Dist	COUNTY	ROUTE	POST MILES TOTAL PROJECT	SHEET No.	TOTAL SHEETS
03	Sut	99	27.7	1	45

INDEX OF PLANS

SHEET No.	DESCCRIPTION
1	TITLE AND LOCATION MAP
2	TYPICAL CROSS SECTION
3-4	LAYOUTS
5-8	CONSTRUCTION DETAILS
9-10	EROSION CONTROL PLAN
11-12	DRAINAGE PLAN, PROFILE, AND QUANTITIES
13-14	PAVEMENT DELINEATION
15	SUMMARY OF QUANTITIES
16-24	LANDSCAPE PLANS
25-28	ELECTRICAL DESIGN PLANS
29-45	NEW AND REVISED STANDARD PLANS

THE STANDARD PLANS LIST APPLICABLE TO THIS CONTRACT IS INCLUDED IN THE NOTICE TO BIDDERS AND SPECIAL PROVISIONS BOOK

STATE OF CALIFORNIA
DEPARTMENT OF TRANSPORTATION

PROJECT PLANS FOR CONSTRUCTION ON
STATE HIGHWAY

IN SUTTER COUNTY
NEAR YUBA CITY
AT A PARK AND RIDE FACILITY
AT BOGUE ROAD

TO BE SUPPLEMENTED BY STANDARD PLANS DATED MAY 2006

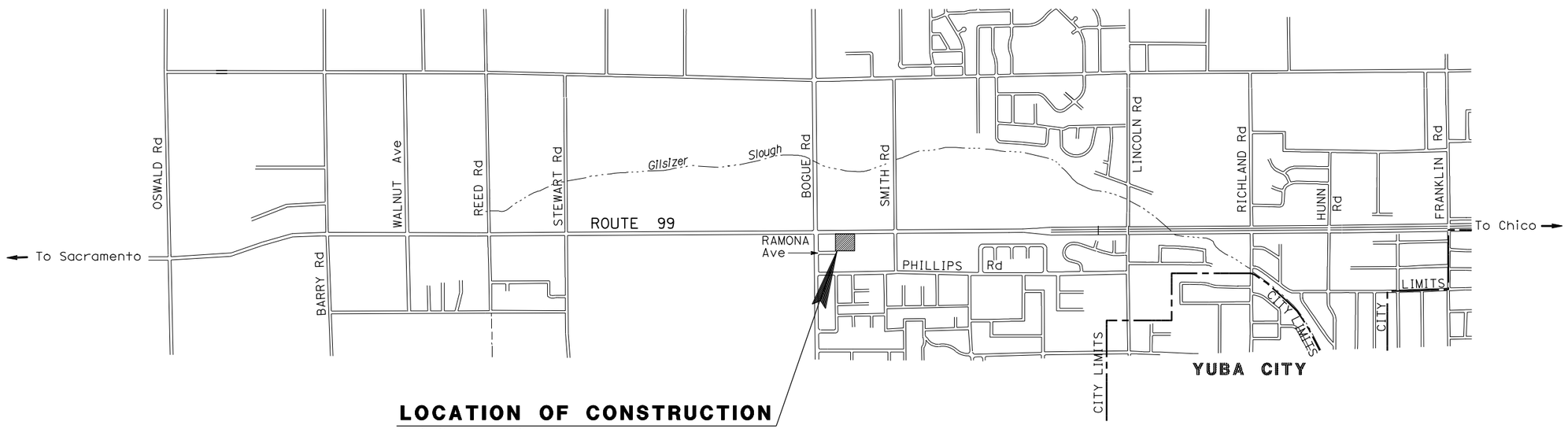

NO SCALE

PROJECT MANAGER WINDER BAJWA

DESIGN ENGINEER OSCAR VASQUEZ

THE CONTRACTOR SHALL POSSESS THE CLASS (OR CLASSES) OF LICENSE AS SPECIFIED IN THE "NOTICE TO BIDDERS."

5-19-11
PROJECT ENGINEER DATE
REGISTERED CIVIL ENGINEER

REGISTERED PROFESSIONAL ENGINEER HUAN M. CUNG No. 74406 Exp. 9-30-11 CIVIL STATE OF CALIFORNIA

JUNE 13, 2011
PLANS APPROVAL DATE

THE STATE OF CALIFORNIA OR ITS OFFICERS OR AGENTS SHALL NOT BE RESPONSIBLE FOR THE ACCURACY OR COMPLETENESS OF SCANNED COPIES OF THIS PLAN SHEET.

CONTRACT No.	03-0F1104
PROJECT ID	0300000064

LAST REVISION 00-00-00

DATE PLOTTED => 02-AUG-2011
TIME PLOTTED => 08:20

Dist	COUNTY	ROUTE	POST MILES TOTAL PROJECT	SHEET No.	TOTAL SHEETS
03	Sut	99	27.7	2	45

REGISTERED CIVIL ENGINEER 5-19-11 DATE

6-13-11
PLANS APPROVAL DATE

REGISTERED PROFESSIONAL ENGINEER HUAN M. CUNG No. 74406 Exp. 9-30-11 CIVIL STATE OF CALIFORNIA

THE STATE OF CALIFORNIA OR ITS OFFICERS OR AGENTS SHALL NOT BE RESPONSIBLE FOR THE ACCURACY OR COMPLETENESS OF SCANNED COPIES OF THIS PLAN SHEET.

NOTE:

EXACT LOCATIONS OF CURB (TYPE A1-6) AND BIO-SWALES ARE SHOWN ON LAYOUT SHEET L-1 AND CONSTRUCTION DETAILS SHEET C-1.

ABBREVIATION:

GB GRADE BREAK

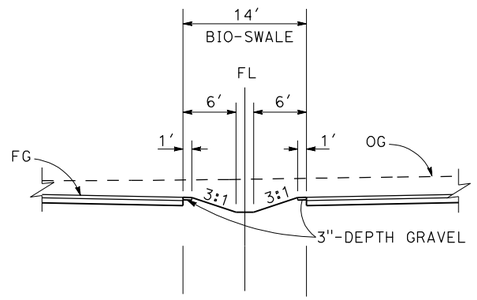

Sta "L1" 1+76.52 TO 2+54.33
Sta "L1" 2+79.03 TO 3+46.74

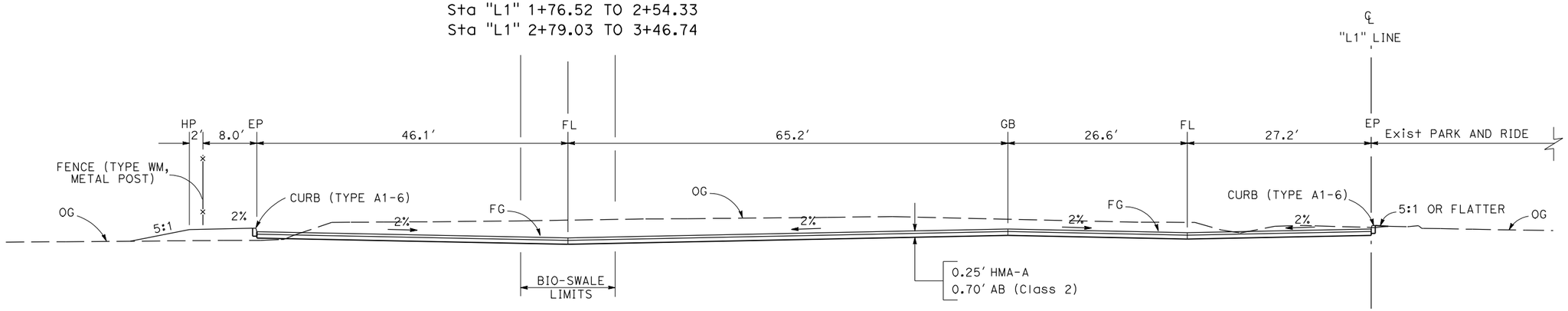

Sta "L1" 1+22.52 TO 4+13.98

TYPICAL CROSS SECTIONS

NO SCALE

X-1

STATE OF CALIFORNIA - DEPARTMENT OF TRANSPORTATION
Caltrans® DIVISION OF ENGINEERING

FUNCTIONAL SUPERVISOR: AMY FONG

CALCULATED-DESIGNED BY: HUAN CUNG
CHECKED BY

REVISED BY
DATE REVISED

LAST REVISION 01-20-11
DATE PLOTTED => 02-AUG-2011
TIME PLOTTED => 08:20

Dist	COUNTY	ROUTE	POST MILES TOTAL PROJECT	SHEET No.	TOTAL SHEETS
03	Sut	99	27.7	3	45

REGISTERED CIVIL ENGINEER 5-19-11 DATE

6-13-11
PLANS APPROVAL DATE

REGISTERED PROFESSIONAL ENGINEER HUAN M. CUNG No. 74406 Exp. 9-30-11 CIVIL STATE OF CALIFORNIA

THE STATE OF CALIFORNIA OR ITS OFFICERS OR AGENTS SHALL NOT BE RESPONSIBLE FOR THE ACCURACY OR COMPLETENESS OF SCANNED COPIES OF THIS PLAN SHEET.

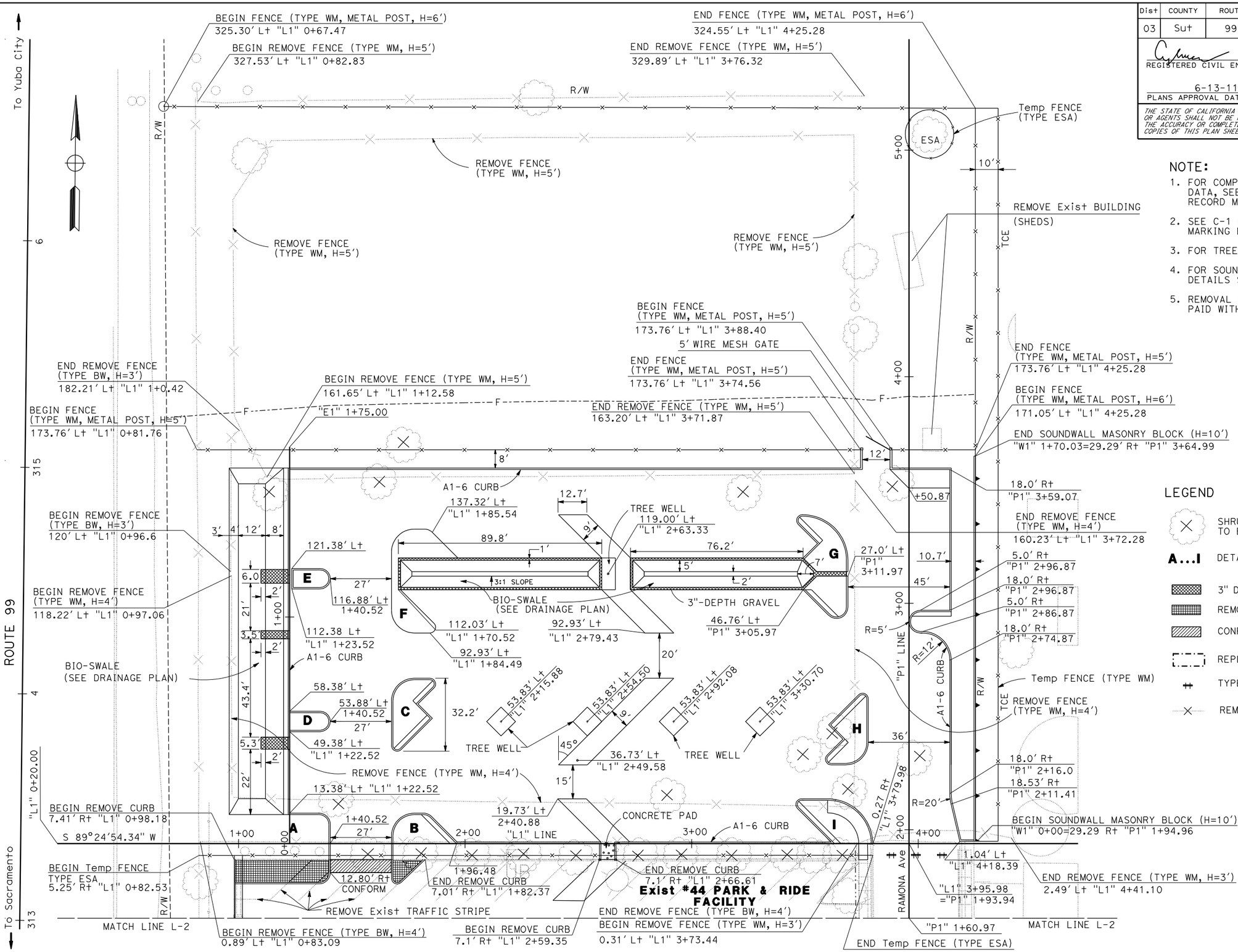

NOTE:

1. FOR COMPLETE RIGHT OF WAY DATA, SEE RIGHT OF WAY RECORD MAPS AT DISTRICT OFFICE.
2. SEE C-1 FOR CURB/PAVEMENT MARKING DETAILS A THROUGH J.
3. FOR TREE WELL DETAILS SEE C-2.
4. FOR SOUNDWALL MASONRY BLOCK DETAILS SEE C-3.
5. REMOVAL OF EXISTING BUILDING TO BE PAID WITH CLEARING AND GRUBBING.

LEGEND

- SHRUB OR TREE TO BE REMOVED
- A...I DETAIL REFERENCE
- 3" DEPTH GRAVEL
- REMOVE AC SURFACING-6"
- CONFORM
- REPLACE AC SURFACING
- TYPE III BARRICADE
- REMOVE Exist TRAFFIC STRIPE

LAYOUT

SCALE 1"=20'

L-1

REVISED BY	DATE REVISED

CALCULATED-DESIGNED BY: HUAN CUNG
CHECKED BY:

FUNCTIONAL SUPERVISOR: AMY FONG

STATE OF CALIFORNIA - DEPARTMENT OF TRANSPORTATION
Caltrans DIVISION OF ENGINEERING

LAST REVISION 01-20-11 DATE PLOTTED => 02-AUG-2011 TIME PLOTTED => 08:20

Dist	COUNTY	ROUTE	POST MILES TOTAL PROJECT	SHEET No.	TOTAL SHEETS
03	Sut	99	27.7	4	45

REGISTERED CIVIL ENGINEER 5-19-11 DATE

6-13-11
PLANS APPROVAL DATE

REGISTERED PROFESSIONAL ENGINEER HUAN M. CUNG No. 74406 Exp. 9-30-11 CIVIL STATE OF CALIFORNIA

THE STATE OF CALIFORNIA OR ITS OFFICERS OR AGENTS SHALL NOT BE RESPONSIBLE FOR THE ACCURACY OR COMPLETENESS OF SCANNED COPIES OF THIS PLAN SHEET.

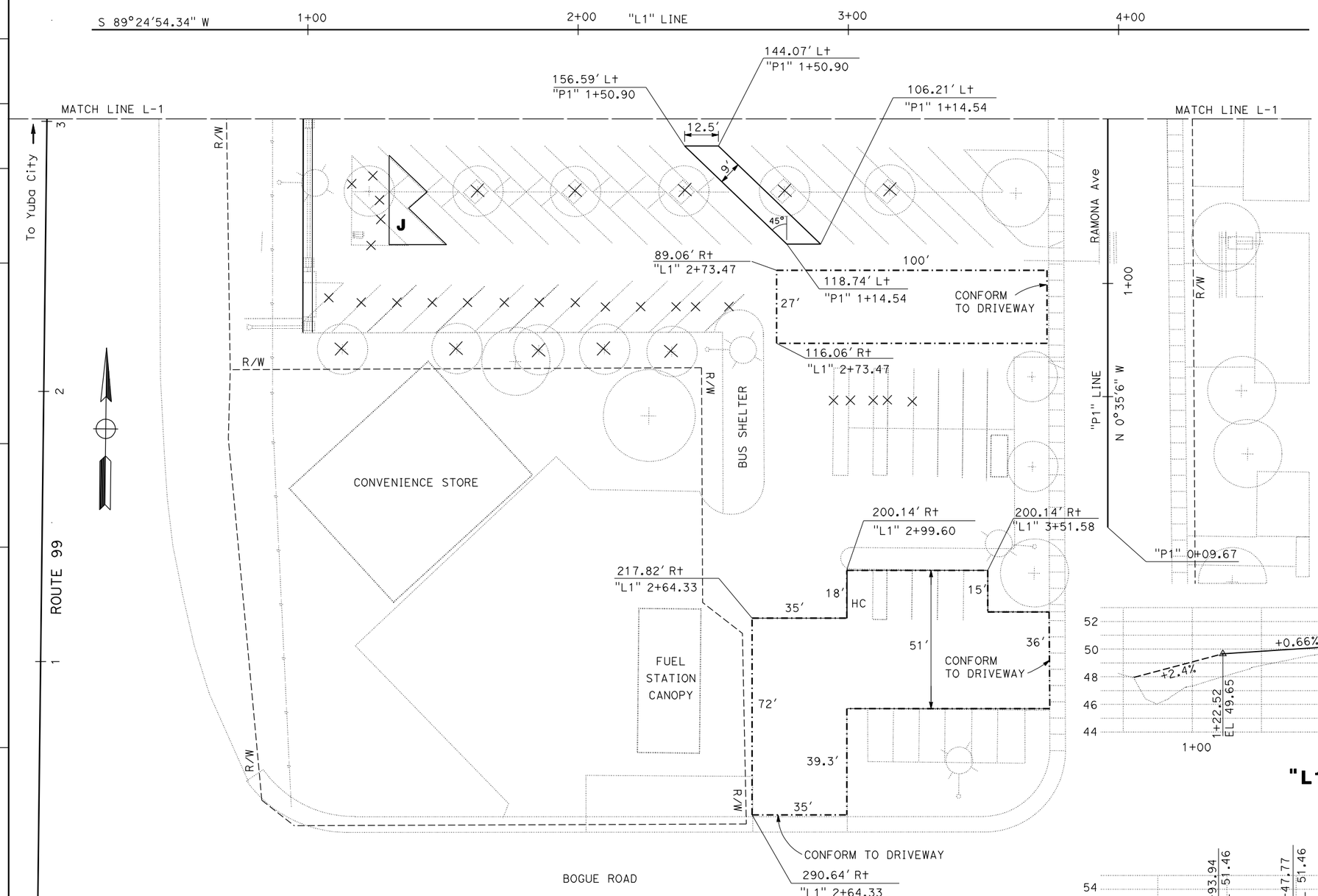

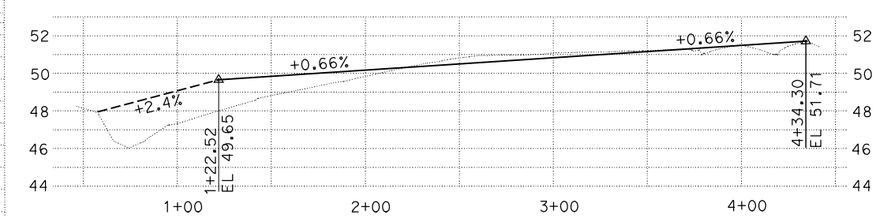

"L1" LINE PROFILE
SCALE Horz 1"=40'
Vert 1"=400'

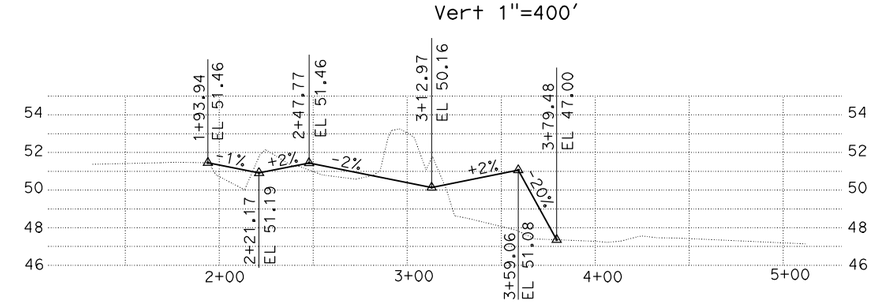

"P1" LINE PROFILE
SCALE Horz 1"=40'
Vert 1"=400'

LAYOUT
SCALE 1"=20'

NOTE:
FOG SEAL COAT EXISTING PARKING AREA AND REPLACE EXISTING PARKING SPACE PAVEMENT MARKINGS.

L-2

STATE OF CALIFORNIA - DEPARTMENT OF TRANSPORTATION
Caltrans® DIVISION OF ENGINEERING

FUNCTIONAL SUPERVISOR: AMY FONG
CALCULATED-DESIGNED BY: HUAN CUNG
CHECKED BY
REVISED BY
DATE REVISED

LAST REVISION 01-20-11
DATE PLOTTED => 02-AUG-2011
TIME PLOTTED => 08:20

Dist	COUNTY	ROUTE	POST MILES TOTAL PROJECT	SHEET No.	TOTAL SHEETS
03	Sut	99	27.7	5	45

REGISTERED CIVIL ENGINEER 5-19-11 DATE

6-13-11
PLANS APPROVAL DATE

REGISTERED PROFESSIONAL ENGINEER HUAN M. CUNG No. 74406 Exp. 9-30-11 CIVIL STATE OF CALIFORNIA

THE STATE OF CALIFORNIA OR ITS OFFICERS OR AGENTS SHALL NOT BE RESPONSIBLE FOR THE ACCURACY OR COMPLETENESS OF SCANNED COPIES OF THIS PLAN SHEET.

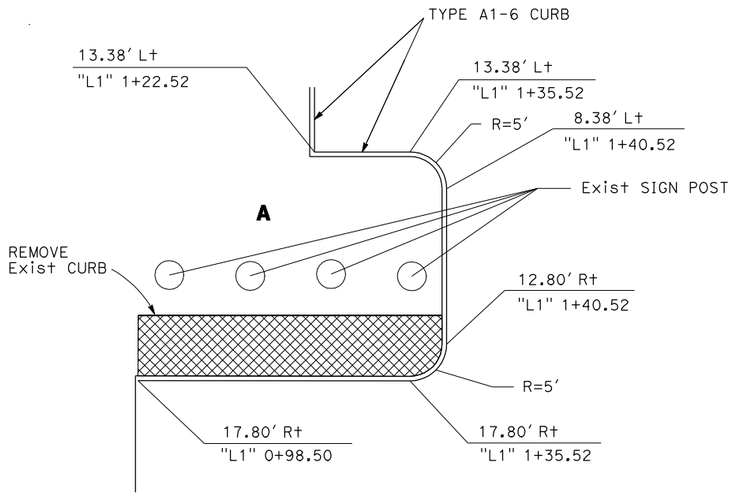

DETAIL A

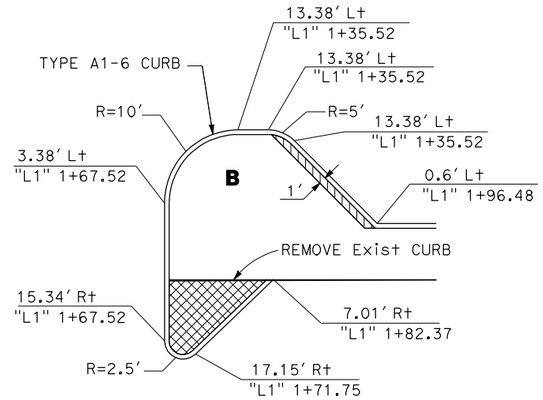

DETAIL B

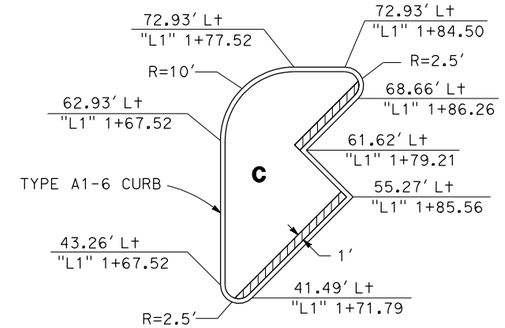

DETAIL C

LEGEND

- MISCELLANEOUS CONCRETE
- REMOVE AC SURFACING-6"
- MINOR CONCRETE (SIDE WALK)
- CURB (TYPE A1-6)

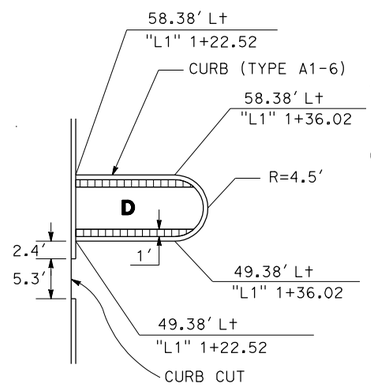

DETAIL D

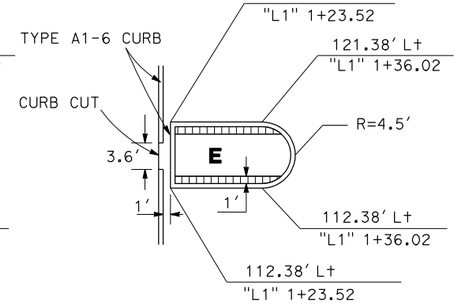

DETAIL E

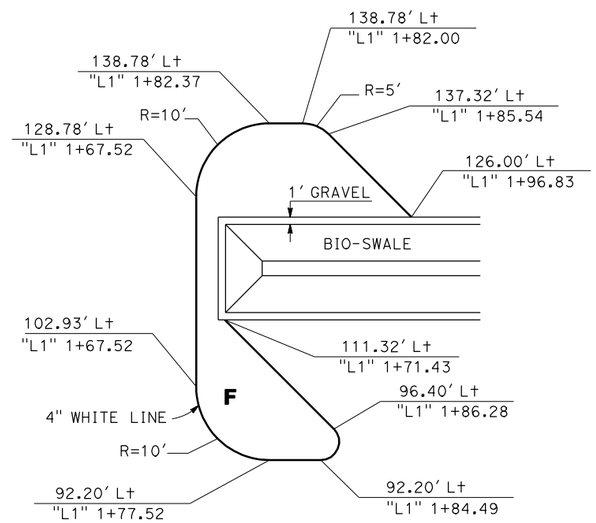

DETAIL F

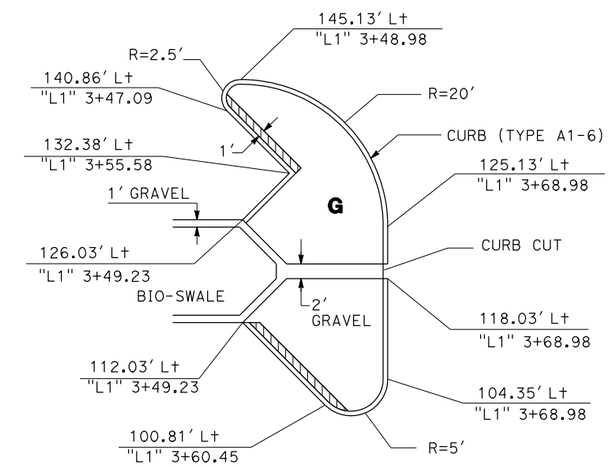

DETAIL G

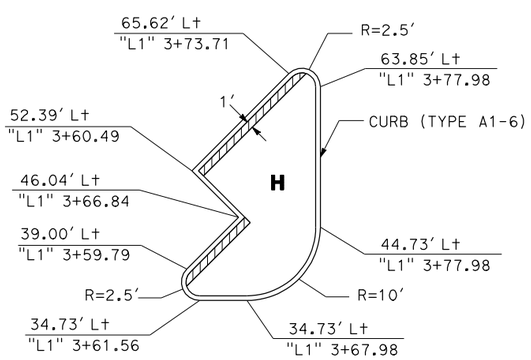

DETAIL H

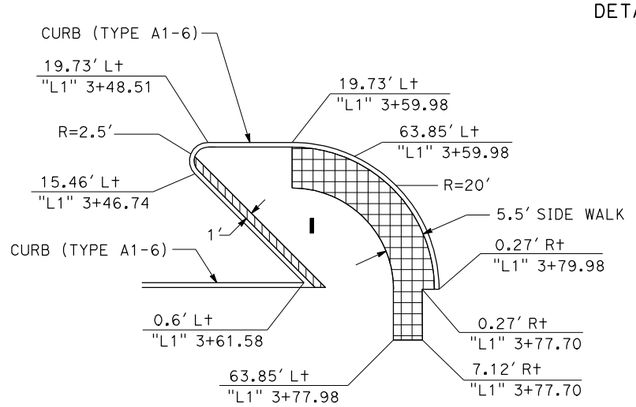

DETAIL I

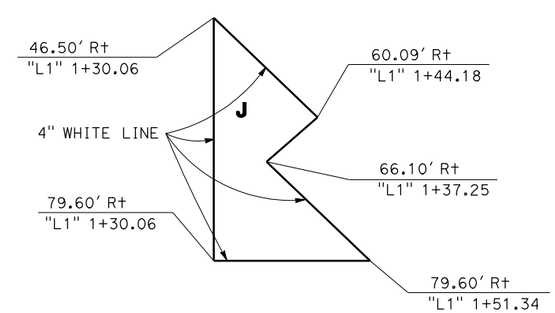

DETAIL J

CONSTRUCTION DETAILS

NO SCALE

C-1

REVISED BY	DATE REVISED
HUAN CUNG	

CALCULATED-DESIGNED BY / CHECKED BY

FUNCTIONAL SUPERVISOR: AMY FONG

STATE OF CALIFORNIA - DEPARTMENT OF TRANSPORTATION
Caltrans® DIVISION OF ENGINEERING

LAST REVISION 01-20-11 | DATE PLOTTED => 02-AUG-2011 | TIME PLOTTED => 08:20

Dist	COUNTY	ROUTE	POST MILES TOTAL PROJECT	SHEET No.	TOTAL SHEETS
03	Sut	99	27.7	6	45

REGISTERED CIVIL ENGINEER 5-19-11 DATE

6-13-11
PLANS APPROVAL DATE

REGISTERED PROFESSIONAL ENGINEER HUAN M. CUNG No. 74406 Exp. 9-30-11 CIVIL STATE OF CALIFORNIA

THE STATE OF CALIFORNIA OR ITS OFFICERS OR AGENTS SHALL NOT BE RESPONSIBLE FOR THE ACCURACY OR COMPLETENESS OF SCANNED COPIES OF THIS PLAN SHEET.

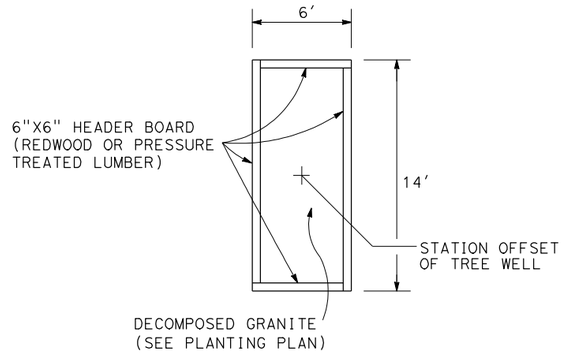

TREE WELL DETAIL
119.0' Lt "L1" 2+63.33

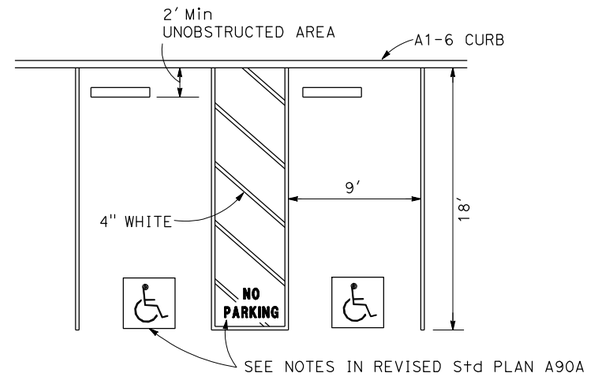

TYPICAL HANDICAPPED PARKING SPACE

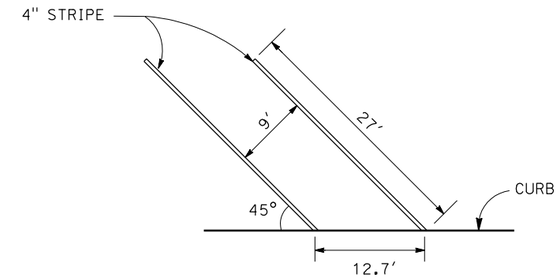

45° STANDARD PARKING STALL DETAIL

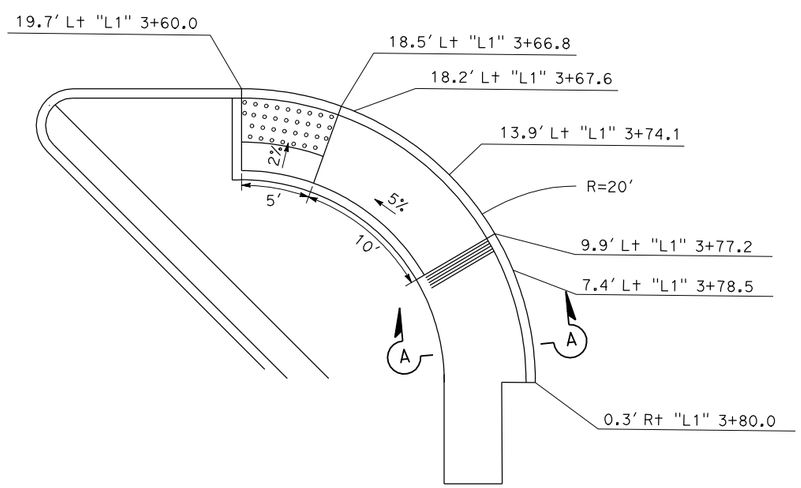

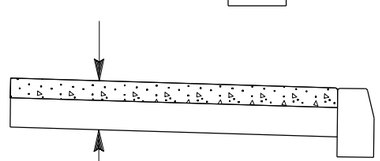

SECTION A-A

NOTE: FOR DETECTABLE WARNING SURFACE AND GROOVING DETAILS, SEE Std PLAN A88A

CURB RAMP DETAIL

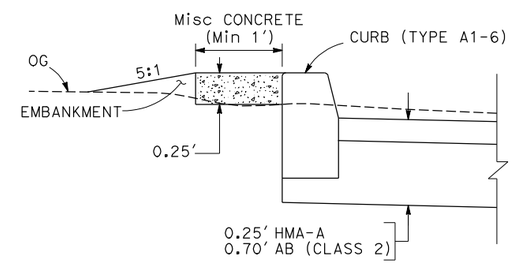

A1-6 CURB TRANSITION AT SIDEWALK

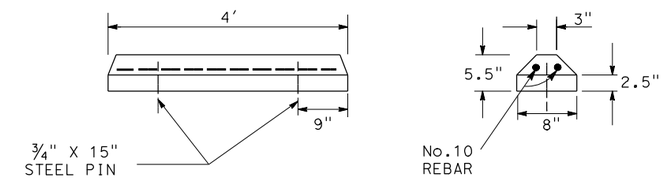

PARKING BUMPER DETAIL

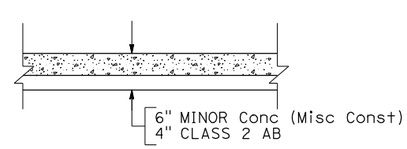

CONCRETE PAD
"L1" 2+63.00

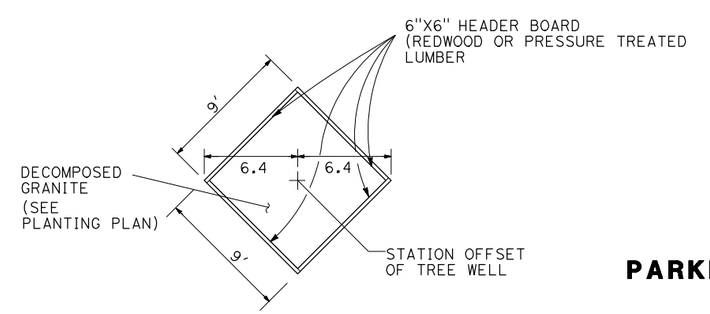

TREE WELL DETAIL
53.83' Lt "L1" 2+15.88
53.83' Lt "L1" 2+54.50
53.83' Lt "L1" 2+95.08
53.83' Lt "L1" 3+30.70

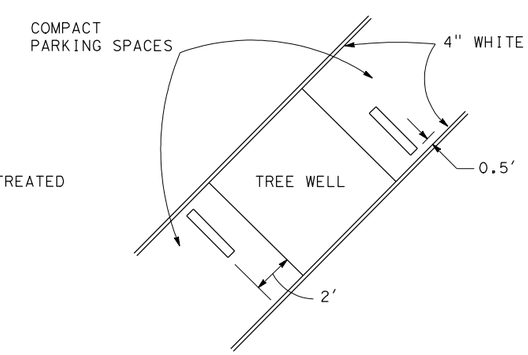

PARKING BUMPER PLACEMENT DETAIL

CONSTRUCTION DETAILS
NO SCALE

C-2

REVISED BY	DATE REVISED
HUAN CUNG	

CALCULATED-DESIGNED BY HUAN CUNG
CHECKED BY

FUNCTIONAL SUPERVISOR AMY FONG

STATE OF CALIFORNIA - DEPARTMENT OF TRANSPORTATION
Caltrans® DIVISION OF ENGINEERING

LAST REVISION 01-20-11
DATE PLOTTED => 02-AUG-2011
TIME PLOTTED => 08:20

Dist	COUNTY	ROUTE	POST MILES TOTAL PROJECT	SHEET No.	TOTAL SHEETS
03	Sut	99	27.7	7	45

REGISTERED CIVIL ENGINEER 5-19-11 DATE

6-13-11
PLANS APPROVAL DATE

REGISTERED PROFESSIONAL ENGINEER HUAN M. CUNG No. 74406 Exp. 9-30-11 CIVIL STATE OF CALIFORNIA

THE STATE OF CALIFORNIA OR ITS OFFICERS OR AGENTS SHALL NOT BE RESPONSIBLE FOR THE ACCURACY OR COMPLETENESS OF SCANNED COPIES OF THIS PLAN SHEET.

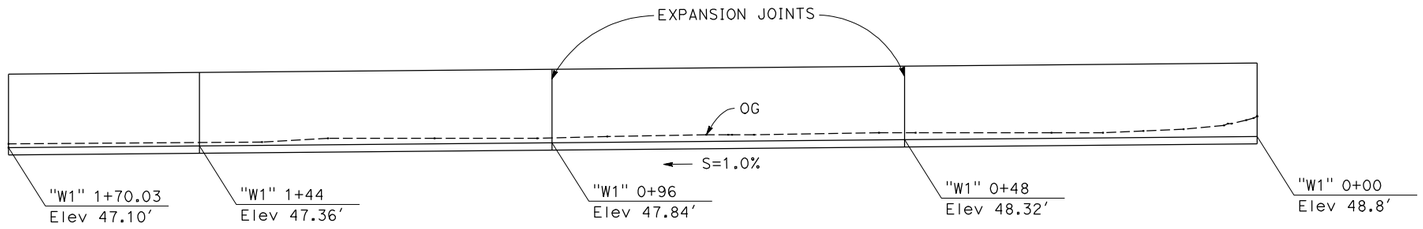

ELEVATION

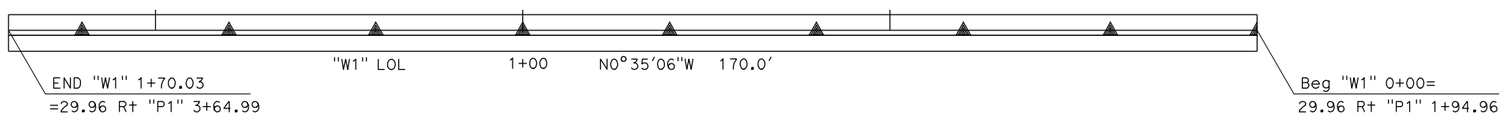

PLAN

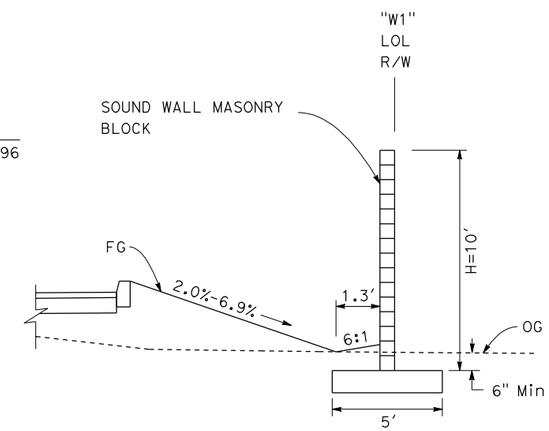

TYPICAL SECTION

SOUND WALL MASONRY BLOCK DETAILS

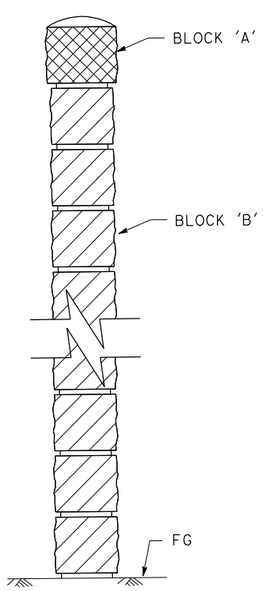

TYPICAL SECTION

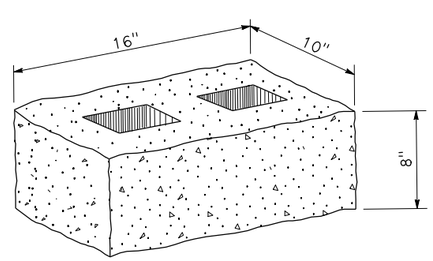

BLOCK 'A'

TEXTURE: SPLIT FACE. BOTH SIDES
COLOR: BASALITE COLOR 335 OR EQUIVALENT
BLOCK 'A' 10" x 8" x 16" NOMINAL SIZE

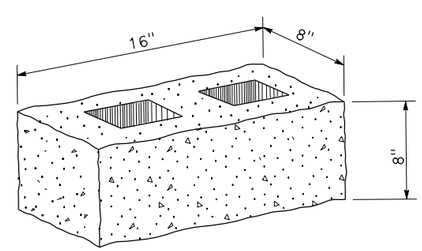

BLOCK 'B'

TEXTURE: SPLIT FACE. BOTH SIDES
COLOR: BASALITE COLOR 335 OR EQUIVALENT
BLOCK 'B' 8" x 8" x 16" NOMINAL SIZE

NOTES:

FOR FOOTING DETAIL AND OTHER DETAILS NOT SHOWN, SEE REVISED Std PLAN B15-1, B15-2, AND B15-9 ON SOUND WALL MASONRY BLOCK

SOUND WALL MASONARY BLOCK AESTHETICS DETAIL

CONSTRUCTION DETAILS

NO SCALE

C-3

REVISED BY | DATE REVISED
HUAN CUNG
CALCULATED-DESIGNED BY | CHECKED BY
FUNCTIONAL SUPERVISOR
AMY FONG
STATE OF CALIFORNIA - DEPARTMENT OF TRANSPORTATION
Caltrans DIVISION OF ENGINEERING

LAST REVISION 01-20-11 | DATE PLOTTED => 02-AUG-2011 | TIME PLOTTED => 08:20

Dist	COUNTY	ROUTE	POST MILES TOTAL PROJECT	SHEET No.	TOTAL SHEETS
03	Sut	99	27.7	8	45

REGISTERED CIVIL ENGINEER 5-19-11 DATE

6-13-11
PLANS APPROVAL DATE

REGISTERED PROFESSIONAL ENGINEER HUAN M. CUNG No. 74406 Exp. 9-30-11 CIVIL STATE OF CALIFORNIA

THE STATE OF CALIFORNIA OR ITS OFFICERS OR AGENTS SHALL NOT BE RESPONSIBLE FOR THE ACCURACY OR COMPLETENESS OF SCANNED COPIES OF THIS PLAN SHEET.

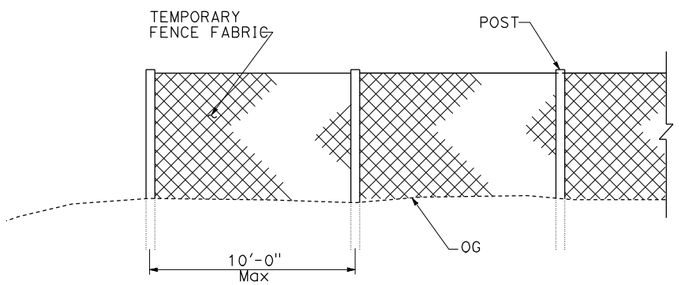

TEMPORARY FENCE (ESA)

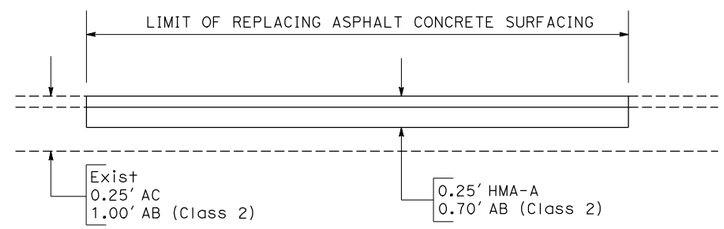

REPLACING AC SURFACING DETAIL

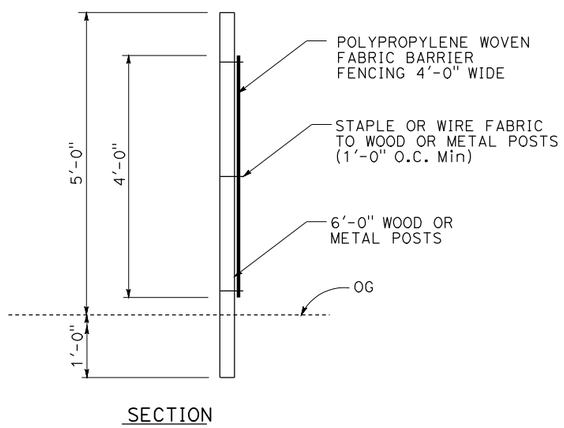

TEMPORARY FENCE (ESA)

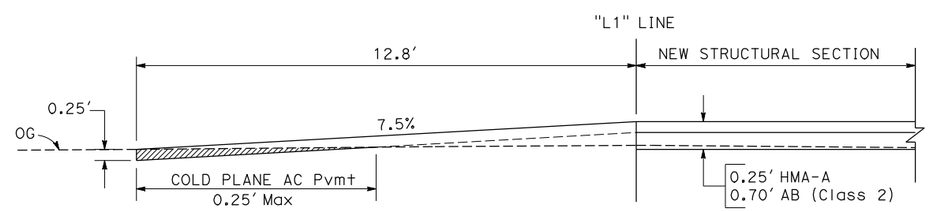

CONFORM TO EXISTING PARK AND RIDE DETAIL
FROM STA "L1" 1+40.52 TO STA "L1" 1+67.52

CONSTRUCTION DETAILS

NO SCALE

C-4

STATE OF CALIFORNIA - DEPARTMENT OF TRANSPORTATION
Caltrans® DIVISION OF ENGINEERING

FUNCTIONAL SUPERVISOR: AMY FONG
CALCULATED-DESIGNED BY: HUAN CUNG
CHECKED BY
REVISED BY
DATE REVISED

LAST REVISION 01-20-11
DATE PLOTTED => 02-AUG-2011
TIME PLOTTED => 08:20

Dist	COUNTY	ROUTE	POST MILES TOTAL PROJECT	SHEET No.	TOTAL SHEETS
03	Sut	99	27.7	9	45

LICENSED LANDSCAPE ARCHITECT

6-13-11
PLANS APPROVAL DATE

LICENSED LANDSCAPE ARCHITECT
JAMES G. WILLIAMSON
No. 5415
Signature
02-29-12
Renewal Date
5-19-11
Date
STATE OF CALIFORNIA

THE STATE OF CALIFORNIA OR ITS OFFICERS OR AGENTS SHALL NOT BE RESPONSIBLE FOR THE ACCURACY OR COMPLETENESS OF SCANNED COPIES OF THIS PLAN SHEET.

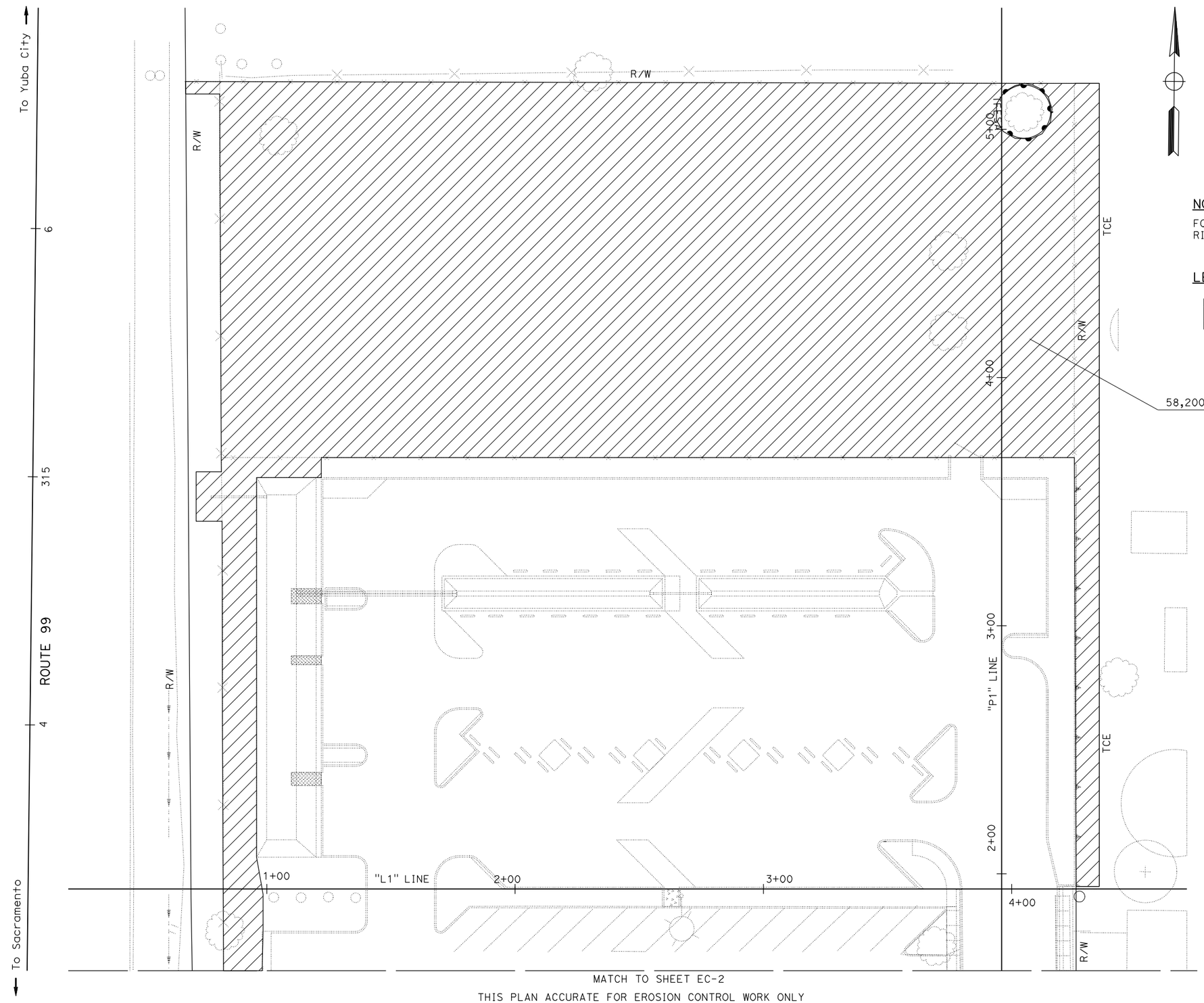

NOTE:

FOR ACCURATE RIGHT OF WAY DATA, CONTACT RIGHT OF WAY ENGINEERING AT THE DISTRICT OFFICE.

LEGEND:

- EROSION CONTROL (HYDROSEED)

58,200 SQFT EROSION CONTROL (HYDROSEED)

EROSION CONTROL PLAN

SCALE 1"=20'

EC-1

STATE OF CALIFORNIA - DEPARTMENT OF TRANSPORTATION
Caltrans® LANDSCAPE ARCHITECTURE

SENIOR LANDSCAPE ARCHITECT: T. CHRIS JOHNSON

CALCULATED-DESIGNED BY: J. WILLIAMSON
CHECKED BY

REVISED BY
DATE REVISED

LAST REVISION 02-28-11
DATE PLOTTED => 02-AUG-2011
TIME PLOTTED => 08:20

Dist	COUNTY	ROUTE	POST MILES TOTAL PROJECT	SHEET No.	TOTAL SHEETS
03	Sut	99	27.7	10	45

LICENSED LANDSCAPE ARCHITECT

6-13-11
PLANS APPROVAL DATE

LICENSED LANDSCAPE ARCHITECT JAMES G. WILLIAMSON No. 5415 STATE OF CALIFORNIA
Signature
02-29-12
Renewal Date
5-19-11
Date

THE STATE OF CALIFORNIA OR ITS OFFICERS OR AGENTS SHALL NOT BE RESPONSIBLE FOR THE ACCURACY OR COMPLETENESS OF SCANNED COPIES OF THIS PLAN SHEET.

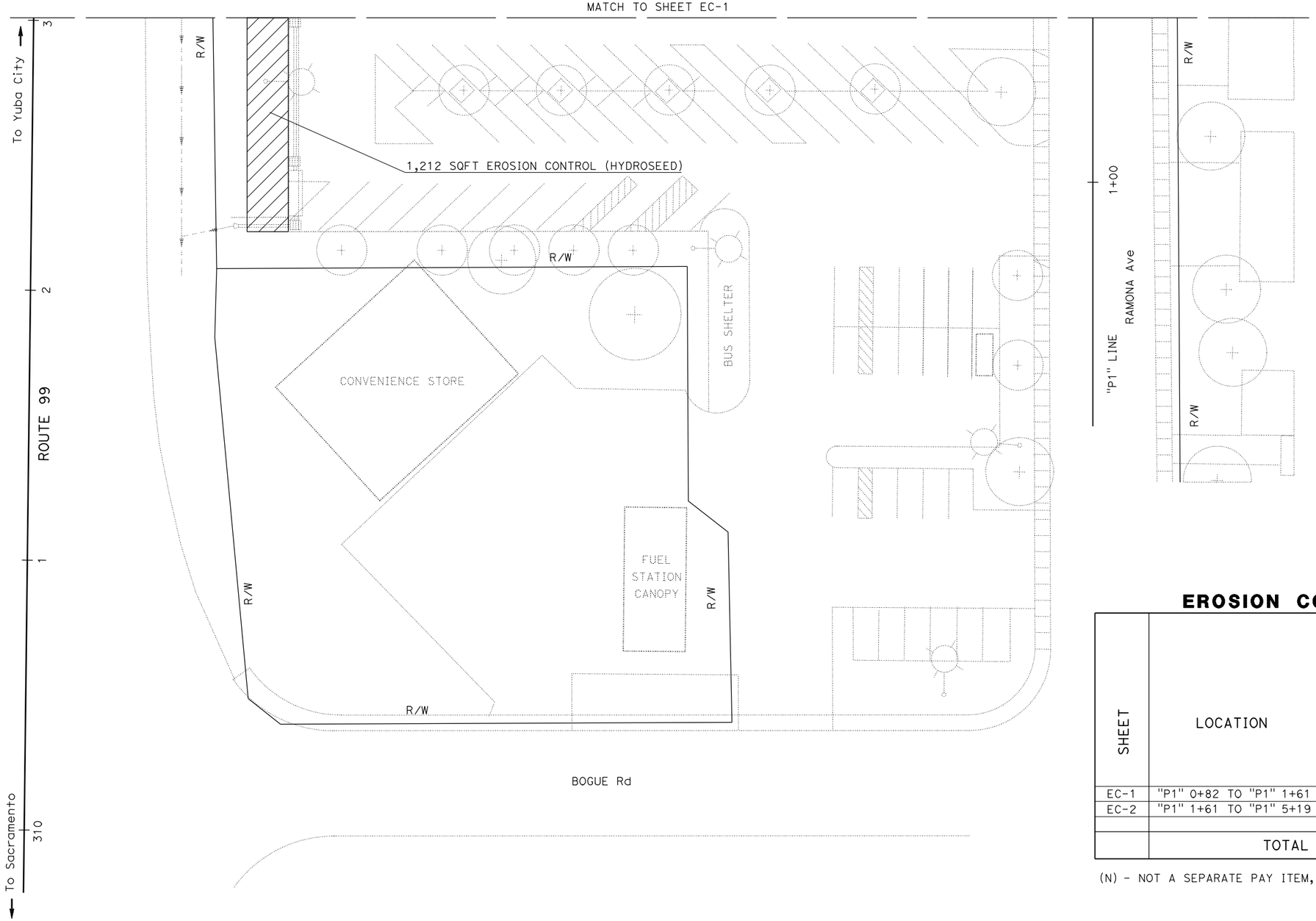

EROSION CONTROL QUANTITIES

SHEET	LOCATION	EROSION CONTROL (HYDROSEED)	(N) SEED	(N) FIBER	(N) ORGANIC FERTILIZER	(N) STRAW	(N) TACKIFIER
		SQFT	LB	LB	LB	TON	LB
EC-1	"P1" 0+82 TO "P1" 1+61	58,200	40.0	1603	1336	2.67	80.2
EC-2	"P1" 1+61 TO "P1" 5+19	1,212	0.80	32	27	0.05	1.6
	TOTAL	59,412	40.8	1635	1363	2.72	81.8

(N) - NOT A SEPARATE PAY ITEM, FOR INFORMATION ONLY

EROSION CONTROL PLAN

SCALE 1"=20'

EC-2

THIS PLAN ACCURATE FOR EROSION CONTROL WORK ONLY

STATE OF CALIFORNIA - DEPARTMENT OF TRANSPORTATION
Caltrans® LANDSCAPE ARCHITECTURE

SENIOR LANDSCAPE ARCHITECT: T. CHRIS JOHNSON
CALCULATED-DESIGNED BY: J. WILLIAMSON
CHECKED BY
REVISED BY
DATE REVISED

LAST REVISION 02-28-11
DATE PLOTTED => 02-AUG-2011
TIME PLOTTED => 08:20

Dist	COUNTY	ROUTE	POST MILES TOTAL PROJECT	SHEET No.	TOTAL SHEETS
03	Sut	99	27.7	11	45

REGISTERED CIVIL ENGINEER 5-19-11 DATE

6-13-11
PLANS APPROVAL DATE

REGISTERED PROFESSIONAL ENGINEER HUAN M. CUNG No. 74406 Exp. 9-30-11 CIVIL STATE OF CALIFORNIA

THE STATE OF CALIFORNIA OR ITS OFFICERS OR AGENTS SHALL NOT BE RESPONSIBLE FOR THE ACCURACY OR COMPLETENESS OF SCANNED COPIES OF THIS PLAN SHEET.

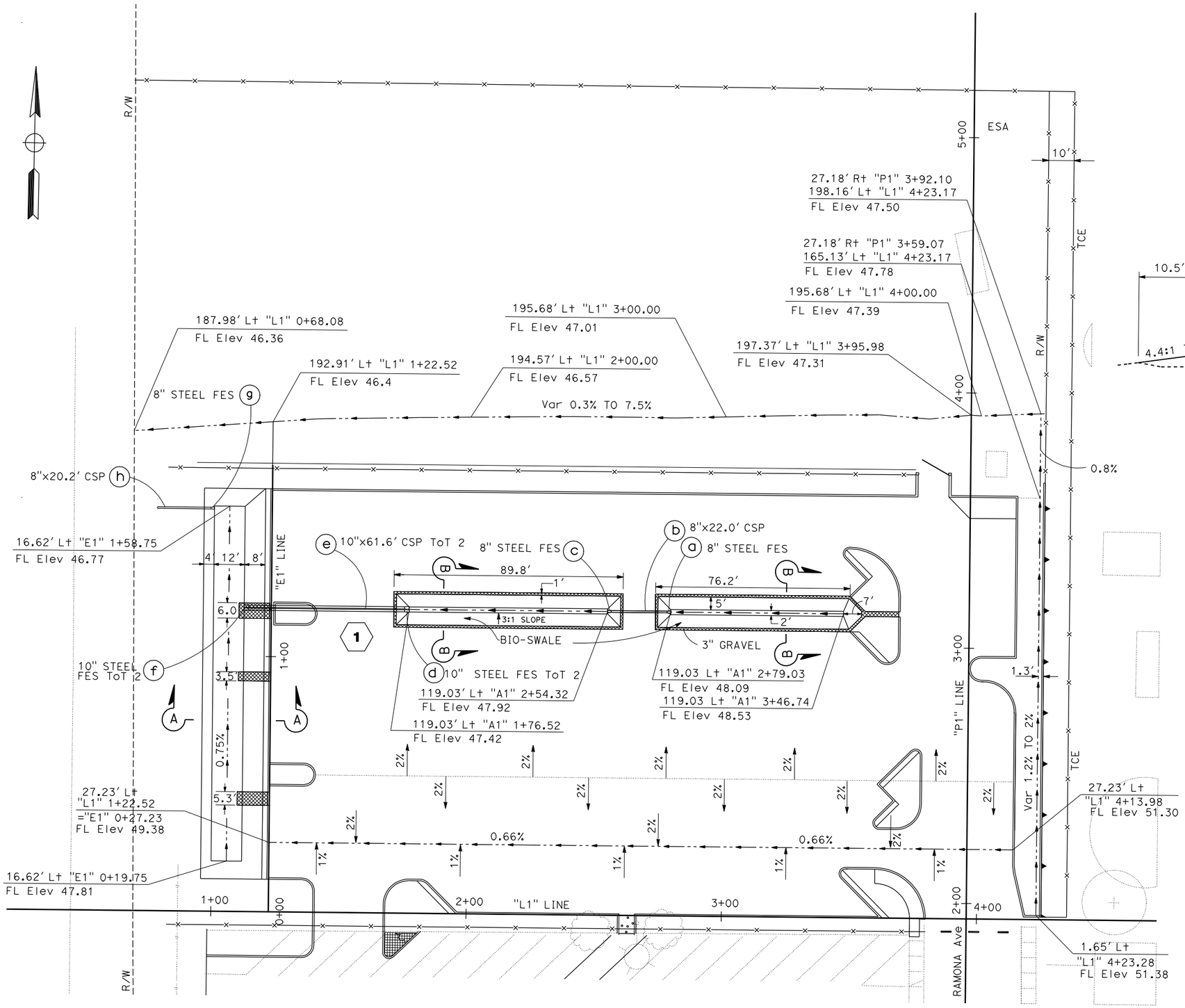

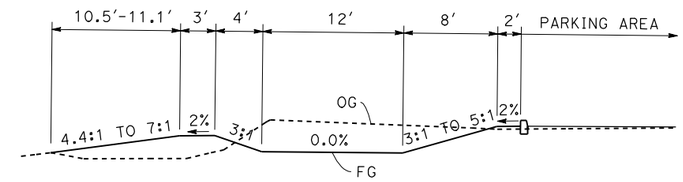

SECTION A-A

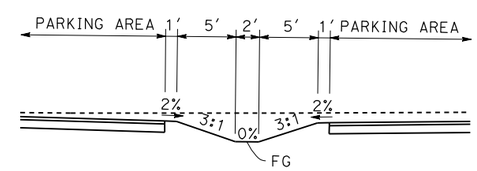

SECTION B-B

DRAINAGE PLAN

SCALE 1"=20'

D-1

REVISED BY	DATE REVISED
HUAN CUNG	

CALCULATED-DESIGNED BY	CHECKED BY

FUNCTIONAL SUPERVISOR: AMY FONG

STATE OF CALIFORNIA - DEPARTMENT OF TRANSPORTATION
Caltrans® DIVISION OF ENGINEERING

LAST REVISION 01-20-11 | DATE PLOTTED => 02-AUG-2011 | TIME PLOTTED => 08:20

Dist	COUNTY	ROUTE	POST MILES TOTAL PROJECT	SHEET No.	TOTAL SHEETS
03	Sut	99	27.7	12	45

REGISTERED CIVIL ENGINEER 5-19-11 DATE

6-13-11
PLANS APPROVAL DATE

REGISTERED PROFESSIONAL ENGINEER HUAN M. CUNG No. 74406 Exp 9-30-11 CIVIL STATE OF CALIFORNIA

THE STATE OF CALIFORNIA OR ITS OFFICERS OR AGENTS SHALL NOT BE RESPONSIBLE FOR THE ACCURACY OR COMPLETENESS OF SCANNED COPIES OF THIS PLAN SHEET.

DRAINAGE QUANTITIES

⬡ DRAINAGE SYSTEM No.	○ DRAINAGE UNIT	10" CSP (0.079" THICK)	8" CSP (0.079" THICK)	MINOR CONCRETE (BACKFILL)	STEEL FES: 8" STEEL FLARED END SECTION	STEEL FES: 10" STEEL FLARED END SECTION	DESCRIPTION
		LF	LF	CY	EA	EA	
1	a				1		
	b		22.0				
	c				1		
	d					2	
	e	123.2		3.2			PLACE CONCRETE BACKFILL
	f					2	
	g				1		
	h		20.2				
SUBTOTAL		123.2	42.2	3.2	3	4	
TOTAL		123.2	42.2	3.2	7		

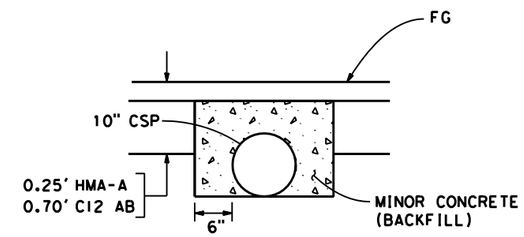

CONCRETE BACKFILL DETAIL

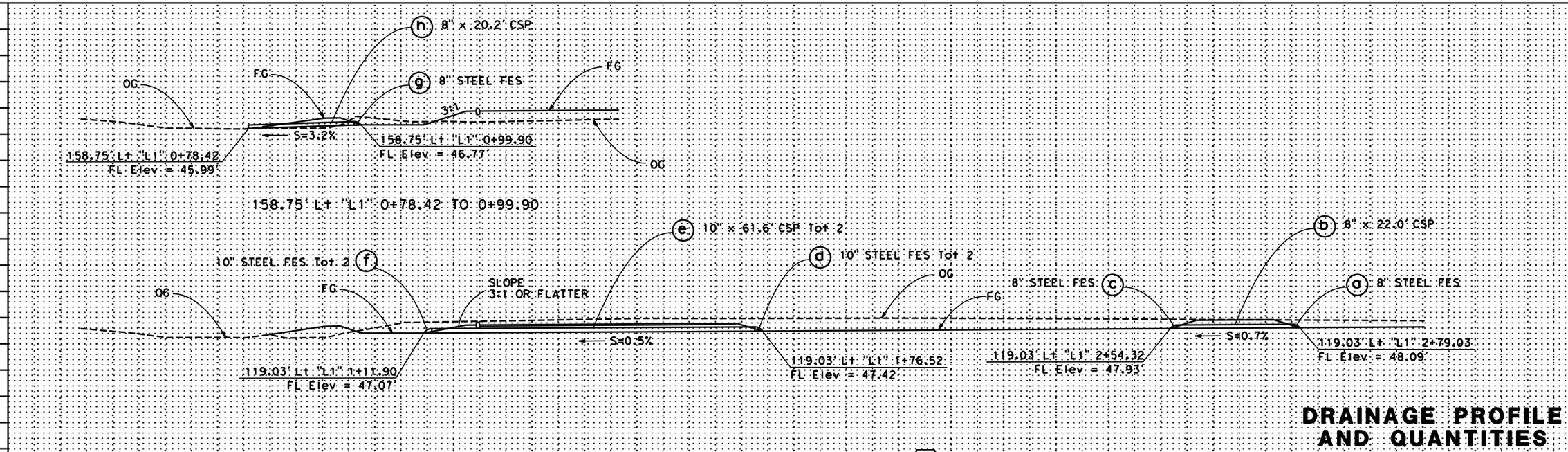

DRAINAGE SYSTEM NO. 1

"L1" 0+78.42 TO 2+79.03

DRAINAGE PROFILE AND QUANTITIES

SCALE 1"=10'

DP-1

STATE OF CALIFORNIA - DEPARTMENT OF TRANSPORTATION
DIVISION OF ENGINEERING

FUNCTIONAL SUPERVISOR: AMY FONG
CALCULATED-DESIGNED BY: HUAN CUNG
CHECKED BY
REVISED BY
DATE REVISED

LAST REVISION 01-20-11
DATE PLOTTED => $DATE
TIME PLOTTED => $TIME

Dist	COUNTY	ROUTE	POST MILES TOTAL PROJECT	SHEET No.	TOTAL SHEETS
03	Sut	99	27.7	13	45

REGISTERED CIVIL ENGINEER 5-19-11 DATE

6-13-11
PLANS APPROVAL DATE

REGISTERED PROFESSIONAL ENGINEER HUAN M. CUNG No. 74406 Exp. 9-30-11 CIVIL STATE OF CALIFORNIA

THE STATE OF CALIFORNIA OR ITS OFFICERS OR AGENTS SHALL NOT BE RESPONSIBLE FOR THE ACCURACY OR COMPLETENESS OF SCANNED COPIES OF THIS PLAN SHEET.

SIGN PANEL QUANTITIES (CONTRACTOR-FURNISHED)

SIGN CODE	SIGN MESSAGE/DESCRIPTION	SIGN SIZE L x D (INCHES)	SIGN AREA (SQFT)	NUMBER OF SIGNS	BACKGROUND SHEETING COLOR	BACKGROUND RETROREFLECTIVE ASTM TYPE	LEGEND SHEETING COLOR	LEGEND RETROREFLECTIVE ASTM TYPE	PROTECTIVE OVERLAY PREMIUM	FURNISH SINGLE SHEET ALUMINUM SIGN (0.063" - UNFRAMED) SQFT
D4-2L	PARK & RIDE (w/Lt ARROW)	30 x 36	7.50	1	GREEN	III	WHITE	III	X	7.50
R7-8b	VAN ACCESSIBLE	12 x 6	0.50	2	BLUE	III	WHITE	III	X	1.00
R99C<CA>	DISABLED (SYMBOL) PARKING ONLY MINIMUM FINE $250	12 x 24	2.00	9	BLUE	III	WHITE	III	X	18.00
R100B<CA>	DISABLED TOW-AWAY	24 x 24	4.00	2	WHITE	III	BLACK		X	8.00
								TOTAL		34.50

NOTES:

1. CALIFORNIA SIGN CODES ARE DESGINATED BY <CA>. OTHERWISE, FEDERAL SIGN CODES ARE SHOWN.
2. ALL SIGN PANELS SHALL BE SINGLE FACED.

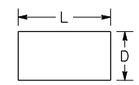

L = LENGTH OF SIGN
D = DEPTH OF SIGN

LEGEND

- TYPE I 10'-0" ARROW
- TYPE IV (L) ARROW
- "COMPACT" PARKING SYMBOL
- ISA MARKING
- SIGN - SINGLE POST
- ROADSIDE SIGN NUMBER
- <CA> CALIFORNIA SIGN CODE
- INSTALL ROADSIDE SIGN PANEL ON EXISTING POST

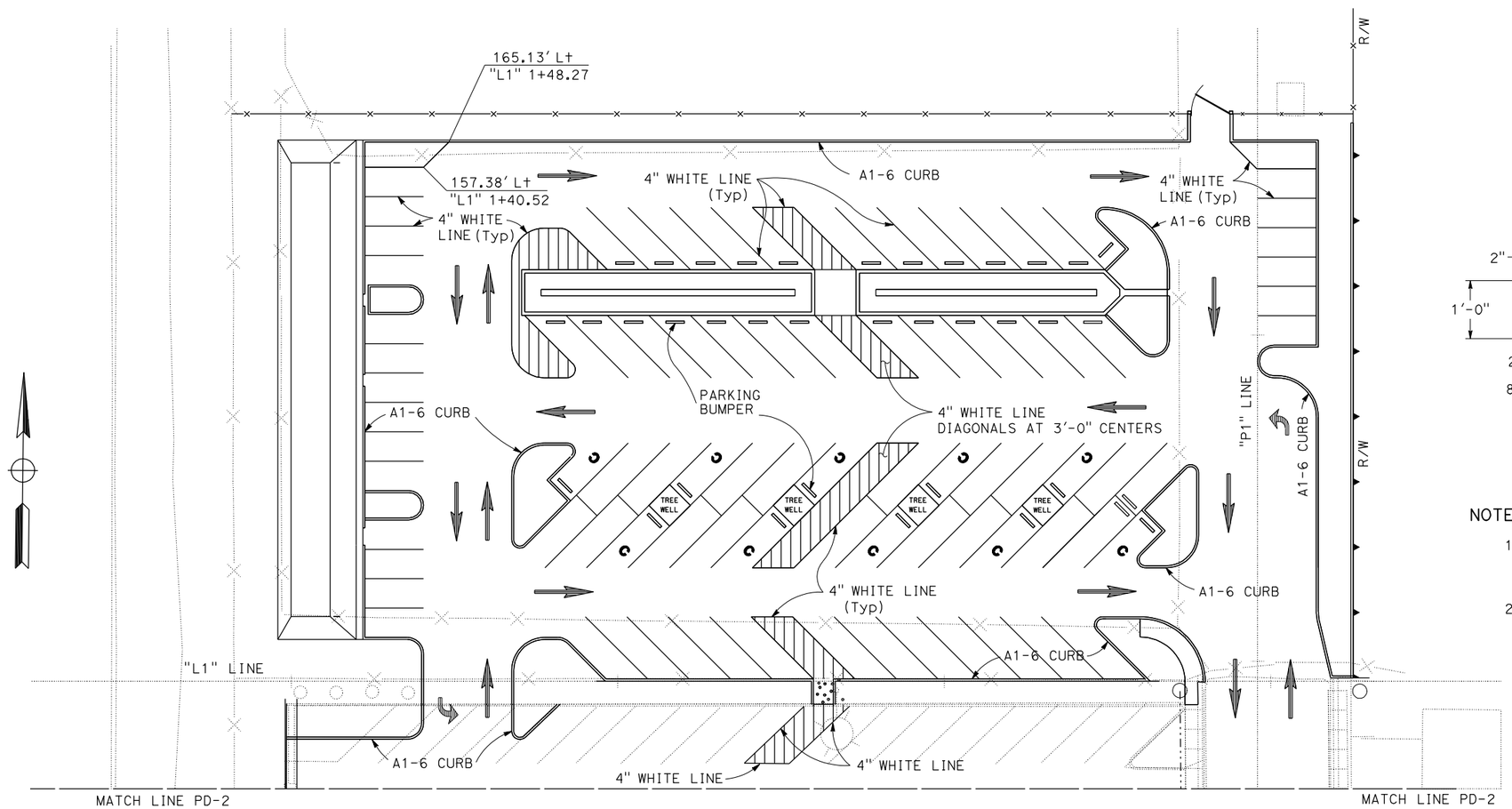

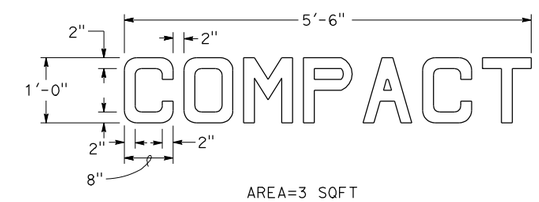

AREA=3 SQFT

"COMPACT" PAVEMENT MARKING DETAIL
NO SCALE

NOTES:

1. ALL SIGN CODES SHOWN ARE FEDERAL SIGN CODES UNLESS OTHERWISE DESIGNATED AS CALIFORNIA SIGN CODES.
2. SEE REVISED STANDARD PLAN RSP A90A FOR ADDITIONAL PAVEMENT MARKING INFORMATION

PAVEMENT DELINEATION, SIGN PLAN AND QUANTITIES

SCALE 1"=20'

PD-1

STATE OF CALIFORNIA - DEPARTMENT OF TRANSPORTATION
Caltrans DIVISION OF ENGINEERING

FUNCTIONAL SUPERVISOR: AMY FONG
CALCULATED-DESIGNED BY: HUAN CUNG
CHECKED BY
REVISED BY
DATE REVISED

LAST REVISION 01-20-11
DATE PLOTTED => 02-AUG-2011
TIME PLOTTED => 08:20

Dist	COUNTY	ROUTE	POST MILES TOTAL PROJECT	SHEET No.	TOTAL SHEETS
03	Sut	99	27.7	14	45

REGISTERED CIVIL ENGINEER 5-19-11 DATE

6-13-11
PLANS APPROVAL DATE

REGISTERED PROFESSIONAL ENGINEER HUAN M. CUNG No. 74406 Exp. 9-30-11 CIVIL STATE OF CALIFORNIA

THE STATE OF CALIFORNIA OR ITS OFFICERS OR AGENTS SHALL NOT BE RESPONSIBLE FOR THE ACCURACY OR COMPLETENESS OF SCANNED COPIES OF THIS PLAN SHEET.

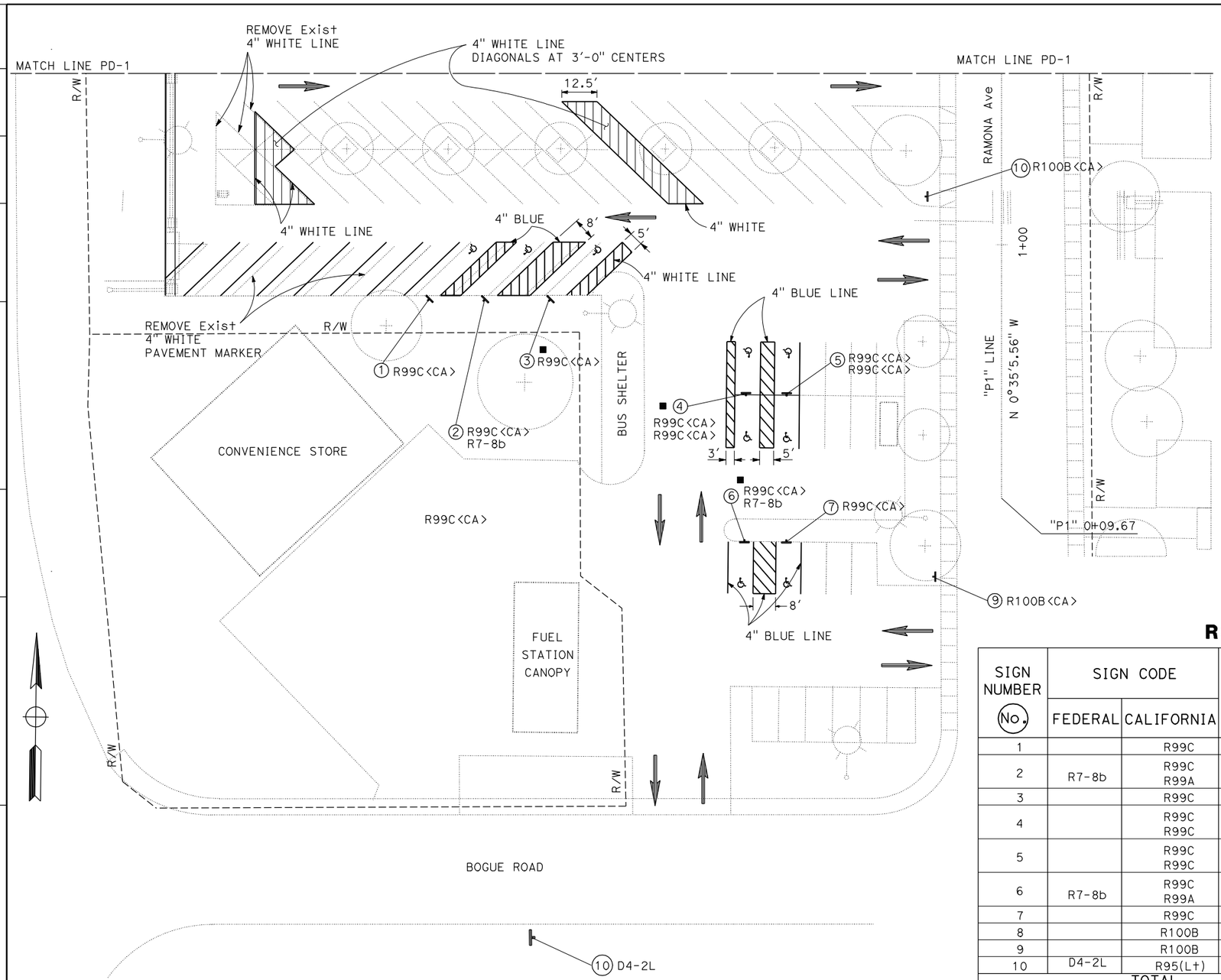

PAVEMENT MARKINGS

DESCRIPTION	PAINT PAVEMENT MARKING (2-COAT)		
	NUMBER	AREA	SQFT
ISA MARKING (WHITE)	9	9	81
ISA MARKING (BLUE)	9	14	126
PARKING STALL (BLUE,4")			154
PARKING STALL (WHITE,4")			1,148
TYPE 1 (10') ARROW	23	14	322
TYPE IV (L) ARROW	2	15	30
PAVEMENT MARKING WORD "COMPACT"	10	2.5	25
PAVEMENT MARKING WORD "NO PARKING"	6	2	12
		TOTAL	1,898

ROADSIDE SIGN QUANTITIES

SIGN NUMBER (No.)	SIGN CODE		PANEL SIZE (INCHES)	"C" DIM IN FEET	POST SIZE AND LENGTH		ROADSIDE SIGN	INSTALL ROADSIDE SIGN PANEL ON EXISTING POST (EACH)	REMARKS
	FEDERAL	CALIFORNIA			4"x4"	4"x6"	ONE POST (EACH)		
1		R99C	12 x 24	7	14'		1		
2	R7-8b	R99C R99A	12 x 24 12 x 6	7	14'		1		
3		R99C	12 x 24	7	14'			1	REMOVE R99<CA>
4		R99C R99C	12 x 24 12 x 24	7	14'			1 1	BACK TO BACK REMOVE R99<CA>
5		R99C R99C	12 x 24 12 x 24	7	14'		1		BACK TO BACK
6	R7-8b	R99C R99A	12 x 24 12 x 6	7	14'			1	REMOVE R99<CA>
7		R99C	12 x 24	7	14'		1		
8		R100B	24 x 24	5	12'		1		
9		R100B	24 x 24	5	12'		1		
10	D4-2L	R95(Lt)	30 x 36	7		14'	1		
TOTAL							7	4	———

NOTES:

1. EXACT LOCATION AND POSITION OF ROADSIDE SIGNS TO BE DETERMINED BY THE ENGINEER.
2. POST LENGTHS GIVEN ARE APPROXIMATE.
3. "C" DIM = VERTICAL CLEARANCE EP TO BOTTOM OF SIGN PANEL.

REMOVE PAVEMENT MARKINGS

DESCRIPTION	UNIT	QUANTITY
REMOVE PAINTED PAVEMENT MARKING	SQFT	280

PAVEMENT DELINEATION, SIGN PLAN AND QUANTITIES

SCALE 1"=20'

PD-2

STATE OF CALIFORNIA - DEPARTMENT OF TRANSPORTATION
Caltrans® DIVISION OF ENGINEERING

FUNCTIONAL SUPERVISOR: AMY FONG
CALCULATED-DESIGNED BY: HUAN CUNG
CHECKED BY
REVISED BY
DATE REVISED

LAST REVISION 01-20-11
DATE PLOTTED => 02-AUG-2011
TIME PLOTTED => 08:21

Dist	COUNTY	ROUTE	POST MILES TOTAL PROJECT	SHEET No.	TOTAL SHEETS
03	Sut	99	27.7	15	45

REGISTERED CIVIL ENGINEER 5-19-11 DATE

6-13-11
PLANS APPROVAL DATE

REGISTERED PROFESSIONAL ENGINEER HUAN M. CUNG No. 74406 Exp. 9-30-11 CIVIL STATE OF CALIFORNIA

THE STATE OF CALIFORNIA OR ITS OFFICERS OR AGENTS SHALL NOT BE RESPONSIBLE FOR THE ACCURACY OR COMPLETENESS OF SCANNED COPIES OF THIS PLAN SHEET.

EARTHWORK AND STRUCTURAL SECTION QUANTITIES

ITEM	UNIT	QUANTITY
ROADWAY EXCAVATION	CY	2,330
ROADWAY EMBANKMENT (N)	CY	905
CLASS 2 AGGREGATE BASE	CY	1,190
HOT MIX ASPHALT (TYPE A)	TON	850
REPLACE ASPHALT CONCRETE SURFACING	CY	325
REMOVE ASPHALT CONCRETE SURFACING	CY	24
ASPHALTIC EMULSION (FOG SEAL COAT)	TON	1

(N) - NOT A SEPARATE PAY ITEM, FOR INFORMATION ONLY

CURB AND SIDEWALK

LOCATION	REMOVE CONCRETE CURB	MINOR CONCRETE (CURB) TYPE A1-6	MINOR CONCRETE (SIDEWALK)	MINOR CONCRETE (Misc Const)
	LF	CY	CY	CY
7.4' R+ "L1" 0+98.2 TO 7.0' R+ "L1" 1+82.4	84.2			
CURB SYSTEM A		2.3		
CURB SYSTEM B		2.0		0.3
CURB SYSTEM C		2.4		0.6
CURB SYSTEM D		1.1		0.6
CURB SYSTEM E		1.2		0.5
CURB SYSTEM G		2.7		0.6
CURB SYSTEM H		2.3		0.6
CURB SYSTEM I		1.8	86.1	0.5
13.4' L+ "L1" 1+22.5 TO 41.7' L+ "L1" 1+22.5		0.8		
47.0' L+ "L1" 1+22.5 TO 90.4' L+ "L1" 1+22.5		1.1		
93.9' L+ "L1" 1+22.5 TO 114.9' L+ "L1" 1+22.5		0.5		
118.6' L+ "L1" 1+22.5 TO 165.8' L+ "L1" 1+22.5		1.2		
165.8' L+ "L1" 1+22.5 TO 173.8' L+ "L1" 3+74.6		6.8		
173.8' L+ "L1" 3+88.4 TO 18.0' R+ "P1" 3+59.1		0.9		
18.0' R+ "P1" 3+59.1 TO 28.6' R+ "P1" 1+95.6		5.1		
"L1" 1+96.5 TO 7.1' R+ "L1" 2+59.3		1.9		
7.1' R+ "L1" 2+66.0 TO "L1" 3+61.6		2.7		
"L1" 2+63.0 (7' x 6' CONCRETE PAD)			0.9	
TOTAL	84.2	36.8	87.0	3.7

GRAVEL (MISCELLANEOUS AREAS)

LOCATION	QUANTITY
	SQFT
SHEET L-1	492
TOTAL	492

PARKING BUMPER (PRECAST CONCRETE)

LOCATION	QUANTITY
	EA
SHEET L-1	37
TOTAL	37

HEADER BOARD FOR TREE WELLS

LOCATION	HEADER BOARD
	LF
53.1 L+ "L1" 2+15.88	36
53.1 L+ "L1" 2+54.50	36
53.1 L+ "L1" 2+92.08	36
53.1 L+ "L1" 3+30.70	36
119 L+ "L1" 2+63.33	40
TOTAL	184

MASONRY BLOCK WALL

LOCATION	LENGTH	SOUND WALL (MASONRY BLOCK)	MINOR CONCRETE (SOUND WALL)
	LF	SQFT	CY
0.95 L+ "L1" 4+25.9 TO 174.1 L+ "L1" 4+25.9	170	1,020	19
TOTAL		1,020	19

REMOVE TREE (N)

LOCATION	QUANTITY
	EA
SHEET L-1	32
TOTAL	32

(N) - NOT A SEPARATE PAY ITEM, FOR INFORMATION ONLY

TYPE III BARRICADE

LOCATION	QUANTITY
	EA
SHEET L-1	3
TOTAL	3

FENCE

LOCATION	REMOVE FENCE	FENCE (TYPE WM, METAL POST) HEIGHT=5'	FENCE (TYPE WM, METAL POST) HEIGHT=6'	5' WIRE MESH GATE	TEMPORARY FENCE (TYPE WM)	TEMPORARY FENCE (TYPE ESA)
	LF	LF	LF	EA	LF	LF
118.2' L+ "L1" 0+97.6 TO 160.2' L+ "L1" 3+72.3	478.7					
120.0' L+ "L1" 0+96.6 TO 182.2' L+ "L1" 1+00.4	64.4					
161.7' L+ "L1" 1+12.6 TO 161.7' L+ "L1" 1+12.6	811.2					
0.9' L+ "L1" 0+83.1 TO 0.3' L+ "L1" 3+73.4	290.4					
0.3' L+ "L1" 3+73.4 TO 2.5' L+ "L1" 4+41.1	67.5					
327.5' L+ "L1" 0+82.8 TO 329.9' L+ "L1" 3+76.3	294.3					
325.3' L+ "L1" 0+67.5 TO 324.6' L+ "L1" 4+25.3			358.4			
173.8' L+ "L1" 0+81.8 TO 173.8' L+ "L1" 3+74.6		292.9		1		
173.8' L+ "L1" 3+88.4 TO 173.8' L+ "L1" 4+25.3		36.9				
171.1' L+ "L1" 4+25.3 TO 324.6' L+ "L1" 4+25.3			153.5			
SEE LAYOUT SHEET L-1					329	365
SUBTOTAL		329.8	511.9			
TOTAL	2,006.5	841.7		1	329	365

SUMMARY OF QUANTITIES

Q-1

REVISED BY | DATE REVISED
HUAN CUNG
CALCULATED-DESIGNED BY | CHECKED BY
FUNCTIONAL SUPERVISOR
AMY FONG
STATE OF CALIFORNIA - DEPARTMENT OF TRANSPORTATION
Caltrans DIVISION OF ENGINEERING

LAST REVISION 01-20-11 | DATE PLOTTED => 02-AUG-2011 | TIME PLOTTED => 08:21

Dist	COUNTY	ROUTE	POST MILES TOTAL PROJECT	SHEET No.	TOTAL SHEETS
03	SUT	99	27.7	16	45

LICENSED LANDSCAPE ARCHITECT

6-13-11
PLANS APPROVAL DATE

LICENSED LANDSCAPE ARCHITECT JAMES G. WILLIAMSON No. 5415 Signature 02-29-12 Renewal Date 05-26-11 Date STATE OF CALIFORNIA

THE STATE OF CALIFORNIA OR ITS OFFICERS OR AGENTS SHALL NOT BE RESPONSIBLE FOR THE ACCURACY OR COMPLETENESS OF SCANNED COPIES OF THIS PLAN SHEET.

ABBREVIATIONS:

AMEND — amendment
B & B — balled and burlapped
Dia — diameter
EA — each
LB — pound
Oz — ounce
Ft — foot/feet
SQFT — square feet
SQYD — square yard
CF — cubic feet
CY — cubic yard
Max — maximum
Min — minimum
NCN — no common name
No. — number
Pkt — packet
PLT ESTB — plant establishment
Pvmt — pavement
R/W — right of way
SF — state furnished
TRVD — traveled

PLANT LIST AND PLANTING SPECIFICATIONS

PLANT GROUP	PLANT No.	SYMBOL	BOTANICAL NAME	COMMON NAME	SIZE	QUANTITY EACH	HOLE SIZE (INCH) Dia	HOLE SIZE (INCH) DEPTH	BASIN TYPE	IRON SULFATE ①	SOIL AMEND ①	COMMERCIAL FERTILIZER ① PLANTING	COMMERCIAL FERTILIZER ① PLT ESTB	BASIN MULCH (CY)	STAKING	PLANTING LIMITS MINIMUM DISTANCE (Ft) FROM TRVD WAY	PVMT	FENCE	WALL	PAVED DITCH	EARTH DITCH	ON CENTER (Ft)	REMARKS
A	1	⊕	DIETES BICOLOR	FORTNIGHT LILY	NO. 1	59	③	③	I	--	1 CF	1 PKT	0.5 LB	1 CF	--	--	2	4	3	--	--	3.5	SHRUB
	2	◉	MUHLENBERGIA RIGENS	DEER GRASS	NO. 1	60	③	③	I	--	1 CF	1 PKT	0.5 LB	1 CF	--	--	2	--	--	--	--	3	SHRUB
	3	▬	PARTHENOCISSUS TRICUSPIDATA	BOSTON IVY	NO. 1	21	③	③	I	--	1 CF	1 PKT	0.5 LB	1 CF	⑦	--	--	--	--	--	--	8	VINE
	4	◬	PITTOSPORUM TOBIRA 'WHEELER'S DWARF'	WHEELER'S DWARF TOBIRA	NO. 1	77	③	③	I	--	1 CF	1 PKT	0.5 LB	1 CF	--	--	2	--	4	--	--	4	SHRUB
T	5	▭	TURF (SOD)		TURF (SOD)	633 SQYD	--	--	--	--	2" DEPTH	⑤	15 LBS/ 1000 SQFT	--	--	--	--	--	--	--	--	--	TURF (SOD)
U	6	⬡	ACER RUBRUM 'OCTOBER GLORY'	RED MAPLE	No. 15	21	36	24	--	--	2 CF	2 PKT	1 LB	--	⑦	--	3	4	--	--	--	22	TREE
	7	✲	QUERCUS COCCINEA	SCARLET OAK	No. 15	11	36	24	--	--	2 CF	2 PKT	1 LB	--	⑦	--	3	--	5	--	--	--	TREE
	8	◻	QUERCUS ILEX	HOLLY OAK	No. 15	10	36	24	--	--	2 CF	2 PKT	1 LB	--	⑦	--	3	--	--	--	--	--	TREE
	9	✲	ZELKOVA SERRATA	ZELKOVA	No. 15	18	36	24	--	--	2 CF	2 PKT	1 LB	--	⑦	--	4	--	5	--	--	22	TREE

APPLICABLE WHEN CIRCLED:

① - Quantities shown are "per plant" unless shown as SQFT or SQYD application rates
2 - Basin mulch is included with mulch quantities shown on Planting Plan
③ - Sufficient to receive root ball and amendments if required
4 - See Detail
⑤ - See Special Provisions
6 - See Standard Specifications
⑦ - As shown on plans
8 - Unless otherwise shown on plans
9 - Foliage Protector required
10 - Root Protector required
11 - Root Barrier required
12 - State-Furnished

LEGEND:

- DECOMPOSTED GRANITE
- MULCH (3" DEPTH)

NOTE:

Underlined portions of botanical name indicate abbreviations used on Planting Plans.

PLANT LIST

PL-1

REVISED BY | DATE REVISED
J. WILLIAMSON
CALCULATED-DESIGNED BY | CHECKED BY
SENIOR LANDSCAPE ARCHITECT
T. CHRIS JOHNSON
STATE OF CALIFORNIA - DEPARTMENT OF TRANSPORTATION
Caltrans® LANDSCAPE ARCHITECTURE

LAST REVISION 02-28-11
DATE PLOTTED => 02-AUG-2011
TIME PLOTTED => 08:21

Dist	COUNTY	ROUTE	POST MILES TOTAL PROJECT	SHEET No.	TOTAL SHEETS
03	Sut	99	27.7	17	45

LICENSED LANDSCAPE ARCHITECT

6-13-11
PLANS APPROVAL DATE

LICENSED LANDSCAPE ARCHITECT
JAMES G. WILLIAMSON
No. 5415
Signature
02-28-12
Renewal Date
05-26-11
Date
STATE OF CALIFORNIA

THE STATE OF CALIFORNIA OR ITS OFFICERS OR AGENTS SHALL NOT BE RESPONSIBLE FOR THE ACCURACY OR COMPLETENESS OF SCANNED COPIES OF THIS PLAN SHEET.

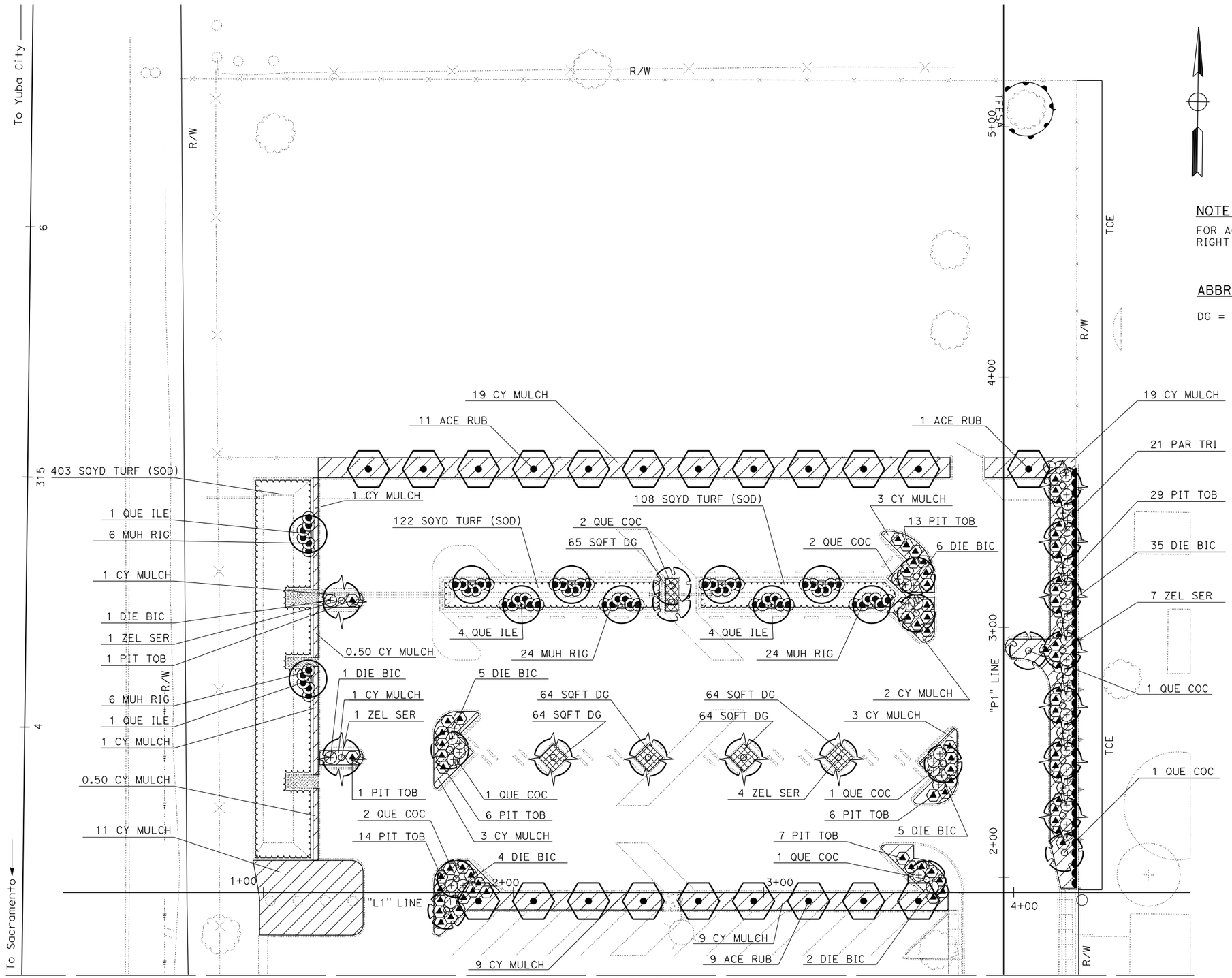

MATCH TO SHEET PP-2

THIS PLAN ACCURATE FOR PLANTING WORK ONLY

NOTE:

FOR ACCURATE RIGHT OF WAY DATA, CONTACT RIGHT OF WAY ENGINEERING AT THE DISTRICT OFFICE.

ABBREVIATION:

DG = DECOMPOSED GRANITE (MISCELLANEOUS AREAS)

PLANTING PLAN

SCALE 1"=20'

PP-1

CALCULATED-DESIGNED BY	J. WILLIAMSON	REVISED BY	
CHECKED BY		DATE REVISED	

SENIOR LANDSCAPE ARCHITECT: T. CHRIS JOHNSON

STATE OF CALIFORNIA - DEPARTMENT OF TRANSPORTATION
Caltrans®
LANDSCAPE ARCHITECTURE

LAST REVISION 02-28-11 | DATE PLOTTED => 02-AUG-2011 | TIME PLOTTED => 08:21

Dist	COUNTY	ROUTE	POST MILES TOTAL PROJECT	SHEET No.	TOTAL SHEETS
03	Sut	99	27.7	18	45

LICENSED LANDSCAPE ARCHITECT

6-13-11
PLANS APPROVAL DATE

LICENSED LANDSCAPE ARCHITECT
JAMES G. WILLIAMSON
No. 5415
Signature
02-29-12
Renewal Date
05-26-11
Date
STATE OF CALIFORNIA

THE STATE OF CALIFORNIA OR ITS OFFICERS OR AGENTS SHALL NOT BE RESPONSIBLE FOR THE ACCURACY OR COMPLETENESS OF SCANNED COPIES OF THIS PLAN SHEET.

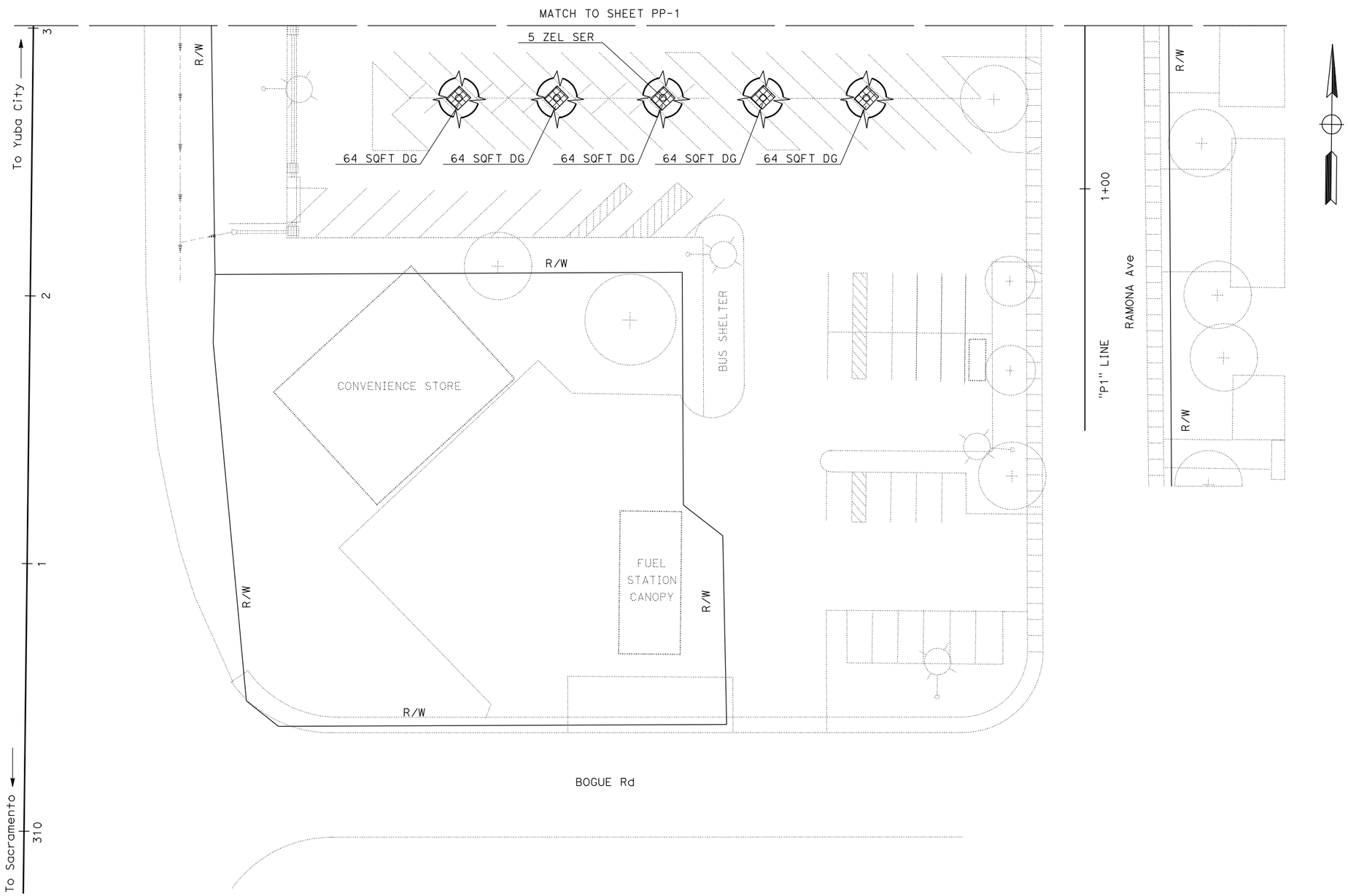

PLANTING PLAN

SCALE 1"=20'

THIS PLAN ACCURATE FOR PLANTING WORK ONLY

PP-2

STATE OF CALIFORNIA - DEPARTMENT OF TRANSPORTATION
Caltrans
LANDSCAPE ARCHITECTURE

SENIOR LANDSCAPE ARCHITECT: T. CHRIS JOHNSON

CALCULATED-DESIGNED BY: J. WILLIAMSON
CHECKED BY

REVISED BY
DATE REVISED

LAST REVISION 02-28-11
DATE PLOTTED => 02-AUG-2011
TIME PLOTTED => 08:21

Dist	COUNTY	ROUTE	POST MILES TOTAL PROJECT	SHEET No.	TOTAL SHEETS
03	Sut	99	27.7	19	45

LICENSED LANDSCAPE ARCHITECT

6-13-11
PLANS APPROVAL DATE

LICENSED LANDSCAPE ARCHITECT
JAMES G. WILLIAMSON
No. 5415
Signature
02-28-12
Renewal Date
05-26-11
Date
STATE OF CALIFORNIA

THE STATE OF CALIFORNIA OR ITS OFFICERS OR AGENTS SHALL NOT BE RESPONSIBLE FOR THE ACCURACY OR COMPLETENESS OF SCANNED COPIES OF THIS PLAN SHEET.

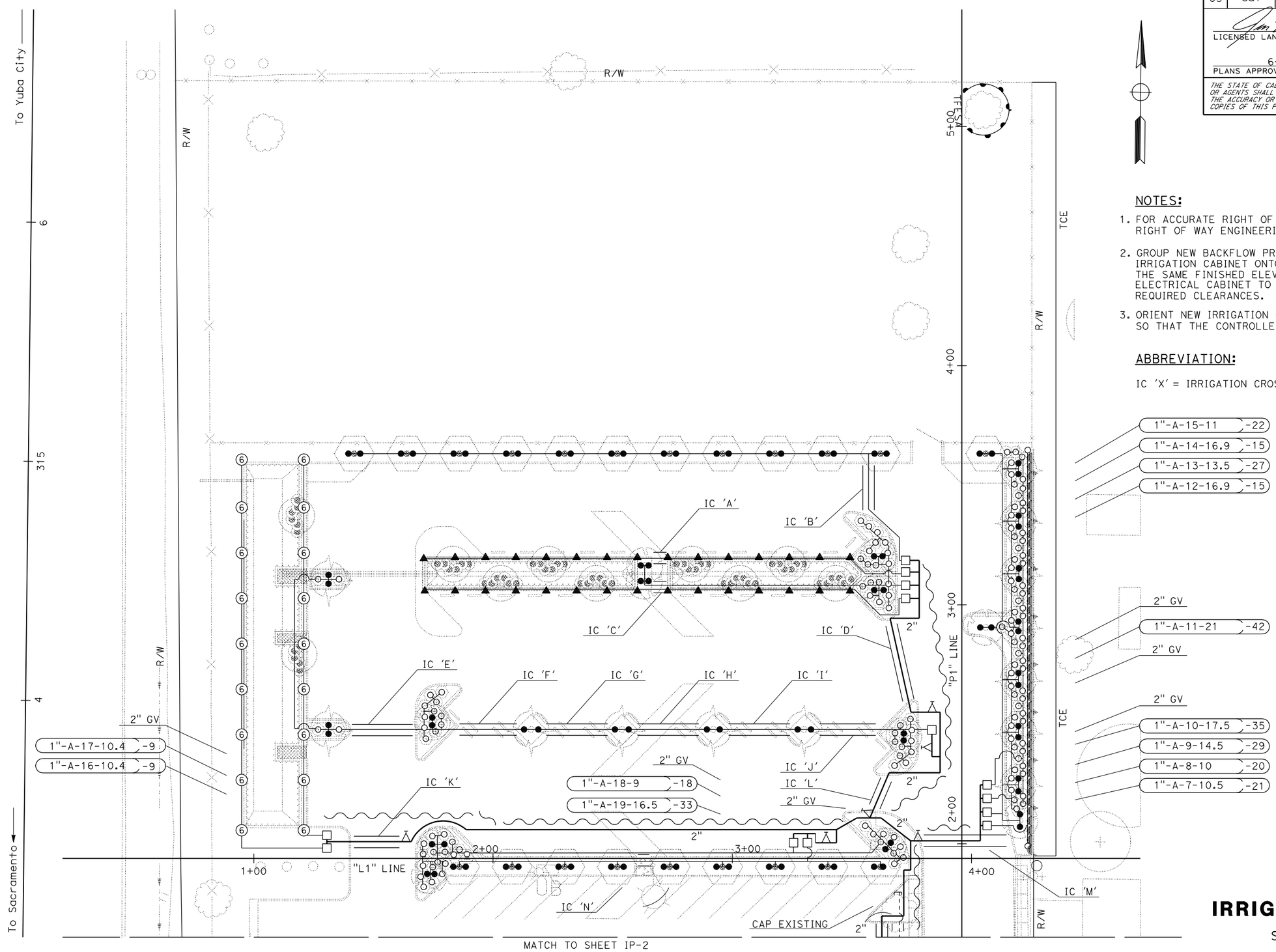

MATCH TO SHEET IP-2

THIS PLAN ACCURATE FOR IRRIGATION WORK ONLY

NOTES:

1. FOR ACCURATE RIGHT OF WAY DATA, CONTACT RIGHT OF WAY ENGINEERING AT THE DISTRICT OFFICE.
2. GROUP NEW BACKFLOW PREVENTOR ASSEMBLY AND IRRIGATION CABINET ONTO A SINGLE PCC PAD, AT THE SAME FINISHED ELEVATION AS THE EXISTING ELECTRICAL CABINET TO REMAIN. MAINTAIN ALL REQUIRED CLEARANCES.
3. ORIENT NEW IRRIGATION CONTROLLER CABINET SO THAT THE CONTROLLER PANEL FACES SOUTH OR EAST.

ABBREVIATION:

IC 'X' = IRRIGATION CROSSOVER 'IDENTIFICATION'

IRRIGATION PLAN

SCALE 1"=20'

IP-1

STATE OF CALIFORNIA - DEPARTMENT OF TRANSPORTATION
Caltrans® LANDSCAPE ARCHITECTURE

SENIOR LANDSCAPE ARCHITECT: T.CHRIS JOHNSON

CALCULATED-DESIGNED BY: J. WILLIAMSON
CHECKED BY

REVISED BY
DATE REVISED

LAST REVISION 02-28-11
DATE PLOTTED => 02-AUG-2011
TIME PLOTTED => 08:21

Dist	COUNTY	ROUTE	POST MILES TOTAL PROJECT	SHEET No.	TOTAL SHEETS
03	Sut	99	27.7	20	45

LICENSED LANDSCAPE ARCHITECT

6-13-11
PLANS APPROVAL DATE

LICENSED LANDSCAPE ARCHITECT JAMES G. WILLIAMSON No. 5415 Signature 02-28-12 Renewal Date 05-26-11 Date STATE OF CALIFORNIA

THE STATE OF CALIFORNIA OR ITS OFFICERS OR AGENTS SHALL NOT BE RESPONSIBLE FOR THE ACCURACY OR COMPLETENESS OF SCANNED COPIES OF THIS PLAN SHEET.

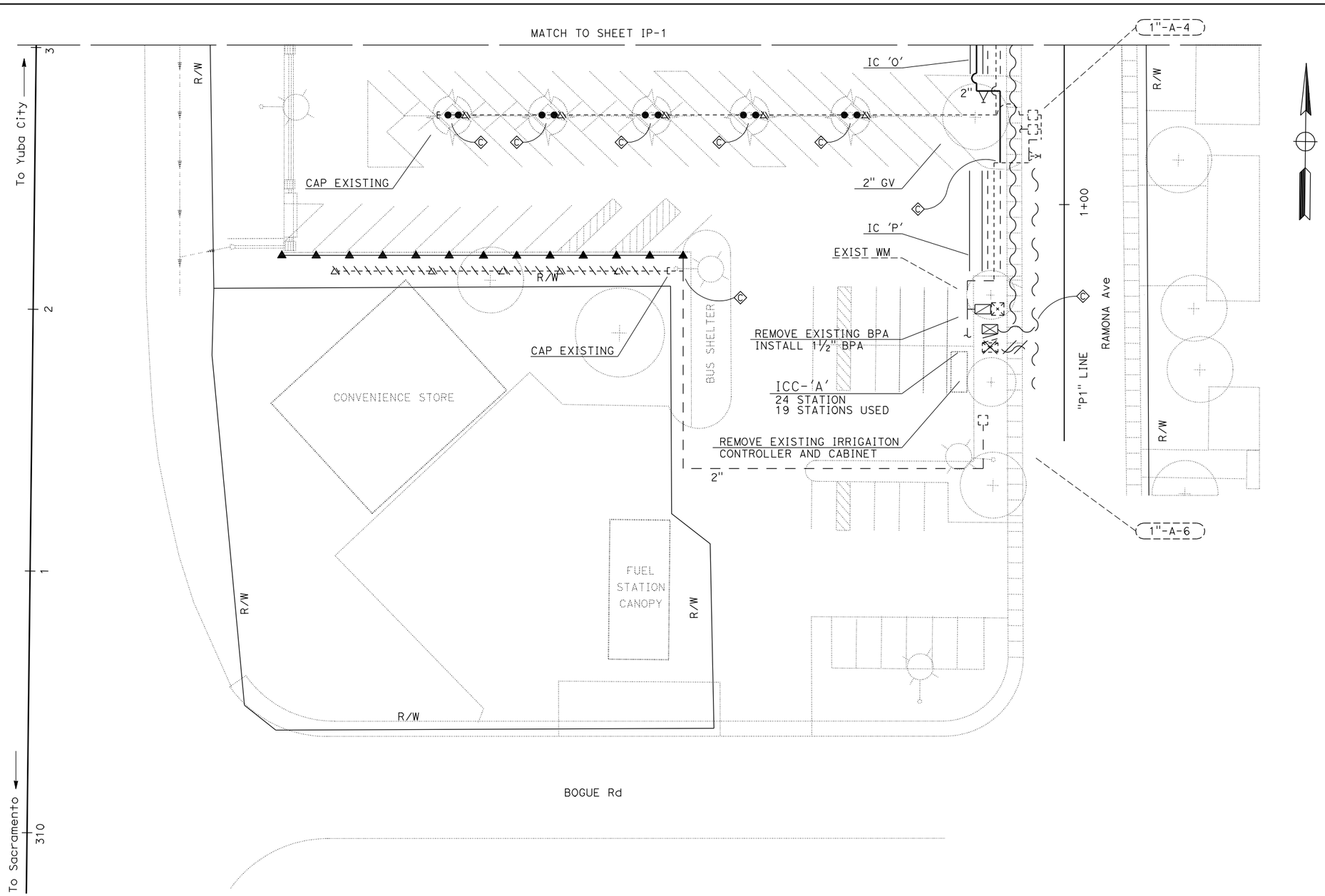

IRRIGATION PLAN

SCALE 1"=20'

IP-2

THIS PLAN ACCURATE FOR IRRIGATION WORK ONLY

REVISED BY	J. WILLIAMSON
DATE REVISED	
CALCULATED-DESIGNED BY	
CHECKED BY	
SENIOR LANDSCAPE ARCHITECT	T. CHRIS JOHNSON

STATE OF CALIFORNIA - DEPARTMENT OF TRANSPORTATION
Caltrans® LANDSCAPE ARCHITECTURE

LAST REVISION 02-28-11 | DATE PLOTTED => 02-AUG-2011 TIME PLOTTED => 08:21

Dist	COUNTY	ROUTE	POST MILES TOTAL PROJECT	SHEET No.	TOTAL SHEETS
03	SUT	99	27.7	21	45

LICENSED LANDSCAPE ARCHITECT

6-13-11
PLANS APPROVAL DATE

LICENSED LANDSCAPE ARCHITECT JAMES G. WILLIAMSON No. 5415 Signature 02-29-12 Renewal Date 05-26-11 Date STATE OF CALIFORNIA

THE STATE OF CALIFORNIA OR ITS OFFICERS OR AGENTS SHALL NOT BE RESPONSIBLE FOR THE ACCURACY OR COMPLETENESS OF SCANNED COPIES OF THIS PLAN SHEET.

SPRINKLER SCHEDULE

SYMBOL	TYPE	DESCRIPTION	SPRAY PATTERN	OPERATING PRESSURE (PSI)	PRESSURE COMPENSATING	PLUS/MINUS 5% ② DISCHARGE: GALLONS PER MINUTE (GPM)	GALLONS PER HOUR (GPH)	RADIUS (Ft)	WIDTH x LENGTH (Ft)	MATERIAL	INLET CONNECTION (NPT INCH)	POSITIVE-LOCKING Adj ARC STOP	BACKSPLASH PREVENTER	DIFFUSER PIN	DISTANCE CONTROL FLAP	ADJ DISCHARGE	RISER: TYPE	MATERIAL: PLASTIC	GALVANIZED	SIZE (IPS INCH)	HEIGHT (INCH)	FLOW SHUTOFF DEVICE	⑤ SWING JOINT (TYPE)	RISER SUPPORT	SPRINKLER PROTECTOR (TYPE)	REMARKS
⑥	A-6	GEAR DRIVEN	Q / H	35	--	1.73 / 0.88	--	24	--	PL	¾	--	--	--	--	--	--	X	--	¾	--	--	II	--	--	12" POP-UP
▲	B-2	SHRUB SPRAY	Q / H	30	X	1.30 / 0.65	--	12	--	PL	½	--	--	--	--	X	VI	FH	--	½	--	--	--	--	--	12" POP-UP
○	C-2	FLOOD BUBBLER	--	30	X	0.50	--	--	--	PL	½	--	--	--	--	--	V	FH	--	½	--	--	--	--	--	BUBBLER ONE PER SHRUB
●	C-2 (Mod)	FLOOD BUBBLER (MODIFIED)	--	30	X	0.50	--	--	--	PL	½	--	--	--	--	--	⑦	X	--	½	--	--	--	--	--	BUBBLER (MODIFIED) TWO PER TREE

X IN BOX DENOTES REQUIREMENT

APPLICABLE WHEN CIRCLED BELOW:

1 - See Special Provisions.
② - If a pressure compensating device is specified, the discharge and radii shown reflect its use.
3 - Arc Stop shall be fitted with a nut and bolt.
4 - Vinyl-coated cast iron housing.
⑤ - Swing Joints required adjacent to shoulders, curbs, sidewalks, and dikes.
6 - Unless otherwise shown on plans.
⑦ - As shown on plans.

ABBREVIATIONS:

F — full circle
P — part circle
F/P — full/part circle
Q — quarter circle
T — third circle
H — half circle
TT — two third circle
TQ — three quarter circle
CST — center strip
SST — side strip
EST — end strip
FH — flexible hose
Ft — feet/foot
GPM — gallons per minute
GPH — gallons per hour
Adj — adjustable
PL — plastic
B/B — brass/bronze
B/PL — brass/plastic
B/B/PL — brass/bronze/plastic
NPT — national pipe thread
IPS — iron pipe size
PSI — pounds per square inch

PIPE SIZING CHART

PIPE SIZINE FOR TYPE A-6 SPRINKLERS

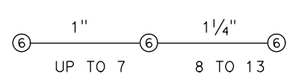

PIPE SIZINE FOR TYPE B-2 SPRINKLERS

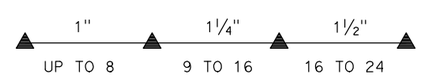

PIPE SIZINE FOR TYPE C-2 SPRINKLERS

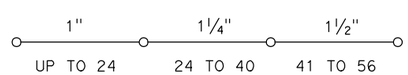

PIPE SIZINE FOR TYPE C-2 (MOD) SPRINKLERS

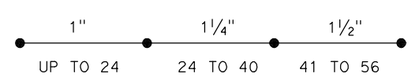

STATE OF CALIFORNIA - DEPARTMENT OF TRANSPORTATION
Caltrans® LANDSCAPE ARCHITECTURE

SENIOR LANDSCAPE ARCHITECT: T. CHRIS JOHNSON

CALCULATED-DESIGNED BY: J. WILLIAMSON
CHECKED BY:

REVISED BY
DATE REVISED

SPRINKLER SCHEDULE
LD-1

LAST REVISION 00-00-00
DATE PLOTTED => 02-AUG-2011
TIME PLOTTED => 08:21

Dist	COUNTY	ROUTE	POST MILES TOTAL PROJECT	SHEET No.	TOTAL SHEETS
03	SUT	99	27.7	22	45

LICENSED LANDSCAPE ARCHITECT

6-13-11
PLANS APPROVAL DATE

LICENSED LANDSCAPE ARCHITECT
JAMES G. WILLIAMSON
No. 5415
Signature
02-28-12
Renewal Date
05-26-11
Date
STATE OF CALIFORNIA

THE STATE OF CALIFORNIA OR ITS OFFICERS OR AGENTS SHALL NOT BE RESPONSIBLE FOR THE ACCURACY OR COMPLETENESS OF SCANNED COPIES OF THIS PLAN SHEET.

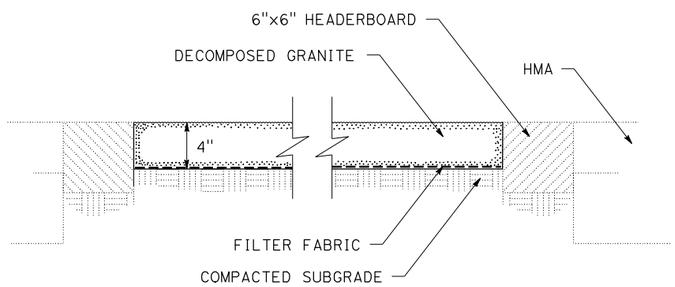

DECOMPOSED GRANITE (MISCELLANEOUS AREAS)

SECTION

LEGEND

1. 3" TO 4" GRATE
2. PRESSURE COMPENSATING BUBBLER
3. TREE WATERING CANISTER
4. FINISH GRADE
5. ½" PVC Sch 80 NIPPLE
6. ½" 90 DEGREE ELBOW
7. ½" SOLVENT WELD IPS HOSE
8. ½" MARLEX St ELL & Sch 40 SXMIPT St ELL
9. PVC Sch 40 TEE OR ELL
10. LATERAL PIPE
11. 18" LENGTH CNISTER (TWO PER TREE)

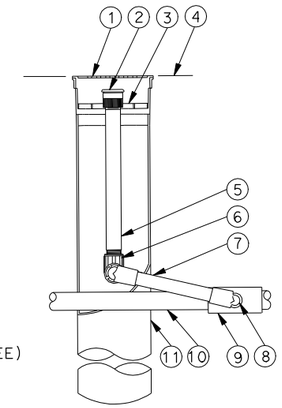

SECTION

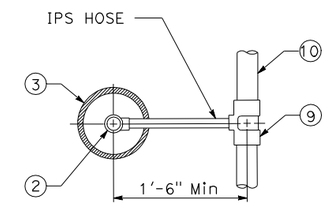

PLAN VIEW

SPRINKLER (TYPE C-2 MODIFIED) DETAIL

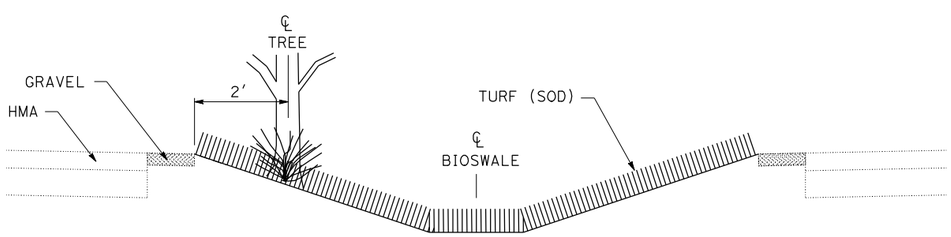

STA. "L1" 01+71.5 TO 02+59.3 Lt
STA. "L1" 02+74.0 TO 03+53+9 Lt

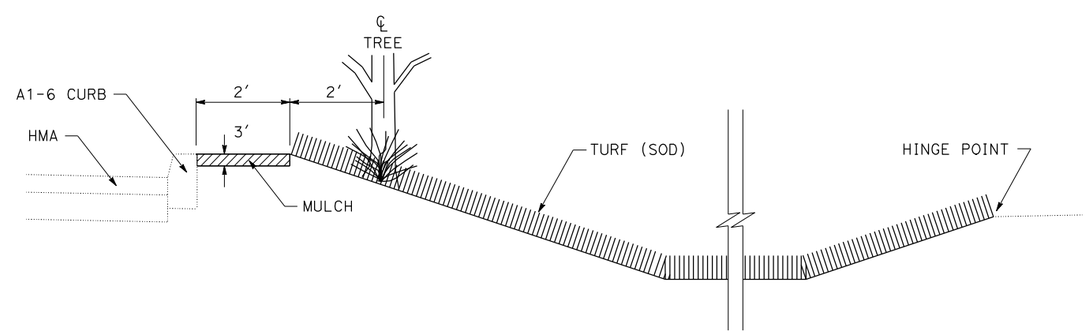

STA. "P1" 02+06.7 TO 03+59.7 Lt

BIOSWALE PLANTING DETAIL

TYPICAL SECTIONS

LANDSCAPE DETAILS
LD-2

REVISED BY	DATE REVISED
J. WILLIAMSON	

CALCULATED-DESIGNED BY
CHECKED BY

SENIOR LANDSCAPE ARCHITECT
T. CHRIS JOHNSON

STATE OF CALIFORNIA - DEPARTMENT OF TRANSPORTATION
Caltrans® LANDSCAPE ARCHITECTURE

LAST REVISION 02-28-11
DATE PLOTTED => 02-AUG-2011
TIME PLOTTED => 08:21

Dist	COUNTY	ROUTE	POST MILES TOTAL PROJECT	SHEET No.	TOTAL SHEETS
03	SUT	99	27.7	23	45

LICENSED LANDSCAPE ARCHITECT

6-13-11
PLANS APPROVAL DATE

LICENSED LANDSCAPE ARCHITECT
JAMES G. WILLIAMSON
No. 5415
Signature
02-29-12
Renewal Date
05-26-11
Date
STATE OF CALIFORNIA

THE STATE OF CALIFORNIA OR ITS OFFICERS OR AGENTS SHALL NOT BE RESPONSIBLE FOR THE ACCURACY OR COMPLETENESS OF SCANNED COPIES OF THIS PLAN SHEET.

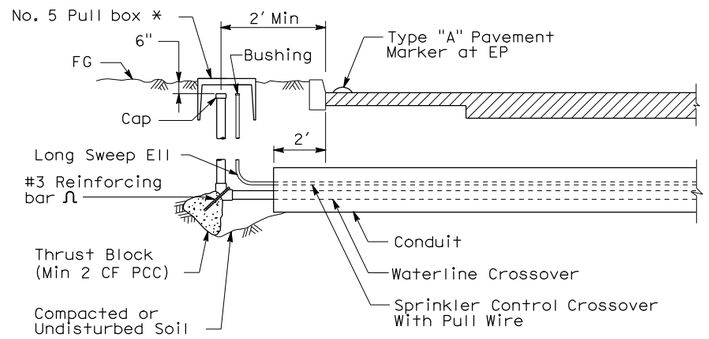

* - SEE IRRIGATION CROSSOVER TABLE

SECTION

IRRIGATION CROSSOVER

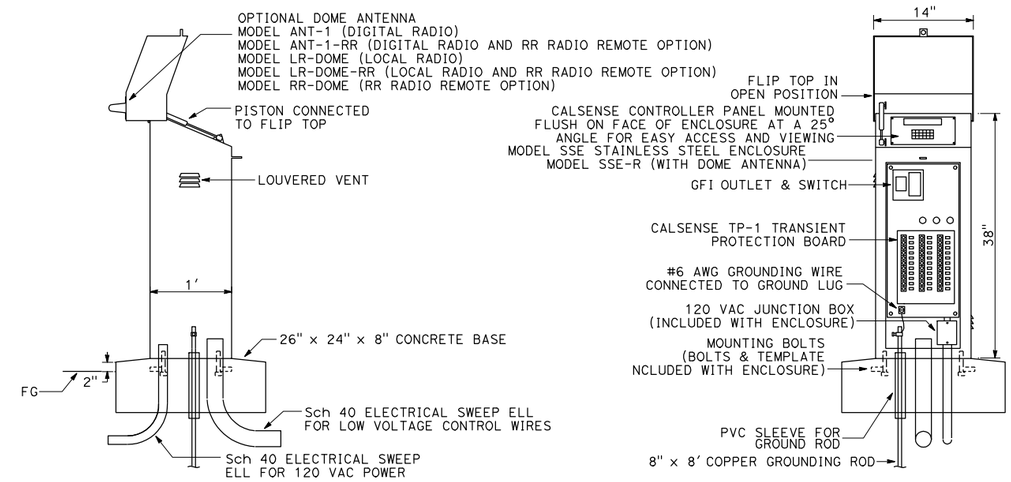

CALSENSE PRE-ASSEMBLED ENCLOSURE INSTALLATION DETAIL

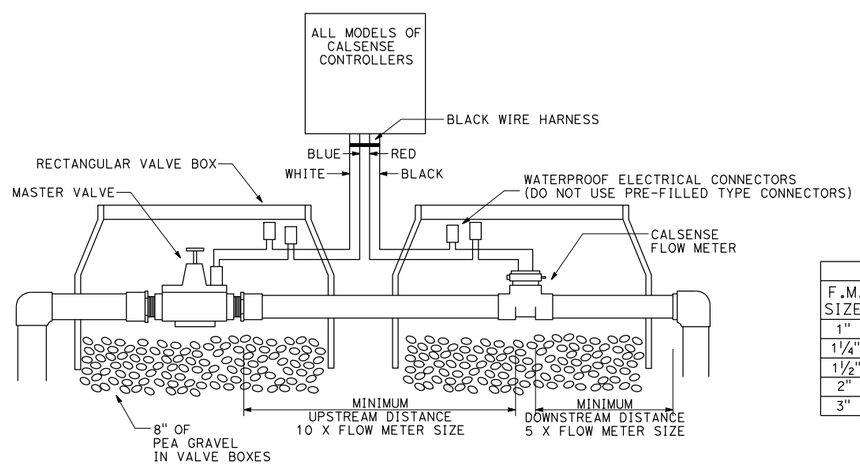

FLOW METER INSTALLATION

PIPE SIZING CHART		
F.M. SIZE	UPSTREAM LENGTH	DOWNSTREAM LENGTH
1"	10"	5"
1¼"	12½"	6¼"
1½"	15"	7½"
2"	20"	10"
3"	30"	15"

LANDSCAPE DETAILS
LD-3

STATE OF CALIFORNIA - DEPARTMENT OF TRANSPORTATION
Caltrans® LANDSCAPE ARCHITECTURE

SENIOR LANDSCAPE ARCHITECT: T. CHRIS JOHNSON
CALCULATED-DESIGNED BY: J. WILLIAMSON
CHECKED BY
REVISED BY
DATE REVISED

LAST REVISION 02-28-11
DATE PLOTTED => 02-AUG-2011
TIME PLOTTED => 08:21

Dist	COUNTY	ROUTE	POST MILES TOTAL PROJECT	SHEET No.	TOTAL SHEETS
03	SUT	99	27.7	24	45

LICENSED LANDSCAPE ARCHITECT

6-13-11
PLANS APPROVAL DATE

LICENSED LANDSCAPE ARCHITECT JAMES G. WILLIAMSON No. 5415 Signature 02-29-12 Renewal Date 05-26-11 Date STATE OF CALIFORNIA

THE STATE OF CALIFORNIA OR ITS OFFICERS OR AGENTS SHALL NOT BE RESPONSIBLE FOR THE ACCURACY OR COMPLETENESS OF SCANNED COPIES OF THIS PLAN SHEET.

IRRIGATION CROSSOVERS

DESIGNATION	CONDUIT TYPE (1) SIZE (INCH) 4	CONDUIT TYPE (1) SIZE (INCH) 8	(N) WATER LINE CROSSOVER SIZE (INCH)	(N) SPRINKLER CONTROL CROSSOVER SIZE (INCH)	(N) PULL BOXS
	LENGTH (LF)				
A	11		1	--	
B	26		1	--	
C	11		1 (x2)	--	
D		39	2	1	X
E	31		1	--	
F	29		1	--	
G	29		1	--	
H	29		1 1/4	--	
I	29		1 1/4	--	
J	29		1 1/4	--	
K		31	2	1	X
L		20	2	1	X
M		42	2	1	X
N		12	2, 1 (x2)	1	X
O		21	2	1	X
P	45		--	1	X
TOTAL	269	165			

(N) - NOT A SEPARATE PAY ITEM FOR INFORMATION ONLY

X IN BOX DENOTES REQUIREMENT

CONDUIT TYPE:

(Applicable when circled below and shown under the 'CONDUIT TYPE' column heading)

(1) ALTERNATIVE CONDUIT

DECOMPOSED GRANITE QUANTITY

SHEET	STATION	DECOMPOSED GRANITE (MISCELLANEOUS AREAS)	(N) FILTER FABRIC
		SQFT	SQFT
PP-1	"P1" 03+07 TO "P1" 03+20	65	65
PP-1	"L1" 02+10 TO "L1" 02+22	64	64
PP-1	"L1" 02+48 TO "L1" 02+60	64	64
PP-1	"L1" 02+87 TO "L1" 02+98	64	64
PP-1	"L1" 03+25 TO "L1" 02+36	64	64
PP-2	"L1" 01+57 TO "L1" 01+67	64	64
PP-2	"L1" 01+94 TO "L1" 02+03	64	64
PP-2	"L1" 02+34 TO "L1" 02+43	64	64
PP-2	"L1" 02+71 TO "L1" 02+80	64	64
PP-2	"L1" 03+08 TO "L1" 03+19	64	64
	SUBTOTAL	641	641
	TOTAL	641	

(N) - NOT A SEPARATE PAY ITEM, FOR INFORMATION ONLY

LANDSCAPE DETAILS
LD-4

REVISED BY | DATE REVISED

J. WILLIAMSON

CALCULATED-DESIGNED BY | CHECKED BY

SENIOR LANDSCAPE ARCHITECT

T. CHRIS JOHNSON

STATE OF CALIFORNIA - DEPARTMENT OF TRANSPORTATION

Caltrans® LANDSCAPE ARCHITECTURE

LAST REVISION 02-28-11 | DATE PLOTTED => 02-AUG-2011 TIME PLOTTED => 08:21

DIST.	COUNTY	ROUTE	POST MILES TOTAL PROJECT	SHEET NO.	TOTAL SHEETS
03	Sut	99	27.7	25	45

REGISTERED ELECTRICAL ENGINEER — 07-28-10 DATE

REGISTERED PROFESSIONAL ENGINEER — J. ABDELSAYED — No. 18915 — Exp. 12-31-11 — ELEC — STATE OF CALIFORNIA

6-13-11
PLANS APPROVAL DATE

The State of California or its officers or agents shall not be responsible for the accuracy or completeness of electronic copies of this plan sheet.

GRAPHIC SYMBOLS FOR ELECTRICAL WIRING AND LAYOUT DIAGRAMS

SYMBOL	DESCRIPTION
	POLE-TOP ELECTROLIER
	POLE-ARM ELECTROLIER
CEILING WALL	
(S) -(S)	SURFACE FLUORESCENT, METAL HALIDE OR SODIUM VAPOR FIXTURE
(R) -(R)	RECESSED FLUORESCENT, METAL HALIDE, OR SODIUM VAPOR FIXTURE
(X) -(X)	EXIT LIGHT
	SURFACE OR PENDANT INDIVIDUAL FLUORESCENT FIXTURE
R	RECESSED INDIVIDUAL FLUORESCENT FIXTURE
	SURFACE OR PENDANT CONTINUOUS ROW FLUORESCENT FIXTURES

NOTE: A LOWER CASE LETTER NEAR GRAPHIC LIGHTING FIXTURE SYMBOL DENOTES THAT FIXTURE IS CONTROLLED BY A SIMILARLY MARKED SWITCH, AN ALPHA-NUMERIC SYMBOL NEAR GRAPHIC LIGHTING FIXTURE SYMBOL DENOTES FIXTURE TYPE, (I=INCANDESCENT, F=FLUORESCENT, MH=METAL HALIDE, H=HIGH PRESSURE SODIUM VAPOR), DESIGN TYPE, NUMBER OF LAMPS AND WATTAGE.

EXAMPLE : (4) F 2 - 2 x 32
- 32 WATT LAMPS
- 2 LAMPS
- DESIGN TYPE
- FLUORESCENT
- NUMBER OF FIXTURES

SYMBOL	DESCRIPTION
(B) -(B)	BLANK OUTLET
(J) -(J)	JUNCTION BOX
(D)	DROP CORD
	SINGLE RECEPTACLE OUTLET
	DUPLEX RECEPTACLE OUTLET
(GFCI)	DUPLEX RECEPTACLE OUTLET (WITH GFCI)
(GFCI) WP	DUPLEX RECEPTACLE OUTLET, WEATHERPROOF (WITH GFCI)
	SINGLE, SPECIAL PURPOSE RECEPTACLE OUTLET
	DUPLEX, SPECIAL PURPOSE RECEPTACLE OUTLET
R	RANGE OUTLET
(C)	CLOCK HANGER RECEPTACLE
(F)	FAN HANGER RECEPTACLE
	FLOOR SINGLE RECEPTACLE OUTLET
	FLOOR DUPLEX RECEPTACLE OUTLET
	FLOOR SPECIAL PURPOSE OUTLET
	FLOOR RADIO OUTLET
	FLOOR TELEPHONE OUTLET
	MULTI-FLOOR OUTLET, 2 OR MORE GANG
	MULTI-OUTLET ASSEMBLY
S	SINGLE POLE SWITCH
S_2	DOUBLE POLE SWITCH
S_3	THREE WAY SWITCH
S_4	FOUR WAY SWITCH
S_D	AUTOMATIC DOOR
S_K	KEY OPERATED SWITCH
S_P	SWITCH AND PILOT LIGHT
S_{MC}	MOMENTARY CONTACT SWITCH
S_{RC}	REMOTE CONTROL SWITCH
S_{WP}	WEATHERPROOF SWITCH
S_F	FAN SWITCH
S_L	LIGHT SWITCH
S_H	HEATER SWITCH
S_{VS}	VARIABLE SPEED MOTOR CONTROL SWITCH
S_{CHLF}	TWO TIMER SWITCHES, ONE SWITCH FOR LIGHT AND FAN AND ONE SWITCH FOR HEAT LAMP

SYMBOL	DESCRIPTION
S^{O}_{1}	OCCUPANCY SENSOR WALL SWITCH, SINGLE LEVEL
S^{O}_{2}	OCCUPANCY SENSOR WALL SWITCH, BILEVEL
S_M	MOTION SENSOR SWITCH
S_T	MANUAL MOTOR STARTING SWITCH, THERMAL OVERLOAD TYPE
S_{HP}	MANUAL MOTOR STARTING SWITCH, WITHOUT OVERLOAD ELEMENT
Ts	TIMER SWITCH
S_S	SWITCH AND SINGLE RECEPTACLE
S_S	SWITCH AND DUPLEX RECEPTACLE
	HAND DRYER NOZZLE
H	HAND DRYER
	RADIO OUTLET
	COMMUNICATION OUTLET
	SOUND SYSTEM LOUD SPEAKER OUTLET
	PUSHBUTTON
L	PUSHBUTTON STATION, NC, WITH LOCKING DEVICE FOR OPEN
	PUSHBUTTON STATION MOTOR CONTROL
	BUZZER
	BELL
	COMBINATION BELL-BUZZER
T	THERMOSTAT
PS	PRESSURE SWITCH
R	CONTROL RELAY
FS	FLOW SWITCH
PEC	PHOTOELECTRIC CELL
R	RADIO OUTLET
TV	TELEVISION OUTLET
M	MICROPHONE OUTLET
	FLUSH-MOUNTED PANELBOARD AND CABINET
	SURFACE-MOUNTED PANELBOARD AND CABINET
	LIGHTING PANEL
	POWER PANEL
	COMBINATION LIGHTING AND POWER
MC	MOTOR CONTROLLER
	DISCONNECT SWITCH
	CONDUIT CONCEALED IN CEILING OR WALL
	CONDUIT CONCEALED IN FLOOR
	CONDUIT EXPOSED
	CROSS-LINES INDICATE NUMBER OF #12 AWG CONDUCTORS. LONGER CROSS-LINE INDICATES 1#12 AWG (G) FOR EQUIPMENT GROUNDING CONDUCTOR. NO CROSS-LINE INDICATES 2#12 WITH 1#12 (G) UNLESS OTHERWISE NOTED. ALL CONDUIT ½" UNLESS OTHERWISE NOTED.
A, 2	HOMERUN TO PANELBOARD, ARROWS INDICATE NUMBER OF CIRCUITS, LETTER DENOTES PANEL-BOARD, NUMERAL DENOTES CIRCUIT.
SM	SURFACE METAL RACEWAY

(2) ½"C, PVC, 2#12
- CONDUCTOR INFO (PER CONDUIT)
- CONDUIT TYPE
- CONDUIT SIZE
- NUMBER OF CONDUITS (NO NUMBER INDICATES ONE CONDUIT)

SYMBOL	DESCRIPTION
MC	CONDUIT, RIGID STEEL, UNDERGROUND
PVC	CONDUIT, POLYVINYL CHLORIDE, UNDERGROUND
	CONDUIT, FLEXIBLE
	CONDUIT, TURN UP
	CONDUIT, TURN DOWN
	CONDUIT SEAL, EXPLOSION-PROOF
X	CONDUIT, EXPANSION JOINT
	ADAPTER, ONE TYPE CONDUIT TO ANOTHER
	POLE

SYMBOL	DESCRIPTION
OC	OCCUPANCY SENSOR
P	OCCUPANCY SENSOR POWER PACK
H	HEAT DETECTOR
S	SMOKE DETECTOR
P	MANUAL PULL STATION
AV	AUDIO/VISUAL ALARM DEVICE
G	GLASS BREAK DISCRIMINATOR
C	MAGNETIC CONTACT SWITCH-PEDESTRIAN DOOR
C	MAGNETIC CONTACT SWITCH-VEHICLE DOOR
K	KEYPAD FOR ALARM SYSTEM
W	COMBINATION DETECTOR (MICROWAVE/PASSIVE INFRARED)
	PULL BOX-LETTER INDICATES TYPE OF PULL BOX (E-ELECTRICAL, T-TELEPHONE, R-RADIO)
(T)	PULL BOX (TRAFFIC RATED)-LETTER INDICATES TYPE OF PULL BOX (E-ELECTRICAL, T-TELEPHONE, R-RADIO)
CHLF	COMBINATION HEAT, LIGHT AND FAN UNIT
A	SECTION/ELEVATION LETTER
EE-2	SHEET NUMBER
1	DETAIL NUMBER
EE-2	SHEET NUMBER

REMODEL WORK

SYMBOL	DESCRIPTION
	EXISTING FLUORESCENT FIXTURE-TO REMAIN
	EXISTING FLUORESCENT FIXTURE-REMOVE
	EXISTING INCANDESCENT FIXTURE-TO REMAIN
	EXISTING INCANDESCENT FIXTURE-REMOVE
	EXISTING OUTLET-TO REMAIN
	EXISTING RECEPTACLE OUTLET-TO REMAIN
	EXISTING RECEPTACLE OUTLET-REMOVE
-E-E-	EXISTING CONDUIT AND CONDUCTORS-TO REMAIN UNLESS OTHERWISE NOTED
-**-	EXISTING CONDUIT AND CONDUCTORS-REMOVE
S	EXISTING SWITCH-TO REMAIN
	EXISTING SWITCH-REMOVE
J	EXISTING JUNCTION BOX-TO REMAIN
	EXISTING JUNCTION BOX-REMOVE

STANDARD NOTES

AB	ABANDON, IF APPLIED TO CONDUIT, REMOVE CONDUCTORS.
BC	INSTALL PULL BOX IN EXISTING CONDUIT RUN.
CB	INSTALL CONDUIT INTO EXISTING PULL BOX.
CC	CONNECT NEW AND EXISTING CONDUIT. REMOVE EXISTING CONDUCTORS AND INSTALL CONDUCTORS AS INDICATED.
CF	CONDUIT TO REMAIN FOR FUTURE USE. REMOVE CONDUCTORS, INSTALL PULL ROPE AND PLUG.
FA	REMOVE FOUNDATION ABOVE GRADE AND ABANDON FOUNDATION BELOW GRADE.
RL	RELOCATE EQUIPMENT.
RLD	RELOCATED EQUIPMENT.
SC	SPLICE NEW TO EXISTING CONDUCTORS.

STANDARD PLANS

DATED MAY, 2006

- ES-6A
- ES-13A
- ES-7M
- ES-7N
- ES-8

GRAPHIC SYMBOLS FOR ELECTRICAL DIAGRAMS

SYMBOL	DESCRIPTION
	CIRCUIT BREAKER, SINGLE POLE
	CIRCUIT BREAKER, DOUBLE POLE
	CIRCUIT BREAKER, THREE POLE
GFCI	CIRCUIT BREAKER, WITH GROUND FAULT CIRCUIT INTERRUPTER
	CIRCUIT BREAKER, SINGLE POLE, SWITCHED NEUTRAL
	CONTACT, NORMALLY OPEN
	CONTACT, NORMALLY CLOSED
	CONTACT, NORMALLY CLOSED, TIME DELAY CLOSING ON DE-ENERGIZING
	CONTACT, NORMALLY OPEN, TIME DELAY OPENING ON DE-ENERGIZING
	CONTACT, NORMALLY OPEN, TIME DELAY CLOSING ON ENERGIZING
	CONTACT, NORMALLY CLOSED, TIME DELAY OPENING ON ENERGIZING
	CONTACT, SINGLE POLE DOUBLE-THROW
	OPERATING COIL
	LIQUID LEVEL ACTUATED SWITCH, NORMALLY CLOSED
	LIQUID LEVEL ACTUATED SWITCH, NORMALLY OPEN
	PRESSURE ACTUATED SWITCH, NORMALLY CLOSED
	PRESSURE ACTUATED SWITCH, NORMALLY OPEN
	FLOW ACTUATED SWITCH, NORMALLY CLOSED
	FLOW ACTUATED SWITCH, NORMALLY OPEN
	TEMPERATURE ACTUATED SWITCH, NORMALLY CLOSED
	TEMPERATURE ACTUATED SWITCH, NORMALLY OPEN
	LIMIT SWITCH, NORMALLY CLOSED
	LIMIT SWITCH, NORMALLY OPEN
	PUSHBUTTON SWITCH, NORMALLY CLOSED
	PUSHBUTTON SWITCH, NORMALLY OPEN
	SWITCH, SINGLE-POLE
	SWITCH, SINGLE-POLE, DOUBLE-THROW
	SWITCH, DOUBLE-POLE
	SWITCH, DOUBLE-POLE, DOUBLE-THROW
	SWITCH, SINGLE-POLE, 3-POSITION
	THERMAL OVERLOAD
	FUSE
	RESISTOR
	VARIABLE RESISTOR
	TRANSFORMER WINDING
	GROUNDING ELECTRODE
	ENCLOSURE BOND
A	PILOT LIGHT (A=AMBER, G=GREEN, R=RED)
G	GENERATOR
M	MOTOR
F	FAN MOTOR

PROJECT NOTES

A. SEPARATE GROUNDED (NEUTRAL) CONDUCTOR SHALL BE USED FOR EACH 120-VOLT CIRCUIT.

B. HOMERUNS TO PANELBOARDS SHALL BE INSTALLED AS SHOWN ON THE PLANS. HOMERUNS SHALL NOT BE COMBINED.

C. A SINGLE INSULATED EQUIPMENT GROUNDING CONDUCTOR (SIZED AS REQUIRED) SHALL BE INSTALLED IN EACH CONDUIT RUN.

CALIFORNIA STATE FIRE MARSHAL APPROVED

Approval of this plan does not authorize or approve any omission or deviation from applicable regulations. Final approval is subject to field inspection. One set of approved plans shall be available on the project site at all times.

Reviewed by: _____

Date: XX/XX/XX

ABBREVIATIONS

A	AMPERES
A/C	AIR CONDITIONING UNIT
ACS	AIR COMPRESSOR STARTER
AI	ANALOG INPUT
AL	ALARM LIGHT
AO	ANALOG OUTPUT
AVC	AIR VOLUME CONTROLLER
BD	BUILDING DISCONNECT
BRK	BREAKER
C	CONDUIT
CB	CIRCUIT BREAKER
CKT	CIRCUIT
CR	CONTROL RELAY
CSW	CURRENT SWITCH
DI	DIGITAL INPUT
DO	DIGITAL OUTPUT
DP	DUPLEX PLUG RECEPTACLE
DS	DOOR SWITCH
(E)	EXISTING
EF	EXHAUST FAN
F	FUSE
FL	FAILURE LIGHT
FLA	FLASHER
FLEX	FLEXIBLE CONDUIT
FLS	FLOW SWITCH
FR	FAILURE RESET
FS	FLOAT SWITCH
G	GROUND
GFCI	GROUND FAULT CIRCUIT INTERRUPTER
GRS	GALVANIZED RIGID STEEL
IR	INDUCTION RELAY
JB	JUNCTION BOX
L	LIGHT
LC	LIGHTING CONTACTOR
LCP	LIGHTING CONTROL PANEL
LD	LIGHT DISCONNECT
LL	LIQUID LEVEL RELAY
LLC	LIQUID LEVEL CONTROLLER
LP	LIGHT PANEL
LS	LIGHT SWITCH
LT	LIGHT TRANSFORMER
LTO	LIGHT TRANSFORMER OVERLOAD
MB	MAIN BREAKER
MC	METALLIC CONDUIT
MCP	MOTOR CIRCUIT PROTECTOR
MCC	MOTOR CONTROL CENTER
MSB	MAIN SWITCHBOARD
MT	EMPTY CONDUIT
(N)	NEW
NC	NORMALLY CLOSED
NO	NORMALLY OPEN
NSW	NEUTRAL SWITCHING BREAKER
OL	OVERLOAD
P	POLE
PB	PULL BOX
PB	PUSHBUTTON
PFR	PHASE FAILURE RELAY
PFRD	PHASE FAILURE RELAY DISCONNECT
PEC	PHOTOELECTRIC CELL
PL	PILOT LIGHT
PS	PRESSURE SWITCH
PTS	POWER TRANSFER SWITCH
PVC	POLYVINYL CHLORIDE
RES	RESISTOR
RTB	RADIO TERMINAL BOARD
S	STARTER COIL
SD	SERVICE DISCONNECT
SFR	SEAL FAILURE RELAY
SL	SUMP LIGHT
SPR	STANDBY POWER RECEPTACLE
SS	SELECTOR SWITCH
ST	STARTER
SV	SOLENOID VALVE
T	TRANSFORMER
TB	TERMINAL BLOCK
TDR	TIME DELAY RELAY
TGLS	TOGGLE SWITCH
TM	TIME METER
TOT	TOTAL
TS	TIMER SWITCH
TSW	TEST SWITCH
TTB	TELEPHONE TERMINAL BOARD
TYP	TYPICAL
UPS	UNINTERRUPTIBLE POWER SUPPLY
WLS	WATER LEVEL SWITCH
WP	WEATHERPROOF

	BY	CHECKED
DESIGN	Joseph Abdelsayed	Tommy F. Lee
DETAILS	Joseph Abdelsayed	Tommy F. Lee
QUANTITIES	Joseph Abdelsayed	Tommy F. Lee

STATE OF CALIFORNIA
DEPARTMENT OF TRANSPORTATION

DIVISION OF ENGINEERING SERVICES
ELECTRICAL-MECHANICAL-WATER AND WASTEWATER DESIGN

BRIDGE NO.
POST MILE

BOGUE ROAD PARK AND RIDE

LEGEND

SHEET **EE-0**

DOES SD Imperial Rev. 9/02

ORIGINAL SCALE IN INCHES FOR REDUCED PLANS 0 1 2 3

CU
EA 0F1101

DISREGARD PRINTS BEARING EARLIER REVISION DATES

REVISION DATES (PRELIMINARY STAGE ONLY) 4/23/10 7/28/10 — SHEET — OF

02-AUG-2011 08:21

0300000064we001.dgn

DIST.	COUNTY	ROUTE	POST MILES TOTAL PROJECT	SHEET NO.	TOTAL SHEETS
03	Sut	99	27.7	26	45

REGISTERED ELECTRICAL ENGINEER — 07-28-10 DATE

REGISTERED PROFESSIONAL ENGINEER — J. ABDELSAYED — No. 18915 — Exp. 12-31-11 — ELEC — STATE OF CALIFORNIA

6-13-11
PLANS APPROVAL DATE

The State of California or its officers or agents shall not be responsible for the accuracy or completeness of electronic copies of this plan sheet.

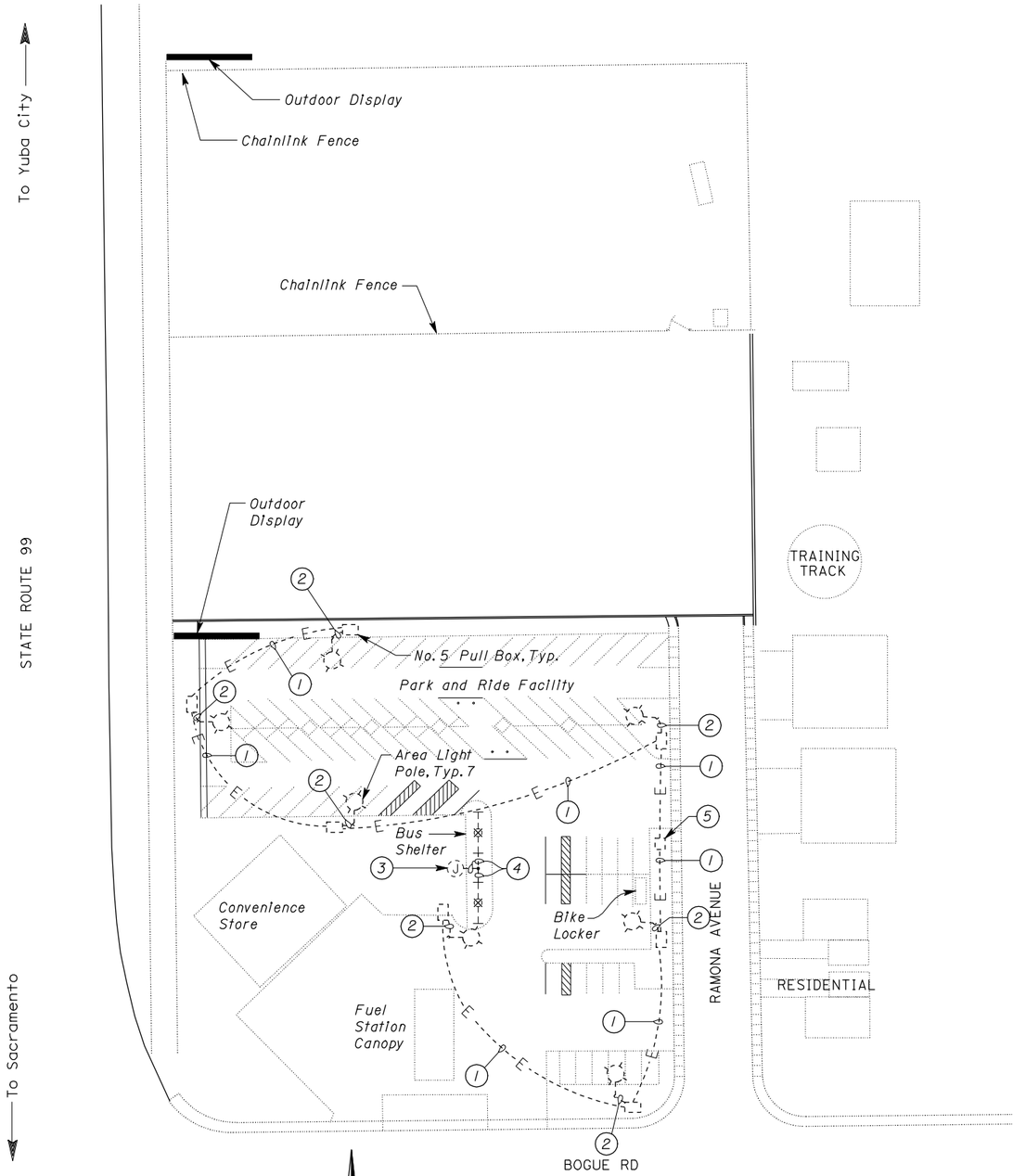

SITE PLAN

SCALE 1" = 40'-0"

Notes:

1. 1½"C, 2*8, 1*8G.
2. 1½"C, 2*14, 1*8G.
3. Junction Box. Junction Box is mounted on the back of the Bus Shelter Structure with 2*12, 1*12G conductors coiled inside it.
4. 2*12, 1*12G conductors to bus shelter lighting to remain. Conductors are fed through bus shelter structure.
5. 240V, 1-phase service pedestal.

THIS DRAWING ACCURATE FOR ELECTRICAL WORK ONLY

DESIGN SUPERVISOR	DESIGN	BY Joseph Abdelsayed	CHECKED Tommy F. Lee
DESIGN ENGINEER	DETAILS	BY Joseph Abdelsayed	CHECKED Tommy F. Lee
	QUANTITIES	BY Joseph Abdelsayed	CHECKED Tommy F. Lee

STATE OF CALIFORNIA DEPARTMENT OF TRANSPORTATION

DIVISION OF ENGINEERING SERVICES ELECTRICAL-MECHANICAL-WATER AND WASTEWATER DESIGN

BRIDGE NO. / POST MILE

BOGUE ROAD PARK AND RIDE

EXISTING SITE PLAN

SHEET **EE-1**

DOES SD Imperial Rev. 9/02

ORIGINAL SCALE IN INCHES FOR REDUCED PLANS 0 1 2 3

CU
EA 0F1101

DISREGARD PRINTS BEARING EARLIER REVISION DATES → 4/23/10 7/28/10

REVISION DATES (PRELIMINARY STAGE ONLY) SHEET OF

02-AUG-2011 08:21

0300000064we002.dgn

DIST.	COUNTY	ROUTE	POST MILES TOTAL PROJECT	SHEET NO.	TOTAL SHEETS
03	Sut	99	27.7	27	45

REGISTERED ELECTRICAL ENGINEER — 07-28-10 DATE

REGISTERED PROFESSIONAL ENGINEER J. ABDELSAYED No. 18915 Exp. 12-31-11 ELEC STATE OF CALIFORNIA

6-13-11
PLANS APPROVAL DATE

The State of California or its officers or agents shall not be responsible for the accuracy or completeness of electronic copies of this plan sheet.

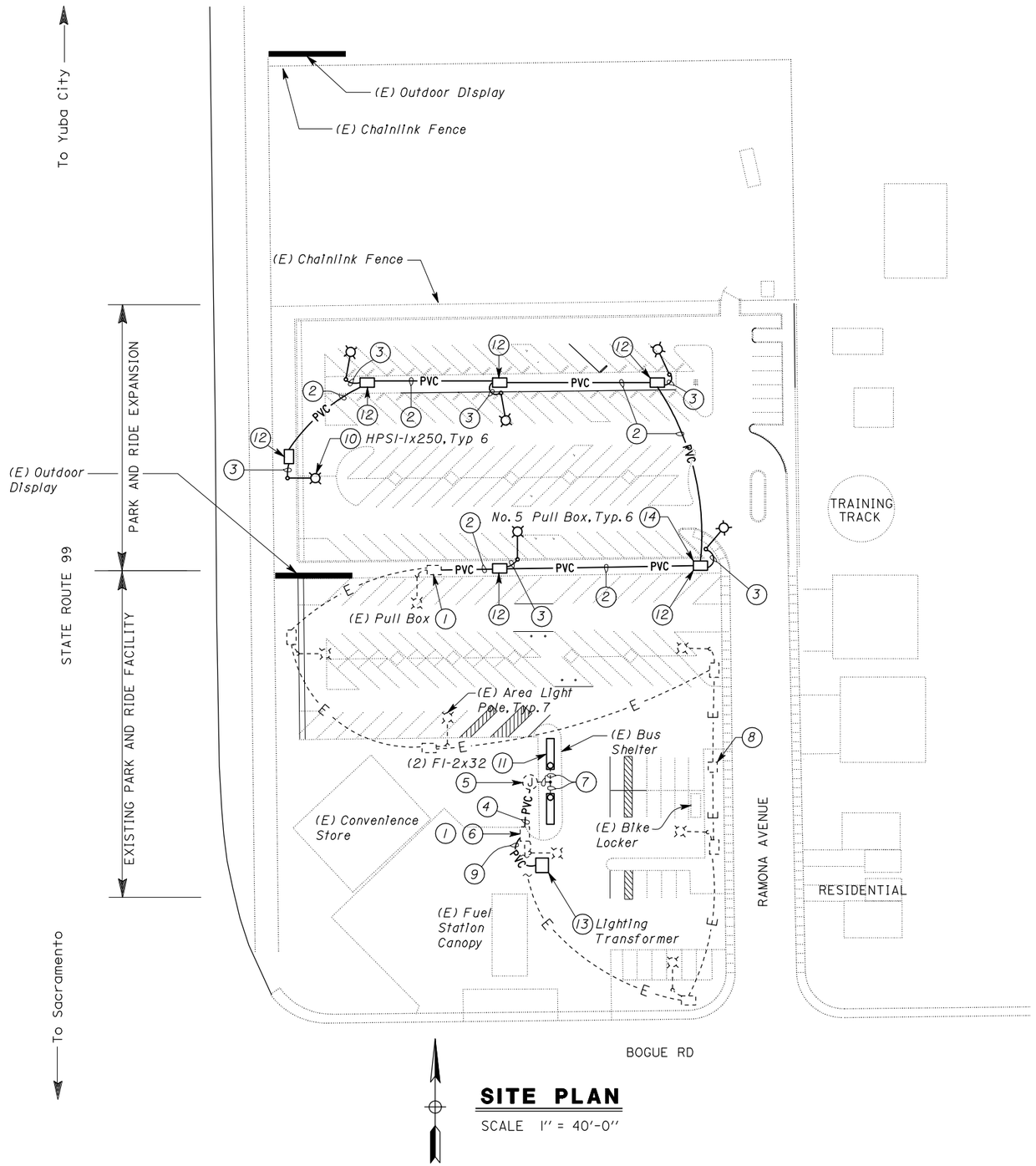

SITE PLAN

SCALE 1" = 40'-0"

Notes:

1. Splice new to existing conductors on the line side of the existing fused splice connector inside existing pull box.
2. 1½"C, 2*8, 1*8G.
3. 1½"C, 2*14, 1*8G.
4. ½"C, 2*12, 1*12G. Conduit shall be Type 1 conduit. For conduit installation, core drill through existing concrete, and terminate conduit at the bottom of existing junction box.
5. Splice new to existing conductors inside existing junction box.
6. Install a ground rod inside existing pull box and bond grounding electrode conductor to it. Ground rod shall be a ¾" (minimum) galvanized or copper clad steel rod, 10 feet long. The ground rod shall be driven vertically until the top is 6 inches above the surrounding surface.
7. (E) 2*12, 1*12G conductors inside bus shelter structure.
8. (E) 240V, 1-phase service pedestal. Replace existing 20A/2P lighting circuit breaker with a 30A/2P circuit breaker of the same frame.
9. ¾"C, 4*12, 1*12G and 1*12 grounding electrode conductor.
10. Type 15 Lighting Standard as shown on sheet ES-6A of the Standard Plans. Luminaire shall be a pole mounted, 310 watt, 240 volt, high pressure sodium, cutoff luminaire with integral ballast. The luminaire shall be General Electric, M-250A2 Series; Roadway, 315 Series or equal.
11. Fluorescent fixture shall be a surface-mounted fluorescent fixture with two-32 watt T8 lamps, 120-volt electronic ballast and one piece, clear acrylic, wraparound diffuser. Fixture shall be UL listed for use in damp and wet locations. The fixture shall be Day Brite, OWW series; Lithonia, 2LB series; or equal.
12. Inside the pull box, a fused splice connector shall be installed in each ungrounded conductor between the line and the ballast. The connector shall be readily accessible in the pull box and shall be insulated and made waterproof in accordance with the splice connector manufacturer's recommendations. Fused splice connectors shall be Buss, Elastimold, or equal; with standard midget, ferrule, 5 ampere, 240 volt, slow blowing fuses. The connectors shall be designed so that both ungrounded conductors are disconnected simultaneously.
13. Lighting transformer shall be a single phase, 240 volt primary, 120 volt secondary, 0.5 kVA transformer with a fusible disconnect enclosed in a lockable-type, NEMA 3R enclosure. Handle shall be able to be locked in the on or off position. Fuses shall be sized to suit transformer supplied. Install a ground bus inside the enclosure and terminate equipment grounding conductor and groudning electrode conductor on it. Install a neutral bus and terminate grounded circuit conductor on it. Provide stainless steel mounting components for the enclosure as required. Mount enclosure on the area light pole as directed by the Engineer in the field. Provide nameplate fastened to the enclosure to read "LIGHTING TRANSFORMER". Nameplate shall be laminated phenolic plastic with white core and black front and back. Nameplate inscription shall be in capital letters etched through the outer layer of the nameplate material. Nameplate shall be fastened with self tapping, cadmium-plated screws or nickel plated bolts.
14. For Pull Box detail, see standard plan sheet ES-8.

THIS DRAWING ACCURATE FOR ELECTRICAL WORK ONLY

	BY	CHECKED
DESIGN	Joseph Abdelsayed	Tommy F. Lee
DETAILS	Joseph Abdelsayed	Tommy F. Lee
QUANTITIES	Joseph Abdelsayed	Tommy F. Lee

STATE OF CALIFORNIA DEPARTMENT OF TRANSPORTATION

DIVISION OF ENGINEERING SERVICES ELECTRICAL-MECHANICAL-WATER AND WASTEWATER DESIGN

BRIDGE NO. / POST MILE

BOGUE ROAD PARK AND RIDE

MODIFIED SITE PLAN

SHEET **EE-2**

DOES SD Imperial Rev. 9/02

ORIGINAL SCALE IN INCHES FOR REDUCED PLANS 0 1 2 3

CU EA 0F1101

DISREGARD PRINTS BEARING EARLIER REVISION DATES → 4/23/10 7/28/10

REVISION DATES (PRELIMINARY STAGE ONLY) SHEET OF

02-AUG-2011 08:21

0300000064we003.dgn

DIST.	COUNTY	ROUTE	POST MILES TOTAL PROJECT	SHEET NO.	TOTAL SHEETS
03	Sut	99	27.7	28	45

REGISTERED ELECTRICAL ENGINEER — 7-28-10 DATE

REGISTERED PROFESSIONAL ENGINEER — J. ABDELSAYED — No. 18915 — Exp. 12-31-11 — ELEC — STATE OF CALIFORNIA

6-13-11
PLANS APPROVAL DATE

The State of California or its officers or agents shall not be responsible for the accuracy or completeness of electronic copies of this plan sheet.

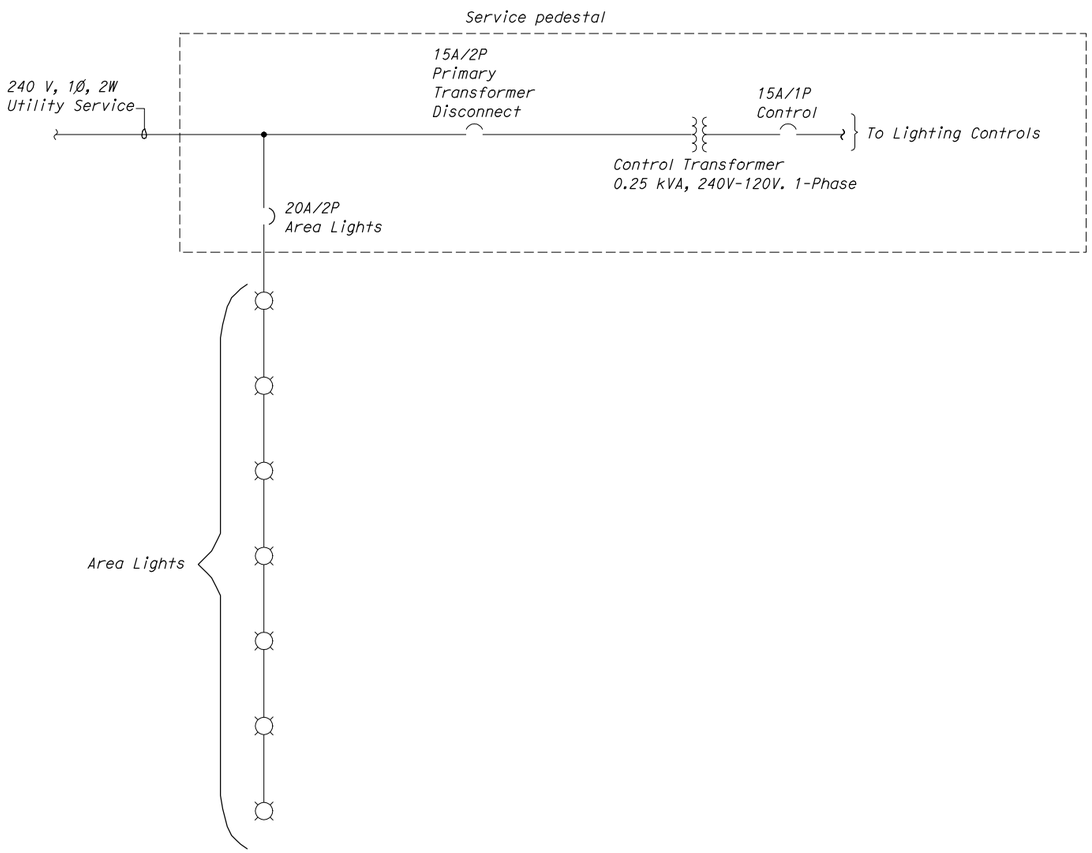

EXISTING

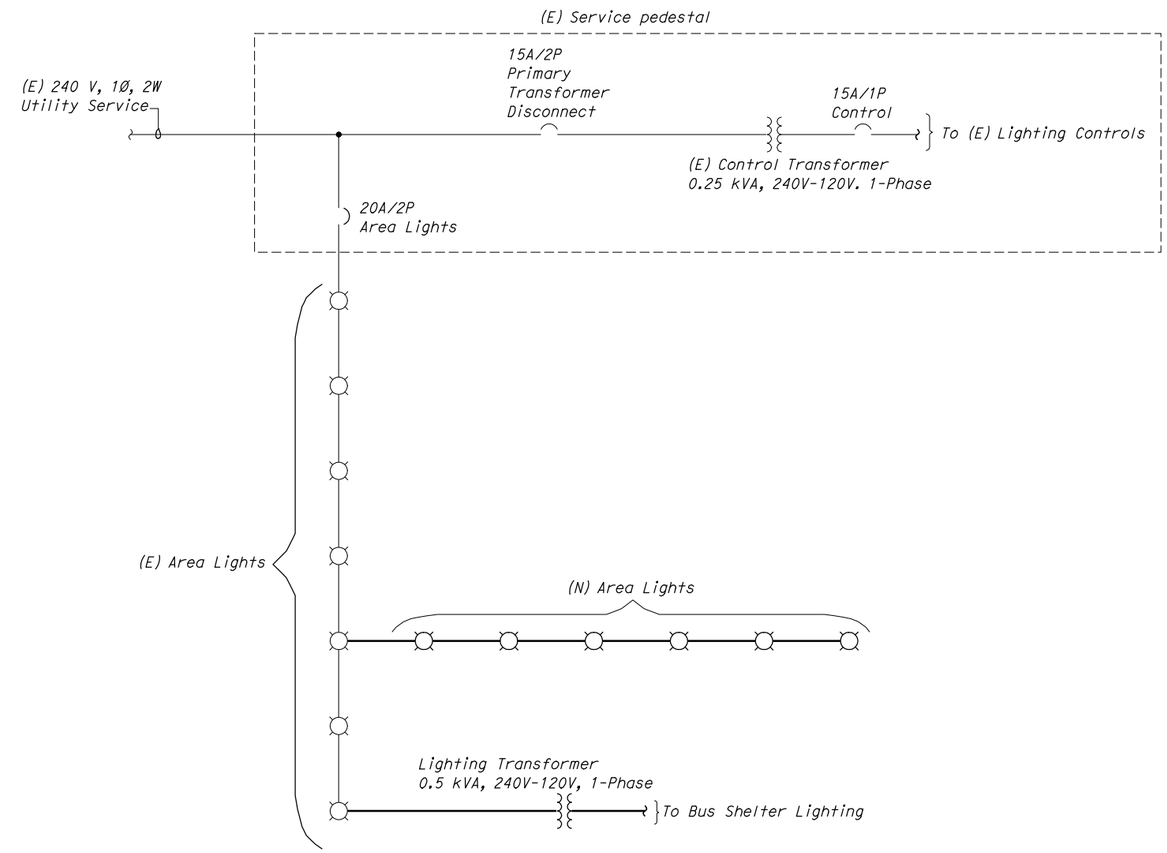

MODIFIED

DESIGN	BY Joseph Abdelsayed	CHECKED Tommy F. Lee	
DETAILS	BY Dall Zhou	CHECKED Tommy F. Lee	
QUANTITIES	BY Joseph Abdelsayed	CHECKED Tommy F. Lee	

STATE OF CALIFORNIA
DEPARTMENT OF TRANSPORTATION

DIVISION OF ENGINEERING SERVICES
ELECTRICAL-MECHANICAL-WATER AND WASTEWATER DESIGN

BRIDGE NO.
POST MILE

BOGUE ROAD PARK AND RIDE

SINGLE LINE DIAGRAM

SHEET **EE-3**

DOES SD Imperial Rev. 9/02

ORIGINAL SCALE IN INCHES FOR REDUCED PLANS 0 1 2 3

UNIT xxxx
PROJECT NUMBER & PHASE 03000000641

DISREGARD PRINTS BEARING EARLIER REVISION DATES → 5/27/11

REVISION DATES (PRELIMINARY STAGE ONLY) SHEET OF

02-AUG-2011 08:21

0300000064we004.dgn

DIST	COUNTY	ROUTE	POST MILES TOTAL PROJECT	SHEET NO.	TOTAL SHEETS
03	Sut	99	27.7	29	45

REGISTERED CIVIL ENGINEER

June 6, 2008
PLANS APPROVAL DATE

REGISTERED PROFESSIONAL ENGINEER Donald E. Howe No. C46402 Exp. 3-31-09 CIVIL STATE OF CALIFORNIA

The State of California or its officers or agents shall not be responsible for the accuracy or completeness of electronic copies of this plan sheet.

To accompany plans dated 6-13-11

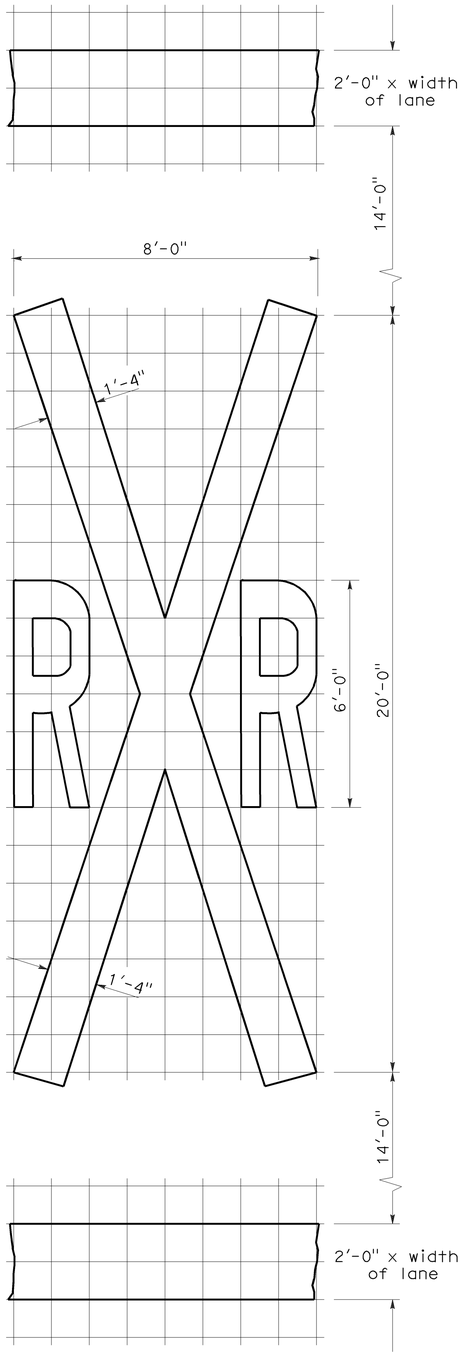

RAILROAD CROSSING SYMBOL

✳70 sq ft DOES NOT INCLUDE THE 2'-0" x VARIABLE WIDTH TRANSVERSE LINES.

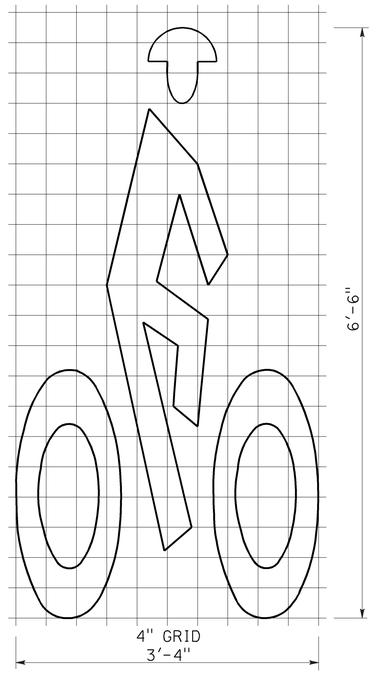

BIKE LANE SYMBOL

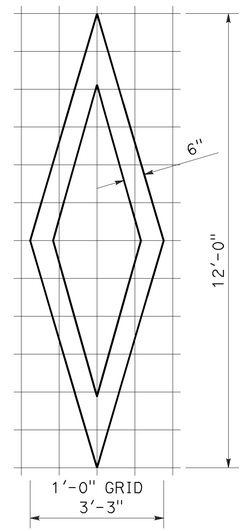

DIAMOND SYMBOL

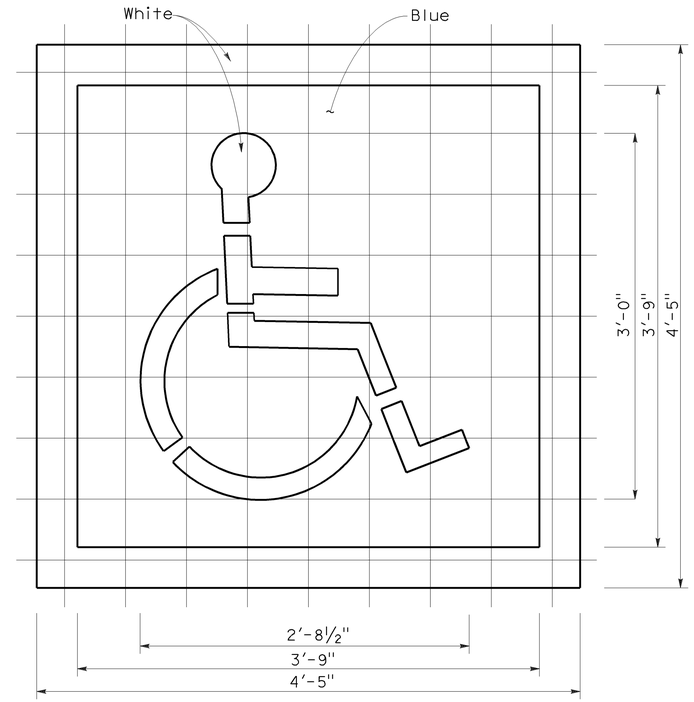

INTERNATIONAL SYMBOL OF ACCESSIBILITY MARKING

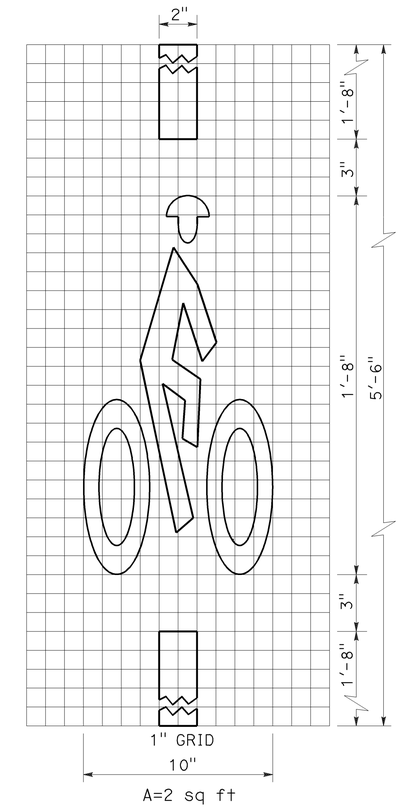

BICYCLE LOOP DETECTOR SYMBOL

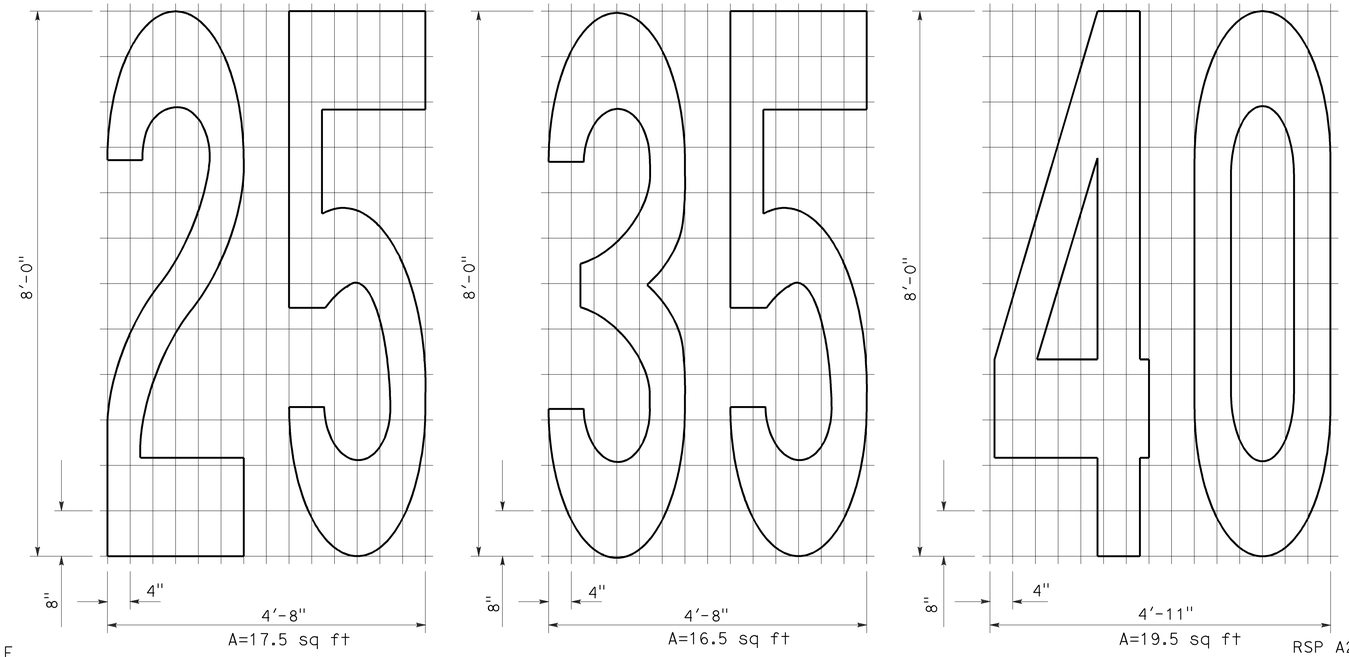

NUMERALS

NOTE:

1. Minor variations in dimensions may be accepted by the Engineer.

STATE OF CALIFORNIA
DEPARTMENT OF TRANSPORTATION

PAVEMENT MARKINGS SYMBOLS AND NUMERALS

NO SCALE

RSP A24C DATED JUNE 6, 2008 SUPERSEDES STANDARD PLAN A24C DATED MAY 1, 2006 - PAGE 11 OF THE STANDARD PLANS BOOK DATED MAY 2006.

REVISED STANDARD PLAN RSP A24C

2006 REVISED STANDARD PLAN RSP A24C

5-27-08

DIST	COUNTY	ROUTE	POST MILES TOTAL PROJECT	SHEET NO.	TOTAL SHEETS
03	Sut	99	27.7	30	45

REGISTERED CIVIL ENGINEER

June 5, 2009
PLANS APPROVAL DATE

REGISTERED PROFESSIONAL ENGINEER Glenn DeCou No. C34547 Exp. 9-30-09 CIVIL STATE OF CALIFORNIA

The State of California or its officers or agents shall not be responsible for the accuracy or completeness of electronic copies of this plan sheet.

To accompany plans dated 6-13-11

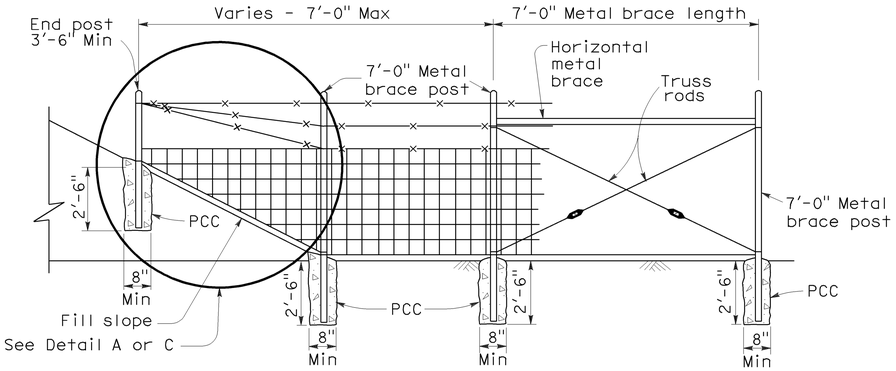

METAL POST

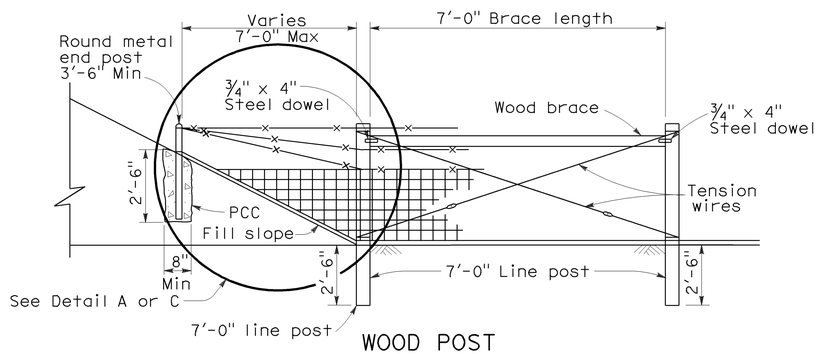

WOOD POST

METHOD OF ERECTING FENCE FOR FILL SLOPE

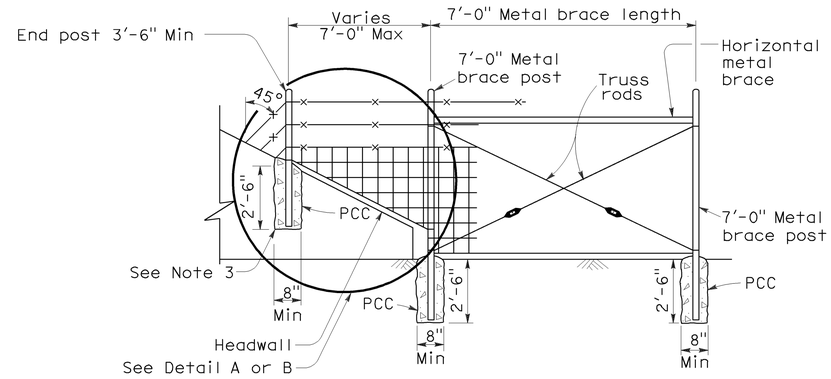

METAL POST

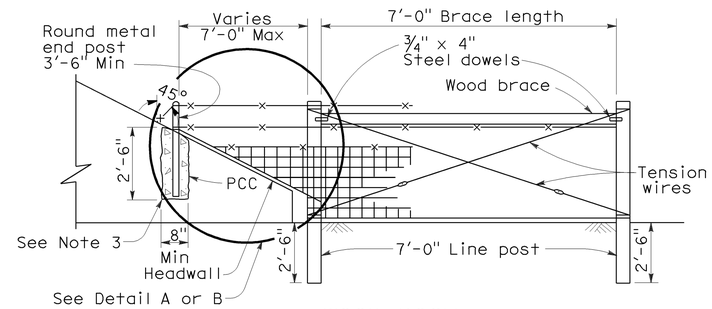

WOOD POST

METHOD OF TYING FENCE TO HEADWALL

NOTES:

1. Wire Mesh fencing shown, can also use Barbed Wire fencing.
2. See Standard Plan A86 for Wire Mesh and Barbed Wire fence dimensions.
3. See Standard Plan B11-7 Alternative Anchorage Detail for connection at headwall. Round metal post to be used for all fence types.

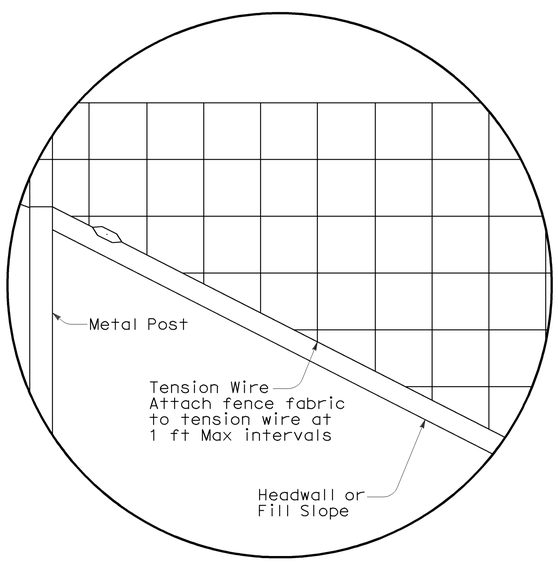

DETAIL A

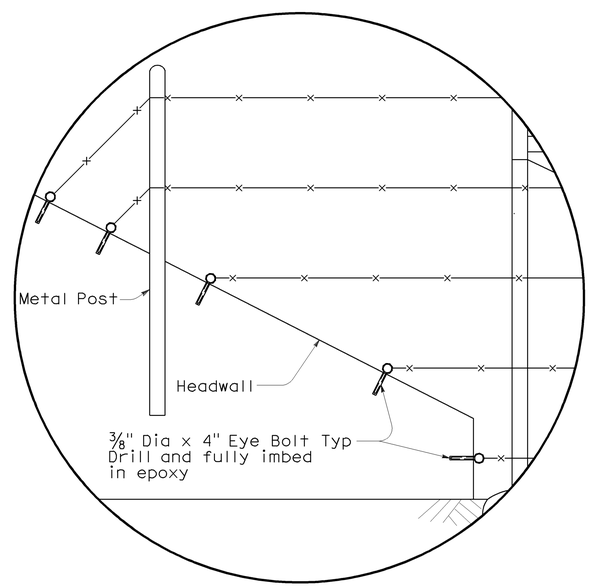

DETAIL B

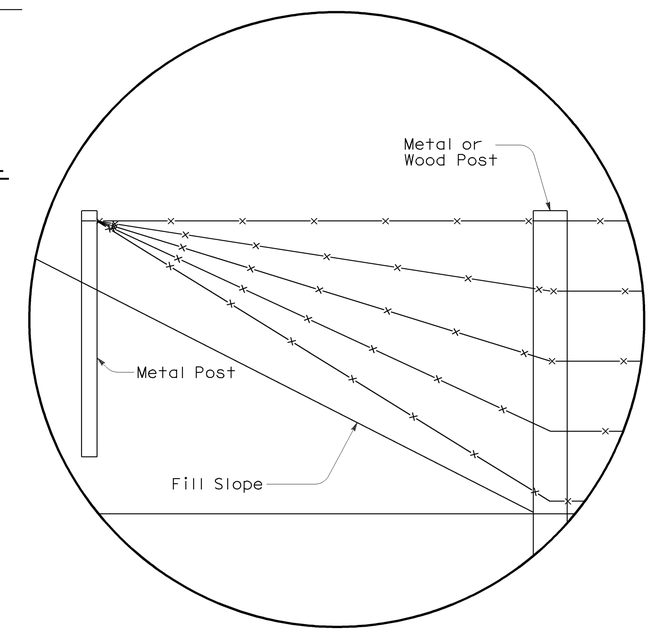

DETAIL C

STATE OF CALIFORNIA
DEPARTMENT OF TRANSPORTATION

BARBED WIRE AND WIRE MESH FENCE DETAILS

NSP A86B DATED JUNE 5, 2009 SUPPLEMENTS THE STANDARD PLANS BOOK DATED MAY 2006.

NEW STANDARD PLAN NSP A86B

2006 NEW STANDARD PLAN NSP A86B

5-12-09

DIST	COUNTY	ROUTE	POST MILES TOTAL PROJECT	SHEET NO.	TOTAL SHEETS
03	Sut	99	27.7	31	45

REGISTERED CIVIL ENGINEER

June 5, 2009
PLANS APPROVAL DATE

REGISTERED PROFESSIONAL ENGINEER Glenn DeCou No. C34547 Exp. 9-30-09 CIVIL STATE OF CALIFORNIA

The State of California or its officers or agents shall not be responsible for the accuracy or completeness of electronic copies of this plan sheet.

To accompany plans dated 6-13-11

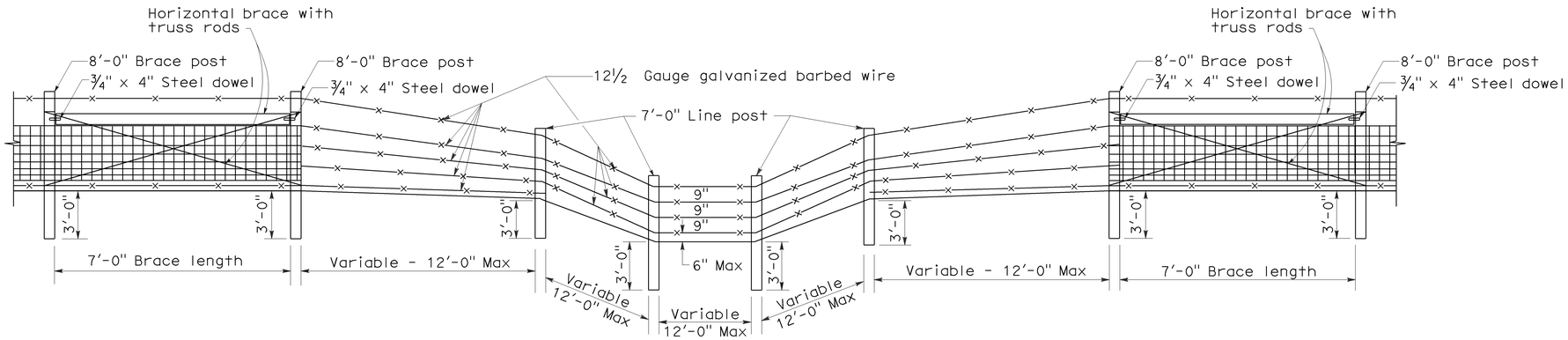

TYPE I

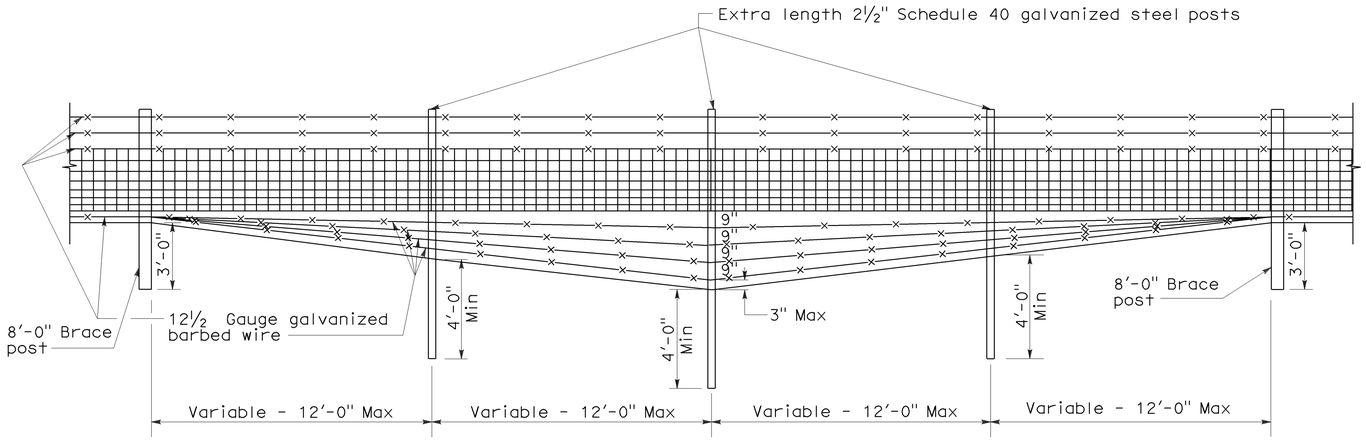

TYPE II

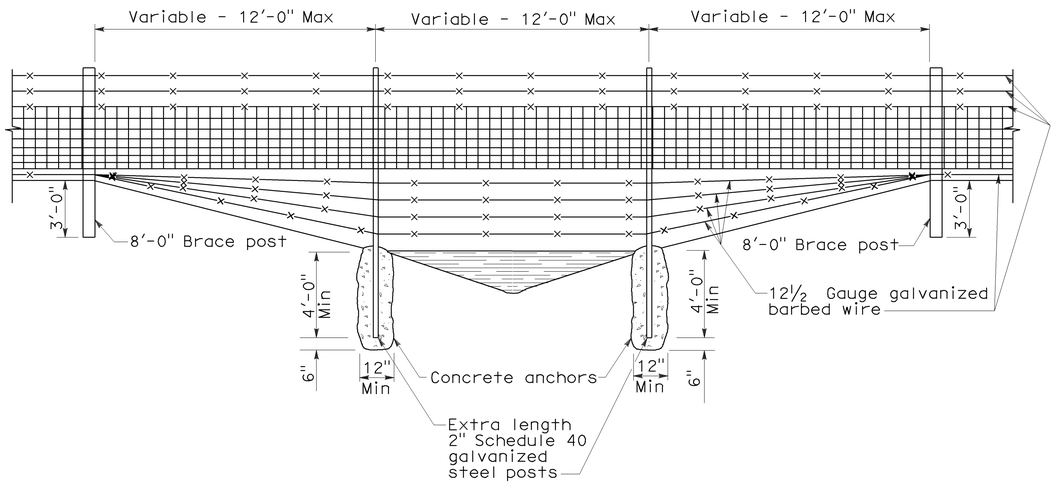

TYPE III

DITCH CROSSINGS

NOTES:

1. Type I Ditch Crossing shows wood posts. Steel posts may be used in place of wood.
2. Ditch crossing show Wire Mesh fencing. Barbed Wire fencing may be used in place of Wire Mesh.
3. See Standard Plan A86 for Wire Mesh and Barbed Wire fence dimensions.
4. See Standard Plan A86 for steel post installation.

STATE OF CALIFORNIA
DEPARTMENT OF TRANSPORTATION

BARBED WIRE AND WIRE MESH FENCE DETAILS AT DITCH CROSSING

NO SCALE

NSP A86C DATED JUNE 5, 2009 SUPPLEMENTS THE STANDARD PLANS BOOK DATED MAY 2006.

NEW STANDARD PLAN NSP A86C

2006 NEW STANDARD PLAN NSP A86C

5-12-09

DIST	COUNTY	ROUTE	POST MILES TOTAL PROJECT	SHEET NO.	TOTAL SHEETS
03	Sut	99	27.7	32	45

REGISTERED CIVIL ENGINEER

November 17, 2006
PLANS APPROVAL DATE

REGISTERED PROFESSIONAL ENGINEER Michael Janzen No. 44788 Exp. 03-31-08 CIVIL STATE OF CALIFORNIA

The State of California or its officers or agents shall not be responsible for the accuracy or completeness of electronic copies of this plan sheet.

To accompany plans dated 6-13-11

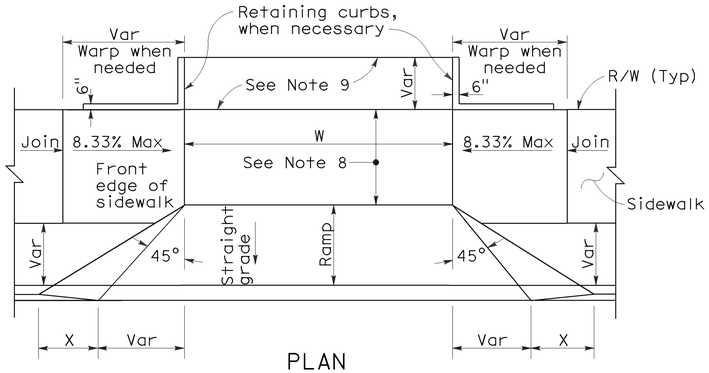

PLAN

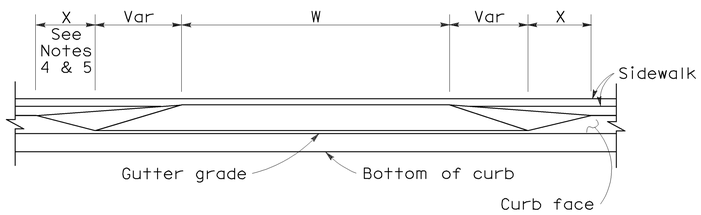

ELEVATION

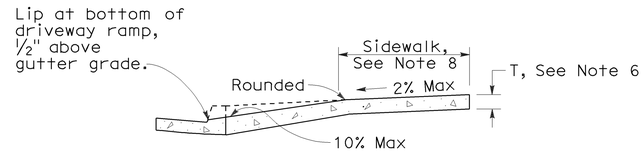

CASE A

Typical driveway, sidewalk not depressed

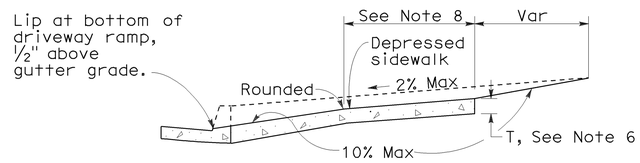

CASE B

Driveway with depressed sidewalk

SECTIONS

DRIVEWAYS

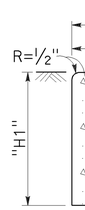

TYPE A1 CURBS

See Table A

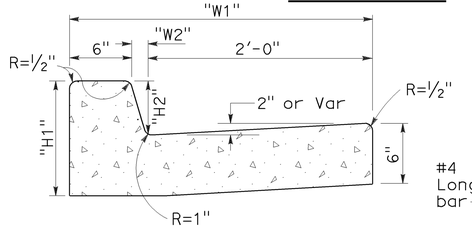

TYPE A2 CURBS

See Table A

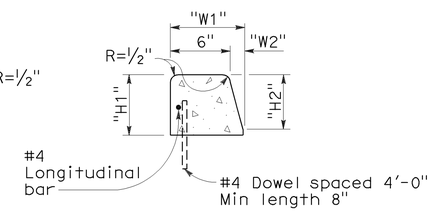

TYPE A3 CURBS

Superimposed on existing pavement
See Table A

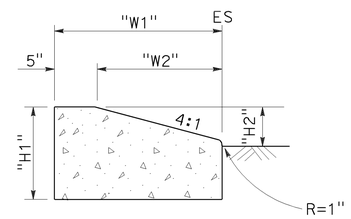

TYPE D CURBS

See Table A

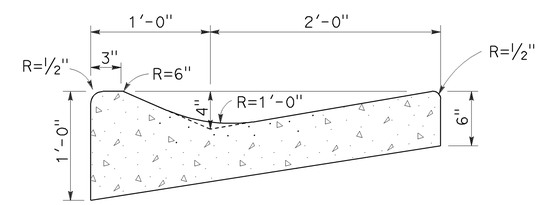

TYPE E CURB

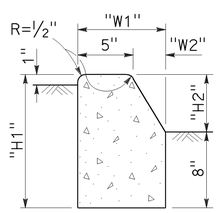

TYPE B1 CURBS

See Table A

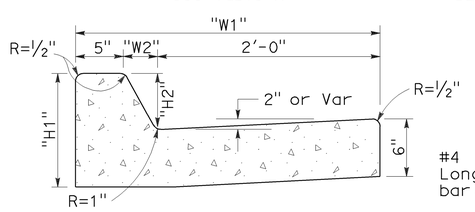

TYPE B2 CURBS

See Table A

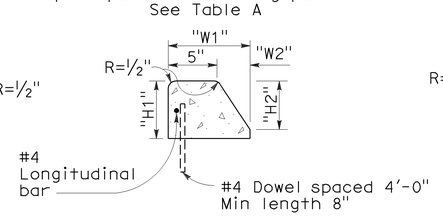

TYPE B3 CURBS

Superimposed on existing pavement
See Table A

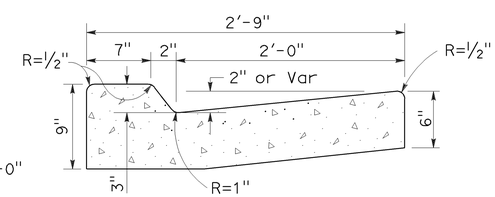

TYPE B4 CURBS

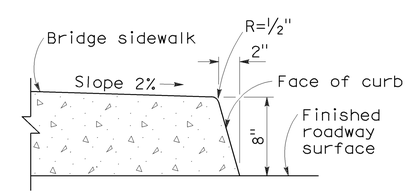

TYPE H CURB

On Bridges

CURBS

CURB QUANTITIES

TYPE	CUBIC YARDS PER LINEAR FOOT
A1-6	0.02585
A1-8	0.03084
A2-6	0.05903
A2-8	0.06379
A3-6	0.01036
A3-8	0.01435
B1-4	0.02185
B1-6	0.02930
B2-4	0.05515
B2-6	0.06171
B3-4	0.00641
B3-6	0.01074
B4	0.05709
D-4	0.04083
D-6	0.06804
E	0.06661

TABLE A

CURB TYPE	DIMENSIONS "H1"	"H2"	"W1"	"W2"
A1-6	1'-2"	6"	7½"	1½"
A1-8	1'-4"	8"	8"	2"
A2-6	1'-0"	6"	2'-7½"	1½"
A2-8	1'-2"	8"	2'-8"	2"
A3-6	6"	5"	7¼"	1¼"
A3-8	8"	7"	7¾"	1¾"
B1-4	1'-0"	4"	7½"	2½"
B1-6	1'-2"	6"	9"	4"
B2-4	10"	4"	2'-7½"	2½"
B2-6	1'-0"	6"	2'-9"	4"
B3-4	4"	3"	7"	2"
B3-6	6"	5"	8½"	3½"
D-4	10"	4"	1'-6"	1'-1"
D-6	1'-0"	6"	2'-2"	1'-8"

NOTES:

1. Case A driveway section typically applies.
2. Use Case B driveway section when ramp slopes would exceed 10% in Case A.
3. Use Case B driveway section when sidewalk cross slope would exceed 2% in Case A.
4. X=3'-0" except for curb heights over 10" where 4:1 slopes shall be used on curb slope.
5. X is a variable when sidewalk is located where wheelchairs may traverse the surface. Slopes shall not exceed 8.33%.
6. Sidewalk and ramp thickness "T" at driveway shall be 4" for residental and 6" for commercial.
7. Difference in slope of the driveway ramp and the slope of a line between the gutter and a point on the roadway 5'-0" from gutter line shall not exceed 15%. Reduce driveway ramp slope, not gutter slope, where required.
8. Minimum width of clear passageway for sidewalk shall be 4'-0".
9. Retaining curbs and acquisition of construction easement may be necessary for narrow sidewalks or curb heights in excess of 6".
10. Across the pedestrian route at curb ramp locations, the gutter pan slope shall not exceed 1" of depth for each 2'-0" of width.

STATE OF CALIFORNIA
DEPARTMENT OF TRANSPORTATION

CURBS AND DRIVEWAYS

NO SCALE

RSP A87A DATED NOVEMBER 17, 2006 SUPERSEDES STANDARD PLAN A87A DATED MAY 1, 2006 - PAGE 113 OF THE STANDARD PLANS BOOK DATED MAY 2006.

REVISED STANDARD PLAN RSP A87A

2006 REVISED STANDARD PLAN RSP A87A

10-25-06

DIST	COUNTY	ROUTE	POST MILES TOTAL PROJECT	SHEET NO.	TOTAL SHEETS
03	Sut	99	27.7	33	45

REGISTERED CIVIL ENGINEER

June 6, 2008
PLANS APPROVAL DATE

REGISTERED PROFESSIONAL ENGINEER Hector David Cordova No. C41957 Exp. 3-31-10 CIVIL STATE OF CALIFORNIA

The State of California or its officers or agents shall not be responsible for the accuracy or completeness of electronic copies of this plan sheet.

To accompany plans dated 6-13-11

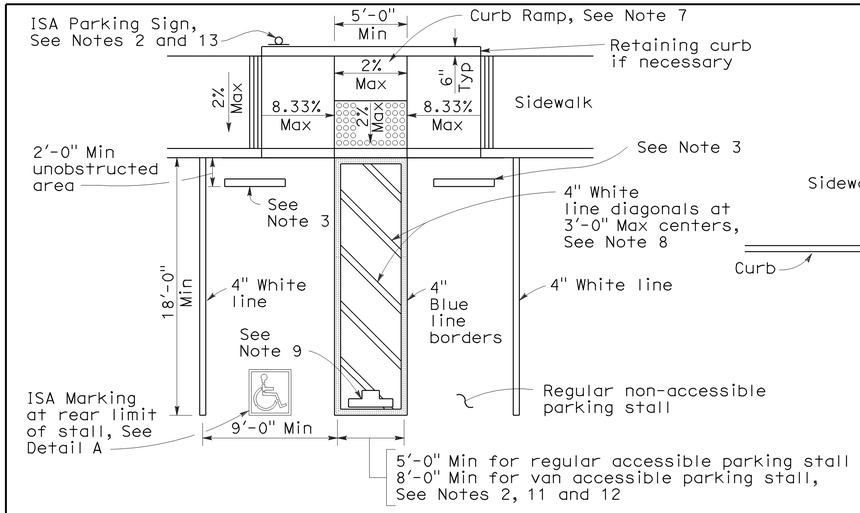

SINGLE PARKING STALL

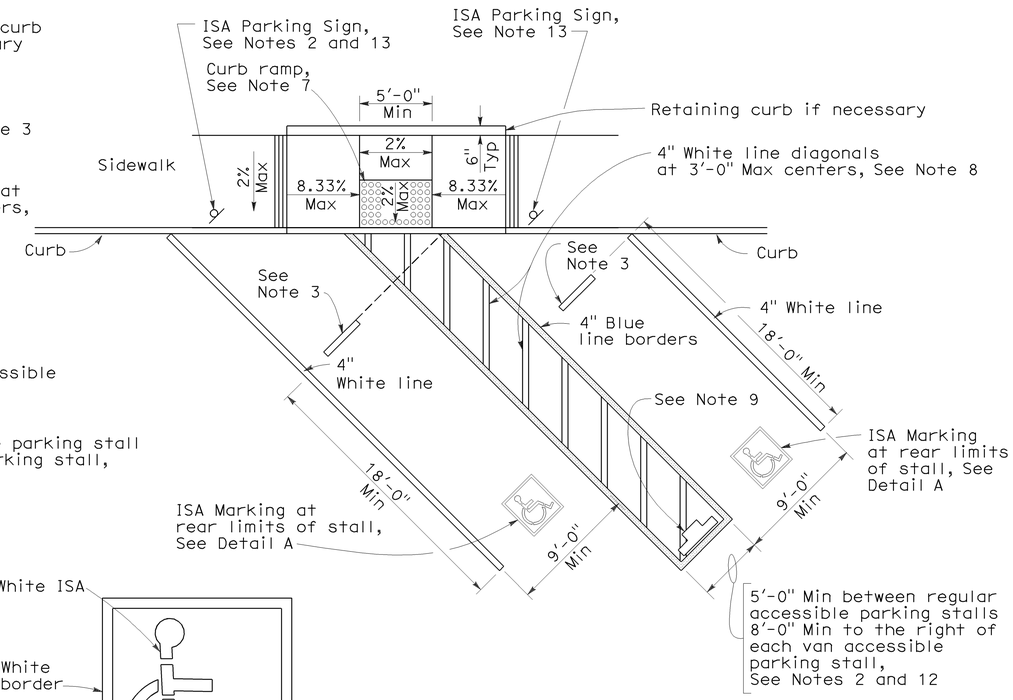

DIAGONAL DOUBLE PARKING STALLS

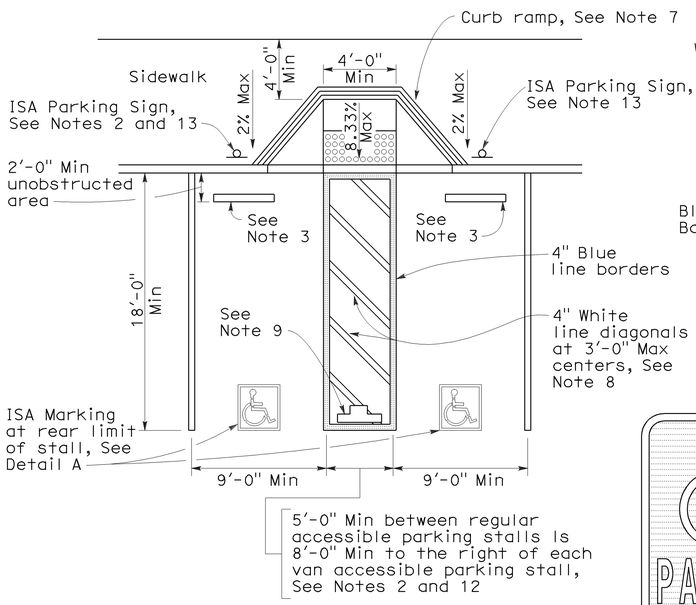

DOUBLE PARKING STALL

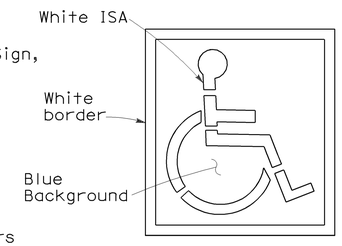

ISA MARKING
See Revised Std Plan RSP A24C

DETAIL A

TABLE A

Total Number of Parking Spaces or Stalls	Minimum Number of Disabled Accessible Parking Spaces or Stalls
1-25	1
26-50	2
51-75	3
76-100	4
101-150	5
151-200	6
201-300	7
301-400	8
401-500	9
501-1000	2 percent of total
Greater than 1001	20 plus 1 for each 100 or fraction thereof over 1001

SIGN R99 (CA)

PLAQUE R99B (CA)

SIGN R99 (CA) with PLAQUE R99B (CA)
See Note 6

SIGN R99C (CA)
See Note 6

UNAUTHORIZED VEHICLES PARKED IN DESIGNATED ACCESSIBLE SPACES NOT DISPLAYING DISTINGUISHING PLACARDS OR SPECIAL LICENSE PLATES ISSUED FOR PERSONS WITH DISABILITIES WILL BE TOWED AWAY AT THE OWNER'S EXPENSE

TOWED VEHICLES MAY BE RECLAIMED AT
(Insert Address)

OR BY TELEPHONING
(Insert Telephone Number)

SIGN R100B (CA)
See Note 10

SIGN R7-8b
See Notes 2 and 6

OFF-STREET PARKING SIGNS
(Parking lot or garage)
See Note 6

ISA = International Symbol of Accessibility

NOTES:

1. Accessible parking spaces serving a particular building shall be located on the shortest accessible route of travel from adjacent parking to an accessible entrance. In parking facilities that do not serve a particular building, accessible parking shall be located on the shortest accessible route of travel to an accessible pedestrian entrance of the parking facility.
2. One in every eight accessible off-street parking stalls, but not less than one, shall be served by an accessible aisle of 8'-0" minimum width and shall be signed van accessible. The R7-8b sign shall be mounted below the R99B (CA) plaque or the R99C (CA) sign.
3. In each parking stall, a curb or bumper shall be provided and located to prevent encroachment of vehicles over the required width of walkways. Parking stalls shall be so located that persons with disabilities are not compelled to wheel or walk behind parked cars other than their own.
4. Surface slopes of accessible off-street parking stalls shall be the minimum possible and shall not exceed 2 percent in any direction.
5. Table A shall be used to determine the required number of accessible parking stalls in each parking lot or garage.
6. Where Plaque R99B (CA), Sign R99C (CA) or Sign R7-8b are installed, the bottom of the sign or plaque panel shall be a minimum of 7'-0" above the surrounding surface.
7. Curb ramps shall conform to the details shown on Revised Standard Plan RSP A88A.
8. Blue paint, instead of white may be used for marking accessibility aisles in areas where snow may cause white markings to not be visible.
9. The words "NO PARKING", shall be painted in white letters no less than 1'-0" high and located so that it is visible to traffic enforcement officials. See Revised Standard Plan RSP A90B for details of the "NO PARKING" pavement marking.
10. A R100B (CA) sign shall be posted in a conspicuous place at each entrance to off-street parking facilities or immediately adjacent to and visible from each stall. The sign shall include the address where the towed vehicle may be reclaimed and the telephone number of the local traffic law enforcement agency.
11. Where a single (non-van) accessible parking space is provided, the loading and unloading access aisle shall be on the passenger side of the vehicle as the vehicle is going forward into the parking space.
12. Where a van accessible parking space is provided, the loading and unloading access aisle shall be 8'-0" wide minimum, and shall be on the passenger side of the vehicle as the vehicle is going forward into the parking space.
13. Accessible Parking Only Sign shall be Sign R99C (CA) or Sign R99 (CA) with Plaque R99B (CA).

STATE OF CALIFORNIA
DEPARTMENT OF TRANSPORTATION

ACCESSIBLE PARKING OFF-STREET

NO SCALE

RSP A90A DATED JUNE 6, 2008 SUPERSEDES STANDARD PLAN A90A
DATED MAY 1, 2006 - PAGE 117 OF THE STANDARD PLANS BOOK DATED MAY 2006.

REVISED STANDARD PLAN RSP A90A

2006 REVISED STANDARD PLAN RSP A90A

6-3-08

DIST	COUNTY	ROUTE	POST MILES TOTAL PROJECT	SHEET NO.	TOTAL SHEETS
03	Sut	99	27.7	34	45

LICENSED LANDSCAPE ARCHITECT

June 5, 2009
PLANS APPROVAL DATE

The State of California or its officers or agents shall not be responsible for the accuracy or completeness of electronic copies of this plan sheet.

LICENSED LANDSCAPE ARCHITECT
Gregory A. Balzer 2576
09 Renewal Date
2-28-11 Renewal Date
5-14-09 Date
STATE OF CALIFORNIA

To accompany plans dated 6-13-11

A

AB	aggregate base
ABS	acrylonitrile-butadiene-styrene
AC	asphalt concrete
Adj	adjacent/adjustable
AIC	auxiliary irrigation controller
Alt	alternative
AMEND	amendment
ARV	air release valve
AUTO	automatic
AUX	auxiliary
AVB	atmospheric vacuum breaker

B

B&B	balled and burlapped
B/B	brass/bronze
B/B/PL	brass/bronze/plastic
B/PL	brass/plastic
BFM	bonded fiber matrix
Bit Ctd	bituminous coated
BP	booster pump
BPA	backflow preventer assembly
BPAE	backflow preventer assembly in enclosure
BPE	backflow preventer enclosure
BV	ball valve

C

CAP	corrugated aluminum pipe
CARV	combination air release valve
CCA	cam coupler assembly
CEC	controller enclosure cabinet
CHDPE	corrugated high density polyethylene
CL	chain link
CNC	control and neutral conductors
Conc	concrete
Cond	conduit
CSP	corrugated steel pipe
CST	center strip
CV	check valve

D

Dia	diameter
DIP	ductile iron pipe
DN	diameter nominal

E

EA	each
Elect	electric/electrical
Elev	elevation
ENCL	enclosure
EP	edge of pavement
ES	edge of shoulder
EST	end strip
ESTB	establishment
ETW	edge of traveled way

F

F	full circle
F/P	full/part circle
FAU	filter assembly unit
FCV	flow control valve
FERT	fertilizer
FG	finished grade
FIPT	female iron pipe thread
FIS	fertilizer injector system
FL	flow line
FM	flow monitor
FS	flow sensor
Ft	foot/feet
FV	flush valve

G

GAL	Gallon(s)
Galv	galvanized
GARV	garden valve
GPH	gallons per hour
GPM	gallons per minute
GSP	galvanized steel pipe
GV	gate valve

H

H	half circle
HB	hose bib
HDPE	high density polyethylene
HP	horsepower/hinge point
HPL	high pressure line
Hwy	highway

I

IC	irrigation controller
ICC	irrigation controller(s) in controller enclosure cabinet
ID	inside diameter
In	inches
IFS	irrigation filtration system
IPS	iron pipe size
IPT	iron pipe thread
Irr	irrigation

L

L	length
LF	linear foot

M

Max	maximum
MBGR	metal beam guard railing
MCV	manual control valve
MIC	master irrigation controller
Min	minimum
MIPT	male iron pipe thread
Misc	miscellaneous
Mtl	material
MVP	maintenance vehicle pullout

N

NCN	no common name
NL	nozzle line
No.	number
NPT	national pipe thread

O

O/C	on center
OD	outside diameter
Oz	ounce

P

P	part circle
PB	pull box
PCC	portland cement concrete
PE	polyethylene
Pkt	packet
PL	plastic
PLT	plant/planting
PLT ESTB	plant establishment
PM	post mile
PR	pressure rated
PRLV	pressure relief valve
PSFM	polymer stabilized fiber matrix
PSI	pounds per square inch
PRV	pressure reducing valve
PVC	polyvinyl chloride
Pvmt	pavement

Q

Q	quarter circle
QCV	quick coupling valve

R

R	radius
RCP	reinforced concrete pipe
RCV	remote control valve
RCVM	remote control valve (master)
RCVMF	remote control valve (master) w/ flow meter
RCW	recycled/reclaimed water
RECP	rolled erosion control product
REQ	required
R/W	right of way

S

S	slip
SCC	sprinkler control conduit
SCH	schedule
SF	state-furnished
Shld	shoulder
SQFT	square foot/feet
SQYD	square yard(s)
SST	side strip
Sta	station
Std	standard
SW	sidewalk/sound wall

T

T	third circle/thread
TLS	truck loading standpipe
TQ	three quarter circle
TRM	turf reinforcement mat
TRVD	traveled
TT	two third circle
Typ	typical

U

UG	underground

V

VAU	valve assembly unit

W

W	width
W/	with
WM	water meter
WS	wye strainer
WSP	welded steel pipe
WWM	welded wire mesh

NOTE:

FOR ADDITIONAL ABBREVIATIONS, SEE STANDARD PLANS A10A AND A10B.

STATE OF CALIFORNIA
DEPARTMENT OF TRANSPORTATION

PLANTING AND IRRIGATION ABBREVIATIONS

NO SCALE

RSP H1 DATED JUNE 5, 2009 SUPERSEDES STANDARD PLAN H1
DATED MAY 1, 2006 - PAGE 201 OF THE STANDARD PLANS BOOK DATED MAY 2006.

REVISED STANDARD PLAN RSP H1

2006 REVISED STANDARD PLAN RSP H1

DIST	COUNTY	ROUTE	POST MILES TOTAL PROJECT	SHEET NO.	TOTAL SHEETS
03	Sut	99	27.7	35	45

LICENSED LANDSCAPE ARCHITECT

June 5, 2009
PLANS APPROVAL DATE

The State of California or its officers or agents shall not be responsible for the accuracy or completeness of electronic copies of this plan sheet.

LICENSED LANDSCAPE ARCHITECT — Gregory A. Balzer — 2576 — 02-28-11 Renewal Date — 5-14-09 Date — STATE OF CALIFORNIA

To accompany plans dated 6-13-11

EXISTING	PROPOSED	ITEM DESCRIPTION
		WATER METER (WM)
		BACKFLOW PREVENTER ASSEMBLY (BPA)
		BACKFLOW PREVENTER ASSEMBLY IN ENCLOSURE (BPAE)
		BACKFLOW PREVENTER ENCLOSURE (BPE)
		BOOSTER PUMP (BP)
		TRUCK LOADING STANDPIPE (TLS)
FS	FS	FLOW SENSOR (FS)
X	X	MASTER IRRIGATION CONTROLLER (MIC)
		AUXILIARY IRRIGATION CONTROLLER (AIC)
		IRRIGATION CONTROLLER (IC)/ IRRIGATION CONTROLLER (IC) (BATTERY) IRRIGATION CONTROLLER (IC) (SOLAR)
		IRRIGATION CONTROLLER(S) IN CONTROLLER ENCLOSURE CABINET (ICC)
		CONTROL AND NEUTRAL CONDUCTORS (CNC)
SCC	SCC	SPRINKLER CONTROL CONDUIT (SCC)
		IRRIGATION CROSSOVER
		EXTEND IRRIGATION CROSSOVER
		IRRIGATION SLEEVE
dip	DIP	DUCTILE IRON PIPE (SUPPLY LINE) (MAIN) (DIP)
		GALVANIZED STEEL PIPE (SUPPLY LINE) (MAIN) (GSP)
		GALVANIZED STEEL PIPE (SUPPLY LINE) (LATERAL) (GSP)
		PLASTIC PIPE (PR 200) (SUPPLY LINE) (MAIN)
		PLASTIC PIPE (PR 200) (SUPPLY LINE) (LATERAL)
		PLASTIC PIPE (IRRIGATION LINE)
		REMOTE CONTROL VALVE (RCV) REMOTE CONTROL VALVE (MASTER) (RCVM) REMOTE CONTROL VALVE (MASTER) W/FLOW METER (RCVMF)
		MANUAL CONTROL VALVE (MCV)
		VALVE ASSEMBLY UNIT (VAU)
		WYE STRAINER (WS)
		FILTER ASSEMBLY UNIT (FAU)
		GATE VALVE (GV)
		BALL VALVE (BV)

EXISTING	PROPOSED	ITEM DESCRIPTION
		QUICK COUPLING VALVE (QCV)
		CAM COUPLER ASSEMBLY (CCA)
		PRESSURE REDUCING VALVE (PRV)
		PRESSURE RELIEF VALVE (PRLV)
		FLOW CONTROL VALVE (FCV)
		COMBINATION AIR RELEASE VALVE (CARV)
		CHECK VALVE (CV)
		FLUSH VALVE (FV)
		NOZZLE LINE W/TURNING UNION
		IRRIGATION SYSTEM
		IRRIGATION SYSTEM TO BE REMOVED
		CHAIN LINK GATE
		QUICK COUPLING VALVE W/SPRINKLER PROTECTOR
3	3	SPRINKLER W/SPRINKLER PROTECTOR
	C	CONNECT TO EXISTING SYSTEM
		CAP
		CAP EXISTING

VALVE CODE

RCV SIZE
IRRIGATION CONTROLLER
CONTROLLER STATION
VALVE IN PARALLEL (IF APPLICABLE)
GPM
QUANTITY OF SPRINKLERS (WHEN SHOWN)

* 2½"-A-2b-40 -60

MCV SIZE
VALVE NUMBER
GPM
QUANTITY OF TYPE SPRINKLERS (WHEN SHOWN)

* 2"-3-30 -50

* VALVE CODES FOR EXISTING VALVES ARE SHOWN IN A DASHED ENCLOSURE.

STATE OF CALIFORNIA
DEPARTMENT OF TRANSPORTATION

PLANTING AND IRRIGATION SYMBOLS

NO SCALE

RSP H2 DATED JUNE 5, 2009 SUPERSEDES RSP H2 DATED MARCH 7, 2008 AND STANDARD PLAN H2 DATED MAY 1, 2006 - PAGE 202 OF THE STANDARD PLANS BOOK DATED MAY 2006.

REVISED STANDARD PLAN RSP H2

2006 REVISED STANDARD PLAN RSP H2

5-11-09

DIST	COUNTY	ROUTE	POST MILES TOTAL PROJECT	SHEET NO.	TOTAL SHEETS
03	Sut	99	27.7	36	45

LICENSED LANDSCAPE ARCHITECT

June 5, 2009
PLANS APPROVAL DATE

LICENSED LANDSCAPE ARCHITECT
Gregory A. Balzer 2576
10 Renewal Date
2-28-11
Renewal Date
5-14-09
Date
STATE OF CALIFORNIA

The State of California or its officers or agents shall not be responsible for the accuracy or completeness of electronic copies of this plan sheet.

To accompany plans dated 6-13-11

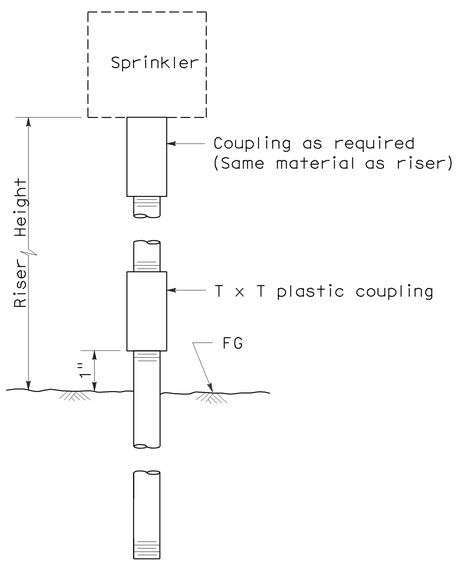

ELEVATION
RISER TYPE I

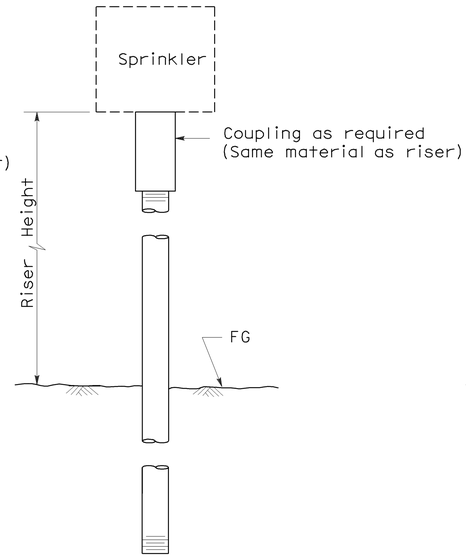

ELEVATION
RISER TYPE II

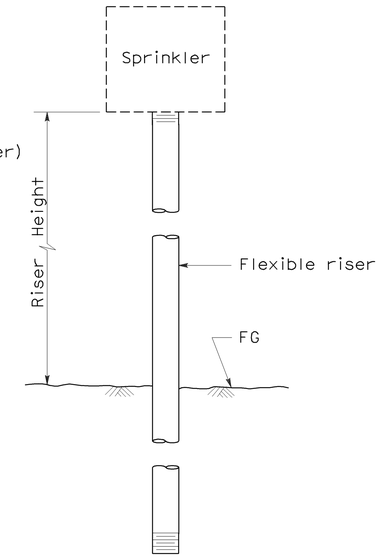

ELEVATION
RISER TYPE III

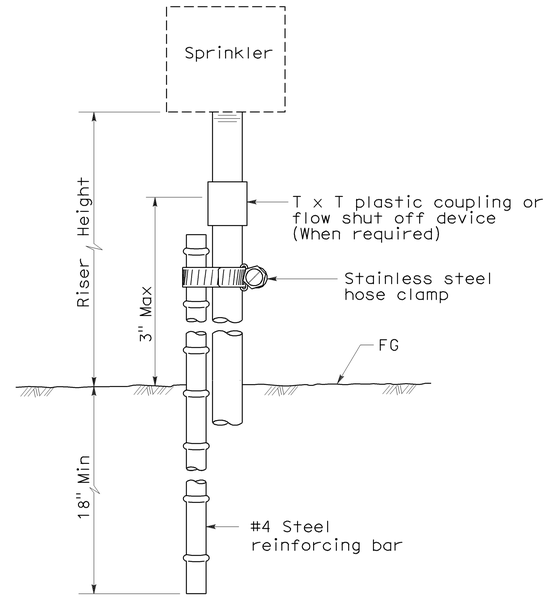

ELEVATION
RISER TYPE IV

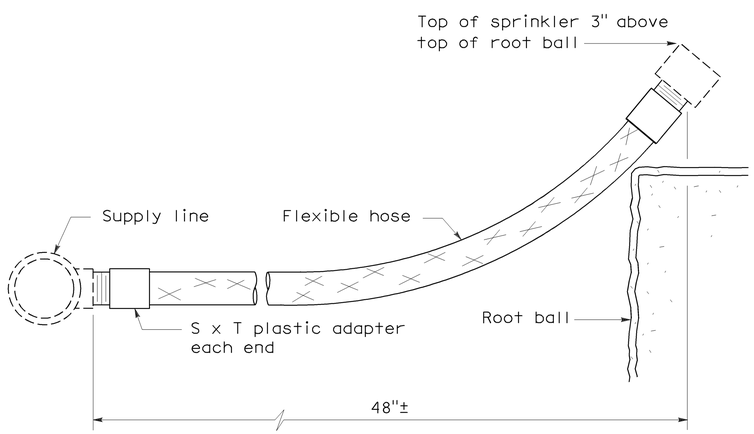

ELEVATION
RISER TYPE V

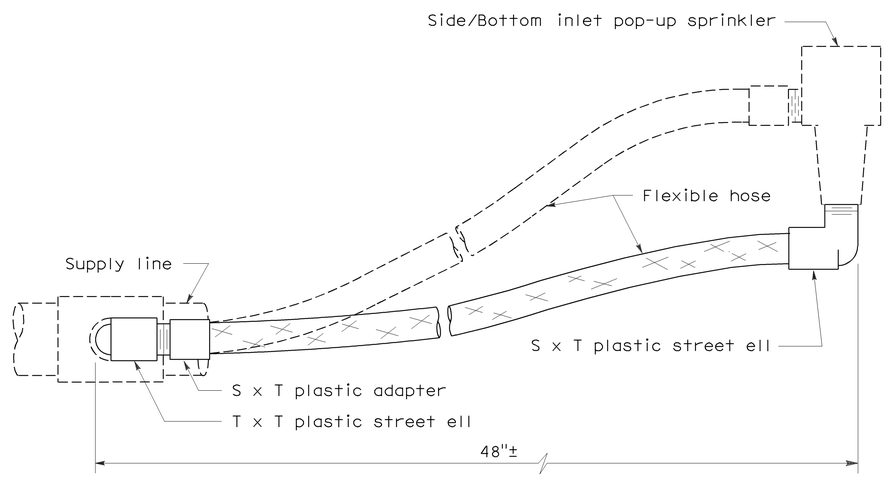

ELEVATION
RISER TYPE VI

STATE OF CALIFORNIA
DEPARTMENT OF TRANSPORTATION

PLANTING AND IRRIGATION DETAILS

NO SCALE

RSP H5 DATED JUNE 5, 2009 SUPERSEDES STANDARD PLAN H5
DATED MAY 1, 2006 - PAGE 205 OF THE STANDARD PLANS BOOK DATED MAY 2006.

REVISED STANDARD PLAN RSP H5

2006 REVISED STANDARD PLAN RSP H5

5-28-09

DIST	COUNTY	ROUTE	POST MILES TOTAL PROJECT	SHEET NO.	TOTAL SHEETS
03	Sut	99	27.7	37	45

LICENSED LANDSCAPE ARCHITECT

June 5, 2009
PLANS APPROVAL DATE

The State of California or its officers or agents shall not be responsible for the accuracy or completeness of electronic copies of this plan sheet.

Gregory A. Balzer 2576 — 02-28-11 Renewal Date — 5-14-09 Date — STATE OF CALIFORNIA

To accompany plans dated 6-13-11

2006 REVISED STANDARD PLAN RSP H7

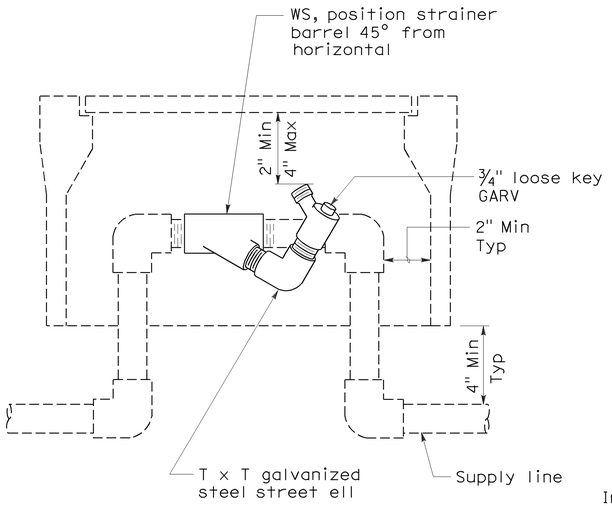

ELEVATION
WYE STRAINER

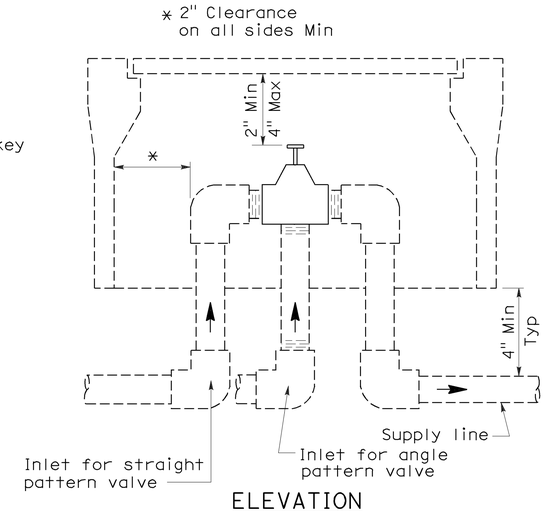

ELEVATION
VALVE

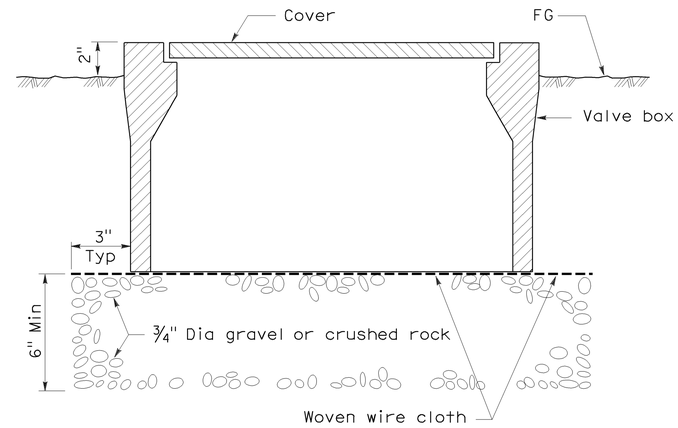

SECTION
VALVE BOX

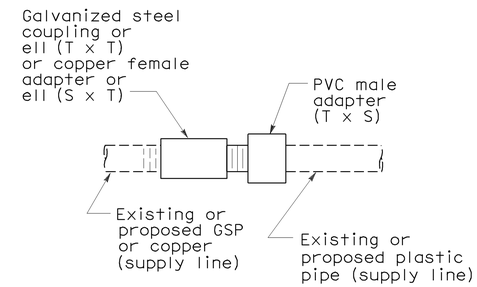

PLAN
GALVANIZED OR COPPER PIPE CONNECTION TO PLASTIC PIPE

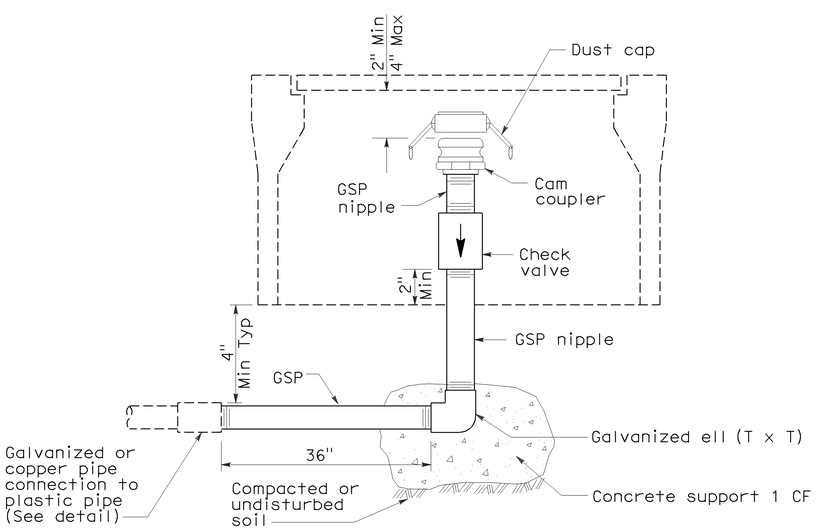

ELEVATION
CAM COUPLER ASSEMBLY

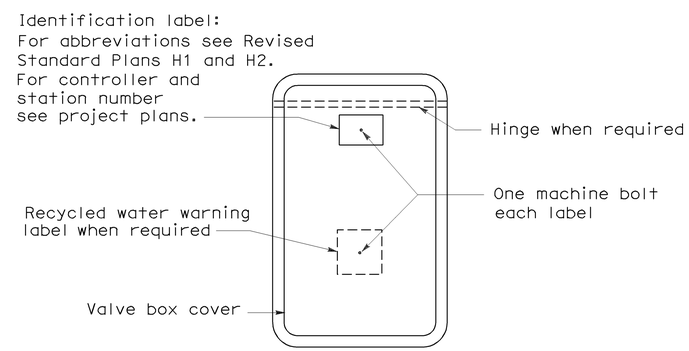

PLAN

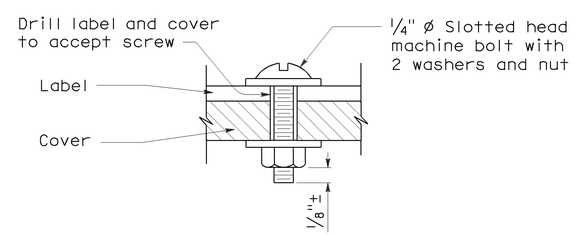

SECTION
VALVE BOX IDENTIFICATION

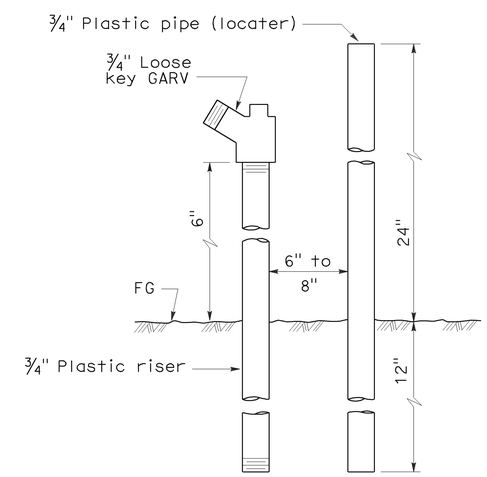

ELEVATION
FLUSH VALVE

STATE OF CALIFORNIA
DEPARTMENT OF TRANSPORTATION

PLANTING AND IRRIGATION DETAILS

NO SCALE

RSP H7 DATED JUNE 5, 2009 SUPERSEDES STANDARD PLAN H7
DATED MAY 1, 2006 - PAGE 207 OF THE STANDARD PLANS BOOK DATED MAY 2006.

REVISED STANDARD PLAN RSP H7

5-28-09

DIST	COUNTY	ROUTE	POST MILES TOTAL PROJECT	SHEET NO.	TOTAL SHEETS
03	Sut	99	27.7	38	45

LICENSED LANDSCAPE ARCHITECT

June 5, 2009
PLANS APPROVAL DATE

LICENSED LANDSCAPE ARCHITECT Gregory A. Balzer 2576 09 Renewal Date 2-28-11 Renewal Date 5-14-09 Date STATE OF CALIFORNIA

The State of California or its officers or agents shall not be responsible for the accuracy or completeness of electronic copies of this plan sheet.

To accompany plans dated 6-13-11

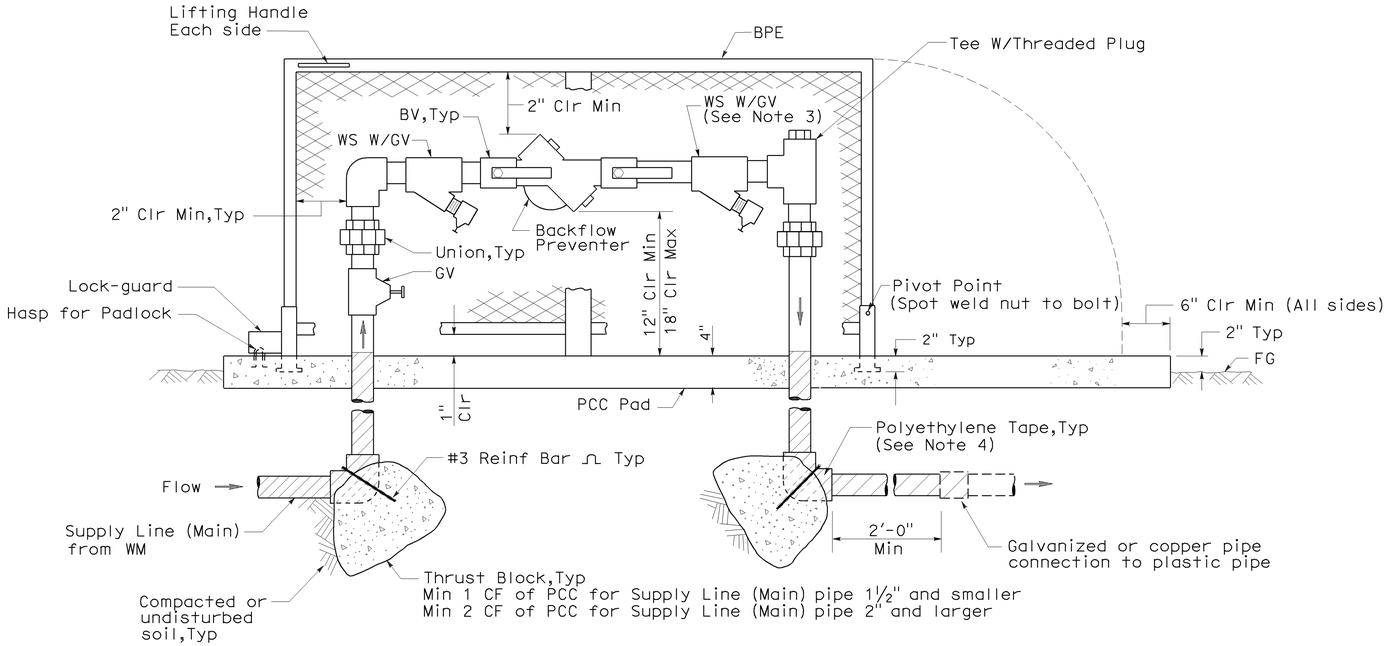

ELEVATION

BACKFLOW PREVENTER ASSEMBLY IN ENCLOSURE (ONE PIECE)

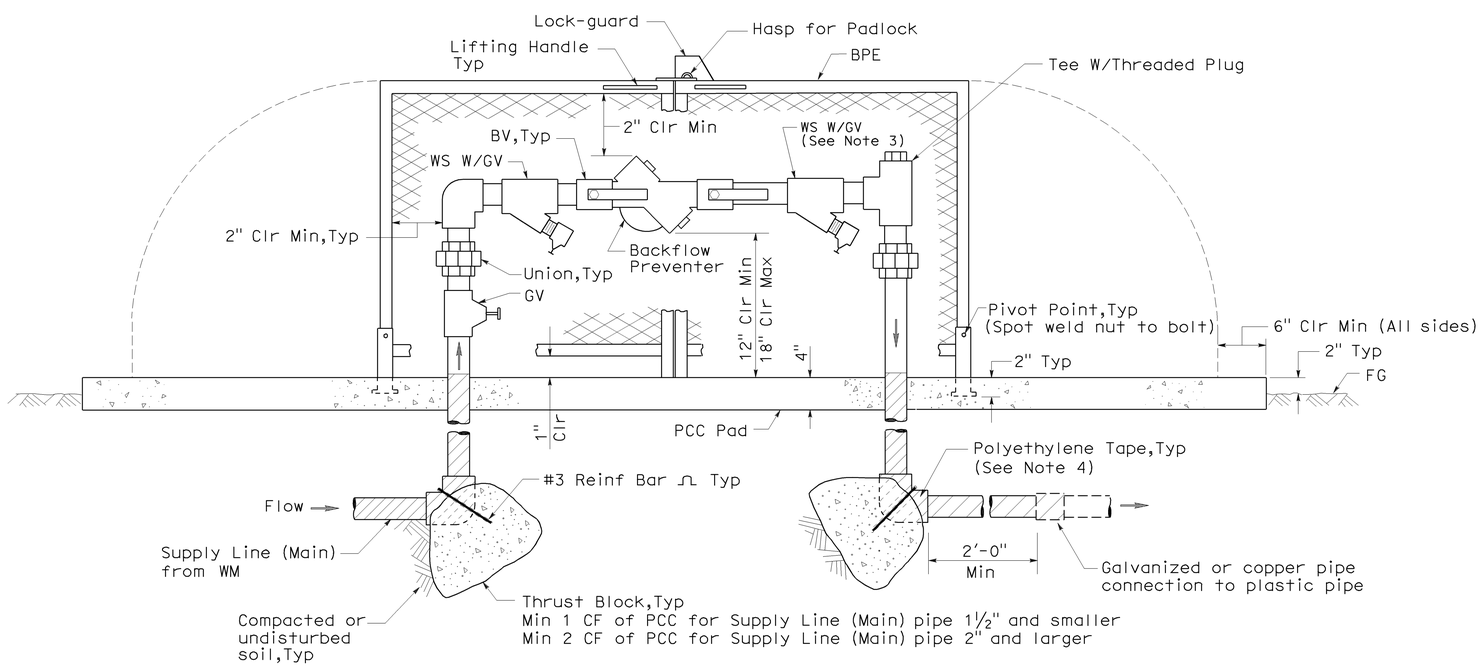

ELEVATION

BACKFLOW PREVENTER ASSEMBLY IN ENCLOSURE (TWO PIECE)

NOTES:

1. Wye strainer and fittings must be the same size as the backflow preventer shown on the plans.
2. Backflow preventer assembly manifold pipe must be the same pipe as the supply line (main) pipe to be installed from the water meter to the backflow preventer assembly.
3. Wye strainer location shown downstream of the backflow preventer is for District 11 projects only.
4. All metal in contact with soil and Portland Cement Concrete must be polyethylene wrapped using 2" wide plastic backed adhesive tape 20 mil thick with ½" overlap.

STATE OF CALIFORNIA
DEPARTMENT OF TRANSPORTATION

PLANTING AND IRRIGATION DETAILS

NO SCALE

RSP H8 DATED JUNE 5, 2009 SUPERSEDES STANDARD PLAN H8
DATED MAY 1, 2006 - PAGE 208 OF THE STANDARD PLANS BOOK DATED MAY 2006.

REVISED STANDARD PLAN RSP H8

2006 REVISED STANDARD PLAN RSP H8

5-28-09

DIST	COUNTY	ROUTE	POST MILES TOTAL PROJECT	SHEET NO.	TOTAL SHEETS
03	Sut	99	27.7	39	45

LICENSED LANDSCAPE ARCHITECT

April 3, 2009
PLANS APPROVAL DATE

The State of California or its officers or agents shall not be responsible for the accuracy or completeness of electronic copies of this plan sheet.

LICENSED LANDSCAPE ARCHITECT — Robert B. Schott 3685 — Expires 11-30-10 Renewal Date — 2-25-09 Date — STATE OF CALIFORNIA

To accompany plans dated 6-13-11

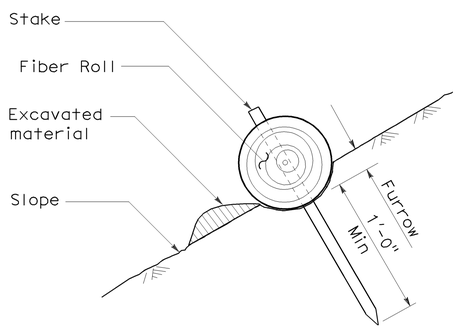

SECTION

TEMPORARY FIBER ROLL (TYPE 1)

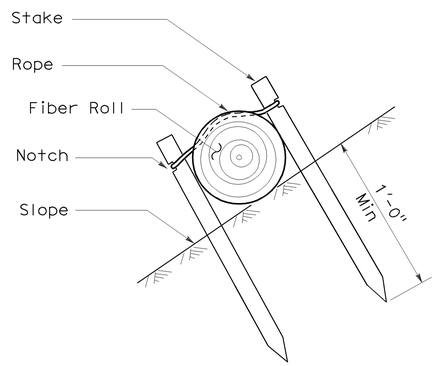

SECTION

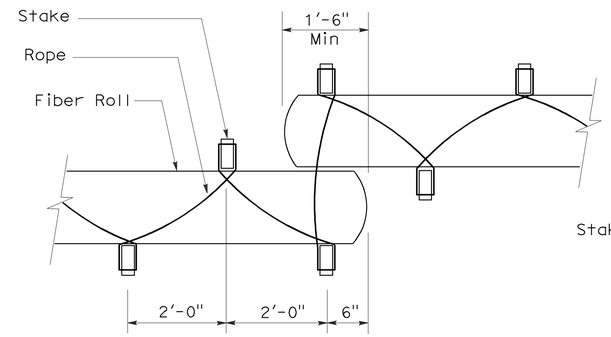

PLAN

TEMPORARY FIBER ROLL (TYPE 2)

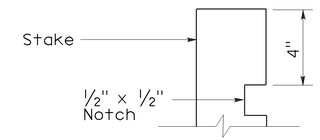

ELEVATION

STAKE NOTCH DETAIL

NOTES:

1. Temporary fiber roll spacing varies depending upon slope inclination.
2. Installations shown in the perspectives are for slope inclination of 10:1 and steeper.

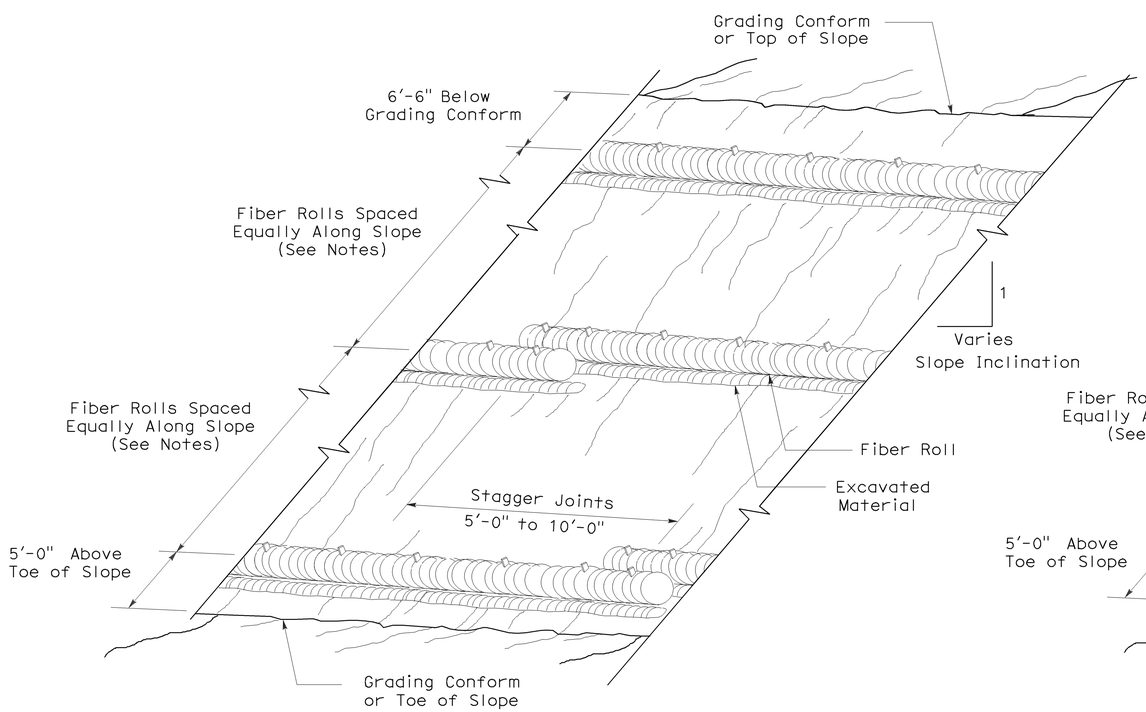

PERSPECTIVE

TEMPORARY FIBER ROLL (TYPE 1)

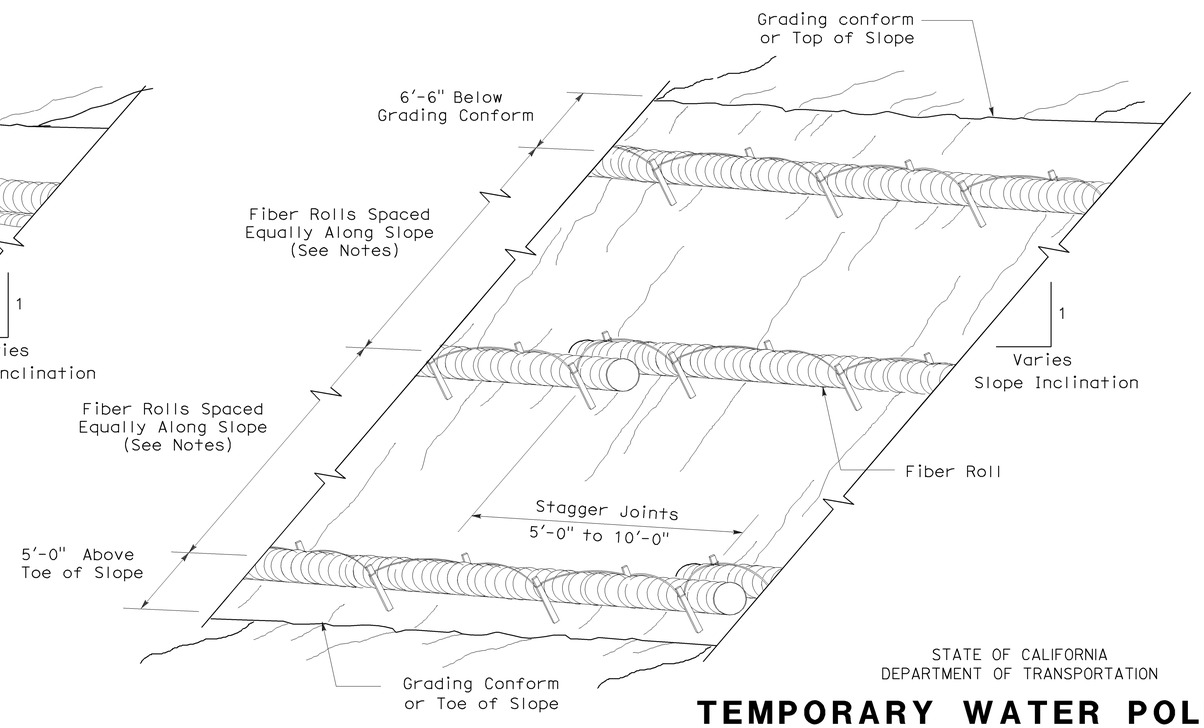

PERSPECTIVE

TEMPORARY FIBER ROLL (TYPE 2)

STATE OF CALIFORNIA
DEPARTMENT OF TRANSPORTATION

TEMPORARY WATER POLLUTION CONTROL DETAILS (TEMPORARY FIBER ROLL)

NO SCALE

RSP T56 DATED APRIL 3, 2009 SUPERSEDES STANDARD PLAN T56
DATED MAY 1, 2006 - PAGE 232 OF THE STANDARD PLANS BOOK DATED MAY 2006.

REVISED STANDARD PLAN RSP T56

2006 REVISED STANDARD PLAN RSP T56

2-23-09

DIST	COUNTY	ROUTE	POST MILES TOTAL PROJECT	SHEET NO.	TOTAL SHEETS
03	Sut	99	27.7	40	45

LICENSED LANDSCAPE ARCHITECT

April 3, 2009
PLANS APPROVAL DATE

The State of California or its officers or agents shall not be responsible for the accuracy or completeness of electronic copies of this plan sheet.

LICENSED LANDSCAPE ARCHITECT Robert B. Schott 3625 Registered Expires 11-30-10 Renewal Date 2-25-09 Date STATE OF CALIFORNIA

To accompany plans dated 6-13-11

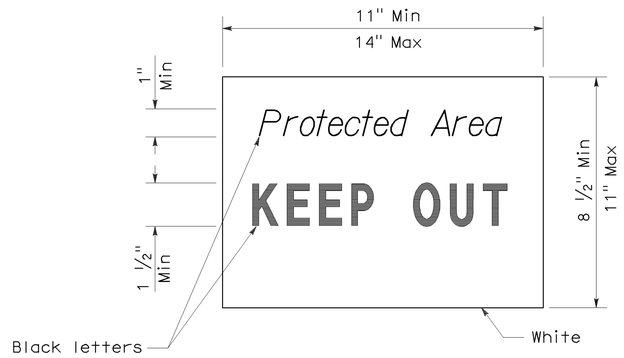

SIGN DETAIL

NOTE:

1. Temporary silt fence and temporary straw bale barrier shown for reference purposes only.

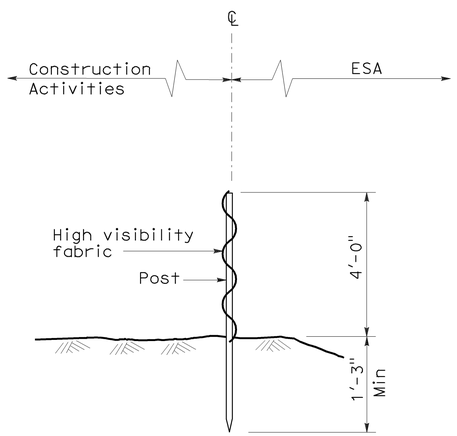

SECTION
TEMPORARY FENCE (TYPE ESA)

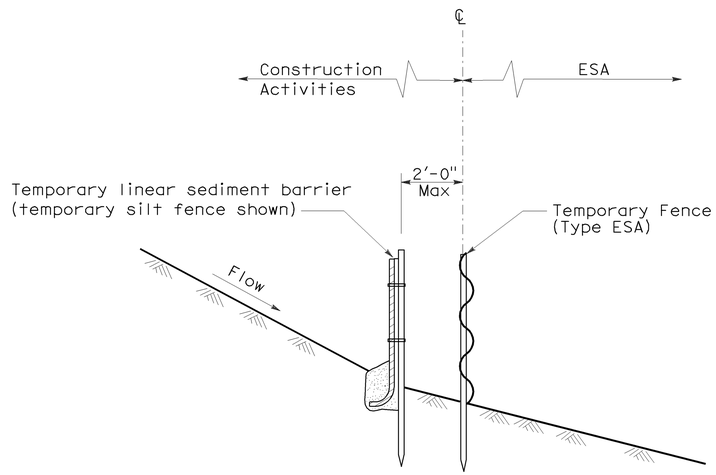

SECTION
PLACEMENT DETAIL
FOR TEMPORARY LINEAR SEDIMENT BARRIER
USED WITH TEMPORARY
FENCE (TYPE ESA)
(See Note 1)

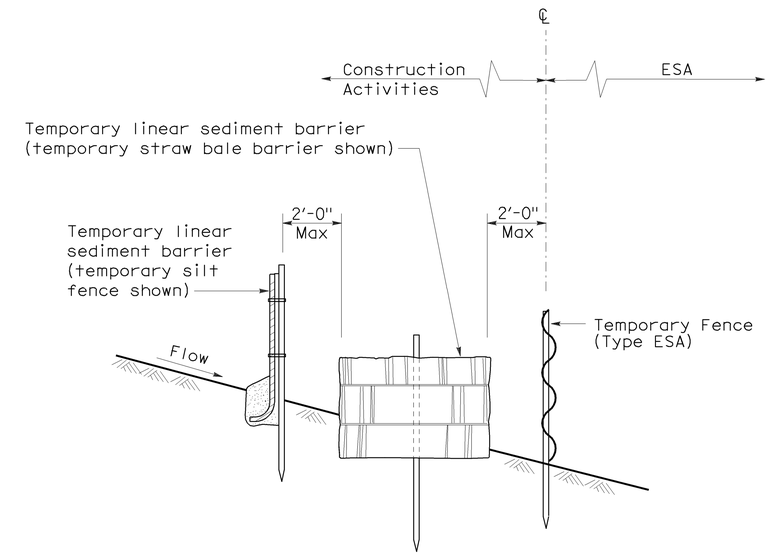

SECTION
PLACEMENT DETAIL
FOR TEMPORARY SILT FENCE
AND TEMPORARY STRAW BALE BARRIER
USED WITH TEMPORARY FENCE (TYPE ESA)
(See Note 1)

STATE OF CALIFORNIA
DEPARTMENT OF TRANSPORTATION

TEMPORARY WATER POLLUTION CONTROL DETAILS [TEMPORARY FENCE (TYPE ESA)]

NO SCALE

NSP T65 DATED APRIL 3, 2009 SUPPLEMENTS
THE STANDARD PLANS BOOK DATED MAY 2006.

NEW STANDARD PLAN NSP T65

2006 NEW STANDARD PLAN NSP T65

DIST	COUNTY	ROUTE	POST MILES TOTAL PROJECT	SHEET NO.	TOTAL SHEETS
03	Sut	99	27.7	41	45

REGISTERED CIVIL ENGINEER

October 5, 2007
PLANS APPROVAL DATE

REGISTERED PROFESSIONAL ENGINEER Douglas J. Dunrud No. C47240 Exp. 12-31-07 CIVIL STATE OF CALIFORNIA

The State of California or its officers or agents shall not be responsible for the accuracy or completeness of electronic copies of this plan sheet.

To accompany plans dated 6-13-11

2006 REVISED STANDARD PLAN RSP B15-1

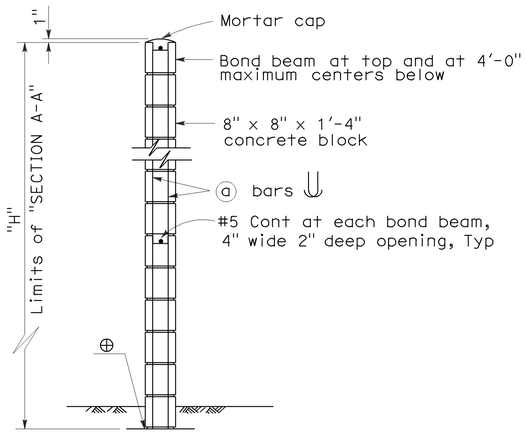

H=6'-0" THRU H=10'-0"

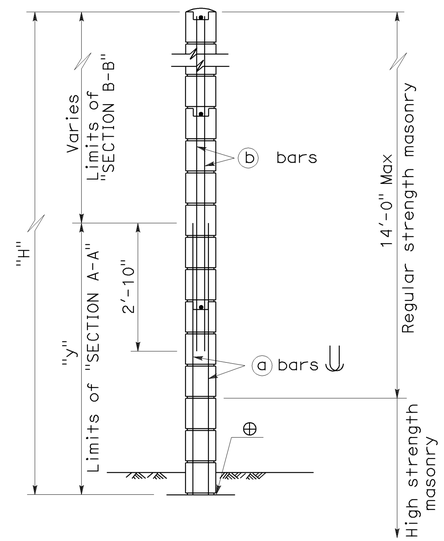

H=12'-0" THRU H=16'-0"

For details not shown, see H=6'-0" thru H=10'-0".

TYPICAL SECTION

⊕ Full mortar bed at bottom of wall

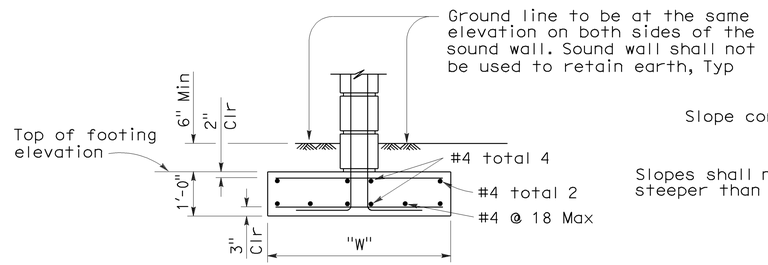

CASE 1

For details not shown, see Case 2. Level ground (±10%) on both sides of the sound wall.

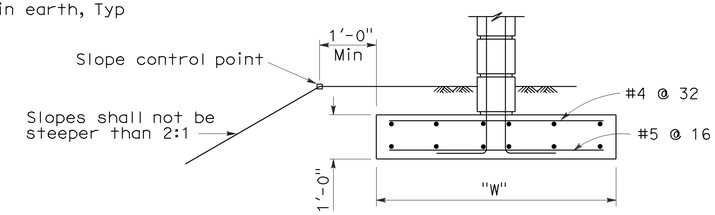

CASE 2

For details not shown, see Case 1. Level ground (±10%) on the traffic side of the sound wall and sloping ground on the opposite side.

SPREAD FOOTING SECTION

TRENCH FOOTING

Maximum H	CASE 1 Ø = 25 Min D	CASE 1 Ø = 30 Min D	CASE 1 Ø = 35 Min D	CASE 2 Ø = 30 Min D	CASE 2 Ø = 35 Min D	Maximum H
6'-0"	5'-0"	4'-3"	3'-6"	6'-6"	5'-0"	6'-0"
8'-0"	6'-0"	5'-0"	4'-3"	7'-9"	6'-0"	8'-0"
10'-0"	6'-9"	5'-9"	5'-0"	8'-9"	6'-9"	10'-0"
12'-0"	7'-9"	6'-6"	5'-6"	9'-9"	7'-9"	12'-0"
14'-0"	8'-6"	7'-3"	6'-0"	10'-9"	8'-6"	14'-0"
16'-0"	9'-3"	7'-9"	6'-6"	11'-9"	9'-3"	16'-0"

Case 1 - Level ground (±10%) on both sides of the sound wall.

Case 2 - Level ground (±10%) on traffic side of the sound wall and sloping ground on opposite side.

SOUND WALL REINFORCEMENT TABLE

Maximum H	ⓐ bars @ 1'-4" Max	ⓑ bars @ 1'-4" Max	"y"	f'm (psi)	Compressive Strength of CMU (psi)	Maximum H
6'-0"	#4	———	———	1500	1900	6'-0"
8'-0"	#4	———	———	1500	1900	8'-0"
10'-0"	#4	———	———	1500	1900	10'-0"
12'-0"	#5	#4	6'-0"	1500	1900	12'-0"
14'-0"	#6	#4	8'-0"	1500	1900	14'-0"
16'-0"	#6	#4	10'-0"	2000	2800	16'-0"

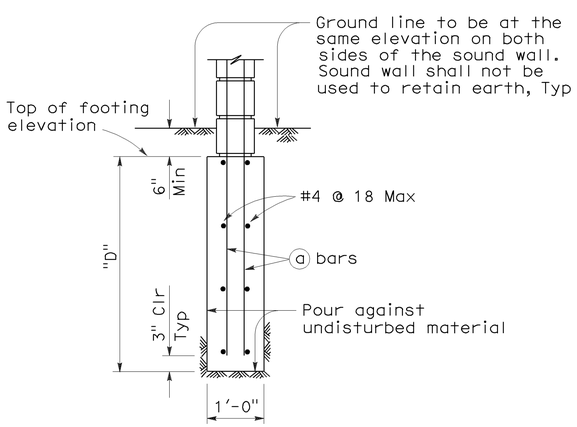

CASE 1

For details not shown, see Case 2. Level ground (±10%) on both sides of the sound wall.

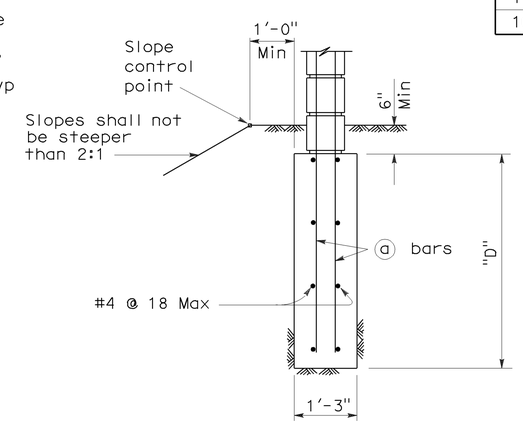

CASE 2

For details not shown, see Case 1. Level ground (±10%) on one side of the sound wall and sloping ground on the opposite side.

TRENCH FOOTING SECTION

SPREAD FOOTING

Maximum H	W
6'-0"	3'-0"
8'-0"	4'-0"
10'-0"	5'-0"
12'-0"	5'-9"
14'-0"	6'-6"
16'-0"	7'-6"

GENERAL NOTES:

A. For type of block and joint finish, see other sheets.

B. When blocks are laid in stacked bond, ladder type, galvanized joint reinforcement shall be provided. A minimum of 2-9 gauge wires continuous at 4'-0" maximum to be used. Locate reinforcement in joints that are at the approximate midpoint between bond and beams.

C. Horizontal joints shall be tooled concave or may be weathered. Vertical joints shall be tooled concave or may be raked.

D. For intermediate wall heights that are between the "H's" given, use the tabular information for the next higher "H".

E. Masonry strengths are listed in the "SOUND WALL REINFORCEMENT TABLE".

STATE OF CALIFORNIA
DEPARTMENT OF TRANSPORTATION

SOUND WALL MASONRY BLOCK ON FOOTING DETAILS (1)

NO SCALE

RSP B15-1 DATED OCTOBER 5, 2007 SUPERSEDES STANDARD PLAN B15-1 DATED MAY 1, 2006 - PAGE 291 OF THE STANDARD PLANS BOOK DATED MAY 2006.

REVISED STANDARD PLAN RSP B15-1

DIST	COUNTY	ROUTE	POST MILES TOTAL PROJECT	SHEET NO.	TOTAL SHEETS
03	Sut	99	27.7	42	45

REGISTERED ELECTRICAL ENGINEER

October 5, 2007
PLANS APPROVAL DATE

REGISTERED PROFESSIONAL ENGINEER Jeffery G. McRae No. E14512 Exp. 6-30-08 ELECTRICAL STATE OF CALIFORNIA

The State of California or its officers or agents shall not be responsible for the accuracy or completeness of electronic copies of this plan sheet.

To accompany plans dated 6-13-11

ELECTROLIERS

STANDARD TYPES
15, 15D
15 STRUCTURE
21, 21D STRUCTURE
30
31
32
35
36-20A

High mast light pole

Double Arm lighting standard

Existing electrolier

Electrolier foundation (Future installation)

NOTES:

1. Luminaires shall be 310 W HPS when installed on Type 21, 21D, 30, 31, 32, 35 and 36-20A Standards, unless otherwise specified. Luminaires shall be 200 W HPS when installed on other type standards or poles, unless otherwise specified.
2. Luminaires shall be the cutoff type, ANSI Type Ⅲ medium cutoff lighting distribution, unless otherwise specified.
3. Variations noted adjacent to symbol on project plans.

Electrolier (see project notes or project plans)

Luminaire on wood pole

STANDARD NOTES:

- AB — Abandon. If applied to conduit, remove conductors.
- BC — Install pull box in existing conduit run.
- BP — Pedestrian barricade, type as indicated on plan.
- CB — Install conduit into existing pull box.
- CC — Connect new and existing conduit. Remove existing conductors and install conductors as indicated.
- CF — Conduit to remain for future use. Remove conductors. Install pull wire or rope.
- DH — Detector handhole.
- FA — Foundation to be abandoned.
- IS — Install sign on signal mast arm.
- NS — No slip base on standard.
- PEC — Photoelectric control.
- PEU — Photoelectric unit.
- RC — Equipment or material to be removed and become the property of the Contractor.
- RE — Remove electrolier, fuses and ballast. Tape ends of conductors.
- RL — Relocate equipment.
- RR — Remove and reuse equipment.
- RS — Remove and salvage equipment.
- SC — Splice new to existing conductors.
- SD — Service disconnect.
- SF — Standard to remain for future use. Remove luminaire, pole conductors, fuses and ballast.
- TSP — Telephone service point.

ABBREVIATIONS AND EQUIPMENT DESIGNATIONS

PROPOSED	EXISTING	
BBS	bbs	Battery backup system
BC	bc	Bolt circle
C	C	Conduit
CCTV	cctv	Closed circuit television
CKT	ckt	Circuit
CMS	cms	Changeable message sign
DLC	dlc	Loop detector lead-in cable
EMS	ems	Extinguishable message sign
EVC	evc	Emergency vehicle cable
EVD	evd	Emergency vehicle detector
FB	fb	Flashing beacon
FBCA	fbca	Flashing beacon control assembly
FBS	fbs	Flashing beacon with slip base
FO	fo	Fiber optic
G	G	Ground (Equipment Grounding Conductor)
GFCI	GFCI	Ground fault circuit interrupt
HAR	har	Highway advisory radio
HEX	hex	Hexagonal
HPS	hps	High pressure sodium
IISNS	iisns	Internally illuminated street name sign
ISL	isl	Induction sign lighting
LED	led	Light emitting diode
LMA	lma	Luminaire mast arm
LPS	lps	Low pressure sodium
LTG	ltg	Lighting
LUM	lum	Luminaire
MAT	mat	Mast arm mounting vehicle signal faces, top attachment
MAS	mas	Mast arm mounting vehicle signal faces, side attachment
MAS-4A	mas-4A	Mast arm mounting vehicle signal faces, side attachment - 4 signal section
MAS-4B	mas-4B	
MAS-4C	mas-4C	
MAS-5A	mas-5A	Mast arm mounting vehicle signal faces, side attachment - 5 signal section
MAS-5B	mas-5B	
MC	mc	Mercury contactor
M/M	m/m	Multiple to multiple transformer
MT	mt	Conduit with pull wire or rope only
MTG	mtg	Mounting
	mv	Mercury vapor lighting fixture
N	N	Neutral (Grounded Conductor)
NC	NC	Normally closed
NO	NO	Normally open
PB	pb	Pull box
PEC	pec	Photoelectric control (Type Ⅰ, Ⅱ, Ⅲ, Ⅳ or Ⅴ as shown)
PED	ped	Pedestrian
PEU	peu	Photoelectric unit
PPB	ppb	Pedestrian push button
RL		Relocated equipment
RM	rm	Ramp metering
SB	sb	Slip base
SIC	sic	Signal interconnect cable
SIG	sig	Signal
SMA	sma	Signal mast arm
SNS	sns	Street name sign
SP	sp	Service point
TDC	tdc	Telephone demarcation cabinet
TMS	tms	Traffic monitoring station
TOS	tos	Traffic Operations System
VEH	veh	Vehicle
XFMR	xfmr	Transformer
COMM	comm	Communication
RWIS	rwis	Roadway weather information system

SOFFIT AND WALL MOUNTED LUMINAIRES

Pendant, 70 W HPS unless otherwise specified.

Flush, 70 W HPS unless otherwise specified.

Wall surface, 70 W HPS unless otherwise specified.

Existing soffit or wall luminaire to remain unmodified.

Existing soffit or wall luminaire to be modified as specified.

NOTE:

Arrow indicates "street side" of luminaire.

STATE OF CALIFORNIA
DEPARTMENT OF TRANSPORTATION

ELECTRICAL SYSTEMS (SYMBOLS AND ABBREVIATIONS)

NO SCALE

RSP ES-1A DATED OCTOBER 5, 2007 SUPERSEDES STANDARD PLAN ES-1A DATED MAY 1, 2006 - PAGE 400 OF THE STANDARD PLANS BOOK DATED MAY 2006.

REVISED STANDARD PLAN RSP ES-1A

2006 REVISED STANDARD PLAN RSP ES-1A

DIST	COUNTY	ROUTE	POST MILES TOTAL PROJECT	SHEET NO.	TOTAL SHEETS
03	Sut	99	27.7	43	45

REGISTERED ELECTRICAL ENGINEER

October 5, 2007
PLANS APPROVAL DATE

REGISTERED PROFESSIONAL ENGINEER Jeffery G. McRae No. E14512 Exp. 6-30-08 ELECTRICAL STATE OF CALIFORNIA

The State of California or its officers or agents shall not be responsible for the accuracy or completeness of electronic copies of this plan sheet.

To accompany plans dated 6-13-11

CONDUIT

PROPOSED	EXISTING	
		Lighting Conduit, unless otherwise indicated or noted
		Traffic signal conduit
C	c	Communication conduit
T	t	Telephone conduit
F	f	Fire alarm conduit
FO	fo	Fiber optic conduit
		Conduit termination RSP ES-9A C
R	r	Conduit riser in/on structure or service pole

SERVICE EQUIPMENT

PROPOSED	EXISTING	
OH	oh	Overhead lines
U	U	Wood pole "U" indicates utility owned
		Pole guy with anchor
		Utility transformer - ground mounted
III		Service equipment enclosure type
		Service equipment enclosure door indicates front of enclosure
T	t	Telephone demarcation cabinet

POLE-MOUNTED SERVICE DESIGNATION

Type of installation

TYPE H SERVICE - 28'-10" ← Pole height above grade

ILLUMINATED OVERHEAD SIGN

PROPOSED	EXISTING	
		Overhead sign - Single post
		Overhead sign - Two post
		Overhead sign - Mounted on structure
		Overhead sign with electrolier

SIGNAL EQUIPMENT

PROPOSED	EXISTING	
		Pedestrian signal face
		Pedestrian push button post
		Pedestrian barricade
		Vehicle signal face (with backplate, 3-Section: red, yellow and green)
		Vehicle signal face with angle visors
PV	PV	Modifications of basic symbols: "L" indicates all non-arrow sections louvered "LG" indicates louvered green section only "PV" indicates 12" programmed visibility sections "8" indicates all 8" sections (only when specified)
		Type 15TS and Vehicle signal face
		Vehicle signal face with red, yellow and green left arrow sections
		Vehicle signal face with red and yellow sections and up green arrow
		Vehicle signal face (5 Section) with red, yellow and green sections and yellow and green right arrows
		Type 1 Standard and attached vehicle signal faces
		Standard with signal mast arm only and attached vehicle signal faces and internally illuminated street name sign
		Type 33 Standard, Left-turn vehicle signal face and sign
		Standard with luminaire and signal mast arms and attached vehicle signal faces
		Cantilever flashing beacon Type 9 Frame, with a sign unless otherwise specified or indicated
		Type 15-FBS Standard with two vehicle signal face sections with lens, backplate and visor with a sign
R	Y	Flashing beacon. One vehicle signal face section with lens, backplate and visor. "R" indicates red indication, "Y" indicates yellow indication
		Controller assembly. Door indicates front of cabinet

SIGNAL EQUIPMENT Cont

PROPOSED	EXISTING	
		Guard post
		Type 1 Standard with "Meter On" sign
		Emergency Vehicle detector

NOTES:

1. All signal sections shall be 12" unless shown otherwise.
2. Signal heads shall be provided with backplates unless shown otherwise.
3. Signal indication shall be LED.

STATE OF CALIFORNIA
DEPARTMENT OF TRANSPORTATION

ELECTRICAL SYSTEMS (SYMBOLS AND ABBREVIATIONS)

NO SCALE

RSP ES-1B DATED OCTOBER 5, 2007 SUPERCEDES STANDARD PLAN ES-1B DATED MAY 1, 2006 - PAGE 401 OF THE STANDARD PLANS BOOK DATED MAY 2006.

REVISED STANDARD PLAN RSP ES-1B

2006 REVISED STANDARD PLAN RSP ES-1B

7-10-07

DIST	COUNTY	ROUTE	POST MILES TOTAL PROJECT	SHEET NO.	TOTAL SHEETS
03	Sut	99	27.7	44	45

REGISTERED ELECTRICAL ENGINEER

October 5, 2007
PLANS APPROVAL DATE

REGISTERED PROFESSIONAL ENGINEER Jeffery G. McRae No. E14512 Exp. 6-30-08 ELECTRICAL STATE OF CALIFORNIA

The State of California or its officers or agents shall not be responsible for the accuracy or completeness of electronic copies of this plan sheet.

To accompany plans dated 6-13-11

EQUIPMENT IDENTIFICATION

ILLUMINATED SIGN IDENTIFICATION NUMBER:

Sign No. 12345

10 ISL SCI 1.0

- Sign number - Place on post or structure
- Transformer rating (kVA)
- Lighting control type
- Number and type of fixtures

Do NOT place on standard or structure

ELECTROLIER OR EQUIPMENT IDENTIFICATION NUMBER:

12345 - 15'-0"

- Mast arm length, if shown. Do not place on standard or structure.
- Equipment number - Place on standard or structure. Existing equipment numbers are shown in parenthesis

CONDUIT AND CONDUCTOR IDENTIFICATION:

1½"C, 2#10, 15#14, 2 DLC

- Number and size of conductors and cables
- Size of conduit in inches

ø1, ø2, ø2P, etc.	Traffic phase identification for signal faces, detectors and phase diagrams
1 2 3	Project note numbers
A B C	Equipment description, installation or item numbers
1 2 3	Conduit run numbers

SIGNAL AND LIGHTING STANDARD (TYPICAL DESIGNATION):

19A - 3 - 100

- Wind velocity = 100 mph
- Case 3 arm loading
- Standard type
- Standard Plan sheet number
- Detail number or letter

MISCELLANEOUS EQUIPMENT

PROPOSED	EXISTING	
CMS	cms	Changeable message sign
		Closed circuit television camera
		Highway advisory radio pole and antenna
EMS	ems	Extinguishable message sign
M V	m v	Detection device M = Microwave sensor V = Video image sensor

WIRING DIAGRAM LEGEND

P	Pole
CB	Circuit breaker
A	Ampere
V	Volt
M	Metered
UM	Unmetered
NB	Neutral bus
GB	Ground bus
G	Equipment grounding conductor
N	Grounded conductor (Neutral)

- External conductor
- Conductor or bus
- Tie point
- Contactor coil
- Contactor, Contact NO
- Terminal blocks
- Contactor, Contact NC
- Enclosure bond
- Grounding electrode
- Circuit breaker
- Receptacle

PULL BOXES

PROPOSED EXISTING

Pull box-No. 5 unless otherwise indicated or noted.

3 9A(21)

Pull box-Additional designations or descriptions

3 = No. 3½ pull box
5 = No. 5 pull box
6 = No. 6 pull box
7 = No. 7 (Ceiling pull box)
8 = No. 8 (Pendant soffit pull box)
9 = No. 9 pull box
9A = No. 9A pull box

(C) = Communications pull box
(E) = Pull box with extension
(S) = Sprinkler control pull box
(21) = Anchor bolts and conduit for future installation of Type 21 Standard
(T) = Traffic pull box

VEHICLE DETECTORS

5 J 9 U

- Vehicle detector designation
- U = Upper
  L = Lower
- Slot number in input file
- Input file (I or J)
- Phase

PROPOSED	EXISTING	
		Type A detector loop. Outline of sawcut shown.
		Type B detector loop. Outline of sawcut shown.
		Type C detector loop. Outline of sawcut shown.
		Type D detector loop. Outline of sawcut shown.
		Type E detector loop. Outline of sawcut shown.
		Type Q detector loop. Outline of sawcut shown.
		Magnetic detector
DH	dh	Detector handhole
		Microwave or video detection zone

STATE OF CALIFORNIA
DEPARTMENT OF TRANSPORTATION

ELECTRICAL SYSTEMS (SYMBOLS AND ABBREVIATIONS)

NO SCALE

RSP ES-1C DATED OCTOBER 5, 2007 SUPERCEDES STANDARD PLAN ES-1C DATED MAY 1, 2006 - PAGE 402 OF THE STANDARD PLANS BOOK DATED MAY 2006.

REVISED STANDARD PLAN RSP ES-1C

2006 REVISED STANDARD PLAN RSP ES-1C

7-10-07

DIST	COUNTY	ROUTE	POST MILES TOTAL PROJECT	SHEET NO.	TOTAL SHEETS
03	Sut	99	27.7	45	45

REGISTERED CIVIL ENGINEER

October 5, 2007
PLANS APPROVAL DATE

REGISTERED PROFESSIONAL ENGINEER Stanley P. Johnson No. C57793 Exp. 3-31-08 CIVIL STATE OF CALIFORNIA

The State of California or its officers or agents shall not be responsible for the accuracy or completeness of electronic copies of this plan sheet.

To accompany plans dated 6-13-11

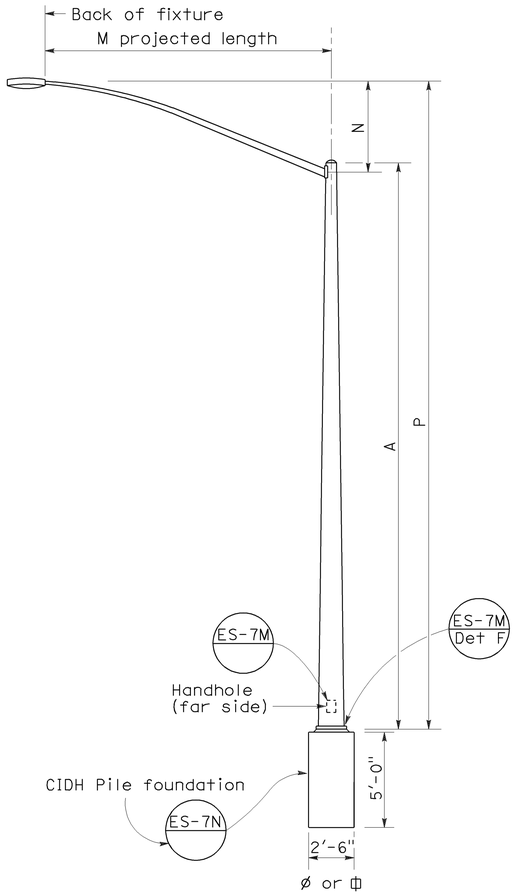

ELEVATION
TYPE 15 AND TYPE 21

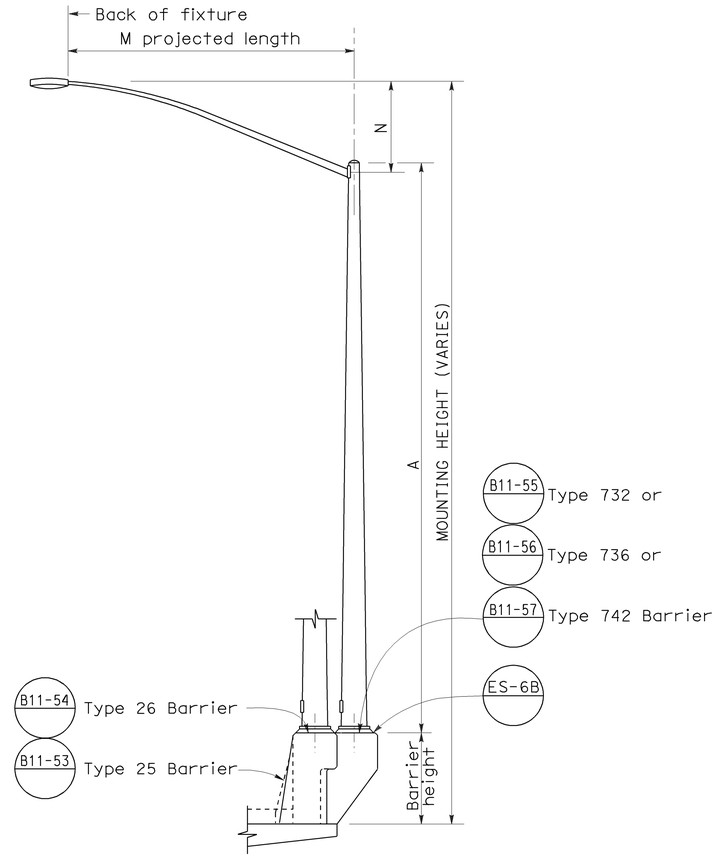

ELEVATION
TYPE 15 AND TYPE 21 BARRIER RAIL MOUNTED

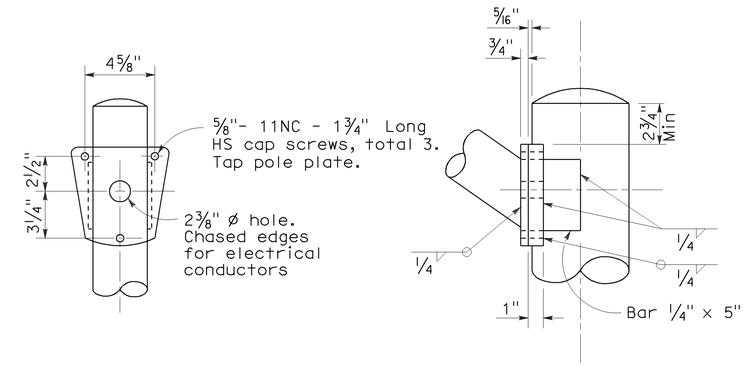

DETAIL R
LUMINAIRE ARM CONNECTION

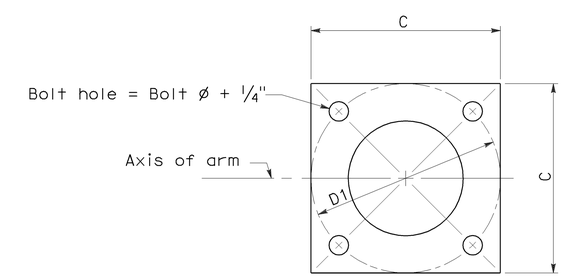

BASE PLATE

POLE TYPE	POLE DATA: A Height	Min OD: Base	Min OD: Top	Wall Thickness	BASE PLATE DATA: C	D1 Bolt Circle	Thickness	Anchor Bolts Size	LUMINAIRE ARM
15	30′	8"	3 7/8"	0.1196"	1′-0"	1′-0"	1"	1" ø x 3′-0" x 4"*	6′ - 15′ [12′]
21	35′	8 5/8"	3 7/8"	0.1196"	1′-0"	1′-0"	1"	1 1/4"ø x 3′-0" x 4"*	6′ - 15′ [12′]

* For barrier rail bolts, see Standard Plan ES-6B.

LUMINAIRE ARM DATA: M Projected Length	N Rise	Min OD At Pole	Nominal Thickness	P: Type 15	P: Type 21
6′-0"	2′-0"±	3 1/4"	0.1196"	31′-6"±	36′-6"±
8′-0"	2′-6"±	3 1/2"	0.1196"	32′-0"±	37′-0"±
10′-0"	3′-3"±	3 7/8"	0.1196"	32′-9"±	37′-9"±
12′-0"	4′-3"±	3 7/8"	0.1196"	33′-9"±	38′-9"±
15′-0"	4′-9"±	4 1/4"	0.1196"	34′-3"±	39′-3"±

NOTES:

1. ☐ Indicates arm length to be used unless otherwise noted on the plans.
2. For Type 15-SB, use Type 15 standard with Type 30 slip base plate details, see Standard Plan ES-6F.
3. For additional notes, see Standard Plan ES-7M and ES-7N.

STATE OF CALIFORNIA
DEPARTMENT OF TRANSPORTATION

ELECTRICAL SYSTEMS (LIGHTING STANDARD TYPES 15 AND 21)

NO SCALE

RSP ES-6A DATED OCTOBER 5, 2007 SUPERCEDES STANDARD PLAN ES-6A DATED MAY 1, 2006 - PAGE 427 OF THE STANDARD PLANS BOOK DATED MAY 2006.

REVISED STANDARD PLAN RSP ES-6A

2006 REVISED STANDARD PLAN RSP ES-6A

7-10-07