Dist	COUNTY	ROUTE	POST MILES TOTAL PROJECT	SHEET No.	TOTAL SHEETS
03	Nev	20	R6.3/R6.8	1	42

STATE OF CALIFORNIA

STP-P020(156)E

DEPARTMENT OF TRANSPORTATION

PROJECT PLANS FOR CONSTRUCTION ON

STATE HIGHWAY

IN NEVADA COUNTY
ABOUT 5 MILES WEST OF GRASS VALLEY
FROM 0.3 MILE WEST OF PENN VALLEY DRIVE
TO 0.2 MILE EAST OF PENN VALLEY DRIVE

INDEX OF PLANS

SHEET No.	DESCRIPTION
1	TITLE AND LOCATION MAP
2-3	TYPICAL CROSS SECTIONS
4	LAYOUT
5	PROFILES
6-8	CONSTRUCTION DETAILS
9	UTILITY PLAN
10	CONSTRUCTION AREA SIGNS
11-12	PAVEMENT DELINEATION AND SIGN PLANS
13	PAVEMENT DELINEATION QUANTITIES
14-16	SIGN DETAILS AND QUANTITIES
17	SUMMARY OF QUANTITIES
18-24	ELECTRICAL PLANS
25-42	REVISED AND NEW STANDARD PLANS

THE STANDARD PLANS LIST APPLICABLE TO THIS CONTRACT IS INCLUDED IN THE NOTICE TO BIDDERS AND SPECIAL PROVISIONS BOOK.

TO BE SUPPLEMENTED BY STANDARD PLANS DATED MAY 2006

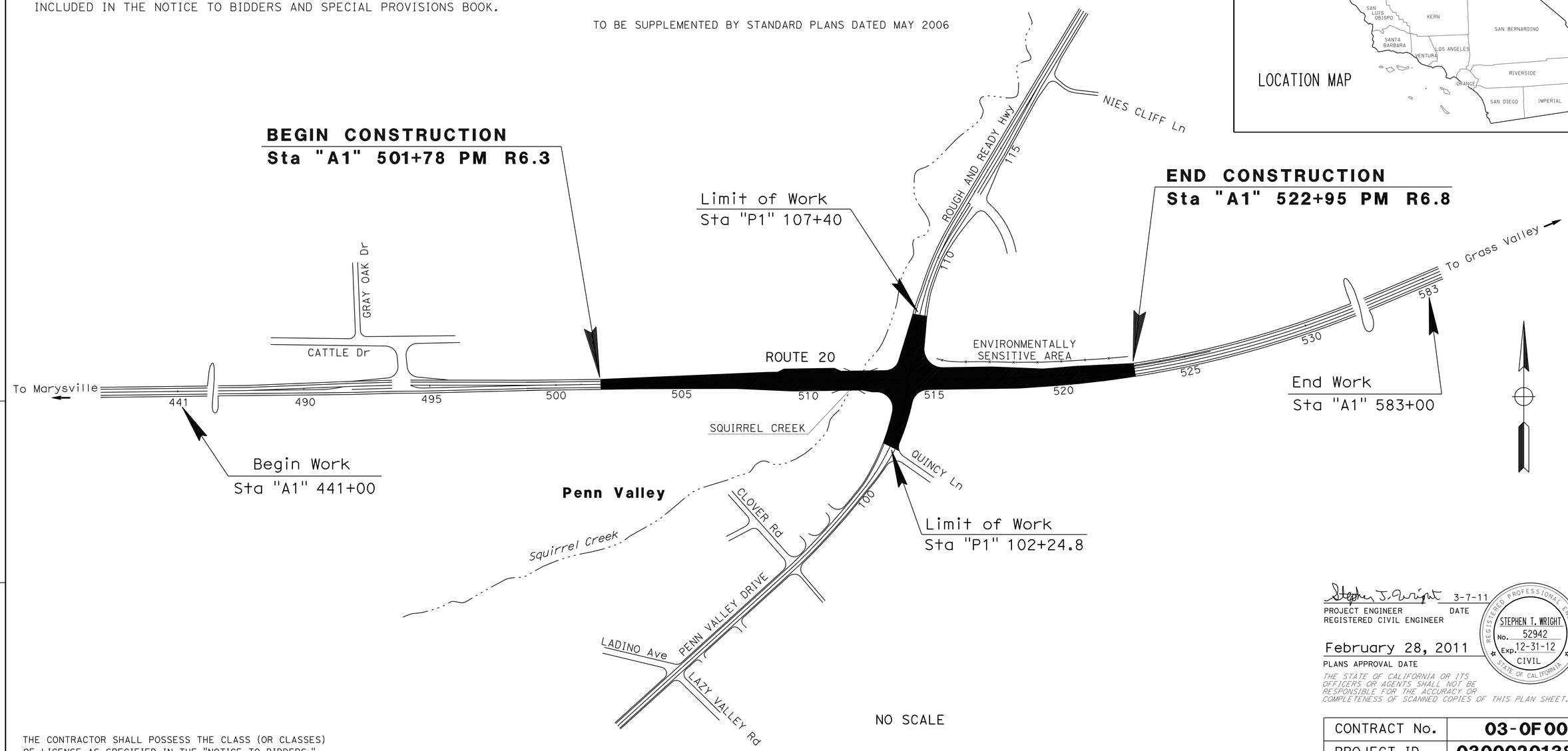

THE CONTRACTOR SHALL POSSESS THE CLASS (OR CLASSES) OF LICENSE AS SPECIFIED IN THE "NOTICE TO BIDDERS."

PROJECT MANAGER NAJED DAKAK

DESIGN ENGINEER LAURIE LAMMERT

Stephen T. Wright 3-7-11
PROJECT ENGINEER DATE
REGISTERED CIVIL ENGINEER

REGISTERED PROFESSIONAL ENGINEER STEPHEN T. WRIGHT No. 52942 Exp. 12-31-12 CIVIL STATE OF CALIFORNIA

February 28, 2011
PLANS APPROVAL DATE

THE STATE OF CALIFORNIA OR ITS OFFICERS OR AGENTS SHALL NOT BE RESPONSIBLE FOR THE ACCURACY OR COMPLETENESS OF SCANNED COPIES OF THIS PLAN SHEET.

CONTRACT No.	03-0F0004
PROJECT ID	0300020138

LAST REVISION 1-27-11

DATE PLOTTED => 17-MAR-2011
TIME PLOTTED => 12:24

Dist	COUNTY	ROUTE	POST MILES TOTAL PROJECT	SHEET No.	TOTAL SHEETS
03	Nev	20	R6.3/R6.8	2	42

REGISTERED CIVIL ENGINEER 3-7-11 DATE

2-28-11
PLANS APPROVAL DATE

REGISTERED PROFESSIONAL ENGINEER STEPHEN T. WRIGHT No. 52942 Exp. 12-31-12 CIVIL STATE OF CALIFORNIA

THE STATE OF CALIFORNIA OR ITS OFFICERS OR AGENTS SHALL NOT BE RESPONSIBLE FOR THE ACCURACY OR COMPLETENESS OF SCANNED COPIES OF THIS PLAN SHEET.

NOTES:

1. DIMENSIONS OF THE PAVEMENT STRUCTURES (STRUCTURAL SECTIONS) ARE SUBJECT TO TOLERANCES SPECIFIED IN THE STANDARD SPECIFICATIONS.
2. SUPERELEVATION AS SHOWN OR AS DIRECTED BY THE ENGINEER.
3. LIMITS OF HMA-O SHALL EXTEND TO EP WHERE SHOULDER IS LESS THAN 6 FEET OR ON THE HIGH SIDE OF SUPER.
4. CRACK TREATMENT OCCURS AFTER COLD PLANE AC PAVEMENT OR AS APPROVED BY THE ENGINEER.

LEGEND

* - MATCH EXISTING
** - Var 1.5% TO 3%
*** - Var 0.15% TO 3%
**** - REPLACE AC SURFACING FROM STATION STA "P1" 102+24 TO STA "P1" 103+56

ABBREVIATIONS

EEP - EXISTING EDGE OF PAVEMENT
CP - CATCH POINT
SC - SAW CUT
HMA-O - HOT MIX ASPHALT (OPEN GRADED)

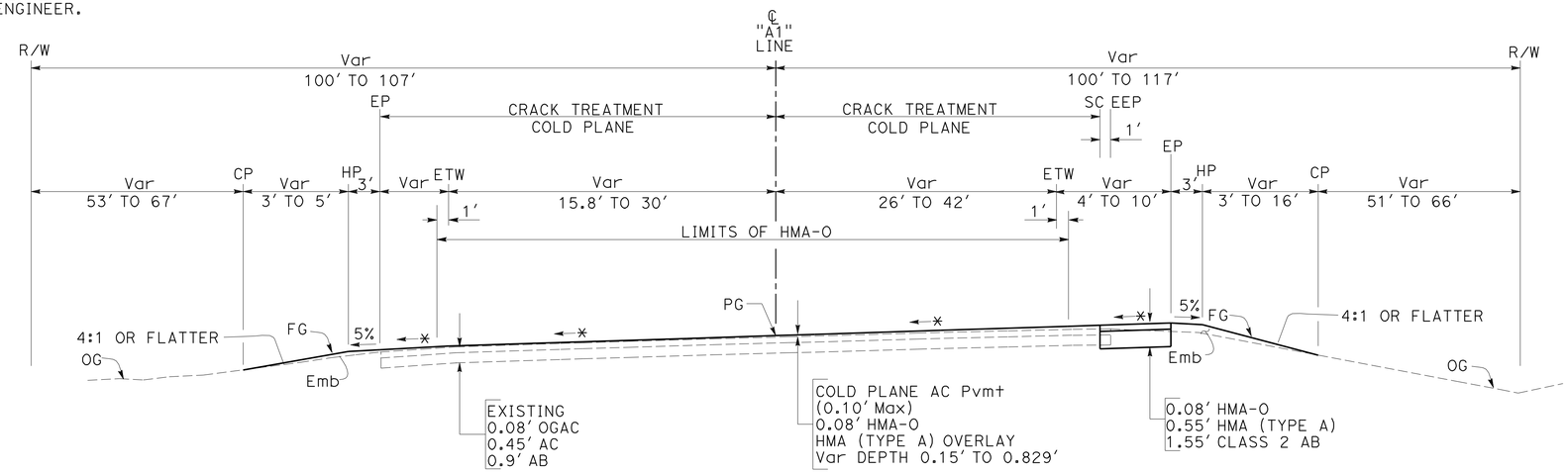

ROUTE 20
Sta "A1" 511+46.9 TO 515+40.9
Sta "A1" 519+17.1 TO 522+95

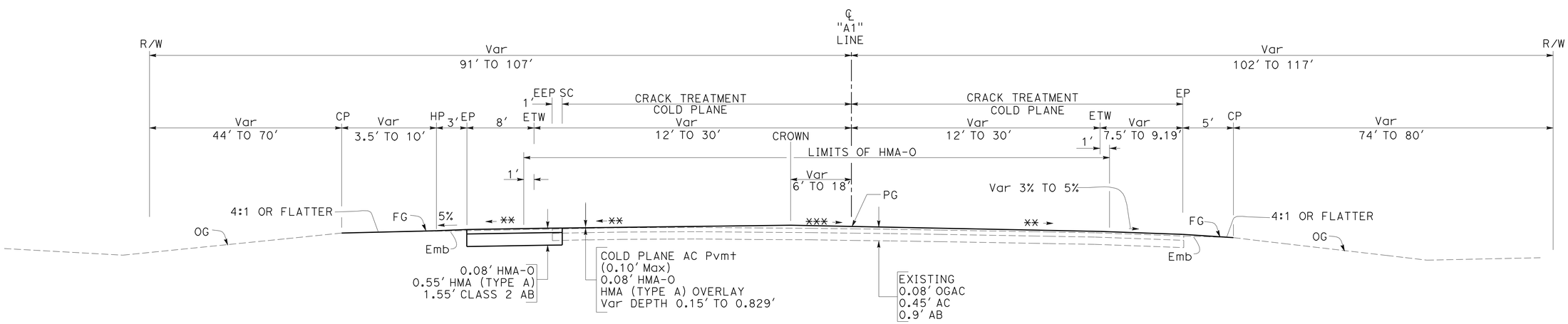

ROUTE 20
Sta "A1" 501+78 TO 511+46.9

TYPICAL CROSS SECTIONS

NO SCALE

X-1

STATE OF CALIFORNIA - DEPARTMENT OF TRANSPORTATION
Caltrans® TRAFFIC DESIGN

FUNCTIONAL SUPERVISOR: LAURIE LAMMERT
CALCULATED-DESIGNED BY: STEPHEN WRIGHT
CHECKED BY: DEANN SPANGLER
REVISED BY / DATE REVISED

LAST REVISION 2-04-11
DATE PLOTTED => 17-MAR-2011
TIME PLOTTED => 12:24

Dist	COUNTY	ROUTE	POST MILES TOTAL PROJECT	SHEET No.	TOTAL SHEETS
03	Nev	20	R6.3/R6.8	3	42

REGISTERED CIVIL ENGINEER 3-7-11 DATE

2-28-11
PLANS APPROVAL DATE

REGISTERED PROFESSIONAL ENGINEER STEPHEN T. WRIGHT No. 52942 Exp. 12-31-12 CIVIL STATE OF CALIFORNIA

THE STATE OF CALIFORNIA OR ITS OFFICERS OR AGENTS SHALL NOT BE RESPONSIBLE FOR THE ACCURACY OR COMPLETENESS OF SCANNED COPIES OF THIS PLAN SHEET.

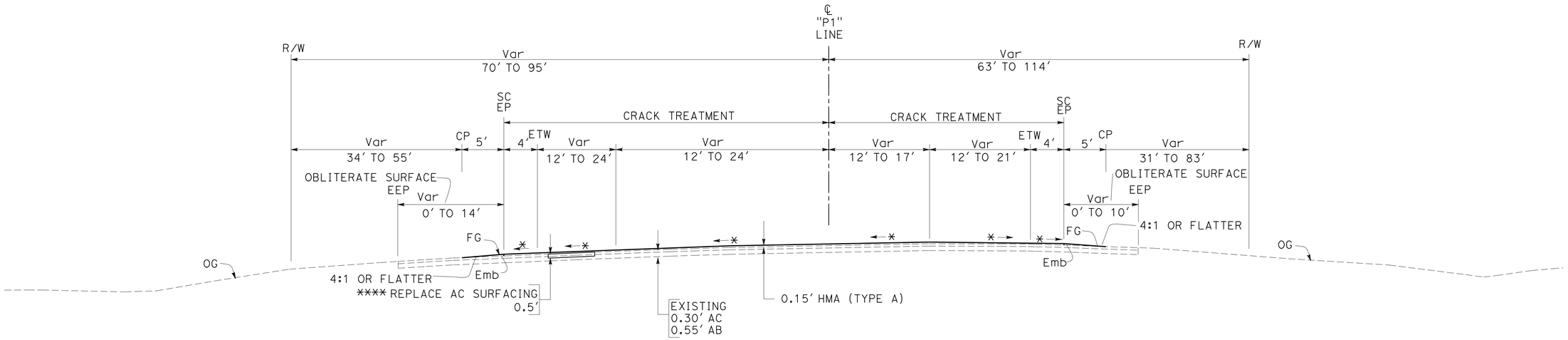

PENN VALLEY DRIVE/ROUGH AND READY HIGHWAY

Sta "P1" 106+14.5 TO 107+40
Sta "P1" 102+24 TO 103+60

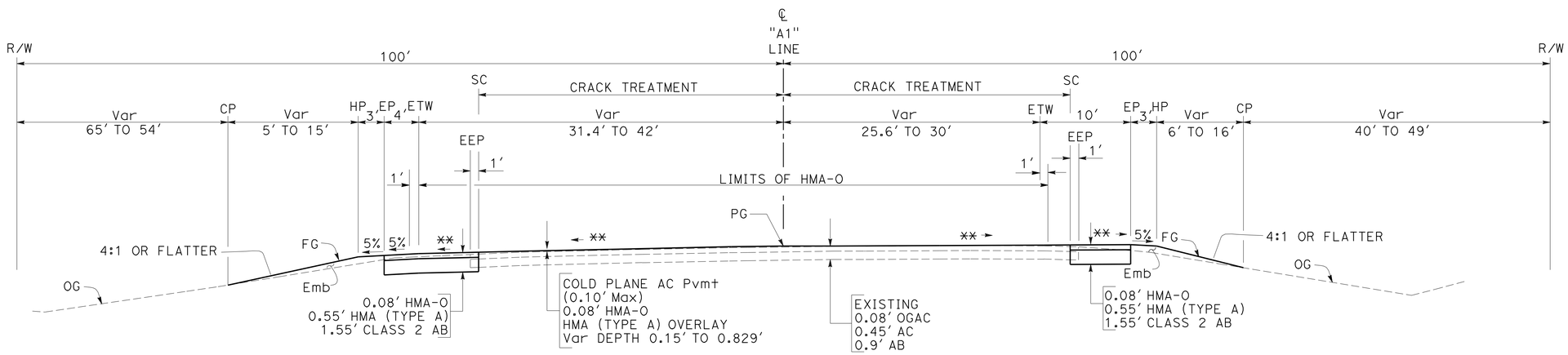

ROUTE 20

Sta "A1" 515+40.9 TO 519+17.1

TYPICAL CROSS SECTIONS

NO SCALE

X-2

STATE OF CALIFORNIA - DEPARTMENT OF TRANSPORTATION
Caltrans
TRAFFIC DESIGN

FUNCTIONAL SUPERVISOR: LAURIE LAMMERT
CALCULATED-DESIGNED BY: STEPHEN WRIGHT
CHECKED BY: DEANN SPANGLER
REVISED BY / DATE REVISED

LAST REVISION 2-04-11
DATE PLOTTED => 17-MAR-2011
TIME PLOTTED => 12:24

Dist	COUNTY	ROUTE	POST MILES TOTAL PROJECT	SHEET No.	TOTAL SHEETS
03	Nev	20	R6.3/R6.8	4	42

REGISTERED CIVIL ENGINEER — DATE 3-7-11

2-28-11
PLANS APPROVAL DATE

REGISTERED PROFESSIONAL ENGINEER STEPHEN T. WRIGHT No. 52942 Exp. 12-31-12 CIVIL STATE OF CALIFORNIA

THE STATE OF CALIFORNIA OR ITS OFFICERS OR AGENTS SHALL NOT BE RESPONSIBLE FOR THE ACCURACY OR COMPLETENESS OF SCANNED COPIES OF THIS PLAN SHEET.

NOTES:

1. FOR ACCURATE RIGHT OF WAY DATA, CONTACT RIGHT OF WAY ENGINEERING AT THE DISTRICT OFFICE.
2. WHERE NO ROADWAY WIDENING, PLACE HMA (Misc AREA), OR OBLITERATION OCCURS, OVERLAY HMA (TYPE A) TO EXISTING EP. SEE EMBANKMENT DETAIL ON SHEET C-2
3. SEE SHEET C-2 FOR ISLAND PASSAGEWAY AND Misc AC DETAILS, AND SECTION A-A.
4. SEE SHEET C-1 FOR INTERSECTION DETAILS.

LEGEND

- OBLITERATE SURFACE
- REMOVE CONCRETE
- REPLACE AC SURFACING 0.5′

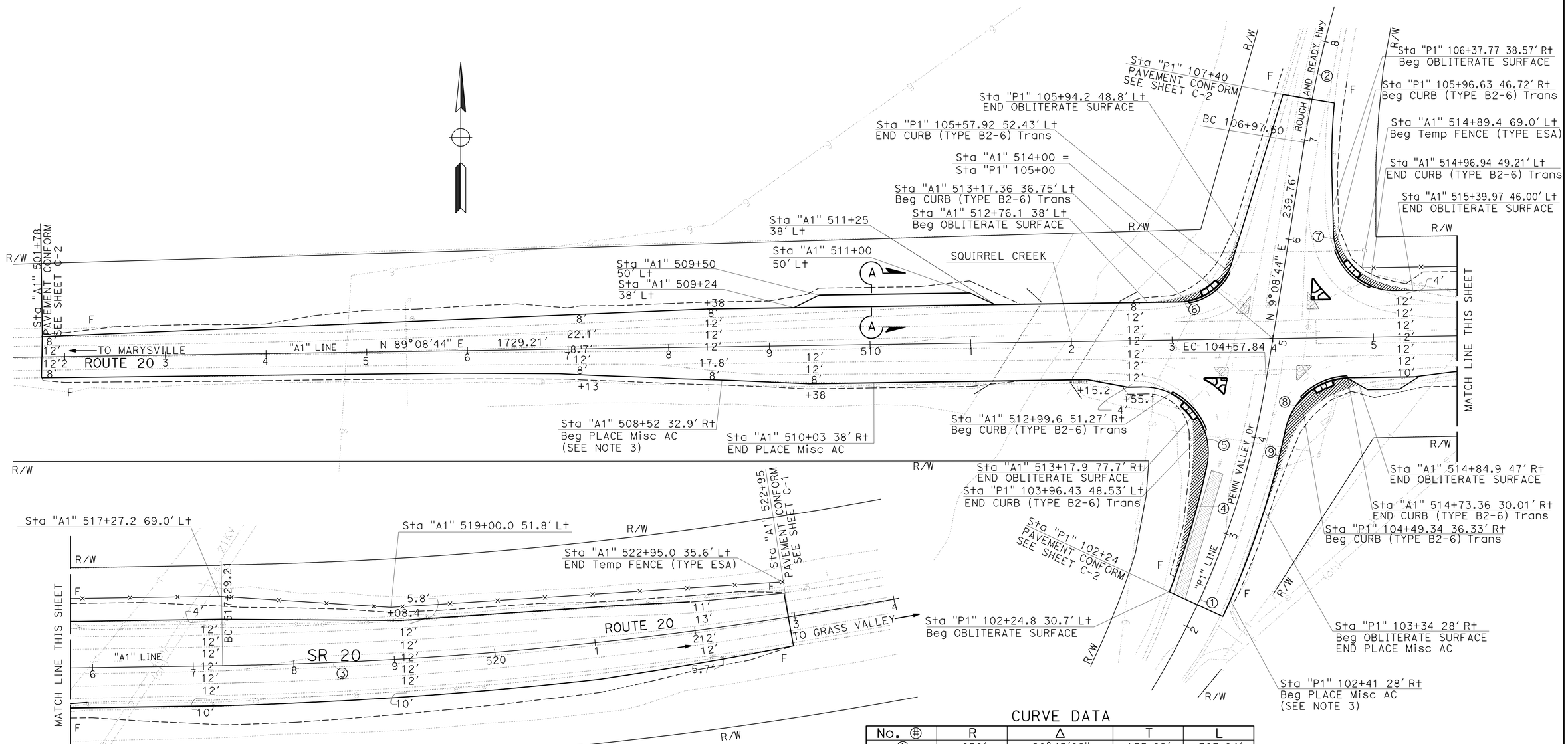

CURVE DATA

No. ⊕	R	Δ	T	L
①	850′	20°45′02″	155.62′	307.84′
②	1200′	4°53′21″	51.23′	102.40′
③	4000′	8°10′33″	285.88′	570.79′
④	818′	9°6′07″	65.11′	129.95′
⑤	65′	102°51′30″	81.51′	116.69′
⑥	55′	72°16′06″	40.16′	69.37′
⑦	60′	89°23′11″	59.36′	93.61′
⑧	65′	77°3′55″	51.76′	87.43′
⑨	878′	11°39′33″	89.64′	178.66′

LAYOUT

SCALE: 1" = 50′

L-1

STATE OF CALIFORNIA - DEPARTMENT OF TRANSPORTATION
Caltrans
TRAFFIC DESIGN

FUNCTIONAL SUPERVISOR: LAURIE LAMMERT
CALCULATED-DESIGNED BY: STEPHEN WRIGHT
CHECKED BY: DEANN SPANGLER
REVISED BY
DATE REVISED

LAST REVISION 00-00-00
DATE PLOTTED => 17-MAR-2011
TIME PLOTTED => 12:24

Dist	COUNTY	ROUTE	POST MILES TOTAL PROJECT	SHEET No.	TOTAL SHEETS
03	Nev	20	R6.3/R6.8	5	42

REGISTERED CIVIL ENGINEER 3-7-11 DATE

2-28-11
PLANS APPROVAL DATE

REGISTERED PROFESSIONAL ENGINEER STEPHEN T. WRIGHT No. 52942 Exp. 12-31-12 CIVIL STATE OF CALIFORNIA

THE STATE OF CALIFORNIA OR ITS OFFICERS OR AGENTS SHALL NOT BE RESPONSIBLE FOR THE ACCURACY OR COMPLETENESS OF SCANNED COPIES OF THIS PLAN SHEET.

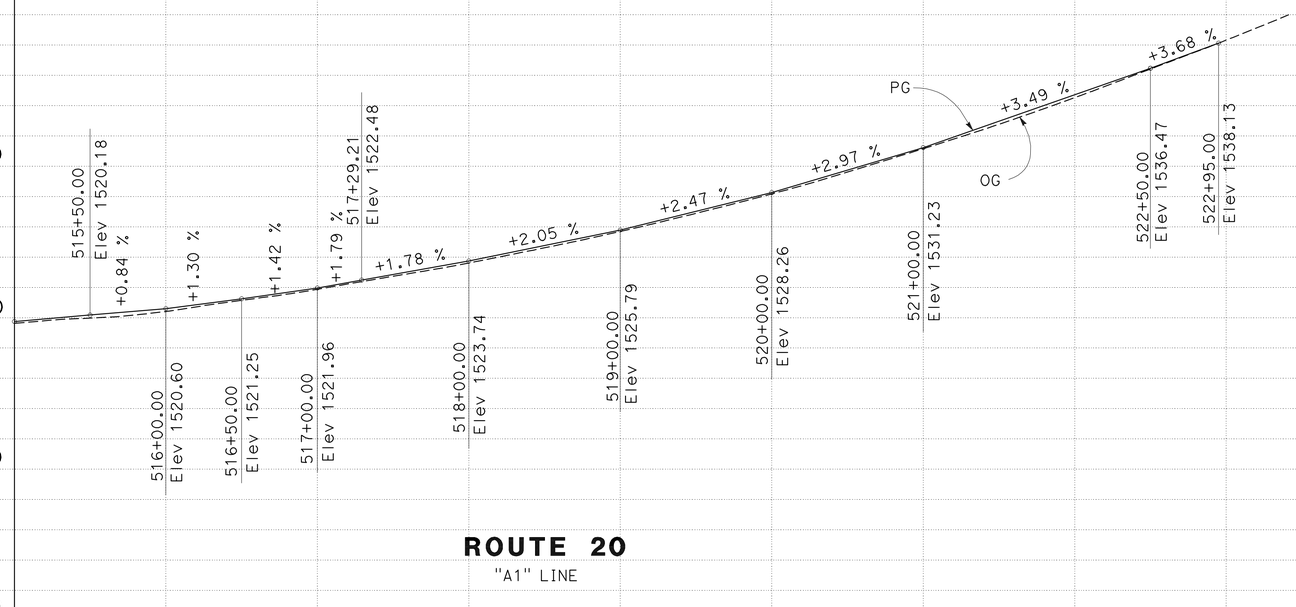

STATION	516	517	518	519	520	521	522	523	524	525	526	527	528	529	TOTAL
CY Exc															
CY Emb															

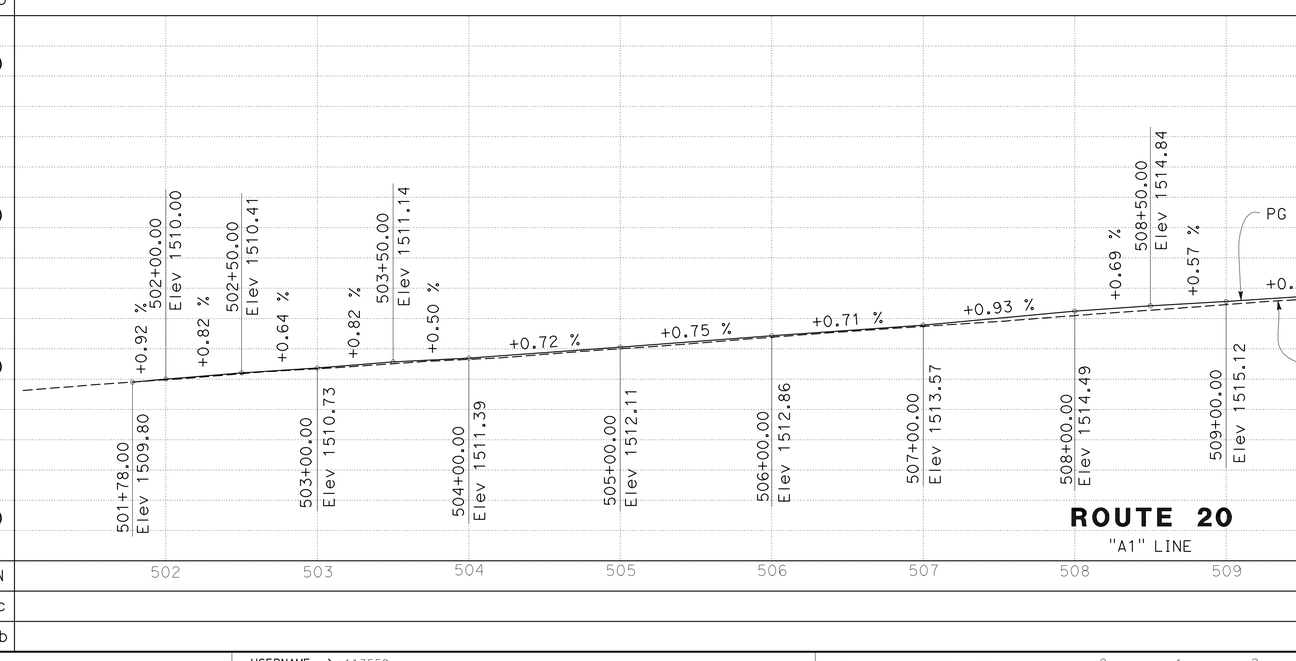

PROFILE

SCALE: Horiz 1" = 50'
Vert 1" = 5'

P-1

STATION	502	503	504	505	506	507	508	509	510	511	512	513	514	515	TOTAL
CY Exc															
CY Emb															

STATE OF CALIFORNIA - DEPARTMENT OF TRANSPORTATION
Caltrans® TRAFFIC DESIGN

FUNCTIONAL SUPERVISOR: LAURIE LAMMERT
CALCULATED-DESIGNED BY: STEPHEN WRIGHT
CHECKED BY: DEANN SPANGLER
REVISED BY
DATE REVISED

LAST REVISION 02-01-11
DATE PLOTTED => 17-MAR-2011
TIME PLOTTED => 12:25

Dist	COUNTY	ROUTE	POST MILES TOTAL PROJECT	SHEET No.	TOTAL SHEETS
03	Nev	20	R6.3/R6.8	6	42

REGISTERED CIVIL ENGINEER 3-7-11 DATE

2-28-11
PLANS APPROVAL DATE

REGISTERED PROFESSIONAL ENGINEER STEPHEN T. WRIGHT No. 52942 Exp. 12-31-12 CIVIL STATE OF CALIFORNIA

THE STATE OF CALIFORNIA OR ITS OFFICERS OR AGENTS SHALL NOT BE RESPONSIBLE FOR THE ACCURACY OR COMPLETENESS OF SCANNED COPIES OF THIS PLAN SHEET.

NOTES:
1. SEE SHEET C-2 FOR ISLAND PASSAGEWAY DETAILS.

LEGEND
- (#) ISLAND NUMBER
- (X) RAMP DESIGNATION LETTER

ABBREVIATION
- EEP Exist EP
- SC SAWCUT

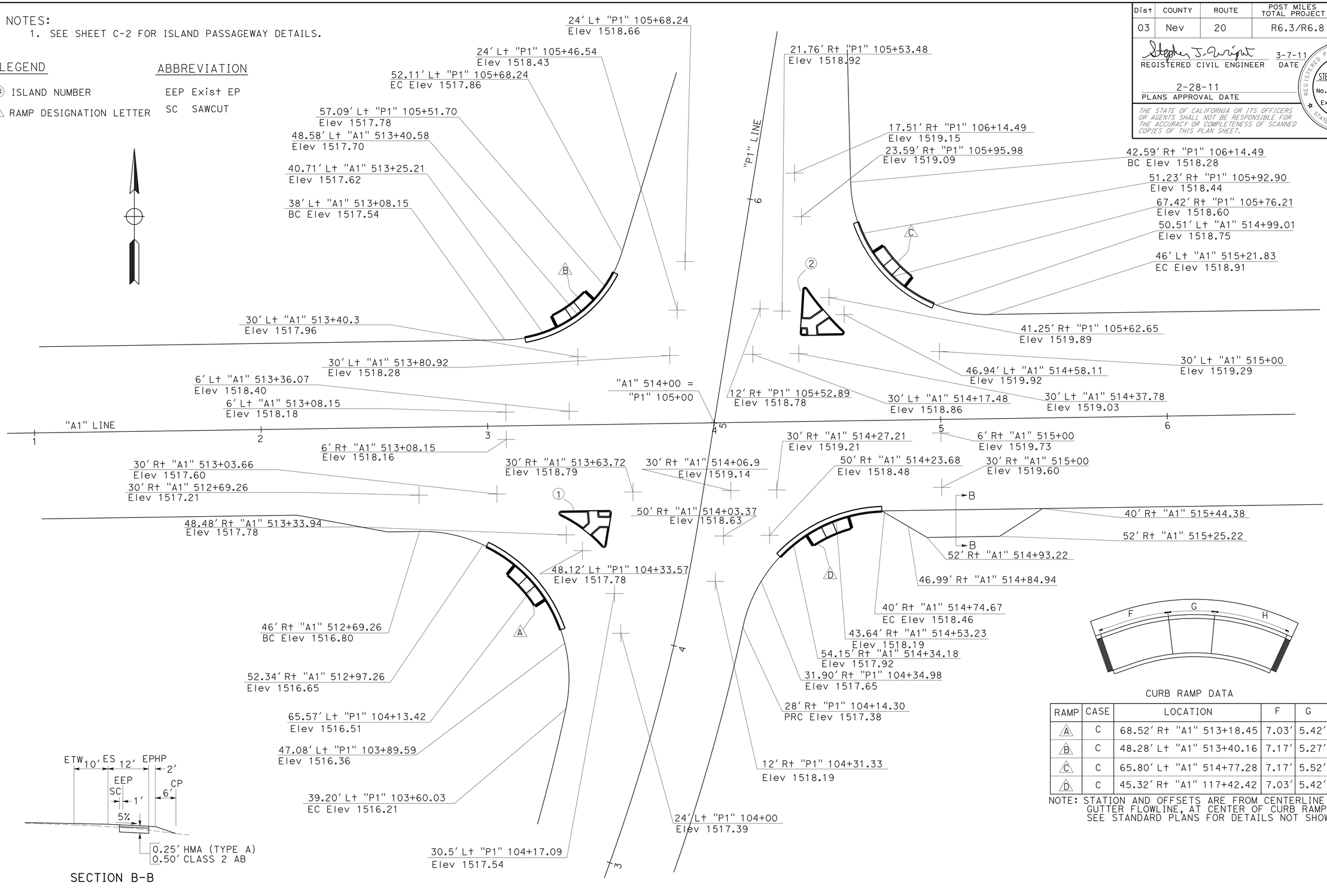

SECTION B-B

VEHICLE PULLOUT

CURB RAMP DATA

RAMP	CASE	LOCATION	F	G	H
A	C	68.52' Rt "A1" 513+18.45	7.03'	5.42'	7.03'
B	C	48.28' Lt "A1" 513+40.16	7.17'	5.27'	7.17'
C	C	65.80' Lt "A1" 514+77.28	7.17'	5.52'	7.17'
D	C	45.32' Rt "A1" 117+42.42	7.03'	5.42'	7.03'

NOTE: STATION AND OFFSETS ARE FROM CENTERLINE TO GUTTER FLOWLINE, AT CENTER OF CURB RAMP. SEE STANDARD PLANS FOR DETAILS NOT SHOWN.

CONSTRUCTION DETAILS

SCALE 1" = 20'

C-1

STATE OF CALIFORNIA - DEPARTMENT OF TRANSPORTATION
Caltrans
TRAFFIC DESIGN

FUNCTIONAL SUPERVISOR: LAURIE LAMMERT
CALCULATED-DESIGNED BY: STEPHEN WRIGHT
CHECKED BY: DEANN SPANGLER
REVISED BY
DATE REVISED

LAST REVISION 1-12-11
DATE PLOTTED => 17-MAR-2011
TIME PLOTTED => 12:25

Dist	COUNTY	ROUTE	POST MILES TOTAL PROJECT	SHEET No.	TOTAL SHEETS
03	Nev	20	R6.3/R6.8	7	42

REGISTERED CIVIL ENGINEER 3-7-11 DATE

2-28-11
PLANS APPROVAL DATE

REGISTERED PROFESSIONAL ENGINEER STEPHEN T. WRIGHT No. 52942 Exp. 12-31-12 CIVIL STATE OF CALIFORNIA

THE STATE OF CALIFORNIA OR ITS OFFICERS OR AGENTS SHALL NOT BE RESPONSIBLE FOR THE ACCURACY OR COMPLETENESS OF SCANNED COPIES OF THIS PLAN SHEET.

LEGEND

- COLD PLANE AC Pvmt
- REMOVE CONCRETE
- PLACE HMA (Misc AREA)

ABBREVIATIONS

HMA-O - HOT MIX ASPHALT (TYPE O)
CHP - CALIFORNIA HIGHWAY PATROL
SC - SAW CUT
EEP - Exist EDGE OF PAVEMENT

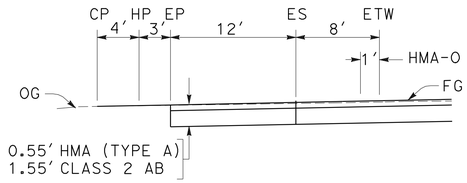

SECTION A-A FROM SHEET L-1

CHP TRUCK PULL OUT

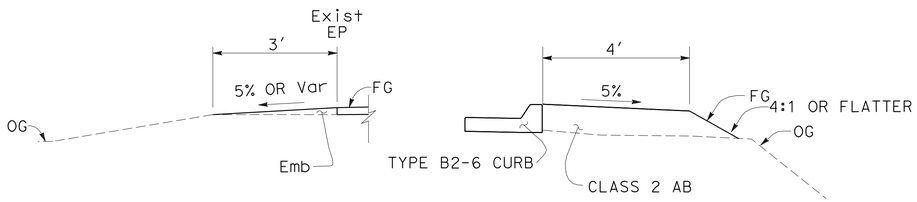

EMBANKMENT DETAIL

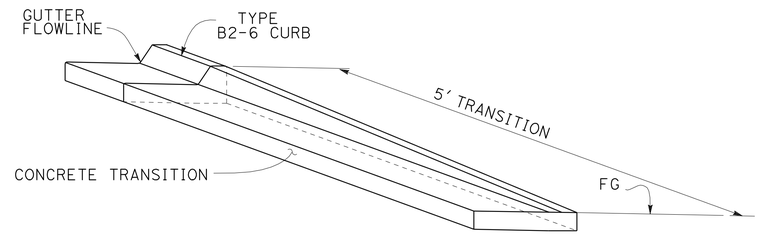

TYPE B2-6 CURB TRANSITION DETAIL

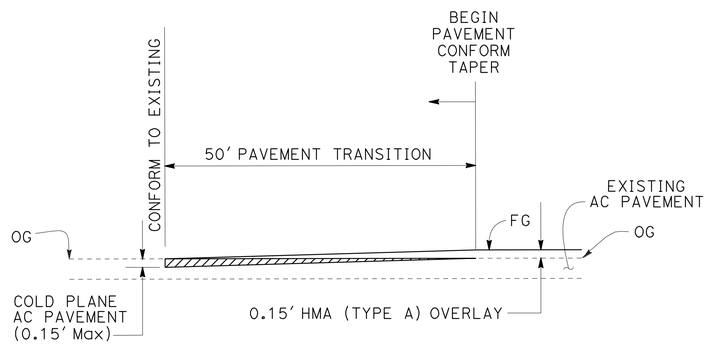

LONGITUDINAL PAVEMENT CONFORM TAPER

"P1" LINE

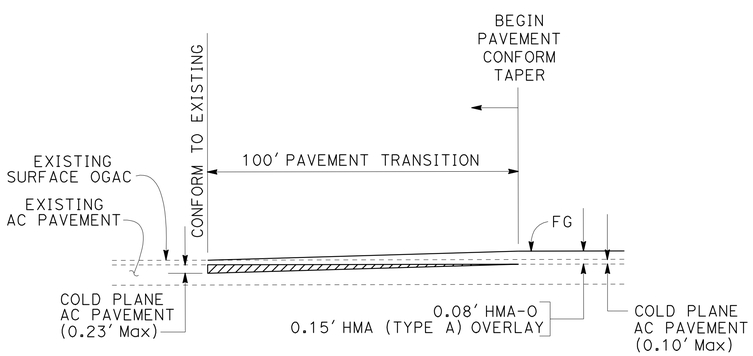

LONGITUDINAL PAVEMENT CONFORM TAPER

"A1" LINE

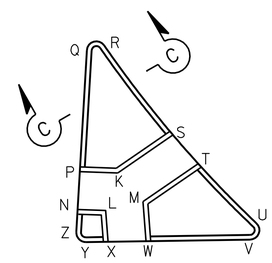

ISLAND
(TYPE C PASSAGEWAY)

LOCATION	STATION AND OFFSET	
	ISLAND 1	ISLAND 2
K	47.23' Lt "P1" 104+46.82	34.56' Rt "P1" 105+52.03
L	40.98' Rt "A1" 513+48.12	33.94' Rt "P1" 105+47.92
M	42.59' Lt "P1" 104+46.20	37.68' Rt "P1" 105+49.48
N	38.00' Rt "A1" 513+47.92	31.09' Rt "P1" 105+47.57
P	38.00' Rt "A1" 513+43.91	30.60' Rt "P1" 105+51.54
Q	38.00' Rt "A1" 513+31.88	29.29' Rt "P1" 105+64.33
R	39.91' Rt "A1" 513+31.44	31.00' Rt "P1" 105+65.12
S	46.06' Rt "A1" 513+41.39	39.66' Rt "P1" 105+56.91
T	46.07' Lt "P1" 104+41.55	46.13' Rt "A1" 514+51.60
U	39.89' Lt "P1" 104+37.13	39.71' Rt "A1" 514+57.65
V	38.28' Lt "P1" 104+37.99	38.00' Rt "A1" 514+56.95
W	38.44' Lt "P1" 104+46.92	38.00' Rt "A1" 514+45.95
X	38.45' Lt "P1" 104+51.16	38.00' Rt "A1" 515+41.95
Y	38.00' Rt "A1" 513+53.02	38.00' Lt "A1" 514+39.60
Z	38.49' Lt "P1" 104+53.23	31.23' Rt "P1" 104+45.18

NOTE: FOR DETAILS NOT SHOWN, SEE STANDARD PLAN A88B AND A87A.

ISLAND PASSAGEWAY DETAILS

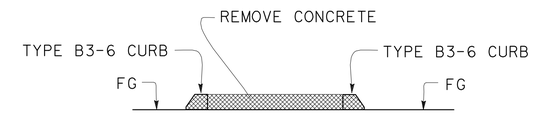

ISLAND REMOVAL TYPICAL

SEE STANDARD PLAN A87A FOR DETAILS NOT SHOWN

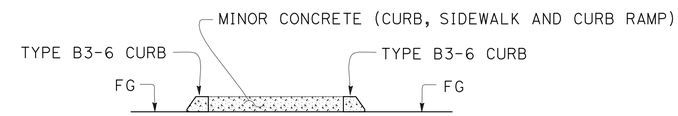

SECTION C-C

ISLAND TYPICAL

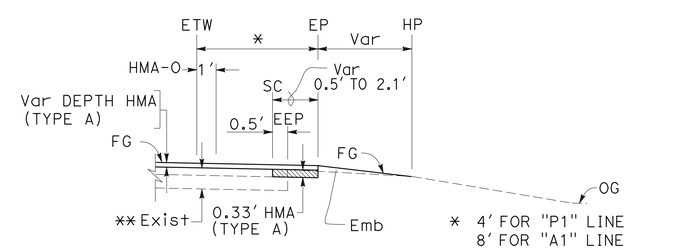

** 0.45' AC FOR "A1" LINE
0.90' AB FOR "A1" LINE
0.30' AC FOR "P1" LINE
0.55' AB FOR "P1" LINE

PLACE HMA (Misc AREA) DETAIL

CONSTRUCTION DETAILS

NO SCALE

C-2

STATE OF CALIFORNIA - DEPARTMENT OF TRANSPORTATION
Caltrans TRAFFIC DESIGN

FUNCTIONAL SUPERVISOR: LAURIE LAMMERT
CALCULATED-DESIGNED BY: STEPHEN T. WRIGHT
CHECKED BY: DEANN SPANGLER
REVISED BY
DATE REVISED

LAST REVISION 2-07-11
DATE PLOTTED => 17-MAR-2011
TIME PLOTTED => 12:25

Dist	COUNTY	ROUTE	POST MILES TOTAL PROJECT	SHEET No.	TOTAL SHEETS
03	Nev	20	R6.3/R6.8	8	42

REGISTERED CIVIL ENGINEER 3-7-11 DATE

2-28-11
PLANS APPROVAL DATE

REGISTERED PROFESSIONAL ENGINEER
STEPHEN T. WRIGHT
No. 52942
Exp. 12-31-12
CIVIL
STATE OF CALIFORNIA

THE STATE OF CALIFORNIA OR ITS OFFICERS OR AGENTS SHALL NOT BE RESPONSIBLE FOR THE ACCURACY OR COMPLETENESS OF SCANNED COPIES OF THIS PLAN SHEET.

NOTES:

1. FOR DETAILS NOT SHOWN, SEE STANDARD PLANS.

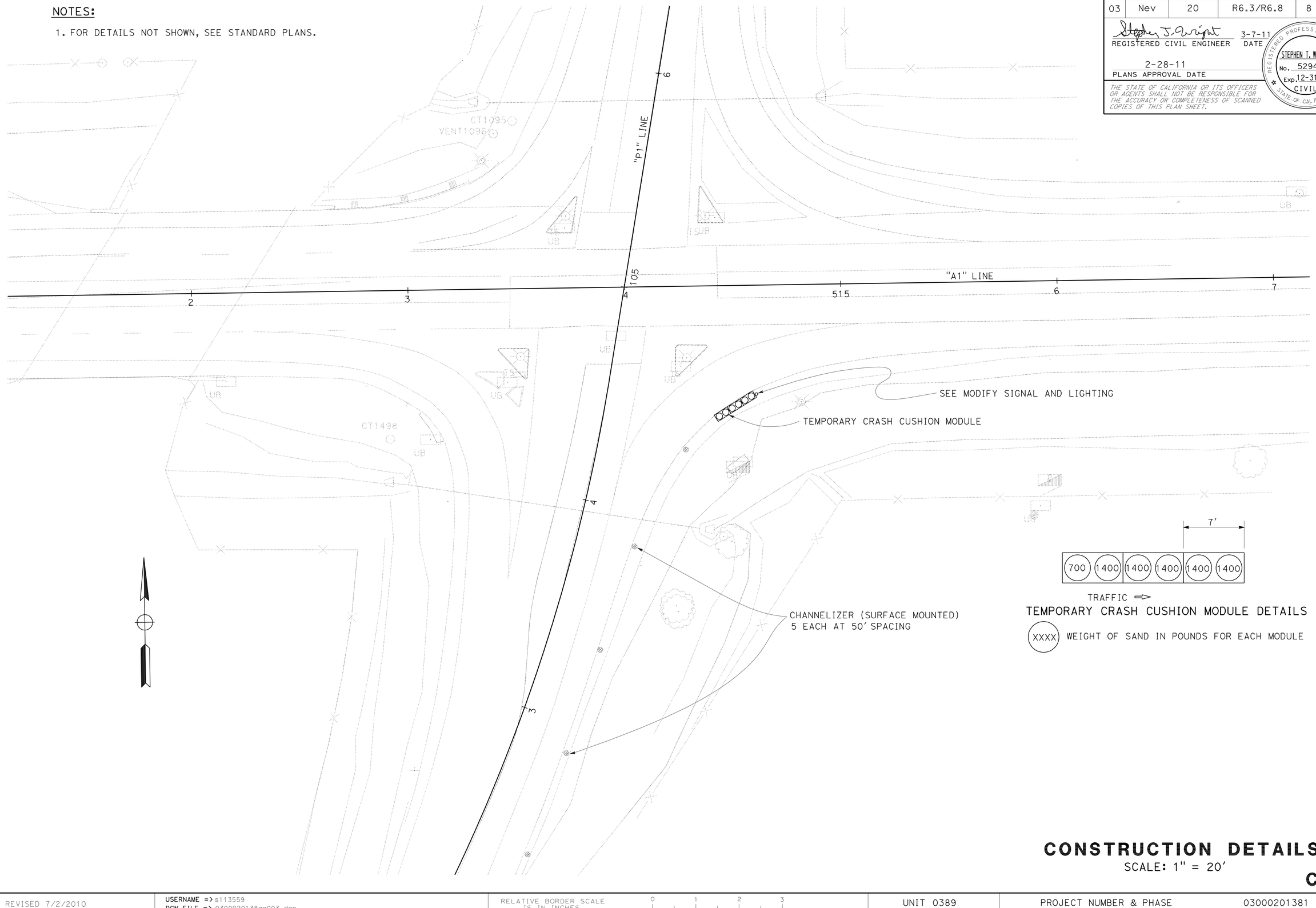

CONSTRUCTION DETAILS

SCALE: 1" = 20'

C-3

STATE OF CALIFORNIA - DEPARTMENT OF TRANSPORTATION
Caltrans
TRAFFIC DESIGN

FUNCTIONAL SUPERVISOR: LAURIE LAMMERT
CALCULATED-DESIGNED BY: AL G. CHIN
CHECKED BY: STEPHEN T. WRIGHT
REVISED BY
DATE REVISED

LAST REVISION 11-24-10
DATE PLOTTED => 17-MAR-2011
TIME PLOTTED => 12:25

Dist	COUNTY	ROUTE	POST MILES TOTAL PROJECT	SHEET No.	TOTAL SHEETS
03	Nev	20	R6.3/R6.8	9	42

REGISTERED CIVIL ENGINEER 3-8-11 DATE

2-28-11
PLANS APPROVAL DATE

REGISTERED PROFESSIONAL ENGINEER CHARLES W. LAUGHLIN No. C61605 Exp. 6-30-11 CIVIL STATE OF CALIFORNIA

THE STATE OF CALIFORNIA OR ITS OFFICERS OR AGENTS SHALL NOT BE RESPONSIBLE FOR THE ACCURACY OR COMPLETENESS OF SCANNED COPIES OF THIS PLAN SHEET.

NOTES:

1. FOR ACCURATE RIGHT OF WAY DATA, CONTACT RIGHT OF WAY ENGINEERING AT THE DISTRICT OFFICE.
2. LOCATIONS OF UTILITY FACILITIES SHOWN ON THE PLANS ARE APPROXIMATE AND SHALL BE VERIFIED BY THE CONTRACTOR PRIOR TO CONSTRUCTION.
3. NOT ALL SERVICE LINES OR FACILITIES OUTSIDE THE STATE RIGHT OF WAY ARE SHOWN.
4. DEPTH IS DISTANCE FROM ORIGINAL GROUND TO TOP OF PIPE.

UTILITY OWNERSHIP:

OVERHEAD ELECTRICAL	—— ——(oh)—— ——e——	PG&E
UNDERGROUND ELECTRICAL	——e—— ——e—— ——	PG&E
UNDERGROUND GAS LINE	——g—— —— g—— ——	PG&E
OVERHEAD TELEPHONE	—t—— ——(oh)—— ———	AT&T
UNDERGROUND TELEPHONE	——t—— ——t—— ——	AT&T

ABBREVIATIONS:

PH = POTHOLE
HP = HIGH PRESSURE

LEGEND:

POTHOLE LOCATION

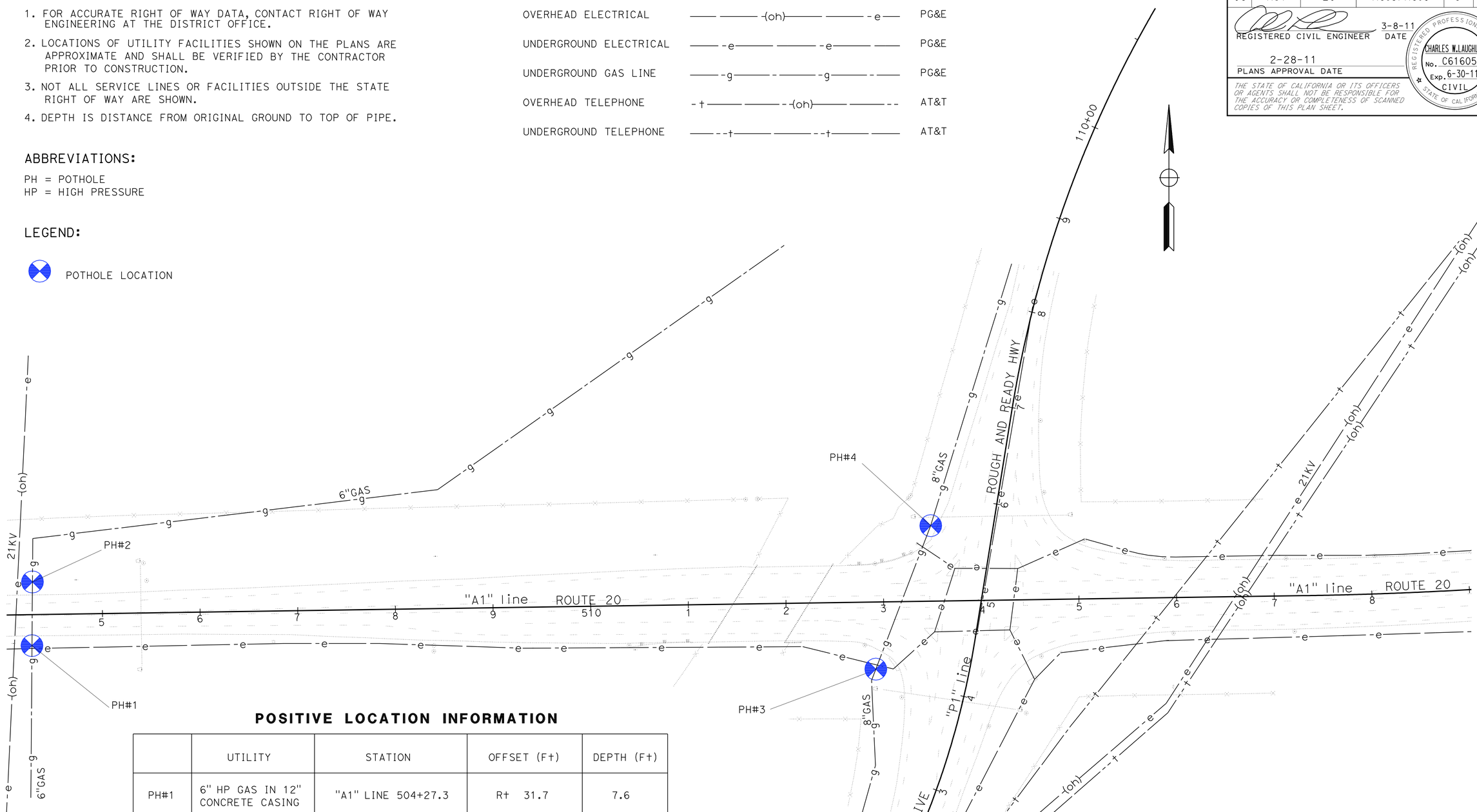

POSITIVE LOCATION INFORMATION

	UTILITY	STATION	OFFSET (ft)	DEPTH (ft)
PH#1	6" HP GAS IN 12" CONCRETE CASING	"A1" LINE 504+27.3	R+ 31.7	7.6
PH#2	6" HP GAS IN 12" CONCRETE CASING	"A1" LINE 504+28.8	L+ 33.5	8.0
PH#3	8" HP GAS	"A1" LINE 512+91.0	R+ 68.7	4.8
PH#4	8" HP GAS	"P1" LINE 105+67.5	L+ 63.2	6.6

THIS PLAN FOR UTILITY INFORMATION ONLY

UTILITY PLAN

SCALE: 1" = 50'

U-1

STATE OF CALIFORNIA - DEPARTMENT OF TRANSPORTATION
Caltrans PROJECT DEVELOPMENT

FUNCTIONAL SUPERVISOR: CARLOS PORTILLO
CALCULATED-DESIGNED BY: THIEN SLOCUM
CHECKED BY: RUSS PETTY
REVISED BY
DATE REVISED

LAST REVISION 02-03-11
DATE PLOTTED => 17-MAR-2011
TIME PLOTTED => 12:25

Dist	COUNTY	ROUTE	POST MILES TOTAL PROJECT	SHEET No.	TOTAL SHEETS
03	Nev	20	R6.3/R6.8	10	42

REGISTERED CIVIL ENGINEER — DATE 3-7-11

2-28-11
PLANS APPROVAL DATE

REGISTERED PROFESSIONAL ENGINEER — STEPHEN T. WRIGHT No. 52942 Exp. 12-31-12 CIVIL — STATE OF CALIFORNIA

THE STATE OF CALIFORNIA OR ITS OFFICERS OR AGENTS SHALL NOT BE RESPONSIBLE FOR THE ACCURACY OR COMPLETENESS OF SCANNED COPIES OF THIS PLAN SHEET.

STATIONARY MOUNTED CONSTRUCTION AREA SIGNS

SIGN LETTER	SIGN CODE FEDERAL	SIGN CODE CALIFORNIA	PANEL SIZE	SIGN MESSAGE	NUMBER OF POST AND SIZE	NUMBER OF SIGNS
A	W20-1	C23	48" x 48"	ROAD WORK AHEAD	1 - 6" x 6"	6
B	G20-2	C14	36" x 18"	END ROAD WORK	1 - 4" x 4"	4
C		C40(Mod)	72" x 42"	TRAFFIC FINES DOUBLED IN WORK ZONES	2 - 4" x 6"	2

NOTE: EXACT SIGN LOCATIONS TO BE DETERMINED BY THE ENGINEER.

(C) C40(Mod)<CA>

TRAFFIC FINES
DOUBLED IN
WORK ZONES

6" D SERIES LETTERS

72"x42"

RETROREFLECTIVE WHITE BACKGROUND WITH BLACK LEGEND AND BORDER.

LEGEND

(X) CONSTRUCTION AREA SIGN LETTER

SIGN - SINGLE POST

SIGN - TWO POSTS

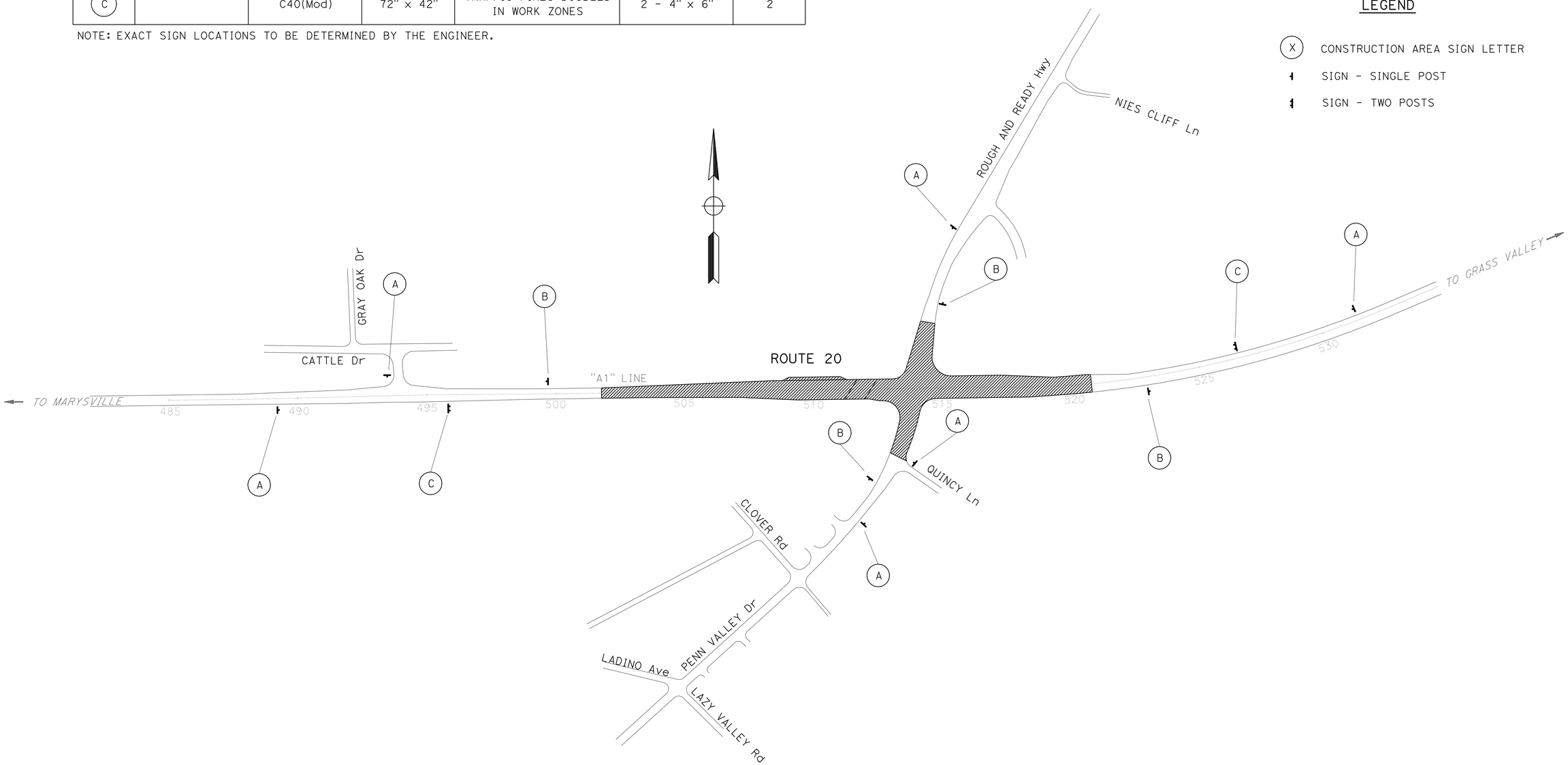

CONSTRUCTION AREA SIGNS

NO SCALE

CS-1

THIS PLAN ACCURATE FOR CONSTRUCTION AREA SIGN WORK ONLY

STATE OF CALIFORNIA - DEPARTMENT OF TRANSPORTATION

Caltrans

TRAFFIC

FUNCTIONAL SUPERVISOR: LAURIE LAMMERT

CALCULATED-DESIGNED BY: CHUCK COOK

CHECKED BY: JACK KEMMERLY

REVISED BY

DATE REVISED

LAST REVISION 11-16-10

DATE PLOTTED => 17-MAR-2011

TIME PLOTTED => 12:25

Dist	COUNTY	ROUTE	POST MILES TOTAL PROJECT	SHEET No.	TOTAL SHEETS
03	Nev	20	R6.3/R6.8	11	42

REGISTERED CIVIL ENGINEER — DATE 3-7-11

2-28-11
PLANS APPROVAL DATE

REGISTERED PROFESSIONAL ENGINEER — STEPHEN T. WRIGHT No. 52942 Exp. 12-31-12 CIVIL — STATE OF CALIFORNIA

THE STATE OF CALIFORNIA OR ITS OFFICERS OR AGENTS SHALL NOT BE RESPONSIBLE FOR THE ACCURACY OR COMPLETENESS OF SCANNED COPIES OF THIS PLAN SHEET.

LEGEND

- LIMIT OF STRIPING PATTERN
- CHANGE IN STRIPING PATTERN
- No. — PAVEMENT DELINEATION DETAIL NUMBER
- LL — LIMIT LINE
- DELINEATOR (CLASS 1) OR OBJECT MARKER
- s= DELINEATOR SPACING
- HIGHWAY POST MARKER
- TYPE 1(24′) ARROW
- TYPE III ARROW
- TYPE VI ARROW
- Si "SIGNAL" PAVEMENT MARKING
- A "AHEAD" PAVEMENT MARKING
- Sht-No. — ROADSIDE SIGN NUMBER
- <CA> — CALIFORNIA SIGN CODE
- SIGN - SINGLE POST
- SIGN - TWO POST
- SIGN - SSBM
- REMOVE ROADSIDE SIGN
- RESET ROADSIDE SIGN

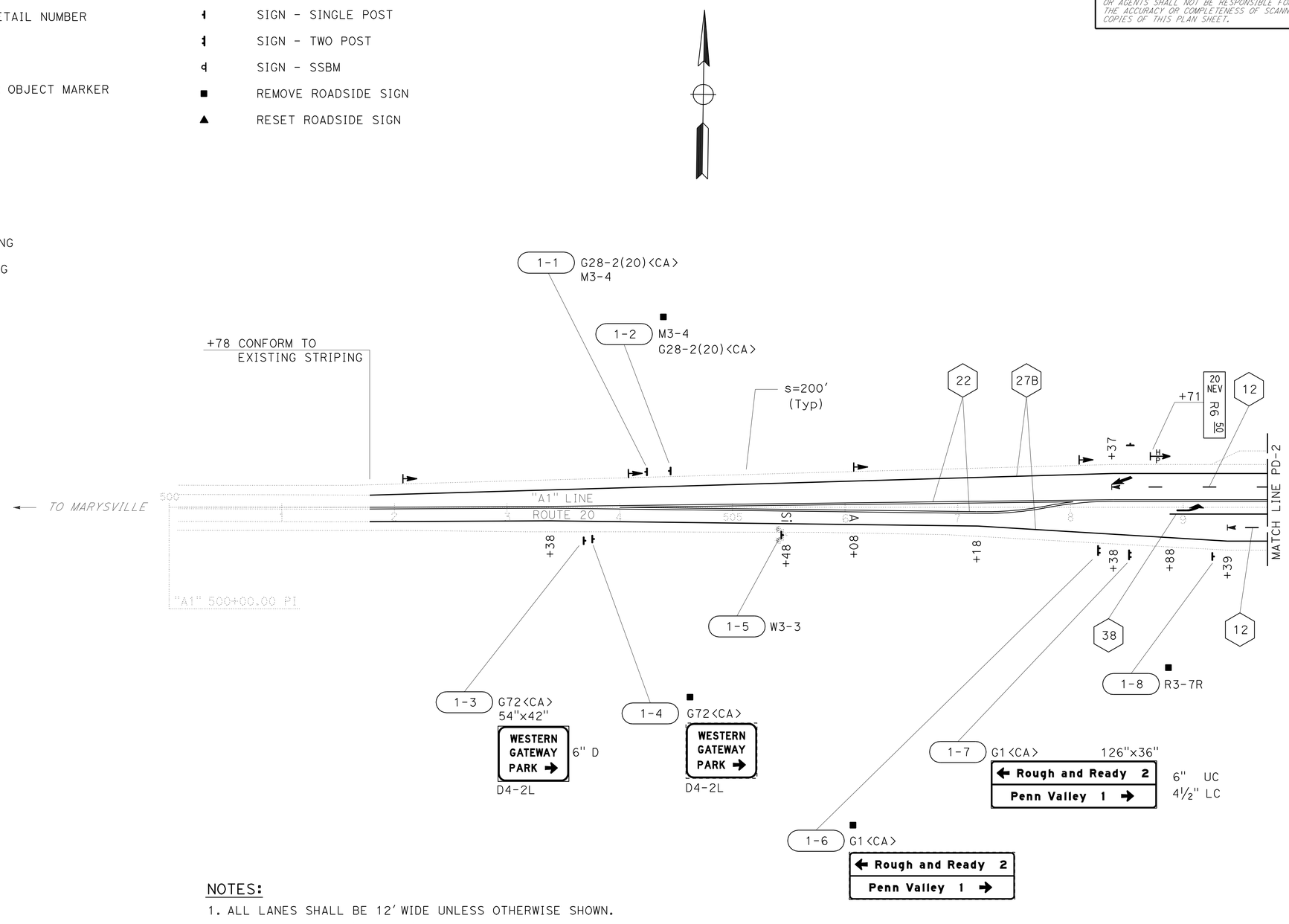

NOTES:

1. ALL LANES SHALL BE 12′ WIDE UNLESS OTHERWISE SHOWN.
2. ALL DELINEATORS (CLASS 1) SHALL BE TYPE F UNLESS OTHERWISE SHOWN.
3. ALL EXISTING SIGNS NOT SHOWN FOR REMOVAL OR RESETTING SHALL REMAIN IN PLACE.
4. ALL SIGN CODES SHOWN ARE FEDERAL SIGN CODES UNLESS OTHERWISE DESIGNATED AS CALIFORNIA SIGN CODES.
5. THIS PLAN ACCURATE FOR PAVEMENT DELINEATION AND SIGN WORK ONLY.

PAVEMENT DELINEATION AND SIGN PLAN

SCALE: 1" = 50′

PD-1

STATE OF CALIFORNIA - DEPARTMENT OF TRANSPORTATION
Caltrans
TRAFFIC

FUNCTIONAL SUPERVISOR: LAURIE LAMMERT
CALCULATED-DESIGNED BY: JACK KEMMERLY
CHECKED BY: CHUCK COOK
REVISED BY / DATE REVISED

LAST REVISION 1-31-11
DATE PLOTTED => 17-MAR-2011
TIME PLOTTED => 12:25

Dist	COUNTY	ROUTE	POST MILES TOTAL PROJECT	SHEET No.	TOTAL SHEETS
03	Nev	20	R6.3/R6.8	12	42

REGISTERED CIVIL ENGINEER 3-7-11 DATE

2-28-11
PLANS APPROVAL DATE

REGISTERED PROFESSIONAL ENGINEER STEPHEN T. WRIGHT No. 52942 Exp. 12-31-12 CIVIL STATE OF CALIFORNIA

THE STATE OF CALIFORNIA OR ITS OFFICERS OR AGENTS SHALL NOT BE RESPONSIBLE FOR THE ACCURACY OR COMPLETENESS OF SCANNED COPIES OF THIS PLAN SHEET.

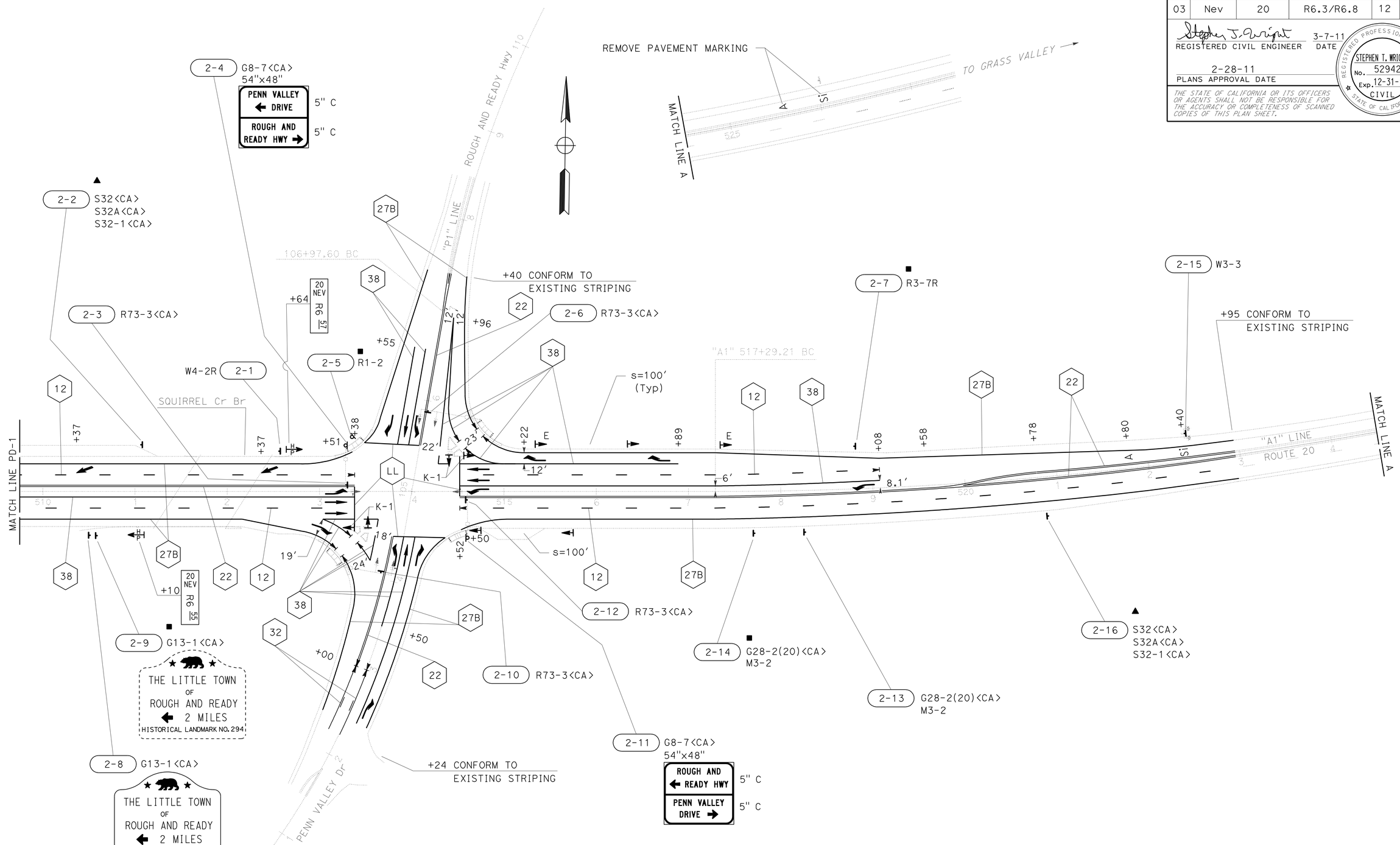

PAVEMENT DELINEATION AND SIGN PLAN

SCALE: 1" = 50'

PD-2

THIS PLAN ACCURATE FOR PAVEMENT DELINEATION AND SIGN WORK ONLY

REVISED BY	DATE REVISED
CHUCK COOK	JACK KEMMERLY
CALCULATED-DESIGNED BY	CHECKED BY
FUNCTIONAL SUPERVISOR	LAURIE LAMMERT

STATE OF CALIFORNIA - DEPARTMENT OF TRANSPORTATION **TRAFFIC** Caltrans

LAST REVISION 2-1-11 DATE PLOTTED => 17-MAR-2011 TIME PLOTTED => 12:25

Dist	COUNTY	ROUTE	POST MILES TOTAL PROJECT	SHEET No.	TOTAL SHEETS
03	Nev	20	R6.3/R6.8	13	42

REGISTERED CIVIL ENGINEER 3-7-11 DATE

2-28-11
PLANS APPROVAL DATE

REGISTERED PROFESSIONAL ENGINEER STEPHEN T. WRIGHT No. 52942 Exp. 12-31-12 CIVIL STATE OF CALIFORNIA

THE STATE OF CALIFORNIA OR ITS OFFICERS OR AGENTS SHALL NOT BE RESPONSIBLE FOR THE ACCURACY OR COMPLETENESS OF SCANNED COPIES OF THIS PLAN SHEET.

4" THERMOPLASTIC TRAFFIC STRIPE

DETAIL NUMBER	LINEAR FEET
22	6,614
27B	4,926
32	118
TOTAL	11,658

8" THERMOPLASTIC TRAFFIC STRIPE

DETAIL NUMBER	LINEAR FEET
38	2,157
TOTAL	2,157

4" THERMOPLASTIC TRAFFIC STRIPE (BROKEN 36 - 12)

DETAIL NUMBER	LINEAR FEET
12	2,199
32	118
TOTAL	2,317

THERMOPLASTIC PAVEMENT MARKING

DESCRIPTION	NUMBER	SQUARE FEET
TYPE 1(24') ARROW	6	186
TYPE III ARROW	12	504
TYPE VI ARROW	3	126
"SIGNAL"	2	64
"AHEAD"	2	62
LIMIT LINE	4	202
TOTAL		1,144

REMOVE PAVEMENT MARKING

DESCRIPTION	NUMBER	SQUARE FEET
"SIGNAL"	1	32
"AHEAD"	1	31
TOTAL		63

PAVEMENT MARKER

DETAIL NUMBER	RETROREFLECTIVE	
	TYPE D	TYPE G
	EACH	EACH
12		47
22	278	
32	8	
38		91
SUBTOTAL	286	138
TOTAL	424	

DELINEATOR - OBJECT MARKER - HIGHWAY POST MARKER

SHEET NUMBER	DELINEATOR (CLASS 1)		OBJECT MARKER (TYPE K-1)	HIGHWAY POST MARKER
	TYPE E (EACH)	TYPE F (EACH)	(EACH)	(EACH)
PD-1		4		1
PD-2	2	3	4	2
SUBTOTAL	2	7	4	3
TOTAL	9		4	3

PAVEMENT DELINEATION QUANTITIES

PDQ-1

STATE OF CALIFORNIA - DEPARTMENT OF TRANSPORTATION
Caltrans
TRAFFIC

FUNCTIONAL SUPERVISOR: LAURIE LAMMERT
CALCULATED-DESIGNED BY: CHUCK COOK
CHECKED BY: JACK KEMMERLY
REVISED BY
DATE REVISED

LAST REVISION 11-18-10 | DATE PLOTTED => 17-MAR-2011 | TIME PLOTTED => 12:25

Dist	COUNTY	ROUTE	POST MILES TOTAL PROJECT	SHEET No.	TOTAL SHEETS
03	Nev	20	R6.3/R6.8	14	42

REGISTERED CIVIL ENGINEER 3-7-11 DATE

2-28-11
PLANS APPROVAL DATE

REGISTERED PROFESSIONAL ENGINEER STEPHEN T. WRIGHT No. 52942 Exp. 12-31-12 CIVIL STATE OF CALIFORNIA

THE STATE OF CALIFORNIA OR ITS OFFICERS OR AGENTS SHALL NOT BE RESPONSIBLE FOR THE ACCURACY OR COMPLETENESS OF SCANNED COPIES OF THIS PLAN SHEET.

G72<CA>

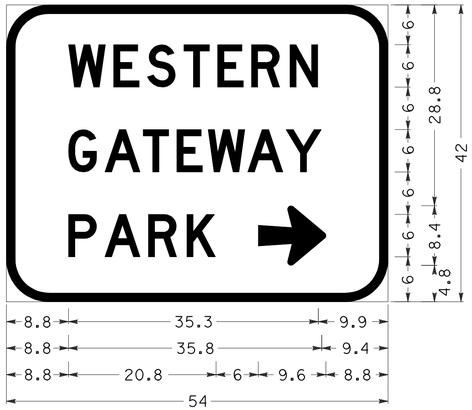

6" RADIUS, 1" BORDER, WHITE ON BROWN
[WESTERN] D, [GATEWAY] D, [PARK] D
ARROW 6"UC-1LINE - 9.6" 0°

1-3

G8-7<CA>

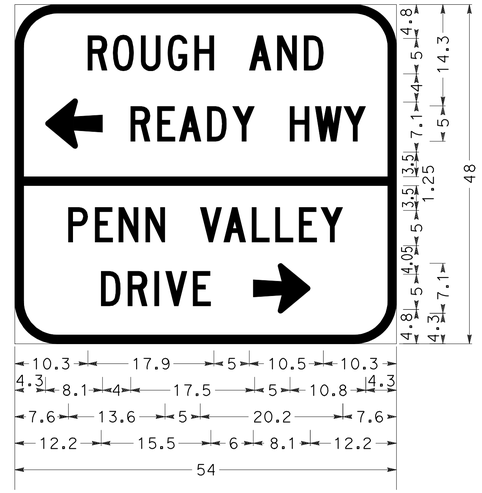

6" RADIUS, 1" BORDER, WHITE ON GREEN
[ROUGH AND] C, ARROW 5"CAP-1LINE - 8.1" 180°
[READY HWY] C, [PENN VALLEY] C, [DRIVE] C
ARROW 5"CAP-1LINE - 8.1" 0°

2-11

G1<CA>

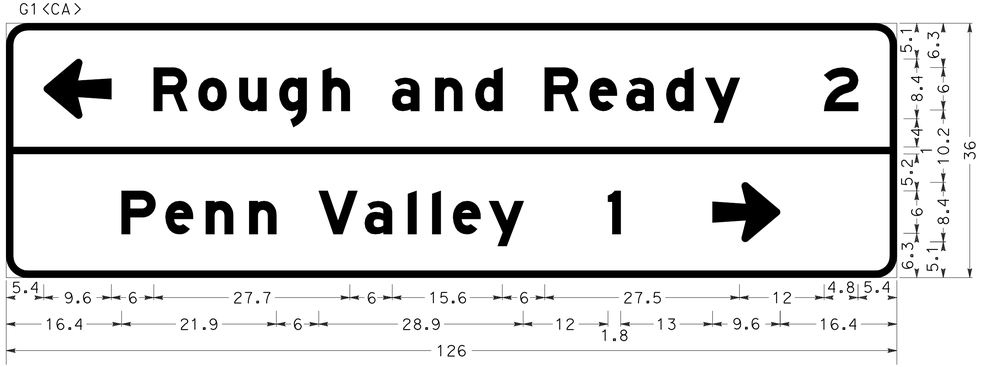

3" RADIUS, 1.0" BORDER, WHITE ON GREEN
ARROW 6"UC-1LINE - 9.6" 180°, {Rough and Ready 2] EMod, [Penn Valley 1] EMod , ARROW 6"UC-1LINE - 9.6" 0°

1-8

G8-7<CA>

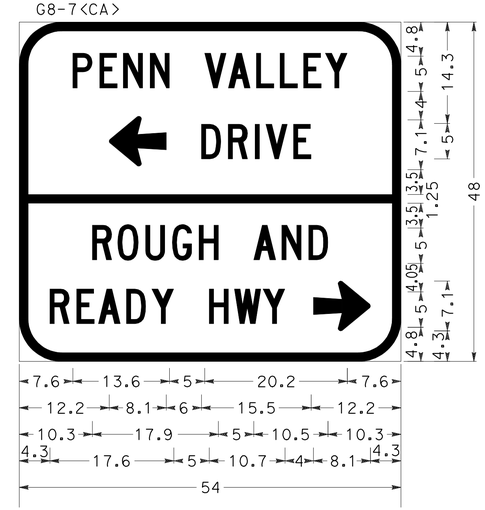

6" RADIUS, 1 BORDER, WHITE ON GREEN
[PENN VALLEY] C, ARROW 5"CAP-1LINE - 8.1" 180°
[DRIVE] C, [ROUGH AND] C, [READY HWY] C,
ARROW 5"CAP-1LINE - 8.1" 0°

2-4

SIGN DETAILS

NO SCALE

SD-1

NOTE: ALL SIGN DETAIL DIMENSIONS ARE IN INCHES.

STATE OF CALIFORNIA - DEPARTMENT OF TRANSPORTATION
Caltrans®
TRAFFIC

FUNCTIONAL SUPERVISOR: LAURIE LAMMERT
CALCULATED-DESIGNED BY: CHUCK COOK
CHECKED BY: JACK KEMMERLY
REVISED BY / DATE REVISED

LAST REVISION 11-16-10
DATE PLOTTED => 17-MAR-2011
TIME PLOTTED => 12:26

Dist	COUNTY	ROUTE	POST MILES TOTAL PROJECT	SHEET No.	TOTAL SHEETS
03	Nev	20	R6.3/R6.8	15	42

REGISTERED CIVIL ENGINEER 3-7-11 DATE

2-28-11
PLANS APPROVAL DATE

REGISTERED PROFESSIONAL ENGINEER STEPHEN T. WRIGHT No. 52942 Exp. 12-31-12 CIVIL STATE OF CALIFORNIA

THE STATE OF CALIFORNIA OR ITS OFFICERS OR AGENTS SHALL NOT BE RESPONSIBLE FOR THE ACCURACY OR COMPLETENESS OF SCANNED COPIES OF THIS PLAN SHEET.

ROADSIDE SIGN QUANTITIES

SIGN NUMBER (SHT-No.)	SIGN CODE FEDERAL	SIGN CODE CALIFORNIA	PANEL SIZE (INCHES)	"C" DIM IN FEET	POST SIZE AND LENGTH 4" x 4"	POST SIZE AND LENGTH 4" x 6"	POST SIZE AND LENGTH 6" x 6"	ROADSIDE SIGN ONE POST (EACH)	ROADSIDE SIGN TWO POST (EACH)	INSTALL SIGN (SSBM) (EACH)	REMOVE ROADSIDE SIGN (EACH)	RESET ROADSIDE SIGN (EACH)	REMARKS
1-1	M3-4	G28-2(20) G50	24 x 25 24 x 12	5′	12′			1					
1-2	M3-4	G28-2(20) G50									1		
1-3	D4-2L	G72 G95(L†)	54 x 42 30 x 36	5′			18′	1					
1-4	D4-2L	G72 G95(L†)									1		
1-5	W3-3	W41	48 x 48										SEE NOTES 5 AND 7
1-6		G1									1		
1-7		G1	126 x 36	5′		14′			1				
1-8	R3-7R	R18(R†)									1		
2-1	W4-2R	W11(R†)	48 x 48	5′		16′		1					
2-2		S32 S32A S32-1										1	
2-3		R73-3	36 x 36										SEE NOTES 4 AND 7
2-4		G8-7	54 x 48							1			SEE NOTE 6
2-5	R1-2	R1-2									1		
2-6		R73-3	36 x 36										SEE NOTES 4 AND 7
2-7	R3-7R	R18(R†)									1		
2-8		G13-1	36 x 30	5′	12′			1					LANDMARK No. 294
2-9		G13-1									1		
2-10		R73-3	36 x 36										SEE NOTES 4 AND 7
2-11		G8-7	54 x 48							1			SEE NOTE 6
2-12		R73-3	36 x 36										SEE NOTES 4 AND 7
2-13	M3-2	G28-2(20) G49	24 x 25 24 x 12	5′	12′			1					
2-14	M3-2	G28-2(20) G49									1		
2-15	W3-3	W41	48 x 48										SEE NOTES 5 AND 7
2-16		S32 S32A S32-1										1	
TOTAL								5	1	2	8	2	

NOTES:

1. EXACT LOCATION AND POSITION OF ROADSIDE SIGNS TO BE DETERMINED BY THE ENGINEER.
2. POST LENGTHS GIVEN ARE APPROXIMATE.
3. "C" DIM = VERTICAL CLEARANCE EP TO BOTTOM OF SIGN PANEL.
4. SIGN PANEL TO BE MOUNTED ON SIGNAL MAST ARM.
5. SIGN PANEL TO BE MOUNTED ON ADVANCED FLASHING BEACON STANDARD. SEE ELECTRICAL PLANS.
6. SIGN PANEL TO BE MOUNTED ON SIGNAL STANDARD DIRECTLY ABOVE THE SIGNAL MAST ARM CONNECTION.
7. (N) - NOT A SEPARATE PAY ITEM. FOR INFORMATION ONLY.

REVISED BY | DATE REVISED
CHUCK COOK | JACK KEMMERLY
CALCULATED-DESIGNED BY | CHECKED BY
FUNCTIONAL SUPERVISOR: LAURIE LAMMERT

STATE OF CALIFORNIA - DEPARTMENT OF TRANSPORTATION
Caltrans
TRAFFIC

SIGN QUANTITIES

SQ-1

LAST REVISION 2-1-11 | DATE PLOTTED => 17-MAR-2011 | TIME PLOTTED => 12:26

Dist	COUNTY	ROUTE	POST MILES TOTAL PROJECT	SHEET No.	TOTAL SHEETS
03	Nev	20	R6.3/R6.8	16	42

REGISTERED CIVIL ENGINEER 3-7-11 DATE

2-28-11
PLANS APPROVAL DATE

REGISTERED PROFESSIONAL ENGINEER STEPHEN T. WRIGHT No. 52942 Exp. 12-31-12 CIVIL STATE OF CALIFORNIA

THE STATE OF CALIFORNIA OR ITS OFFICERS OR AGENTS SHALL NOT BE RESPONSIBLE FOR THE ACCURACY OR COMPLETENESS OF SCANNED COPIES OF THIS PLAN SHEET.

ROADSIDE SIGN PANEL QUANTITIES (CONTRACTOR-FURNISHED)

SIGN CODE	SIGN MESSAGE/DESCRIPTION	SIGN SIZE L X D (INCHES)	SIGN AREA (SQFT)	NUMBER OF SIGNS	BACKGROUND SHEETING COLOR	BACKGROUND RETROREFLECTIVE ASTM TYPE	LEGEND SHEETING COLOR	LEGEND RETROREFLECTIVE ASTM TYPE	PROTECTIVE OVERLAY PREMIUM	FURNISH SINGLE SHEET ALUMINUM SIGN UNFRAMED 0.063" SQFT	FURNISH SINGLE SHEET ALUMINUM SIGN UNFRAMED 0.080" SQFT	FURNISH SINGLE SHEET ALUMINUM SIGN FRAMED 0.080" SQFT
W3-3	SIGNAL AHEAD (SYMBOL)	48 x 48	16.00	2	YELLOW	IX	BLACK RED,GREEN	 IX	X		32.00	
W4-2R	RIGHT LANE ENDS (SYMBOL)	48 x 48	16.00	1	YELLOW	IX	BLACK		X		16.00	
R73-3<CA>	LANE USE SIGN	36 x 36	9.00	4	WHITE	III	BLACK		X	36.00		
M3-2	EAST	24 x 12	2.00	1	GREEN	III	WHITE	III	X	2.00		
M3-4	WEST	24 x 12	2.00	1	GREEN	III	WHITE	III	X	2.00		
D4-2L	PARK AND RIDE	30 x 36	7.50	1	GREEN	III	WHITE	III	X	7.50		
G1<CA>	← Rough and Ready 2 Penn Valley 1 →	126 x 36	31.50	1	GREEN	III	WHITE	IX	X			31.50
G13-1<CA>	HISTORICAL LANDMARK SIGN (No. 294)	36 x 30	7.50	1	CREAM	II	BROWN	II	X	7.50		
G8-7<CA>	PENN VALLEY ~ ← DRIVE ROUGH AND ~ READY HWY →	54 x 48	18.00	1	GREEN	III	WHITE	IX	X		18.00	
G8-7<CA>	ROUGH AND ~ ← READY HWY PENN VALLEY ~ DRIVE →	54 x 48	18.00	1	GREEN	III	WHITE	IX	X		18.00	
G28-2(20)<CA>	CALIFORNIA 20 (Route Marker)	24 x 25	4.17	2	GREEN	III	WHITE	III	X	8.34		
G72<CA>	WESTERN GATEWAY PARK →	54 x 42	15.75	1	BROWN	III	WHITE	IX	X		15.75	
TOTAL										63.34	99.75	31.50

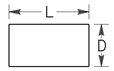

L = LENGTH OF SIGN
D = DEPTH OF SIGN

NOTE: CALIFORNIA SIGN CODES ARE DESIGNATED BY <CA>.
OTHERWISE, FEDERAL SIGN CODES ARE SHOWN.

SIGN QUANTITIES

SQ-2

STATE OF CALIFORNIA - DEPARTMENT OF TRANSPORTATION
TRAFFIC
Caltrans

FUNCTIONAL SUPERVISOR: LAURIE LAMMERT
CALCULATED-DESIGNED BY: CHUCK COOK
CHECKED BY: JACK KEMMERLY
REVISED BY
DATE REVISED

LAST REVISION 11-16-10
DATE PLOTTED => 17-MAR-2011
TIME PLOTTED => 12:26

Dist	COUNTY	ROUTE	POST MILES TOTAL PROJECT	SHEET No.	TOTAL SHEETS
03	Nev	20	R6.3/R6.8	17	42

REGISTERED CIVIL ENGINEER 3-7-11 DATE

2-28-11
PLANS APPROVAL DATE

REGISTERED PROFESSIONAL ENGINEER STEPHEN T. WRIGHT No. 52942 Exp. 12-31-12 CIVIL STATE OF CALIFORNIA

THE STATE OF CALIFORNIA OR ITS OFFICERS OR AGENTS SHALL NOT BE RESPONSIBLE FOR THE ACCURACY OR COMPLETENESS OF SCANNED COPIES OF THIS PLAN SHEET.

ROADWAY QUANTITIES SUMMARY

LOCATION	Temp FENCE (TYPE ESA)	CHANNELIZER (SURFACE MOUNTED)	Temp CRASH CUSHION MODULE	OBLITERATE SURFACING	MINOR CONCRETE (CURB, SIDEWALK, AND CURB RAMP)	COLD PLANE AC PAVEMENT			REMOVE CONCRETE	ROADWAY EXCAVATION	(N) ROADWAY EMBANKMENT	CLASS 2 AGGREGATE BASE	CRACK TREATMENT	REPLACE AC SURFACING	HMA (TYPE A)				HMA (OPEN GRADED)	PLACE HOT MIX ASPHALT (Misc AREA)	TACK COAT
						0.10' Max	0.15' Max	0.23' Max							STRUCTURAL SECTION	OVERLAY	VEHICLE PULLOUT	Misc AREA			
	LF	EA	EA	SQYD	CY	SQYD			CY	CY	CY	CY	LNMI	CY	TON				TON	SQYD	TON
"A1" 501+78 TO 514+00					11.8	6,420		250	4.3	649	50	524	0.50		400	1,260		8	290	22	2.0
"A1" 514+00 TO 522+95	800				11.7	4,780		633	4.3	451	310	414	0.50		318	1,780	19		285		2.2
"P1" 102+24.8 TO 105+00		5	6	285			333				37		0.25	28		255		5		14	0.5
"P1" 105+00 TO 107+40				86			317				60		0.25			260					0.6
SUBTOTAL						11,200	650	883							718	3,555	19	13			
TOTAL	800	5	6	371	23.5	12,733			8.6	1,100	457	938	1.50	28	4,305				575	60	5.3

(N) NOT A SEPARATE PAY ITEM, FOR INFORMATION ONLY.

MULCH

LOCATION	CY
"A1" 501+78 TO 522+95 "P1" 107+40 TO 102+24.8	25

TEMPORARY FIBER ROLL	LF
*STA 501+78 TO 514+00	700
*STA 514+00 TO 522+95	1300
TOTAL	2000

*EXACT LOCATIONS TO BE DETERMINED IN THE FIELD.

SUMMARY OF QUANTITIES

Q-1

STATE OF CALIFORNIA - DEPARTMENT OF TRANSPORTATION
Caltrans TRAFFIC DESIGN

FUNCTIONAL SUPERVISOR: LAURIE LAMMERT
CALCULATED-DESIGNED BY: DEANN SPANGLER
CHECKED BY: STEPHEN T. WRIGHT
REVISED BY
DATE REVISED

LAST REVISION 2-04-11
DATE PLOTTED => 17-MAR-2011
TIME PLOTTED => 12:26

Dist	COUNTY	ROUTE	POST MILES TOTAL PROJECT	SHEET No.	TOTAL SHEETS
03	Nev	20	R6.3/R6.8	18	42

REGISTERED ELECTRICAL ENGINEER 2-10-11 DATE

2-28-11
PLANS APPROVAL DATE

REGISTERED PROFESSIONAL ENGINEER JASKARAN SINGH BOPARAI No. E15056 Exp.12/31/11 ELECTRICAL STATE OF CALIFORNIA

THE STATE OF CALIFORNIA OR ITS OFFICERS OR AGENTS SHALL NOT BE RESPONSIBLE FOR THE ACCURACY OR COMPLETENESS OF SCANNED COPIES OF THIS PLAN SHEET.

GENERAL NOTES:

1. AB ALL EXISTING CONDUITS AND LOOP DETECTORS UNLESS OTHER SHOWN. AFTER THE NEW SIGNAL AND LIGHTING INSTALLATIONS.
2. RC EXISTING FOUNDATIONS, FLASHING BEACON, PULL BOXES, DLC, DETECTOR HANDHOLE, SIGNAL CABLES AND ALL CONDUCTORS AFTER THE NEW SIGNAL AND LIGHTING FACILITIES HAS BEEN INSTALLED AND TESTED SEE SHEET E-4, E-5 AND E-6.

PROJECT NOTES (THIS SHEET ONLY)

1. TYPE III-AF SERVICE EQUIPMENT ENCLOSURE CTID No. 0317020R006700.
2. EXISTING CONTROLLER ASSEMBLY.
3. 2"C, 4#10, 4 dlc
4. 1½"C, 4#10, 4 dlc
5. 1½"C, 2#8
6. 1½"C, 4#10, 4 dlc
7. 1½"C, 4#8, 3#10, 5 dlc
8. 2"C, 4#10, 5 dlc
9. 1½"C, 4#8, 3#14, 6#10, 2#4
10. 1"C, 2#8, 1 dlc
11. EXISTING CONDUIT MOUNTED ON THE BRIDGE TO BE REMAIN, RC CONDUCTORS.
12. INSTALL VIVDS FOR TEMPORAY DETECTION FOR MOUNTING SEE DETAIL A ON SHEET E-7.
13. RR AFTER TEMPORARY DETECTION COMPLETION SEE SHEET E-4.
14. RS AFTER TEMPORARY SIGNAL COMPLETION.
15. 2"C, 4 VIVDS CABLES
16. RR SEE SHEET E-4

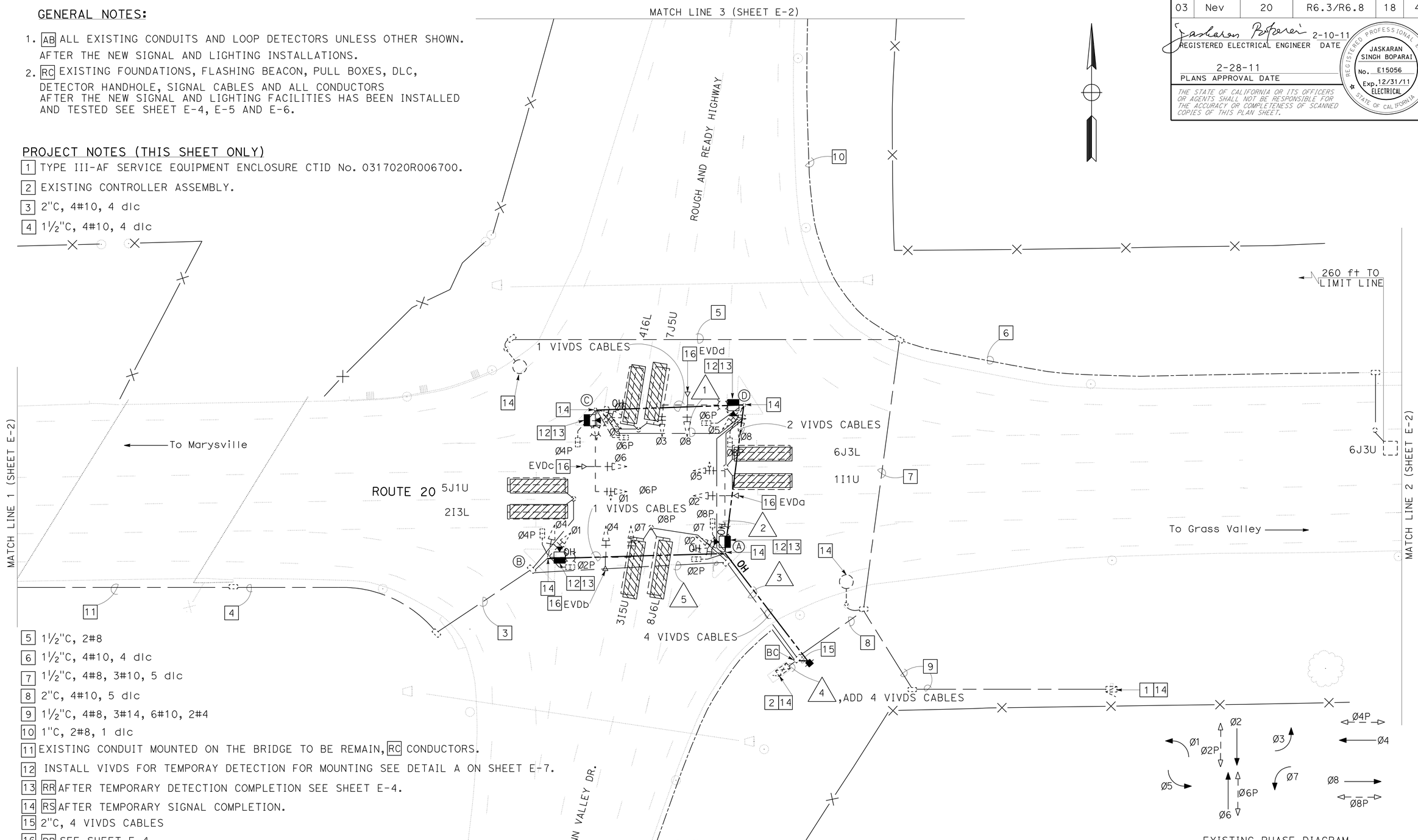

EXISTING PHASE DIAGRAM

LEGEND

VIDEO IMAGE VEHICLE DETECTION ZONE

THIS PLAN IS ACCURATE FOR ELECTRICAL WORK ONLY.

ALL DIMENSIONS ARE IN FEET UNLESS OTHERWISE SHOWN

MODIFY SIGNAL AND LIGHTING

SCALE 1"=20'

E-1

STATE OF CALIFORNIA - DEPARTMENT OF TRANSPORTATION
OFFICE OF ELECTRICAL DESIGN
SACRAMENTO

FUNCTIONAL SUPERVISOR: STEVEN S LEE
CALCULATED-DESIGNED BY: OANH D. NGUYEN
CHECKED BY: JASKARAN BOPARAI
REVISED BY / DATE REVISED

LAST REVISION 02-10-11 | DATE PLOTTED => 17-MAR-2011 | TIME PLOTTED => 12:26

Dist	COUNTY	ROUTE	POST MILES TOTAL PROJECT	SHEET No.	TOTAL SHEETS
03	Nev	20	R6.3/R6.8	19	42

REGISTERED ELECTRICAL ENGINEER 2-10-11 DATE

2-28-11
PLANS APPROVAL DATE

REGISTERED PROFESSIONAL ENGINEER
JASKARAN SINGH BOPARAI
No. E15056
Exp. 12/31/11
ELECTRICAL
STATE OF CALIFORNIA

THE STATE OF CALIFORNIA OR ITS OFFICERS OR AGENTS SHALL NOT BE RESPONSIBLE FOR THE ACCURACY OR COMPLETENESS OF SCANNED COPIES OF THIS PLAN SHEET.

ALL DIMENSIONS ARE IN FEET UNLESS OTHERWISE SHOWN

THIS PLAN IS ACCURATE FOR ELECTRICAL WORK ONLY.

MODIFY SIGNAL AND LIGHTING

SCALE 1"=20'

E-2

REVISED BY	DATE REVISED

CALCULATED-DESIGNED BY	CHECKED BY
OANH D. NGUYEN	JASKARAN BOPARAI

FUNCTIONAL SUPERVISOR
STEVEN S LEE

STATE OF CALIFORNIA - DEPARTMENT OF TRANSPORTATION
Caltrans® OFFICE OF ELECTRICAL DESIGN

LAST REVISION | DATE PLOTTED => 17-MAR-2011
02/10/11 | TIME PLOTTED => 12:26

Dist	COUNTY	ROUTE	POST MILES TOTAL PROJECT	SHEET No.	TOTAL SHEETS
03	Nev	20	R6.3/R6.8	20	42

Jaskaran Boparai 2-10-11
REGISTERED ELECTRICAL ENGINEER DATE

2-28-11
PLANS APPROVAL DATE

REGISTERED PROFESSIONAL ENGINEER
JASKARAN SINGH BOPARAI
No. E15056
Exp. 12/31/11
ELECTRICAL
STATE OF CALIFORNIA

THE STATE OF CALIFORNIA OR ITS OFFICERS OR AGENTS SHALL NOT BE RESPONSIBLE FOR THE ACCURACY OR COMPLETENESS OF SCANNED COPIES OF THIS PLAN SHEET.

EXISTING CONDUIT AND CONDUCTOR SCHEDULE

AWG	CONDUCTOR RUN	1	2	3	4	5
#14	Ø1	3	3	3	3	3
	Ø2				3	3
	Ø3	3	3	3	3	
	Ø4				3	3
	Ø5		3	3	3	
	Ø6	3	3	3	3	
	Ø7			3	3	3
	Ø8				2	2
	Ø2P	2	2	2	2	2
	Ø4P	2	2	2	2	
	Ø6P		2	2	2	
	Ø8P				1	1
	Ø2PPB	1	1	1	1	1
	Ø4PPB	1	1	1	1	
	Ø6PPB		1	1	1	
	Ø8PPB	1	1	1	1	1
	SPARE	3	3	3	3	3
	TOTAL #14	19	28	31	40	22
#10	Signal Common	1	1	1	1	1
	Flashing Beacon			4		4
	TOTAL #10	1	1	5	1	5
2#16 DLC TYP B	Ø1 Detector		1	1	1	
	Ø2 Detector			4	4	4
	Ø3 Detector			1	1	
	Ø4 Detector	1	1	1	2	
	Ø5 Detector				1	1
	Ø6 Detector		1	1	4	
	Ø7 Detector	1	1	1	1	
	Ø8 Detector			1	2	
	Spare Detector			1	2	1
	TOTAL DLC	2	4	11	18	6
#4	CONTROLLER				2	
	EVA			1	1	1
EVP CABLE	EVB	1	1	1	1	
	EVC			1	1	
	EVD		1	1	1	
	CABLE	1	2	4	4	1
CONDUIT SIZE (IN)		3	3	3	2-3	3

EXISTING POLE AND EQUIPMENT SCHEDULE

No.	STANDARDS TYPE	SMA (ft)	LMA (ft)	VEH SIG MTG Ø	TYPE	MTG	PEDESTRIAN SIGNAL Ø	MTG	PPB Ø	ARROW	HPS LUMINAIRE	SPECIAL REQUIREMENT (ft)
A	23-3-80	35	-	5	A	MAS	8	SP-2-T	4	←	-	RS SIGNAL POLE RS SIGNAL MAST-ARM RC SIGNAL SECTIONS RC PED. FACES
				2	12"							
				7	A	SV-2-TD	2		6	→		
				2	12"							
B	23-3-80	35	-	7	A	MAS	2	SP-2-T	6	←	-	RS SIGNAL POLE RS SIGNAL MAST-ARM RC SIGNAL SECTIONS RC PED. FACES
				4	12"							
				1	A	SV-2-TD	4		8	→		
				4	12"							
C	23-3-80	35	-	1	A	MAS	4	SP-2-T	8	←	-	RS SIGNAL POLE RS SIGNAL MAST-ARM RC SIGNAL SECTIONS RC PED. FACES
				6	12"							
				3	A	SV-2-TD	6		2	→		
				6	12"							
D	23-3-80	35	-	3	A	MAS	6	SP-2-T	2	←	-	RS SIGNAL POLE RS SIGNAL MAST-ARM RC SIGNAL SECTIONS RC PED. FACES
				8	12"							
				5	A	SV-2-TD	8		4	→		
				8	12"							

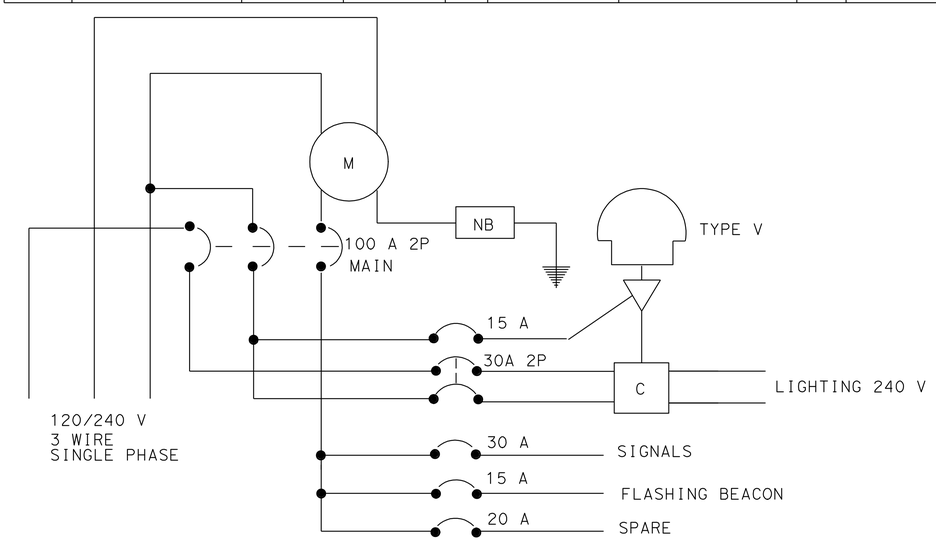

EXISTING SERVICE WIRING DIAGRAM

ALL DIMENSIONS ARE IN FEET UNLESS OTHERWISE SHOWN

NO SCALE

MODIFY SIGNAL AND LIGHTING

THIS PLAN IS ACCURATE FOR ELECTRICAL WORK ONLY.

E-3

STATE OF CALIFORNIA - DEPARTMENT OF TRANSPORTATION
Caltrans® OFFICE OF ELECTRICAL DESIGN

FUNCTIONAL SUPERVISOR: STEVEN S LEE
CALCULATED-DESIGNED BY: OANH D. NGUYEN
CHECKED BY: JASKARAN BOPARAI
REVISED BY / DATE REVISED

LAST REVISION 02/10/11
DATE PLOTTED => 17-MAR-2011
TIME PLOTTED => 12:26

Dist	COUNTY	ROUTE	POST MILES TOTAL PROJECT	SHEET No.	TOTAL SHEETS
03	Nev	20	R6.3/R6.8	21	42

REGISTERED ELECTRICAL ENGINEER 2-10-11 DATE

2-28-11
PLANS APPROVAL DATE

REGISTERED PROFESSIONAL ENGINEER JASKARAN SINGH BOPARAI No. E15056 Exp. 12/31/11 ELECTRICAL STATE OF CALIFORNIA

THE STATE OF CALIFORNIA OR ITS OFFICERS OR AGENTS SHALL NOT BE RESPONSIBLE FOR THE ACCURACY OR COMPLETENESS OF SCANNED COPIES OF THIS PLAN SHEET.

PROJECT NOTES (THIS SHEET ONLY)

1. INSTALL TYPE III-AF SERVICE EQUIPMENT ENCLOSURE CTID No. 0317020R006700. FOR SERVICE WIRING DIAGRAM SEE SHEET E-6.
2. INSTALL STATE-FURNISHED MODEL 2070 CONTROLLER ASSEMBLY. INSTALL C11 HARNESS CABLE PER TEES 2009.
3. SIGN TO BE MOUNTED ON SIGNAL MAST ARM, SEE SHEET PD-2.
4. RL EMERGENCY VEHICLE DETECTOR SEE SHEET E-1. FOR EMERGENCY VEHICLE DETECTOR MOUNTING PER PLAN ES-4E.
5. INSTALL TYPE B TELEPHONE DEMARCATION CABINET.
6. TYPE III-AF SERVICE EQUIPMENT ENCLOSURE, CONTROLLER CABINET AND TELEPHONE DEMARCATION ON THE SAME 10' X 22' CONCRETE PAD.
7. RL VIVDS SEE SHEET E-1 FOR VIVDS MOUNTING ON THE NEW LIGHTING MAST ARM SEE DETAIL A ON SHEET E-7.
8. INSTALL CONDUITS BY THE TRENCHING IN PAVEMENT METHOD.
9. INSTALL TWO COLOR OVERLAP FIVE SECTIONAL TRAFFIC SIGNAL HEADS SEE DETAIL A THIS SHEET.

ABBREVIATION

CTID No. CALTRANS IDENTIFICATION NUMBER

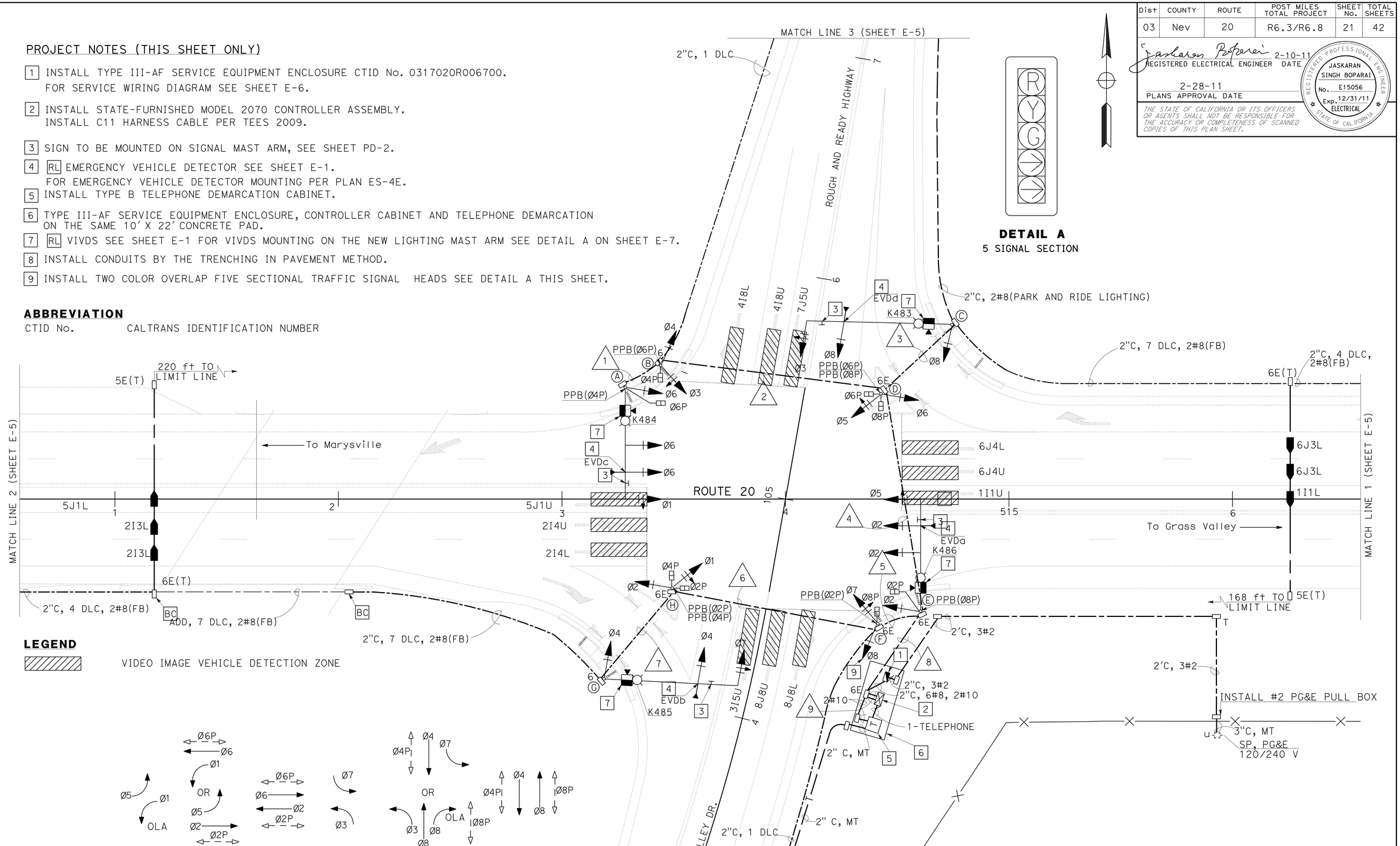

THIS PLAN IS ACCURATE FOR ELECTRICAL WORK ONLY.

MODIFY SIGNAL AND LIGHTING

SCALE 1"=20'

E-4

STATE OF CALIFORNIA - DEPARTMENT OF TRANSPORTATION
OFFICE OF ELECTRICAL DESIGN

FUNCTIONAL SUPERVISOR: STEVEN S LEE
CALCULATED-DESIGNED BY: JASKARAN BOPARAI
CHECKED BY: OANH D. NGUYEN
REVISED BY / DATE REVISED

LAST REVISION 02/10/11 DATE PLOTTED => 17-MAR-2011 TIME PLOTTED => 12:26

Dist	COUNTY	ROUTE	POST MILES TOTAL PROJECT	SHEET No.	TOTAL SHEETS
03	Nev	20	R6.3/R6.8	22	42

REGISTERED ELECTRICAL ENGINEER 2-10-11 DATE

2-28-11
PLANS APPROVAL DATE

REGISTERED PROFESSIONAL ENGINEER JASKARAN SINGH BOPARAI No. E15056 Exp. 12/31/11 ELECTRICAL STATE OF CALIFORNIA

THE STATE OF CALIFORNIA OR ITS OFFICERS OR AGENTS SHALL NOT BE RESPONSIBLE FOR THE ACCURACY OR COMPLETENESS OF SCANNED COPIES OF THIS PLAN SHEET.

PROJECT NOTES (THIS SHEET ONLY)

1. TO PARK AND RIDE LIGHTING.
2. INSTALL CONDUITS BY THE TRENCHING IN PAVEMENT METHOD.

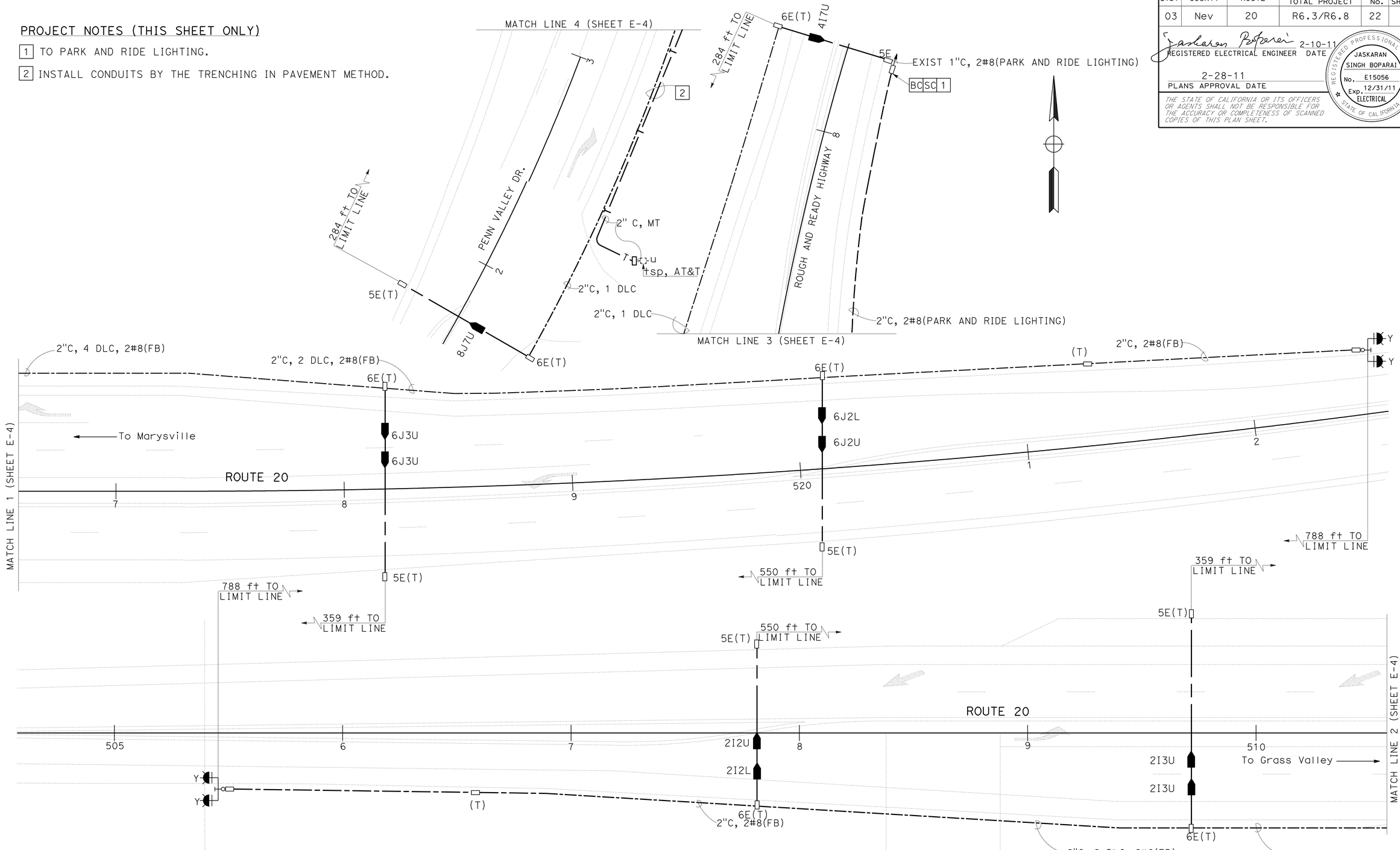

ALL DIMENSIONS ARE IN FEET UNLESS OTHERWISE SHOWN

MODIFY SIGNAL AND LIGHTING

SCALE 1"=20'

THIS PLAN IS ACCURATE FOR ELECTRICAL WORK ONLY.

E-5

STATE OF CALIFORNIA - DEPARTMENT OF TRANSPORTATION
Caltrans® OFFICE OF ELECTRICAL DESIGN

FUNCTIONAL SUPERVISOR: STEVEN S LEE
CALCULATED-DESIGNED BY: OANH D. NGUYEN
CHECKED BY: JASKARAN BOPARAI
REVISED BY
DATE REVISED

LAST REVISION DATE PLOTTED => 17-MAR-2011
TIME PLOTTED => 12:26
02/10/11

Dist	COUNTY	ROUTE	POST MILES TOTAL PROJECT	SHEET No.	TOTAL SHEETS
03	Nev	20	R6.3/R6.8	23	42

REGISTERED ELECTRICAL ENGINEER 2-10-11 DATE

2-28-11
PLANS APPROVAL DATE

REGISTERED PROFESSIONAL ENGINEER JASKARAN SINGH BOPARAI No. E15056 Exp. 12/31/11 ELECTRICAL STATE OF CALIFORNIA

THE STATE OF CALIFORNIA OR ITS OFFICERS OR AGENTS SHALL NOT BE RESPONSIBLE FOR THE ACCURACY OR COMPLETENESS OF SCANNED COPIES OF THIS PLAN SHEET.

CONDUIT AND CONDUCTOR SCHEDULE

CONDUCTOR DESIGNATION			CONDUIT RUN NUMBER AND SIZE								
CABLE TYPE	STD	PHASE	1	2	3	4	5	6	7	8	9
			3"	3"	3"	2-3"	4"	2-3"	3"	2-4"	2-4"
VEH-PED 12 CSC	A	1,6,6P / 4	1 / 1	1 / 1		1 / 1				1 / 1	1 / 1
	B	3,4,4P / 6		1 / 1		1 / 1				1 / 1	1 / 1
	C	3,8			1	1				1	1
	D	5,6,6P,8P / 6,8				1 / 1				1 / 1	1 / 1
	E	2,5,2P / 8								1 / 1	1 / 1
	F	7,8,8P / 2					1 / 1			1 / 1	1 / 1
PPB 3 CSC	G	4,7					1 / 1	1 / 1	1 / 1	1 / 1	1 / 1
	H	1,2,2P,4P / 2,4					1 / 1	1 / 1		1 / 1	1 / 1
TOTAL CABLES			1 / 1	2 / 2	1	4 / 3	3 / 3	2 / 2	1 / 1	8 / 8	8 / 8
AWG	CIRCUIT										
#8	SIGNAL										2
#8	LIGHTING		2	2	2	2	2	2	2	2	
#8	FLASHING BEACON				2	2	2	2	2	2	
EVC	EVD		1	1	1	2	1	1	1	4	4
VIVDS CABLE			1	1	1	2	1	1	1	4	4
DETECTORS											
PHASE											
Ø1					1	1				1	1
Ø2							6	6	6	6	6
Ø4				1		1				1	1
Ø5							1	1	1	1	1
Ø6					6	6				6	6
Ø8							1			1	1
TOTAL DLC				1	7	8	8	7	7	16	16

POLE AND EQUIPMENT SCHEDULE

No.	STANDARDS			VEH SIG MTG				PEDESTRIAN SIGNAL		PPB		HPS LUMINAIRE	SPECIAL REQUIREMENT (ft)
	TYPE	SMA (ft)	LMA (ft)	Ø	MAST ARM	Ø	POLE	Ø	MTG	Ø	ARROW		
A	29-5-100A	50	15	1 6	MAT MAS	6	SV-2-T	6	SP-1-T	4	←	310 W	F=12
B	1-B					4 3	TV-2-T	4	SP-1-T	6	→		
C	61-5-100A	65	15	3 8	MAT MAS	8	SV-1-T					310 W	F=17
D	1-B					5 6	TV-2-T	6 8	SP-2-T	6 8	← →		
E	29-5-100A	50	15	5 2	MAT MAS	2	SV-2-T	2	SP-1-T	8	←	310 W	F=12
F	1-B					7 8	TV-2-T	8	SP-1-T	2	→		
G	61-5-100A	60	15	7 4	MAT MAS	4	SV-1-T					310 W	F=18
H	1-B					1 2	TV-2-T	2	SP-1-T	2 4	← →		

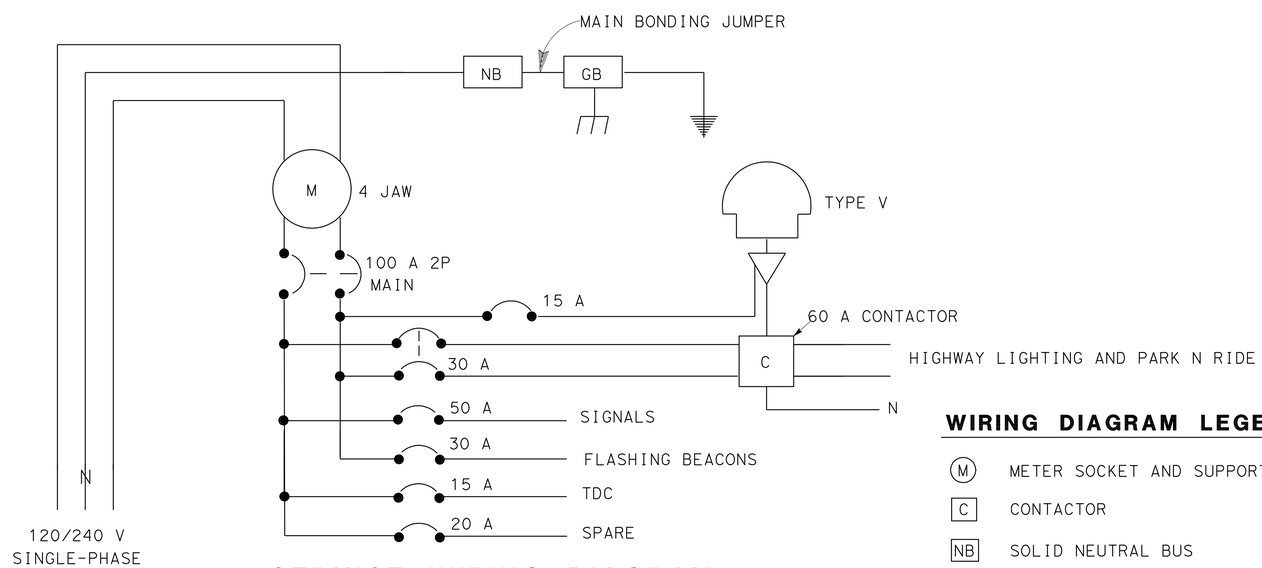

SERVICE WIRING DIAGRAM

LOAD: 1200 W (SIGNAL)
1420 W (HIGHWAY LIGHTING AND PARK N RIDE)
CTID No. 0317020R006700.

WIRING DIAGRAM LEGEND:

- (M) METER SOCKET AND SUPPORT
- [C] CONTACTOR
- [NB] SOLID NEUTRAL BUS
- ▽ AUTO TEST SWITCH
- ⌒ PHOTOELECTRIC UNIT

THIS PLAN IS ACCURATE FOR ELECTRICAL WORK ONLY.

CONDUCTOR, POLE AND EQUIPMENT SCHEDULES

NO SCALE

E-6

STATE OF CALIFORNIA - DEPARTMENT OF TRANSPORTATION
Caltrans® OFFICE OF ELECTRICAL DESIGN

FUNCTIONAL SUPERVISOR: STEVEN S LEE
CALCULATED-DESIGNED BY: OANH D. NGUYEN
CHECKED BY: JASKARAN BOPARAI
REVISED BY / DATE REVISED

LAST REVISION 02/10/11
DATE PLOTTED => 17-MAR-2011
TIME PLOTTED => 12:27

Dist	COUNTY	ROUTE	POST MILES TOTAL PROJECT	SHEET No.	TOTAL SHEETS
03	Nev	20	R6.3/R6.8	24	42

Jaskaran Boparai 2-10-11
REGISTERED ELECTRICAL ENGINEER DATE

2-28-11
PLANS APPROVAL DATE

REGISTERED PROFESSIONAL ENGINEER
JASKARAN SINGH BOPARAI
No. E15056
Exp. 12/31/11
ELECTRICAL
STATE OF CALIFORNIA

THE STATE OF CALIFORNIA OR ITS OFFICERS OR AGENTS SHALL NOT BE RESPONSIBLE FOR THE ACCURACY OR COMPLETENESS OF SCANNED COPIES OF THIS PLAN SHEET.

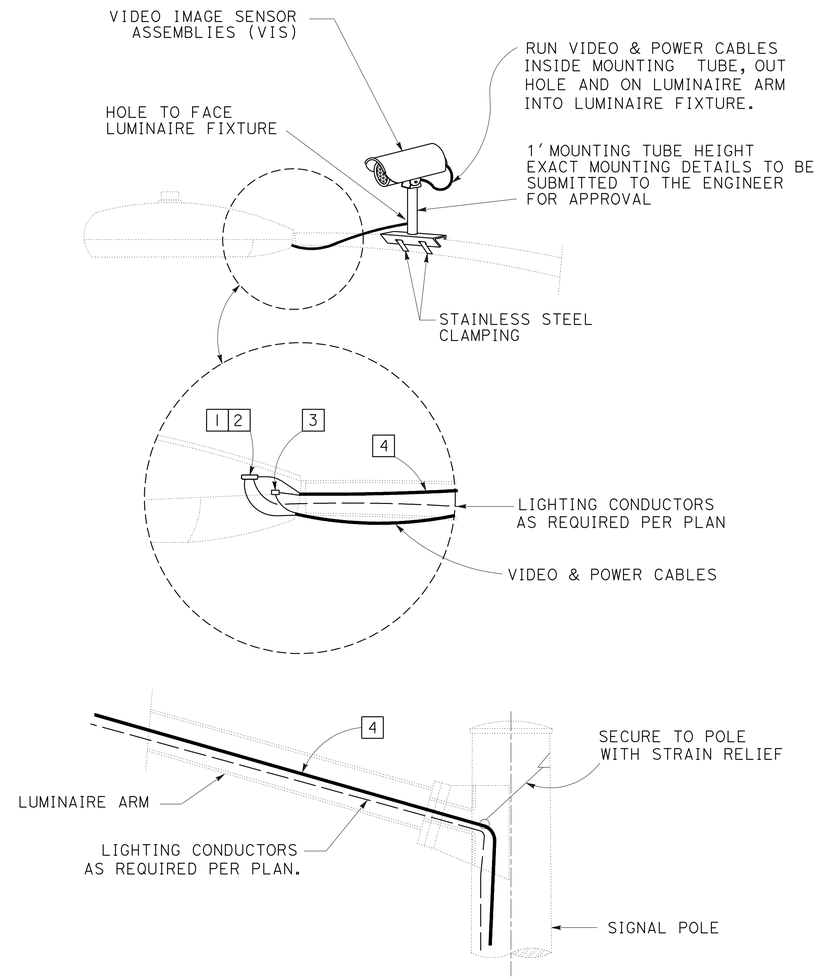

1. PROVIDE HEAVY DUTY (6 CONNECTOR) TERMINAL BLOCK FOR LIGHTING AND VIS POWER.
2. CONNECT 2#12 FROM VIVDS CABLE FOR POWER TO HEAVY DUTY TERMINAL BLOCK IN LUMINAIRE FIXTURE.
3. INSTALL BNC BARREL TYPE CONNECTOR BETWEEN RG-59/U VIDEO COAXIAL CABLE AND BELDEN #8281 COAXIAL CABLE.
4. VIVDS CABLE (COAXIAL CABLE AND 2#12) TO RUN CONTINUOUS TO VIDEO PANEL TERMINATION IN CONTROLLER CABINET.

VIDEO IMAGE VEHICLE DETECTION SYSTEM CAMERA MOUNTING DETAILS

DETAIL "A"

THIS PLAN IS ACCURATE FOR ELECTRICAL WORK ONLY.

ELECTRICAL DETAILS

SCALE = NO SCALE

E-7

STATE OF CALIFORNIA - DEPARTMENT OF TRANSPORTATION
Caltrans® OFFICE OF ELECTRICAL DESIGN

FUNCTIONAL SUPERVISOR: STEVEN S LEE
CALCULATED-DESIGNED BY: OANH D. NGUYEN
CHECKED BY: JASKARAN BOPARAI
REVISED BY
DATE REVISED

LAST REVISION DATE PLOTTED => 17-MAR-2011
02/10/11 TIME PLOTTED => 12:27

DIST	COUNTY	ROUTE	POST MILES TOTAL PROJECT	SHEET NO.	TOTAL SHEETS
03	Nev	20	R6.3/R6.8	25	42

REGISTERED CIVIL ENGINEER

November 17, 2006
PLANS APPROVAL DATE

REGISTERED PROFESSIONAL ENGINEER Michael Janzen No. 44788 Exp. 03-31-08 CIVIL STATE OF CALIFORNIA

The State of California or its officers or agents shall not be responsible for the accuracy or completeness of electronic copies of this plan sheet.

To accompany plans dated 2-28-11

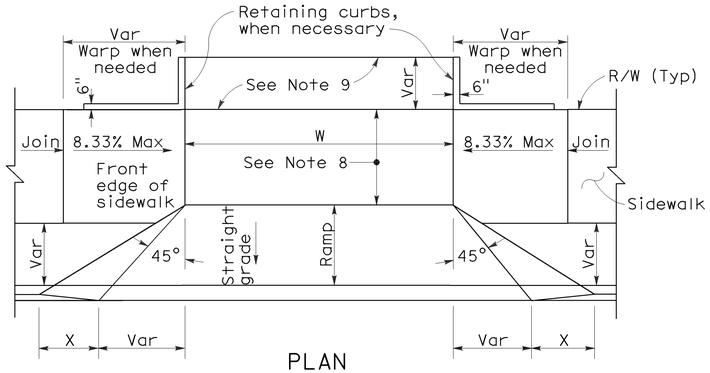

PLAN

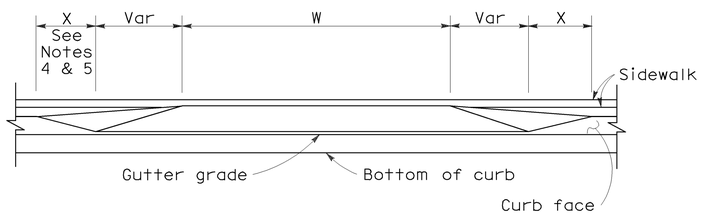

ELEVATION

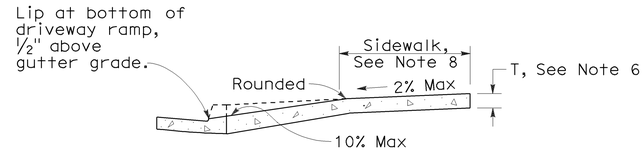

CASE A

Typical driveway, sidewalk not depressed

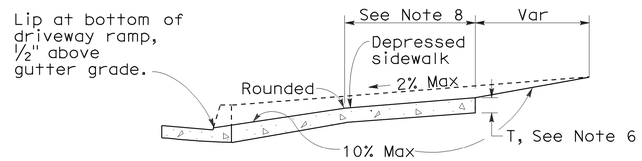

CASE B

Driveway with depressed sidewalk

SECTIONS

DRIVEWAYS

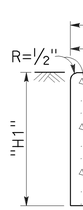

TYPE A1 CURBS

See Table A

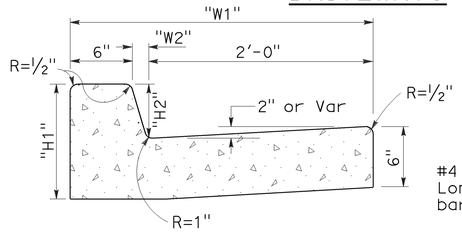

TYPE A2 CURBS

See Table A

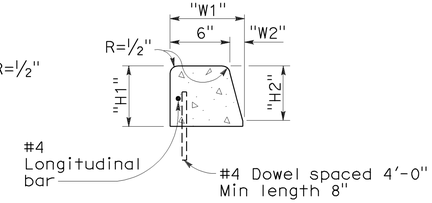

TYPE A3 CURBS

Superimposed on existing pavement
See Table A

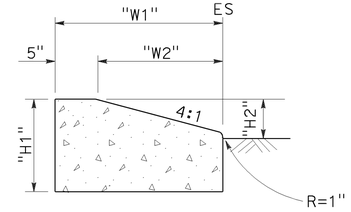

TYPE D CURBS

See Table A

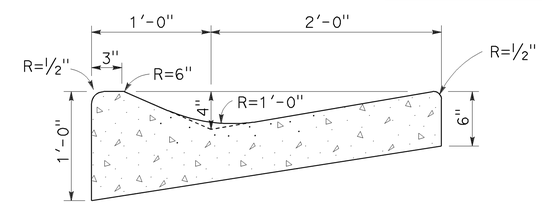

TYPE E CURB

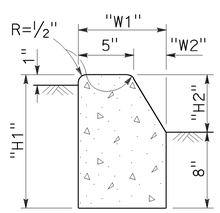

TYPE B1 CURBS

See Table A

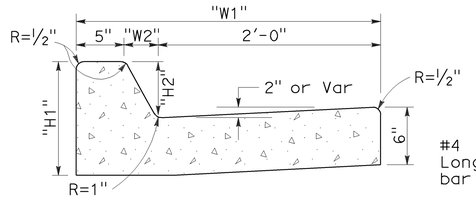

TYPE B2 CURBS

See Table A

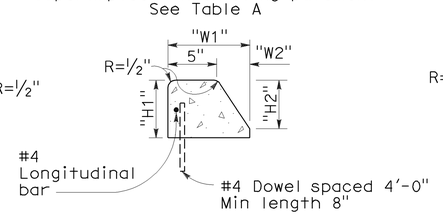

TYPE B3 CURBS

Superimposed on existing pavement
See Table A

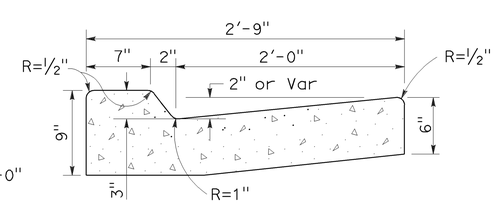

TYPE B4 CURBS

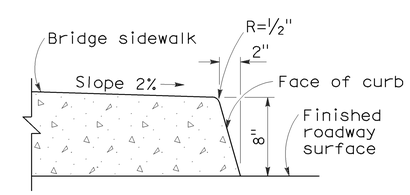

TYPE H CURB

On Bridges

CURBS

CURB QUANTITIES

TYPE	CUBIC YARDS PER LINEAR FOOT
A1-6	0.02585
A1-8	0.03084
A2-6	0.05903
A2-8	0.06379
A3-6	0.01036
A3-8	0.01435
B1-4	0.02185
B1-6	0.02930
B2-4	0.05515
B2-6	0.06171
B3-4	0.00641
B3-6	0.01074
B4	0.05709
D-4	0.04083
D-6	0.06804
E	0.06661

TABLE A

CURB TYPE	DIMENSIONS "H1"	"H2"	"W1"	"W2"
A1-6	1'-2"	6"	7½"	1½"
A1-8	1'-4"	8"	8"	2"
A2-6	1'-0"	6"	2'-7½"	1½"
A2-8	1'-2"	8"	2'-8"	2"
A3-6	6"	5"	7¼"	1¼"
A3-8	8"	7"	7¾"	1¾"
B1-4	1'-0"	4"	7½"	2½"
B1-6	1'-2"	6"	9"	4"
B2-4	10"	4"	2'-7½"	2½"
B2-6	1'-0"	6"	2'-9"	4"
B3-4	4"	3"	7"	2"
B3-6	6"	5"	8½"	3½"
D-4	10"	4"	1'-6"	1'-1"
D-6	1'-0"	6"	2'-2"	1'-8"

NOTES:

1. Case A driveway section typically applies.
2. Use Case B driveway section when ramp slopes would exceed 10% in Case A.
3. Use Case B driveway section when sidewalk cross slope would exceed 2% in Case A.
4. X=3'-0" except for curb heights over 10" where 4:1 slopes shall be used on curb slope.
5. X is a variable when sidewalk is located where wheelchairs may traverse the surface. Slopes shall not exceed 8.33%.
6. Sidewalk and ramp thickness "T" at driveway shall be 4" for residental and 6" for commercial.
7. Difference in slope of the driveway ramp and the slope of a line between the gutter and a point on the roadway 5'-0" from gutter line shall not exceed 15%. Reduce driveway ramp slope, not gutter slope, where required.
8. Minimum width of clear passageway for sidewalk shall be 4'-0".
9. Retaining curbs and acquisition of construction easement may be necessary for narrow sidewalks or curb heights in excess of 6".
10. Across the pedestrian route at curb ramp locations, the gutter pan slope shall not exceed 1" of depth for each 2'-0" of width.

STATE OF CALIFORNIA
DEPARTMENT OF TRANSPORTATION

CURBS AND DRIVEWAYS

NO SCALE

RSP A87A DATED NOVEMBER 17, 2006 SUPERSEDES STANDARD PLAN A87A DATED MAY 1, 2006 - PAGE 113 OF THE STANDARD PLANS BOOK DATED MAY 2006.

REVISED STANDARD PLAN RSP A87A

2006 REVISED STANDARD PLAN RSP A87A

10-25-06

DIST	COUNTY	ROUTE	POST MILES TOTAL PROJECT	SHEET NO.	TOTAL SHEETS
03	Nev	20	R6.3/R6.8	26	42

REGISTERED CIVIL ENGINEER

September 1, 2006
PLANS APPROVAL DATE

REGISTERED PROFESSIONAL ENGINEER Hector David Cordova No. C41957 Exp. 3-31-08 CIVIL STATE OF CALIFORNIA

The State of California or its officers or agents shall not be responsible for the accuracy or completeness of electronic copies of this plan sheet.

To accompany plans dated 2-28-11

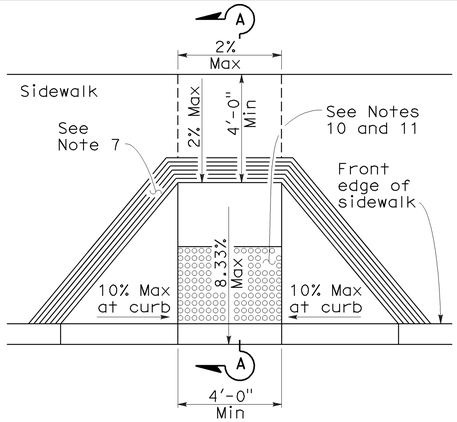

CASE A

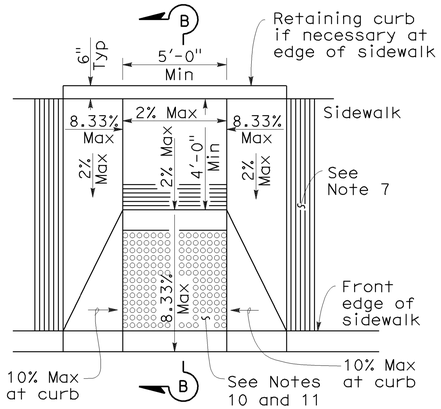

CASE B

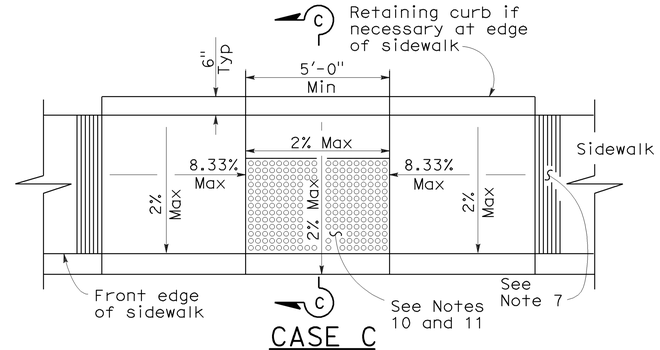

CASE C

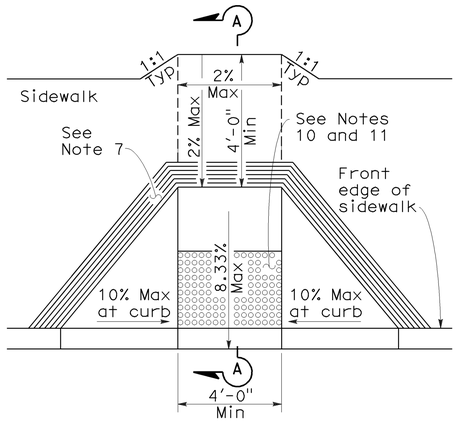

CASE D

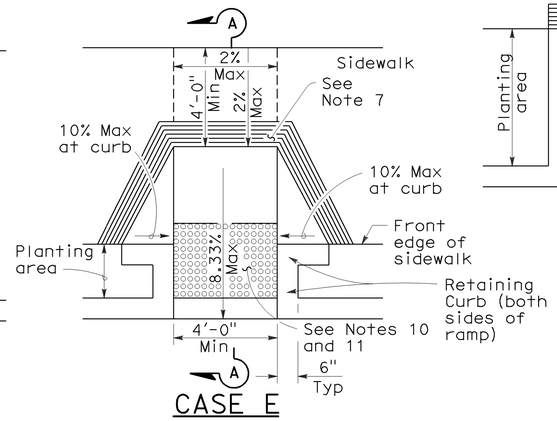

CASE E

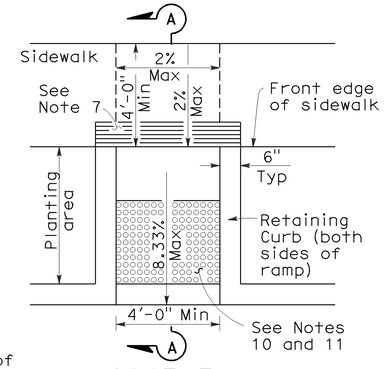

CASE F

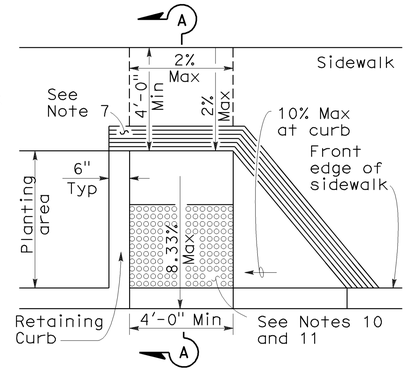

CASE G

See Note 4

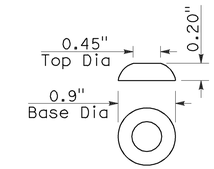

RAISED TRUNCATED DOME

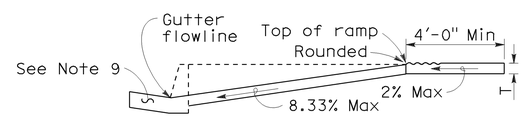

SECTION A-A

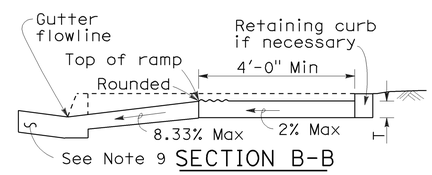

SECTION B-B

Depress entire sidewalk as required

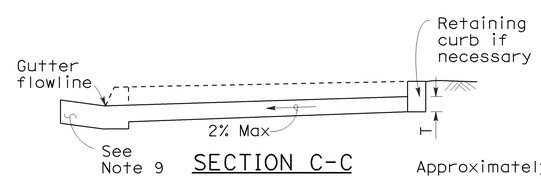

SECTION C-C

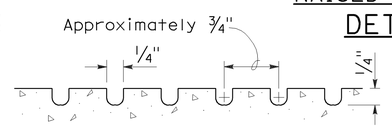

GROOVING DETAIL

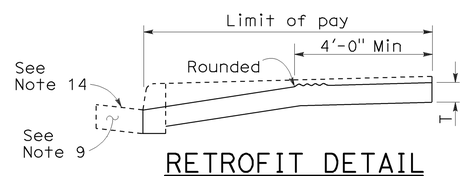

RETROFIT DETAIL

Existing curb and sidewalk

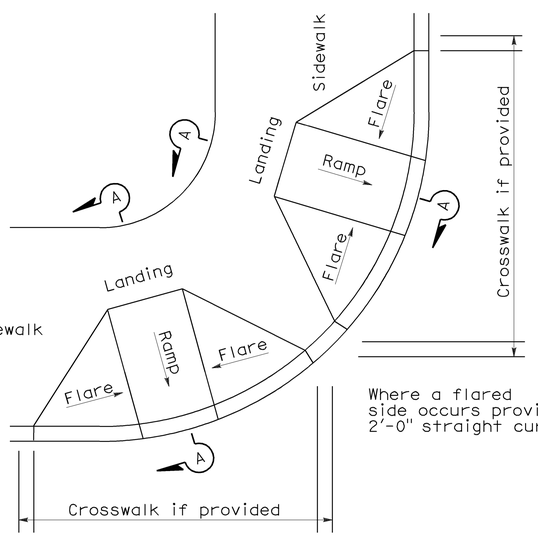

DETAIL A

TYPICAL TWO-RAMP CORNER INSTALLATION

See Note 1

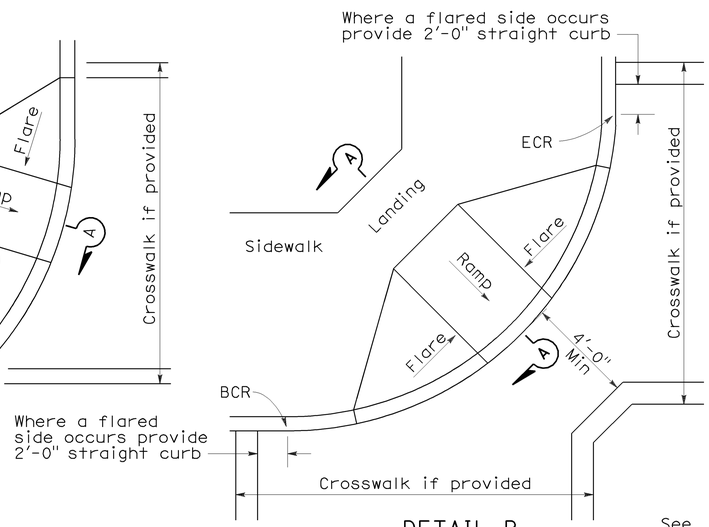

DETAIL B

TYPICAL ONE-RAMP CORNER INSTALLATION

See Notes 1 and 3

NOTES:

1. As site conditions dictate, Case A through Case G curb ramps may be used for corner installations similar to those shown in Detail A and Detail B. The case of curb ramps used in Detail A do not have to be the same. Case A through Case G curb ramps also may be used at mid block locations, as site conditions dictate.
2. If distance from curb to back of sidewalk is too short to accommodate ramp and 4'-0" platform (landing) as shown in Case A, the sidewalk may be depressed longitudinally as in Case B, or C or may be widened as in Case D.
3. When ramp is located in center of curb return, crosswalk configuration must be similar to that shown for Detail B.
4. As site conditions dictate, the retaining curb side and the flared side of the Case G ramp shall be constructed in reversed position.
5. If located on a curve, the sides of the ramp need not be parallel, but the minimum width of the ramp shall be 4'-0".
6. Side slope of ramp flares vary uniformly from a maximum of 10% at curb to conform with longitudinal sidewalk slope adjacent to top of the ramp, except in Case C and Case F.
7. The curb ramp shall be outlined, as shown, with a 1'-0" wide border with 1/4" grooves approximately 3/4" on center. See grooving detail.
8. Transitions from ramps and landing to walks, gutters or streets shall be flush and free of abrupt changes.
9. Maximum slopes of adjoining gutters, the road surface immediately adjacent to the curb ramp or accessible route shall not exceed 5 percent within 4'-0" of the top and bottom of the curb ramp.
10. Curb ramps shall have a detectable warning surface that extends the full width and 3'-0" depth of the ramp. Detectable Warning Surfaces shall conform to the details on this plan and the requirements in the Special Provisions.
11. The edge of the detectable warning surface nearest the street shall be between 6" and 8" from the gutter flowline.
12. Sidewalk and ramp thickness, "T", shall be 3 1/2" minimum.
13. Utility pull boxes, manholes, vaults and all other utility facilities within the boundaries of the curb ramp will be relocated or adjusted to grade by the owner prior to, or in conjunction with, curb ramp construction.
14. For retrofit conditions, removal and replacement of curb apron will be at the Contractor's option, unless otherwise shown on project plans.

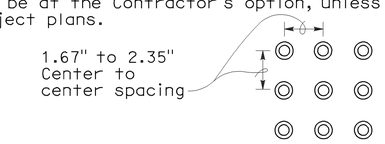

RAISED TRUNCATED DOME PATTERN (IN-LINE)

DETECTABLE WARNING SURFACE

See Note 10

STATE OF CALIFORNIA
DEPARTMENT OF TRANSPORTATION

CURB RAMP DETAILS

NO SCALE

RSP A88A DATED SEPTEMBER 1, 2006 SUPERSEDES STANDARD PLAN A88A DATED MAY 1, 2006 - PAGE 115 OF THE STANDARD PLANS BOOK DATED MAY 2006.

REVISED STANDARD PLAN RSP A88A

2006 REVISED STANDARD PLAN RSP A88A

8-3-06

DIST	COUNTY	ROUTE	POST MILES TOTAL PROJECT	SHEET NO.	TOTAL SHEETS
03	Nev	20	R6.3/R6.8	27	42

Randell D. Hiatt
REGISTERED CIVIL ENGINEER

June 6, 2008
PLANS APPROVAL DATE

REGISTERED PROFESSIONAL ENGINEER
Randell D. Hiatt
No. C50200
Exp. 6-30-09
CIVIL
STATE OF CALIFORNIA

The State of California or its officers or agents shall not be responsible for the accuracy or completeness of electronic copies of this plan sheet.

To accompany plans dated 2-28-11

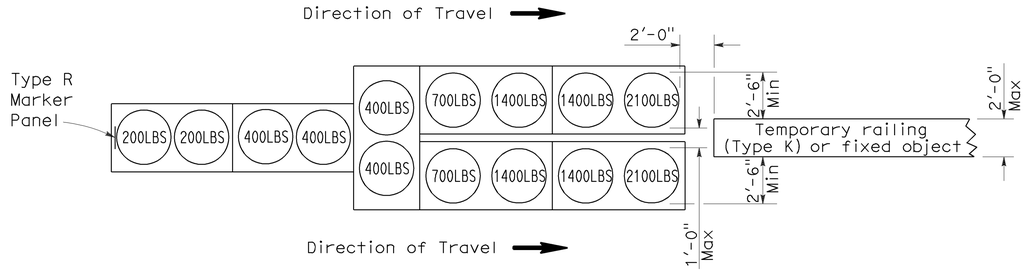

ARRAY 'TU14'

Approach speed 45 mph or more

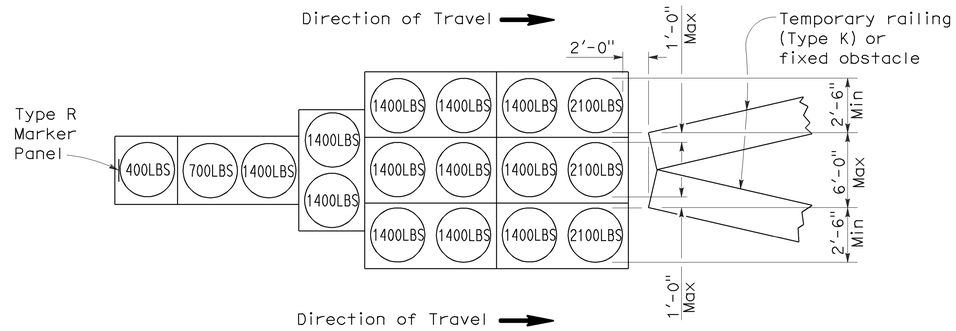

ARRAY 'TU17'

Approach speed less than 45 mph

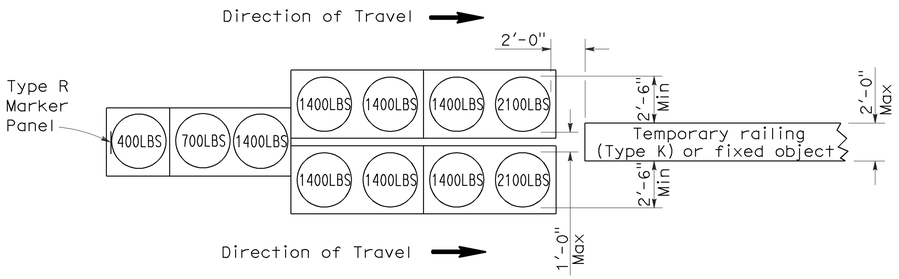

ARRAY 'TU11'

Approach speed less than 45 mph

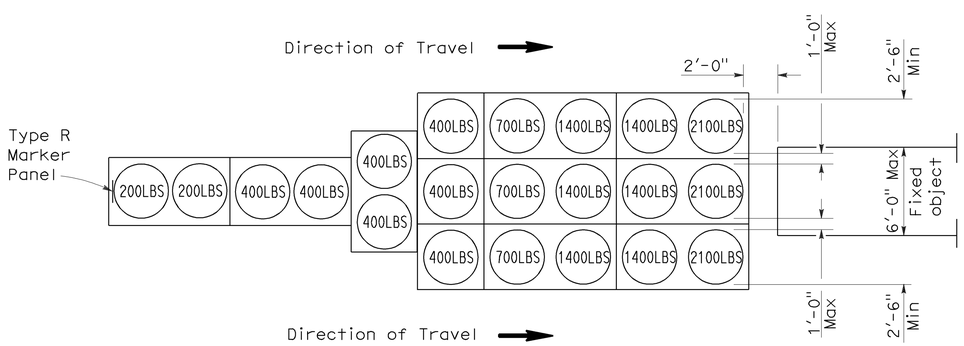

ARRAY 'TU21'

Approach speed 45 mph or more

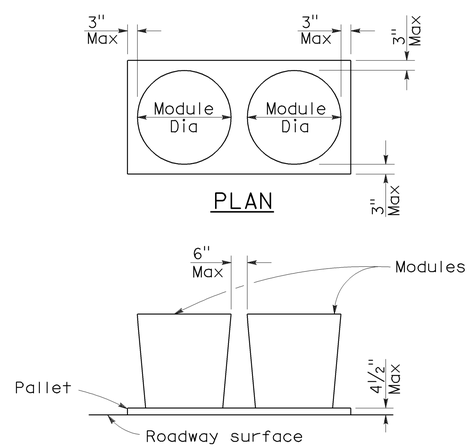

ELEVATION

CRASH CUSHION PALLET DETAIL

See Note 7

NOTES:

1. (XXX) Indicates sand filled module location and weight of sand in pounds for each module. Module spacing is based on the greater diameter of the module.
2. All sand weights are nominal.
3. Temporary crash cushion arrays shall not encroach on the traveled way.
4. Place the top of Type R marker panel 1" below the module lid.
5. Refer to Standard Plan A73B for marker details.
6. Approach speeds indicated conform to NCHRP 350 Report criteria.
7. Use of pallets is optional.

STATE OF CALIFORNIA
DEPARTMENT OF TRANSPORTATION

TEMPORARY CRASH CUSHION, SAND FILLED (UNIDIRECTIONAL)

NO SCALE

RSP T1A DATED JUNE 6, 2008 SUPERSEDES STANDARD PLAN T1A
DATED MAY 1, 2006 - PAGE 211 OF THE STANDARD PLANS BOOK DATED MAY 2006.

REVISED STANDARD PLAN RSP T1A

2006 REVISED STANDARD PLAN RSP T1A

DIST	COUNTY	ROUTE	POST MILES TOTAL PROJECT	SHEET NO.	TOTAL SHEETS
03	Nev	20	R6.3/R6.8	28	42

Randell D. Hiatt
REGISTERED CIVIL ENGINEER

June 6, 2008
PLANS APPROVAL DATE

REGISTERED PROFESSIONAL ENGINEER
Randell D. Hiatt
No. C50200
Exp. 6-30-09
CIVIL
STATE OF CALIFORNIA

The State of California or its officers or agents shall not be responsible for the accuracy or completeness of electronic copies of this plan sheet.

To accompany plans dated 2-28-11

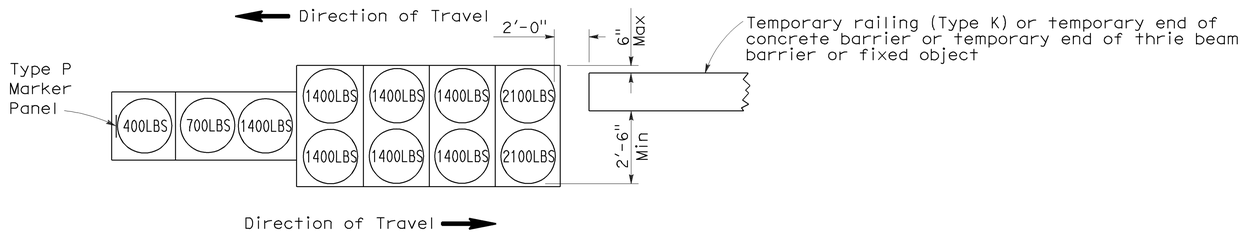

ARRAY 'TB11'

Approach speed less than 45 mph

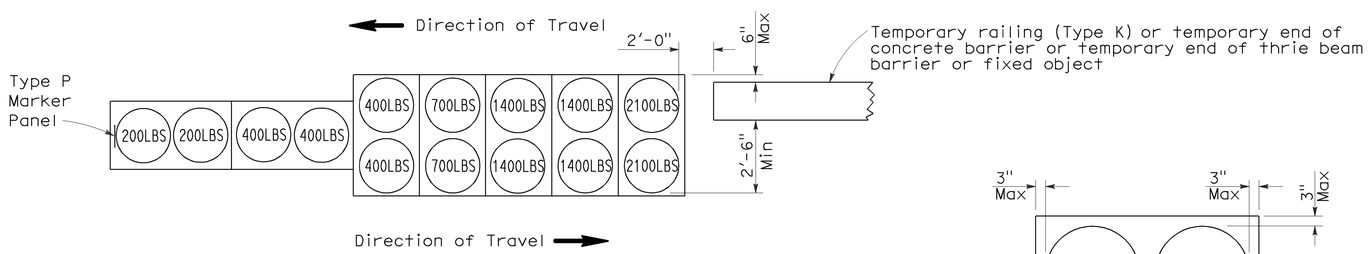

ARRAY 'TB14'

Approach speed 45 mph or more

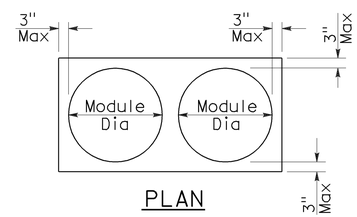

PLAN

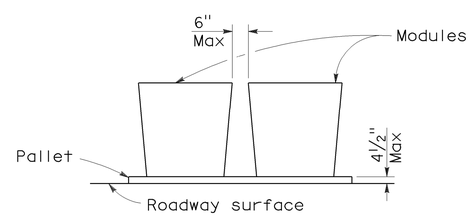

ELEVATION

CRASH CUSHION PALLET DETAIL

See Note 7

NOTES:

1. (XXX) Indicates sand filled module location and weight of sand in pounds for each module. Module spacing is based on the greater diameter of the module.
2. All sand weights are nominal.
3. Temporary crash cushion arrays shall not encroach on the traveled way.
4. Place the Type P marker panel so that the bottom of the panel rests upon the pallet.
5. Refer to Standard Plan A73B for marker details.
6. Approach speeds indicated conform to NCHRP 350 Report criteria.
7. Use of pallets is optional.

STATE OF CALIFORNIA
DEPARTMENT OF TRANSPORTATION

TEMPORARY CRASH CUSHION, SAND FILLED (BIDIRECTIONAL)

NO SCALE

RSP T1B DATED JUNE 6, 2008 SUPERSEDES STANDARD PLAN T1B
DATED MAY 1, 2006 - PAGE 212 OF THE STANDARD PLANS BOOK DATED MAY 2006.

REVISED STANDARD PLAN RSP T1B

2006 REVISED STANDARD PLAN RSP T1B

DIST	COUNTY	ROUTE	POST MILES TOTAL PROJECT	SHEET NO.	TOTAL SHEETS
03	Nev	20	R6.3/R6.8	29	42

Randell D. Hiatt
REGISTERED CIVIL ENGINEER

June 6, 2008
PLANS APPROVAL DATE

REGISTERED PROFESSIONAL ENGINEER
Randell D. Hiatt
No. C50200
Exp. 6-30-09
CIVIL
STATE OF CALIFORNIA

The State of California or its officers or agents shall not be responsible for the accuracy or completeness of electronic copies of this plan sheet.

To accompany plans dated 2-28-11

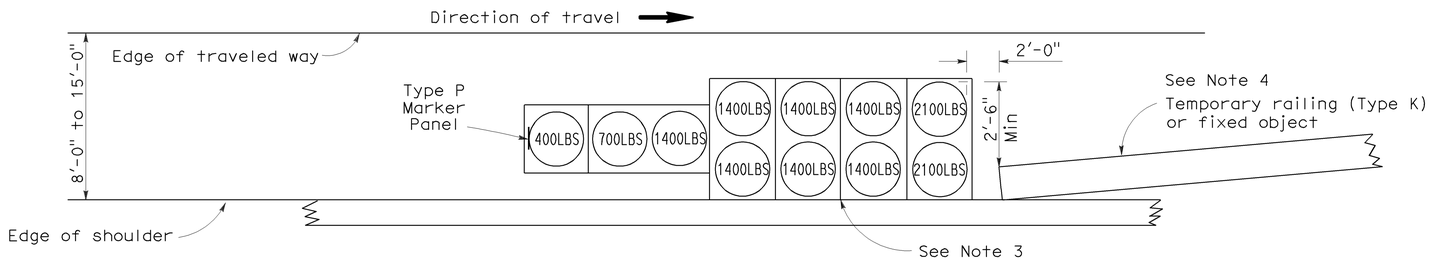

ARRAY 'TS11'

Approach speed less than 45 mph
See Note 9

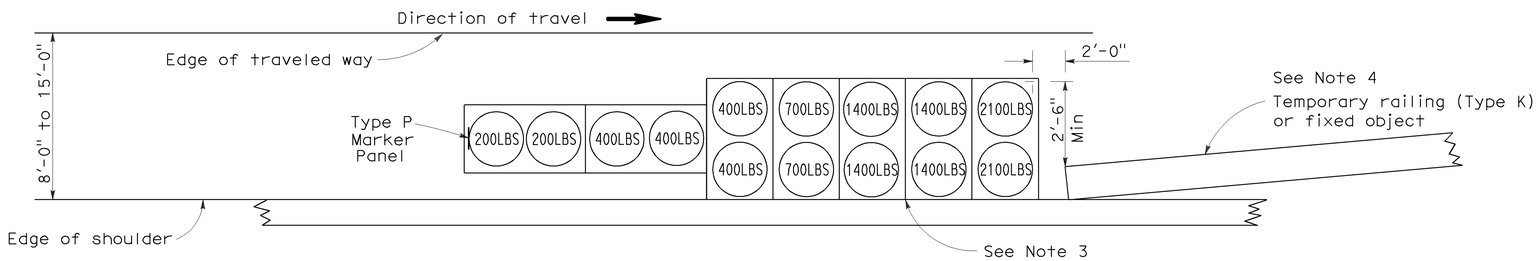

ARRAY 'TS14'

Approach speed 45 mph or more
See Note 9

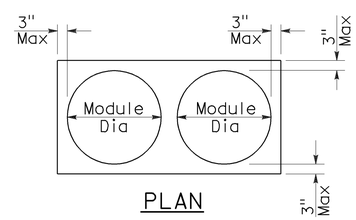

PLAN

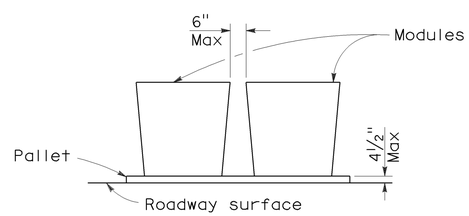

ELEVATION

CRASH CUSHION PALLET DETAIL

See Note 11

NOTES:

1. (XXX) Indicates sand filled module location and weight of sand in pounds for each module. Module spacing is based on the greater diameter of the module.
2. All sand weights are nominal.
3. The temporary crash cushion arrays shown on this plan shall be used only in locations where there will be traffic on one side of the temporary crash cushion array.
4. If the fixed object or approach end of the temporary railing is less than 15'-0" from the edge of traveled way, a temporary crash cushion is required in a construction or work zone.
5. Temporary crash cushion arrays shall not encroach on the traveled way.
6. Arrays for median shoulders shall conform to details shown on this plan for outside shoulders.
7. Place the Type P marker panel so that the bottom of the panel rests upon the pallet and faces traffic.
8. Refer to Standard Plan A73B for marker details.
9. For shoulder widths less than 8'-0", appropriate approved crash cushion protection, other than sand filled modules, shall be provided at fixed objects and at approach ends of temporary railing. The specific type of crash cushion shall be as shown on the project plans or as specified in the Special Provisions, or if not shown on the project plans or specified in the Special Provisions, shall be as approved by the Engineer.
10. Approach speeds indicated conform to NCHRP 350 Report criteria.
11. Use of pallets is optional.

STATE OF CALIFORNIA
DEPARTMENT OF TRANSPORTATION

TEMPORARY CRASH CUSHION, SAND FILLED (SHOULDER INSTALLATIONS)

NO SCALE

RSP T2 DATED JUNE 6, 2008 SUPERSEDES STANDARD PLAN T2
DATED MAY 1, 2006 - PAGE 213 OF THE STANDARD PLANS BOOK DATED MAY 2006.

REVISED STANDARD PLAN RSP T2

2006 REVISED STANDARD PLAN RSP T2

5-15-08

DIST	COUNTY	ROUTE	POST MILES TOTAL PROJECT	SHEET NO.	TOTAL SHEETS
03	Nev	20	R6.3/R6.8	30	42

LICENSED LANDSCAPE ARCHITECT

April 3, 2009
PLANS APPROVAL DATE

The State of California or its officers or agents shall not be responsible for the accuracy or completeness of electronic copies of this plan sheet.

LICENSED LANDSCAPE ARCHITECT — ROBERT B. SCHOTT 3635 — REGISTRATION 11-30-10 Renewal Date — 2-25-09 Date — STATE OF CALIFORNIA

To accompany plans dated 2-28-11

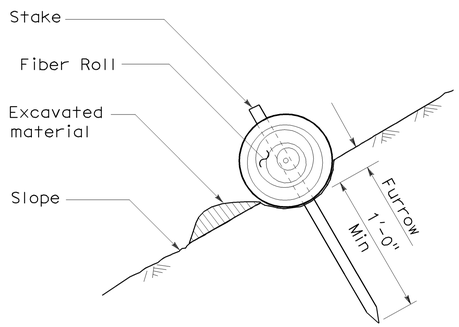

SECTION

TEMPORARY FIBER ROLL (TYPE 1)

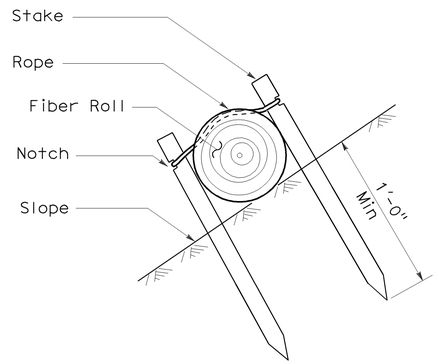

SECTION

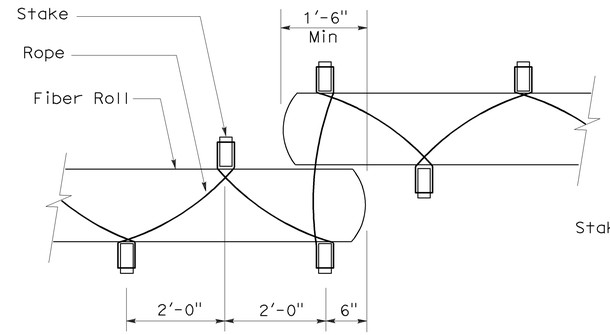

PLAN

TEMPORARY FIBER ROLL (TYPE 2)

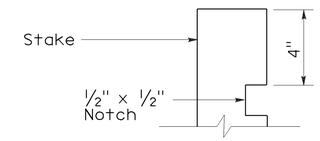

ELEVATION

STAKE NOTCH DETAIL

NOTES:

1. Temporary fiber roll spacing varies depending upon slope inclination.
2. Installations shown in the perspectives are for slope inclination of 10:1 and steeper.

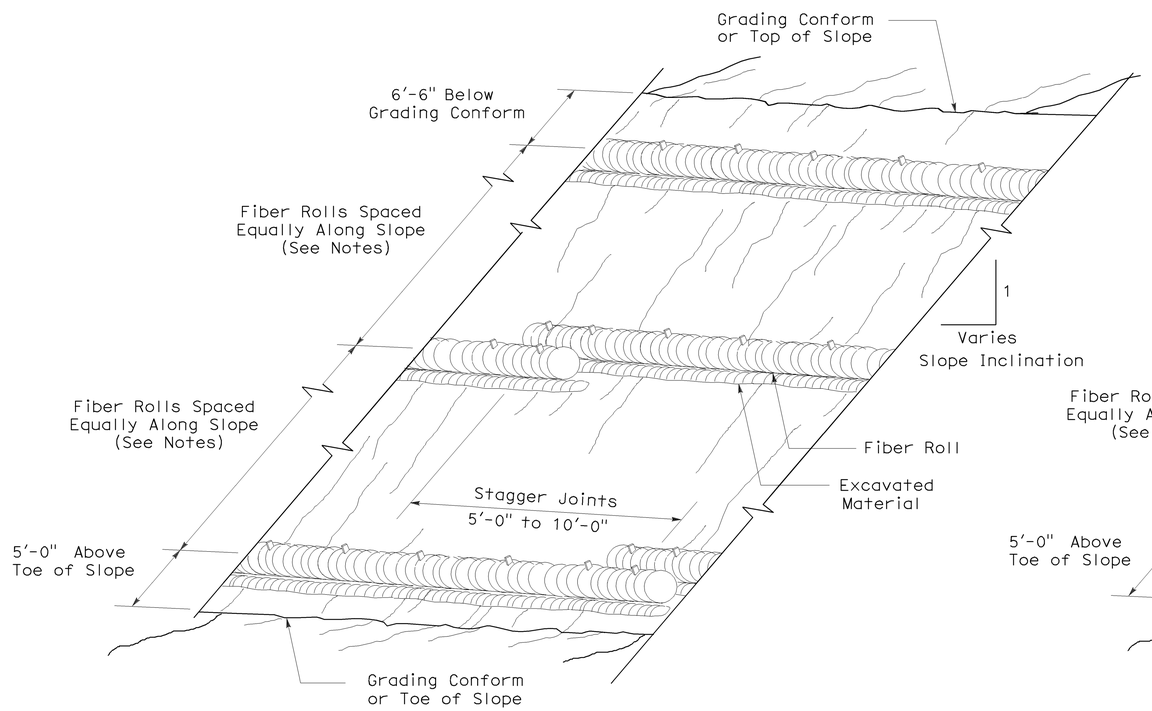

PERSPECTIVE

TEMPORARY FIBER ROLL (TYPE 1)

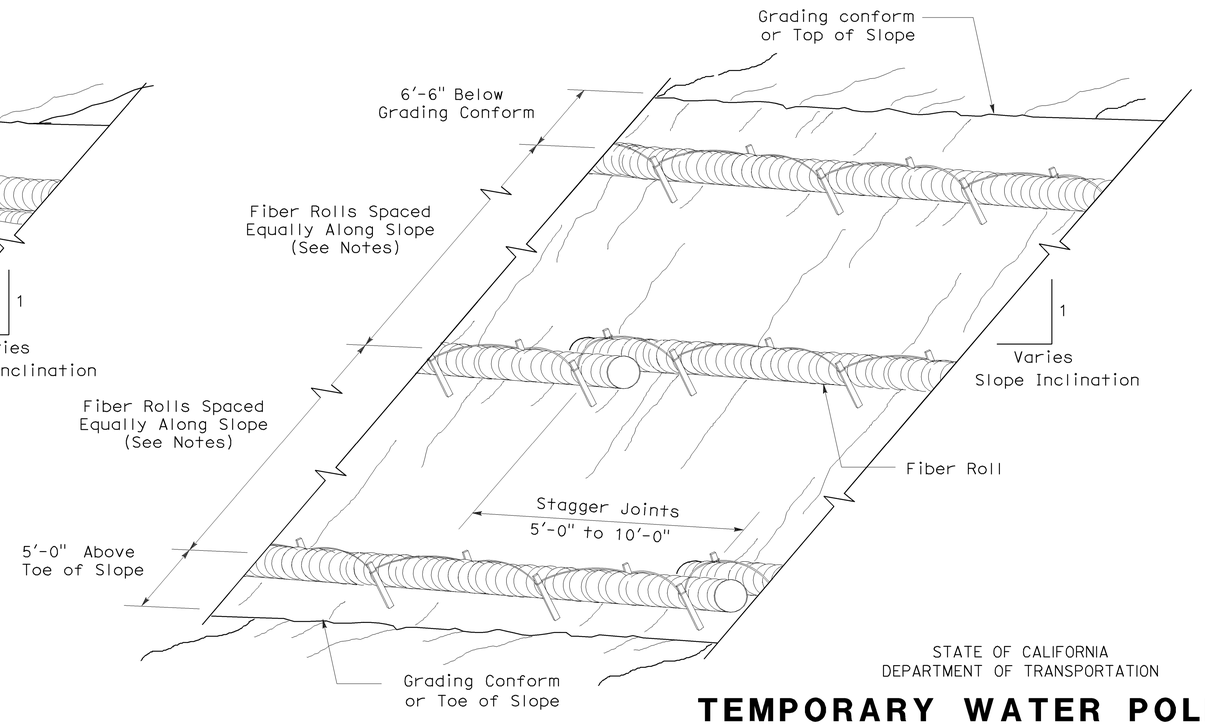

PERSPECTIVE

TEMPORARY FIBER ROLL (TYPE 2)

STATE OF CALIFORNIA
DEPARTMENT OF TRANSPORTATION

TEMPORARY WATER POLLUTION CONTROL DETAILS (TEMPORARY FIBER ROLL)

NO SCALE

RSP T56 DATED APRIL 3, 2009 SUPERSEDES STANDARD PLAN T56
DATED MAY 1, 2006 - PAGE 232 OF THE STANDARD PLANS BOOK DATED MAY 2006.

REVISED STANDARD PLAN RSP T56

2006 REVISED STANDARD PLAN RSP T56

2-23-09

DIST	COUNTY	ROUTE	POST MILES TOTAL PROJECT	SHEET NO.	TOTAL SHEETS
03	Nev	20	R6.3/R6.8	31	42

LICENSED LANDSCAPE ARCHITECT

April 3, 2009
PLANS APPROVAL DATE

LICENSED LANDSCAPE ARCHITECT ROBERT B. SCHOTT 3635 Signature 11-30-10 Renewal date 2-25-09 Date STATE OF CALIFORNIA

The State of California or its officers or agents shall not be responsible for the accuracy or completeness of electronic copies of this plan sheet.

To accompany plans dated 2-28-11

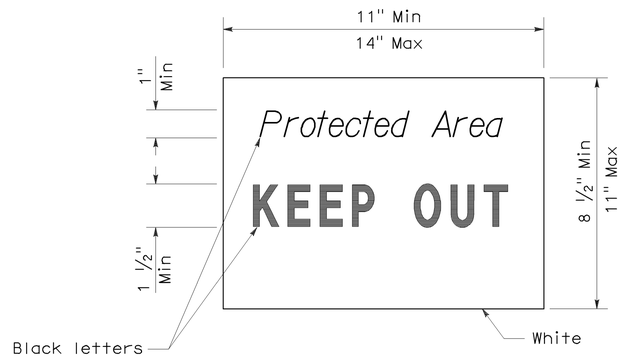

SIGN DETAIL

NOTE:

1. Temporary silt fence and temporary straw bale barrier shown for reference purposes only.

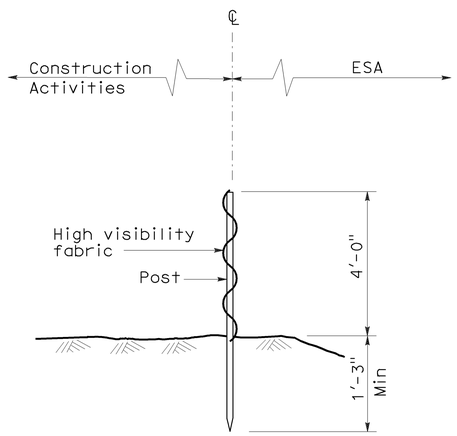

SECTION
TEMPORARY FENCE (TYPE ESA)

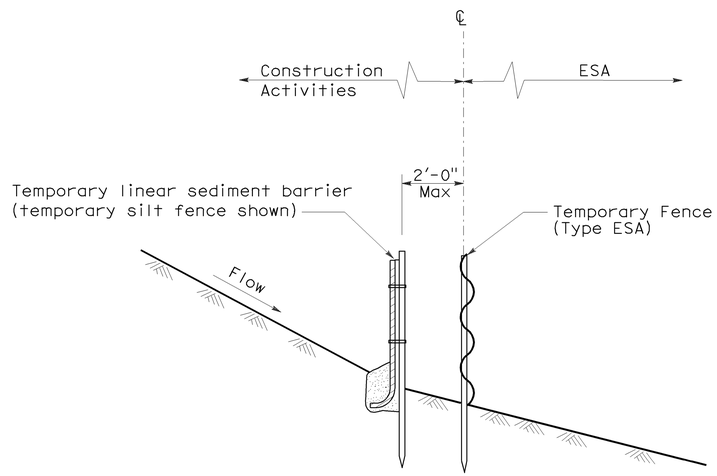

SECTION
PLACEMENT DETAIL
FOR TEMPORARY LINEAR SEDIMENT BARRIER
USED WITH TEMPORARY
FENCE (TYPE ESA)
(See Note 1)

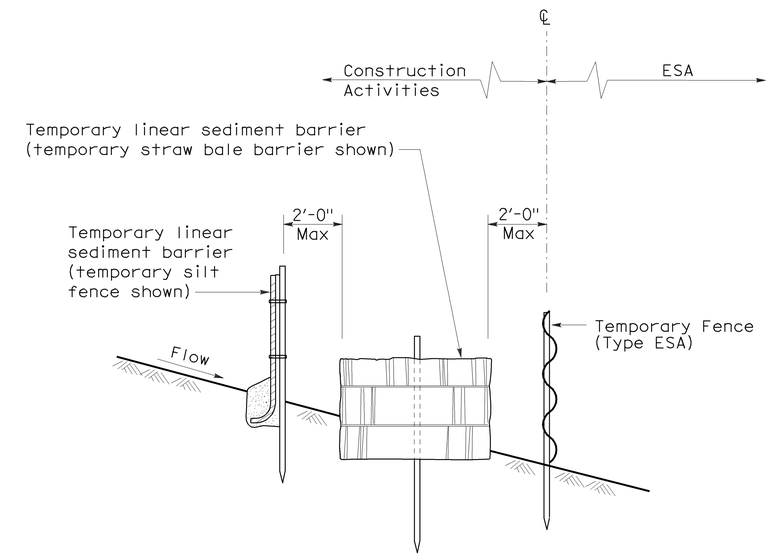

SECTION
PLACEMENT DETAIL
FOR TEMPORARY SILT FENCE
AND TEMPORARY STRAW BALE BARRIER
USED WITH TEMPORARY FENCE (TYPE ESA)
(See Note 1)

STATE OF CALIFORNIA
DEPARTMENT OF TRANSPORTATION

TEMPORARY WATER POLLUTION CONTROL DETAILS [TEMPORARY FENCE (TYPE ESA)]

NO SCALE

NSP T65 DATED APRIL 3, 2009 SUPPLEMENTS
THE STANDARD PLANS BOOK DATED MAY 2006.

NEW STANDARD PLAN NSP T65

2006 NEW STANDARD PLAN NSP T65

DIST	COUNTY	ROUTE	POST MILES TOTAL PROJECT	SHEET NO.	TOTAL SHEETS
03	Nev	20	R6.3/R6.8	32	42

REGISTERED ELECTRICAL ENGINEER

October 5, 2007
PLANS APPROVAL DATE

REGISTERED PROFESSIONAL ENGINEER Jeffery G. McRae No. E14512 Exp. 6-30-08 ELECTRICAL STATE OF CALIFORNIA

The State of California or its officers or agents shall not be responsible for the accuracy or completeness of electronic copies of this plan sheet.

To accompany plans dated 2-28-11

2006 REVISED STANDARD PLAN RSP ES-1A

ELECTROLIERS

STANDARD TYPES
15, 15D
15 STRUCTURE
21, 21D STRUCTURE
30
31
32
35
36-20A

High mast light pole

Double Arm lighting standard

Existing electrolier

Electrolier foundation (Future installation)

NOTES:

1. Luminaires shall be 310 W HPS when installed on Type 21, 21D, 30, 31, 32, 35 and 36-20A Standards, unless otherwise specified. Luminaires shall be 200 W HPS when installed on other type standards or poles, unless otherwise specified.
2. Luminaires shall be the cutoff type, ANSI Type Ⅲ medium cutoff lighting distribution, unless otherwise specified.
3. Variations noted adjacent to symbol on project plans.

Electrolier (see project notes or project plans)

Luminaire on wood pole

STANDARD NOTES:

- AB Abandon. If applied to conduit, remove conductors.
- BC Install pull box in existing conduit run.
- BP Pedestrian barricade, type as indicated on plan.
- CB Install conduit into existing pull box.
- CC Connect new and existing conduit. Remove existing conductors and install conductors as indicated.
- CF Conduit to remain for future use. Remove conductors. Install pull wire or rope.
- DH Detector handhole.
- FA Foundation to be abandoned.
- IS Install sign on signal mast arm.
- NS No slip base on standard.
- PEC Photoelectric control.
- PEU Photoelectric unit.
- RC Equipment or material to be removed and become the property of the Contractor.
- RE Remove electrolier, fuses and ballast. Tape ends of conductors.
- RL Relocate equipment.
- RR Remove and reuse equipment.
- RS Remove and salvage equipment.
- SC Splice new to existing conductors.
- SD Service disconnect.
- SF Standard to remain for future use. Remove luminaire, pole conductors, fuses and ballast.
- TSP Telephone service point.

ABBREVIATIONS AND EQUIPMENT DESIGNATIONS

PROPOSED	EXISTING	
BBS	bbs	Battery backup system
BC	bc	Bolt circle
C	C	Conduit
CCTV	cctv	Closed circuit television
CKT	ckt	Circuit
CMS	cms	Changeable message sign
DLC	dlc	Loop detector lead-in cable
EMS	ems	Extinguishable message sign
EVC	evc	Emergency vehicle cable
EVD	evd	Emergency vehicle detector
FB	fb	Flashing beacon
FBCA	fbca	Flashing beacon control assembly
FBS	fbs	Flashing beacon with slip base
FO	fo	Fiber optic
G	G	Ground (Equipment Grounding Conductor)
GFCI	GFCI	Ground fault circuit interrupt
HAR	har	Highway advisory radio
HEX	hex	Hexagonal
HPS	hps	High pressure sodium
IISNS	iisns	Internally illuminated street name sign
ISL	isl	Induction sign lighting
LED	led	Light emitting diode
LMA	lma	Luminaire mast arm
LPS	lps	Low pressure sodium
LTG	ltg	Lighting
LUM	lum	Luminaire
MAT	mat	Mast arm mounting vehicle signal faces, top attachment
MAS	mas	Mast arm mounting vehicle signal faces, side attachment
MAS-4A	mas-4A	Mast arm mounting vehicle signal faces, side attachment - 4 signal section
MAS-4B	mas-4B	
MAS-4C	mas-4C	
MAS-5A	mas-5A	Mast arm mounting vehicle signal faces, side attachment - 5 signal section
MAS-5B	mas-5B	
MC	mc	Mercury contactor
M/M	m/m	Multiple to multiple transformer
MT	mt	Conduit with pull wire or rope only
MTG	mtg	Mounting
	mv	Mercury vapor lighting fixture
N	N	Neutral (Grounded Conductor)
NC	NC	Normally closed
NO	NO	Normally open
PB	pb	Pull box
PEC	pec	Photoelectric control (Type Ⅰ, Ⅱ, Ⅲ, Ⅳ or Ⅴ as shown)
PED	ped	Pedestrian
PEU	peu	Photoelectric unit
PPB	ppb	Pedestrian push button
RL		Relocated equipment
RM	rm	Ramp metering
SB	sb	Slip base
SIC	sic	Signal interconnect cable
SIG	sig	Signal
SMA	sma	Signal mast arm
SNS	sns	Street name sign
SP	sp	Service point
TDC	tdc	Telephone demarcation cabinet
TMS	tms	Traffic monitoring station
TOS	tos	Traffic Operations System
VEH	veh	Vehicle
XFMR	xfmr	Transformer
COMM	comm	Communication
RWIS	rwis	Roadway weather information system

SOFFIT AND WALL MOUNTED LUMINAIRES

Pendant, 70 W HPS unless otherwise specified.

Flush, 70 W HPS unless otherwise specified.

Wall surface, 70 W HPS unless otherwise specified.

Existing soffit or wall luminaire to remain unmodified.

Existing soffit or wall luminaire to be modified as specified.

NOTE:

Arrow indicates "street side" of luminaire.

STATE OF CALIFORNIA
DEPARTMENT OF TRANSPORTATION

ELECTRICAL SYSTEMS (SYMBOLS AND ABBREVIATIONS)

NO SCALE

RSP ES-1A DATED OCTOBER 5, 2007 SUPERSEDES STANDARD PLAN ES-1A DATED MAY 1, 2006 - PAGE 400 OF THE STANDARD PLANS BOOK DATED MAY 2006.

REVISED STANDARD PLAN RSP ES-1A

DIST	COUNTY	ROUTE	POST MILES TOTAL PROJECT	SHEET NO.	TOTAL SHEETS
03	Nev	20	R6.3/R6.8	33	42

REGISTERED ELECTRICAL ENGINEER

October 5, 2007
PLANS APPROVAL DATE

REGISTERED PROFESSIONAL ENGINEER Jeffery G. McRae No. E14512 Exp. 6-30-08 ELECTRICAL STATE OF CALIFORNIA

The State of California or its officers or agents shall not be responsible for the accuracy or completeness of electronic copies of this plan sheet.

To accompany plans dated 2-28-11

CONDUIT

PROPOSED	EXISTING	
		Lighting Conduit, unless otherwise indicated or noted
		Traffic signal conduit
C	c	Communication conduit
T	t	Telephone conduit
F	f	Fire alarm conduit
FO	fo	Fiber optic conduit
		Conduit termination (RSP ES-9A C)
R	r	Conduit riser in/on structure or service pole

SERVICE EQUIPMENT

PROPOSED	EXISTING	
OH	oh	Overhead lines
U	U	Wood pole "U" indicates utility owned
		Pole guy with anchor
		Utility transformer - ground mounted
III		Service equipment enclosure type
		Service equipment enclosure door indicates front of enclosure
T	t	Telephone demarcation cabinet

POLE-MOUNTED SERVICE DESIGNATION

Type of installation

TYPE H SERVICE - 28'-10" ← Pole height above grade

ILLUMINATED OVERHEAD SIGN

PROPOSED	EXISTING	
		Overhead sign - Single post
		Overhead sign - Two post
		Overhead sign - Mounted on structure
		Overhead sign with electrolier

SIGNAL EQUIPMENT

PROPOSED	EXISTING	
		Pedestrian signal face
		Pedestrian push button post
		Pedestrian barricade
		Vehicle signal face (with backplate, 3-Section: red, yellow and green)
		Vehicle signal face with angle visors
PV	PV	Modifications of basic symbols: "L" indicates all non-arrow sections louvered "LG" indicates louvered green section only "PV" indicates 12" programmed visibility sections "8" indicates all 8" sections (only when specified)
		Type 15TS and Vehicle signal face
		Vehicle signal face with red, yellow and green left arrow sections
		Vehicle signal face with red and yellow sections and up green arrow
		Vehicle signal face (5 Section) with red, yellow and green sections and yellow and green right arrows
		Type 1 Standard and attached vehicle signal faces
		Standard with signal mast arm only and attached vehicle signal faces and internally illuminated street name sign
		Type 33 Standard, Left-turn vehicle signal face and sign
		Standard with luminaire and signal mast arms and attached vehicle signal faces
		Cantilever flashing beacon Type 9 Frame, with a sign unless otherwise specified or indicated
		Type 15-FBS Standard with two vehicle signal face sections with lens, backplate and visor with a sign
R	Y	Flashing beacon. One vehicle signal face section with lens, backplate and visor. "R" indicates red indication, "Y" indicates yellow indication
		Controller assembly. Door indicates front of cabinet

SIGNAL EQUIPMENT Cont

PROPOSED	EXISTING	
		Guard post
		Type 1 Standard with "Meter On" sign
		Emergency Vehicle detector

NOTES:

1. All signal sections shall be 12" unless shown otherwise.
2. Signal heads shall be provided with backplates unless shown otherwise.
3. Signal indication shall be LED.

STATE OF CALIFORNIA
DEPARTMENT OF TRANSPORTATION

ELECTRICAL SYSTEMS (SYMBOLS AND ABBREVIATIONS)

NO SCALE

RSP ES-1B DATED OCTOBER 5, 2007 SUPERCEDES STANDARD PLAN ES-1B DATED MAY 1, 2006 - PAGE 401 OF THE STANDARD PLANS BOOK DATED MAY 2006.

REVISED STANDARD PLAN RSP ES-1B

2006 REVISED STANDARD PLAN RSP ES-1B

7-10-07

DIST	COUNTY	ROUTE	POST MILES TOTAL PROJECT	SHEET NO.	TOTAL SHEETS
03	Nev	20	R6.3/R6.8	34	42

REGISTERED ELECTRICAL ENGINEER

October 5, 2007
PLANS APPROVAL DATE

REGISTERED PROFESSIONAL ENGINEER Jeffery G. McRae No. E14512 Exp. 6-30-08 ELECTRICAL STATE OF CALIFORNIA

The State of California or its officers or agents shall not be responsible for the accuracy or completeness of electronic copies of this plan sheet.

To accompany plans dated 2-28-11

EQUIPMENT IDENTIFICATION

ILLUMINATED SIGN IDENTIFICATION NUMBER:

Sign No. 12345 — Sign number - Place on post or structure

10 ISL SCI 1.0

- 1.0 — Transformer rating (kVA)
- SCI — Lighting control type
- ISL — Number and type of fixtures

Do NOT place on standard or structure

ELECTROLIER OR EQUIPMENT IDENTIFICATION NUMBER:

12345 - 15'-0"

- 15'-0" — Mast arm length, if shown. Do not place on standard or structure.
- 12345 — Equipment number - Place on standard or structure. Existing equipment numbers are shown in parenthesis

CONDUIT AND CONDUCTOR IDENTIFICATION:

1½"C, 2#10, 15#14, 2 DLC

- 2#10, 15#14, 2 DLC — Number and size of conductors and cables
- 1½"C — Size of conduit in inches

Ø1, Ø2, Ø2P, etc.	Traffic phase identification for signal faces, detectors and phase diagrams
1 2 3	Project note numbers
A B C	Equipment description, installation or item numbers
1 2 3	Conduit run numbers

SIGNAL AND LIGHTING STANDARD (TYPICAL DESIGNATION):

19A - 3 - 100

- 100 — Wind velocity = 100 mph
- 3 — Case 3 arm loading
- 19A — Standard type
- Standard Plan sheet number
- Detail number or letter

MISCELLANEOUS EQUIPMENT

PROPOSED	EXISTING	
CMS	cms	Changeable message sign
		Closed circuit television camera
		Highway advisory radio pole and antenna
EMS	ems	Extinguishable message sign
M V	m v	Detection device M = Microwave sensor V = Video image sensor

WIRING DIAGRAM LEGEND

P	Pole
CB	Circuit breaker
A	Ampere
V	Volt
M	Metered
UM	Unmetered
NB	Neutral bus
GB	Ground bus
G	Equipment grounding conductor
N	Grounded conductor (Neutral)

- External conductor
- Conductor or bus
- Tie point
- Contactor coil
- Contactor, Contact NO
- Terminal blocks
- Contactor, Contact NC
- Enclosure bond
- Grounding electrode
- Circuit breaker
- Receptacle

PULL BOXES

PROPOSED EXISTING

Pull box-No. 5 unless otherwise indicated or noted.

3 — 9A(21)

Pull box-Additional designations or descriptions

3 = No. 3½ pull box
5 = No. 5 pull box
6 = No. 6 pull box
7 = No. 7 (Ceiling pull box)
8 = No. 8 (Pendant soffit pull box)
9 = No. 9 pull box
9A = No. 9A pull box

(C) = Communications pull box
(E) = Pull box with extension
(S) = Sprinkler control pull box
(21) = Anchor bolts and conduit for future installation of Type 21 Standard
(T) = Traffic pull box

VEHICLE DETECTORS

5 J 9 U

- U — U = Upper, L = Lower
- 9 — Slot number in input file
- J — Input file (I or J)
- 5 — Phase

PROPOSED	EXISTING	
		Type A detector loop. Outline of sawcut shown.
		Type B detector loop. Outline of sawcut shown.
		Type C detector loop. Outline of sawcut shown.
		Type D detector loop. Outline of sawcut shown.
		Type E detector loop. Outline of sawcut shown.
		Type Q detector loop. Outline of sawcut shown.
		Magnetic detector
DH	dh	Detector handhole
		Microwave or video detection zone

STATE OF CALIFORNIA
DEPARTMENT OF TRANSPORTATION

ELECTRICAL SYSTEMS (SYMBOLS AND ABBREVIATIONS)

NO SCALE

RSP ES-1C DATED OCTOBER 5, 2007 SUPERCEDES STANDARD PLAN ES-1C DATED MAY 1, 2006 - PAGE 402 OF THE STANDARD PLANS BOOK DATED MAY 2006.

REVISED STANDARD PLAN RSP ES-1C

2006 REVISED STANDARD PLAN RSP ES-1C

7-10-07

DIST	COUNTY	ROUTE	POST MILES TOTAL PROJECT	SHEET NO.	TOTAL SHEETS
03	Nev	20	R6.3/R6.8	35	42

REGISTERED ELECTRICAL ENGINEER

October 5, 2007
PLANS APPROVAL DATE

REGISTERED PROFESSIONAL ENGINEER
Jeffery G. McRae
No. E14512
Exp. 6-30-08
ELECTRICAL
STATE OF CALIFORNIA

The State of California or its officers or agents shall not be responsible for the accuracy or completeness of electronic copies of this plan sheet.

To accompany plans dated 2-28-11

2006 REVISED STANDARD PLAN RSP ES-2C

NOTES-TYPE III SERVICE EQUIPMENT ENCLOSURES:

1. Service equipment enclosure and metering equipment shall meet the requirements of the service utility. The meter area shall have a sealable, lockable, weathertight cover that can be removed without the use of tools.

2. Service equipment enclosures shall be factory wired and conform to NEMA standards.

3. Dimensions of service equipment enclosures shall meet the requirements of the service utility.

4. The dead front panels on Type III service equipment enclosures shall have a continuous stainless steel or aluminum piano hinge. The panel in front of the breakers shall be secured with a latch or captive screws. No live parts shall be mounted on the dead front panel.

5. The exterior door shall have provisions for padlocking. The padlock hole shall be a minimum diameter of 7/16".

6. Enclosures housing transformers of more than one kVA shall have effective screened ventilation louver of not less than 50 square inches. Screen shall be stainless steel No. 304, with a No. 10 size mesh. Framed screen shall be secured with at least four bolts.

7. Fasteners on the exterior of the enclosure shall be vandal-resistant and shall not be removable from the exterior. Exterior screws, nuts, bolts and washers shall be stainless steel.

8. Landing lugs for incoming service conductors shall be compatible with either copper or aluminum conductors sized to suit the conductors shown on the plan. Landing lugs shall be copper or tin-plated aluminum. Neutral bus shall be rated for 125 A and be suitable for copper or aluminum conductors unless otherwise specified. The terminal shall include but not be limited to:

   a) Incoming terminals (landing lugs)
   b) Neutral lugs
   c) Solid neutral terminal strip

9. At least 6 standard single pole circuit breaker spaces, 3/4" nominal, shall be provided for branch circuits. Circuit breaker interiors shall be copper. Interiors of enclosure shall accept plug-in or cable-in/cable-out circuit breakers.

10. Control wiring shall be 600 V, 14 stranded machine tool wire. Where subject to flexing, 19 strand wire shall be used.

11. Main bus shall be rated for 125 A and shall be tin-plated copper.

12. A plastic laminated wiring diagram shall be provided with brass mounting eyelets and attached to the inside of the enclosure and the wiring diagram shall be affixed to the interior with a UL or ETL approved method.

13. An engraved phenolic nameplate on the dead front panel indicating the function of each circuit or device shall be installed with stainless steel rivets or stainless steel screws:

    a) Adjacent to the breaker or device with character size a minimum of 1/8".

    b) At the top of the exterior door panel indicating State system number, voltage level and number of phases with character size a minimum of 3/16".

14. The plan shows the approximate location of devices within the enclosure. Components may be rearranged, however, the "working" clearances within the service equipment enclosure shall be maintained.

15. In unpaved areas a raised portland cement concrete pad 2'-0" x 4" x width of foundation shall be constructed in front of new service equipment enclosure installation. Pad shall be set to elevation of foundation.

16. Foundation shall extend 2" minimum beyond edge of service equipment enclosure.

17. Internal bus, where shown, is typical only. Alternative design of proposed service equipment enclosure shall be submitted to the Engineer for approval.

18. Plug-in circuit breakers may be mounted in the vertical or horizontal position. Cable-in/cable-out circuit breakers shall be mounted in the vertical position.

19. Type III-AF and Type III-BF service equipment enclosures shall have the meter viewing windows located on the front side of the service equipment enclosures.

20. Type III-AR and Type III-BR service equipment enclosures shall be similarly constructed as Type III-AF and Type III-BF respectively, except the meter viewing windows shall be located on the back side of the service equipment enclosures.

21. Minimum clearance shall be required for front and back of service equipment enclosure per National Electrical Code, Article 110.26, "Spaces About Electric Equipment (600 Volts, Nominal, or Less)."

STATE OF CALIFORNIA
DEPARTMENT OF TRANSPORTATION

ELECTRICAL SYSTEMS (SERVICE EQUIPMENT NOTES TYPE III SERIES)

NO SCALE

RSP ES-2C DATED OCTOBER 5, 2007 SUPERCEDES STANDARD PLAN ES-2C
DATED MAY 1, 2006 - PAGE 405 OF THE STANDARD PLANS BOOK DATED MAY 2006.

REVISED STANDARD PLAN RSP ES-2C

DIST	COUNTY	ROUTE	POST MILES TOTAL PROJECT	SHEET NO.	TOTAL SHEETS
03	Nev	20	R6.3/R6.8	36	42

REGISTERED ELECTRICAL ENGINEER

October 5, 2007
PLANS APPROVAL DATE

REGISTERED PROFESSIONAL ENGINEER Jeffery G. McRae No. E14512 Exp. 6-30-08 ELECTRICAL STATE OF CALIFORNIA

The State of California or its officers or agents shall not be responsible for the accuracy or completeness of electronic copies of this plan sheet.

To accompany plans dated 2-28-11

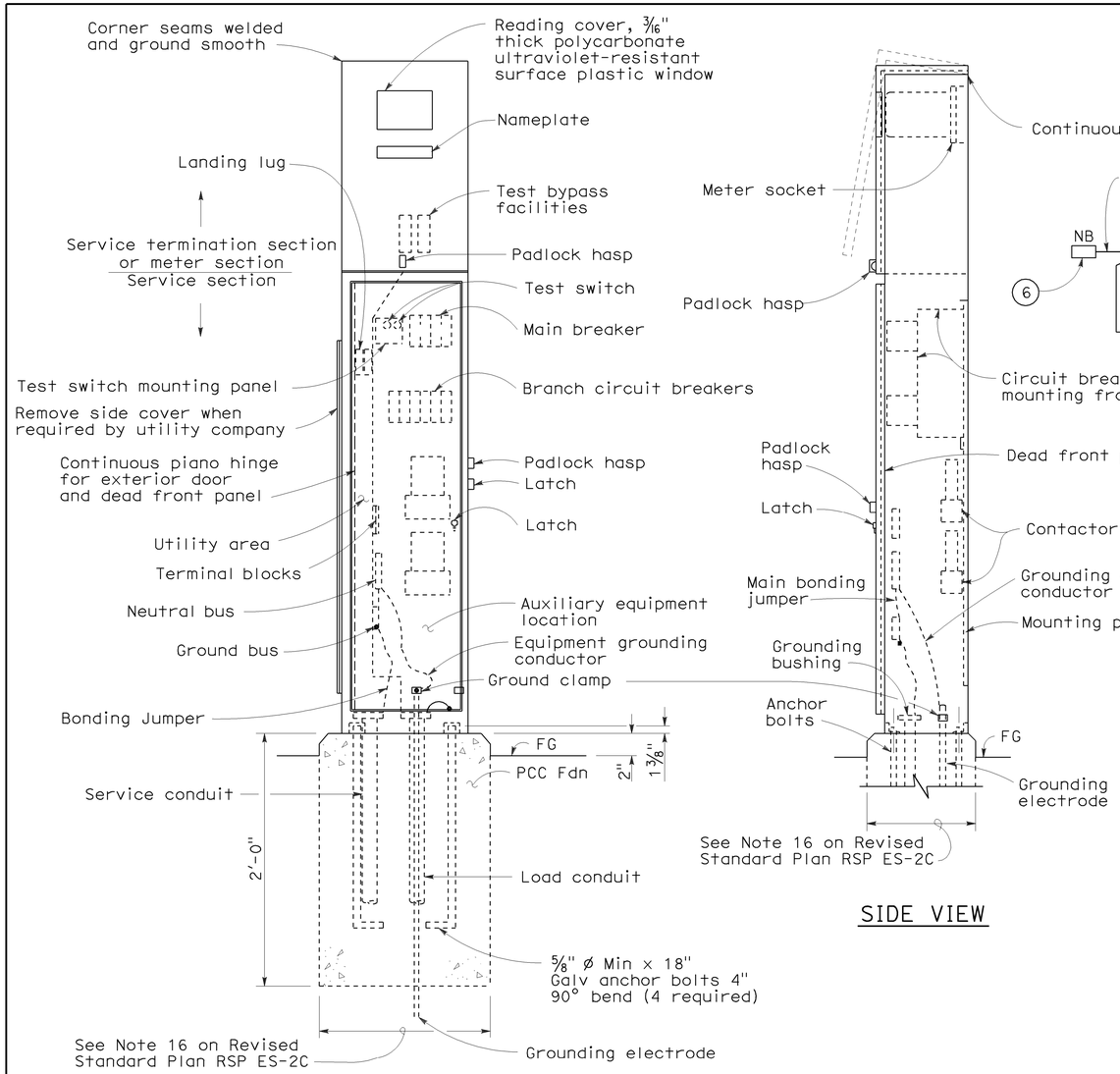

TYPE III-AF SERVICE EQUIPMENT ENCLOSURE (TYPICAL)

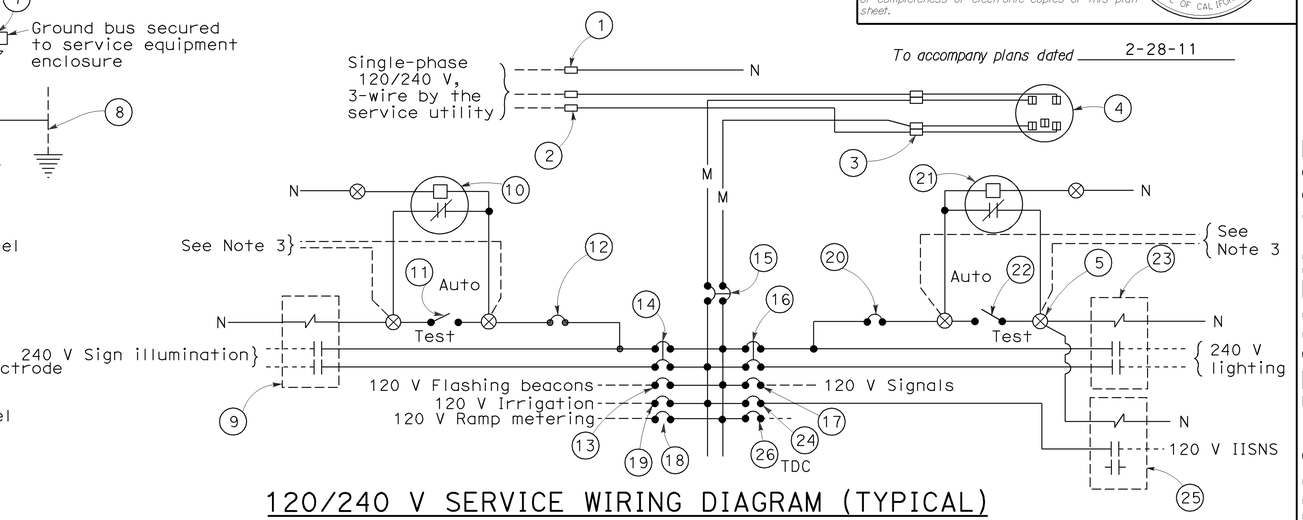

120/240 V SERVICE WIRING DIAGRAM (TYPICAL)

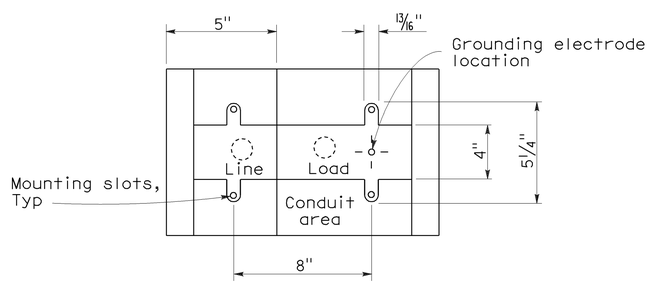

BASE FOR TYPE III-A SERVICE EQUIPMENT ENCLOSURE

TYPE III-A SERVICE (120/240 V) EQUIPMENT LEGEND

ITEM No.	COMPONENT	NAME PLATE DESCRIPTION	ITEM No.	COMPONENT	NAME PLATE DESCRIPTION
1	Neutral lug		14	30 A, 240 V, 2P, CB	Sign Illumination
2	Landing lug (Note 6)		15	100 A, 240 V, 2P, CB	Main Breaker
3	Test bypass facility		16	30 A, 240 V, 2P, CB	Lighting
4	Meter socket and support		17	50 A, 120 V, 1P, CB	Signals
5	Terminal blocks		18	30 A, 120 V, 1P, CB	Ramp Metering
6	Neutral bus		19	20 A, 120 V, 1P, CB	Irrigation
7	Ground bus		20	15 A, 120 V, 1P, CB	Lighting Control
8	Grounding electrode		21	Photoelectric unit (Note 7)	
9	30 A, 2PNO Contactor	Sign Illumination	22	15 A, 1P, Test switch	Lighting Test Switch
10	Photoelectric unit (Note 7)		23	60 A, 2PNO Contactor	Lighting
11	15 A, 1P, Test switch	Sign Illumination Test Switch	24	15 A, 120 V, 1P, CB	IISNS
12	15 A, 120 V, 1P, CB	Sign Illumination Control	25	30 A, 2PNO Contactor	IISNS
13	15 A, 120 V, 1P, CB	Flashing Beacon	26	20 A, 120 V, 1P, CB	Telephone Demarcation Cabinet

NOTES: (FOR SERVICE EQUIPMENT ENCLOSURE)

1. Voltage ratings of service equipment shall conform to the service voltages indicated on the plans.
2. Unless otherwise indicated on the plans, service equipment items shall be provided for each service equipment enclosure as shown.
3. Connect to remote test switch mounted on lighting standards, sign post or structure when required.
4. Items No. 1 and 6 shall be isolated from the service equipment enclosure.
5. Meter sockets shall be 5 clip type.
6. The landing lug shall be suitable for multiple conductors.
7. Type V photoelectric control shall be used unless otherwise indicated on the plans.

STATE OF CALIFORNIA
DEPARTMENT OF TRANSPORTATION

ELECTRICAL SYSTEMS (SERVICE EQUIPMENT AND TYPICAL WIRING DIAGRAM, TYPE III-A SERIES)

NO SCALE

RSP ES-2D DATED OCTOBER 5, 2007 SUPERCEDES STANDARD PLAN ES-2D DATED MAY 1, 2006 - PAGE 406 OF THE STANDARD PLANS BOOK DATED MAY 2006.

REVISED STANDARD PLAN RSP ES-2D

2006 REVISED STANDARD PLAN RSP ES-2D

7-10-07

DIST	COUNTY	ROUTE	POST MILES TOTAL PROJECT	SHEET NO.	TOTAL SHEETS
03	Nev	20	R6.3/R6.8	37	42

REGISTERED ELECTRICAL ENGINEER

October 5, 2007
PLANS APPROVAL DATE

REGISTERED PROFESSIONAL ENGINEER
Jeffery G. McRae
No. E14512
Exp. 6-30-08
ELECTRICAL
STATE OF CALIFORNIA

The State of California or its officers or agents shall not be responsible for the accuracy or completeness of electronic copies of this plan sheet.

To accompany plans dated 2-28-11

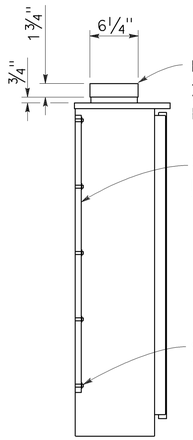

SECTION A-A

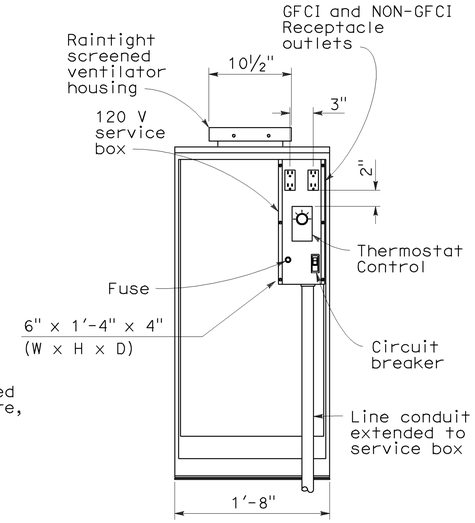

FRONT VIEW

(Exterior door removed for clarity)

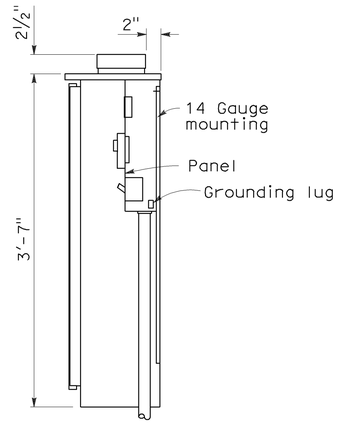

SECTION B-B

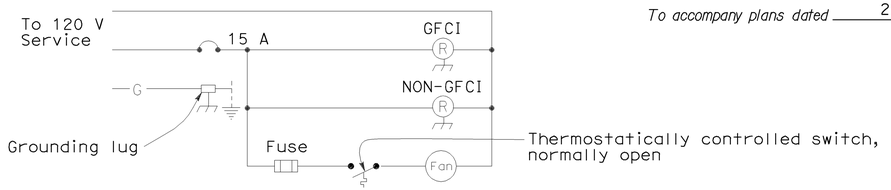

WIRING DIAGRAM

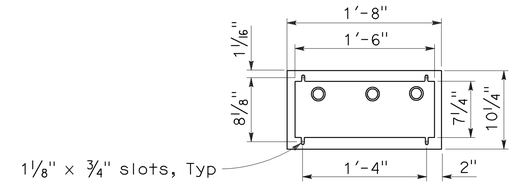

BASE PLAN

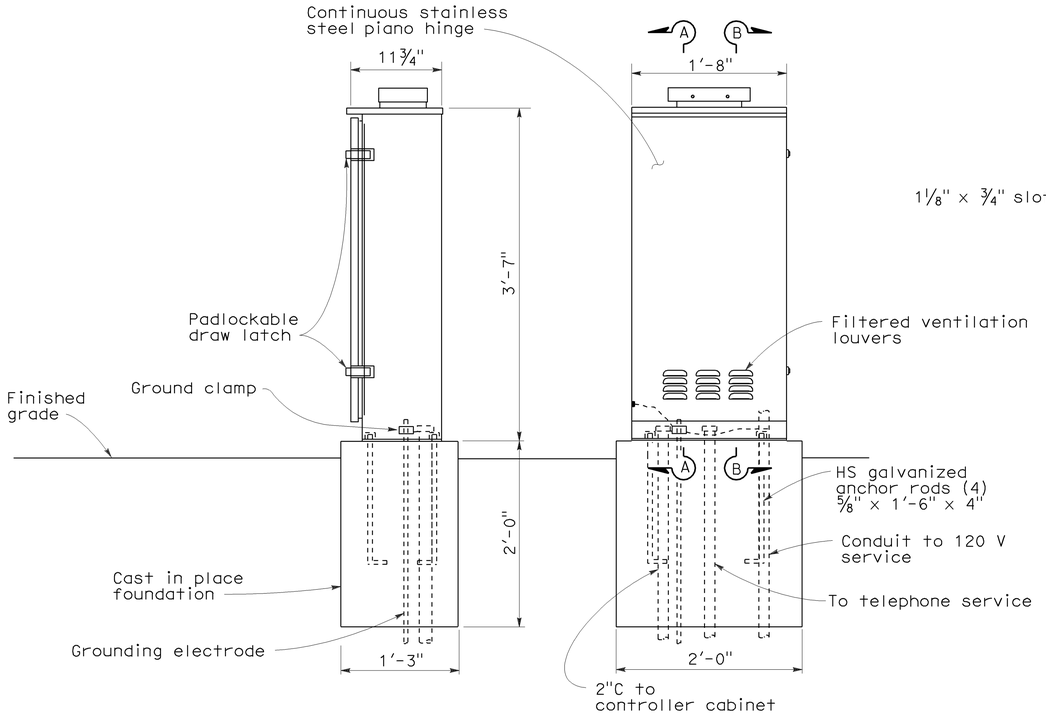

SIDE VIEW

FRONT VIEW

NOTES:

1. Telephone demarcation cabinet shall be furnished with a mounting panel, outlets, circuit breaker and deadfront plates in place. Dimensions are nominal.
2. An approved mastic or caulking compound shall be placed on the foundation prior to placing the cabinet to seal openings between the bottom of the cabinet and the foundation.
3. In unpaved areas, a raised PCC pad shall be placed in front of the telephone demarcation cabinet. Pad shall be 2'-0" x 1'-10" x 4" thick, with 2" above the finished grade.
4. All conduits shall be bonded to the enclosure.
5. Telephone demarcation cabinet:
   a) Material shall be anodized aluminum (⅛" thick).
   b) Fabrication shall conform to the requirements of the Standard Specifications.
   c) The exterior door shall be side hung and secured with a padlockable draw latch, the padlock hole shall be a minimum diameter of 7/16" to receive a padlock.
   d) Ventilation louvers shall be located on the door.
   e) Fan shall be mounted in a ventilator housing.
   f) Fan shall be thermostatically controlled and adjustable to turn on between 80°F and 130°F.
   g) Fan circuit shall be fused at 175 percent of the fan motor capacity.
   h) Fan capacity shall be at least 25 cubic feet per minute.
   i) Fasten fixed mounting panels with nuts, lock and flat washers to 3/16" Ø x 1" studs welded to enclosure.

STATE OF CALIFORNIA
DEPARTMENT OF TRANSPORTATION

ELECTRICAL SYSTEMS (TELEPHONE DEMARCATION CABINET, TYPE B)

NO SCALE

RSP ES-3E DATED OCTOBER 5, 2007 SUPERCEDES STANDARD PLAN ES-3E DATED MAY 1, 2006 - PAGE 414 OF THE STANDARD PLANS BOOK DATED MAY 2006.

REVISED STANDARD PLAN RSP ES-3E

2006 REVISED STANDARD PLAN RSP ES-3E

8-17-07

DIST	COUNTY	ROUTE	POST MILES TOTAL PROJECT	SHEET NO.	TOTAL SHEETS
03	Nev	20	R6.3/R6.8	38	42

REGISTERED ELECTRICAL ENGINEER

June 6, 2008
PLANS APPROVAL DATE

REGISTERED PROFESSIONAL ENGINEER
Jeffery G. McRae
No. E14512
Exp. 6-30-10
ELECTRICAL
STATE OF CALIFORNIA

The State of California or its officers or agents shall not be responsible for the accuracy or completeness of electronic copies of this plan sheet.

To accompany plans dated 2-28-11

2006 REVISED STANDARD PLAN RSP ES-4C

VISORS

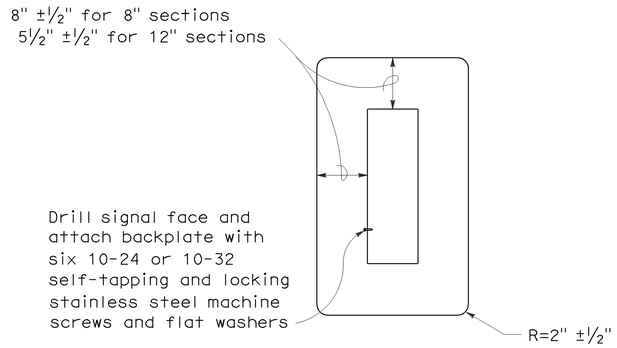

8" AND 12" SECTIONS

BACKPLATE

1/16" minimum thickness
3001-14 aluminum, or plastic when specified

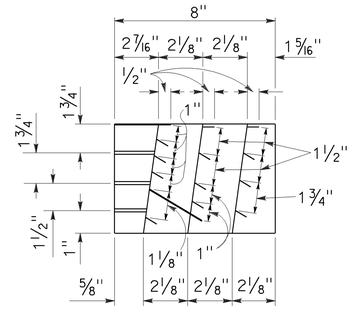

SECTION A-A

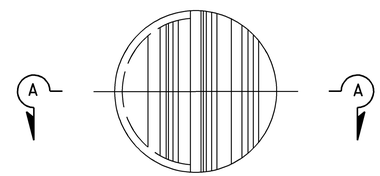

FRONT VIEW

DIRECTIONAL LOUVER

Directional louvers shall be oriented as directed by the Engineer and secured in place with one plated brass machine screw and nut.

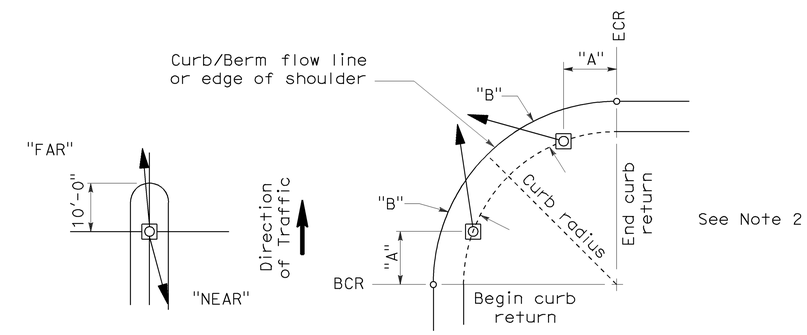

NOTES:

1. Typical signal pole placement unless dimensioned on plans.
2. For "A" and "B" dimensions, see Pole Schedule, or as directed by the Engineer.

SIGNAL STANDARD PLACEMENT DIMENSIONS AND EQUIPMENT LOCATIONS

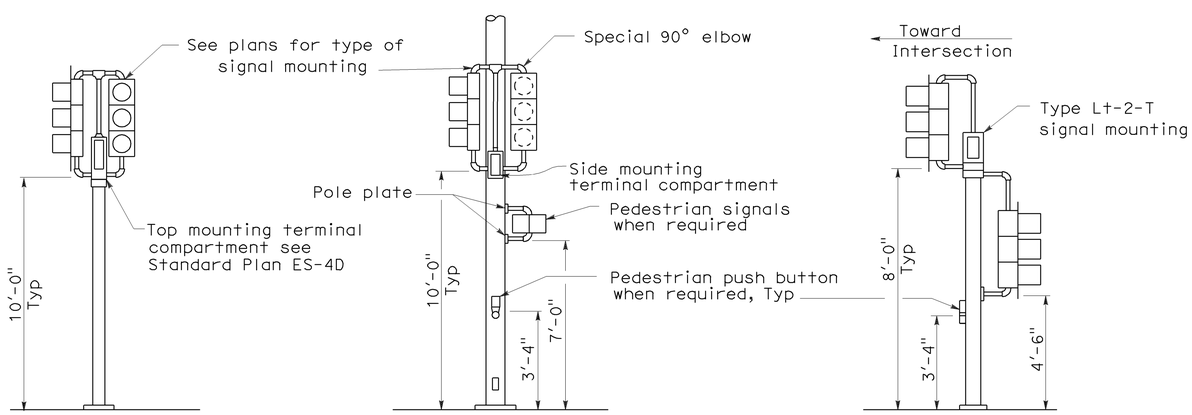

TOP MOUNTED SIGNALS (TV)

Type 1-A, 1-B, 1-C and 1-D standard as indicated on the plans

SIDE MOUNTED SIGNALS (SV AND SP)

Normally used on standards with luminaire or signal mast arm

LEFT TURN LANE SIGNAL

Type 1-A, 1-B, 1-C and 1-D standard as indicated on plans

TYPICAL SIGNAL INSTALLATIONS

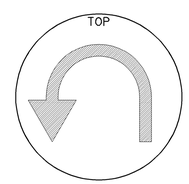

U-TURN SIGNAL FACE

BICYCLE SIGNAL FACE

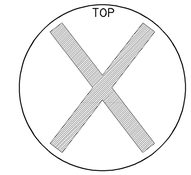

LANE CONTROL SIGNAL FACE

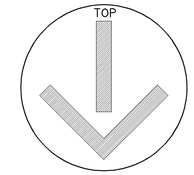

LANE CONTROL SIGNAL FACE

STATE OF CALIFORNIA
DEPARTMENT OF TRANSPORTATION

ELECTRICAL SYSTEMS (SIGNAL HEADS AND MOUNTINGS)

NO SCALE

RSP ES-4C DATED JUNE 6, 2008 SUPERSEDES STANDARD PLAN ES-4C DATED MAY 1, 2006 - PAGE 420 OF THE STANDARD PLANS BOOK DATED MAY 2006.

REVISED STANDARD PLAN RSP ES-4C

5-19-08

DIST	COUNTY	ROUTE	POST MILES TOTAL PROJECT	SHEET NO.	TOTAL SHEETS
03	Nev	20	R6.3/R6.8	39	42

REGISTERED ELECTRICAL ENGINEER

June 6, 2008
PLANS APPROVAL DATE

REGISTERED PROFESSIONAL ENGINEER Jeffery G. McRae No. E14512 Exp. 6-30-10 ELECTRICAL STATE OF CALIFORNIA

The State of California or its officers or agents shall not be responsible for the accuracy or completeness of electronic copies of this plan sheet.

To accompany plans dated 2-28-11

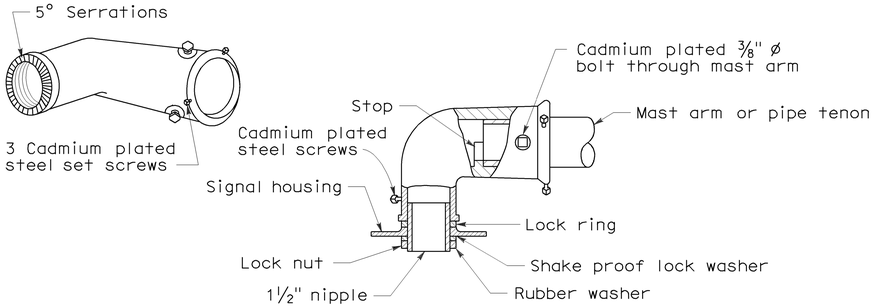

MAST ARM MOUNTING - TYPE "MAT"

For 2 NPS pipe, see Note 1.

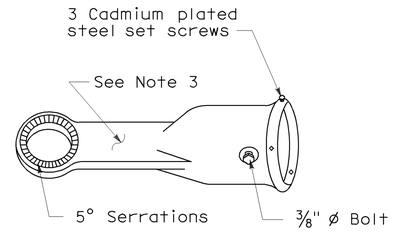

MAST ARM MOUNTING - TYPE "MAS"

For 2 NPS pipe. See Note 1.

SIGNAL SLIP FITTERS

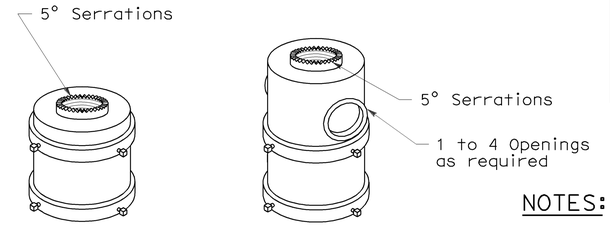

For one mounting For mulitiple mountings

TOP MOUNTINGS

For 4 NPS pipe, see Note 2.

NOTES:

1. After mast arm signal has been plumbed and secured, drill 7/16" hole through mast arm tenon in line with slip fitter hole. Place a cadmium plated 3/8" ø galvanized bolt with washer under bolt head through hole and secure with washer, nut, and locknut. Seal openings between mast arm mountings and mast arm with mastic.
2. (a) Threaded top mounted slip fitter openings shall be 1½ NPS.
   (b) Serrations in fittings shall match those on bottom of signal heads or in lock ring.
   (c) Top opening shall be offset when backplate is used.
3. Wireway shall have a cross section area of 0.95 square inch minimum. Minimum width of ½".

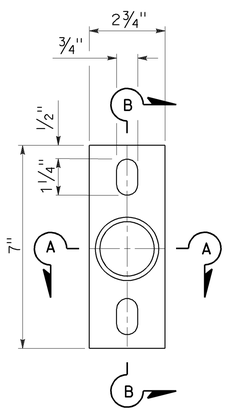

POLE PLATE

For side mountings

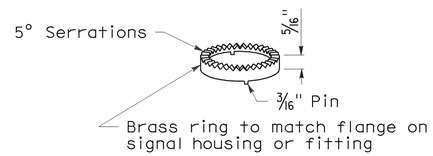

LOCK RING

Use where locking ring is not integral with signal housing or fitting.

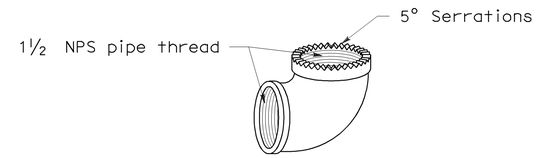

SPECIAL 90° ELBOW

One for each signal head, except those with special slip fitter mounting

MISCELLANEOUS MOUNTING HARDWARE

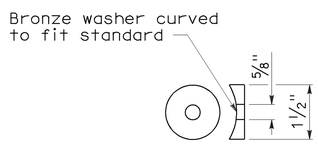

DETAIL "C"

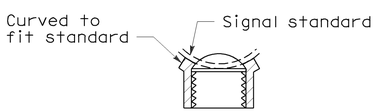

SECTION A-A

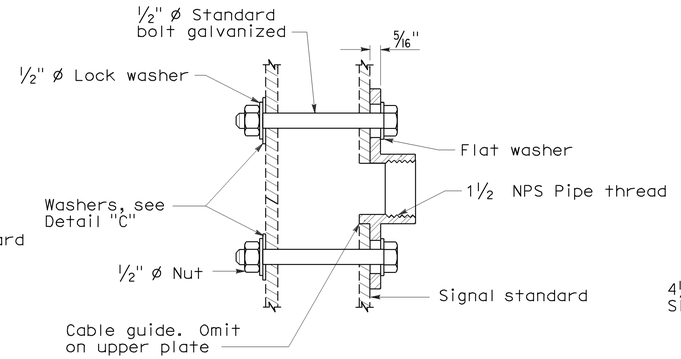

SECTION B-B

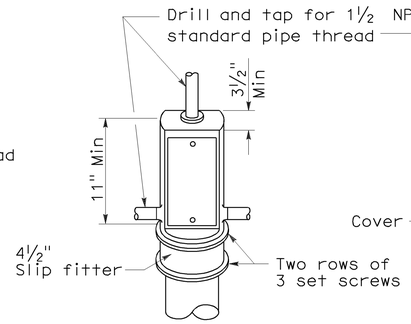

TOP MOUNTING

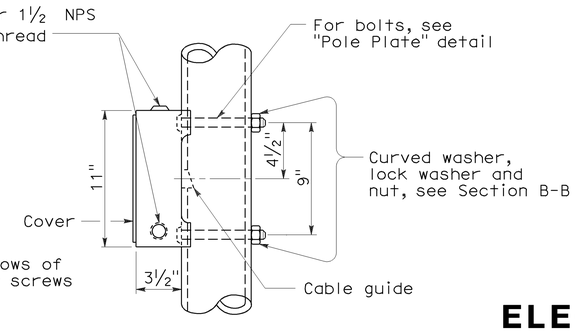

SIDE MOUNTING

TERMINAL COMPARTMENTS

STATE OF CALIFORNIA
DEPARTMENT OF TRANSPORTATION

ELECTRICAL SYSTEMS (SIGNAL HEADS AND MOUNTINGS)

NO SCALE

RSP ES-4D DATED June 6, 2008 SUPERSEDES STANDARD PLAN ES-4D
DATED MAY 1, 2006 - PAGE 421 OF THE STANDARD PLANS BOOK DATED MAY 2006.

REVISED STANDARD PLAN RSP ES-4D

2006 REVISED STANDARD PLAN RSP ES-4D

DIST	COUNTY	ROUTE	POST MILES TOTAL PROJECT	SHEET NO.	TOTAL SHEETS
03	Nev	20	R6.3/R6.8	40	42

REGISTERED ELECTRICAL ENGINEER

October 5, 2007
PLANS APPROVAL DATE

REGISTERED PROFESSIONAL ENGINEER Jeffery G. McRae No. E14512 Exp. 6-30-08 ELECTRICAL STATE OF CALIFORNIA

The State of California or its officers or agents shall not be responsible for the accuracy or completeness of electronic copies of this plan sheet.

To accompany plans dated 2-28-11

LOOP INSTALLATION PROCEDURE

1. Loops shall be centered in lanes.
2. Saw slots in pavement for loop conductors as shown in details.
3. Distance between side of loop and a lead-in saw cut from adjacent detectors shall be 2'-0" minimum. Distance between lead-in saw cuts shall be 6" minimum.
4. Bottom of saw slot shall be smooth with no sharp edges.
5. Slots shall be washed until clean, blown out and thoroughly dried before installing loop conductors.
6. Adjacent loops on the same sensor unit channel shall be wound in opposite directions.
7. Identify and tag loop circuit pairs in the pull box with loop number, start (S) and finish (F) of conductor. Identify and tag lead-in-cable with sensor number and phase.
8. Install loop conductor in slot using a 3/16" to 1/4" thick wood paddle. Hold loop conductors with wood paddles (at the bottom of the sawed slot) during sealant placement.
9. No more than 2 twisted pairs shall be installed in one sawed slot.
10. Allow additional 5'-0" of slack length of conductor for the lead-in run to pull box.
11. The additional length of each conductor for each loop shall be twisted together into a pair (6 turns per 3'-4" minimum) before being placed in the slot and conduit leading to pull box.
12. Test each loop circuit for continuity, circuit resistance and insulation resistance at the pull box before filling slots.
13. Fill slots as shown in details.
14. Splice loop conductors to lead-in-cable. Splices shall be soldered.
15. End of lead-in-cable and Type 2 loop conductor shall be waterproofed prior to installing in conduit to prevent moisture from entering the cable.
16. Lead-in-cable shall not be spliced between the pull box and the controller cabinet terminals.
17. Test each loop circuit for continuity, circuit resistance and insulation resistance at the controller cabinet location.
18. Where loop conductors are not to be spliced to a lead-in-cable, the ends of the conductors shall be taped and waterproofed with electrical insulating coating.

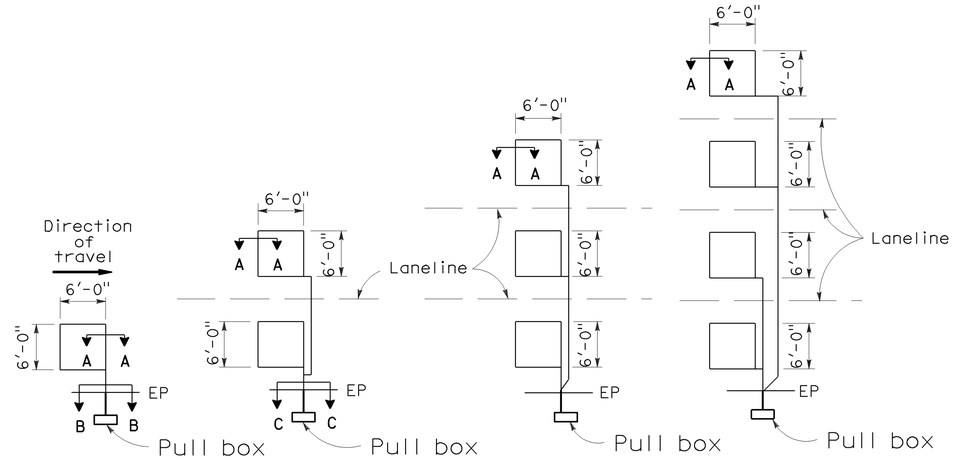

TYPE 1A INSTALLATION | TYPE 2A INSTALLATION | TYPE 3A INSTALLATION | TYPE 4A INSTALLATION

SAWCUT DETAILS

(Type A loop detector configurations illustrated)

1. 1A thru 4A = 1 Type A loop configuration in each lane.
2. 1B thru 4B = 1 Type B loop configuration in each lane.
3. 1C = 1 Type C loop configuration entering lanes as required.
4. 1D thru 4D = 1 Type D loop configuration in each lane.
5. 1E thru 4E = 1 Type E loop configuration in each lane.
6. 1Q thru 4Q = 1 Type Q loop configuration in each lane. (Use Type A, B, C, D, E or Q loop detector configurations only when specified or shown on plans)

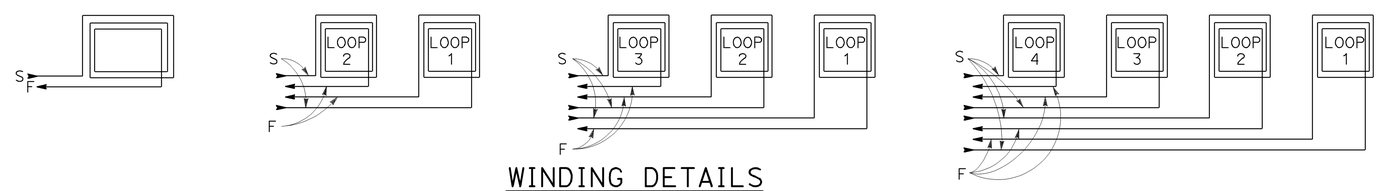

WINDING DETAILS

See Notes 6 and 7

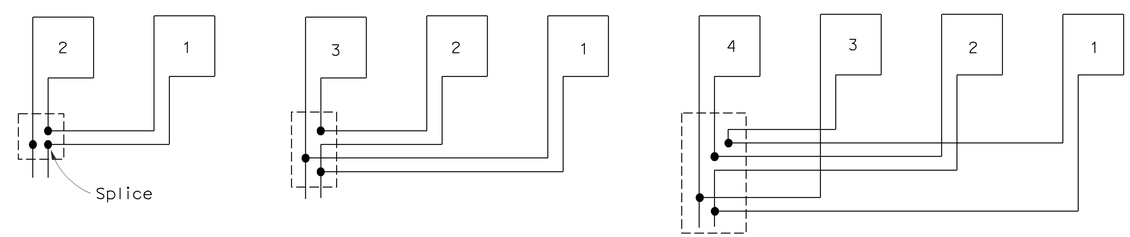

TYPICAL LOOP CONNECTIONS

(Dashed lines represent the pull box)

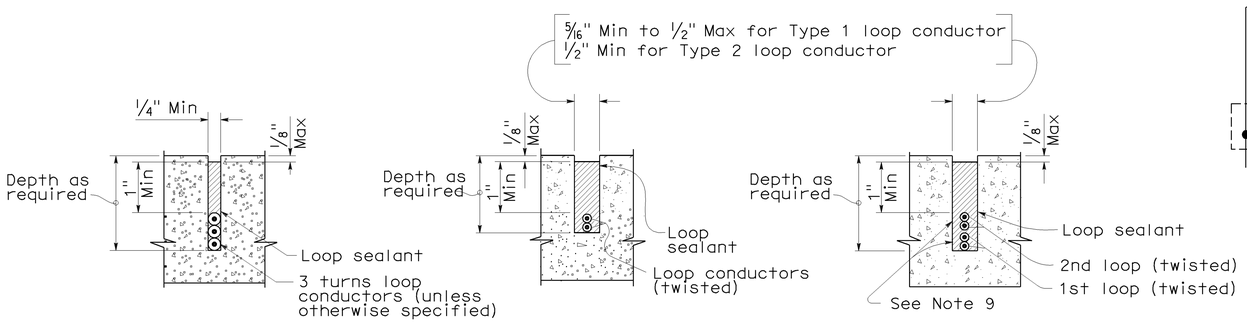

SECTION A-A | SECTION B-B | SECTION C-C

SLOT DETAILS - TYPE 1 AND TYPE 2 LOOP CONDUCTOR

STATE OF CALIFORNIA
DEPARTMENT OF TRANSPORTATION

ELECTRICAL SYSTEMS (DETECTORS)

NO SCALE

RSP ES-5A DATED OCTOBER 5, 2007 SUPERCEDES STANDARD PLAN ES-5A DATED MAY 1, 2006 - PAGE 423 OF THE STANDARD PLANS BOOK DATED MAY 2006.

REVISED STANDARD PLAN RSP ES-5A

2006 REVISED STANDARD PLAN RSP ES-5A

8-17-07

DIST	COUNTY	ROUTE	POST MILES TOTAL PROJECT	SHEET NO.	TOTAL SHEETS
03	Nev	20	R6.3/R6.8	41	42

REGISTERED CIVIL ENGINEER

October 5, 2007
PLANS APPROVAL DATE

REGISTERED PROFESSIONAL ENGINEER
Stanley P. Johnson
No. C57793
Exp. 3-31-08
CIVIL
STATE OF CALIFORNIA

The State of California or its officers or agents shall not be responsible for the accuracy or completeness of electronic copies of this plan sheet.

To accompany plans dated 2-28-11

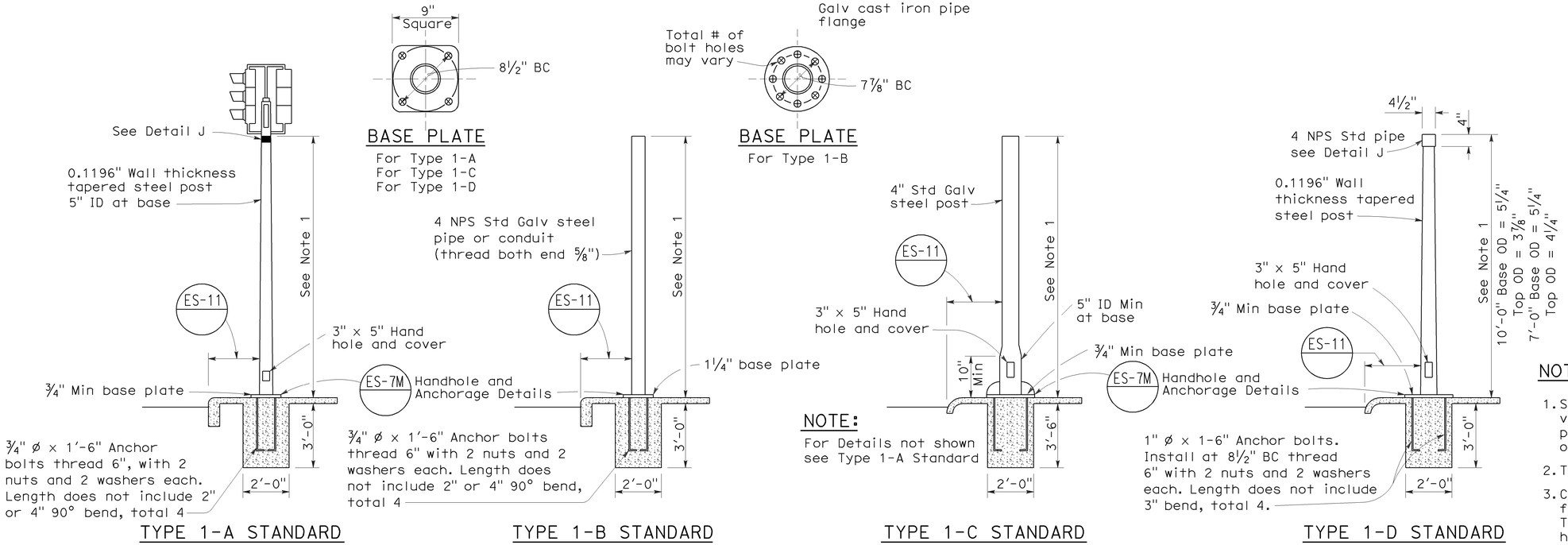

TYPE 1 SIGNAL STANDARDS

NOTES:

1. Standards shall be 10'-0" ± 2" for vehicle signals and 7'-0" ± 2" for pedestrian signals unless otherwise noted on plans.
2. Top of standards shall be 4½" OD.
3. Conduits shall extend 2" maximum above finished surface of foundation and for Types 1-A, 1-C and 1-D shall be sloped toward handhole.
4. Anchor bolts shall be bonded to conduit or grounding conductor.
5. Conduit between standard and adjacent pull box shall be 2" minimum.
6. Paint numbers on roadway side facing traffic when electrolier or post is left of direction of traffic.

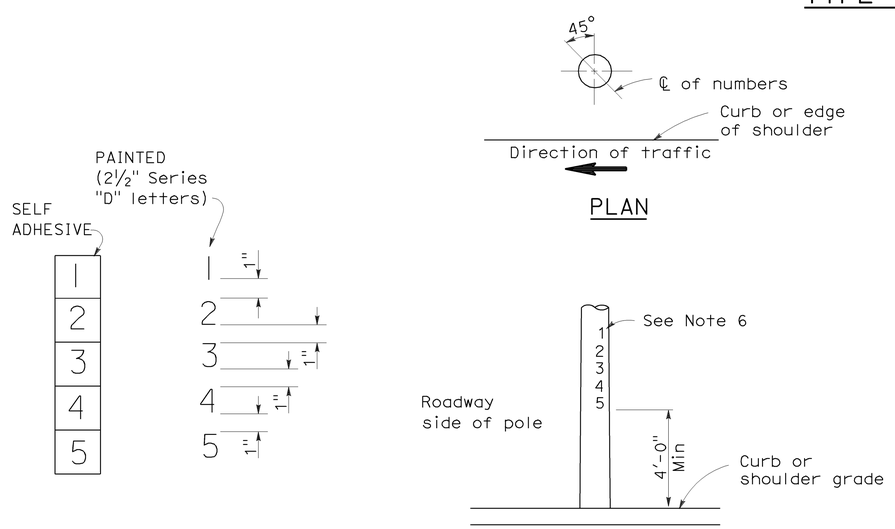

LOCATION OF EQUIPMENT NUMBERS ON STANDARDS AND POSTS

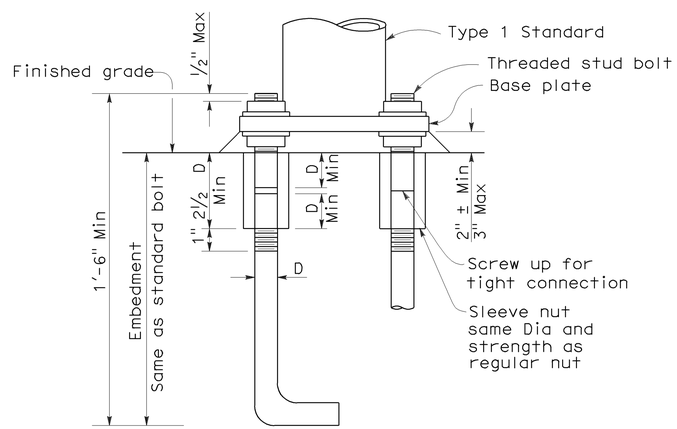

ANCHOR BOLTS WITH SLEEVE NUTS

Sleeve nuts to be used only when shown or specified on Project Plans

D = Diameter of anchor bolt

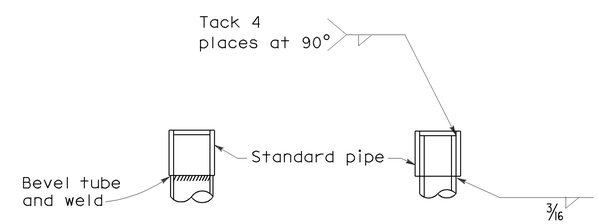

DETAIL J

Tube may be inserted into pipe or butted as required

STATE OF CALIFORNIA
DEPARTMENT OF TRANSPORTATION

ELECTRICAL SYSTEMS (SIGNAL AND LIGHTING STANDARD TYPE 1 STANDARD AND EQUIPMENT NUMBERING)

NO SCALE

RSP ES-7B DATED OCTOBER 5, 2007 SUPERCEDES STANDARD PLAN ES-7B DATED MAY 1, 2006 - PAGE 438 OF THE STANDARD PLANS BOOK DATED MAY 2006.

REVISED STANDARD PLAN RSP ES-7B

2006 REVISED STANDARD PLAN RSP ES-7B

7-10-07

DIST	COUNTY	ROUTE	POST MILES TOTAL PROJECT	SHEET NO.	TOTAL SHEETS
03	Nev	20	R6.3/R6.8	42	42

REGISTERED CIVIL ENGINEER

November 17, 2006
PLANS APPROVAL DATE

REGISTERED PROFESSIONAL ENGINEER Stanley P. Johnson No. C57793 Exp. 03-31-08 CIVIL STATE OF CALIFORNIA

The State of California or its officers or agents shall not be responsible for the accuracy or completeness of electronic copies of this plan sheet.

To accompany plans dated 2-28-11

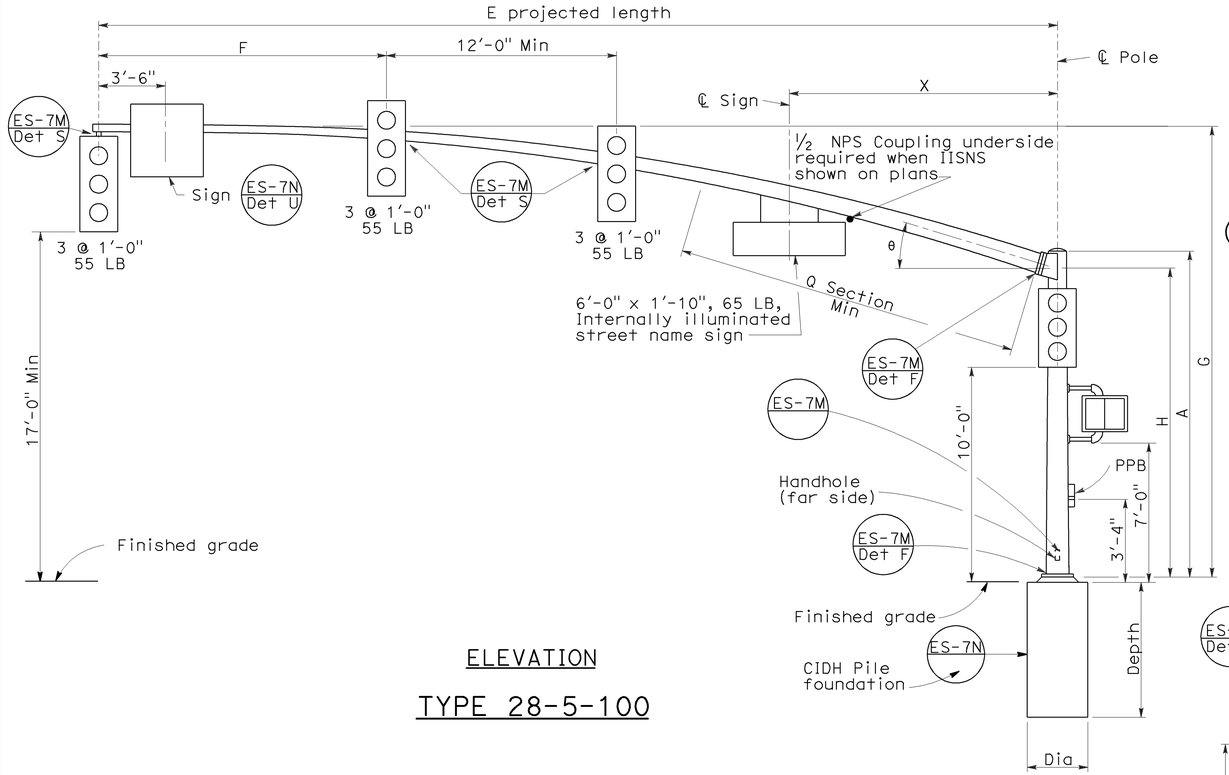

ELEVATION

TYPE 28-5-100

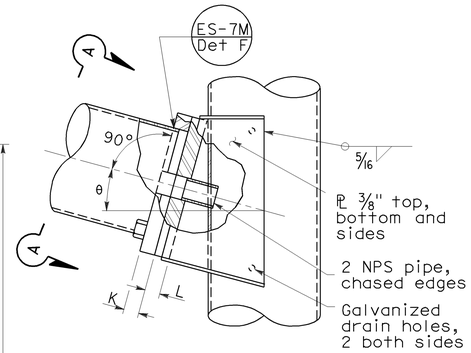

ELEVATION

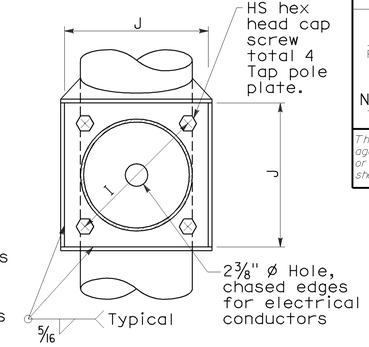

VIEW A-A

SIGNAL ARM CONNECTION DETAILS

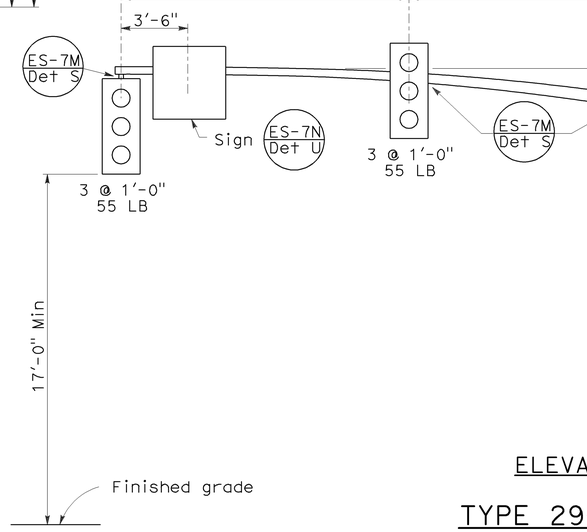

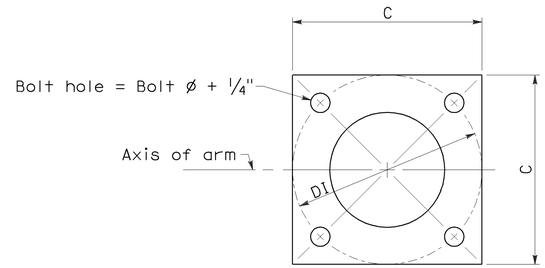

BASE PLATE

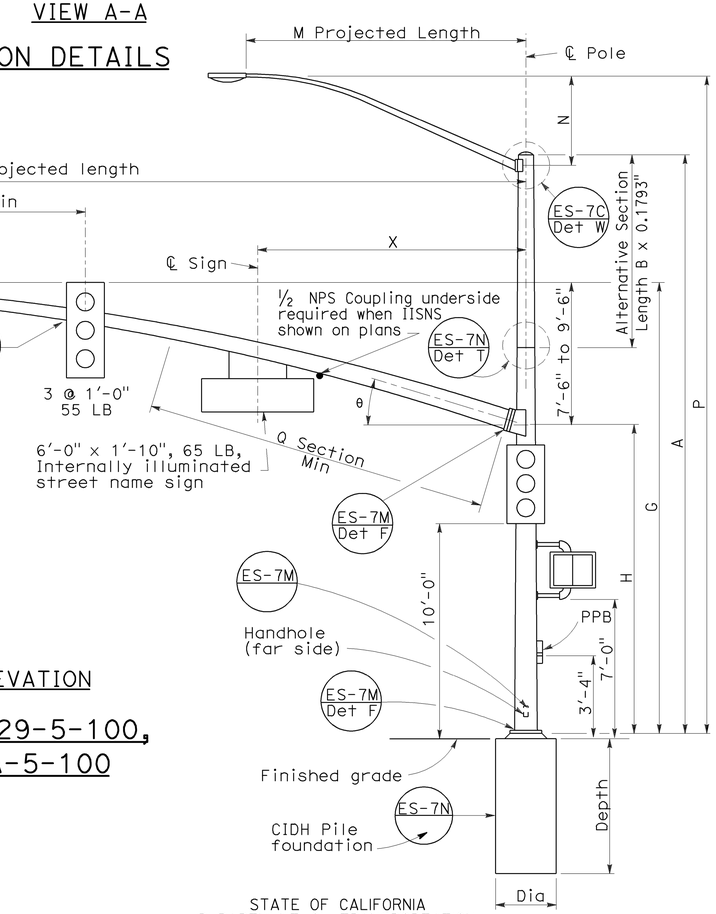

ELEVATION

TYPE 29-5-100, 29A-5-100

LUMINAIRE ARM DATA					
M Projected Length	N Rise	Min OD at Pole	Thickness	P Mounting Height 30'-0" Pole	P Mounting Height 35'-0" Pole
6'-0"	2'-0"±	3 1/4"	0.1196"	31'-6"±	36'-6"±
8'-0"	2'-6"±	3 1/2"		32'-0"±	37'-0"±
10'-0"	3'-3"±	3 7/8"		32'-9"±	37'-9"±
12'-0"	4'-3"±			33'-9"±	38'-9"±
15'-0"	4'-9"±	4 1/4"		34'-3"±	39'-3"±

SIGNAL ARM DATA														
E Projected Length	F Min Spacing	G Mounting Height	H	Min OD at Pole	Thickness	I Bolt Circle	HS Cap Screws	J Plate Size	K Arm ℄ Thickness	L Pole ℄ Thickness	θ	Q Section Length	Q Section Thickness	X Max
50'-0"	15'-0"	23'-7"± to 25'-7"±	16'-0"	11 7/16"	0.1793"	16"	1 1/2"-6NC-3 1/4"	1'-4"	1 3/4"	1 3/4"	15°	18'-0"	0.2391"	14'-0"
55'-0"				1'-1/4"								23'-0"		

POLE DATA									BASE PLATE DATA						CIDH PILE FOUNDATION		
Pole Type	Load Case	Wind Velocity mph	A Height	Min OD Base	Min OD Top	Thickness	Alternative Section B Length	Alternative Section Bottom	Alternative Section Top	C	DI Bolt Circle	Thickness	Anchor Bolts Size	Luminaire Arm	Signal Arm	Dia	Depth	Reinforced
28-5-100	5	100	17'-0"	14"	11 11/16"	0.3125"	None	11 1/4"	9 7/8"	21"	21"	1 3/4"	2" ø x 42" x 6"	None	50'-0", 55'-0"	3'-0"	9'-2"	Yes
29-5-100			30'-0"		9 7/8"		10'-0"							6'-15' [15'-0"]				
29A-5-100			35'-0"		9 3/16"		15'-0"		9 3/16"	23"	23"							

[ ] Indicates arm length to be used unless otherwise noted on plans.

STATE OF CALIFORNIA
DEPARTMENT OF TRANSPORTATION

ELECTRICAL SYSTEMS (SIGNAL AND LIGHTING STANDARD CASE 5 ARM LOADING WIND VELOCITY=100 MPH ARM LENGTHS 50' TO 55')

NO SCALE

RSP ES-7G DATED NOVEMBER 17, 2006 SUPERSEDES STANDARD PLAN ES-7G DATED MAY 1, 2006 - PAGE 443 OF THE STANDARD PLANS BOOK DATED MAY 2006.

REVISED STANDARD PLAN RSP ES-7G

2006 REVISED STANDARD PLAN RSP ES-7G

5-15-06