Dist	COUNTY	ROUTE	POST MILES TOTAL PROJECT	SHEET No.	TOTAL SHEETS
02	Tri	299	0.0/8.3	1	103

STATE OF CALIFORNIA

DEPARTMENT OF TRANSPORTATION

ACST-P299(198)E

PROJECT PLANS FOR CONSTRUCTION ON

STATE HIGHWAY

IN TRINITY COUNTY AT AND NEAR SALYER FROM HUMBOLDT COUNTY LINE TO 0.6 MILE EAST OF GRAY CREEK ROAD

TO BE SUPPLEMENTED BY STANDARD PLANS DATED 2010

INDEX OF PLANS

SHEET No.	DESCRIPTION
1	TITLE AND LOCATION MAP
2-3	TYPICAL CROSS SECTIONS
4	KEY MAP AND LINE INDEX
5-16	LAYOUTS
17-19	PROFILES AND SUPERELEVATION DIAGRAMS
20-34	CONSTRUCTION DETAILS
35-43	DRAINAGE PLANS, PROFILES, DETAILS AND QUANTITIES
44	CONSTRUCTION AREA SIGNS
45-46	PAVEMENT DELINEATION QUANTITIES
47-60	SIGN PLANS, DETAILS AND QUANTITIES
61-62	SUMMARY OF QUANTITIES
63-103	REVISED STANDARD PLANS

THE STANDARD PLANS LIST APPLICABLE TO THIS CONTRACT IS INCLUDED IN THE NOTICE TO BIDDERS AND SPECIAL PROVISIONS BOOK.

LEGEND

* ESA LOCATION

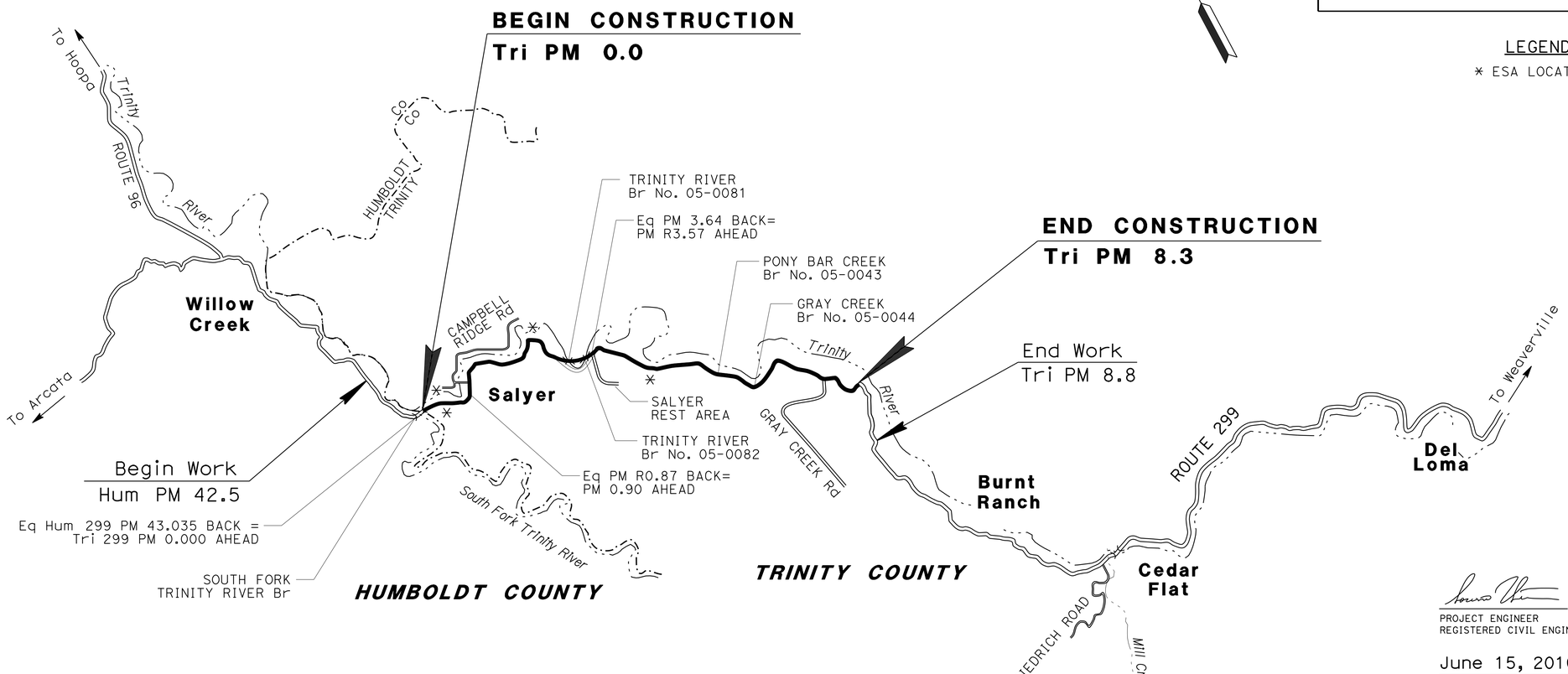

THE CONTRACTOR SHALL POSSESS THE CLASS (OR CLASSES) OF LICENSE AS SPECIFIED IN THE "NOTICE TO BIDDERS."

NO SCALE

06-12-16

PROJECT ENGINEER DATE
REGISTERED CIVIL ENGINEER

June 15, 2016

PLANS APPROVAL DATE

REGISTERED PROFESSIONAL ENGINEER
SOCORRO V. URENA
No. C79633
Exp. 9-30-16
CIVIL
STATE OF CALIFORNIA

THE STATE OF CALIFORNIA OR ITS OFFICERS OR AGENTS SHALL NOT BE RESPONSIBLE FOR THE ACCURACY OR COMPLETENESS OF SCANNED COPIES OF THIS PLAN SHEET.

CONTRACT No.	02-4G3804
PROJECT ID	0214000006

LAST REVISION 06-12-16 | DATE PLOTTED => 06-SEP-2016 | TIME PLOTTED => 13:53

PROJECT MANAGER: CLINT BURKENPAS
DESIGN ENGINEER: AL TRUJILLO

P:\proj1\02\4G380_plans\pse\24g380ab001.dgn

Dist	COUNTY	ROUTE	POST MILES TOTAL PROJECT	SHEET No.	TOTAL SHEETS
02	Tri	299	0.0/8.3	2	103

REGISTERED CIVIL ENGINEER 06-12-16 DATE

06-15-16
PLANS APPROVAL DATE

REGISTERED PROFESSIONAL ENGINEER SOCORRO V. URENA No. 79633 Exp. 9-30-16 CIVIL STATE OF CALIFORNIA

THE STATE OF CALIFORNIA OR ITS OFFICERS OR AGENTS SHALL NOT BE RESPONSIBLE FOR THE ACCURACY OR COMPLETENESS OF SCANNED COPIES OF THIS PLAN SHEET.

NOTES:

1. DIMENSIONS OF THE PAVEMENT STRUCTURES (STRUCTURAL SECTIONS) ARE SUBJECT TO TOLERANCES SPECIFIED IN THE STANDARD SPECIFICATIONS.
2. SUPERELEVATIONS ARE SHOWN ON THE SUPERELEVATION DIAGRAM.
3. IN AREAS WHERE THE WIDTH OF THE EXISTING SURFACING VARIES FROM THAT SHOWN, VARY THE WIDTH OF THE PAVING OPERATIONS AS DIRECTED BY THE ENGINEER.
4. FOR CPACP, SEE CONSTRUCTION DETAILS.

LEGEND:

LIMITS OF COLD PLANE AC PAVEMENT

ABBREVIATIONS:

CPACP	COLD PLANE ASPHALT CONCRETE PAVEMENT
RHMA-O	RUBBERIZED HOT MIX ASPHALT-OPEN GRADED (OPEN GRADED - FRICTION COURSE)
RHMA-G	RUBBERIZED HOT MIX ASPHALT (GAP GRADED)
VCMC	VEGETATION CONTROL (MINOR CONCRETE)
Bar	BARRIER

PAVEMENT CLIMATE REGION

LOW MOUNTAIN

DESIGN DESIGNATION:

2017 ADT=3600 D=76%
2022 ADT=3800 T=7%
2022 DHV=475 V=55 MPH

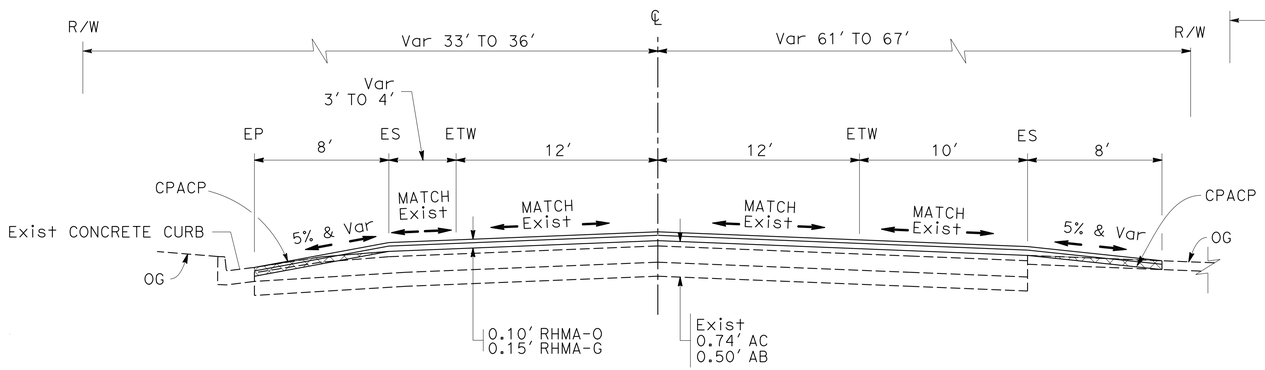

ROUTE 299
PM 1.11 TO 1.13

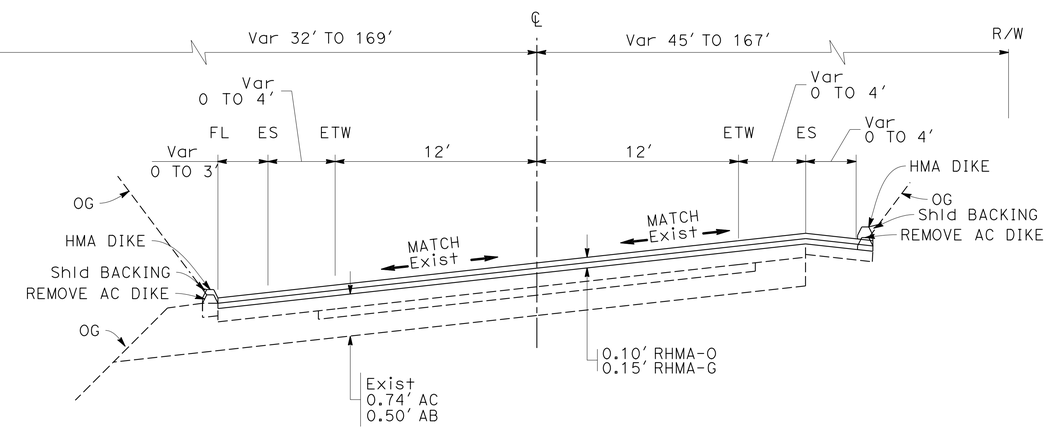

ROUTE 299
PM R2.90 TO R3.16
PM R3.28 TO R3.44
PM R3.54 TO R3.70

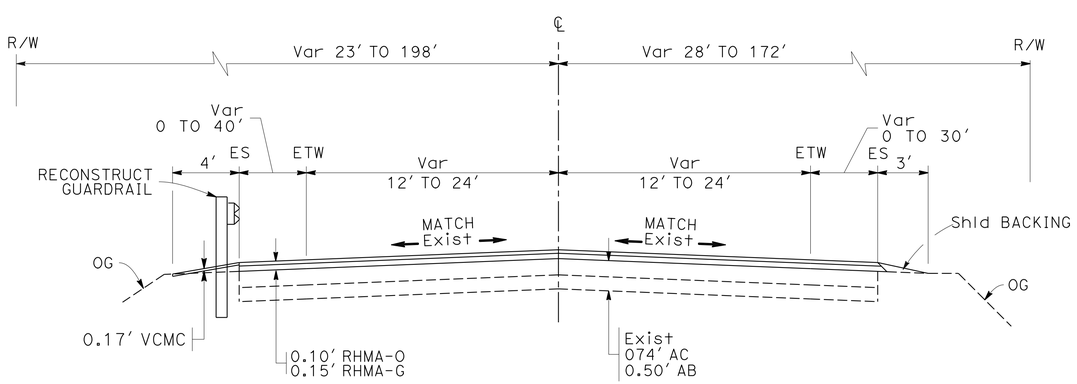

ROUTE 299
PM 0.04 TO 0.40
PM 0.90 TO 1.11
PM 1.13 TO 2.20
PM 2.67 TO R2.90
PM R3.70 TO 5.94
PM 5.97 TO 6.33
PM 6.38 TO 6.69
PM 6.81 TO 8.10

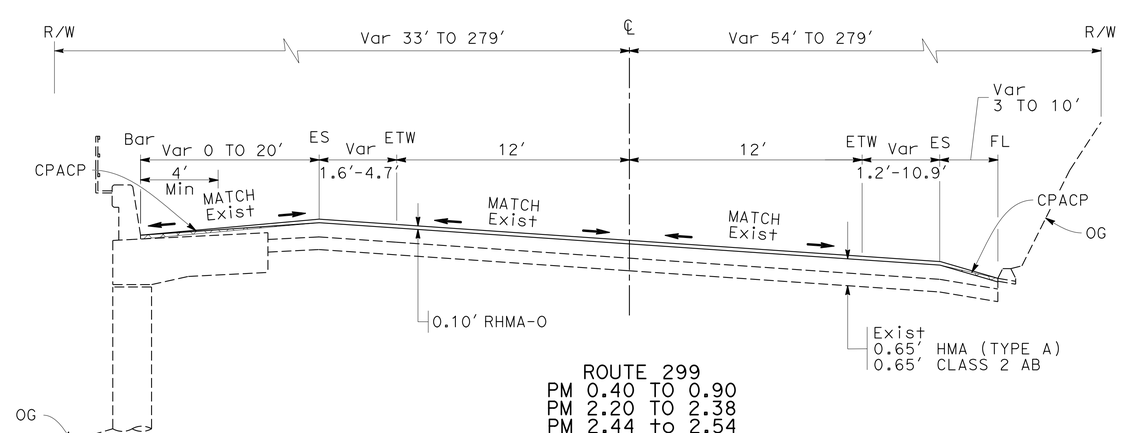

ROUTE 299
PM 0.40 TO 0.90
PM 2.20 TO 2.38
PM 2.44 to 2.54

TYPICAL CROSS SECTIONS

NO SCALE

X-1

REVISED BY | DATE REVISED
JEFF B. COON | SOCORRO URENA
CALCULATED-DESIGNED BY | CHECKED BY
FUNCTIONAL SUPERVISOR
AL TRUJILLO

STATE OF CALIFORNIA - DEPARTMENT OF TRANSPORTATION
Caltrans
DESIGN

P:\proj1\02\4G380_plans\pse\24g380ca001.dgn

LAST REVISION 05-20-16
DATE PLOTTED => 02-AUG-2016
TIME PLOTTED => 08:15

Dist	COUNTY	ROUTE	POST MILES TOTAL PROJECT	SHEET No.	TOTAL SHEETS
02	Tri	299	0.0/8.3	3	103

REGISTERED CIVIL ENGINEER 06-12-16 DATE

06-15-16
PLANS APPROVAL DATE

REGISTERED PROFESSIONAL ENGINEER SOCORRO V. URENA No. 79633 Exp. 9-30-16 CIVIL STATE OF CALIFORNIA

THE STATE OF CALIFORNIA OR ITS OFFICERS OR AGENTS SHALL NOT BE RESPONSIBLE FOR THE ACCURACY OR COMPLETENESS OF SCANNED COPIES OF THIS PLAN SHEET.

"G1" LINE

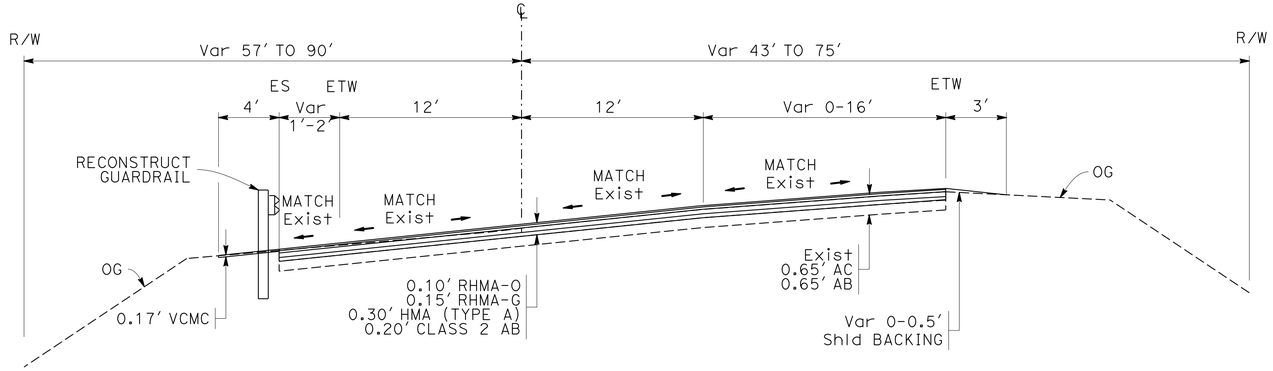

ROUTE 299
PM 8.10 TO 8.30

"B1" LINE
"F1" LINE

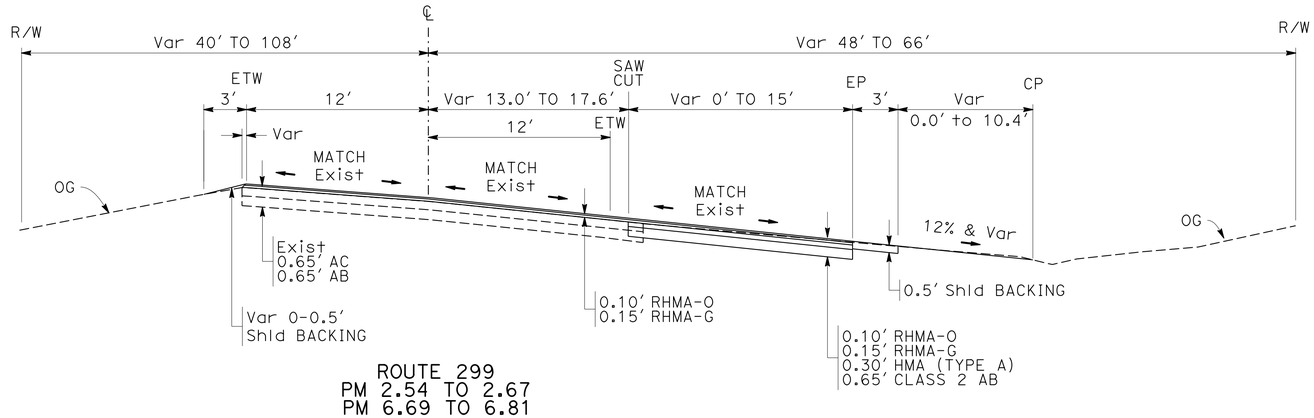

ROUTE 299
PM 2.54 TO 2.67
PM 6.69 TO 6.81

"B1" LINE

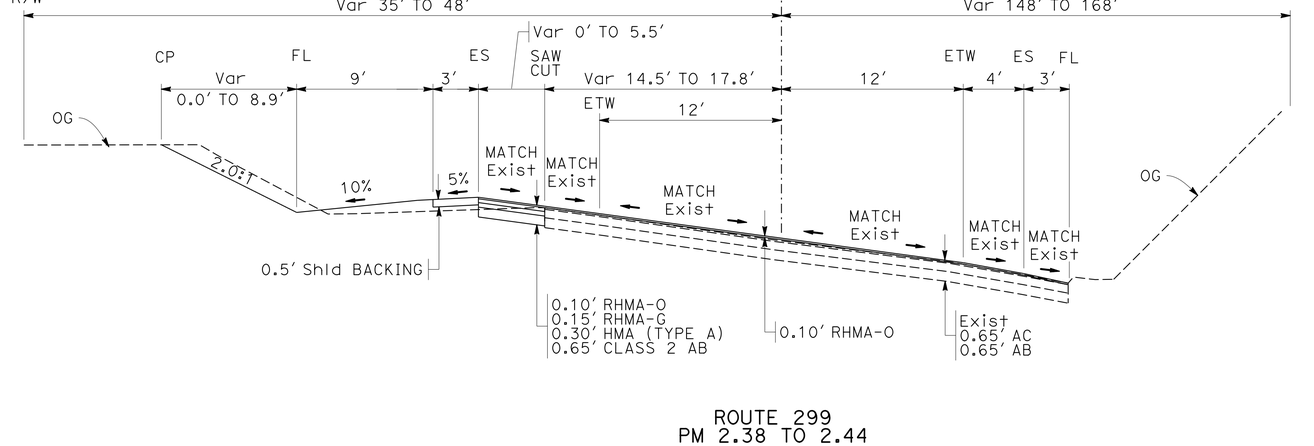

ROUTE 299
PM 2.38 TO 2.44

TYPICAL CROSS SECTIONS

NO SCALE

X-2

REVISED BY	DATE REVISED

CALCULATED-DESIGNED BY	CHECKED BY
JEFF B. COON	SOCORRO URENA

FUNCTIONAL SUPERVISOR: AL TRUJILLO

STATE OF CALIFORNIA - DEPARTMENT OF TRANSPORTATION

Caltrans® **DESIGN**

P:\proj\02\4G380_plans\pse\24g380ca002.dgn

LAST REVISION 05-20-16 | DATE PLOTTED => 02-AUG-2016 | TIME PLOTTED => 08:15

Dist	COUNTY	ROUTE	POST MILES TOTAL PROJECT	SHEET No.	TOTAL SHEETS
02	Tri	299	0.0/8.3	4	103

REGISTERED CIVIL ENGINEER 06-12-16 DATE

PLANS APPROVAL DATE 06-15-16

REGISTERED PROFESSIONAL ENGINEER SOCORRO V. URENA No. 79633 Exp. 9-30-16 CIVIL STATE OF CALIFORNIA

THE STATE OF CALIFORNIA OR ITS OFFICERS OR AGENTS SHALL NOT BE RESPONSIBLE FOR THE ACCURACY OR COMPLETENESS OF SCANNED COPIES OF THIS PLAN SHEET.

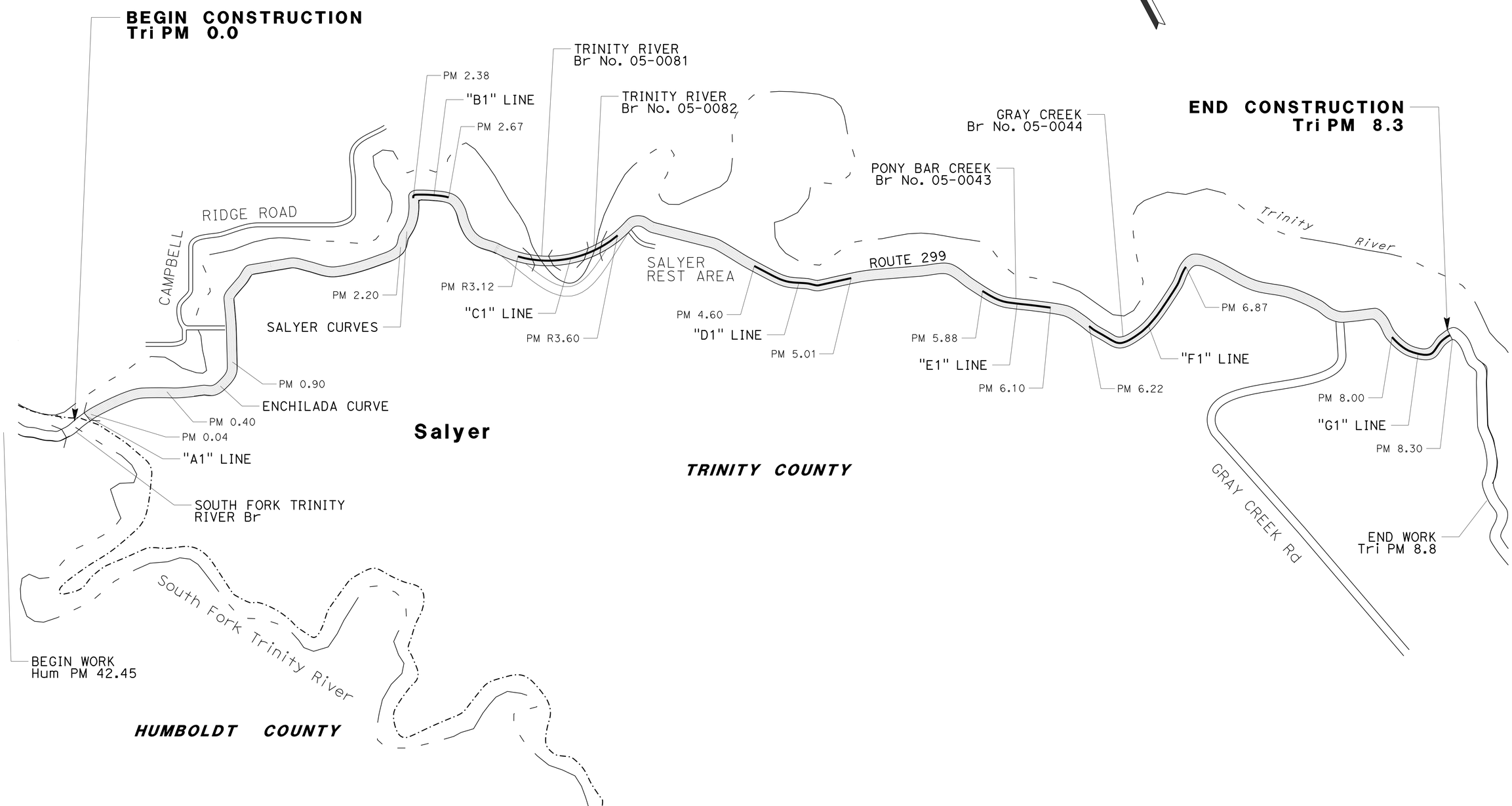

KEY MAP AND LINE INDEX

K-1

REVISED BY	DATE REVISED

CALCULATED-DESIGNED BY	CHECKED BY
JEFF B. COON	SOCORRO URENA

FUNCTIONAL SUPERVISOR: AL TRUJILLO

STATE OF CALIFORNIA - DEPARTMENT OF TRANSPORTATION

Caltrans®

DESIGN

P:\proj1\02\4G380_plans\pse\24g380da001.dgn

LAST REVISION 03-28-16 | DATE PLOTTED => 02-AUG-2016 | TIME PLOTTED => 08:15

Dist	COUNTY	ROUTE	POST MILES TOTAL PROJECT	SHEET No.	TOTAL SHEETS
02	Tri	299	0.0/8.3	5	103

REGISTERED CIVIL ENGINEER 06-12-16 DATE

06-15-16
PLANS APPROVAL DATE

REGISTERED PROFESSIONAL ENGINEER SOCORRO V. URENA No. 79633 Exp. 9-30-16 CIVIL STATE OF CALIFORNIA

THE STATE OF CALIFORNIA OR ITS OFFICERS OR AGENTS SHALL NOT BE RESPONSIBLE FOR THE ACCURACY OR COMPLETENESS OF SCANNED COPIES OF THIS PLAN SHEET.

NOTES:

1. FOR ACCURATE RIGHT OF WAY DATA, CONTACT RIGHT OF WAY ENGINEERING AT THE DISTRICT OFFICE.
2. NO WORK TO BE DONE ON EXISTING BRIDGE DECKS.

LEGEND:

- LIMITS OF COLD PLANE AC PAVEMENT
- EXISTING METAL BEAM GUARDRAIL
- TEMPORARY FENCE (TYPE ESA)
- MODIFIED Temp SILT FENCE (ESA)

ABBREVIATIONS:

AILTS	ALTERNATIVE IN-LINE TERMINAL SYSTEM
BPEA	BURIED POST END ANCHOR
CPACP	COLD PLANE ASPHALT CONCRETE PAVEMENT
Reconst	RECONSTRUCT
Rem	REMOVE
SP	STEEL POST
VCMC	VEGETATION CONTROL MINOR CONCRETE
TFESA	TEMPORARY FENCE (TYPE ESA)

PAVEMENT CLIMATE REGION

LOW MOUNTAIN

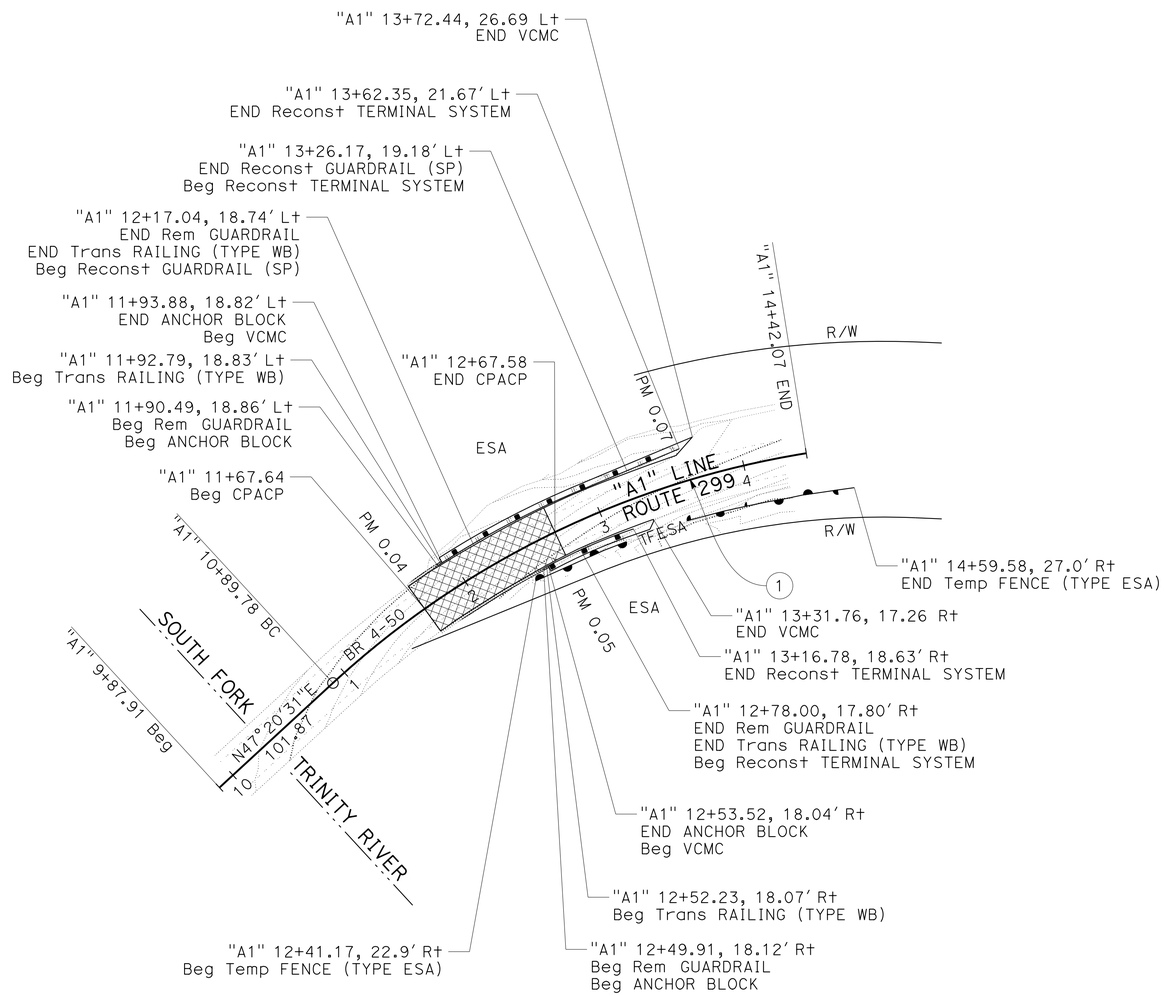

CURVE DATA

No. ⊕	R	Δ	T	L
1	602'	33°32'28"	181'	352'

LAYOUT

SCALE: 1" = 50'

L-1

REVISED BY	DATE REVISED
JEFF B. COON	SOCORRO URENA

CALCULATED-DESIGNED BY / CHECKED BY

FUNCTIONAL SUPERVISOR: AL TRUJILLO

STATE OF CALIFORNIA - DEPARTMENT OF TRANSPORTATION

Caltrans DESIGN

P:\proj1\02\4G380_plans\pse\24g380ea001.dgn

LAST REVISION 06-06-16 | DATE PLOTTED => 02-AUG-2016 | TIME PLOTTED => 08:15

Dist	COUNTY	ROUTE	POST MILES TOTAL PROJECT	SHEET No.	TOTAL SHEETS
02	Tri	299	0.0/8.3	6	103

REGISTERED CIVIL ENGINEER 06-12-16 DATE

06-15-16
PLANS APPROVAL DATE

REGISTERED PROFESSIONAL ENGINEER SOCORRO V. URENA No. 79633 Exp. 9-30-16 CIVIL STATE OF CALIFORNIA

THE STATE OF CALIFORNIA OR ITS OFFICERS OR AGENTS SHALL NOT BE RESPONSIBLE FOR THE ACCURACY OR COMPLETENESS OF SCANNED COPIES OF THIS PLAN SHEET.

NOTE:

1. FOR ACCURATE RIGHT OF WAY DATA, CONTACT RIGHT OF WAY ENGINEERING AT THE DISTRICT OFFICE.

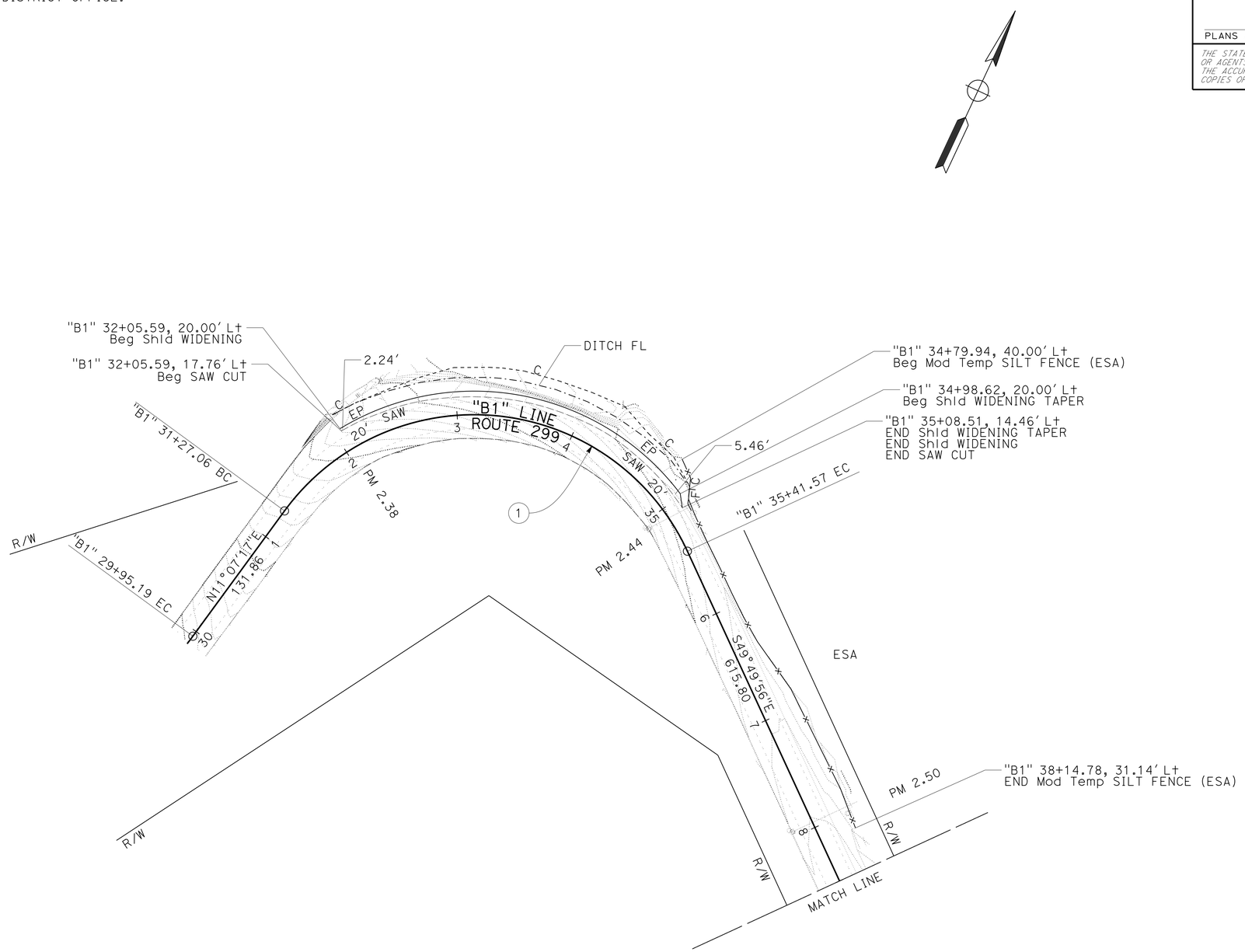

CURVE DATA

No. ⊕	R	Δ	T	L
1	200'	119°02'47"	339.00'	414.51'

LAYOUT
SCALE: 1" = 50'

L-2

STATE OF CALIFORNIA - DEPARTMENT OF TRANSPORTATION
Caltrans® **DESIGN**

FUNCTIONAL SUPERVISOR: AL TRUJILLO
CALCULATED-DESIGNED BY: JEFF B. COON
CHECKED BY: SOCORRO URENA
REVISED BY
DATE REVISED

P:\proj1\02\4G380_plans\pse\24g380ea002.dgn

LAST REVISION 03-09-16 | DATE PLOTTED => 02-AUG-2016 | TIME PLOTTED => 08:15

BORDER LAST REVISED 7/2/2010 | USERNAME => s115152 | DGN FILE => 24g380ea002.dgn | RELATIVE BORDER SCALE IS IN INCHES 0 1 2 3 | UNIT 0318 | PROJECT NUMBER & PHASE 02 1400 0006 1

Dist	COUNTY	ROUTE	POST MILES TOTAL PROJECT	SHEET No.	TOTAL SHEETS
02	Tri	299	0.0/8.3	7	103

REGISTERED CIVIL ENGINEER 06-12-16 DATE

06-15-16
PLANS APPROVAL DATE

REGISTERED PROFESSIONAL ENGINEER SOCORRO V. URENA No. 79633 Exp. 9-30-16 CIVIL STATE OF CALIFORNIA

THE STATE OF CALIFORNIA OR ITS OFFICERS OR AGENTS SHALL NOT BE RESPONSIBLE FOR THE ACCURACY OR COMPLETENESS OF SCANNED COPIES OF THIS PLAN SHEET.

NOTES:

1. FOR ACCURATE RIGHT OF WAY DATA, CONTACT RIGHT OF WAY ENGINEERING AT THE DISTRICT OFFICE.

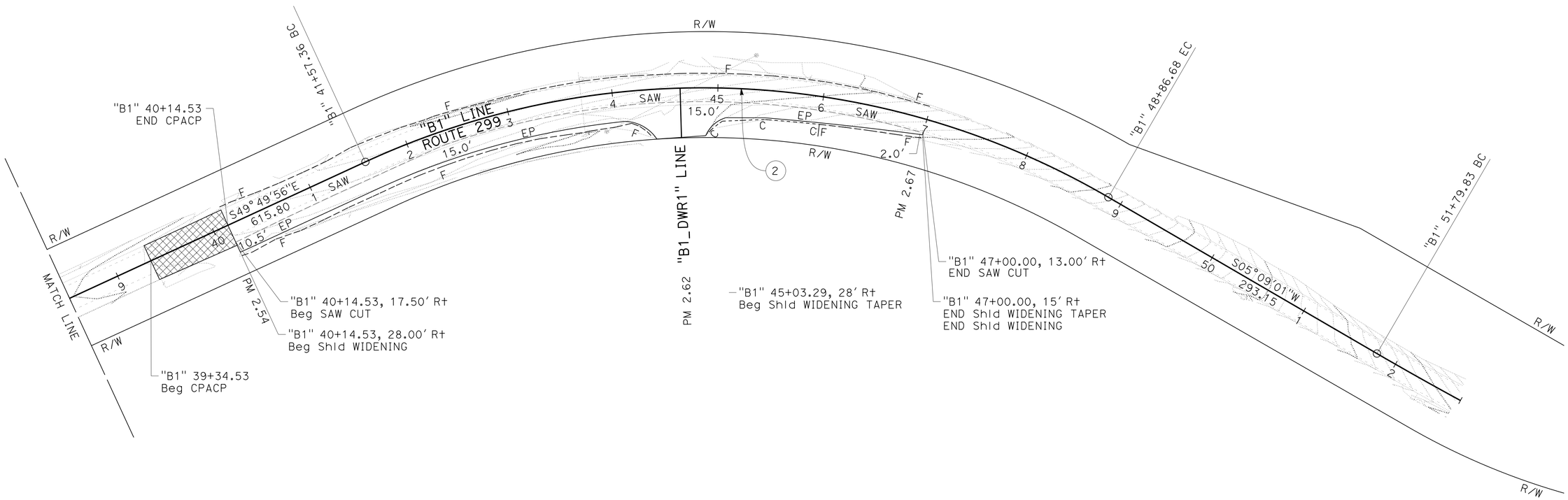

CURVE DATA

No. ⊕	R	Δ	T	L
2	760'	54°58'57"	395'	729'

LAYOUT

SCALE: 1" = 50'

L-3

STATE OF CALIFORNIA - DEPARTMENT OF TRANSPORTATION
Caltrans DESIGN

FUNCTIONAL SUPERVISOR: AL TRUJILLO
CALCULATED-DESIGNED BY: JEFF B. COON
CHECKED BY: SOCORRO URENA
REVISED BY
DATE REVISED

P:\proj1\02\4G380_plans\pse\24g380ea003.dgn

LAST REVISION 03-09-16
DATE PLOTTED => 02-AUG-2016
TIME PLOTTED => 08:15

Dist	COUNTY	ROUTE	POST MILES TOTAL PROJECT	SHEET No.	TOTAL SHEETS
02	Tri	299	0.0/8.3	8	103

REGISTERED CIVIL ENGINEER 06-12-16 DATE

06-15-16
PLANS APPROVAL DATE

REGISTERED PROFESSIONAL ENGINEER SOCORRO V. URENA No. 79633 Exp. 9-30-16 CIVIL STATE OF CALIFORNIA

THE STATE OF CALIFORNIA OR ITS OFFICERS OR AGENTS SHALL NOT BE RESPONSIBLE FOR THE ACCURACY OR COMPLETENESS OF SCANNED COPIES OF THIS PLAN SHEET.

NOTES:

1. FOR ACCURATE RIGHT OF WAY DATA, CONTACT RIGHT OF WAY ENGINEERING AT THE DISTRICT OFFICE.

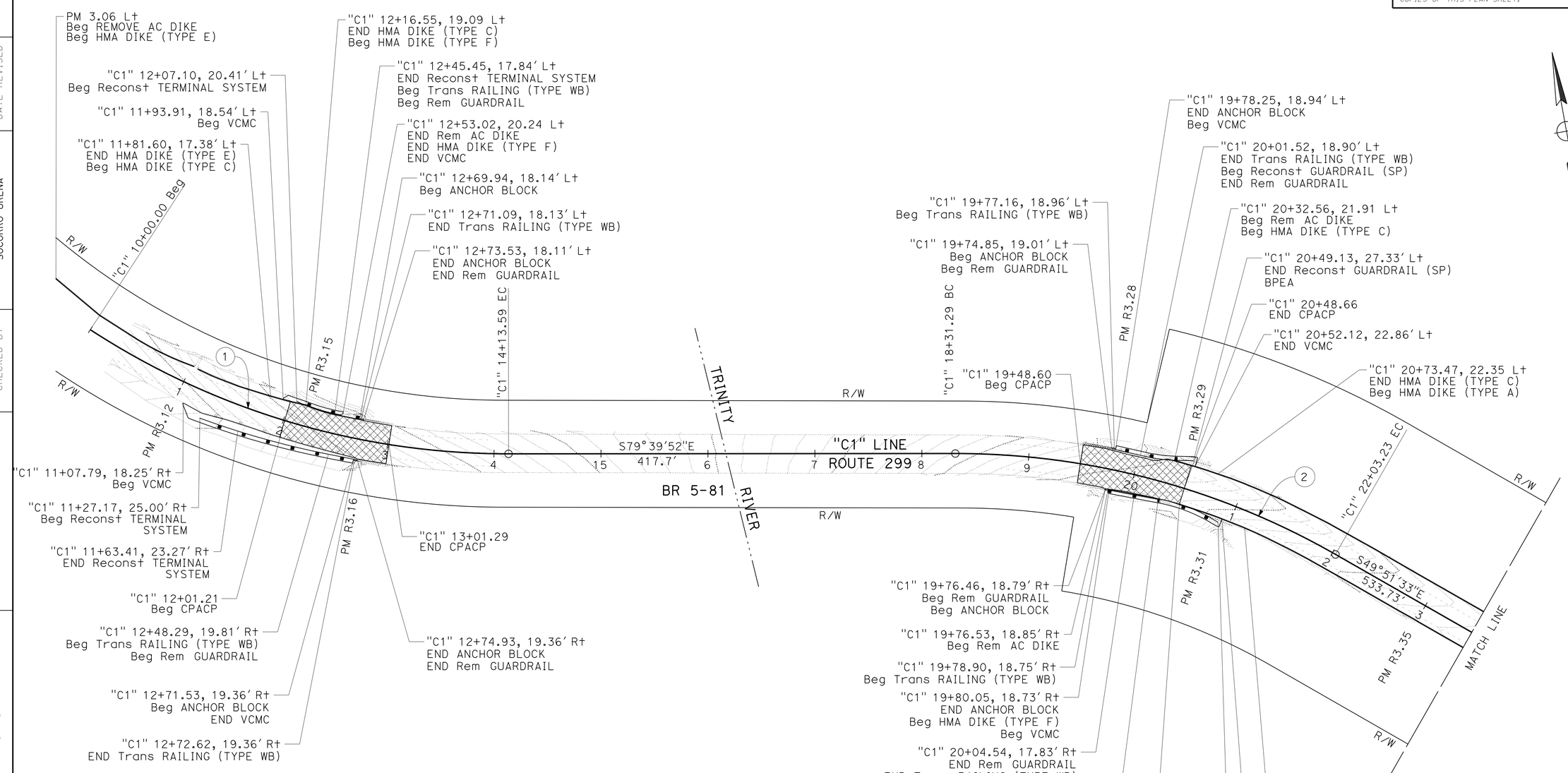

CURVE DATA

No. ⊕	R	Δ	T	L
1	715'	33°08'34"	213'	414'
2	715'	29°48'19"	190'	372'

LAYOUT

SCALE: 1" = 50'

L-4

REVISED BY	DATE REVISED
JEFF B. COON	SOCORRO URENA
CALCULATED-DESIGNED BY	CHECKED BY
FUNCTIONAL SUPERVISOR	AL TRUJILLO

STATE OF CALIFORNIA - DEPARTMENT OF TRANSPORTATION

Caltrans

DESIGN

P:\proj1\02\4G380_plans\pse\24g380ea004.dgn

LAST REVISION 05-16-16 | DATE PLOTTED => 02-AUG-2016 | TIME PLOTTED => 08:15

BORDER LAST REVISED 7/2/2010 | USERNAME => s115152 | DGN FILE => 24g380ea004.dgn | RELATIVE BORDER SCALE IS IN INCHES 0 1 2 3 | UNIT 0318 | PROJECT NUMBER & PHASE 02 1400 0006 1

Dist	COUNTY	ROUTE	POST MILES TOTAL PROJECT	SHEET No.	TOTAL SHEETS
02	Tri	299	0.0/8.3	9	103

REGISTERED CIVIL ENGINEER 06-12-16 DATE

06-15-16
PLANS APPROVAL DATE

REGISTERED PROFESSIONAL ENGINEER SOCORRO V. URENA No. 79633 Exp. 9-30-16 CIVIL STATE OF CALIFORNIA

THE STATE OF CALIFORNIA OR ITS OFFICERS OR AGENTS SHALL NOT BE RESPONSIBLE FOR THE ACCURACY OR COMPLETENESS OF SCANNED COPIES OF THIS PLAN SHEET.

NOTES:

1. FOR ACCURATE RIGHT OF WAY DATA, CONTACT RIGHT OF WAY ENGINEERING AT THE DISTRICT OFFICE.

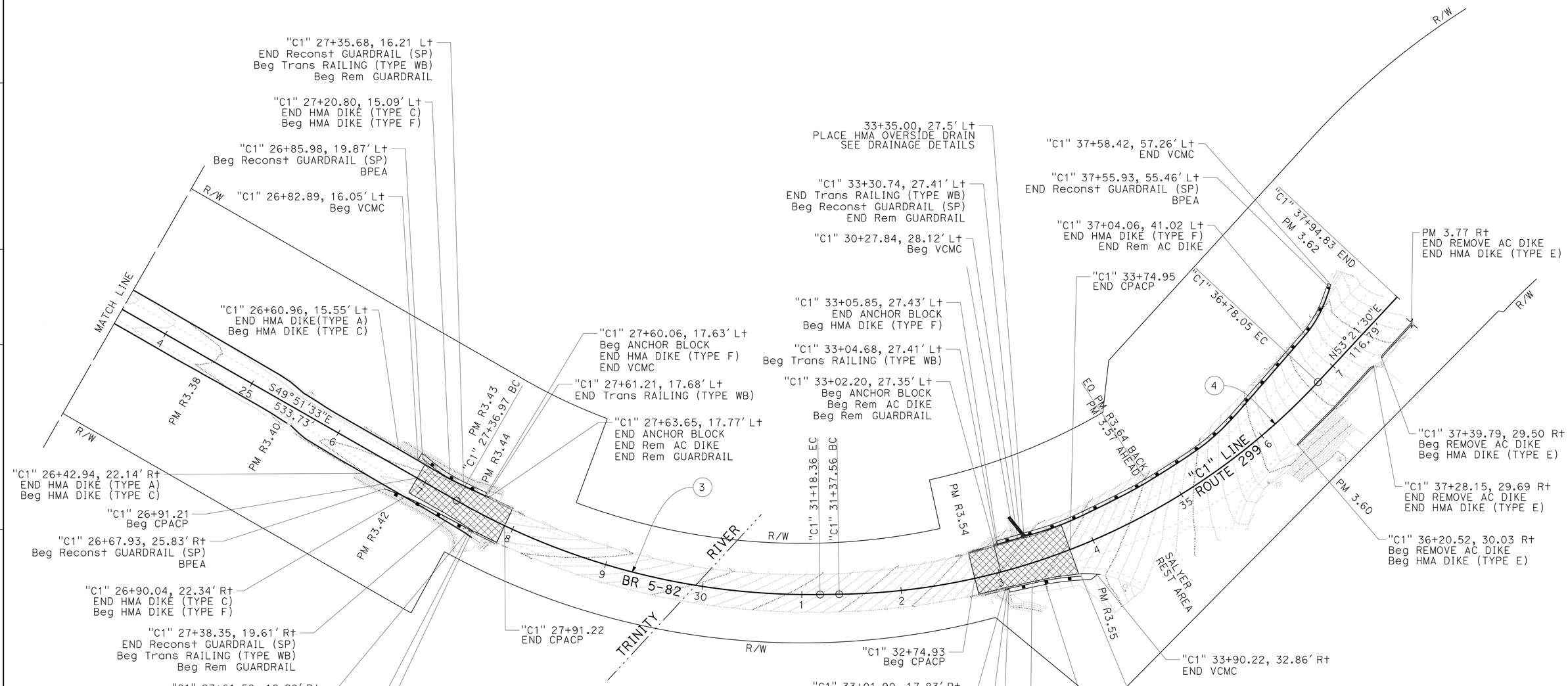

CURVE DATA

No. ⊕	R	Δ	T	L
3	715'	30°33'46"	195'	381'
4	670'	46°13'12"	286'	540'

LAYOUT

SCALE: 1" = 50'

L-5

REVISED BY	DATE REVISED
JEFF B. COON	SOCORRO URENA

CALCULATED-DESIGNED BY	CHECKED BY

FUNCTIONAL SUPERVISOR: AL TRUJILLO

STATE OF CALIFORNIA - DEPARTMENT OF TRANSPORTATION

Caltrans® DESIGN

P:\proj1\02\4G380_plans\pse\24g380ea005.dgn

LAST REVISION: DATE PLOTTED => 02-AUG-2016 TIME PLOTTED => 08:15 05-20-16

Dist	COUNTY	ROUTE	POST MILES TOTAL PROJECT	SHEET No.	TOTAL SHEETS
02	Tri	299	0.0/8.3	10	103

REGISTERED CIVIL ENGINEER 06-12-16 DATE

06-15-16
PLANS APPROVAL DATE

REGISTERED PROFESSIONAL ENGINEER SOCORRO V. URENA No. 79633 Exp. 9-30-16 CIVIL STATE OF CALIFORNIA

THE STATE OF CALIFORNIA OR ITS OFFICERS OR AGENTS SHALL NOT BE RESPONSIBLE FOR THE ACCURACY OR COMPLETENESS OF SCANNED COPIES OF THIS PLAN SHEET.

NOTES:

1. FOR ACCURATE RIGHT OF WAY DATA, CONTACT RIGHT OF WAY ENGINEERING AT THE DISTRICT OFFICE.

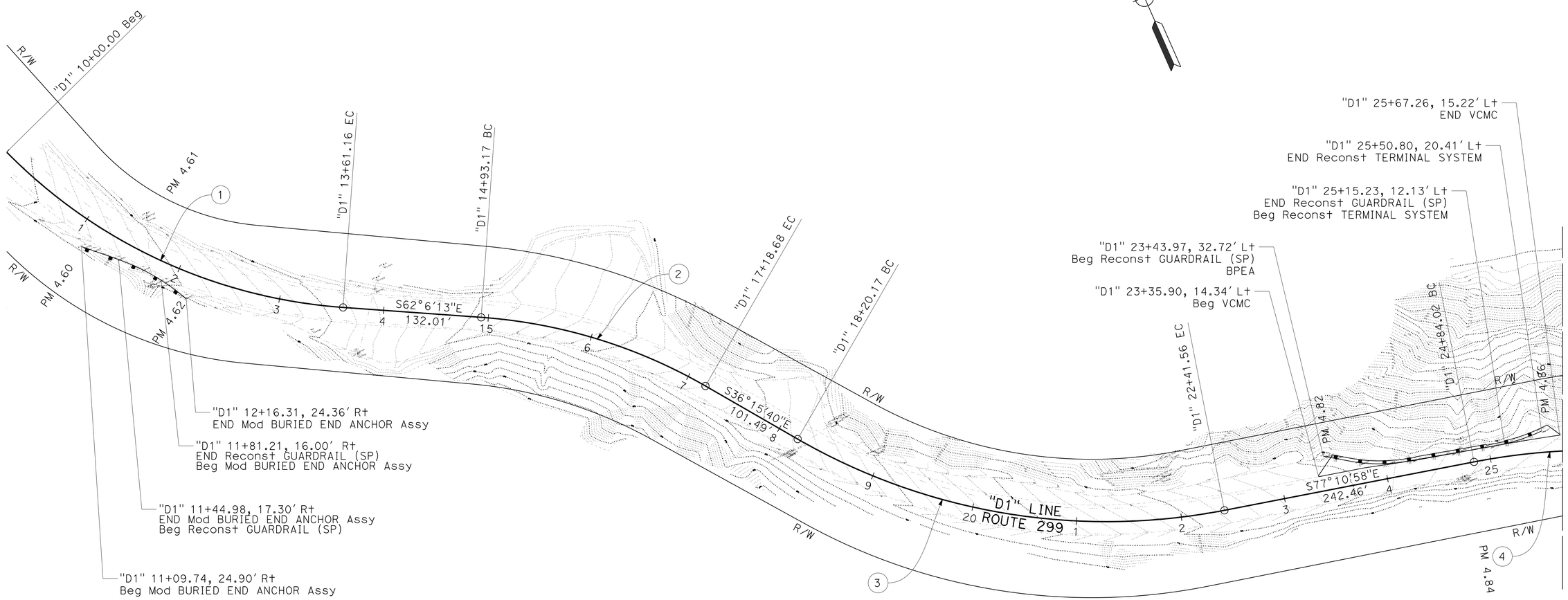

CURVE DATA

No. ⊕	R	Δ	T	L
1	500'	41°23'10"	189'	361'
2	500'	25°50'32"	115'	226'
3	590'	40°55'18"	220'	421'
4	615'	13°37'01"	73'	146'

LAYOUT

SCALE: 1" = 50'

L-6

REVISED BY | DATE REVISED
JEFF B. COON | SOCORRO URENA
CALCULATED-DESIGNED BY | CHECKED BY
FUNCTIONAL SUPERVISOR
AL TRUJILLO

STATE OF CALIFORNIA - DEPARTMENT OF TRANSPORTATION
Caltrans
DESIGN

P:\proj1\02\4G380_plans\pse\24g380ea006.dgn

LAST REVISION 05-20-16 | DATE PLOTTED => 02-AUG-2016 TIME PLOTTED => 08:15

Dist	COUNTY	ROUTE	POST MILES TOTAL PROJECT	SHEET No.	TOTAL SHEETS
02	Tri	299	0.0/8.3	11	103

REGISTERED CIVIL ENGINEER 06-12-16 DATE

06-15-16
PLANS APPROVAL DATE

REGISTERED PROFESSIONAL ENGINEER SOCORRO V. URENA No. 79633 Exp. 9-30-16 CIVIL STATE OF CALIFORNIA

THE STATE OF CALIFORNIA OR ITS OFFICERS OR AGENTS SHALL NOT BE RESPONSIBLE FOR THE ACCURACY OR COMPLETENESS OF SCANNED COPIES OF THIS PLAN SHEET.

NOTES:

1. FOR ACCURATE RIGHT OF WAY DATA, CONTACT RIGHT OF WAY ENGINEERING AT THE DISTRICT OFFICE.

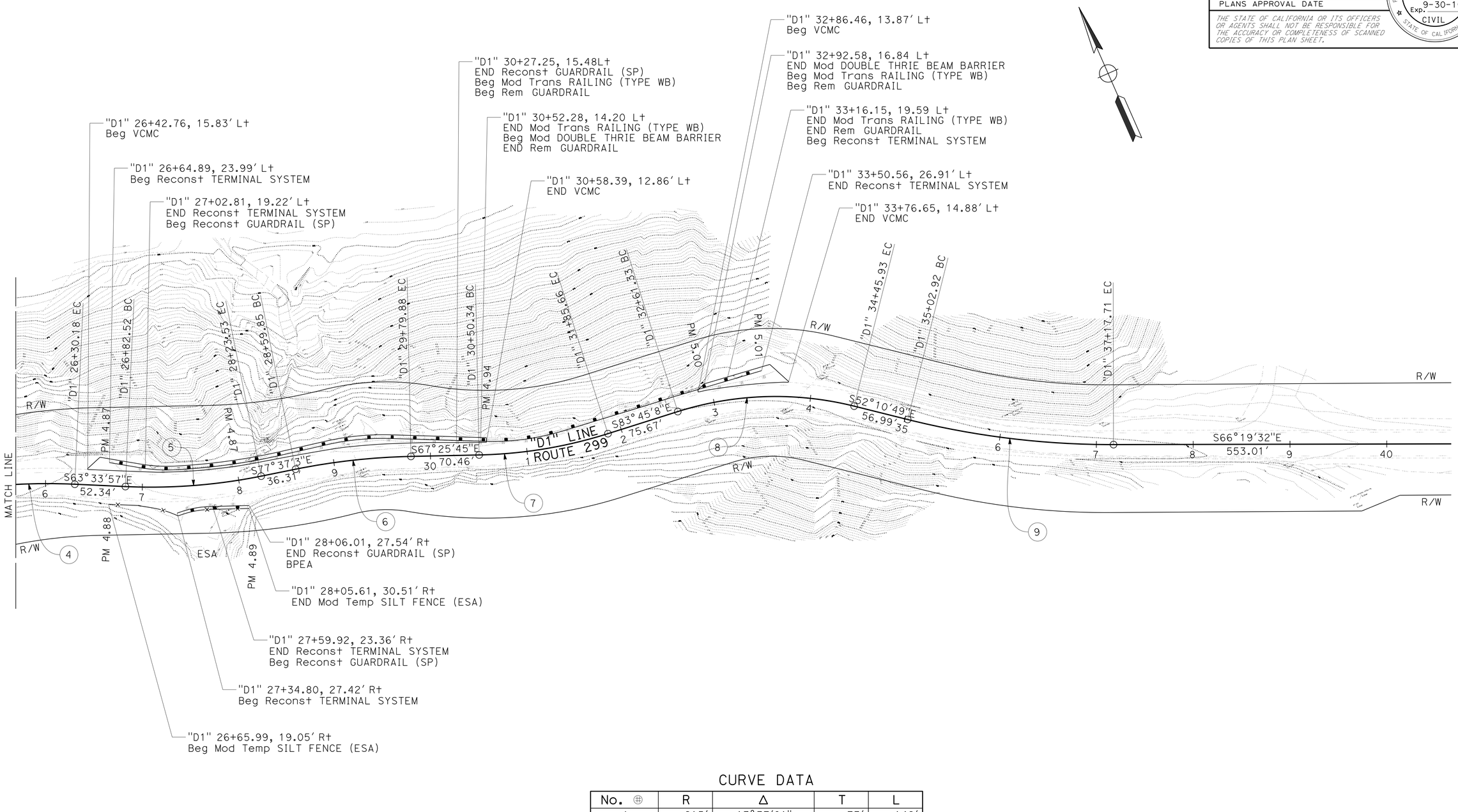

CURVE DATA

No. ⊕	R	Δ	T	L
4	615′	13°37′01"	73′	146′
5	575′	14°03′06"	71′	141′
6	675′	10°11′18"	60′	120′
7	475′	16°19′23"	68′	135′
8	335′	31°34′19"	95′	185′
9	870′	14°08′43"	108′	215′

LAYOUT

SCALE: 1" = 50′

L-7

STATE OF CALIFORNIA - DEPARTMENT OF TRANSPORTATION
Caltrans DESIGN
FUNCTIONAL SUPERVISOR: AL TRUJILLO
CALCULATED-DESIGNED BY: JEFF B. COON
CHECKED BY: SOCORRO URENA
REVISED BY / DATE REVISED

P:\proj1\02\4G380_plans\pse\24g380ea007.dgn

LAST REVISION 03-18-16 | DATE PLOTTED => 02-AUG-2016 | TIME PLOTTED => 08:15

BORDER LAST REVISED 7/2/2010 | USERNAME => s115152 | DGN FILE => 24g380ea007.dgn | RELATIVE BORDER SCALE IS IN INCHES 0 1 2 3 | UNIT 0318 | PROJECT NUMBER & PHASE 02 1400 0006 1

Dist	COUNTY	ROUTE	POST MILES TOTAL PROJECT	SHEET No.	TOTAL SHEETS
02	Tri	299	0.0/8.3	12	103

REGISTERED CIVIL ENGINEER 06-12-16 DATE

06-15-16
PLANS APPROVAL DATE

REGISTERED PROFESSIONAL ENGINEER SOCORRO V. URENA No. 79633 Exp. 9-30-16 CIVIL STATE OF CALIFORNIA

THE STATE OF CALIFORNIA OR ITS OFFICERS OR AGENTS SHALL NOT BE RESPONSIBLE FOR THE ACCURACY OR COMPLETENESS OF SCANNED COPIES OF THIS PLAN SHEET.

NOTES:

1. FOR ACCURATE RIGHT OF WAY DATA, CONTACT RIGHT OF WAY ENGINEERING AT THE DISTRICT OFFICE.

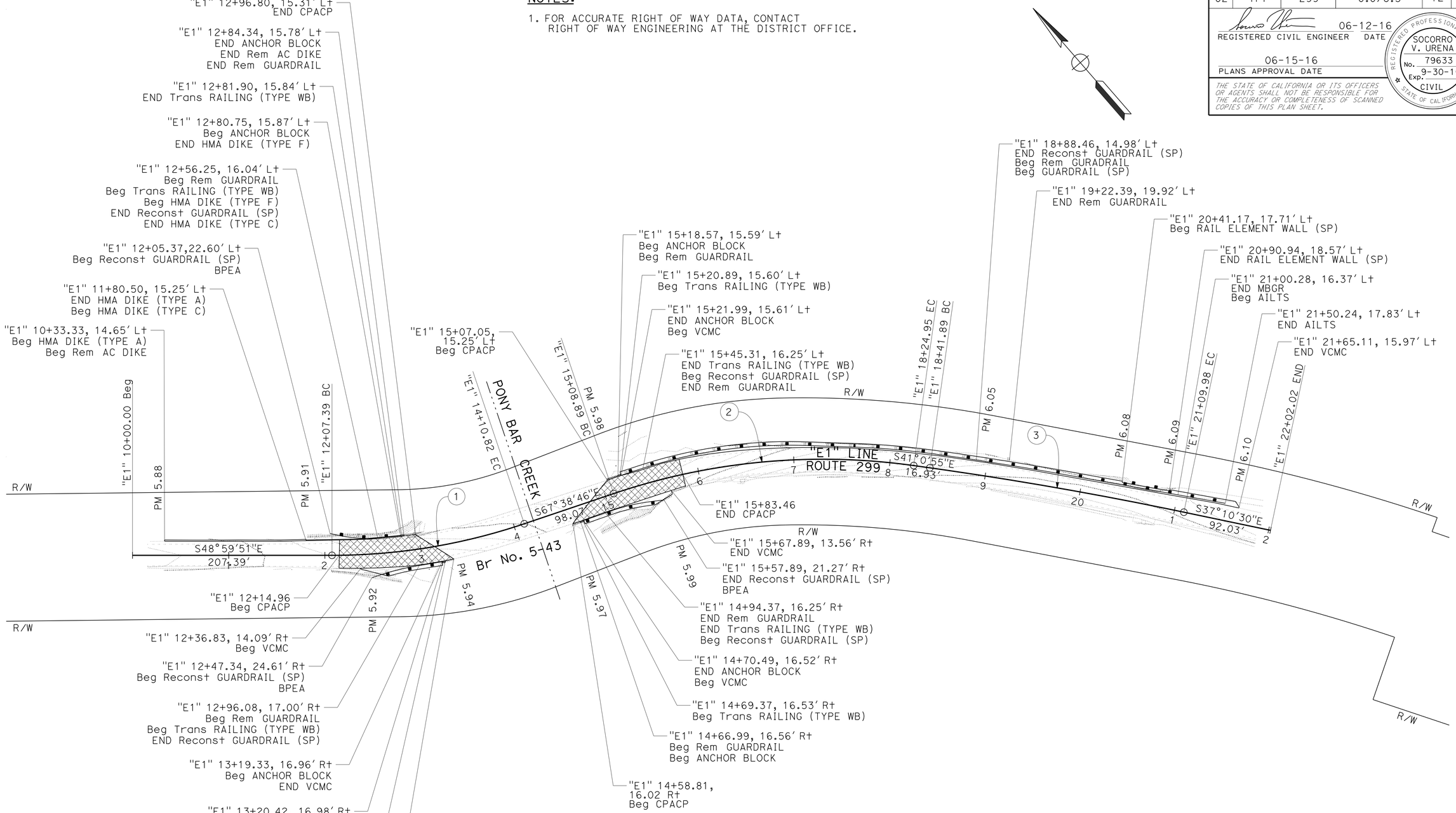

CURVE DATA

No. ⊕	R	Δ	T	L
1	625'	18°38'55"	103'	203'
2	680'	26°37'52"	161'	316'
3	4000'	03°50'25"	134'	268'

LAYOUT

SCALE: 1" = 50'

L-8

REVISED BY	DATE REVISED
JEFF B. COON	SOCORRO URENA

CALCULATED-DESIGNED BY
CHECKED BY

FUNCTIONAL SUPERVISOR: AL TRUJILLO

STATE OF CALIFORNIA - DEPARTMENT OF TRANSPORTATION
Caltrans
DESIGN

P:\proj1\02\46380_plans\pse\24g380ea008.dgn

LAST REVISION 03-18-16 | DATE PLOTTED => 02-AUG-2016 | TIME PLOTTED => 08:15

Dist	COUNTY	ROUTE	POST MILES TOTAL PROJECT	SHEET No.	TOTAL SHEETS
02	Tri	299	0.0/8.3	13	103

REGISTERED CIVIL ENGINEER 06-12-16 DATE

06-15-16
PLANS APPROVAL DATE

REGISTERED PROFESSIONAL ENGINEER SOCORRO V. URENA No. 79633 Exp. 9-30-16 CIVIL STATE OF CALIFORNIA

THE STATE OF CALIFORNIA OR ITS OFFICERS OR AGENTS SHALL NOT BE RESPONSIBLE FOR THE ACCURACY OR COMPLETENESS OF SCANNED COPIES OF THIS PLAN SHEET.

CURVE DATA

No. ⊕	R	Δ	T	L
1	1750′	06°03′25"	93′	185′
2	495′	35°44′58"	160′	309′
3	425′	38°02′04"	146′	282′
4	850′	06°02′27"	45′	90′
5	480′	32°19′37"	139′	271′
6	525′	20°17′31"	94′	186′

NOTES:

1. FOR ACCURATE RIGHT OF WAY DATA, CONTACT RIGHT OF WAY ENGINEERING AT THE DISTRICT OFFICE.

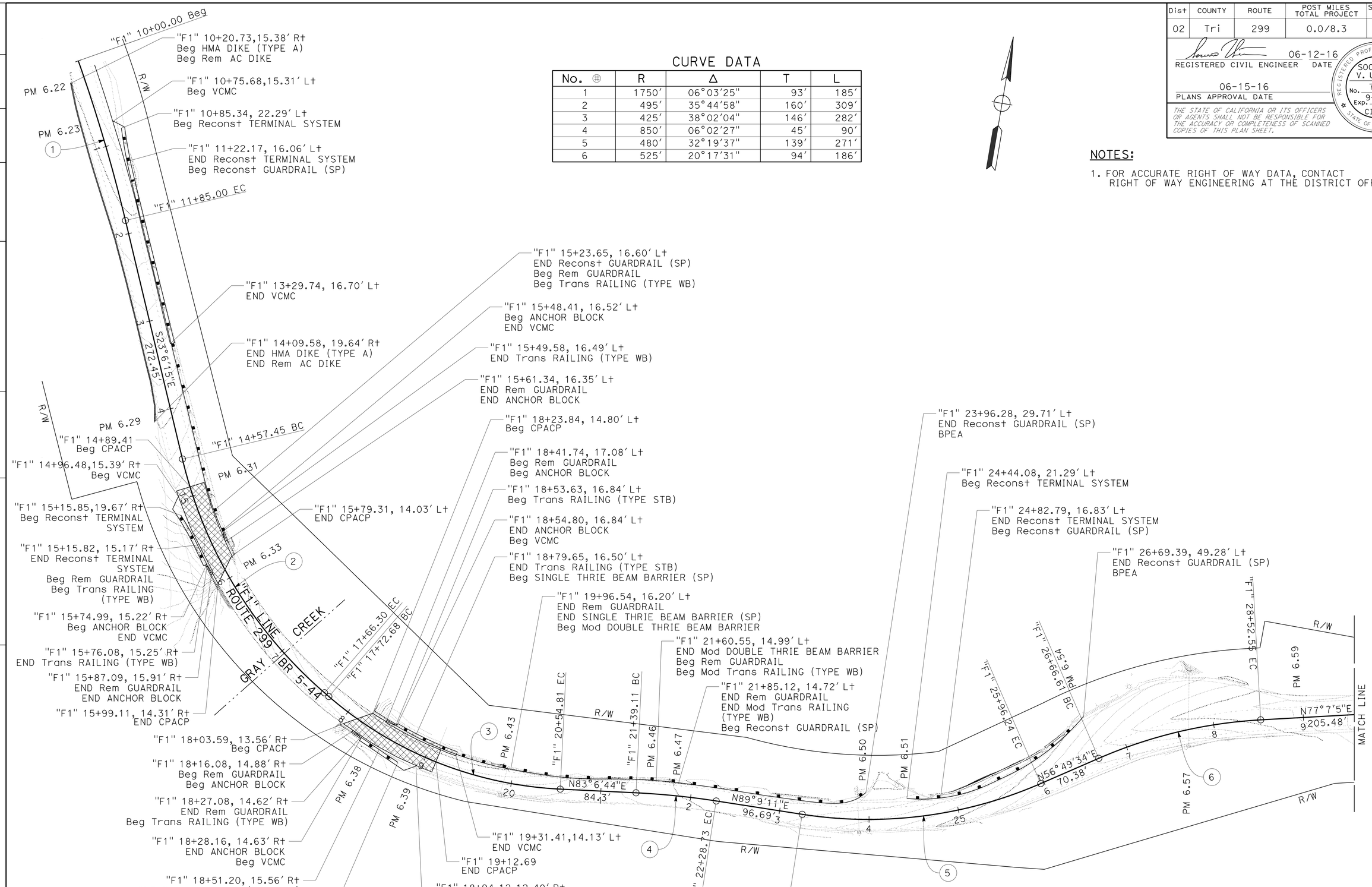

LAYOUT
SCALE: 1" = 50′

L-9

REVISED BY	DATE REVISED

CALCULATED-DESIGNED BY	CHECKED BY
JEFF B. COON	SOCORRO URENA

FUNCTIONAL SUPERVISOR: AL TRUJILLO

STATE OF CALIFORNIA - DEPARTMENT OF TRANSPORTATION
Caltrans® **DESIGN**

P:\proj\02\4G380_plans\pse\24g380ea009.dgn

LAST REVISION 05-14-16 | DATE PLOTTED => 02-AUG-2016 | TIME PLOTTED => 08:15

Dist	COUNTY	ROUTE	POST MILES TOTAL PROJECT	SHEET No.	TOTAL SHEETS
02	Tri	299	0.0/8.3	14	103

REGISTERED CIVIL ENGINEER 06-12-16 DATE

06-15-16
PLANS APPROVAL DATE

REGISTERED PROFESSIONAL ENGINEER SOCORRO V. URENA No. 79633 Exp. 9-30-16 CIVIL STATE OF CALIFORNIA

THE STATE OF CALIFORNIA OR ITS OFFICERS OR AGENTS SHALL NOT BE RESPONSIBLE FOR THE ACCURACY OR COMPLETENESS OF SCANNED COPIES OF THIS PLAN SHEET.

NOTES:

1. FOR ACCURATE RIGHT OF WAY DATA, CONTACT RIGHT OF WAY ENGINEERING AT THE DISTRICT OFFICE.

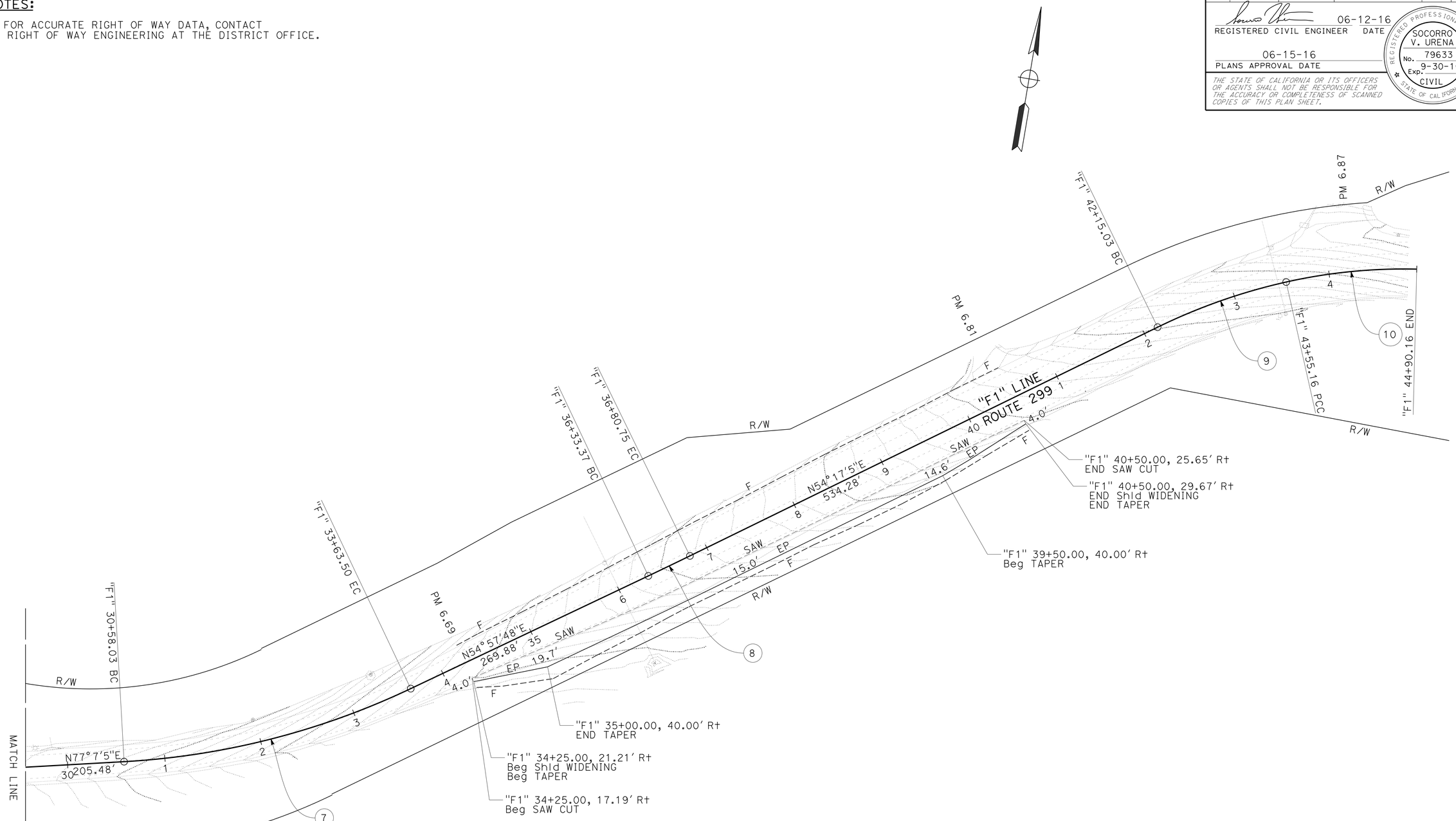

CURVE DATA

No. ⊕	R	Δ	T	L
7	790'	22°09'17"	155'	305'
8	4000'	00°40'43"	24'	47'
9	600'	13°22'52"	70'	140'
10	550'	14°03'49"	68'	135'

LAYOUT

SCALE: 1" = 50'

L-10

REVISED BY	DATE REVISED

CALCULATED-DESIGNED BY: JEFF B. COON
CHECKED BY: SOCORRO URENA
FUNCTIONAL SUPERVISOR: AL TRUJILLO

STATE OF CALIFORNIA - DEPARTMENT OF TRANSPORTATION
Caltrans
DESIGN

P:\proj1\02\4G380_plans\pse\24g380ea010.dgn

LAST REVISION 03-09-16 | DATE PLOTTED => 02-AUG-2016 | TIME PLOTTED => 08:15

Dist	COUNTY	ROUTE	POST MILES TOTAL PROJECT	SHEET No.	TOTAL SHEETS
02	Tri	299	0.0/8.3	15	103

REGISTERED CIVIL ENGINEER 06-12-16 DATE

06-15-16
PLANS APPROVAL DATE

REGISTERED PROFESSIONAL ENGINEER SOCORRO V. URENA No. 79633 Exp. 9-30-16 CIVIL STATE OF CALIFORNIA

THE STATE OF CALIFORNIA OR ITS OFFICERS OR AGENTS SHALL NOT BE RESPONSIBLE FOR THE ACCURACY OR COMPLETENESS OF SCANNED COPIES OF THIS PLAN SHEET.

NOTES:

1. FOR ACCURATE RIGHT OF WAY DATA, CONTACT RIGHT OF WAY ENGINEERING AT THE DISTRICT OFFICE.

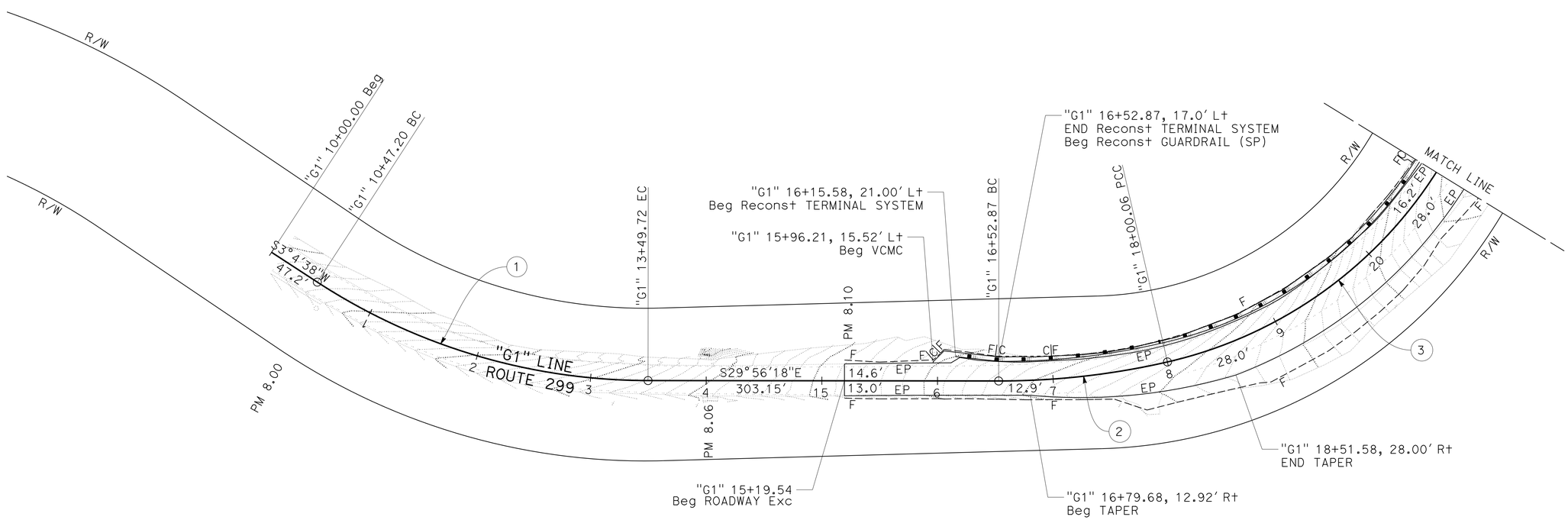

CURVE DATA

No. ⊕	R	Δ	T	L
1	525′	33°00′55"	156′	303′
2	650′	12°58′30"	74′	147′
3	375′	59°32′39"	215′	390′

LAYOUT

SCALE: 1" = 50′

L-11

REVISED BY	DATE REVISED
JEFF B. COON	SOCORRO URENA

CALCULATED-DESIGNED BY
CHECKED BY

FUNCTIONAL SUPERVISOR: AL TRUJILLO

STATE OF CALIFORNIA - DEPARTMENT OF TRANSPORTATION
Caltrans
DESIGN

P:\proj1\02\4G380_plans\pse\24g380ea011.dgn

LAST REVISION 03-18-16 | DATE PLOTTED => 02-AUG-2016 | TIME PLOTTED => 08:15

Dist	COUNTY	ROUTE	POST MILES TOTAL PROJECT	SHEET No.	TOTAL SHEETS
02	Tri	299	0.0/8.3	16	103

REGISTERED CIVIL ENGINEER 06-12-16 DATE

06-15-16
PLANS APPROVAL DATE

REGISTERED PROFESSIONAL ENGINEER SOCORRO V. URENA No. 79633 Exp. 9-30-16 CIVIL STATE OF CALIFORNIA

THE STATE OF CALIFORNIA OR ITS OFFICERS OR AGENTS SHALL NOT BE RESPONSIBLE FOR THE ACCURACY OR COMPLETENESS OF SCANNED COPIES OF THIS PLAN SHEET.

NOTES:

1. FOR ACCURATE RIGHT OF WAY DATA, CONTACT RIGHT OF WAY ENGINEERING AT THE DISTRICT OFFICE.

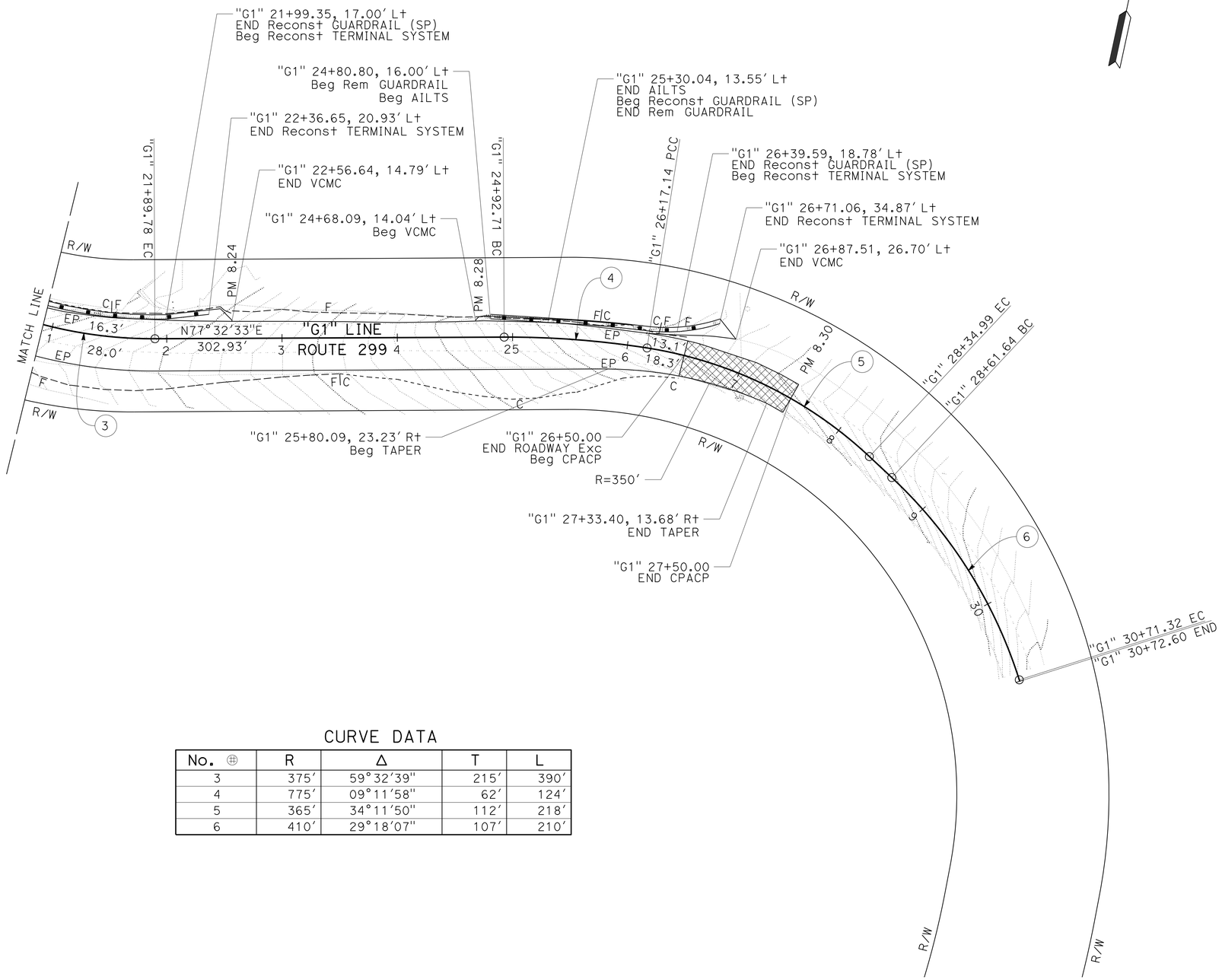

CURVE DATA

No. ⊕	R	Δ	T	L
3	375'	59°32'39"	215'	390'
4	775'	09°11'58"	62'	124'
5	365'	34°11'50"	112'	218'
6	410'	29°18'07"	107'	210'

LAYOUT

SCALE: 1" = 50'

L-12

REVISED BY | DATE REVISED
JEFF B. COON | SOCORRO URENA
CALCULATED-DESIGNED BY | CHECKED BY
FUNCTIONAL SUPERVISOR
AL TRUJILLO

STATE OF CALIFORNIA - DEPARTMENT OF TRANSPORTATION
Caltrans
DESIGN

P:\proj1\02\4G380_plans\pse\24g380ea012.dgn

LAST REVISION 03-18-16 | DATE PLOTTED => 02-AUG-2016 | TIME PLOTTED => 08:15

Dist	COUNTY	ROUTE	POST MILES TOTAL PROJECT	SHEET No.	TOTAL SHEETS
02	Tri	299	0.0/8.3	17	103

REGISTERED CIVIL ENGINEER 06-12-16 DATE

06-15-16
PLANS APPROVAL DATE

REGISTERED PROFESSIONAL ENGINEER SOCORRO V. URENA No. 79633 Exp. 9-30-16 CIVIL STATE OF CALIFORNIA

THE STATE OF CALIFORNIA OR ITS OFFICERS OR AGENTS SHALL NOT BE RESPONSIBLE FOR THE ACCURACY OR COMPLETENESS OF SCANNED COPIES OF THIS PLAN SHEET.

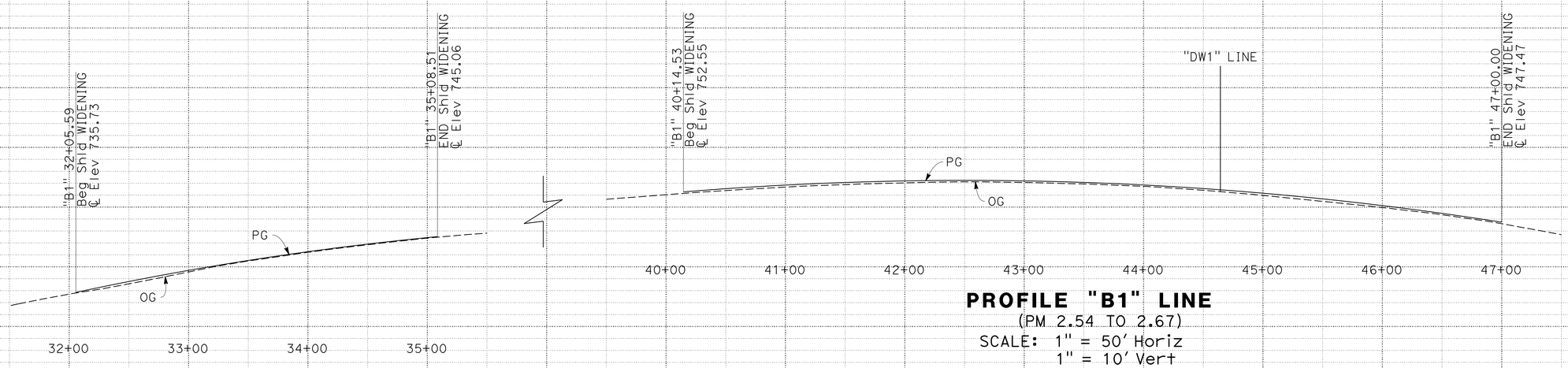

PROFILE "B1" LINE
(PM 2.38 TO 2.43)
SCALE: 1" = 50' Horiz
1" = 10' Vert

PROFILE "B1" LINE
(PM 2.54 TO 2.67)
SCALE: 1" = 50' Horiz
1" = 10' Vert

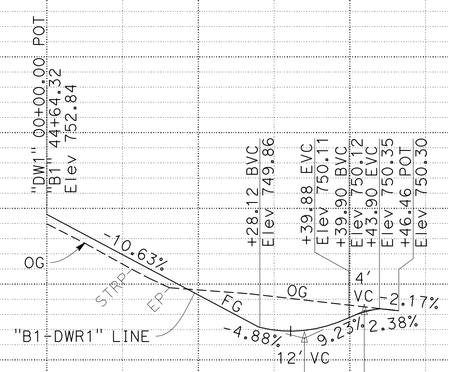

DRIVEWAY PROFILE "B1-DWR1" LINE
("B1" 44+64.32, 28' Rt)
SCALE: 1" = 10' Horiz
1" = 2' Vert

PROFILE
SCALE: AS SHOWN

P-1

STATION		TOTAL
CY	Exc	
	Emb	

REVISED BY | DATE REVISED

JEFF B. COON | SOCORRO URENA

CALCULATED-DESIGNED BY | CHECKED BY

FUNCTIONAL SUPERVISOR: AL TRUJILLO

STATE OF CALIFORNIA - DEPARTMENT OF TRANSPORTATION
Caltrans
DESIGN

P:\proj1\02\4G380_plans\pse\24g380fa001.dgn

LAST REVISION 05-20-16 | DATE PLOTTED => 02-AUG-2016 | TIME PLOTTED => 08:15

Dist	COUNTY	ROUTE	POST MILES TOTAL PROJECT	SHEET No.	TOTAL SHEETS
02	Tri	299	0.0/8.3	18	103

REGISTERED CIVIL ENGINEER 06-12-16 DATE

06-15-16
PLANS APPROVAL DATE

REGISTERED PROFESSIONAL ENGINEER
SOCORRO V. URENA
No. 79633
Exp. 9-30-16
CIVIL
STATE OF CALIFORNIA

THE STATE OF CALIFORNIA OR ITS OFFICERS OR AGENTS SHALL NOT BE RESPONSIBLE FOR THE ACCURACY OR COMPLETENESS OF SCANNED COPIES OF THIS PLAN SHEET.

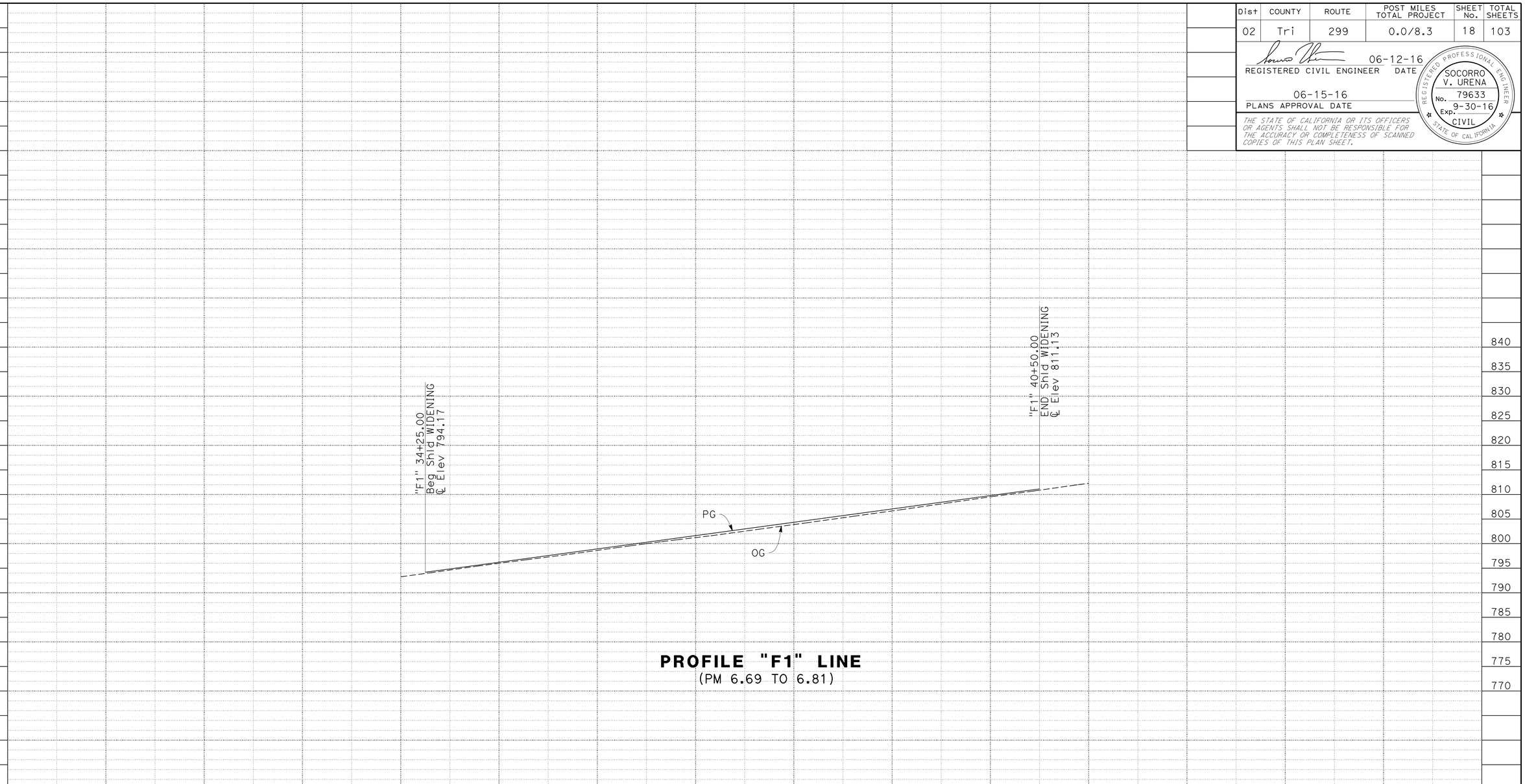

PROFILE "F1" LINE
(PM 6.69 TO 6.81)

PROFILE
SCALE: 1" = 50' Horiz
1" = 10' Vert

P-2

STATION	34+00	35+00	36+00	37+00	38+00	39+00	40+00	41+00	TOTAL
CY Exc									
CY Emb									

REVISED BY
DATE REVISED

JEFF B. COON
SOCORRO URENA

CALCULATED-DESIGNED BY
CHECKED BY

FUNCTIONAL SUPERVISOR
AL TRUJILLO

STATE OF CALIFORNIA - DEPARTMENT OF TRANSPORTATION
Caltrans
DESIGN

P:\proj1\02\4G380_plans\pse\24g380fa002.dgn

LAST REVISION 03-09-16
DATE PLOTTED => 02-AUG-2016
TIME PLOTTED => 08:15

Dist	COUNTY	ROUTE	POST MILES TOTAL PROJECT	SHEET No.	TOTAL SHEETS
02	Tri	299	0.0/8.3	19	103

REGISTERED CIVIL ENGINEER 06-12-16 DATE

06-15-16
PLANS APPROVAL DATE

REGISTERED PROFESSIONAL ENGINEER SOCORRO V. URENA No. 79633 Exp. 9-30-16 CIVIL STATE OF CALIFORNIA

THE STATE OF CALIFORNIA OR ITS OFFICERS OR AGENTS SHALL NOT BE RESPONSIBLE FOR THE ACCURACY OR COMPLETENESS OF SCANNED COPIES OF THIS PLAN SHEET.

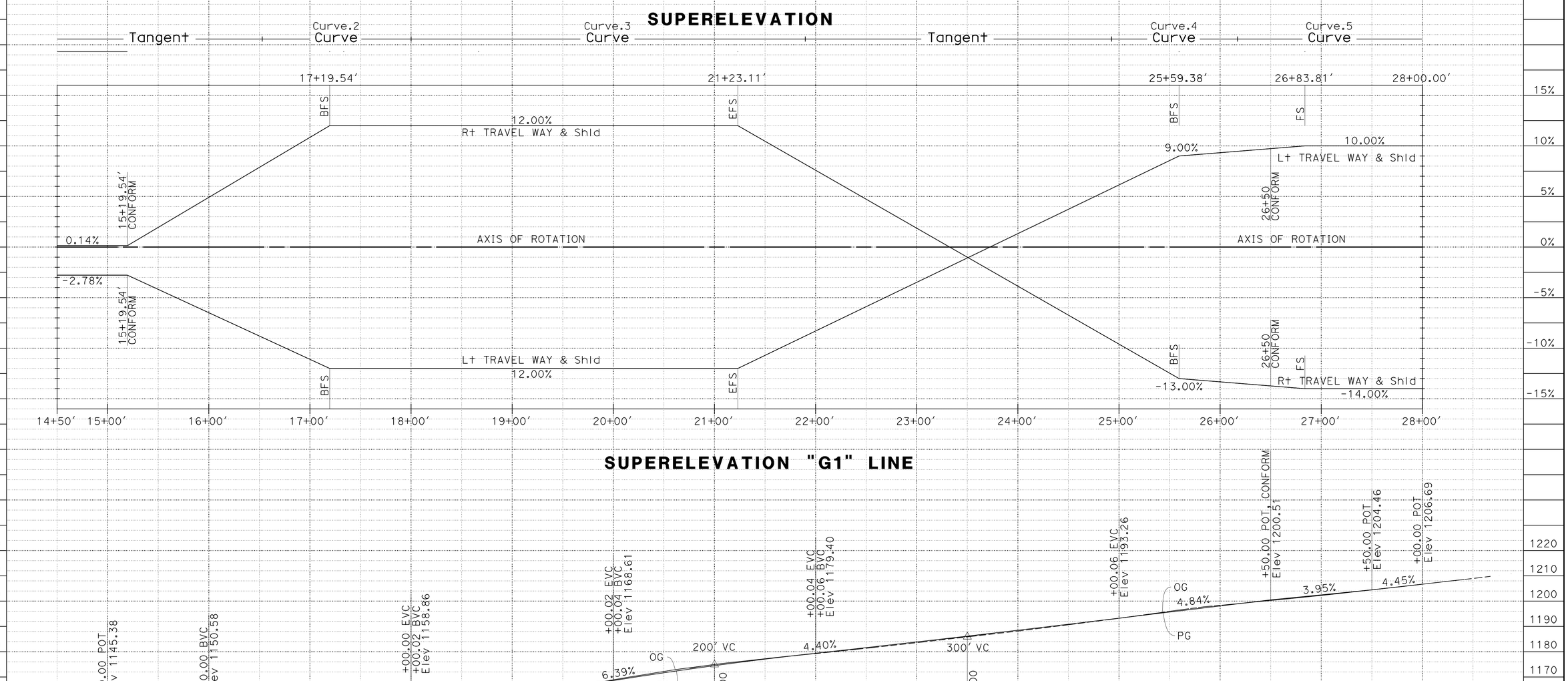

PROFILE AND SUPERELEVATION DIAGRAM

SCALE: 1" = 50' Horiz
1" = 20' Vert

PS-1

STATION		15+00	16+00	17+00	18+00	19+00	20+00	21+00	22+00	23+00	24+00	25+00	26+00	27+00	28+00	TOTAL
CY	Exc	0.0					387.8					556.6		302.6	302.6	1247.0
	Emb	0.0					174.9					142.5		0.6	0.6	318.0

REVISED BY | DATE REVISED
JEFF B. COON | SOCORRO URENA
CALCULATED-DESIGNED BY | CHECKED BY
FUNCTIONAL SUPERVISOR
AL TRUJILLO

STATE OF CALIFORNIA - DEPARTMENT OF TRANSPORTATION
Caltrans
DESIGN

P:\proj\02\4G380_plans\pse\24g380fb001.dgn

LAST REVISION 03-09-16 | DATE PLOTTED => 02-AUG-2016 | TIME PLOTTED => 08:15

Dist	COUNTY	ROUTE	POST MILES TOTAL PROJECT	SHEET No.	TOTAL SHEETS
02	Tri	299	0.0/8.3	20	103

REGISTERED CIVIL ENGINEER 06-12-16 DATE

06-15-16
PLANS APPROVAL DATE

REGISTERED PROFESSIONAL ENGINEER SOCORRO V. URENA No. 79633 Exp. 9-30-16 CIVIL STATE OF CALIFORNIA

THE STATE OF CALIFORNIA OR ITS OFFICERS OR AGENTS SHALL NOT BE RESPONSIBLE FOR THE ACCURACY OR COMPLETENESS OF SCANNED COPIES OF THIS PLAN SHEET.

NOTES:

1. FOR COMPLETE RIGHT OF WAY DATA, SEE RIGHT OF WAY RECORD MAPS AT DISTRICT OFFICE.
2. PAVE RHMA (GAP GRADED) AND RHMA (OPEN GRADED) FROM EDGE OF PAVEMENT TO EDGE OF PAVEMENT.
3. IN AREAS WHERE THE WIDTH OF THE EXISTING SURFACING VARIES FROM THAT SHOWN, VARY THE WIDTH OF THE PAVING OPERATIONS AS DIRECTED BY THE ENGINEER.
4. MAINTAIN EXISTING FLOW LINE ELEVATIONS, OTHERWISE AS SPECIFIED BY THESE PLANS OR AS DIRECTED BY THE ENGINEER.
5. EXISTING UTILITY FACILITIES HAVE NOT BEEN PLOTTED ON THESE PLANS.
6. FOR DETAILS NOT SHOWN ON THESE CONSTRUCTION DETAILS, SEE THE STANDARD PLANS.

LEGEND:

- LIMITS OF CPACP
- LIMITS OF RHMA-G
- LIMITS OF RHMA-O

ABBREVIATIONS:

CPACP	COLD PLANE ASPHALT CONCRETE PAVEMENT
RHMA-O	RUBBERIZED HOT MIX ASPHALT-OPEN GRADED (OPEN GRADED - FRICTION COURSE)
RHMA-G	RUBBERIZED HOT MIX ASPHALT (GAP GRADED)
VCMC	VEGETATION CONTROL (MINOR CONCRETE)

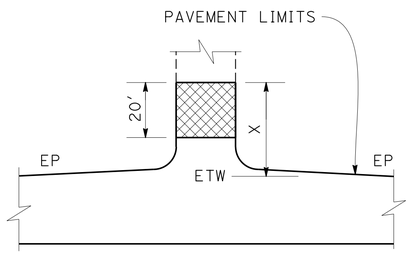

PUBLIC ROAD CONNECTION

LOCATION	PM	X FT
S FORK CO Rd 447	0.15 R+	37
SALYER FORESTRY STA	0.98 R+	20
CAMPBELL RIDGE Rd	1.10 L+	35
SALYER STORE	1.10 R+	35
SALYER TLR PARK	1.30 R+	23
SALYER RDSIDE REST	R3.56 R+	25
DENNY Rd	5.47 L+	25
HANSEN Rd	6.89 L+	25
GRAYS FLAT Rd	7.06 L+	24
AMMON Rd	7.16 L+	20
GRAY FALL CMPGRND	7.63 L+	45

LIMITS OF SURFACING FOR PUBLIC ROAD CONNECTIONS

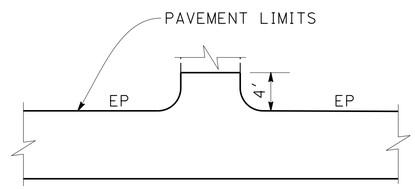

PRIVATE ROAD CONNECTION

DESCRIPTION	PM
CHURCH	0.84 R+
FORESTRY STA	0.98 R+
ACCESS Rd	1.09 L+
PRIVATE Dr	1.36 L+
PRIVATE Dr	1.42 R+
PRIVATE Dr	1.43 L+
PRIVATE Dr	2.66 R+
PRIVATE Dr	4.19 R+
TRINITY RIVER B&B	5.04 L+
PRIVATE Dr	5.10 L+
PRIVATE Dr	5.20 L+

LIMITS OF SURFACING FOR PRIVATE ROAD CONNECTIONS

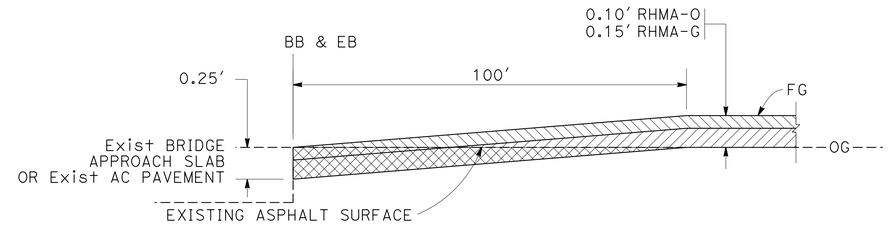

COLD PLANE AC PAVEMENT ON MAINLINE, BB & EB

PM 0.04, R3.16, R3.28, R3.44, R3.54, 5.94, 5.97, 6.33, 6.38, & 8.30

LOCATION	PM
EB S FORK TRI RVR	0.04
WEST WHOLE ENCHILADA	0.40
EAST WHOLE ENCHILADA	0.90
WEST SALYER CURVES	2.20
EAST SALYER CURVES	2.54
BB TRINITY RIVER 5-81	R3.16
EB TRINITY RIVER 5-81	R3.28
BB TRINITY RIVER 5-82	R3.44
EB TRINITY RIVER 5-82	R3.54
BB PONY BAR CREEK	5.94
EB PONY BAR CREEK	5.97
BB GRAY CREEK	6.33
EB GRAY CREEK	6.38
EAST PROJECT CONFORM	8.30

COLD PLANE AC PAVEMENT ON MAINLINE, BB & EB, AND PROJECT CONFORMS

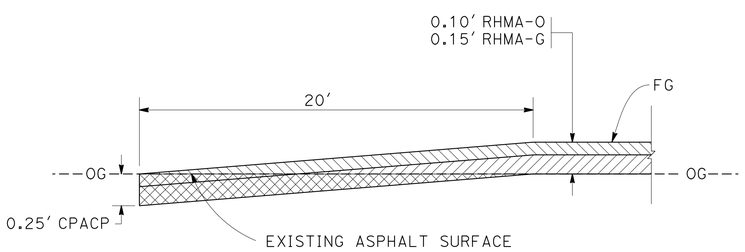

COLD PLANE AC PAVEMENT AT PUBLIC ROAD CONNECTIONS

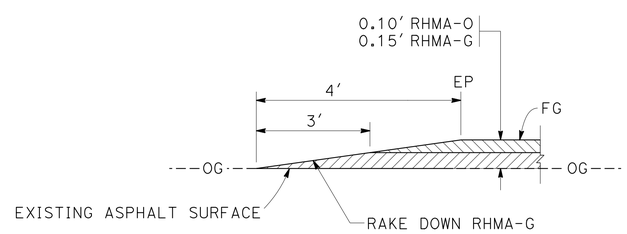

HMA CONFORM AT PRIVATE ROAD CONNECTIONS

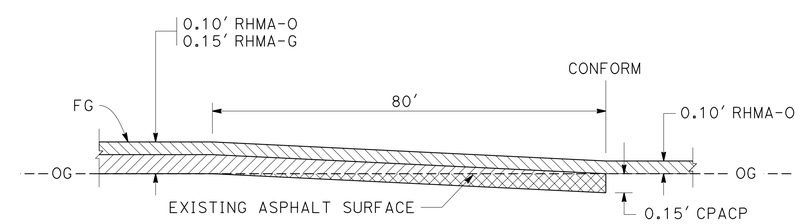

COLD PLANE AC PAVEMENT AT PROJECT CONFORMS

PM 0.40, 0.90, 2.20, & 2.54

CONSTRUCTION DETAILS

NO SCALE

C-1

REVISED BY | DATE REVISED
JEFF B. COON | SOCORRO URENA
CALCULATED-DESIGNED BY | CHECKED BY
FUNCTIONAL SUPERVISOR | AL TRUJILLO

STATE OF CALIFORNIA - DEPARTMENT OF TRANSPORTATION
Caltrans
DESIGN

P:\proj1\02\4G380_plans\pse\24g380ga001.dgn

LAST REVISION 12-22-15 | DATE PLOTTED => 02-AUG-2016 | TIME PLOTTED => 08:15

Dist	COUNTY	ROUTE	POST MILES TOTAL PROJECT	SHEET No.	TOTAL SHEETS
02	Tri	299	0.0/8.3	21	103

REGISTERED CIVIL ENGINEER 06-12-16 DATE

06-15-16
PLANS APPROVAL DATE

REGISTERED PROFESSIONAL ENGINEER SOCORRO V. URENA No. 79633 Exp. 9-30-16 CIVIL STATE OF CALIFORNIA

THE STATE OF CALIFORNIA OR ITS OFFICERS OR AGENTS SHALL NOT BE RESPONSIBLE FOR THE ACCURACY OR COMPLETENESS OF SCANNED COPIES OF THIS PLAN SHEET.

NOTES:

1. RAIL ELEMENT SPLICES TO BE STANDARD 8 BOLT GUARDRAIL CONNECTIONS.
2. IF GUARDRAIL POST WILL NOT ALIGN WITH HOLE IN GUARDRAIL ELEMENT, FOR RAIL ELEMENT WALL, CUT NEW HOLE IN ELEMENT AND USE FLAT PLATE WASHER ON GUARDRAIL BOLT HEAD FOR REINFORCEMENT.

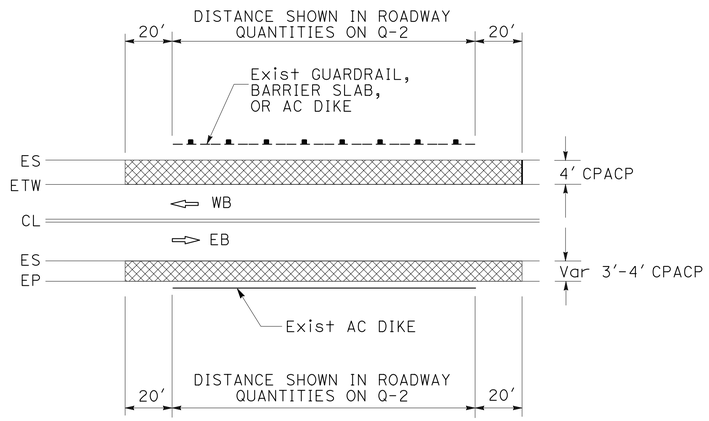

PLAN

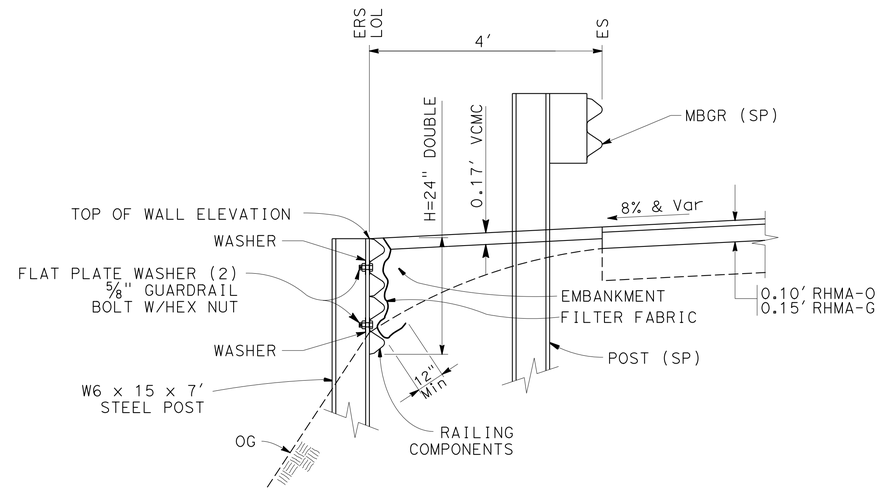

SECTION A-A

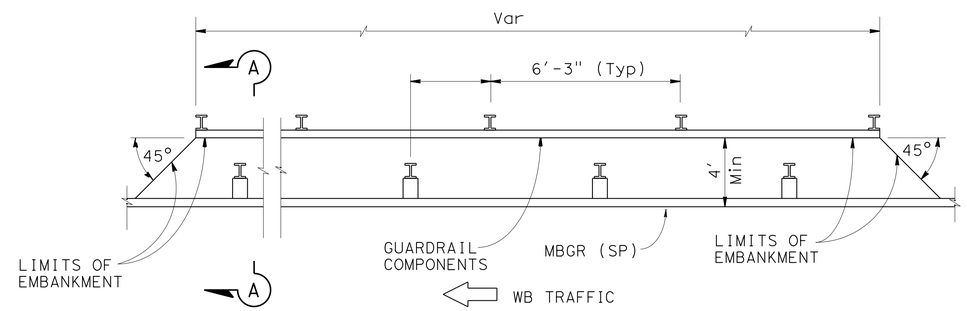

PLAN

RAIL ELEMENT WALL

"E1" 20+41.17 TO 20+90.94 Lt

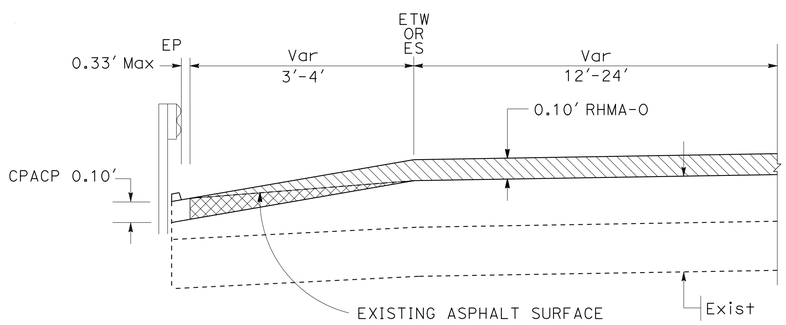

COLD PLANE AC PAVEMENT AT GUARDRAIL, BARRIER SLAB, OR AC DIKE

PM 0.58 TO 0.78 Lt
PM 0.60 TO 0.70 Rt
PM 2.20 TO 2.52 Rt
PM 2.22 TO 2.37 Lt

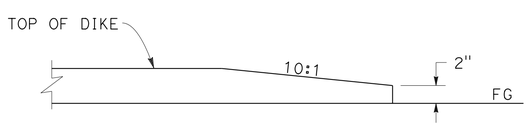

DIKE END TRANSITION

TYPICAL ALL DIKES

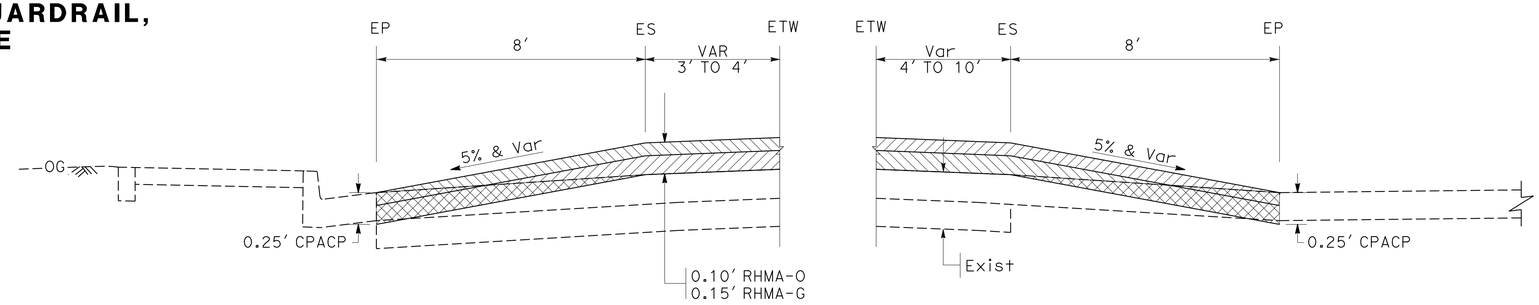

COLD PLANE AC PAVEMENT AT CONCRETE CURB WITH ADA RAMP

PM 1.11 TO 1.13 Lt
PM 1.11 TO 1.13 Rt

CONSTRUCTION DETAILS

NO SCALE

C-2

REVISED BY | DATE REVISED
JEFF B. COON | SOCORRO URENA
CALCULATED-DESIGNED BY | CHECKED BY
FUNCTIONAL SUPERVISOR
AL TRUJILLO

STATE OF CALIFORNIA - DEPARTMENT OF TRANSPORTATION
Caltrans
DESIGN

P:\proj1\02\4G380_plans\pse\24g380ga002.dgn

LAST REVISION 06-09-16 | DATE PLOTTED => 02-AUG-2016 | TIME PLOTTED => 08:15

Dist	COUNTY	ROUTE	POST MILES TOTAL PROJECT	SHEET No.	TOTAL SHEETS
02	Tri	299	0.0/8.3	22	103

REGISTERED CIVIL ENGINEER 06-12-16 DATE

PLANS APPROVAL DATE 06-15-16

REGISTERED PROFESSIONAL ENGINEER SOCORRO V. URENA No. 79633 Exp. 9-30-16 CIVIL STATE OF CALIFORNIA

THE STATE OF CALIFORNIA OR ITS OFFICERS OR AGENTS SHALL NOT BE RESPONSIBLE FOR THE ACCURACY OR COMPLETENESS OF SCANNED COPIES OF THIS PLAN SHEET.

NOTES:

1. THE CONTRACTOR MUST VERIFY ALL CONTROLLING FIELD DIMENSIONS BEFORE ORDERING OR FABRICATING ANY MATERIAL.
2. ADJUST TO EXISTING FIELD CONDITIONS.

LEGEND:

-·-·-·- INDICATES EXISTING STRUCTURE

——— INDICATES NEW CONSTRUCTION

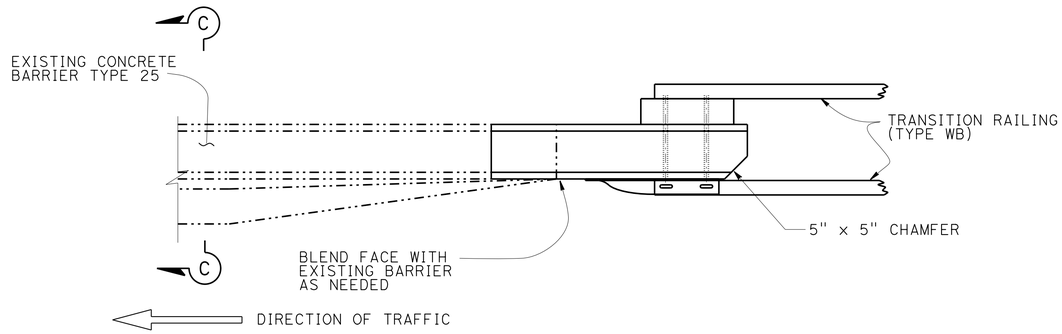

PLAN

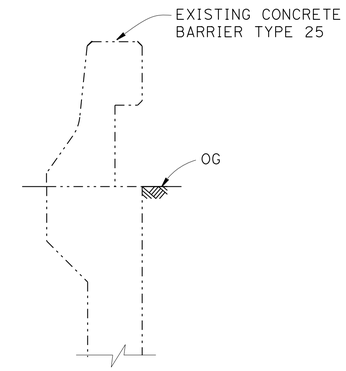

SECTION C-C

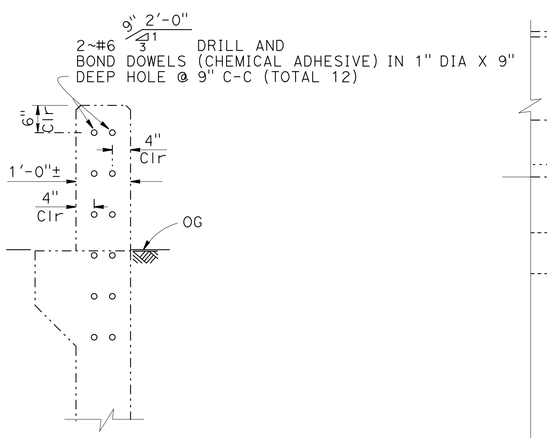

SECTION A-A

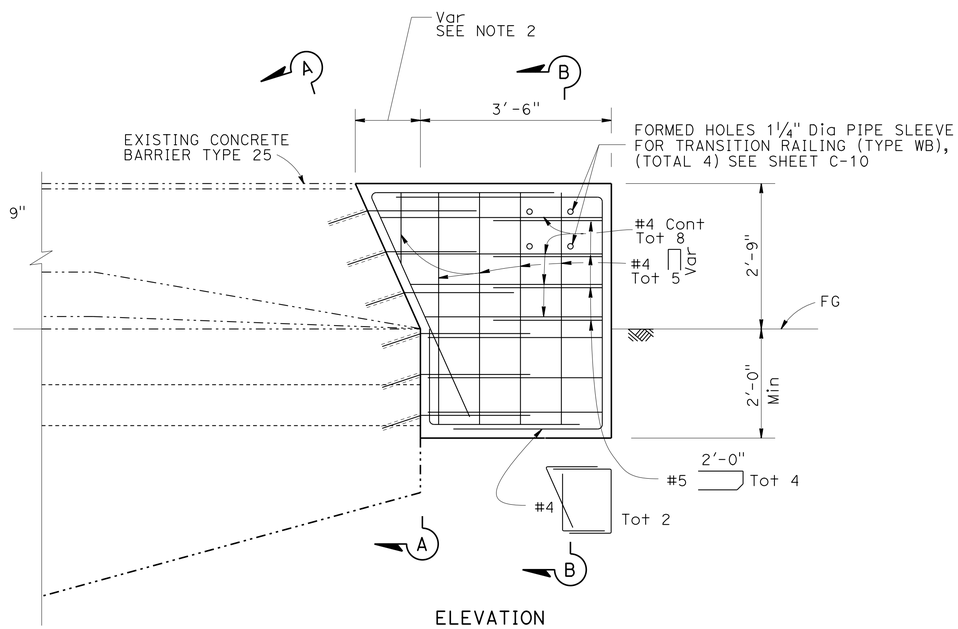

ELEVATION

ANCHOR BLOCK

"A1" 11+90.49 TO 11+93.88 L+	"A1" 12+49.91 TO 12+53.52 R+
"C1" 12+69.94 TO 12+73.53 L+	"C1" 12+71.53 TO 12+74.93 R+
"C1" 19+76.46 TO 19+78.90 R+	"C1" 19+74.85 TO 19+78.25 L+
"C1" 27+50.02 TO 27+63.61 L+	"C1" 27+61.59 TO 27+64.99 R+
"C1" 33+01.90 TO 33+05.30 R+	"C1" 33+02.20 TO 33+05.85 L+
"E1" 12+80.75 TO 12+84.34 L+	"E1" 13+19.33 TO 13+22.73 R+
"E1" 14+66.99 TO 14+70.49 R+	"E1" 15+18.57 TO 15+21.99 L+

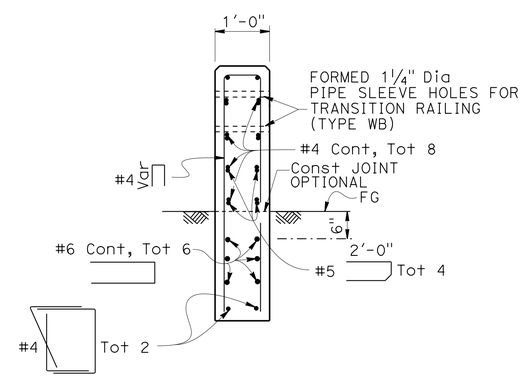

SECTION B-B

THRIE BEAM NOT SHOWN

CONSTRUCTION DETAILS

SCALE: ¾" = 1'-0"

C-3

REVISED BY | DATE REVISED

JEFF B. COON | SOCORRO URENA

CALCULATED-DESIGNED BY | CHECKED BY

FUNCTIONAL SUPERVISOR: AL TRUJILLO

STATE OF CALIFORNIA - DEPARTMENT OF TRANSPORTATION

Caltrans DESIGN

P:\proj1\02\4G380_plans\pse\24g380ga003.dgn

LAST REVISION 10-27-15 | DATE PLOTTED => 02-AUG-2016 | TIME PLOTTED => 08:15

Dist	COUNTY	ROUTE	POST MILES TOTAL PROJECT	SHEET No.	TOTAL SHEETS
02	Tri	299	0.0/8.3	23	103

REGISTERED CIVIL ENGINEER 06-12-16 DATE

PLANS APPROVAL DATE 06-15-16

REGISTERED PROFESSIONAL ENGINEER SOCORRO V. URENA No. 79633 Exp. 9-30-16 CIVIL STATE OF CALIFORNIA

THE STATE OF CALIFORNIA OR ITS OFFICERS OR AGENTS SHALL NOT BE RESPONSIBLE FOR THE ACCURACY OR COMPLETENESS OF SCANNED COPIES OF THIS PLAN SHEET.

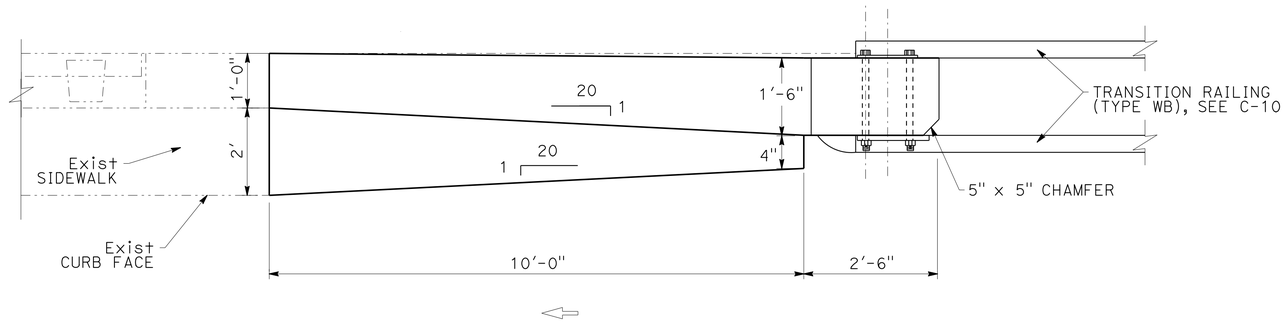

PLAN

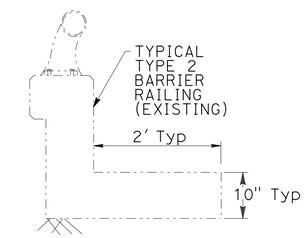

SECTION A-A

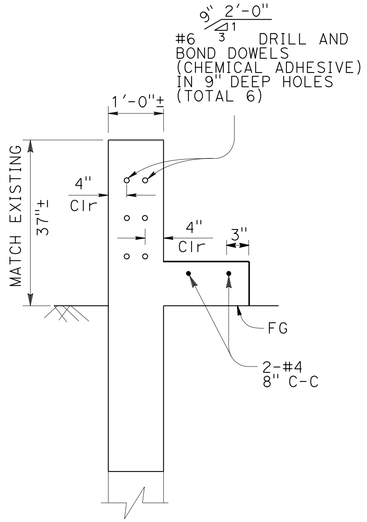

SECTION B-B

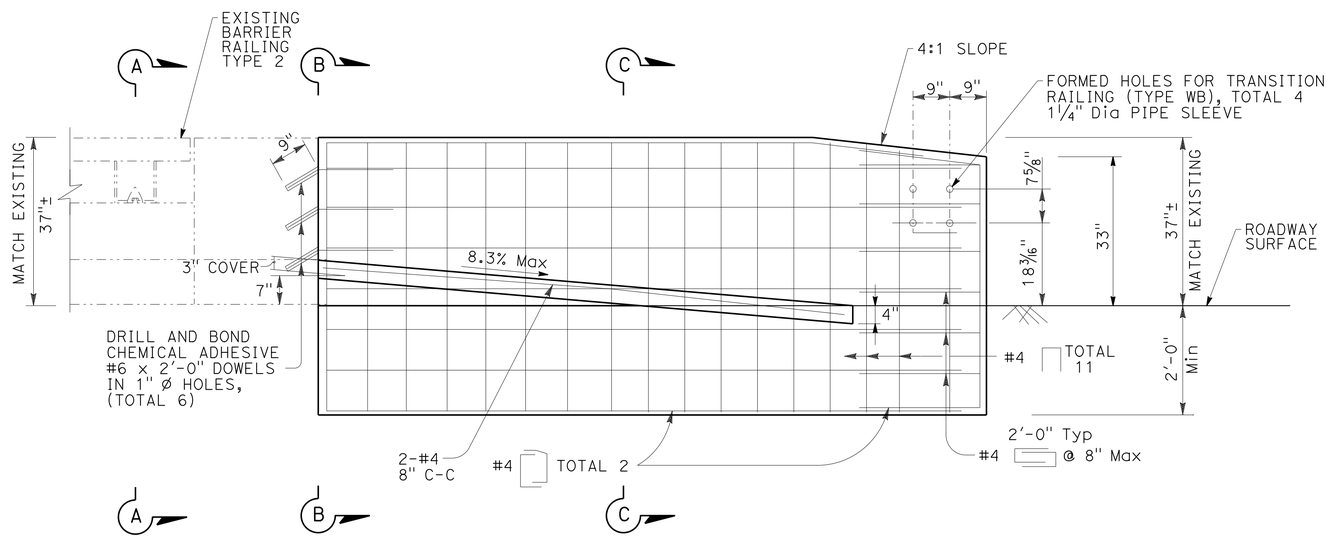

ELEVATION

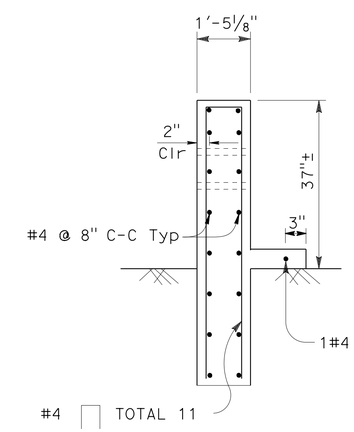

SECTION C-C

CONCRETE BARRIER (TRANSITION ANCHOR BLOCK), BARRIER RAILING TYPE 2

"F1" 15+48.41 TO 15+61.34 L+ "F1" 18+16.08 TO 18+28.16 R+
"F1" 15+74.99 TO 15+87.09 R+ "F1" 18+41.74 TO 18+54.80 L+

CONSTRUCTION DETAILS

NO SCALE

C-4

REVISED BY	DATE REVISED
JEFF B. COON	SOCORRO URENA
CALCULATED-DESIGNED BY	CHECKED BY
FUNCTIONAL SUPERVISOR	AL TRUJILLO

STATE OF CALIFORNIA - DEPARTMENT OF TRANSPORTATION

Caltrans DESIGN

P:\proj1\02\4G380_plans\pse\24g380ga004.dgn

LAST REVISION 06-10-16 DATE PLOTTED => 02-AUG-2016 TIME PLOTTED => 08:15

Dist	COUNTY	ROUTE	POST MILES TOTAL PROJECT	SHEET No.	TOTAL SHEETS
02	Tri	299	0.0/8.3	24	103

Dwight D Winterlin 06-12-16
REGISTERED CIVIL ENGINEER DATE

06-15-16
PLANS APPROVAL DATE

REGISTERED PROFESSIONAL ENGINEER DWIGHT WINTERLIN No. 68438 Exp 9-30-17 CIVIL STATE OF CALIFORNIA

THE STATE OF CALIFORNIA OR ITS OFFICERS OR AGENTS SHALL NOT BE RESPONSIBLE FOR THE ACCURACY OR COMPLETENESS OF SCANNED COPIES OF THIS PLAN SHEET.

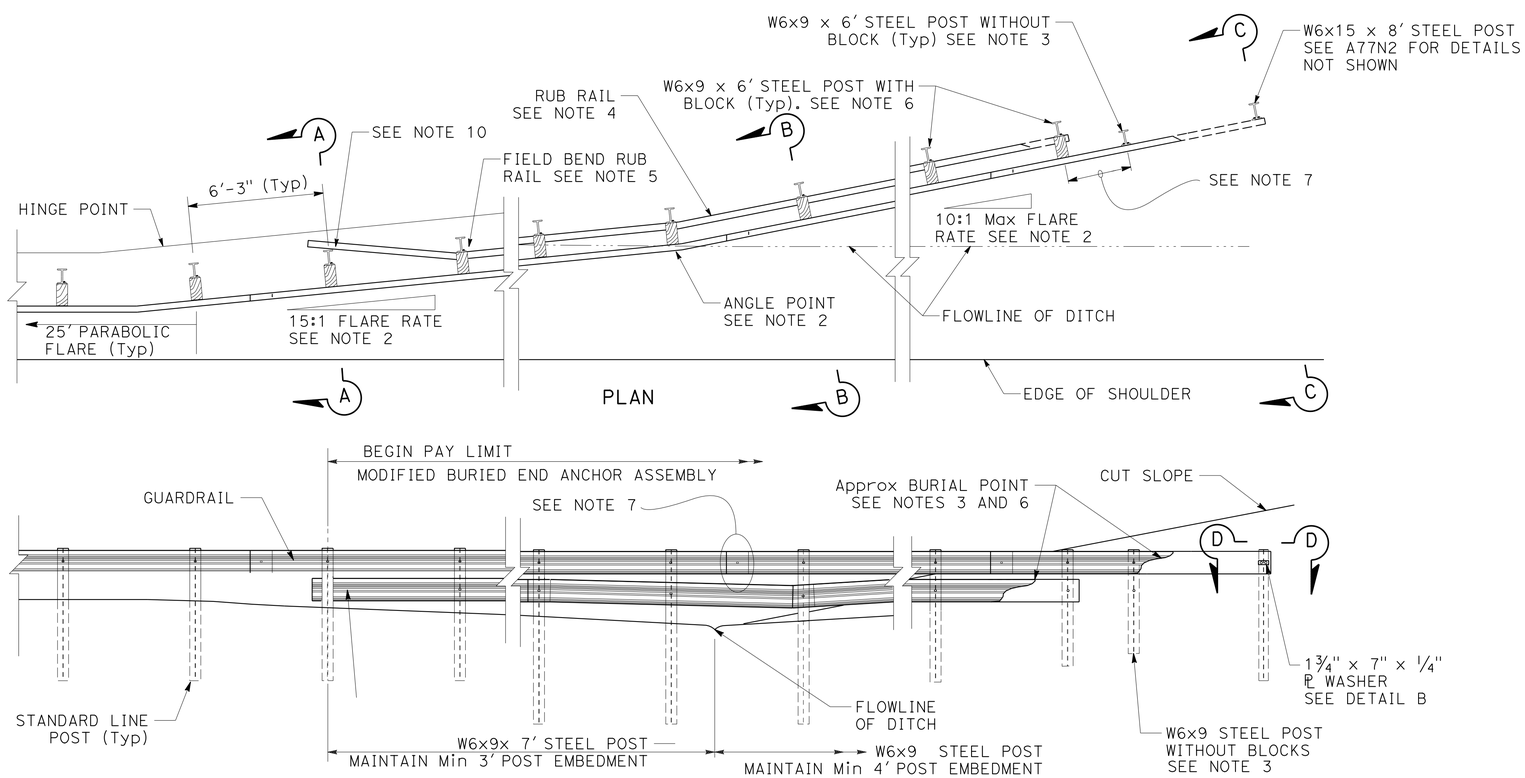

ELEVATION
(PROFILE ALONG RAIL)

NOTES:

1. ELEVATION OF THE GUARDRAIL SHOULD FOLLOW THE PROFILE GRADE OF THE SHOULDER AND BE NO LOWER THAN 10% OF THE OFFSET FROM THE SHOULDER TO THE RAIL. SEE SECTION B-B AND SECTION C-C.
2. MAXIMUM FLARE RATE OF GUARDRAIL FROM THE SHOULDER TO THE FLOWLINE IS 15:1. FLARE RATE CAN BE INCREASED UP TO 10:1 AFTER CROSSING THE DITCH FLOWLINE.
3. NO BLOCKS ON POSTS WHERE BLOCKS ARE IN CONTACT WITH SOIL.
4. USE STANDARD GUARDRAIL ELEMENTS WITH NO BLOCKS FOR RUB RAIL.
5. BEGIN RUB RAIL WHEN THE HEIGHT OF THE GUARDRAIL IS MORE THAN 32" ABOVE THE GROUND DIRECTLY BELOW THE RAIL. HOLES CUT THOUGH FLANGE OF STEEL POST SHALL BE ¾"ø AND ON THE TRAILING SIDE OF POST.
6. CONTINUE RUB RAIL UNTIL TOP OF RUB RAIL BURIED IN THE BACKSLOPE.
7. POST SPACING AND ELEMENT SPLICES SHOWN FOR MGS. MAINTAIN 6'-3" SPACING AND SPLICE ELEMENTS AT POSTS FOR MBGR.
8. THE BURIED POST END ANCHOR SHOULD BE INSTALLED IN A NON-TRAVERSABLE SLOPE.
9. ANCHOR POST MAY BE MOVED 1 POST FROM END IF AUTHORIZED.
10. ONE WAY ROADWAYS AT TRAILING END, RUB RAIL MAY REMAIN ON TRAFFIC SIDE OF POST.
11. 6" MINIMUM AT FLOW LINE.
12. ROCK ANCHOR OPTION MAY BE AVAILABLE IF AUTHORIZED.
13. EXISTING UTILITY FACILITIES ARE NOT SHOWN ON THESE PLANS.

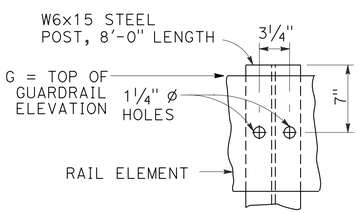

DETAIL A

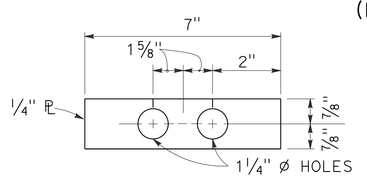

DETAIL B

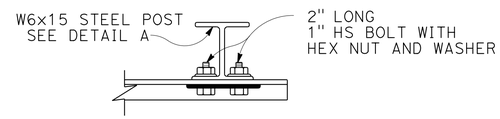

ANCHOR POST DETAIL SECTION D-D

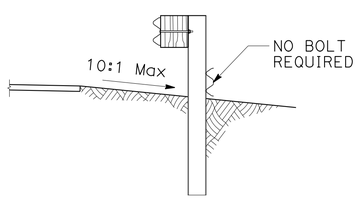

SECTION A-A

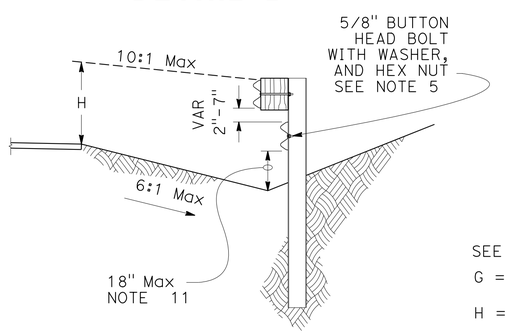

SECTION B-B

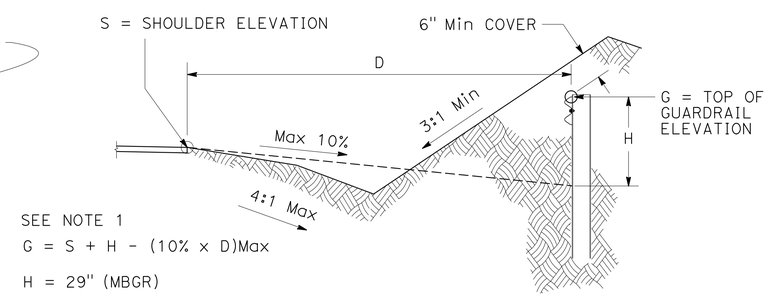

SECTION C-C

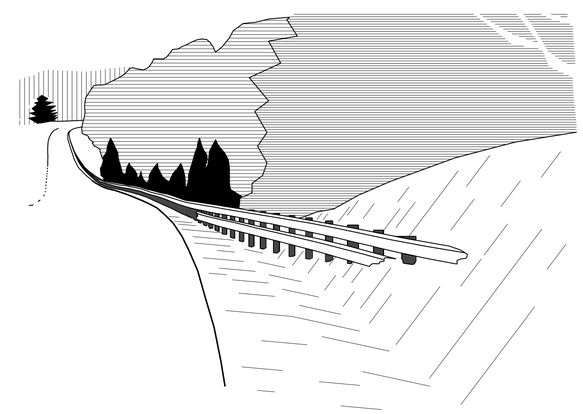

PERSPECTIVE

CONSTRUCTION DETAILS
GUARDRAIL MODIFIED BURIED END ANCHOR ASSEMBLY

NO SCALE

C-5

REVISED BY	DATE REVISED

CALCULATED-DESIGNED BY	CHECKED BY
SOCORRO URENA	DWIGHT WINTERLIN

FUNCTIONAL SUPERVISOR: AL TRUJILLO

STATE OF CALIFORNIA - DEPARTMENT OF TRANSPORTATION
Caltrans® DESIGN

P:\proj1\02\40380_plans\pse\24g380ga005.dgn

LAST REVISION 12-9-15
DATE PLOTTED => 02-AUG-2016
TIME PLOTTED => 08:15

Dist	COUNTY	ROUTE	POST MILES TOTAL PROJECT	SHEET No.	TOTAL SHEETS
02	Tri	299	0.0/8.3	25	103

Dwight D Winterlin 06-12-16
REGISTERED CIVIL ENGINEER DATE

06-15-16
PLANS APPROVAL DATE

REGISTERED PROFESSIONAL ENGINEER DWIGHT WINTERLIN No. 68438 Exp. 9-30-17 CIVIL STATE OF CALIFORNIA

THE STATE OF CALIFORNIA OR ITS OFFICERS OR AGENTS SHALL NOT BE RESPONSIBLE FOR THE ACCURACY OR COMPLETENESS OF SCANNED COPIES OF THIS PLAN SHEET.

NOTES:

1. CONNECTION DETAIL D APPLIES TO THE CONNECTION TO STACKED STONE WALLS
2. FOR RAILING DETAILS, SEE GUARD RAILING TRANSITION (TYPE WB).
3. ANCHOR POST ASSEMBLY TO BE GALVANIZED AFTER FABRICATION.
4. CIDH PILE DETAILS SEE Std PLAN B2-3.
5. CORE DRILL THROUGH EXISTING STACKED STONE WALL WITH NO VIBRATION OR IMPACT TO MAINTAIN MORTAR ADHESION INTEGRITY.
6. FIELD VERIFY BEFORE FABRICATION.

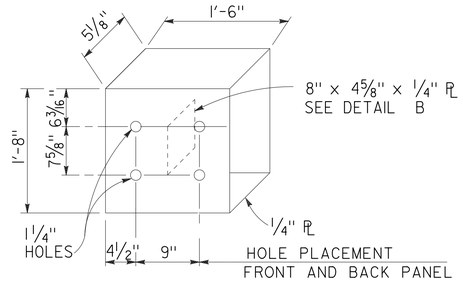

DETAIL A

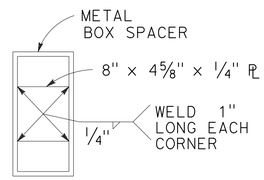

DETAIL B

METAL BOX SPACER

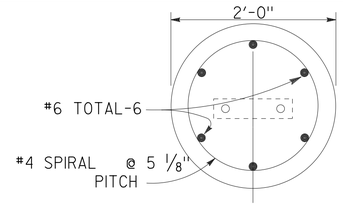

SECTION E-E

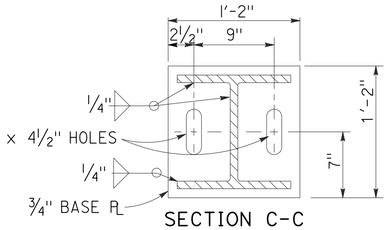

SECTION C-C

ANCHOR POST DETAILS
FOR CONNECTION DETAIL D

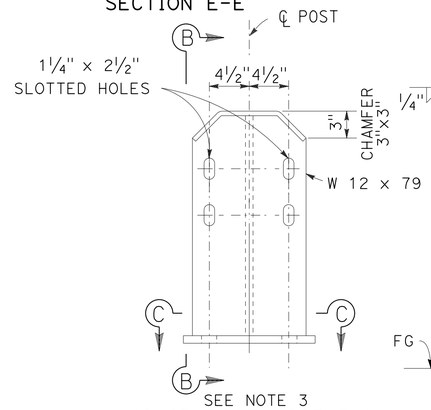

ANCHOR POST ASSEMBLY

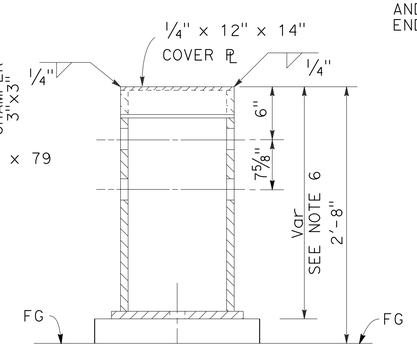

SECTION B-B

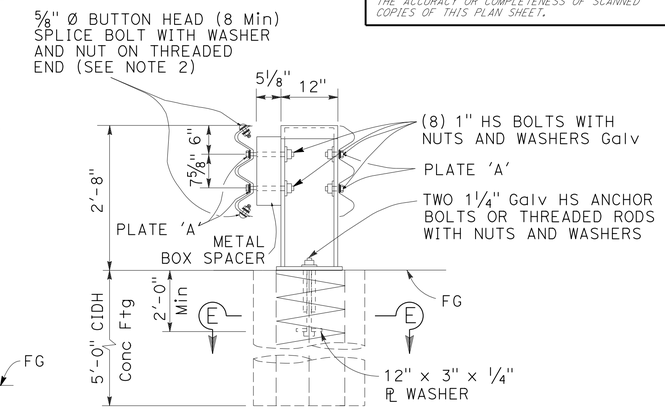

SECTION D-D

SEE NOTE 4

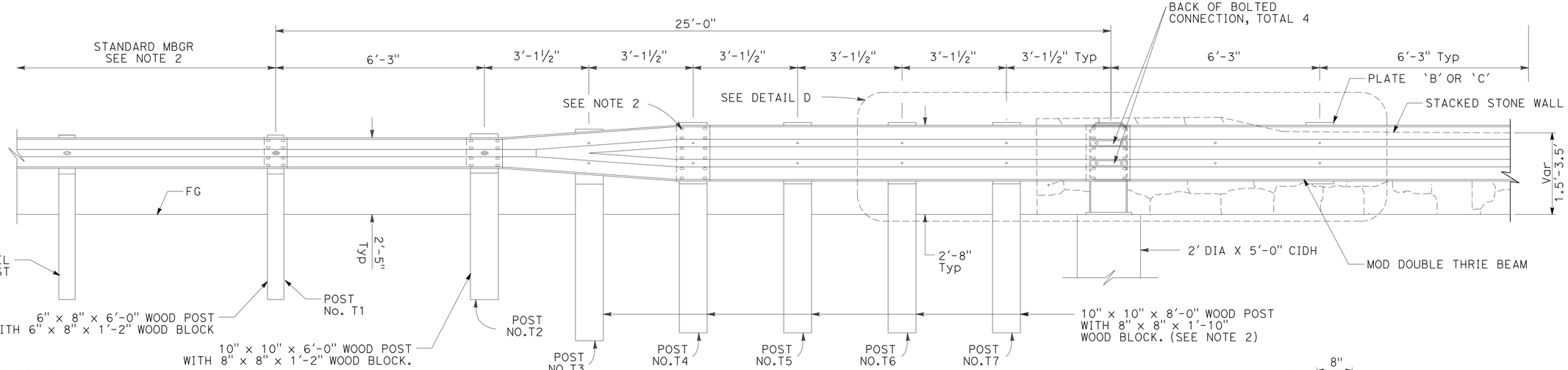

ELEVATION

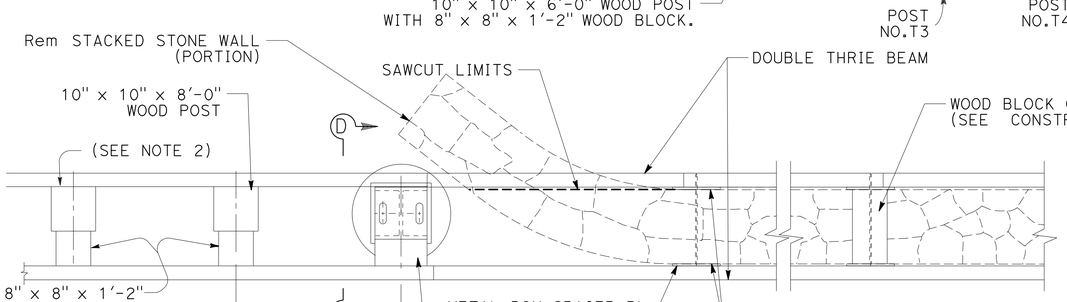

PLAN

CONNECTION DETAIL D

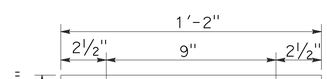

DETAIL C
PLATE 'A'

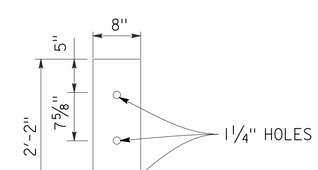

PLATE 'B'

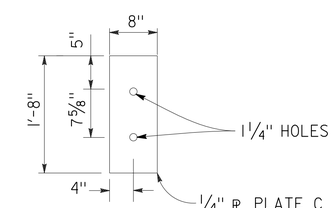

PLATE 'C'

CONSTRUCTION DETAILS
MODIFIED TRANSITION RAILING (TYPE WB) AT STACKED STONE WALL
NO SCALE

C-6

STATE OF CALIFORNIA - DEPARTMENT OF TRANSPORTATION
Caltrans DESIGN
FUNCTIONAL SUPERVISOR: AL TRUJILLO
CALCULATED-DESIGNED BY: DWIGHT WINTERLIN
CHECKED BY
REVISED BY
DATE REVISED

P:\proj1\02\40380_plans\pse\24g380ga006.dgn

LAST REVISION 12-09-15
DATE PLOTTED => 02-AUG-2016
TIME PLOTTED => 08:15

Dist	COUNTY	ROUTE	POST MILES TOTAL PROJECT	SHEET No.	TOTAL SHEETS
02	Tri	299	0.0/8.3	26	103

Dwight D Winterlin 06-12-16
REGISTERED CIVIL ENGINEER DATE

06-15-16
PLANS APPROVAL DATE

REGISTERED PROFESSIONAL ENGINEER
DWIGHT WINTERLIN
No. 68438
Exp. 9-30-17
CIVIL
STATE OF CALIFORNIA

THE STATE OF CALIFORNIA OR ITS OFFICERS OR AGENTS SHALL NOT BE RESPONSIBLE FOR THE ACCURACY OR COMPLETENESS OF SCANNED COPIES OF THIS PLAN SHEET.

NOTES:

1. WHEN BOLTING DOUBLE THRIE BEAM RAIL TOGETHER, DRILL THROUGH STACKED STONE WALL WITH NON IMPACT DRILL, PLACE PLATE "B" OR "C" AND FIELD FIT WOOD BLOCKS TO MAINTAIN TOP OF RAIL HEIGHT AT 32" ABOVE FINISH GRADE.
2. FOR DETAILS NOT SHOWN ON THE DOUBLE THRIE BEAM BARRIER BETWEEN STACKED STONE WALLS GAPS, SEE CONSTRUCTION DETAILS SHEET C-6.
3. THREADED ROD HAVE MAXIMUM ½" EXPOSED ON TRAFFIC SIDE.
4. PROVIDE SMOOTH SURFACE BY CHIPPING OR GRINDING STACKED STONE WALL, SO STEEL PLATE DOES NOT PROTRUDE MORE THAN ½" FROM WALL FACE. CHAMFER THE MORTAR AT EDGE OF PLATE TO WALL ON TRAFFIC SIDE.

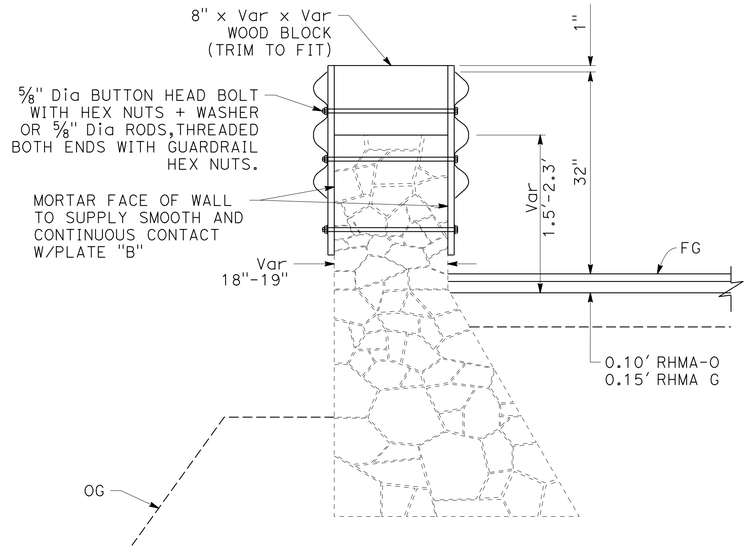

MODIFIED DOUBLE THRIE BEAM BARRIER
PARTIALLY ATTACHED TO STACKED STONE WALL

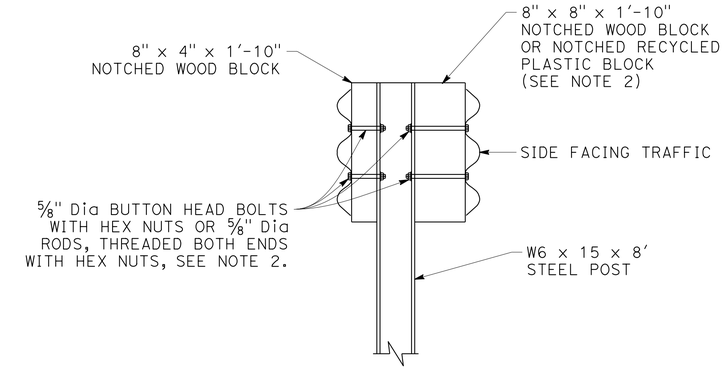

MODIFIED DOUBLE THRIE BEAM BARRIER
BETWEEN STACKED STONE WALLS

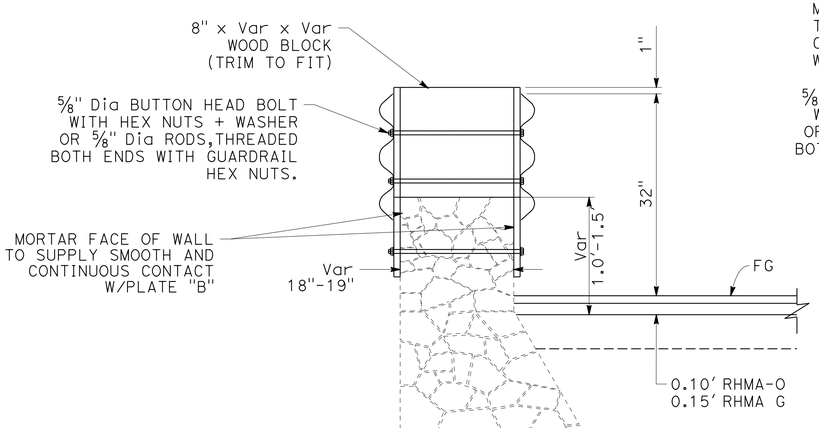

MODIFIED DOUBLE THRIE BEAM BARRIER
ON TOP OF STACKED STONE WALL

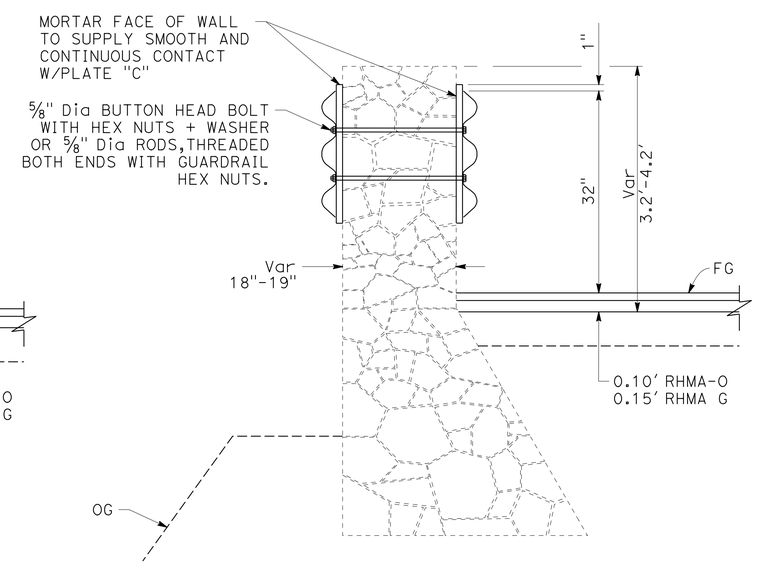

MODIFIED DOUBLE THRIE BEAM BARRIER
ATTACHED TO STACKED STONE WALL

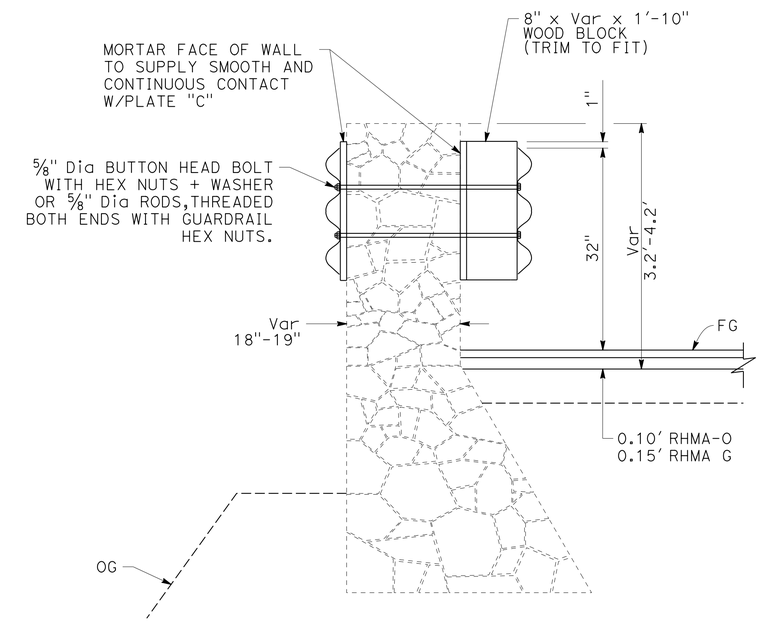

MODIFIED DOUBLE THRIE BEAM BARRIER
ATTACHED TO STACKED STONE WALL
AT WALL SEPARATION

MODIFIED DOUBLE THRIE BEAM BARRIER CONSTRUCTION DETAILS

NO SCALE

C-7

REVISED BY	DATE REVISED

SOCORRO URENA — DWIGHT WINTERLIN
CALCULATED-DESIGNED BY — CHECKED BY
FUNCTIONAL SUPERVISOR — AL TRUJILLO

STATE OF CALIFORNIA - DEPARTMENT OF TRANSPORTATION
Caltrans® DESIGN

P:\proj\02\4G380_plans\pse\24g380ga007.dgn

LAST REVISION 05-05-16 | DATE PLOTTED => 02-AUG-2016 | TIME PLOTTED => 08:15

Dist	COUNTY	ROUTE	POST MILES TOTAL PROJECT	SHEET No.	TOTAL SHEETS
02	Tri	299	0.0/8.3	27	103

REGISTERED CIVIL ENGINEER 06-12-16 DATE

06-15-16
PLANS APPROVAL DATE

REGISTERED PROFESSIONAL ENGINEER SOCORRO V. URENA No. 79633 Exp. 9-30-16 CIVIL STATE OF CALIFORNIA

THE STATE OF CALIFORNIA OR ITS OFFICERS OR AGENTS SHALL NOT BE RESPONSIBLE FOR THE ACCURACY OR COMPLETENESS OF SCANNED COPIES OF THIS PLAN SHEET.

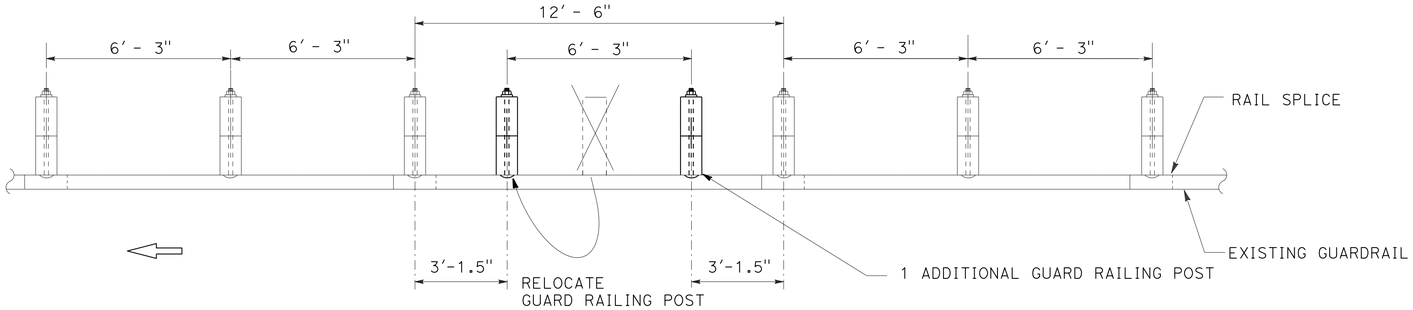

CASE 1

(ONE POST CONFLICT, MOVE THE POST and ADD ONE POST)
(NO NESTED RAIL REQUIRED)

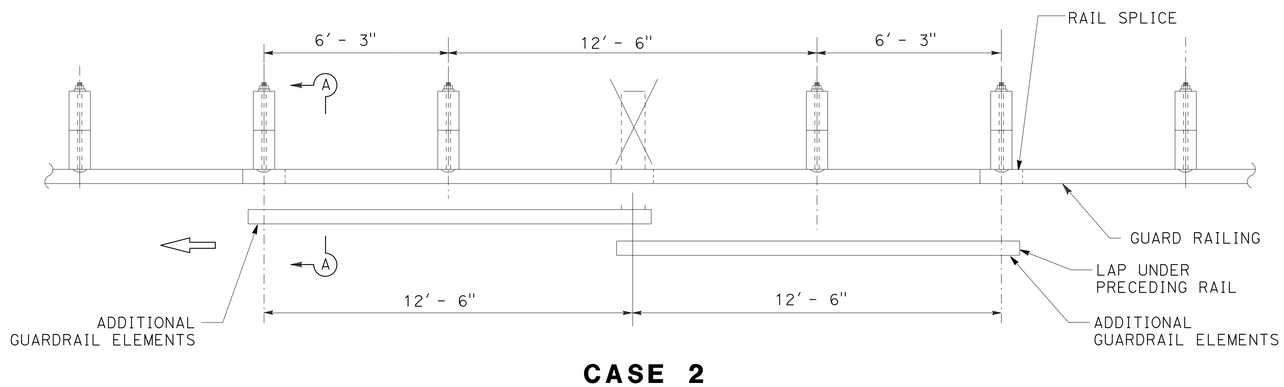

CASE 2

(ONE POST OMITTED AT JUNCTION OF TWO ELEMENTS)
(NEST TWO LENGTHS OF RAIL REQUIRED)

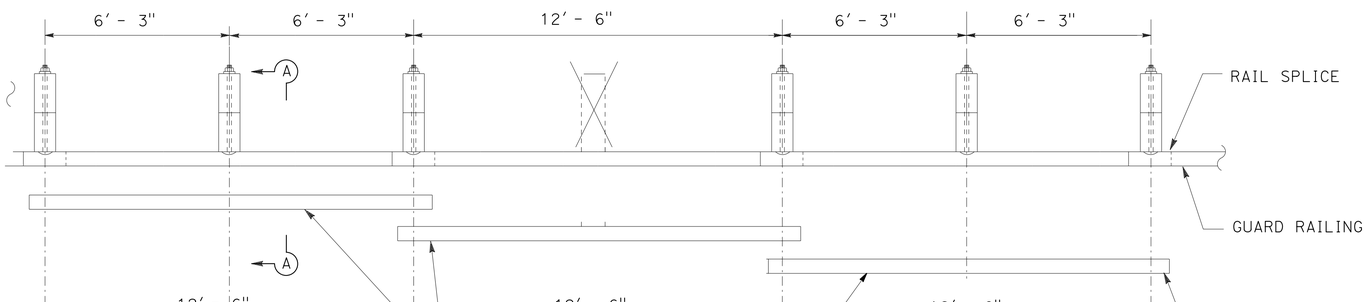

CASE 3

(ONE POST OMITTED AT CENTER OF OF ELEMENT)
(NEST THREE LENGTHS OF RAIL REQUIRED)

NOTES:

1. NEST ALL RAILS AT EXISTING RAIL LAPS.
2. WHEN A POST IS REMOVED AND THE RAIL ELEMENTS ARE NESTED, THEN THE NESTED ELEMENTS MUST BE SUPPORTED BY A Min OF 2 POST EACH SIDE OF THE MISSING POST OR ADD ADDITIONAL LENGTH OF NESTED ELEMENTS.

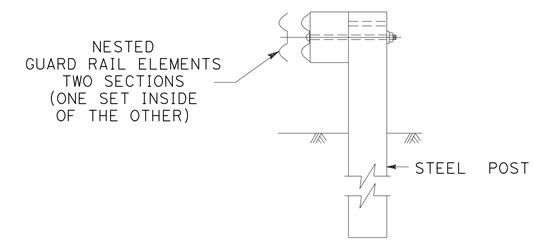

SECTION A-A

TYPICAL RAILING OVERLAP INSTALLATION AT POST

CONSTRUCTION DETAILS
GUARD RAILING
REMOVE POST OPTIONS
LONG SPAN NESTED GUARD RAILING

NO SCALE

C-8

REVISED BY | DATE REVISED
JEFF B. COON | SOCORRO URENA
CALCULATED-DESIGNED BY | CHECKED BY
FUNCTIONAL SUPERVISOR
AL TRUJILLO

STATE OF CALIFORNIA - DEPARTMENT OF TRANSPORTATION
Caltrans
DESIGN

P:\proj1\02\40380_plans\pse\24g380ga008.dgn

LAST REVISION 12-18-15 | DATE PLOTTED => 02-AUG-2016 | TIME PLOTTED => 08:15

Dist	COUNTY	ROUTE	POST MILES TOTAL PROJECT	SHEET No.	TOTAL SHEETS
02	Tri	299	0.0/8.3	28	103

REGISTERED CIVIL ENGINEER 06-12-16 DATE

06-15-16
PLANS APPROVAL DATE

REGISTERED PROFESSIONAL ENGINEER SOCORRO V. URENA No. 79633 Exp. 9-30-16 CIVIL STATE OF CALIFORNIA

THE STATE OF CALIFORNIA OR ITS OFFICERS OR AGENTS SHALL NOT BE RESPONSIBLE FOR THE ACCURACY OR COMPLETENESS OF SCANNED COPIES OF THIS PLAN SHEET.

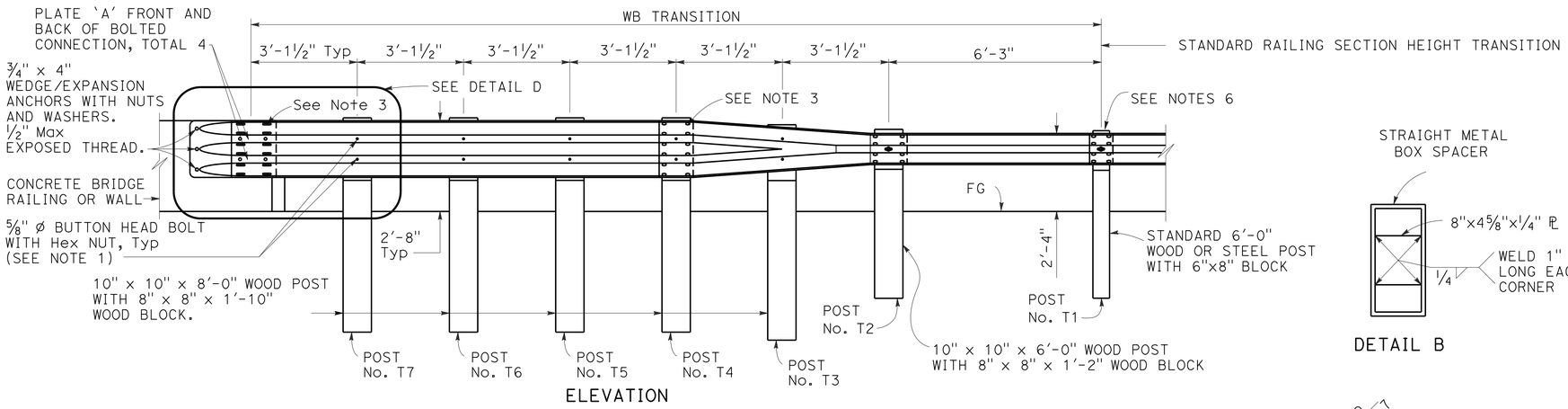

ELEVATION

DETAIL B

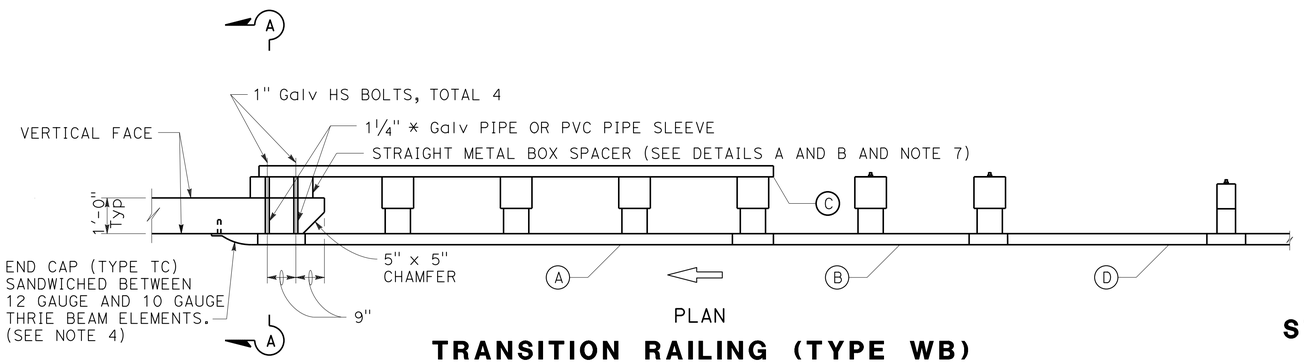

PLAN

TRANSITION RAILING (TYPE WB)

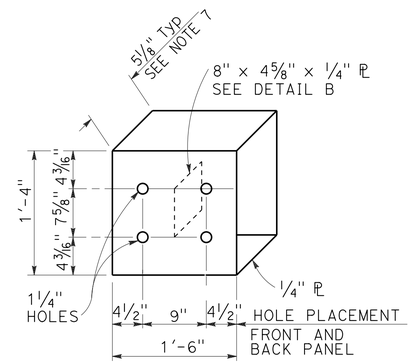

DETAIL A

STRAIGHT METAL BOX SPACER

NOTES:

1. USE ⅝" ø BUTTON HEAD BOLTS AND HEX NUTS FOR CONNECTIONS TO POSTS. NO WASHER ON RAIL FACE FOR BOLTED CONNECTIONS TO POST.
2. THE NESTED RAIL ELEMENTS, END CAP, AND 'W' BEAM TO THRIE BEAM ELEMENT MAY BE SPLICED TOGETHER PRIOR TO BOLTING THE ELEMENTS TO THE WOOD POST AND CONCRETE BARRIER OR RAILING.
3. EXTERIOR SPLICE BOLT HOLES FOR RAIL ELEMENT SPLICES AT POST NO. T4 AND THE CONNECTION TO THE CONCRETE BARRIER OR RAILING SHALL BE THE STANDARD 13/16" X 1 ⅛" SLOT SIZE. INTERIOR SPLICE BOLT HOLES AT THESE LOCATIONS MAY BE INCREASED UP TO 1 ¼" ø. ONLY THE TOP 4 AND THE BOTTOM 4 SPLICE BOLTS WITH WASHERS AND NUTS ARE REQUIRED FOR RAIL SPLICES AT POST NO. T4 AND THE CONNECTION TO THE CONCRETE BARRIER OR RAILING.
4. END CAP MAY BE INSTALLED OVER 12 GAUGE AND 10 GAUGE THRIE BEAM ELEMENTS WHERE TRANSITION RAILING IS INSTALLED ON THE DEPARTURE END OF BRIDGE RAILING.
5. THE TOP ELEVATION OF POSTS NO. T2 THROUGH NO. T7 SHALL NOT PROJECT MORE THAN 1" ABOVE THE TOP ELEVATION OF THE RAIL ELEMENT.
6. THE GUARD RAILING CONNECTED TO TRANSITION RAILING (TYPE WB) WILL BE A STANDARD RAILING SECTION OF METAL BEAM GUARD RAILING WITH HEIGHT TRANSITION RATIO OF 120:1 FROM POST NO. T1.
7. THE DEPTH OF THE METAL BOX SPACER VARIES FROM THE 5 ⅛" TO 1 ½" AND IS DEPENDENT ON THE WIDTH OF THE CONCRETE RAILING OR WALL. THE COMBINED DIMENSION FOR THE DEPTH OF THE METAL BOX SPACER PLUS THE WIDTH OF RAILING OR WALL SHOULD BE 17 ⅛".

LEGEND

(A) NESTED THRIE BEAM ELEMENTS (ONE 12 GAUGE ELEMENT NESTED OVER ONE 10 GAUGE ELEMENT).

(B) ONE 10 GAUGE "W" BEAM TO THRIE BEAM ELEMENT.

(C) ONE 12 GAUGE THRIE BEAM ELEMENT.

(D) ONE 10 GAUGE "W" BEAM RAIL ELEMENT (7'-3½" LENGTH)

10 GAUGE = 0.135" THICK

12 GAUGE = 0.108" THICK

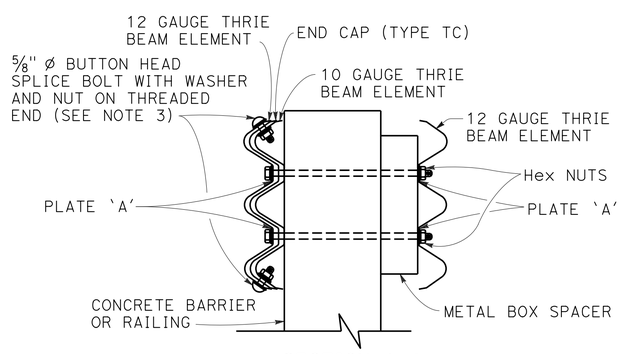

SECTION A-A

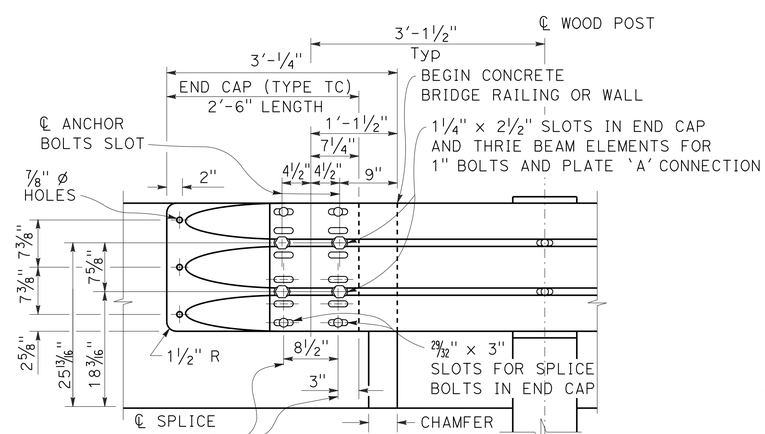

DETAIL D

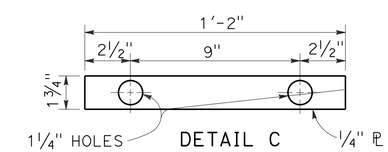

DETAIL C

PLATE 'A'

CONSTRUCTION DETAILS GUARD RAILING TRANSITION (TYPE WB)

NO SCALE

C-9

STATE OF CALIFORNIA - DEPARTMENT OF TRANSPORTATION
Caltrans® DESIGN

FUNCTIONAL SUPERVISOR: AL TRUJILLO
CALCULATED-DESIGNED BY: JEFF B. COON
CHECKED BY: SOCORRO URENA
REVISED BY / DATE REVISED

P:\proj\02\4G380_plans\pse\24g380ga009.dgn

LAST REVISION 12-18-15 | DATE PLOTTED => 02-AUG-2016 | TIME PLOTTED => 08:16

BORDER LAST REVISED 7/2/2010 | USERNAME => s115152 | DGN FILE => 24g380ga009.dgn | RELATIVE BORDER SCALE IS IN INCHES 0 1 2 3 | UNIT 0318 | PROJECT NUMBER & PHASE 02 1400 0006 1

Dist	COUNTY	ROUTE	POST MILES TOTAL PROJECT	SHEET No.	TOTAL SHEETS
02	Tri	299	0.0/8.3	29	103

REGISTERED CIVIL ENGINEER 06-12-16 DATE

PLANS APPROVAL DATE 06-15-16

REGISTERED PROFESSIONAL ENGINEER SOCORRO V. URENA No. 79633 Exp. 9-30-16 CIVIL STATE OF CALIFORNIA

THE STATE OF CALIFORNIA OR ITS OFFICERS OR AGENTS SHALL NOT BE RESPONSIBLE FOR THE ACCURACY OR COMPLETENESS OF SCANNED COPIES OF THIS PLAN SHEET.

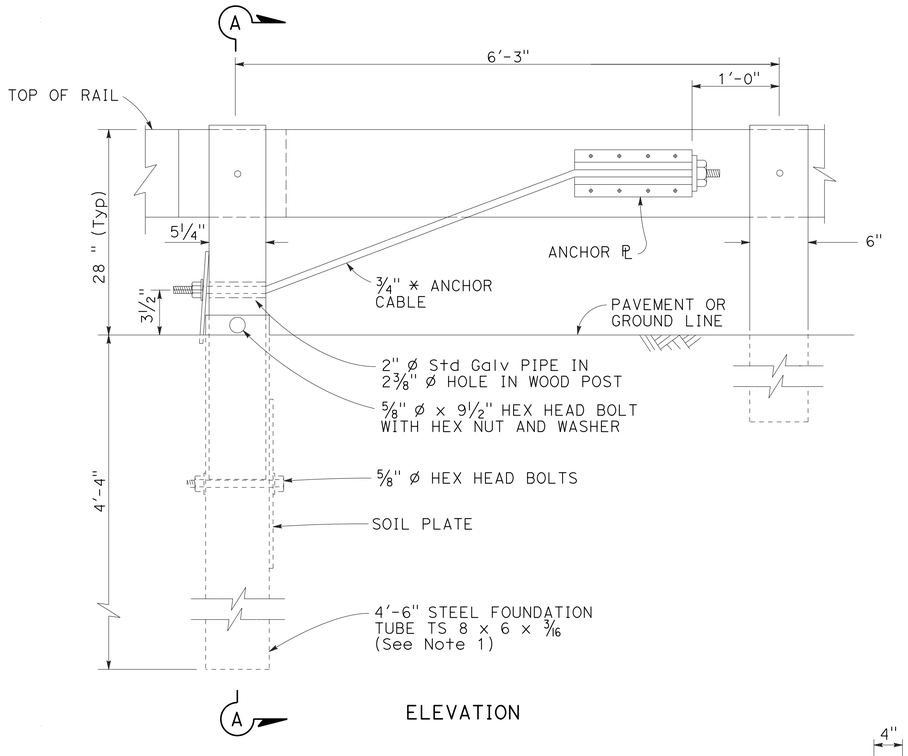

ELEVATION

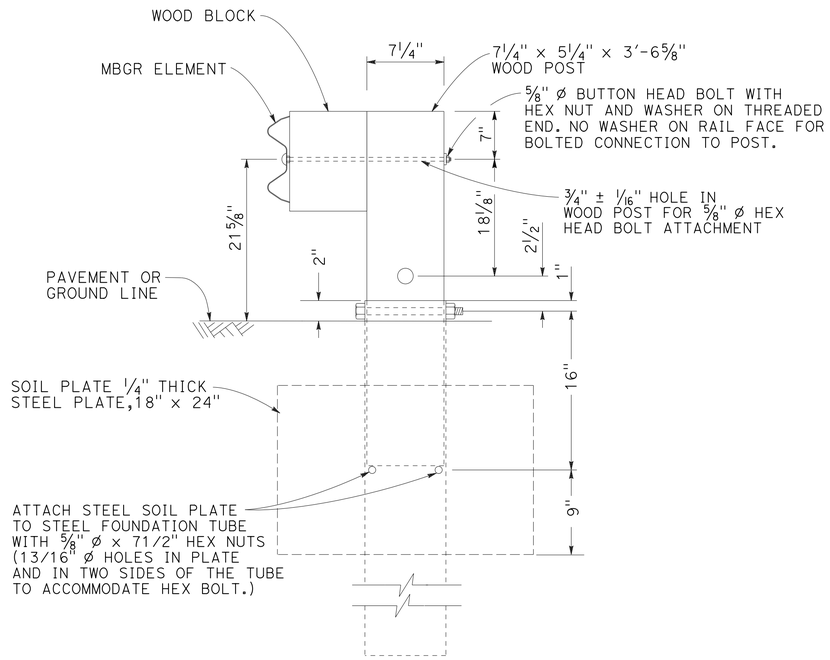

SECTION A-A

NOTES:

1. A 6'-0" LENGTH STEEL FOUNDATION TUBE, TS 8 x 16 x 3/16, WITHOUT A SOIL PLATE, MAY BE FURNISHED AND INSTALLED IN PLACE OF THE 4'-6" LENGTH STEEL FOUNDATION TUBE AND SOIL PLATE SHOWN. MINIMUM EMBEDMENT OF THE 6'-0" LENGTH TUBE SHALL BE 5'-9". A ⅝"⌀ HEX HEAD BOLT AND NUT SHALL BE INSTALLED IN THE HOLE IN THE 6'-0" LENGTH TUBE TO KEEP THE WOOD POST FROM DROPPING INTO THE TUBE.

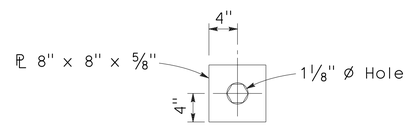

DETAIL A
CABLE CONNECTION END PLATE

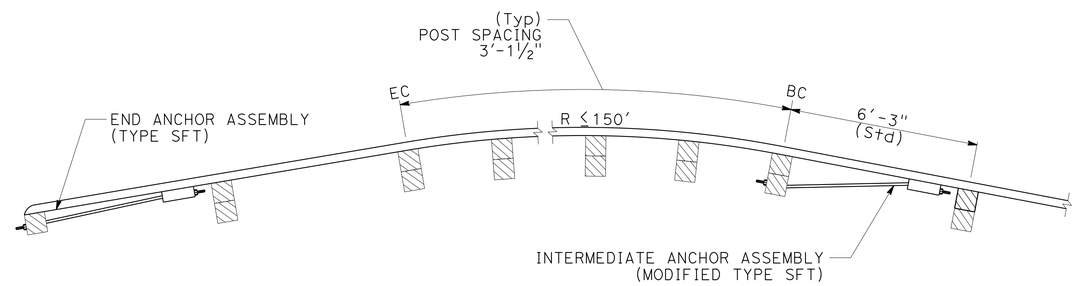

END TREATMENT AND GUARD RAIL POST (HALF SPACING) FOR RADII LESS THAN OR EQUAL TO 150'

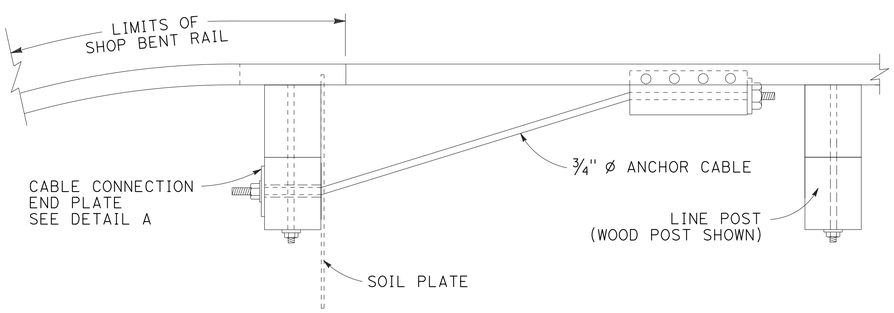

PLAN

INTERMEDIATE ANCHOR ASSEMBLY (MODIFIED TYPE SFT) DETAIL

CONSTRUCTION DETAILS
NO SCALE

C-10

REVISED BY | DATE REVISED
JEFF B. COON | SOCORRO URENA
CALCULATED-DESIGNED BY | CHECKED BY
FUNCTIONAL SUPERVISOR: AL TRUJILLO
STATE OF CALIFORNIA - DEPARTMENT OF TRANSPORTATION
Caltrans
DESIGN

P:\proj1\02\4G380_plans\pse\24g380ga010.dgn

LAST REVISION | DATE PLOTTED => 02-AUG-2016 | 12-18-15 | TIME PLOTTED => 08:16

BORDER LAST REVISED 7/2/2010 | USERNAME => s115152 | DGN FILE => 24g380ga010.dgn | RELATIVE BORDER SCALE IS IN INCHES 0 1 2 3 | UNIT 0318 | PROJECT NUMBER & PHASE 02 1400 0006 1

Dist	COUNTY	ROUTE	POST MILES TOTAL PROJECT	SHEET No.	TOTAL SHEETS
02	Tri	299	0.0/8.3	30	103

Dwight D Winterlin 06-12-16
REGISTERED CIVIL ENGINEER DATE

06-15-16
PLANS APPROVAL DATE

REGISTERED PROFESSIONAL ENGINEER
DWIGHT WINTERLIN
No. 68438
Exp. 9-30-17
CIVIL
STATE OF CALIFORNIA

THE STATE OF CALIFORNIA OR ITS OFFICERS OR AGENTS SHALL NOT BE RESPONSIBLE FOR THE ACCURACY OR COMPLETENESS OF SCANNED COPIES OF THIS PLAN SHEET.

NOTES:

1. SEE STANDARD PLANS FOR RAIL ELEMENT SPLICE DETAILS.

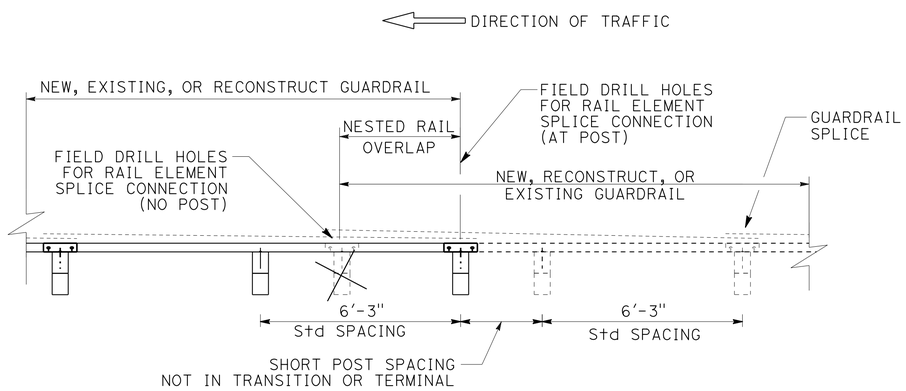

GUARDRAIL OVERLAP DETAIL (REDUCE LENGTH)

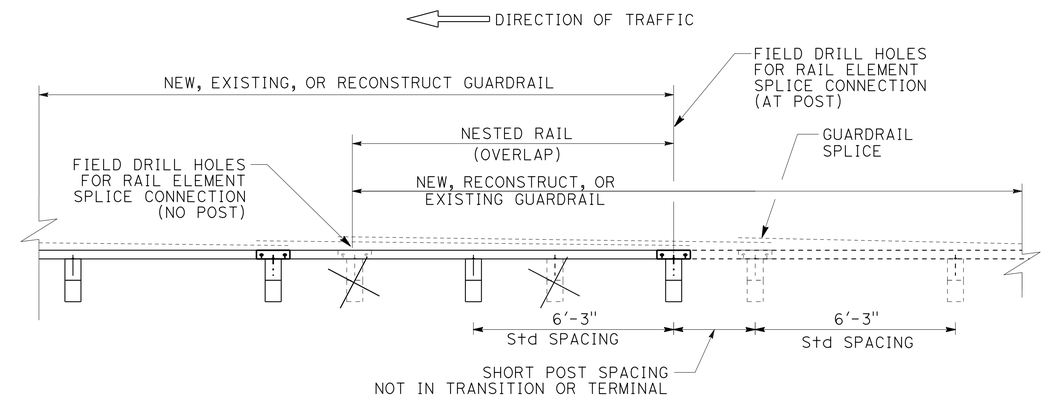

GUARDRAIL OVERLAP DETAIL (EXTEND LENGTH)

CONSTRUCTION DETAILS

NO SCALE

C-11

REVISED BY | DATE REVISED
SOCORRO URENA | DWIGHT WINTERLIN
CALCULATED-DESIGNED BY | CHECKED BY
FUNCTIONAL SUPERVISOR: AL TRUJILLO

STATE OF CALIFORNIA - DEPARTMENT OF TRANSPORTATION
Caltrans
DESIGN

P:\proj1\02\4G380_plans\pse\24g380ga011.dgn

LAST REVISION 12-22-15 | DATE PLOTTED => 02-AUG-2016 | TIME PLOTTED => 08:16

Dist	COUNTY	ROUTE	POST MILES TOTAL PROJECT	SHEET No.	TOTAL SHEETS
02	Tri	299	0.0/8.3	31	103

REGISTERED CIVIL ENGINEER 06-12-16 DATE

06-15-16
PLANS APPROVAL DATE

REGISTERED PROFESSIONAL ENGINEER JOHN HART No. 69586 Exp. 6-30-18 CIVIL STATE OF CALIFORNIA

THE STATE OF CALIFORNIA OR ITS OFFICERS OR AGENTS SHALL NOT BE RESPONSIBLE FOR THE ACCURACY OR COMPLETENESS OF SCANNED COPIES OF THIS PLAN SHEET.

NOTES:

1. A SINGLE LINE POST MAY BE OFFSET UP TO 12" ALONG THE GUARDRAIL. DO NOT CUT OR DRILL HOLE IN ELEMENT TO ATTACH ELEMENT TO POST AND BLOCK. IF THERE IS NO HOLE IN ELEMENT, ONLY BOLT BLOCK TO POST.
2. POSTS ARE TO BE W6X8.5 OR W6X9 UNLESS OTHERWISE SHOWN. FOR POST AND BLOCK DETAILS SEE STANDARD PLAN A77N2. FOR RAIL ELEMENT AND HARDWARE DETAILS, USE DETAILS SHOWN FOR MGS ON A77L2 AND A77M1.
3. GUARDRAIL POSTS MUST BE A MINIMUM OF 1′ FROM BACK OF RETAINING WALL.
4. WHEN THERE IS A BREAK POINT IN FRONT OF GUARDRAIL BETWEEN 4′-8′ THE HEIGHT WILL BE DETERMINED BY THE ENGINEER.
5. PLACE RUB RAIL (GUARDRAIL ELEMENT) AND ATTACH TO POST WITH NO BLOCK WHEN HEIGHT OF GUARDRAIL IS MORE THAN 2" ABOVE STANDARD PLACEMENT HEIGHT (H).
6. FOR PARABOLIC FLARE OFFSETS, SEE A77P1. DO NOT FLARE GUARDRAIL AT MORE THAN 15:1 AWAY FROM THE ETW UNLESS SHOWN.
7. FOR CURB AND DIKE DETAILS, SEE RSP A87B.
8. ONLY TYPE C DIKE MAY BE USED UNDER, OR IN FRONT OF, OR WITHIN 25′ OF APPROACH TO TERMINAL SYSTEMS. SEE GUARDRAIL LAYOUTS IN STANDARD PLANS. ONLY TYPE C DIKE MAY BE PLACED MORE THAN 2" IN FRONT OF FACE OF MBGR AND MORE THAN 7" IN FRONT OF MGS.
9. DIKE OR CURB MUST BE PLACED IN THE STANDARD POSITION OR AS AUTHORIZED. FOR MGS WITH 12" BLOCKS ONLY, THE TOE OF THE DIKE OR CURB MAY BE UP TO 7" IN FRONT OF THE FACE OF RAIL IF AUTHORIZED.
10. THE MAXIMUM HEIGHT OF THE DIKE OR CURB SHALL BE 4" FOR MBGR, AND 6" FOR MGS WITH 12" BLOCKS. 6" MOUNTABLE DIKE SHOULD NOT BE USED UNDER GUARDRAIL.
11. IF THE WIDTH OF THE PAVED SHOULDER IS REDUCED APPROACHING A FIXED OBJECT, PLACE A "P" MARKER INSTEAD OF THE L-1 MARKER.
12. EXISTING UTILITY FACILITIES HAVE NOT BEEN INCLUDED ON THESE PLANS

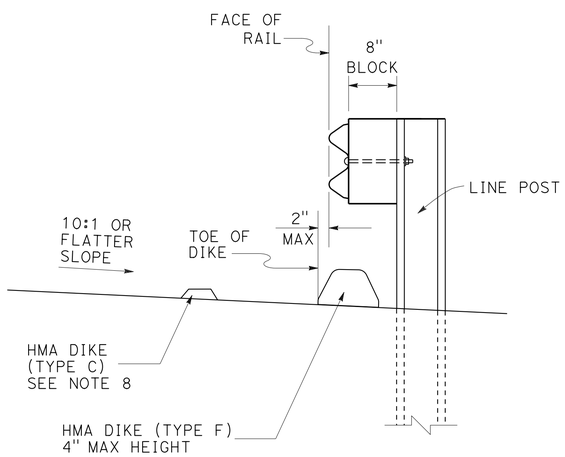

GUARDRAIL WITH 8" BLOCK
W-BEAM GUARDRAIL DIKE POSITIONING

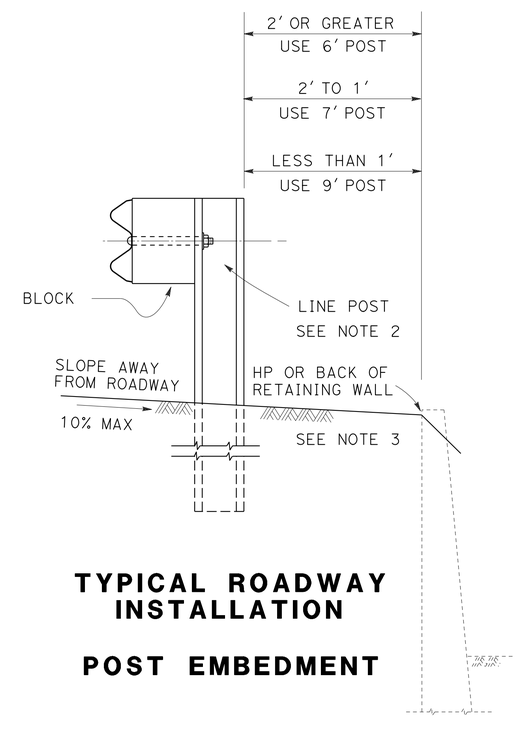

TYPICAL ROADWAY INSTALLATION

POST EMBEDMENT

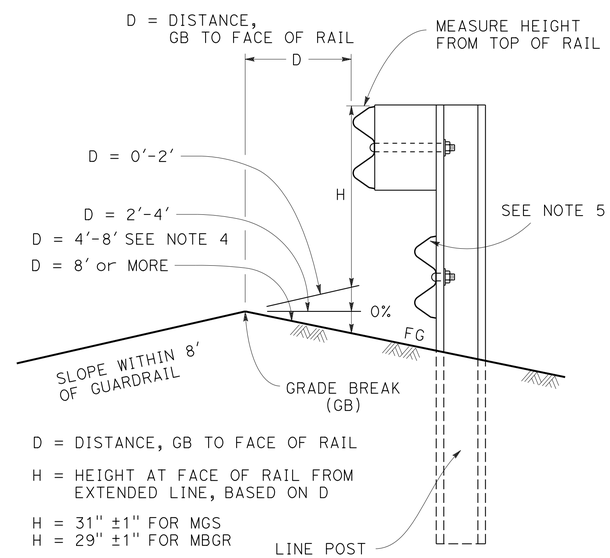

MEASURE HEIGHT DETAIL AT GRADE BREAK (GB)

WHEN THERE IS A GRADE BREAK IN FRONT OF GUARDRAIL MEASURE HEIGHT OF GUARDRAIL BASED ON DISTANCE FROM GRADE BREAK TO ADJUST FOR TRAJECTORY.

CONSTRUCTON DETAILS W-BEAM GUARDRAIL

NO SCALE

C-12

REVISED BY | DATE REVISED
JOHN HART | DWIGHT WINTERLIN
CALCULATED-DESIGNED BY | CHECKED BY
FUNCTIONAL SUPERVISOR | KRISTI WESTOBY
STATE OF CALIFORNIA - DEPARTMENT OF TRANSPORTATION
Caltrans® TRAFFIC SAFETY
P:\proj\02\4G380_plans\pse\24g380ga012.dgn

LAST REVISION | DATE PLOTTED => 02-AUG-2016 | TIME PLOTTED => 08:16

Dist	COUNTY	ROUTE	POST MILES TOTAL PROJECT	SHEET No.	TOTAL SHEETS
02	Tri	299	0.0/8.3	32	103

REGISTERED CIVIL ENGINEER 06-12-16 DATE

06-15-16
PLANS APPROVAL DATE

REGISTERED PROFESSIONAL ENGINEER SOCORRO V. URENA No. 79633 Exp. 9-30-16 CIVIL STATE OF CALIFORNIA

THE STATE OF CALIFORNIA OR ITS OFFICERS OR AGENTS SHALL NOT BE RESPONSIBLE FOR THE ACCURACY OR COMPLETENESS OF SCANNED COPIES OF THIS PLAN SHEET.

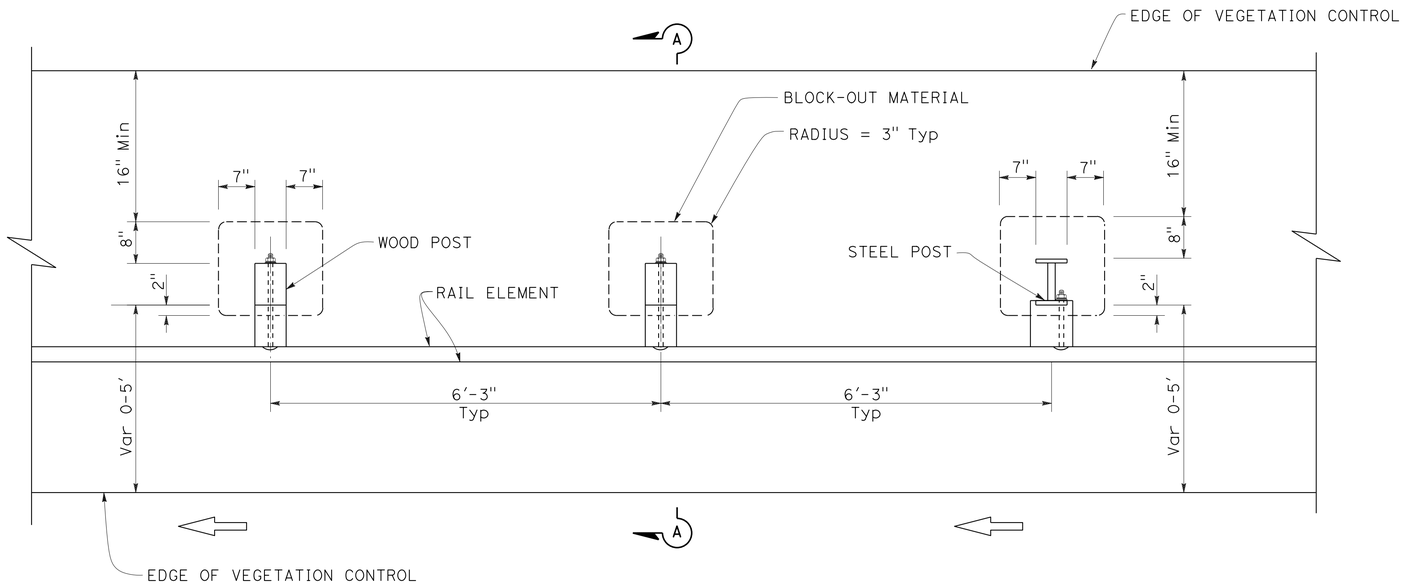

PLAN

NOTES:

1. WHERE THE DISTANCE BETWEEN BACK OF POST AND HINGE POINT IS LESS THAN 24", CONSTRUCT VEGETATION CONTROL TO 6" FROM HINGE POINT WHILE MAINTAINING THE 8" BLOCK-OUT AT BACK OF POST. IF THE 8" BLOCK-OUT AT BACK OF POST CAN NOT BE MAINTAINED, CONSTRUCT VEGETATION CONTROL FLUSH WITH THE BACK EDGE OF POST.

2. WHERE DIKE IS CONSTRUCTED UNDER RAILING, CONSTRUCT VEGETATION CONTROL TO BACK EDGE OF DIKE. WHERE PAVED SHOULDER IS CONSTRUCTED WITHIN 36" IN FRONT OF THE POST, CONSTRUCT VEGETATION CONTROL TO THE EDGE OF PAVED SHOULDER.

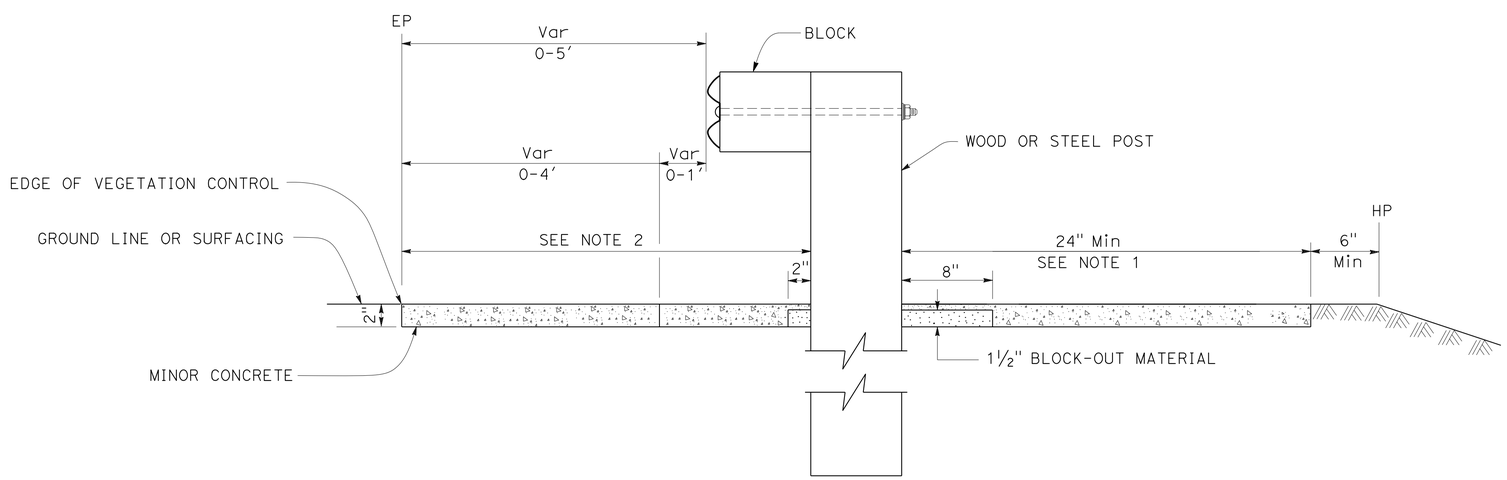

SECTION A-A

CONSTRUCTION DETAILS
METAL BEAM GUARD RAILING
TYPICAL VEGETATION CONTROL
STANDARD RAILING SECTION

NO SCALE

C-13

REVISED BY | DATE REVISED
JEFF B. COON | SOCORRO URENA
CALCULATED-DESIGNED BY | CHECKED BY
FUNCTIONAL SUPERVISOR
AL TRUJILLO

STATE OF CALIFORNIA - DEPARTMENT OF TRANSPORTATION
Caltrans
DESIGN

P:\proj1\02\4G380_plans\pse\24g380ga013.dgn

LAST REVISION 04-22-16 | DATE PLOTTED => 02-AUG-2016 | TIME PLOTTED => 08:16

Dist	COUNTY	ROUTE	POST MILES TOTAL PROJECT	SHEET No.	TOTAL SHEETS
02	Tri	299	0.0/8.3	33	103

REGISTERED CIVIL ENGINEER 06-12-16 DATE

06-15-16
PLANS APPROVAL DATE

REGISTERED PROFESSIONAL ENGINEER SOCORRO V. URENA No. 79633 Exp. 9-30-16 CIVIL STATE OF CALIFORNIA

THE STATE OF CALIFORNIA OR ITS OFFICERS OR AGENTS SHALL NOT BE RESPONSIBLE FOR THE ACCURACY OR COMPLETENESS OF SCANNED COPIES OF THIS PLAN SHEET.

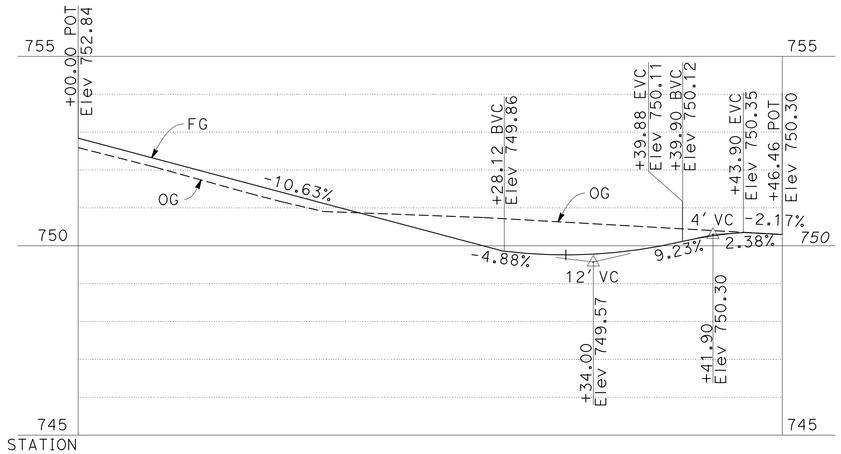

PROFILE "B1_DWR1"

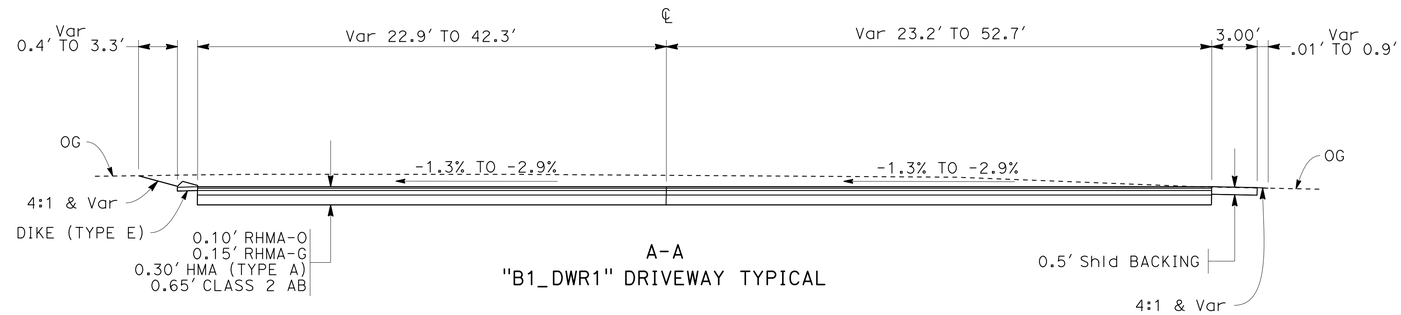

A-A
"B1_DWR1" DRIVEWAY TYPICAL

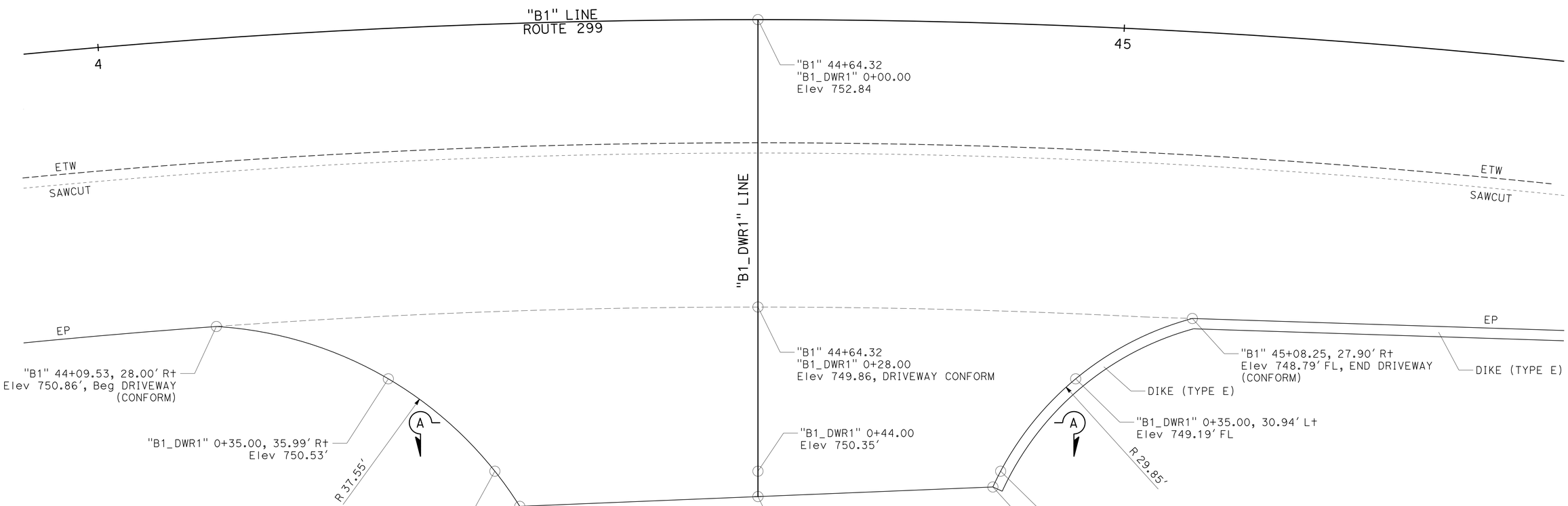

PLAN

CONSTRUCTION DETAILS

SCALE: 1" = 5'

C-14

REVISED BY | DATE REVISED
JEFF B. COON | SOCORRO URENA
CALCULATED-DESIGNED BY | CHECKED BY
FUNCTIONAL SUPERVISOR
AL TRUJILLO

STATE OF CALIFORNIA - DEPARTMENT OF TRANSPORTATION
Caltrans®
DESIGN

P:\proj1\02\4G380_plans\pse\24g380ga014.dgn

LAST REVISION 04-22-16 | DATE PLOTTED => 02-AUG-2016 | TIME PLOTTED => 08:16

Dist	COUNTY	ROUTE	POST MILES TOTAL PROJECT	SHEET No.	TOTAL SHEETS
02	Tri	299	0.0/8.3	34	103

REGISTERED CIVIL ENGINEER 06-12-16 DATE

06-15-16
PLANS APPROVAL DATE

REGISTERED PROFESSIONAL ENGINEER SOCORRO V. URENA No. 79633 Exp. 9-30-16 CIVIL STATE OF CALIFORNIA

THE STATE OF CALIFORNIA OR ITS OFFICERS OR AGENTS SHALL NOT BE RESPONSIBLE FOR THE ACCURACY OR COMPLETENESS OF SCANNED COPIES OF THIS PLAN SHEET.

NOTES:

1. GRIND EXISTING SURFACES TO ACCOMODATE A MINIMUM TAPER THICKNESS OF 0.10′ UNDER EITHER OF THE FOLLOWING CONDITIONS:
   A. HMA MATERIAL SUCH AS RUBBERIZED HMA, POLYMER-MODIFIED BONDED WEARING COURSE, OR OPEN-GRADED FRICTION COURSE IS UNSUITABLE FOR RAKING TO A MAXIMUM 0.02′ THICKNESS AT THE EDGE.
   B. TAPER WILL BE IN PLACE FOR MORE THAN 14 DAYS.
2. PERMANENT SURFACE MAY BE EXISTING OR NEW PAVEMENT.
3. ROADWAY SURFACE IS THE TOP OF EXISTING SURFACE OR THE TOP OF THE PLANED SURFACE.

LEGEND:

HMA OR POLYESTER CONCRETE

IF NECESSARY, GRIND EXISTING PAVEMENT AND PLACE HMA MATERIAL (SEE NOTE 1)

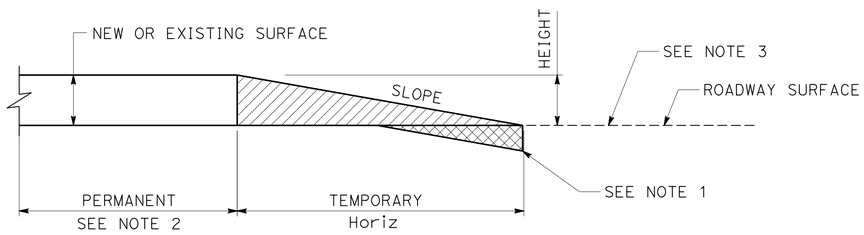

ELEVATION

TEMPORARY TAPERS

HEIGHT DIFFERENTIAL (FOOT)	SLOPE (HORIZONTAL:VERTICAL)	
	TAPER USE OF 14 DAYS OR LESS	TAPER USE OF MORE THAN 14 DAYS
GREATER THAN 0.08	100:1 OR FLATTER	200:1 OR FLATTER
0.04-0.08	70:1 OR FLATTER	70:1 OR FLATTER

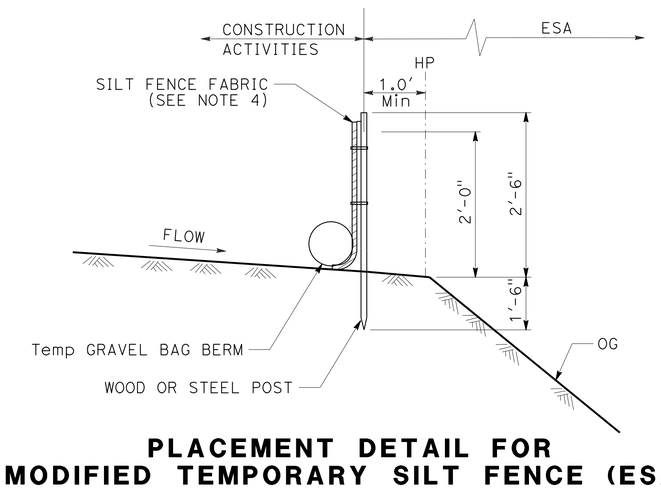

PLACEMENT DETAIL FOR MODIFIED TEMPORARY SILT FENCE (ESA)

CONSTRUCTION DETAILS

NO SCALE

C-15

REVISED BY | DATE REVISED
JEFF B. COON | SOCORRO URENA
CALCULATED-DESIGNED BY | CHECKED BY
FUNCTIONAL SUPERVISOR
AL TRUJILLO

STATE OF CALIFORNIA - DEPARTMENT OF TRANSPORTATION
Caltrans DESIGN

P:\proj1\02\46380_plans\pse\24g380ga015.dgn

LAST REVISION 02-22-16 | DATE PLOTTED => 02-AUG-2016 | TIME PLOTTED => 13:22

Dist	COUNTY	ROUTE	POST MILES TOTAL PROJECT	SHEET No.	TOTAL SHEETS
02	Tri	299	0.0/8.3	35	103

REGISTERED CIVIL ENGINEER 06-12-16 DATE

PLANS APPROVAL DATE 06-15-16

REGISTERED PROFESSIONAL ENGINEER SOCORRO V. URENA No. 79633 Exp. 9-30-16 CIVIL STATE OF CALIFORNIA

THE STATE OF CALIFORNIA OR ITS OFFICERS OR AGENTS SHALL NOT BE RESPONSIBLE FOR THE ACCURACY OR COMPLETENESS OF SCANNED COPIES OF THIS PLAN SHEET.

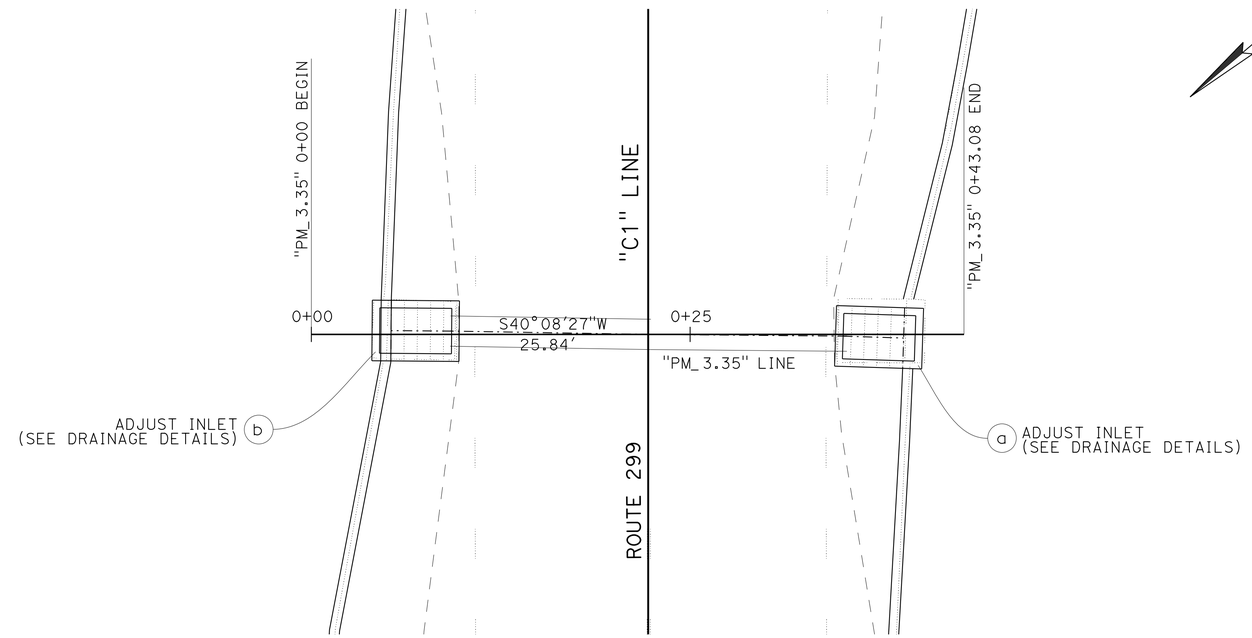

DRAINAGE SYSTEM 3.40

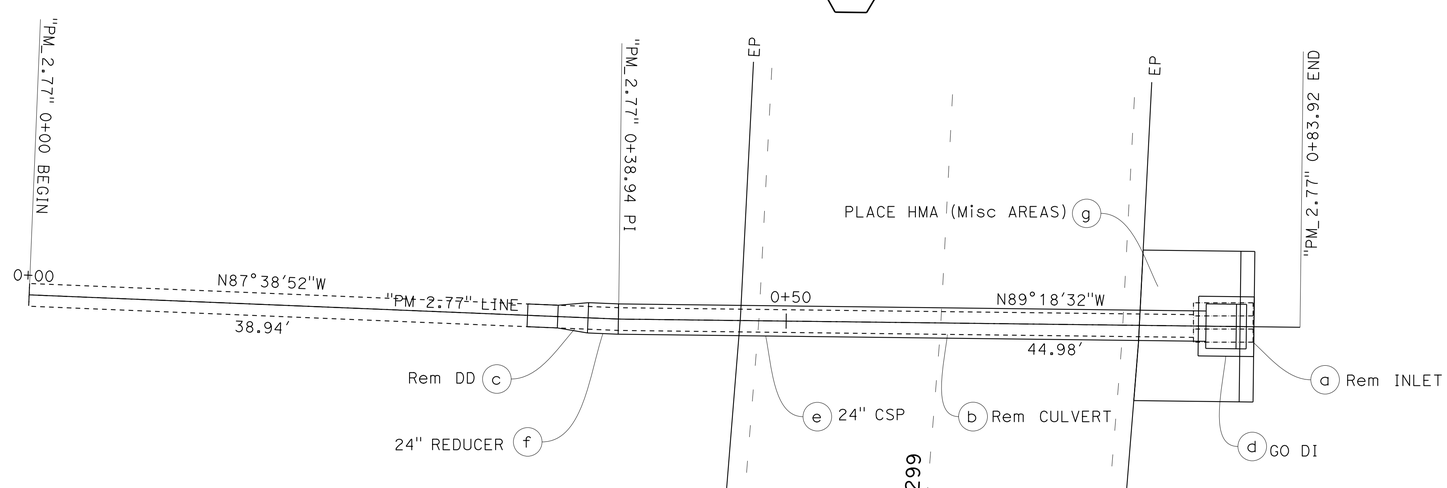

DRAINAGE SYSTEM 2.77

ABBREVIATIONS:

Rem REMOVE
SFES STEEL FLARED END SECTION

DRAINAGE PLAN

SCALE: 1" = 5'

D-1

APPROVED FOR DRAINAGE WORK ONLY

REVISED BY	DATE REVISED

CALCULATED-DESIGNED BY	JEFF B. COON
CHECKED BY	SOCORRO URENA
FUNCTIONAL SUPERVISOR	AL TRUJILLO

STATE OF CALIFORNIA - DEPARTMENT OF TRANSPORTATION

Caltrans® **DESIGN**

P:\proj1\02\4G380_plans\pse\24g380ia001.dgn

LAST REVISION 05-16-16 | DATE PLOTTED => 02-AUG-2016 TIME PLOTTED => 08:16

Dist	COUNTY	ROUTE	POST MILES TOTAL PROJECT	SHEET No.	TOTAL SHEETS
02	Tri	299	0.0/8.3	36	103

REGISTERED CIVIL ENGINEER 06-12-16 DATE

06-15-16
PLANS APPROVAL DATE

REGISTERED PROFESSIONAL ENGINEER SOCORRO V. URENA No. 79633 Exp. 9-30-16 CIVIL STATE OF CALIFORNIA

THE STATE OF CALIFORNIA OR ITS OFFICERS OR AGENTS SHALL NOT BE RESPONSIBLE FOR THE ACCURACY OR COMPLETENESS OF SCANNED COPIES OF THIS PLAN SHEET.

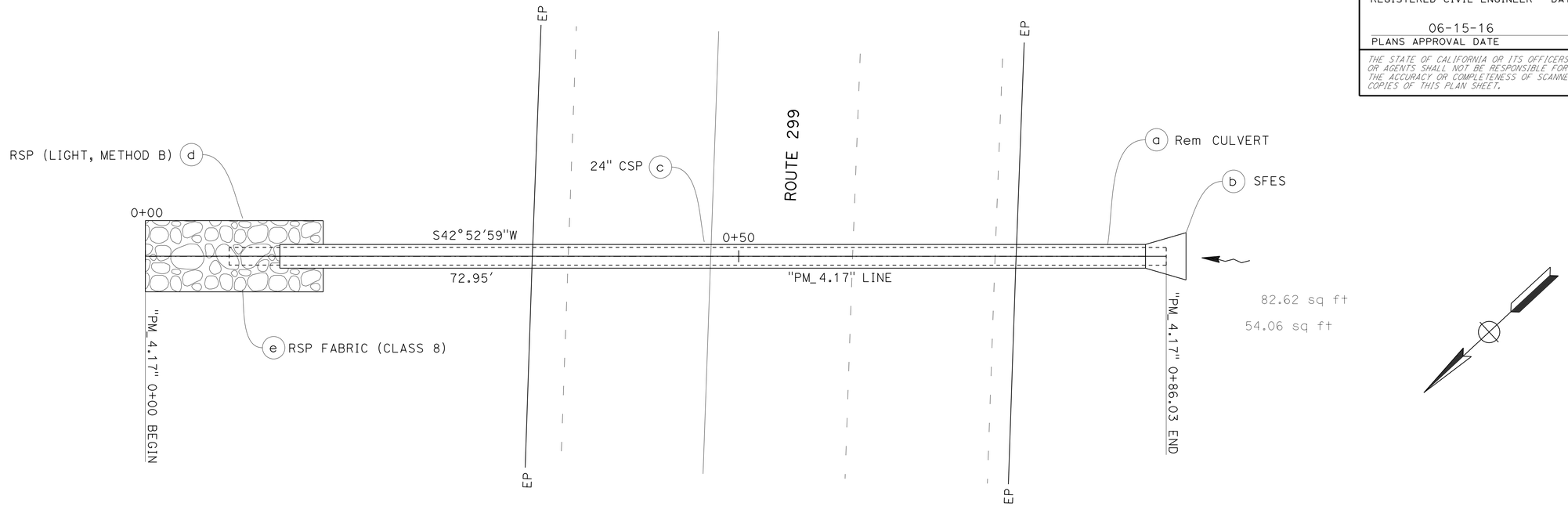

DRAINAGE SYSTEM 4.15

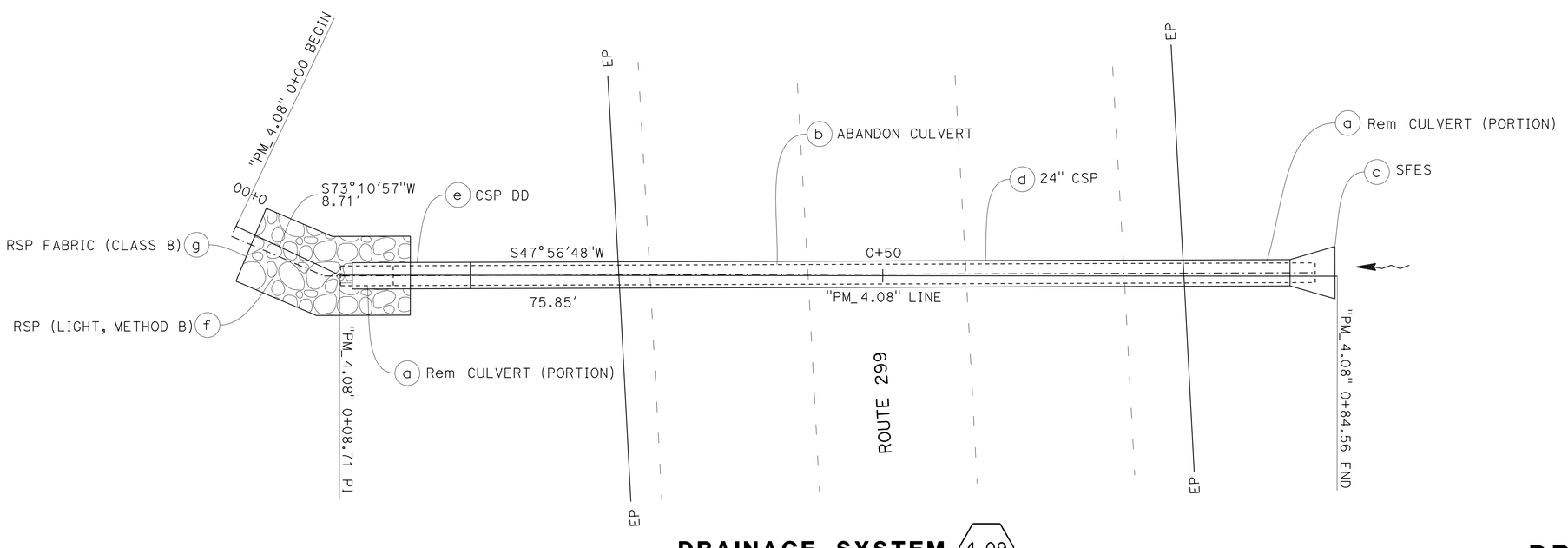

DRAINAGE SYSTEM 4.09

APPROVED FOR DRAINAGE WORK ONLY

DRAINAGE PLAN

SCALE: 1" = 5'

D-2

REVISED BY	DATE REVISED

CALCULATED-DESIGNED BY	CHECKED BY
JEFF B. COON	SOCORRO URENA

FUNCTIONAL SUPERVISOR: AL TRUJILLO

STATE OF CALIFORNIA - DEPARTMENT OF TRANSPORTATION

Caltrans® **DESIGN**

P:\proj1\02\4G380_plans\pse\24g380ia002.dgn

LAST REVISION 05-14-16 | DATE PLOTTED => 02-AUG-2016 | TIME PLOTTED => 08:16

Dist	COUNTY	ROUTE	POST MILES TOTAL PROJECT	SHEET No.	TOTAL SHEETS
02	Tri	299	0.0/8.3	37	103

REGISTERED CIVIL ENGINEER 06-12-16 DATE

06-15-16
PLANS APPROVAL DATE

REGISTERED PROFESSIONAL ENGINEER
SOCORRO V. URENA
No. 79633
Exp. 9-30-16
CIVIL
STATE OF CALIFORNIA

THE STATE OF CALIFORNIA OR ITS OFFICERS OR AGENTS SHALL NOT BE RESPONSIBLE FOR THE ACCURACY OR COMPLETENESS OF SCANNED COPIES OF THIS PLAN SHEET.

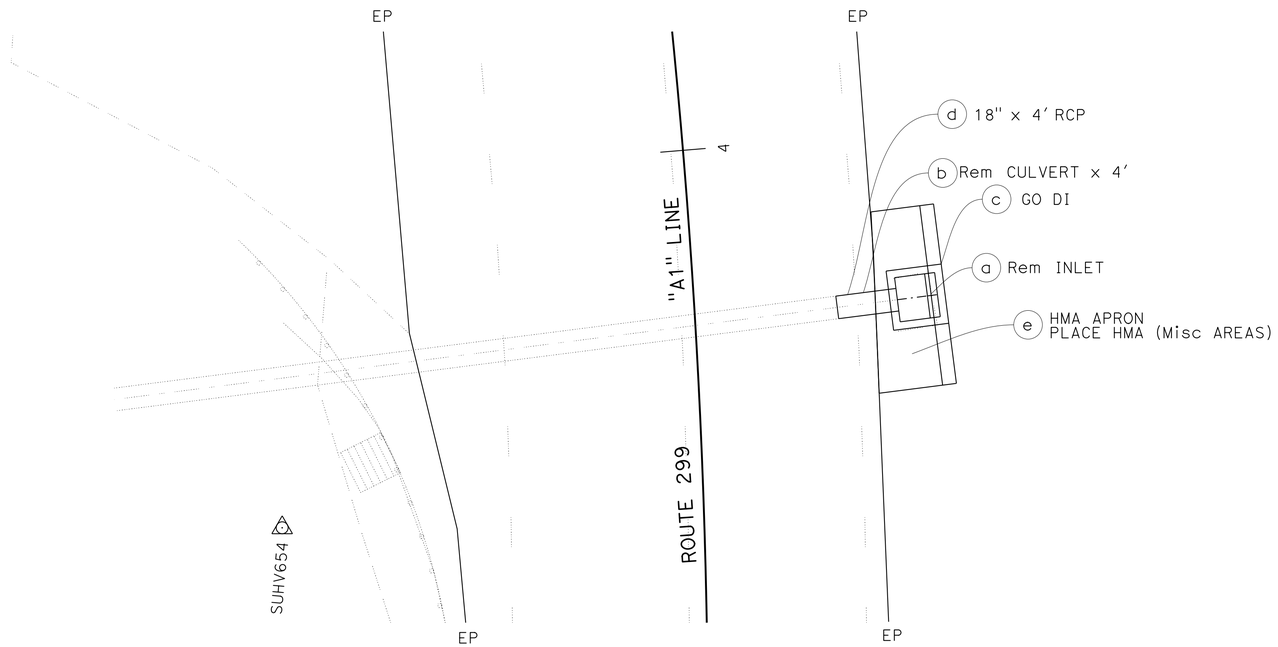

DRAINAGE SYSTEM 6.50

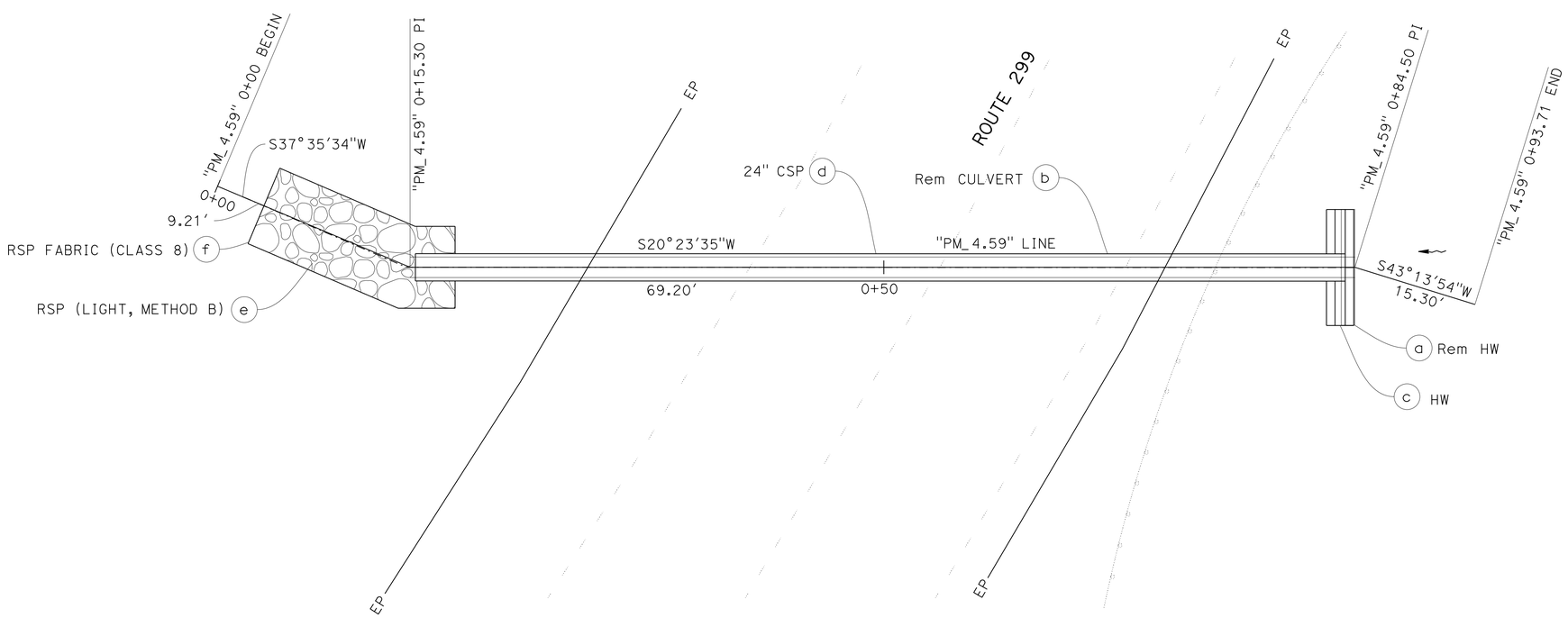

DRAINAGE SYSTEM 4.61

DRAINAGE PLAN

SCALE: 1" = 5'

D-3

APPROVED FOR DRAINAGE WORK ONLY

REVISED BY	DATE REVISED

CALCULATED-DESIGNED BY: JEFF B. COON
CHECKED BY: SOCORRO URENA
FUNCTIONAL SUPERVISOR: AL TRUJILLO

STATE OF CALIFORNIA - DEPARTMENT OF TRANSPORTATION
Caltrans
DESIGN

P:\proj1\02\4G380_plans\pse\24g380ia003.dgn

LAST REVISION 05-20-16
DATE PLOTTED => 02-AUG-2016
TIME PLOTTED => 08:16

Dist	COUNTY	ROUTE	POST MILES TOTAL PROJECT	SHEET No.	TOTAL SHEETS
02	Tri	299	0.0/8.3	38	103

REGISTERED CIVIL ENGINEER 06-12-16 DATE

06-15-16
PLANS APPROVAL DATE

REGISTERED PROFESSIONAL ENGINEER SOCORRO V. URENA No. 79633 Exp. 9-30-16 CIVIL STATE OF CALIFORNIA

THE STATE OF CALIFORNIA OR ITS OFFICERS OR AGENTS SHALL NOT BE RESPONSIBLE FOR THE ACCURACY OR COMPLETENESS OF SCANNED COPIES OF THIS PLAN SHEET.

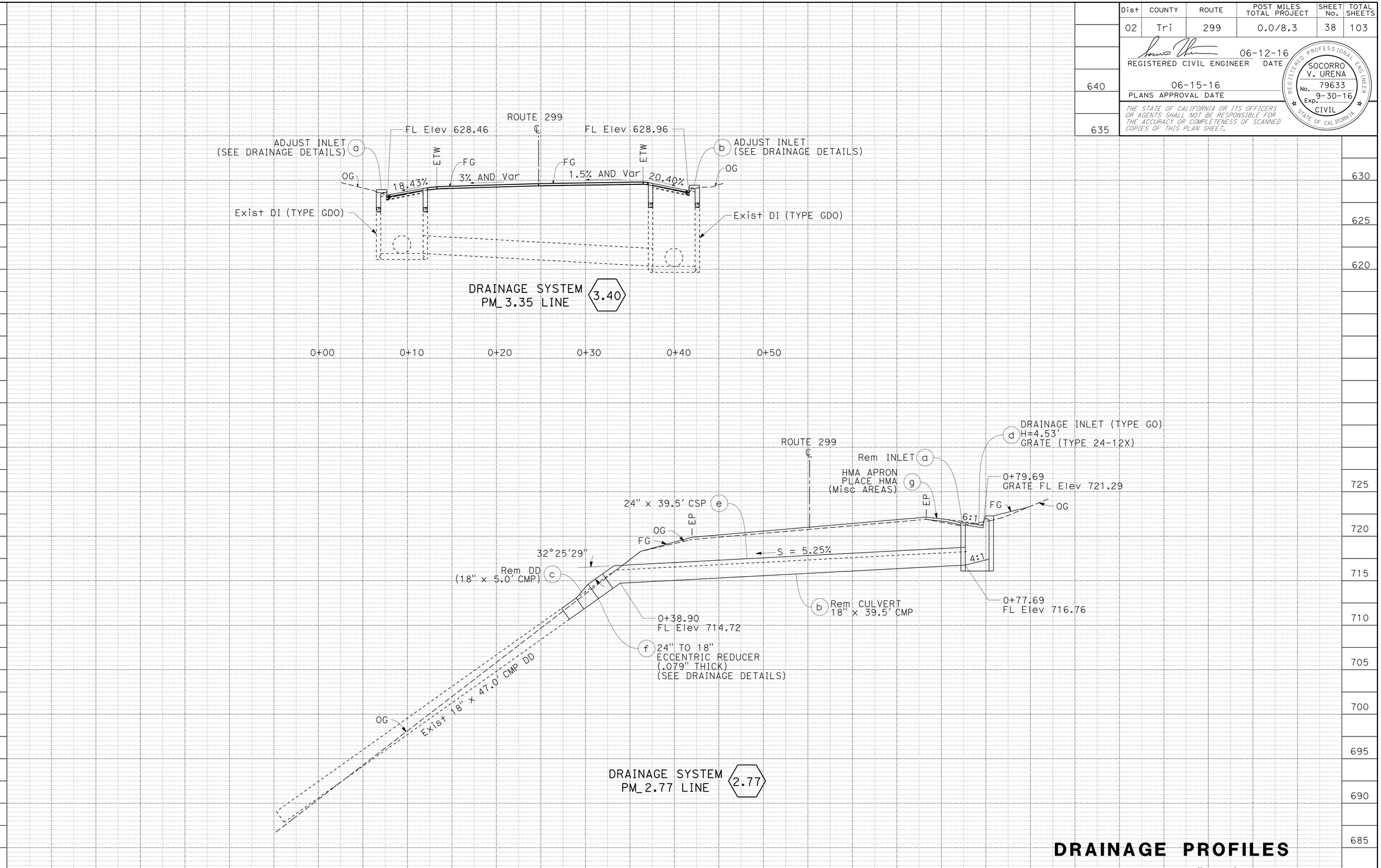

DRAINAGE PROFILES

SCALE: 1" = 5'

DP-1

STATE OF CALIFORNIA - DEPARTMENT OF TRANSPORTATION
Caltrans DESIGN

FUNCTIONAL SUPERVISOR: AL TRUJILLO
CALCULATED-DESIGNED BY: JEFF B. COON
CHECKED BY: SOCORRO URENA
REVISED BY / DATE REVISED

P:\proj1\02\4G380_plans\pse\24g380ib001.dgn

LAST REVISION 05-16-16 | DATE PLOTTED => 02-AUG-2016 | TIME PLOTTED => 08:16

BORDER LAST REVISED 7/2/2010 | USERNAME => s115152 | DGN FILE => 24g380ib001.dgn | RELATIVE BORDER SCALE IS IN INCHES 0 1 2 3 | UNIT 0318 | PROJECT NUMBER & PHASE 02 1400 0006 1

Dist	COUNTY	ROUTE	POST MILES TOTAL PROJECT	SHEET No.	TOTAL SHEETS
02	Tri	299	0.0/8.3	39	103

REGISTERED CIVIL ENGINEER 06-12-16 DATE

06-15-16
PLANS APPROVAL DATE

REGISTERED PROFESSIONAL ENGINEER SOCORRO V. URENA No. 79633 Exp. 9-30-16 CIVIL STATE OF CALIFORNIA

THE STATE OF CALIFORNIA OR ITS OFFICERS OR AGENTS SHALL NOT BE RESPONSIBLE FOR THE ACCURACY OR COMPLETENESS OF SCANNED COPIES OF THIS PLAN SHEET.

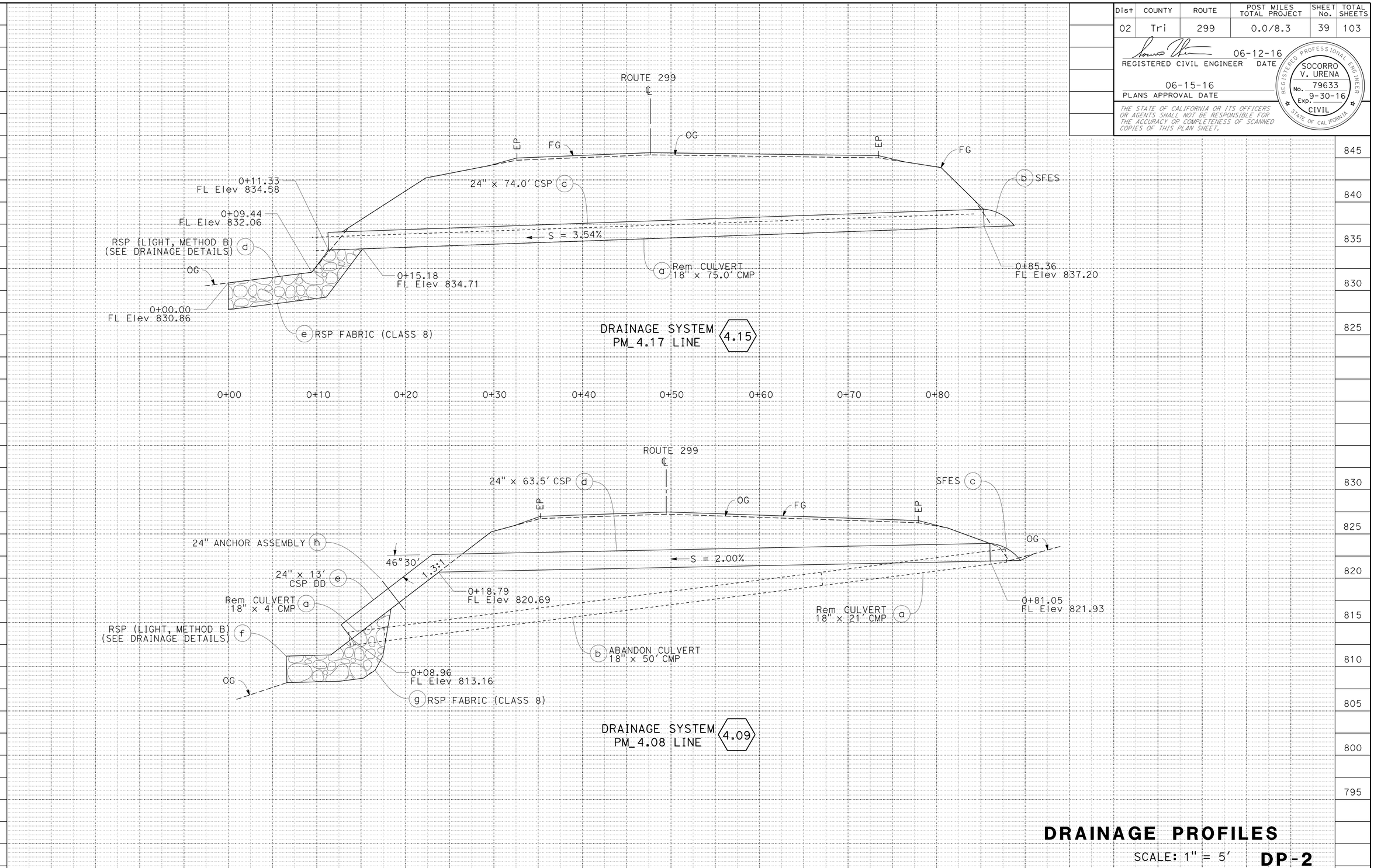

DRAINAGE PROFILES

SCALE: 1" = 5'

DP-2

REVISED BY | DATE REVISED

JEFF B. COON | SOCORRO URENA

CALCULATED-DESIGNED BY | CHECKED BY

FUNCTIONAL SUPERVISOR: AL TRUJILLO

STATE OF CALIFORNIA - DEPARTMENT OF TRANSPORTATION

Caltrans® DESIGN

P:\proj1\02\4G380_plans\pse\24g380ib002.dgn

LAST REVISION 05-14-16 | DATE PLOTTED => 02-AUG-2016 | TIME PLOTTED => 08:16

Dist	COUNTY	ROUTE	POST MILES TOTAL PROJECT	SHEET No.	TOTAL SHEETS
02	Tri	299	0.0/8.3	40	103

REGISTERED CIVIL ENGINEER 06-12-16 DATE

06-15-16
PLANS APPROVAL DATE

REGISTERED PROFESSIONAL ENGINEER SOCORRO V. URENA No. 79633 Exp. 9-30-16 CIVIL STATE OF CALIFORNIA

THE STATE OF CALIFORNIA OR ITS OFFICERS OR AGENTS SHALL NOT BE RESPONSIBLE FOR THE ACCURACY OR COMPLETENESS OF SCANNED COPIES OF THIS PLAN SHEET.

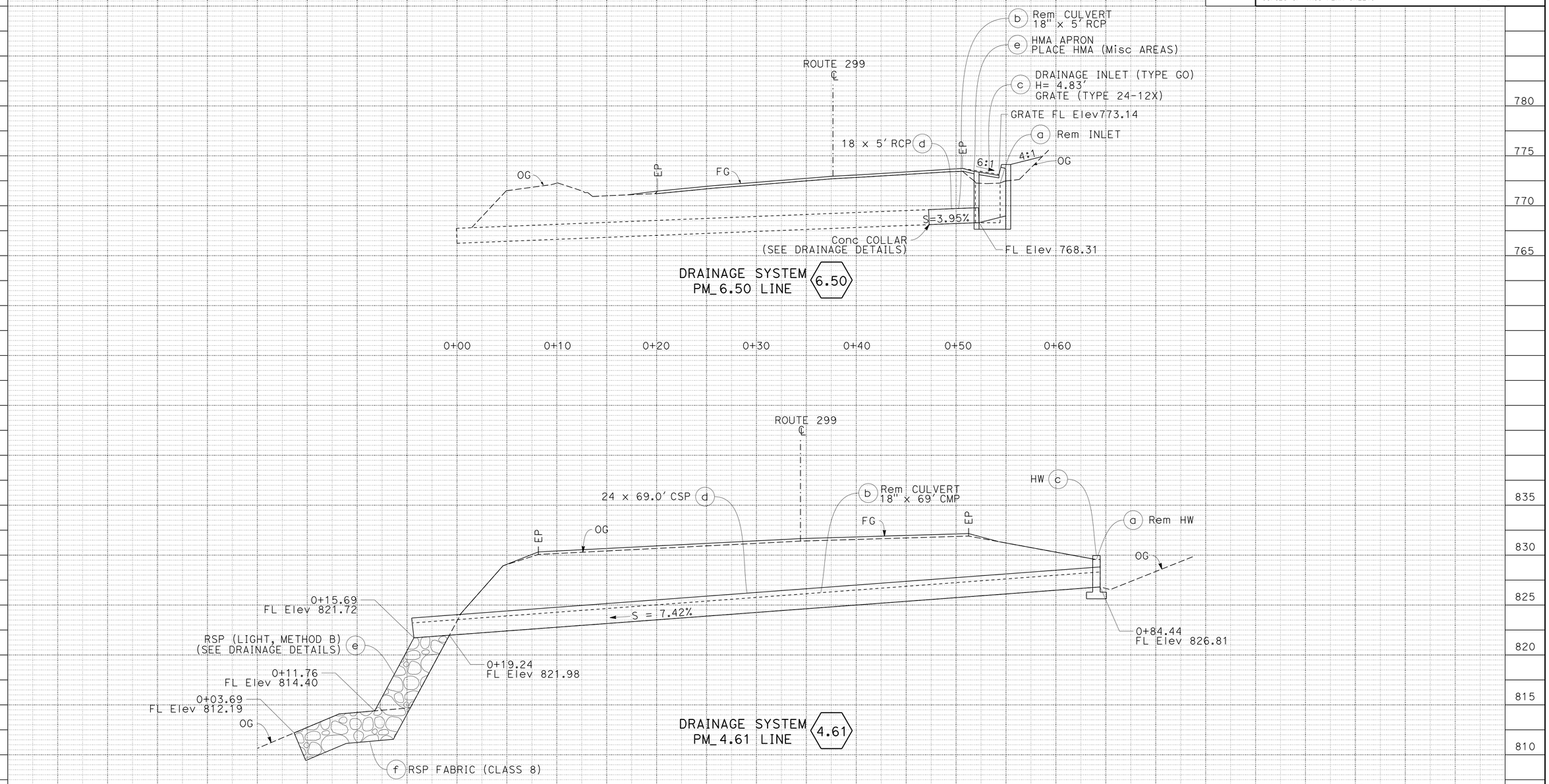

DRAINAGE PROFILES

SCALE: 1 = 5'

DP-3

REVISED BY | DATE REVISED

JEFF B. COON | SOCORRO URENA

CALCULATED-DESIGNED BY | CHECKED BY

FUNCTIONAL SUPERVISOR: AL TRUJILLO

STATE OF CALIFORNIA - DEPARTMENT OF TRANSPORTATION

Caltrans® DESIGN

P:\proj1\02\4G380_plans\pse\24g380ib003.dgn

LAST REVISION 05-20-16 | DATE PLOTTED => 02-AUG-2016 | TIME PLOTTED => 08:16

Dist	COUNTY	ROUTE	POST MILES TOTAL PROJECT	SHEET No.	TOTAL SHEETS
02	Tri	299	0.0/8.3	41	103

REGISTERED CIVIL ENGINEER 06-12-16 DATE

06-15-16
PLANS APPROVAL DATE

REGISTERED PROFESSIONAL ENGINEER SOCORRO V. URENA No. 79633 Exp. 9-30-16 CIVIL STATE OF CALIFORNIA

THE STATE OF CALIFORNIA OR ITS OFFICERS OR AGENTS SHALL NOT BE RESPONSIBLE FOR THE ACCURACY OR COMPLETENESS OF SCANNED COPIES OF THIS PLAN SHEET.

NOTES:

1. FOR DETAILS NOT SHOWN, SEE STANDARD PLANS.
2. HMA OVERLAY (SEE Typ CROSS SECTIONS).
3. ✳ DRAINAGE SYSTEM NUMBER IS DIFFERENT THAN POST MILE SHOWN ON THE HIGHWAY.

LEGEND:

- PLACE HOT MIX ASPHALT (MISCELLANEOUS AREA)
- MINOR CONCRETE

ABBREVIATIONS:

DS DRAINAGE SYSTEM
(N) NOT A SEPARATE PAY ITEM

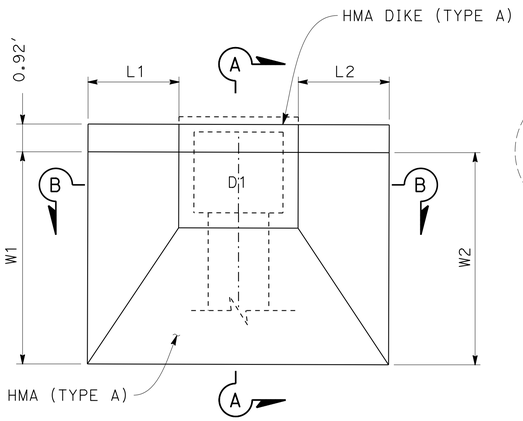

PLAN

HMA APRON PLACE HMA (Misc AREA) AND ADJUST INLET

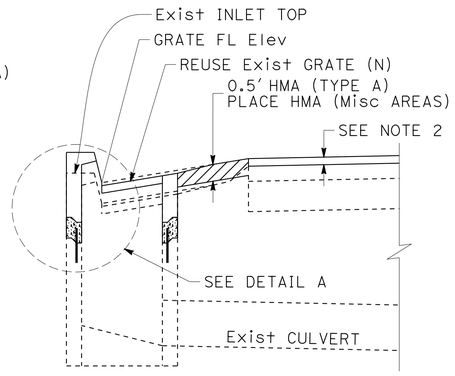

SECTION A-A ADJUST INLET (TYPE GO)

3.35 3.38 3.43 5.99 6.43
6.57 7.41 7.50 7.61 7.80 8.10 a

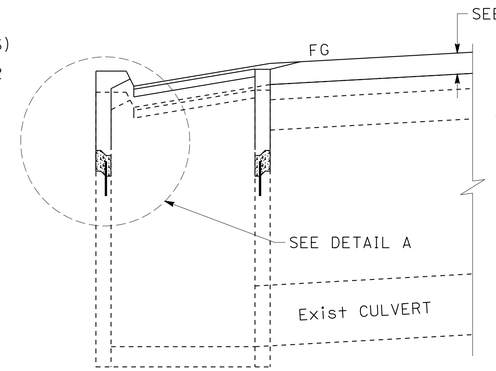

SECTION A-A ADJUST INLET (TYPE GDO)

3.40 a b

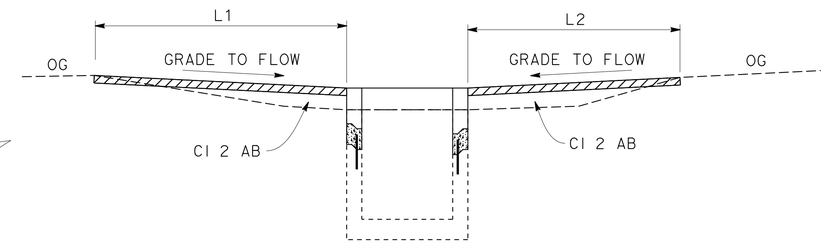

SECTION B-B

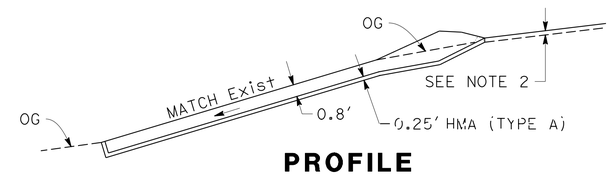

PROFILE

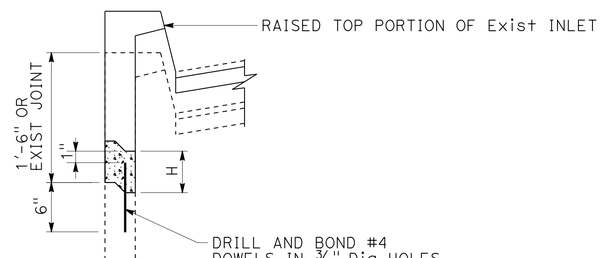

DETAIL A

ADJUST INLET

	(PM)	UNIT No.	H (Ft)
	3.35	a	0.25
	3.38	a	0.25
✳	3.40	a	0.30
✳	3.40	b	0.30
	3.43	a	0.25
	5.99	a	0.75
	6.43	a	0.75
	6.57	a	0.60
	7.41	a	0.75
✳	7.50	a	0.75
	7.61	a	0.75
	7.80	a	0.70
	8.10	a	0.70

PLACE HMA (Misc AREA)

LOCATION (Tri 299) (PM)	UNIT No.	INLET TYPE	WIDTH		LENGTH	
			W1	W2	L1	L2
			LF	LF	LF	LF
2.77	g	GO	6.5	7.0	3.0	3.0
3.35	a	GO	4.3	4.3	3.0	3.0
3.38	a	GO	4.2	4.2	3.0	3.0
3.40 ✳	a	GO	5.2	5.2	3.0	3.0
3.40 ✳	b	GO	5.5	5.5	3.0	3.0
3.43	a	GO	4.5	3.6	3.0	3.0
5.99	a	GO	4.0	4.0	6.0	4.0
6.43	a	GO	5.0	4.0	6.0	3.0
6.50	e	GO	3.5	4.0	4.0	4.0
6.57	a	GO	4.0	4.0	5.0	3.0
6.87	a	ODI	2.7	2.7	14.0	4.0
7.41	a	GO	3.0	3.0	5.0	3.0
7.50 ✳	a	GO	2.5	2.7	10.0	4.0
7.61	a	GO	3.5	4.5	10.0	3.0
7.80	a	GO	6.0	6.0	10.0	3.0
8.10	a	GO	3.0	3.0	9.0	3.0

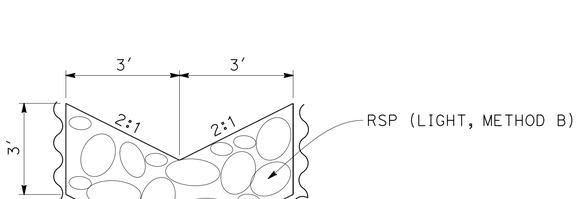

ENERGY DISSIPATER

4.09 4.15 4.61

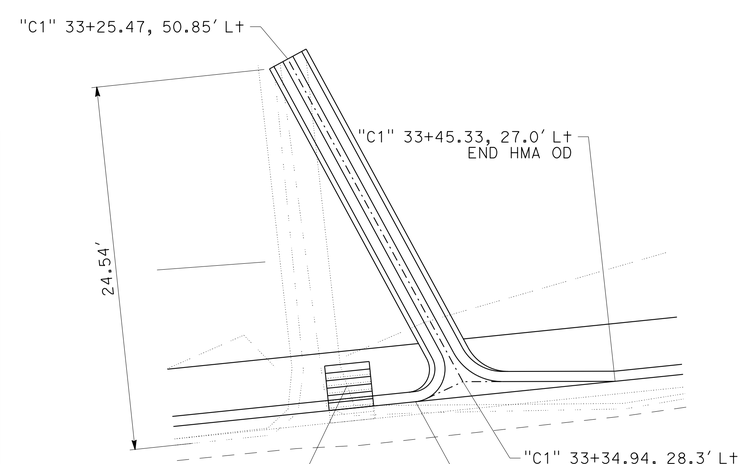

PLAN

HMA OVERSIDE DRAIN PLACE HMA Misc AREAS

3.55 a

DRAINAGE DETAILS

NO SCALE

DD-1

REVISED BY | DATE REVISED
JEFF B. COON | SOCORRO URENA
CALCULATED-DESIGNED BY | CHECKED BY
FUNCTIONAL SUPERVISOR: AL TRUJILLO
STATE OF CALIFORNIA - DEPARTMENT OF TRANSPORTATION
Caltrans® DESIGN
P:\proj1\02\4G380_plans\pse\24g380ic001.dgn

LAST REVISION 05-20-16 | DATE PLOTTED => 02-AUG-2016 | TIME PLOTTED => 08:16

Dist	COUNTY	ROUTE	POST MILES TOTAL PROJECT	SHEET No.	TOTAL SHEETS
02	Tri	299	0.0/8.3	42	103

REGISTERED CIVIL ENGINEER 06-12-16 DATE

PLANS APPROVAL DATE 06-15-16

REGISTERED PROFESSIONAL ENGINEER SOCORRO V. URENA No. 79633 Exp. 9-30-16 CIVIL STATE OF CALIFORNIA

THE STATE OF CALIFORNIA OR ITS OFFICERS OR AGENTS SHALL NOT BE RESPONSIBLE FOR THE ACCURACY OR COMPLETENESS OF SCANNED COPIES OF THIS PLAN SHEET.

TABLE D

D	L (Min)	T (Min)
1'-6"	1'-0"	6"

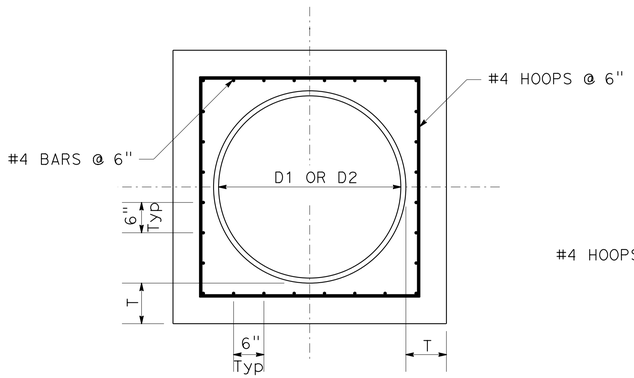

SECTION B-B

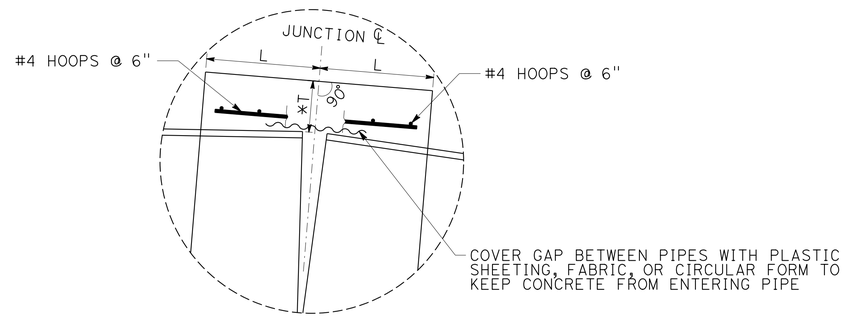

DETAIL C

*MEASURED ALONG JUNCTION ℄

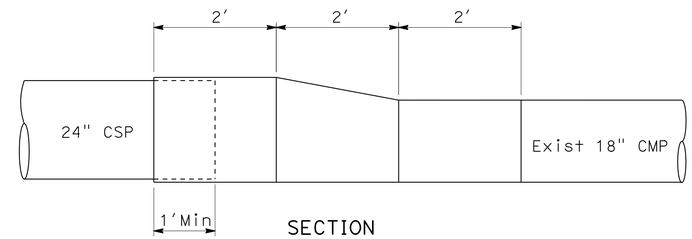

SECTION

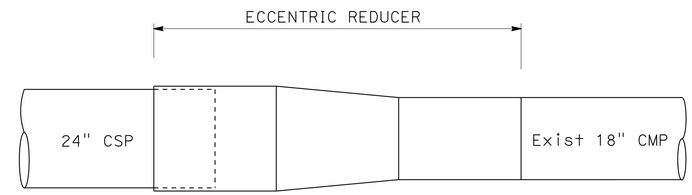

PLAN

CORRUGATED STEEL PIPE ECCENTRIC REDUCER

VARIABLE PIPE DIMENSIONS

DRAINAGE SYSTEM No.	SIZE
2.77	24" TO 18"

2.77 c

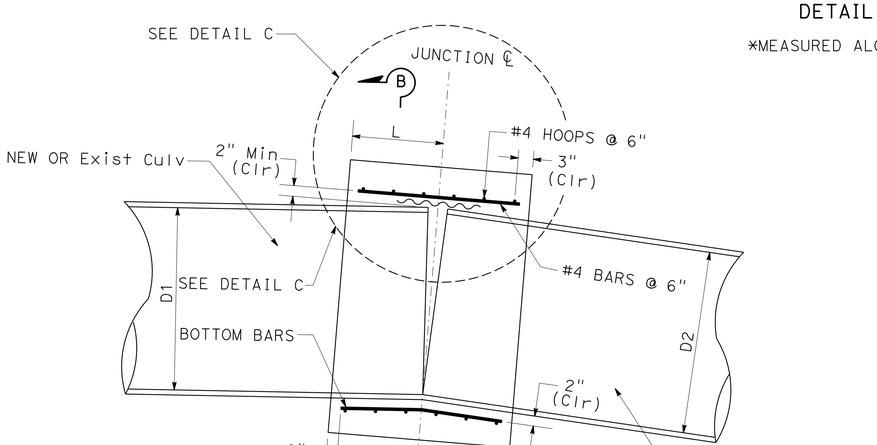

SECTION A-A

NOTE: BEND BOTTOM BARS AS NECESSARY TO MAINTAIN 2" CLEARANCE

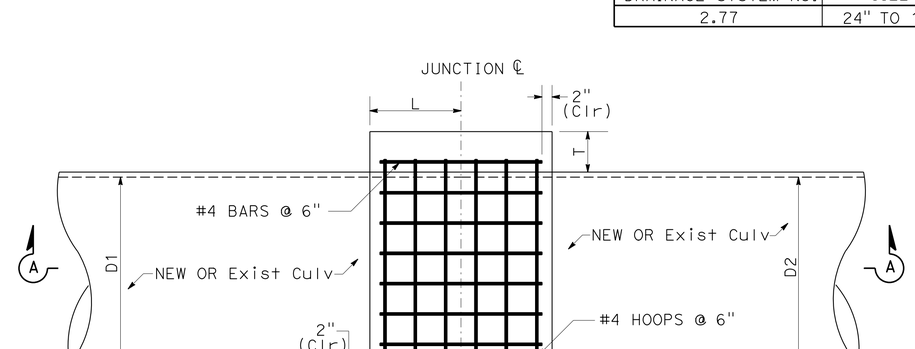

Conc COLLAR 6.50 d

PLAN

DRAINAGE DETAILS

NO SCALE **DD-2**

REVISED BY | DATE REVISED

JEFF B. COON | SOCORRO URENA

CALCULATED-DESIGNED BY | CHECKED BY

FUNCTIONAL SUPERVISOR: AL TRUJILLO

STATE OF CALIFORNIA - DEPARTMENT OF TRANSPORTATION

Caltrans® DESIGN

P:\proj1\02\4G380_plans\pse\24g380ic002.dgn

LAST REVISION 05-16-16 | DATE PLOTTED => 02-AUG-2016 | TIME PLOTTED => 08:16

BORDER LAST REVISED 7/2/2010 | USERNAME => s115152 | DGN FILE => 24g380ic002.dgn | RELATIVE BORDER SCALE IS IN INCHES 0 1 2 3 | UNIT 0318 | PROJECT NUMBER & PHASE 02 1400 0006 1

Dist	COUNTY	ROUTE	POST MILES TOTAL PROJECT	SHEET No.	TOTAL SHEETS
02	Tri	299	0.0/8.3	43	103

REGISTERED CIVIL ENGINEER 06-12-16 DATE

06-15-16
PLANS APPROVAL DATE

REGISTERED PROFESSIONAL ENGINEER SOCORRO V. URENA No. 79633 Exp. 9-30-16 CIVIL STATE OF CALIFORNIA

THE STATE OF CALIFORNIA OR ITS OFFICERS OR AGENTS SHALL NOT BE RESPONSIBLE FOR THE ACCURACY OR COMPLETENESS OF SCANNED COPIES OF THIS PLAN SHEET.

DRAINAGE QUANTITIES

SHEET No.	DRAINAGE SYSTEM No. (#)	DRAINAGE UNIT No. (#)	REMOVE INLET	REMOVE HEADWALL	REMOVE CULVERT	REMOVE DOWNDRAIN	REMOVE ASPHALT CONCRETE OVERSIDE DRAIN	ABANDON CULVERT	18" REINFORCED CONCRETE PIPE	24" CSP DOWNDRAIN (.109" THICK)	24" CORRUGATED STEEL PIPE (.109" THICK)	24" TO 18" CORRUGATED STEEL ECCENTRIC REDUCER (0.79" THICK)	24" STEEL FLARED END SECTION	* MINOR CONCRETE (MINOR STRUCTURE)	HEIGHT (N)	Misc IRON AND STEEL	RSP (LIGHT, METHOD B)	RSP FABRIC (CLASS 8)	PLACE HMA (Misc AREA)	* HOT MIX ASPHALT (TYPE A)	ADJUST INLET	24" ANCHOR ASSEMBLY	PM	DESCRIPTION	SHEET No.	DRAINAGE SYSTEM No. (#)	DRAINAGE UNIT No. (#)
			EA	EA	LF	EA	EA	EA	LF	LF	LF	EA	EA	CY	FT	LB	CY	SQYD	SQYD	TON	EA	EA					
D-1	2.77	a	1																				2.77		D-1	2.77	a
		b			39.5																			Exist 18" x 39.5' CMP			b
DD-2		c				1																		Exist 18" x 47.0' CMP DD, REMOVE 5 LF	DD-2		c
		d												1.61	4.53	239								INLET (TYPE GO), GRATE (TYPE 24-12X)			d
		e									39.5																e
		f										1															f
		g																	6.86	2.86				HMA APRON			g
DD-1	3.35	a																	4.24	1.97	1		R3.35	ADJUST INLET (TYPE GO), HMA APRON	DD-1	3.35	a
DD-1	3.38	a																	4.11	1.93	1		R3.38	ADJUST INLET (TYPE GO), HMA APRON	DD-1	3.38	a
D-1	3.40	a																	4.47	2.31	1		R3.40	ADJUST INLET (TYPE GDO), HMA APRON	D-1	3.40	a
DD-1		b																	4.81	2.42	1			ADJUST INLET (TYPE GDO), HMA APRON	DD-1		b
DD-1	3.43	a																	3.42	1.70	1		R3.43	ADJUST INLET (TYPE GO), HMA APRON	DD-1	3.43	a
DD-1	3.55	a					1												12.17	2.05			R3.55	HOT MIX ASPHALT OVERSIDE DRAIN	DD-1	3.55	a
D-2	4.09	a			25.0																		4.08	18" CMP	D-2	4.09	a
		b						1																18" CMP			b
		c											1														c
		d									63.5																d
		e								13.0																	e
		f															9							RSP (1/4 TON, METHOD B)			f
DD-1		g			75.0													27							DD-1		g
		h																				1					h
D-2	4.15	a																					4.17	18" CMP	D-2	4.15	a
		b											1														b
		c									74.0																c
DD-1		d															12							RSP (1/4 TON, METHOD B)	DD-1		d
		e																32									e
D-3	4.61	a		1																			4.61		D-3	4.61	a
		b			69.0																			18" CMP			b
		c												1.20	3.67									HEADWALL			c
		d									69.0																d
DD-1		e															14							RSP (1/4 TON, METHOD B)	DD-1		e
		f																36									f
DD-1	5.99	a																	6.05	2.58	1		5.99	ADJUST INLET (TYPE GO), HMA APRON	DD-1	5.99	a
DD-1	6.43	a																	6.22	2.64	1		6.43	ADJUST INLET (TYPE GO), HMA APRON	DD-1	6.43	a
D-3	6.50	a	1																				6.50		D-3	6.50	a
		b			5.0																						b
		c												1.69	4.83	239								INLET (TYPE GO), GRATE (TYPE 24-12X)			c
DD-2		d							5					0.37										18" RCP/CONCRTE COLLAR	DD-2		d
		e																	4.95	2.21				HMA APRON			e
DD-1	6.57	a																	4.95	2.21	1		6.57	ADJUST INLET (TYPE G1), HMA APRON	DD-1	6.57	a
DD-1	6.87	a																	6.33	2.14			6.87	HMA APRON	DD-1	6.87	a
DD-1	7.41	a																	6.67	2.79	1		7.41	ADJUST INLET (TYPE GO), HMA APRON	DD-1	7.41	a
DD-1	7.50	a																	6.23	2.65	1		7.50	ADJUST INLET (TYPE GO), HMA APRON	DD-1	7.50	a
DD-1	7.61	a																	7.69	3.14	1		7.61	ADJUST INLET (TYPE GO), HMA APRON	DD-1	7.61	a
DD-1	7.80	a																	11.47	4.41	1		7.80	ADJUST INLET (TYPE GO), HMA APRON	DD-1	7.80	a
DD-1	8.10	a																	5.36	2.35	1		8.10	ADJUST INLET (TYPE GO), HMA APRON	DD-1	8.10	a
TOTAL			2	1	213.5	1	1	1	5	13.0	246.0	1	2	4.87		478	35	95	106.00	42.36	13	1					

(N) - NOT A SEPARATE PAY ITEM, FOR INFORMATION ONLY
* TOTAL QUANTITY SHOWN ON SHEET Q-1

DRAINAGE QUANTITIES
DQ-1

REVISED BY | DATE REVISED
JEFF B. COON | SOCORRO URENA
CALCULATED-DESIGNED BY | CHECKED BY
FUNCTIONAL SUPERVISOR: AL TRUJILLO
STATE OF CALIFORNIA - DEPARTMENT OF TRANSPORTATION
Caltrans® DESIGN

P:\proj1\02\40380_plans\pse\24g380id001.dgn

LAST REVISION 05-20-16 | DATE PLOTTED => 02-AUG-2016 | TIME PLOTTED => 08:16

Dist	COUNTY	ROUTE	POST MILES TOTAL PROJECT	SHEET No.	TOTAL SHEETS
02	Tri	299	0.0/8.3	44	103

REGISTERED CIVIL ENGINEER 06-12-16 DATE

06-15-16
PLANS APPROVAL DATE

REGISTERED PROFESSIONAL ENGINEER SOCORRO V. URENA No. 79633 Exp. 9-30-16 CIVIL STATE OF CALIFORNIA

THE STATE OF CALIFORNIA OR ITS OFFICERS OR AGENTS SHALL NOT BE RESPONSIBLE FOR THE ACCURACY OR COMPLETENESS OF SCANNED COPIES OF THIS PLAN SHEET.

NOTES:

1. EXACT SIGN LOCATIONS TO BE DETERMINED BY THE ENGINEER.
2. FOR ACCURATE RIGHT OF WAY DATA, CONTACT RIGHT OF WAY ENGINEERING AT THE DISTRICT OFFICE
3. EXISTING UTILITY FACILITIES HAVE NOT BEEN PLOTTED ON THESE PLAN.

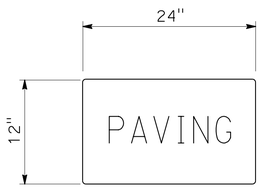

C23B(CA) SIGN DETAIL

STATIONARY MOUNTED CONSTRUCTION AREA SIGNS

SIGN No.	SIGN CODE	SIGN MESSAGE	PANEL SIZE (INCHES)	No. OF POSTS AND SIZE (NOMINAL INCHES)	No. OF SIGNS
A	C11(CA)	ROAD WORK NEXT 8.3 MILES	60 x 36	2-4 x 6	2
	C23B(CA)	PAVING	24 x 12		
B	W11-1	BICYCLE SYMBOL	36 x 36	1-4 x 6	2
	W16-1	SHARE THE ROAD	24 x 30		
C	G20-2	END ROAD WORK	36 x 18	1-4 x 4	2
D	C40(CA)	TRAFFIC FINES DOUBLED IN CONSTRUCTION ZONES	108 x 42	2-6 x 6	2
E	W20-1	ROAD WORK AHEAD	36 x 36	1-4 x 6	7
F	C11(CA)	ROAD WORK NEXT 4 MILES	60 x 36	2-4 x 6	2

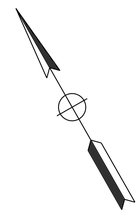

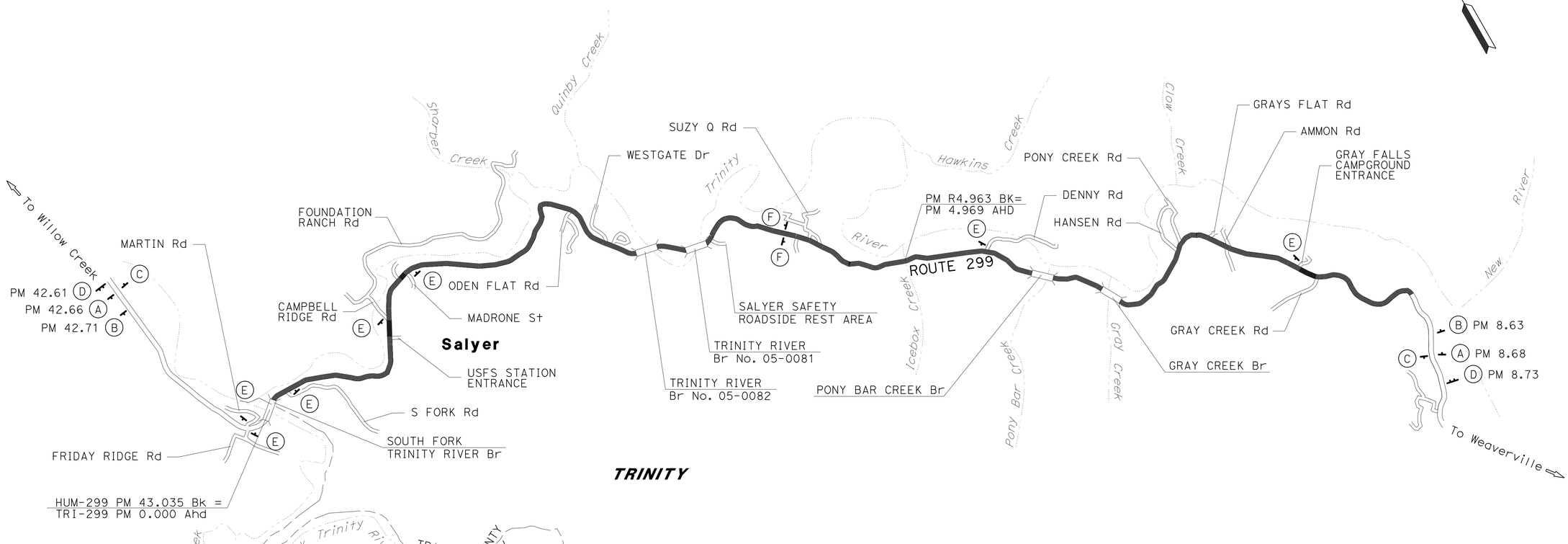

CONSTRUCTION AREA SIGNS
CS-1

APPROVED FOR CONSTRUCTION AREA SIGN WORK ONLY

REVISED BY | DATE REVISED
JEFF B. COON | SOCORRO URENA
CALCULATED-DESIGNED BY | CHECKED BY
FUNCTIONAL SUPERVISOR: AL TRUJILLO

STATE OF CALIFORNIA - DEPARTMENT OF TRANSPORTATION
Caltrans
DESIGN

P:\proj1\02\4G380_plans\pse\24g3801a001.dgn

LAST REVISION 05-06-16 | DATE PLOTTED => 02-AUG-2016 | TIME PLOTTED => 08:16

Dist	COUNTY	ROUTE	POST MILES TOTAL PROJECT	SHEET No.	TOTAL SHEETS
02	Tri	299	0.0/8.3	45	103

REGISTERED CIVIL ENGINEER 06-12-16 DATE

PLANS APPROVAL DATE 06-15-16

REGISTERED PROFESSIONAL ENGINEER SOCORRO V. URENA No. 79633 Exp. 9-30-16 CIVIL STATE OF CALIFORNIA

THE STATE OF CALIFORNIA OR ITS OFFICERS OR AGENTS SHALL NOT BE RESPONSIBLE FOR THE ACCURACY OR COMPLETENESS OF SCANNED COPIES OF THIS PLAN SHEET.

NOTE:

1. FOR TEMPORARY PAVEMENT MARKING USE TEMPORARY, REMOVABLE PAVEMENT MARKING TAPE.

TRAFFIC STRIPE AND PAVEMENT MARKER QUANTITIES

LOCATION (PM)		DETAIL NUMBER	DETAIL LENGTH	THERMOPLASTIC TRAFFIC STRIPE							PAVEMENT MARKER (RETROREFLECTIVE-RECESSED)			REMARKS
				REMOVE	8 INCH	4 INCH	4 INCH	4 INCH (BROKEN 12-3)	4 INCH (BROKEN 36-12)	4 INCH (BROKEN 36-12)	TYPE D	TYPE G	TYPE H	
					WHITE	YELLOW	WHITE	WHITE	WHITE	YELLOW				
FROM	TO		LF								EA			
0.00 R+	0.12 R+	27B	634				634							
0.00	0.15	22	792			1584					68			
0.00 L+	1.14 L+	27B	6019				6019							
0.12 R+	0.17 R+	27C	264					264						
0.15 R+		21	45			90								SOUTH FORK COUNTY Rd
0.15	1.13	22	5174			10348					434			
0.17 R+	1.00 R+	27B	4382				4382							
1.00 R+		38A	20	40	20									
1.01 R+	1.14 R+	27B	686				686							
1.10 L+		21	30											CAMPBELL RIDGE Rd
0.13	1.14	22	53			106					6			
0.14	1.56	22	2218			4436					188			
1.14 R+	R3.54 R+	27B	12672				12672							
1.14 L+	5.32 L+	27B	22070				22070							
1.56	1.74	19R	950			950				950	22		42	
1.74	1.91	19L	898			898				898	22		39	
1.91	R3.55	22	8659			17318					724			
R3.53 R+	R3.58 R+	27C	264					264						
R3.54 L+	R3.60 L+	38	317	634	317							15		
R3.56 R+		21	25			50								SALYER SAFETY ROADSIDE REST AREA
R3.56 R+	3.99 R+	27B	2270				2270							
R3.58 R+	R3.60 R+	27B	106				106							
R3.58	R3.61	22	158			316					16			
R3.60 R+	4.29 R+	12	3643						3643			78		
R3.61	R3.68	29	370			1480					34			
R3.68	5.35	22	8818			17636					738			
4.00 R+	7.60 R+	27B	19008				19008							
4.00		38A	20	40	20									
EQUATION Sta R4.963 Bk = 4.969 Ahd														
5.32 L+	5.35 L+	27C	158					158						
5.35	6.58	22	6494			12988					544			
5.35 L+	7.50 L+	27B	11352				11352							
5.44 L+		21	32			64								DENNY Rd
6.58	7.27	29	3643			14572					306			
6.62 R+	7.12 R+	12	2640						2640			57		
6.65 L+	7.22 L+	12	3010						3010			65		
7.27	8.10	22	4382			8764					366			
8.10	8.32	22	1162			2323					98			
7.50 L+	7.57 L+	27C	370					370						
7.57 L+	8.10 L+	27B	2798				2798							
8.10 L+	8.32 L+	27B	1162				1162							
7.60 R+	7.63 R+	27C	158					158						
7.63 L+		21	22			44								
7.63 R+	8.10 R+	27B	2482				2482							GRAY FALLS CAMPGROUND
8.10 R+	8.32 R+	27B	1162				1162							
SUBTOTAL				714	357	93967	86803	1214	9293	1848	3566	215	81	
TOTAL				714	357	180770		1214	11141		3862			

PAVEMENT DELINEATION QUANTITIES
PDQ-1

REVISED BY | DATE REVISED

JEFF B. COON | SOCORRO URENA

CALCULATED-DESIGNED BY | CHECKED BY

FUNCTIONAL SUPERVISOR: AL TRUJILLO

STATE OF CALIFORNIA - DEPARTMENT OF TRANSPORTATION

Caltrans® DESIGN

P:\proj1\02\40380_plans\pse\24g380nc001.dgn

LAST REVISION 05-12-16 | DATE PLOTTED => 02-AUG-2016 | TIME PLOTTED => 08:16

Dist	COUNTY	ROUTE	POST MILES TOTAL PROJECT	SHEET No.	TOTAL SHEETS
02	Tri	299	0.0/8.3	46	103

REGISTERED CIVIL ENGINEER 06-12-16 DATE

PLANS APPROVAL DATE 06-15-16

REGISTERED PROFESSIONAL ENGINEER SOCORRO V. URENA No. 79633 Exp. 9-30-16 CIVIL STATE OF CALIFORNIA

THE STATE OF CALIFORNIA OR ITS OFFICERS OR AGENTS SHALL NOT BE RESPONSIBLE FOR THE ACCURACY OR COMPLETENESS OF SCANNED COPIES OF THIS PLAN SHEET.

PAVEMENT MARKING QUANTITIES

LOCATION (PM)	ORIENTATION	LEGEND	REMOVE THERMOPLASTIC PAVEMENT MARKING	THERMOPLASTIC PAVEMENT MARKING	REMARKS
			SQFT		
0.15 R+	FNBT	LIMIT LINE	38	38	S FORK CO. Rd
0.15 R+	FNBT	STOP (2)	44	44	S FORK CO. Rd
1.04 R+	FEBT	PED	18	18	MAINLINE
1.05 R+	FEBT	XING	21	21	MAINLINE
1.12 L+	FSBT	LIMIT LINE	32	32	CAMPBELL RIDGE Rd
1.12 L+	FSBT	STOP (2)	44	44	CAMPBELL RIDGE Rd
1.14		CROSSWALK	82	82	MAINLINE
1.21 L+	FWBT	XING	21	21	MAINLINE
1.22 L+	FWBT	PED	18	18	MAINLINE
R3.56 R+	FNBT	LIMIT LINE	68	68	SALYER SAFETY ROADSIDE REST AREA
R3.56 R+	FNBT	STOP (2)	44	44	SALYER SAFETY ROADSIDE REST AREA
R3.57 L+	FWBT	TYPE III (L) ARROW	42	42	L+ TURN Ln
R3.61 L+	FWBT	TYPE III (L) ARROW	42	42	L+ TURN Ln
4.21 R+	FEBT	TYPE VI ARROW	42	42	Ln DROP
4.25 R+	FEBT	TYPE VI ARROW	42	42	Ln DROP
4.29 R+	FEBT	TYPE VI ARROW	42	42	Ln DROP
5.47 L+	FSBT	LIMIT LINE	64	64	DENNY Rd
5.47 L+	FSBT	STOP (2)	44	44	DENNY Rd
6.77 L+	FWBT	TYPE VI ARROW	42	42	Ln DROP
6.82 L+	FWBT	TYPE VI ARROW	42	42	Ln DROP
6.86 L+	FWBT	TYPE VI ARROW	42	42	Ln DROP
7.14 R+	FEBT	TYPE VI ARROW	42	42	Ln DROP
7.18 R+	FEBT	TYPE VI ARROW	42	42	Ln DROP
7.22 R+	FEBT	TYPE VI ARROW	42	42	Ln DROP
7.61 L+	FSBT	LIMIT LINE	32	32	GRAY FALL CAMPGROUND
7.61 L+	FSBT	STOP	22	22	GRAY FALL CAMPGROUND
		TOTAL	1054	1054	

PAVEMENT DELINEATION QUANTITIES
PDQ-2

REVISED BY | DATE REVISED

JEFF B. COON | SOCORRO URENA

CALCULATED-DESIGNED BY | CHECKED BY

FUNCTIONAL SUPERVISOR: AL TRUJILLO

STATE OF CALIFORNIA - DEPARTMENT OF TRANSPORTATION

Caltrans DESIGN

P:\proj1\02\4G380_plans\pse\24g380nc002.dgn

LAST REVISION 05-14-16 | DATE PLOTTED => 02-AUG-2016 | TIME PLOTTED => 08:16

Dist	COUNTY	ROUTE	POST MILES TOTAL PROJECT	SHEET No.	TOTAL SHEETS
02	Tri	299	0.0/8.3	47	103

06-12-16
REGISTERED CIVIL ENGINEER DATE

06-15-16
PLANS APPROVAL DATE

REGISTERED PROFESSIONAL ENGINEER
SOCORRO V. URENA
No. 79633
Exp. 9-30-16
CIVIL
STATE OF CALIFORNIA

THE STATE OF CALIFORNIA OR ITS OFFICERS OR AGENTS SHALL NOT BE RESPONSIBLE FOR THE ACCURACY OR COMPLETENESS OF SCANNED COPIES OF THIS PLAN SHEET.

LEGEND:

- MARKER (CULVERT)
- DELINEATOR (CLASS 2) TYPE E
- REMOVE DELINEATOR
- RESET ROADSIDE SIGN
- EXISTING SIGN TO REMAIN
- REMOVE OBJECT MARKER
- OBJECT MARKER (TYPE L-1)
- MILEPOST MARKER
- EXISTING 1 POST ROADSIDE SIGN
- EXISTING 2 POST ROADSIDE SIGN

ABBREVIATIONS:

S DELINEATOR SPACING

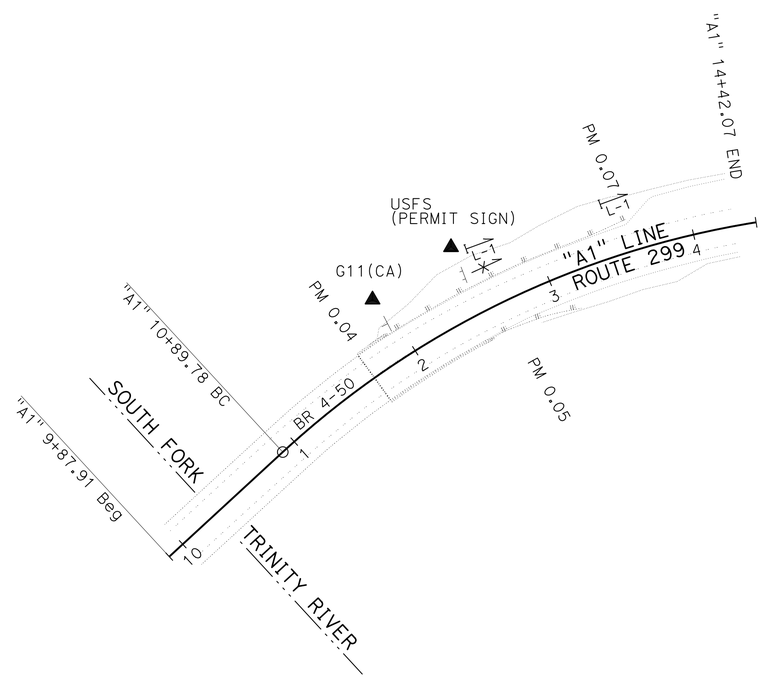

APPROVED FOR SIGN WORK ONLY

SIGN PLAN

SCALE: 1" = 50'

S-1

STATE OF CALIFORNIA - DEPARTMENT OF TRANSPORTATION
Caltrans®
DESIGN

FUNCTIONAL SUPERVISOR: AL TRUJILLO
CALCULATED-DESIGNED BY: JEFF B. COON
CHECKED BY: SOCORRO URENA
REVISED BY
DATE REVISED

P:\proj\02\4G380_plans\pse\24g380aa001.dgn

LAST REVISION 03-21-16
DATE PLOTTED => 02-AUG-2016
TIME PLOTTED => 08:16

BORDER LAST REVISED 7/2/2010
USERNAME => s115152
DGN FILE => 24g380aa001.dgn
RELATIVE BORDER SCALE IS IN INCHES 0 1 2 3
UNIT 0318
PROJECT NUMBER & PHASE 02 1400 0006 1

Dist	COUNTY	ROUTE	POST MILES TOTAL PROJECT	SHEET No.	TOTAL SHEETS
02	Tri	299	0.0/8.3	48	103

REGISTERED CIVIL ENGINEER 06-12-16 DATE

PLANS APPROVAL DATE 06-15-16

REGISTERED PROFESSIONAL ENGINEER SOCORRO V. URENA No. 79633 Exp. 9-30-16 CIVIL STATE OF CALIFORNIA

THE STATE OF CALIFORNIA OR ITS OFFICERS OR AGENTS SHALL NOT BE RESPONSIBLE FOR THE ACCURACY OR COMPLETENESS OF SCANNED COPIES OF THIS PLAN SHEET.

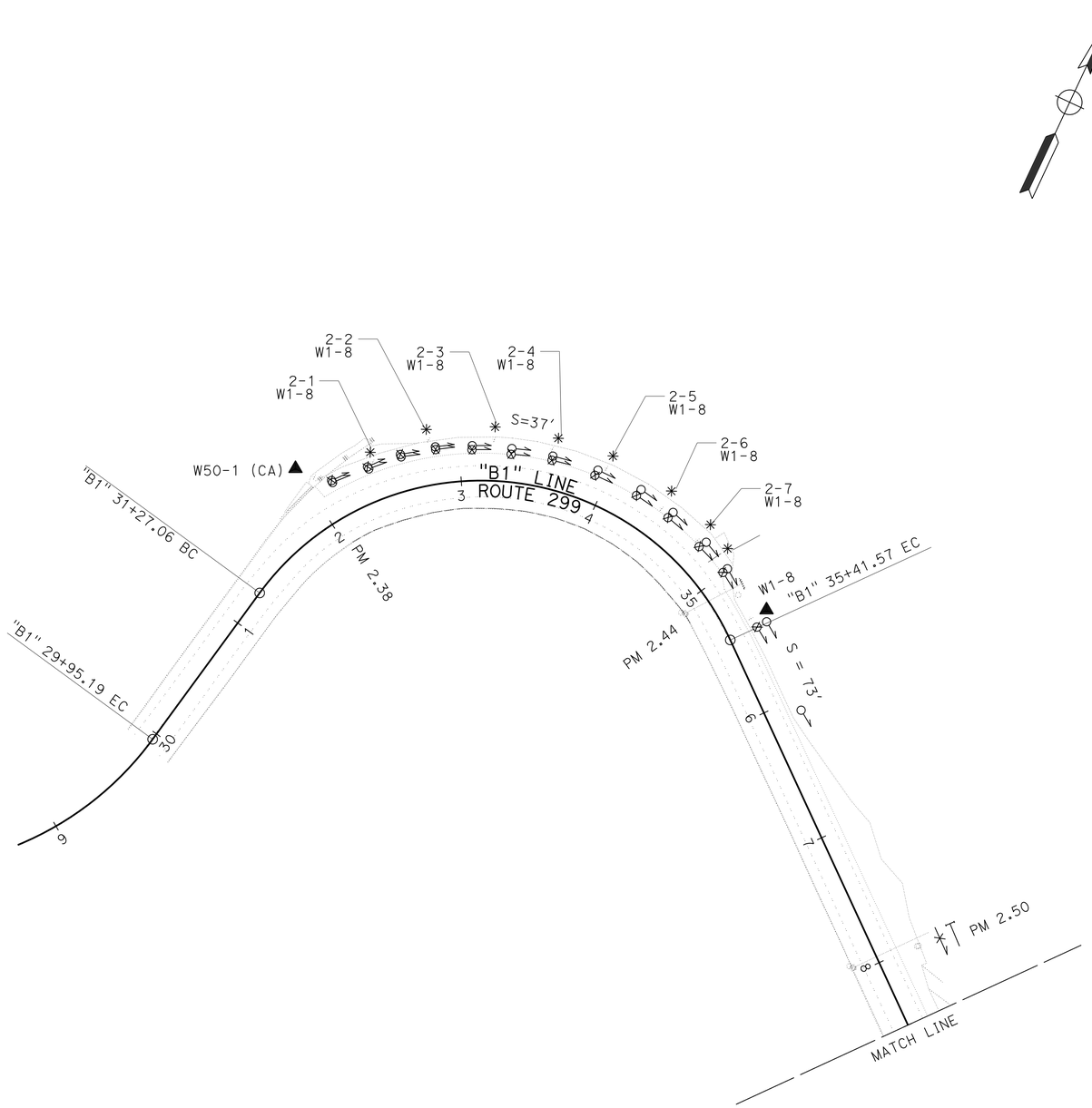

SIGN PLAN

SCALE: 1" = 50'

S-2

APPROVED FOR SIGN WORK ONLY

REVISED BY | DATE REVISED

JEFF B. COON | SOCORRO URENA

CALCULATED-DESIGNED BY | CHECKED BY

FUNCTIONAL SUPERVISOR: AL TRUJILLO

STATE OF CALIFORNIA - DEPARTMENT OF TRANSPORTATION

Caltrans® **DESIGN**

P:\proj1\02\40380_plans\pse\24g380oa002.dgn

LAST REVISION 05-16-16 | DATE PLOTTED => 02-AUG-2016 | TIME PLOTTED => 08:16

Dist	COUNTY	ROUTE	POST MILES TOTAL PROJECT	SHEET No.	TOTAL SHEETS
02	Tri	299	0.0/8.3	49	103

REGISTERED CIVIL ENGINEER 06-12-16 DATE

06-15-16
PLANS APPROVAL DATE

REGISTERED PROFESSIONAL ENGINEER
SOCORRO V. URENA
No. 79633
Exp. 9-30-16
CIVIL
STATE OF CALIFORNIA

THE STATE OF CALIFORNIA OR ITS OFFICERS OR AGENTS SHALL NOT BE RESPONSIBLE FOR THE ACCURACY OR COMPLETENESS OF SCANNED COPIES OF THIS PLAN SHEET.

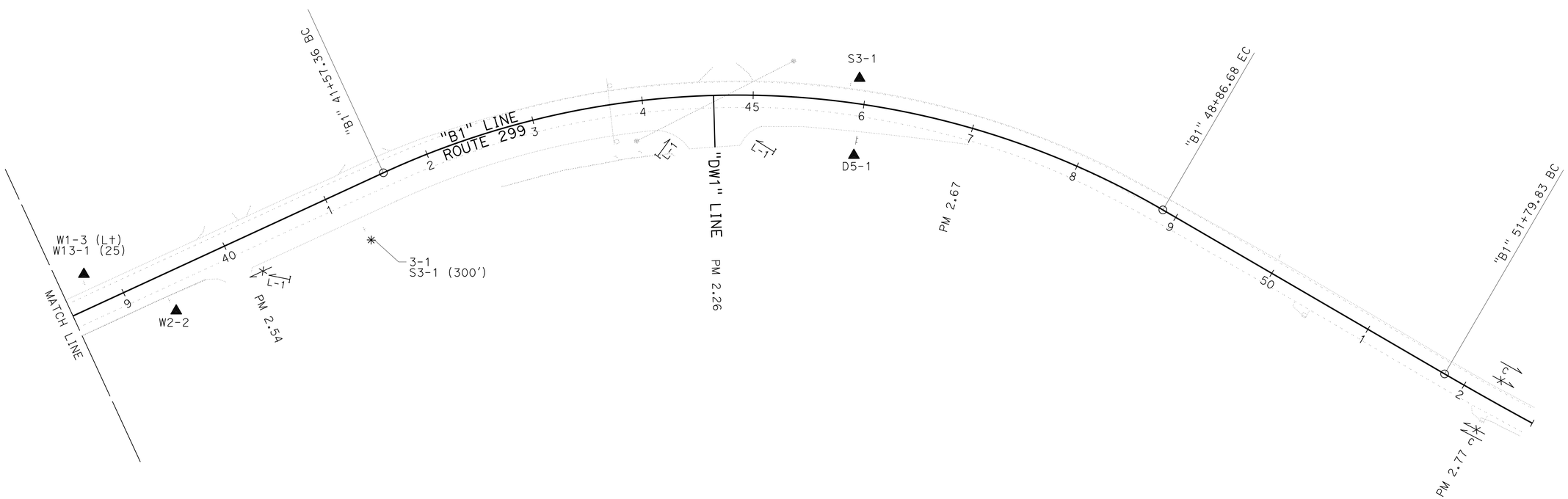

SIGN PLAN

SCALE: 1" = 50'

S-3

APPROVED FOR SIGN WORK ONLY

REVISED BY	DATE REVISED

CALCULATED-DESIGNED BY: JEFF B. COON
CHECKED BY: SOCORRO URENA
FUNCTIONAL SUPERVISOR: AL TRUJILLO

STATE OF CALIFORNIA - DEPARTMENT OF TRANSPORTATION
Caltrans
DESIGN

P:\proj1\02\4G380_plans\pse\24g380oa003.dgn

LAST REVISION 05-06-16
DATE PLOTTED => 02-AUG-2016
TIME PLOTTED => 08:16

BORDER LAST REVISED 7/2/2010
USERNAME => s115152
DGN FILE => 24g380oa003.dgn
RELATIVE BORDER SCALE IS IN INCHES 0 1 2 3
UNIT 0318
PROJECT NUMBER & PHASE 02 1400 0006 1

Dist	COUNTY	ROUTE	POST MILES TOTAL PROJECT	SHEET No.	TOTAL SHEETS
02	Tri	299	0.0/8.3	50	103

REGISTERED CIVIL ENGINEER 06-12-16 DATE

PLANS APPROVAL DATE 06-15-16

REGISTERED PROFESSIONAL ENGINEER SOCORRO V. URENA No. 79633 Exp. 9-30-16 CIVIL STATE OF CALIFORNIA

THE STATE OF CALIFORNIA OR ITS OFFICERS OR AGENTS SHALL NOT BE RESPONSIBLE FOR THE ACCURACY OR COMPLETENESS OF SCANNED COPIES OF THIS PLAN SHEET.

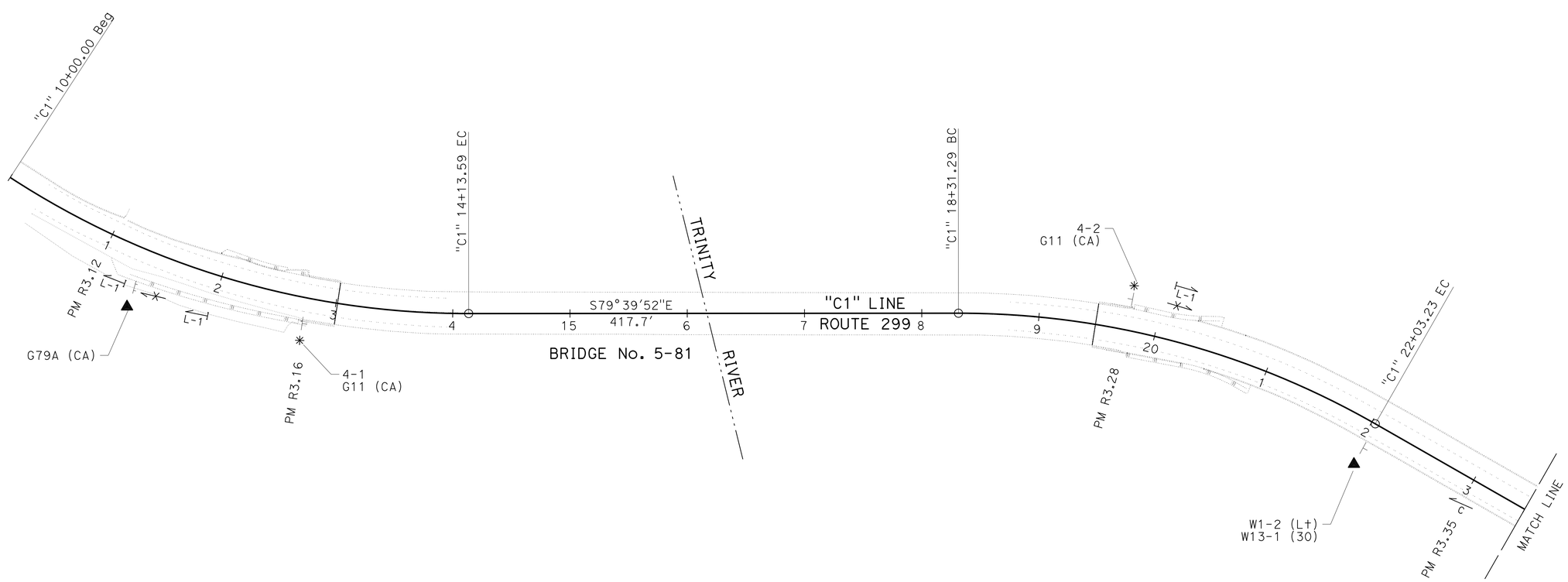

APPROVED FOR SIGN WORK ONLY

SIGN PLAN

SCALE: 1" = 50'

S-4

CALCULATED-DESIGNED BY	JEFF B. COON
CHECKED BY	SOCORRO URENA
FUNCTIONAL SUPERVISOR	AL TRUJILLO
REVISED BY	
DATE REVISED	

STATE OF CALIFORNIA - DEPARTMENT OF TRANSPORTATION

Caltrans®

DESIGN

P:\proj1\02\4G380_plans\pse\24g380oa004.dgn

LAST REVISION 05-16-16 | DATE PLOTTED => 02-AUG-2016 TIME PLOTTED => 08:16

Dist	COUNTY	ROUTE	POST MILES TOTAL PROJECT	SHEET No.	TOTAL SHEETS
02	Tri	299	0.0/8.3	51	103

REGISTERED CIVIL ENGINEER 06-12-16 DATE

PLANS APPROVAL DATE 06-15-16

REGISTERED PROFESSIONAL ENGINEER SOCORRO V. URENA No. 79633 Exp. 9-30-16 CIVIL STATE OF CALIFORNIA

THE STATE OF CALIFORNIA OR ITS OFFICERS OR AGENTS SHALL NOT BE RESPONSIBLE FOR THE ACCURACY OR COMPLETENESS OF SCANNED COPIES OF THIS PLAN SHEET.

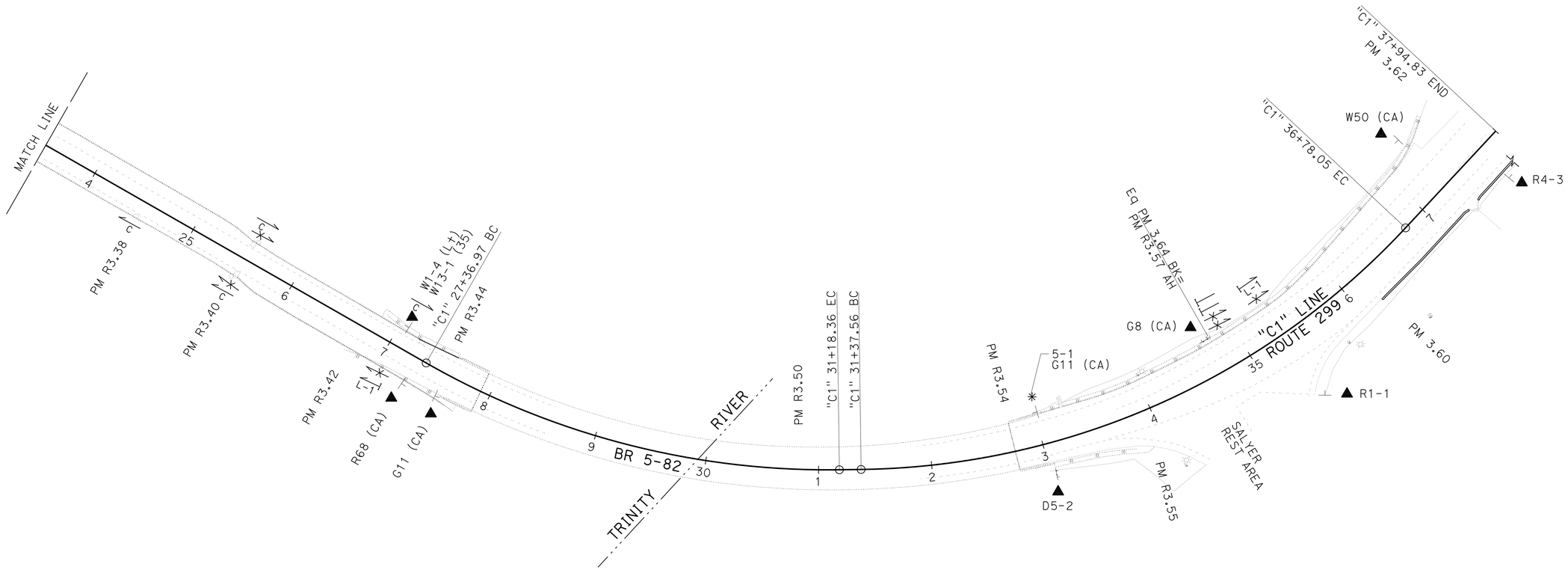

SIGN PLAN

SCALE: 1" = 50'

S-5

APPROVED FOR SIGN WORK ONLY

REVISED BY	DATE REVISED

CALCULATED-DESIGNED BY: JEFF B. COON
CHECKED BY: SOCORRO URENA
FUNCTIONAL SUPERVISOR: AL TRUJILLO

STATE OF CALIFORNIA - DEPARTMENT OF TRANSPORTATION
Caltrans
DESIGN

P:\proj1\02\4G380_plans\pse\24g380oa005.dgn

LAST REVISION 05-16-16 | DATE PLOTTED => 02-AUG-2016 | TIME PLOTTED => 08:16

Dist	COUNTY	ROUTE	POST MILES TOTAL PROJECT	SHEET No.	TOTAL SHEETS
02	Tri	299	0.0/8.3	52	103

REGISTERED CIVIL ENGINEER 06-12-16 DATE

06-15-16
PLANS APPROVAL DATE

REGISTERED PROFESSIONAL ENGINEER
SOCORRO V. URENA
No. 79633
Exp. 9-30-16
CIVIL
STATE OF CALIFORNIA

THE STATE OF CALIFORNIA OR ITS OFFICERS OR AGENTS SHALL NOT BE RESPONSIBLE FOR THE ACCURACY OR COMPLETENESS OF SCANNED COPIES OF THIS PLAN SHEET.

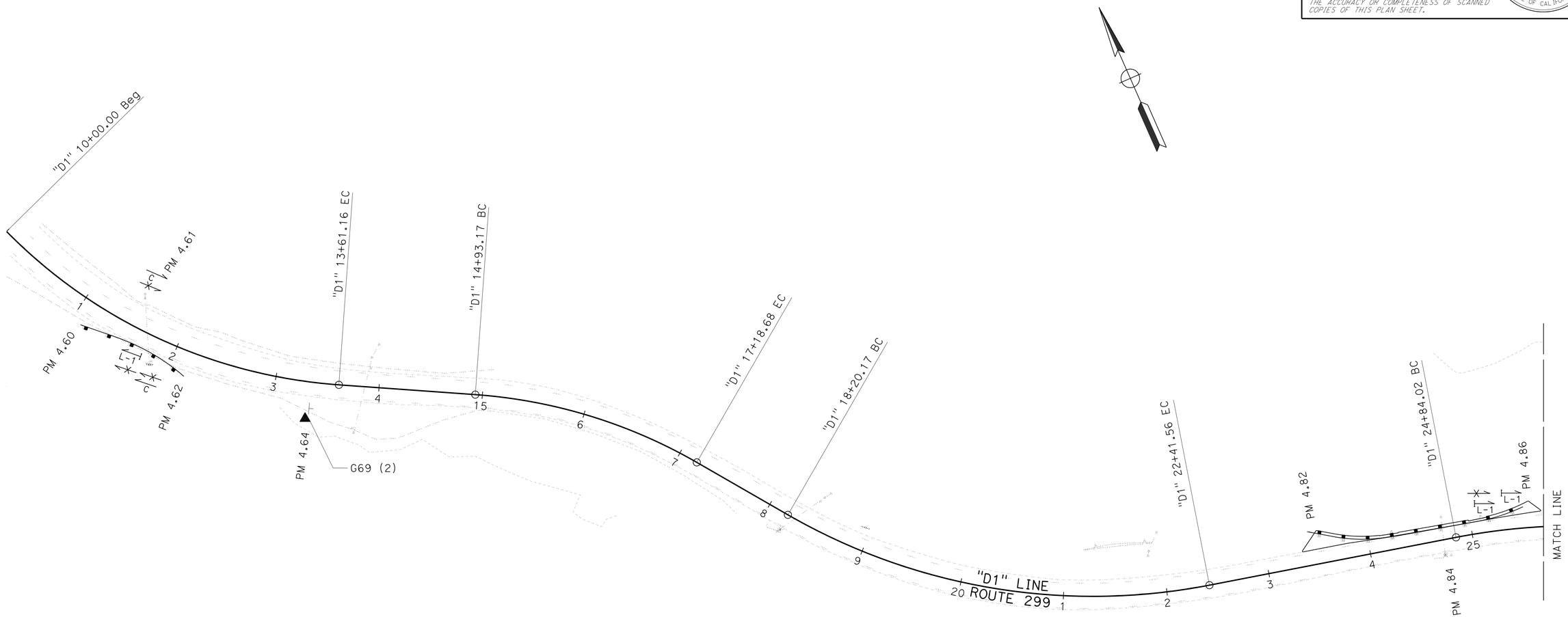

SIGN PLAN

SCALE: 1" = 50'

S-6

APPROVED FOR SIGN WORK ONLY

CALCULATED-DESIGNED BY	JEFF B. COON
CHECKED BY	SOCORRO URENA
FUNCTIONAL SUPERVISOR	AL TRUJILLO
REVISED BY	
DATE REVISED	

STATE OF CALIFORNIA - DEPARTMENT OF TRANSPORTATION
Caltrans
DESIGN

P:\proj1\02\4G380_plans\pse\24g380aa006.dgn

LAST REVISION 05-16-16
DATE PLOTTED => 02-AUG-2016
TIME PLOTTED => 08:16

Dist	COUNTY	ROUTE	POST MILES TOTAL PROJECT	SHEET No.	TOTAL SHEETS
02	Tri	299	0.0/8.3	53	103

REGISTERED CIVIL ENGINEER 06-12-16 DATE

06-15-16
PLANS APPROVAL DATE

REGISTERED PROFESSIONAL ENGINEER
SOCORRO V. URENA
No. 79633
Exp. 9-30-16
CIVIL
STATE OF CALIFORNIA

THE STATE OF CALIFORNIA OR ITS OFFICERS OR AGENTS SHALL NOT BE RESPONSIBLE FOR THE ACCURACY OR COMPLETENESS OF SCANNED COPIES OF THIS PLAN SHEET.

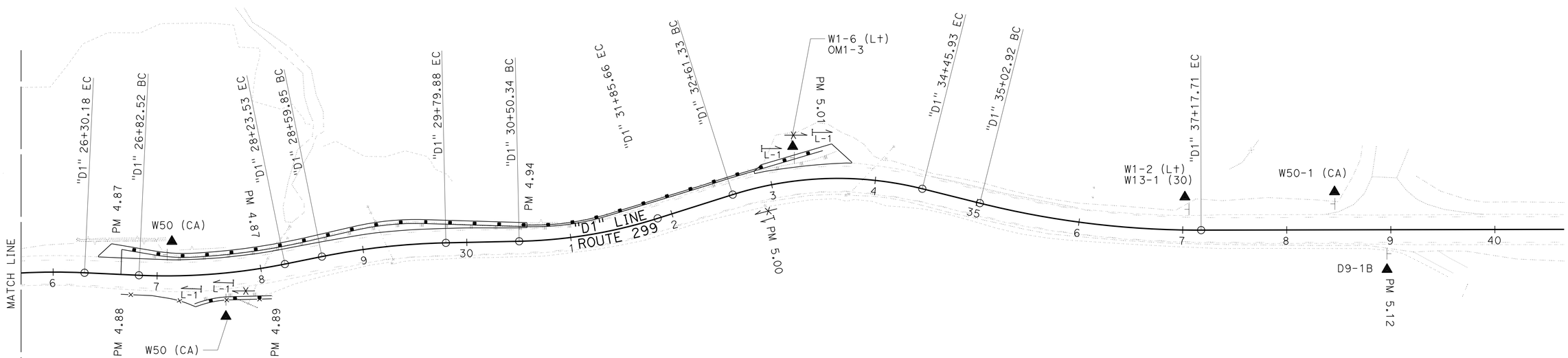

SIGN PLAN

SCALE: 1" = 50'

S-7

APPROVED FOR SIGN WORK ONLY

CALCULATED-DESIGNED BY | CHECKED BY | REVISED BY | DATE REVISED

JEFF B. COON | SOCORRO URENA

FUNCTIONAL SUPERVISOR: AL TRUJILLO

STATE OF CALIFORNIA - DEPARTMENT OF TRANSPORTATION

Caltrans

DESIGN

P:\proj1\02\4G380_plans\pse\24g380oa007.dgn

LAST REVISION 05-16-16 | DATE PLOTTED => 02-AUG-2016 | TIME PLOTTED => 08:16

Dist	COUNTY	ROUTE	POST MILES TOTAL PROJECT	SHEET No.	TOTAL SHEETS
02	Tri	299	0.0/8.3	54	103

REGISTERED CIVIL ENGINEER 06-12-16 DATE

06-15-16
PLANS APPROVAL DATE

REGISTERED PROFESSIONAL ENGINEER
SOCORRO V. URENA
No. 79633
Exp. 9-30-16
CIVIL
STATE OF CALIFORNIA

THE STATE OF CALIFORNIA OR ITS OFFICERS OR AGENTS SHALL NOT BE RESPONSIBLE FOR THE ACCURACY OR COMPLETENESS OF SCANNED COPIES OF THIS PLAN SHEET.

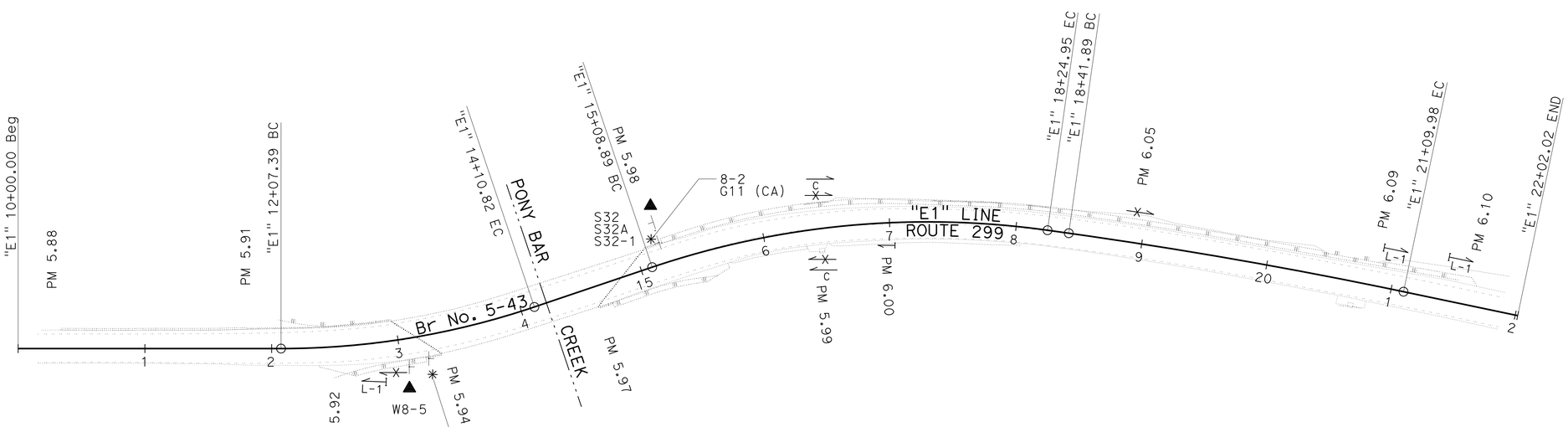

SIGN PLAN

SCALE: 1" = 50'

S-8

APPROVED FOR SIGN WORK ONLY

CALCULATED-DESIGNED BY: JEFF B. COON
CHECKED BY: SOCORRO URENA
REVISED BY
DATE REVISED
FUNCTIONAL SUPERVISOR: AL TRUJILLO

STATE OF CALIFORNIA - DEPARTMENT OF TRANSPORTATION
Caltrans
DESIGN

P:\proj1\02\4G380_plans\pse\24g380oa008.dgn

LAST REVISION 05-16-16
DATE PLOTTED => 02-AUG-2016
TIME PLOTTED => 08:16

Dist	COUNTY	ROUTE	POST MILES TOTAL PROJECT	SHEET No.	TOTAL SHEETS
02	Tri	299	0.0/8.3	55	103

06-12-16
REGISTERED CIVIL ENGINEER DATE

06-15-16
PLANS APPROVAL DATE

REGISTERED PROFESSIONAL ENGINEER
SOCORRO V. URENA
No. 79633
Exp. 9-30-16
CIVIL
STATE OF CALIFORNIA

THE STATE OF CALIFORNIA OR ITS OFFICERS OR AGENTS SHALL NOT BE RESPONSIBLE FOR THE ACCURACY OR COMPLETENESS OF SCANNED COPIES OF THIS PLAN SHEET.

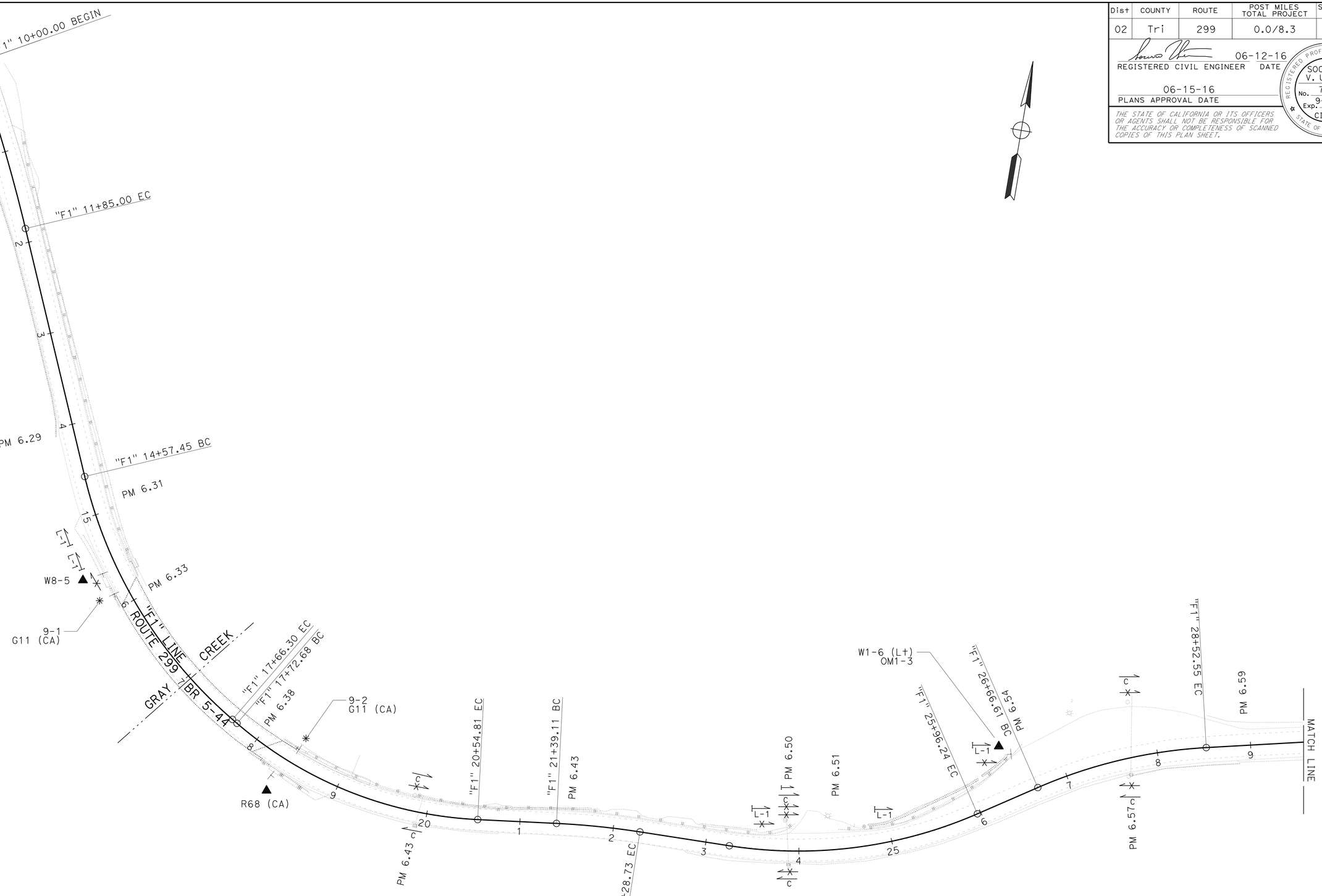

SIGN PLAN

SCALE: 1" = 50'

S-9

APPROVED FOR SIGN WORK ONLY

REVISED BY	DATE REVISED

CALCULATED-DESIGNED BY: JEFF B. COON
CHECKED BY: SOCORRO URENA
FUNCTIONAL SUPERVISOR: AL TRUJILLO

STATE OF CALIFORNIA - DEPARTMENT OF TRANSPORTATION
Caltrans
DESIGN

P:\proj1\02\4G380_plans\pse\24g380oa009.dgn

LAST REVISION 05-16-16 | DATE PLOTTED => 02-AUG-2016 | TIME PLOTTED => 08:16

Dist	COUNTY	ROUTE	POST MILES TOTAL PROJECT	SHEET No.	TOTAL SHEETS
02	Tri	299	0.0/8.3	56	103

REGISTERED CIVIL ENGINEER 06-12-16 DATE

PLANS APPROVAL DATE 06-15-16

REGISTERED PROFESSIONAL ENGINEER SOCORRO V. URENA No. 79633 Exp. 9-30-16 CIVIL STATE OF CALIFORNIA

THE STATE OF CALIFORNIA OR ITS OFFICERS OR AGENTS SHALL NOT BE RESPONSIBLE FOR THE ACCURACY OR COMPLETENESS OF SCANNED COPIES OF THIS PLAN SHEET.

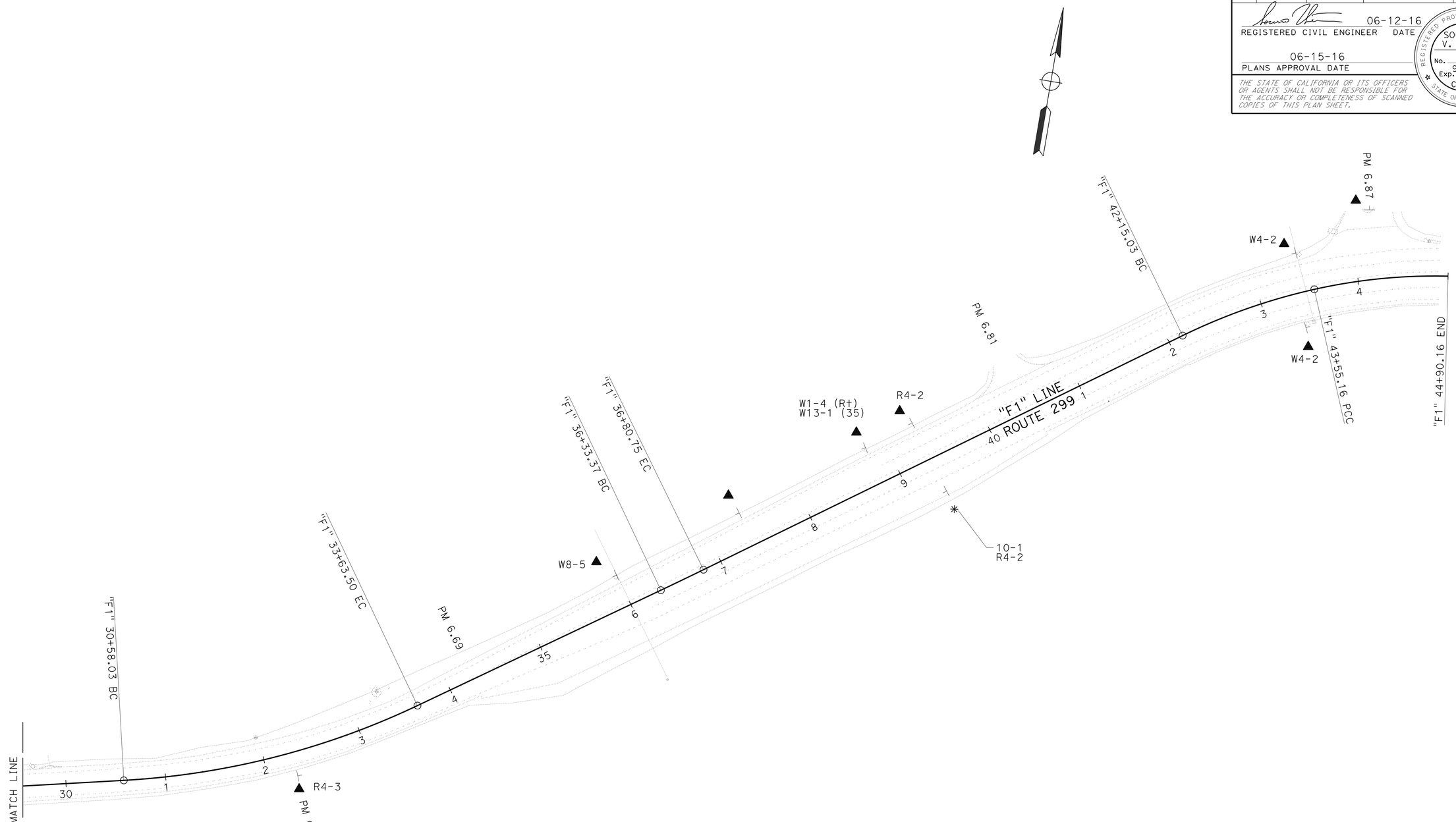

SIGN PLAN

SCALE: 1" = 50'

S-10

APPROVED FOR SIGN WORK ONLY

REVISED BY	
DATE REVISED	
JEFF B. COON	
SOCORRO URENA	
CALCULATED-DESIGNED BY	
CHECKED BY	
FUNCTIONAL SUPERVISOR	
AL TRUJILLO	

STATE OF CALIFORNIA - DEPARTMENT OF TRANSPORTATION

Caltrans

DESIGN

P:\proj1\02\4G380_plans\pse\24g380oa010.dgn

LAST REVISION 05-06-16 | DATE PLOTTED => 02-AUG-2016 | TIME PLOTTED => 08:16

Dist	COUNTY	ROUTE	POST MILES TOTAL PROJECT	SHEET No.	TOTAL SHEETS
02	Tri	299	0.0/8.3	57	103

REGISTERED CIVIL ENGINEER 06-12-16 DATE

PLANS APPROVAL DATE 06-15-16

REGISTERED PROFESSIONAL ENGINEER SOCORRO V. URENA No. 79633 Exp. 9-30-16 CIVIL STATE OF CALIFORNIA

THE STATE OF CALIFORNIA OR ITS OFFICERS OR AGENTS SHALL NOT BE RESPONSIBLE FOR THE ACCURACY OR COMPLETENESS OF SCANNED COPIES OF THIS PLAN SHEET.

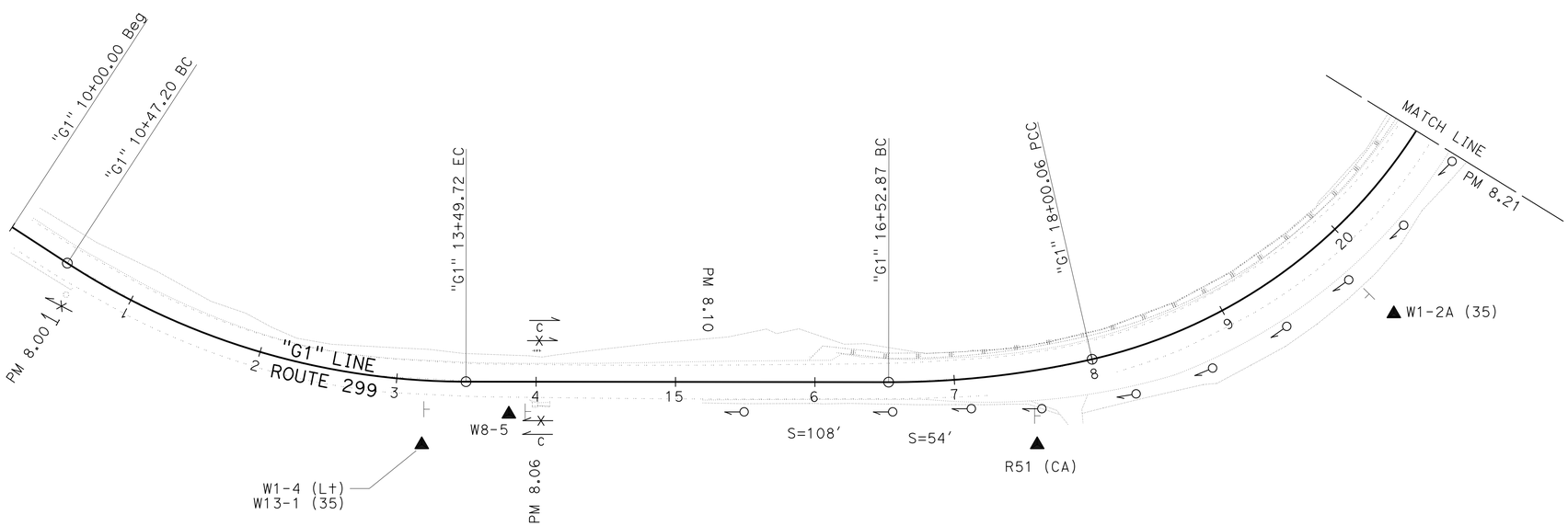

SIGN PLAN

SCALE: 1" = 50'

S-11

APPROVED FOR SIGN WORK ONLY

CALCULATED-DESIGNED BY	JEFF B. COON
CHECKED BY	SOCORRO URENA
FUNCTIONAL SUPERVISOR	AL TRUJILLO
REVISED BY	
DATE REVISED	

STATE OF CALIFORNIA - DEPARTMENT OF TRANSPORTATION

Caltrans® **DESIGN**

P:\proj1\02\4G380_plans\pse\24g380oa011.dgn

LAST REVISION 05-16-16 | DATE PLOTTED => 02-AUG-2016 | TIME PLOTTED => 08:16

BORDER LAST REVISED 7/2/2010 | USERNAME => s115152 | DGN FILE => 24g380oa011.dgn | RELATIVE BORDER SCALE IS IN INCHES 0 1 2 3 | UNIT 0318 | PROJECT NUMBER & PHASE 02 1400 0006 1

Dist	COUNTY	ROUTE	POST MILES TOTAL PROJECT	SHEET No.	TOTAL SHEETS
02	Tri	299	0.0/8.3	58	103

REGISTERED CIVIL ENGINEER 06-12-16 DATE

06-15-16
PLANS APPROVAL DATE

REGISTERED PROFESSIONAL ENGINEER
SOCORRO V. URENA
No. 79633
Exp. 9-30-16
CIVIL
STATE OF CALIFORNIA

THE STATE OF CALIFORNIA OR ITS OFFICERS OR AGENTS SHALL NOT BE RESPONSIBLE FOR THE ACCURACY OR COMPLETENESS OF SCANNED COPIES OF THIS PLAN SHEET.

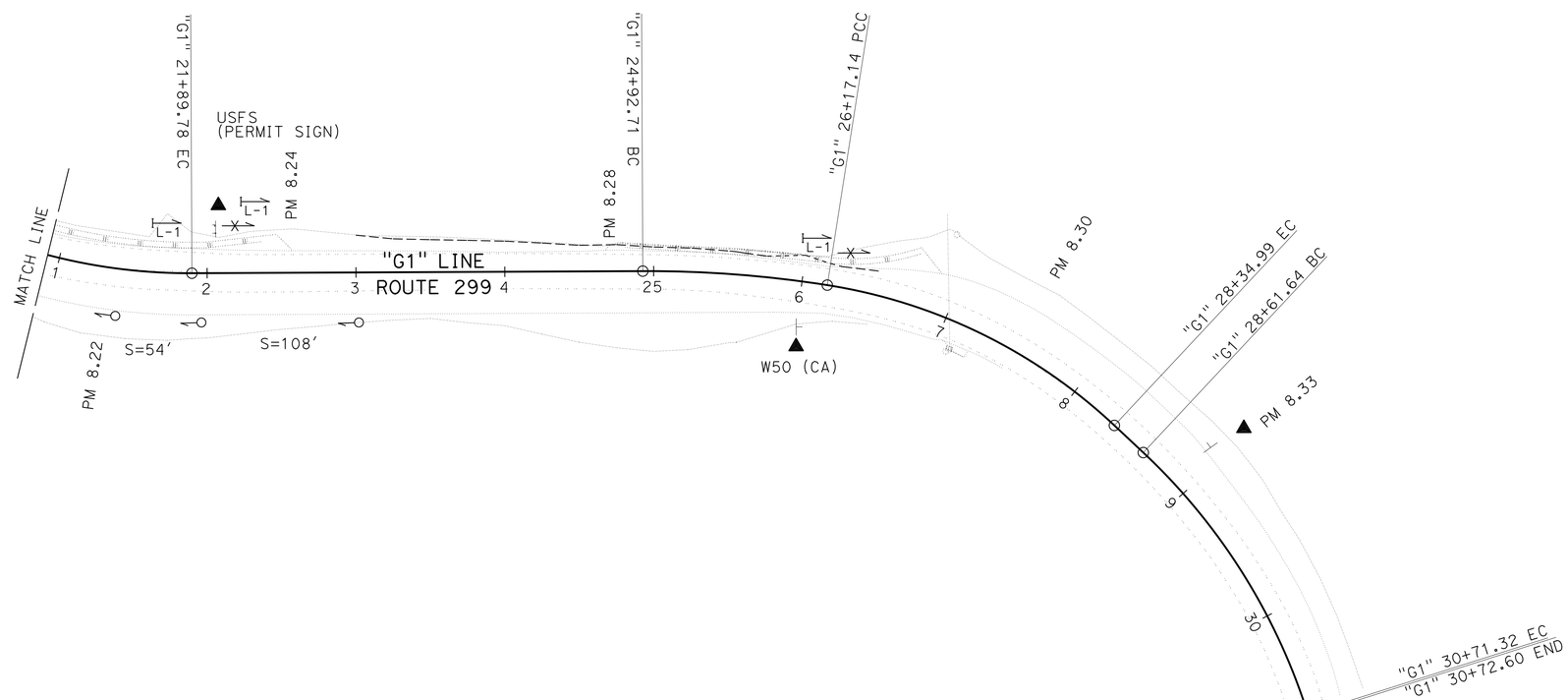

SIGN PLAN

SCALE: 1" = 50'

S-12

APPROVED FOR SIGN WORK ONLY

REVISED BY	
DATE REVISED	
CALCULATED-DESIGNED BY	JEFF B. COON
CHECKED BY	SOCORRO URENA
FUNCTIONAL SUPERVISOR	AL TRUJILLO

STATE OF CALIFORNIA - DEPARTMENT OF TRANSPORTATION
Caltrans
DESIGN

P:\proj1\02\40380_plans\pse\24g380oa012.dgn

LAST REVISION 05-06-16
DATE PLOTTED => 02-AUG-2016
TIME PLOTTED => 08:16

Dist	COUNTY	ROUTE	POST MILES TOTAL PROJECT	SHEET No.	TOTAL SHEETS
02	Tri	299	0.0/8.3	59	103

REGISTERED CIVIL ENGINEER 06-12-16 DATE

06-15-16
PLANS APPROVAL DATE

REGISTERED PROFESSIONAL ENGINEER SOCORRO V. URENA No. 79633 Exp. 9-30-16 CIVIL STATE OF CALIFORNIA

THE STATE OF CALIFORNIA OR ITS OFFICERS OR AGENTS SHALL NOT BE RESPONSIBLE FOR THE ACCURACY OR COMPLETENESS OF SCANNED COPIES OF THIS PLAN SHEET.

NOTES:

1. THE MARKER SHALL BE WHITE (NON-REFLECTIVE) TARGET PLATE WITH BLACK SERIES D NUMERALS AND LETTERS.
2. "BK" (BACK), "AH" (AHEAD), OR A BLANK MUST APPLY AS DIRECTED BY THE ENGINEER.
3. ALL INFORMATION MUST BE IN ENGLISH UNITS (MILES).
4. * DRAINAGE SYSTEM NUMBER IS DIFFERENT THAT THE SHOWN ON THE ROADWAY.

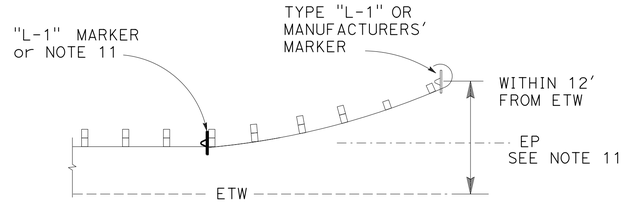

GUARDRAIL DELINEATION

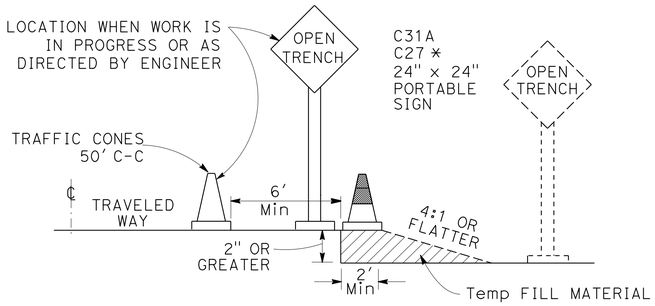

OPEN TRENCH SIGNING AND MARKING

* PLACE AT 250' INTERVALS THROUGH THE OPEN TRENCH AREA ALTERNATE C27 (OPEN TRENCH) AND C31A (NO SHOULDER) SIGNS

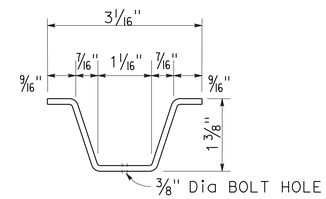

METAL MARKER POST SECTION

MILEPOST MARKER

POST MILE	QUANTITY
0.50	1
1.00	1
1.50	1
2.00	1
2.50	1
R3.00	1
3.64 BK=R3.57 AH	2
4.00	1
4.50	1
5.00	1
5.50	1
6.00	1
6.50	1
7.00	1
7.50	1
8.00	1

MARKER (CULVERT)

DRAINAGE SYSTEM	L+/R+	MARKER (CULVERT)	POST MILES
2.77	L+/R+	2	2.77
3.35	R+	1	R3.35
3.38	R+	1	R3.38
3.40 *	L+/R+	2	R3.40
3.43	L+	1	R3.43
4.09	L+/R+	2	4.09
4.15	L+/R+	2	4.15
4.61	L+/R+	2	4.61
5.99	L+/R+	2	5.99
6.43	L+/R+	2	6.43
6.50	L+/R+	2	6.50
6.57	L+/R+	2	6.57
7.41	L+/R+	2	7.41
7.50 *	L+/R+	2	7.50
7.61	L+/R+	2	7.61
7.80	L+/R+	2	7.80
8.10	L+/R+	2	8.06

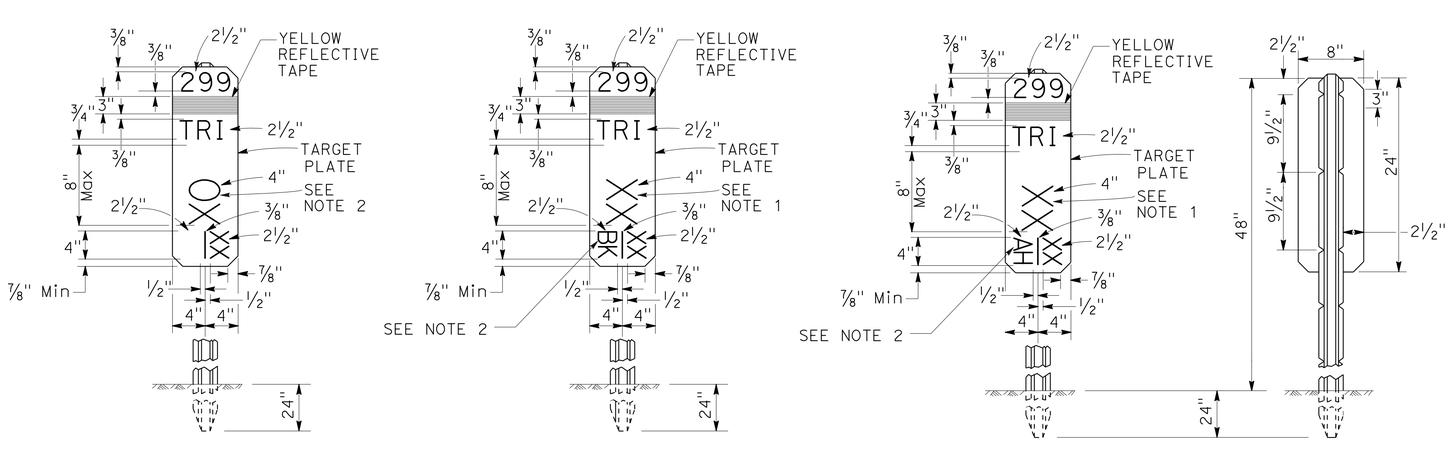

MILEPOST MARKER DETAIL

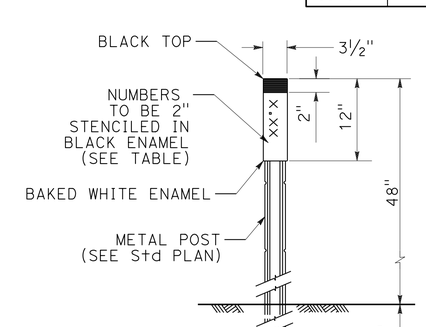

CULVERT MARKER DETAIL

SIGN DETAILS

NO SCALE

PDD-1

STATE OF CALIFORNIA - DEPARTMENT OF TRANSPORTATION
Caltrans
DESIGN

FUNCTIONAL SUPERVISOR: AL TRUJILLO
CALCULATED-DESIGNED BY / CHECKED BY
JEFF B. COON / SOCORRO URENA
REVISED BY / DATE REVISED

P:\proj1\02\4G380_plans\pse\24g380ob001.dgn

LAST REVISION 05-16-15 | DATE PLOTTED => 02-AUG-2016 | TIME PLOTTED => 08:16

Dist	COUNTY	ROUTE	POST MILES TOTAL PROJECT	SHEET No.	TOTAL SHEETS
02	Tri	299	0.0/8.3	60	103

REGISTERED CIVIL ENGINEER 06-12-16 DATE

PLANS APPROVAL DATE 06-15-16

REGISTERED PROFESSIONAL ENGINEER SOCORRO V. URENA No. 79633 Exp. 9-30-16 CIVIL STATE OF CALIFORNIA

THE STATE OF CALIFORNIA OR ITS OFFICERS OR AGENTS SHALL NOT BE RESPONSIBLE FOR THE ACCURACY OR COMPLETENESS OF SCANNED COPIES OF THIS PLAN SHEET.

MARKERS AND DELINEATORS

SHEET No.	LOCATION (PM)	MILEPOST MARKERS	DELINEATOR (CLASS 2) (TYPE E)	MARKER (CULVERT)	OBJECT MARKER (TYPE L-1)	REMOVE DELINEATOR	REMOVE MARKER
		EA	EA	EA	EA	EA	EA
S-1	0.04 TO 0.07				2		1
	0.50	1					1
	1.00	1					1
	1.50	1					1
	2.00	1					1
	2.05 TO 2.06				2		
	2.13 TO 2.20				2		
S-2	2.38 TO 2.46		14			12	
S-2	2.50	1					1
S-3	2.54 TO 2.77			2	3		3
	R3.00	1					1
S-4	R3.12 TO R3.32			1	3		2
S-5	R3.33 TO 3.62	2		4	2		6
	3.96 TO 4.03				2		2
	4.00	1					1
	4.09 TO 4.15			4			3
	4.50	1					1
S-6	4.60 TO 4.86			2	3		4
S-7	4.87 TO 5.12	1			4		3
	5.50	1					1
S-8	5.88 TO 6.10	1		2	3		3
S-9	6.22 TO 6.59	1		6	5		9
	6.65 TO 6.87				3		2
	7.00	1					1
	7.41			2			2
	7.50	1					1
	7.51			2			2
	7.61			2			2
	7.80			2			2
S-11	8.00 TO 8.21	1	10	2			3
S-12	8.22 TO 8.33		3		3		2
	TOTAL	17	27	31	37	12	62

ROADSIDE SIGNS

SHEET No.	SIGN No.	SIGN CODE	RESET ROADSIDE SIGN
			EA
S-2	2-1	W1-8	1
S-2	2-2	W1-8	1
S-2	2-3	W1-8	1
S-2	2-4	W1-8	1
S-2	2-5	W1-8	1
S-2	2-6	W1-8	1
S-2	2-7	W1-8	1
S-2	2-8	W1-8	1
S-3	3-1	S3-1 (300 Ft)	1
S-4	4-1	G11 (CA)	1
S-4	4-2	G11 (CA)	1
S-5	5-1	G11 (CA)	1
S-8	8-1	G11 (CA)	1
S-8	8-2	G11 (CA)	1
S-9	9-1	G11 (CA)	1
S-9	9-2	G11 (CA)	1
S-10	10-1	R4-2	1
	TOTAL		17

SIGN QUANTITIES
SQ-1

REVISED BY | DATE REVISED

JEFF B. COON | SOCORRO URENA

CALCULATED-DESIGNED BY | CHECKED BY

FUNCTIONAL SUPERVISOR: AL TRUJILLO

STATE OF CALIFORNIA - DEPARTMENT OF TRANSPORTATION

Caltrans® DESIGN

P:\proj1\02\4G380_plans\pse\24g380oc001.dgn

LAST REVISION 05-20-16 | DATE PLOTTED => 02-AUG-2016 | TIME PLOTTED => 08:17

Dist	COUNTY	ROUTE	POST MILES TOTAL PROJECT	SHEET No.	TOTAL SHEETS
02	Tri	299	0.0/8.3	61	103

REGISTERED CIVIL ENGINEER 06-12-16 DATE

PLANS APPROVAL DATE 06-15-16

REGISTERED PROFESSIONAL ENGINEER SOCORRO V. URENA No. 79633 Exp. 9-30-16 CIVIL STATE OF CALIFORNIA

THE STATE OF CALIFORNIA OR ITS OFFICERS OR AGENTS SHALL NOT BE RESPONSIBLE FOR THE ACCURACY OR COMPLETENESS OF SCANNED COPIES OF THIS PLAN SHEET.

ROADWAY QUANTITIES

LOCATION (PM) FROM	LOCATION (PM) TO	Lt/Rt	LENGTH (N)	COLD PLANE ASPHALT CONCRETE PAVEMENT	ROADWAY EXCAVATION	ROADWAY EMBANKMENT (N)	CLASS 2 AGGREGATE BASE	HOT MIX ASPHALT (TYPE A)	RUBBERIZED HOT MIX ASPHALT (GAP GRADED)	RUBBERIZED HOT MIX ASPHALT-OPEN GRADED (OPEN GRADED FRICTION COURSE)	TACK COAT	MINOR CONCRETE (MINOR STRUCTURE)	REMARKS
FROM	TO		LF	SQYD	CY	CY	CY	TON	TON	TON	TON	CY	
0.04	0.06		100	394									S FORK TRINITY RIVER EB
0.04	0.40								907.8	602.1	1.79		
0.15		Rt	94	140									S FORK CO RD NO 447
0.40			100	299									WEST WHOLE ENCHILADA CONFORM
0.40	0.90									743.8	1.22		ONLY RHMA (OPEN GRADED) PAVING
0.60	0.70	Rt	527	234									MBGR & RW
0.58	0.78	Lt	1040	462									DIKE, MBGR, & Conc Bar
0.90	2.20								2789.4	1858.3	6.36		
0.90			100	323									EAST WHOLE ENCHILADA CONFORM
0.98		Rt	60	88									SALYER FORESTRY STA
1.10		Lt	75	142									CAMPBELL RIDGE RD
1.10		Rt	314	534									SALYER STORE
1.30		Rt	207	147									SALYER TRAILER PARK
2.20			80	258									WEST SALYER CURVES CONFORM
2.20	2.52	Rt	1690	751									DIKE
2.22	2.37	Lt	816	363									DIKE, MBGR, & Bar
2.20	2.38									236.7	0.46		ONLY RHMA (OPEN GRADED) PAVING
2.38	2.44				277	33	34	32	16.0	96.4	0.22		MAIN Rd & Shld WIDENING
2.44	2.54									228.8	0.24		ONLY RHMA (OPEN GRADED) PAVING
2.54			80	319									EAST SALYER CURVES CONFORM
2.54	2.67				12	1	205	192	343.0	232.6	0.85		MAIN Rd & Shld WIDENING
2.67	R3.16								869.7	579.8	2.20		
R3.14	R3.16		100	392									TRINITY RIVER BB Br 8-81
R3.28	R3.44								503.7	335.8	0.89		
R3.28	R3.30		100	400									TRINITY RIVER EB Br 8.81
R3.42	R3.44		100	376									TRINITY RIVER BB Br 8-82
R3.54	5.94								5930.3	3953.6	15.11		
R3.54	R3.56		100	501									TRINITY RIVER EB Br 8-82
R3.56		Rt	241	477									SALYER ROADSIDE REST
													R4.963 EQUATES TO R4.969
5.47			233	444									DENNY RD - RD 402
5.92	5.94		100	343									PONY BAR CR BB
5.98	6.00		100	339									PONY BAR CR EB
5.97	8.10								5029.5	3353.0	12.63		
6.31	6.33		100	325									GRAY CR BB
6.38	6.50		100	302									GRAY CR EB
6.69	6.81				139	240	212	198					MAIN Rd & Shld WIDENING
6.89			95	211									HANSEN RD
7.06		Lt	33	60									GRAYS FLAT Rd
7.16		Lt	31	49									AMMON Rd
7.63			47	77									GRAY FALL CAMPGROUND
8.10	8.30				1247	318	1143	1069	534.3	356.2	2.49		PAVEMENT REPLACEMENT
8.28	8.30		100	311									EAST PROJECT CONFORM
"DW1"							28	26	13.0	8.7	0.03		DRIVEWAY
SUBTOTAL Q-1				9061	1675	592	1622	1517	16,936.7	12,585.8	44.49		
SUBTOTAL Q-2								113.2				22.36	FROM SHEET Q-2
SUBTOTAL DQ-1								42.36				4.87	FROM DRAINAGE QUANTITIES
TOTAL				9061	1675	592	1622	1672.56	16,936.7	12,585.8	44.49	27.23	

NOTES:

1. (N) - NOT A SEPARATE PAY ITEM, FOR INFORMATION ONLY.
2. * QUANTITY ADDED TO TOTAL ROADWAY QUANTITIES ON SHEET Q-1.
3. TREE TRIMMINGS MULCH MUST BE APPLIED UNIFORMLY AT DEPTH OF 6" AND MUST COVER ALL DISTURBED SLOPE AREAS.
4. LOCATIONS (PM) SHOWN HEREIN ARE APPROXIMATE. FOR MORE ACCURATE LOCATIONS SEE LAYOUT PLANS OR AS DIRECTED BY ENGINEER.

SHOULDER BACKING QUANTITIES

LOCATION (PM) FROM	LOCATION (PM) TO	LENGTH	SHOULDER BACKING
FROM	TO	LF	TON
0.05 Rt	0.61 Rt	2956.8	128.9
0.08 Lt	0.60 Lt	2746	154.4
0.80 Lt	1.10 Lt	1584	89.1
0.69 Rt	0.90 Rt	1109	25.0
0.90 Rt	2.05 Rt	6072	341.6
1.13 Lt	2.05 Lt	4858	273.2
2.08 Lt	2.20 Lt	634	35.6
2.13 Rt	2.20 Rt	370	20.8
2.45 Lt	3.14 Lt	3643	204.9
2.54 Rt	3.12 Rt	3062	172.3
3.30 Lt	3.42 Lt	634	35.6
3.31 Rt	3.42 Rt	581	32.7
3.58 Rt	5.91 Rt	12302	692.0
3.62 Lt	3.96 Lt	1795	101.0
4.03 Lt	4.82 Lt	4171	234.6
4.86 Lt	4.87 Lt	53	3.0
5.01 Lt	5.47 Lt	2429	136.6
5.50 Lt	5.91 Lt	2165	121.8
5.99 Rt	6.31 Rt	1690	95.0
6.10 Lt	6.33 Lt	1214.4	68.3
6.39 Rt	8.30 Rt	10085	567.3
6.49 Lt	6.50 Lt	53	3.0
6.59 Lt	6.87 Lt	1478	83.2
6.92 Lt	6.94 Lt	106	5.9
7.02 Lt	8.11 Lt	5755	323.7
8.24 Lt	8.28 Lt	211	11.9
TOTAL			3961.4

SUMMARY OF QUANTITIES

Q-1

REVISED BY | DATE REVISED

JEFF B. COON | SOCORRO URENA

CALCULATED-DESIGNED BY | CHECKED BY

FUNCTIONAL SUPERVISOR: AL TRUJILLO

STATE OF CALIFORNIA - DEPARTMENT OF TRANSPORTATION

Caltrans DESIGN

P:\proj1\02\4G380_plans\pse\24g380pa001.dgn

LAST REVISION 05-20-16 | DATE PLOTTED => 02-AUG-2016 | TIME PLOTTED => 08:17

Dist	COUNTY	ROUTE	POST MILES TOTAL PROJECT	SHEET No.	TOTAL SHEETS
02	Tri	299	0.0/8.3	62	103

REGISTERED CIVIL ENGINEER 06-12-16 DATE

06-15-16
PLANS APPROVAL DATE

REGISTERED PROFESSIONAL ENGINEER SOCORRO V. URENA No. 79633 Exp. 9-30-16 CIVIL STATE OF CALIFORNIA

THE STATE OF CALIFORNIA OR ITS OFFICERS OR AGENTS SHALL NOT BE RESPONSIBLE FOR THE ACCURACY OR COMPLETENESS OF SCANNED COPIES OF THIS PLAN SHEET.

WOOD MULCH (EROSION CONTROL)

MATERIAL		WOOD MULCH (CY)
DESCRIPTION	TYPE	
MULCH	TREE TRIMMINGS	
PM 2.38 TO 2.44 L+		92.0
PM 2.54 TO 2.67 R+		8.3
PM 6.69 TO 6.87 R+		56.6
PM 8.10 TO 8.30 R+		19.6
	TOTAL	176.5

GUARDRAIL

LOCATION (PM)	L+/R+	TREATED WOOD WASTE	REMOVE GUARDRAIL	RECONSTRUCT GUARDRAIL (STEEL POST)	RECONSTRUCT TERMINAL SYSTEM (TYPE SRT)	ADJUST GUARDRAIL	METAL BEAM GUARD RAILING (STEEL POST)	SINGLE THRIE BEAM BARRIER (STEEL POST)	MODIFIED DOUBLE THRIE BEAM BARRIER	TRANSITION RAILING (TYPE STB)	TRANSITION RAILING (TYPE WB)	MODIFIED TRANSITION RAILING (TYPE WB)	MODIFIED BURIED END ANCHOR ASSEMBLY	ALTERNATIVE IN-LINE TERMINAL SYSTEM	VEGETATION CONTROL (MINOR CONCRETE)	RAIL ELEMENT WALL (STEEL POST)	* MINOR CONCRETE (MINOR STRUCTURE)
		LB	LF	LF	EA	LF	LF	LF	LF	EA	EA	EA	LF	EA	SQYD	SQFT	CY
0.04 TO 0.07	L+	1982	25	112.5	1						1				100.4		0.74
0.04 TO 0.06	R+	555	25		1						1				40.7		0.74
2.05 TO 2.06	L+	238	25		1							1					
2.13 TO 2.20	L+	3330		250.0	1												
R3.12 TO R3.16	R+	951	25	87.5	1						1				218.8		0.74
R3.13 TO R3.16	L+	238	25		1						1				25.4		0.74
R3.28 TO R3.29	L+	872	25	50.0							1				48.0		0.74
R3.28 TO R3.31	R+	1348	25	100.0							1				57.0		0.74
R3.42 TO R3.44	L+	1189	25	50.0							1				48.1		0.74
R3.42 TO R3.44	R+	1506	25	87.5							1						0.74
R3.54 TO R3.62	L+	4202	25	425.0							1				144.3		0.74
R3.54 TO R3.55	R+	238	25	12.5	1						1				54.0		0.74
3.96 TO 4.03	L+				2	300											
4.60 TO 4.62	R+	1506	75	37.5									75				
4.82 TO 4.86	L+	1031		175.0	1										141.6		
4.87 TO 4.94	L+	5470	25	325.0	1							1			350.4		
4.88 TO 4.89	R+	555		37.5	1												
4.94 TO 5.00	L+								237.5								
5.00 TO 5.01	L+		37.5		1							1			118.2		
5.91 TO 5.93	L+		25	50.0							1						0.74
5.92 TO 5.94	R+	951	25	37.5							1				49.4		0.74
5.97 TO 5.99	R+		25	50.0							1				59.1		0.74
5.98 TO 6.05	L+		25	350.0							1				409.0		0.74
6.05 TO 6.09	L+		37.5				212.5							1			
6.08 TO 6.09	L+															100	
6.23 TO 6.33	L+	5470	25	412.5	1						1				256.7		3.00
6.31 TO 6.33	R+		25		1						1				58.9		3.00
6.37 TO 6.39	R+		25		1						1				41.3		3.00
6.38 TO 6.43	L+		150							1					51.6		3.00
6.39 TO 6.43	L+							112.5									
6.43 TO 6.46	L+	2933							162.5								
6.46 TO 6.47	L+		25									1					
6.47 TO 6.50	L+			200.0													
6.51 TO 6.54	L+	2458		187.5	1												
6.88 TO 6.92	L+	1982		237.5													
6.94 TO 7.02	L+	4202		375.0	1												
8.13 TO 8.24	L+	5312		525.0	2										348.9		
8.24 TO 8.28	L+	1586	50	112.5	1									1	149.9		
TOTAL		50105	850.0	4287.5	21	300	212.5	112.5	400.0	1	17	4	75	2	2771.7	100	22.36

TEMPORARY WATER POLLUTION CONTROL

LOCATION (PM)	L+/R+	Temp DRAINAGE INLET PROTECTION	Temp FIBER ROLL
		EA	LF
0.0-8.3	L+/R+	25	250
TOTAL		25	250

TEMPORARY FENCE

LOCATION (PM)	L+/R+	Mod TEMP SILT FENCE (ESA)	TEMP FENCE (TYPE ESA)
		LF	LF
0.04 TO 0.09	R+		220
2.43 TO 2.50	L+	350	
4.88 TO 4.89	R+	150	
TOTAL		500	220

HMA DIKE

LOCATION (PM)		L+/R+	REMOVE AC DIKE	PLACE HOT MIX ASPHALT DIKE (TYPE A)	PLACE HOT MIX ASPHALT DIKE (TYPE C)	PLACE HOT MIX ASPHALT DIKE (TYPE E)	PLACE HOT MIX ASPHALT DIKE (TYPE F)	* HOT MIX ASPHALT (TYPE A)
Beg	End		LF	LF	LF	LF	LF	TON
2.77		R+		10				0.3
3.05	3.11	R+	335	335				9.2
3.06	R3.15	L+				297		7.8
3.06	R3.16	L+	504					
R3.15		L+			35			0.3
R3.15	R3.16	L+					34	0.5
R3.28	R3.29	R+					47	0.6
R3.28	R3.44	L+	845					
R3.28	R3.44	R+	845					
R3.29		L+			43			0.3
R3.29		R+			65			0.5
R3.30	R3.42	L+		592				16.2
R3.31	R3.42	R+		523				14.3
R3.42	R3.44	L+			60			0.5
R3.42	R3.43	R+			47			0.4
R3.43	R3.44	L+					39	0.5
R3.43	R3.44	R+					79	1.1
R3.54	R3.62	L+	450				421	5.6
R3.60	R3.77	R+	928			921		24.2
3.96	4.03	L+					393	5.3
3.96	4.03	R+	378					
4.03		L+						0.2
5.88	5.94	L+		147				4.0
5.88	5.91	L+	300					5.8
5.91	5.92	L+			75			0.6
5.92	5.93	L+					24	0.6
5.99		R+		14				0.4
6.22	6.29	R+	380	388				10.6
6.43		R+		13				0.4
6.50		R+		12				0.3
6.57		R+		12				0.3
7.41		R+		19				0.5
7.51		R+		18				0.5
7.61		R+		17				0.5
7.80		R+		17				0.5
8.10		R+		16				0.4
TOTAL			4965	2133	325	1218	1037	113.2

SUMMARY OF QUANTITIES
Q-2

REVISED BY	DATE REVISED

JEFF B. COON — SOCORRO URENA
CALCULATED-DESIGNED BY — CHECKED BY
FUNCTIONAL SUPERVISOR: AL TRUJILLO

STATE OF CALIFORNIA - DEPARTMENT OF TRANSPORTATION
Caltrans® DESIGN

P:\proj1\02\40380_plans\pse\24g380pa002.dgn

LAST REVISION 05-20-16 | DATE PLOTTED => 02-AUG-2016 | TIME PLOTTED => 08:17

M

Maint	MAINTENANCE
Max	MAXIMUM
MB	METAL BEAM
MBB	METAL BEAM BARRIER
MBGR	METAL BEAM GUARD RAILING
Med	MEDIAN
MGS	MIDWEST GUARDRAIL SYSTEM
MH	MANHOLE
Min	MINIMUM
Misc	MISCELLANEOUS
Misc I & S	MISCELLANEOUS IRON AND STEEL
Mkr	MARKER
Mod	MODIFIED,
	MODIFY
Mon	MONUMENT
MP	METAL PLATE
MPGR	METAL PLATE GUARD RAILING
MR	MOVEMENT RATING
MSE	MECHANICALLY STABILIZED EMBANKMENT
Mt	MOUNTAIN, MOUNT
Mtl	MATERIAL
MVP	MAINTENANCE VEHICLE PULLOUT

N

N	NORTH
NB	NORTHBOUND
No.	NUMBER (MUST HAVE PERIOD)
Nos.	NUMBERS (MUST HAVE PERIOD)
NPS	NOMINAL PIPE SIZE
NS	NEAR SIDE
NSP	NEW STANDARD PLAN
NTS	NOT TO SCALE

O

Oblr	OBLITERATE
OC	OVERCROSSING
OD	OUTSIDE DIAMETER
OF	OUTSIDE FACE
OG	ORIGINAL GROUND
OGAC	OPEN GRADED ASPHALT CONCRETE
OGFC	OPEN GRADED FRICTION COURSE
OH	OVERHEAD
OHWM	ORDINARY HIGH WATER MARK
O-O	OUT TO OUT
Opp	OPPOSITE
OSD	OVERSIDE DRAIN

P

P	PAGE
PAP	PERFORATED ALUMINUM PIPE
PB	PULL BOX
PC	POINT OF CURVATURE,
	PRECAST
PCC	POINT OF COMPOUND CURVE,
	PORTLAND CEMENT CONCRETE
PCMS	PORTABLE CHANGEABLE MESSAGE SIGN
PCP	PERFORATED CONCRETE PIPE,
	PRESTRESSED CONCRETE PIPE
PCVC	POINT OF COMPOUND VERTICAL CURVE
PEC	PERMIT TO ENTER AND CONSTRUCT
Ped	PEDESTRIAN
Ped OC	PEDESTRIAN OVERCROSSING
Ped UC	PEDESTRIAN UNDERCROSSING
Perm Mtl	PERMEABLE MATERIAL

P continued

PG	PROFILE GRADE
PI	POINT OF INTERSECTION
PJP	PARTIAL JOINT PENETRATION
Pkwy	PARKWAY
ℙ,PL	PLATE
P/L	PROPERTY LINE
PM	POST MILE,
	TIME FROM NOON TO MIDNIGHT
PN	PAVING NOTCH
POC	POINT OF HORIZONTAL CURVE
POT	POINT OF TANGENT
POVC	POINT OF VERTICAL CURVE
PP	PIPE PILE,
	PLASTIC PIPE,
	POWER POLE
PPL	PREFORMED PERMEABLE LINER
PPP	PERFORATED PLASTIC PIPE
PRC	POINT OF REVERSE CURVE
PRF	PAVEMENT REINFORCING FABRIC
PRVC	POINT OF REVERSE VERTICAL CURVE
PS&E	PLANS, SPECIFICATIONS AND ESTIMATES
PS, P/S	PRESTRESSED
PSP	PERFORATED STEEL PIPE
PT	POINT OF TANGENCY
PVC	POLYVINYL CHLORIDE
Pvmt	PAVEMENT

Q

Qty	QUANTITY

R

R	RADIUS
R & D	REMOVE AND DISPOSE
R & S	REMOVE AND SALVAGE
R/C	RATE OF CHANGE
RCA	REINFORCED CONCRETE ARCH
RCB	REINFORCED CONCRETE BOX
RCP	REINFORCED CONCRETE PIPE
RCPA	REINFORCED CONCRETE PIPE ARCH
Rd	ROAD
Reinf	REINFORCED,
	REINFORCEMENT,
	REINFORCING
Rel	RELOCATE
Repl	REPLACEMENT
Ret	RETAINING
Rev	REVISED, REVISION
Rdwy	ROADWAY
RHMA	RUBBERIZED HOT MIX ASPHALT
Riv	RIVER
RM	ROAD-MIXED
RP	RADIUS POINT,
	REFERENCE POINT
RR	RAILROAD
RSP	ROCK SLOPE PROTECTION,
	REVISED STANDARD PLAN
Rt	RIGHT
Rte	ROUTE
RW	REDWOOD,
	RETAINING WALL
R/W	RIGHT OF WAY
Rwy	RAILWAY

S

S	SOUTH,
	SUPPLEMENT
SAE	STRUCTURE APPROACH EMBANKMENT
Salv	SALVAGE
SAPP	STRUCTURAL ALUMINUM PLATE PIPE
SB	SOUTHBOUND
SC	SAND CUSHION
SCSP	SLOTTED CORRUGATED STEEL PIPE
SD	STORM DRAIN
Sec	SECOND,
	SECTION
Sep	SEPARATION
SG	SUBGRADE
Shld	SHOULDER
Sht	SHEET
Sim	SIMILAR
℄	STATION LINE
SM	SELECTED MATERIAL
Spec	SPECIAL,
	SPECIFICATIONS
SPP	SLOTTED PLASTIC PIPE
SS	SLOPE STAKE
SSBM	STRAP AND SADDLE BRACKET METHOD
SSD	STRUCTURAL SECTION DRAIN
SSPA	STRUCTURAL STEEL PLATE ARCH
SSPP	STRUCTURAL STEEL PLATE PIPE
SSPPA	STRUCTURAL STEEL PLATE PIPE ARCH
SSRP	STEEL SPIRAL RIB PIPE
St	STREET
Sta	STATION
STBB	SINGLE THRIE BEAM BARRIER
Std	STANDARD
Str	STRUCTURE
Surf	SURFACING
SW	SIDEWALK,
	SOUND WALL
Swr	SEWER
Sym	SYMMETRICAL
S4S	SURFACE 4 SIDES

T

T	SEMI-TANGENT
Tan	TANGENT
TBB	THRIE BEAM BARRIER
Tbr	TIMBER
TC	TOP OF CURB
TCB	TRAFFIC CONTROL BOX
TCE	TEMPORARY CONSTRUCTION EASEMENT
Tel	TELEPHONE
Temp	TEMPORARY
TG	TOP OF GRADE
Tot	TOTAL
TP	TELEPHONE POLE
TPB	TREATED PERMEABLE BASE
TPM	TREATED PERMEABLE MATERIAL
Trans	TRANSITION

T continued

TS	TRANSVERSE,
	TRAFFIC SIGNAL,
	TUBULAR STEEL
Typ	TYPICAL

U

UC	UNDERCROSSING
UD	UNDERDRAIN
UG	UNDERGROUND
UON	UNLESS OTHERWISE NOTED
UP	UNDERPASS

V

V	VALVE,
	DESIGN SPEED
Var	VARIABLE,
	VARIES
VC	VERTICAL CURVE
VCP	VITRIFIED CLAY PIPE
Vert	VERTICAL
Via	VIADUCT
Vol	VOLUME

W

W	WEST,
	WIDTH
WB	WESTBOUND
WH	WEEP HOLE
WM	WIRE MESH
WS	WATER SURFACE
WSP	WELDED STEEL PIPE
Wt	WEIGHT
WV	WATER VALVE
WW	WINGWALL
WWLOL	WINGWALL LAYOUT LINE

X

X Sec	CROSS SECTION
Xing	CROSSING

Y

Yr	YEAR
Yrs	YEARS

Dist	COUNTY	ROUTE	POST MILES TOTAL PROJECT	SHEET No.	TOTAL SHEETS
02	Tri	299	0.0/8.3	63	103

Grace M. Tsushima
REGISTERED CIVIL ENGINEER

July 19, 2013
PLANS APPROVAL DATE

REGISTERED PROFESSIONAL ENGINEER Grace M. Tsushima No. C49814 Exp. 9-30-14 CIVIL STATE OF CALIFORNIA

THE STATE OF CALIFORNIA OR ITS OFFICERS OR AGENTS SHALL NOT BE RESPONSIBLE FOR THE ACCURACY OR COMPLETENESS OF SCANNED COPIES OF THIS PLAN SHEET.

TO ACCOMPANY PLANS DATED 06-15-16

2010 REVISED STANDARD PLAN RSP A10B

UNIT OF MEASUREMENT SYMBOLS:

Some of the symbols used in the project plan quantity tables and in the Bid Item List are:

TABLE A

SYMBOL USED	DEFINITIONS
ACRE	ACRE
CF	CUBIC FOOT
CY	CUBIC YARD
EA	EACH
GAL	GALLON
LB	POUND
LF	LINEAR FOOT
SQFT	SQUARE FOOT
SQYD	SQUARE YARD
STA	100 FEET
TAB	TABLET
TON	2,000 POUNDS

Some of the symbols used in the plans other than in the project plan quantity tables are:

TABLE B

SYMBOL USED	DEFINITIONS
ksi	KIPS PER SQUARE INCH
ksf	KIPS PER SQUARE FOOT
psi	POUNDS PER SQUARE INCH
psf	POUNDS PER SQUARE FOOT
lb/ft^3, pcf	POUNDS PER CUBIC FOOT
tsf	TONS PER SQUARE FOOT
mph, MPH *	MILES PER HOUR
ø	NOMINAL DIAMETER
oz	OUNCE
lb	POUND
kip	1,000 POUNDS
cal	CALORIE
ft	FOOT OR FEET
gal	GALLON

* For use on a sign panel only

STATE OF CALIFORNIA
DEPARTMENT OF TRANSPORTATION

ABBREVIATIONS (SHEET 2 OF 2)

NO SCALE

RSP A10B DATED JULY 19, 2013 SUPERSEDES STANDARD PLAN A10B DATED MAY 20, 2011 - PAGE 2 OF THE STANDARD PLANS BOOK DATED 2010.

REVISED STANDARD PLAN RSP A10B

DATE PLOTTED => 02-AUG-2016
TIME PLOTTED => 08:17

Dist	COUNTY	ROUTE	POST MILES TOTAL PROJECT	SHEET No.	TOTAL SHEETS
02	Tri	299	0.0/8.3	64	103

REGISTERED CIVIL ENGINEER

July 19, 2013
PLANS APPROVAL DATE

REGISTERED PROFESSIONAL ENGINEER Roberta L. McLaughlin No. C40375 Exp. 3-31-15 CIVIL STATE OF CALIFORNIA

THE STATE OF CALIFORNIA OR ITS OFFICERS OR AGENTS SHALL NOT BE RESPONSIBLE FOR THE ACCURACY OR COMPLETENESS OF SCANNED COPIES OF THIS PLAN SHEET.

TO ACCOMPANY PLANS DATED 06-15-16

EXIT RAMP NEUTRAL AREA (GORE) TREATMENT

DETAIL 36

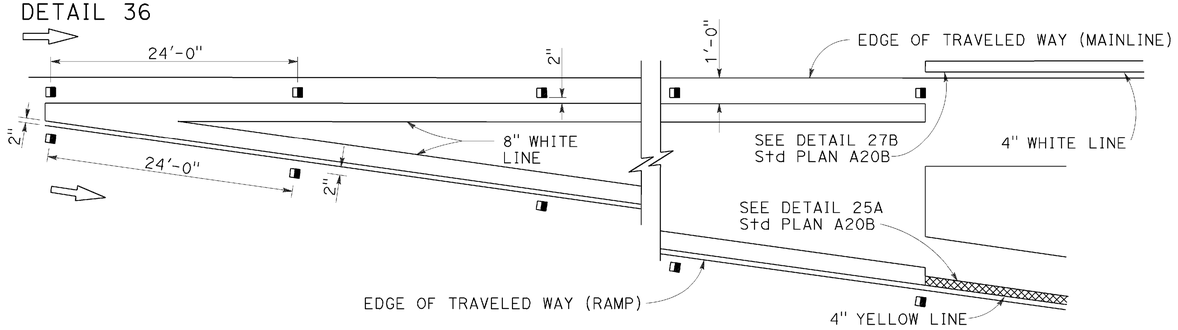

ENTRANCE RAMP NEUTRAL AREA (MERGE) TREATMENT

DETAIL 36A

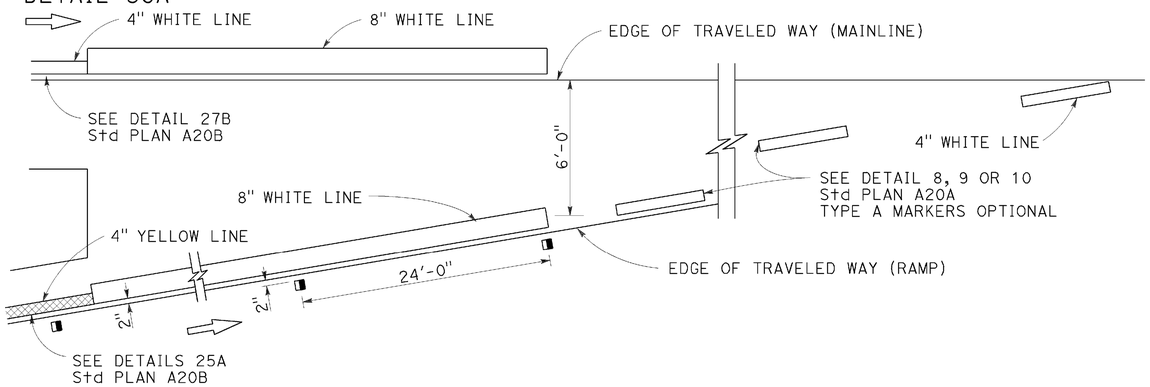

ENTRANCE RAMP NEUTRAL AREA (ACCELERATION LANE) TREATMENT

DETAIL 36B

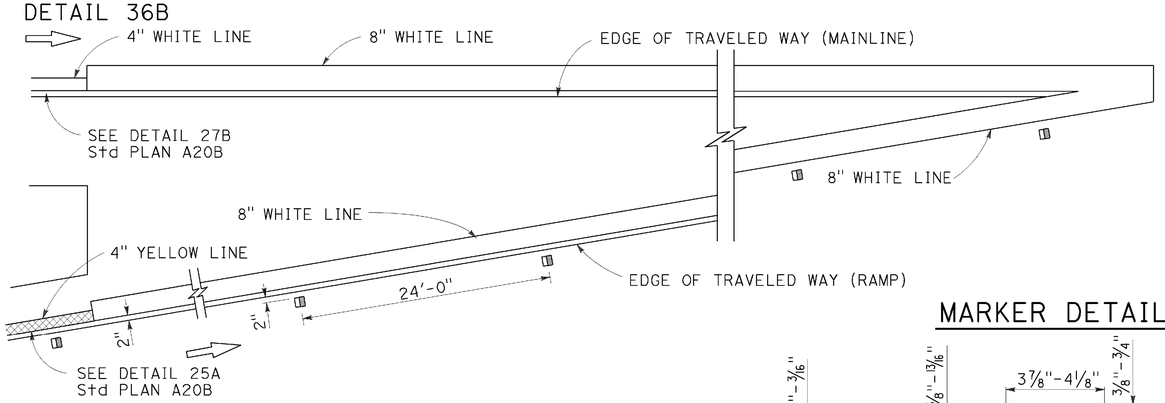

MARKER DETAILS

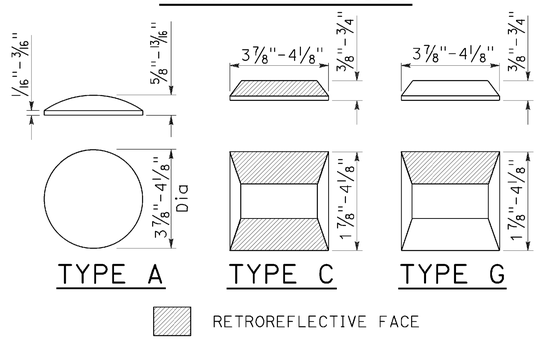

LEGEND:

MARKERS

- ○ TYPE A WHITE NON-REFLECTIVE
- ⊟ TYPE C RED-CLEAR RETROREFLECTIVE
- ◨ TYPE G ONE-WAY CLEAR RETROREFLECTIVE

LANE DROP AT EXIT RAMPS

DETAIL 37

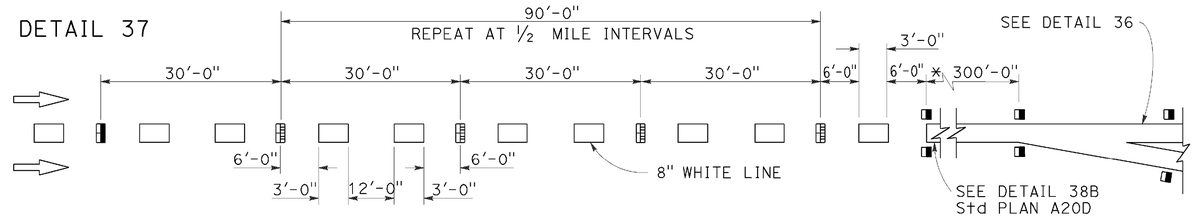

DETAIL 37A

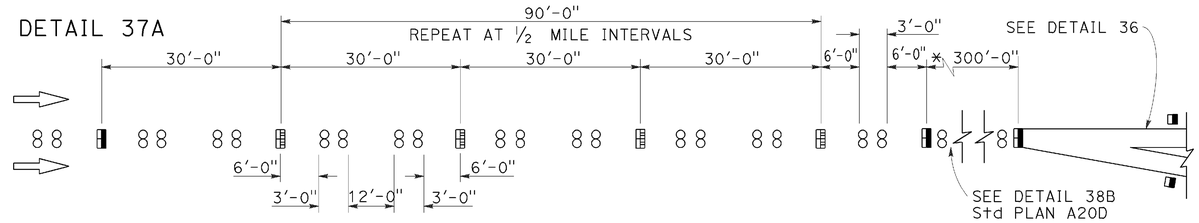

* The solid channelizing line shown may be omitted on short auxiliary lanes where weaving length is critical.

LANE DROP AT INTERSECTIONS

DETAIL 37B

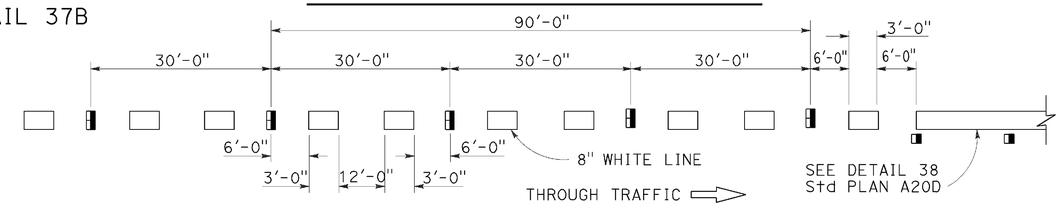

DETAIL 37C

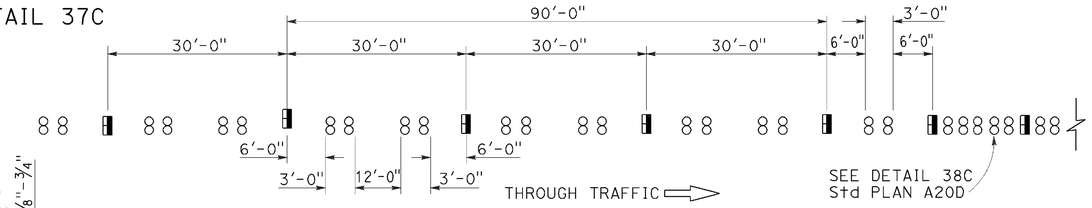

STATE OF CALIFORNIA
DEPARTMENT OF TRANSPORTATION

PAVEMENT MARKERS AND TRAFFIC LINE TYPICAL DETAILS

NO SCALE

RSP A20C DATED JULY 19, 2013 SUPERSEDES STANDARD PLAN A20C DATED MAY 20, 2011 - PAGE 11 OF THE STANDARD PLANS BOOK DATED 2010.

REVISED STANDARD PLAN RSP A20C

2010 REVISED STANDARD PLAN RSP A20C

DATE PLOTTED => 02-AUG-2016
TIME PLOTTED => 08:17

Dist	COUNTY	ROUTE	POST MILES TOTAL PROJECT	SHEET No.	TOTAL SHEETS
02	Tri	299	0.0/8.3	65	103

REGISTERED CIVIL ENGINEER

April 20, 2012
PLANS APPROVAL DATE

REGISTERED PROFESSIONAL ENGINEER
Roberta L. McLaughlin
No. C40375
Exp. 3-31-13
CIVIL
STATE OF CALIFORNIA

THE STATE OF CALIFORNIA OR ITS OFFICERS OR AGENTS SHALL NOT BE RESPONSIBLE FOR THE ACCURACY OR COMPLETENESS OF SCANNED COPIES OF THIS PLAN SHEET.

TO ACCOMPANY PLANS DATED 06-15-16

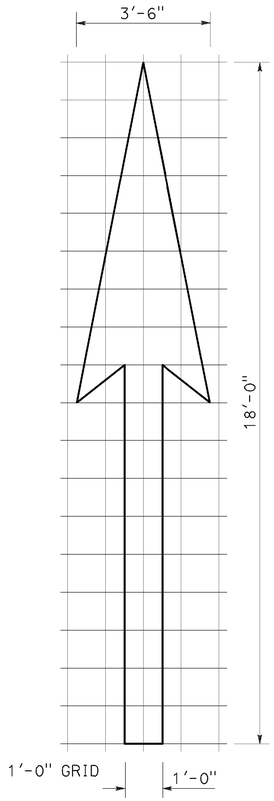

A=25 ft^2

TYPE I 18'-0" ARROW

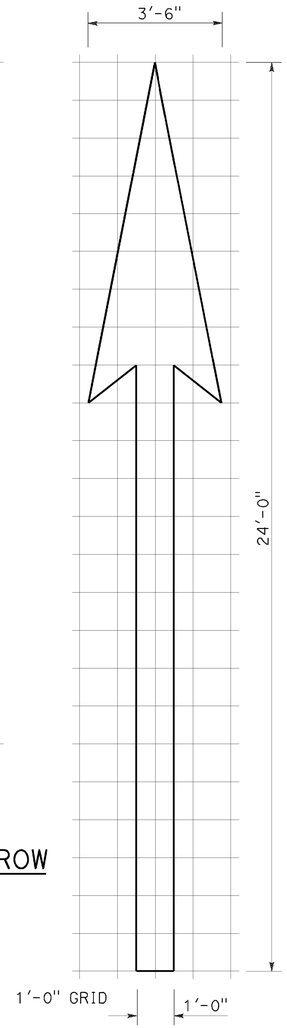

A=31 ft^2

TYPE I 24'-0" ARROW

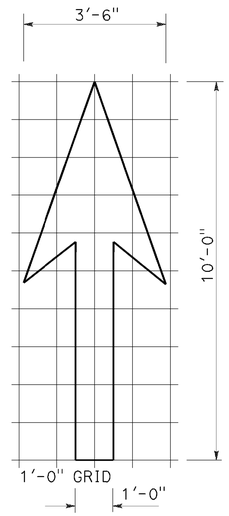

A=14 ft^2

TYPE I 10'-0" ARROW

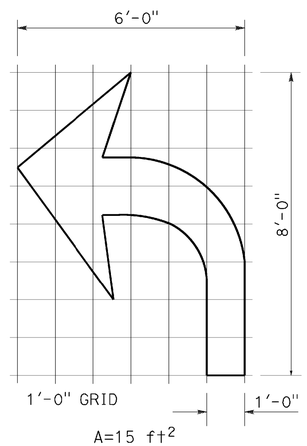

A=15 ft^2

TYPE IV (L) ARROW

(For Type IV (R) arrow, use mirror image)

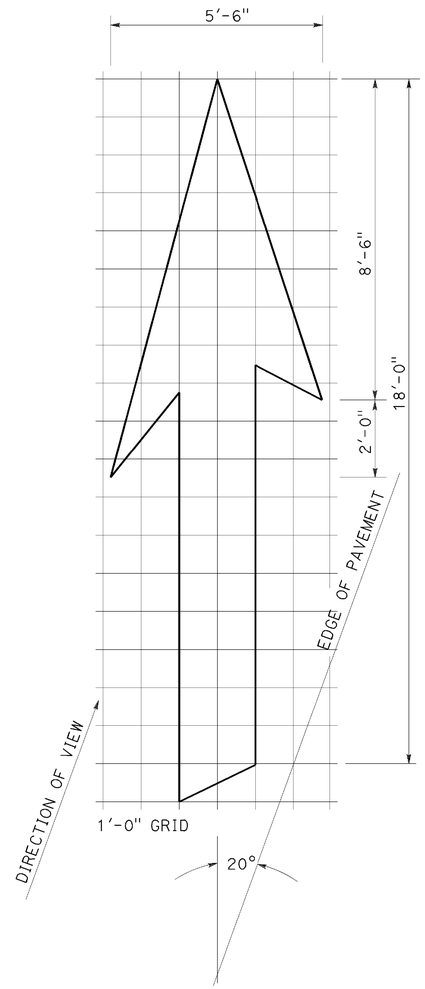

A=42 ft^2

TYPE VI ARROW

Right lane drop arrow
(For left lane, use mirror image)

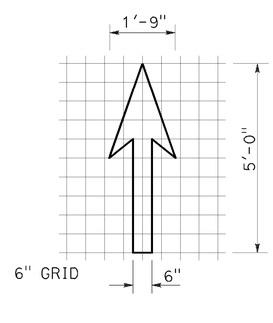

A=3.5 ft^2

BIKE LANE ARROW

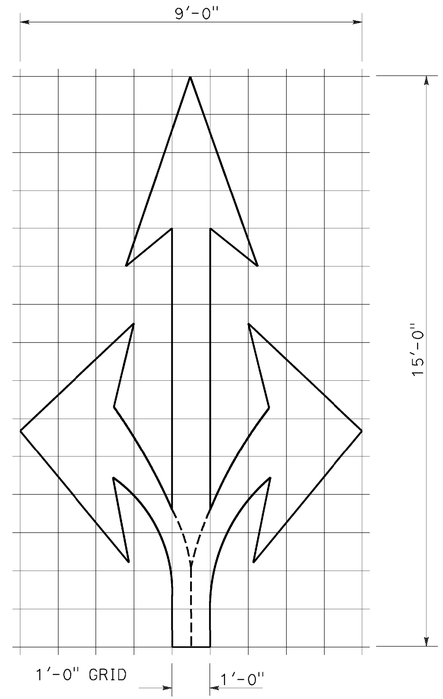

A=36 ft^2

TYPE VIII ARROW

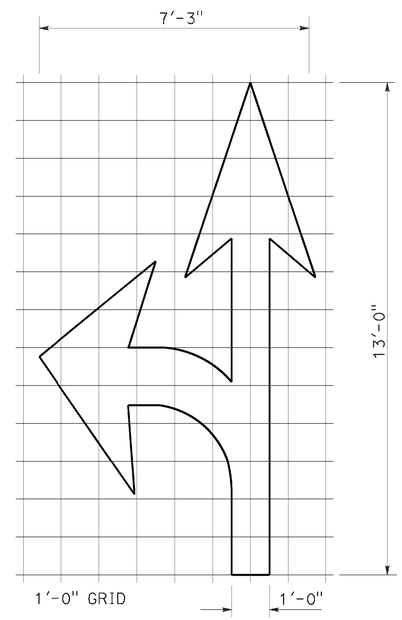

A=27 ft^2

TYPE VII (L) ARROW

(For Type VII (R) arrow, use mirror image)

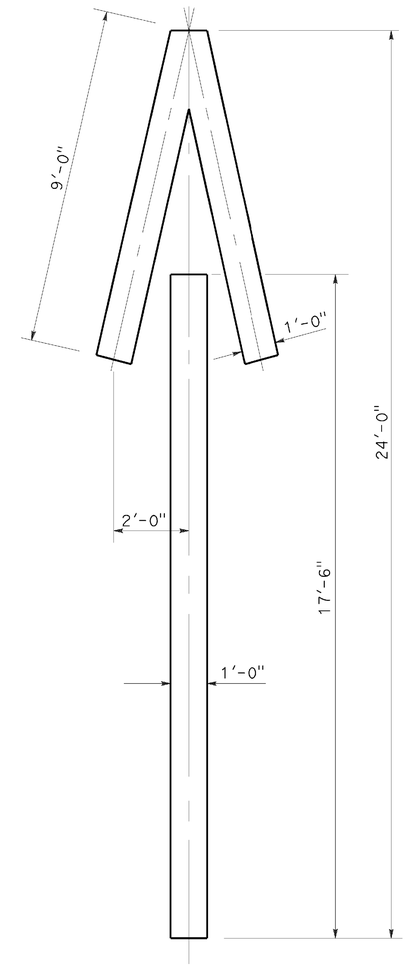

A=33 ft^2

TYPE V ARROW

NOTE:
Minor variations in dimensions may be accepted by the Engineer.

STATE OF CALIFORNIA
DEPARTMENT OF TRANSPORTATION

PAVEMENT MARKINGS ARROWS

NO SCALE

RSP A24A DATED APRIL 20, 2012 SUPERSEDES STANDARD PLAN A24A DATED MAY 20, 2011 - PAGE 13 OF THE STANDARD PLANS BOOK DATED 2010.

REVISED STANDARD PLAN RSP A24A

2010 REVISED STANDARD PLAN RSP A24A

DATE PLOTTED => 02-AUG-2016
TIME PLOTTED => 08:17

Dist	COUNTY	ROUTE	POST MILES TOTAL PROJECT	SHEET No.	TOTAL SHEETS
02	Tri	299	0.0/8.3	66	103

REGISTERED CIVIL ENGINEER

July 20, 2012
PLANS APPROVAL DATE

REGISTERED PROFESSIONAL ENGINEER
Roberta L. McLaughlin
No. C40375
Exp. 3-31-13
CIVIL
STATE OF CALIFORNIA

THE STATE OF CALIFORNIA OR ITS OFFICERS OR AGENTS SHALL NOT BE RESPONSIBLE FOR THE ACCURACY OR COMPLETENESS OF SCANNED COPIES OF THIS PLAN SHEET.

TO ACCOMPANY PLANS DATED 06-15-16

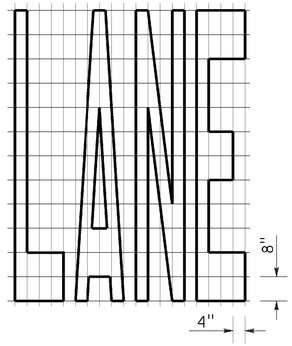

A=24 ft^2

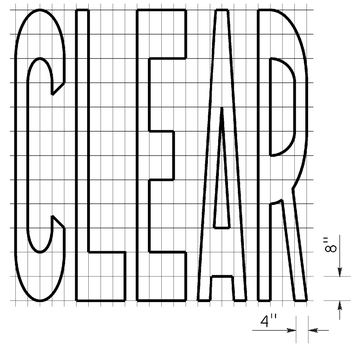

A=27 ft^2

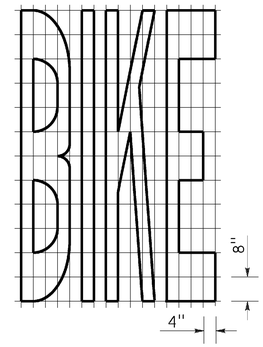

A=21 ft^2

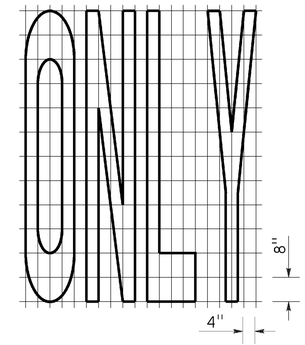

A=22 ft^2

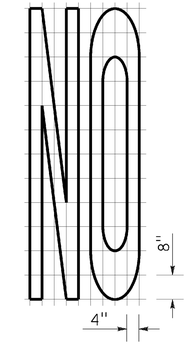

A=14 ft^2

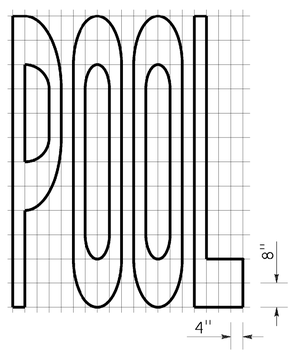

A=23 ft^2

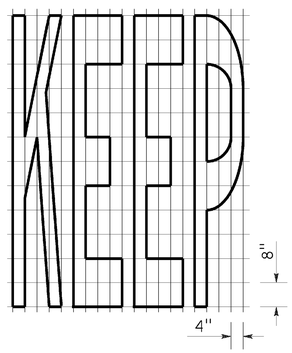

A=24 ft^2

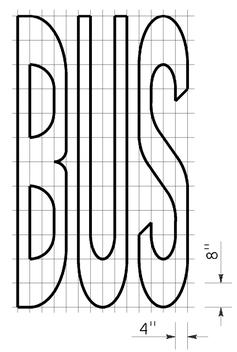

A=20 ft^2

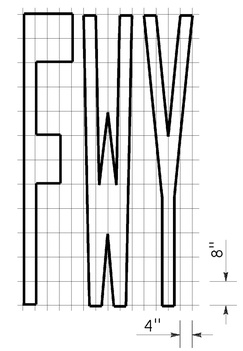

A=16 ft^2

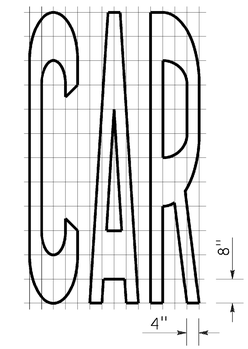

A=17 ft^2

WORD MARKINGS			
ITEM	ft^2	ITEM	ft^2
LANE	24	NO	14
POOL	23	BIKE	21
CAR	17	BUS	20
CLEAR	27	ONLY	22
KEEP	24	FWY	16

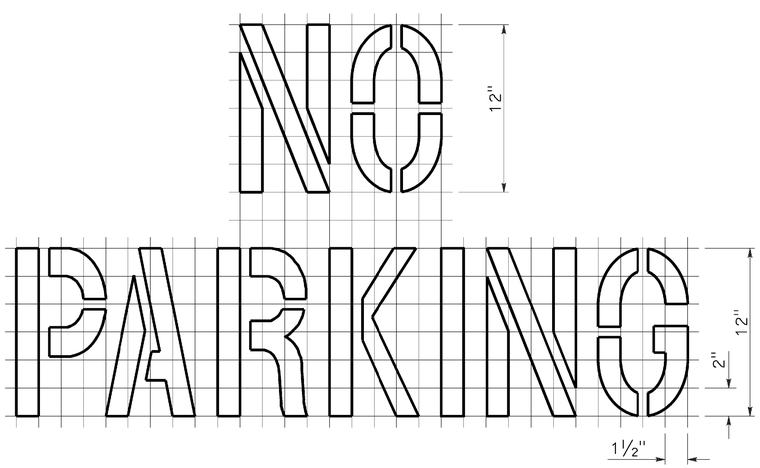

A=2 ft^2

See Notes 6 and 7

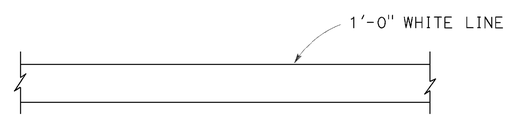

LIMIT LINE (STOP LINE)

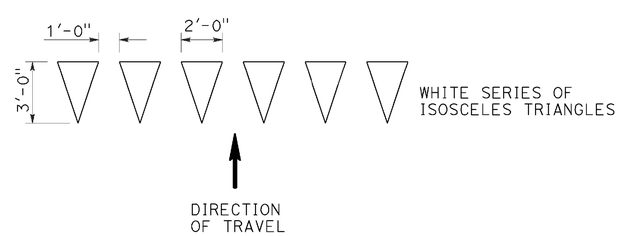

YIELD LINE

NOTES:

1. If a message consists of more than one word, it should read "UP", i.e., the first word should be nearest the driver.
2. The space between words should be at least four times the height of the characters for low speed roads, but not more than ten times the height of the characters. The space may be reduced appropriately where there is limited space because of local conditions.
3. Minor variations in dimensions may be accepted by the Engineer.
4. Portions of a letter, number or symbol may be separated by connecting segments not to exceed 2" in width.
5. The words "NO PARKING" pavement marking is to be used for parking facilities. For typical locations of markings, see Standard Plans A90A and A90B.
6. The words "NO PARKING", shall be painted in white letters no less than 1'-0" high on a contrasting background and located so that it is visible to traffic enforcement officials.

STATE OF CALIFORNIA
DEPARTMENT OF TRANSPORTATION

PAVEMENT MARKINGS WORDS, LIMIT AND YIELD LINES

NO SCALE

RSP A24E DATED JULY 20, 2012 SUPERSEDES STANDARD PLAN A24E
DATED MAY 20, 2011 - PAGE 17 OF THE STANDARD PLANS BOOK DATED 2010.

REVISED STANDARD PLAN RSP A24E

2010 REVISED STANDARD PLAN RSP A24E

DATE PLOTTED => 02-AUG-2016
TIME PLOTTED => 08:18

Dist	COUNTY	ROUTE	POST MILES TOTAL PROJECT	SHEET No.	TOTAL SHEETS
02	Tri	299	0.0/8.3	67	103

REGISTERED CIVIL ENGINEER

July 20, 2012
PLANS APPROVAL DATE

REGISTERED PROFESSIONAL ENGINEER
Roberta L. McLaughlin
No. C40375
Exp. 3-31-13
CIVIL
STATE OF CALIFORNIA

THE STATE OF CALIFORNIA OR ITS OFFICERS OR AGENTS SHALL NOT BE RESPONSIBLE FOR THE ACCURACY OR COMPLETENESS OF SCANNED COPIES OF THIS PLAN SHEET.

TO ACCOMPANY PLANS DATED 06-15-16

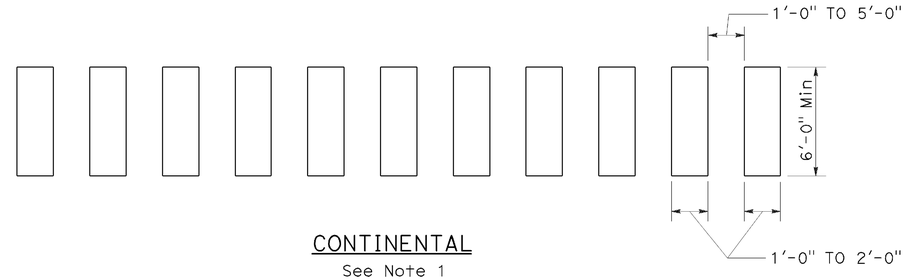

CONTINENTAL
See Note 1

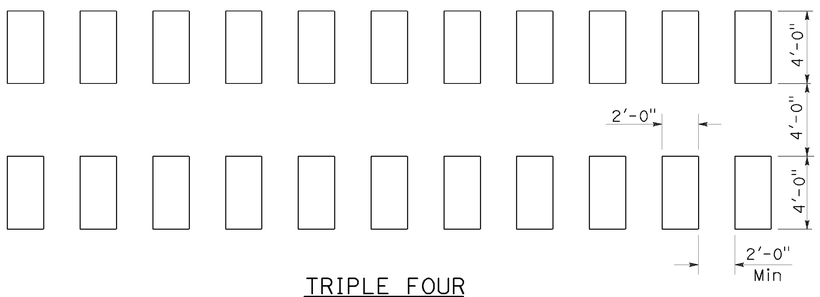

TRIPLE FOUR
See Note 1

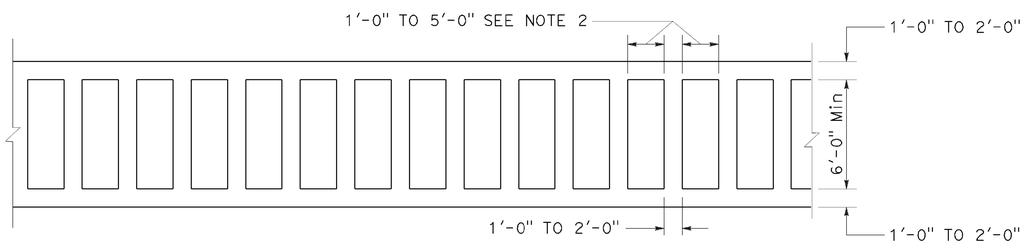

LADDER

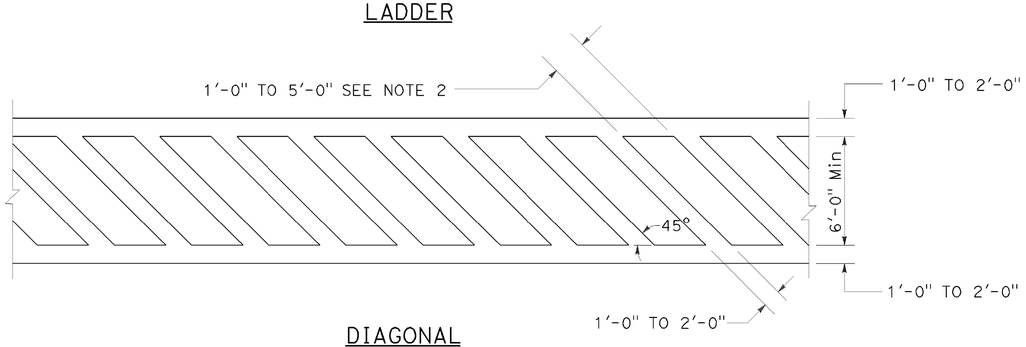

DIAGONAL

HIGHER VISIBILITY CROSSWALKS

NOTES:

1. Spaces between markings should be placed in wheel tracks of each lane.
2. Spacings not to exceed 2.5 times width of longitudinal line.
3. All crosswalk markings must be white except for those near schools must be yellow.

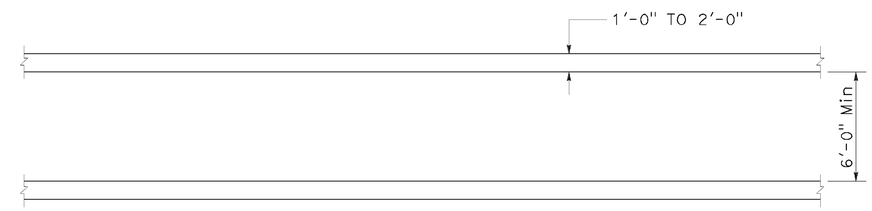

BASIC

STATE OF CALIFORNIA
DEPARTMENT OF TRANSPORTATION

PAVEMENT MARKINGS CROSSWALKS

NO SCALE

RSP A24F DATED JULY 20, 2012 SUPPLEMENTS THE STANDARD PLANS BOOK DATED 2010.

REVISED STANDARD PLAN RSP A24F

2010 REVISED STANDARD PLAN RSP A24F

DATE PLOTTED => 02-AUG-2016
TIME PLOTTED => 08:18

Dist	COUNTY	ROUTE	POST MILES TOTAL PROJECT	SHEET No.	TOTAL SHEETS
02	Tri	299	0.0/8.3	68	103

REGISTERED CIVIL ENGINEER

July 18, 2014
PLANS APPROVAL DATE

REGISTERED PROFESSIONAL ENGINEER
Carl M. Duan
No. C59976
Exp. 6-30-16
CIVIL
STATE OF CALIFORNIA

THE STATE OF CALIFORNIA OR ITS OFFICERS OR AGENTS SHALL NOT BE RESPONSIBLE FOR THE ACCURACY OR COMPLETENESS OF SCANNED COPIES OF THIS PLAN SHEET.

TO ACCOMPANY PLANS DATED 06-15-16

DESIGN NOTES:

Design: AASHTO LRFD Bridge Design Specifications, 4th edition with California Amendments. ACPA DESIGN DATA 1, October 2007. INDIRECT DESIGN METHOD

Soil: w Fe = 162 pcf Installation Type 1
w Fe = 168 pcf Installation Types 2 & 3
w = Unit weight of soil (pcf)
Fe = Soil-structure interaction factor

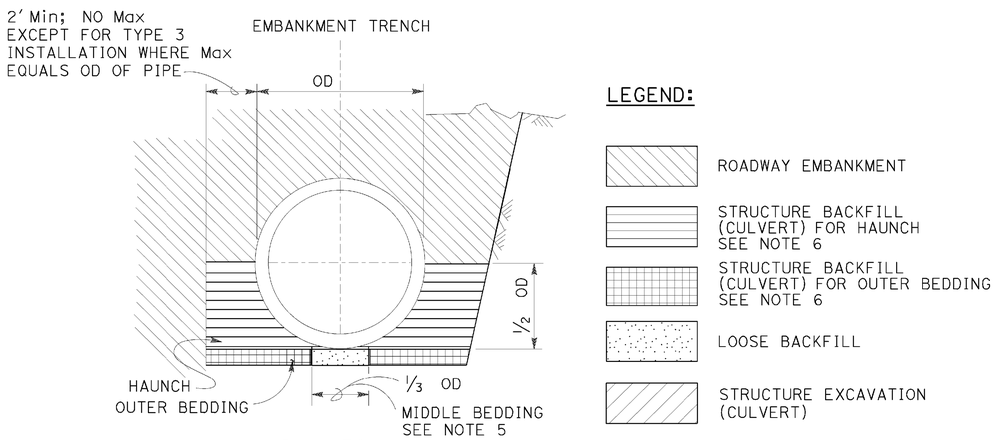

BACKFILL

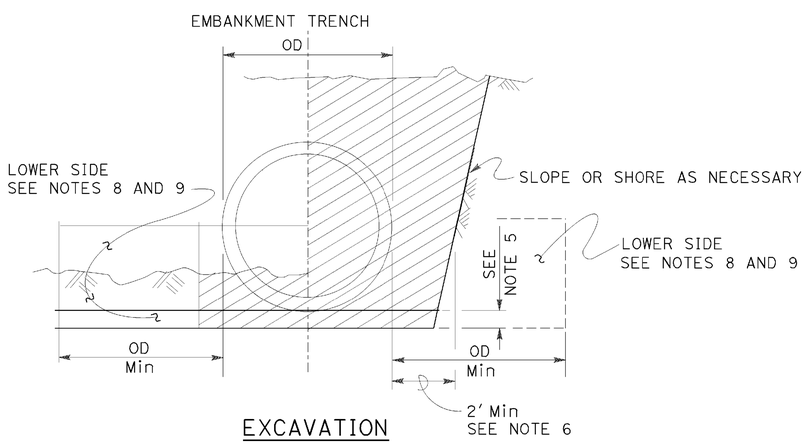

EXCAVATION

INSTALLATION TYPE 1:

The haunch and outer bedding shall be compacted to a minimum 90 percent relative compaction. In addition, the minimum sand equivalent in these areas shall be 30 and the maximum percentage passing the No. 200 sieve size shall be 12.

INSTALLATION TYPE 2:

The haunch and outer bedding shall be compacted to a minimum 90 percent relative compaction. In addition, the minimum sand equivalent in these areas shall be 25.

INSTALLATION TYPE 3:

The haunch and outer bedding shall be compacted to a minimum 85 percent relative compaction. 90 percent relative compaction will be required where the fill over the pipe is less than 4′-0″ or ½ OD. In addition, the minimum sand equivalent in these areas shall be 25 and the material shall not contain rocks, broken concrete, or other solid material exceeding 3″ in greatest dimension.

INSTALLATION TYPE 1

MINIMUM CLASS AND D-LOAD	COVER	
	60″ Dia AND SMALLER	OVER 60″ Dia TO 120″ Dia Max
CLASS II 1000D	14.9′	12.9′
CLASS III 1350D	15.0′ - 21.9′	13.0′ - 18.9′
CLASS III SPECIAL 1700D	22.0′ - 27.9′	19.0′ - 24.9′
CLASS IV 2000D	28.0′ - 32.9′	25.0′ - 29.9′
CLASS IV SPECIAL 2500D	33.0′ - 41.9′	30.0′ - 38.9′
CLASS V 3000D	42.0′ - 49.9′	39.0′ - 46.9′
CLASS V SPECIAL 3600D	50.0′ - 60.0′	47.0′ - 58.0′

INSTALLATION TYPE 2

MINIMUM CLASS AND D-LOAD	COVER	
	60″ Dia AND SMALLER	OVER 60″ Dia TO 120″ Dia Max
CLASS II 1000D	11.9′	9.9′
CLASS III 1350D	12.0′ - 15.9′	10.0′ - 14.9′
CLASS III SPECIAL 1700D	16.0′ - 20.9′	15.0′ - 19.9′
CLASS IV 2000D	21.0′ - 24.9′	20.0′ - 23.9′
CLASS IV SPECIAL 2500D	25.0′ - 31.9′	24.0′ - 30.9′
CLASS V 3000D	32.0′ - 37.9′	31.0′ - 37.9′
CLASS V SPECIAL 3600D	38.0′ - 46.0′	38.0′ - 46.0′

INSTALLATION TYPE 3

MINIMUM CLASS AND D-LOAD	COVER	
	60″ Dia AND SMALLER	OVER 60″ Dia TO 120″ Dia Max
CLASS II 1000D	8.9′	5.9′
CLASS III 1350D	9.0′ - 11.9′	6.0′ - 10.9′
CLASS III SPECIAL 1700D	12.0′ - 15.9′	11.0′ - 13.9′
CLASS IV 2000D	16.0′ - 18.9′	14.0′ - 17.9′
CLASS IV SPECIAL 2500D	19.0′ - 24.9′	18.0′ - 22.9′
CLASS V 3000D	25.0′ - 29.9′	23.0′ - 28.9′
CLASS V SPECIAL 3600D	30.0′ - 36.0′	29.0′ - 35.0′

NOTES:

1. Unless otherwise shown on the plans or specified in the special provision, the Contractor shall have the option of selecting the class of RCP and the type of installation to be used, provided the height of cover does not exceed the value shown for the RCP selected.
   Example: 24″ RCP culvert with maximum cover of 24′-0″ the options are:
   a) Class III Special or stronger with Installation Type 1.
   b) Class IV or stronger with Installation Type 2.
   c) Class IV Special or stronger with Installation Type 3.
   Cover is defined as the maximum vertical distance from top of the pipe to finished grade within the length of any given culvert.
2. The class of RCP and Installation Type selected shall be the same throughout the length of any given culvert.
3. The "length of any culvert" is defined as the culvert between:
   a) Successive drainage structure (inlets, junction boxes, headwalls, etc.).
   b) A drainage structure and the inlet or outlet end of the culvert.
   c) The inlet and outlet end of the culvert when there are no intervening drainage structures.
4. Oval and arch shaped RCP shall not be used.
5. Bedding depth: 1/25 OD Min, not less than 3″.
6. Slurry cement backfill may be substituted for backfill in the outer bedding and haunch areas. If slurry is used, the outer and middle beddings shall be omitted. Prior to installation, the soil under the middle ⅓ of the outside diameter of the pipe shall be softened by scarifying or other means to a minimum depth of 1/25 OD, but not less than 3″. Where slurry cement backfill is used, clear distance to trench wall may be reduced as set forth in the Standard Specifications.
7. Backfill shall be placed full width of excavation except where dimensions are shown for backfill width or thickness. Dimensions shown are minimum.
8. Lower side shall be suitable material as determined by the Engineer. Otherwise it shall be considered unsuitable as set forth in of the Standard Specifications. See Note 9.
9. Where the pipe is placed in a trench, if the trench walls are sloped at 5 vertical to 1 horizontal or steeper for at least 90 percent of the trench height or up to not less than 12″ from the grading plane, the firmness of the soil in the lower side need not be considered.
10. Non-reinforced precast concrete pipe sizes 3′-0″ or smaller may be placed under installation Types 1, 2 or 3.

STATE OF CALIFORNIA
DEPARTMENT OF TRANSPORTATION

EXCAVATION AND BACKFILL CONCRETE PIPE CULVERTS INDIRECT DESIGN METHOD

NO SCALE

RSP A62DA DATED JULY 18, 2014 SUPERSEDES STANDARD PLAN A62DA DATED MAY 20, 2011 - PAGE 24 OF THE STANDARD PLANS BOOK DATED 2010.

REVISED STANDARD PLAN RSP A62DA

2010 REVISED STANDARD PLAN RSP A62DA

DATE PLOTTED => 02-AUG-2016
TIME PLOTTED => 08:18

Dist	COUNTY	ROUTE	POST MILES TOTAL PROJECT	SHEET No.	TOTAL SHEETS
02	Tri	299	0.0/8.3	69	103

REGISTERED CIVIL ENGINEER

October 30, 2015
PLANS APPROVAL DATE

REGISTERED PROFESSIONAL ENGINEER
Carl M. Duan
No. C59976
Exp. 6-30-16
CIVIL
STATE OF CALIFORNIA

THE STATE OF CALIFORNIA OR ITS OFFICERS OR AGENTS SHALL NOT BE RESPONSIBLE FOR THE ACCURACY OR COMPLETENESS OF SCANNED COPIES OF THIS PLAN SHEET.

TO ACCOMPANY PLANS DATED 06-15-16

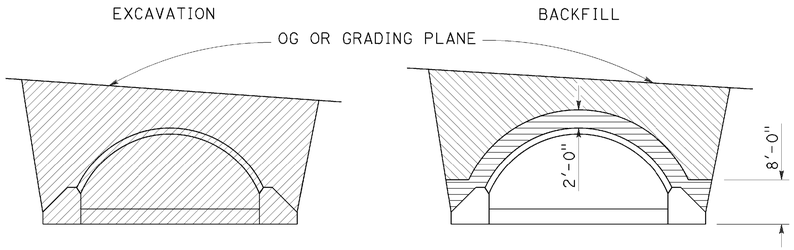

IN TRENCH

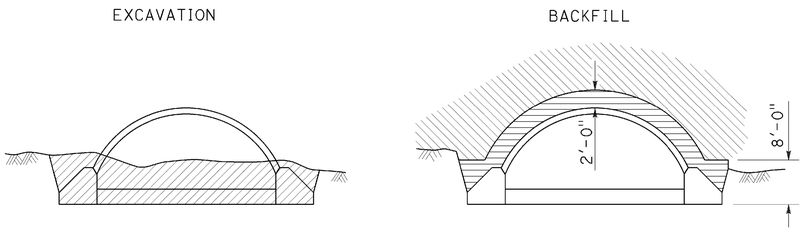

IN EMBANKMENT

STRUCTURAL STEEL PLATE ARCHES

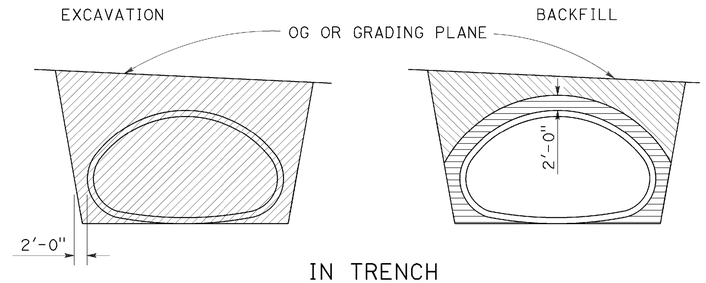

IN TRENCH

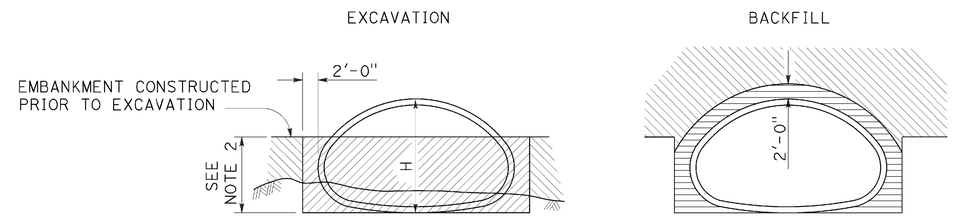

IN EMBANKMENT

STRUCTURAL STEEL PLATE PIPE ARCHES AND VEHICULAR UNDERCROSSING

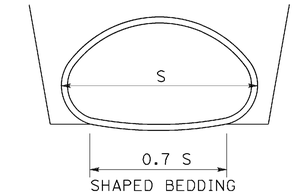

SHAPED BEDDING
S = Larger than 84"

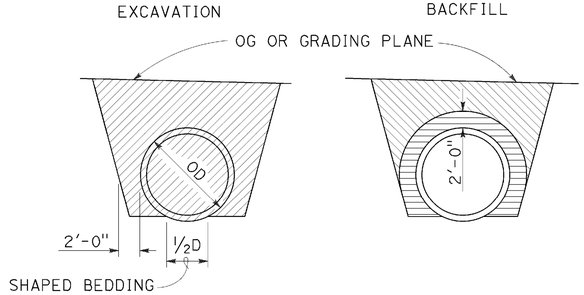

IN TRENCH

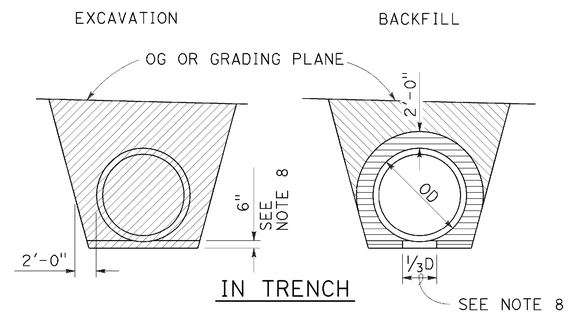

IN TRENCH

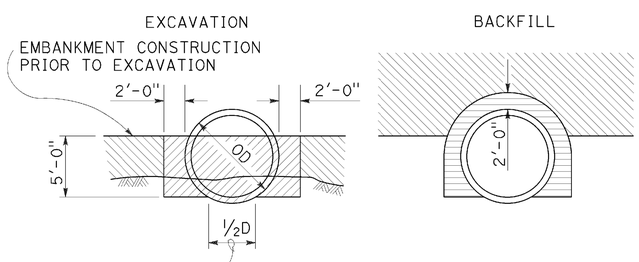

IN EMBANKMENT

PIPES

Larger than 84"

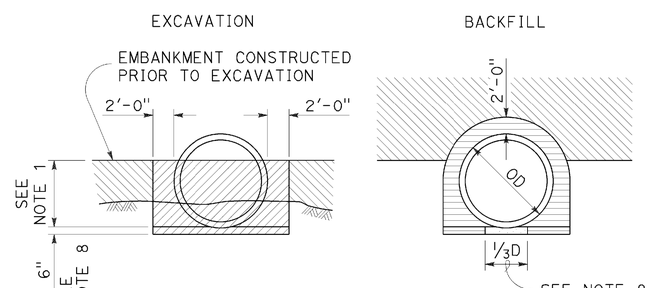

IN EMBANKMENT

METAL AND PLASTIC PIPES AND CORRUGATED METAL PIPE ARCHES

84" or Smaller

NOTES:

1. PIPES: 30" minimum for diameters up to and including 42" then ⅔ diameter but no more than 60" required. CORRUGATED METAL PIPE ARCHES: 30" maximum.
2. ⅔ H up to 60" maximum.
3. Slope or shore excavation sides as necessary.
4. Backfill shall be placed full width of excavation except as noted.
5. Diagrams do not apply to overside drains.
6. Dimensions shown are minimum.
7. Construction strutting of structural steel plate pipe, arches and vehicular undercrossing to be used when shown on the project plans. When shown, see Standard Plan D88A for strutting requirements.
8. Excavation below pipe and 80% relative compaction requirements for plastic pipes only.
9. D is the inside diameter (ID) of the pipe.

LEGEND

- STRUCTURE EXCAVATION (CULVERT)
- ROADWAY EMBANKMENT
- STRUCTURE BACKFILL (CULVERT) 95% RELATIVE COMPACTION
- STRUCTURE BACKFILL (CULVERT) 80% RELATIVE COMPACTION

STATE OF CALIFORNIA
DEPARTMENT OF TRANSPORTATION

EXCAVATION AND BACKFILL METAL AND PLASTIC CULVERTS

NO SCALE

RSP A62F DATED OCTOBER 30, 2015 SUPERSEDES STANDARD PLAN A62F DATED MAY 20, 2011 - PAGE 26 OF THE STANDARD PLANS BOOK DATED 2010.

REVISED STANDARD PLAN RSP A62F

2010 REVISED STANDARD PLAN RSP A62F

DATE PLOTTED => 02-AUG-2016
TIME PLOTTED => 08:19

Dist	COUNTY	ROUTE	POST MILES TOTAL PROJECT	SHEET No.	TOTAL SHEETS
02	Tri	299	0.0/8.3	70	103

Randell D. Hiatt
REGISTERED CIVIL ENGINEER

July 19, 2013
PLANS APPROVAL DATE

REGISTERED PROFESSIONAL ENGINEER Randell D. Hiatt No. C50200 Exp. 6-30-15 CIVIL STATE OF CALIFORNIA

THE STATE OF CALIFORNIA OR ITS OFFICERS OR AGENTS SHALL NOT BE RESPONSIBLE FOR THE ACCURACY OR COMPLETENESS OF SCANNED COPIES OF THIS PLAN SHEET.

TO ACCOMPANY PLANS DATED 06-15-16

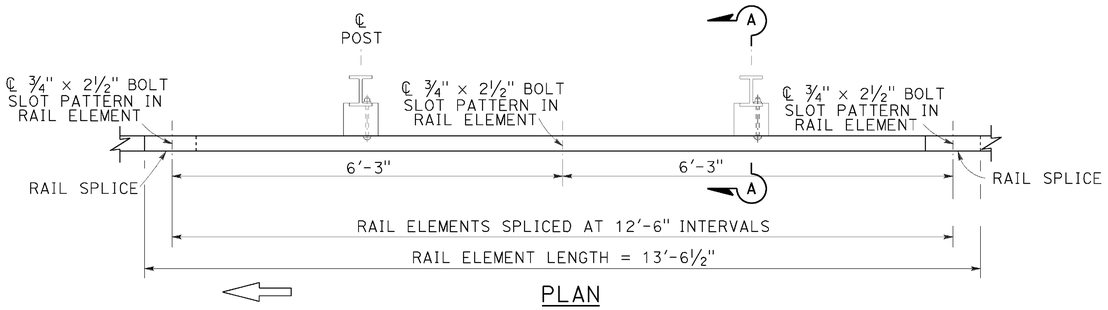

PLAN

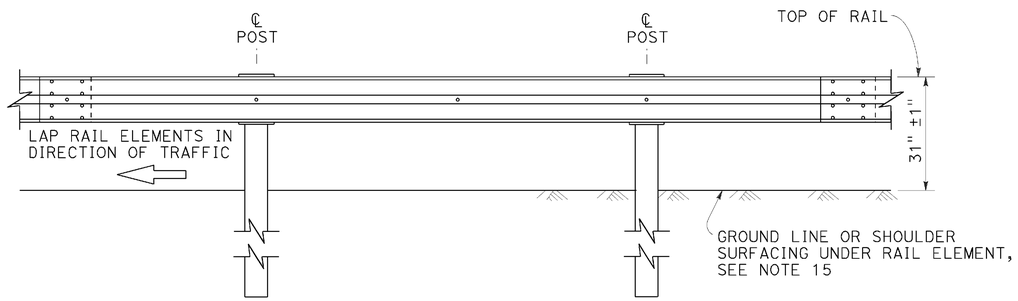

ELEVATION

MIDWEST GUARDRAIL SYSTEM WITH STEEL POSTS AND NOTCHED WOOD OR NOTCHED RECYCLED PLASTIC BLOCKS

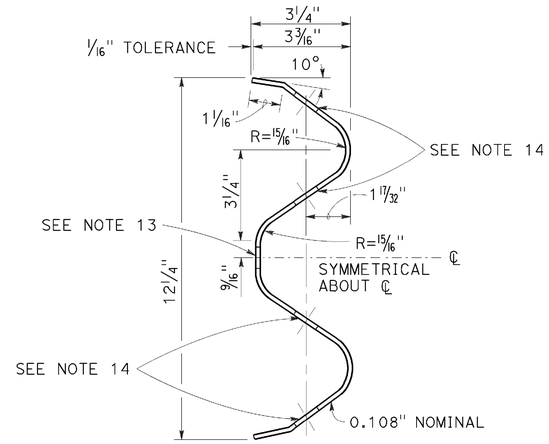

SECTION THRU RAIL ELEMENT

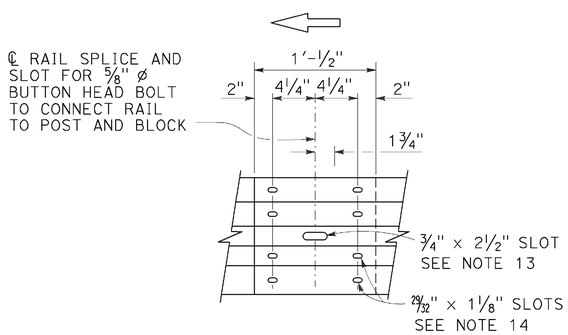

ELEVATION

RAIL ELEMENT SPLICE DETAIL

a) Connect the over lapped end of the rail elements with ⅝" ø × 1⅜" button head oval shoulder splice bolts inserted into the 29⁄32" × 1⅛" slots and bolted together with ⅝" ø recessed hex nuts. Recess of hex nut points toward rail element. A total of 8 bolts and nuts are to be used at each rail splice connection.

b) The ends of the rail elements are to be overlapped in the direction of traffic (see details).

c) Where end cap is to be attached to the end of a rail element, a total of 4 of the above described splice bolts and nuts are to be used.

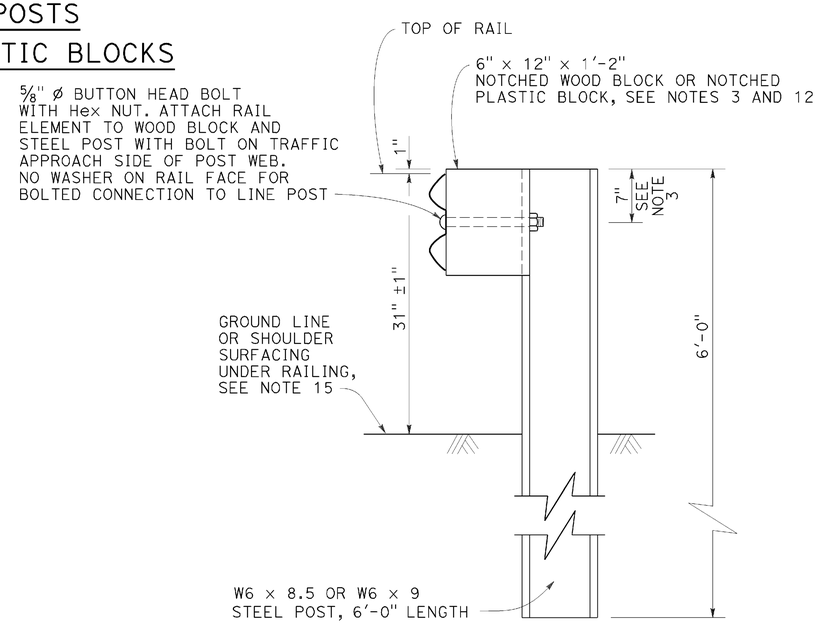

SECTION A-A

TYPICAL STEEL LINE POST INSTALLATION

See Note 4

NOTES:

1. For details of wood post installations, see Revised Standard Plan RSP A77L1.
2. For details of standard hardware used to construct MGS, see Revised Standard Plan RSP A77M1.
3. For details of steel posts and notched wood blocks used to construct MGS, see Revised Standard Plan RSP A77N2.
4. For additional installation details, see Revised Standard Plan RSP A77N3.
5. MGS post spacing to be 6'-3" center to center, except as otherwise noted.
6. For MGS typical layouts, see the A77P, A77Q and A77R Series of Standard Plans.
7. If railing is connected to terminal system end treatment, use 31" height terminal system end treatment.
8. For MGS end anchor details, see Revised Standard Plans RSP A77S1 and RSP A77T2.
9. For details of MGS transition to bridge railing, see Revised Standard Plan RSP A77U4.
10. For additional details of MGS connection to bridge railings, see Revised Standard Plans RSP A77U1, RSP A77U2 and RSP A77V1.
11. For dike positioning and MGS delineation details, see Revised Standard Plan RSP A77N4.
12. Notched face of block faces steel post.
13. Slotted hole for bolted connection of rail element to block and post. See "Section Thru Rail Element".
14. Slotted holes for splice bolts to overlap ends of rail element. See "Section Thru Rail Element".
15. Install posts in soil.

STATE OF CALIFORNIA
DEPARTMENT OF TRANSPORTATION

MIDWEST GUARDRAIL SYSTEM STANDARD RAILING SECTION (STEEL POST WITH NOTCHED WOOD OR NOTCHED RECYCLED PLASTIC BLOCK)

NO SCALE

RSP A77L2 DATED JULY 19, 2013 SUPPLEMENTS THE STANDARD PLANS BOOK DATED 2010.

REVISED STANDARD PLAN RSP A77L2

2010 REVISED STANDARD PLAN RSP A77L2

DATE PLOTTED => 02-AUG-2016
TIME PLOTTED => 08:19

Dist	COUNTY	ROUTE	POST MILES TOTAL PROJECT	SHEET No.	TOTAL SHEETS
02	Tri	299	0.0/8.3	71	103

Randell D. Hiatt
REGISTERED CIVIL ENGINEER

July 19, 2013
PLANS APPROVAL DATE

REGISTERED PROFESSIONAL ENGINEER
Randell D. Hiatt
No. C50200
Exp. 6-30-15
CIVIL
STATE OF CALIFORNIA

THE STATE OF CALIFORNIA OR ITS OFFICERS OR AGENTS SHALL NOT BE RESPONSIBLE FOR THE ACCURACY OR COMPLETENESS OF SCANNED COPIES OF THIS PLAN SHEET.

TO ACCOMPANY PLANS DATED 06-15-16

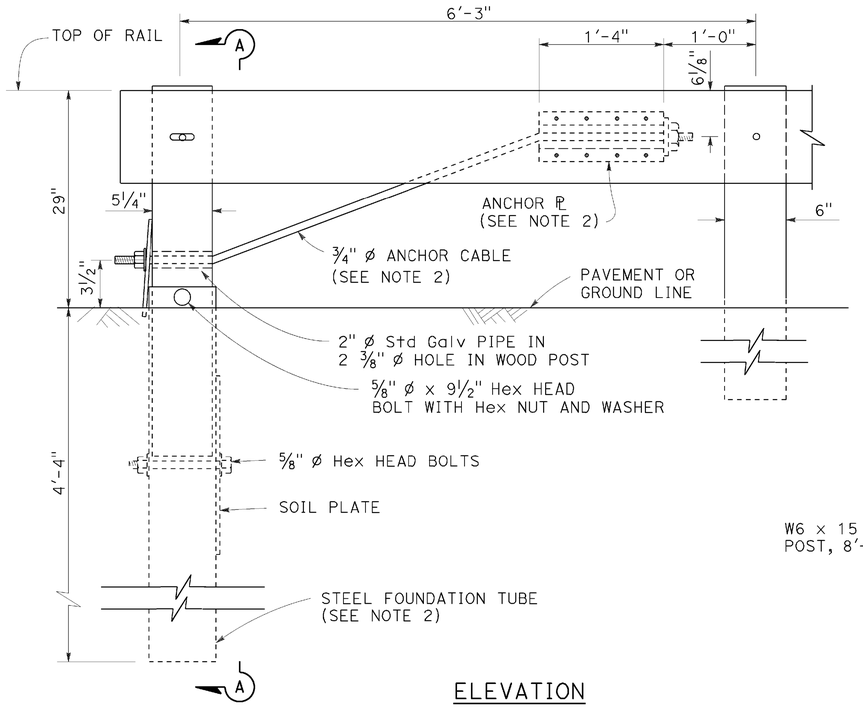

ELEVATION
END ANCHOR
ASSEMBLY (TYPE SFT)

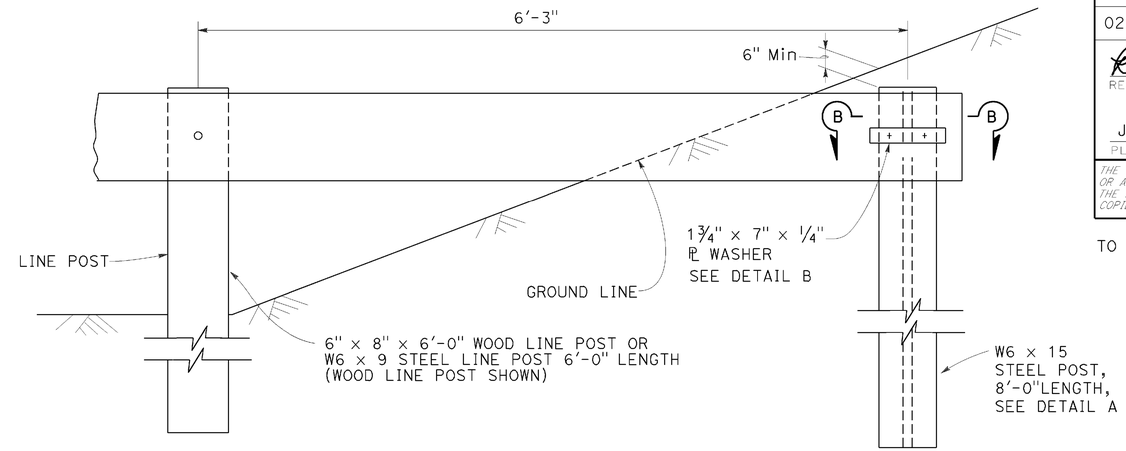

BURIED POST END ANCHOR

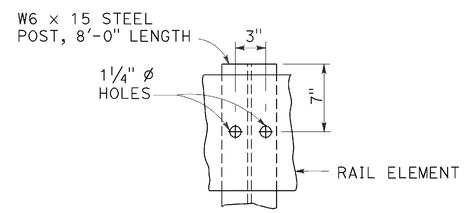

DETAIL A

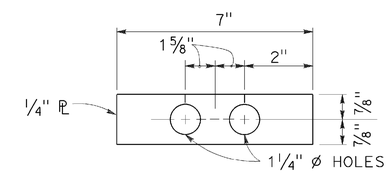

DETAIL B

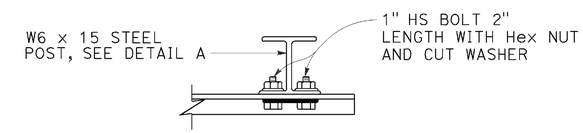

SECTION B-B

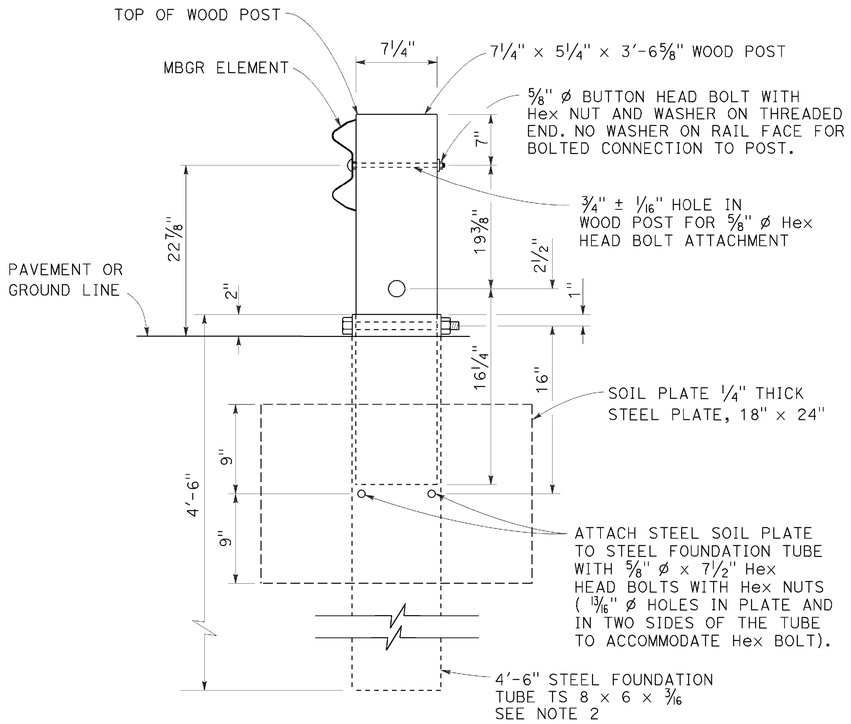

SECTION A-A

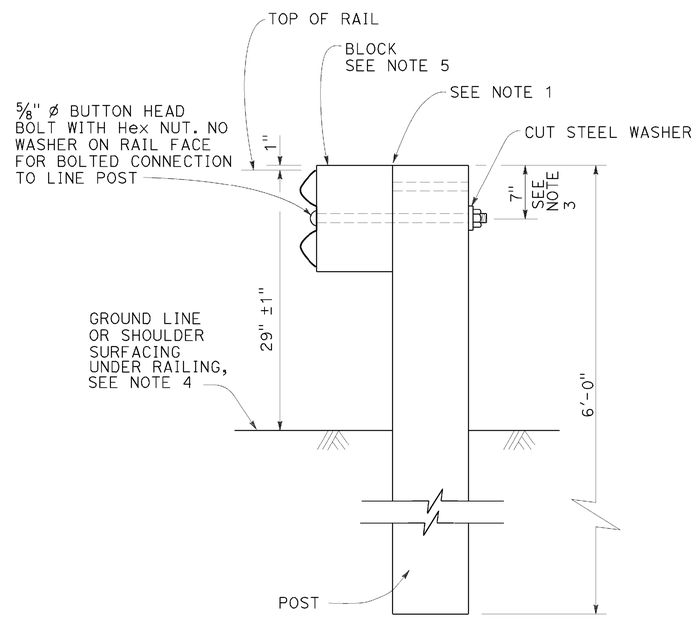

TYPICAL LINE
POST INSTALLATION

NOTES:

1. For wood post and wood block, toenail with 2-16d Galv nails in top of block. For steel post and notched wood or plastic block, notched face of block faces steel post.
2. A 6'-0" Length steel foundation tube, TS 8 x 6 x 3/16, without a soil plate, may be furnished and installed in place of the 4'-6" length steel foundation tube and soil plate shown, Minimum embadment of the 6'-0" length tube shall be 5'-9". A 5/8" ø Hex head bolt and nut shall be installed in the hole in the 6'-0" length tube to keep the wood post from dropping into the tube.
3. To connect railing to 27" terminal system end treatment, transition the top of railing height at a ratio of 120:1 to terminal system end treatment height plus one 12'-6" standard railing section at the transitioned height for a horizontal connection to the end treatment.
4. Install posts in soil.
5. See Revised Standard Plans RSP A77N1 and RSP A77N2 for details.
6. Holes excavation in the slope to construct the buried post end anchor shall be backfilled with selected earth, placed in layers approximately 1'-0" thick. Each layer shall be moistened and thoroughly compacted.

STATE OF CALIFORNIA
DEPARTMENT OF TRANSPORTATION

METAL BEAM GUARD RAILING RECONSTRUCT INSTALLATION

NO SCALE

RSP A77L3 DATED JULY 19, 2013 SUPPLEMENTS THE STANDARD PLANS BOOK DATED 2010.

REVISED STANDARD PLAN RSP A77L3

2010 REVISED STANDARD PLAN RSP A77L3

DATE PLOTTED => 02-AUG-2016
TIME PLOTTED => 08:19

Dist	COUNTY	ROUTE	POST MILES TOTAL PROJECT	SHEET No.	TOTAL SHEETS
02	Tri	299	0.0/8.3	72	103

Randell D. Hiatt
REGISTERED CIVIL ENGINEER

July 19, 2013
PLANS APPROVAL DATE

REGISTERED PROFESSIONAL ENGINEER
Randell D. Hiatt
No. C50200
Exp. 6-30-15
CIVIL
STATE OF CALIFORNIA

THE STATE OF CALIFORNIA OR ITS OFFICERS OR AGENTS SHALL NOT BE RESPONSIBLE FOR THE ACCURACY OR COMPLETENESS OF SCANNED COPIES OF THIS PLAN SHEET.

TO ACCOMPANY PLANS DATED 06-15-16

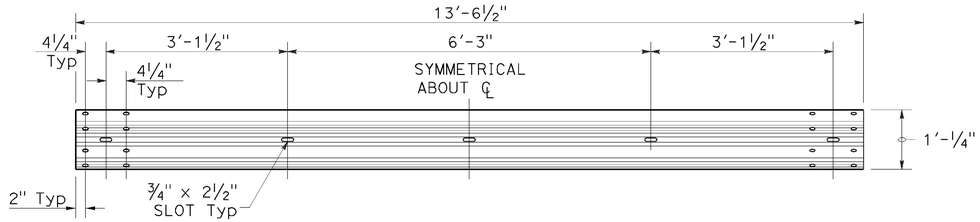

TYPICAL RAIL ELEMENT

NOTE:

1. Slotted holes for splice bolts to overlap ends of rail element.

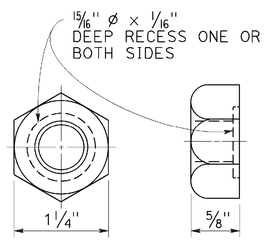

⅝" Ø RECESS NUT

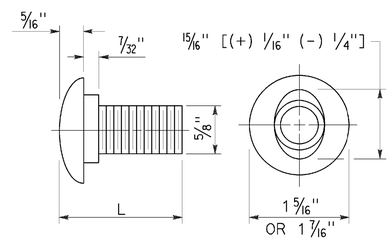

⅝" Ø BUTTON HEAD BOLT

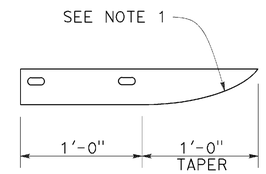

PLAN

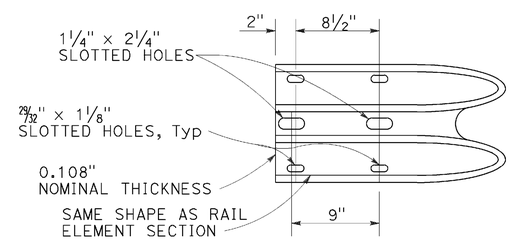

ELEVATION

END CAP

(TYPE A)

BUTTON HEAD BOLT

L	THREAD LENGTH
1⅜"	FULL THREAD LENGTH
2"	FULL THREAD LENGTH
10"	4" Min THREAD LENGTH
18"	4" Min THREAD LENGTH
20"	4" Min THREAD LENGTH
22"	4" Min THREAD LENGTH
26"	4" Min THREAD LENGTH
36"	4" Min THREAD LENGTH
** 2¾"	2" Min THREAD LENGTH
** 19"	4" Min THREAD LENGTH

** For nested rail applications.

STATE OF CALIFORNIA
DEPARTMENT OF TRANSPORTATION

MIDWEST GUARDRAIL SYSTEM STANDARD HARDWARE

NO SCALE

RSP A77M1 DATED JULY 19, 2013 SUPPLEMENTS THE STANDARD PLANS BOOK DATED 2010.

REVISED STANDARD PLAN RSP A77M1

2010 REVISED STANDARD PLAN RSP A77M1

DATE PLOTTED => 02-AUG-2016
TIME PLOTTED => 08:20

Dist	COUNTY	ROUTE	POST MILES TOTAL PROJECT	SHEET No.	TOTAL SHEETS
02	Tri	299	0.0/8.3	73	103

Randell D. Hiatt
REGISTERED CIVIL ENGINEER

November 15, 2013
PLANS APPROVAL DATE

REGISTERED PROFESSIONAL ENGINEER
Randell D. Hiatt
No. C50200
Exp. 6-30-15
CIVIL
STATE OF CALIFORNIA

THE STATE OF CALIFORNIA OR ITS OFFICERS OR AGENTS SHALL NOT BE RESPONSIBLE FOR THE ACCURACY OR COMPLETENESS OF SCANNED COPIES OF THIS PLAN SHEET.

TO ACCOMPANY PLANS DATED 06-15-16

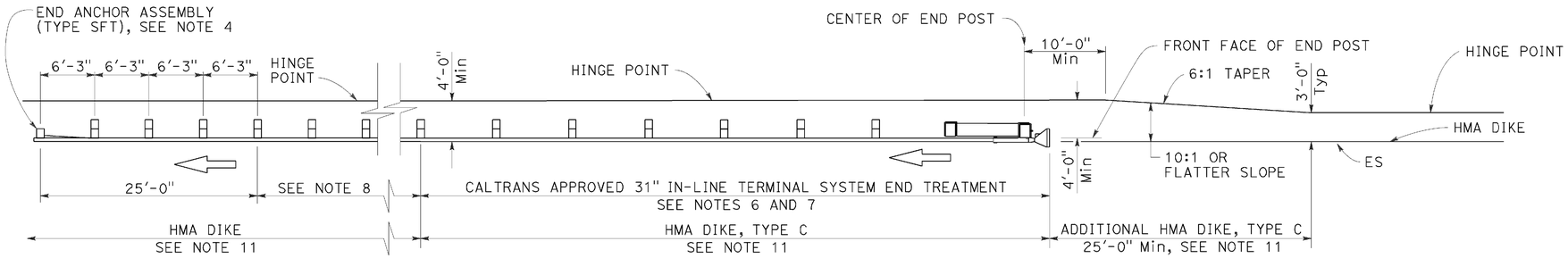

TYPE 11A LAYOUT

(Embankment MGS installation with 31" in-line end treatment at traffic approach end of railing) see Note 5

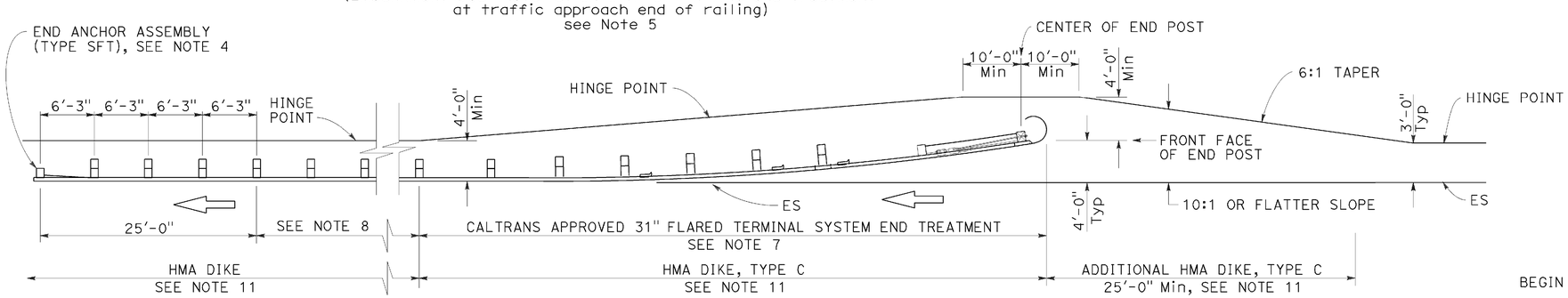

TYPE 11B LAYOUT

(Embankment MGS installation with 31" flared end treatment at traffic approach end of railing) see Note 5

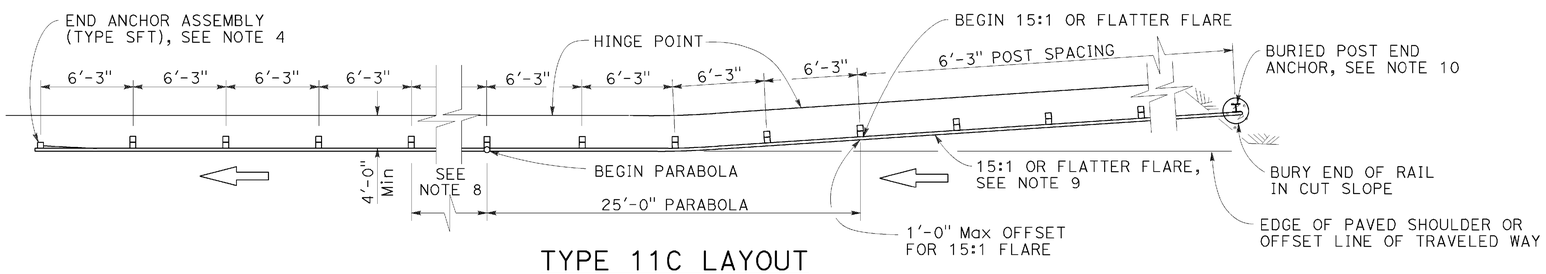

TYPE 11C LAYOUT

(Embankment MGS installation with buried end anchor treatment at traffic approach end of railing) see Notes 5 and 11

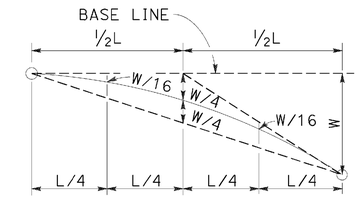

TYPICAL PARABOLIC LAYOUT

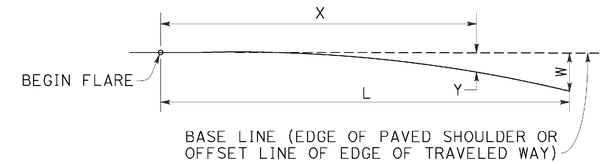

$$Y = \frac{WX^2}{L^2}$$

Y = OFFSET FROM BASE LINE
W = MAXIMUM OFFSET
X = DISTANCE ALONG BASE LINE
L = LENGTH OF FLARE

PARABOLIC FLARE OFFSETS

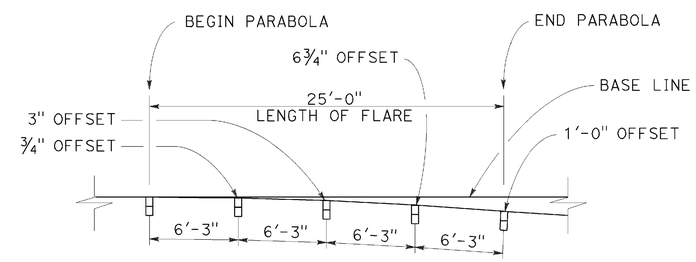

TYPICAL FLARE OFFSETS FOR 1 FOOT Max END OFFSET

NOTES:

1. Line post, blocks and hardware to be used are shown on Revised Standard Plans RSP A77L1, RSP A77L2, RSP A77M1, RSP A77N1 and RSP A77N2.
2. MGS post spacing to be 6'-3" center to center, except as otherwise noted.
3. Except as noted, line posts are 6" x 8" x 6'-0" wood with 6" x 12" x 1'-2" wood blocks. W6 x 8.5 or W6 x 9 steel posts, 6'-0" in length, with 6" x 12" x 1'-2" notched wood blocks or recycled plastic blocks may be used for 6" x 8" x 6'-0" wood post with 6" x 12" x 1'-2" wood blocks where applicable and when specified.
4. For End Anchor Assembly (Type SFT) details, see Revised Standard Plan RSP A77S1.
5. Layout Types 11A, 11B or 11C are typically used where MGS is recommended to shield embankment slopes and a crashworthy end treatment is required for only one direction of traffic.
6. 31" in-line terminal system end treatments are used where site conditions will not accommodate a flared end treatment.
7. The type of 31" terminal system end treatment to be used will be shown on the Project Plans.
8. Dependent on site conditions (embankment height and side slope), construction of additional MGS (length equal to multiples of 12'-6" with 6'-3" post spacing) may be advisable.
9. The 15:1 or flatter flare used with buried end anchors is based on the edge of the paved shoulder or offset line of edge of the traveled way. The length of MGS within the 15:1 or flatter flare is based on site conditions and should be a length equal to multiples of 12'-6".
10. For details of the buried post end anchor used with Type 11C Layout, see Revised Standard Plan RSP A77T2.
11. Where placement of dike is required with MGS installations, see Revised Standard Plan RSP A77N4 for dike positioning details.

STATE OF CALIFORNIA
DEPARTMENT OF TRANSPORTATION

MIDWEST GUARDRAIL SYSTEM TYPICAL LAYOUTS FOR EMBANKMENTS

NO SCALE

RSP A77P1 DATED NOVEMBER 15, 2013 SUPERSEDES RSP A77P1 DATED JULY 19, 2013 THAT SUPPLEMENTS THE STANDARD PLANS BOOK DATED 2010.

REVISED STANDARD PLAN RSP A77P1

2010 REVISED STANDARD PLAN RSP A77P1

DATE PLOTTED => 02-AUG-2016
TIME PLOTTED => 08:20

Dist	COUNTY	ROUTE	POST MILES TOTAL PROJECT	SHEET No.	TOTAL SHEETS
02	Tri	299	0.0/8.3	74	103

Randell D. Hiatt
REGISTERED CIVIL ENGINEER

July 19, 2013
PLANS APPROVAL DATE

REGISTERED PROFESSIONAL ENGINEER
Randell D. Hiatt
No. C50200
Exp. 6-30-15
CIVIL
STATE OF CALIFORNIA

THE STATE OF CALIFORNIA OR ITS OFFICERS OR AGENTS SHALL NOT BE RESPONSIBLE FOR THE ACCURACY OR COMPLETENESS OF SCANNED COPIES OF THIS PLAN SHEET.

TO ACCOMPANY PLANS DATED 06-15-16

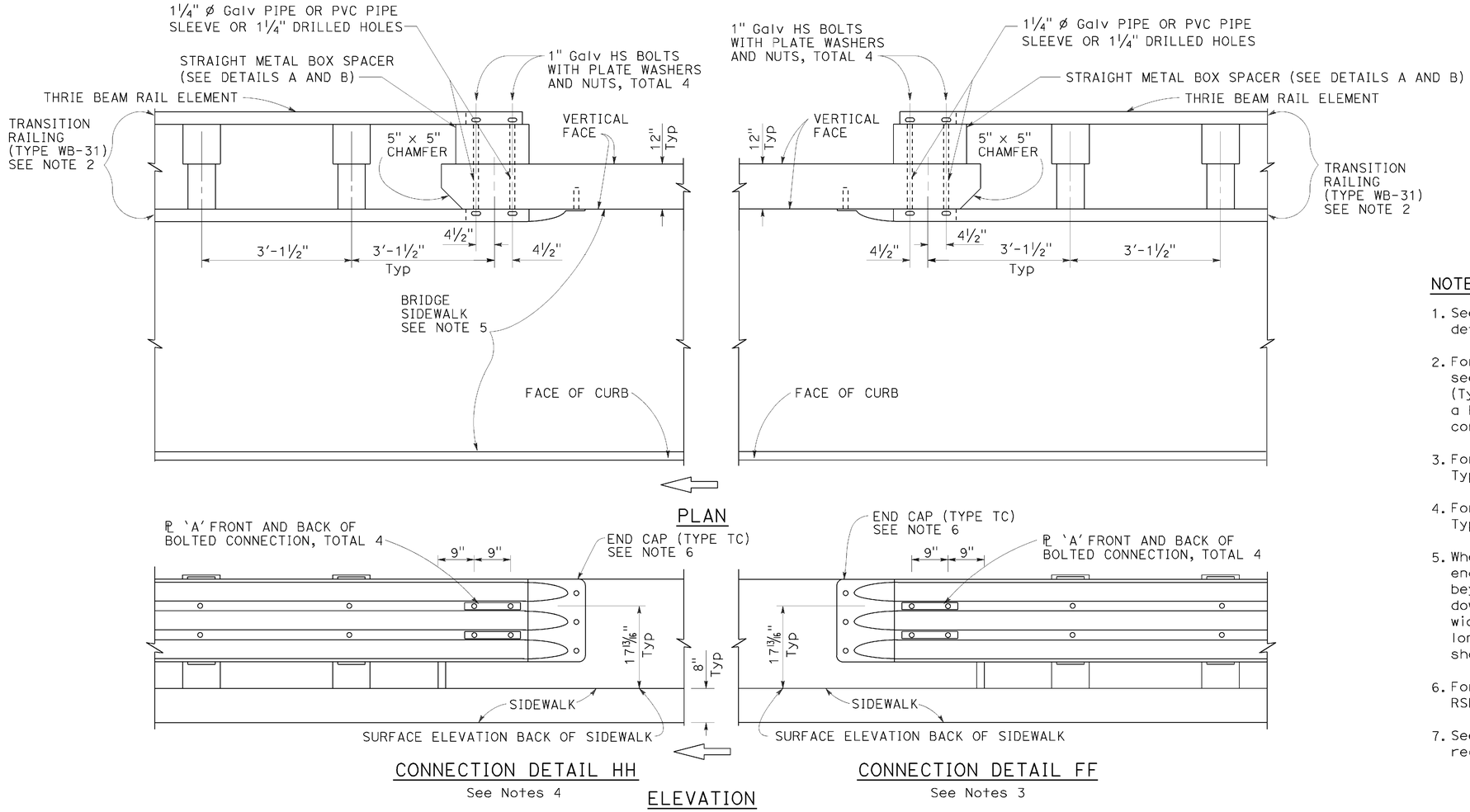

MIDWEST GUARDRAIL SYSTEM CONNECTION TO BRIDGE RAILING WITH SIDEWALKS

NOTES:

1. See Revised Standard Plan RSP A77V1 for additional connection details to bridges with sidewalks.
2. For additional details of Transition Railing (Type WB-31), see Revised Standard Plan RSP A77U4. Transition Railing (Type WB-31) transitions the 12 gauge MGS railing section to a heavier gage nested thrie beam railing section which is connected to the concrete bridge railing.
3. For typical use of Connection Detail FF, see Layout Types 12A and 12B on Revised Standard Plan RSP A77Q1.
4. For typical use of Connection Detail HH, see Layout Types 12AA and 12BB on Revised Standard Plan RSP A77Q4.
5. Where the bridge sidewalk is not continued beyond the end of the bridge railing, the portion of the sidewalk beyond each end of the bridge railing shall be transitioned down from the top elevation of the sidewalk, for its entire width, to the finished grade of the adjacent roadbed. The longitudinal slope of each sidewalk elevation transition shall not exceed 8.33 percent.
6. For details of End Cap (Type TC), see Revised Standard Plan RSP A77U4.
7. See Revised Standard Plan RSP A77U4 for additional details regarding depth dimension for straight metal box spacer.

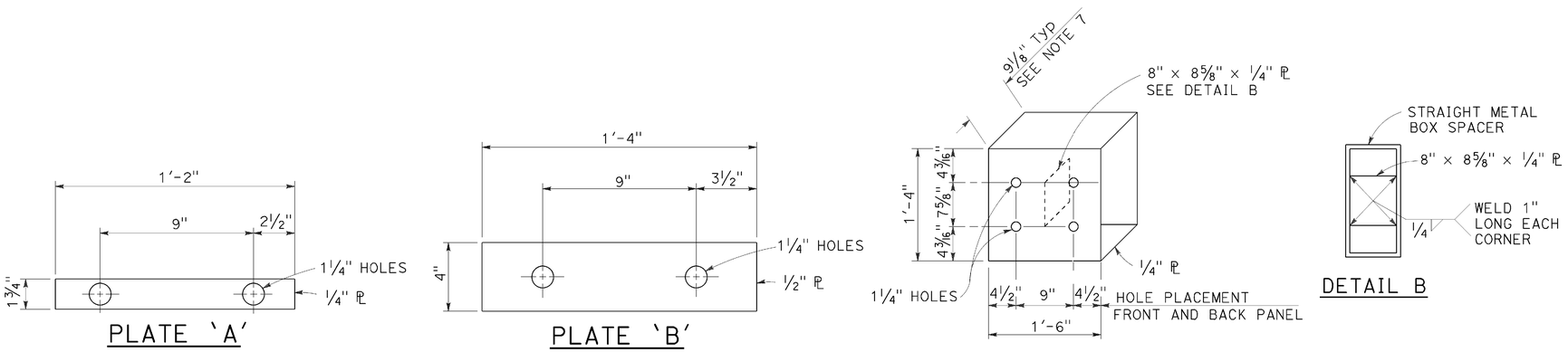

STRAIGHT METAL BOX SPACER

STATE OF CALIFORNIA
DEPARTMENT OF TRANSPORTATION

MIDWEST GUARDRAIL SYSTEM CONNECTIONS TO BRIDGE RAILINGS WITH SIDEWALKS DETAILS No. 2

NO SCALE

RSP A77V2 DATED JULY 19, 2013 SUPPLEMENTS THE STANDARD PLANS BOOK DATED 2010.

REVISED STANDARD PLAN RSP A77V2

2010 REVISED STANDARD PLAN RSP A77V2

DATE PLOTTED => 02-AUG-2016
TIME PLOTTED => 08:20

Dist	COUNTY	ROUTE	POST MILES TOTAL PROJECT	SHEET No.	TOTAL SHEETS
02	Tri	299	0.0/8.3	75	103

Randell D. Hiatt
REGISTERED CIVIL ENGINEER

October 30, 2015
PLANS APPROVAL DATE

REGISTERED PROFESSIONAL ENGINEER Randell D. Hiatt No. C50200 Exp. 6-30-17 CIVIL STATE OF CALIFORNIA

THE STATE OF CALIFORNIA OR ITS OFFICERS OR AGENTS SHALL NOT BE RESPONSIBLE FOR THE ACCURACY OR COMPLETENESS OF SCANNED COPIES OF THIS PLAN SHEET.

TO ACCOMPANY PLANS DATED 06-15-16

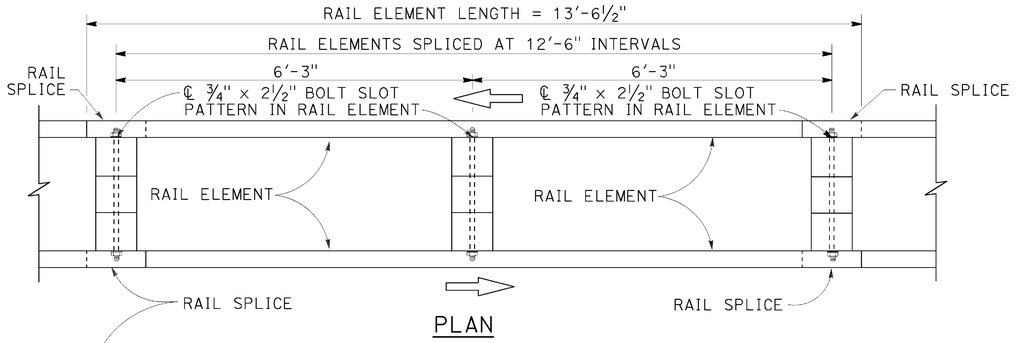

PLAN

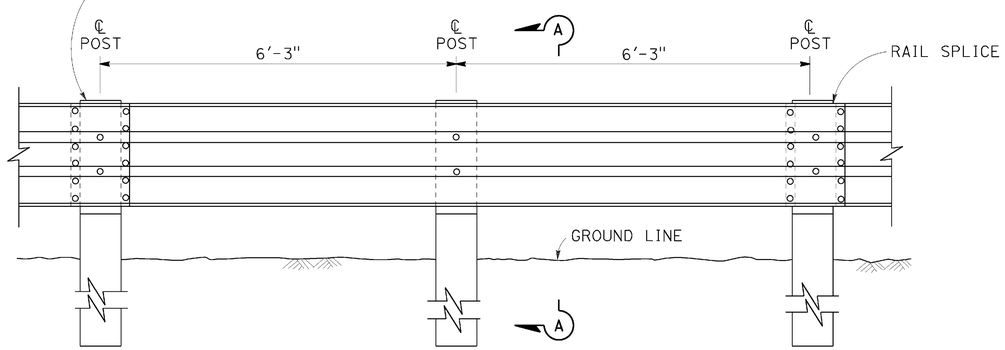

ELEVATION

DOUBLE THRIE BEAM BARRIER

(Wood post and blocks)
See Note 1

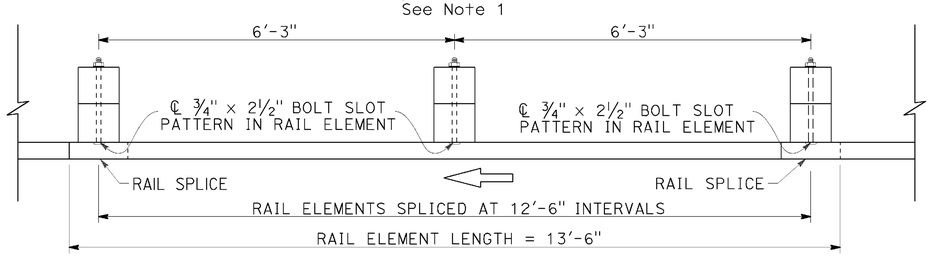

PLAN

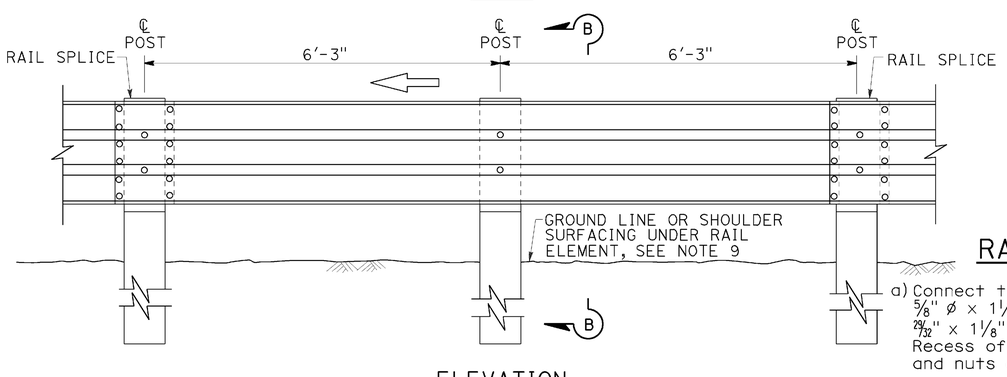

ELEVATION

SINGLE THRIE BEAM BARRIER

(Wood post and blocks)
See Note 1

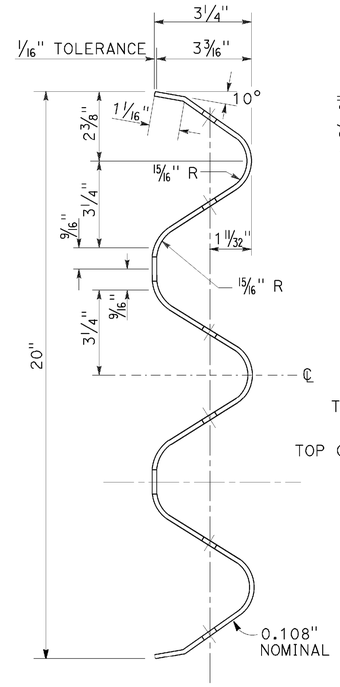

SECTION THRU RAIL ELEMENT

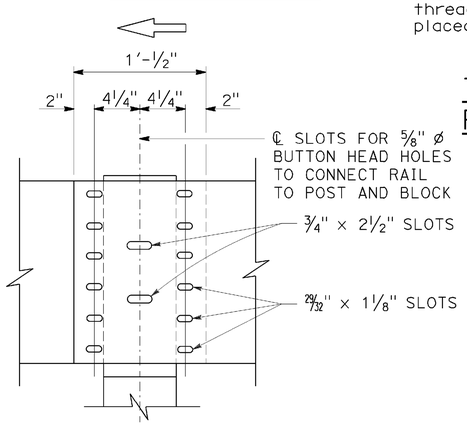

ELEVATION

RAIL ELEMENT SPLICE DETAIL

a) Connect the overlapped ends of the thrie beam rail elements with ⅝" ø x 1¼" button head oval shoulder bolts inserted into the 29/32" x 1⅛" slots and bolted together with ⅝" ø recessed hex nuts. Recess of hex nut points toward rail element. A total of 12 bolts and nuts are to be used at each rail splice connection.

b) The ends of the rail elements are to be overlapped in the direction of traffic (see details).

c) Where end cap is to be attached to the end of a rail element, a total of 4 of the above described splice bolts and nuts are to be used. Where a return cap is to be attached to the ends of rail elements, a total of 8 of the above described splice bolts and nuts are to be used.

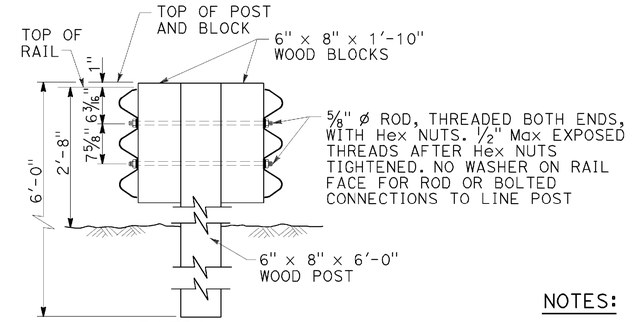

SECTION A-A

TYPICAL WOOD LINE POST INSTALLATION

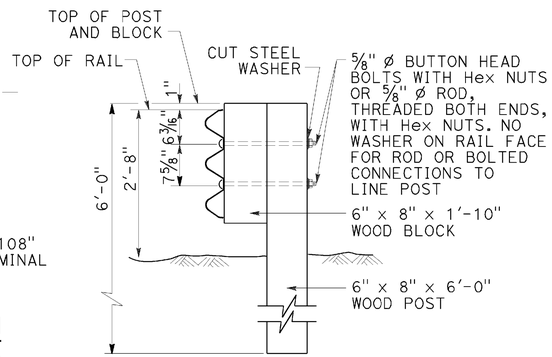

Where bolts are used, install so that the threaded end of the bolts and nuts are placed away from traffic side of rail.

SECTION B-B

TYPICAL WOOD LINE POST INSTALLATION

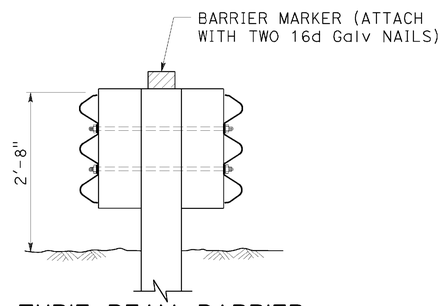

THRIE BEAM BARRIER DELINEATION

See Note 8

NOTES:

1. For details of steel post thrie beam barrier, see Standard Plan A78B.
2. For details of standard hardware, posts and blocks used to construct thrie beam barrier, see Standard Plan A78C1 and Revised Standard Plan RSP A78C2.
3. Thrie beam barrier post spacing to be 6'-3" center to center, except as otherwise noted.
4. Top of barrier rail to be 2'-8" above ground line or shoulder surfacing under the rail element.
5. For barrier end treatments and barrier connections, see Standard Plans A78E3 and A78G, and Revised Standard Plans RSP A78E1, RSP A78E2 RSP A77Q1, RSP A77Q2 and RSP A78H.
6. For connection to Concrete Barrier (Type 60), see Standard Plans A78I.
7. For details of thrie beam barrier on bridge see Standard Plan A78D2. For details of thrie beam barrier at fixed object, see Revised Standard Plan RSP A78D1.
8. See Project Plans for barrier delineation locations. Spacing of barrier markers to match spacing of raised pavement markers on adjacent median edgeline pavement delineation.
9. Install posts in soil.

STATE OF CALIFORNIA
DEPARTMENT OF TRANSPORTATION

THRIE BEAM BARRIER STANDARD BARRIER RAILING SECTION (WOOD POST WITH WOOD BLOCK)

NO SCALE

RSP A78A DATED OCTOBER 30, 2015 SUPERSEDES RSP A78A DATED JULY 19, 2013 AND STANDARD PLAN A78A DATED MAY 20, 2011 - PAGE 89 OF THE STANDARD PLANS BOOK DATED 2010.

REVISED STANDARD PLAN RSP A78A

2010 REVISED STANDARD PLAN RSP A78A

DATE PLOTTED => 02-AUG-2016
TIME PLOTTED => 08:21

Dist	COUNTY	ROUTE	POST MILES TOTAL PROJECT	SHEET No.	TOTAL SHEETS
02	Tri	299	0.0/8.3	76	103

Randell D. Hiatt
REGISTERED CIVIL ENGINEER

July 19, 2013
PLANS APPROVAL DATE

REGISTERED PROFESSIONAL ENGINEER
Randell D. Hiatt
No. C50200
Exp. 6-30-15
CIVIL
STATE OF CALIFORNIA

THE STATE OF CALIFORNIA OR ITS OFFICERS OR AGENTS SHALL NOT BE RESPONSIBLE FOR THE ACCURACY OR COMPLETENESS OF SCANNED COPIES OF THIS PLAN SHEET.

TO ACCOMPANY PLANS DATED 06-15-16

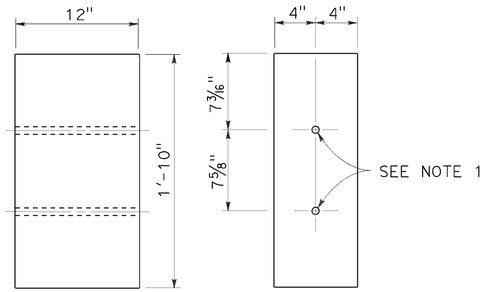

SIDE FRONT

8" x 12"
WOOD BLOCK

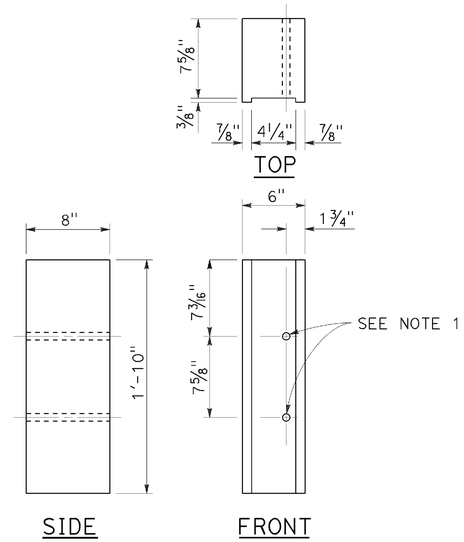

SIDE FRONT

6" x 8"
NOTCHED WOOD BLOCK
See Notes 3 and 5

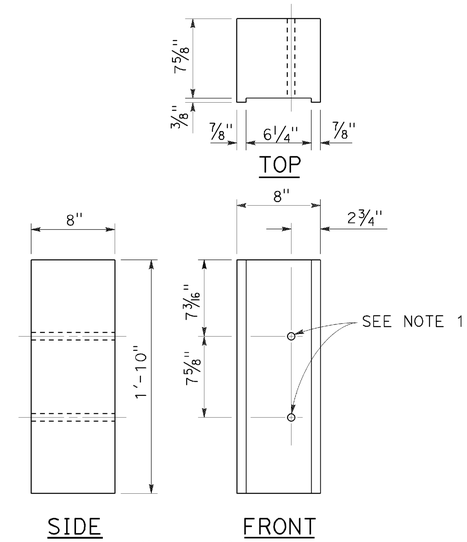

SIDE FRONT

8" x 8"
NOTCHED WOOD BLOCK
See Notes 4 and 5

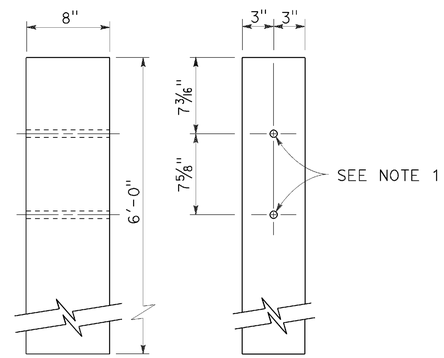

SIDE FRONT

6" x 8"
WOOD POST

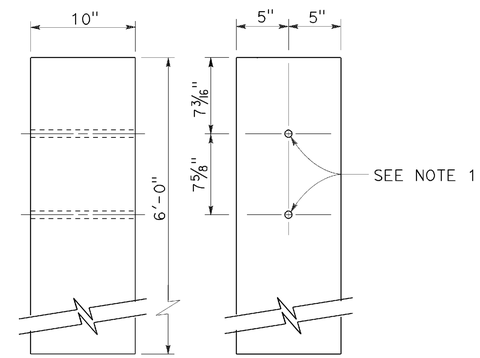

SIDE FRONT

10" x 10"
WOOD POST

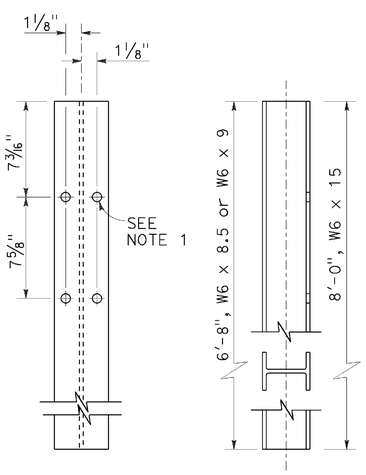

FRONT SIDE

STEEL POST
W6 x 9 or W6 x 8.5 and
W6 x 15

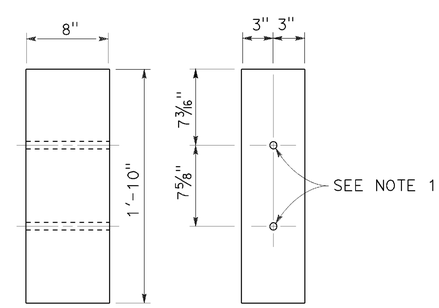

SIDE FRONT

6" x 8"
WOOD BLOCK

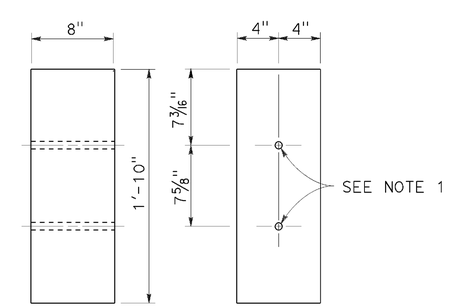

SIDE FRONT

8" x 8"
WOOD BLOCK

NOTES:

1. All holes in steel post to be 13/16" Dia maximum. Holes in wood posts and wood blocks to be 3/4" Dia ±1/16".
2. Dimensions shown for wood post are nominal.
3. For use with W6 x 8.5 or W6 x 9 steel post.
4. For use with W6 x 15 steel post.
5. Notched face of block faces steel post.

STATE OF CALIFORNIA
DEPARTMENT OF TRANSPORTATION

THRIE BEAM BARRIER POST AND BLOCK DETAILS

NO SCALE

RSP A78C2 DATED JULY 19, 2013 SUPERSEDES STANDARD PLAN A78C2 DATED MAY 20, 2011 - PAGE 92 OF THE STANDARD PLANS BOOK DATED 2010.

REVISED STANDARD PLAN RSP A78C2

2010 REVISED STANDARD PLAN RSP A78C2

DATE PLOTTED => 02-AUG-2016
TIME PLOTTED => 08:21

Dist	COUNTY	ROUTE	POST MILES TOTAL PROJECT	SHEET No.	TOTAL SHEETS
02	Tri	299	0.0/8.3	77	103

Randell D. Hiatt
REGISTERED CIVIL ENGINEER

July 19, 2013
PLANS APPROVAL DATE

REGISTERED PROFESSIONAL ENGINEER
Randell D. Hiatt
No. C50200
Exp. 6-30-15
CIVIL
STATE OF CALIFORNIA

THE STATE OF CALIFORNIA OR ITS OFFICERS OR AGENTS SHALL NOT BE RESPONSIBLE FOR THE ACCURACY OR COMPLETENESS OF SCANNED COPIES OF THIS PLAN SHEET.

TO ACCOMPANY PLANS DATED 06-15-16

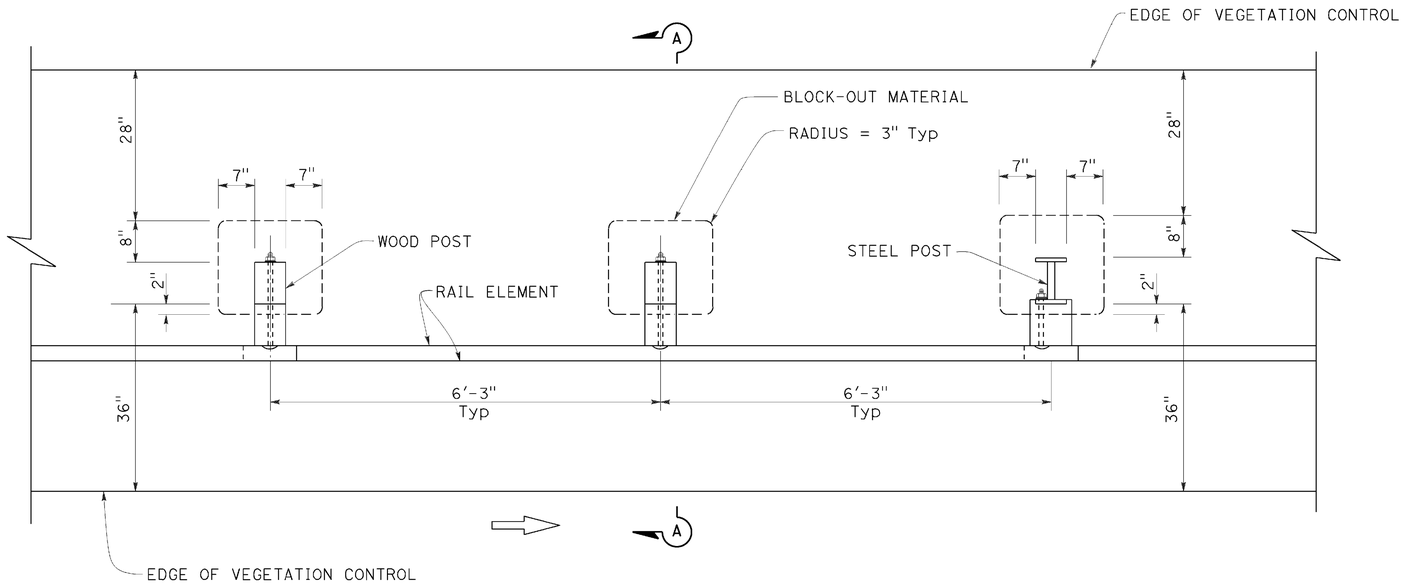

PLAN

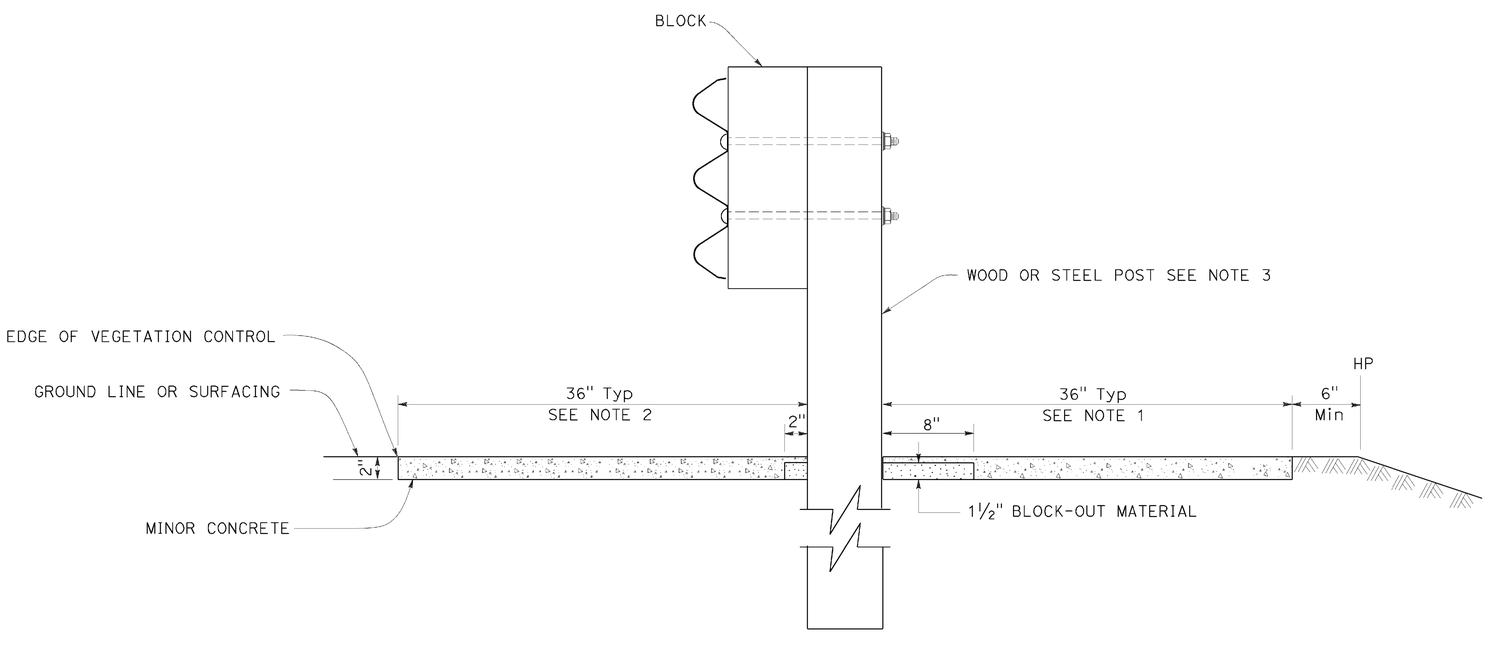

SECTION A-A

NOTES:

1. Where the distance between back of post and hinge point is less than 42", construct vegetation control to 6" from hinge point while maintaining the 8" block-out at back of post. If the 8" block-out at back of post can not be maintained, construct vegetation control flush with the back edge of post.
2. Where dike is constructed under barrier, construct vegetation control to back edge of dike. Where paved shoulder is constructed within 36" in front of the post, construct vegetation control to the edge of paved shoulder.
3. For wood and steel post sizes, see Revised Standard Plan RSP A77N2.
4. For details not shown, see Standard Plan A78B and Revised Standard Plan RSP A78A.

STATE OF CALIFORNIA
DEPARTMENT OF TRANSPORTATION

SINGLE THRIE BEAM BARRIER TYPICAL VEGETATION CONTROL STANDARD BARRIER RAILING SECTION

NO SCALE

RSP A78C3 DATED JULY 19, 2013 SUPERSEDES STANDARD PLAN A78C3
DATED MAY 20, 2011 - PAGE 93 OF THE STANDARD PLANS BOOK DATED 2010.

REVISED STANDARD PLAN RSP A78C3

2010 REVISED STANDARD PLAN RSP A78C3

DATE PLOTTED => 02-AUG-2016
TIME PLOTTED => 08:21

Dist	COUNTY	ROUTE	POST MILES TOTAL PROJECT	SHEET No.	TOTAL SHEETS
02	Tri	299	0.0/8.3	78	103

REGISTERED CIVIL ENGINEER

January 15, 2016
PLANS APPROVAL DATE

REGISTERED PROFESSIONAL ENGINEER
Michael Janzen
No. 44788
Exp. 3-31-16
CIVIL
STATE OF CALIFORNIA

THE STATE OF CALIFORNIA OR ITS OFFICERS OR AGENTS SHALL NOT BE RESPONSIBLE FOR THE ACCURACY OR COMPLETENESS OF SCANNED COPIES OF THIS PLAN SHEET.

TO ACCOMPANY PLANS DATED 06-15-16

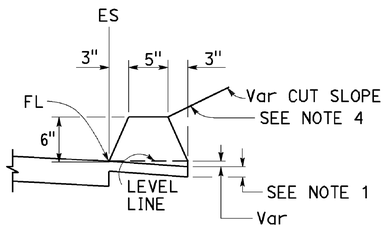

TYPE A
See Notes 3 and 5

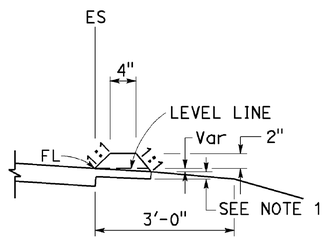

TYPE C

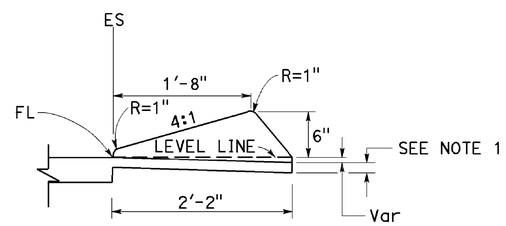

TYPE D

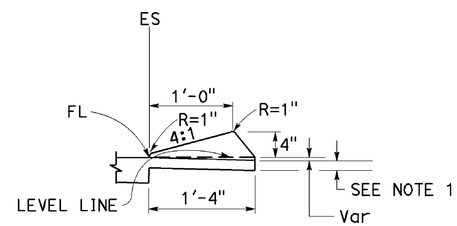

TYPE E

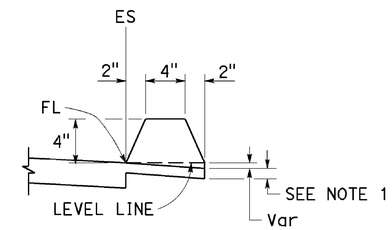

TYPE F
See Note 5

DIKES

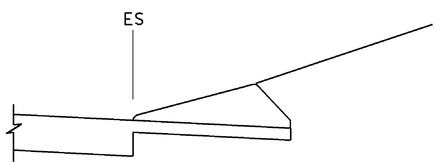

CASE C-1
Cut Slope

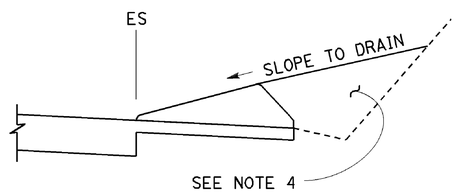

CASE C-2
Cut Slope

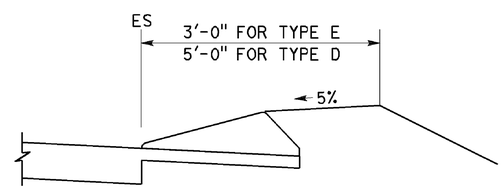

CASE F

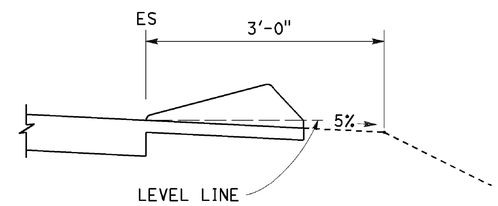

CASE R
See Note 2

TYPE D AND E BACKFILL DETAILS

NOTES:

1. For HMA shoulders only, extend top layer of HMA placed on the shoulder under dike with no joint at the ES. For projects with OGFC shoulders, do not extend OGFC under dike. See project plans for modified dike detail.
2. Case R applies to retrofit only projects where restrictive conditions do not provide enough width for Case F backfill.
3. Type A dike only to be used where restrictive slope conditions do not provide enough width to use Type D or Type E dike.
4. Fill and compact with excavated material to top of dike.
5. Use Type A or F dike, where dike is required with guardrail installations. See Revised Standard Plan RSP A77N4 for dike positioning details. See Revised Standard Plan RSP A77N3 for hinge point offsets with guardrail.

DIKE QUANTITIES

TYPE	CUBIC YARDS PER LINEAR FOOT
A	0.0135
C	0.0038
D	0.0293
E	0.0130
F	0.0066

Quantities based on 5% cross slope.

STATE OF CALIFORNIA
DEPARTMENT OF TRANSPORTATION

HOT MIX ASPHALT DIKES

NO SCALE

RSP A87B DATED JANUARY 15, 2016 SUPERSEDES RSP A87B DATED JULY 19, 2013 AND STANDARD PLAN A87B DATED MAY 20, 2011 - PAGE 120 OF THE STANDARD PLANS BOOK DATED 2010.

REVISED STANDARD PLAN RSP A87B

2010 REVISED STANDARD PLAN RSP A87B

DATE PLOTTED => 02-AUG-2016
TIME PLOTTED => 08:22

Dist	COUNTY	ROUTE	POST MILES TOTAL PROJECT	SHEET No.	TOTAL SHEETS
02	Tri	299	0.0/8.3	79	103

REGISTERED CIVIL ENGINEER

October 30, 2015
PLANS APPROVAL DATE

Srikanth N. Balasubramanian
No. C56426
Exp. 6-30-17
CIVIL
STATE OF CALIFORNIA
REGISTERED PROFESSIONAL ENGINEER

THE STATE OF CALIFORNIA OR ITS OFFICERS OR AGENTS SHALL NOT BE RESPONSIBLE FOR THE ACCURACY OR COMPLETENESS OF SCANNED COPIES OF THIS PLAN SHEET.

TO ACCOMPANY PLANS DATED 06-15-16

ABBREVIATIONS:

TE TAPERED EDGE

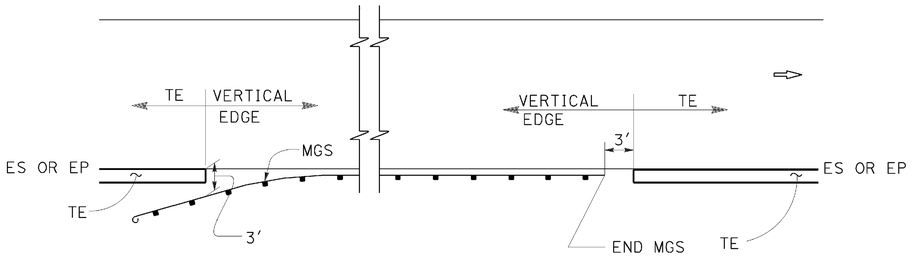

MGS

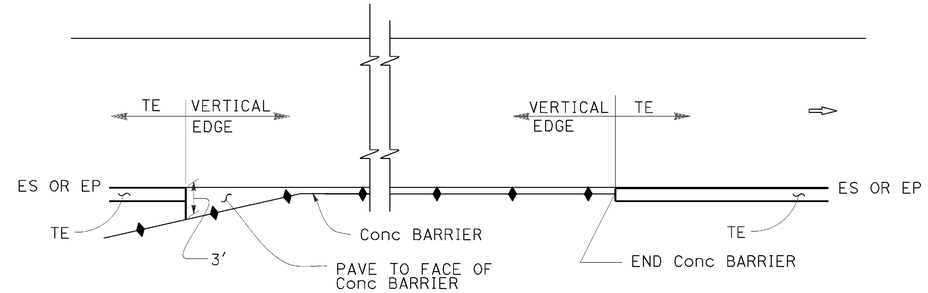

CONCRETE BARRIER

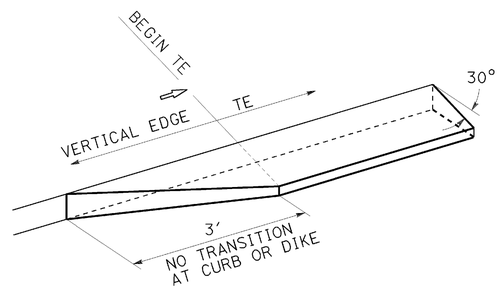

TRANSITION DETAIL FOR CONCRETE ONLY

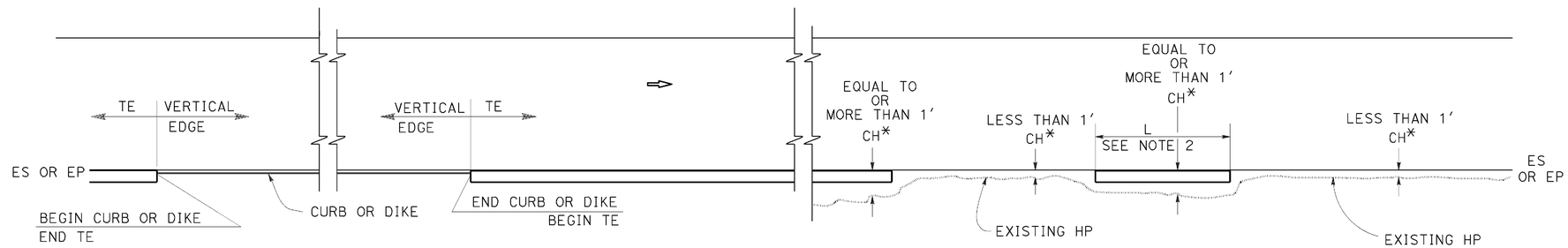

CURB OR DIKE

NARROW SIDE SLOPE

* CH = Distance from ES or EP to existing HP.

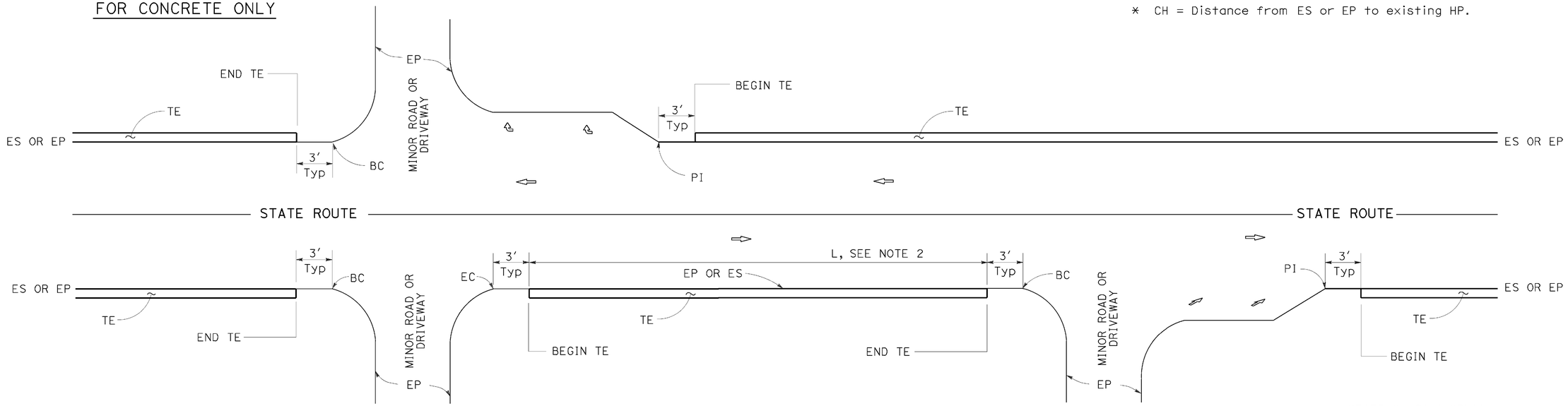

INTERTECTION

MINOR ROADWAY OR DRIVEWAY

DRIVEWAY AND INTERSECTION

STATE OF CALIFORNIA
DEPARTMENT OF TRANSPORTATION

PAVEMENT EDGE TREATMENTS

NO SCALE

NOTES:

1. For details not shown, see Revised Standard Plans RSP P75 and RSP P76.
2. Tapered edge is optional when L is less than 30′.

RSP P74 DATED OCTOBER 30, 2015 SUPERSEDES RSP P74 DATED NOVEMBER 15, 2013 AND RSP P74 DATED JANUARY 20, 2012 THAT SUPPLEMENTS THE STANDARD PLANS BOOK DATED 2010.

REVISED STANDARD PLAN RSP P74

2010 REVISED STANDARD PLAN RSP P74

DATE PLOTTED => 02-AUG-2016
TIME PLOTTED => 08:22

Dist	COUNTY	ROUTE	POST MILES TOTAL PROJECT	SHEET No.	TOTAL SHEETS
02	Tri	299	0.0/8.3	80	103

REGISTERED CIVIL ENGINEER

October 30, 2015
PLANS APPROVAL DATE

REGISTERED PROFESSIONAL ENGINEER Srikanth N. Balasubramanian No. C56426 Exp. 6-30-17 CIVIL STATE OF CALIFORNIA

THE STATE OF CALIFORNIA OR ITS OFFICERS OR AGENTS SHALL NOT BE RESPONSIBLE FOR THE ACCURACY OR COMPLETENESS OF SCANNED COPIES OF THIS PLAN SHEET.

TO ACCOMPANY PLANS DATED 06-15-16

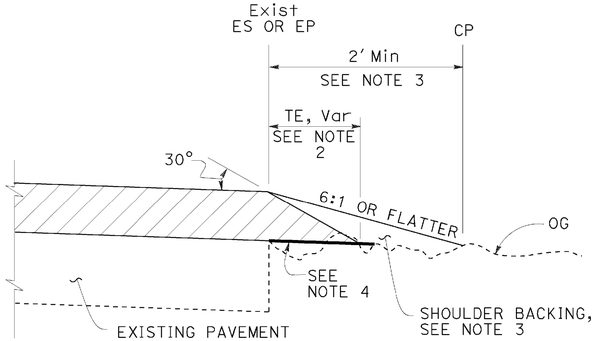

CASE A
Tapered Edge

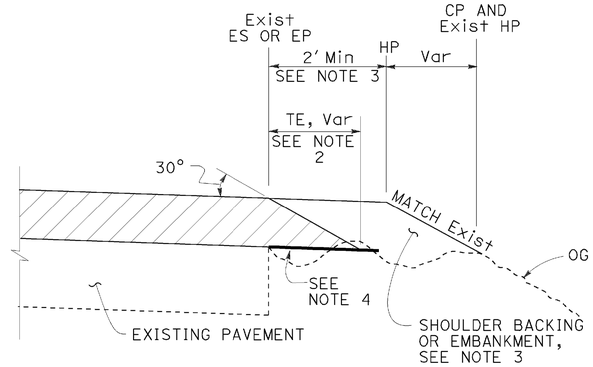

CASE B
Tapered Edge

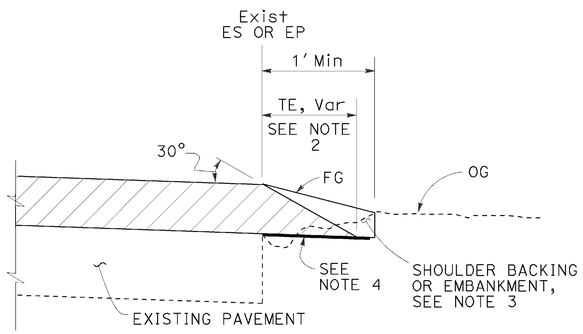

CASE C
Tapered Edge

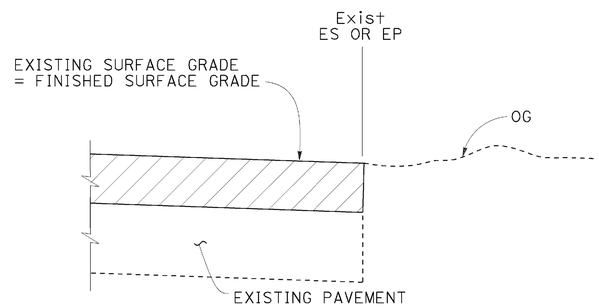

CASE D
Vertical Edge

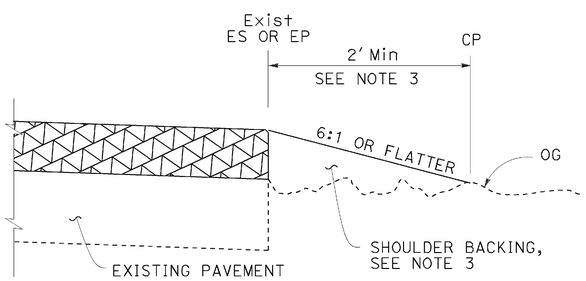

CASE E
Vertical Edge

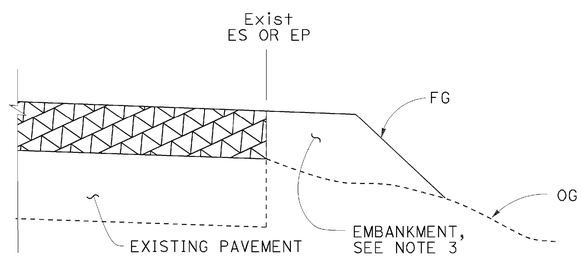

CASE F
Vertical Edge
* See Table A and Revised Std Plan RSP P74

LEGEND:

- HMA OVERLAY
- HMA OR CONCRETE OVERLAY
- CONCRETE OVERLAY

ABBREVIATIONS:

TE TAPERED EDGE
TT TOTAL THICKNESS OF TE

TABLE A
EDGE TREATMENT FOR VARIOUS OVERLAY THICKNESS AND CONDITIONS

	OVERLAY THICKNESS	
FIELD CONDITION	LESS THAN 0.15'	0.15' OR MORE
Exist SLOPE 6:1 OR FLATTER	CASE E	CASE A
Exist SLOPE 3:1 TO 6:1	CASE E	CASE B
Exist SLOPE STEEPER THAN 3:1	CASE F	CASE F
CUT SECTION (REPLACE, COLD PLANE, MILL PAVEMENT)	CASE D	CASE C

ADDITIONAL HMA OR CONCRETE QUANTITIES FOR TE/SIDE/MILE

TYPICAL CROSS SECTION	TT	TOTAL ADDITIONAL MATERIAL FOR TE/SIDE/MILE		
		HMA (TON)	CONCRETE (CY)*	CONCRETE (CY)**
TT	0.15'	7.7	NA	NA
	0.20'	13.7	NA	NA
	0.30'	30.9	NA	NA
	0.40'	54.9	NA	NA
	0.45'	69.4	NA	NA
TT 0.43'	0.50'	84.2	NA	NA
	0.60'	113.9	NA	NA
	0.70'	143.6	70.9	94.2
	0.80'	173.3	85.6	112.2
	0.90'	203.0	100.3	130.2
	1.00'	232.7	114.9	148.2
	1.10'	262.4	129.6	166.2
	1.20'	292.1	144.3	184.2

* For Detail "A"
** For Optional Detail "A"

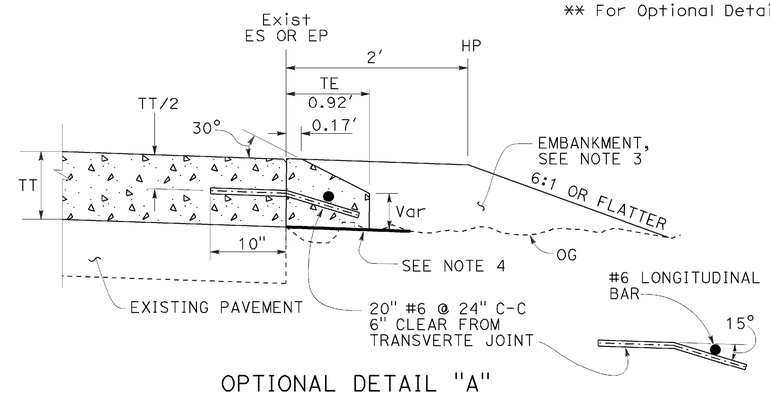

OPTIONAL DETAIL "A"
For concrete overlay
See Note 5

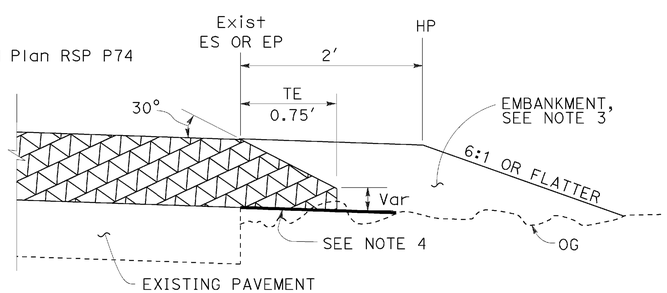

DETAIL "A"
For HMA overlay thickness more than 0.43' or concrete overlay

NOTES:

1. For limits of tapered edge and vertical edge treatments, see Revised Standard Plan RSP P74.
2. Details shown for HMA overlay thickness less than 0.43'. See Detail "A" for HMA overlay thickness more than 0.43' or concrete overlay.
3. For locations and limits of shoulder backing or embankment see project plans.
4. Grade existing ground to place tapered edge. 1' minimum width
5. Tapered edge transverse joint must match overlay transverse joint. End of #6 longitudinal bar must be 2" ±½" clear from transverse joint.
6. Tapered edge is not needed in the area of MGS, barrier, right turn lane and acceleration lane. See Revised Standard Plan RSP P74.

STATE OF CALIFORNIA
DEPARTMENT OF TRANSPORTATION

PAVEMENT EDGE TREATMENTS-OVERLAYS

NO SCALE

RSP P75 DATED OCTOBER 30, 2015 SUPERSEDES RSP P75 DATED NOVEMBER 15, 2013 AND RSP P75 DATED JANUARY 20, 2012 THAT SUPPLEMENTS THE STANDARD PLANS BOOK DATED 2010.

REVISED STANDARD PLAN RSP P75

2010 REVISED STANDARD PLAN RSP P75

DATE PLOTTED => 02-AUG-2016
TIME PLOTTED => 08:23

Dist	COUNTY	ROUTE	POST MILES TOTAL PROJECT	SHEET No.	TOTAL SHEETS
02	Tri	299	0.0/8.3	81	103

REGISTERED CIVIL ENGINEER

October 30, 2015
PLANS APPROVAL DATE

REGISTERED PROFESSIONAL ENGINEER Srikanth N. Balasubramanian No. C56426 Exp. 6-30-17 CIVIL STATE OF CALIFORNIA

THE STATE OF CALIFORNIA OR ITS OFFICERS OR AGENTS SHALL NOT BE RESPONSIBLE FOR THE ACCURACY OR COMPLETENESS OF SCANNED COPIES OF THIS PLAN SHEET.

TO ACCOMPANY PLANS DATED 06-15-16

LEGEND:

- HMA PAVEMENT
- HMA OR CONCRETE PAVEMENT
- CONCRETE PAVEMENT

ABBREVIATIONS:

TE TAPERED EDGE

TT TOTAL THICKNESS OF TE

HW HINGE WIDTH, DISTANCE FROM ES OR EP TO HP

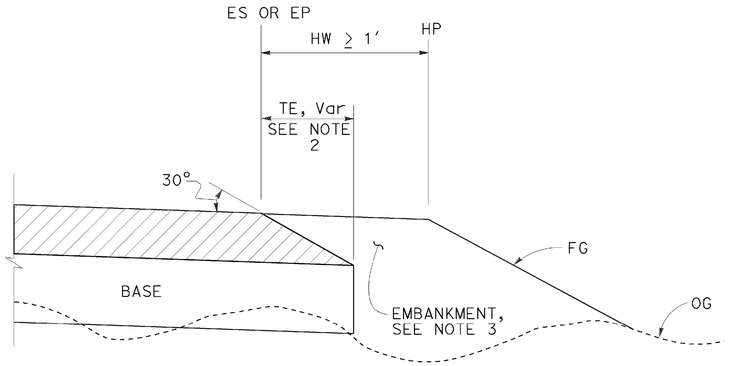

CASE K
Tapered Edge - Fill Section, HW ≥ 1′

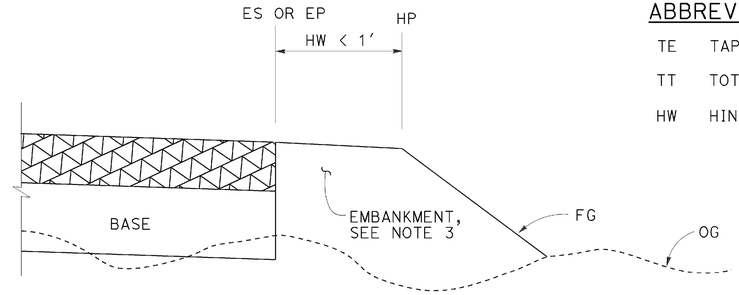

CASE L
Vertical Edge - Fill Section, HW < 1′

FILL SECTION

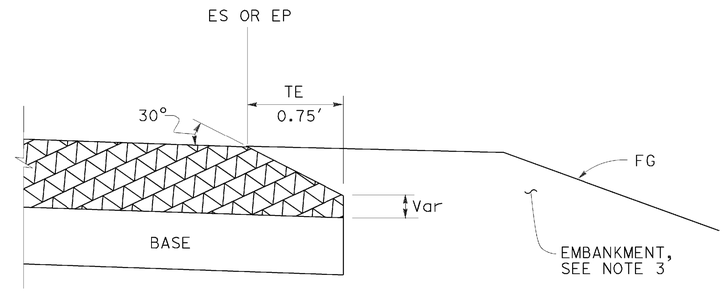

DETAIL "B"
For HMA pavement thickness more than 0.43′ or concrete pavement

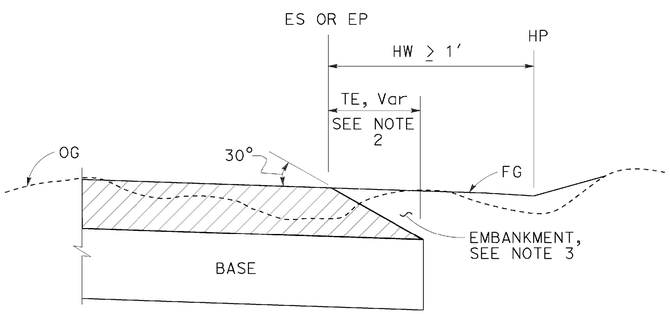

CASE M
Tapered Edge - Cut Section, HW ≥ 1′

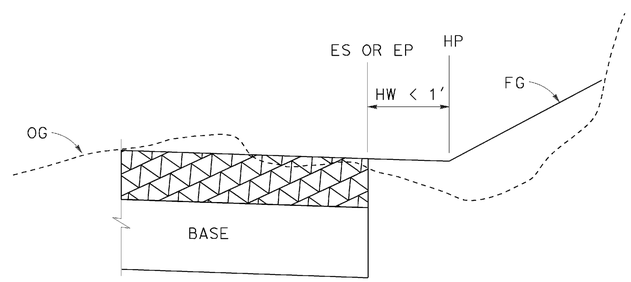

CASE N
Vertical Edge - Cut Section, HW < 1′

CUT SECTION

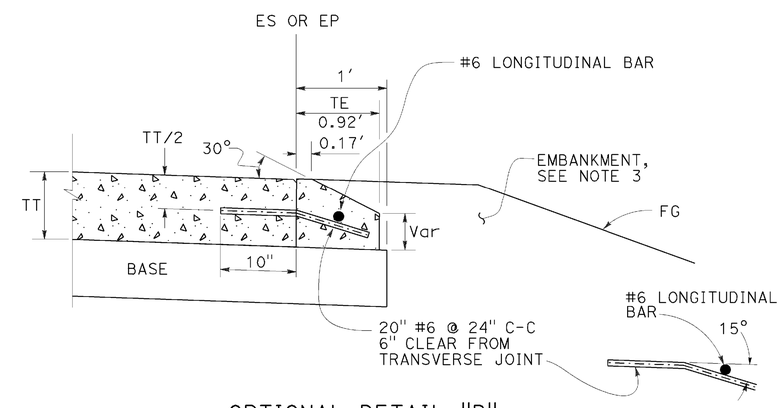

OPTIONAL DETAIL "B"
For concrete pavement
See Note 4

NOTES:

1. For limits of tapered edge and vertical edge treatments, see Revised Standard Plan RSP P74
2. Details shown for HMA pavement thickness less than 0.43′. See Detail "B" for HMA pavement thickness more than 0.43′ or concrete pavement.
3. For locations and limits of embankment see project plans.
4. Tapered edge transverse joint must match pavement transverse joint. End of #6 longitudinal bar must be 2" ±½" clear from transverse joint.
5. Tapered edge is not needed in the area of MGS, barrier, right turn lane and acceleration lane. See Revised Standard Plan RSP P74.

STATE OF CALIFORNIA
DEPARTMENT OF TRANSPORTATION

PAVEMENT EDGE TREATMENTS-NEW CONSTRUCTION

NO SCALE

RSP P76 DATED OCTOBER 30, 2015 SUPERSEDES RSP P76 DATED NOVEMBER 15, 2013 AND RSP P76 DATED JANUARY 20, 2012 THAT SUPPLEMENTS THE STANDARD PLANS BOOK DATED 2010.

REVISED STANDARD PLAN RSP P76

2010 REVISED STANDARD PLAN RSP P76

DATE PLOTTED => 02-AUG-2016
TIME PLOTTED => 08:23

Dist	COUNTY	ROUTE	POST MILES TOTAL PROJECT	SHEET No.	TOTAL SHEETS
02	Tri	299	0.0/8.3	82	103

REGISTERED CIVIL ENGINEER

July 15, 2016
PLANS APPROVAL DATE

REGISTERED PROFESSIONAL ENGINEER Carl M. Duan No. C59976 Exp. 6-30-18 CIVIL STATE OF CALIFORNIA

THE STATE OF CALIFORNIA OR ITS OFFICERS OR AGENTS SHALL NOT BE RESPONSIBLE FOR THE ACCURACY OR COMPLETENESS OF SCANNED COPIES OF THIS PLAN SHEET.

TO ACCOMPANY PLANS DATED 06-15-16

NOTE:

1. For notes and Table 2, See Revised Standard Plan RSP D72C.

TABLE 1		
	T_1	Vert BARS
L_1 AND L_2 < 2'-10"	9"	#4 @ 12
L_1 OR L_2 > 2'-10"	12"	#5 @ 12

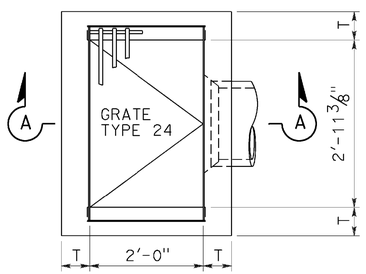

PLAN
TYPE G1

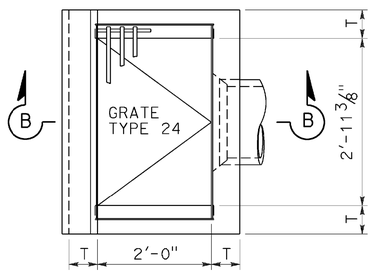

PLAN
TYPE G3

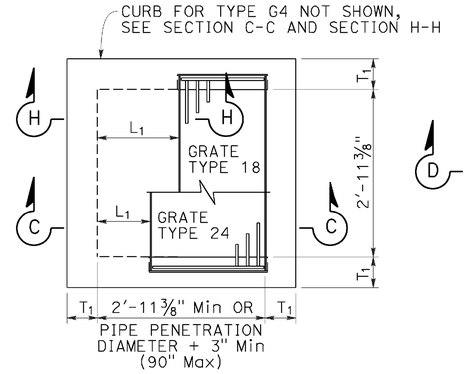

PLAN
STANDARD
TYPE G2 OR G4

FOR "L_1", "L_2" AND "T_1" VALUES, SEE "TABLE 1"

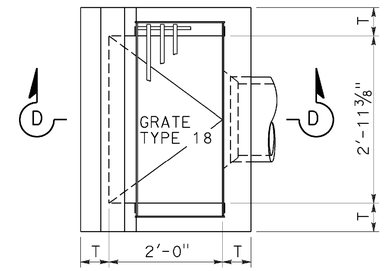

PLAN
TYPE G5

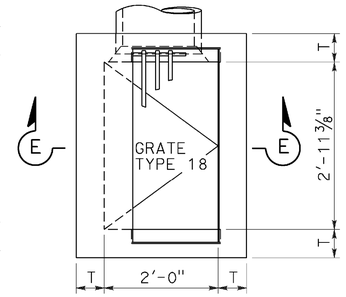

PLAN
TYPE G6

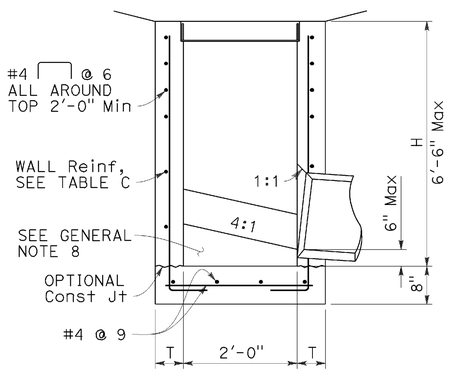

SECTION A-A

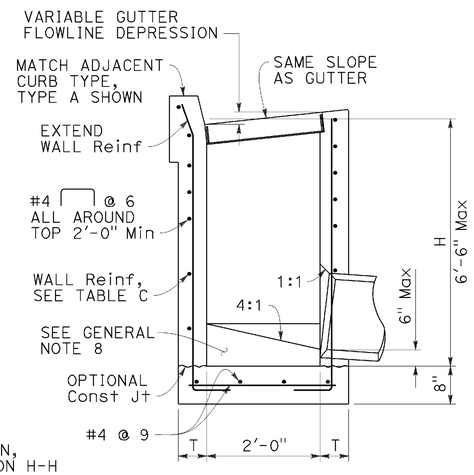

SECTION B-B

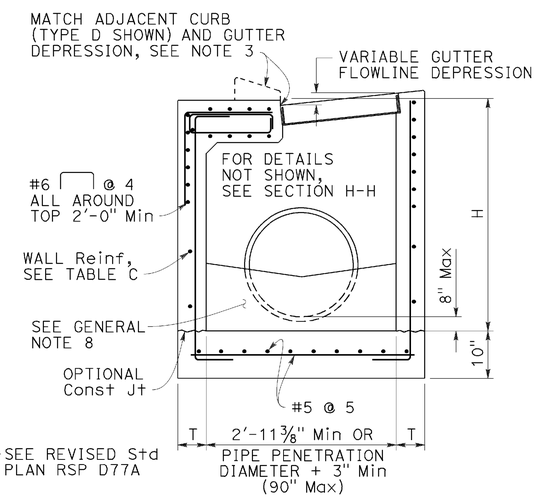

SECTION C-C

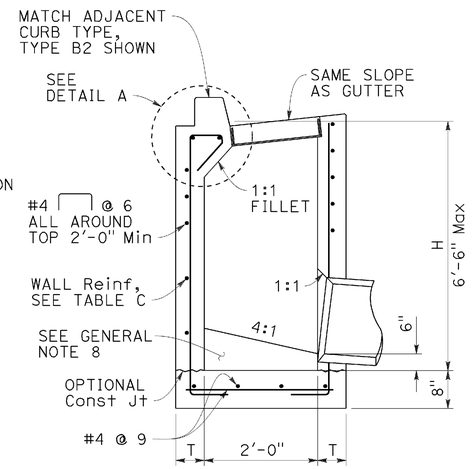

SECTION D-D

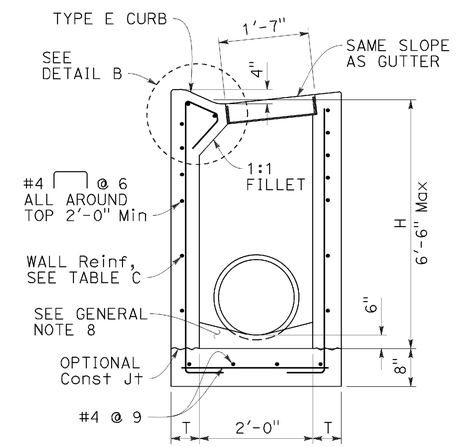

SECTION E-E

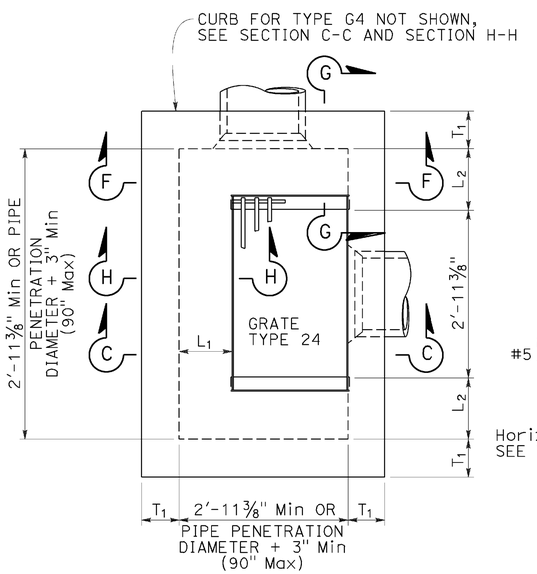

PLAN
EXPANDED
TYPE G2 OR G4

(INTEGRAL TOP ALTERNATIVE)
FOR "L" AND "T" VALUES, SEE TABLE 1

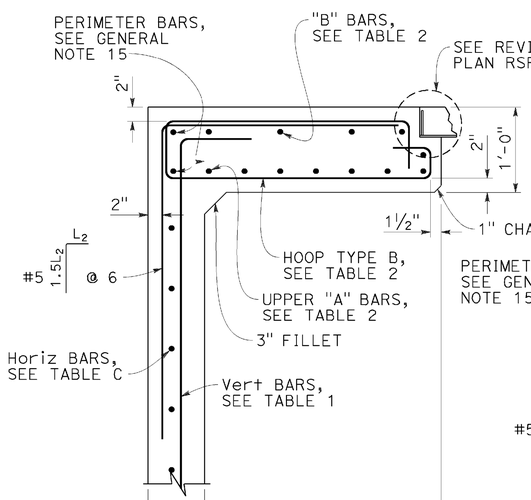

SECTION G-G

FOR "L_1", "L_2" AND "T_1" VALUES, SEE "TABLE 1"

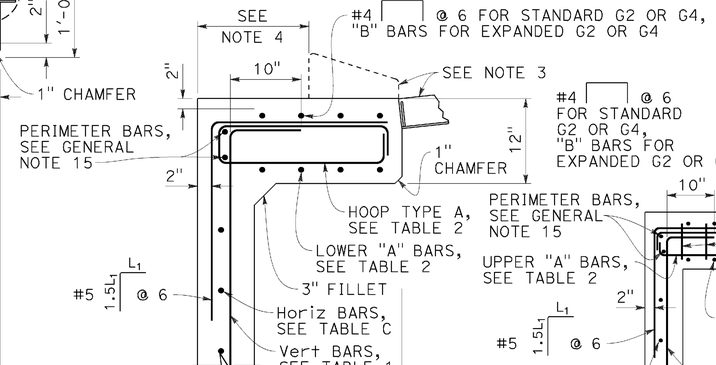

SECTION H-H

FOR "L_1", "L_2" AND "T_1" VALUES, SEE "TABLE 1"

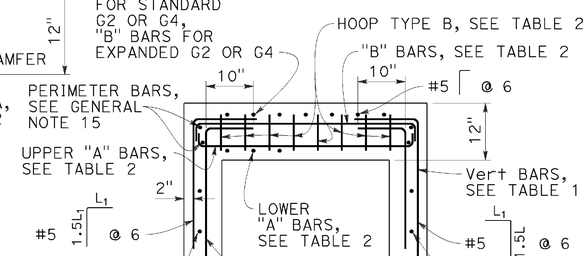

SECTION F-F

FOR "L_1", "L_2" AND "T_1" VALUES, SEE "TABLE 1"

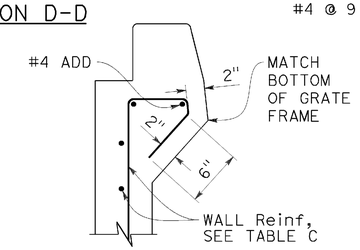

DETAIL A

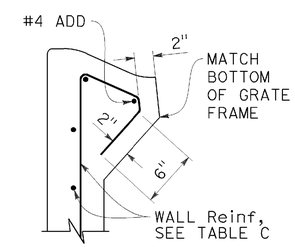

DETAIL B

STATE OF CALIFORNIA
DEPARTMENT OF TRANSPORTATION

CIP DRAINAGE INLETS TYPES G1, G2, G3, G4, G5 AND G6

NO SCALE

RSP D72A DATED JULY 15, 2016 SUPPLEMENTS THE STANDARD PLANS BOOK DATED 2010.

2010 REVISED STANDARD PLAN RSP D72B

REVISED STANDARD PLAN RSP D72B

DATE PLOTTED => 02-AUG-2016
TIME PLOTTED => 08:23

Dist	COUNTY	ROUTE	POST MILES TOTAL PROJECT	SHEET No.	TOTAL SHEETS
02	Tri	299	0.0/8.3	83	103

REGISTERED CIVIL ENGINEER

July 15, 2016
PLANS APPROVAL DATE

REGISTERED PROFESSIONAL ENGINEER
Carl M. Duan
No. C59976
Exp. 6-30-18
CIVIL
STATE OF CALIFORNIA

THE STATE OF CALIFORNIA OR ITS OFFICERS OR AGENTS SHALL NOT BE RESPONSIBLE FOR THE ACCURACY OR COMPLETENESS OF SCANNED COPIES OF THIS PLAN SHEET.

TO ACCOMPANY PLANS DATED 06-15-16

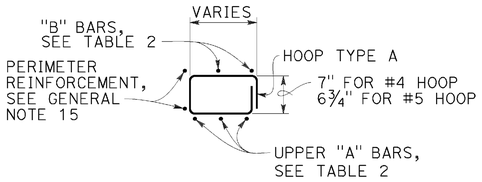

HOOP TYPE A

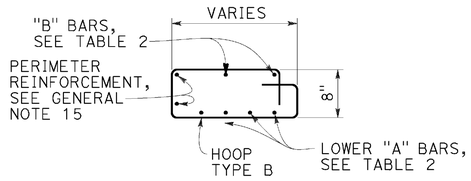

HOOP TYPE B

NOTES:

1. See Revised Standard Plan RSP D72F for General Notes and additional details. See Revised Standard Plan RSP D72G for tables and quantities.
2. Type G4 inlet can use Grate Type 18 or 24. Type G2 inlet uses Grate Type 24.
3. Type G4 inlet details are similar to Type G2 inlet details, except for the addition of a curb and sloped grate to match the adjacent curb and gutter depression.
4. Dimension will vary with different grates, curb types, box width and wall thickness.

TABLE 2 - TOP SLAB REINFORCEMENT

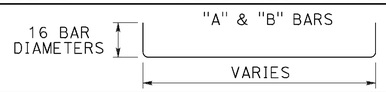

	W/ CURB	W/O CURB
"A" BARS	#4 @ 5 (2 BARS Min)	#5 @ 5 (3 BARS Min)
"B" BARS	#4 @ 10 (2 BARS Min)	#4 @ 12 (2 BARS Min)
HOOPS ("A" & "B")	#4 @ 5	#5 @ 5

ROTATE "A" AND "B" BARS SO HOOKED ENDS WILL MAINTAIN 2" CLEAR COVERAGE.

STATE OF CALIFORNIA
DEPARTMENT OF TRANSPORTATION

CIP DRAINAGE INLETS TYPES G1, G2, G3, G4, G5 AND G6

NO SCALE

RSP D72C DATED JULY 15, 2016 SUPPLEMENTS THE STANDARD PLANS BOOK DATED 2010.

REVISED STANDARD PLAN RSP D72C

2010 REVISED STANDARD PLAN RSP D72C

DATE PLOTTED => 02-AUG-2016
TIME PLOTTED => 08:24

Dist	COUNTY	ROUTE	POST MILES TOTAL PROJECT	SHEET No.	TOTAL SHEETS
02	Tri	299	0.0/8.3	84	103

REGISTERED CIVIL ENGINEER

July 15, 2016
PLANS APPROVAL DATE

REGISTERED PROFESSIONAL ENGINEER Carl M. Duan No. C59976 Exp. 6-30-18 CIVIL STATE OF CALIFORNIA

THE STATE OF CALIFORNIA OR ITS OFFICERS OR AGENTS SHALL NOT BE RESPONSIBLE FOR THE ACCURACY OR COMPLETENESS OF SCANNED COPIES OF THIS PLAN SHEET.

TO ACCOMPANY PLANS DATED 06-15-16

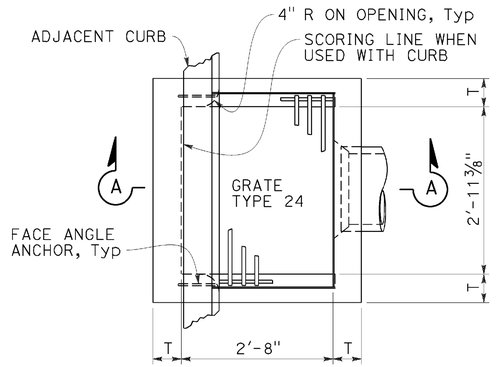

PLAN
TYPE GO

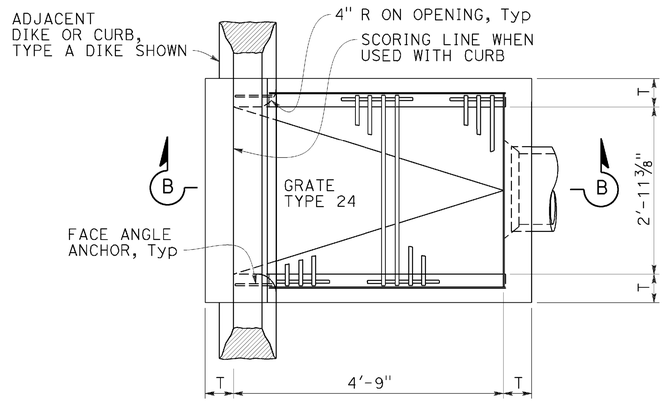

PLAN
TYPE GDO

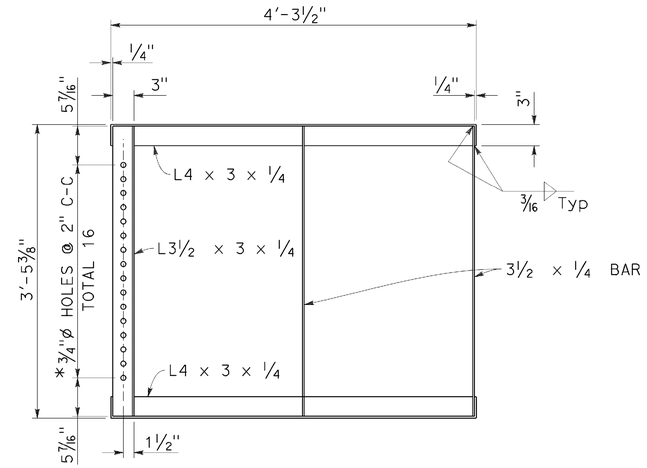

GRATE FRAME FOR TYPE GDO INLET
* HOLES REQUIRED ONLY WITH TRASH RACK

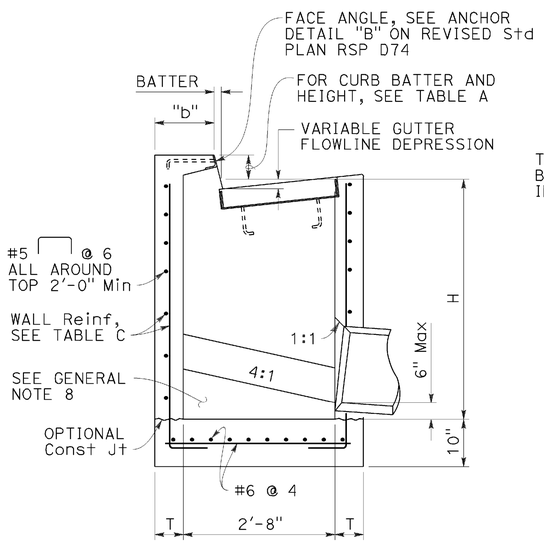

SECTION A-A

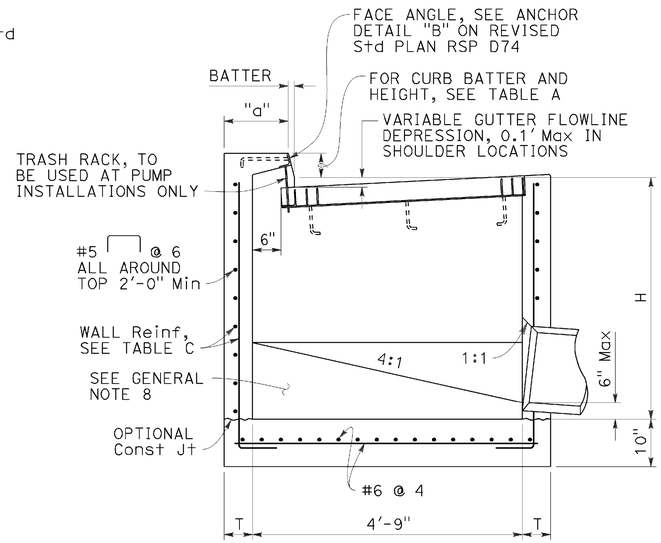

SECTION B-B

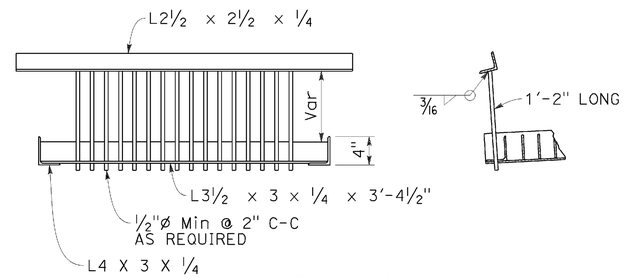

TRASH RACK
(FOR USE WITH PUMP INSTALLATION)

TABLE A				
CURB TYPE	NORMAL CURB HEIGHT	CURB BATTER	"a" DIMENSION	"b" DIMENSION
A1-6	6"	1½"	T+7½"	T+6½"
A1-8	8"	2"	T+7"	T+6"
B1-6	6"	4"	T+5"	T+4"
TYPE A DIKE	6"	3"	T+6"	T+5"

Height of curb opening will vary with the type of curb and the depth of the local depression.

NOTES:

1. See Revised Standard Plan RSP D72F for General Notes and additional details. See Revised Standard Plan RSP D72G for tables, wall thickness "T" and quantities.
2. Where shown on the project plans, place a ¾"ø plain round protection bar horizontally across the length of the opening and bend back 4" into the inlet wall on each side.
3. Complete joint penetration butt welds may be substituted for the fillet welds on all anchors.
4. Standard square, hexagon, round or equivalent headed anchors may be substituted for the right angle hooks on the anchors shown on this plan.

STATE OF CALIFORNIA
DEPARTMENT OF TRANSPORTATION

CIP DRAINAGE INLETS TYPES GO AND GDO

NO SCALE

RSP D72E DATED JULY 15, 2016 SUPPLEMENTS THE STANDARD PLANS BOOK DATED 2010.

REVISED STANDARD PLAN RSP D72E

2010 REVISED STANDARD PLAN RSP D72E

DATE PLOTTED => 02-AUG-2016
TIME PLOTTED => 08:24

Dist	COUNTY	ROUTE	POST MILES TOTAL PROJECT	SHEET No.	TOTAL SHEETS
02	Tri	299	0.0/8.3	85	103

REGISTERED CIVIL ENGINEER

July 15, 2016
PLANS APPROVAL DATE

REGISTERED PROFESSIONAL ENGINEER
Carl M. Duan
No. C59976
Exp. 6-30-18
CIVIL
STATE OF CALIFORNIA

THE STATE OF CALIFORNIA OR ITS OFFICERS OR AGENTS SHALL NOT BE RESPONSIBLE FOR THE ACCURACY OR COMPLETENESS OF SCANNED COPIES OF THIS PLAN SHEET.

TO ACCOMPANY PLANS DATED 06-15-16

GENERAL NOTES:

1. "H" is measured from top of bottom slab to the normal gutter grade line undepressed at the curb face.
2. For "T" wall thickness and reinforcement, see Table C on Revised Standard Plan RSP D72G.
3. Wall reinforcement must be placed in the center of the wall thickness with horizontal bars placed on the exterior face. Bottom slab concrete cover must be 3" clear on the interior face unless otherwise noted. Top slab concrete cover must be 2" clear on the exterior face unless otherwise noted. Reinforcement spacing is in inches unless otherwise noted.
4. Steps - None required where "H" is less than 2'-6". Where "H" is 2'-6" or more, install steps with lowest rung 1'-0" above the floor and highest rung not more than 6" below bottom of lid. The distance between steps must not exceed 1'-0" and be uniform throughout the length of the wall. Place steps in the wall without an opening. Steps inserts may be substituted for the bar steps. Step inserts must comply with State Industrial Safety Requirements. See Revised Standard Plan RSP D74 for step details.
5. Pipe(s) can be placed in any wall. Adjacent to each side of the opening, place additional reinforcement equivalent to half the interupted main reinforcement. For larger pipes greater than or equal to 42" diameter, also add 4 diagonal bars, 1 bar each side. Bars must be the same size as the larger of the main vertical or horizontal bars. Extend bars one development length past the intersection with the adjacent diagonal bar, or where bars intersect mid thickness of adjacent wall bottom or top of non-continuous wall, bend ends as required into same plane.
6. Set inlet so that grate bars are parallel to direction of principal surface flow.
7. Curb section must match adjacent curb.
8. Except for inlets used as junction boxes, basin floors must have wood trowel finish and a minimum slope of 4:1, unless otherwise noted, from all directions toward outlet pipe by casting grout fill on top of the bottom slab. The additional volume to achieve the 4:1 slope may also be achieved by casting the bottom slab and fill as a composite concrete element.
9. See Revised Standard Plans RSP D77A and RSP D77B for grate and frame details and weights of miscellaneous iron and steel.
10. See Standard Plans D78A and D78B for gutter depression details.
11. See Revised Standard Plans RSP A87A and RSP A87B for curb and dike details.
12. Details shown apply to metal, concrete and plastic pipe(s).
13. The Contractor may use WWR instead of bar reinforcement. The ratio of bar reinforcement to WWR shall be based on the yield strength ratio.
14. Cast-in-place (CIP) inlets to be formed around all pipes/stubs intersecting the inlet, and concrete poured in one continuous operation.
15. Perimeter reinforcement must not be smaller than main bars and #4 and serves as a rigid frame to position and attach the required structural reinforcement and may be tack welded at outer corners when using ASTM A706 weldable bars.

DESIGN NOTES:

1. Design Specifications: AASHTO LRFD Bridge Design Specifications, 6th edition with 2012 Interims and Errata and CA Amendments.
2. Live Load (AASHTO LRFD 3.6.1.2):
   HL-93, consists of design truck or tandem, and design lane load.
   Dynamic Load Allowance, IM = 33%
   Multiple Presence Factor, m = 1.0
   Design lane load was excluded in Top Slab design.
   A wheel load of 8 kips without impact factor was used for top slabs that are above a curb.
3. Earth Load:
   Vertical pressure = 140 pcf
   Lateral pressure:
   = 100 pcf for walls with flat embankment
   = 140 pcf For walls with slope embankment, 1.5:1 Max
4. Downdrag: ϕ = 34° and γ_E = 120 pcf.
5. Buoyancy: γ_W = 62.4 pcf to finished grade
6. Reinforced Concrete: f'c = 3.6 ksi, fy = 60.0 ksi.
7. Soil pressures shown are factored per AASHTO LRFD and include self-weight, live load and downdrag.

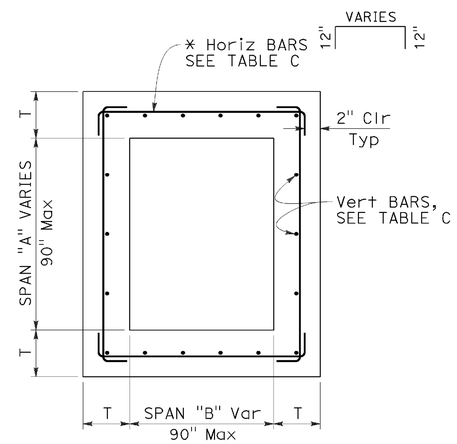

TYPICAL INLET PLAN

* ALTERNATIVE HORIZONTAL BARS

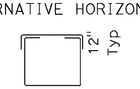

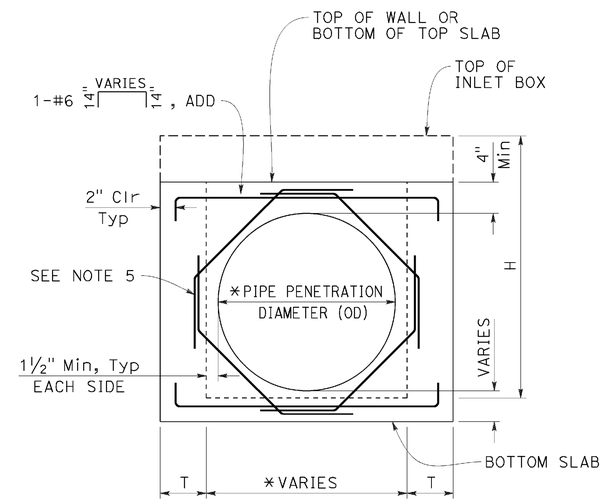

TYPICAL WALL
W/ PIPE OPENING

* SEE "SKEWED PIPE PLAN"

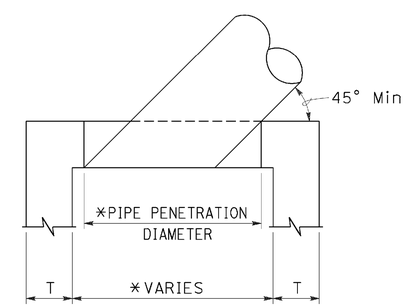

SKEWED PIPE PLAN

* ADJUST PIPE PENETRATION AND BOX WIDTH FOR SKEWED PIPES.

STATE OF CALIFORNIA
DEPARTMENT OF TRANSPORTATION

CIP DRAINAGE INLET NOTES

NO SCALE

RSP D72F DATED JULY 15, 2016 SUPPLEMENTS THE STANDARD PLANS BOOK DATED 2010.

REVISED STANDARD PLAN RSP D72F

2010 REVISED STANDARD PLAN RSP D72F

DATE PLOTTED => 02-AUG-2016
TIME PLOTTED => 08:24

Dist	COUNTY	ROUTE	POST MILES TOTAL PROJECT	SHEET No.	TOTAL SHEETS
02	Tri	299	0.0/8.3	86	103

REGISTERED CIVIL ENGINEER

July 15, 2016
PLANS APPROVAL DATE

REGISTERED PROFESSIONAL ENGINEER
Carl M. Duan
No. C59976
Exp. 6-30-18
CIVIL
STATE OF CALIFORNIA

THE STATE OF CALIFORNIA OR ITS OFFICERS OR AGENTS SHALL NOT BE RESPONSIBLE FOR THE ACCURACY OR COMPLETENESS OF SCANNED COPIES OF THIS PLAN SHEET.

TO ACCOMPANY PLANS DATED 06-15-16

TABLE A - CONCRETE QUANTITIES

TYPE	H=3'-0" TO 8'-0"		H=8'-1" TO 20'-0"	
	H=3'-0" (CY)	ADDITIONAL CONCRETE PER FOOT (CY)	H=8'-1" (CY)	ADDITIONAL CONCRETE PER FOOT (CY)
G1	0.95	0.220	SEE NOTE 2	SEE NOTE 2
G2*	2.00	0.411	5.11	0.525
G3	1.03	0.220	SEE NOTE 2	SEE NOTE 2
G4 (TYPE 18)*	2.02	0.411	5.14	0.525
G4 (TYPE 24)*	1.99	0.411	5.10	0.525
G5	1.02	0.220	SEE NOTE 2	SEE NOTE 2
G6	1.04	0.220	SEE NOTE 2	SEE NOTE 2
OS	1.53	0.278	5.08	0.504
OL7	2.06	0.278	6.17	0.566
OL10	2.85	0.278	6.85	0.566
OL14	3.81	0.278	7.78	0.566
OL21	5.71	0.278	9.62	0.566
GOL7	2.48	0.313	6.89	0.630
GOL10	3.41	0.313	7.85	0.630
GT1	1.72	0.248	SEE NOTE 2	SEE NOTE 2
GT2	2.93	0.530	7.73	0.762
GT3	1.74	0.348	SEE NOTE 2	SEE NOTE 2
GT4	2.83	0.530	7.62	0.762
GO	1.26	0.245	4.90	0.506
GDO	1.74	0.322	6.33	0.647

* Quantities are based on the minimum interior dimensions.

TABLE B - REINFORCEMENT QUANTITIES

TYPE	H=3'-0" TO 8'-0"		H=8'-1" TO 20'-0"	
	H=3'-0" (LB)	ADDITIONAL REINFORCEMENT PER FOOT (LB)	H=8'-1" (LB)	ADDITIONAL REINFORCEMENT PER FOOT (LB)
G1	118	22.20	SEE NOTE 2	SEE NOTE 2
G2*	729	86.48	1794	171.79
G3	118	22.20	SEE NOTE 2	SEE NOTE 2
G4 (TYPE 18)*	647	86.48	1675	171.79
G4 (TYPE 24)*	647	86.48	1675	171.79
G5	118	22.20	SEE NOTE 2	SEE NOTE 2
G6	118	22.20	SEE NOTE 2	SEE NOTE 2
OS	245	49.88	1057	120.77
OL7	458	50.53	1324	126.75
OL10	729	50.53	1595	126.75
OL14	982	50.53	1849	126.75
OL21	1453	50.53	2320	126.75
GOL7	644	83.57	1969	148.79
GOL10	883	83.57	2208	148.79
GT1	486	96.91	SEE NOTE 2	SEE NOTE 2
GT2	1040	117.08	2543	233.37
GT3	486	96.91	SEE NOTE 2	SEE NOTE 2
GT4	1001	117.08	2556	237.88
GO	308	32.44	1013	96.56
GDO	519	57.09	1654	165.66

* Quantities are based on the minimum interior dimensions.

TABLE D

INLET	CURB USED IN QUANTITIES
G1	-
G2	-
G3	A1-6
G4 (Type 18)	A1-6
G4 (Type 24)	A1-6
G5	B1-4
G6	½E
OS	-
OL7	-
OL10	-
OL14	-
OL21	-
GOL7	-
GOL10	-
GT1	D-6
GT2	E
GT3	A2-8
GT4	A2-8
GO	-
GDO	-

TABLE C - WALL REINFORCEMENT

TYPE	H≤8 (T=6",UON)		8<H≤20 (T=11",UON)	
	HORIZ	VERTICAL	HORIZ	VERTICAL
OS	#4 @ 8	#4 @ 6	#5 @ 6	#6 @ 4.5
OL	#4 @ 6	#4 @ 6	#5 @ 6	#6 @ 4.5
GOL	#5 @ 6	#5 @ 8	#6 @ 5	#6 @ 4.5
G1 (H≤6-6")	#3 @ 6	#3 @ 6	-	-
G2	T=9" #5 @ 5	#5 @ 5	T=11" #6 @ 4	#6 @ 4.5
G3 (H≤6-6")	#3 @ 6	#3 @ 6	-	-
G4	T=9" #5 @ 5	#5 @ 5	T=11" #6 @ 4	#6 @ 4.5
G5 (H≤6-6")	#3 @ 6	#3 @ 6	-	-
G6 (H≤6-6")	#3 @ 6	#3 @ 6	-	-
GT1 (H≤6-6")	#5 @ 6	#5 @ 6	-	-
GT2	T=8" #5 @ 6	#5 @ 6	#6 @ 4	#6 @ 4.5
GT3 (H≤6-6")	#5 @ 6	#5 @ 6	-	-
GT4	T=8" #5 @ 6	#5 @ 6	#6 @ 4	#6 @ 4.5
GO	#4 @ 9	#4 @ 6	#4 @ 6	#6 @ 4.5
GDO	#4 @ 6	#4 @ 6	#5 @ 4	#6 @ 4.5

TABLE E

SOIL PRESSURE BELOW BASE SLAB (ksf)		
TYPE	H=8'-0"	8'-0"< H ≤20'-0"
OS	2.93	5.56
OL*	2.93	5.56
GOL*	2.50	5.06
G1	3.67	-
G2	2.99	5.91
G3	3.67	-
G4	2.99	5.91
G5	3.67	-
G6	3.67	-
GT1	3.66	-
GT2	3.91	6.07
GT3	3.86	-
GT4	3.91	6.07
GO	3.42	6.11
GDO	2.52	6.95

* Main Box

NOTES:

1. No deduction or adjustment was made to the quantities of concrete and reinforcement for pipe openings, floor alternatives or curb type.
2. Maximum allowable height is 6'-6".
3. Quantities are approximate and for design purposes only.
4. Design is based on envelope of level and sloped ground.

STATE OF CALIFORNIA
DEPARTMENT OF TRANSPORTATION

CIP DRAINAGE INLET TABLES

NO SCALE

RSP D72G DATED JULY 15, 2016 SUPPLEMENTS THE STANDARD PLANS BOOK DATED 2010.

REVISED STANDARD PLAN RSP D72G

2010 REVISED STANDARD PLAN RSP D72G

DATE PLOTTED => 02-AUG-2016
TIME PLOTTED => 08:25

Dist	COUNTY	ROUTE	POST MILES TOTAL PROJECT	SHEET No.	TOTAL SHEETS
02	Tri	299	0.0/8.3	87	103

REGISTERED CIVIL ENGINEER

July 15, 2016
PLANS APPROVAL DATE

REGISTERED PROFESSIONAL ENGINEER Carl M. Duan No. C59976 Exp. 6-30-18 CIVIL STATE OF CALIFORNIA

THE STATE OF CALIFORNIA OR ITS OFFICERS OR AGENTS SHALL NOT BE RESPONSIBLE FOR THE ACCURACY OR COMPLETENESS OF SCANNED COPIES OF THIS PLAN SHEET.

TO ACCOMPANY PLANS DATED 06-15-16

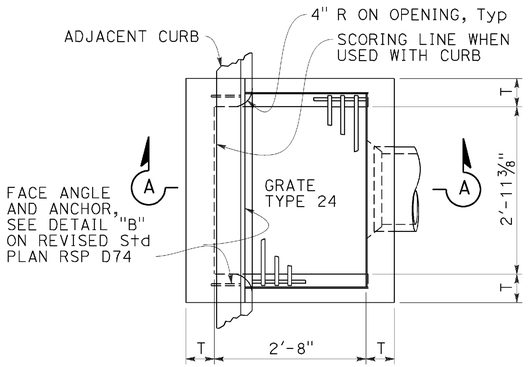

PLAN
TYPE GO

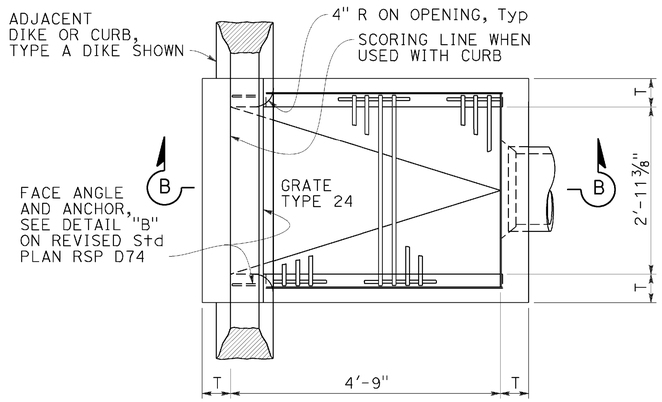

PLAN
TYPE GDO

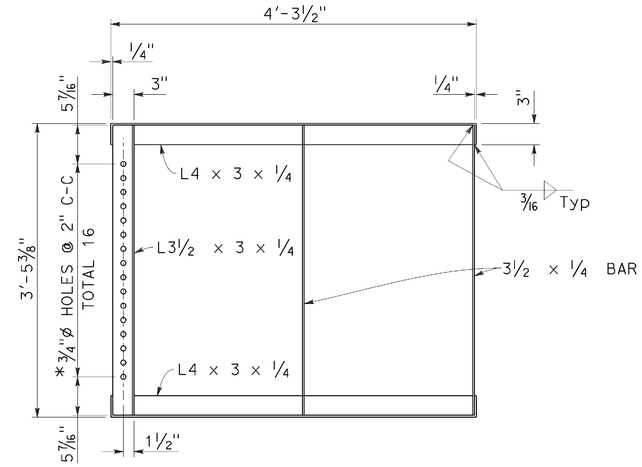

GRATE FRAME FOR TYPE GDO INLET

* HOLES REQUIRED ONLY WITH TRASH RACK

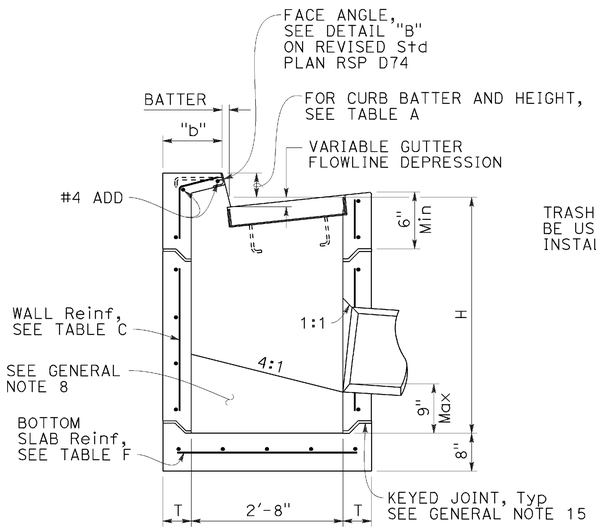

SECTION A-A

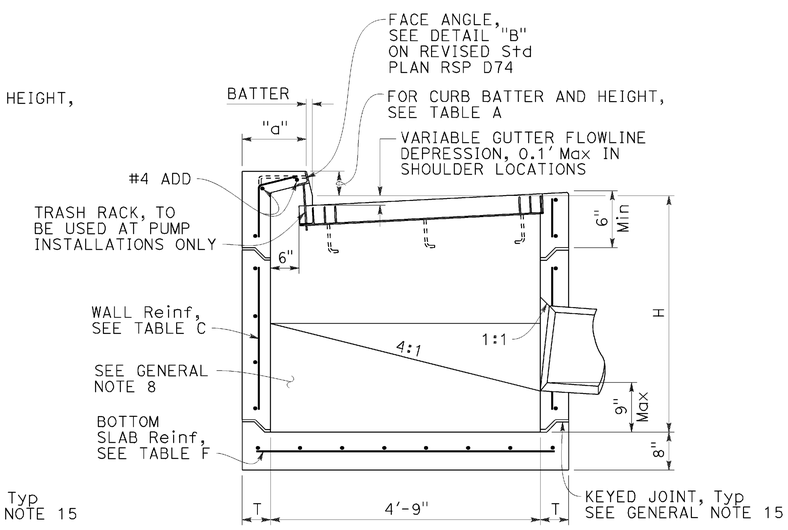

SECTION B-B

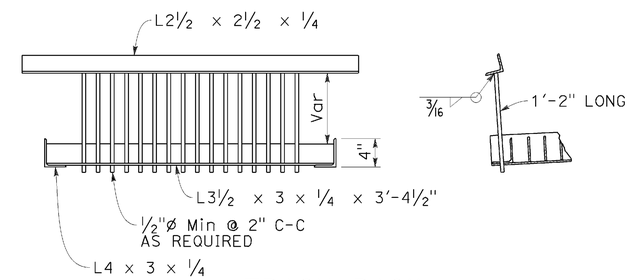

TRASH RACK

FOR USE WITH PUMP INSTALLATION

TABLE A				
CURB TYPE	NORMAL CURB HEIGHT	CURB BATTER	"a" DIMENSION	"b" DIMENSION
A1-6	6"	1½"	T+7½"	T+6½"
A1-8	8"	2"	T+7"	T+6"
B1-6	6"	4"	T+5"	T+4"
TYPE A DIKE	6"	3"	T+6"	T+5"

Height of curb opening will vary with the type of curb and the depth of the local depression.

NOTES:

1. See Revised Standard Plan RSP D73F for General Notes and additional details. See Revised Standard Plan RSP D73G for tables, wall thickness "T" and quantities.
2. Where shown on the project plans, place a ¾"ø plain round protection bar horizontally across the length of the opening and bend back 4" into the inlet wall on each side.
3. Complete joint penetration butt welds may be substituted for the fillet welds on all anchors.
4. Standard square, hexagon, round or equivalent headed anchors may be substituted for the right angle hooks on the anchors shown on this plan.

STATE OF CALIFORNIA
DEPARTMENT OF TRANSPORTATION

PRECAST DRAINAGE INLETS TYPES GO AND GDO

NO SCALE

RSP D73E DATED JULY 15, 2016 SUPPLEMENTS THE STANDARD PLANS BOOK DATED 2010.

REVISED STANDARD PLAN RSP D73E

2010 REVISED STANDARD PLAN RSP D73E

DATE PLOTTED => 02-AUG-2016
TIME PLOTTED => 08:25

Dist	COUNTY	ROUTE	POST MILES TOTAL PROJECT	SHEET No.	TOTAL SHEETS
02	Tri	299	0.0/8.3	88	103

REGISTERED CIVIL ENGINEER

July 15, 2016
PLANS APPROVAL DATE

REGISTERED PROFESSIONAL ENGINEER Carl M. Duan No. C59976 Exp. 6-30-18 CIVIL STATE OF CALIFORNIA

THE STATE OF CALIFORNIA OR ITS OFFICERS OR AGENTS SHALL NOT BE RESPONSIBLE FOR THE ACCURACY OR COMPLETENESS OF SCANNED COPIES OF THIS PLAN SHEET.

TO ACCOMPANY PLANS DATED 06-15-16

GENERAL NOTES:

1. "H" is measured from top of bottom slab to the normal gutter grade line undepressed at the curb face.
2. For "T" wall thickness and reinforcement, see Table C on Revised Standard Plan RSP D73G.
3. Wall reinforcement must be placed at the center of wall thickness with horizontal bars placed on the exterior face. Bottom slab concrete cover must be 3" clear on the interior side face unless otherwise noted. Top slab concrete cover must be 2" clear on the exterior face unless otherwise noted. Short independent wall sections or height adjustment rings 6" to 24" high must have a minimum of two #4 horizontal bars. Reinforcement spacing is in inches unless otherwise noted.
4. Steps - None required where "H" is less than 2'-6". Where "H" is 2'-6" or more, install steps with lowest rung 1'-0" above the floor and highest rung not more than 6" below bottom of lid. The distance between steps must not exceed 1'-0" and be uniform throughout the length of the wall. Place steps in the wall without an opening. Steps inserts may be substituted for the bar steps. Step inserts must comply with State Industrial Safety Requirements. See Revised Standard Plan RSP D74 for step details.
5. Pipe(s) can be placed in any wall. Adjacent to each side of the opening, place additional reinforcement equivalent to half the interupted main reinforcement. For larger pipes greater than or equal to 42" diameter, also add 4 diagonal bars, 1 bar each side. Bars must be the same size as the larger of the main vertical or horizontal bars. Extend bars one development length past the intersection with the adjacent diagonal bar, or where bars intersect mid thickness of adjacent wall bottom or top of non-continuous wall, bend ends as required into same plane.
6. Set inlet so that grate bars are parallel to direction of principal surface flow.
7. Curb section must match adjacent curb.
8. Except for inlets used as junction boxes, basin floors must have wood trowel finish and a minimum slope of 4:1, unless otherwise noted, from all directions toward outlet pipe by casting grout on top of the bottom slab. Grout must be placed prior to backfill.
9. See Revised Standard Plans RSP D77A and RSP D77B for grate and frame details and weights of miscellaneous iron and steel.
10. See Standard Plans D78A and D78B for gutter depression details.
11. See Revised Standard Plans RSP A87A and RSP A87B for curb and dike details.
12. Details shown apply to metal, concrete and plastic pipe(s).
13. The Contractor may use WWR instead of bar reinforcement. The ratio of bar reinforcement to WWR shall be based on the yield strength ratio.
14. Seal precast inlets connection openings between wall and pipe with non-shrink grout or resilient connectors as specified in the Special Provisions. Precast inlets shall have mortared connections conforming to details for Type GCP Inlet shown on Revised Standard Plan RSP D75B. See Standard Specifications for mortar composition.
15. Where shown, provide precast inlets with separate top sections for final grade adjustment. Provide keyed joints with butyl rubber sealant between the top section and wall, multiple wall sections, and wall and bottom slab. Joint design may vary but must be 1" to 3" in depth. For tongue type joints, tongue down orientation is not allowed. For keyed joints, keyway up, keyway down or tongue up configurations are allowed. Only one key type is allowed for each drainage inlet.
16. Non-shrink grout can be used for upper most joint to facilitate final top grade adjustment.
17. Provide a level and firm sand bedding on which to place precast inlets. Extend sand bedding under all structure backfill.
18. For Integral Base, see Detail "A".
19. Perimeter reinforcement must not be smaller than main bars and #4 and serves as a rigid frame to position and attach the required structural reinforcement and may be tack welded at outer corners when using ASTM A706 weldable bars.
20. Inlet extensions may be cast in place after placement of main box and placement and compaction of backfill. Concrete strength must be 3.6 ksi minimum. All slab and wall thicknesses must be per Revised Standard Plan RSP D72A. All reinforcement shall extend a minimum of 24" from precast main inlet box.

DESIGN NOTES:

1. Design Specifications: AASHTO LRFD Bridge Design Specifications, 6th edition with 2012 Interims and Errata and CA Amendments.
2. Live Load (AASHTO LRFD 3.6.1.2):
   HL-93, consists of design truck or tandem, and design lane load.
   Dynamic Load Allowance, IM = 33%
   Multiple Presence Factor, m = 1.0
   Design lane load was excluded in Top Slab design.
   A wheel load of 8 kips without impact factor was used for top slabs that are above a curb.
3. Earth Load:
   Vertical pressure = 140 pcf
   Lateral pressure:
   = 100 pcf for walls with flat embankment
   = 140 pcf For walls with slope embankment, 1.5:1 Max
4. Downdrag: ϕ = 34° and γ_E = 120 pcf.
5. Buoyancy: γ_W = 62.4 pcf to finished grade.
6. Reinforced Concrete: f'c = 5.0 ksi, fy = 60.0 ksi.
7. Tables are based on the worst case from the level ground and sloped ground.
8. Soil pressures shown are factored per AASHTO LRFD and include self-weight, live load and downdrag.

SPAN "A" OR "B" (IN)	L (IN)
<38	34
38 TO 50	40
51 TO 64	47
65 TO 76	53
77 TO 90	60

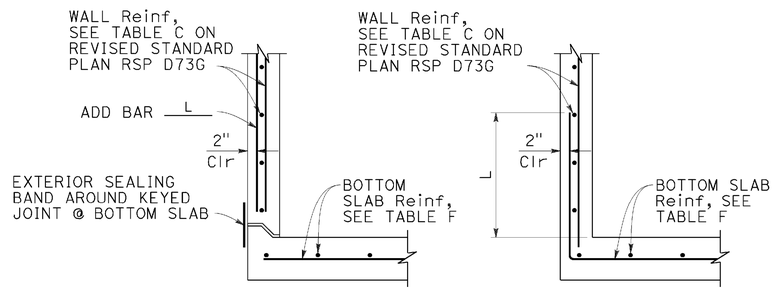

BASE WITH KEYED JOINT INTEGRAL BASE

DETAIL "A"

FOR INTEGRAL BASE, CLEARANCE BETWEEN PIPE PENETRATION AND BASE SLAB MAY BE AS SHOWN IN CIP ALTERNATIVE STANDARD PLAN SHEET.

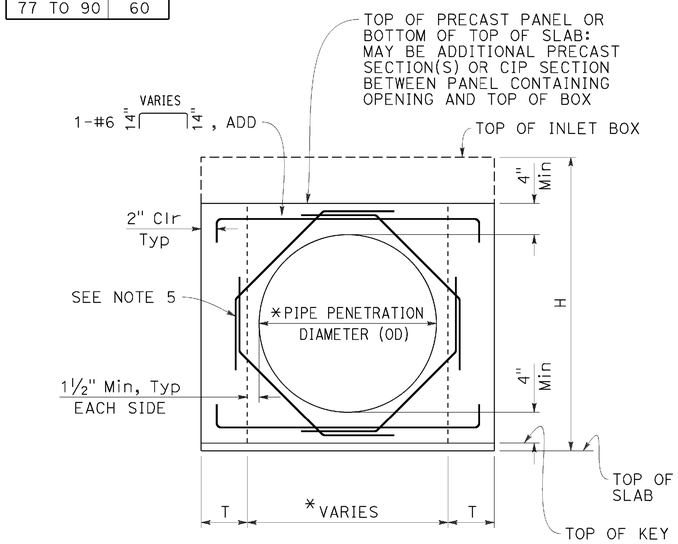

BASE WITH KEYED JOINT

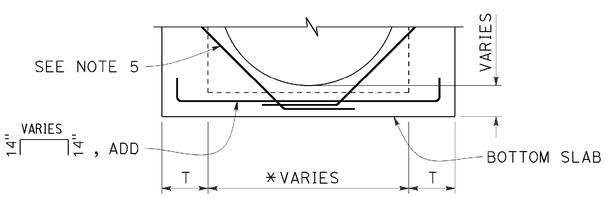

INTEGRAL BASE

FOR DETAILS NOT SHOWN, SEE "BASE WITH KEYED JOINT"

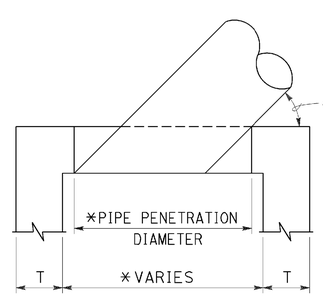

SKEWED PIPE PLAN

* ADJUST PIPE PENETRATION AND BOX WIDTH FOR SKEWED PIPES.

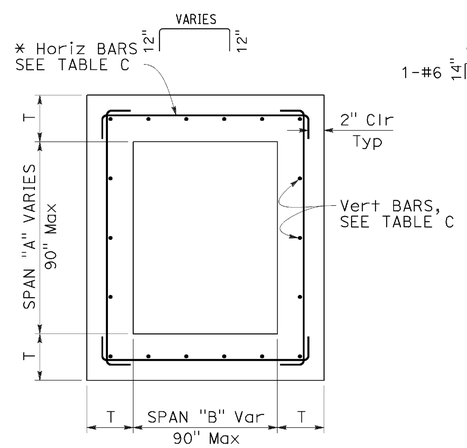

TYPICAL INLET PLAN

* ALTERNATIVE HORIZONTAL BARS

TYPICAL WALL W/ PIPE OPENING

* SEE "SKEWED PIPE PLAN"

STATE OF CALIFORNIA
DEPARTMENT OF TRANSPORTATION

PRECAST DRAINAGE INLET NOTES

NO SCALE

RSP D73F DATED JULY 15, 2016 SUPPLEMENTS THE STANDARD PLANS BOOK DATED 2010.

REVISED STANDARD PLAN RSP D73F

2010 REVISED STANDARD PLAN RSP D73F

DATE PLOTTED => 02-AUG-2016
TIME PLOTTED => 08:26

Dist	COUNTY	ROUTE	POST MILES TOTAL PROJECT	SHEET No.	TOTAL SHEETS
02	Tri	299	0.0/8.3	89	103

REGISTERED CIVIL ENGINEER

July 15, 2016
PLANS APPROVAL DATE

REGISTERED PROFESSIONAL ENGINEER
Carl M. Duan
No. C59976
Exp. 6-30-18
CIVIL
STATE OF CALIFORNIA

THE STATE OF CALIFORNIA OR ITS OFFICERS OR AGENTS SHALL NOT BE RESPONSIBLE FOR THE ACCURACY OR COMPLETENESS OF SCANNED COPIES OF THIS PLAN SHEET.

TO ACCOMPANY PLANS DATED 06-15-16

2010 REVISED STANDARD PLAN RSP D73G

TABLE A - CONCRETE QUANTITIES

TYPE	H=3'-0" TO 8'-0"		H=8'-1" TO 20'-0"	
	H=3'-0" (CY)	ADDITIONAL CONCRETE PER FOOT (CY)	H=8'-1" (CY)	ADDITIONAL CONCRETE PER FOOT (CY)
G1	0.95	0.220	SEE NOTE 2	SEE NOTE 2
G2*	1.25	0.255	2.55	0.255
G3	1.06	0.220	SEE NOTE 2	SEE NOTE 2
G4 (TYPE 18)*	1.41	0.255	2.71	0.255
G4 (TYPE 24)*	1.36	0.255	2.65	0.255
G5	1.09	0.220	SEE NOTE 2	SEE NOTE 2
G6	1.14	0.220	SEE NOTE 2	SEE NOTE 2
OS	1.28	0.278	2.69	0.278
OL7	1.92	0.278	3.33	0.278
OL10	2.43	0.278	3.84	0.278
OL14	3.16	0.278	4.57	0.278
OL21	4.58	0.278	5.99	0.278
GOL7	2.36	0.313	4.04	0.434
GOL10	2.84	0.313	4.53	0.434
GT1	2.30	0.480	SEE NOTE 2	SEE NOTE 2
GT2	2.71	0.530	5.40	0.530
GT3	2.29	0.480	SEE NOTE 2	SEE NOTE 2
GT4	2.69	0.530	5.39	0.530
GO	1.25	0.245	2.37	0.245
GDO	1.64	0.322	3.37	0.446

* Quantities are based on the minimum interior dimensions.

TABLE B - REINFORCEMENT QUANTITIES

TYPE	H=3'-0" TO 8'-0"		H=8'-1" TO 20'-0"	
	H=3'-0" (LB)	ADDITIONAL REINFORCEMENT PER FOOT (LB)	H=8'-1" (LB)	ADDITIONAL REINFORCEMENT PER FOOT (LB)
G1	88.5	21.90	SEE NOTE 2	SEE NOTE 2
G2*	151.5	24.54	277.4	38.64
G3	92.9	21.90	SEE NOTE 2	SEE NOTE 2
G4 (TYPE 18)*	134.4	24.54	260.3	38.64
G4 (TYPE 24)*	125.1	24.54	251.0	38.64
G5	92.5	21.90	SEE NOTE 2	SEE NOTE 2
G6	92.5	21.90	SEE NOTE 2	SEE NOTE 2
OS	145.8	35.57	327.8	49.60
OL7	328.0	35.57	510.0	49.60
OL10	467.5	35.57	649.5	49.60
OL14	667.5	35.57	849.5	49.60
OL21	1056.1	35.57	1238.1	49.60
GOL7	474.7	45.17	706.8	74.02
GOL10	604.9	45.17	836.9	74.02
GT1	349.0	80.48	SEE NOTE 2	SEE NOTE 2
GT2	403.7	86.82	849.1	135.15
GT3	347.0	80.48	SEE NOTE 2	SEE NOTE 2
GT4	403.7	86.82	849.1	135.15
GO	99.8	23.75	221.7	37.46
GDO	208.8	46.22	446.2	75.61

* Quantities are based on the minimum interior dimensions.

TABLE D

INLET	CURB USED IN QUANTITIES
G1	-
G2	-
G3	A1-6
G4 (Type 18)	A1-6
G4 (Type 24)	A1-6
G5	B1-4
G6	½E
OS	-
OL7	-
OL10	-
OL14	-
OL21	-
GOL7	-
GOL10	-
GT1	D-6
GT2	E
GT3	A2-8
GT4	A2-8
GO	-
GDO	-

TABLE C - WALL REINFORCEMENT

TYPE	H ≤8'-0" (T=6", UON)			8'-0"< H ≤20'-0" (T=8", UON)		
	HORIZONTAL	VERTICAL	*ADD	HORIZONTAL	VERTICAL	*ADD
OS	#4@6	#3@8	#3@8	#4@4 (T=6")	#3@8	#3@8
OL	#4@6	#3@8	#3@8	#4@4 (T=6")	#3@8	#3@8
GOL	#4@5	#3@8	#3@8	#5@5	#3@6	#3@6
G1 (H ≤6'-9")	#4@9	#3@8	#3@8	-	-	-
G2 & G4 (a** ≤38")	#4@9	#3@8	#3@8	#4@5 (T=6")	#3@8	#3@8
G2 & G4 (38" < a** ≤50")	#4@6	#3@8	#3@8	#4@4 (T=6")	#3@8	#3@8
G2 & G4 (50" < a** ≤64")	#4@5	#3@8	#3@8	#5@5	#3@6	#3@6
G2 & G4 (64"< a** ≤76")	#5@7 (T=8")	#3@6	#3@6	#5@4	#3@6	#5@6
G2 & G4 (76" < a** ≤90")	#5@5 (T=8")	#3@6	#3@6	#5@3	#3@6	#5@6
G3 (H ≤6'-9")	#4@9	#3@8	#3@8	-	-	-
G5 (H ≤6'-9")	#4@9	#3@8	#3@8	-	-	-
G6 (H ≤6'-9")	#4@9	#3@8	#3@8	-	-	-
GT1 (H ≤6'-9")	#5@5 (T=8")	#3@6	#3@6	-	-	-
GT2	#5@5 (T=8")	#3@6	#3@6	#5@3	#3@6	#5@6
GT3 (H ≤6'-9")	#5@5 (T=8")	#3@6	#3@6	-	-	-
GT4	#5@5 (T=8")	#3@6	#3@6	#5@3	#3@6	#5@6
GO	#4@9	#3@8	#3@8	#4@5 (T=6")	#3@8	#3@8
GDO	#4@5	#3@8	#3@8	#5@5	#3@6	#3@6

* See Detail A on Revised Standard Plan RSP D73F for additional vertical bars at the base.
** a = Larger interior span

TABLE E

SOIL PRESSURE BELOW BASE SLAB (ksf)

TYPE	H ≤8'-0"	8'-0"< H ≤20'-0"
OS	2.89	5.68
OL*	2.89	5.68
GOL*	2.36	4.93
G1 (H ≤6'-9")	3.51	-
G2 & G4 (a** ≤38")	2.96	5.79
G2 & G4 (38" < a** ≤50")	2.21	4.51
G2 & G4 (50" < a** ≤64")	3.19	4.89
G2 & G4 (64"< a** ≤76")	2.50	4.23
G2 & G4 (76" < a** ≤90")	2.04	3.56
G3 (H ≤6'-9")	3.51	-
G5 (H ≤6'-9")	3.51	-
G6 (H ≤6'-9")	3.51	-
GT1 (H ≤6'-9")	3.41	-
GT2	3.60	6.42
GT3 (H ≤6'-9")	3.41	-
GT4	3.60	6.42
GO	3.37	6.46
GDO	2.48	7.30

* Main Box
** a = Larger interior span

TABLE F

BASE SLAB REINFORCEMENT (T=8", UON)

TYPE	H ≤8'-0"	8'-0"< H ≤20'-0"
OS	#4@8 (EW)	#4@5 (EW)
OL*	#4@8 (EW)	#4@5 (EW)
GOL*	#4@6 (EW)	#4@4 (EW)
G1 (H ≤6'-9")	#4@10 (EW)	-
G2 & G4 (a** ≤38")	#4@10 (EW)	#4@6 (EW)
G2 & G4 (38" < a** ≤50")	#4@8 (EW)	#4@5 (EW)
G2 & G4 (50" < a** ≤64")	#4@6 (EW)	#4@4 (EW)
G2 & G4 (64"< a** ≤76")	#4@5 (EW)	#4@3 (EW)
G2 & G4 (76" < a** ≤90")	#4@4 (EW)	#5@3 (EW)
G3 (H ≤6'-9")	#4@10 (EW)	-
G5 (H ≤6'-9")	#4@10 (EW)	-
G6 (H ≤6'-9")	#4@10 (EW)	-
GT1 (H ≤6'-9")	#4@4 (EW)	-
GT2	#4@4 (EW)	#5@3 (EW)
GT3 (H ≤6'-9")	#4@4 (EW)	-
GT4	#4@4 (EW)	#5@3 (EW)
GO	#4@10 (EW)	#4@6 (EW)
GDO	#4@6 (EW)	#4@4 (EW)

(EW) Each Way
* Main Box
** a = Larger interior span

NOTES:

1. No deduction or adjustment was made to the quantities of concrete and reinforcement for pipe openings, floor alternatives or curb type.
2. Maximum allowable height is 6'-9".
3. Quantities are approximate and for design purposes only.
4. Design is based on envelope of level and sloped ground.

STATE OF CALIFORNIA
DEPARTMENT OF TRANSPORTATION

PRECAST DRAINAGE INLET TABLES

NO SCALE

RSP D73G DATED JULY 15, 2016 SUPPLEMENTS THE STANDARD PLANS BOOK DATED 2010.

REVISED STANDARD PLAN RSP D73G

DATE PLOTTED => 02-AUG-2016
TIME PLOTTED => 08:26

Dist	COUNTY	ROUTE	POST MILES TOTAL PROJECT	SHEET No.	TOTAL SHEETS
02	Tri	299	0.0/8.3	90	103

REGISTERED CIVIL ENGINEER

July 15, 2016
PLANS APPROVAL DATE

REGISTERED PROFESSIONAL ENGINEER
Carl M. Duan
No. C59976
Exp. 6-30-18
CIVIL
STATE OF CALIFORNIA

THE STATE OF CALIFORNIA OR ITS OFFICERS OR AGENTS SHALL NOT BE RESPONSIBLE FOR THE ACCURACY OR COMPLETENESS OF SCANNED COPIES OF THIS PLAN SHEET.

TO ACCOMPANY PLANS DATED 06-15-16

2010 REVISED STANDARD PLAN RSP D74

FACE ANGLE DETAIL "A"	
LENGTH OF CURB OPENING	No. OF ANCHORS
3'-6" OR LESS	2
7'-0"	3
10'-0"	4
14'-0"	5
21'-0"	7

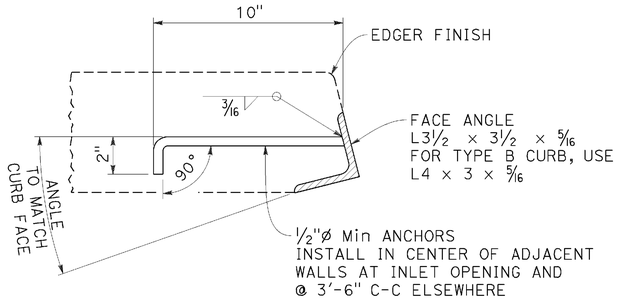

DETAIL "A"

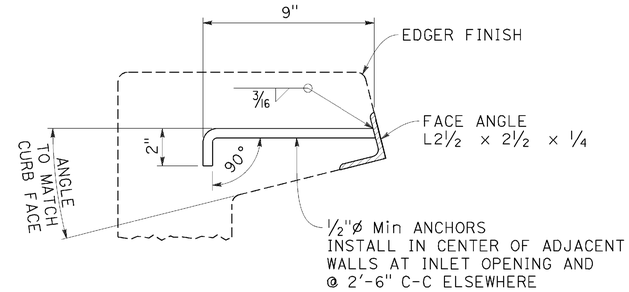

DETAIL "B"

FACE ANGLE AND ANCHOR

NOTE:

1. When shown on the project plans, place a ¾"ø plain round protection bar horizontally across the length of the opening and bend back 4" into the inlet wall on each side.

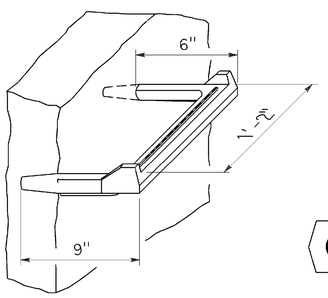

STEP INSERT

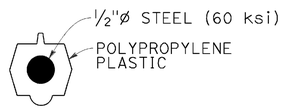

TYPICAL SECTION
(STEP INSERT)

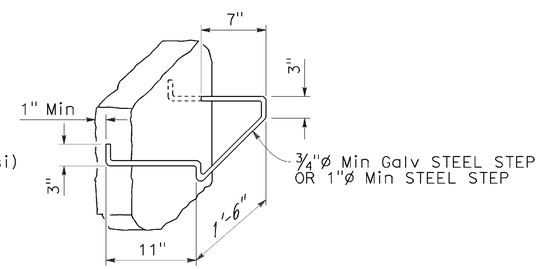

BAR STEP

STEP DETAILS

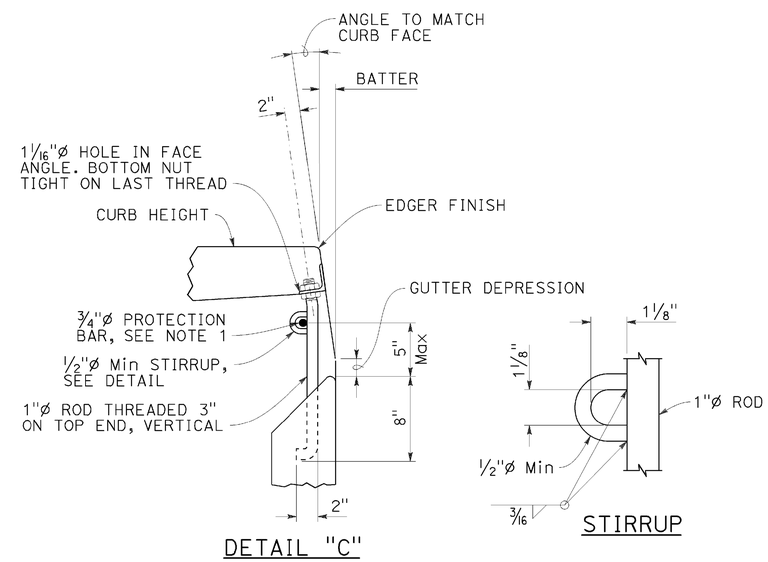

DETAIL "C"

STIRRUP

CURB SUPPORT

CURB SUPPORTS SHALL BE EVENLY SPACED AND MINIMAL IN NUMBER SUCH THAT MAXIMUM SPAN OF UNSUPPORTED CURB IS 7'-0".

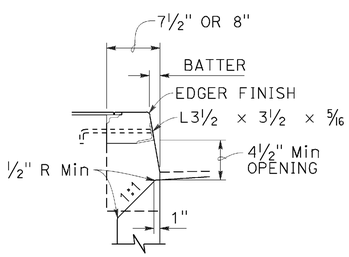

TYPE A CURBS

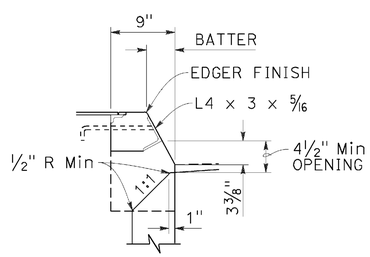

TYPE B CURBS

CURB OPENING DETAILS

STATE OF CALIFORNIA
DEPARTMENT OF TRANSPORTATION

DRAINAGE INLET DETAILS

NO SCALE

RSP D74 DATED JULY 15, 2016 SUPPLEMENTS THE STANDARD PLANS BOOK DATED 2010.

REVISED STANDARD PLAN RSP D74

DATE PLOTTED => 02-AUG-2016
TIME PLOTTED => 08:26

Dist	COUNTY	ROUTE	POST MILES TOTAL PROJECT	SHEET No.	TOTAL SHEETS
02	Tri	299	0.0/8.3	91	103

Raymond Don Tsztoo
REGISTERED CIVIL ENGINEER

April 19, 2013
PLANS APPROVAL DATE

REGISTERED PROFESSIONAL ENGINEER Raymond Don Tsztoo No. C37332 Exp. 6-30-14 CIVIL STATE OF CALIFORNIA

THE STATE OF CALIFORNIA OR ITS OFFICERS OR AGENTS SHALL NOT BE RESPONSIBLE FOR THE ACCURACY OR COMPLETENESS OF SCANNED COPIES OF THIS PLAN SHEET.

TO ACCOMPANY PLANS DATED 06-15-16

2010 REVISED STANDARD PLAN RSP D77A

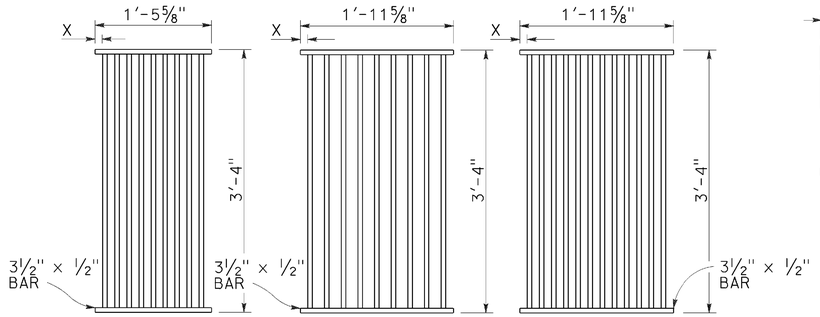

TYPE 18-9

1⅜" Clear spacing. Use within the roadbed on highways where bicycles and pedestrians are excluded.

TYPE 24-9

2" Clear spacing. Use in locations off the roadbed on all types of highways.

TYPE 24-12

1⅜" Clear spacing. Use within the roadbed on highways where bicycles and pedestrians are excluded.

RECTANGULAR GRATE DETAILS

(See table below)

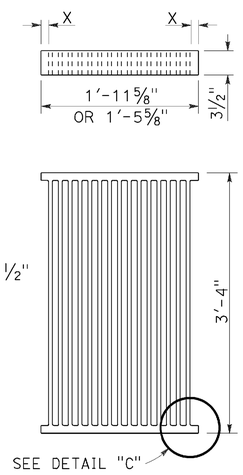

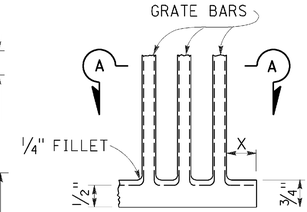

DETAIL "C"

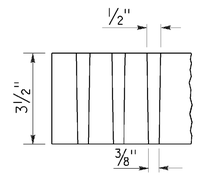

SECTION A-A

ALTERNATIVE CAST DUCTILE IRON GRATE OR CAST CARBON STEEL GRATE

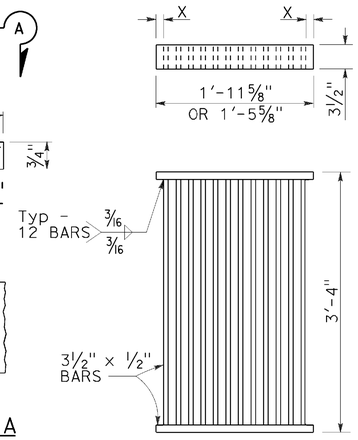

ALTERNATIVE WELDED GRATE

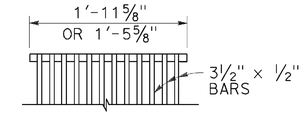

CAST END BLOCK

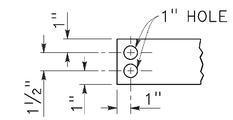

END OF BAR

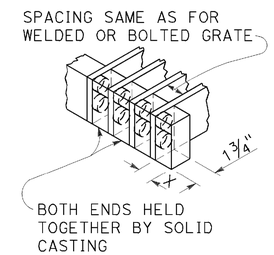

ALTERNATIVE CAST DUCTILE IRON OR CAST CARBON STEEL END BLOCK GRATE

NOTES:

1. Grate type numbers refer to approximate width of grate in inches and number of bars, respectively.
2. Contractor has the option of using cast ductile iron, cast carbon steel, welded, bolted, or cast end block grate.
3. Rounded top of bars optional on all grates.
4. Pipe inlets with a grate shall be placed so that bars parallel direction of principle surface flow.
5. Complete joint penetration butt welds may be substituted for the fillet welds on all anchors.
6. Standard square, hexagon, round or equivalent headed anchors may be substituted for the right angle hooks on the anchors shown on this plan.
7. Grate and frame weights are based on welded grates (weights of face angles, steps, protection bars, etc. are not included).
8. Connect chain to grate and frame only at locations shown on the plans. When chain is required, do not use cast ductile iron grates.

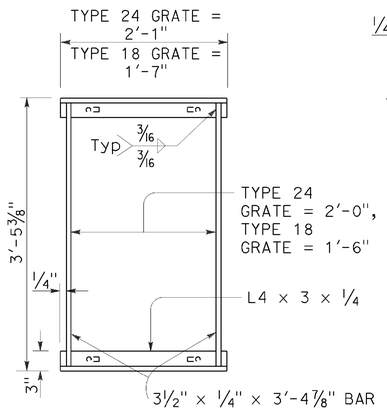

TYPICAL FRAME

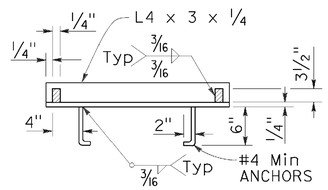

CROSS SECTION

(Thru frame)

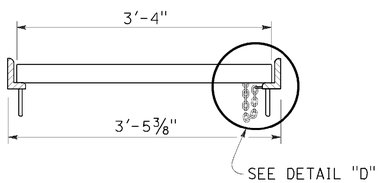

LONGITUDINAL SECTION

(Thru frame and grate)

RECTANGULAR FRAME DETAILS

(For all rectangular grates)

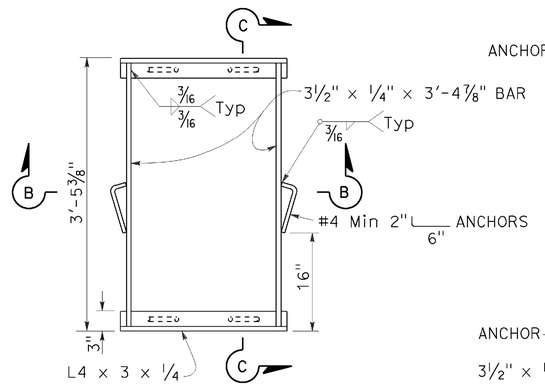

TYPICAL FRAME

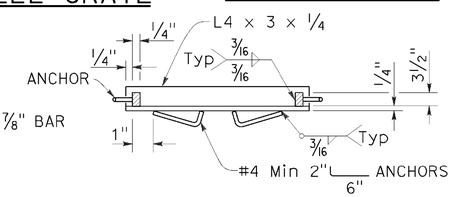

SECTION B-B

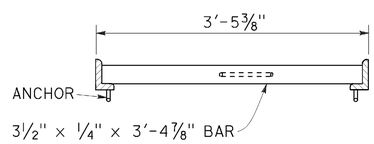

SECTION C-C

ALTERNATIVE ANCHOR FOR RECTANGULAR FRAME

(For details not shown, See Rectangular Frame Details)

INLET TYPE	GRATE TYPE	No. OF GRATES	WEIGHT LB
GDO	24-12	2	634
GOL-7	24-12	1	326
GOL-10	24-12	1	326
GO,G1,G2,G3,G4 (TYPE 24)	24-9	1	263
	24-12	1	326
G4 (TYPE 18),G5,G6	18-9	1	249
GT1	18-9	2	498
GT2	18-9	2	498
GT3	24-12	2	652
GT4	24-12	2	652
TRASH RACK			22
GRATE CHAIN			3

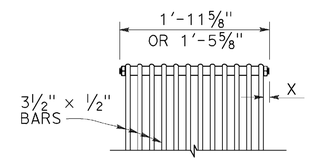

BOLTED END BLOCK

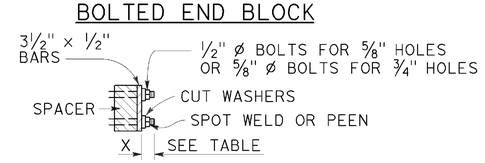

BOLTING DETAIL

ALTERNATIVE BOLTED GRATE

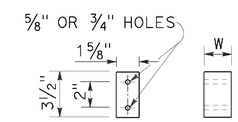

BAR SPACER

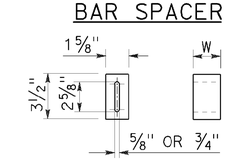

ALTERNATIVE SPACER

W = 1⅜" or 2"

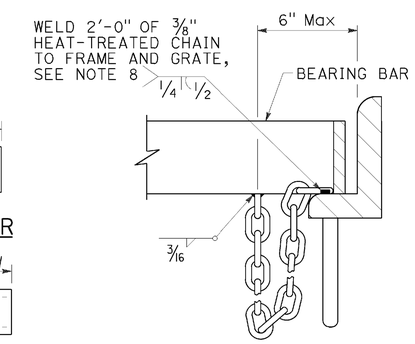

DETAIL "D"

(Steel grates only)

GRATE BAR SPACING TABLE

TYPE	No. OF BARS	CLEAR BAR SPACING	X
18-9	9	1⅜"	1 1/16"
24-9	9	2"	1 9/16"
24-12	12	1⅜"	1¼"

INLET TYPE	COVER TYPE	WEIGHT LB
OS	PLATE	174
OL-7	PLATE	170
OL-10	PLATE	170
OL-14	PLATE	170
OL-21	PLATE	170
OCP	PLATE	112
OCPI	PLATE	112
OCPI	REDWOOD	42
OMP	PLATE	177
OMPI	PLATE	177

BASIS FOR Misc IRON & STEEL FINAL PAY WEIGHTS FOR DRAINAGE INLETS

(See Note 7)

STATE OF CALIFORNIA
DEPARTMENT OF TRANSPORTATION

GRATE DETAILS No. 1

NO SCALE

RSP D77A DATED APRIL 19, 2013 SUPERSEDES RSP D77A DATED JULY 20, 2012 AND STANDARD PLAN D77A DATED MAY 20, 2011 - PAGE 164 OF THE STANDARD PLANS BOOK DATED 2010.

REVISED STANDARD PLAN RSP D77A

DATE PLOTTED => 02-AUG-2016
TIME PLOTTED => 08:27

Dist	COUNTY	ROUTE	POST MILES TOTAL PROJECT	SHEET No.	TOTAL SHEETS
02	Tri	299	0.0/8.3	92	103

REGISTERED CIVIL ENGINEER

April 19, 2013
PLANS APPROVAL DATE

Raymond Don Tsztoo No. C37332 Exp. 6-30-14 CIVIL — REGISTERED PROFESSIONAL ENGINEER — STATE OF CALIFORNIA

THE STATE OF CALIFORNIA OR ITS OFFICERS OR AGENTS SHALL NOT BE RESPONSIBLE FOR THE ACCURACY OR COMPLETENESS OF SCANNED COPIES OF THIS PLAN SHEET.

TO ACCOMPANY PLANS DATED 06-15-16

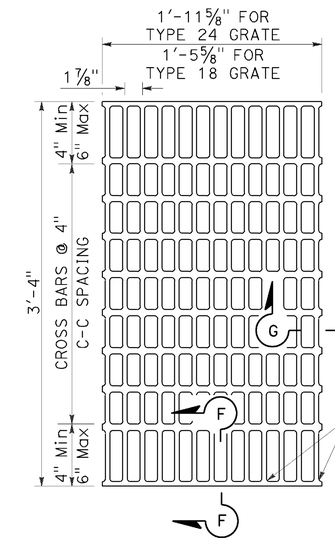

NOTES:

Bearing bars to be 3½" × ¼" bars on 1⅞" centers.

⅜"± ø Cross bars may be fillet welded, resistance welded or electroforged to bearing bars.

Weight of Type 24 grate = 141 LBS.

Weight of Type 18 grate = 107 LBS. (Type 24 grate shown).

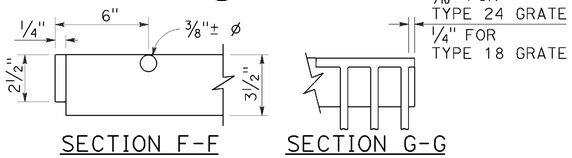

SECTION F-F SECTION G-G

TYPE 18-10 AND 24-13 GRATE

(Welded Steel)

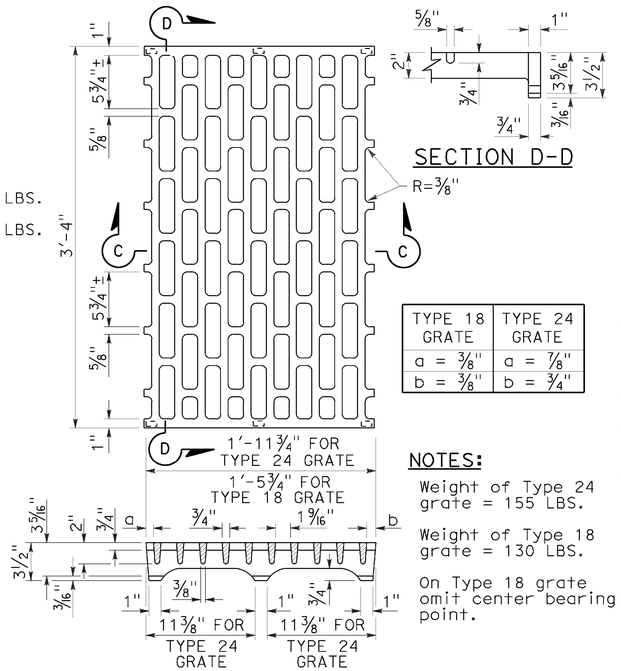

TYPE 18 GRATE	TYPE 24 GRATE
a = ⅜"	a = ⅞"
b = ⅜"	b = ¾"

SECTION D-D

NOTES:

Weight of Type 24 grate = 155 LBS.

Weight of Type 18 grate = 130 LBS.

On Type 18 grate omit center bearing point.

SECTION C-C

TYPE 18-8C AND 24-10C GRATE

(Cast ductile iron)

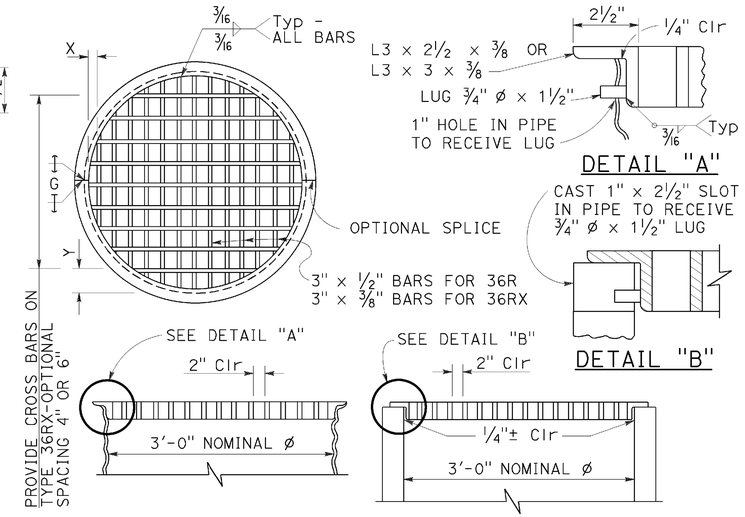

TYPE 36R AND 36RX GRATE DETAILS

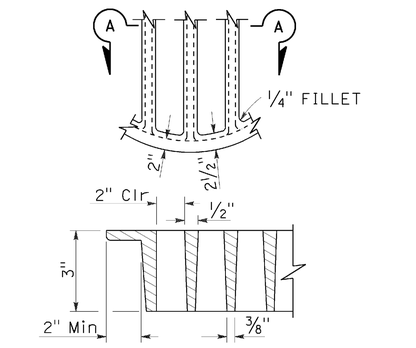

SECTION A-A

ALTERNATIVE CAST DUCTILE IRON GRATE OR CAST CARBON STEEL GRATE TYPE 36R AND 36RX

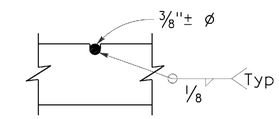

⅜"± ø Cross bars may be fillet welded, resistance welded or electroforged to bearing bars.

CROSS BAR DETAIL TYPE 36RX GRATE (WELDED STEEL)

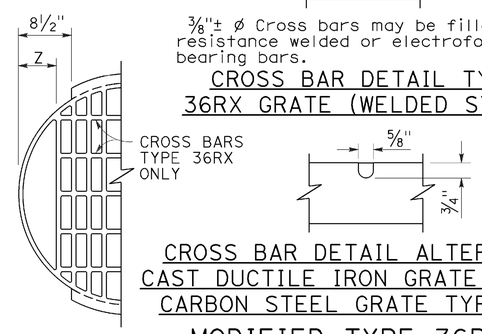

CROSS BAR DETAIL ALTERNATIVE CAST DUCTILE IRON GRATE OR CAST CARBON STEEL GRATE TYPE 36RX

MODIFIED TYPE 36R AND 36RX GRATE FOR ODI INLET

BASIS FOR Misc IRON AND STEEL FINAL PAY WEIGHTS FOR DRAINAGE INLETS

INLET TYPE	GRATE TYPE	No. OF GRATES	WEIGHT LB
GDO (SEE NOTE 4)	24-10C	2	391
	24-10S	2	456
	24-12X	2	473
	24-13	2	374
GO,GOL,G1,G2, G3,G4 (TYPE 24)	24-10C	1	202
	24-10S	1	229
	24-12X	1	239
	24-13	1	188
G4 (TYPE 18) G5,G6	18-8S	1	187
	18-9X	1	187
	18-10	1	149
GT1,GT2	18-8S	2	374
	18-9X	2	374
	18-10	2	298
GT3,GT4	24-10C	2	404
	24-10S	2	458
	24-12X	2	478
	24-13	2	376
ODI	36RX (Mod)	1	196
GMP,GCP,GCPI	36RX	1	215
ODI	36R (Mod)	1	220
GMP,GCP,GCPI	36R	1	236
TRASH RACK			22
GRATE CHAIN			3

NOTES:

1. When alternative grates are allowed - Final pay based on alternative with the lesser weight.
2. Use frame shown on Standard Plan D74A, D74B or RSP D77A as appropriate.
3. When Type 24-10S, 24-12X or 24-13 grates are used with GDO Inlets, a ¼" × 3½" × 3'-4⅞" steel bar shall be welded across the center of inlet frame to separate the individual grates.
4. See Revised Standard Plan RSP D77A for connecting chain to welded grate and frame. When chain is required, do not use cast ductile iron grate.

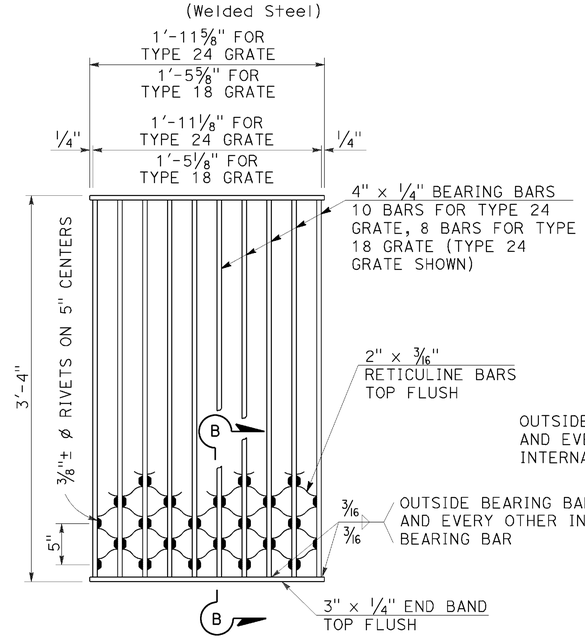

NOTES:

Weight of Type 24 grate = 182 LBS.
Weight of Type 18 grate = 145 LBS.

SECTION B-B

TYPE 18-8S AND 24-10S GRATE

(Welded Steel) Reticuline type

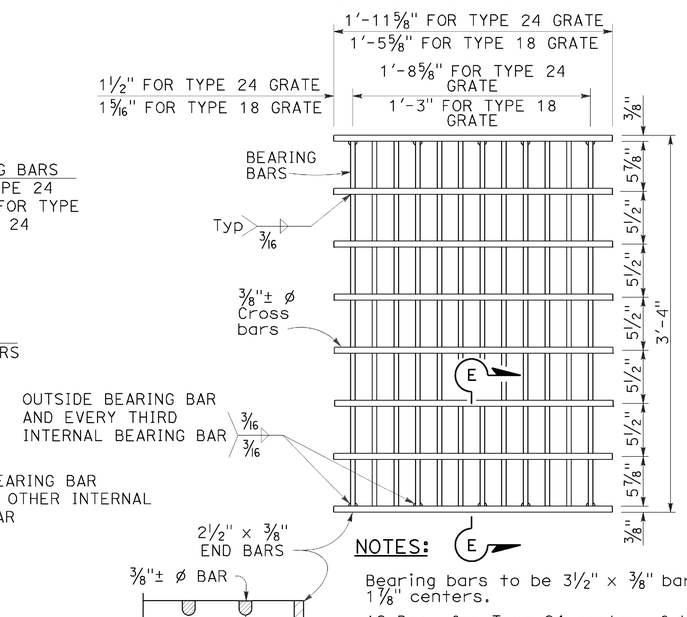

SECTION E-E

NOTES:

Bearing bars to be 3½" × ⅜" bars on 1⅞" centers.

12 Bars for Type 24 grate - 9 bars for Type 18 grates. (Type 24 grate shown).

Weight of Type 24 grate = 192 LBS.

Weight of Type 18 grate = 145 LBS.

⅜"± ø Cross bars may be fillet welded, resistance welded or electroforged to bearing bars.

TYPE 18-9X AND 24-12X GRATE

(Welded Steel)

GRATE BAR SPACING TABLE

TYPE	No. OF BARS	CLEAR BAR SPACING	X	Y 4" SPACING	Y 6" SPACING	Z
36R	13	2"	2⅛"	-	-	-
36RX (STEEL)	15	2"	9/16"	3¾"	5¾"	-
36RX (CAST)	13	2"	2⅛"	3¾"	5¾"	-
36R Mod	12	2"	2⅛"	-	-	5"
36RX Mod (STEEL)	13	2"	9/16"	3¾"	5¾"	5 11/16"
36RX Mod (CAST)	12	2"	2⅛"	3¾"	5¾"	5"

STATE OF CALIFORNIA
DEPARTMENT OF TRANSPORTATION

GRATE DETAILS No. 2

NO SCALE

RSP D77B DATED APRIL 19, 2013 SUPERSEDES RSP D77B DATED JULY 20, 2012 AND STANDARD PLAN D77B DATED MAY 20, 2011 - PAGE 165 OF THE STANDARD PLANS BOOK DATED 2010.

REVISED STANDARD PLAN RSP D77B

2010 REVISED STANDARD PLAN RSP D77B

DATE PLOTTED => 02-AUG-2016
TIME PLOTTED => 08:27

Dist	COUNTY	ROUTE	POST MILES TOTAL PROJECT	SHEET No.	TOTAL SHEETS
02	Tri	299	0.0/8.3	93	103

REGISTERED CIVIL ENGINEER

October 30, 2015
PLANS APPROVAL DATE

REGISTERED PROFESSIONAL ENGINEER Bruce D. Swanger No. C61257 Exp. 6-30-17 CIVIL STATE OF CALIFORNIA

THE STATE OF CALIFORNIA OR ITS OFFICERS OR AGENTS SHALL NOT BE RESPONSIBLE FOR THE ACCURACY OR COMPLETENESS OF SCANNED COPIES OF THIS PLAN SHEET.

TO ACCOMPANY PLANS DATED 06-15-16

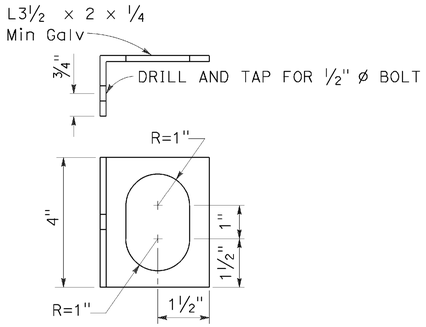

ALTERNATIVE CLIP BRACKET DETAIL

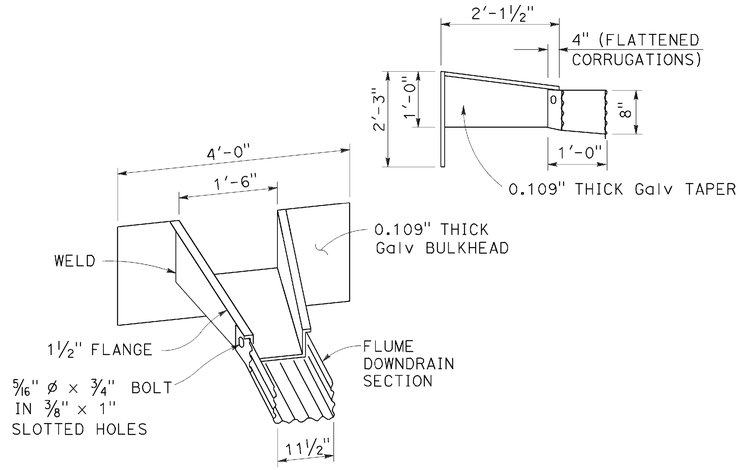

TAPERED INLET

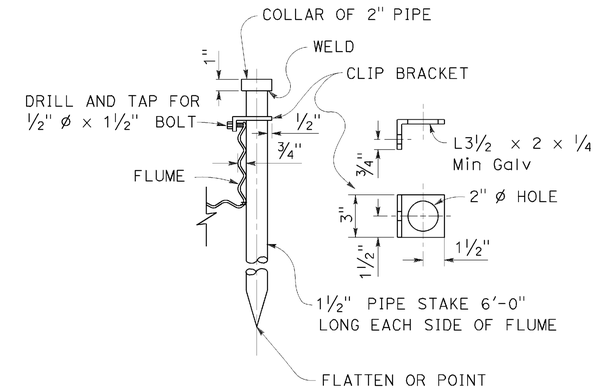

PIPE STAKE ANCHOR DETAIL

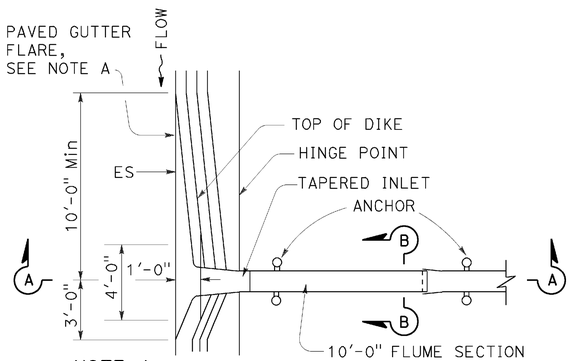

NOTE A

In sag location, use 10'-0" length of paved gutter flare on both sides of inlet.

PLAN

TAPERED INLET AND FLUME DOWNDRAIN

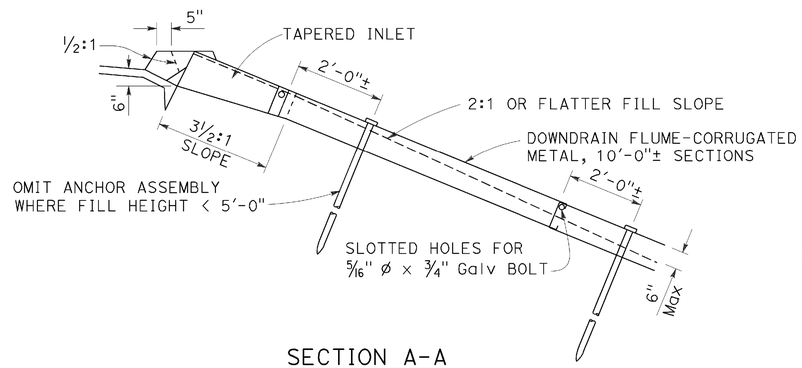

SECTION A-A

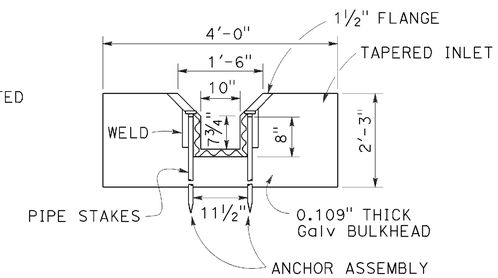

SECTION B-B

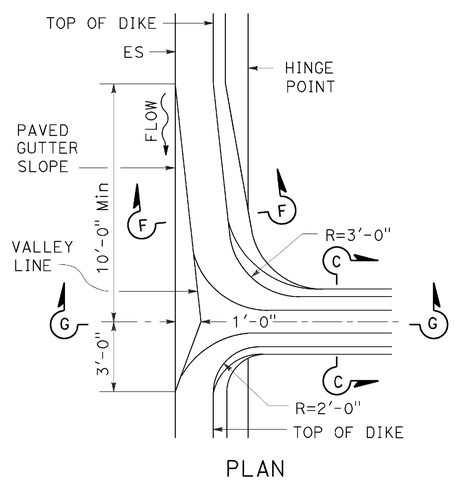

PLAN

MOUNTABLE DIKE

HOT MIX ASPHALT OVERSIDE DRAINS

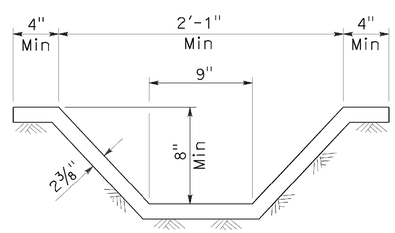

SECTION C-C

See Note 1

NOTE:

1. Cross section of slope ditch may be semicircular, vee or trapezoidal.

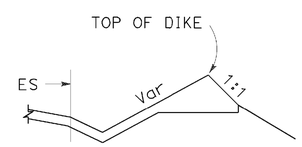

SECTION F-F

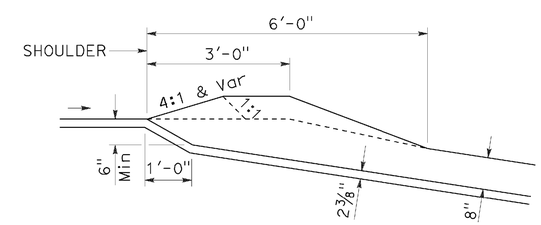

SECTION G-G

STATE OF CALIFORNIA
DEPARTMENT OF TRANSPORTATION

OVERSIDE DRAINS

NO SCALE

RSP D87D DATED OCTOBER 30, 2015 SUPERSEDES STANDARD PLAN D87D DATED MAY 20, 2011 - PAGE 185 OF THE STANDARD PLANS BOOK DATED 2010.

REVISED STANDARD PLAN RSP D87D

2010 REVISED STANDARD PLAN RSP D87D

DATE PLOTTED => 02-AUG-2016
TIME PLOTTED => 08:28

Dist	COUNTY	ROUTE	POST MILES TOTAL PROJECT	SHEET No.	TOTAL SHEETS
02	Tri	299	0.0/8.3	94	103

REGISTERED CIVIL ENGINEER

July 15, 2016
PLANS APPROVAL DATE

REGISTERED PROFESSIONAL ENGINEER — Carl M. Duan No. C59976 Exp. 6-30-18 CIVIL — STATE OF CALIFORNIA

THE STATE OF CALIFORNIA OR ITS OFFICERS OR AGENTS SHALL NOT BE RESPONSIBLE FOR THE ACCURACY OR COMPLETENESS OF SCANNED COPIES OF THIS PLAN SHEET.

TO ACCOMPANY PLANS DATED 06-15-16

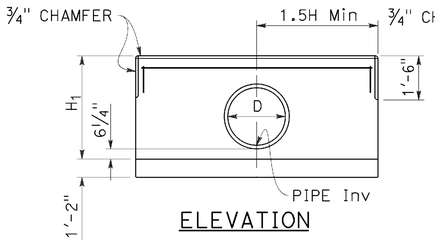

ELEVATION
STRAIGHT HEADWALL
SINGLE CIRCULAR PIPE

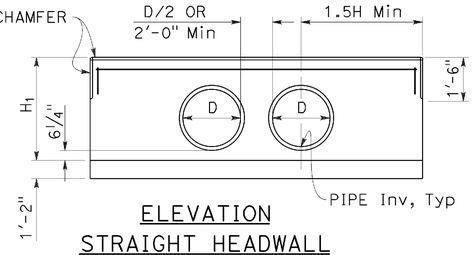

ELEVATION
STRAIGHT HEADWALL
DOUBLE CIRCULAR PIPE

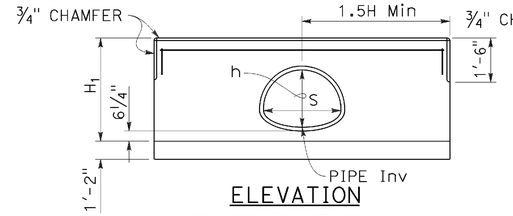

ELEVATION
STRAIGHT HEADWALL
SINGLE CMP

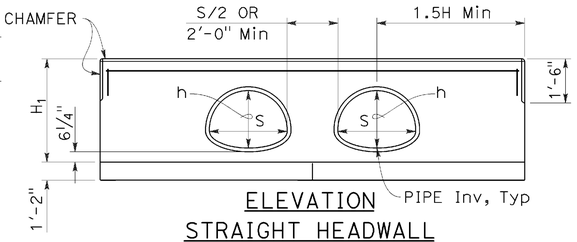

ELEVATION
STRAIGHT HEADWALL
DOUBLE CMP

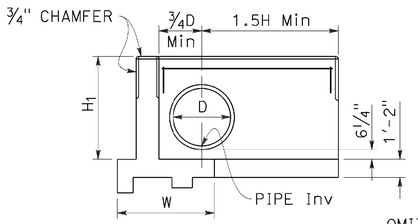

ELEVATION
"L" HEADWALL

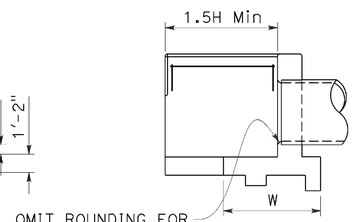

SECTION
"L" HEADWALL

H	CIRCULAR PIPE SIZE D	CMP ARCH SIZE S x h
2'-8"	12"	-
2'-11"	15"	21" x 15"
3'-2"	18"	24" x 18"
3'-5"	21"	28" x 20"
3'-8"	24"	35" x 24"
3'-11"	27"	-
4'-2"	30"	42" x 29"
4'-5"	33"	49" x 33"
4'-8"	36"	-
4'-11"	39"	57" x 38"
5'-2"	42"	64" x 43"
5'-5"	45"	-
5'-8"	48"	71" x 47"
5'-11"	51"	-
6'-2"	54"	-

CIRCULAR PIPE CULVERT HEADWALLS

See Note 2

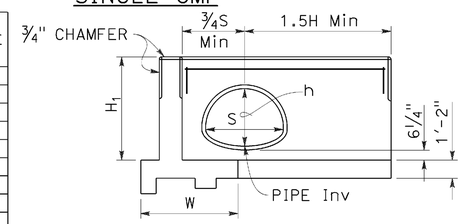

ELEVATION
"L" HEADWALL

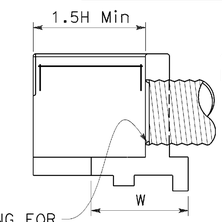

SECTION
"L" HEADWALL

CMP ARCH CULVERT HEADWALLS

See Note 2

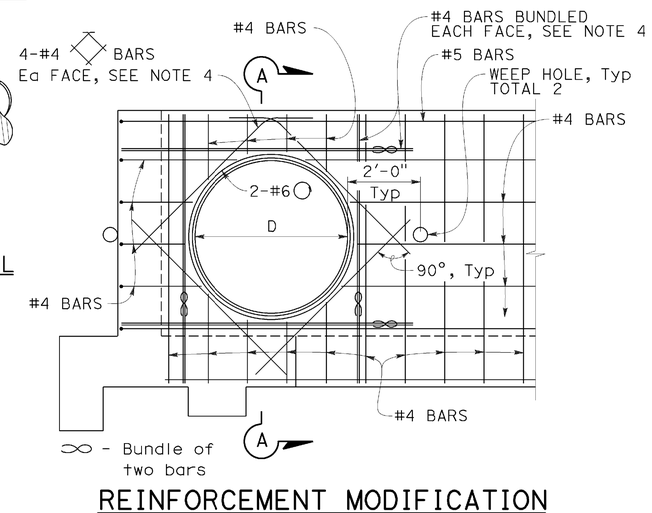

REINFORCEMENT MODIFICATION

"L" headwall shown. Straight headwall similar.
Circular pipe shown. CMP arch similar.

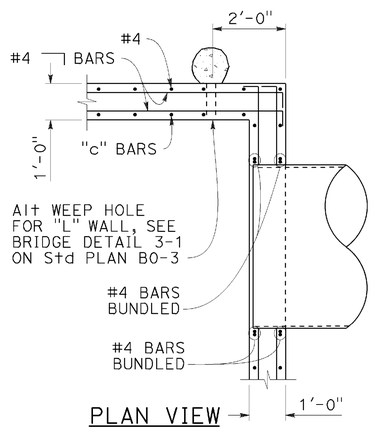

PLAN VIEW
STEM WALL

"L" headwall shown.
Straight headwall similar.

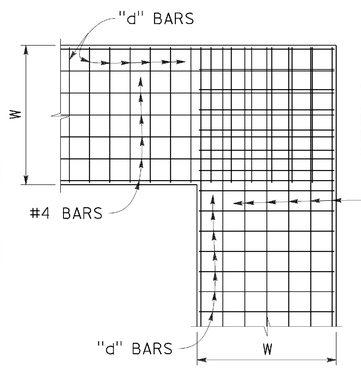

PLAN VIEW
FOOTING

"L" headwall shown.
Straight headwall similar.

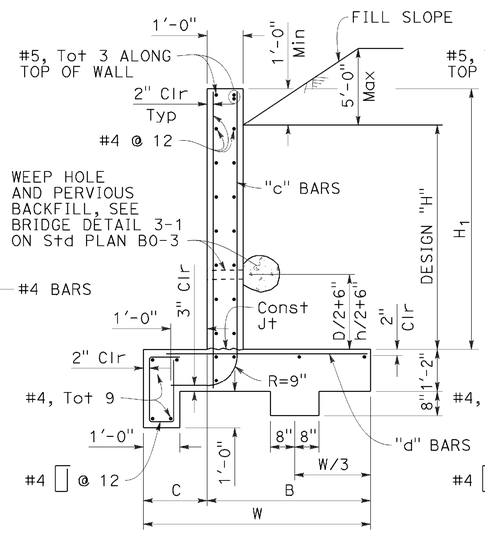

TYPICAL SECTION

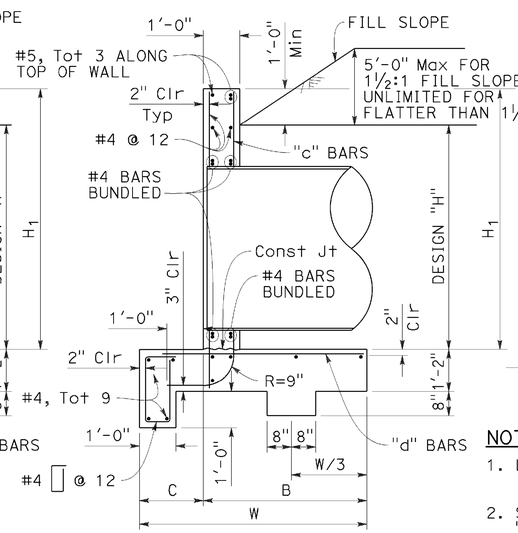

SECTION A-A

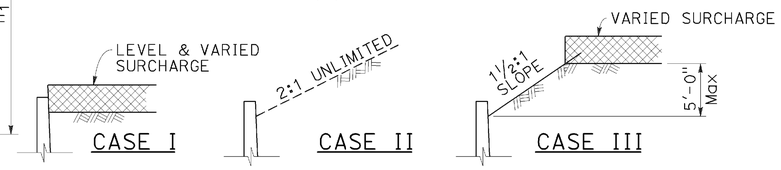

DETAIL OF DESIGN LOADING CASES

		H	2'-8"	2'-11"	3'-2"	3'-5"	3'-8"	3'-11"	4'-2"	4'-5"	4'-8"	4'-11"	5'-2"	5'-5"	5'-8"	5'-11"	6'-2"
		W	4'-7"	4'-9"	4'-10"	5'-0"	5'-1"	5'-2"	5'-3"	5'-5"	5'-6"	5'-7"	5'-8"	5'-9"	5'-11"	6'-0"	6'-3"
		C	1'-2"	1'-2"	1'-2"	1'-3"	1'-3"	1'-3"	1'-3"	1'-4"	1'-4"	1'-4"	1'-5"	1'-5"	1'-6"	1'-6"	1'-9"
		B	3'-5"	3'-7"	3'-8"	3'-9"	3'-10"	3'-11"	4'-0"	4'-1"	4'-2"	4'-3"	4'-3"	4'-4"	4'-5"	4'-6"	4'-6"
		"c" BARS	#4 @ 12	#4 @ 12	#4 @ 12	#4 @ 12	#4 @ 12	#4 @ 12	#4 @ 12	#4 @ 12	#4 @ 12	#4 @ 12	#4 @ 12	#4 @ 12	#4 @ 12	#4 @ 12	#5 @ 12
		"d" BARS	#4 @ 12	#4 @ 8	#4 @ 8	#4 @ 8	#4 @ 8	#5 @ 12	#5 @ 12	#5 @ 12	#5 @ 12	#5 @ 8	#5 @ 8	#5 @ 8	#5 @ 8	#6 @ 8	#6 @ 8
		* Conc CY/LF	0.404	0.412	0.415	0.423	0.426	0.430	0.433	0.440	0.444	0.448	0.451	0.455	0.462	0.466	0.477
		* Reinf LB/LF	23	24	24	25	25	26	27	27	28	28	29	29	30	31	32
**CASE I		Ser (q'o, B')	0.79, 4.66	0.83, 4.57	0.88, 4.58	0.89, 4.73	0.93, 4.74	0.93, 4.75	1.02, 4.75	1.02, 4.92	1.07, 4.93	1.11, 4.94	1.12, 4.98	1.16, 4.99	1.17, 5.16	1.21, 5.18	1.15, 5.53
		Str (q'o, B')	1.48, 1.75	1.53, 1.80	1.65, 1.76	1.64, 1.88	1.76, 1.85	1.89, 1.83	2.02, 1.80	1.97, 1.95	2.08, 1.94	2.20, 1.93	2.28, 1.92	2.39, 1.92	2.31, 2.08	2.41, 2.09	2.17, 2.41
		Extr (q'o, B')	0.65, 4.16	0.68, 4.27	0.72, 4.29	0.74, 4.44	0.78, 4.46	0.82, 4.47	0.86, 4.47	0.87, 4.63	0.92, 4.63	0.96, 4.64	0.98, 4.69	1.03, 4.69	1.04, 4.84	1.09, 4.84	1.05, 5.18
**CASE II		Ser (q'o, B')	0.41, 4.52	0.44, 4.67	0.48, 4.73	0.51, 4.90	0.55, 4.95	0.59, 5.00	0.63, 5.04	0.65, 5.21	0.70, 5.26	0.74, 5.30	0.77, 5.37	0.81, 5.40	0.83, 5.58	0.88, 5.61	0.86, 5.96
		Str (q'o, B')	1.05, 4.49	1.10, 4.64	1.15, 4.69	1.19, 4.86	1.24, 4.90	1.30, 4.94	1.36, 4.98	1.39, 5.15	1.46, 5.18	1.52, 5.22	1.56, 5.28	1.62, 5.31	1.62, 5.48	1.72, 5.51	1.69, 5.85
		Extr (q'o, B')	0.98, 3.90	1.03, 4.00	1.10, 4.01	1.13, 4.15	1.19, 4.15	1.26, 4.15	1.33, 4.14	1.37, 4.28	1.44, 4.27	1.52, 4.26	1.57, 4.29	1.65, 4.28	1.68, 4.41	1.77, 4.40	1.72, 4.71
**CASE III		Ser (q'o, B')	0.61, 4.53	0.64, 4.73	0.68, 4.76	0.70, 4.91	0.74, 4.91	0.79, 4.94	0.83, 4.93	0.85, 5.08	1.17, 4.03	1.23, 4.03	1.27, 4.06	1.34, 4.02	1.36, 4.15	1.43, 4.11	1.36, 4.45
		Str (q'o, B')	0.99, 4.28	1.04, 4.67	1.10, 4.69	1.13, 4.83	1.19, 4.82	1.25, 4.83	1.32, 4.82	1.35, 4.95	2.02, 2.66	2.16, 2.62	2.25, 2.59	2.44, 2.48	2.49, 2.54	2.70, 2.44	2.50, 2.72
		Extr (q'o, B')	0.90, 3.88	0.95, 3.93	1.01, 3.91	1.04, 4.02	1.11, 3.97	1.18, 3.92	1.25, 3.90	1.28, 4.00	1.35, 3.94	1.43, 3.92	1.11, 5.14	1.55, 3.87	1.58, 3.97	1.67, 3.91	1.60, 4.22

* Quantities include 1'-0" extension above the design "H" limit.
** q'o = net bearing stress (ksf), B' = effective footing width (ft)
Ser - service limit
Str - strength limit
Extr - extreme event

REINFORCED CONCRETE HEADWALL

Quantities do not include added diagonals and do not consider pipe occupancy.

NOTE: Reinforced Concrete: fy = 60,000 psi
f'c = 3,600 psi

Earth Density: 120 pcf
Equivalent Fluid Pressure: 36 pcf

NOTES:

1. Length of wall from ℄ pipe to end of wall is 1.5H Min, unless a greater length is shown on project plans.
2. Single circular pipe or single CMP shown for "L" headwall. For double pipe in "L" headwall, see "ELEVATION STRAIGHT HEADWALL DOUBLE CIRCULAR PIPE" or "ELEVATION STRAIGHT HEADWALL DOUBLE CMP" detail for additional information.
3. Cable railing to be installed on top of headwall when shown on Project Plans. See Revised Standard Plan RSP B11-47 for cable railing details.
4. Adjacent to each side of the opening, place additional reinforcement equivalent to half the interupted main reinforcement. For pipes 42" diameter and greater, add 4 diagonals, 1 bar each side. Extend bars one development length past the intersection with the adjacent diagonal bar, or where bars intersect mid thickness of adjacent wall, bottom slab or at top of wall, bend ends as required into same plane.
5. Quantities are approximate and for design purposes only. No deduction is made for pipe or arch occupancy.

STATE OF CALIFORNIA
DEPARTMENT OF TRANSPORTATION

PIPE CULVERT HEADWALLS STRAIGHT AND "L"

NO SCALE

RSP D89 DATED JULY 15, 2016 SUPERSEDES STANDARD PLAN D89
DATED MAY 20, 2011 - PAGE 188 OF THE STANDARD PLANS BOOK DATED 2010.

REVISED STANDARD PLAN RSP D89

2010 REVISED STANDARD PLAN RSP D89

DATE PLOTTED => 02-AUG-2016
TIME PLOTTED => 08:28

Dist	COUNTY	ROUTE	POST MILES TOTAL PROJECT	SHEET No.	TOTAL SHEETS
02	Tri	299	0.0/8.3	95	103

Raymond Don Tsztoo
REGISTERED CIVIL ENGINEER

October 30, 2015
PLANS APPROVAL DATE

REGISTERED PROFESSIONAL ENGINEER
Raymond Don Tsztoo
No. C37332
Exp. 6-30-16
CIVIL
STATE OF CALIFORNIA

THE STATE OF CALIFORNIA OR ITS OFFICERS OR AGENTS SHALL NOT BE RESPONSIBLE FOR THE ACCURACY OR COMPLETENESS OF SCANNED COPIES OF THIS PLAN SHEET.

TO ACCOMPANY PLANS DATED 06-15-16

ANNULAR AND HELICAL PROFILE

COUPLING TYPE	PIPE CORRUGATION	PIPE SIZE	W OR A	PIPE WALL THICKNESS		BAND THICKNESS		BAR AND STRAP (CSP ONLY)				ANGLE						
												DIMENSIONS		BOLTS (No.- Dia)		RIVETS ANGLE TO BAND		SPOT WELDS ANGLE TO BAND
				CSP	CAP	CSP	CAP	STRAP THICKNESS	BOLTS Dia	BAR Dia	BAR YIELD STRENGTH	CSP	CAP	CSP	CAP	CSP	CAP	CSP
TWO PIECE INTEGRAL FLANGE	1½′ × ¼″	6″	7″	0.064″-0.168″		0.052″								3-⅜″				
	1½′ × ¼″	8″-10″	7″	0.064″-0.168″	0.060″-0.164″	0.064″	0.060″							3-⅜″	3-⅜″			
ANNULAR	2⅔″ × ½″	THROUGH 24″	12″	0.064″-0.168″	0.060″-0.164″	0.064″	0.060″					2″ × 2″ × 3/16″	2″ × 2″ × 3/16″	3-½″	3-½″	3-⅜″	3-⅜″	3-½″
HUGGER	2⅔″ × ½″ REROLLED END	THROUGH 24″	10½″	0.064″-0.168″		0.064″		0.079″	½″	⅞″	32 ksi							

SPIRAL RIB PROFILE

COUPLING TYPE	PIPE CORRUGATION	PIPE SIZE	W	PIPE WALL THICKNESS		BAND THICKNESS		BAR AND STRAP (SSRP ONLY)				ANGLE						
												DIMENSIONS		BOLTS (No.- Dia)		RIVETS ANGLE TO BAND		SPOT WELDS ANGLE TO BAND
				SSRP	ASRP	SSRP	ASRP	STRAP THICKNESS	BOLTS Dia	BAR Dia	BAR YIELD STRENGTH	SSRP	ASRP	SSRP	ASRP	SSRP	ASRP	SSRP
ANNULAR	2⅔″ × ½″ * REROLLED END	24″	12″	0.064″-0.168″	0.060″-0.164″	0.064″	0.060″					2″ × 2″ × 3/16″	2″ × 2″ × 3/16″	3-½″	3-½″	3-⅜″	3-⅜″	3-½″
HUGGER	2⅔″ × ½″ * REROLLED END	24″	10½″	0.064″-0.168″		0.064″		0.079″	½″	⅞″	32 ksi							

* See Note 11.

11. All profiles of Spiral Rib Pipe (¾″ × ¾″ ribs at 7½″ pitch and ¾″ × 1″ ribs at 11½″ pitch in both steel and aluminum and ¾″ × 1″ ribs at 8½″ pitch in steel only) shall be manufactured with rerolled ends. Corrugation profile of the rerolled ends shall be 2⅔″ × ½″ annual corrugations with a minimum of two full corrugations at each end.

NOTES:

1. For helically corrugated coupling bands, the connection angles may be oriented parallel to the pipe axis, provided connecting holes are slotted lengthwise sufficiently to allow adjustment for the helix angle.
2. Tension strap may be connected to band with either spot welds or fillet welds that develop minimum required strength of strap.
3. Use 1¼″ gage line dimension on attached angle leg for rivets and spot welds.
4. Band thickness shall not be less than:
   a. 3 standard thicknesses lighter than the thickness of the pipe for Corrugated Steel Pipe.
   b. 2 standard thicknesses lighter than the thickness of the pipe and in no case lighter than 0.060″ for Corrugated Aluminum Pipe.
5. Dimensions, thicknesses and strengths shown are minimum.
6. For pipe arches use same width band as for round pipe of equal periphery.
7. Fillet welds of equivalent strength may be substituted for spot welds or rivets.
8. Spot welds shall develop minimum required strength of strap.
9. Pipe with rerolled ends having at least two 2⅔″ × ½″ annular corrugations at each end with or without an upturned flange may be connected with any of the annular coupling bands shown for pipe of the same diameter and wall thickness and having 2⅔″ × ½″ corrugations.
10. For downdrain applications, two piece integral flange couplers shall have factory applied sleeve type rubber gaskets with a minimum length of 7″ measured along the length of the pipe.

STATE OF CALIFORNIA
DEPARTMENT OF TRANSPORTATION

CORRUGATED METAL PIPE COUPLING DETAILS No. 7 DOWNDRAIN

NO SCALE

RSP D97G DATED OCTOBER 30, 2015 SUPERSEDES STANDARD PLAN D97G DATED MAY 20, 2011 - PAGE 202 OF THE STANDARD PLANS BOOK DATED 2010.

REVISED STANDARD PLAN RSP D97G

2010 REVISED STANDARD PLAN RSP D97G

DATE PLOTTED => 02-AUG-2016
TIME PLOTTED => 08:29

Dist	COUNTY	ROUTE	POST MILES TOTAL PROJECT	SHEET No.	TOTAL SHEETS
02	Tri	299	0.0/8.3	96	103

REGISTERED CIVIL ENGINEER

July 19, 2013
PLANS APPROVAL DATE

REGISTERED PROFESSIONAL ENGINEER
Gurinderpal Bhullar
No. C48815
Exp. 9-30-14
CIVIL
STATE OF CALIFORNIA

THE STATE OF CALIFORNIA OR ITS OFFICERS OR AGENTS SHALL NOT BE RESPONSIBLE FOR THE ACCURACY OR COMPLETENESS OF SCANNED COPIES OF THIS PLAN SHEET.

TO ACCOMPANY PLANS DATED 06-15-16

2010 REVISED STANDARD PLAN RSP T9

TABLE 1

TAPER LENGTH CRITERIA AND CHANNELIZING DEVICE SPACING

SPEED (S)	MINIMUM TAPER LENGTH * FOR WIDTH OF OFFSET 12 FEET (W)				MAXIMUM CHANNELIZING DEVICE SPACING		
					X	Y	Z **
	TANGENT 2L	MERGING L	SHIFTING L/2	SHOULDER L/3	TAPER	TANGENT	CONFLICT
mph	ft	ft	ft	ft	ft	ft	ft
20	160	80	40	27	20	40	10
25	250	125	63	42	25	50	12
30	360	180	90	60	30	60	15
35	490	245	123	82	35	70	17
40	640	320	160	107	40	80	20
45	1080	540	270	180	45	90	22
50	1200	600	300	200	50	100	25
55	1320	660	330	220	55	110	27
60	1440	720	360	240	60	120	30
65	1560	780	390	260	65	130	32
70	1680	840	420	280	70	140	35

* - For other offsets, use the following merging taper length formula for L:
For speed of 40 mph or less, $L = WS^2/60$
For speed of 45 mph or more, $L = WS$

Where: L = Taper length in feet
W = Width of offset in feet
S = Posted speed limit, off-peak 85th-percentile speed prior to work starting, or the anticipated operating speed in mph

** - Use for taper and tangent sections where there are no pavement markings or where there is a conflict between existing pavement markings and channelizers (CA).

TABLE 2

LONGITUDINAL BUFFER SPACE AND FLAGGER STATION SPACING

SPEED *	Min D **	DOWNGRADE Min D ***		
		-3%	-6%	-9%
mph	ft	ft	ft	ft
20	115	116	120	126
25	155	158	165	173
30	200	205	215	227
35	250	257	271	287
40	305	315	333	354
45	360	378	400	427
50	425	446	474	507
55	495	520	553	593
60	570	598	638	686
65	645	682	728	785
70	730	771	825	891

* - Speed is posted speed limit, off-peak 85th-percentile speed prior to work starting, or the anticipated operating speed in mph

** - Longitudinal buffer space or flagger station spacing

*** - Use on sustained downgrade steeper than -3 percent and longer than 1 mile.

TABLE 3

ADVANCE WARNING SIGN SPACING

ROAD TYPE	DISTANCE BETWEEN SIGNS *		
	A	B	C
	ft	ft	ft
URBAN - 25 mph OR LESS	100	100	100
URBAN - MORE THAN 25 mph TO 40 mph	250	250	250
URBAN - MORE THAN 40 mph	350	350	350
RURAL	500	500	500
EXPRESSWAY / FREEWAY	1000	1500	2640

* - The distances are approximate, are intended for guidance purposes only, and should be applied with engineering judgment. These distances should be adjusted by the Engineer for field conditions, if necessary, by increasing or decreasing the recommmended distances.

STATE OF CALIFORNIA
DEPARTMENT OF TRANSPORTATION

TRAFFIC CONTROL SYSTEM TABLES FOR LANE AND RAMP CLOSURES

NO SCALE

RSP T9 DATED JULY 19, 2013 SUPERSEDES RSP T9 DATED APRIL 19, 2013 THAT SUPPLEMENTS THE STANDARD PLANS BOOK DATED 2010.

REVISED STANDARD PLAN RSP T9

DATE PLOTTED => 02-AUG-2016
TIME PLOTTED => 08:29

TO ACCOMPANY PLANS DATED 06-15-16

Dist	COUNTY	ROUTE	POST MILES TOTAL PROJECT	SHEET No.	TOTAL SHEETS
02	Tri	299	0.0/8.3	97	103

REGISTERED CIVIL ENGINEER

April 19, 2013
PLANS APPROVAL DATE

REGISTERED PROFESSIONAL ENGINEER Gurinderpal Bhullar No. C48815 Exp. 9-30-14 CIVIL STATE OF CALIFORNIA

THE STATE OF CALIFORNIA OR ITS OFFICERS OR AGENTS SHALL NOT BE RESPONSIBLE FOR THE ACCURACY OR COMPLETENESS OF SCANNED COPIES OF THIS PLAN SHEET.

NOTES:

See Revised Standard Plan RSP T9 for tables.

Use cone spacing X for taper segment, Y for tangent segment or Z for conflict situations, as approriate, per Table 1, unless X, Y, or Z cone spacing is shown on this sheet.

Unless otherwise specified in the special provisions, all temporary warning signs shall have black legend on fluorescent orange background.

California codes are designated by (CA). Otherwise, Federal (MUTCD) codes are shown.

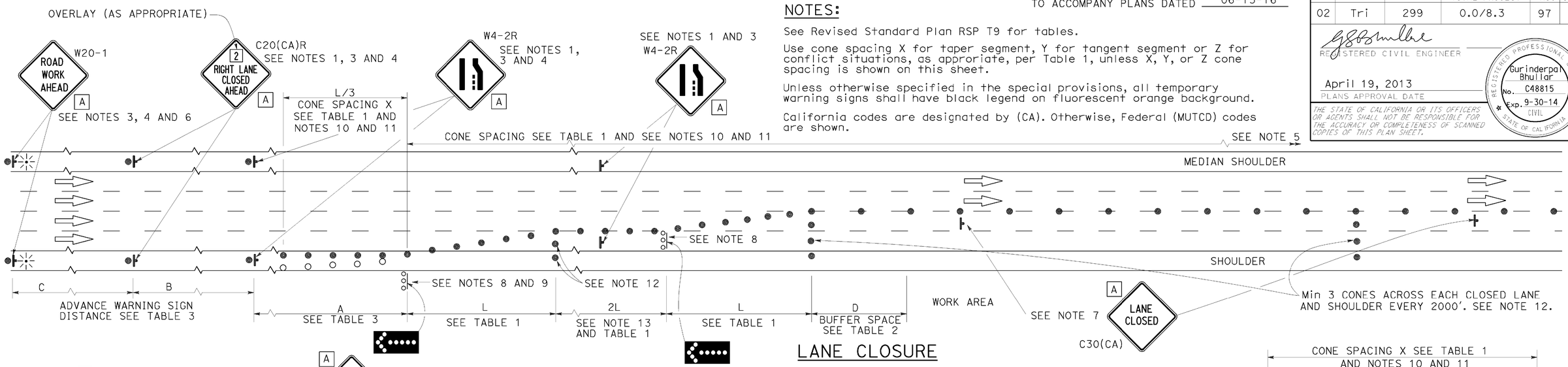

LANE CLOSURE

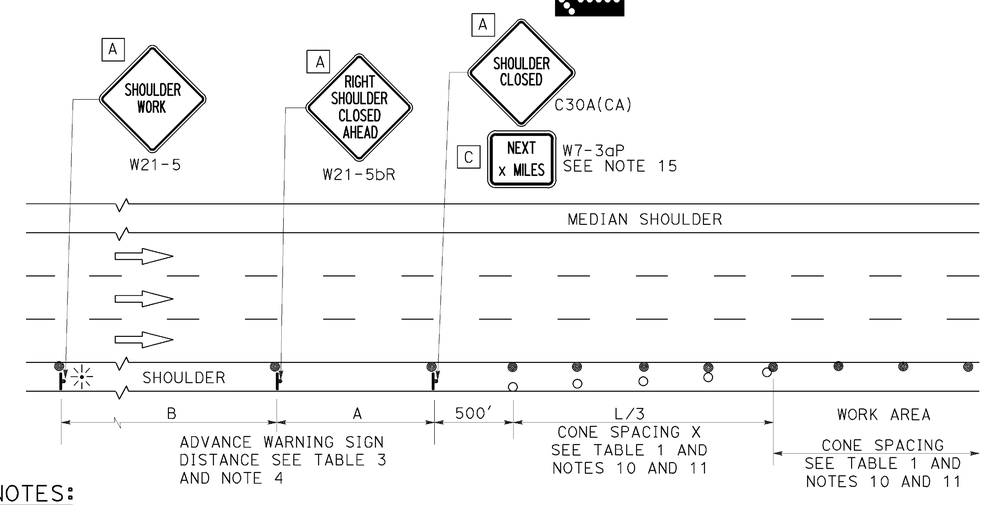

SHOULDER CLOSURE

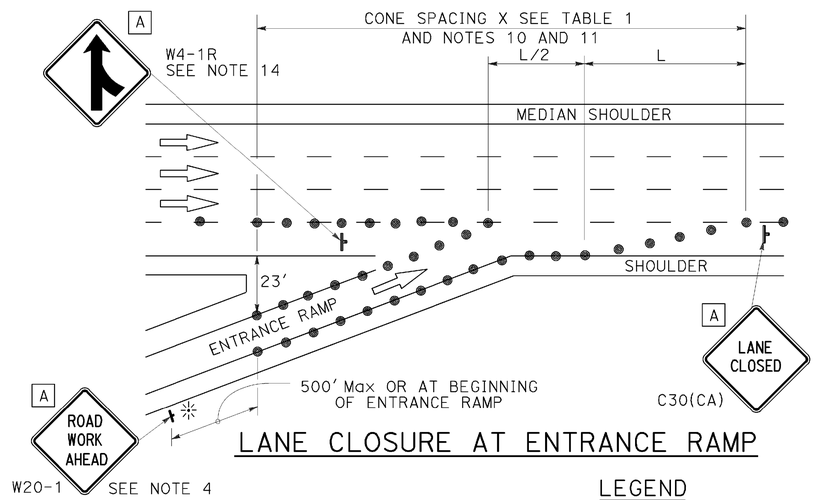

LANE CLOSURE AT ENTRANCE RAMP

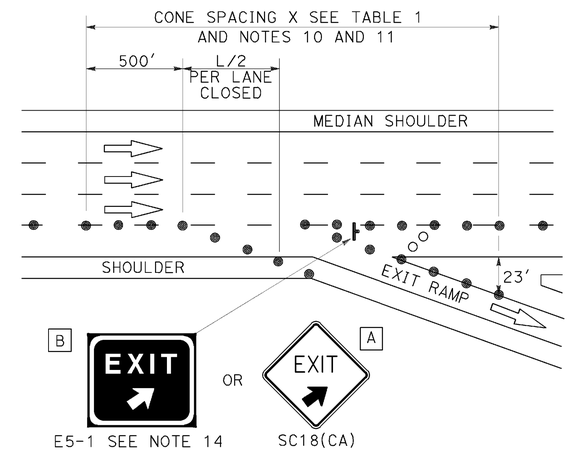

LANE CLOSURE AT EXIT RAMP

NOTES:

1. Median lane closures shall conform to the details as shown except that C20(CA)L and W4-2L signs shall be used.
2. At least one person shall be assigned to provide full time maintenance of traffic control devices for lane closures.
3. Duplicate sign installations are not required:
   a) On opposite shoulder if at least one-half of the available lanes remain open to traffic.
   b) In the median if the width of the median shoulder is less than 8' and the outside lanes are to be closed.
4. Each advance warning sign on each side of the roadway shall be equipped with at least two flags for daytime closure. Each flag shall be at least 16" x 16" in size and shall be orange or fluorescent red-orange in color. Flashing beacons shall be placed at the locations indicated for lane closure during hours of darkness.
5. A G20-2 "END ROAD WORK" sign, with minimum size of 48" x 24" as appropriate, shall be placed at the end of the lane closure unless the end of work area is obvious or ends within a larger project's limits.
6. If the W20-1 sign would follow within 2000' of a stationary W20-1 or G20-1 "ROAD WORK NEXT _____ MILES", use a C20(CA) sign for the first advance warning sign.
7. Place a C30(CA) sign every 2000' throughout length of lane closure.
8. One flashing arrow sign for each lane closed. The flashing arrow signs shall be Type I.
9. A minimum 1500' of sight distance shall be provided where possible for vehicles approaching the first flashing arrow sign. Lane closures shall not begin at top of crest vertical curve or on a horizontal curve.
10. All cones used for lane closures during the hours of darkness shall be fitted with retroreflective bands (or sleeves) as specified in the specifications.
11. Portable delineators, placed at one-half the spacing indicated for traffic cones may be used instead of cones for daytime closures only.
12. Unless otherwise specified in the special provisions, a minimum of 3 cones shall be placed transversely across each closed lane and shoulder at each location where a taper across a traffic lane ends and every 2000' as shown on the "Lane Closure" detail. Two Type II barricades may be used instead of the 3 cones. The transverse alignment of the cones or barricades on the closed shoulder may be shifted from the transverse alignment to provide access to the work.
13. Unless otherwise specified in the special provisions, the 2L tangent shown along lane lines shall be used between the L tapers required for each closed traffic lane.
14. Unless otherwise specified in the special provisions, the E5-1 or SC18(CA) and W4-1 signs shall be used as shown.
15. A W7-3aP "NEXT____ MILES" plaque must be used if theshoulder closure extends beyond the distance that can be perceived by road users.

LEGEND

- TRAFFIC CONE
- TRAFFIC CONE (OPTIONAL TAPER)
- TEMPORARY TRAFFIC CONTROL SIGN
- FLASHING ARROW SIGN (FAS)
- FAS SUPPORT OR TRAILER
- PORTABLE FLASHING BEACON

SIGN PANEL SIZE (Min)

A	48" x 48"
B	72" x 60"
C	36" x 30"

STATE OF CALIFORNIA
DEPARTMENT OF TRANSPORTATION

TRAFFIC CONTROL SYSTEM FOR LANE CLOSURE ON FREEWAYS AND EXPRESSWAYS

NO SCALE

RSP T10 DATED APRIL 19, 2013 SUPERSEDES STANDARD PLAN T10 DATED MAY 20, 2011 - PAGE 237 OF THE STANDARD PLANS BOOK DATED 2010.

REVISED STANDARD PLAN RSP T10

2010 REVISED STANDARD PLAN RSP T10

DATE PLOTTED => 02-AUG-2016
TIME PLOTTED => 08:29

Dist	COUNTY	ROUTE	POST MILES TOTAL PROJECT	SHEET No.	TOTAL SHEETS
02	Tri	299	0.0/8.3	98	103

REGISTERED CIVIL ENGINEER

April 19, 2013
PLANS APPROVAL DATE

REGISTERED PROFESSIONAL ENGINEER
Gurinderpal Bhullar
No. C48815
Exp. 9-30-14
CIVIL
STATE OF CALIFORNIA

THE STATE OF CALIFORNIA OR ITS OFFICERS OR AGENTS SHALL NOT BE RESPONSIBLE FOR THE ACCURACY OR COMPLETENESS OF SCANNED COPIES OF THIS PLAN SHEET.

TO ACCOMPANY PLANS DATED 06-15-16

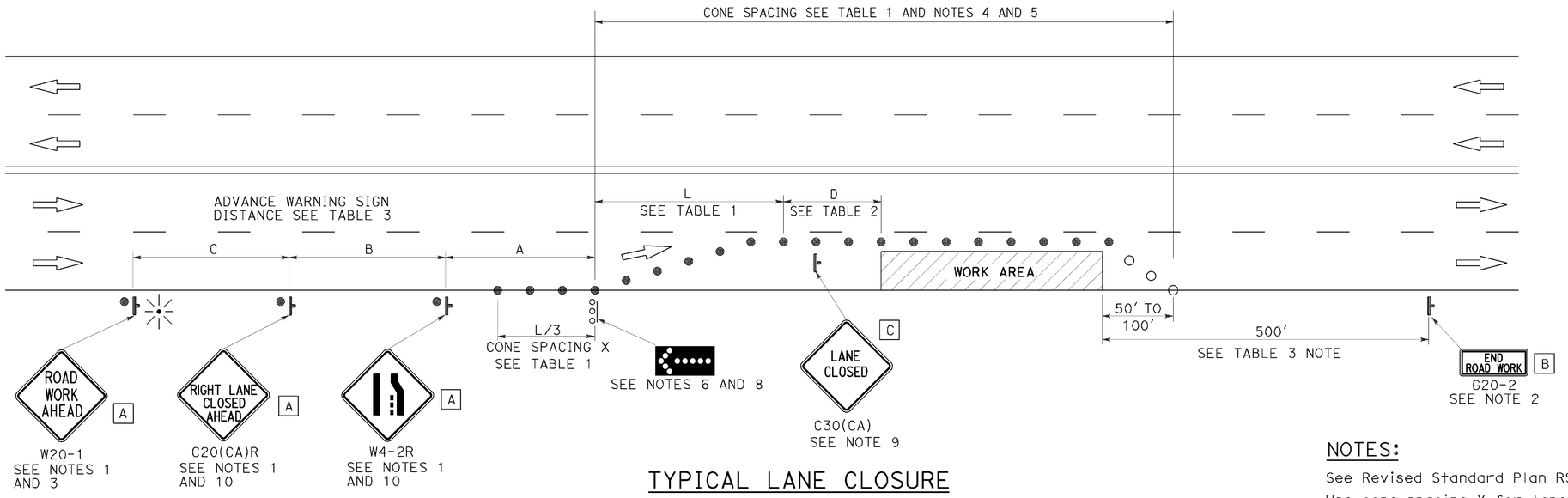

TYPICAL LANE CLOSURE

NOTES:

See Revised Standard Plan RSP T9 for tables.

Use cone spacing X for taper segment, Y for tangent segment or Z for conflict situations, as approriate, per Table 1, unless X, Y, or Z cone spacing is shown on this sheet.

Unless otherwise specified in the special provisions, all temporary warning signs shall have black legend on fluorescent orange background.

California codes are designated by (CA). Otherwise, Federal (MUTCD) codes are shown.

NOTES:

1. Each advance warning sign shall be equipped with at least two flags for daytime closure. Each flag shall be at least 16" x 16" in size and shall be orange or fluorescent red-orange in color. Flashing beacons shall be placed at the locations indicated for lane closure during hours of darkness.
2. A G20-2 "END ROAD WORK" sign, as appropriate, shall be placed at the end of the lane closure unless the end of work area is obvious, or ends within a larger project's limits.
3. If the W20-1 sign would follow within 2000' of a stationary W20-1 or G20-1 "ROAD WORK NEXT _____ MILES", use a C20(CA) sign for the first advance warning sign.
4. All cones used for lane closures during the hours of darkness shall be fitted with retroreflective bands (or sleeves) as specified in the specifications.
5. Portable delineators, placed at one-half the spacing indicated for traffic cones, may be used instead of cones for daytime closures only.
6. Flashing arrow sign shall be either Type I or Type II.
7. For approach speeds over 50 mph, use the "Traffic Control System for Lane Closure On Freeways And Expressways" plan for lane closure details and requirements.
8. A minimum 1500' of sight distance shall be provided where possible for vehicles approaching the first flashing arrow sign. Lane closures shall not begin at the top of crest vertical curve or on a horizontal curve.
9. Place a C30(CA) sign every 2000' throughout length of lane closure.
10. Median lane closures shall conform to the details as shown except that C20(CA)L and W4-2L signs shall be used.
11. At least one person shall be assigned to provide full time maintenance of traffic control devices for lane closure unless, otherwise directed by the Engineer.

LEGEND

- TRAFFIC CONE
- TRAFFIC CONE (OPTIONAL TAPER)
- TEMPORARY TRAFFIC CONTROL SIGN
- FLASHING ARROW SIGN (FAS)
- FAS SUPPORT OR TRAILER
- PORTABLE FLASHING BEACON

SIGN PANEL SIZE (Min)

A	48" x 48"
B	36" x 18"
C	30" x 30"

STATE OF CALIFORNIA
DEPARTMENT OF TRANSPORTATION

TRAFFIC CONTROL SYSTEM FOR LANE CLOSURE ON MULTILANE CONVENTIONAL HIGHWAYS

NO SCALE

RSP T11 DATED APRIL 19, 2013 SUPERSEDES STANDARD PLAN T11
DATED MAY 20, 2011 - PAGE 239 OF THE STANDARD PLANS BOOK DATED 2010.

REVISED STANDARD PLAN RSP T11

2010 REVISED STANDARD PLAN RSP T11

DATE PLOTTED => 02-AUG-2016
TIME PLOTTED => 08:30

Dist	COUNTY	ROUTE	POST MILES TOTAL PROJECT	SHEET No.	TOTAL SHEETS
02	Tri	299	0.0/8.3	99	103

REGISTERED CIVIL ENGINEER

April 19, 2013
PLANS APPROVAL DATE

REGISTERED PROFESSIONAL ENGINEER Gurinderpal Bhullar No. C48815 Exp. 9-30-14 CIVIL STATE OF CALIFORNIA

THE STATE OF CALIFORNIA OR ITS OFFICERS OR AGENTS SHALL NOT BE RESPONSIBLE FOR THE ACCURACY OR COMPLETENESS OF SCANNED COPIES OF THIS PLAN SHEET.

TO ACCOMPANY PLANS DATED 06-15-16

LEGEND

- TRAFFIC CONE
- TEMPORARY TRAFFIC CONTROL SIGN
- FLASHING ARROW SIGN (FAS)
- FAS SUPPORT OR TRAILER
- PORTABLE FLASHING BEACON

SIGN PANEL SIZE (Min)

A	48" x 48"
B	24" x 24"
C	36" x 18"

NOTES:

See Revised Standard Plan RSP T9 for tables.

Use cone spacing X for taper segment, Y for tangent segment or Z for conflict situations, as approriate, per Table 1, unless X, Y, or Z cone spacing is shown on this sheet.

Unless otherwise specified in the special provisions, all temporary warning signs shall have black legend on fluorescent orange background.

California codes are designated by (CA). Otherwise, Federal (MUTCD) codes are shown.

TYPICAL HALF ROAD CLOSURE

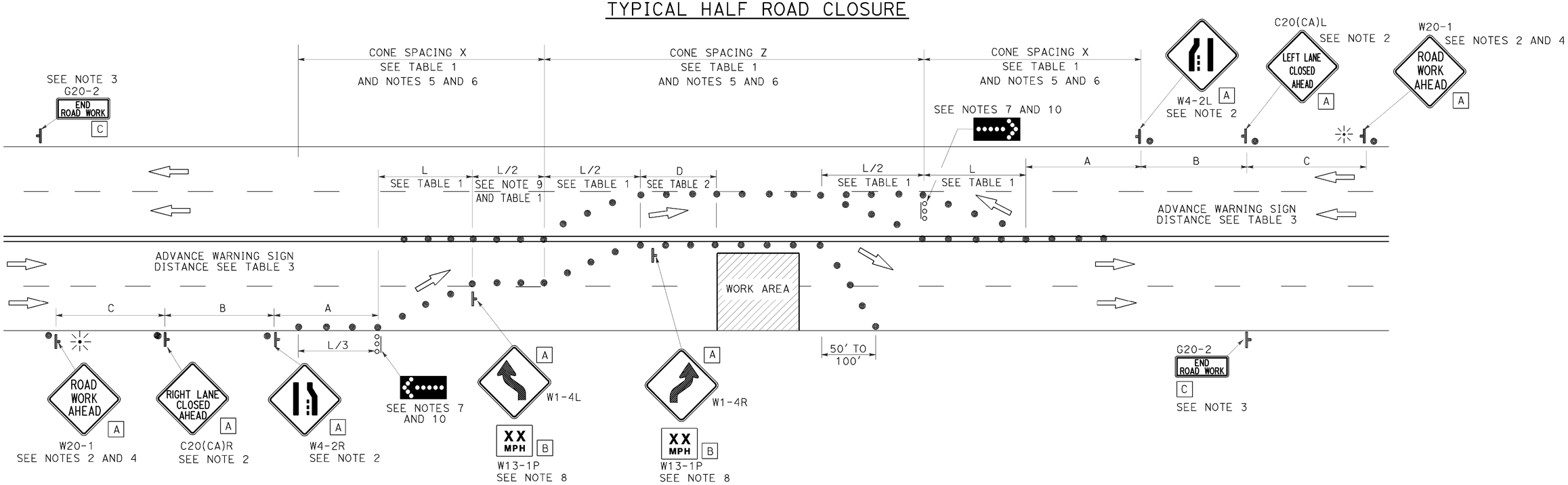

NOTES:

1. At least one person shall be assigned to provide full time maintenance of traffic control devices for lane closure unless, otherwise directed by the Engineer.
2. Each advance warning sign in each direction of travel shall be equipped with at least two flags for daytime closure. Each flag shall be at least 16" x 16" in size and shall be orange or fluorescent red-orange in color. Flashing beacons shall be placed at the locations indicated for lane closure during hours of darkness.
3. A G20-2 "END ROAD WORK" sign, as appropriate, shall be placed at the end of the lane closure unless the end of work area is obvious, or ends within a larger project's limits.
4. If the W20-1 sign would follow within 2000' of a stationary W20-1 or G20-1 "ROAD WORK NEXT _____ MILES", use a C20(CA) sign for the first advance warning sign.
5. All cones used for lane closures during the hours of darkness shall be fitted with retroreflective bands (or sleeves) as specified in the specifications.
6. Portable delineators, placed at one-half the spacing indicated for traffic cones, may be used instead of cones for daytime closures only.
7. Flashing arrow signs shall be either Type I or Type II.
8. Advisory speed will be determined by the Engineer. The W13-1P Plaque will not be required when advisory speed is more than the posted or maximum speed limit.
9. Unless otherwise specified in the special provisions, the tangent (L/2) shall be used.
10. A minimum 1500' of sight distance shall be provided where possible for vehicles approaching the first flashing arrow sign. Lane closures shall not begin at the top of crest vertical curve or on a horizontal curve.

STATE OF CALIFORNIA
DEPARTMENT OF TRANSPORTATION

TRAFFIC CONTROL SYSTEM FOR HALF ROAD CLOSURE ON MULTILANE CONVENTIONAL HIGHWAYS AND EXPRESSWAYS

NO SCALE

RSP T12 DATED APRIL 19, 2013 SUPERSEDES STANDARD PLAN T12
DATED MAY 20, 2011 - PAGE 240 OF THE STANDARD PLANS BOOK DATED 2010.

REVISED STANDARD PLAN RSP T12

2010 REVISED STANDARD PLAN RSP T12

DATE PLOTTED => 02-AUG-2016
TIME PLOTTED => 08:30

Dist	COUNTY	ROUTE	POST MILES TOTAL PROJECT	SHEET No.	TOTAL SHEETS
02	Tri	299	0.0/8.3	100	103

REGISTERED CIVIL ENGINEER

October 30, 2015
PLANS APPROVAL DATE

Devinder Singh
No. C50470
Exp. 6-30-17
CIVIL
STATE OF CALIFORNIA
REGISTERED PROFESSIONAL ENGINEER

THE STATE OF CALIFORNIA OR ITS OFFICERS OR AGENTS SHALL NOT BE RESPONSIBLE FOR THE ACCURACY OR COMPLETENESS OF SCANNED COPIES OF THIS PLAN SHEET.

TO ACCOMPANY PLANS DATED 06-15-16

NOTES:

See Revised Standard Plan RSP T9 for tables.

Use cone spacing X for taper segment, Y for tangent segment or Z for conflict situations, as approriate, per Table 1, unless X, Y, or Z cone spacing is shown on this sheet.

Unless otherwise specified in the special provisions, all temporary warning signs shall have black legend on fluorescent orange background.

California codes are designated by (CA). Otherwise, Federal (MUTCD) codes are shown.

TYPICAL LANE CLOSURE WITH REVERSIBLE CONTROL

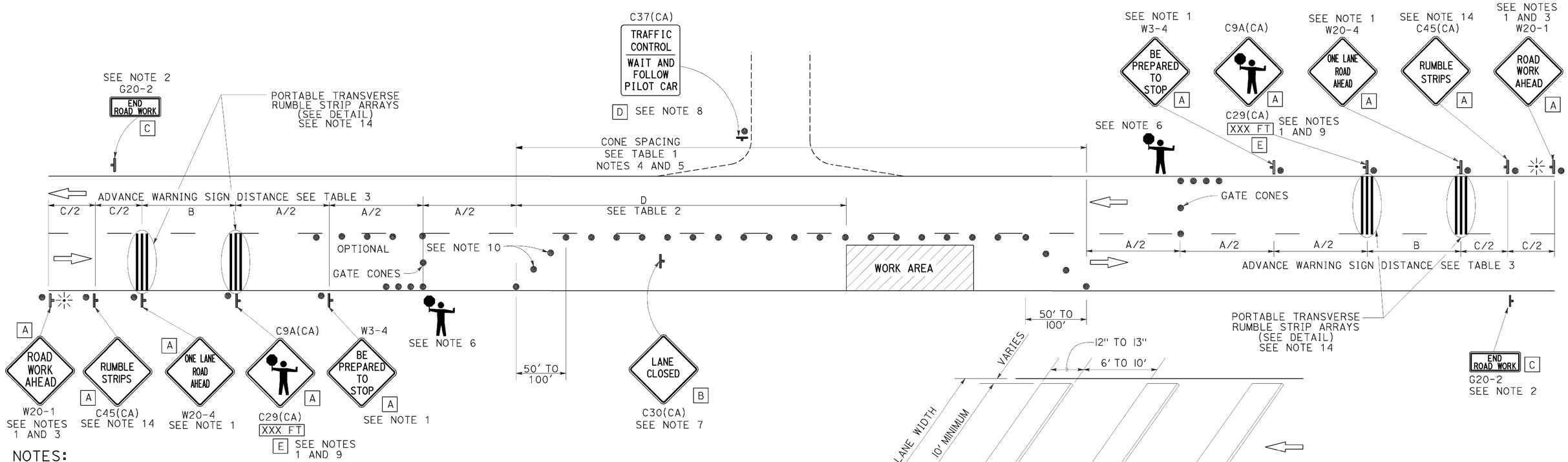

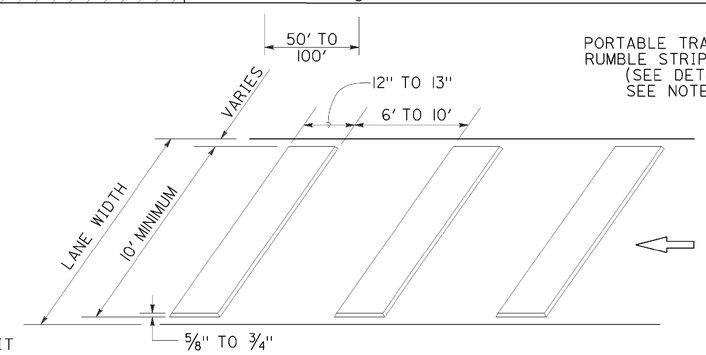

PORTABLE TRANSVERSE RUMBLE STRIP ARRAY DETAIL

NOTES:

1. Each advance warning sign in each direction of travel shall be equipped with at least two flags for daytime closure. Each flag shall be at least 16" x 16" in size and shall be orange or fluorescent red-orange in color. Flashing beacons shall be placed at the locations indicated for lane closure during hours of darkness.
2. A G20-2 "END ROAD WORK" sign, as appropriate, shall be placed at the end of the lane control unless the end of work area is obvious, or ends within a larger project's limits.
3. If the W20-1 sign would follow within 2000' of a stationary W20-1 or G20-1 "ROAD WORK NEXT _____ MILES", use a W20-4 sign for the first advance warning sign.
4. All cones used for lane closures during the hours of darkness shall be fitted with retroreflective bands (or sleeves) as specified in the specifications.
5. Portable delineators, placed at one-half the spacing indicated for traffic cones, may be used instead of cones for daytime closures only.
6. Additional advance flaggers may be required. Flagger should stand in a conspicuous place, be visible to approaching traffic as well as approaching vehicles after the first vehicle has stopped. During the hours of darkness, the flagging-station and flagger shall be illuminated and clearly visible to approaching traffic. The illumination footprint of the lighting on the ground shall be at least 20' in diameter. Place a minimum of four cones at 50' intervals in advance of flagger station as shown.
7. Place C30(CA) "LANE CLOSED" sign at 500' to 1000' intervals throughout extended work areas. They are optional if the work area is visible from the flagger station.
8. When a pilot car is used, place a C37(CA) "TRAFFIC CONTROL-WAIT AND FOLLOW PILOT CAR" sign with black legend on white background at all intersections, driveways and alleys without a flagger within traffic control area. Signs shall be clean and visible at all times. Where traffic can not be effectively self-regulated, at least one flagger shall be used at each intersection within traffic control area.
9. An optional C29(CA) sign may be placed below the C9A(CA) sign.
10. Either traffic cones or barricades shall be placed on the taper. Barricades shall be Type I, II, or III.
11. The color of the portable transverse rumble strips shall be black or orange. Use 2 arrays, each array shall consist of 3 rumble strips.
12. Portable transverse rumble strips shall not be placed on sharp horizontal or vertical curves nor shall they be placed through pedestrian crossings.
13. If the portable transverse rumble strips become out of alignment (skewed) by more than 6 inches, measured from one end to the other, they shall be readjusted to bring the placement back to the original location.
14. Portable transverse rumble strips are not required if any one of the following conditions is satisfied:
    A. Work duration occupies a location for four hours or less
    B. Posted speed limit is below 45 MPH
    C. Work is of emergency nature
    D. Work zone is in snow or icy weather conditions

SIGN PANEL SIZE (Min)

A	48" x 48"
B	30" x 30"
C	36" x 18"
D	36" x 42"
E	20" x 7"

LEGEND

- TRAFFIC CONE
- TEMPORARY TRAFFIC CONTROL SIGN
- PORTABLE FLASHING BEACON
- FLAGGER

STATE OF CALIFORNIA
DEPARTMENT OF TRANSPORTATION

TRAFFIC CONTROL SYSTEM FOR LANE CLOSURE ON TWO LANE CONVENTIONAL HIGHWAYS

NO SCALE

RSP T13 DATED OCTOBER 30, 2015 SUPERSEDES RSP T13 DATED OCTOBER 17, 2014, RSP T13 DATED JULY 18, 2014 AND RSP T13 DATED APRIL 19, 2013 AND STANDARD PLAN T13 DATED MAY 20, 2011 - PAGE 241 OF THE STANDARD PLANS BOOK DATED 2010.

REVISED STANDARD PLAN RSP T13

2010 REVISED STANDARD PLAN RSP T13

DATE PLOTTED => 02-AUG-2016
TIME PLOTTED => 08:31

Dist	COUNTY	ROUTE	POST MILES TOTAL PROJECT	SHEET No.	TOTAL SHEETS
02	Tri	299	0.0/8.3	101	103

REGISTERED CIVIL ENGINEER

April 19, 2013
PLANS APPROVAL DATE

REGISTERED PROFESSIONAL ENGINEER Gurinderpal Bhullar No. C48815 Exp. 9-30-14 CIVIL STATE OF CALIFORNIA

THE STATE OF CALIFORNIA OR ITS OFFICERS OR AGENTS SHALL NOT BE RESPONSIBLE FOR THE ACCURACY OR COMPLETENESS OF SCANNED COPIES OF THIS PLAN SHEET.

TO ACCOMPANY PLANS DATED 06-15-16

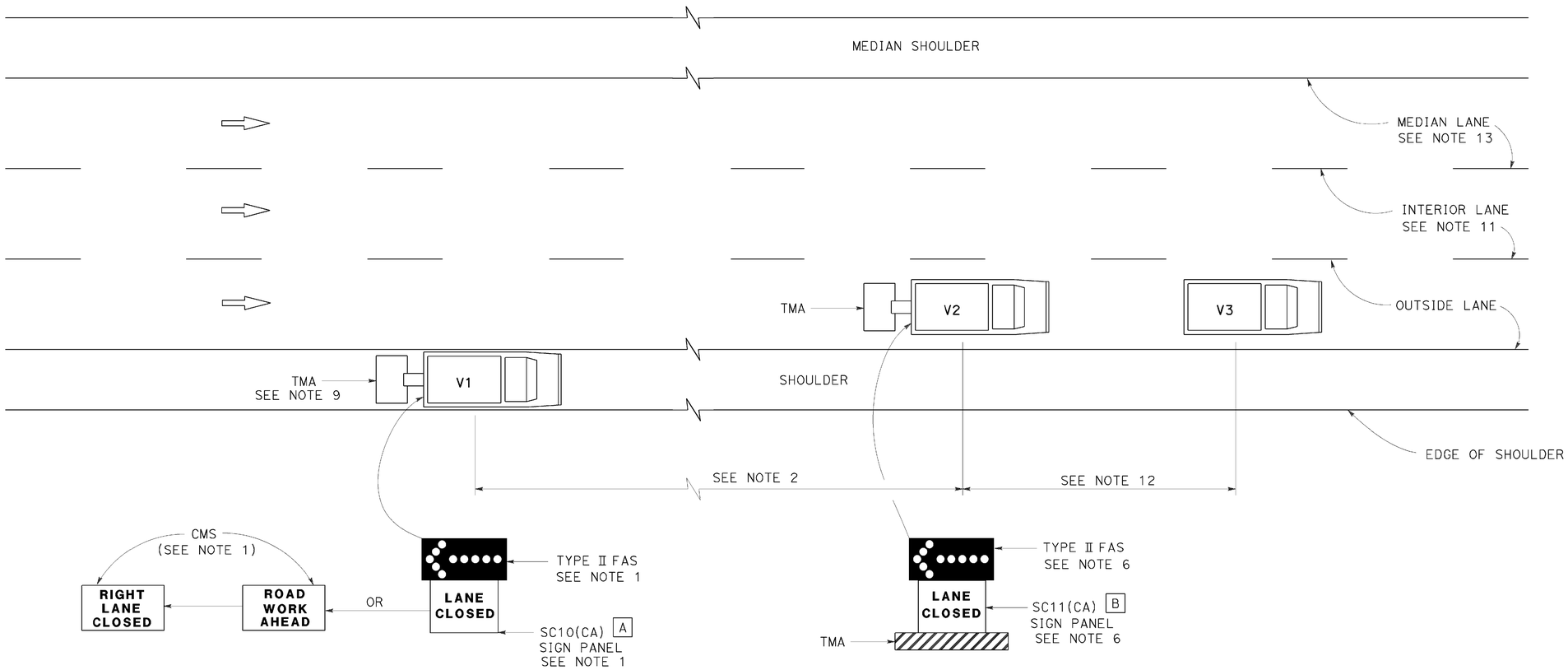

MOVING LANE CLOSURE ON MEDIAN LANE OR OUTSIDE LANE OF MULTILANE HIGHWAYS

SIGN PANEL SIZE (Min)

A 66" x 36"

B 54" x 42"

LEGEND

V1	SIGN VEHICLE
V2	SHADOW VEHICLE
V3	WORK/APPLICATION VEHICLE
	FLASHING ARROW SIGN (FAS)
CMS	CHANGEABLE MESSAGE SIGN
TMA	TRUCK-MOUNTED ATTENUATOR

NOTES:

1. Either a changeable message sign or a SC10(CA) sign panel and a Type II flashing arrow sign shall be mounted on the rear of sign vehicle V1. The changeable message sign shall be sequenced to show the "ROAD WORK AHEAD" message first, followed by the "RIGHT LANE CLOSED" message. For median lane closure, the flashing arrow symbol shall be reversed with the arrowhead on the right and the changeable message sign shall show "LEFT LANE CLOSED".
2. If traffic queues develop, sign vehicle V1 should be positioned upstream from the end of queue. Sign vehicle V1 shall be positioned where highly visible when shoulders are not available.
3. A minimum sight distance of 1500′ should be provided in advance of sign vehicle V1.
4. Sign vehicle V1 should remain at the beginning of horizontal or vertical curves until the other vehicles (V2 and V3) are far enough beyond the curve to resume the minimum sight distance of 1500′.
5. Vehicle-mounted sign panels shall have Type III or above retroreflective sheeting, black on white, or black on fluorescent orange, with 6" minimum series D letters per Caltrans sign specifications.
6. Shadow vehicle V2 shall be equipped with a truck-mounted attenuator. The sign panel shown and a Type II flashing arrow sign shall be mounted on the rear of shadow vehicle V2. For median lane closure the flashing arrow sign symbol shall be displayed with the arrowhead on the right.
7. All vehicles used for lane closures shall be equipped with two-way radios, and the vehicle operators shall maintain communication during the work or application operation.
8. All vehicles shall be equipped with flashing or rotating amber lights.
9. If sign vehicle V1 encroaches into the traffic lane due to insufficient shoulder width, sign vehicle V1 shall be equipped with a truck-mounted attenuator. Sign vehicle V1 shall stay as close to the edge of shoulder as practicable.
10. Where workers would be on foot in the work area, a stationary type lane closure (Revised Standard Plan T10, T11, etc., as applicable) shall be used instead of this plan.
11. For moving lane closure on interior lane of multilane highways, use Revised Standard Plan T16.
12. The spacing between work vehicle(s) and the shadow vehicles, and between each shadow vehicle should be minimized to deter road users from driving in between.
13. When the work/application vehicle V3 occupies the median lane, sign vehicle V1 should drive in the median shoulder and indicate left lane closed ahead.

STATE OF CALIFORNIA
DEPARTMENT OF TRANSPORTATION

TRAFFIC CONTROL SYSTEM FOR MOVING LANE CLOSURE ON MULTILANE HIGHWAYS

NO SCALE

RSP T15 DATED APRIL 19, 2013 SUPERSEDES STANDARD PLAN T15
DATED MAY 20, 2011 - PAGE 243 OF THE STANDARD PLANS BOOK DATED 2010.

REVISED STANDARD PLAN RSP T15

2010 REVISED STANDARD PLAN RSP T15

DATE PLOTTED => 02-AUG-2016
TIME PLOTTED => 08:31

Dist	COUNTY	ROUTE	POST MILES TOTAL PROJECT	SHEET No.	TOTAL SHEETS
02	Tri	299	0.0/8.3	102	103

REGISTERED CIVIL ENGINEER

April 19, 2013
PLANS APPROVAL DATE

REGISTERED PROFESSIONAL ENGINEER
Gurinderpal Bhullar
No. C48815
Exp. 9-30-14
CIVIL
STATE OF CALIFORNIA

THE STATE OF CALIFORNIA OR ITS OFFICERS OR AGENTS SHALL NOT BE RESPONSIBLE FOR THE ACCURACY OR COMPLETENESS OF SCANNED COPIES OF THIS PLAN SHEET.

TO ACCOMPANY PLANS DATED 06-15-16

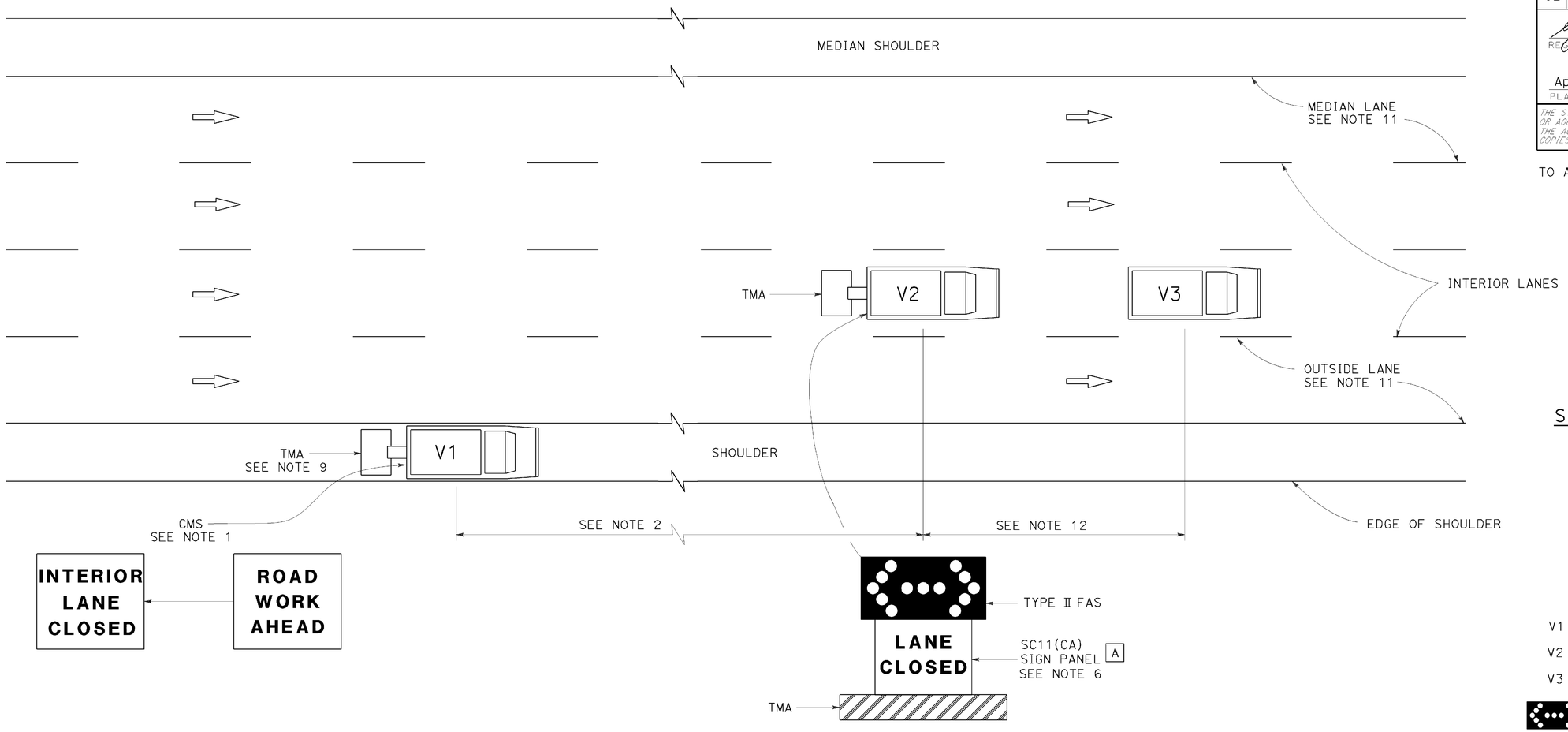

MOVING LANE CLOSURE ON INTERIOR LANE OF MULTILANE HIGHWAYS

SIGN PANEL SIZE (Min)

A 54" x 42"

LEGEND

V1	SIGN VEHICLE
V2	SHADOW VEHICLE
V3	WORK/APPLICATION VEHICLE
	FLASHING ARROW SIGN (FAS) IN FLASHING DOUBLE ARROW MODE
CMS	CHANGEABLE MESSAGE SIGN
TMA	TRUCK-MOUNTED ATTENUATOR

NOTES:

1. A changeable message sign shall be mounted on the rear of sign vehicle V1. The changeable message sign shall be sequenced to show the "ROAD WORK AHEAD" message first, followed by the "INTERIOR LANE CLOSED" message. The message "CENTER LANE CLOSED" may be used in place of the "INTERIOR LANE CLOSED" message.
2. If traffic queues develop, sign vehicle V1 should be positioned upstream from the end of queue. Sign vehicle V1 shall be positioned where highly visible when shoulders are not available.
3. A minimum sight distance of 1500′ should be provided in advance of sign vehicle V1.
4. Sign vehicle V1 should remain at the beginning of horizontal or vertical curves until the other vehicles (V2 and V3) are far enough beyond the curve to resume the minimum sight distance of 1500′.
5. Vehicle-mounted sign panels shall have Type III or above retroreflective sheeting, black on white, or black on fluorescent orange, with 6" minimum series D letters per Caltrans sign specifications.
6. Shadow vehicle V2 shall be equipped with a truck-mounted attenuator. The sign panel shown and a Type II flashing arrow sign shall be mounted on the rear of shadow vehicle V2.
7. All vehicles used for lane closures shall be equipped with two-way radios, and the vehicle operators shall maintain communication during the work or application operation.
8. All vehicles shall be equipped with flashing or rotating amber lights.
9. If sign vehicle V1 encroaches into the traffic lane due to insufficient shoulder width, sign vehicle V1 shall be equipped with a truck-mounted attenuator. Sign vehicle V1 shall stay as close to the edge of shoulder as practicable.
10. Where workers would be on foot in the work area, a stationary type lane closure (Revised Standard Plan T10, T11 etc., as applicable) shall be used instead of this plan.
11. For moving lane closure on median lane or outside lane of multilane highways, use Revised Standard Plan T15.
12. The spacing between work vehicle(s) and the shadow vehicles, and between each shadow vehicle should be minimized to deter road users from driving in between.

STATE OF CALIFORNIA
DEPARTMENT OF TRANSPORTATION

TRAFFIC CONTROL SYSTEM FOR MOVING LANE CLOSURE ON MULTILANE HIGHWAYS

NO SCALE

RSP T16 DATED APRIL 19, 2013 SUPERSEDES STANDARD PLAN T16
DATED MAY 20, 2011 - PAGE 244 OF THE STANDARD PLANS BOOK DATED 2010.

REVISED STANDARD PLAN RSP T16

2010 REVISED STANDARD PLAN RSP T16

DATE PLOTTED => 02-AUG-2016
TIME PLOTTED => 08:31

Dist	COUNTY	ROUTE	POST MILES TOTAL PROJECT	SHEET No.	TOTAL SHEETS
02	Tri	299	0.0/8.3	103	103

REGISTERED CIVIL ENGINEER

April 19, 2013
PLANS APPROVAL DATE

REGISTERED PROFESSIONAL ENGINEER Gurinderpal Bhullar No. C48815 Exp. 9-30-14 CIVIL STATE OF CALIFORNIA

THE STATE OF CALIFORNIA OR ITS OFFICERS OR AGENTS SHALL NOT BE RESPONSIBLE FOR THE ACCURACY OR COMPLETENESS OF SCANNED COPIES OF THIS PLAN SHEET.

TO ACCOMPANY PLANS DATED 06-15-16

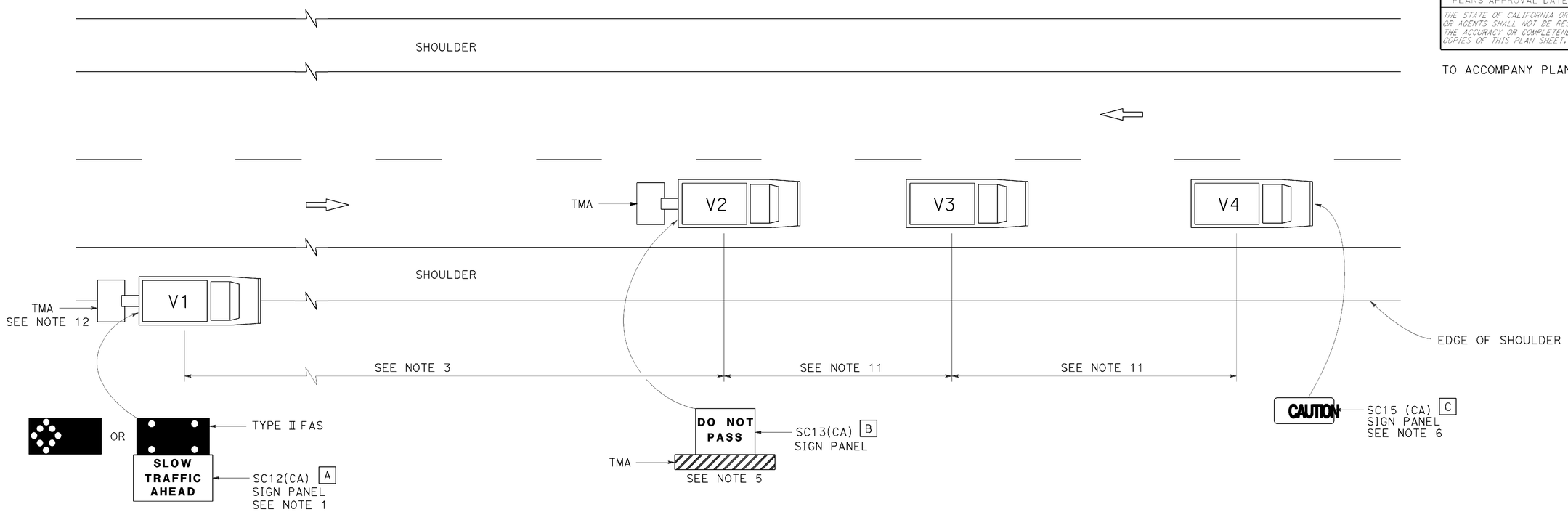

LEGEND

V1	SIGN VEHICLE
V2	SHADOW VEHICLE
V3	WORK/APPLICATION VEHICLE
V4	SIGN VEHICLE
TMA	TRUCK-MOUNTED ATTENUATOR
	FLASHING ARROW SIGN (FAS) IN FLASHING CAUTION MODE
	FLASHING ARROW SIGN (FAS) IN ALTERNATING DIAMOND CAUTION

SIGN PANEL SIZE (Min)

A	72" x 42"
B	54" x 42"
C	54" x 24"

NOTES:

1. Either a changeable message sign or a SC12(CA) "SLOW TRAFFIC AHEAD" sign shall be mounted on the rear of sign vehicle V1. The changeable message sign shall be sequenced to show the "CAUTION" message first, follow by the "SLOW TRAFFIC AHEAD" message. A Type II flashing arrow sign may be used with the SC12(CA) sign panel.
2. Sign vehicle V1 should be positioned where highly visible when shoulders are not available.
3. If traffic queues develop, sign vehicle V1 should be positioned upstream from the end of queue.
4. Vehicle-mounted sign panels shall have Type III or above retroreflective sheeting, black on white, or black on fluorescent orange, with 6" minimum series D letters per Caltrans sign specifications.
5. Shadow vehicle shall be equipped with a truck-mounted attenuator. The sign panel shown shall be mounted on the rear of shadow vehicle V2. The message "LANE CLOSED" may be used in place of the "DO NOT PASS" message.
6. The sign panel shown shall be mounted on the front of sign vehicle V4, facing opposing traffic.
7. All vehicles shall be equipped with flashing or rotating amber lights.
8. Sign vehicle V4 will not be required when the work and vehicles V2 and V3 are 2′ or more from the centerline of the highway during the work or application operations.
9. All vehicles used for lane closures shall be equipped with two-way radios and the vehicle operators shall maintain communication during the work or application operation.
10. This plan shall not be used where workers would be on foot in the work area. Use a stationary type lane closure (Revised Standard Plan T13) for this condition.
11. Minimize spacing between vehicles V2 and V3 and vehicles V3 and V4 to deter road users from driving in between them.
12. If sign vehicle V1 encroaches into the traffic lane due to insufficient shoulder width, sign vehicle V1 shall be equipped with a truck-mounted attenuator. Sign vehicle V1 shall stay as close to the edge of shoulder as practicable.

STATE OF CALIFORNIA
DEPARTMENT OF TRANSPORTATION

TRAFFIC CONTROL SYSTEM FOR MOVING LANE CLOSURE ON TWO LANE HIGHWAYS

NO SCALE

RSP T17 DATED APRIL 19, 2013 SUPERSEDES STANDARD PLAN T17
DATED MAY 20, 2011 - PAGE 245 OF THE STANDARD PLANS BOOK DATED 2010.

REVISED STANDARD PLAN RSP T17

2010 REVISED STANDARD PLAN RSP T17

DATE PLOTTED => 02-AUG-2016
TIME PLOTTED => 08:32