Dist	COUNTY	ROUTE	POST MILES TOTAL PROJECT	SHEET No.	TOTAL SHEETS
02	Plu	147	0.0/1.0	3	52

REGISTERED CIVIL ENGINEER 03-30-16 DATE

03-30-16
PLANS APPROVAL DATE

REGISTERED PROFESSIONAL ENGINEER JAVED IQBAL No. C82518 Exp. 9-30-16 CIVIL STATE OF CALIFORNIA

THE STATE OF CALIFORNIA OR ITS OFFICERS OR AGENTS SHALL NOT BE RESPONSIBLE FOR THE ACCURACY OR COMPLETENESS OF SCANNED COPIES OF THIS PLAN SHEET.

NOTES:

1. FDR-C DEPTH IS TO BE MEASURED FROM THE FINISHED GRADE FDR-C SURFACE PLANE.
2. EXCAVATE SHOULDERS PRIOR THE FDR-C PROCESS.
3. SELECT MATERIAL IS EXCESS FDR-C PULVERIZED MATERIAL.
4. PLACE PAVEMENT EDGE TREATMENT REGARDLESS OF SHOULDER BACKING WIDTH, EXCEPT DRIVEWAYS.

LEGEND:

1. Exist
   Var 0.55' TO 0.70' AC
   Var 0.33 TO 0.50' AB
   Approx 0.50' BASEMENT MATERIAL
2. (2) 0.35' HMA (TYPE A)
   0.70' FDR-C
3. 0.35' HMA (TYPE A)
   0.70' PLACE SELECT MATERIAL
   0.70' Min FDR-C
4. 0.35' SHOULDER BACKING
   Var DEPTH Emb 0.0' TO 4.5'

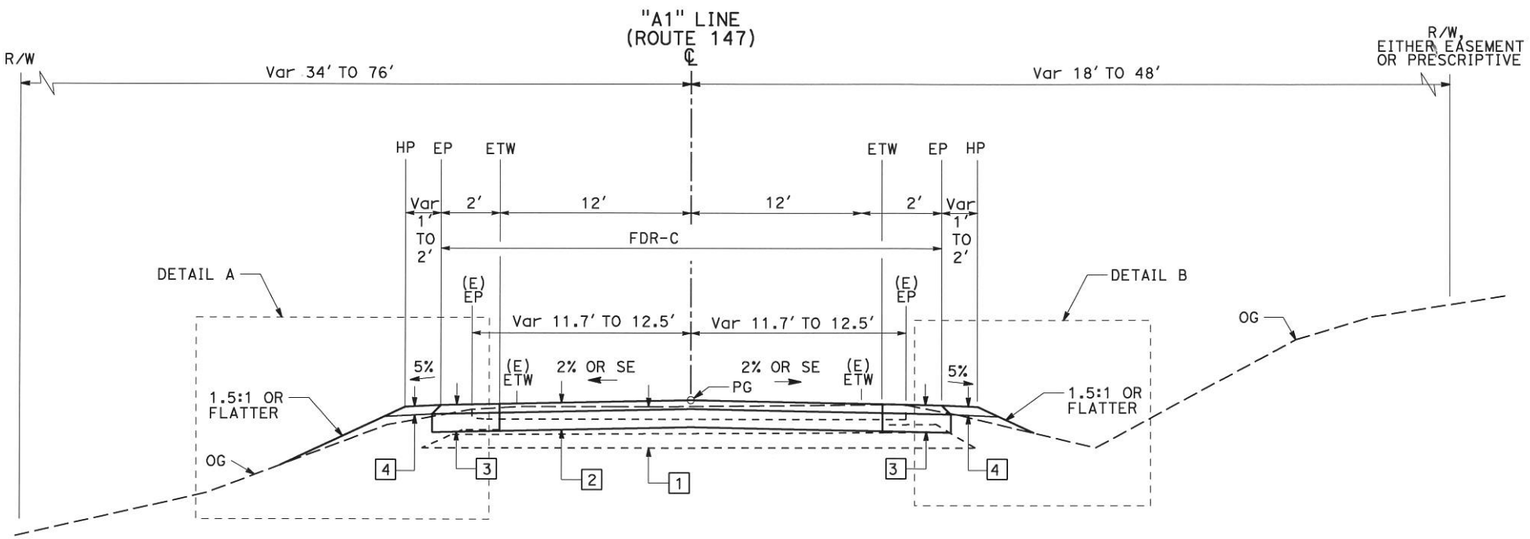

ROUTE 147
FULL DEPTH RECLAMATION - CEMENT WITH STRUCTURAL SECTION SHOULDER WIDENING

"A1" 11+51 TO "A1" 62+00

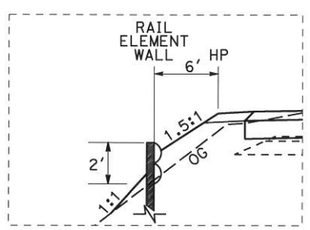

DETAIL A
SHOULDER WIDENING Lt
RAIL ELEMENT WALL (SEE Const DETAILS)

"A1" 41+90 TO "A1" 44+55

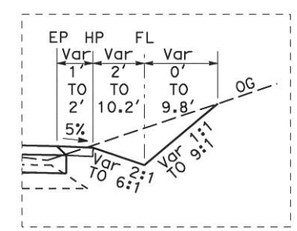

DETAIL B
SHOULDER WIDENING Rt, DITCH

"A1" 17+90 TO "A1" 23+00
"A1" 32+90 TO "A1" 41+50
"A1" 52+75 TO "A1" 59+15
"A1" 59+45 TO "A1" 62+50

(2) **REPLACED PER ADDENDUM No. 2 DATED MAY 26, 2016**

TYPICAL CROSS SECTIONS
NO SCALE

X-2

REVISED BY	DATE REVISED

CALCULATED-DESIGNED BY: JEFF B COON
CHECKED BY: JAVED IQBAL
FUNCTIONAL SUPERVISOR: AL TRUJILLO

STATE OF CALIFORNIA - DEPARTMENT OF TRANSPORTATION
Caltrans
DESIGN

P:\proj\02\4G260_plans\pse\Addenda 2\24g260ca002.dgn

LAST REVISION 03-30-16 | DATE PLOTTED => 26-MAY-2016 | TIME PLOTTED => 06:08