Dist	COUNTY	ROUTE	POST MILES TOTAL PROJECT	SHEET No.	TOTAL SHEETS
02	Mod	299	52.2/54.7	1	34

INDEX OF PLANS

SHEET No.	DESCRIPTION
1	TITLE AND LOCATION MAP
2	TYPICAL CROSS SECTIONS
3-7	CONSTRUCTION DETAILS
8-14	DRAINAGE DETAILS AND QUANTITIES
15	CONSTRUCTION AREA SIGNS
16-17	PAVEMENT DELINEATION DETAILS
18	SUMMARY OF QUANTITIES
19	EROSION CONTROL QUANTITIES
20-34	REVISED STANDARD PLANS

THE STANDARD PLANS LIST APPLICABLE TO THIS CONTRACT IS INCLUDED IN THE NOTICE TO BIDDERS AND SPECIAL PROVISIONS BOOK.

STATE OF CALIFORNIA

DEPARTMENT OF TRANSPORTATION

PROJECT PLANS FOR CONSTRUCTION ON

STATE HIGHWAY

IN MODOC COUNTY NEAR CEDARVILLE FROM 4.7 MILES WEST TO 2.1 MILES WEST OF PATTERSON STREET

TO BE SUPPLEMENTED BY STANDARD PLANS DATED 2010

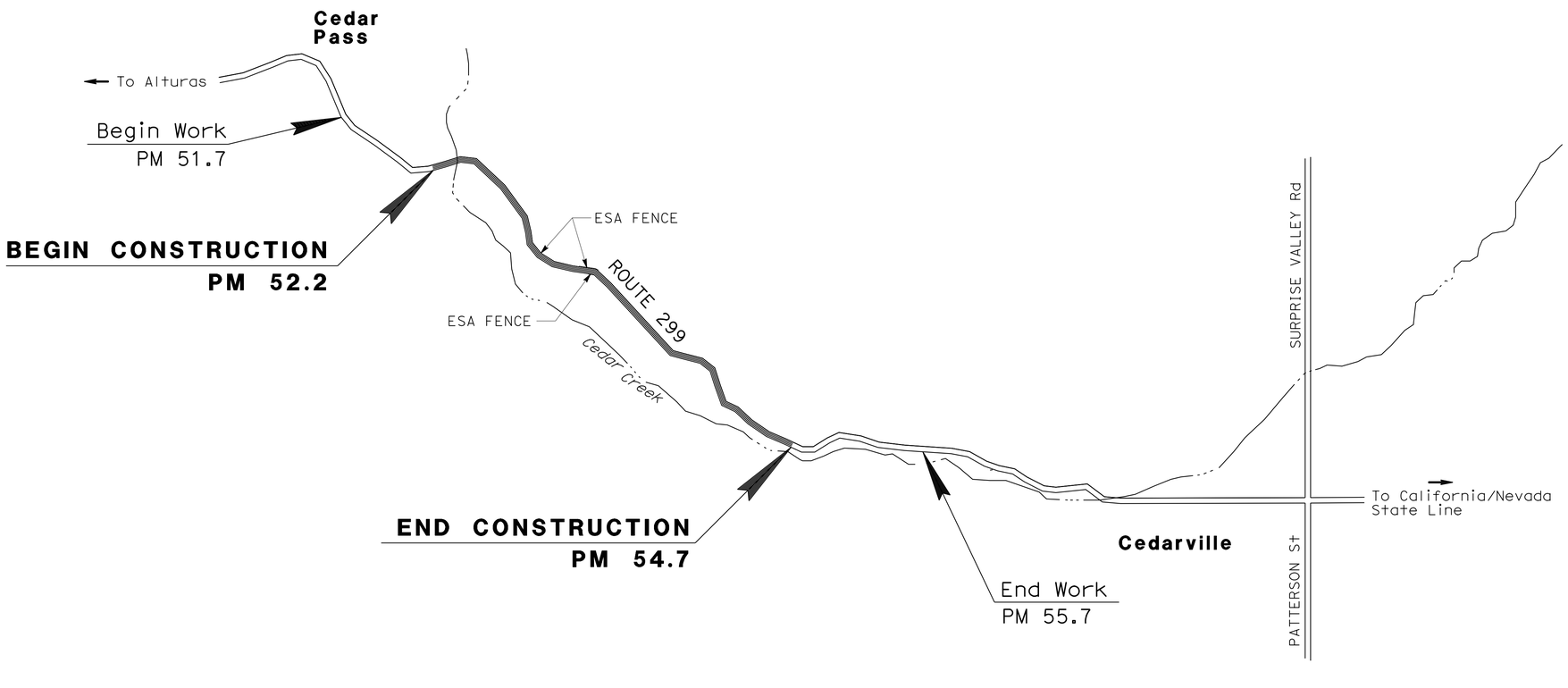

Russell Flood 10-05-15
PROJECT ENGINEER DATE
REGISTERED CIVIL ENGINEER

October 12, 2015
PLANS APPROVAL DATE

REGISTERED PROFESSIONAL ENGINEER
RUSSELL P. FLOOD
No. C72261
Exp. 6-30-16
CIVIL
STATE OF CALIFORNIA

THE STATE OF CALIFORNIA OR ITS OFFICERS OR AGENTS SHALL NOT BE RESPONSIBLE FOR THE ACCURACY OR COMPLETENESS OF SCANNED COPIES OF THIS PLAN SHEET.

THE CONTRACTOR SHALL POSSESS THE CLASS (OR CLASSES) OF LICENSE AS SPECIFIED IN THE "NOTICE TO BIDDERS."

NO SCALE

CONTRACT No.	02-4G2204
PROJECT ID	0213000086

DESIGN ENGINEER: STEVE TOPAL
PROJECT MANAGER: ERIC AKANA

P:\proj\02\4G220_plans\pse\Resubmit 11-06-15\24g220ab001.dgn

LAST REVISION 10-07-15 | DATE PLOTTED => 06-NOV-2015 | TIME PLOTTED => 11:30

Dist	COUNTY	ROUTE	POST MILES TOTAL PROJECT	SHEET No.	TOTAL SHEETS
02	Mod	299	52.2/54.7	2	34

Russell Flood 10-12-15
REGISTERED CIVIL ENGINEER DATE

10-12-15
PLANS APPROVAL DATE

REGISTERED PROFESSIONAL ENGINEER RUSSELL FLOOD No. C72261 Exp. 6-30-16 CIVIL STATE OF CALIFORNIA

THE STATE OF CALIFORNIA OR ITS OFFICERS OR AGENTS SHALL NOT BE RESPONSIBLE FOR THE ACCURACY OR COMPLETENESS OF SCANNED COPIES OF THIS PLAN SHEET.

NOTES:

1. DIMENSIONS OF THE PAVEMENT STRUCTURES (STRUCTURAL SECTIONS) ARE SUBJECT TO TOLERANCES SPECIFIED IN THE STANDARD SPECIFICATIONS.
2. SEE REVISED STANDARD PLANS FOR TAPERED EDGE DETAILS.
3. LOCATIONS OF REPLACE ASPHALT CONCRETE SURFACING SHOWN ON SHEET Q-1 OR AS DIRECTED BY THE ENGINEER.

DESIGN DESIGNATION

ADT (2015)	1116	D	61%
ADT (2035)	1196	T	9%
DHV	174	V	55 mph
ESAL	963,600	TI(20)	9.0

PAVEMENT CLIMATE REGION

HIGH DESERT

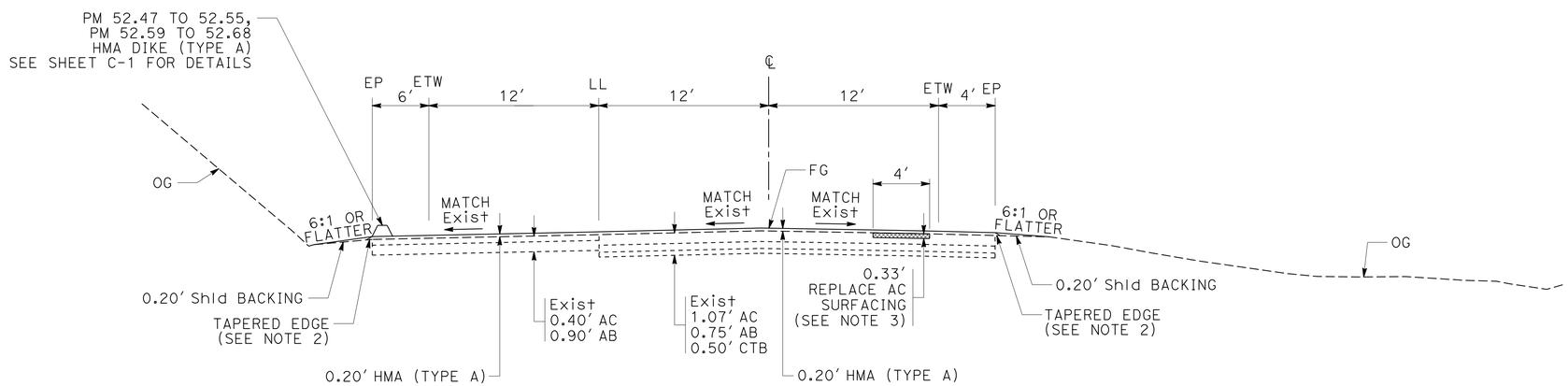

PM 52.43 TO 52.84

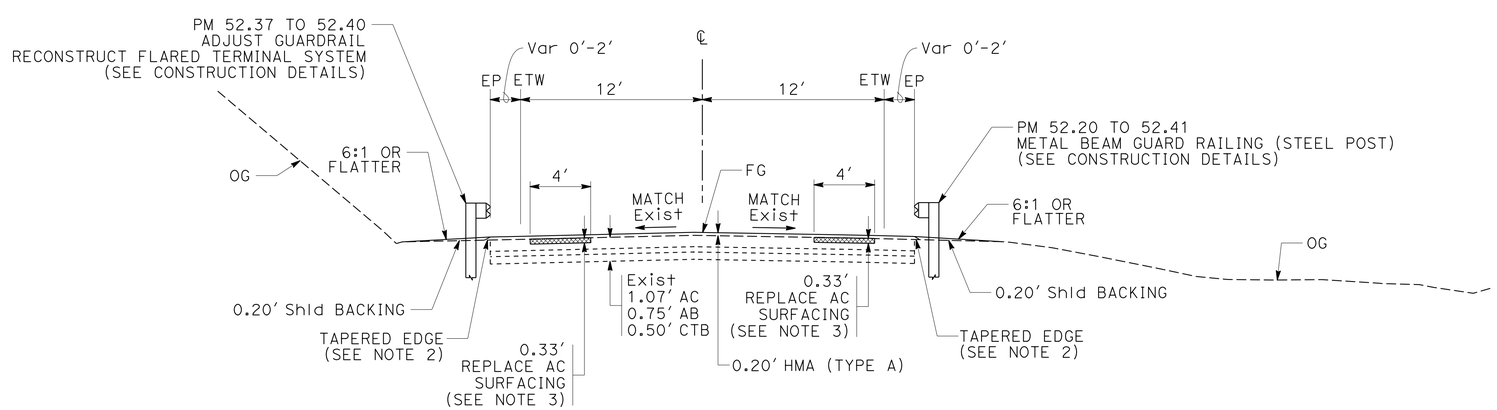

PM 52.84 TO 54.70
PM 52.20 TO 52.43

TYPICAL CROSS SECTIONS

NO SCALE

X-1

ROUTE 299

REVISED BY | DATE REVISED
RUSSELL FLOOD | GINNY SEIBERT
CALCULATED-DESIGNED BY | CHECKED BY
FUNCTIONAL SUPERVISOR | STEVE TOPAL

STATE OF CALIFORNIA - DEPARTMENT OF TRANSPORTATION
Caltrans
DESIGN

P:\proj1\02\4G220_plans\pse\Resubmit 11-06-15\24g220ca001.dgn

LAST REVISION 08-20-15 | DATE PLOTTED => 06-NOV-2015 | TIME PLOTTED => 11:30

Dist	COUNTY	ROUTE	POST MILES TOTAL PROJECT	SHEET No.	TOTAL SHEETS
02	Mod	299	52.2/54.7	3	34

Russell Flood 10-12-15
REGISTERED CIVIL ENGINEER DATE

10-12-15
PLANS APPROVAL DATE

REGISTERED PROFESSIONAL ENGINEER RUSSELL FLOOD No. C72261 Exp. 6-30-16 CIVIL STATE OF CALIFORNIA

THE STATE OF CALIFORNIA OR ITS OFFICERS OR AGENTS SHALL NOT BE RESPONSIBLE FOR THE ACCURACY OR COMPLETENESS OF SCANNED COPIES OF THIS PLAN SHEET.

NOTES:

1. FOR GUARDRAIL DETAILS SEE CONSTRUCTION DETAILS SHEETS C-2 THROUGH C-5.
2. REMOVE EXISTING MATERIAL AS NECESSARY TO CAP HMA DIKE. SEE STANDARD PLANS FOR DETAILS NOT SHOWN.
3. RECONSTRUCT EXISTING TERMINAL SYSTEM TYPE SRT.
4. COLD PLANE EXISTING SURFACES TO ACCOMODATE A MINIMUM TAPER THICKNESS OF 0.10′ WHEN EITHER:
   A. HMA MATERIAL SUCH AS RUBBERIZED, POLYMER MODIFIED OR OPEN GRADED IS UNSUITABLE FOR RAKING TO A MAXIMUM 0.02′ THICKNESS AT THE CONFORM.
   B. TEMPORARY TAPER WILL BE IN PLACE FOR MORE THAN 14 DAYS.
5. PERMANENT SURFACE MAY BE EXISTING OR NEW PAVEMENT.
6. ROADWAY SURFACE IS THE TOP OF EXISTING SURFACE OR THE TOP OF THE PLANED SURFACE.
7. IF AUTHORIZED, YOU MAY USE ALTERNATIVE MATERIALS OR METHODS TO PRODUCE THE REQUIRED TAPER.

LEGEND:

- 0.20′ HOT MIX ASPHALT OVERLAY
- COLD PLANE ASPHALT CONCRETE PAVEMENT
- HMA MATERIAL (TEMPORARY TAPER) (SEE NOTE 7)
- IF NECESSARY, COLD PLANE ASPHALT CONCRETE PAVEMENT AND PLACE HMA MATERIAL (SEE NOTE 4)

ABBREVIATIONS:

CPACP COLD PLANE ASPHALT CONCRETE PAVEMENT

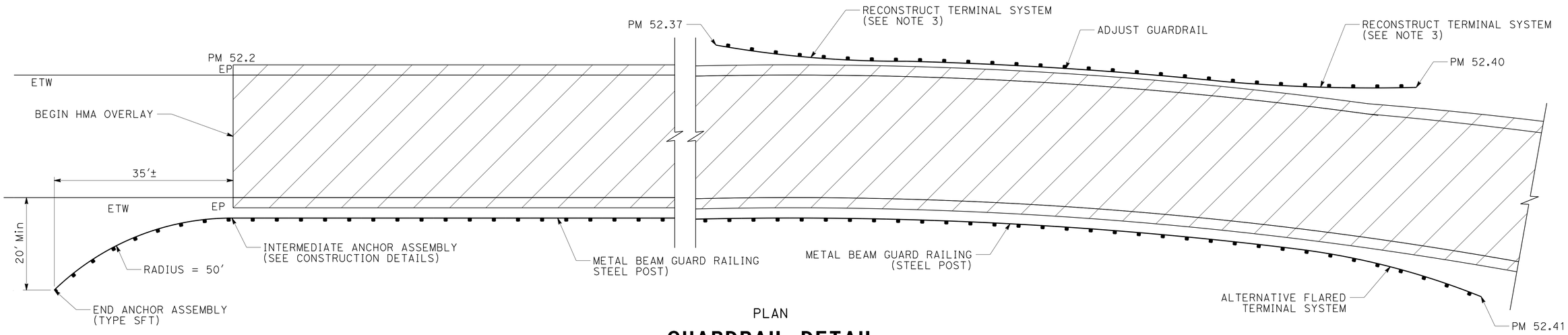

PLAN

GUARDRAIL DETAIL

PM 52.20 TO 52.41

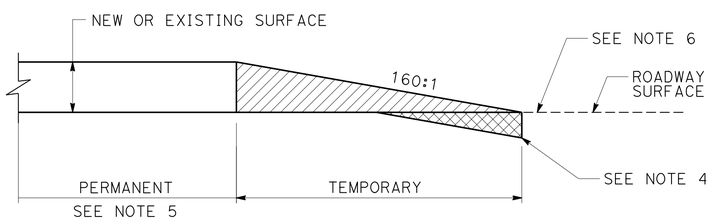

TYPICAL PAVING CONFORM FOR TEMPORARY CONSTRUCTION TAPERS

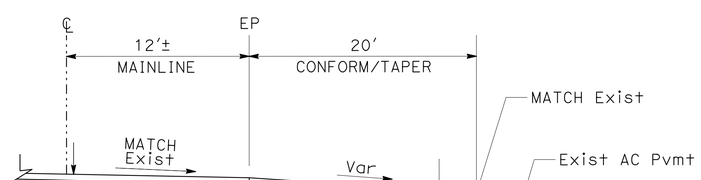

SECTION

ROAD CONNECTION CONFORM TAPER

PM 52.51

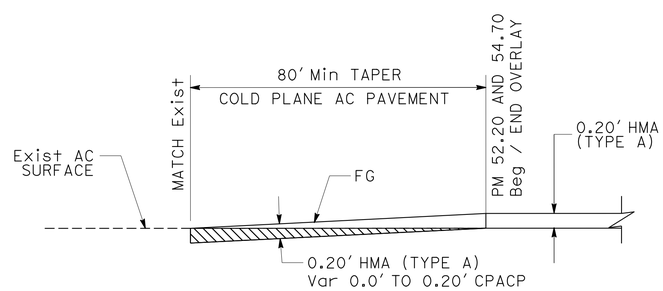

MAINLINE CONFORM TAPERS

PM 52.2
PM 54.7

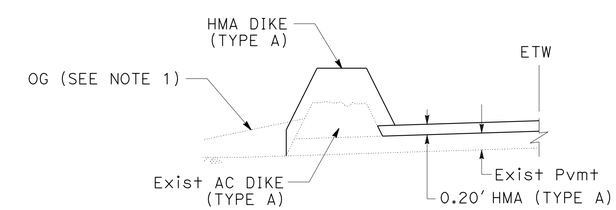

TYPE A

TYPICAL CAP EXISTING ASPHALT CONCRETE DIKE

PM 52.47 TO 52.55 Lt
PM 52.59 TO 52.68 Lt

CONSTRUCTION DETAILS

NO SCALE

C-1

REVISED BY | DATE REVISED
RUSSELL FLOOD | GINNY SEIBERT
CALCULATED-DESIGNED BY | CHECKED BY
FUNCTIONAL SUPERVISOR: STEVE TOPAL

STATE OF CALIFORNIA - DEPARTMENT OF TRANSPORTATION
Caltrans DESIGN

P:\proj1\02\4G220_plans\pse\Resubmit 11-06-15\24g220ga001.dgn

LAST REVISION 09-14-15 | DATE PLOTTED => 06-NOV-2015 | TIME PLOTTED => 11:30

Dist	COUNTY	ROUTE	POST MILES TOTAL PROJECT	SHEET No.	TOTAL SHEETS
02	Mod	299	52.2/54.7	4	34

Russell Flood 10-12-15
REGISTERED CIVIL ENGINEER DATE

10-12-15
PLANS APPROVAL DATE

REGISTERED PROFESSIONAL ENGINEER RUSSELL FLOOD No. C72261 Exp. 6-30-16 CIVIL STATE OF CALIFORNIA

THE STATE OF CALIFORNIA OR ITS OFFICERS OR AGENTS SHALL NOT BE RESPONSIBLE FOR THE ACCURACY OR COMPLETENESS OF SCANNED COPIES OF THIS PLAN SHEET.

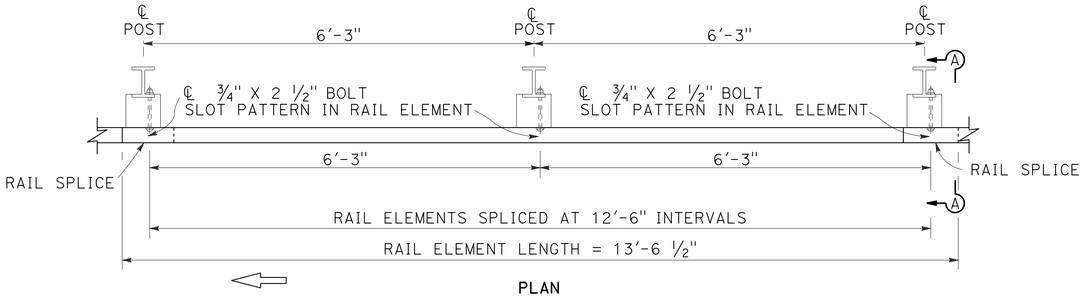

PLAN

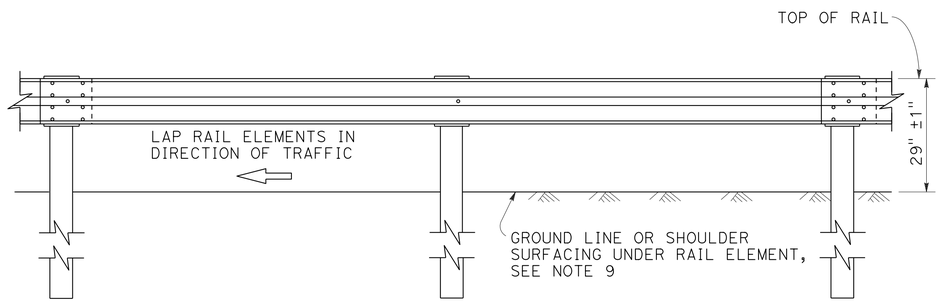

ELEVATION

METAL BEAM GUARD RAILING WITH STEEL POSTS AND NOTCHED WOOD OR NOTCHED RECYCLED PLASTIC BLOCKS

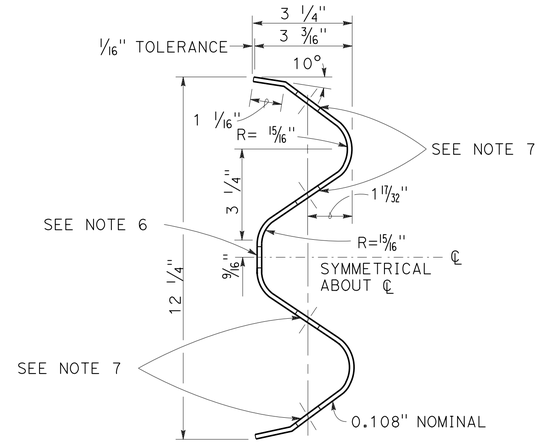

SECTION THRU RAIL ELEMENT

NOTES:

1. STANDARD HARDWARE USED TO CONSTRUCT GUARD RAILING IS THE SAME HARDWARE USED FOR MIDWEST GUARDRAIL SYSTEM. FOR DETAILS, SEE REVISED STANDARD PLAN A77M1.
2. FOR DETAILS OF STEEL POSTS AND NOTCHED WOOD BLOCKS USED TO CONSTRUCT GUARD RAILING, SEE CONSTRUCTION DETAIL C-3.
3. FOR ADDITIONAL INSTALLATION DETAILS, SEE CONSTRUCTION DETAIL C-4.
4. GUARD RAILING POST SPACING TO BE 6'-3" CENTER TO CENTER, EXCEPT AS OTHERWISE NOTED.
5. FOR GUARD RAILING END ANCHOR DETAILS, SEE CONSTRUCTION DETAIL C-5.
6. SLOTTED HOLE FOR BOLTED CONNECTION OF RAIL ELEMENT TO BLOCK AND POST. SEE "SECTION THRU RAIL ELEMENT".
7. SLOTTED HOLES FOR SPLICE BOLTS TO OVERLAP ENDS OF RAIL ELEMENT. SEE "SECTION THRU RAIL ELEMENT".
8. NOTCHED FACE OF BLOCK TOWARDS STEEL POST.
9. INSTALL POSTS IN SOIL.

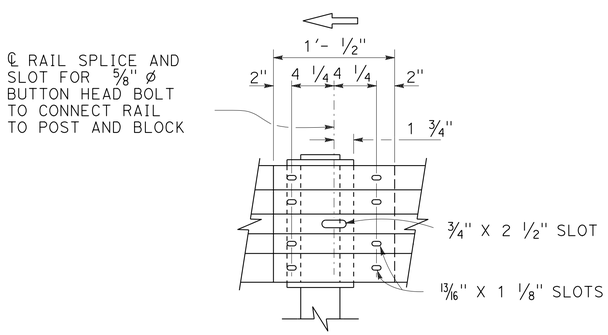

ELEVATION

RAIL ELEMENT SPLICE DETAIL

A) CONNECT THE OVER LAPPED END OF THE RAIL ELEMENTS WITH ⅝" ø X 1 ⅜" BUTTON HEAD OVAL SHOULDER SPLICE BOLTS INSERTED INTO THE 13/16" X 1 ⅛" SLOTS AND BOLTED TOGETHER WITH ⅝" ø RECESSED HEX NUTS. RECESS OF HEX NUT POINTS TOWARD RAIL ELEMENT. A TOTAL OF 8 BOLTS AND NUTS ARE TO BE USED AT EACH RAIL SPLICE CONNECTION.

B) THE ENDS OF THE RAIL ELEMENTS ARE TO BE OVERLAPPED IN THE DIRECTION OF TRAFFIC (SEE DETAILS).

C) WHERE END CAP IS TO BE ATTACHED TO THE END OF A RAIL ELEMENT, A TOTAL OF 4 OF THE ABOVE DESCRIBED SPLICE BOLTS AND NUTS ARE TO BE USED.

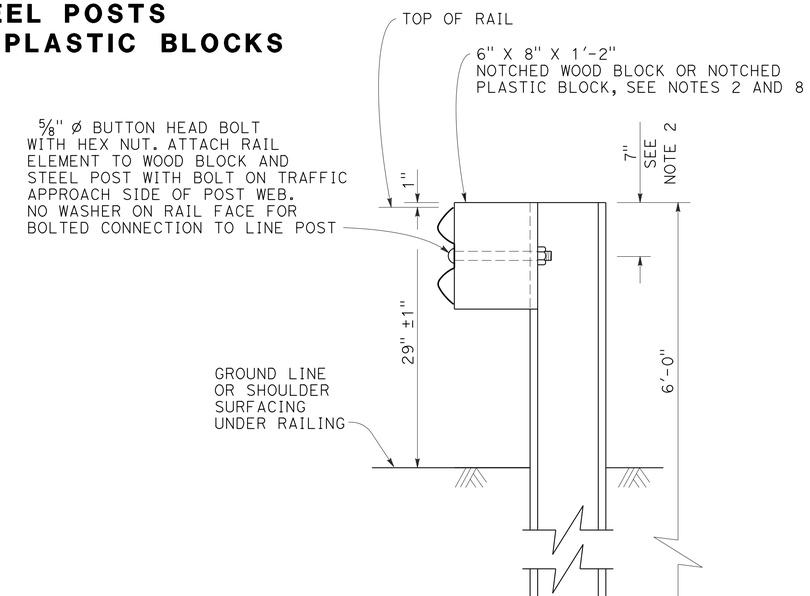

SECTION A-A

TYPICAL STEEL LINE POST INSTALLATION

SEE NOTE 3

CONSTRUCTION DETAILS METAL BEAM GUARD RAILING STANDARD RAILING SECTION (STEEL POST WITH NOTCHED WOOD OR NOTCHED RECYCLED PLASTIC BLOCK)

NO SCALE

C-2

STATE OF CALIFORNIA - DEPARTMENT OF TRANSPORTATION
Caltrans DESIGN
FUNCTIONAL SUPERVISOR STEVE TOPAL
CALCULATED-DESIGNED BY GINNY SEIBERT
CHECKED BY RUSSELL FLOOD
REVISED BY
DATE REVISED

P:\proj1\02\40220_plans\pse\Resubmit 11-06-15\24g220ga002.dgn

LAST REVISION 04-20-14
DATE PLOTTED => 06-NOV-2015
TIME PLOTTED => 11:30

Dist	COUNTY	ROUTE	POST MILES TOTAL PROJECT	SHEET No.	TOTAL SHEETS
02	Mod	299	52.2/54.7	5	34

Russell Flood 10-12-15
REGISTERED CIVIL ENGINEER DATE

10-12-15
PLANS APPROVAL DATE

REGISTERED PROFESSIONAL ENGINEER
RUSSELL FLOOD
No. C72261
Exp. 6-30-16
CIVIL
STATE OF CALIFORNIA

THE STATE OF CALIFORNIA OR ITS OFFICERS OR AGENTS SHALL NOT BE RESPONSIBLE FOR THE ACCURACY OR COMPLETENESS OF SCANNED COPIES OF THIS PLAN SHEET.

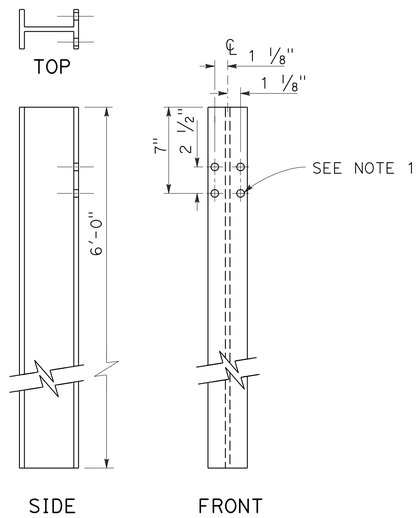

W6 X 9
STEEL POST

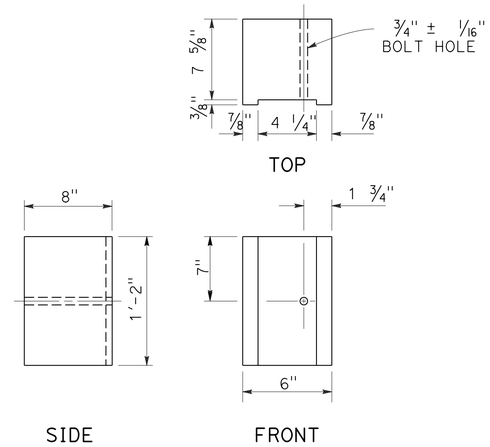

6" X 8"
NOTCHED WOOD BLOCK
SEE NOTES 2 AND 3

NOTES:

1. ALL HOLES IN STEEL POST SHALL BE 13/16" Dia MAXIMUM.
2. DIMENSIONS SHOWN FOR WOOD BLOCK ARE NOMINAL.
3. NOTCHED FACE OF BLOCK FACES STEEL POST.
4. PLASTIC BLOCK OPTION AVAILABLE PER CALTRANS APPROVED PRODUCTS LIST.

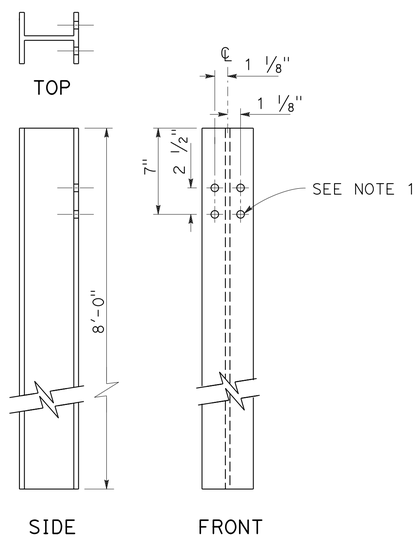

W6 X 15
STEEL POST

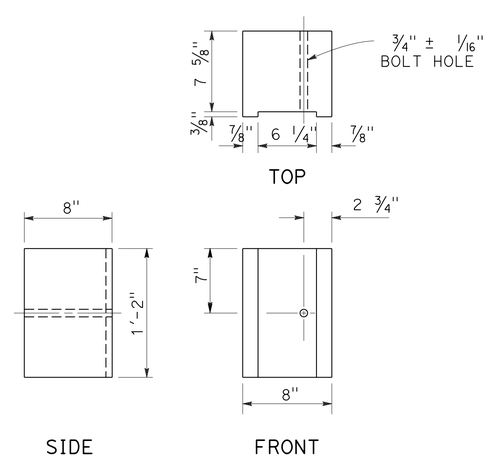

8" X 8"
NOTCHED WOOD BLOCK
SEE NOTES 2 AND 3

CONSTRUCTION DETAILS
METAL BEAM GUARD RAILING
STEEL POST,
NOTCHED WOOD BLOCK DETAILS

NO SCALE

C-3

REVISED BY	DATE REVISED
GINNY SEIBERT	RUSSELL FLOOD
CALCULATED-DESIGNED BY	CHECKED BY
FUNCTIONAL SUPERVISOR	STEVE TOPAL

STATE OF CALIFORNIA - DEPARTMENT OF TRANSPORTATION
Caltrans® DESIGN

P:\proj1\02\4G220_plans\pse\Resubmit 11-06-15\24g220ga003.dgn

LAST REVISION 02-14-14
DATE PLOTTED => 06-NOV-2015
TIME PLOTTED => 11:30

Dist	COUNTY	ROUTE	POST MILES TOTAL PROJECT	SHEET No.	TOTAL SHEETS
02	Mod	299	52.2/54.7	6	34

Russell Flood 10-12-15
REGISTERED CIVIL ENGINEER DATE

10-12-15
PLANS APPROVAL DATE

REGISTERED PROFESSIONAL ENGINEER
RUSSELL FLOOD
No. C72261
Exp. 6-30-16
CIVIL
STATE OF CALIFORNIA

THE STATE OF CALIFORNIA OR ITS OFFICERS OR AGENTS SHALL NOT BE RESPONSIBLE FOR THE ACCURACY OR COMPLETENESS OF SCANNED COPIES OF THIS PLAN SHEET.

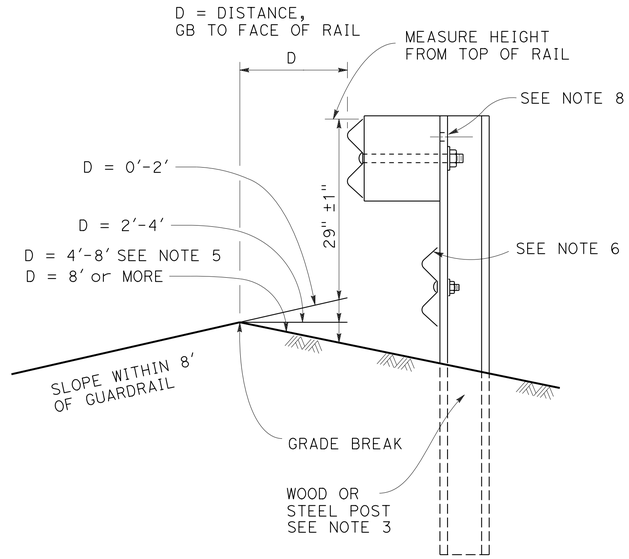

SECTION A-A

MEASURE HEIGHT DETAIL AT GRADE BREAK (GB)

WHEN THERE IS A BREAK POINT IN FRONT OF GUARDRAIL MEASURE HEIGHT OF GUARD RAIL BASED ON DISTANCE FROM GRADE BREAK TO ADJUST FOR TRAJECTORY.

NOTES:

1. Max 10:1 SLOPE IN FRONT OF GUARD RAILING.
2. STANDARD HARDWARE USED TO CONSTRUCT GUARD RAILING IS THE SAME HARDWARE USED FOR MIDWEST GUARDRAIL SYSTEM. FOR DETAILS, SEE REVISED STANDARD PLAN A77M1.
3. FOR DETAILS OF STEEL POSTS AND NOTCHED WOOD BLOCKS USED TO CONSTRUCT GUARD RAILING, SEE CONSTRUCTION DETAIL C-2.
4. A SINGLE LINE POST MAY BE OFFSET UP TO 12" IN-LINE WITH THE GUARD RAILING IF AUTHORIZED.
5. WHEN THERE IS A BREAK POINT IN FRONT OF GUARDRAIL BETWEEN 4'-8' THE HEIGHT WILL BE DETERMINED BY THE ENGINEER.
6. PLACE RUB RAIL (RAIL ELEMENT) AS SHOWN WHEN THE HEIGHT OF THE GUARD RAILING IS MORE THAN 32" ABOVE THE GROUND DIRECTLY BELOW THE RAIL.
7. FOR BOLTED CONNECTION OF RAIL ELEMENT TO BLOCK AND POST, SEE "RAIL ELEMENT SPLICE DETAIL" AND "SECTON THRU RAIL ELEMENT".
8. ADDITIONAL HOLE IN UPPERMOST PORTION OF LINE POST IS FOR POTENTIAL FUTURE ADJUSTMENTS OF RAILING HEIGHT.
9. FOR WOOD POST, TOENAIL BLOCKS TO POST WITH 2-16D GALVANIZED NAILS. BLOCKS MUST HAVE MEANS TO RESIST ROTATION OTHER THAN THROUGH BOLT.
10. DIMENSIONS FOR POST AND BLOCKS ARE NOMINAL.

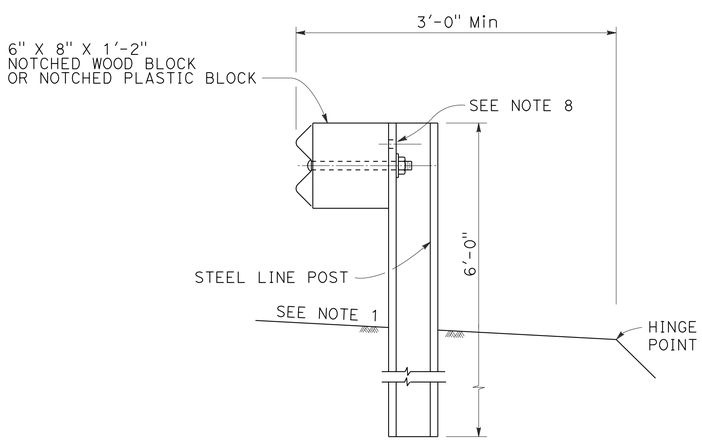

DETAIL A
TYPICAL ROADWAY INSTALLATION

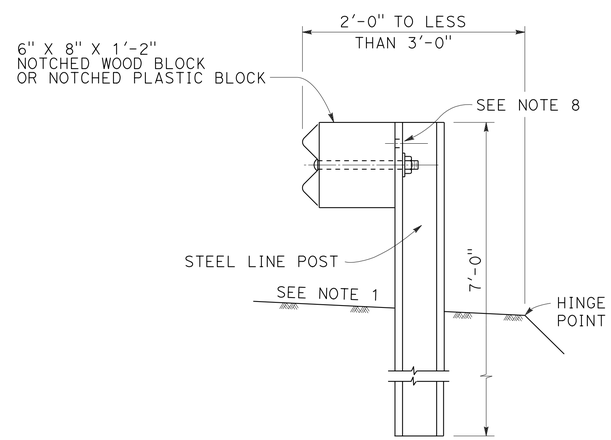

DETAIL B
NARROW ROADWAY INSTALLATION

POST EMBEDMENT

CONSTRUCTION DETAILS METAL BEAM GUARD RAILING TYPICAL LINE POST EMBEDMENT AND HINGE POINT OFFSET DETAILS

NO SCALE

C-4

STATE OF CALIFORNIA - DEPARTMENT OF TRANSPORTATION
Caltrans DESIGN

FUNCTIONAL SUPERVISOR: STEVE TOPAL
CALCULATED-DESIGNED BY: GINNY SEIBERT
CHECKED BY: RUSSELL FLOOD
REVISED BY
DATE REVISED

P:\proj1\02\4G220_plans\pse\Resubmit 11-06-15\24g220ga004.dgn

LAST REVISION 02-14-14 | DATE PLOTTED => 06-NOV-2015 | TIME PLOTTED => 11:30

Dist	COUNTY	ROUTE	POST MILES TOTAL PROJECT	SHEET No.	TOTAL SHEETS
02	Mod	299	52.2/54.7	7	34

Russell Flood 10-12-15
REGISTERED CIVIL ENGINEER DATE

10-12-15
PLANS APPROVAL DATE

REGISTERED PROFESSIONAL ENGINEER RUSSELL FLOOD No. C72261 Exp. 6-30-16 CIVIL STATE OF CALIFORNIA

THE STATE OF CALIFORNIA OR ITS OFFICERS OR AGENTS SHALL NOT BE RESPONSIBLE FOR THE ACCURACY OR COMPLETENESS OF SCANNED COPIES OF THIS PLAN SHEET.

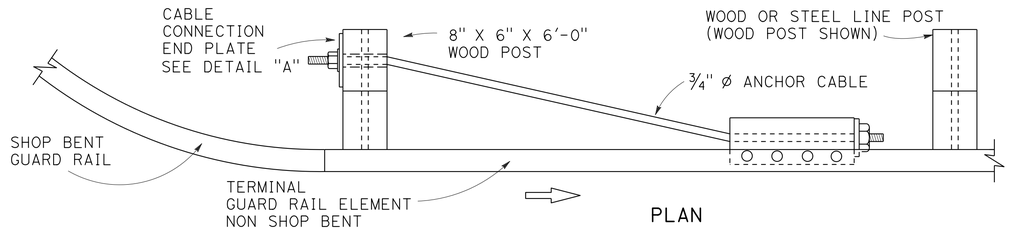

PLAN

INTERMEDIATE ANCHOR ASSEMBLY

SEE NOTE 2

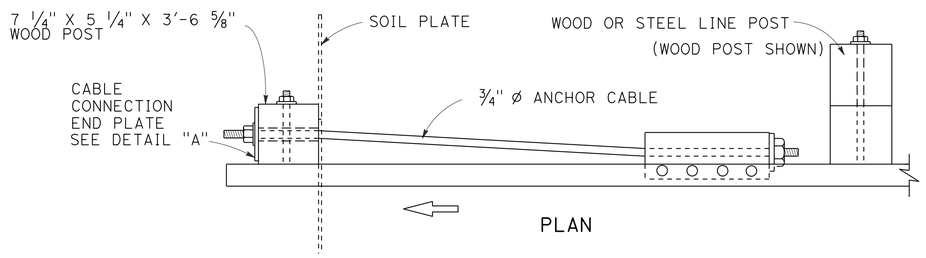

PLAN

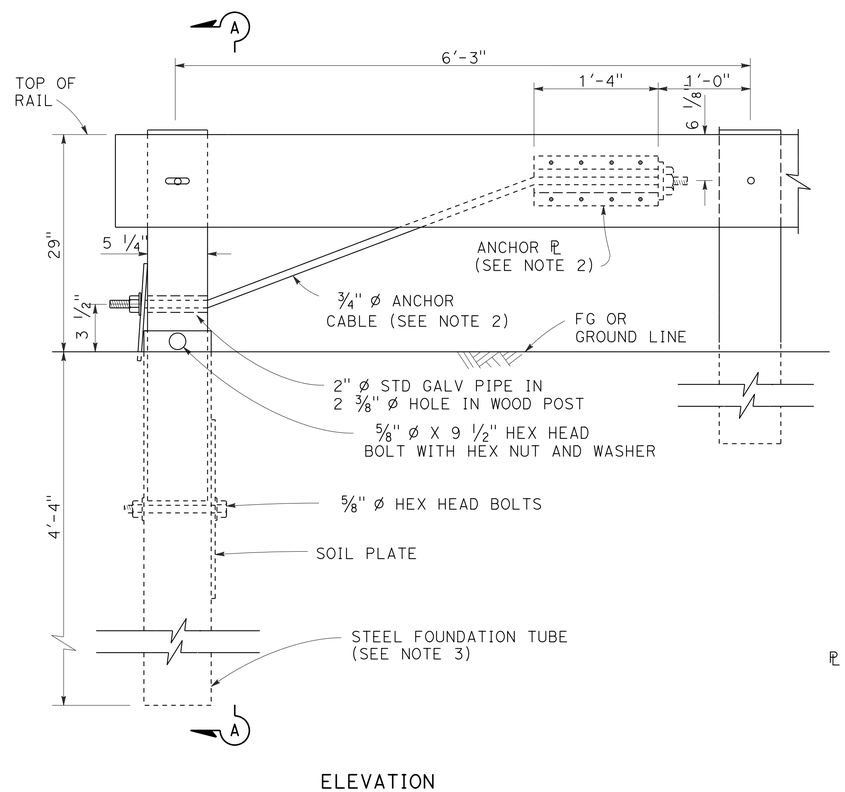

ELEVATION

END ANCHOR ASSEMBLY (TYPE SFT)

SEE NOTE 1

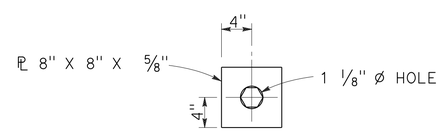

DETAIL "A" CABLE CONNECTION END PLATE

NOTES:

1. TO BE USED AT THE TRAILING END OF MBGR ON ONE WAY ROADWAYS, OR OUTSIDE OF THE CLEAR RECOVERY ZONE (20'+ FROM APPROACHING TRAFFIC).
2. FOR DETAILS OF THE ANCHOR PLATE AND 3/4" CABLE, SEE STANDARD PLAN A77S3.
3. A 6'-0" LENGTH STEEL FOUNDATION TUBE, TS 8" X 6" X 3/16", WITHOUT A SOIL PLATE, MAY BE FURNISHED AND INSTALLED IN PLACE OF THE 4'-6" LENGTH STEEL FOUNDATION TUBE AND SOIL PLATE SHOWN. MINIMUM EMBEDMENT OF THE 6'-0" LENGTH TUBE SHALL BE 5'-9". A 5/8" O HEX HEAD BOLT AND NUT SHALL BE INSTALLED IN THE HOLE IN THE 6'-0" LENGTH TUBE TO KEEP THE WOOD POST FROM DROPPING INTO THE TUBE.
4. INSTALL LINE POST, STEEL FOUNDATION TUBE AND SOIL PLATE IN SOIL.
5. INTERMEDIATE ANCHOR ASSEMBLY USES MODIFIED SFT BY PLACING BLOCK AT POST WITH STEEL FOUNDATION TUBE.
6. INTERMEDIATE ANCHOR ASSEMBLY IS TYPICALLY USED AT THE END OF SHOP BENT GUARD RAILING TO PROVIDE TENSION FOR THE NON SHOP BENT GUARD RAILING.

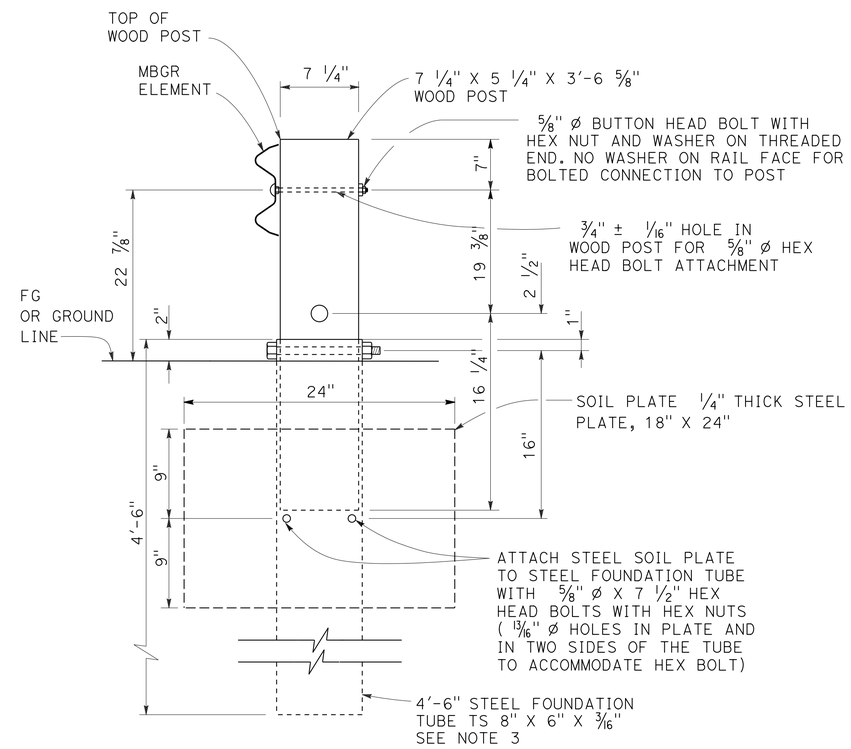

SECTION A-A

CONSTRUCTION DETAILS METAL BEAM GUARD RAILING END ANCHOR ASSEMBLY (TYPE SFT)

NO SCALE

C-5

REVISED BY	DATE REVISED
GINNY SEIBERT	RUSSELL FLOOD
CALCULATED-DESIGNED BY	CHECKED BY
FUNCTIONAL SUPERVISOR	STEVE TOPAL

STATE OF CALIFORNIA - DEPARTMENT OF TRANSPORTATION
Caltrans DESIGN

P:\proj1\02\40220_plans\pse\Resubmit 11-06-15\24g220ga005.dgn

LAST REVISION 09-01-15 | DATE PLOTTED => 06-NOV-2015 | TIME PLOTTED => 11:30

Dist	COUNTY	ROUTE	POST MILES TOTAL PROJECT	SHEET No.	TOTAL SHEETS
02	Mod	299	52.2/54.7	8	34

Russell Flood 10-12-15
REGISTERED CIVIL ENGINEER DATE

10-12-15
PLANS APPROVAL DATE

REGISTERED PROFESSIONAL ENGINEER
RUSSELL FLOOD
No. C72261
Exp. 6-30-16
CIVIL
STATE OF CALIFORNIA

THE STATE OF CALIFORNIA OR ITS OFFICERS OR AGENTS SHALL NOT BE RESPONSIBLE FOR THE ACCURACY OR COMPLETENESS OF SCANNED COPIES OF THIS PLAN SHEET.

NOTES:

1. CONTRACTOR SHALL FIELD VERIFY HEIGHT PRIOR TO REPAIRING INLET.
2. REPAIR CURB OPENING ON TYPE GO DRAINAGE INLET.

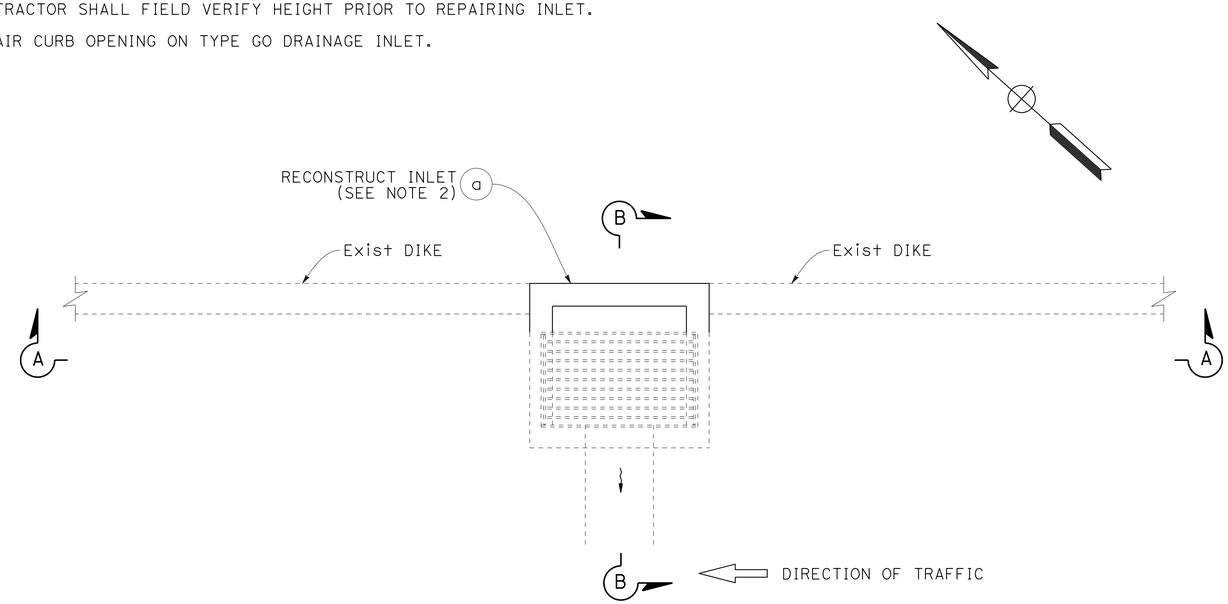

PLAN

RECONSTRUCT DRAINAGE INLET (TYPE GO)

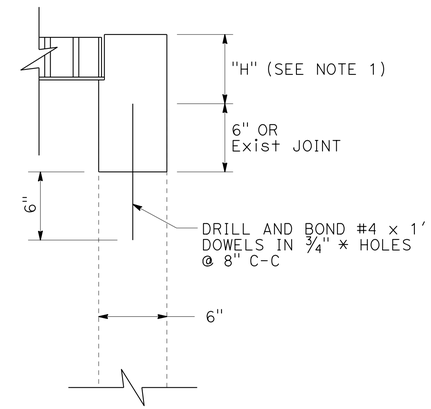

DETAIL A

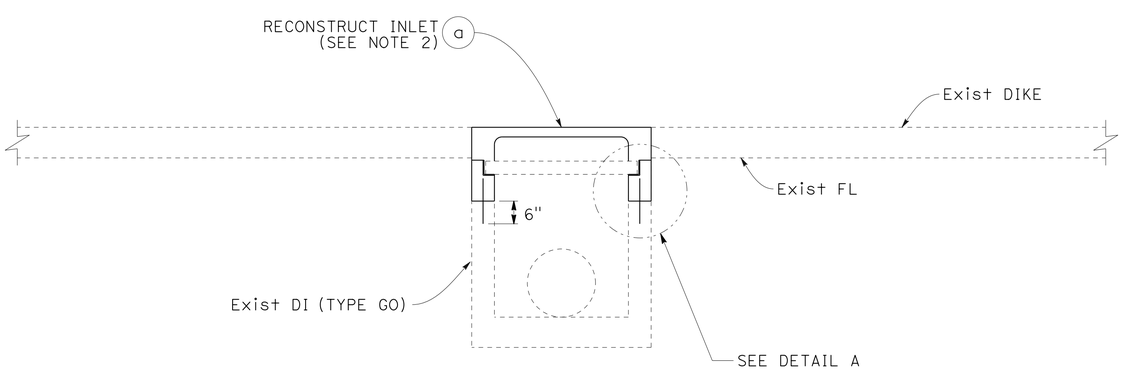

SECTION A-A

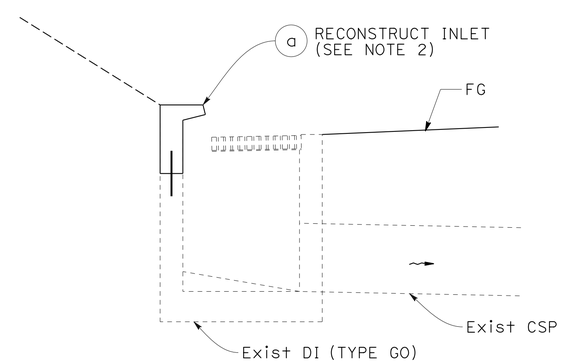

SECTION B-B

DRAINAGE SYSTEM No. 1

PM 52.50

DRAINAGE DETAILS

NO SCALE **DD-1**

REVISED BY	DATE REVISED

RUSSELL FLOOD — GINNY SEIBERT — CALCULATED-DESIGNED BY / CHECKED BY

FUNCTIONAL SUPERVISOR: STEVE TOPAL

STATE OF CALIFORNIA - DEPARTMENT OF TRANSPORTATION — Caltrans® DESIGN

P:\proj1\02\4G220_plans\pse\Resubmit 11-06-15\24g220ic001.dgn

LAST REVISION 08-31-15 | DATE PLOTTED => 06-NOV-2015 | TIME PLOTTED => 11:30

Dist	COUNTY	ROUTE	POST MILES TOTAL PROJECT	SHEET No.	TOTAL SHEETS
02	Mod	299	52.2/54.7	9	34

Russell Flood 10-12-15
REGISTERED CIVIL ENGINEER DATE

10-12-15
PLANS APPROVAL DATE

REGISTERED PROFESSIONAL ENGINEER RUSSELL FLOOD No. C72261 Exp. 6-30-16 CIVIL STATE OF CALIFORNIA

THE STATE OF CALIFORNIA OR ITS OFFICERS OR AGENTS SHALL NOT BE RESPONSIBLE FOR THE ACCURACY OR COMPLETENESS OF SCANNED COPIES OF THIS PLAN SHEET.

NOTES:

1. PLACE 12" - 18" PIPE REDUCER BENEATH EXISTING 12" CMP TO DIRECT WATER INTO DOWNDRAIN.
2. ELEVATIONS ARE ASSUMED DATUM.
3. SEE SHEET DD-6 FOR ROCK BLANKET DETAILS.

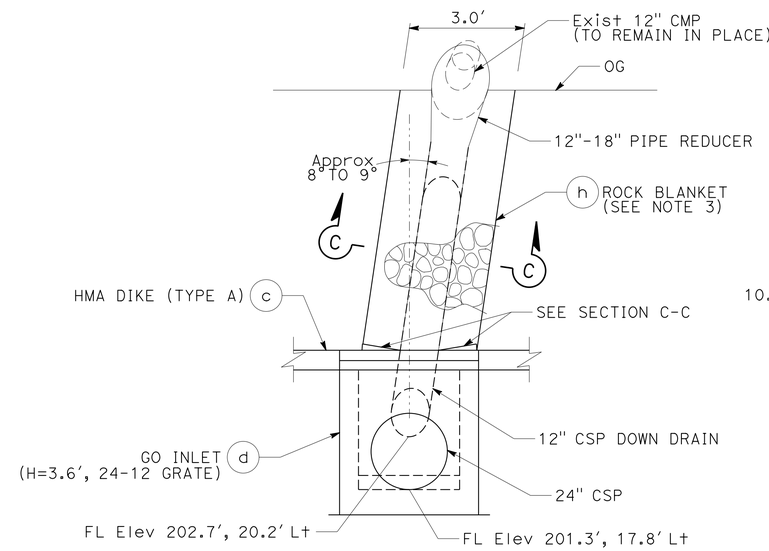

SECTION A-A

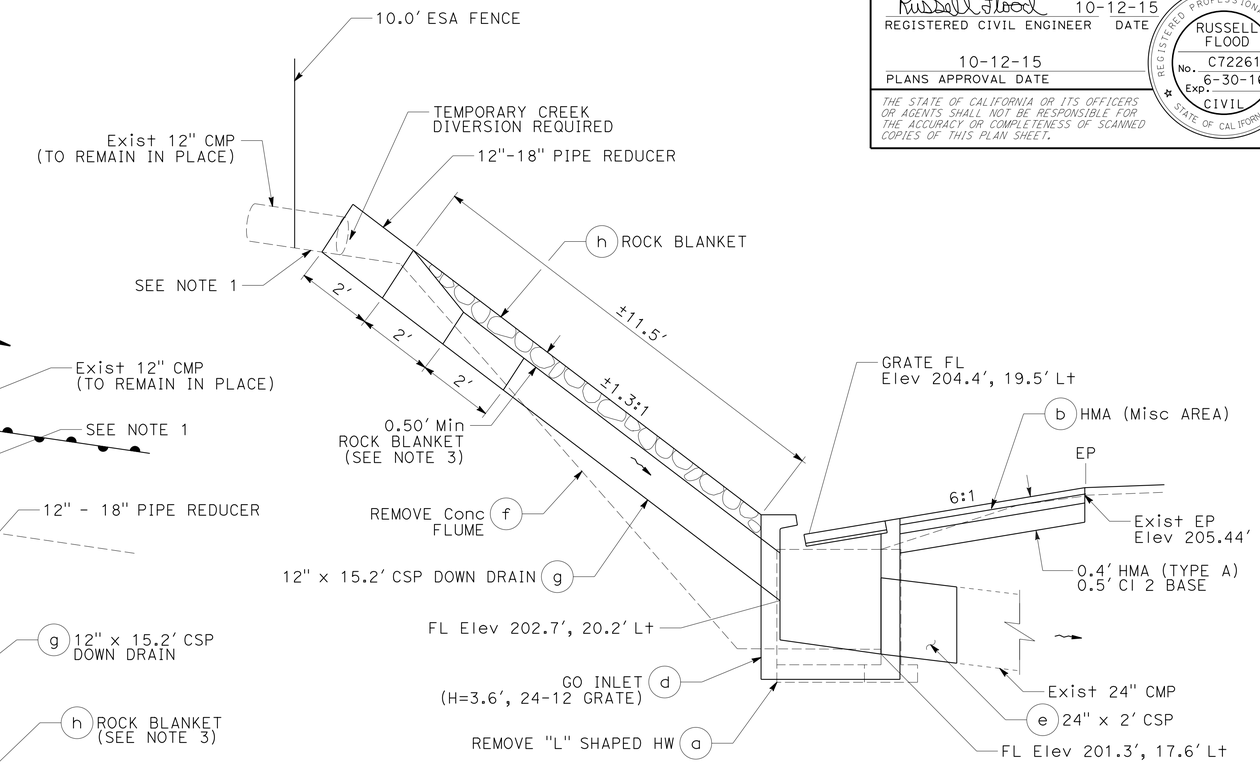

SECTION B-B

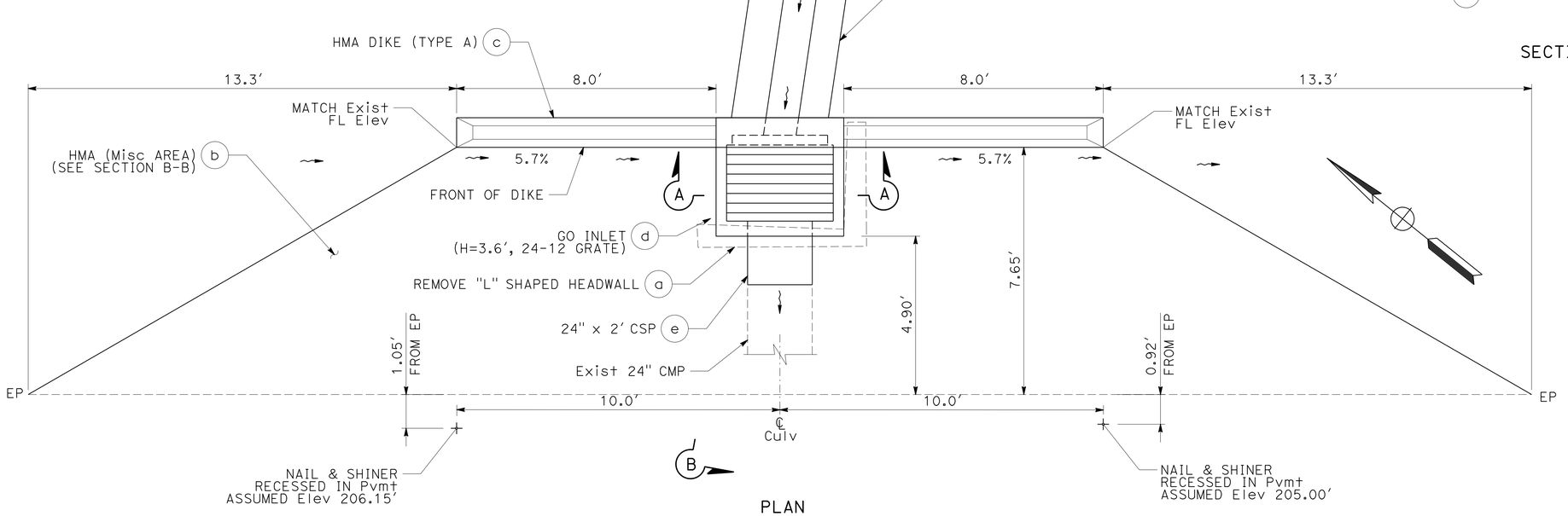

PLAN

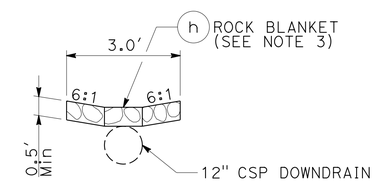

SECTION C-C

DRAINAGE SYSTEM No. 2

PM 52.96

DRAINAGE DETAILS

NO SCALE

DD-2

STATE OF CALIFORNIA - DEPARTMENT OF TRANSPORTATION
Caltrans
DESIGN
FUNCTIONAL SUPERVISOR: STEVE TOPAL
CALCULATED-DESIGNED BY: GINNY SEIBERT
CHECKED BY: RUSSELL FLOOD
REVISED BY
DATE REVISED

P:\proj1\02\40220_plans\pse\Resubmit 11-06-15\24g220ic002.dgn

LAST REVISION 09-14-15
DATE PLOTTED => 06-NOV-2015
TIME PLOTTED => 11:30

Dist	COUNTY	ROUTE	POST MILES TOTAL PROJECT	SHEET No.	TOTAL SHEETS
02	Mod	299	52.2/54.7	10	34

Russell Flood 10-12-15
REGISTERED CIVIL ENGINEER DATE

10-12-15
PLANS APPROVAL DATE

REGISTERED PROFESSIONAL ENGINEER RUSSELL FLOOD No. C72261 Exp. 6-30-16 CIVIL STATE OF CALIFORNIA

THE STATE OF CALIFORNIA OR ITS OFFICERS OR AGENTS SHALL NOT BE RESPONSIBLE FOR THE ACCURACY OR COMPLETENESS OF SCANNED COPIES OF THIS PLAN SHEET.

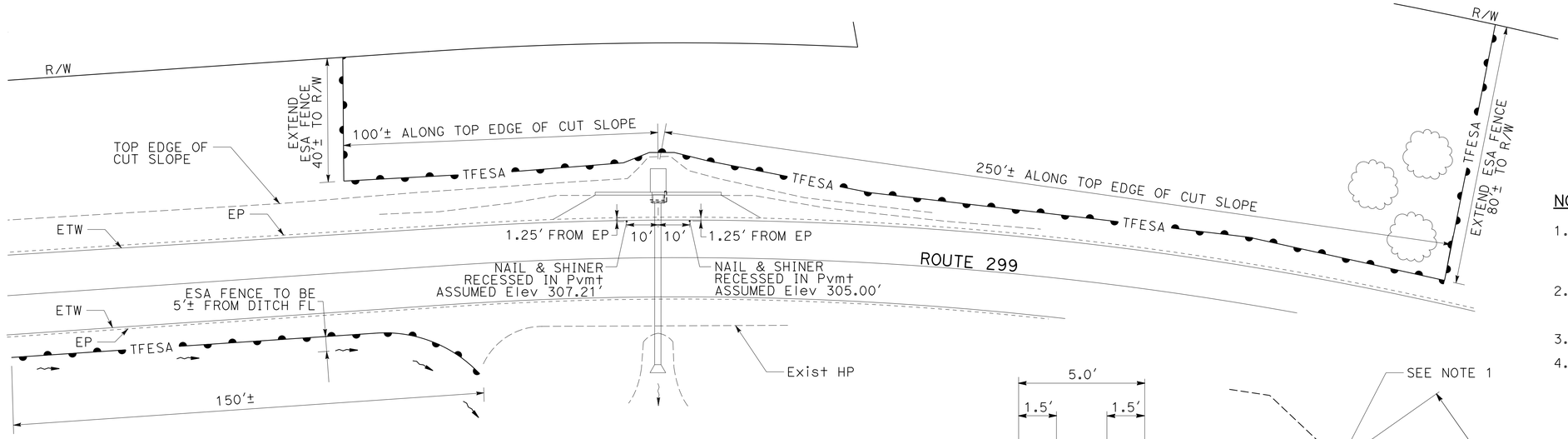

TEMPORARY FENCE (TYPE ESA) LOCATIONS

NOTES:

1. ROCK BLANKET TO BE BUILT INTO HILLSIDE IN SUCH A WAY THAT WATER DROPPING FROM NATURAL LEDGE FLOWS ONTO ROCK BLANKET.
2. FOR COMPLETE RIGHT OF WAY DATA, SEE RIGHT OF WAY RECORD MAPS AT THE DISTRICT OFFICE.
3. ELEVATIONS ARE ASSUMED DATUM.
4. SEE SHEET DD-6 FOR ROCK BLANKET DETAILS.

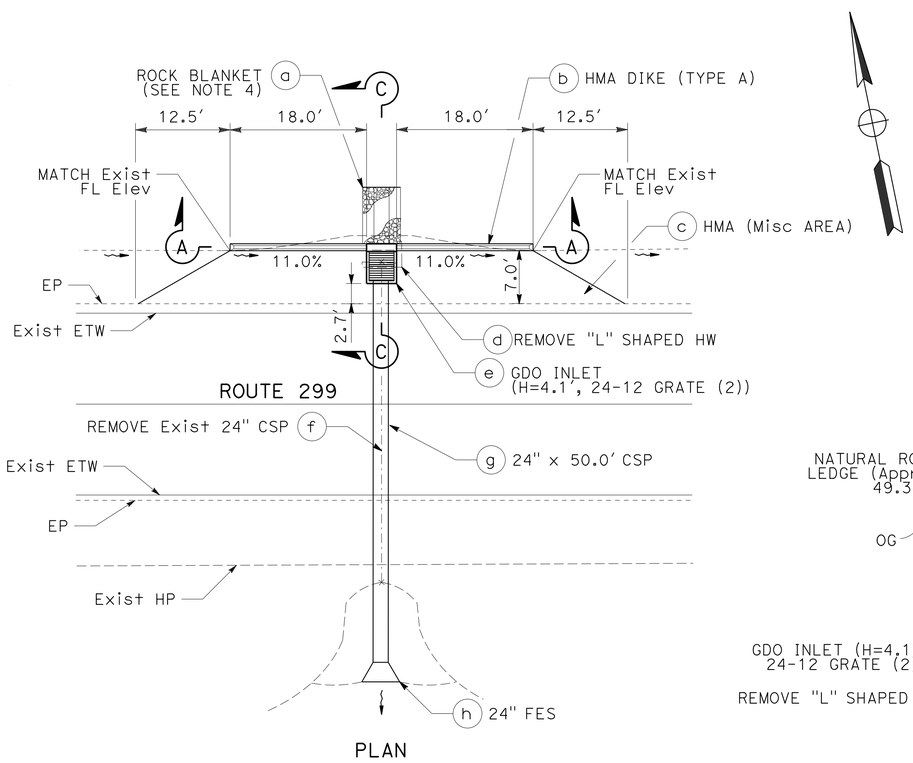

PLAN

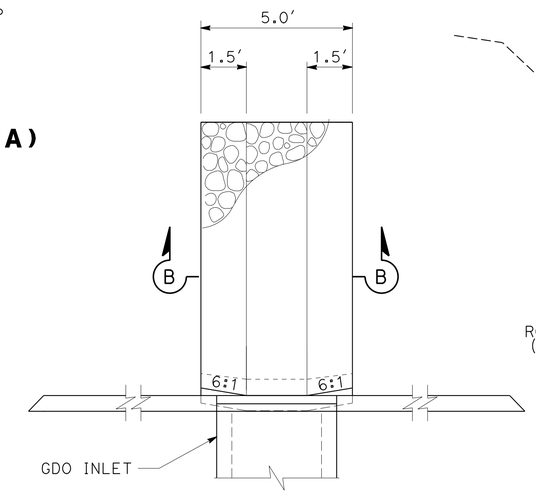

SECTION A-A

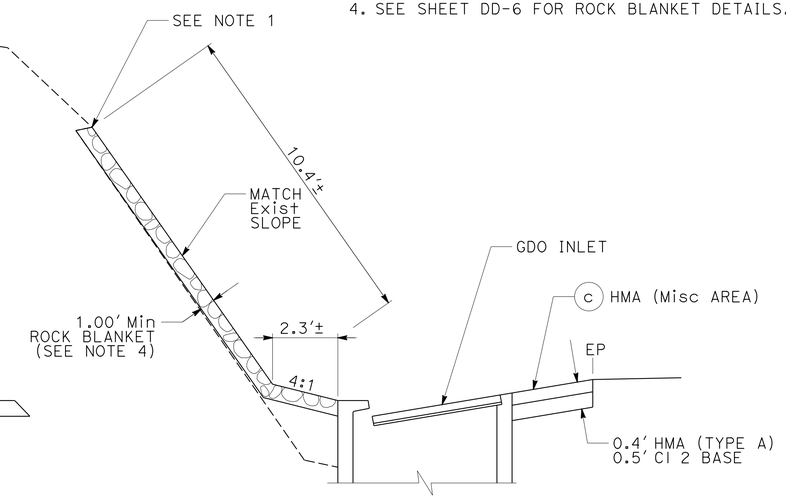

SECTION C-C

ROCK BLANKET

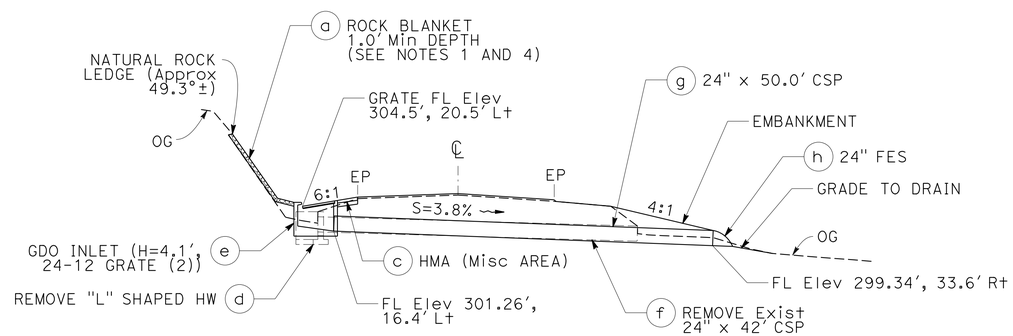

PROFILE

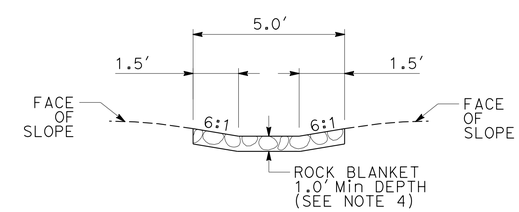

SECTION B-B

DRAINAGE SYSTEM No. 3

PM 53.22

DRAINAGE DETAILS

NO SCALE

DD-3

APPROVED FOR DRAINAGE WORK ONLY

REVISED BY	DATE REVISED
GINNY SEIBERT	RUSSELL FLOOD
CALCULATED-DESIGNED BY	CHECKED BY
FUNCTIONAL SUPERVISOR	STEVE TOPAL

STATE OF CALIFORNIA - DEPARTMENT OF TRANSPORTATION
Caltrans
DESIGN

P:\proj1\02\4G220_plans\pse\Resubmit 11-06-15\24g220ic003.dgn

LAST REVISION 09-14-15 | DATE PLOTTED => 06-NOV-2015 | TIME PLOTTED => 11:30

Dist	COUNTY	ROUTE	POST MILES TOTAL PROJECT	SHEET No.	TOTAL SHEETS
02	Mod	299	52.2/54.7	11	34

Russell Flood 10-12-15
REGISTERED CIVIL ENGINEER DATE

10-12-15
PLANS APPROVAL DATE

REGISTERED PROFESSIONAL ENGINEER
RUSSELL FLOOD
No. C72261
Exp. 6-30-16
CIVIL
STATE OF CALIFORNIA

THE STATE OF CALIFORNIA OR ITS OFFICERS OR AGENTS SHALL NOT BE RESPONSIBLE FOR THE ACCURACY OR COMPLETENESS OF SCANNED COPIES OF THIS PLAN SHEET.

NOTE:

1. ELEVATIONS ARE ASSUMED DATUM.

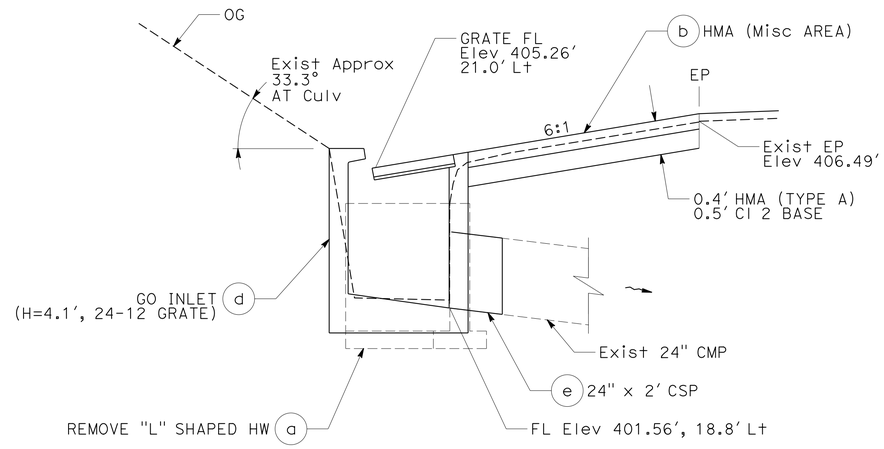

SECTION A-A

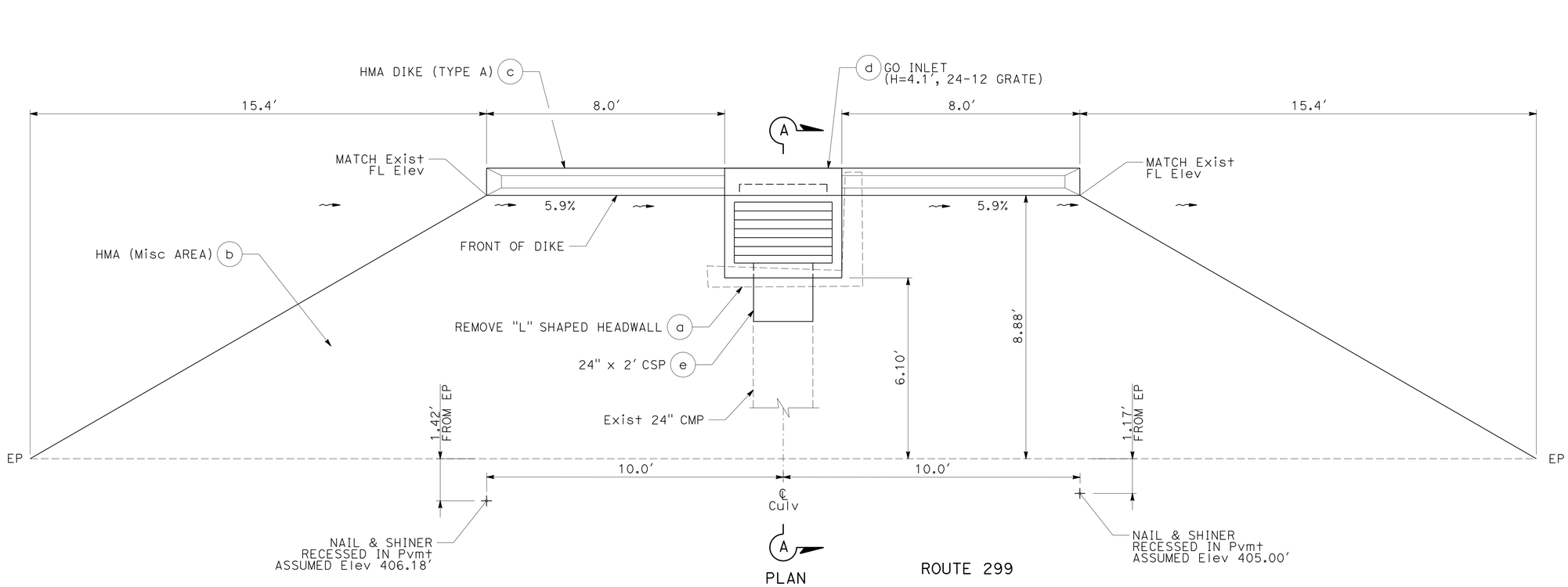

DRAINAGE SYSTEM No. 4

PM 53.85

DRAINAGE DETAILS

NO SCALE

DD-4

STATE OF CALIFORNIA - DEPARTMENT OF TRANSPORTATION
Caltrans
DESIGN

FUNCTIONAL SUPERVISOR: STEVE TOPAL
CALCULATED-DESIGNED BY: GINNY SEIBERT
CHECKED BY: RUSSELL FLOOD
REVISED BY
DATE REVISED

P:\proj\02\4G220_plans\pse\Resubmit 11-06-15\24g220ic004.dgn

LAST REVISION 09-14-15 | DATE PLOTTED => 06-NOV-2015 | TIME PLOTTED => 11:30

Dist	COUNTY	ROUTE	POST MILES TOTAL PROJECT	SHEET No.	TOTAL SHEETS
02	Mod	299	52.2/54.7	12	34

Russell Flood 10-12-15
REGISTERED CIVIL ENGINEER DATE

10-12-15
PLANS APPROVAL DATE

REGISTERED PROFESSIONAL ENGINEER
RUSSELL FLOOD
No. C72261
Exp. 6-30-16
CIVIL
STATE OF CALIFORNIA

THE STATE OF CALIFORNIA OR ITS OFFICERS OR AGENTS SHALL NOT BE RESPONSIBLE FOR THE ACCURACY OR COMPLETENESS OF SCANNED COPIES OF THIS PLAN SHEET.

NOTE:

1. ELEVATIONS ARE ASSUMED DATUM.

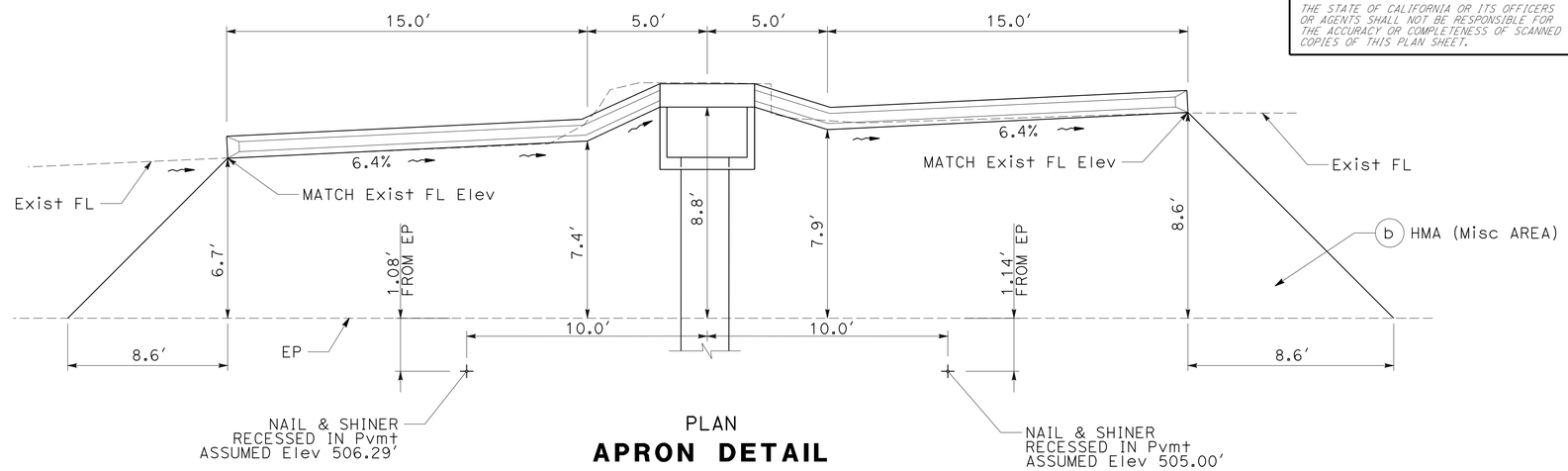

PLAN
APRON DETAIL

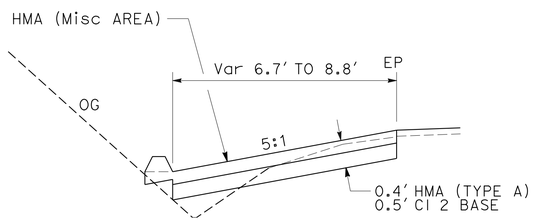

TYPICAL CROSS SECTION
HMA APRON

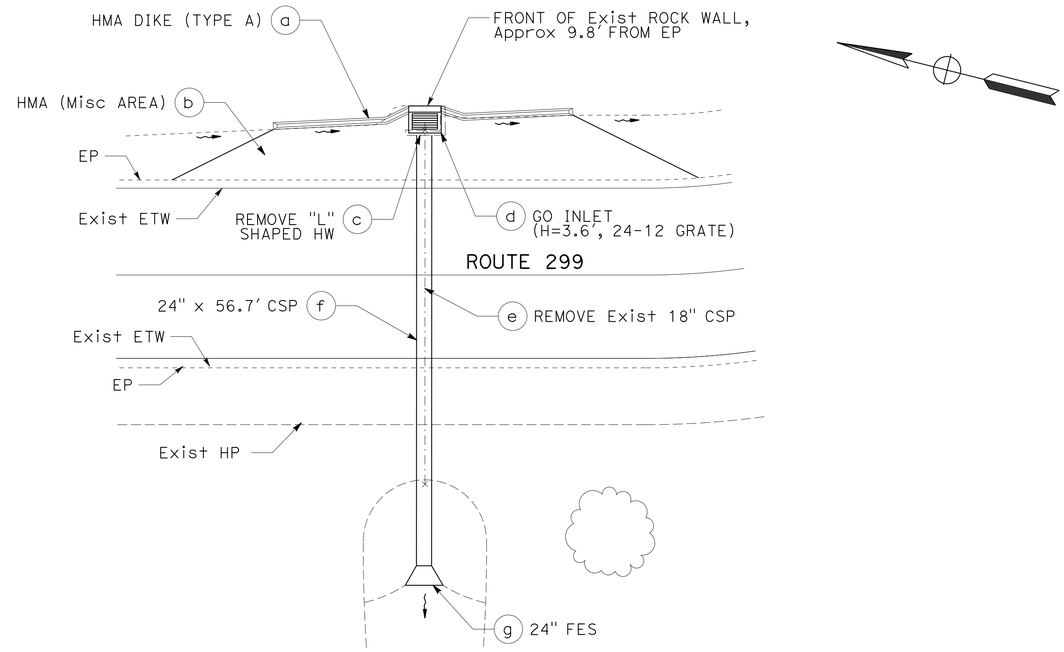

PLAN

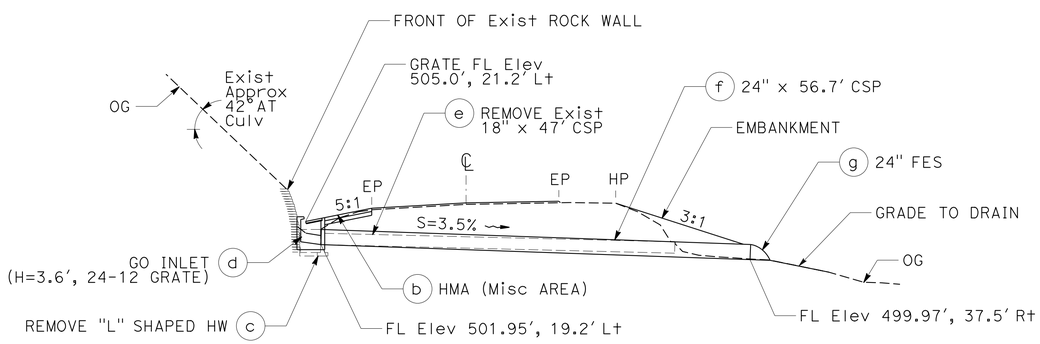

PROFILE

DRAINAGE SYSTEM No. 5
PM 54.10

DRAINAGE DETAILS
NO SCALE **DD-5**

APPROVED FOR DRAINAGE WORK ONLY

STATE OF CALIFORNIA - DEPARTMENT OF TRANSPORTATION
Caltrans DESIGN
FUNCTIONAL SUPERVISOR STEVE TOPAL
CALCULATED-DESIGNED BY GINNY SEIBERT
CHECKED BY RUSSELL FLOOD
REVISED BY
DATE REVISED

P:\proj1\02\4G220_plans\pse\Resubmit 11-06-15\24g220ic005.dgn

LAST REVISION 07-06-15
DATE PLOTTED => 06-NOV-2015
TIME PLOTTED => 11:30

Dist	COUNTY	ROUTE	POST MILES TOTAL PROJECT	SHEET No.	TOTAL SHEETS
02	Mod	299	52.2/54.7	13	34

Russell Flood 10-07-15
REGISTERED CIVIL ENGINEER DATE

10-12-15
PLANS APPROVAL DATE

REGISTERED PROFESSIONAL ENGINEER
RUSSELL FLOOD
No. C72261
Exp. 6-30-16
CIVIL
STATE OF CALIFORNIA

THE STATE OF CALIFORNIA OR ITS OFFICERS OR AGENTS SHALL NOT BE RESPONSIBLE FOR THE ACCURACY OR COMPLETENESS OF SCANNED COPIES OF THIS PLAN SHEET.

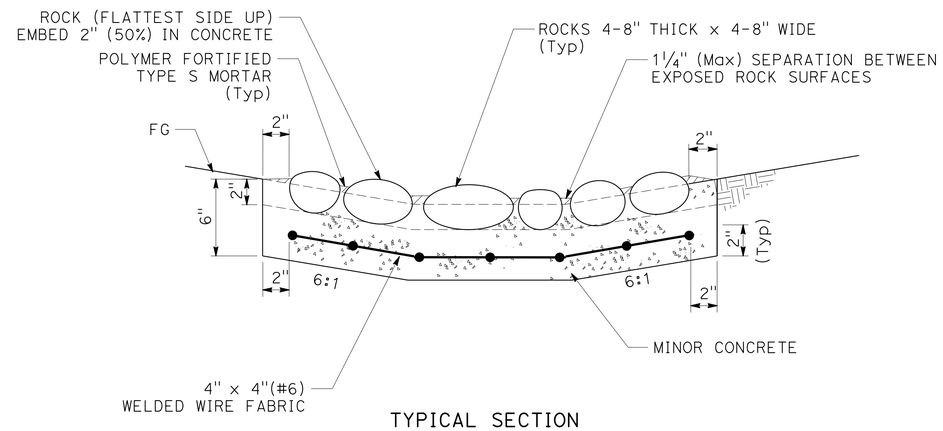

TYPICAL SECTION

DETAIL A

DRAINAGE SYSTEM No. 2 h

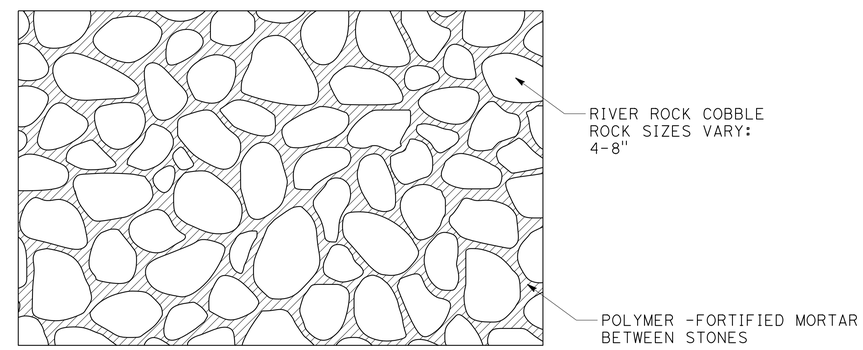

PLAN

ROCK BLANKET

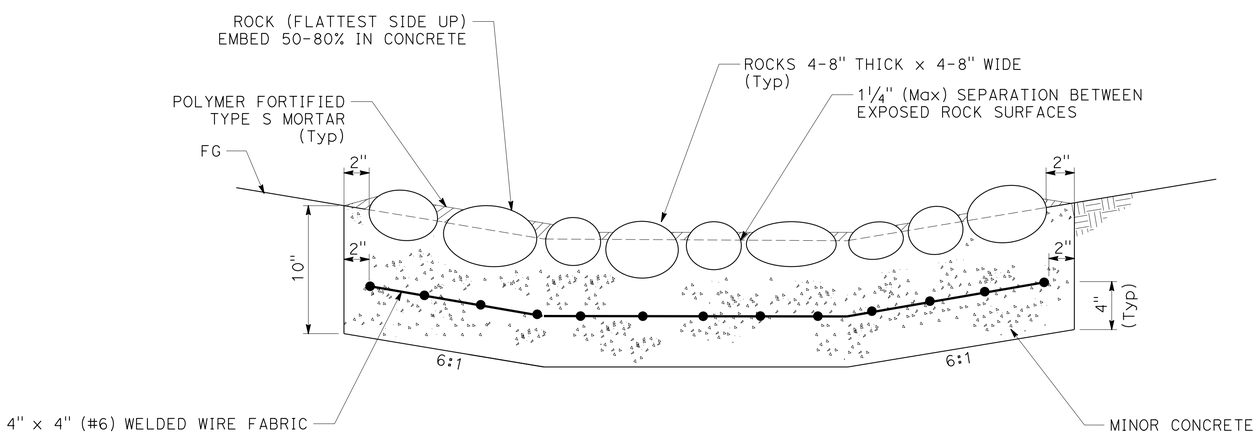

TYPICAL SECTION

DETAIL B

DRAINAGE SYSTEM No. 3 a

DRAINAGE DETAILS
ROCK BLANKET
NO SCALE

DD-6

REVISED BY | DATE REVISED
ROBIN SOLARI | RUSSELL FLOOD
CALCULATED-DESIGNED BY | CHECKED BY
FUNCTIONAL SUPERVISOR | STEVE TOPAL
STATE OF CALIFORNIA - DEPARTMENT OF TRANSPORTATION
Caltrans
DESIGN

P:\proj1\02\4G220_plans\pse\Resubmit 11-06-15\24g220ic006.dgn

LAST REVISION 08-25-15 | DATE PLOTTED => 06-NOV-2015 | TIME PLOTTED => 11:30

Dist	COUNTY	ROUTE	POST MILES TOTAL PROJECT	SHEET No.	TOTAL SHEETS
02	Mod	299	52.2/54.7	14	34

Russell Flood 10-12-15
REGISTERED CIVIL ENGINEER DATE

10-12-15
PLANS APPROVAL DATE

REGISTERED PROFESSIONAL ENGINEER
RUSSELL FLOOD
No. C72261
Exp. 6-30-16
CIVIL
STATE OF CALIFORNIA

THE STATE OF CALIFORNIA OR ITS OFFICERS OR AGENTS SHALL NOT BE RESPONSIBLE FOR THE ACCURACY OR COMPLETENESS OF SCANNED COPIES OF THIS PLAN SHEET.

NOTE:

1. (N) - NOT A SEPARATE PAY ITEM, FOR INFORMATION ONLY.
2. STANDARD JOINTS SHALL BE USED ON CROSS CULVERTS. DOWNDRAIN JOINTS SHALL BE USED ON DOWNDRAIN.

DRAINAGE QUANTITIES

POST MILE	DRAINAGE SYSTEM No.	DRAINAGE ITEM	REMOVE CULVERT (LF)	REMOVE CONCRETE (CY)	RECONSTRUCT INLET (EA)	ROADWAY EXCAVATION (CY)	(N) EMBANKMENT (CY)	CLASS 2 AGGREGATE BASE (CY)	* HOT MIX ASPHALT (TYPE A) (TON)	* PLACE HMA DIKE (TYPE A) (LF)	PLACE HMA (MISCELLANEOUS AREA) (SQYD)	MINOR CONCRETE (MINOR STRUCTURE) (CY)	24" CORRUGATED STEEL PIPE (.109" THICK) (LF)	12" CORRUGATED STEEL PIPE DOWNDRAIN (LF)	24" STEEL FLARED END SECTION (EA)	ROCK BLANKET (SQFT)	MISCELLANEOUS IRON AND STEEL (LB)	MARKER (CULVERT) (EA)	DESCRIPTION	DRAINAGE ITEM	DRAINAGE SYSTEM No.
52.50	1	a			1													1	REPAIR CURB OPENING ON GO INLET	a	1
52.96	2	a		1.29															REMOVE "L" HEADWALL	a	2
		b				8.1		4.5	7.3		27.1								HMA APRON	b	
		c							0.7	16									HMA DIKE (TYPE A)	c	
		d										1.39					326	1	GO INLET (H=3.6, 24-12 GRATE)	d	
		e											2.0						24" X 2' CSP	e	
		f		0.50															REMOVE CONCRETE FLUME	f	
		g					3.7							15.2					12" CSP DOWNDRAIN	g	
		h														34.5			ROCK BLANKET	h	
53.22	3	a														64			ROCK BLANKET	a	3
		b							1.6	36									HMA DIKE (TYPE A)	b	
		c				12.2		6.8	11.0		38.6								HMA APRON	c	
		d		1.29															REMOVE "L" HEADWALL	d	
		e										1.97					634	2	GDO INLET (H=4.1, 24-12 GRATE (2))	e	
		f	42																REMOVE 24" CSP	f	
		g					8.5						50.0						24" X 50' CSP	g	
		h													1				24" FES	h	
53.85	4	a		1.29															REMOVE "L" HEADWALL	a	4
		b				10.1		5.6	9.1		33.7								HMA APRON	b	
		c							0.7	16									HMA DIKE (TYPE A)	c	
		d										1.51					326	1	GO INLET (H=4.1, 24-12 GRATE)	d	
		e											2.0						24" X 2' CSP	e	
54.10	5	a							1.6	36									HMA DIKE (TYPE A)	a	5
		b				13.8		7.7	12.5		46.2								HMA APRON	b	
		c		1.29															REMOVE "L" HEADWALL	c	
		d										1.39					326	2	GO INLET (H=3.6, 24-12 GRATE)	d	
		e	47																REMOVE 18" CSP	e	
		f					12.2						56.7						24" X 56.7' CSP	f	
		g													1				24" FES	g	
	TOTAL		89	5.66	1	44.2	24.4	24.6	44.5	104	145.6	6.26	110.7	15.2	2	98.5	1612	7			

* INCLUDED IN ROADWAY QUANTITIES TABLE ON SHEET Q-1.

DRAINAGE QUANTITIES

DQ-1

REVISED BY: RUSSELL FLOOD
DATE REVISED: GINNY SEIBERT
CALCULATED-DESIGNED BY
CHECKED BY
FUNCTIONAL SUPERVISOR: STEVE TOPAL

STATE OF CALIFORNIA - DEPARTMENT OF TRANSPORTATION
Caltrans® DESIGN

P:\proj1\02\40220_plans\pse\Resubmit 11-06-15\24g220id001.dgn

LAST REVISION 08-31-15 | DATE PLOTTED => 06-NOV-2015 | TIME PLOTTED => 11:30

Dist	COUNTY	ROUTE	POST MILES TOTAL PROJECT	SHEET No.	TOTAL SHEETS
02	Mod	299	52.2/54.7	15	34

Russell Flood 10-12-15
REGISTERED CIVIL ENGINEER DATE

10-12-15
PLANS APPROVAL DATE

REGISTERED PROFESSIONAL ENGINEER
RUSSELL FLOOD
No. C72261
Exp. 6-30-16
CIVIL
STATE OF CALIFORNIA

THE STATE OF CALIFORNIA OR ITS OFFICERS OR AGENTS SHALL NOT BE RESPONSIBLE FOR THE ACCURACY OR COMPLETENESS OF SCANNED COPIES OF THIS PLAN SHEET.

NOTES:

1. EXACT SIGN LOCATIONS TO BE DETERMINED BY THE ENGINEER.
2. EXISTING UTILITY FACILITIES HAVE NOT BEEN POSITIVELY LOCATED.
3. SIGNS SHOWN WITH (CA) INDICATE CALIFORNIA SIGN CODES, OTHERWISE FEDERAL SIGN CODES ARE SHOWN.

CONSTRUCTION AREA SIGNS (STATIONARY MOUNTED)

TYPE	CODE	PANEL SIZE	SIGN MESSAGE	NUMBER AND SIZE OF POSTS	No. OF SIGNS
A	W20-1 C23B(CA)	48" x 48" 36" x 18"	ROAD WORK AHEAD PAVEMENT MAINTENANCE	1-4" x 6"	2
B	W20-1	36" x 36"	ROAD WORK AHEAD	1-4" x 4"	2
C	G20-2	36" x 18"	END ROAD WORK	1-4" x 4"	4

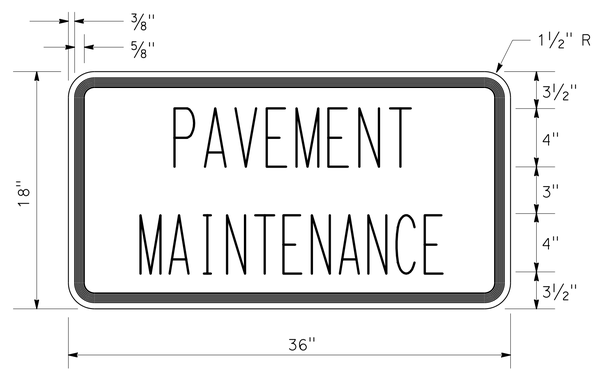

C23B(CA) SIGN PANEL DETAIL

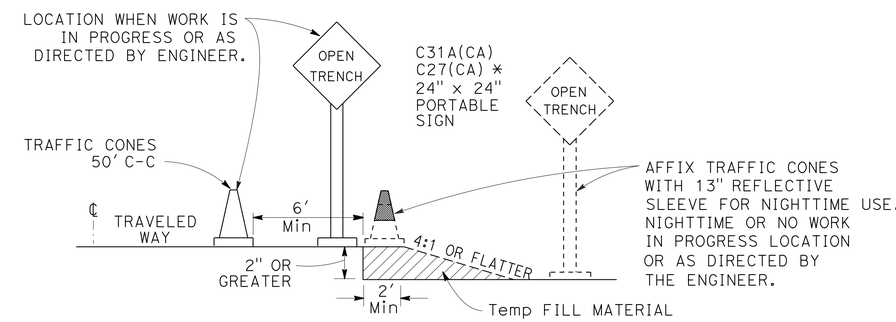

OPEN TRENCH SIGNING AND MARKING

* PLACE AT 250' INTERVALS THROUGH THE OPEN TRENCH AREA. ALTERNATE C27(CA) (OPEN TRENCH) AND C31A(CA) (NO SHOULDER) SIGNS.

ROAD CONNECTIONS*

POSTMILE	NAME
52.31	U.S.F.S. Rd 44N31
52.51	CEDAR PASS SKI PARK

* ROAD CONNECTIONS REQUIRING TYPE (B) & (C) CONSTRUCTION AREA SIGNS

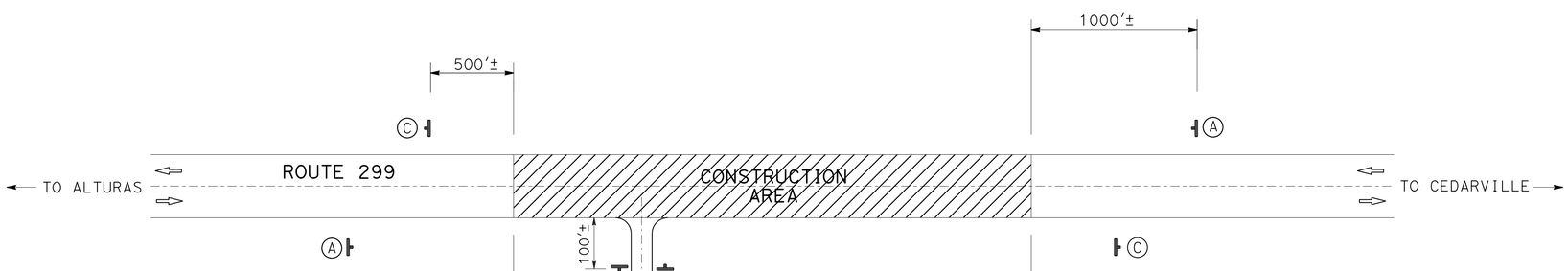

CONSTRUCTION AREA SIGNS

CONSTRUCTION AREA SIGNS

NO SCALE

CS-1

REVISED BY | DATE REVISED
RUSSELL FLOOD | GINNY SEIBERT
CALCULATED-DESIGNED BY | CHECKED BY
FUNCTIONAL SUPERVISOR: STEVE TOPAL
STATE OF CALIFORNIA - DEPARTMENT OF TRANSPORTATION
Caltrans DESIGN
P:\proj1\02\4G220_plans\pse\Resubmit 11-06-15\24g2201a001.dgn

LAST REVISION 02-14-14 | DATE PLOTTED => 06-NOV-2015 | TIME PLOTTED => 11:30

Dist	COUNTY	ROUTE	POST MILES TOTAL PROJECT	SHEET No.	TOTAL SHEETS
02	Mod	299	52.2/54.7	16	34

Russell Flood 10-12-15
REGISTERED CIVIL ENGINEER DATE

10-12-15
PLANS APPROVAL DATE

REGISTERED PROFESSIONAL ENGINEER
RUSSELL FLOOD
No. C72261
Exp. 6-30-16
CIVIL
STATE OF CALIFORNIA

THE STATE OF CALIFORNIA OR ITS OFFICERS OR AGENTS SHALL NOT BE RESPONSIBLE FOR THE ACCURACY OR COMPLETENESS OF SCANNED COPIES OF THIS PLAN SHEET.

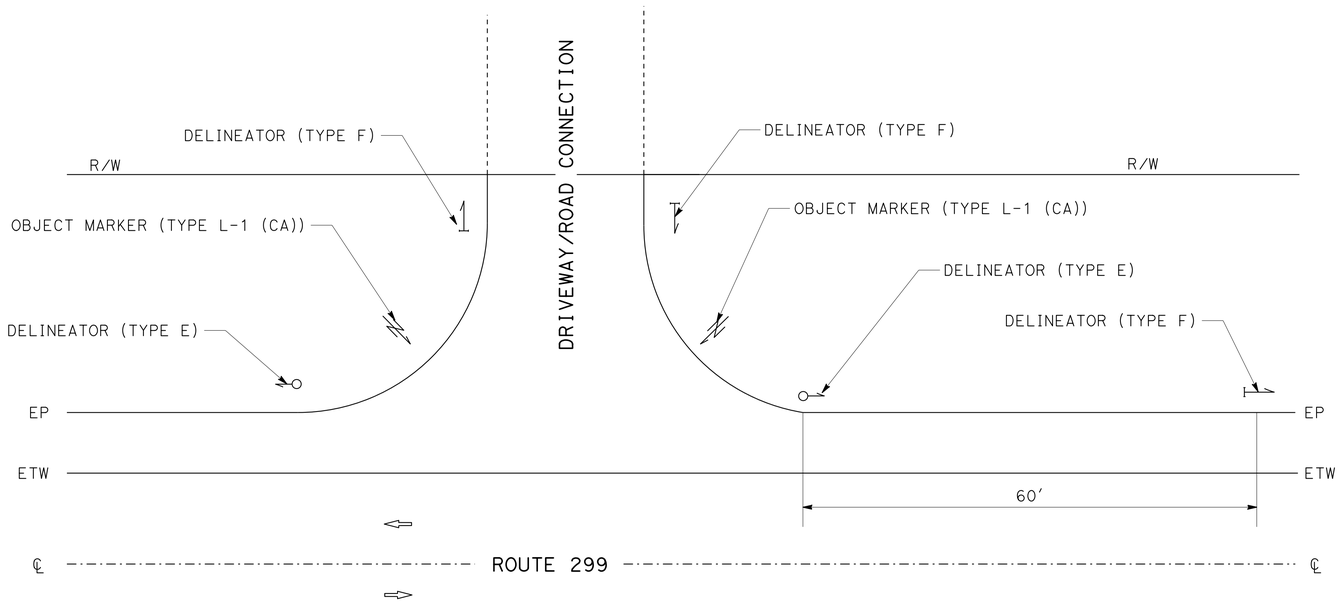

DRIVEWAY / ROAD CONNECTION DELINEATOR PLACEMENT DETAIL

PM 52.31 Lt, 52.51 Rt

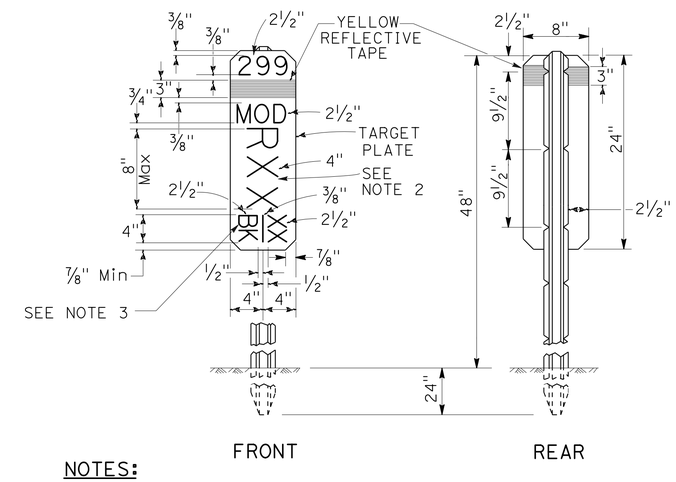

NOTES:

1. THE MARKER SHALL BE WHITE (NON-REFLECTIVE) TARGET PLATE WITH BLACK SERIES D NUMERALS AND LETTERS.
2. A POST MILE PREFIX, SUCH AS "R", SHALL APPLY ONLY WHEN DIRECTED BY THE ENGINEER.
3. "BK" (BACK), "AH" (AHEAD), OR A BLANK SPACE SHALL APPLY AS DIRECTED BY THE ENGINEER.
4. ALL INFORMATION SHALL BE IN ENGLISH UNITS (MILES).

MILE POST MARKER DETAIL

PM 52.5, 53.0, 53.5, 54.0, 54.5

PAVEMENT DELINEATION DETAILS

NO SCALE

PDD-1

REVISED BY | DATE REVISED
RUSSELL FLOOD | GINNY SEIBERT
CALCULATED-DESIGNED BY | CHECKED BY
FUNCTIONAL SUPERVISOR: STEVE TOPAL

STATE OF CALIFORNIA - DEPARTMENT OF TRANSPORTATION
Caltrans
DESIGN

P:\proj1\02\4G220_plans\pse\Resubmit 11-06-15\24g220nb001.dgn

LAST REVISION 09-14-15 | DATE PLOTTED => 06-NOV-2015 | TIME PLOTTED => 11:31

Dist	COUNTY	ROUTE	POST MILES TOTAL PROJECT	SHEET No.	TOTAL SHEETS
02	Mod	299	52.2/54.7	17	34

Russell Flood 10-12-15
REGISTERED CIVIL ENGINEER DATE

10-12-15
PLANS APPROVAL DATE

REGISTERED PROFESSIONAL ENGINEER
RUSSELL FLOOD
No. C72261
Exp. 6-30-16
CIVIL
STATE OF CALIFORNIA

THE STATE OF CALIFORNIA OR ITS OFFICERS OR AGENTS SHALL NOT BE RESPONSIBLE FOR THE ACCURACY OR COMPLETENESS OF SCANNED COPIES OF THIS PLAN SHEET.

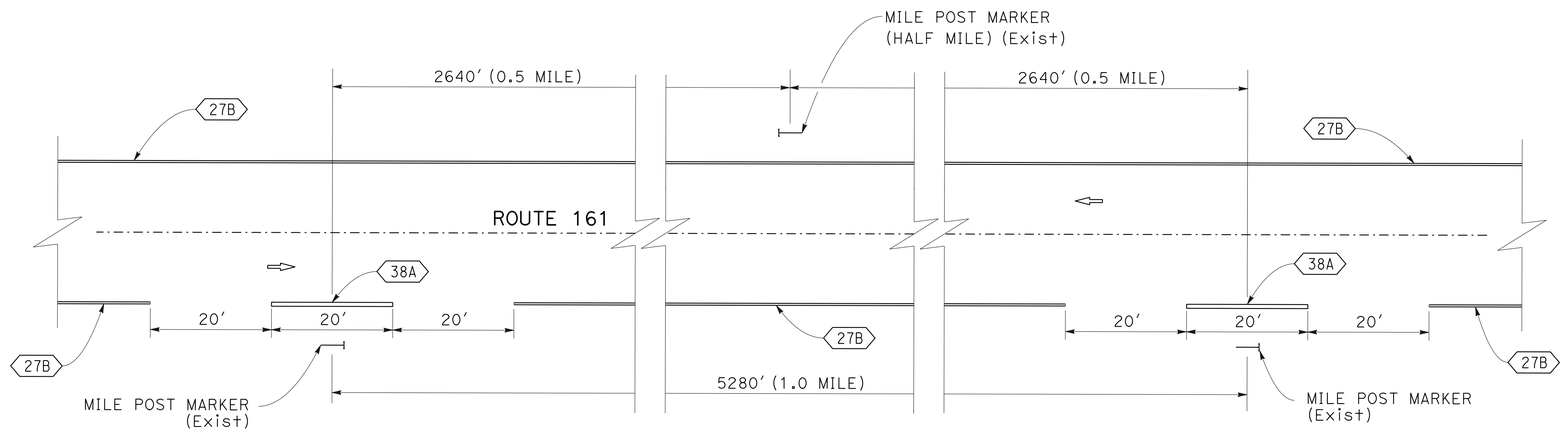

TYPICAL HALF MILE AND MILE POST STRIPE (CONVENTIONAL ROADWAY)

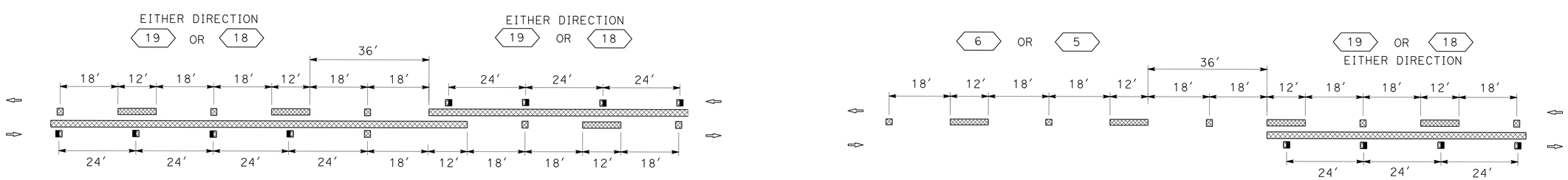

TYPICAL STRIPE TRANSITION DETAILS

PAVEMENT DELINEATION DETAILS

NO SCALE

PDD-2

REVISED BY	DATE REVISED
RUSSELL FLOOD	GINNY SEIBERT
CALCULATED-DESIGNED BY	CHECKED BY
FUNCTIONAL SUPERVISOR	STEVE TOPAL

STATE OF CALIFORNIA - DEPARTMENT OF TRANSPORTATION
Caltrans® DESIGN

P:\proj1\02\4G220_plans\pse\Resubmit 11-06-15\24g220nb002.dgn

LAST REVISION 08-20-15 | DATE PLOTTED => 06-NOV-2015 | TIME PLOTTED => 11:31

Dist	COUNTY	ROUTE	POST MILES TOTAL PROJECT	SHEET No.	TOTAL SHEETS
02	Mod	299	52.2/54.7	18	34

Russell Flood 10-12-15
REGISTERED CIVIL ENGINEER DATE

10-12-15
PLANS APPROVAL DATE

REGISTERED PROFESSIONAL ENGINEER RUSSELL FLOOD No. C72261 Exp. 6-30-16 CIVIL STATE OF CALIFORNIA

THE STATE OF CALIFORNIA OR ITS OFFICERS OR AGENTS SHALL NOT BE RESPONSIBLE FOR THE ACCURACY OR COMPLETENESS OF SCANNED COPIES OF THIS PLAN SHEET.

NOTE:

1. (N) - NOT A SEPARATE PAY ITEM, FOR INFORMATION ONLY.

ROADWAY QUANTITIES

POST MILE	COLD PLANE ASPHALT CONCRETE PAVEMENT	SHOULDER BACKING	HOT MIX ASPHALT (TYPE A)	TACK COAT	DESCRIPTION
	SQYD	TON	TON	TON	
52.2 TO 54.7		443.4	5600	3.84	MAINLINE
CONFORMS					
52.2	107		7	0.05	MAINLINE CONFORM
52.5	139	1.3	9	0.10	ROAD CONNECTION
54.7	107		7	0.05	MAINLINE CONFORM
FROM DQ-1			44		
FROM HMA DIKE			12		
TOTAL	353	444.7	5679	4.04	

DELINEATORS AND MARKERS

POST MILE	REMOVE MARKER	REMOVE DELINEATOR	DELINEATOR (CLASS 2)		MILEPOST MARKER	OBJECT MARKER (TYPE L-1)
			TYPE E	TYPE F		
	EA	EA	EA	EA	EA	EA
52.2 TO 54.7	16	31	4	36	5	4
TOTAL	16	31	40		5	4

PLACE HOT MIX ASPHALT DIKE

POST MILE	HOT MIX ASPHALT DIKE (TYPE A)	HOT MIX ASPHALT (TYPE A)
	LF	TON
52.47 TO 52.55	395	5.3
52.59 TO 52.68	460	6.2
FROM DQ-1	104	
TOTAL	959	11.5

WATER POLLUTION CONTROL

POST MILE	TEMPORARY COVER	TEMPORARY DRAINAGE INLET PROTECTION	TEMPORARY GRAVEL BAG BERM
	SQYD	EA	LF
52.2 TO 54.7	10	5	30

TEMPORARY FENCE (TYPE ESA)

POSTMILE	SIDE	TEMPORARY FENCE (TYPE ESA)
		LF
52.96	L+	10
53.20 TO 53.22	R+	150
53.21 TO 53.27	L+	470
	TOTAL	630

REPLACE ASPHALT CONCRETE SURFACING

POST MILE LIMITS	(N) APPROXIMATE NUMBER OF DIGOUTS	(N) AVERAGE LENGTH	(N) WIDTH	(N) DEPTH	REPLACE ASPHALT CONCRETE SURFACING
PM - PM		LF	LF	LF	CY
52.20-52.50	12	100	4	0.33	59
52.50-53.00	18	100	4	0.33	88
53.00-53.50	18	100	4	0.33	88
53.50-54.00	18	100	4	0.33	88
54.00-54.50	18	100	4	0.33	88
54.50-54.70	8	100	4	0.33	39
				TOTAL	450

THERMOPLASTIC PAVEMENT MARKING

DESCRIPTION	POST MILE	REMOVE	PLACE		REMARKS
		SQFT	EA	SQFT	
LANE DROP	52.45	42	1	42	TYPE VI ARROW
LANE DROP	52.49	42	1	42	TYPE VI ARROW
CEDAR PASS SKI PARK	52.50	28	1	28	LIMIT LINE
CEDAR PASS SKI PARK	52.50	22	1	22	STOP
LANE DROP	52.53	42	1	42	TYPE VI ARROW
	TOTAL	176		176	

METAL BEAM GUARD RAILING

POST MILE	SIDE	TREATED WOOD WASTE	* RECONSTRUCT TERMINAL SYSTEM	ADJUST GUARDRAIL	METAL BEAM GUARD RAILING (STEEL POST)	END ANCHOR ASSEMBLY (TYPE SFT)	INTERMEDIATE ANCHOR ASSEMBLY	ALTERNATIVE FLARED TERMINAL SYSTEM
		LB	EA	LF	LF	EA	EA	EA
52.20 TO 52.41	R+				1062.5	1	1	1
52.37 TO 52.40	L+	840	2	67.5				
TOTAL		840	2	67.5	1062.5	1	1	1

* EXISTING TERMINAL SYSTEM TYPE SRT

TRAFFIC STRIPES

POST MILE	THERMOPLASTIC TRAFFIC STRIPE (SPRAYABLE)					
	DETAIL 5	DETAIL 18	DETAIL 21	DETAIL 27B	DETAIL 27C	DETAIL 38A
	LF	LF	LF	LF	LF	LF
52.20 TO 52.45			1320	2640		
52.45 TO 52.84			2220	3870	250	
52.84 TO 53.38			2860	5660		20
53.38 TO 53.48		530		1060		
53.48 TO 53.60	640			1280		
53.60 TO 53.74				1480		
53.74 TO 54.70			5469	10,878		20
SUBTOTAL	640	530	11,869	26,868	250	40
TOTAL	40,197					

SUMMARY OF QUANTITIES

Q-1

REVISED BY | DATE REVISED
RUSSELL FLOOD | GINNY SEIBERT
CALCULATED-DESIGNED BY | CHECKED BY
FUNCTIONAL SUPERVISOR
STEVE TOPAL

STATE OF CALIFORNIA - DEPARTMENT OF TRANSPORTATION
Caltrans DESIGN

P:\proj1\02\4G220_plans\pse\Resubmit 11-06-15\24g220pa001.dgn

LAST REVISION 09-14-15 | DATE PLOTTED => 06-NOV-2015 | TIME PLOTTED => 11:31

Dist	COUNTY	ROUTE	POST MILES TOTAL PROJECT	SHEET No.	TOTAL SHEETS
02	Mod	299	52.2/54.7	19	34

LICENSED LANDSCAPE ARCHITECT

10-12-15
PLANS APPROVAL DATE

LICENSED LANDSCAPE ARCHITECT J. PATRICK SULLIVAN #3125 Signature 07/31/16 Renewal Date 10/07/15 Date STATE OF CALIFORNIA

THE STATE OF CALIFORNIA OR ITS OFFICERS OR AGENTS SHALL NOT BE RESPONSIBLE FOR THE ACCURACY OR COMPLETENESS OF SCANNED COPIES OF THIS PLAN SHEET.

NOTE:

1. (N) - NOT A SEPARATE PAY ITEM, FOR INFORMATION ONLY

EROSION CONTROL SEQUENCE/APPLICATION RATES (N) (FOR NON ROLLED EROSION CONTROL PRODUCT SLOPES) (N)

SEQUENCE	ITEM	MATERIAL		APPLICATION RATE (N)
		DESCRIPTION	TYPE	
STEP 1	PREPARE BARE SOIL	RAKE SOIL & REMOVE WEEDS	SURFACE PREP	———
STEP 2	APPLY DRY SEED	PURE LIVE SEED	MIX	167 LB/ACRE
STEP 3	APPLY FERTILIZER	GRANULAR FERTILIZER	SLOW RELEASE	300 LB/ACRE
STEP 5	APPLY STRAW	STRAW	RICE STRAW	8000 LB/ACRE

SEED MIX (N)

BOTANICAL NAME (COMMON NAME)	PERCENT GERMINATION (MINIMUM)	POUNDS PURE LIVE SEED PER ACRE (N) (SLOPE MEASUREMENT)
ACHILLEA MILLEFOLIUM (COMMON YARROW)	50	2
BROMUS CARINATUS (CALIFORNIA BROME)	80	20
ELYMUS ELYMIOIDES (SQUIRREL TAIL WILD RYE)	70	20
FESTUCA IDAHOENSIS (WESTERN FESCUE)	70	45
LOTUS PURSHIANUS (PURSHING)	70	8
LUPINUS BICOLOR (DWARF LUPINES)	60	2
POA SECUNDA (PINE BLUEGRASS)	70	30
VULPIA MICROSTACHYS (SMALL FESCUE)	80	40
	TOTAL	167

EROSION CONTROL SEQUENCE/APPLICATION RATES (N) AT SYSTEM No. 3

SEQUENCE	ITEM	MATERIAL		APPLICATION RATE (N)
		DESCRIPTION	TYPE	
STEP 1	RAKE & SMOOTH OUT	PREPARE DISTURBED AREAS	———	WITHIN BOUNDS OF DISTURBED AREAS
STEP 2	APPLY DRY SEED	PURE LIVE SEED	MIX	167 LB/ACRE
STEP 3	APPLY FERTILIZER	GRANULAR FERTILIZER	SLOW RELEASE	300 LB/ACRE
STEP 5	APPLY RECP (BLANKET)	BLANKET	TYPE A	APPLY PER STD PLANS

EROSION CONTROL TOTALS

MATERIAL		TOTALS	EROSION CONTROL (DRY SEED)	STRAW	ROLLED EROSION CONTROL PRODUCT (BLANKET)
DESCRIPTION	TYPE				
PURE LIVE SEED	MIX	3.0 LB (N)			
SLOW RELEASE FERTLIZER	GRANULAR	5 LB (N)			
STRAW	RICE	63 LB (N)			
DRAINAGE SYSTEM No.2 (INLET SIDE)	PM 52.96		143	143	—
DRAINAGE SYSTEM No.3 (INLET SIDE)	PM 53.22		195	—	195
DRAINAGE SYSTEM No.3 (OUTLET SIDE)	PM 53.22		150	—	150
DRAINAGE SYSTEM No.5 (OUTLET SIDE)	PM 54.10		200	200	—
		SQFT	688	343	345

NOTE: STRAW MUST BE WEED FREE.

EROSION CONTROL QUANTITIES

ECQ-1

REVISED BY | DATE REVISED
J. PATRICK SULLIVAN | RON FLORY
CALCULATED-DESIGNED BY | CHECKED BY
SENIOR LANDSCAPE ARCHITECT | RON FLORY
STATE OF CALIFORNIA - DEPARTMENT OF TRANSPORTATION
Caltrans® LANDSCAPE ARCHITECTURE

P:\proj1\02\4g220_plans\pse\Resubmit 11-06-15\24g220tg001.dgn

LAST REVISION 09-14-15 | DATE PLOTTED => 06-NOV-2015 | TIME PLOTTED => 11:31

M

Maint	MAINTENANCE
Max	MAXIMUM
MB	METAL BEAM
MBB	METAL BEAM BARRIER
MBGR	METAL BEAM GUARD RAILING
Med	MEDIAN
MGS	MIDWEST GUARDRAIL SYSTEM
MH	MANHOLE
Min	MINIMUM
Misc	MISCELLANEOUS
Misc I & S	MISCELLANEOUS IRON AND STEEL
Mkr	MARKER
Mod	MODIFIED,
	MODIFY
Mon	MONUMENT
MP	METAL PLATE
MPGR	METAL PLATE GUARD RAILING
MR	MOVEMENT RATING
MSE	MECHANICALLY STABILIZED EMBANKMENT
Mt	MOUNTAIN, MOUNT
Mtl	MATERIAL
MVP	MAINTENANCE VEHICLE PULLOUT

N

N	NORTH
NB	NORTHBOUND
No.	NUMBER (MUST HAVE PERIOD)
Nos.	NUMBERS (MUST HAVE PERIOD)
NPS	NOMINAL PIPE SIZE
NS	NEAR SIDE
NSP	NEW STANDARD PLAN
NTS	NOT TO SCALE

O

Oblr	OBLITERATE
OC	OVERCROSSING
OD	OUTSIDE DIAMETER
OF	OUTSIDE FACE
OG	ORIGINAL GROUND
OGAC	OPEN GRADED ASPHALT CONCRETE
OGFC	OPEN GRADED FRICTION COURSE
OH	OVERHEAD
OHWM	ORDINARY HIGH WATER MARK
O-O	OUT TO OUT
Opp	OPPOSITE
OSD	OVERSIDE DRAIN

P

P	PAGE
PAP	PERFORATED ALUMINUM PIPE
PB	PULL BOX
PC	POINT OF CURVATURE,
	PRECAST
PCC	POINT OF COMPOUND CURVE,
	PORTLAND CEMENT CONCRETE
PCMS	PORTABLE CHANGEABLE MESSAGE SIGN
PCP	PERFORATED CONCRETE PIPE,
	PRESTRESSED CONCRETE PIPE
PCVC	POINT OF COMPOUND VERTICAL CURVE
PEC	PERMIT TO ENTER AND CONSTRUCT
Ped	PEDESTRIAN
Ped OC	PEDESTRIAN OVERCROSSING
Ped UC	PEDESTRIAN UNDERCROSSING
Perm Mtl	PERMEABLE MATERIAL

P continued

PG	PROFILE GRADE
PI	POINT OF INTERSECTION
PJP	PARTIAL JOINT PENETRATION
Pkwy	PARKWAY
ℙ,PL	PLATE
P/L	PROPERTY LINE
PM	POST MILE,
	TIME FROM NOON TO MIDNIGHT
PN	PAVING NOTCH
POC	POINT OF HORIZONTAL CURVE
POT	POINT OF TANGENT
POVC	POINT OF VERTICAL CURVE
PP	PIPE PILE,
	PLASTIC PIPE,
	POWER POLE
PPL	PREFORMED PERMEABLE LINER
PPP	PERFORATED PLASTIC PIPE
PRC	POINT OF REVERSE CURVE
PRF	PAVEMENT REINFORCING FABRIC
PRVC	POINT OF REVERSE VERTICAL CURVE
PS&E	PLANS, SPECIFICATIONS AND ESTIMATES
PS, P/S	PRESTRESSED
PSP	PERFORATED STEEL PIPE
PT	POINT OF TANGENCY
PVC	POLYVINYL CHLORIDE
Pvmt	PAVEMENT

Q

Qty	QUANTITY

R

R	RADIUS
R & D	REMOVE AND DISPOSE
R & S	REMOVE AND SALVAGE
R/C	RATE OF CHANGE
RCA	REINFORCED CONCRETE ARCH
RCB	REINFORCED CONCRETE BOX
RCP	REINFORCED CONCRETE PIPE
RCPA	REINFORCED CONCRETE PIPE ARCH
Rd	ROAD
Reinf	REINFORCED,
	REINFORCEMENT,
	REINFORCING
Rel	RELOCATE
Repl	REPLACEMENT
Ret	RETAINING
Rev	REVISED, REVISION
Rdwy	ROADWAY
RHMA	RUBBERIZED HOT MIX ASPHALT
Riv	RIVER
RM	ROAD-MIXED
RP	RADIUS POINT,
	REFERENCE POINT
RR	RAILROAD
RSP	ROCK SLOPE PROTECTION,
	REVISED STANDARD PLAN
Rt	RIGHT
Rte	ROUTE
RW	REDWOOD,
	RETAINING WALL
R/W	RIGHT OF WAY
Rwy	RAILWAY

S

S	SOUTH,
	SUPPLEMENT
SAE	STRUCTURE APPROACH EMBANKMENT
Salv	SALVAGE
SAPP	STRUCTURAL ALUMINUM PLATE PIPE
SB	SOUTHBOUND
SC	SAND CUSHION
SCSP	SLOTTED CORRUGATED STEEL PIPE
SD	STORM DRAIN
Sec	SECOND,
	SECTION
Sep	SEPARATION
SG	SUBGRADE
Shld	SHOULDER
Sht	SHEET
Sim	SIMILAR
℄	STATION LINE
SM	SELECTED MATERIAL
Spec	SPECIAL,
	SPECIFICATIONS
SPP	SLOTTED PLASTIC PIPE
SS	SLOPE STAKE
SSBM	STRAP AND SADDLE BRACKET METHOD
SSD	STRUCTURAL SECTION DRAIN
SSPA	STRUCTURAL STEEL PLATE ARCH
SSPP	STRUCTURAL STEEL PLATE PIPE
SSPPA	STRUCTURAL STEEL PLATE PIPE ARCH
SSRP	STEEL SPIRAL RIB PIPE
St	STREET
Sta	STATION
STBB	SINGLE THRIE BEAM BARRIER
Std	STANDARD
Str	STRUCTURE
Surf	SURFACING
SW	SIDEWALK,
	SOUND WALL
Swr	SEWER
Sym	SYMMETRICAL
S4S	SURFACE 4 SIDES

T

T	SEMI-TANGENT
Tan	TANGENT
TBB	THRIE BEAM BARRIER
Tbr	TIMBER
TC	TOP OF CURB
TCB	TRAFFIC CONTROL BOX
TCE	TEMPORARY CONSTRUCTION EASEMENT
Tel	TELEPHONE
Temp	TEMPORARY
TG	TOP OF GRADE
Tot	TOTAL
TP	TELEPHONE POLE
TPB	TREATED PERMEABLE BASE
TPM	TREATED PERMEABLE MATERIAL
Trans	TRANSITION

T continued

TS	TRANSVERSE,
	TRAFFIC SIGNAL,
	TUBULAR STEEL
Typ	TYPICAL

U

UC	UNDERCROSSING
UD	UNDERDRAIN
UG	UNDERGROUND
UON	UNLESS OTHERWISE NOTED
UP	UNDERPASS

V

V	VALVE,
	DESIGN SPEED
Var	VARIABLE,
	VARIES
VC	VERTICAL CURVE
VCP	VITRIFIED CLAY PIPE
Vert	VERTICAL
Via	VIADUCT
Vol	VOLUME

W

W	WEST,
	WIDTH
WB	WESTBOUND
WH	WEEP HOLE
WM	WIRE MESH
WS	WATER SURFACE
WSP	WELDED STEEL PIPE
Wt	WEIGHT
WV	WATER VALVE
WW	WINGWALL
WWLOL	WINGWALL LAYOUT LINE

X

X Sec	CROSS SECTION
Xing	CROSSING

Y

Yr	YEAR
Yrs	YEARS

Dist	COUNTY	ROUTE	POST MILES TOTAL PROJECT	SHEET No.	TOTAL SHEETS
02	Mod	299	52.2/54.7	20	34

Grace M. Tsushima
REGISTERED CIVIL ENGINEER

July 19, 2013
PLANS APPROVAL DATE

REGISTERED PROFESSIONAL ENGINEER Grace M. Tsushima No. C49814 Exp. 9-30-14 CIVIL STATE OF CALIFORNIA

THE STATE OF CALIFORNIA OR ITS OFFICERS OR AGENTS SHALL NOT BE RESPONSIBLE FOR THE ACCURACY OR COMPLETENESS OF SCANNED COPIES OF THIS PLAN SHEET.

TO ACCOMPANY PLANS DATED 10-12-15

UNIT OF MEASUREMENT SYMBOLS:

Some of the symbols used in the project plan quantity tables and in the Bid Item List are:

TABLE A

SYMBOL USED	DEFINITIONS
ACRE	ACRE
CF	CUBIC FOOT
CY	CUBIC YARD
EA	EACH
GAL	GALLON
LB	POUND
LF	LINEAR FOOT
SQFT	SQUARE FOOT
SQYD	SQUARE YARD
STA	100 FEET
TAB	TABLET
TON	2,000 POUNDS

Some of the symbols used in the plans other than in the project plan quantity tables are:

TABLE B

SYMBOL USED	DEFINITIONS
ksi	KIPS PER SQUARE INCH
ksf	KIPS PER SQUARE FOOT
psi	POUNDS PER SQUARE INCH
psf	POUNDS PER SQUARE FOOT
lb/ft^3, pcf	POUNDS PER CUBIC FOOT
tsf	TONS PER SQUARE FOOT
mph, MPH *	MILES PER HOUR
ø	NOMINAL DIAMETER
oz	OUNCE
lb	POUND
kip	1,000 POUNDS
cal	CALORIE
ft	FOOT OR FEET
gal	GALLON

* For use on a sign panel only

STATE OF CALIFORNIA
DEPARTMENT OF TRANSPORTATION

ABBREVIATIONS (SHEET 2 OF 2)

NO SCALE

RSP A10B DATED JULY 19, 2013 SUPERSEDES STANDARD PLAN A10B DATED MAY 20, 2011 - PAGE 2 OF THE STANDARD PLANS BOOK DATED 2010.

REVISED STANDARD PLAN RSP A10B

2010 REVISED STANDARD PLAN RSP A10B

DATE PLOTTED => 06-NOV-2015
TIME PLOTTED => 11:31

Dist	COUNTY	ROUTE	POST MILES TOTAL PROJECT	SHEET No.	TOTAL SHEETS
02	Mod	299	52.2/54.7	21	34

REGISTERED CIVIL ENGINEER

April 20, 2012
PLANS APPROVAL DATE

REGISTERED PROFESSIONAL ENGINEER
Roberta L. McLaughlin
No. C40375
Exp. 3-31-13
CIVIL
STATE OF CALIFORNIA

THE STATE OF CALIFORNIA OR ITS OFFICERS OR AGENTS SHALL NOT BE RESPONSIBLE FOR THE ACCURACY OR COMPLETENESS OF SCANNED COPIES OF THIS PLAN SHEET.

TO ACCOMPANY PLANS DATED 10-12-15

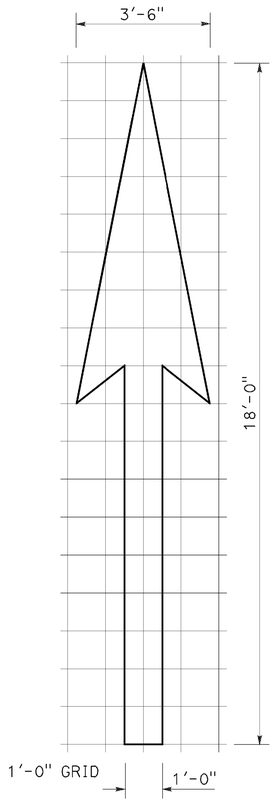

A=25 ft^2

TYPE I 18'-0" ARROW

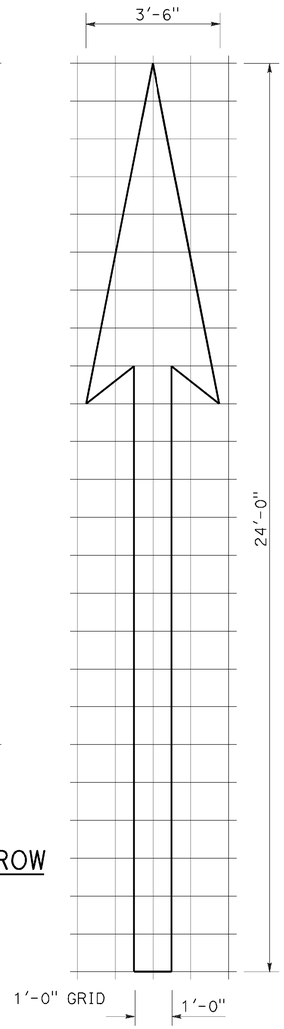

A=31 ft^2

TYPE I 24'-0" ARROW

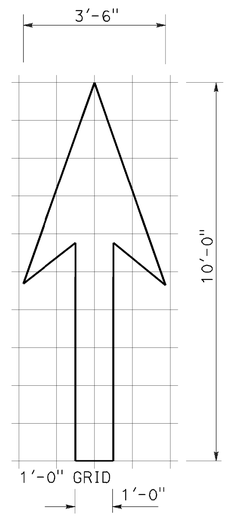

A=14 ft^2

TYPE I 10'-0" ARROW

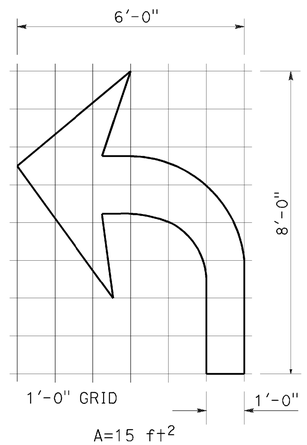

A=15 ft^2

TYPE IV (L) ARROW

(For Type IV (R) arrow, use mirror image)

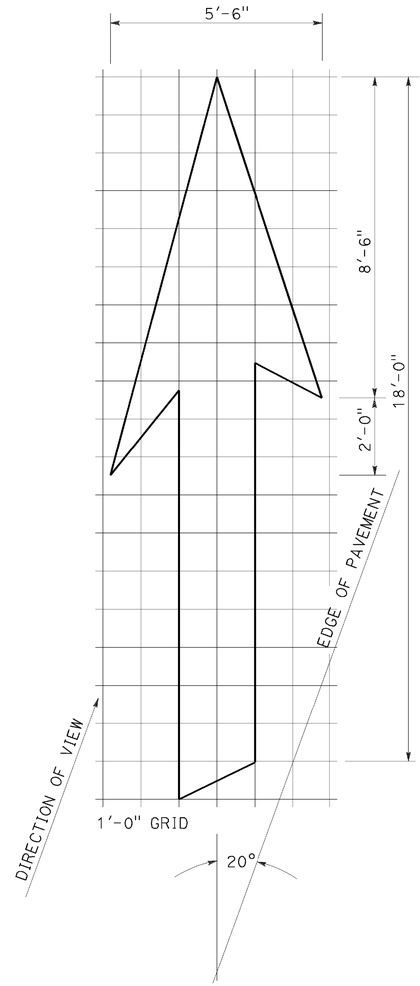

A=42 ft^2

TYPE VI ARROW

Right lane drop arrow
(For left lane, use mirror image)

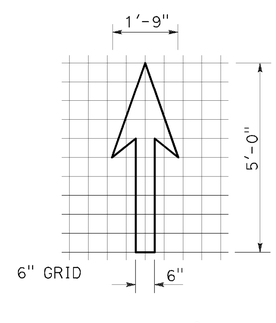

A=3.5 ft^2

BIKE LANE ARROW

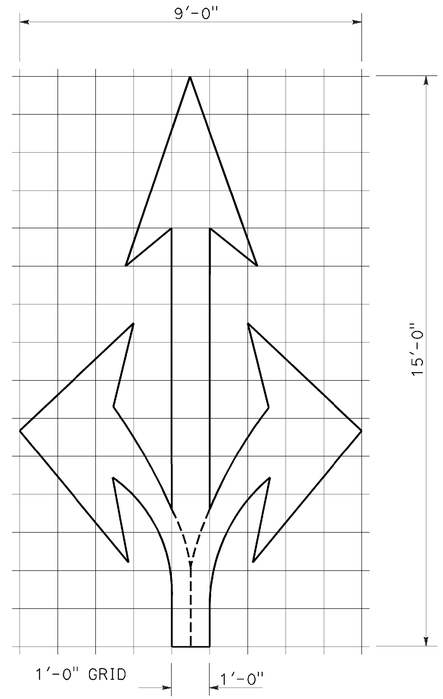

A=36 ft^2

TYPE VIII ARROW

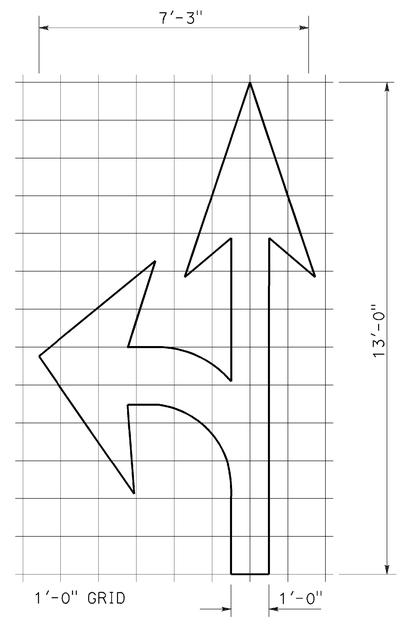

A=27 ft^2

TYPE VII (L) ARROW

(For Type VII (R) arrow, use mirror image)

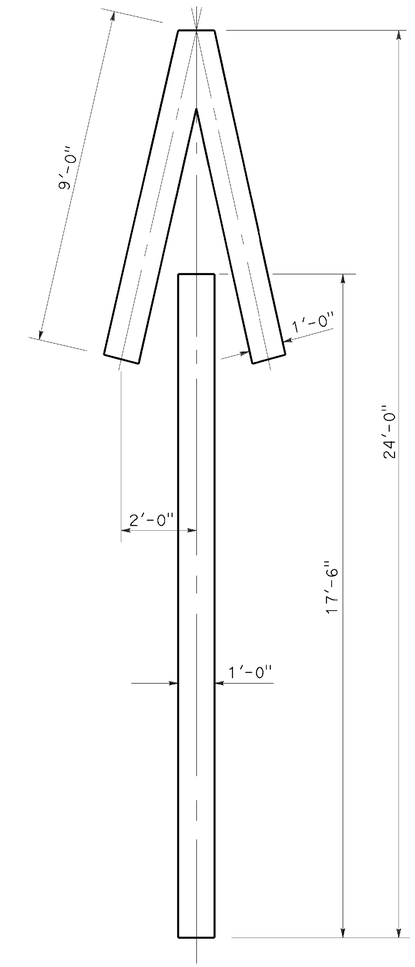

A=33 ft^2

TYPE V ARROW

NOTE:
Minor variations in dimensions may be accepted by the Engineer.

STATE OF CALIFORNIA
DEPARTMENT OF TRANSPORTATION

PAVEMENT MARKINGS ARROWS

NO SCALE

RSP A24A DATED APRIL 20, 2012 SUPERSEDES STANDARD PLAN A24A DATED MAY 20, 2011 - PAGE 13 OF THE STANDARD PLANS BOOK DATED 2010.

REVISED STANDARD PLAN RSP A24A

2010 REVISED STANDARD PLAN RSP A24A

DATE PLOTTED => 06-NOV-2015
TIME PLOTTED => 11:31

Dist	COUNTY	ROUTE	POST MILES TOTAL PROJECT	SHEET No.	TOTAL SHEETS
02	Mod	299	52.2/54.7	22	34

REGISTERED CIVIL ENGINEER

July 20, 2012
PLANS APPROVAL DATE

REGISTERED PROFESSIONAL ENGINEER
Roberta L. McLaughlin
No. C40375
Exp. 3-31-13
CIVIL
STATE OF CALIFORNIA

THE STATE OF CALIFORNIA OR ITS OFFICERS OR AGENTS SHALL NOT BE RESPONSIBLE FOR THE ACCURACY OR COMPLETENESS OF SCANNED COPIES OF THIS PLAN SHEET.

TO ACCOMPANY PLANS DATED 10-12-15

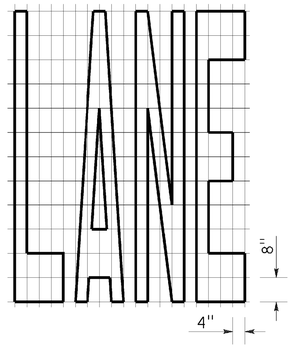

A=24 ft^2

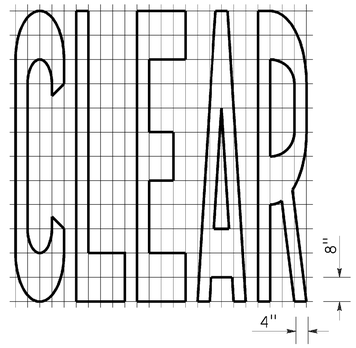

A=27 ft^2

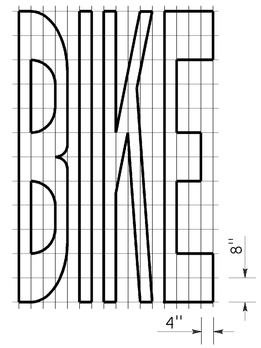

A=21 ft^2

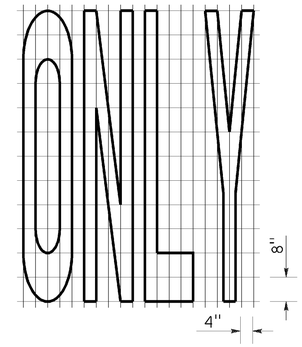

A=22 ft^2

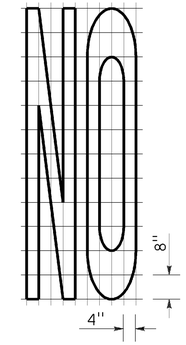

A=14 ft^2

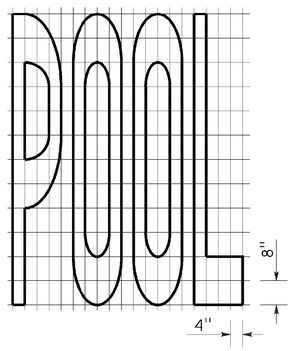

A=23 ft^2

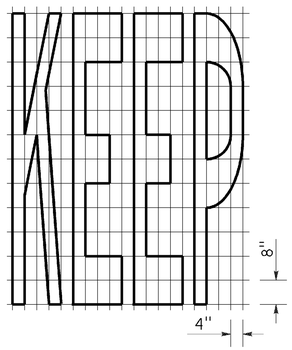

A=24 ft^2

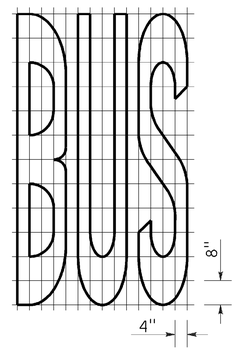

A=20 ft^2

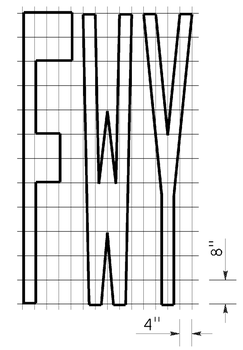

A=16 ft^2

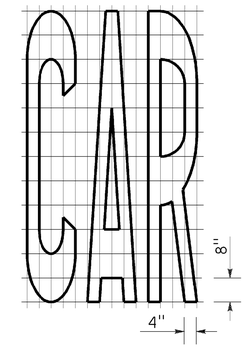

A=17 ft^2

WORD MARKINGS			
ITEM	ft^2	ITEM	ft^2
LANE	24	NO	14
POOL	23	BIKE	21
CAR	17	BUS	20
CLEAR	27	ONLY	22
KEEP	24	FWY	16

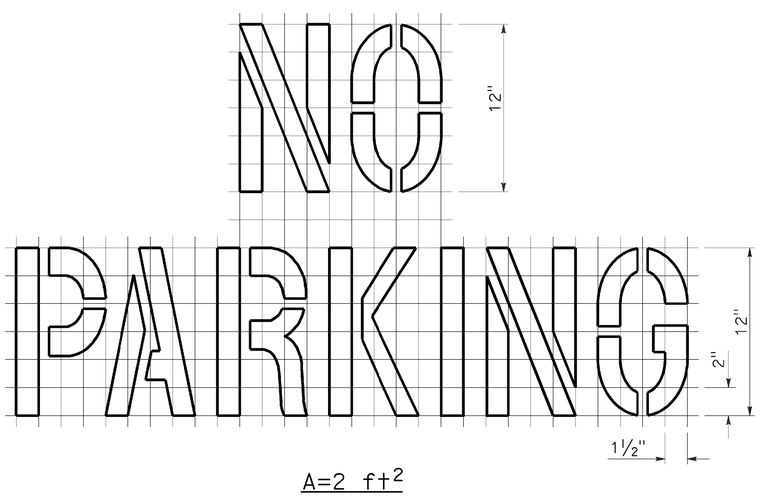

A=2 ft^2
See Notes 6 and 7

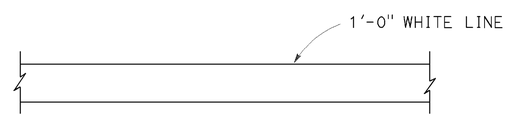

LIMIT LINE (STOP LINE)

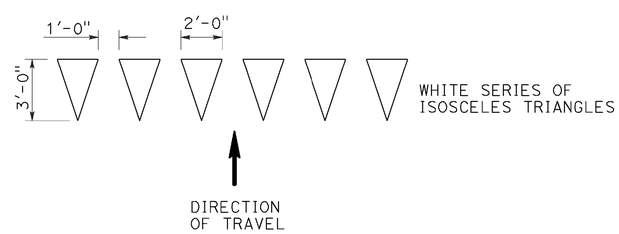

YIELD LINE

NOTES:

1. If a message consists of more than one word, it should read "UP", i.e., the first word should be nearest the driver.
2. The space between words should be at least four times the height of the characters for low speed roads, but not more than ten times the height of the characters. The space may be reduced appropriately where there is limited space because of local conditions.
3. Minor variations in dimensions may be accepted by the Engineer.
4. Portions of a letter, number or symbol may be separated by connecting segments not to exceed 2" in width.
5. The words "NO PARKING" pavement marking is to be used for parking facilities. For typical locations of markings, see Standard Plans A90A and A90B.
6. The words "NO PARKING", shall be painted in white letters no less than 1'-0" high on a contrasting background and located so that it is visible to traffic enforcement officials.

STATE OF CALIFORNIA
DEPARTMENT OF TRANSPORTATION

PAVEMENT MARKINGS WORDS, LIMIT AND YIELD LINES

NO SCALE

RSP A24E DATED JULY 20, 2012 SUPERSEDES STANDARD PLAN A24E
DATED MAY 20, 2011 - PAGE 17 OF THE STANDARD PLANS BOOK DATED 2010.

REVISED STANDARD PLAN RSP A24E

2010 REVISED STANDARD PLAN RSP A24E

DATE PLOTTED => 06-NOV-2015
TIME PLOTTED => 11:32

Dist	COUNTY	ROUTE	POST MILES TOTAL PROJECT	SHEET No.	TOTAL SHEETS
02	Mod	299	52.2/54.7	23	34

REGISTERED CIVIL ENGINEER

October 30, 2015
PLANS APPROVAL DATE

REGISTERED PROFESSIONAL ENGINEER
Carl M. Duan
No. C59976
Exp. 6-30-16
CIVIL
STATE OF CALIFORNIA

THE STATE OF CALIFORNIA OR ITS OFFICERS OR AGENTS SHALL NOT BE RESPONSIBLE FOR THE ACCURACY OR COMPLETENESS OF SCANNED COPIES OF THIS PLAN SHEET.

TO ACCOMPANY PLANS DATED 10-12-15

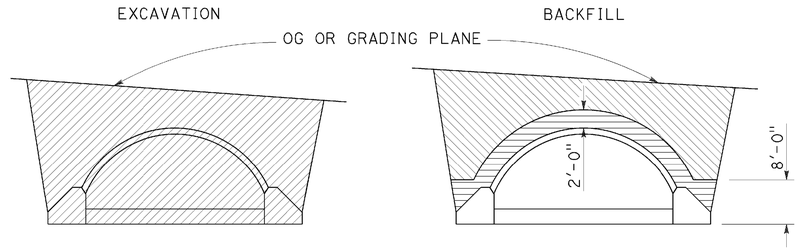

IN TRENCH

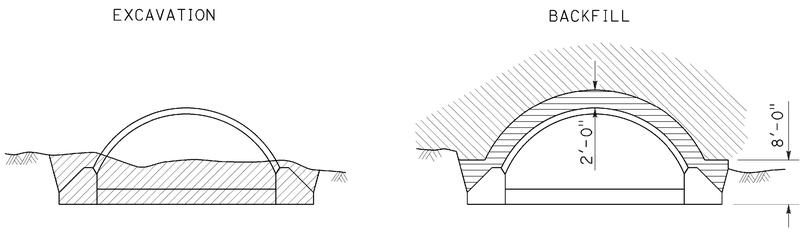

IN EMBANKMENT

STRUCTURAL STEEL PLATE ARCHES

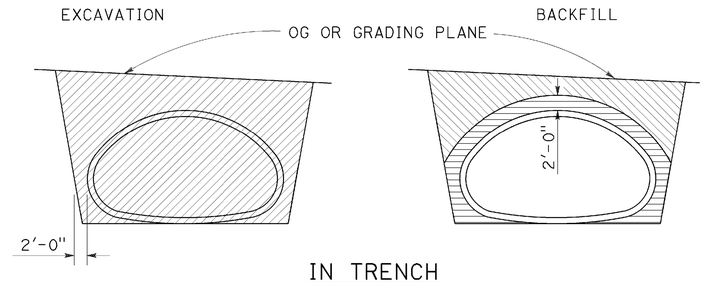

IN TRENCH

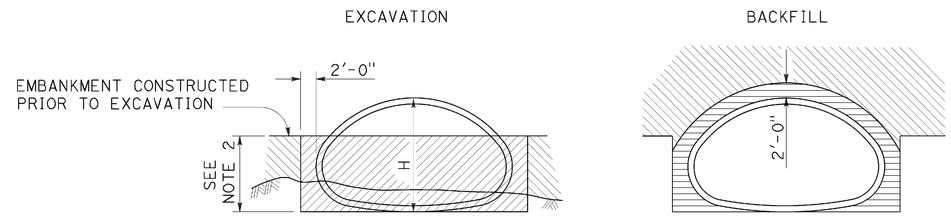

IN EMBANKMENT

STRUCTURAL STEEL PLATE PIPE ARCHES AND VEHICULAR UNDERCROSSING

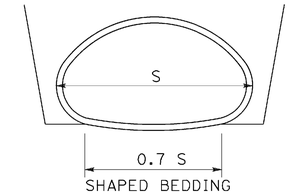

SHAPED BEDDING
S = Larger than 84"

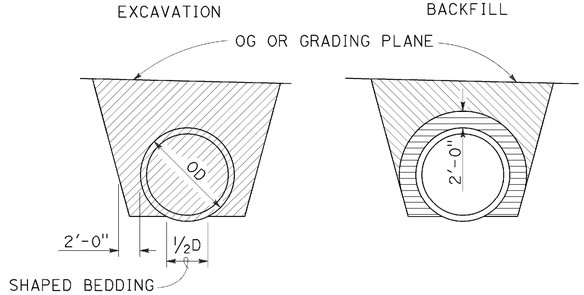

IN TRENCH

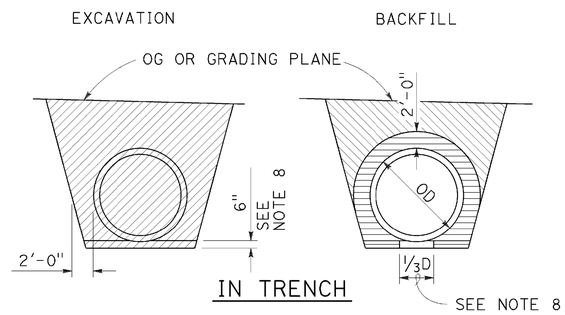

IN TRENCH

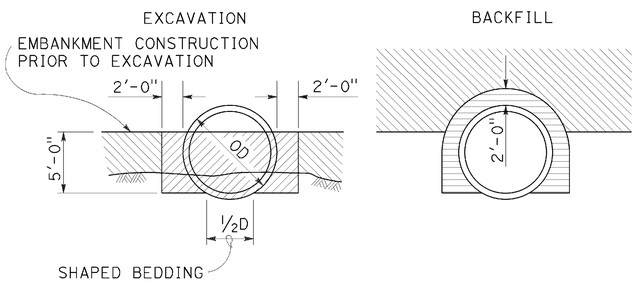

IN EMBANKMENT

PIPES

Larger than 84"

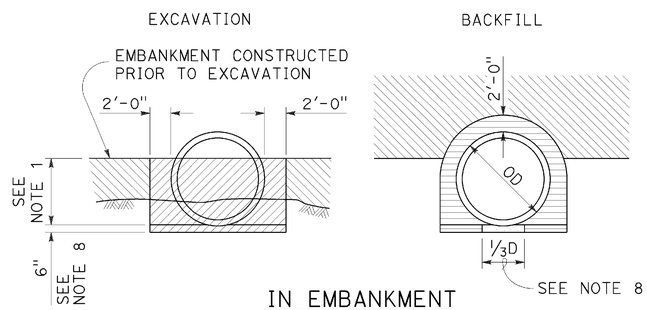

IN EMBANKMENT

METAL AND PLASTIC PIPES AND CORRUGATED METAL PIPE ARCHES

84" or Smaller

NOTES:

1. PIPES: 30" minimum for diameters up to and including 42" then ⅔ diameter but no more than 60" required. CORRUGATED METAL PIPE ARCHES: 30" maximum.
2. ⅔ H up to 60" maximum.
3. Slope or shore excavation sides as necessary.
4. Backfill shall be placed full width of excavation except as noted.
5. Diagrams do not apply to overside drains.
6. Dimensions shown are minimum.
7. Construction strutting of structural steel plate pipe, arches and vehicular undercrossing to be used when shown on the project plans. When shown, see Standard Plan D88A for strutting requirements.
8. Excavation below pipe and 80% relative compaction requirements for plastic pipes only.
9. D is the inside diameter (ID) of the pipe.

LEGEND

- STRUCTURE EXCAVATION (CULVERT)
- ROADWAY EMBANKMENT
- STRUCTURE BACKFILL (CULVERT) 95% RELATIVE COMPACTION
- STRUCTURE BACKFILL (CULVERT) 80% RELATIVE COMPACTION

STATE OF CALIFORNIA
DEPARTMENT OF TRANSPORTATION

EXCAVATION AND BACKFILL METAL AND PLASTIC CULVERTS

NO SCALE

RSP A62F DATED OCTOBER 30, 2015 SUPERSEDES STANDARD PLAN A62F DATED MAY 20, 2011 - PAGE 26 OF THE STANDARD PLANS BOOK DATED 2010.

REVISED STANDARD PLAN RSP A62F

2010 REVISED STANDARD PLAN RSP A62F

DATE PLOTTED => 06-NOV-2015
TIME PLOTTED => 11:32

Dist	COUNTY	ROUTE	POST MILES TOTAL PROJECT	SHEET No.	TOTAL SHEETS
02	Mod	299	52.2/54.7	24	34

Randell D. Hiatt
REGISTERED CIVIL ENGINEER

July 19, 2013
PLANS APPROVAL DATE

REGISTERED PROFESSIONAL ENGINEER
Randell D. Hiatt
No. C50200
Exp. 6-30-15
CIVIL
STATE OF CALIFORNIA

THE STATE OF CALIFORNIA OR ITS OFFICERS OR AGENTS SHALL NOT BE RESPONSIBLE FOR THE ACCURACY OR COMPLETENESS OF SCANNED COPIES OF THIS PLAN SHEET.

TO ACCOMPANY PLANS DATED 10-12-15

2010 REVISED STANDARD PLAN RSP A77L3

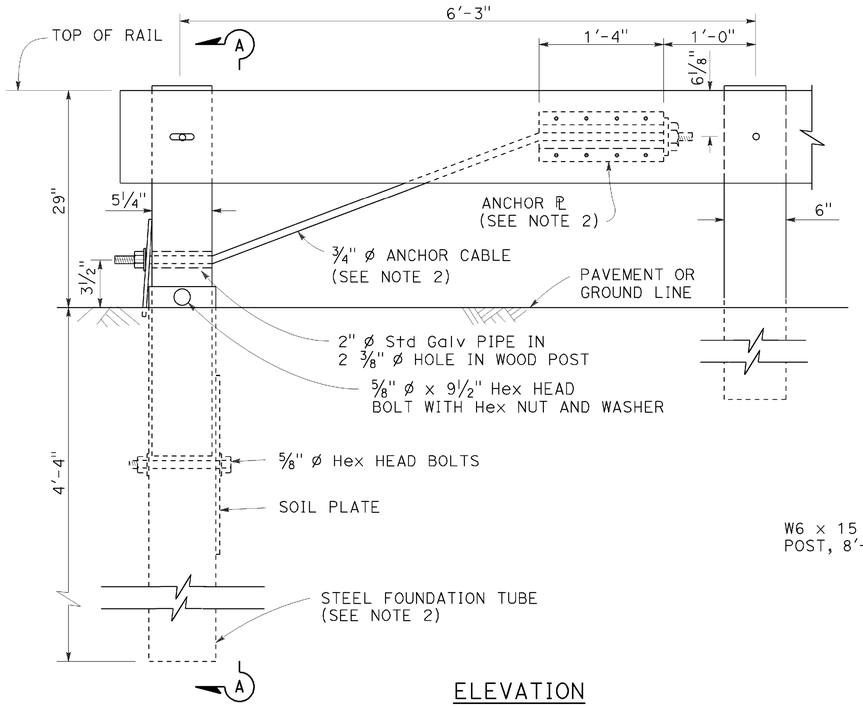

ELEVATION
END ANCHOR
ASSEMBLY (TYPE SFT)

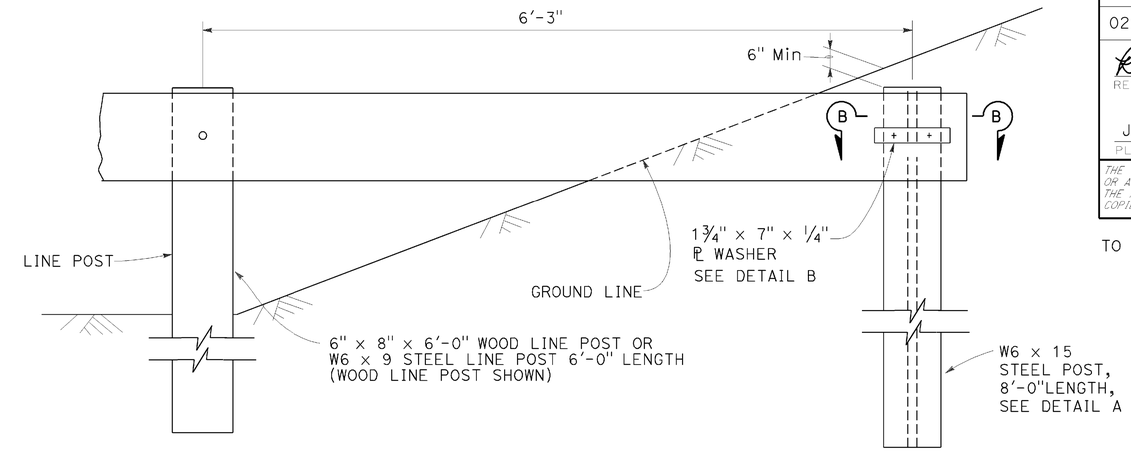

BURIED POST END ANCHOR

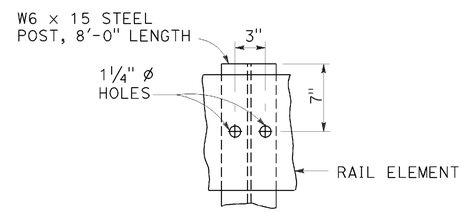

DETAIL A

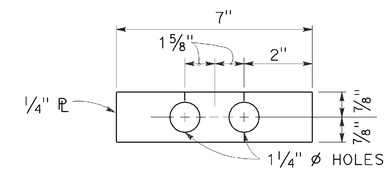

DETAIL B

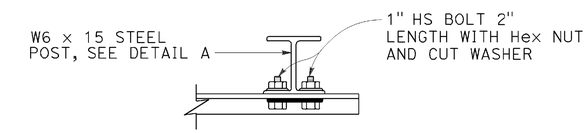

SECTION B-B

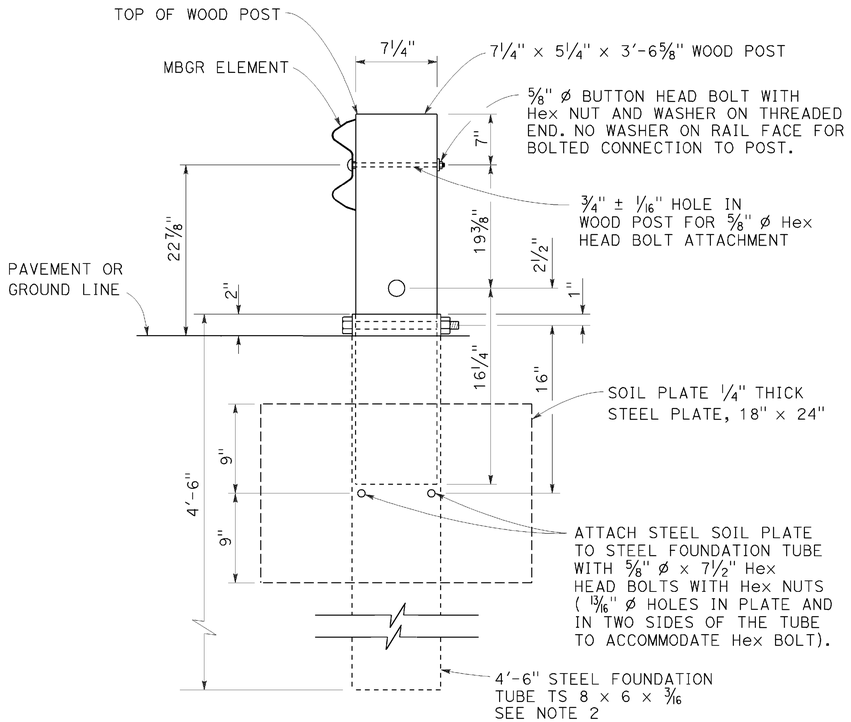

SECTION A-A

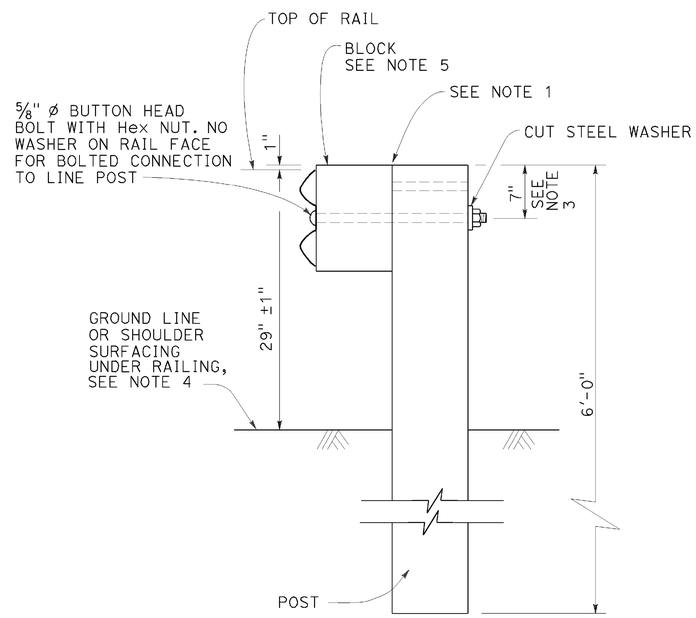

TYPICAL LINE
POST INSTALLATION

NOTES:

1. For wood post and wood block, toenail with 2-16d Galv nails in top of block. For steel post and notched wood or plastic block, notched face of block faces steel post.
2. A 6'-0" Length steel foundation tube, TS 8 x 6 x 3/16, without a soil plate, may be furnished and installed in place of the 4'-6" length steel foundation tube and soil plate shown, Minimum embadment of the 6'-0" length tube shall be 5'-9". A 5/8" ø Hex head bolt and nut shall be installed in the hole in the 6'-0" length tube to keep the wood post from dropping into the tube.
3. To connect railing to 27" terminal system end treatment, transition the top of railing height at a ratio of 120:1 to terminal system end treatment height plus one 12'-6" standard railing section at the transitioned height for a horizontal connection to the end treatment.
4. Install posts in soil.
5. See Revised Standard Plans RSP A77N1 and RSP A77N2 for details.
6. Holes excavation in the slope to construct the buried post end anchor shall be backfilled with selected earth, placed in layers approximately 1'-0" thick. Each layer shall be moistened and thoroughly compacted.

STATE OF CALIFORNIA
DEPARTMENT OF TRANSPORTATION

METAL BEAM GUARD RAILING RECONSTRUCT INSTALLATION

NO SCALE

RSP A77L3 DATED JULY 19, 2013 SUPPLEMENTS THE STANDARD PLANS BOOK DATED 2010.

REVISED STANDARD PLAN RSP A77L3

DATE PLOTTED => 06-NOV-2015
TIME PLOTTED => 11:32

Dist	COUNTY	ROUTE	POST MILES TOTAL PROJECT	SHEET No.	TOTAL SHEETS
02	Mod	299	52.2/54.7	25	34

Randell D. Hiatt
REGISTERED CIVIL ENGINEER

July 19, 2013
PLANS APPROVAL DATE

REGISTERED PROFESSIONAL ENGINEER
Randell D. Hiatt
No. C50200
Exp. 6-30-15
CIVIL
STATE OF CALIFORNIA

THE STATE OF CALIFORNIA OR ITS OFFICERS OR AGENTS SHALL NOT BE RESPONSIBLE FOR THE ACCURACY OR COMPLETENESS OF SCANNED COPIES OF THIS PLAN SHEET.

TO ACCOMPANY PLANS DATED 10-12-15

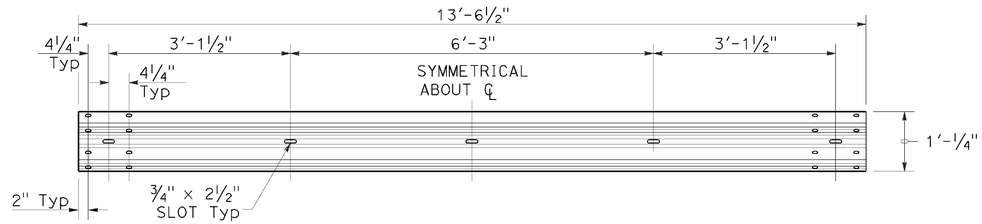

TYPICAL RAIL ELEMENT

NOTE:

1. Slotted holes for splice bolts to overlap ends of rail element.

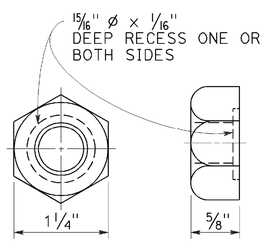

⅝" ø RECESS NUT

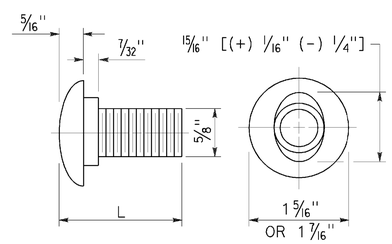

⅝" ø BUTTON HEAD BOLT

BUTTON HEAD BOLT

L	THREAD LENGTH
1⅜"	FULL THREAD LENGTH
2"	FULL THREAD LENGTH
10"	4" Min THREAD LENGTH
18"	4" Min THREAD LENGTH
20"	4" Min THREAD LENGTH
22"	4" Min THREAD LENGTH
26"	4" Min THREAD LENGTH
36"	4" Min THREAD LENGTH
** 2¾"	2" Min THREAD LENGTH
** 19"	4" Min THREAD LENGTH

** For nested rail applications.

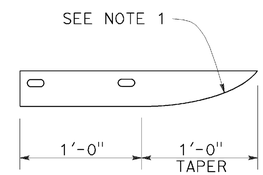

PLAN

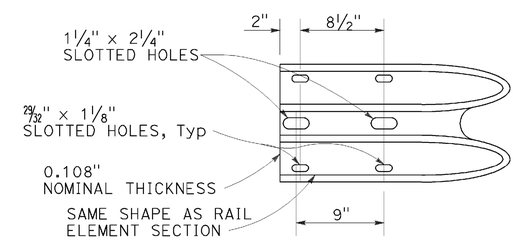

ELEVATION

END CAP
(TYPE A)

STATE OF CALIFORNIA
DEPARTMENT OF TRANSPORTATION

MIDWEST GUARDRAIL SYSTEM STANDARD HARDWARE

NO SCALE

RSP A77M1 DATED JULY 19, 2013 SUPPLEMENTS THE STANDARD PLANS BOOK DATED 2010.

REVISED STANDARD PLAN RSP A77M1

2010 REVISED STANDARD PLAN RSP A77M1

DATE PLOTTED => 06-NOV-2015
TIME PLOTTED => 11:33

Dist	COUNTY	ROUTE	POST MILES TOTAL PROJECT	SHEET No.	TOTAL SHEETS
02	Mod	299	52.2/54.7	26	34

Randell D. Hiatt
REGISTERED CIVIL ENGINEER

November 15, 2013
PLANS APPROVAL DATE

REGISTERED PROFESSIONAL ENGINEER
Randell D. Hiatt
No. C50200
Exp. 6-30-15
CIVIL
STATE OF CALIFORNIA

THE STATE OF CALIFORNIA OR ITS OFFICERS OR AGENTS SHALL NOT BE RESPONSIBLE FOR THE ACCURACY OR COMPLETENESS OF SCANNED COPIES OF THIS PLAN SHEET.

TO ACCOMPANY PLANS DATED 10-12-15

NOTE:

See Revised Standard Plans RSP A77S1, RSP A77S2 and RSP A77T1 for typical use of anchor cable and anchor plate.

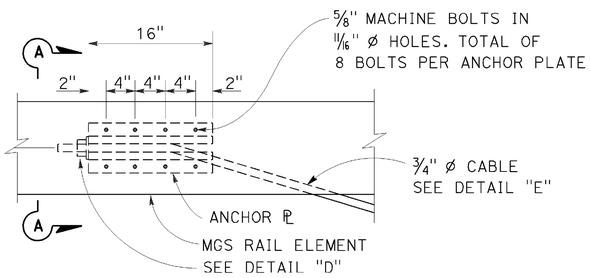

ANCHOR PLATE DETAIL

(MGS shown, TBB similar)

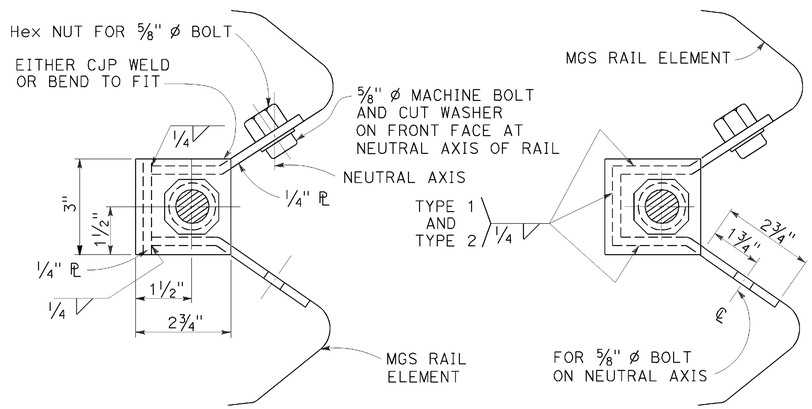

NOTE:

Dimensioning applies to both types.

SECTION A-A
(ALTERNATIVE TYPE 1)

SECTION A-A
(ALTERNATIVE TYPE 2)

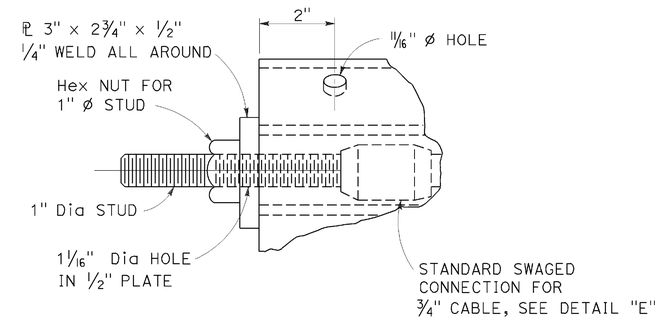

DETAIL "D"

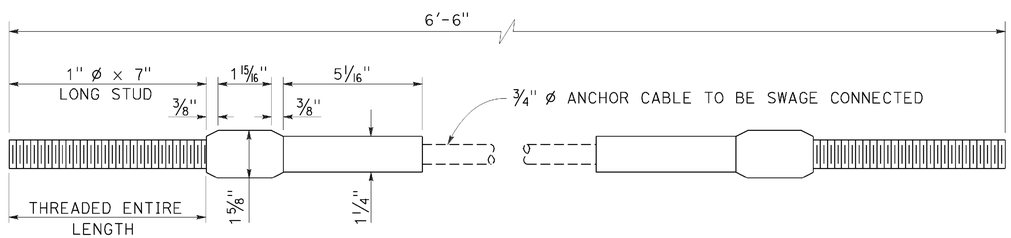

ANCHOR CABLE WITH SWAGED FITTING AND STUD

DETAIL "E"

STATE OF CALIFORNIA
DEPARTMENT OF TRANSPORTATION

METAL RAILING ANCHOR CABLE AND ANCHOR PLATE DETAILS

NO SCALE

RSP A77S3 DATED NOVEMBER 15, 2013 SUPERSEDES RSP A77S3 DATED JULY 19, 2013 THAT SUPPLEMENTS THE STANDARD PLANS BOOK DATED 2010.

REVISED STANDARD PLAN RSP A77S3

2010 REVISED STANDARD PLAN RSP A77S3

DATE PLOTTED => 06-NOV-2015
TIME PLOTTED => 11:33

Dist	COUNTY	ROUTE	POST MILES TOTAL PROJECT	SHEET No.	TOTAL SHEETS
02	Mod	299	52.2/54.7	27	34

REGISTERED CIVIL ENGINEER

October 30, 2015
PLANS APPROVAL DATE

REGISTERED PROFESSIONAL ENGINEER Srikanth N. Balasubramanian No. C56426 Exp. 6-30-17 CIVIL STATE OF CALIFORNIA

THE STATE OF CALIFORNIA OR ITS OFFICERS OR AGENTS SHALL NOT BE RESPONSIBLE FOR THE ACCURACY OR COMPLETENESS OF SCANNED COPIES OF THIS PLAN SHEET.

TO ACCOMPANY PLANS DATED 10-12-15

ABBREVIATIONS:

TE TAPERED EDGE

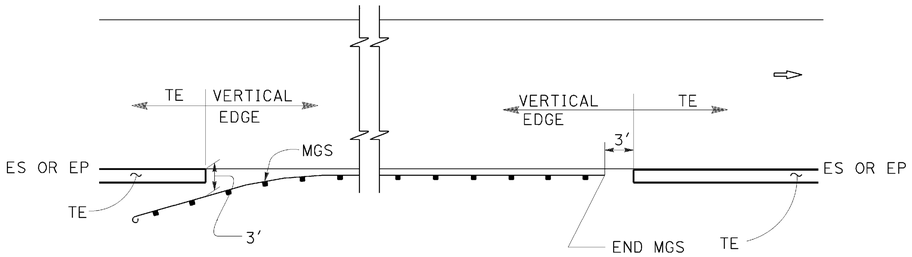

MGS

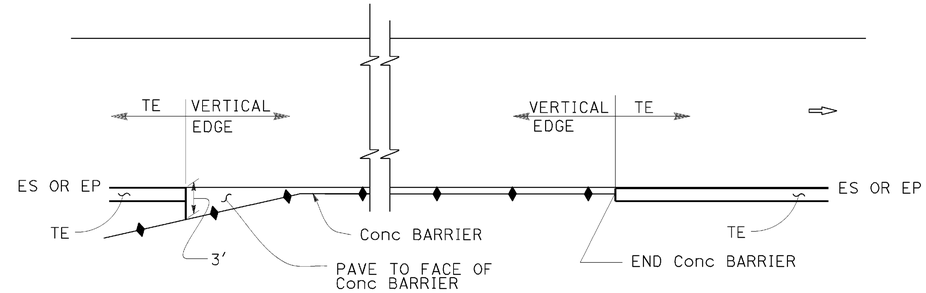

CONCRETE BARRIER

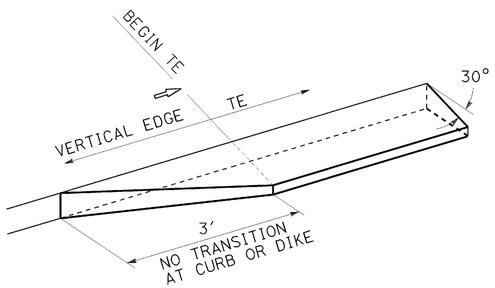

TRANSITION DETAIL FOR CONCRETE ONLY

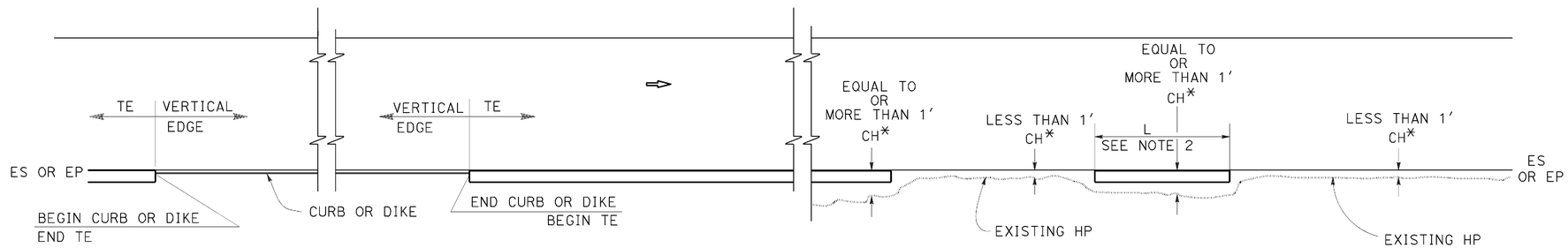

CURB OR DIKE

NARROW SIDE SLOPE

* CH = Distance from ES or EP to existing HP.

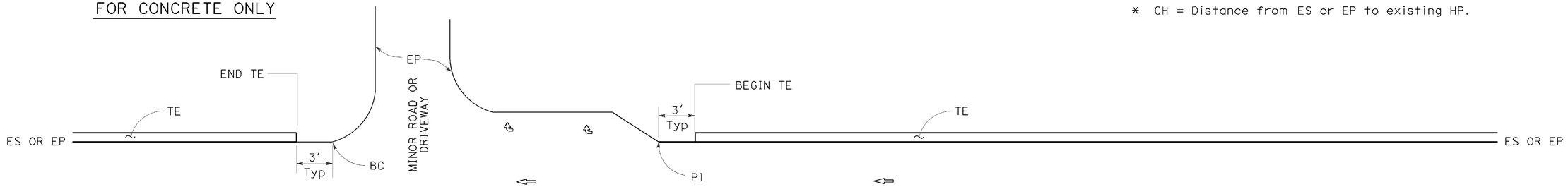

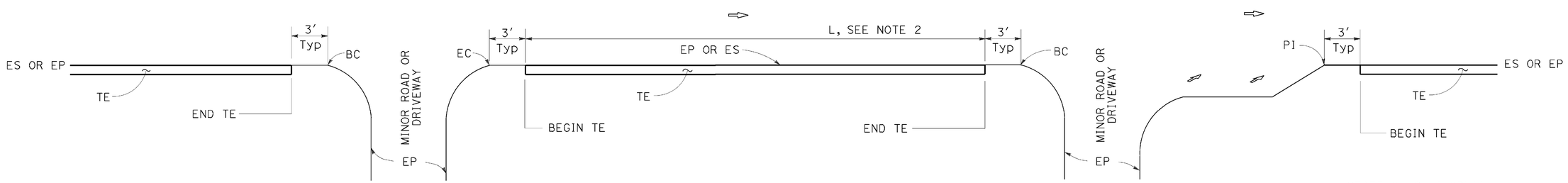

INTERTECTION

MINOR ROADWAY OR DRIVEWAY

DRIVEWAY AND INTERSECTION

STATE OF CALIFORNIA
DEPARTMENT OF TRANSPORTATION

PAVEMENT EDGE TREATMENTS

NO SCALE

NOTES:

1. For details not shown, see Revised Standard Plans RSP P75 and RSP P76.
2. Tapered edge is optional when L is less than 30′.

RSP P74 DATED OCTOBER 30, 2015 SUPERSEDES RSP P74 DATED NOVEMBER 15, 2013 AND RSP P74 DATED JANUARY 20, 2012 THAT SUPPLEMENTS THE STANDARD PLANS BOOK DATED 2010.

REVISED STANDARD PLAN RSP P74

2010 REVISED STANDARD PLAN RSP P74

DATE PLOTTED => 06-NOV-2015
TIME PLOTTED => 11:33

Dist	COUNTY	ROUTE	POST MILES TOTAL PROJECT	SHEET No.	TOTAL SHEETS
02	Mod	299	52.2/54.7	28	34

REGISTERED CIVIL ENGINEER

October 30, 2015
PLANS APPROVAL DATE

REGISTERED PROFESSIONAL ENGINEER Srikanth N. Balasubramanian No. C56426 Exp. 6-30-17 CIVIL STATE OF CALIFORNIA

THE STATE OF CALIFORNIA OR ITS OFFICERS OR AGENTS SHALL NOT BE RESPONSIBLE FOR THE ACCURACY OR COMPLETENESS OF SCANNED COPIES OF THIS PLAN SHEET.

TO ACCOMPANY PLANS DATED 10-12-15

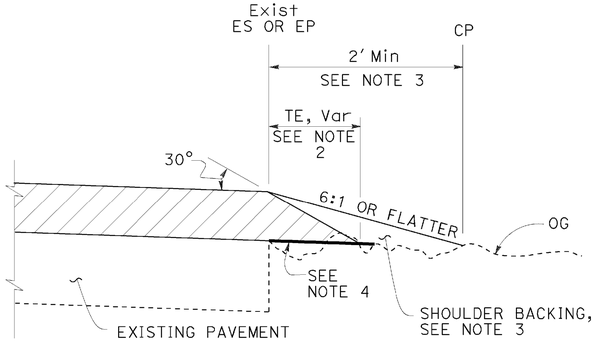

CASE A
Tapered Edge

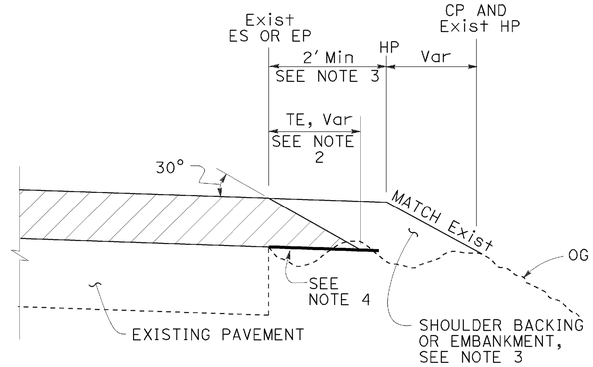

CASE B
Tapered Edge

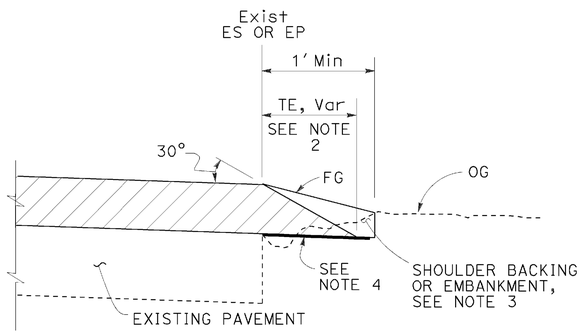

CASE C
Tapered Edge

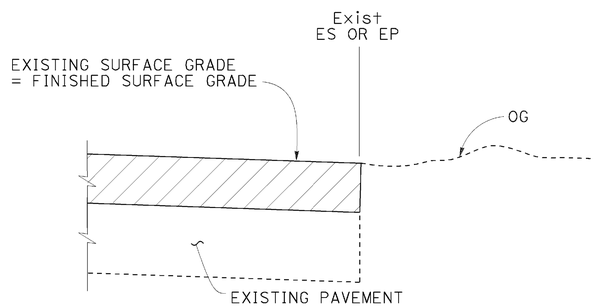

CASE D
Vertical Edge

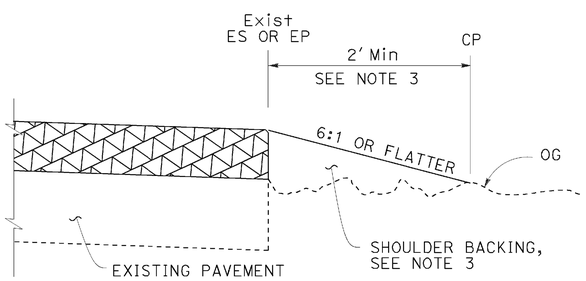

CASE E
Vertical Edge

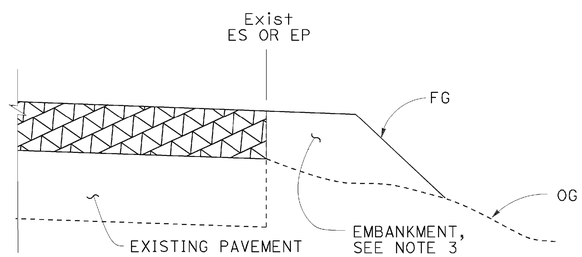

CASE F
Vertical Edge
* See Table A and Revised Std Plan RSP P74

LEGEND:

- HMA OVERLAY
- HMA OR CONCRETE OVERLAY
- CONCRETE OVERLAY

ABBREVIATIONS:

TE TAPERED EDGE
TT TOTAL THICKNESS OF TE

TABLE A
EDGE TREATMENT FOR VARIOUS OVERLAY THICKNESS AND CONDITIONS

	OVERLAY THICKNESS	
FIELD CONDITION	LESS THAN 0.15'	0.15' OR MORE
Exist SLOPE 6:1 OR FLATTER	CASE E	CASE A
Exist SLOPE 3:1 TO 6:1	CASE E	CASE B
Exist SLOPE STEEPER THAN 3:1	CASE F	CASE F
CUT SECTION (REPLACE, COLD PLANE, MILL PAVEMENT)	CASE D	CASE C

ADDITIONAL HMA OR CONCRETE QUANTITIES FOR TE/SIDE/MILE

TYPICAL CROSS SECTION	TT	TOTAL ADDITIONAL MATERIAL FOR TE/SIDE/MILE		
		HMA (TON)	CONCRETE (CY)*	CONCRETE (CY)**
TT	0.15'	7.7	NA	NA
	0.20'	13.7	NA	NA
	0.30'	30.9	NA	NA
	0.40'	54.9	NA	NA
	0.45'	69.4	NA	NA
TT 0.43'	0.50'	84.2	NA	NA
	0.60'	113.9	NA	NA
	0.70'	143.6	70.9	94.2
	0.80'	173.3	85.6	112.2
	0.90'	203.0	100.3	130.2
	1.00'	232.7	114.9	148.2
	1.10'	262.4	129.6	166.2
	1.20'	292.1	144.3	184.2

* For Detail "A"
** For Optional Detail "A"

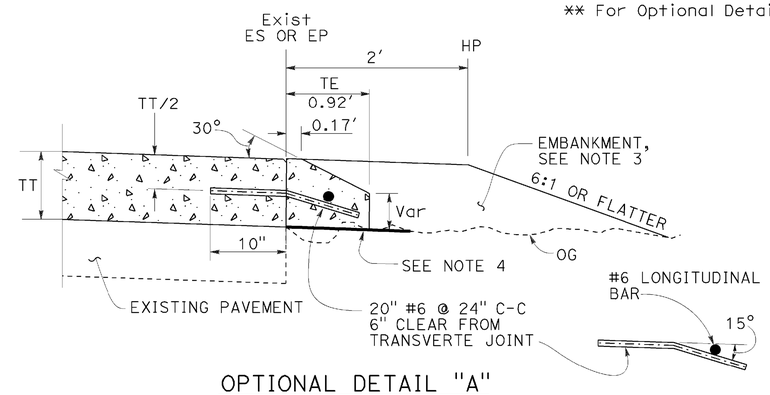

OPTIONAL DETAIL "A"
For concrete overlay
See Note 5

NOTES:

1. For limits of tapered edge and vertical edge treatments, see Revised Standard Plan RSP P74.
2. Details shown for HMA overlay thickness less than 0.43'. See Detail "A" for HMA overlay thickness more than 0.43' or concrete overlay.
3. For locations and limits of shoulder backing or embankment see project plans.
4. Grade existing ground to place tapered edge. 1' minimum width
5. Tapered edge transverse joint must match overlay transverse joint. End of #6 longitudinal bar must be 2" ±½" clear from transverse joint.
6. Tapered edge is not needed in the area of MGS, barrier, right turn lane and acceleration lane. See Revised Standard Plan RSP P74.

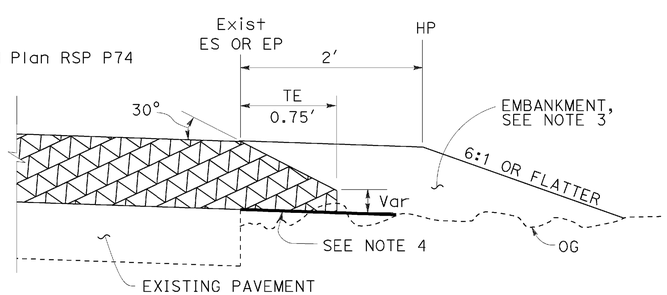

DETAIL "A"
For HMA overlay thickness more than 0.43' or concrete overlay

STATE OF CALIFORNIA
DEPARTMENT OF TRANSPORTATION

PAVEMENT EDGE TREATMENTS-OVERLAYS

NO SCALE

RSP P75 DATED OCTOBER 30, 2015 SUPERSEDES RSP P75 DATED NOVEMBER 15, 2013 AND RSP P75 DATED JANUARY 20, 2012 THAT SUPPLEMENTS THE STANDARD PLANS BOOK DATED 2010.

REVISED STANDARD PLAN RSP P75

2010 REVISED STANDARD PLAN RSP P75

DATE PLOTTED => 06-NOV-2015
TIME PLOTTED => 11:34

Dist	COUNTY	ROUTE	POST MILES TOTAL PROJECT	SHEET No.	TOTAL SHEETS
02	Mod	299	52.2/54.7	29	34

REGISTERED CIVIL ENGINEER

October 30, 2015
PLANS APPROVAL DATE

REGISTERED PROFESSIONAL ENGINEER Carl M. Duan No. C59976 Exp. 6-30-16 CIVIL STATE OF CALIFORNIA

THE STATE OF CALIFORNIA OR ITS OFFICERS OR AGENTS SHALL NOT BE RESPONSIBLE FOR THE ACCURACY OR COMPLETENESS OF SCANNED COPIES OF THIS PLAN SHEET.

TO ACCOMPANY PLANS DATED 10-12-15

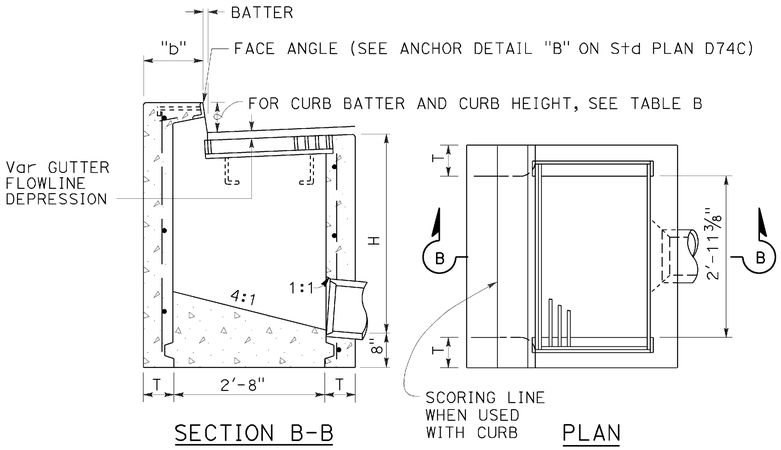

SECTION B-B PLAN

TYPE GO

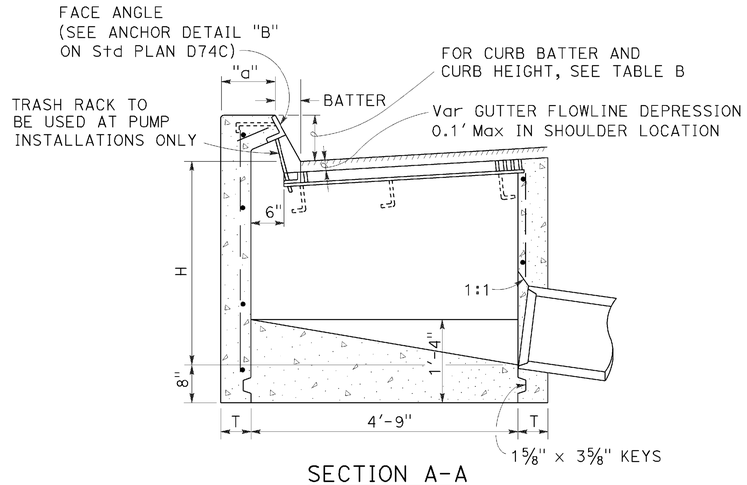

SECTION A-A

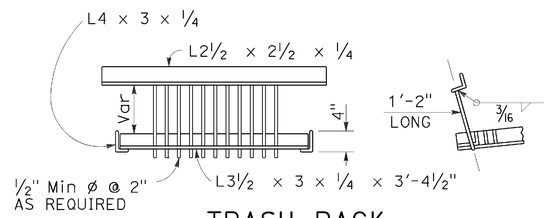

TRASH RACK

(For use with pump installation)

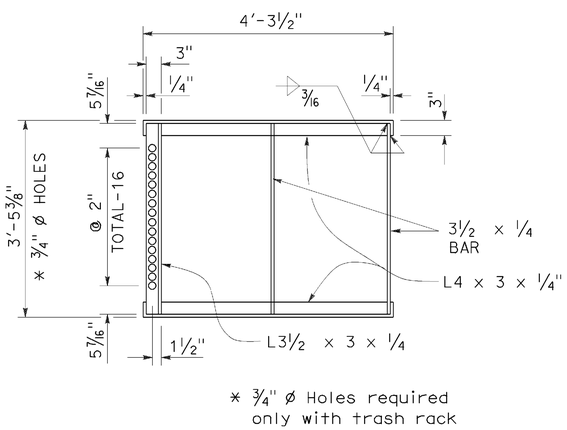

* 3/4" ø Holes required only with trash rack

GRATE FRAME FOR TYPE GDO INLET

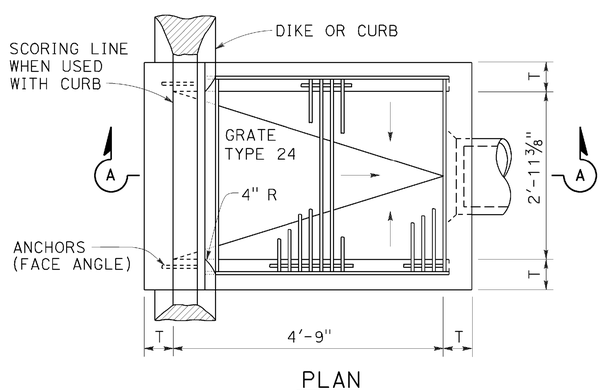

PLAN

TYPE GDO

TABLE A

CONCRETE QUANTITIES				
TYPE	H=3'-0" TO 8'-0" (T=6")		H=8'-1" TO 20'-0" (T=8")	
	H=3'-0" (CY)	ADDITIONAL PCC PER FOOT (CY)	H=8'-1" (CY)	ADDITIONAL PCC PER FOOT (CY)
GO	1.24	0.245	3.39	0.346
GDO	1.62	0.322	4.36	0.446

Table based on 8" floor slab, and curb type giving highest quantity of concrete. no deductions or adjustments are to be made to these quantities because of pipe openings, different floor alternatives or different curb type.

TABLE B

CURB TYPE	NORMAL CURB HEIGHT	CURB BATTER	"a" DIMENSION	"b" DIMENSION
A1-6	6"	1 1/2"	T+7 1/2"	T+6 1/2"
A1-8	8"	2"	T+7"	T+6"
B1-6	6"	4"	T+5"	T+4"
TYPE A DIKE	6"	3"	T+6"	T+5"

NOTES:

1. "H" is the difference in elevation between the outlet pipe flow line and the normal gutter grade line undepressed.
2. For "T" wall thickness, see Table A below.
3. Wall reinforcing not required when "H" is 8'-0" or less and the unsupported width or length is 7'-0" or less. Walls exceeding these limits shall be reinforced with #4 @ 18"± centers placed 1 1/2" clear to inside of box unless otherwise shown.
4. Inlet bottom reinforcing not required. See Standard Plan D74C for alternative reinforced bottom.
5. Steps - None required where "H" is less than 2'-6" Where "H" is 2'-6" or more, install steps with lowest rung 1'-0" above the floor and highest rung not more than 6" below top of inlet. The distance between steps shall not exceed 1'-0" and shall be uniform throughout the length of the wall. Place steps in the wall without an opening. Step inserts may be substituted for the bar steps. Step Inserts shall comply with State Industrial Safety requirements. See Standard Plan D74C for step details.
6. When shown on the project plans, place a 3/4" plain round protection bar horizontally across the length of the opening and bend back 4" into the inlet wall on each side.
7. Pipe(s) can be placed in any wall.
8. Curb section shall match adjacent curb.
9. Basin floors shall have wood trowel finish and shall slope toward the outlet pipe as shown.
10. See Revised Standard Plans RSP D77A and RSP D77B for grate and frame details and weights of miscellaneous iron and Steel.
11. See Standard Plan D78A for gutter depression details.
12. Complete joint penetration butt welds may be substituted for the fillet welds on all anchors.
13. Standard square, hexagon, round or equivalent headed anchors may be substituted for the right angle hooks on the anchors shown on this plan.
14. Cast-in-place inlets to be formed around all pipes/stubs intersecting the inlet and concrete poured in one continuous operation. Precast inlets shall have mortared pipe connections conforming to details for Type GCP inlets on Revised Standard Plan RSP D75B. See Standard Specifications for mortar composition.

STATE OF CALIFORNIA
DEPARTMENT OF TRANSPORTATION

DRAINAGE INLETS

NO SCALE

RSP D74B DATED OCTOBER 30, 2015 SUPERSEDES STANDARD PLAN D74B DATED MAY 20, 2011 - PAGE 159 OF THE STANDARD PLANS BOOK DATED 2010.

REVISED STANDARD PLAN RSP D74B

2010 REVISED STANDARD PLAN RSP D74B

DATE PLOTTED => 06-NOV-2015
TIME PLOTTED => 11:34

Dist	COUNTY	ROUTE	POST MILES TOTAL PROJECT	SHEET No.	TOTAL SHEETS
02	Mod	299	52.2/54.7	30	34

Raymond Don Tsztoo
REGISTERED CIVIL ENGINEER

April 19, 2013
PLANS APPROVAL DATE

REGISTERED PROFESSIONAL ENGINEER Raymond Don Tsztoo No. C37332 Exp. 6-30-14 CIVIL STATE OF CALIFORNIA

THE STATE OF CALIFORNIA OR ITS OFFICERS OR AGENTS SHALL NOT BE RESPONSIBLE FOR THE ACCURACY OR COMPLETENESS OF SCANNED COPIES OF THIS PLAN SHEET.

TO ACCOMPANY PLANS DATED 10-12-15

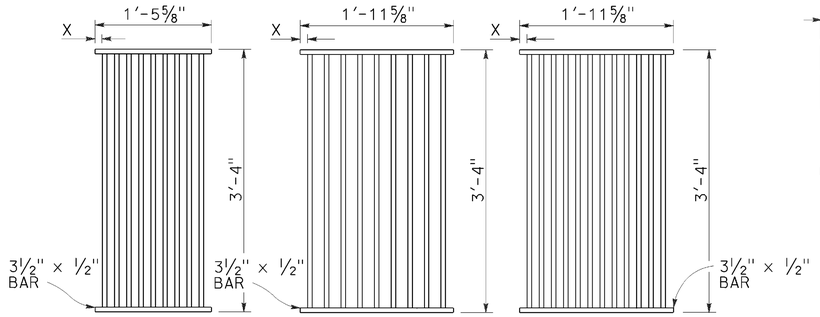

TYPE 18-9

1⅜" Clear spacing. Use within the roadbed on highways where bicycles and pedestrians are excluded.

TYPE 24-9

2" Clear spacing. Use in locations off the roadbed on all types of highways.

TYPE 24-12

1⅜" Clear spacing. Use within the roadbed on highways where bicycles and pedestrians are excluded.

RECTANGULAR GRATE DETAILS

(See table below)

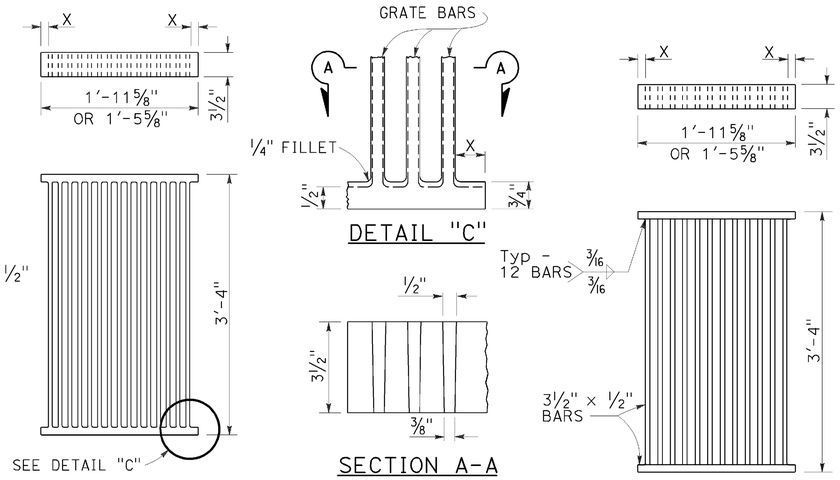

ALTERNATIVE CAST DUCTILE IRON GRATE OR CAST CARBON STEEL GRATE

ALTERNATIVE WELDED GRATE

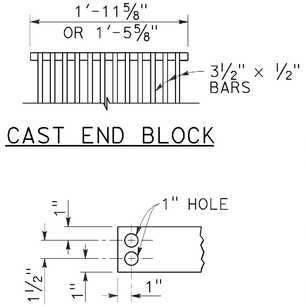

CAST END BLOCK

END OF BAR

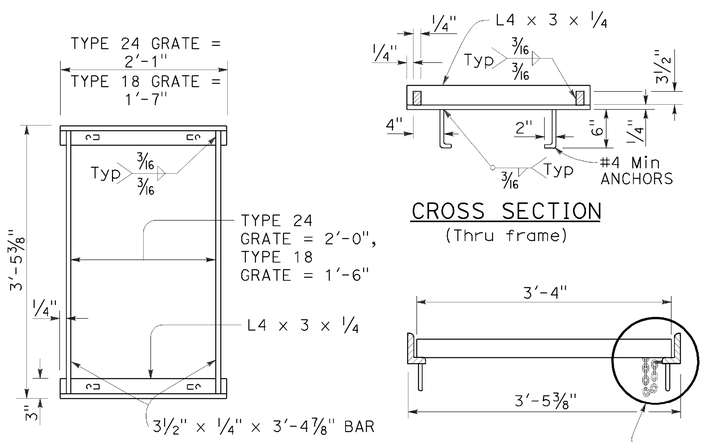

TYPICAL FRAME

CROSS SECTION

(Thru frame)

LONGITUDINAL SECTION

(Thru frame and grate)

RECTANGULAR FRAME DETAILS

(For all rectangular grates)

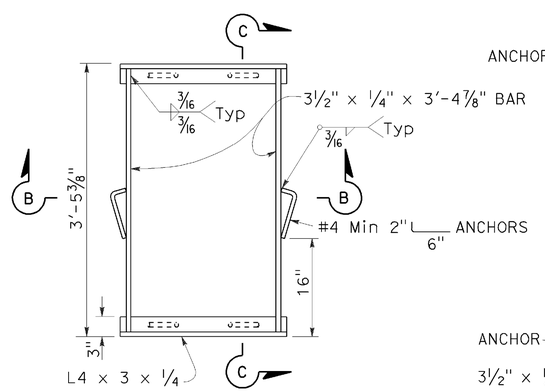

TYPICAL FRAME

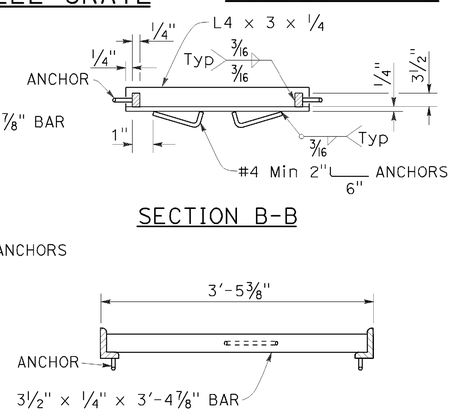

SECTION B-B

SECTION C-C

ALTERNATIVE ANCHOR FOR RECTANGULAR FRAME

(For details not shown, See Rectangular Frame Details)

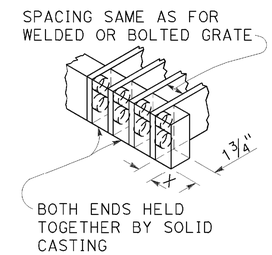

ALTERNATIVE CAST DUCTILE IRON OR CAST CARBON STEEL END BLOCK GRATE

NOTES:

1. Grate type numbers refer to approximate width of grate in inches and number of bars, respectively.
2. Contractor has the option of using cast ductile iron, cast carbon steel, welded, bolted, or cast end block grate.
3. Rounded top of bars optional on all grates.
4. Pipe inlets with a grate shall be placed so that bars parallel direction of principle surface flow.
5. Complete joint penetration butt welds may be substituted for the fillet welds on all anchors.
6. Standard square, hexagon, round or equivalent headed anchors may be substituted for the right angle hooks on the anchors shown on this plan.
7. Grate and frame weights are based on welded grates (weights of face angles, steps, protection bars, etc. are not included).
8. Connect chain to grate and frame only at locations shown on the plans. When chain is required, do not use cast ductile iron grates.

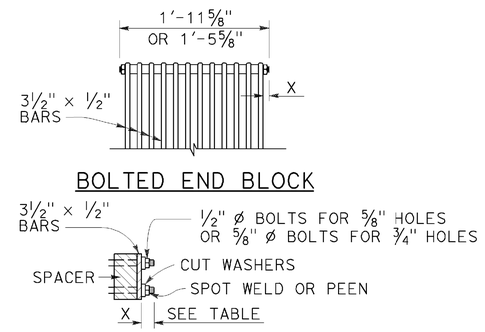

ALTERNATIVE BOLTED GRATE

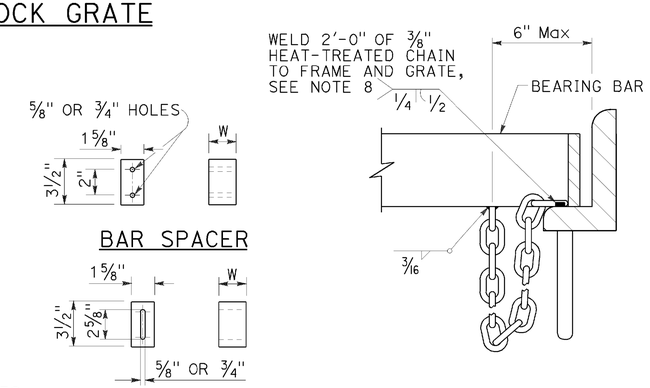

GRATE BAR SPACING TABLE

TYPE	No. OF BARS	CLEAR BAR SPACING	X
18-9	9	1⅜"	1 1/16"
24-9	9	2"	1 9/16"
24-12	12	1⅜"	1¼"

INLET TYPE	COVER TYPE	WEIGHT LB
OS	PLATE	174
OL-7	PLATE	170
OL-10	PLATE	170
OL-14	PLATE	170
OL-21	PLATE	170
OCP	PLATE	112
OCPI	PLATE	112
OCPI	REDWOOD	42
OMP	PLATE	177
OMPI	PLATE	177

INLET TYPE	GRATE TYPE	No. OF GRATES	WEIGHT LB
GDO	24-12	2	634
GOL-7	24-12	1	326
GOL-10	24-12	1	326
GO,G1,G2,G3,G4 (TYPE 24)	24-9	1	263
	24-12	1	326
G4 (TYPE 18),G5,G6	18-9	1	249
GT1	18-9	2	498
GT2	18-9	2	498
GT3	24-12	2	652
GT4	24-12	2	652
TRASH RACK			22
GRATE CHAIN			3

BASIS FOR Misc IRON & STEEL FINAL PAY WEIGHTS FOR DRAINAGE INLETS

(See Note 7)

STATE OF CALIFORNIA
DEPARTMENT OF TRANSPORTATION

GRATE DETAILS No. 1

NO SCALE

RSP D77A DATED APRIL 19, 2013 SUPERSEDES RSP D77A DATED JULY 20, 2012 AND STANDARD PLAN D77A DATED MAY 20, 2011 - PAGE 164 OF THE STANDARD PLANS BOOK DATED 2010.

REVISED STANDARD PLAN RSP D77A

2010 REVISED STANDARD PLAN RSP D77A

DATE PLOTTED => 06-NOV-2015
TIME PLOTTED => 11:35

Dist	COUNTY	ROUTE	POST MILES TOTAL PROJECT	SHEET No.	TOTAL SHEETS
02	Mod	299	52.2/54.7	31	34

Raymond Don Tsztoo
REGISTERED CIVIL ENGINEER

October 30, 2015
PLANS APPROVAL DATE

REGISTERED PROFESSIONAL ENGINEER
Raymond Don Tsztoo
No. C37332
Exp. 6-30-16
CIVIL
STATE OF CALIFORNIA

THE STATE OF CALIFORNIA OR ITS OFFICERS OR AGENTS SHALL NOT BE RESPONSIBLE FOR THE ACCURACY OR COMPLETENESS OF SCANNED COPIES OF THIS PLAN SHEET.

TO ACCOMPANY PLANS DATED 10-12-15

ANNULAR AND HELICAL PROFILE

COUPLING TYPE	PIPE CORRUGATION	PIPE SIZE	W OR A	PIPE WALL THICKNESS		BAND THICKNESS		BAR AND STRAP (CSP ONLY)				ANGLE						
												DIMENSIONS		BOLTS (No.- Dia)		RIVETS ANGLE TO BAND		SPOT WELDS ANGLE TO BAND
				CSP	CAP	CSP	CAP	STRAP THICKNESS	BOLTS Dia	BAR Dia	BAR YIELD STRENGTH	CSP	CAP	CSP	CAP	CSP	CAP	CSP
TWO PIECE INTEGRAL FLANGE	1½′ × ¼"	6"	7"	0.064"-0.168"		0.052"								3-⅜"				
	1½′ × ¼"	8"-10"	7"	0.064"-0.168"	0.060"-0.164"	0.064"	0.060"							3-⅜"	3-⅜"			
ANNULAR	2⅔" × ½"	THROUGH 24"	12"	0.064"-0.168"	0.060"-0.164"	0.064"	0.060"					2" × 2" × 3/16"	2" × 2" × 3/16"	3-½"	3-½"	3-⅜"	3-⅜"	3-½"
HUGGER	2⅔" × ½" REROLLED END	THROUGH 24"	10½"	0.064"-0.168"		0.064"		0.079"	½"	⅞"	32 ksi							

SPIRAL RIB PROFILE

COUPLING TYPE	PIPE CORRUGATION	PIPE SIZE	W	PIPE WALL THICKNESS		BAND THICKNESS		BAR AND STRAP (SSRP ONLY)				ANGLE						
												DIMENSIONS		BOLTS (No.- Dia)		RIVETS ANGLE TO BAND		SPOT WELDS ANGLE TO BAND
				SSRP	ASRP	SSRP	ASRP	STRAP THICKNESS	BOLTS Dia	BAR Dia	BAR YIELD STRENGTH	SSRP	ASRP	SSRP	ASRP	SSRP	ASRP	SSRP
ANNULAR	2⅔" × ½" * REROLLED END	24"	12"	0.064"-0.168"	0.060"-0.164"	0.064"	0.060"					2" × 2" × 3/16"	2" × 2" × 3/16"	3-½"	3-½"	3-⅜"	3-⅜"	3-½"
HUGGER	2⅔" × ½" * REROLLED END	24"	10½"	0.064"-0.168"		0.064"		0.079"	½"	⅞"	32 ksi							

* See Note 11.

11. All profiles of Spiral Rib Pipe (¾" x ¾" ribs at 7½" pitch and ¾" x 1" ribs at 11½" pitch in both steel and aluminum and ¾" x 1" ribs at 8½" pitch in steel only) shall be manufactured with rerolled ends. Corrugation profile of the rerolled ends shall be 2⅔" x ½" annual corrugations with a minimum of two full corrugations at each end.

NOTES:

1. For helically corrugated coupling bands, the connection angles may be oriented parallel to the pipe axis, provided connecting holes are slotted lengthwise sufficiently to allow adjustment for the helix angle.
2. Tension strap may be connected to band with either spot welds or fillet welds that develop minimum required strength of strap.
3. Use 1¼" gage line dimension on attached angle leg for rivets and spot welds.
4. Band thickness shall not be less than:
   a. 3 standard thicknesses lighter than the thickness of the pipe for Corrugated Steel Pipe.
   b. 2 standard thicknesses lighter than the thickness of the pipe and in no case lighter than 0.060" for Corrugated Aluminum Pipe.
5. Dimensions, thicknesses and strengths shown are minimum.
6. For pipe arches use same width band as for round pipe of equal periphery.
7. Fillet welds of equivalent strength may be substituted for spot welds or rivets.
8. Spot welds shall develop minimum required strength of strap.
9. Pipe with rerolled ends having at least two 2⅔" × ½" annular corrugations at each end with or without an upturned flange may be connected with any of the annular coupling bands shown for pipe of the same diameter and wall thickness and having 2⅔" × ½" corrugations.
10. For downdrain applications, two piece integral flange couplers shall have factory applied sleeve type rubber gaskets with a minimum length of 7" measured along the length of the pipe.

STATE OF CALIFORNIA
DEPARTMENT OF TRANSPORTATION

CORRUGATED METAL PIPE COUPLING DETAILS No. 7 DOWNDRAIN

NO SCALE

RSP D97G DATED OCTOBER 30, 2015 SUPERSEDES STANDARD PLAN D97G DATED MAY 20, 2011 - PAGE 202 OF THE STANDARD PLANS BOOK DATED 2010.

REVISED STANDARD PLAN RSP D97G

2010 REVISED STANDARD PLAN RSP D97G

DATE PLOTTED => 06-NOV-2015
TIME PLOTTED => 11:35

Dist	COUNTY	ROUTE	POST MILES TOTAL PROJECT	SHEET No.	TOTAL SHEETS
02	Mod	299	52.2/54.7	32	34

REGISTERED CIVIL ENGINEER

July 19, 2013
PLANS APPROVAL DATE

REGISTERED PROFESSIONAL ENGINEER Gurinderpal Bhullar No. C48815 Exp. 9-30-14 CIVIL STATE OF CALIFORNIA

THE STATE OF CALIFORNIA OR ITS OFFICERS OR AGENTS SHALL NOT BE RESPONSIBLE FOR THE ACCURACY OR COMPLETENESS OF SCANNED COPIES OF THIS PLAN SHEET.

TO ACCOMPANY PLANS DATED 10-12-15

TABLE 1

TAPER LENGTH CRITERIA AND CHANNELIZING DEVICE SPACING

SPEED (S)	MINIMUM TAPER LENGTH * FOR WIDTH OF OFFSET 12 FEET (W)				MAXIMUM CHANNELIZING DEVICE SPACING		
					X	Y	Z **
	TANGENT 2L	MERGING L	SHIFTING L/2	SHOULDER L/3	TAPER	TANGENT	CONFLICT
mph	ft	ft	ft	ft	ft	ft	ft
20	160	80	40	27	20	40	10
25	250	125	63	42	25	50	12
30	360	180	90	60	30	60	15
35	490	245	123	82	35	70	17
40	640	320	160	107	40	80	20
45	1080	540	270	180	45	90	22
50	1200	600	300	200	50	100	25
55	1320	660	330	220	55	110	27
60	1440	720	360	240	60	120	30
65	1560	780	390	260	65	130	32
70	1680	840	420	280	70	140	35

* - For other offsets, use the following merging taper length formula for L:
For speed of 40 mph or less, $L = WS^2/60$
For speed of 45 mph or more, $L = WS$

Where: L = Taper length in feet
W = Width of offset in feet
S = Posted speed limit, off-peak 85th-percentile speed prior to work starting, or the anticipated operating speed in mph

** - Use for taper and tangent sections where there are no pavement markings or where there is a conflict between existing pavement markings and channelizers (CA).

TABLE 2

LONGITUDINAL BUFFER SPACE AND FLAGGER STATION SPACING

SPEED *	Min D **	DOWNGRADE Min D ***		
		-3%	-6%	-9%
mph	ft	ft	ft	ft
20	115	116	120	126
25	155	158	165	173
30	200	205	215	227
35	250	257	271	287
40	305	315	333	354
45	360	378	400	427
50	425	446	474	507
55	495	520	553	593
60	570	598	638	686
65	645	682	728	785
70	730	771	825	891

* - Speed is posted speed limit, off-peak 85th-percentile speed prior to work starting, or the anticipated operating speed in mph

** - Longitudinal buffer space or flagger station spacing

*** - Use on sustained downgrade steeper than -3 percent and longer than 1 mile.

TABLE 3

ADVANCE WARNING SIGN SPACING

ROAD TYPE	DISTANCE BETWEEN SIGNS *		
	A	B	C
	ft	ft	ft
URBAN - 25 mph OR LESS	100	100	100
URBAN - MORE THAN 25 mph TO 40 mph	250	250	250
URBAN - MORE THAN 40 mph	350	350	350
RURAL	500	500	500
EXPRESSWAY / FREEWAY	1000	1500	2640

* - The distances are approximate, are intended for guidance purposes only, and should be applied with engineering judgment. These distances should be adjusted by the Engineer for field conditions, if necessary, by increasing or decreasing the recommmended distances.

STATE OF CALIFORNIA
DEPARTMENT OF TRANSPORTATION

TRAFFIC CONTROL SYSTEM TABLES FOR LANE AND RAMP CLOSURES

NO SCALE

RSP T9 DATED JULY 19, 2013 SUPERSEDES RSP T9 DATED APRIL 19, 2013 THAT SUPPLEMENTS THE STANDARD PLANS BOOK DATED 2010.

REVISED STANDARD PLAN RSP T9

2010 REVISED STANDARD PLAN RSP T9

DATE PLOTTED => 06-NOV-2015
TIME PLOTTED => 11:36

Dist	COUNTY	ROUTE	POST MILES TOTAL PROJECT	SHEET No.	TOTAL SHEETS
02	Mod	299	52.2/54.7	33	34

Devinder Singh
REGISTERED CIVIL ENGINEER

October 30, 2015
PLANS APPROVAL DATE

REGISTERED PROFESSIONAL ENGINEER
Devinder Singh
No. C50470
Exp. 6-30-17
CIVIL
STATE OF CALIFORNIA

THE STATE OF CALIFORNIA OR ITS OFFICERS OR AGENTS SHALL NOT BE RESPONSIBLE FOR THE ACCURACY OR COMPLETENESS OF SCANNED COPIES OF THIS PLAN SHEET.

TO ACCOMPANY PLANS DATED 10-12-15

2010 REVISED STANDARD PLAN RSP T13

NOTES:

See Revised Standard Plan RSP T9 for tables.

Use cone spacing X for taper segment, Y for tangent segment or Z for conflict situations, as approriate, per Table 1, unless X, Y, or Z cone spacing is shown on this sheet.

Unless otherwise specified in the special provisions, all temporary warning signs shall have black legend on fluorescent orange background.

California codes are designated by (CA). Otherwise, Federal (MUTCD) codes are shown.

TYPICAL LANE CLOSURE WITH REVERSIBLE CONTROL

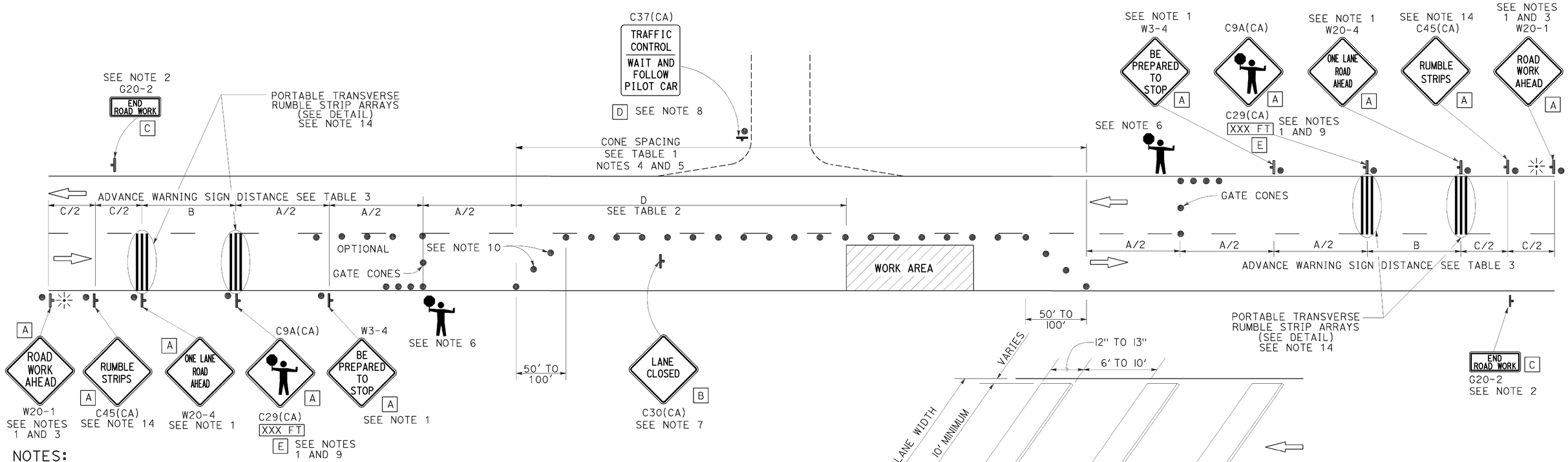

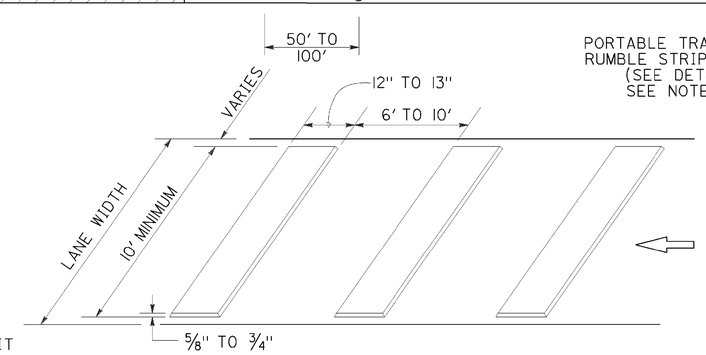

PORTABLE TRANSVERSE RUMBLE STRIP ARRAY DETAIL

NOTES:

1. Each advance warning sign in each direction of travel shall be equipped with at least two flags for daytime closure. Each flag shall be at least 16" x 16" in size and shall be orange or fluorescent red-orange in color. Flashing beacons shall be placed at the locations indicated for lane closure during hours of darkness.
2. A G20-2 "END ROAD WORK" sign, as appropriate, shall be placed at the end of the lane control unless the end of work area is obvious, or ends within a larger project's limits.
3. If the W20-1 sign would follow within 2000' of a stationary W20-1 or G20-1 "ROAD WORK NEXT _____ MILES", use a W20-4 sign for the first advance warning sign.
4. All cones used for lane closures during the hours of darkness shall be fitted with retroreflective bands (or sleeves) as specified in the specifications.
5. Portable delineators, placed at one-half the spacing indicated for traffic cones, may be used instead of cones for daytime closures only.
6. Additional advance flaggers may be required. Flagger should stand in a conspicuous place, be visible to approaching traffic as well as approaching vehicles after the first vehicle has stopped. During the hours of darkness, the flagging-station and flagger shall be illuminated and clearly visible to approaching traffic. The illumination footprint of the lighting on the ground shall be at least 20' in diameter. Place a minimum of four cones at 50' intervals in advance of flagger station as shown.
7. Place C30(CA) "LANE CLOSED" sign at 500' to 1000' intervals throughout extended work areas. They are optional if the work area is visible from the flagger station.
8. When a pilot car is used, place a C37(CA) "TRAFFIC CONTROL-WAIT AND FOLLOW PILOT CAR" sign with black legend on white background at all intersections, driveways and alleys without a flagger within traffic control area. Signs shall be clean and visible at all times. Where traffic can not be effectively self-regulated, at least one flagger shall be used at each intersection within traffic control area.
9. An optional C29(CA) sign may be placed below the C9A(CA) sign.
10. Either traffic cones or barricades shall be placed on the taper. Barricades shall be Type I, II, or III.
11. The color of the portable transverse rumble strips shall be black or orange. Use 2 arrays, each array shall consist of 3 rumble strips.
12. Portable transverse rumble strips shall not be placed on sharp horizontal or vertical curves nor shall they be placed through pedestrian crossings.
13. If the portable transverse rumble strips become out of alignment (skewed) by more than 6 inches, measured from one end to the other, they shall be readjusted to bring the placement back to the original location.
14. Portable transverse rumble strips are not required if any one of the following conditions is satisfied:
    A. Work duration occupies a location for four hours or less
    B. Posted speed limit is below 45 MPH
    C. Work is of emergency nature
    D. Work zone is in snow or icy weather conditions

SIGN PANEL SIZE (Min)

A	48" x 48"
B	30" x 30"
C	36" x 18"
D	36" x 42"
E	20" x 7"

LEGEND

- TRAFFIC CONE
- TEMPORARY TRAFFIC CONTROL SIGN
- PORTABLE FLASHING BEACON
- FLAGGER

STATE OF CALIFORNIA
DEPARTMENT OF TRANSPORTATION

TRAFFIC CONTROL SYSTEM FOR LANE CLOSURE ON TWO LANE CONVENTIONAL HIGHWAYS

NO SCALE

RSP T13 DATED OCTOBER 30, 2015 SUPERSEDES RSP T13 DATED OCTOBER 17, 2014, RSP T13 DATED JULY 18, 2014 AND RSP T13 DATED APRIL 19, 2013 AND STANDARD PLAN T13 DATED MAY 20, 2011 - PAGE 241 OF THE STANDARD PLANS BOOK DATED 2010.

REVISED STANDARD PLAN RSP T13

DATE PLOTTED => 06-NOV-2015
TIME PLOTTED => 11:36

Dist	COUNTY	ROUTE	POST MILES TOTAL PROJECT	SHEET No.	TOTAL SHEETS
02	Mod	299	52.2/54.7	34	34

REGISTERED CIVIL ENGINEER

April 19, 2013
PLANS APPROVAL DATE

REGISTERED PROFESSIONAL ENGINEER Gurinderpal Bhullar No. C48815 Exp. 9-30-14 CIVIL STATE OF CALIFORNIA

THE STATE OF CALIFORNIA OR ITS OFFICERS OR AGENTS SHALL NOT BE RESPONSIBLE FOR THE ACCURACY OR COMPLETENESS OF SCANNED COPIES OF THIS PLAN SHEET.

TO ACCOMPANY PLANS DATED 10-12-15

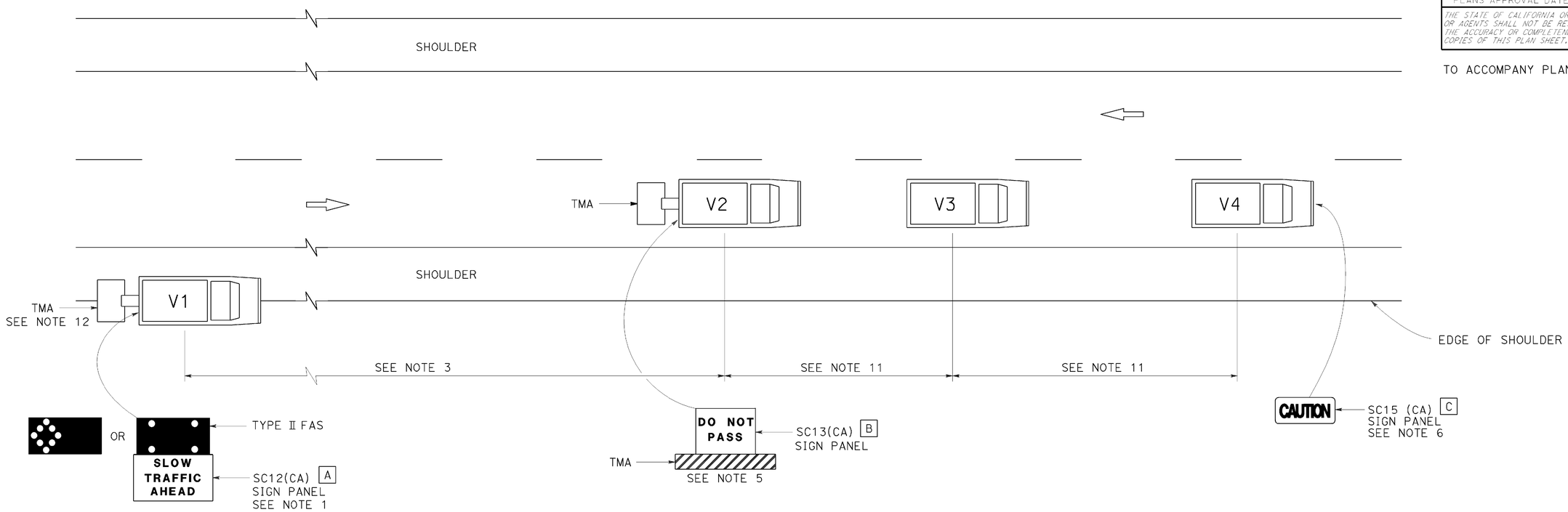

LEGEND

V1	SIGN VEHICLE
V2	SHADOW VEHICLE
V3	WORK/APPLICATION VEHICLE
V4	SIGN VEHICLE
TMA	TRUCK-MOUNTED ATTENUATOR
	FLASHING ARROW SIGN (FAS) IN FLASHING CAUTION MODE
	FLASHING ARROW SIGN (FAS) IN ALTERNATING DIAMOND CAUTION

SIGN PANEL SIZE (Min)

A	72" x 42"
B	54" x 42"
C	54" x 24"

NOTES:

1. Either a changeable message sign or a SC12(CA) "SLOW TRAFFIC AHEAD" sign shall be mounted on the rear of sign vehicle V1. The changeable message sign shall be sequenced to show the "CAUTION" message first, follow by the "SLOW TRAFFIC AHEAD" message. A Type II flashing arrow sign may be used with the SC12(CA) sign panel.
2. Sign vehicle V1 should be positioned where highly visible when shoulders are not available.
3. If traffic queues develop, sign vehicle V1 should be positioned upstream from the end of queue.
4. Vehicle-mounted sign panels shall have Type III or above retroreflective sheeting, black on white, or black on fluorescent orange, with 6" minimum series D letters per Caltrans sign specifications.
5. Shadow vehicle shall be equipped with a truck-mounted attenuator. The sign panel shown shall be mounted on the rear of shadow vehicle V2. The message "LANE CLOSED" may be used in place of the "DO NOT PASS" message.
6. The sign panel shown shall be mounted on the front of sign vehicle V4, facing opposing traffic.
7. All vehicles shall be equipped with flashing or rotating amber lights.
8. Sign vehicle V4 will not be required when the work and vehicles V2 and V3 are 2' or more from the centerline of the highway during the work or application operations.
9. All vehicles used for lane closures shall be equipped with two-way radios and the vehicle operators shall maintain communication during the work or application operation.
10. This plan shall not be used where workers would be on foot in the work area. Use a stationary type lane closure (Revised Standard Plan T13) for this condition.
11. Minimize spacing between vehicles V2 and V3 and vehicles V3 and V4 to deter road users from driving in between them.
12. If sign vehicle V1 encroaches into the traffic lane due to insufficient shoulder width, sign vehicle V1 shall be equipped with a truck-mounted attenuator. Sign vehicle V1 shall stay as close to the edge of shoulder as practicable.

STATE OF CALIFORNIA
DEPARTMENT OF TRANSPORTATION

TRAFFIC CONTROL SYSTEM FOR MOVING LANE CLOSURE ON TWO LANE HIGHWAYS

NO SCALE

RSP T17 DATED APRIL 19, 2013 SUPERSEDES STANDARD PLAN T17
DATED MAY 20, 2011 - PAGE 245 OF THE STANDARD PLANS BOOK DATED 2010.

REVISED STANDARD PLAN RSP T17

2010 REVISED STANDARD PLAN RSP T17

DATE PLOTTED => 06-NOV-2015
TIME PLOTTED => 11:36