Dist	COUNTY	ROUTE	POST MILES TOTAL PROJECT	SHEET No.	TOTAL SHEETS
02	Sha	5	R34.3/R36.8	1	72

STATE OF CALIFORNIA

DEPARTMENT OF TRANSPORTATION

ACHSNHPI-0058(351)E

PROJECT PLANS FOR CONSTRUCTION ON

STATE HIGHWAY

IN SHASTA COUNTY NEAR LAKEHEAD FROM 0.8 MILE SOUTH OF GILMAN ROAD OVERCROSSING TO GILMAN ROAD OVERCROSSING

TO BE SUPPLEMENTED BY STANDARD PLANS DATED MAY 2010

INDEX OF PLANS

SHEET No.	DESCRIPTION
1	TITLE AND LOCATION MAP
2-3	TYPICAL CROSS SECTIONS
4-5	LAYOUTS
6-8	PROFILE AND SUPERELEVATION
9-12	CONSTRUCTION DETAILS
13-17	DRAINAGE PLANS, PROFILES, DETAILS AND QUANTITIES
18	CONSTRUCTION AREA SIGNS
19-36	STAGE CONSTRUCTION
37	DETOUR PLAN
38-45	PAVEMENT DELINEATION, SIGN PLANS, QUANTITIES AND DETAILS
46	SUMMARY OF QUANTITIES
47-48	EROSION CONTROL PLANS
49-50	ELECTRICAL PLANS
51-72	REVISED STANDARD PLANS

THE STANDARD PLANS LIST APPLICABLE TO THIS CONTRACT IS INCLUDED IN THE NOTICE TO BIDDERS AND SPECIAL PROVISIONS BOOK.

LOCATION MAP

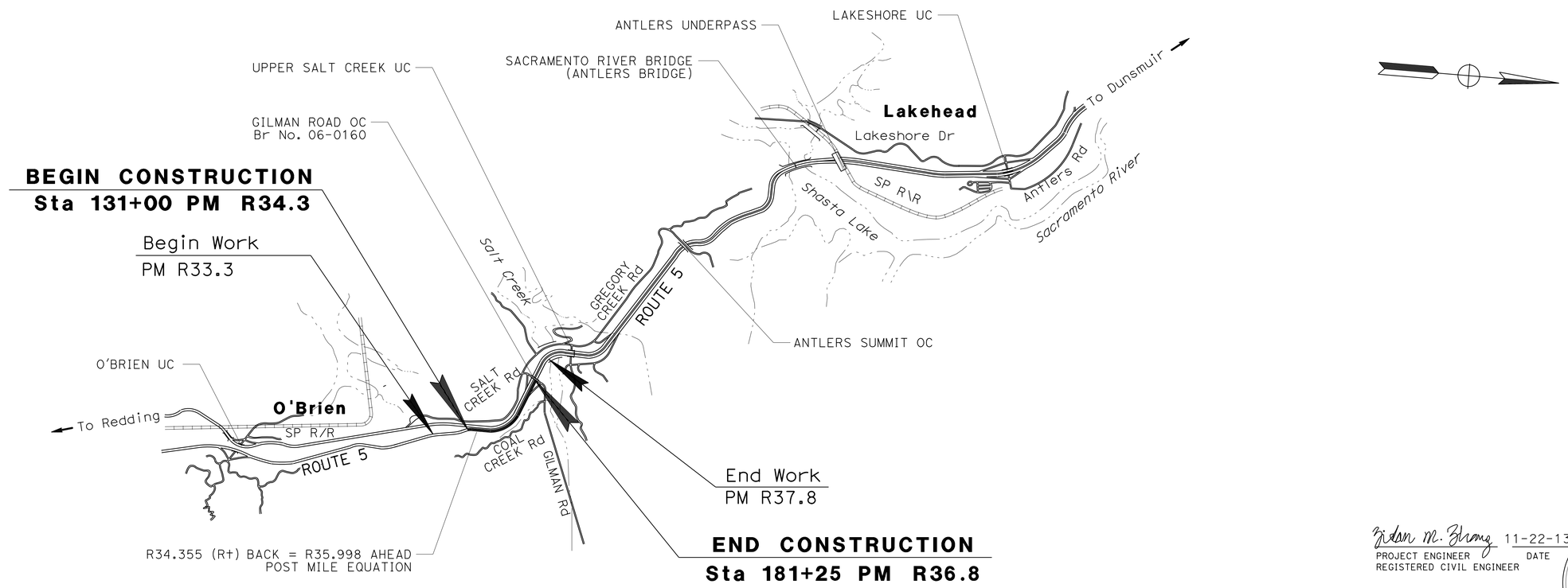

NO SCALE

THE CONTRACTOR SHALL POSSESS THE CLASS (OR CLASSES) OF LICENSE AS SPECIFIED IN THE "NOTICE TO BIDDERS."

Zidan M. Zhang 11-22-13
PROJECT ENGINEER DATE
REGISTERED CIVIL ENGINEER

November 22, 2013
PLANS APPROVAL DATE

REGISTERED PROFESSIONAL ENGINEER Z.M. ZHANG No. C69054 Exp. 6-30-14 CIVIL STATE OF CALIFORNIA

THE STATE OF CALIFORNIA OR ITS OFFICERS OR AGENTS SHALL NOT BE RESPONSIBLE FOR THE ACCURACY OR COMPLETENESS OF SCANNED COPIES OF THIS PLAN SHEET.

CONTRACT No.	02-4F4504
PROJECT ID	0212000155

PROJECT MANAGER: PHIL BAKER
DESIGN ENGINEER: AL TRUJILLO

P:\proj1\02\4F450_plans\pse\24f450ab001.dgn

LAST REVISION 11-22-13 | DATE PLOTTED => 28-JAN-2014 | TIME PLOTTED => 06:31

Dist	COUNTY	ROUTE	POST MILES TOTAL PROJECT	SHEET No.	TOTAL SHEETS
02	Sha	5	R34.3/R36.8	2	72

Zidan M. Zhang 11-22-13
REGISTERED CIVIL ENGINEER DATE

11-22-13
PLANS APPROVAL DATE

REGISTERED PROFESSIONAL ENGINEER Z. M. ZHANG No. C69054 Exp. 6-30-14 CIVIL STATE OF CALIFORNIA

THE STATE OF CALIFORNIA OR ITS OFFICERS OR AGENTS SHALL NOT BE RESPONSIBLE FOR THE ACCURACY OR COMPLETENESS OF SCANNED COPIES OF THIS PLAN SHEET.

NOTES:

1. DIMENSIONS OF THE PAVEMENT STRUCTURES (STRUCTURAL SECTIONS) ARE SUBJECT TO TOLERANCES SPECIFIED IN THE STANDARD SPECIFICATIONS.
2. SUPERELEVATIONS ARE SHOWN ON THE SUPERELEVATION DIAGRAM.

ABBREVIATIONS:

VCMC	VEGETATION CONTROL (MINOR CONCRETE)
(E)	EXISTING

DESIGN DESIGNATION (ROUTE 5)

ADT (2014)	18,600	D	60%
ADT (2034)	25,450	T	29%
DHV	2,850	V	65 mph
ESAL	49,363,100	TI20	14.5

PAVEMENT CLIMATE REGION

LOW MOUNTAIN

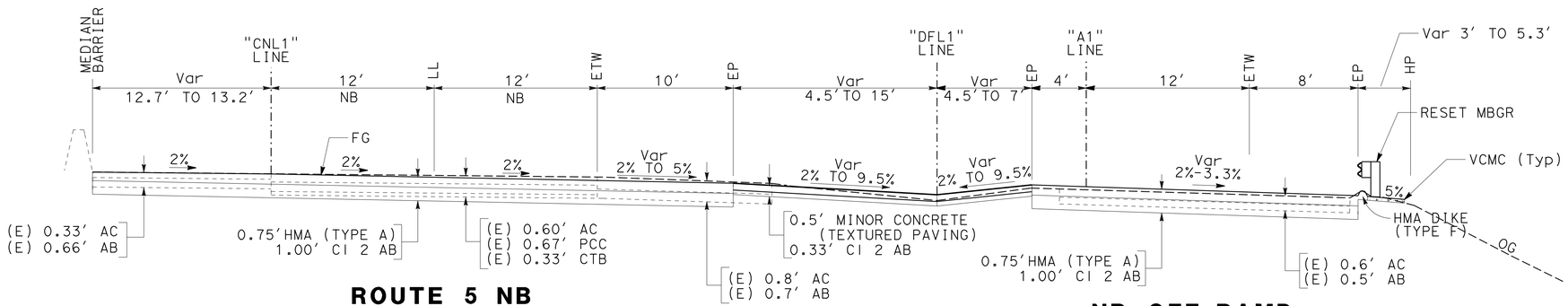

ROUTE 5 NB
"CNL1" 169+83.60 TO "CNL1" 171+35.30

NB OFF-RAMP
"A1" 169+84.70 TO "A1" 171+36.90

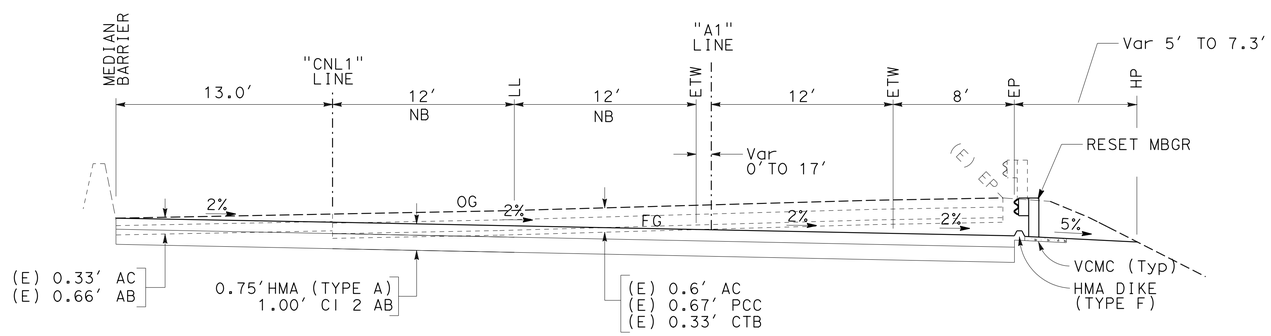

ROUTE 5 NB
"CNL1" 166+93.22 TO "CNL1" 169+83.60

NB OFF-RAMP
"A1" 166+93.22 TO "A1" 169+84.70

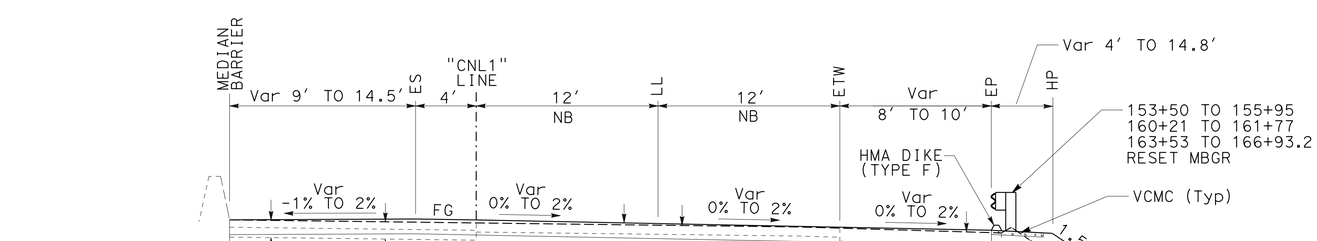

ROUTE 5 NB
"CNL1" 153+50.00 TO "CNL1" 166+93.22

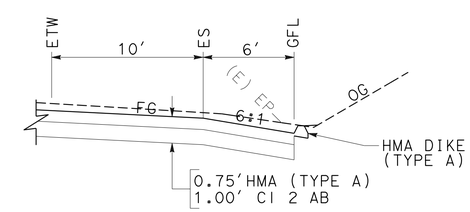

TYPICAL PAVED GUTTER
156+50 TO 161+00
162+00 TO 163+75

TYPICAL CROSS SECTIONS

NO SCALE

X-1

REVISED BY | DATE REVISED
JEFF CARSON | ZIDAN ZHANG
CALCULATED-DESIGNED BY | CHECKED BY
FUNCTIONAL SUPERVISOR
AL TRUJILLO

STATE OF CALIFORNIA - DEPARTMENT OF TRANSPORTATION
Caltrans DESIGN

P:\proj1\02\4F450_plans\pse\24f450ca001.dgn

LAST REVISION | DATE PLOTTED => 02-DEC-2013
11-22-13 | TIME PLOTTED => 15:40

Dist	COUNTY	ROUTE	POST MILES TOTAL PROJECT	SHEET No.	TOTAL SHEETS
02	Sha	5	R34.3/R36.8	3	72

Zidan M. Zhang 11-22-13
REGISTERED CIVIL ENGINEER DATE

11-22-13
PLANS APPROVAL DATE

REGISTERED PROFESSIONAL ENGINEER Z. M. ZHANG No. C69054 Exp. 6-30-14 CIVIL STATE OF CALIFORNIA

THE STATE OF CALIFORNIA OR ITS OFFICERS OR AGENTS SHALL NOT BE RESPONSIBLE FOR THE ACCURACY OR COMPLETENESS OF SCANNED COPIES OF THIS PLAN SHEET.

ABBREVIATIONS:

Bkg BACKING

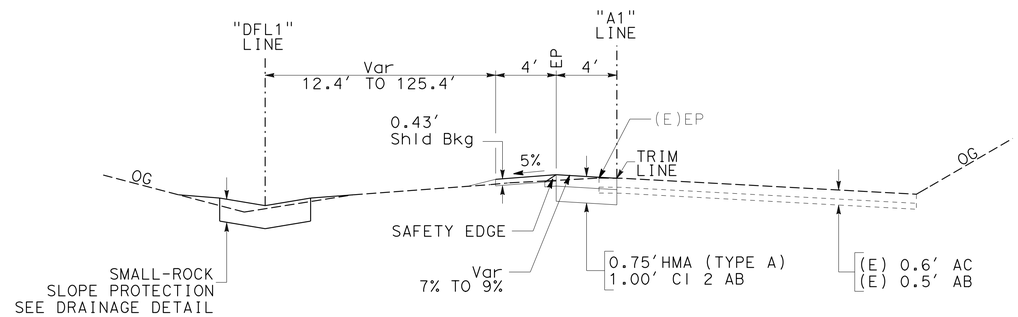

NB OFF-RAMP
"A1" 172+50.00 TO "A1" 176+00.00

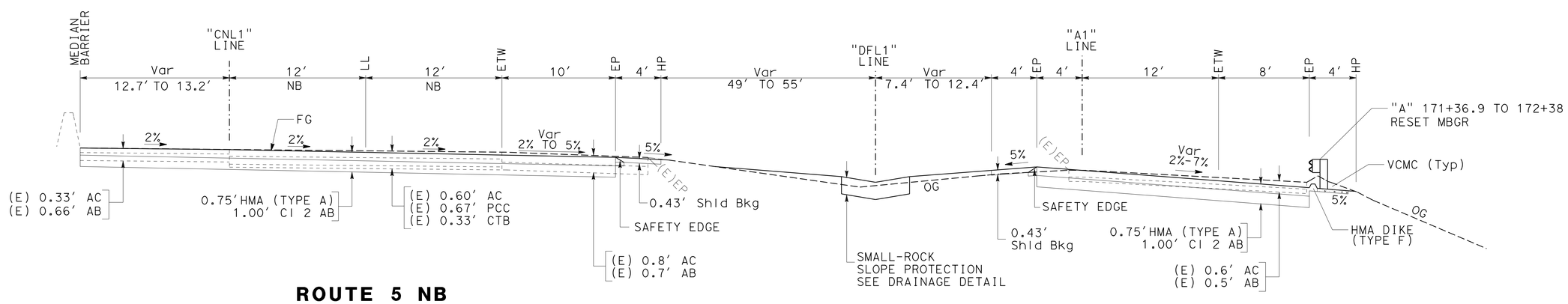

ROUTE 5 NB
"CNL1" 171+35.30 TO "CNL1" 172+50.00

NB OFF-RAMP
"A1" 171+36.90 TO "A1" 172+50.00

TYPICAL CROSS SECTIONS

NO SCALE **X-2**

REVISED BY	DATE REVISED
JEFF CARSON	ZIDAN ZHANG
CALCULATED-DESIGNED BY	CHECKED BY
FUNCTIONAL SUPERVISOR	AL TRUJILLO

STATE OF CALIFORNIA - DEPARTMENT OF TRANSPORTATION
Caltrans® DESIGN

P:\proj1\02\4F450_plans\pse\24f450ca002.dgn

LAST REVISION 11-22-13 | DATE PLOTTED => 02-DEC-2013 | TIME PLOTTED => 15:40

Dist	COUNTY	ROUTE	POST MILES TOTAL PROJECT	SHEET No.	TOTAL SHEETS
02	Sha	5	R34.3/R36.8	4	72

Zidan M. Zhang 11-22-13
REGISTERED CIVIL ENGINEER DATE

11-22-13
PLANS APPROVAL DATE

REGISTERED PROFESSIONAL ENGINEER Z. M. ZHANG No. C69054 Exp. 6-30-14 CIVIL STATE OF CALIFORNIA

THE STATE OF CALIFORNIA OR ITS OFFICERS OR AGENTS SHALL NOT BE RESPONSIBLE FOR THE ACCURACY OR COMPLETENESS OF SCANNED COPIES OF THIS PLAN SHEET.

NOTE:

1. FOR ACCURATE RIGHT OF WAY DATA, CONTACT RIGHT OF WAY ENGINEERING AT THE DISTRICT OFFICE.
2. RESET MBGR EXACT LOCATION TO BE DETERMINED BY THE ENGINEER.

LEGEND

CPACP

MINOR CONCRETE (TEXTURED PAVING)

ABBREVIATIONS

CPACP COLD PLANE ASPHALT CONCRETE PAVEMENT

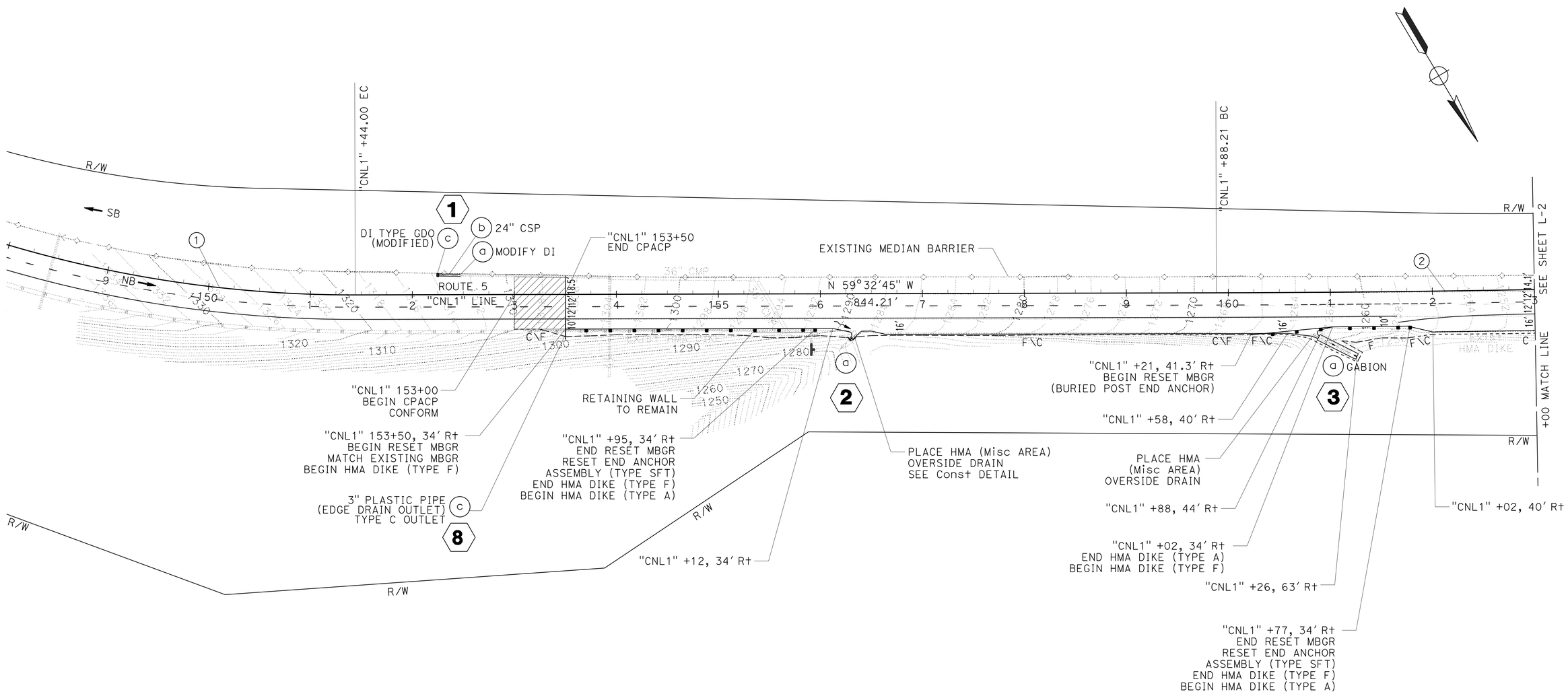

CURVE DATA

No. ⊕	R	Δ	T	L
1	1186'	56°58'25"	643.59'	1179.33'
2	20000'	02°48'49"	491.16'	982.12'

LAYOUT

SCALE: 1" = 50'

L-1

REVISED BY	DATE REVISED

CALCULATED-DESIGNED BY: JEFF CARSON
CHECKED BY: ZIDAN ZHANG
FUNCTIONAL SUPERVISOR: AL TRUJILLO

STATE OF CALIFORNIA - DEPARTMENT OF TRANSPORTATION
Caltrans
DESIGN

P:\proj1\02\4F450_plans\pse\24f450ea001.dgn

LAST REVISION 11-22-13
DATE PLOTTED => 02-DEC-2013
TIME PLOTTED => 15:40

Dist	COUNTY	ROUTE	POST MILES TOTAL PROJECT	SHEET No.	TOTAL SHEETS
02	Sha	5	R34.3/R36.8	5	72

Zidan M. Zhang 11-22-13
REGISTERED CIVIL ENGINEER DATE

11-22-13
PLANS APPROVAL DATE

REGISTERED PROFESSIONAL ENGINEER Z. M. ZHANG No. C69054 Exp. 6-30-14 CIVIL STATE OF CALIFORNIA

THE STATE OF CALIFORNIA OR ITS OFFICERS OR AGENTS SHALL NOT BE RESPONSIBLE FOR THE ACCURACY OR COMPLETENESS OF SCANNED COPIES OF THIS PLAN SHEET.

NOTE:

1. FOR ACCURATE RIGHT OF WAY DATA, CONTACT RIGHT OF WAY ENGINEERING AT THE DISTRICT OFFICE.

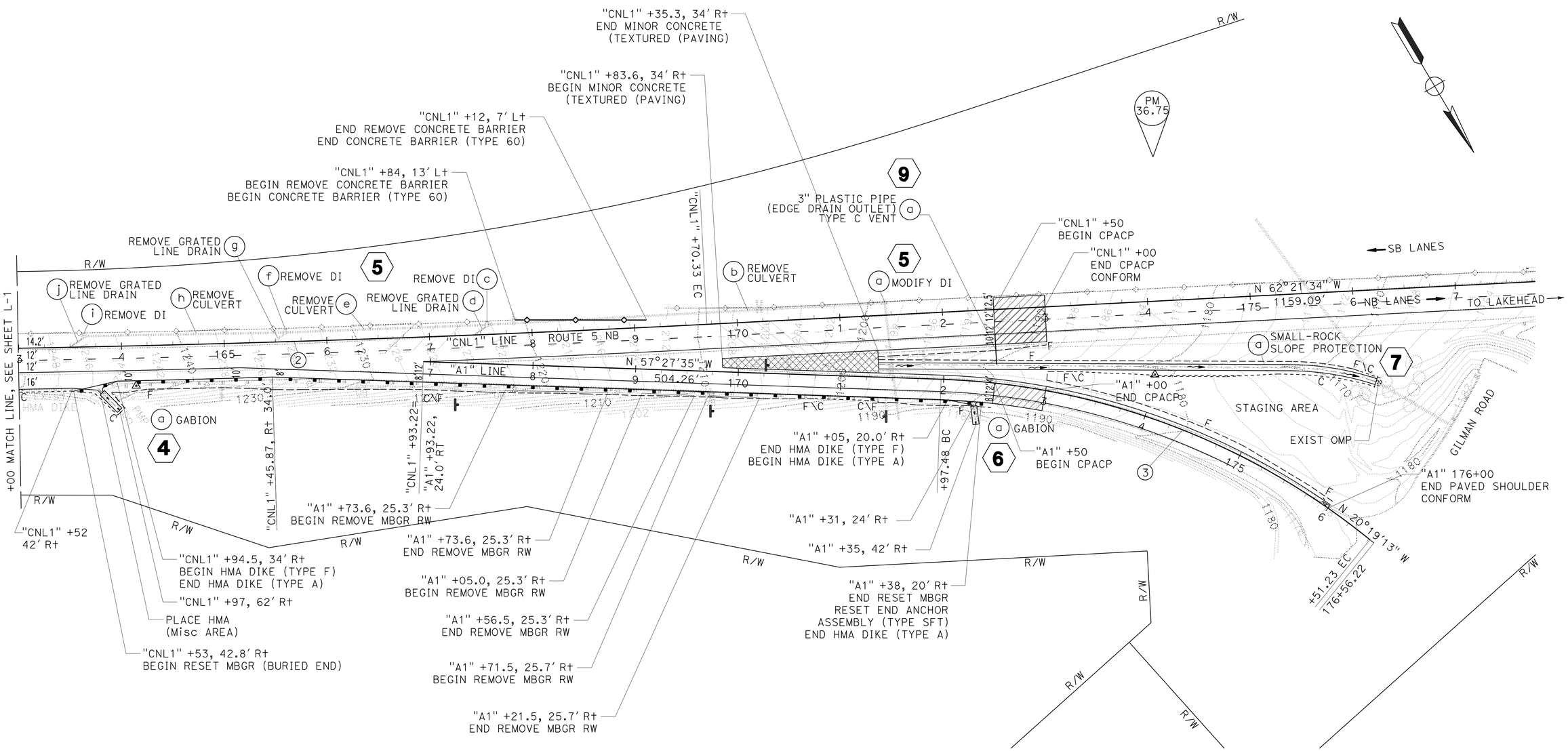

CURVE DATA

No. ⊕	R	Δ	T	L
②	20000.00′	02°48′49″	491.16′	982.12′
③	700.00′	37°08′22″	235.16′	453.74′

LAYOUT

SCALE: 1″ = 50′

L-2

REVISED BY | DATE REVISED
JEFF CARSON | ZIDAN ZHANG
CALCULATED-DESIGNED BY | CHECKED BY
FUNCTIONAL SUPERVISOR
AL TRUJILLO

STATE OF CALIFORNIA - DEPARTMENT OF TRANSPORTATION
Caltrans
DESIGN

P:\proj\02\4F450_plans\pse\24f450ea002.dgn

LAST REVISION 11-22-13 | DATE PLOTTED => 02-DEC-2013 | TIME PLOTTED => 15:40

Dist	COUNTY	ROUTE	POST MILES TOTAL PROJECT	SHEET No.	TOTAL SHEETS
02	Sha	5	R34.3/R36.8	6	72

Zidan M. Zhang 11-22-13
REGISTERED CIVIL ENGINEER DATE

11-22-13
PLANS APPROVAL DATE

REGISTERED PROFESSIONAL ENGINEER Z. M. ZHANG No. C69054 Exp. 6-30-14 CIVIL STATE OF CALIFORNIA

THE STATE OF CALIFORNIA OR ITS OFFICERS OR AGENTS SHALL NOT BE RESPONSIBLE FOR THE ACCURACY OR COMPLETENESS OF SCANNED COPIES OF THIS PLAN SHEET.

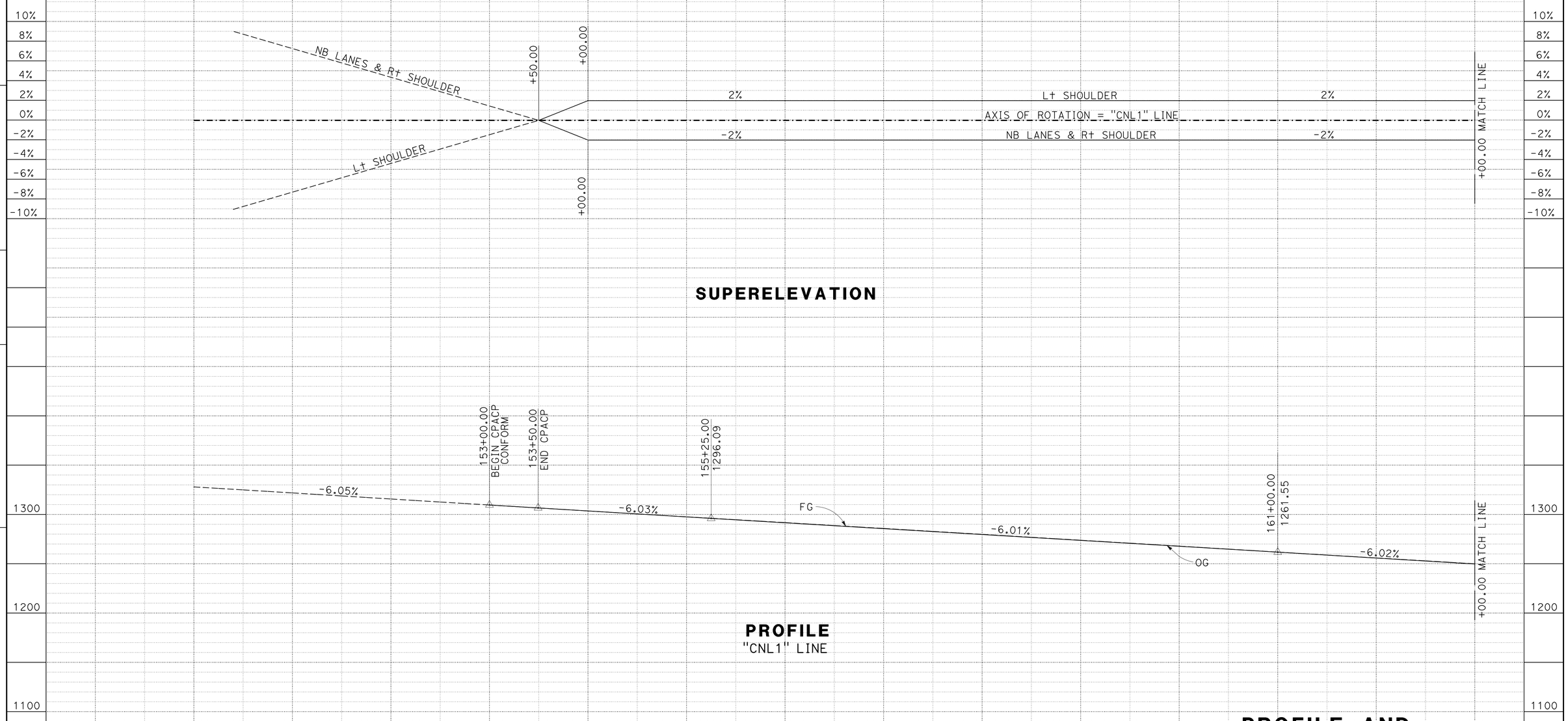

PROFILE AND SUPERELEVATION DIAGRAM

SCALE: 1" = 50' Horiz
1" = 50' Vert

PS-1

REVISED BY | DATE REVISED

JEFF CARSON | ZIDAN ZHANG

CALCULATED-DESIGNED BY | CHECKED BY

FUNCTIONAL SUPERVISOR: AL TRUJILLO

STATE OF CALIFORNIA - DEPARTMENT OF TRANSPORTATION

Caltrans

DESIGN

P:\proj1\02\4F450_plans\pse\24f450fb001.dgn

LAST REVISION 11-22-13 | DATE PLOTTED => 02-DEC-2013 | TIME PLOTTED => 15:40

Dist	COUNTY	ROUTE	POST MILES TOTAL PROJECT	SHEET No.	TOTAL SHEETS
02	Sha	5	R34.3/R36.8	7	72

Zidan M. Zhang 11-22-13
REGISTERED CIVIL ENGINEER DATE

11-22-13
PLANS APPROVAL DATE

REGISTERED PROFESSIONAL ENGINEER Z. M. ZHANG No. C69054 Exp. 6-30-14 CIVIL STATE OF CALIFORNIA

THE STATE OF CALIFORNIA OR ITS OFFICERS OR AGENTS SHALL NOT BE RESPONSIBLE FOR THE ACCURACY OR COMPLETENESS OF SCANNED COPIES OF THIS PLAN SHEET.

NOTE:

1. RAMP QUANTITIES FROM "A1" Sta 16693.22 TO 169+84.70 ARE INCLUDED IN THE MAINLINE "CNL1" QUANTITIES.

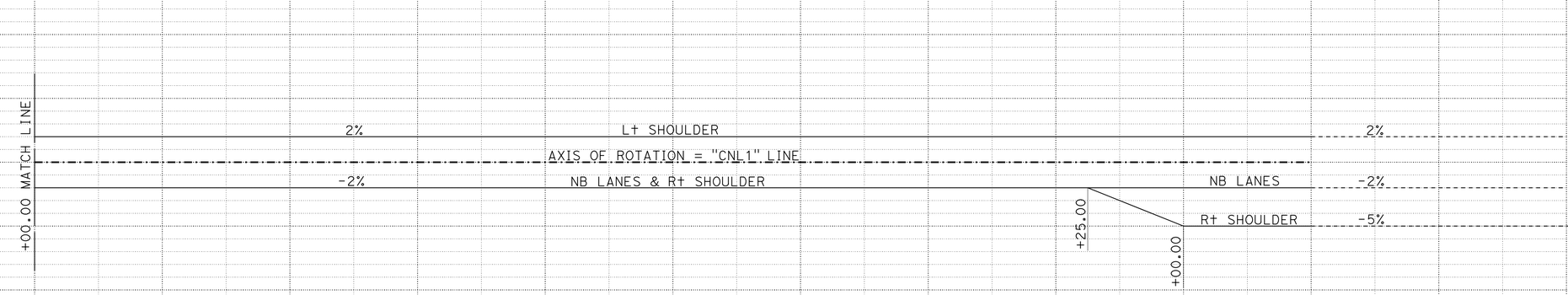

SUPERELEVATION

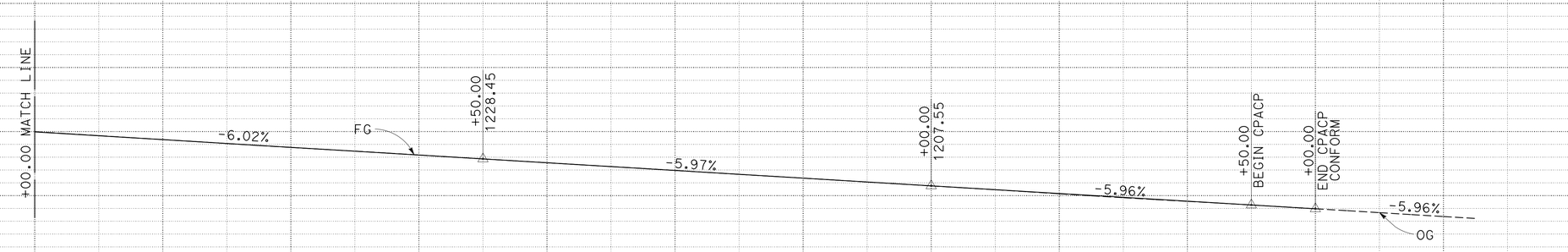

PROFILE
"CNL1" LINE

STATION	3	4	165+00	6	7	8	9	170+00	1	2	3	TOTAL
CY Exc	4,952											9,167
CY Emb	1											15

PROFILE AND SUPERELEVATION DIAGRAM

SCALE: 1" = 50' Horiz
1" = 50' Vert

PS-2

REVISED BY | DATE REVISED
JEFF CARSON | ZIDAN ZHANG
CALCULATED-DESIGNED BY | CHECKED BY
FUNCTIONAL SUPERVISOR: AL TRUJILLO

STATE OF CALIFORNIA - DEPARTMENT OF TRANSPORTATION
Caltrans
DESIGN

P:\proj1\02\4F450_plans\pse\24f450fb002.dgn

LAST REVISION 11-22-13 | DATE PLOTTED => 02-DEC-2013 | TIME PLOTTED => 15:40

BORDER LAST REVISED 7/2/2010 | USERNAME => s123119 | DGN FILE => 24f450fb002.dgn | RELATIVE BORDER SCALE IS IN INCHES 0 1 2 3 | UNIT 0316 | PROJECT NUMBER & PHASE 02-1200-0155-1 | EA: 02-4F4501

Dist	COUNTY	ROUTE	POST MILES TOTAL PROJECT	SHEET No.	TOTAL SHEETS
02	Sha	5	R34.3/R36.8	8	72

Zidan M. Zhang 11-22-13
REGISTERED CIVIL ENGINEER DATE

11-22-13
PLANS APPROVAL DATE

REGISTERED PROFESSIONAL ENGINEER Z. M. ZHANG No. C69054 Exp. 6-30-14 CIVIL STATE OF CALIFORNIA

THE STATE OF CALIFORNIA OR ITS OFFICERS OR AGENTS SHALL NOT BE RESPONSIBLE FOR THE ACCURACY OR COMPLETENESS OF SCANNED COPIES OF THIS PLAN SHEET.

NOTE:

1. RAMP QUANTITIES FROM "A1" Sta 166+93.22 TO 169+84.70 ARE INCLUDED IN THE MAINLINE "CNL1" QUANTITIES.

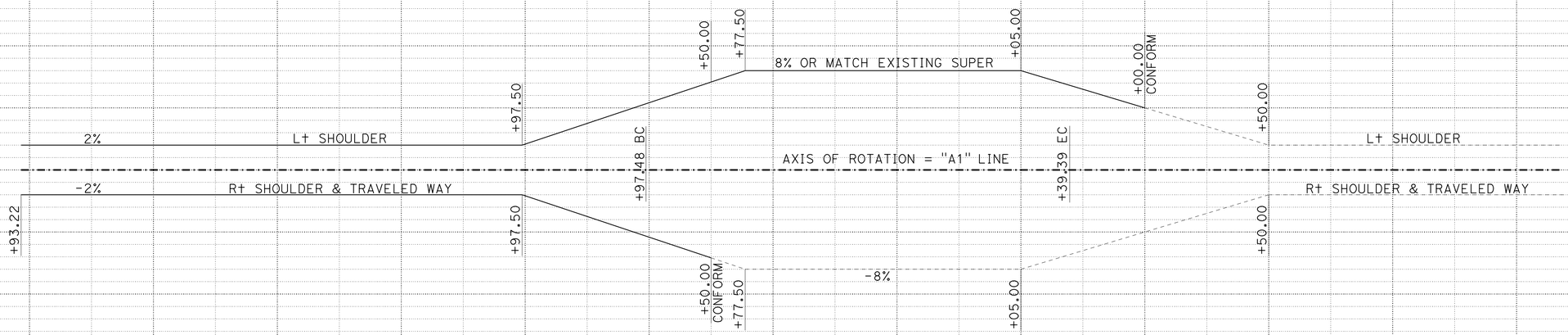

SUPERELEVATION

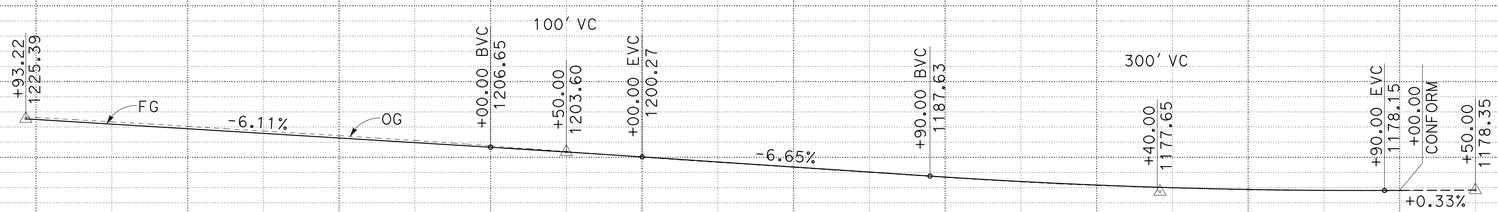

PROFILE
"A1" LINE

PROFILE AND SUPERELEVATION DIAGRAM

SCALE: 1" = 50' Horiz
1" = 50' Vert

PS-3

STATION	7	8	9	170+00	1	2	3	4	175+00	6	TOTAL
CY Exc				697							697
CY Emb				47							47

STATE OF CALIFORNIA - DEPARTMENT OF TRANSPORTATION
Caltrans® DESIGN

FUNCTIONAL SUPERVISOR: AL TRUJILLO
CALCULATED-DESIGNED BY: JEFF CARSON
CHECKED BY: ZIDAN ZHANG
REVISED BY / DATE REVISED

P:\proj1\02\4F450_plans\pse\24f450fb003.dgn

LAST REVISION 11-22-13
DATE PLOTTED => 02-DEC-2013
TIME PLOTTED => 15:40

Dist	COUNTY	ROUTE	POST MILES TOTAL PROJECT	SHEET No.	TOTAL SHEETS
02	Sha	5	R34.3/R36.8	9	72

Zidan M. Zhang 11-22-13
REGISTERED CIVIL ENGINEER DATE

11-22-13
PLANS APPROVAL DATE

REGISTERED PROFESSIONAL ENGINEER Z. M. ZHANG No. C69054 Exp. 6-30-14 CIVIL STATE OF CALIFORNIA

THE STATE OF CALIFORNIA OR ITS OFFICERS OR AGENTS SHALL NOT BE RESPONSIBLE FOR THE ACCURACY OR COMPLETENESS OF SCANNED COPIES OF THIS PLAN SHEET.

SYSTEM & UNIT No.	STATION	PLACE HMA (Misc AREA) SQYD	GABION (LF)
2a	"CNL1" 156+25	15.5	-
3a	"CNL1" 160+75	15.0	42′
4a	"CNL1" 163+75	16.0	24′
6a	"A1" 172+25	6.5	18′

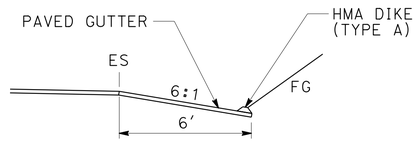

SECTION A-A

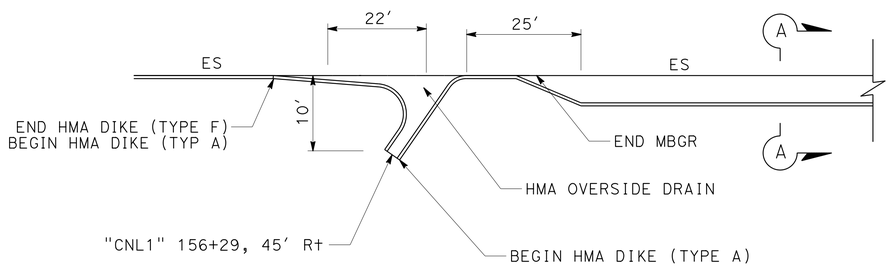

DETAIL A 2 a

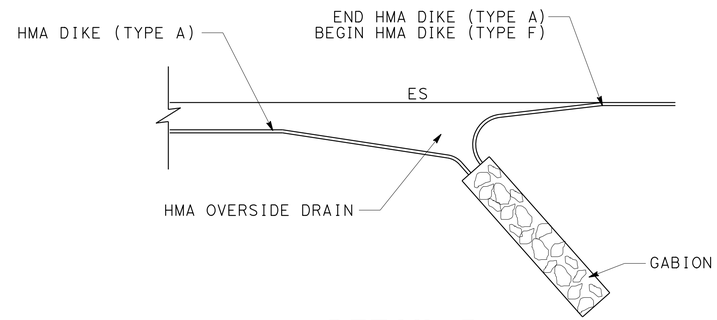

DETAIL B

3 a 4 a 6 a

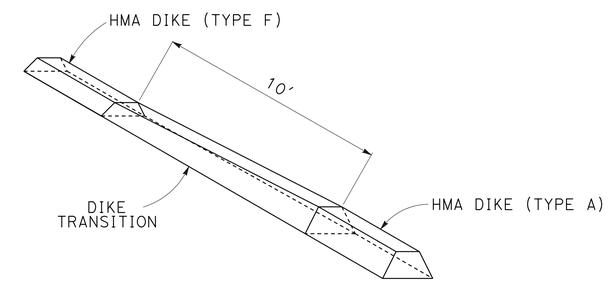

HMA DIKE (TYPE F) TO
HMA DIKE (TYPE A)

HMA DIKE TRANSITION

PAVED GUTTER WITH HMA OVERSIDE DRAIN

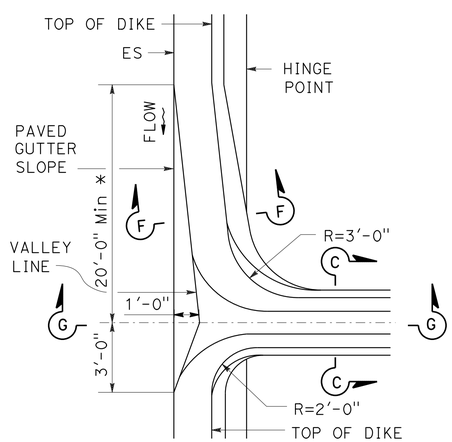

* 22′ FOR 2 a

MOUNTABLE DIKE

HOT MIX ASPHALT OVERSIDE DRAINS

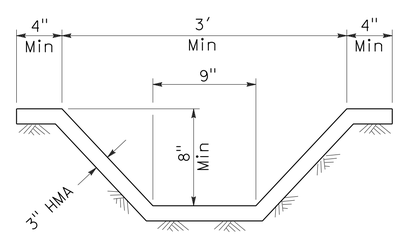

SECTION C-C

SEE NOTE 1

NOTE:

1. CROSS SECTION OF SLOPE DITCH MAY BE SEMICIRCULAR, VEE OR TRAPEZOIDAL.

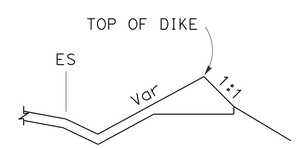

SECTION F-F

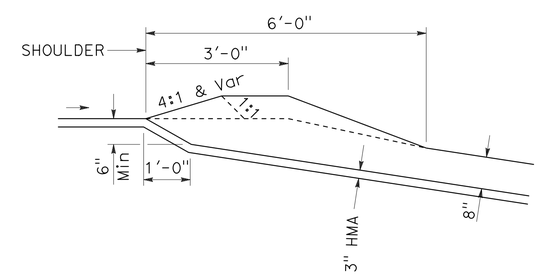

SECTION G-G

CONSTRUCTION DETAILS

NO SCALE

C-1

STATE OF CALIFORNIA - DEPARTMENT OF TRANSPORTATION
Caltrans
DESIGN
FUNCTIONAL SUPERVISOR: AL TRUJILLO
CALCULATED-DESIGNED BY: JEFF CARSON
CHECKED BY: ZIDAN ZHANG
REVISED BY
DATE REVISED

P:\proj1\02\4F450_plans\pse\24f450ga001.dgn

LAST REVISION 11-22-13 | DATE PLOTTED => 02-DEC-2013 | TIME PLOTTED => 15:40

Dist	COUNTY	ROUTE	POST MILES TOTAL PROJECT	SHEET No.	TOTAL SHEETS
02	Sha	5	R34.3/R36.8	10	72

Zidan M. Zhang 11-22-13
REGISTERED CIVIL ENGINEER DATE

11-22-13
PLANS APPROVAL DATE

REGISTERED PROFESSIONAL ENGINEER Z. M. ZHANG No. C69054 Exp. 6-30-14 CIVIL STATE OF CALIFORNIA

THE STATE OF CALIFORNIA OR ITS OFFICERS OR AGENTS SHALL NOT BE RESPONSIBLE FOR THE ACCURACY OR COMPLETENESS OF SCANNED COPIES OF THIS PLAN SHEET.

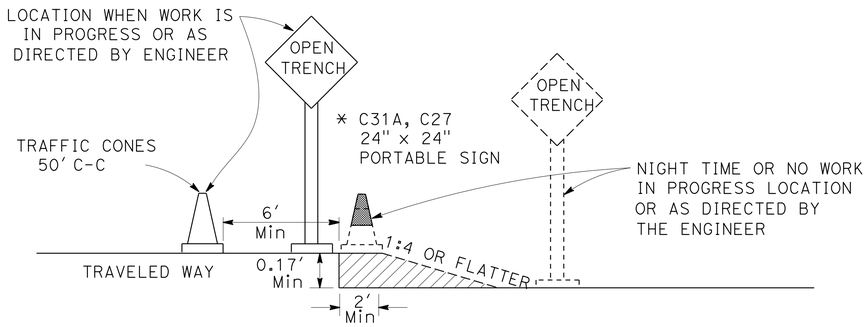

OPEN TRENCH SIGNING AND MARKING

* THE OPEN TRENCH AREA ALTERNATE C27 (OPEN TRENCH) AND C31A (NO SHOULDER) SIGNS PLACE AT 500' INTERVALS THROUGH THE LIMITS OF THE PROJECT

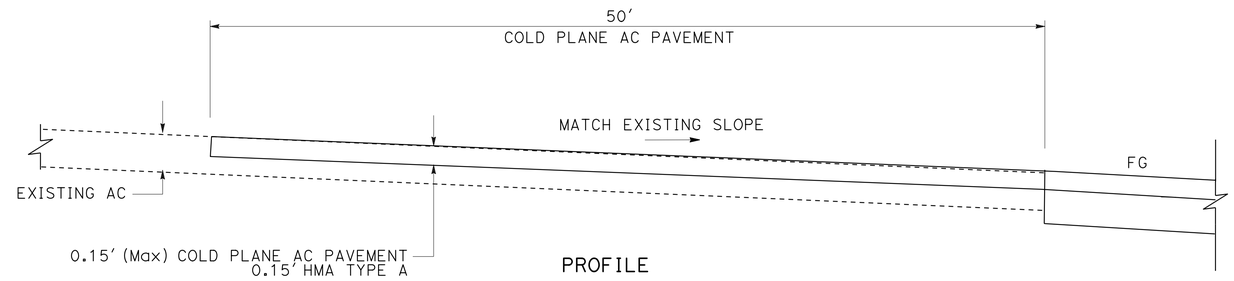

PROFILE

PAVEMENT CONFORM

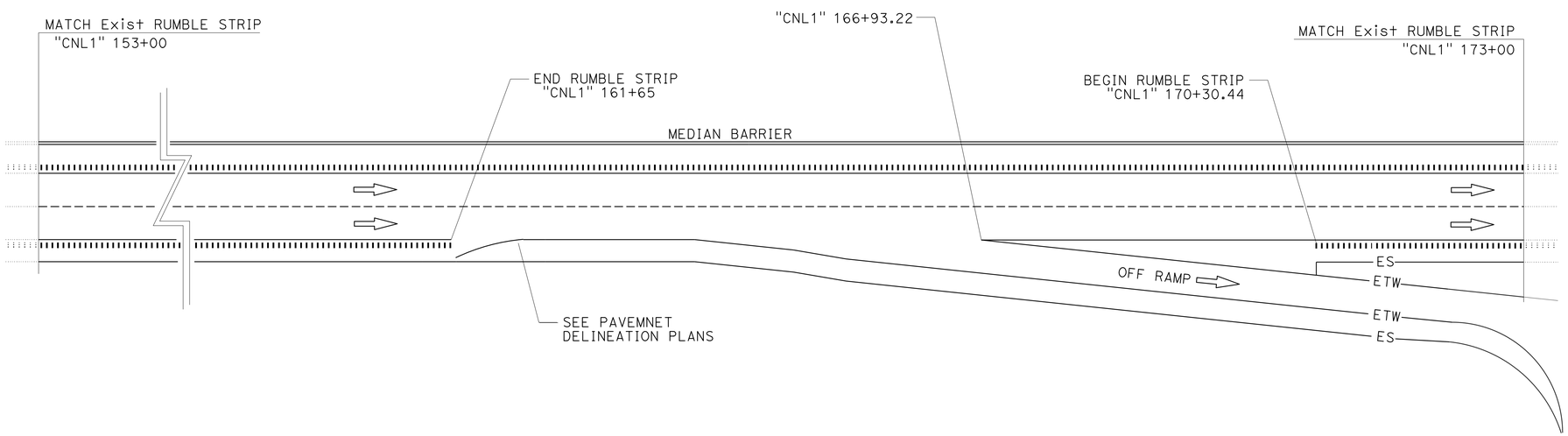

RUMBLE STRIP AT GILMAN ROAD EXIT RAMP

CONSTRUCTION DETAILS

NO SCALE

C-2

REVISED BY | DATE REVISED
JEFF CARSON | ZIDAN ZHANG
CALCULATED-DESIGNED BY | CHECKED BY
FUNCTIONAL SUPERVISOR
AL TRUJILLO

STATE OF CALIFORNIA - DEPARTMENT OF TRANSPORTATION
Caltrans
DESIGN

P:\proj1\02\4F450_plans\pse\24f450ga002.dgn

LAST REVISION 11-22-13 | DATE PLOTTED => 02-DEC-2013 | TIME PLOTTED => 15:40

Dist	COUNTY	ROUTE	POST MILES TOTAL PROJECT	SHEET No.	TOTAL SHEETS
02	Sha	5	R34.3/R36.8	11	72

Zidan M. Zhang 11-22-13
REGISTERED CIVIL ENGINEER DATE

11-22-13
PLANS APPROVAL DATE

REGISTERED PROFESSIONAL ENGINEER Z. M. ZHANG No. C69054 Exp. 6-30-14 CIVIL STATE OF CALIFORNIA

THE STATE OF CALIFORNIA OR ITS OFFICERS OR AGENTS SHALL NOT BE RESPONSIBLE FOR THE ACCURACY OR COMPLETENESS OF SCANNED COPIES OF THIS PLAN SHEET.

LEGEND

DIRECTION OF TRAVEL

MINOR CONCRETE (TEXTURED PAVING)

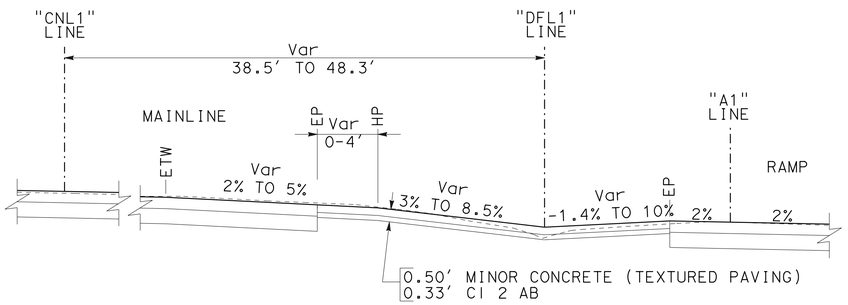

TYPICAL

MINOR CONCRETE (TEXTURED PAVING)

"CNL1" 169+83.6 TO "CNL1" 171+35.7
NO SCALE

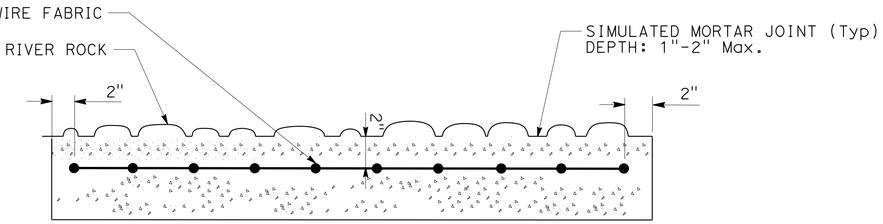

SECTION A-A
NO SCALE

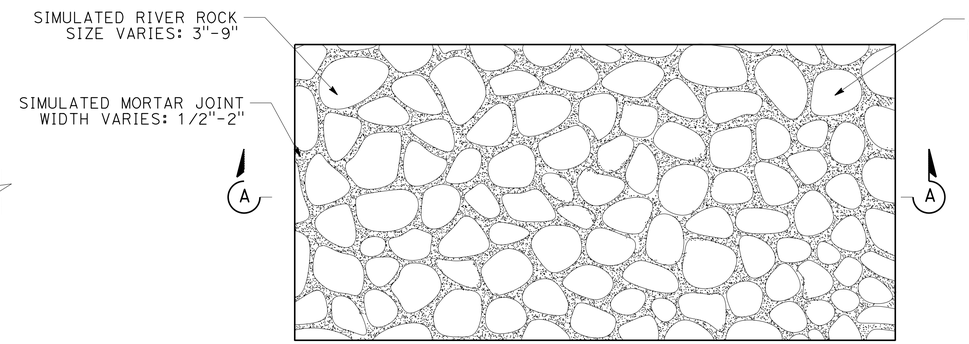

PLAN

TEXTURED CONCRETE DETAIL

NO SCALE

COLOR TREATMENTS

TEXTURED CONCRETE COLOR HARDENER:
FEDERAL STANDARD 595C: 33711

TEXTURED CONCRETE ANTIQUE RELEASE AGENT:
FEDERAL STANDARD 595C: 30108

TEXTURED CONCRETE STAIN
FEDERAL STANDARD 595C: 20318
FEDERAL STANDARD 595C: 36076
FEDERAL STANDARD 595C: 27885
FEDERAL STANDARD 595C: 20400

EXTERIOR CONCRETE SEALER FINISH:
CLEAR-LO-SHEEN

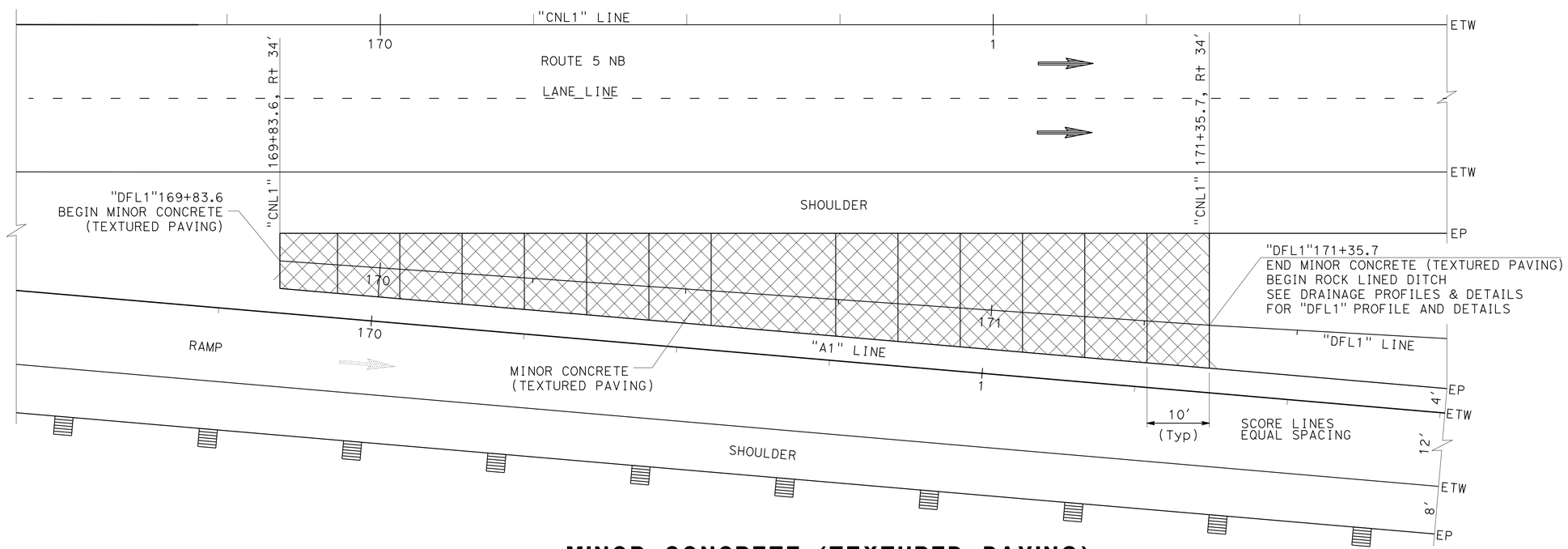

MINOR CONCRETE (TEXTURED PAVING)

SCALE: 1" = 10'

CONSTRUCTION DETAILS

SCALE: AS SHOWN

C-3

REVISED BY	DATE REVISED

JEFF CARSON — ZIDAN ZHANG — CALCULATED-DESIGNED BY — CHECKED BY

FUNCTIONAL SUPERVISOR: AL TRUJILLO

STATE OF CALIFORNIA - DEPARTMENT OF TRANSPORTATION
Caltrans® DESIGN

P:\proj1\02\4F450_plans\pse\24f450ga003.dgn

LAST REVISION 11-22-13 | DATE PLOTTED => 02-DEC-2013 | TIME PLOTTED => 15:40

Dist	COUNTY	ROUTE	POST MILES TOTAL PROJECT	SHEET No.	TOTAL SHEETS
02	Sha	5	R34.3/R36.8	12	72

Zidan M. Zhang 11-22-13
REGISTERED CIVIL ENGINEER DATE

11-22-13
PLANS APPROVAL DATE

REGISTERED PROFESSIONAL ENGINEER Z. M. ZHANG No. C69054 Exp. 6-30-14 CIVIL STATE OF CALIFORNIA

THE STATE OF CALIFORNIA OR ITS OFFICERS OR AGENTS SHALL NOT BE RESPONSIBLE FOR THE ACCURACY OR COMPLETENESS OF SCANNED COPIES OF THIS PLAN SHEET.

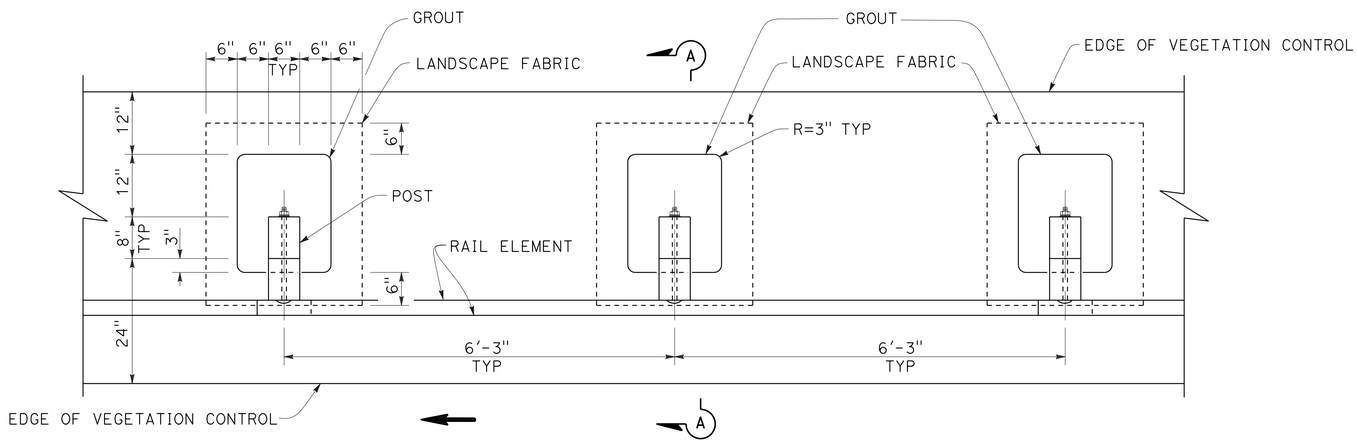

PLAN

NOTES:

1. WHERE THE DISTANCE BETWEEN BACK OF POST AND HINGE POINT IS LESS THAN 24", VEGETATION CONTROL TO BE CONSTRUCTED FLUSH WITH THE BACK EDGE OF THE POST.
2. WHERE DIKE IS CONSTRUCTED UNDER RAILING, CONSTRUCT VEGETATION CONTROL TO BACK EDGE OF DIKE. WHERE PAVED SHOULDER IS CONSTRUCTED WITHIN 24" IN FRONT OF THE POST, CONSTRUCT VEGETATION CONTROL TO THE EDGE OF PAVED SHOULDER.
3. DIRECTION OF ADJACENT TRAFFIC INDICATED BY ⟶ .

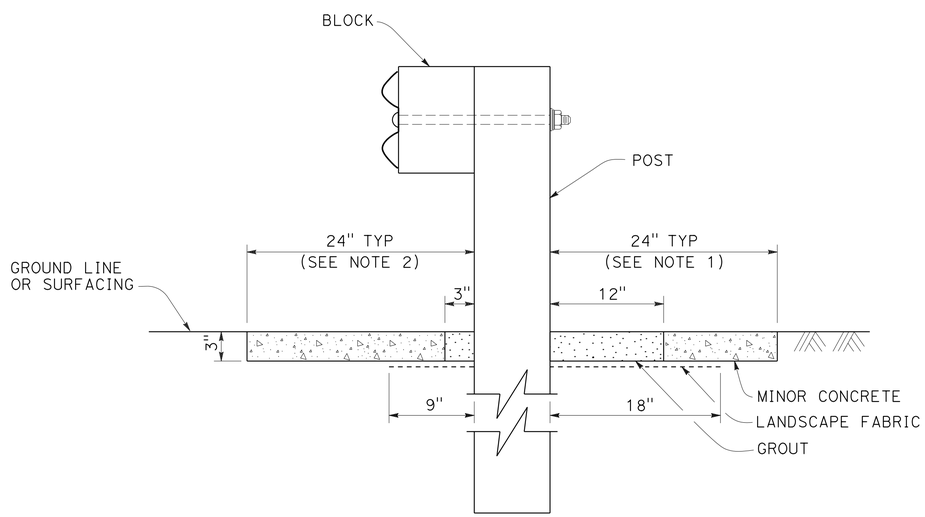

SECTION A-A

CONSTRUCTION DETAILS
METAL BEAM GUARD RAILING
TYPICAL VEGETATION CONTROL
STANDARD RAILING SECTION

NO SCALE

C-4

REVISED BY | DATE REVISED
JEFF CARSON | ZIDAN ZHANG
CALCULATED-DESIGNED BY | CHECKED BY
FUNCTIONAL SUPERVISOR
AL TRUJILLO

STATE OF CALIFORNIA - DEPARTMENT OF TRANSPORTATION
Caltrans
DESIGN

P:\proj1\02\4F450_plans\pse\24f450ga004.dgn

LAST REVISION 11-22-13 | DATE PLOTTED => 02-DEC-2013 | TIME PLOTTED => 15:40

Dist	COUNTY	ROUTE	POST MILES TOTAL PROJECT	SHEET No.	TOTAL SHEETS
02	Sha	5	R34.3/R36.8	13	72

Zidan M. Zhang 11-22-13
REGISTERED CIVIL ENGINEER DATE

11-22-13
PLANS APPROVAL DATE

REGISTERED PROFESSIONAL ENGINEER Z. M. ZHANG No. C69054 Exp. 6-30-14 CIVIL STATE OF CALIFORNIA

THE STATE OF CALIFORNIA OR ITS OFFICERS OR AGENTS SHALL NOT BE RESPONSIBLE FOR THE ACCURACY OR COMPLETENESS OF SCANNED COPIES OF THIS PLAN SHEET.

ABBREVIATIONS:

GFL GUTTER FLOW LINE

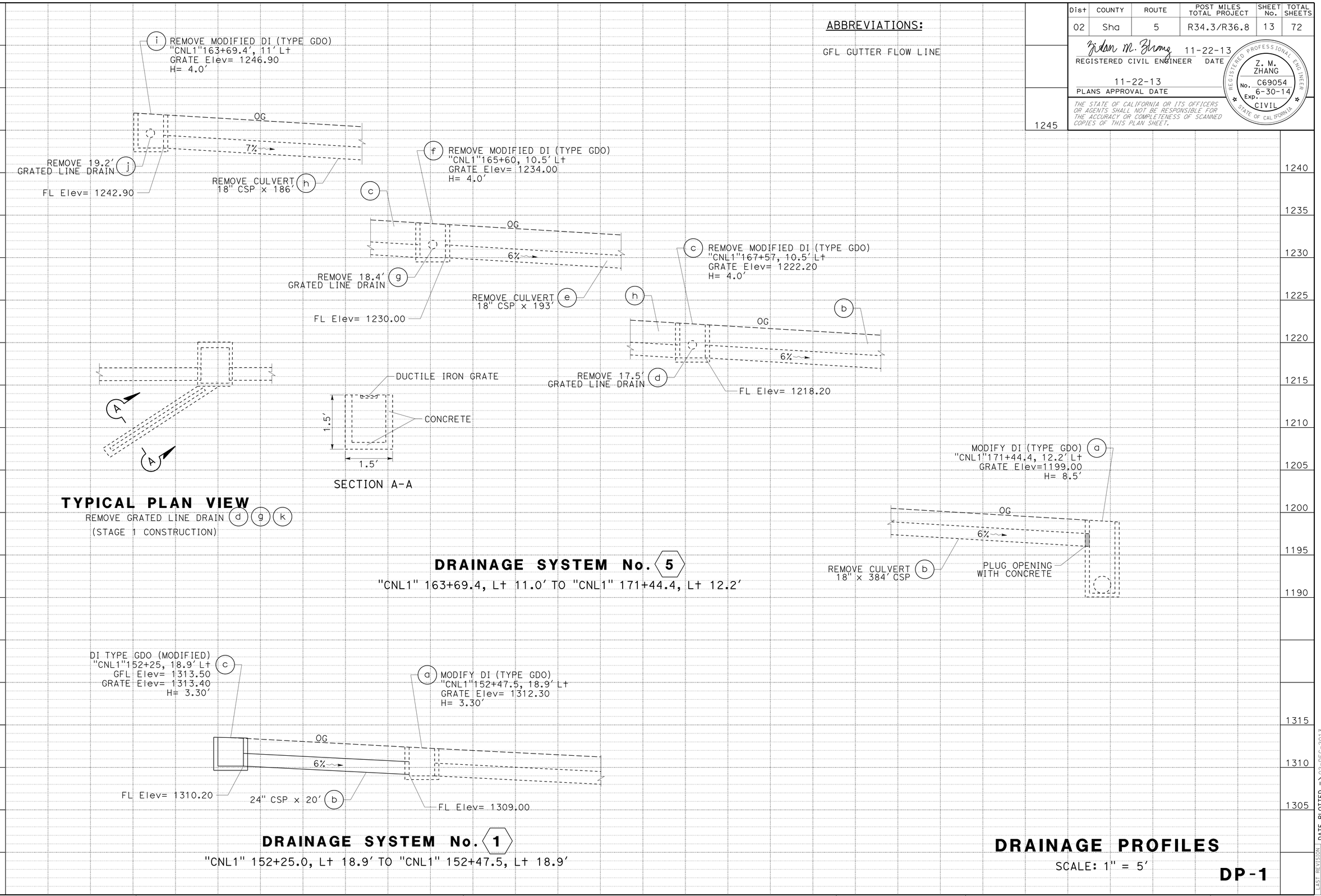

DRAINAGE PROFILES

SCALE: 1" = 5'

DP-1

REVISED BY | DATE REVISED

JEFF CARSON | ZIDAN ZHANG

CALCULATED-DESIGNED BY | CHECKED BY

FUNCTIONAL SUPERVISOR: AL TRUJILLO

STATE OF CALIFORNIA - DEPARTMENT OF TRANSPORTATION

DESIGN

Caltrans

P:\proj1\02\4F450_plans\pse\24f450ib001.dgn

LAST REVISION | DATE PLOTTED => 02-DEC-2013
11-22-13 | TIME PLOTTED => 15:40

Dist	COUNTY	ROUTE	POST MILES TOTAL PROJECT	SHEET No.	TOTAL SHEETS
02	Sha	5	R34.3/R36.8	14	72

Zidan M. Zhang 11-22-13
REGISTERED CIVIL ENGINEER DATE

11-22-13
PLANS APPROVAL DATE

REGISTERED PROFESSIONAL ENGINEER Z. M. ZHANG No. C69054 Exp. 6-30-14 CIVIL STATE OF CALIFORNIA

THE STATE OF CALIFORNIA OR ITS OFFICERS OR AGENTS SHALL NOT BE RESPONSIBLE FOR THE ACCURACY OR COMPLETENESS OF SCANNED COPIES OF THIS PLAN SHEET.

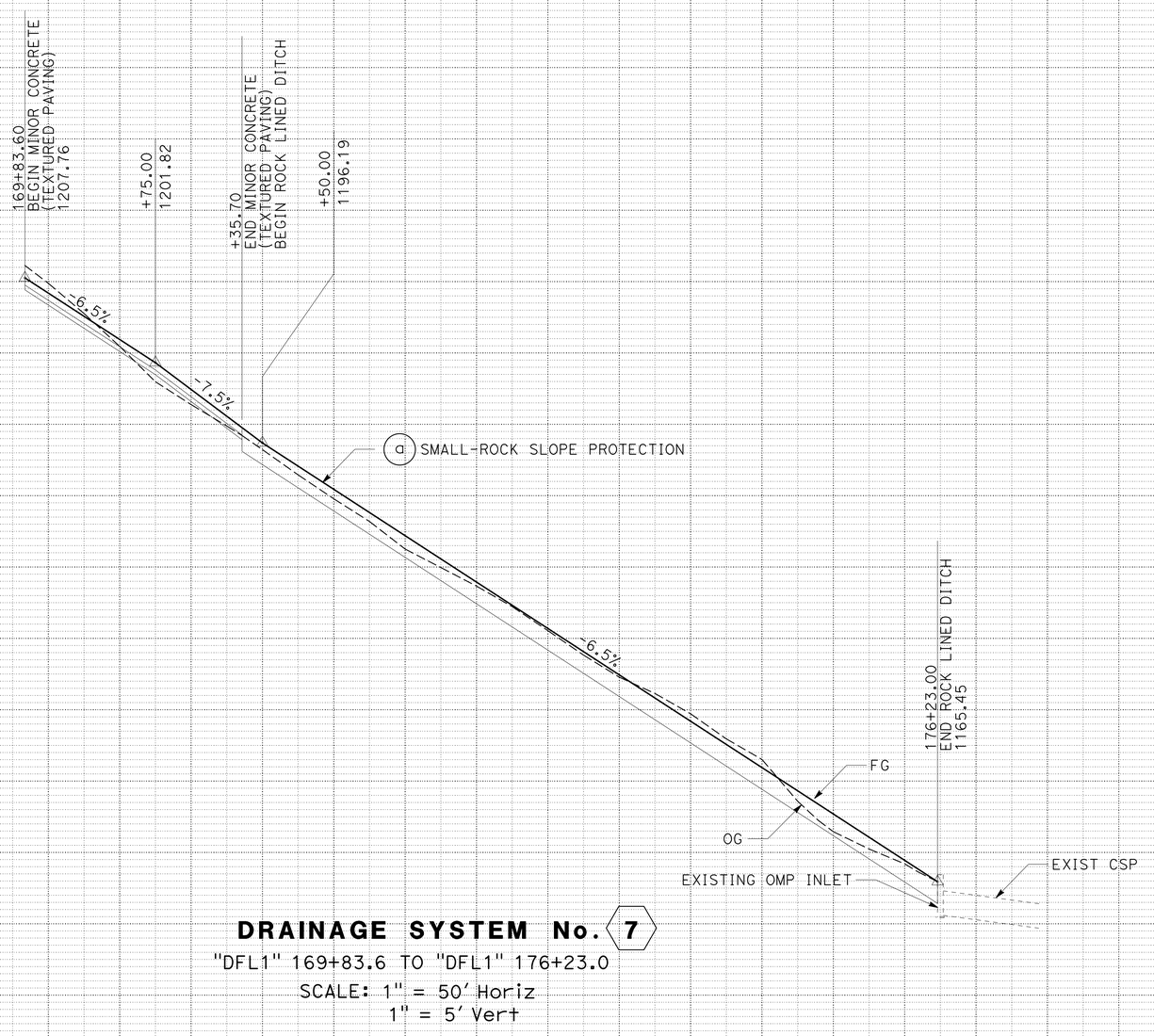

DRAINAGE SYSTEM No. 7

"DFL1" 169+83.6 TO "DFL1" 176+23.0

SCALE: 1" = 50' Horiz
1" = 5' Vert

DRAINAGE PROFILES

SCALE: AS SHOWN

DP-2

REVISED BY | DATE REVISED
JEFF CARSON | ZIDAN ZHANG
CALCULATED-DESIGNED BY | CHECKED BY
FUNCTIONAL SUPERVISOR
AL TRUJILLO

STATE OF CALIFORNIA - DEPARTMENT OF TRANSPORTATION
Caltrans
DESIGN

P:\proj1\02\4F450_plans\pse\24f4501b002.dgn

LAST REVISION 11-22-13 | DATE PLOTTED => 02-DEC-2013 | TIME PLOTTED => 15:40

Dist	COUNTY	ROUTE	POST MILES TOTAL PROJECT	SHEET No.	TOTAL SHEETS
02	Sha	5	R34.3/R36.8	15	72

Zidan M. Zhang 11-22-13
REGISTERED CIVIL ENGINEER DATE

11-22-13
PLANS APPROVAL DATE

REGISTERED PROFESSIONAL ENGINEER Z. M. ZHANG No. C69054 Exp. 6-30-14 CIVIL STATE OF CALIFORNIA

THE STATE OF CALIFORNIA OR ITS OFFICERS OR AGENTS SHALL NOT BE RESPONSIBLE FOR THE ACCURACY OR COMPLETENESS OF SCANNED COPIES OF THIS PLAN SHEET.

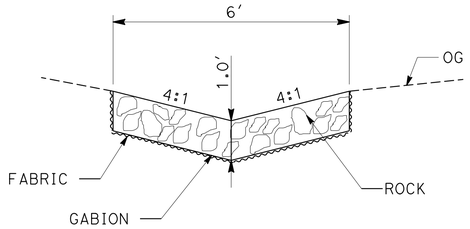

CROSS SECTION

GABION LINED OVERSIDE DRAIN DETAIL

3 a 4 a 6 a

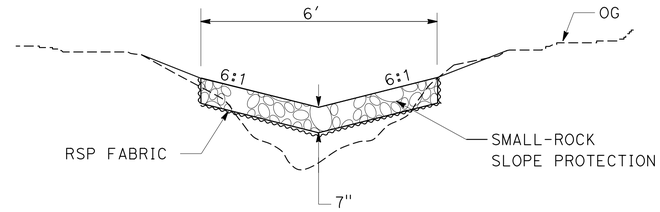

CORSS SECTION

SMALL-ROCK SLOPE PROTECTION 7 a

"DFL1"171+35.7 TO "DFL1" 176+23.0

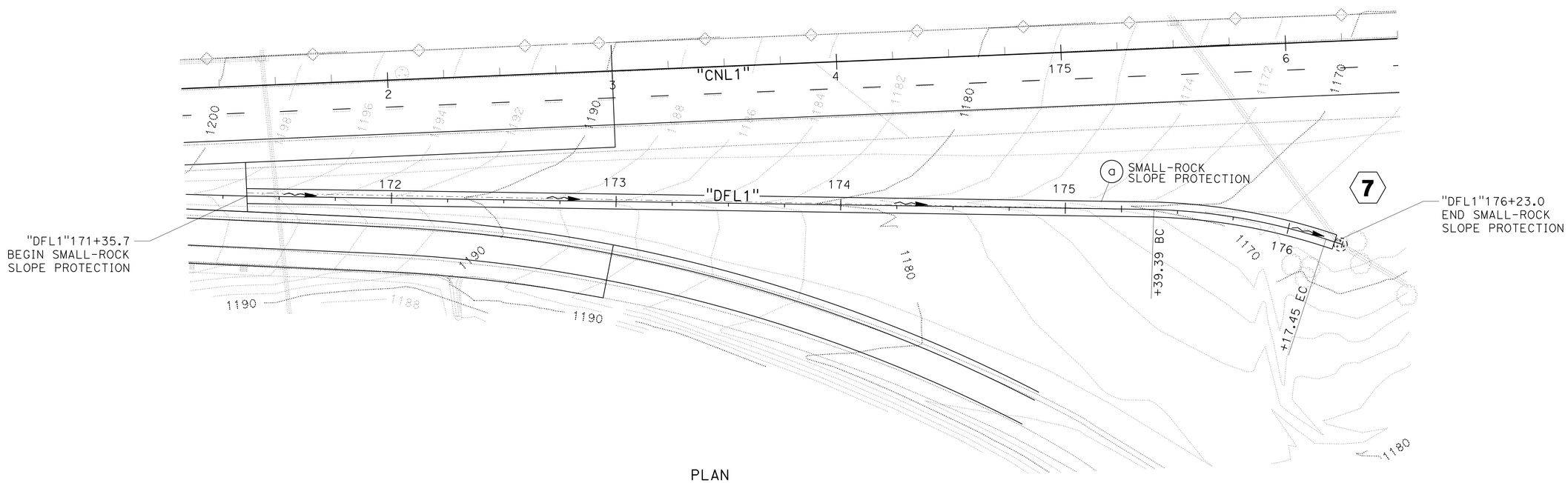

PLAN

DRAINAGE DETAILS

NO SCALE

DD-1

STATE OF CALIFORNIA - DEPARTMENT OF TRANSPORTATION
Caltrans
DESIGN

FUNCTIONAL SUPERVISOR: AL TRUJILLO
CALCULATED-DESIGNED BY: JEFF CARSON
CHECKED BY: ZIDAN ZHANG
REVISED BY
DATE REVISED

P:\proj\02\4F450_plans\pse\24f450ic001.dgn

LAST REVISION 11-22-13 | DATE PLOTTED => 02-DEC-2013 | TIME PLOTTED => 15:40

Dist	COUNTY	ROUTE	POST MILES TOTAL PROJECT	SHEET No.	TOTAL SHEETS
02	Sha	5	R34.3/R36.8	16	72

Zidan M. Zhang 11-22-13
REGISTERED CIVIL ENGINEER DATE

11-22-13
PLANS APPROVAL DATE

REGISTERED PROFESSIONAL ENGINEER Z. M. ZHANG No. C69054 Exp. 6-30-14 CIVIL STATE OF CALIFORNIA

THE STATE OF CALIFORNIA OR ITS OFFICERS OR AGENTS SHALL NOT BE RESPONSIBLE FOR THE ACCURACY OR COMPLETENESS OF SCANNED COPIES OF THIS PLAN SHEET.

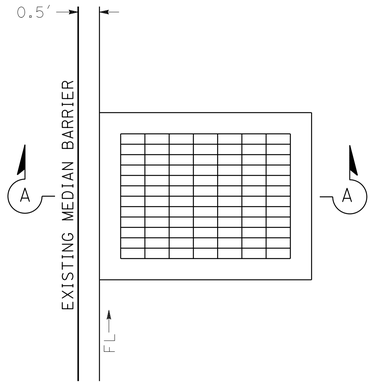

PLAN
TYPE GDO (Mod) INLET
DRAINAGE SYSTEM No. 1 a

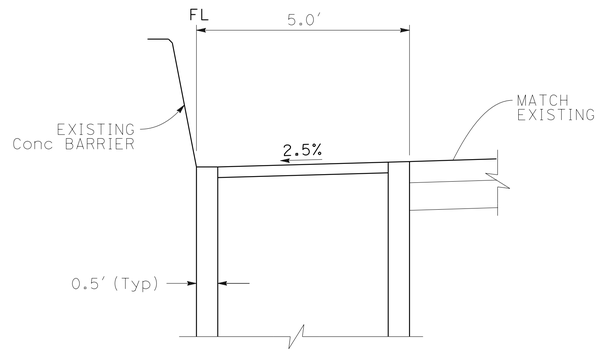

SECTION A-A

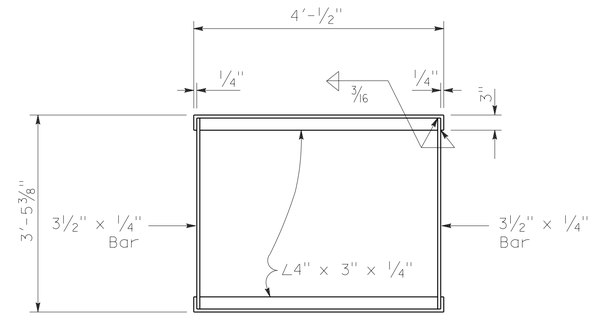

GRATE FRAME FOR TYPE GDO (Mod) INLET

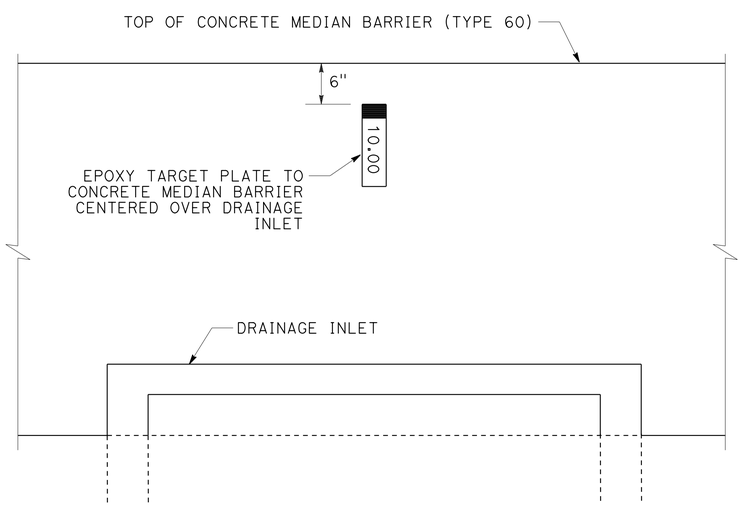

PLAN
CULVERT MARKER (BARRIER MOUNTED)

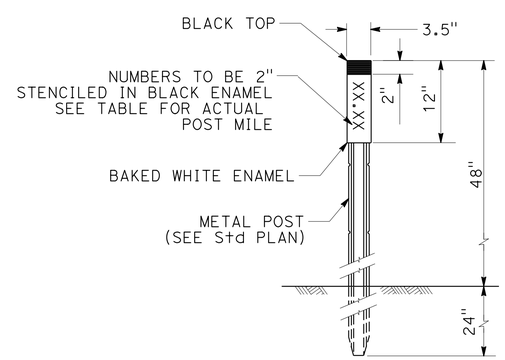

MARKER (CULVERT)

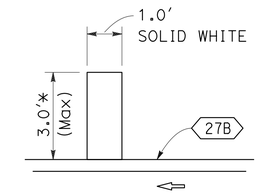

HALF MILE STRIPE DETAIL

* ACTUAL LENGTH MAY VARY DUE TO PAVEMENT WIDTH

DRAINAGE DETAILS

NO SCALE **DD-2**

REVISED BY	DATE REVISED

CALCULATED-DESIGNED BY	CHECKED BY
JEFF CARSON	ZIDAN ZHANG

FUNCTIONAL SUPERVISOR: AL TRUJILLO

STATE OF CALIFORNIA - DEPARTMENT OF TRANSPORTATION
Caltrans® **DESIGN**

P:\proj1\02\4F450_plans\pse\24f450ic002.dgn

LAST REVISION 11-22-13 | DATE PLOTTED => 02-DEC-2013 | TIME PLOTTED => 15:40

Dist	COUNTY	ROUTE	POST MILES TOTAL PROJECT	SHEET No.	TOTAL SHEETS
02	Sha	5	R34.3/R36.8	17	72

Zidan M. Zhang 11-22-13
REGISTERED CIVIL ENGINEER DATE

11-22-13
PLANS APPROVAL DATE

REGISTERED PROFESSIONAL ENGINEER Z. M. ZHANG No. C69054 Exp. 6-30-14 CIVIL STATE OF CALIFORNIA

THE STATE OF CALIFORNIA OR ITS OFFICERS OR AGENTS SHALL NOT BE RESPONSIBLE FOR THE ACCURACY OR COMPLETENESS OF SCANNED COPIES OF THIS PLAN SHEET.

NOTES:

1. (N) - NOT A SEPARATE PAY ITEM, FOR INFORMATION ONLY

DRAINAGE QUANTITIES

SHEET No.	STAGE	DRAINAGE SYSTEM No. ⬡	DRAINAGE UNIT No. ◯	REMOVE CULVERT LF	REMOVE INLET EA	MODIFY INLET EA	REMOVE GRATED LINE DRAIN LF	MINOR CONCRETE (MINOR STRUCTURE) CY	24" CORRUGATED STEEL PIPE (0.109" THICK) LF	GABION CY	Misc IRON AND STEEL LB	SMALL-ROCK SLOPE PROTECTION CY	ROCK SLOPE PROTECTION FABRIC (CLASS 8) SQYD	3" PLASTIC PIPE (EDGE DRAIN OUTLET) LF	(N) HEIGHT LF	(N) MAX COVER LF	STATION "CNL1" LINE	DESCRIPTION	SHEET No.	DRAINAGE SYSTEM No. ⬡	DRAINAGE UNIT No. ◯
L-1		1	a			1									3.3		152+45	CUT SIDE OPENING TO INSTALL 24" CSP	L-1	1	a
			b						20							1.3		24" CSP			b
			c					1.73			634				3.3		152+25	TYPE GDO INLET (MODIFIED), GRATE (TYPE 24-12)			c
L-1		2	a														156+25		L-1	2	a
L-1		3	a							9.3							160+75	GABION BASKET	L-1	3	a
L-2		4	a							5.3							163+75	GABION BASKET	L-2	4	a
L-2	3	5	a			1									8.5		171+44	PLUG PIPE OPENING WITH CONCRETE	L-2	5	a
	3		b	384												2	167+57 TO 171+44	18" CSP			b
	3		c		1										4.0		167+57				c
	1		d				17.5										167+56				d
	3		e	193												2	165+60 TO 167+57	18" CSP			e
	3		f		1										4.0		165+60				f
	1		g				18.4										165+50				g
	3		h	186												2	163+69 TO 165+60	18" CSP			h
	3		i		1										4.0		163+69				i
	1		j				19.2										163+63				j
L-2		6	a							4.0							172+25	GABION BASKET		6	a
L-2		7	a									66	370				"DFL1" 171+35.7 TO 176+23	RSP LINED V-DITCH		7	a
L-1		8	a											20			153+50	TYPE C OUTLET		8	a
L-2		9	a											30			172+50	TYPE C VENT		9	a
TOTAL				763	3	2	55.1	1.73	20	18.7	634	66	370	50							

* QUANTITY INCLUDED IN ROADWAY QUANTITIES

DRAINAGE QUANTITIES

DQ-1

CALCULATED-DESIGNED BY JEFF CARSON
CHECKED BY ZIDAN ZHANG
REVISED BY
DATE REVISED
FUNCTIONAL SUPERVISOR AL TRUJILLO

STATE OF CALIFORNIA - DEPARTMENT OF TRANSPORTATION
Caltrans
DESIGN

P:\proj1\02\4F450_plans\pse\24f450id001.dgn

LAST REVISION 11-22-13
DATE PLOTTED => 02-DEC-2013
TIME PLOTTED => 15:40

Dist	COUNTY	ROUTE	POST MILES TOTAL PROJECT	SHEET No.	TOTAL SHEETS
02	Sha	5	R34.3/R36.8	18	72

Zidan M. Zhang 11-22-13
REGISTERED CIVIL ENGINEER DATE

11-22-13
PLANS APPROVAL DATE

REGISTERED PROFESSIONAL ENGINEER Z. M. ZHANG No. C69054 Exp. 6-30-14 CIVIL STATE OF CALIFORNIA

THE STATE OF CALIFORNIA OR ITS OFFICERS OR AGENTS SHALL NOT BE RESPONSIBLE FOR THE ACCURACY OR COMPLETENESS OF SCANNED COPIES OF THIS PLAN SHEET.

NOTES:

1. EXACT LOCATION OF ALL SIGNS TO BE DETERMINED BY THE ENGINEER.
2. CALIFORNIA CODES ARE DESIGNATED BY (CA), OTHERWISE FEDERAL CODES ARE SHOWN.
3. ALL SIGNS SHALL BE BLACK ON ORANGE EXCEPT C40 (CA), WHICH IS BLACK ON WHITE.

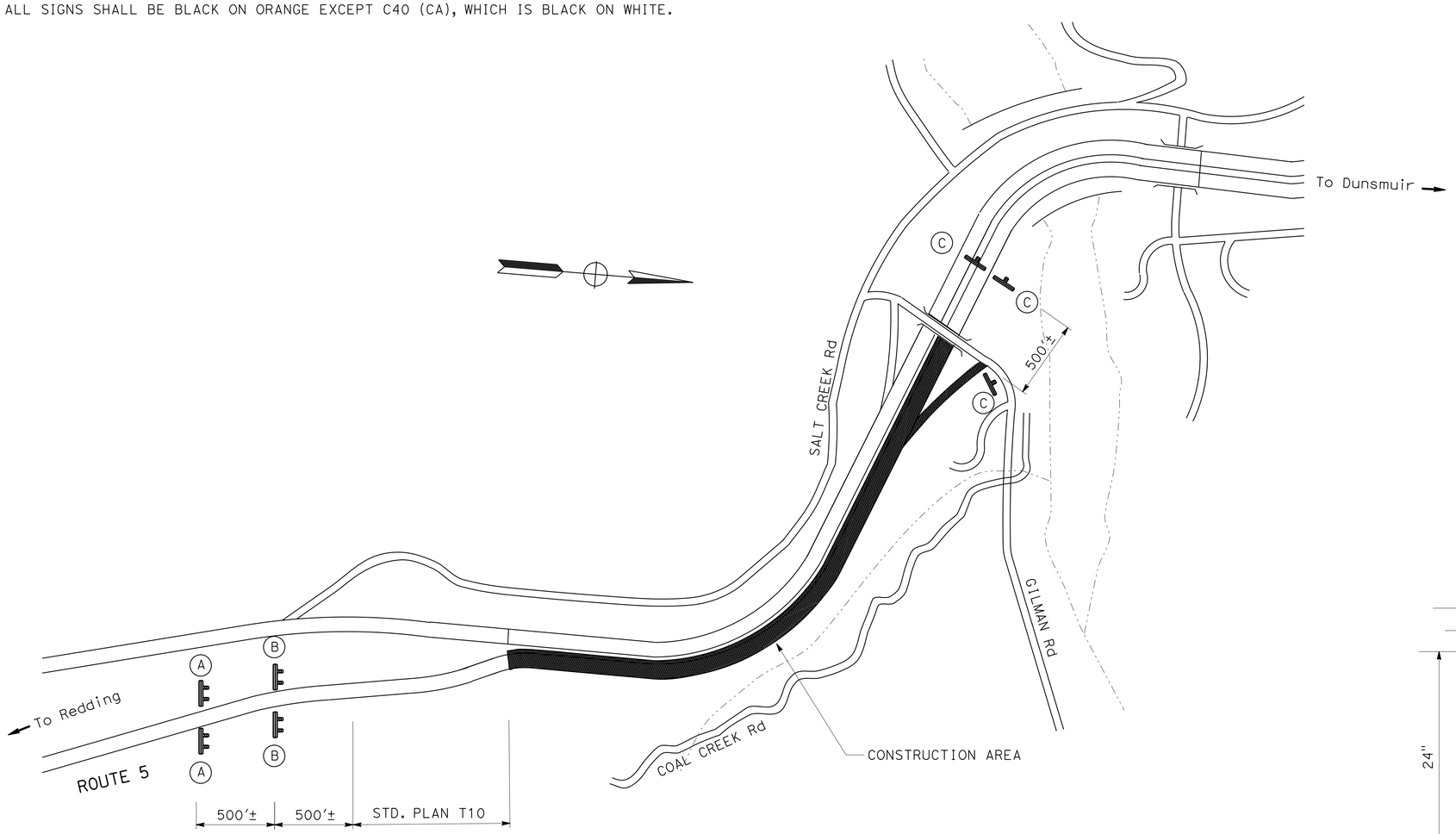

LEGEND:

ONE POST STATIONARY MOUNTED SIGN

TWO POST STATIONARY MOUNTED SIGN

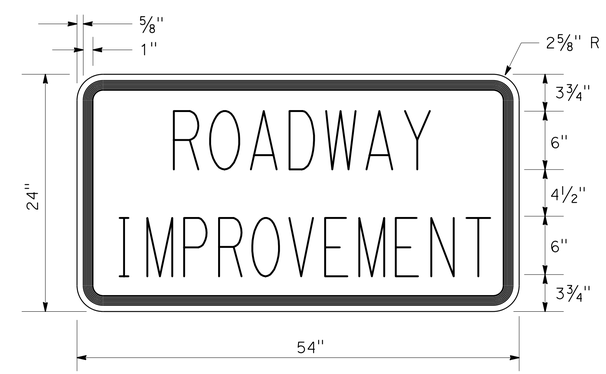

C23B(CA) SIGN PANEL DETAIL

CONSTRUCTION AREA SIGNS (STATIONARY MOUNTED)

TYPE	CODE	PANEL SIZE	SIGN MESSAGE	No. OF SIGNS	NUMBER AND SIZE POSTS
A	C40 (CA)	108" x 42"	TRAFFIC FINES DOUBLED IN CONSTRUCTION ZONES	2	2 - 4" x 6"
B	W20-1	48" x 48"	ROAD WORK AHEAD	2	2 - 6" x 6"
	C23B (CA)	54" x 24"	ROADWAY IMPROVEMENT		
C	G20-2	36" x 18"	END ROAD WORK	3	1 - 4" x 4"

CONSTRUCTION AREA SIGNS

NO SCALE

CS-1

STATE OF CALIFORNIA - DEPARTMENT OF TRANSPORTATION
Caltrans® DESIGN

FUNCTIONAL SUPERVISOR: AL TRUJILLO
CALCULATED-DESIGNED BY: ZIDAN ZHANG
CHECKED BY:
REVISED BY:
DATE REVISED:

P:\proj1\02\4F450_plans\pse\24f4501a001.dgn

LAST REVISION 11-22-13 | DATE PLOTTED => 02-DEC-2013 | TIME PLOTTED => 15:40

Dist	COUNTY	ROUTE	POST MILES TOTAL PROJECT	SHEET No.	TOTAL SHEETS
02	Sha	5	R34.3/R36.8	19	72

Zidan M. Zhang 11-22-13
REGISTERED CIVIL ENGINEER DATE

11-22-13
PLANS APPROVAL DATE

REGISTERED PROFESSIONAL ENGINEER Z. M. ZHANG No. C69054 Exp. 6-30-14 CIVIL STATE OF CALIFORNIA

THE STATE OF CALIFORNIA OR ITS OFFICERS OR AGENTS SHALL NOT BE RESPONSIBLE FOR THE ACCURACY OR COMPLETENESS OF SCANNED COPIES OF THIS PLAN SHEET.

STAGE 1 WORK ITEMS:

1. 0.50′ CPACP AND 0.20′ CPACP
2. REMOVE PORTION OF EXISTING MEDIAN BARRIER AND PLACE TEMPORARY RAILING (TYPE K).
3. REMOVE EXISTING RUMBLE STRIP
4. REMOVE DRAINAGE SYSTEM 5, UNITS d, g, j.
5. PLACE HMA (TYPE A).

LEGEND:

- Temp RAILING (TYPE K)
- Exist CONCRETE BARRIER
- WORK AREA
- CPACP
- DIRECTION OF TRAFFIC
- CHANNELIZER (SURFACE MOUNTED)

ABBREVIATIONS:

CPACP	COLD PLANE ASPHALT CONCRETE PAVEMENT
(E)	EXISTING

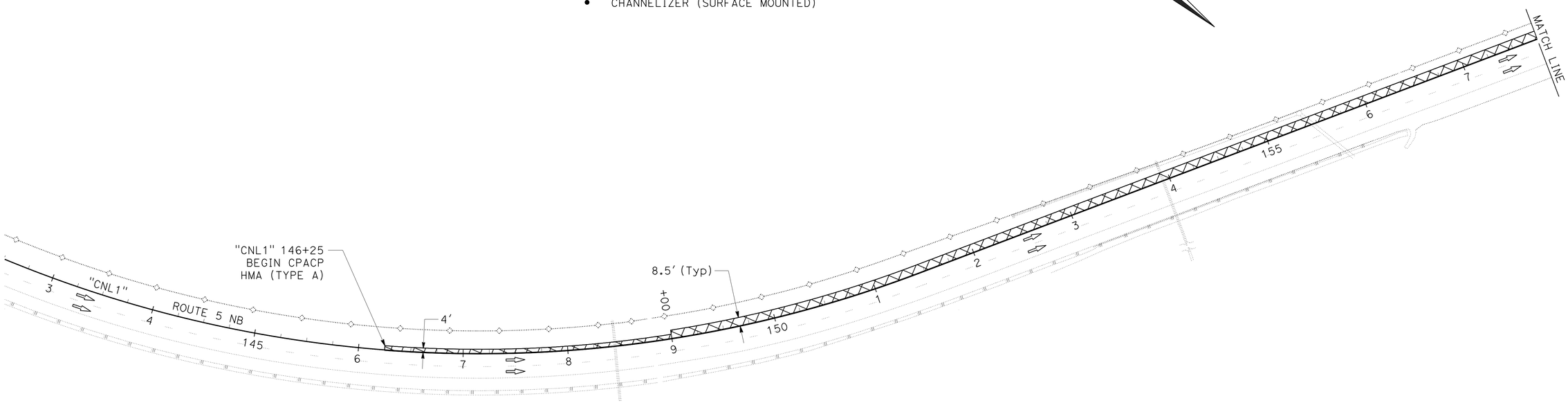

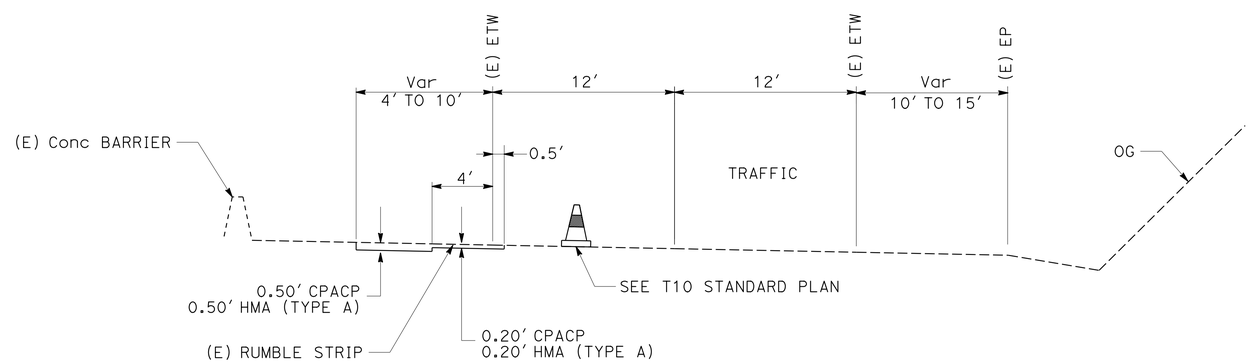

"CNL1" 146+25 TO 180+75

STAGE 1

STAGE CONSTRUCTION

SCALE: 1" = 50′

SC-1

APPROVED FOR STAGE CONSTRUCTION WORK ONLY

REVISED BY	DATE REVISED

CALCULATED-DESIGNED BY	CHECKED BY
JEFF CARSON	ZIDAN ZHANG

FUNCTIONAL SUPERVISOR: AL TRUJILLO

STATE OF CALIFORNIA - DEPARTMENT OF TRANSPORTATION

Caltrans **DESIGN**

P:\proj1\02\4F450_plans\pse\24f450ma001.dgn

LAST REVISION 11-22-13 | DATE PLOTTED => 02-DEC-2013 | TIME PLOTTED => 15:40

Dist	COUNTY	ROUTE	POST MILES TOTAL PROJECT	SHEET No.	TOTAL SHEETS
02	Sha	5	R34.3/R36.8	20	72

Zidan M. Zhang 11-22-13
REGISTERED CIVIL ENGINEER DATE

11-22-13
PLANS APPROVAL DATE

REGISTERED PROFESSIONAL ENGINEER Z. M. ZHANG No. C69054 Exp. 6-30-14 CIVIL STATE OF CALIFORNIA

THE STATE OF CALIFORNIA OR ITS OFFICERS OR AGENTS SHALL NOT BE RESPONSIBLE FOR THE ACCURACY OR COMPLETENESS OF SCANNED COPIES OF THIS PLAN SHEET.

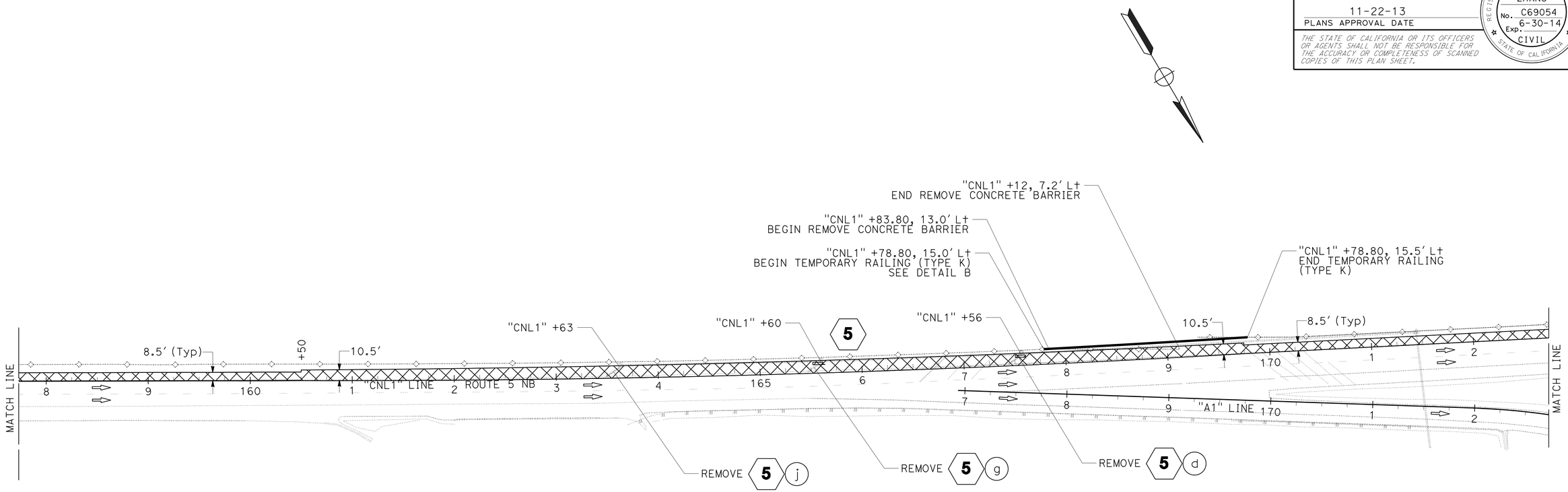

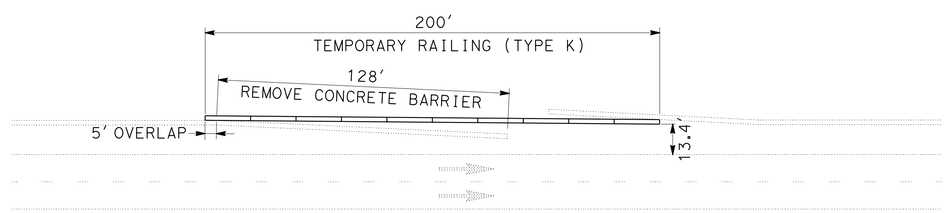

DETAIL B
NO SCALE

STAGE 1
STAGE CONSTRUCTION
SCALE: 1" = 50'

SC-2

APPROVED FOR STAGE CONSTRUCTION WORK ONLY

REVISED BY	
DATE REVISED	
JEFF CARSON	
ZIDAN ZHANG	
CALCULATED-DESIGNED BY	
CHECKED BY	
FUNCTIONAL SUPERVISOR	
AL TRUJILLO	

STATE OF CALIFORNIA - DEPARTMENT OF TRANSPORTATION
Caltrans
DESIGN

P:\proj1\02\4F450_plans\pse\24f450ma002.dgn

LAST REVISION 11-22-13 | DATE PLOTTED => 02-DEC-2013 | TIME PLOTTED => 15:40

Dist	COUNTY	ROUTE	POST MILES TOTAL PROJECT	SHEET No.	TOTAL SHEETS
02	Sha	5	R34.3/R36.8	21	72

Zidan M. Zhang 11-22-13
REGISTERED CIVIL ENGINEER DATE

11-22-13
PLANS APPROVAL DATE

REGISTERED PROFESSIONAL ENGINEER
Z. M. ZHANG
No. C69054
Exp. 6-30-14
CIVIL
STATE OF CALIFORNIA

THE STATE OF CALIFORNIA OR ITS OFFICERS OR AGENTS SHALL NOT BE RESPONSIBLE FOR THE ACCURACY OR COMPLETENESS OF SCANNED COPIES OF THIS PLAN SHEET.

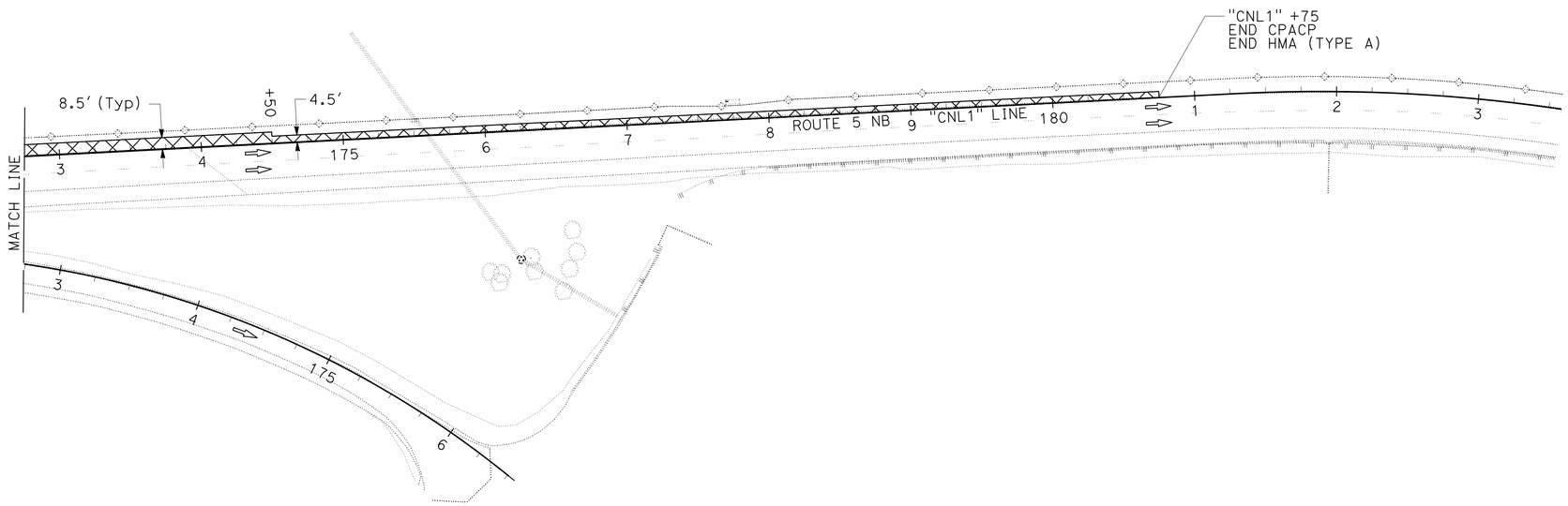

STAGE 1
STAGE CONSTRUCTION

SCALE: 1" = 50'

SC-3

APPROVED FOR STAGE CONSTRUCTION WORK ONLY

REVISED BY	DATE REVISED

CALCULATED-DESIGNED BY	CHECKED BY
JEFF CARSON	ZIDAN ZHANG

FUNCTIONAL SUPERVISOR: AL TRUJILLO

STATE OF CALIFORNIA - DEPARTMENT OF TRANSPORTATION
Caltrans
DESIGN

P:\proj1\02\4F450_plans\pse\24f450ma003.dgn

LAST REVISION 11-22-13 | DATE PLOTTED => 02-DEC-2013 | TIME PLOTTED => 15:40

Dist	COUNTY	ROUTE	POST MILES TOTAL PROJECT	SHEET No.	TOTAL SHEETS
02	Sha	5	R34.3/R36.8	22	72

Zidan M. Zhang 11-22-13
REGISTERED CIVIL ENGINEER DATE

11-22-13
PLANS APPROVAL DATE

REGISTERED PROFESSIONAL ENGINEER Z. M. ZHANG No. C69054 Exp. 6-30-14 CIVIL STATE OF CALIFORNIA

THE STATE OF CALIFORNIA OR ITS OFFICERS OR AGENTS SHALL NOT BE RESPONSIBLE FOR THE ACCURACY OR COMPLETENESS OF SCANNED COPIES OF THIS PLAN SHEET.

STAGE 2A WORK ITEMS:

1. PLACE TEMPORARY RAILING.
2. CONSTRUCT No. 2 LANE AND OUTSIDE SHOULDER.
3. CONSTRUCT DRAINAGE SYSTEM No. 2 AND No. 3.
4. INSTALL MBGR SET TO FINISH GRADE.
5. DO NOT PAVE FINAL LIFT (THIS STAGE).
6. PLACE STATIONARY MOUNTED SIGNS.
7. SURFACE MOUNTED CHANNELIZED INSTEAD OF CONES.

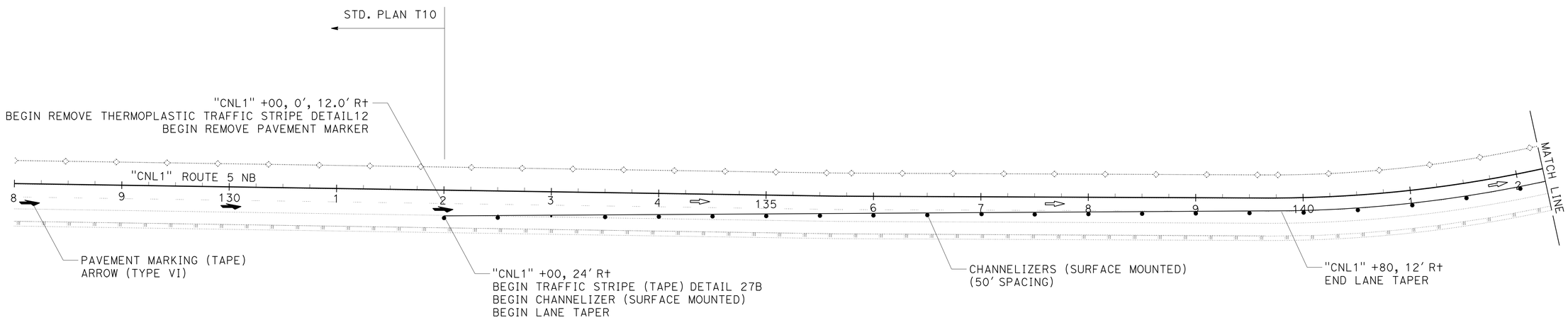

APPROVED FOR STAGE CONSTRUCTION WORK ONLY

STAGE 2A
STAGE CONSTRUCTION
SCALE: 1" = 50'

SC-4

REVISED BY | DATE REVISED
JEFF CARSON | ZIDAN ZHANG
CALCULATED-DESIGNED BY | CHECKED BY
FUNCTIONAL SUPERVISOR
AL TRUJILLO

STATE OF CALIFORNIA - DEPARTMENT OF TRANSPORTATION
Caltrans
DESIGN

P:\proj1\02\4F450_plans\pse\24f450ma004.dgn

LAST REVISION | DATE PLOTTED => 02-DEC-2013
11-22-13 | TIME PLOTTED => 15:40

Dist	COUNTY	ROUTE	POST MILES TOTAL PROJECT	SHEET No.	TOTAL SHEETS
02	Sha	5	R34.3/R36.8	23	72

Zidan M. Zhang 11-22-13
REGISTERED CIVIL ENGINEER DATE

11-22-13
PLANS APPROVAL DATE

REGISTERED PROFESSIONAL ENGINEER Z. M. ZHANG No. C69054 Exp. 6-30-14 CIVIL STATE OF CALIFORNIA

THE STATE OF CALIFORNIA OR ITS OFFICERS OR AGENTS SHALL NOT BE RESPONSIBLE FOR THE ACCURACY OR COMPLETENESS OF SCANNED COPIES OF THIS PLAN SHEET.

LEGEND:

OBJECT MARKER (TYPE P)

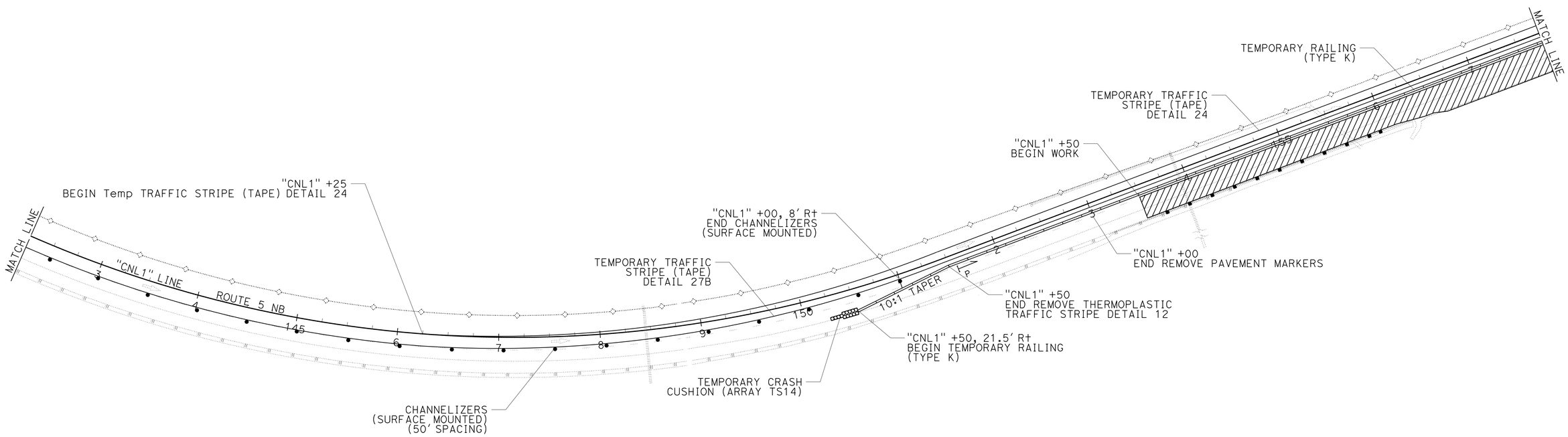

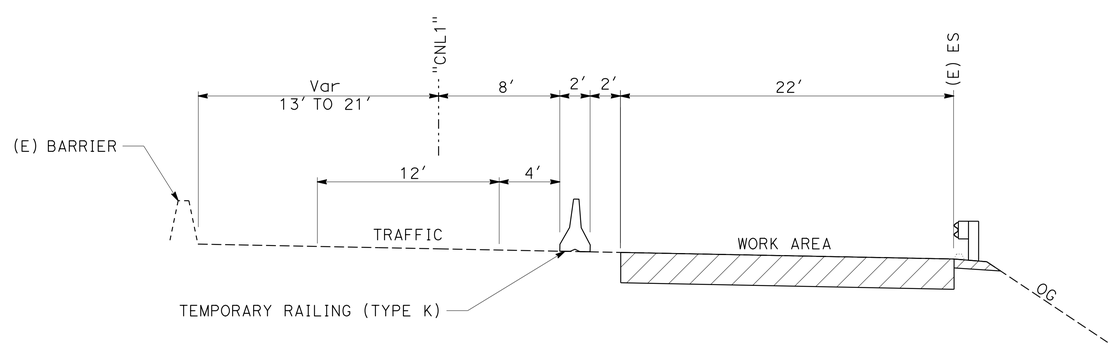

STAGE 2A (Typ)
NO SCALE

STAGE 2A
STAGE CONSTRUCTION
SCALE: 1" = 50'

SC-5

APPROVED FOR STAGE CONSTRUCTION WORK ONLY

REVISED BY	DATE REVISED

CALCULATED-DESIGNED BY: JEFF CARSON
CHECKED BY: ZIDAN ZHANG
FUNCTIONAL SUPERVISOR: AL TRUJILLO

STATE OF CALIFORNIA - DEPARTMENT OF TRANSPORTATION
Caltrans
DESIGN

P:\proj\02\4F450_plans\pse\24f450ma005.dgn

LAST REVISION 11-22-13 | DATE PLOTTED => 02-DEC-2013 | TIME PLOTTED => 15:40

Dist	COUNTY	ROUTE	POST MILES TOTAL PROJECT	SHEET No.	TOTAL SHEETS
02	Sha	5	R34.3/R36.8	24	72

Zidan M. Zhang 11-22-13
REGISTERED CIVIL ENGINEER DATE

11-22-13
PLANS APPROVAL DATE

REGISTERED PROFESSIONAL ENGINEER
Z. M. ZHANG
No. C69054
Exp. 6-30-14
CIVIL
STATE OF CALIFORNIA

THE STATE OF CALIFORNIA OR ITS OFFICERS OR AGENTS SHALL NOT BE RESPONSIBLE FOR THE ACCURACY OR COMPLETENESS OF SCANNED COPIES OF THIS PLAN SHEET.

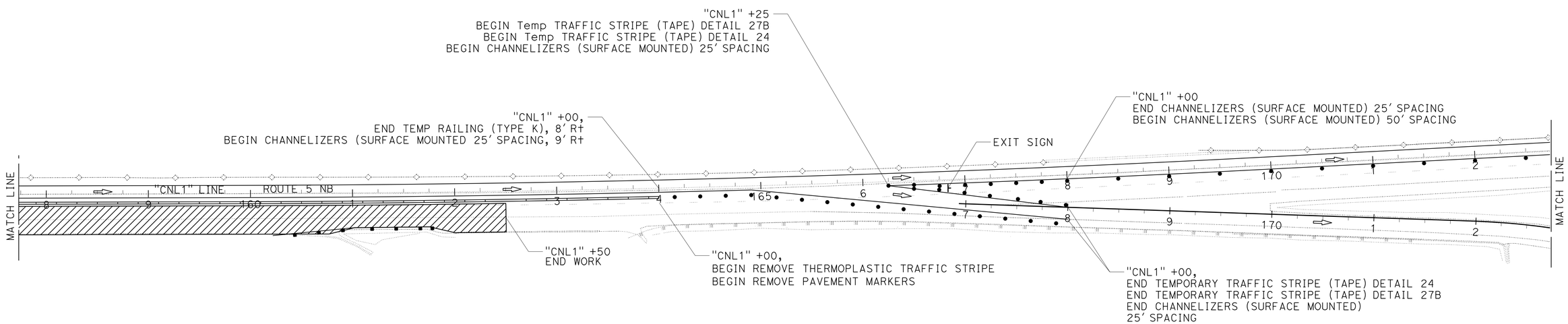

APPROVED FOR STAGE CONSTRUCTION WORK ONLY

STAGE 2A
STAGE CONSTRUCTION
SCALE: 1" = 50'

SC-6

REVISED BY	DATE REVISED

CALCULATED-DESIGNED BY: JEFF CARSON
CHECKED BY: ZIDAN ZHANG
FUNCTIONAL SUPERVISOR: AL TRUJILLO

STATE OF CALIFORNIA - DEPARTMENT OF TRANSPORTATION
Caltrans
DESIGN

P:\proj1\02\4F450_plans\pse\24f450ma006.dgn

LAST REVISION 11-22-13 | DATE PLOTTED => 02-DEC-2013 | TIME PLOTTED => 15:40

Dist	COUNTY	ROUTE	POST MILES TOTAL PROJECT	SHEET No.	TOTAL SHEETS
02	Sha	5	R34.3/R36.8	25	72

Zidan M. Zhang 11-22-13
REGISTERED CIVIL ENGINEER DATE

11-22-13
PLANS APPROVAL DATE

REGISTERED PROFESSIONAL ENGINEER
Z. M. ZHANG
No. C69054
Exp. 6-30-14
CIVIL
STATE OF CALIFORNIA

THE STATE OF CALIFORNIA OR ITS OFFICERS OR AGENTS SHALL NOT BE RESPONSIBLE FOR THE ACCURACY OR COMPLETENESS OF SCANNED COPIES OF THIS PLAN SHEET.

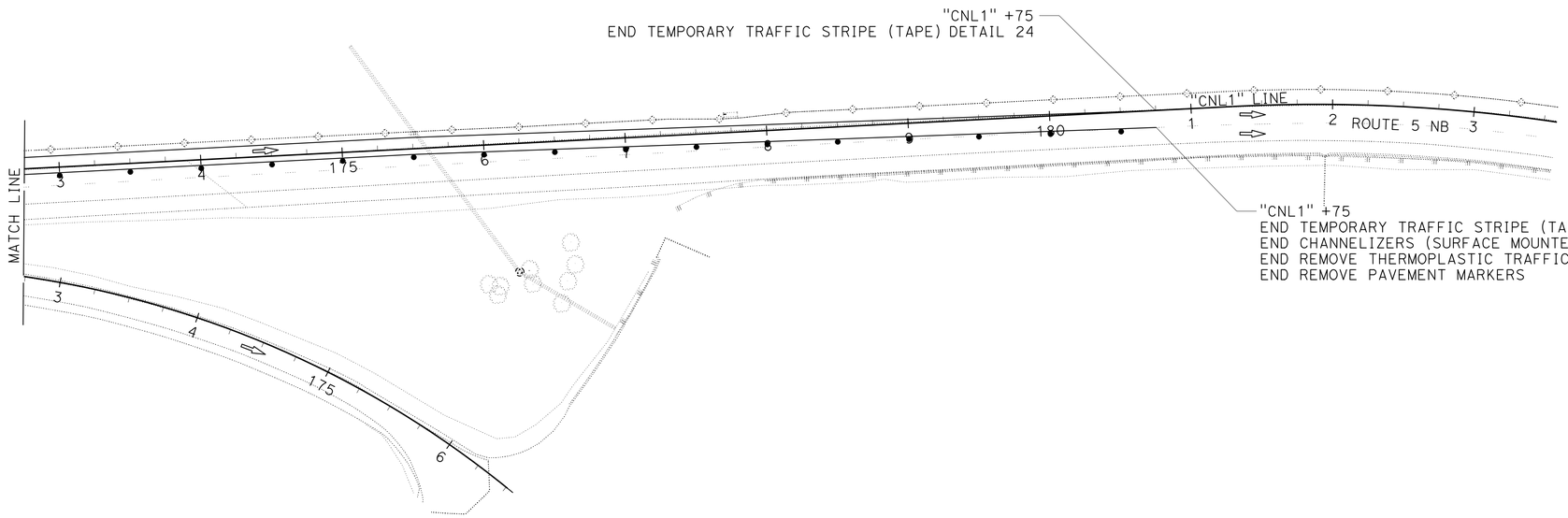

STAGE 2A
STAGE CONSTRUCTION
SCALE: 1" = 50'

SC-7

APPROVED FOR STAGE CONSTRUCTION WORK ONLY

REVISED BY	DATE REVISED

CALCULATED-DESIGNED BY: JEFF CARSON
CHECKED BY: ZIDAN ZHANG
FUNCTIONAL SUPERVISOR: AL TRUJILLO

STATE OF CALIFORNIA - DEPARTMENT OF TRANSPORTATION
Caltrans
DESIGN

P:\proj1\02\4F450_plans\pse\24f450ma007.dgn

LAST REVISION 11-22-13
DATE PLOTTED => 02-DEC-2013
TIME PLOTTED => 15:40

Dist	COUNTY	ROUTE	POST MILES TOTAL PROJECT	SHEET No.	TOTAL SHEETS
02	Sha	5	R34.3/R36.8	26	72

Zidan M. Zhang 11-22-13
REGISTERED CIVIL ENGINEER DATE

11-22-13
PLANS APPROVAL DATE

REGISTERED PROFESSIONAL ENGINEER Z. M. ZHANG No. C69054 Exp. 6-30-14 CIVIL STATE OF CALIFORNIA

THE STATE OF CALIFORNIA OR ITS OFFICERS OR AGENTS SHALL NOT BE RESPONSIBLE FOR THE ACCURACY OR COMPLETENESS OF SCANNED COPIES OF THIS PLAN SHEET.

STAGE 2B WORK ITEMS:

1. INSTALL RAMP ELECTRICAL.
2. EXTEND TEMPORARY RAILING FROM STAGE 2a THROUGH STAGE 2b.
3. CONSTRUCT #2 LANE, R† SHOULDER AND RAMP.
4. CONSTRUCT DRAINAGE SYSTEM 4, 6, 7.
5. ENABLE RAMP DETOUR PLAN.
6. INSTALL MBGR SET TO FINISH GRADE
7. DO NOT PAVE FINAL LIFT (THIS STAGE).

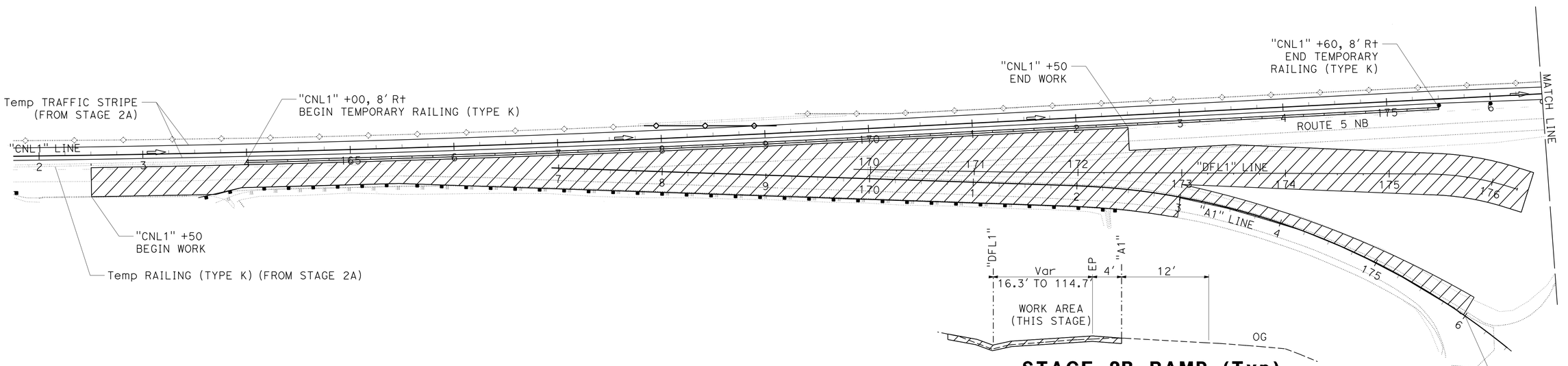

STAGE 2B RAMP (Typ)
"A1" 173+00.00 TO 176+00.00

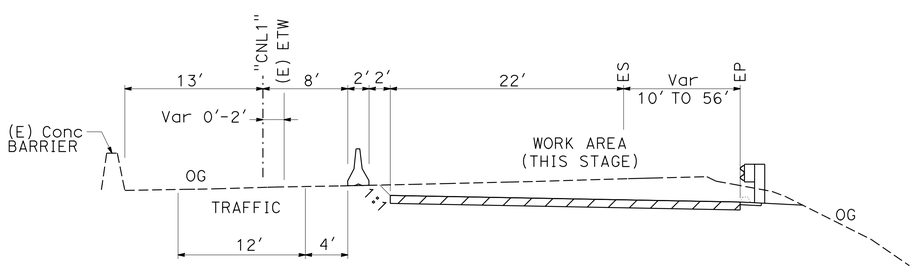

STAGE 2B (Typ)
"CNL1" 162+50 TO 171+35.25

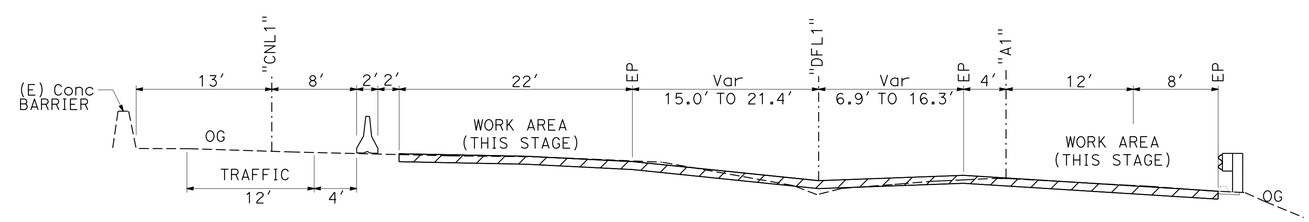

STAGE 2B (Typ)
"CNL1" 171+35.25 TO 172+50

STAGE 2B RAMP (Typ)
"A1" 171+36.85 TO 173+00

STAGE 2B
STAGE CONSTRUCTION
SCALE: 1" = 50′

SC-8

APPROVED FOR STAGE CONSTRUCTION WORK ONLY

REVISED BY | DATE REVISED
JEFF CARSON | ZIDAN ZHANG
CALCULATED-DESIGNED BY | CHECKED BY
FUNCTIONAL SUPERVISOR
AL TRUJILLO

STATE OF CALIFORNIA - DEPARTMENT OF TRANSPORTATION
Caltrans
DESIGN

P:\proj1\02\4F450_plans\pse\24f450ma008.dgn

LAST REVISION 11-22-13 | DATE PLOTTED => 02-DEC-2013 TIME PLOTTED => 15:40

Dist	COUNTY	ROUTE	POST MILES TOTAL PROJECT	SHEET No.	TOTAL SHEETS
02	Sha	5	R34.3/R36.8	27	72

Zidan M. Zhang 11-22-13
REGISTERED CIVIL ENGINEER DATE

11-22-13
PLANS APPROVAL DATE

REGISTERED PROFESSIONAL ENGINEER
Z. M. ZHANG
No. C69054
Exp. 6-30-14
CIVIL
STATE OF CALIFORNIA

THE STATE OF CALIFORNIA OR ITS OFFICERS OR AGENTS SHALL NOT BE RESPONSIBLE FOR THE ACCURACY OR COMPLETENESS OF SCANNED COPIES OF THIS PLAN SHEET.

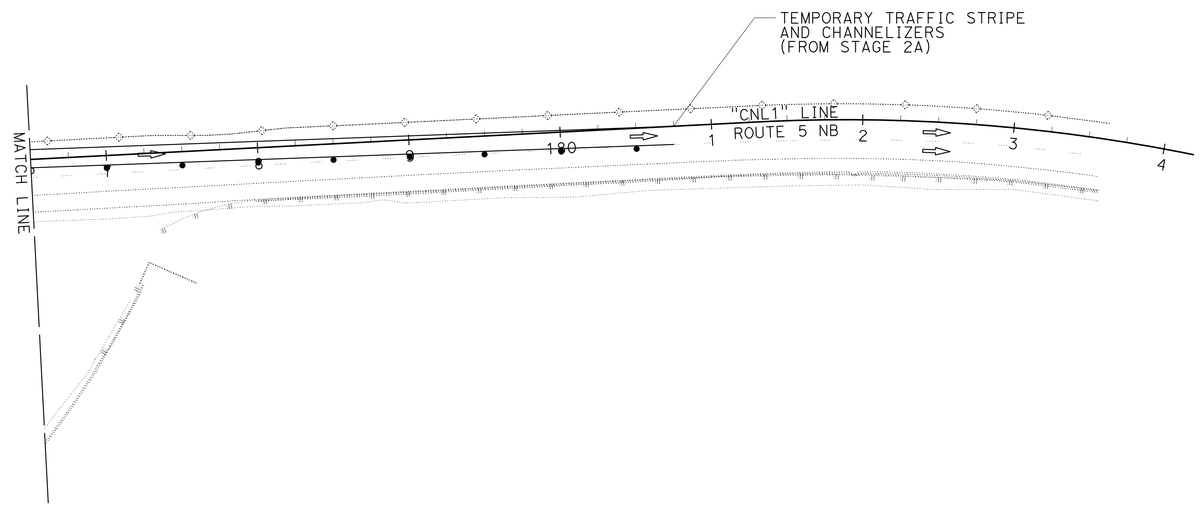

STAGE 2B
STAGE CONSTRUCTION
SCALE: 1" = 50'

SC-9

APPROVED FOR STAGE CONSTRUCTION WORK ONLY

REVISED BY	DATE REVISED

CALCULATED-DESIGNED BY: JEFF CARSON
CHECKED BY: ZIDAN ZHANG

FUNCTIONAL SUPERVISOR: AL TRUJILLO

STATE OF CALIFORNIA - DEPARTMENT OF TRANSPORTATION
Caltrans
DESIGN

P:\proj1\02\4F450_plans\pse\24f450ma009.dgn

LAST REVISION 11-22-13 | DATE PLOTTED => 02-DEC-2013 | TIME PLOTTED => 15:40

Dist	COUNTY	ROUTE	POST MILES TOTAL PROJECT	SHEET No.	TOTAL SHEETS
02	Sha	5	R34.3/R36.8	28	72

Zidan M. Zhang 11-22-13
REGISTERED CIVIL ENGINEER DATE

11-22-13
PLANS APPROVAL DATE

REGISTERED PROFESSIONAL ENGINEER Z. M. ZHANG No. C69054 Exp. 6-30-14 CIVIL STATE OF CALIFORNIA

THE STATE OF CALIFORNIA OR ITS OFFICERS OR AGENTS SHALL NOT BE RESPONSIBLE FOR THE ACCURACY OR COMPLETENESS OF SCANNED COPIES OF THIS PLAN SHEET.

STAGE 3 WORK ITEMS:

1. PLACE TEMPORARY RAILING.
2. CONSTRUCT No. 1 LANE AND MEDIAN SHOULDER.
3. CONSTRUCT DRAINAGE SYSTEM No. 1.
4. REMOVE INLETS AND CULVERTS IN DRAINAGE SYSTEM No. 5.
5. DO NOT PAVE FINAL LIFT (THIS STAGE).

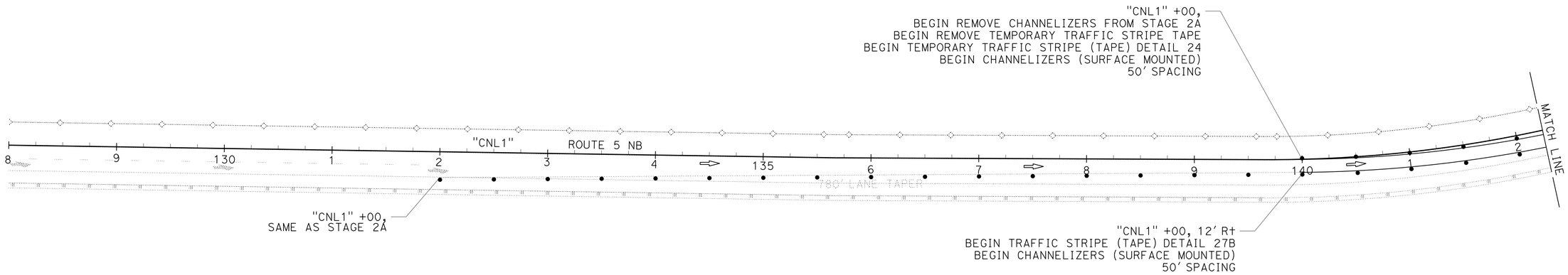

APPROVED FOR STAGE CONSTRUCTION WORK ONLY

STAGE 3
STAGE CONSTRUCTION

SCALE: 1" = 50'

SC-10

REVISED BY	DATE REVISED

CALCULATED-DESIGNED BY: JEFF CARSON
CHECKED BY: ZIDAN ZHANG

FUNCTIONAL SUPERVISOR: AL TRUJILLO

STATE OF CALIFORNIA - DEPARTMENT OF TRANSPORTATION
Caltrans
DESIGN

P:\proj1\02\4F450_plans\pse\24f450ma010.dgn

LAST REVISION 11-22-13 | DATE PLOTTED => 02-DEC-2013 | TIME PLOTTED => 15:40

Dist	COUNTY	ROUTE	POST MILES TOTAL PROJECT	SHEET No.	TOTAL SHEETS
02	Sha	5	R34.3/R36.8	29	72

Zidan M. Zhang 11-22-13
REGISTERED CIVIL ENGINEER DATE

11-22-13
PLANS APPROVAL DATE

REGISTERED PROFESSIONAL ENGINEER Z. M. ZHANG No. C69054 Exp. 6-30-14 CIVIL STATE OF CALIFORNIA

THE STATE OF CALIFORNIA OR ITS OFFICERS OR AGENTS SHALL NOT BE RESPONSIBLE FOR THE ACCURACY OR COMPLETENESS OF SCANNED COPIES OF THIS PLAN SHEET.

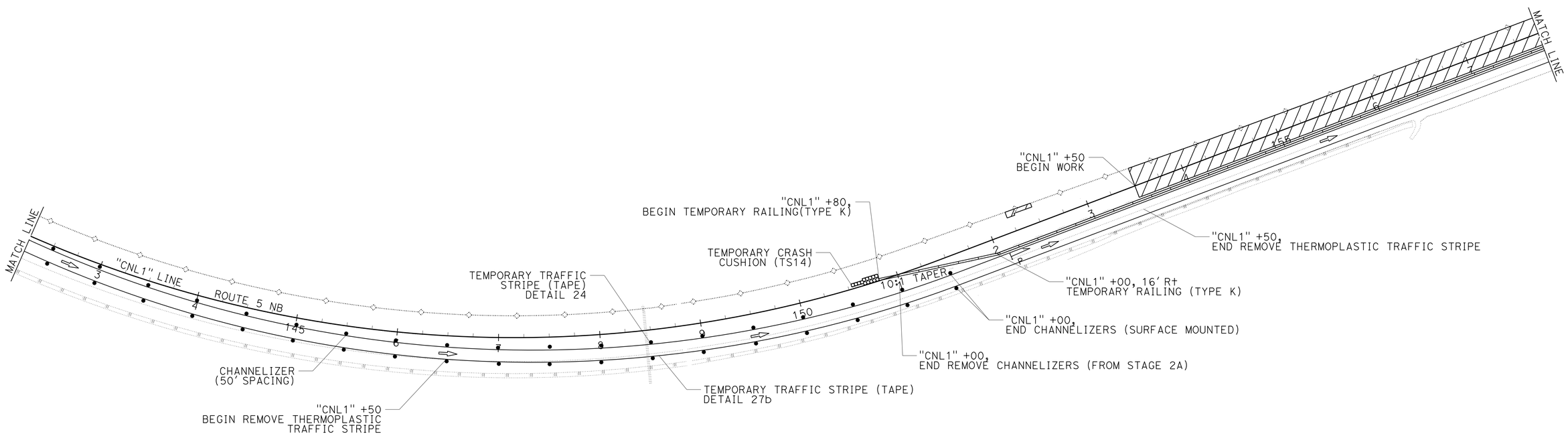

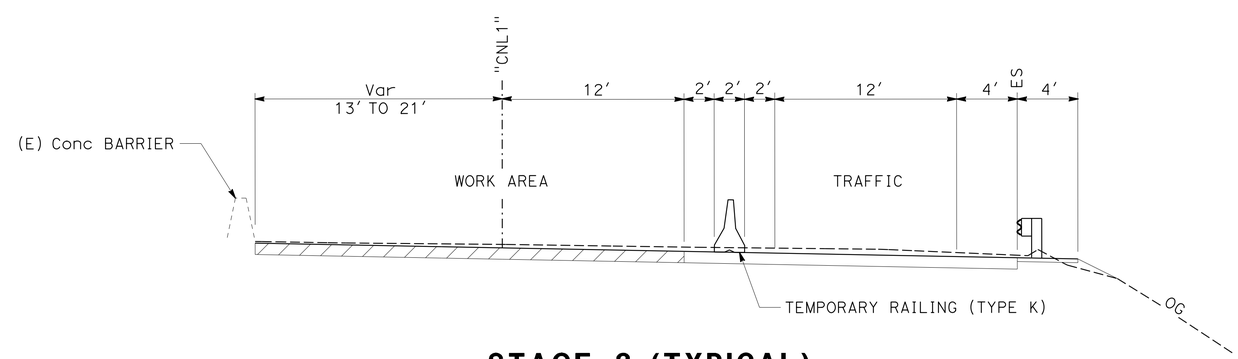

STAGE 3 (TYPICAL)

STAGE 3
STAGE CONSTRUCTION
SCALE: 1" = 50'

SC-11

APPROVED FOR STAGE CONSTRUCTION WORK ONLY

REVISED BY	DATE REVISED

CALCULATED-DESIGNED BY: JEFF CARSON
CHECKED BY: ZIDAN ZHANG
FUNCTIONAL SUPERVISOR: AL TRUJILLO

STATE OF CALIFORNIA - DEPARTMENT OF TRANSPORTATION
Caltrans
DESIGN

P:\proj1\02\4F450_plans\pse\24f450ma011.dgn

LAST REVISION 11-22-13 | DATE PLOTTED => 02-DEC-2013 | TIME PLOTTED => 15:40

Dist	COUNTY	ROUTE	POST MILES TOTAL PROJECT	SHEET No.	TOTAL SHEETS
02	Sha	5	R34.3/R36.8	30	72

Zidan M. Zhang 11-22-13
REGISTERED CIVIL ENGINEER DATE

11-22-13
PLANS APPROVAL DATE

REGISTERED PROFESSIONAL ENGINEER
Z. M. ZHANG
No. C69054
Exp. 6-30-14
CIVIL
STATE OF CALIFORNIA

THE STATE OF CALIFORNIA OR ITS OFFICERS OR AGENTS SHALL NOT BE RESPONSIBLE FOR THE ACCURACY OR COMPLETENESS OF SCANNED COPIES OF THIS PLAN SHEET.

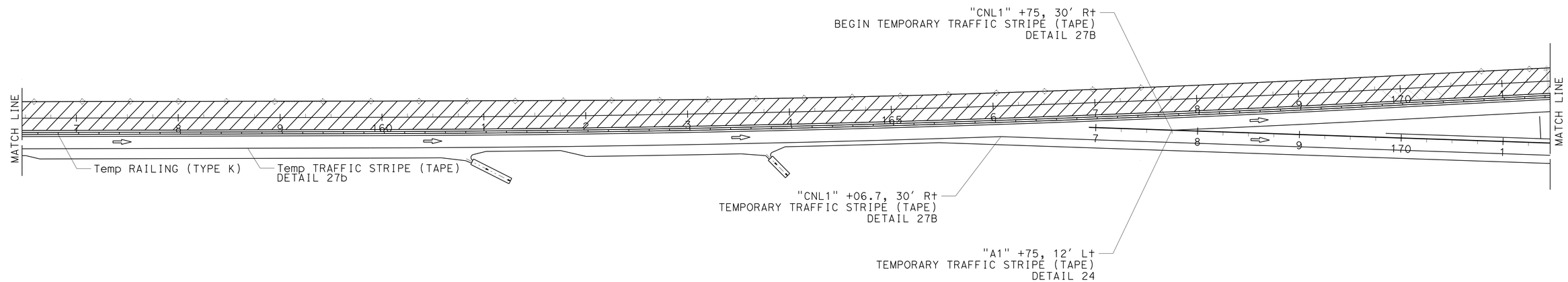

STAGE 3

STAGE CONSTRUCTION

SCALE: 1" = 50'

SC-12

APPROVED FOR STAGE CONSTRUCTION WORK ONLY

REVISED BY	DATE REVISED

CALCULATED-DESIGNED BY: JEFF CARSON
CHECKED BY: ZIDAN ZHANG

FUNCTIONAL SUPERVISOR: AL TRUJILLO

STATE OF CALIFORNIA - DEPARTMENT OF TRANSPORTATION
Caltrans
DESIGN

P:\proj1\02\4F450_plans\pse\24f450ma012.dgn

LAST REVISION 11-22-13 | DATE PLOTTED => 02-DEC-2013 | TIME PLOTTED => 15:41

Dist	COUNTY	ROUTE	POST MILES TOTAL PROJECT	SHEET No.	TOTAL SHEETS
02	Sha	5	R34.3/R36.8	31	72

Zidan M. Zhang 11-22-13
REGISTERED CIVIL ENGINEER DATE

11-22-13
PLANS APPROVAL DATE

REGISTERED PROFESSIONAL ENGINEER
Z. M. ZHANG
No. C69054
Exp. 6-30-14
CIVIL
STATE OF CALIFORNIA

THE STATE OF CALIFORNIA OR ITS OFFICERS OR AGENTS SHALL NOT BE RESPONSIBLE FOR THE ACCURACY OR COMPLETENESS OF SCANNED COPIES OF THIS PLAN SHEET.

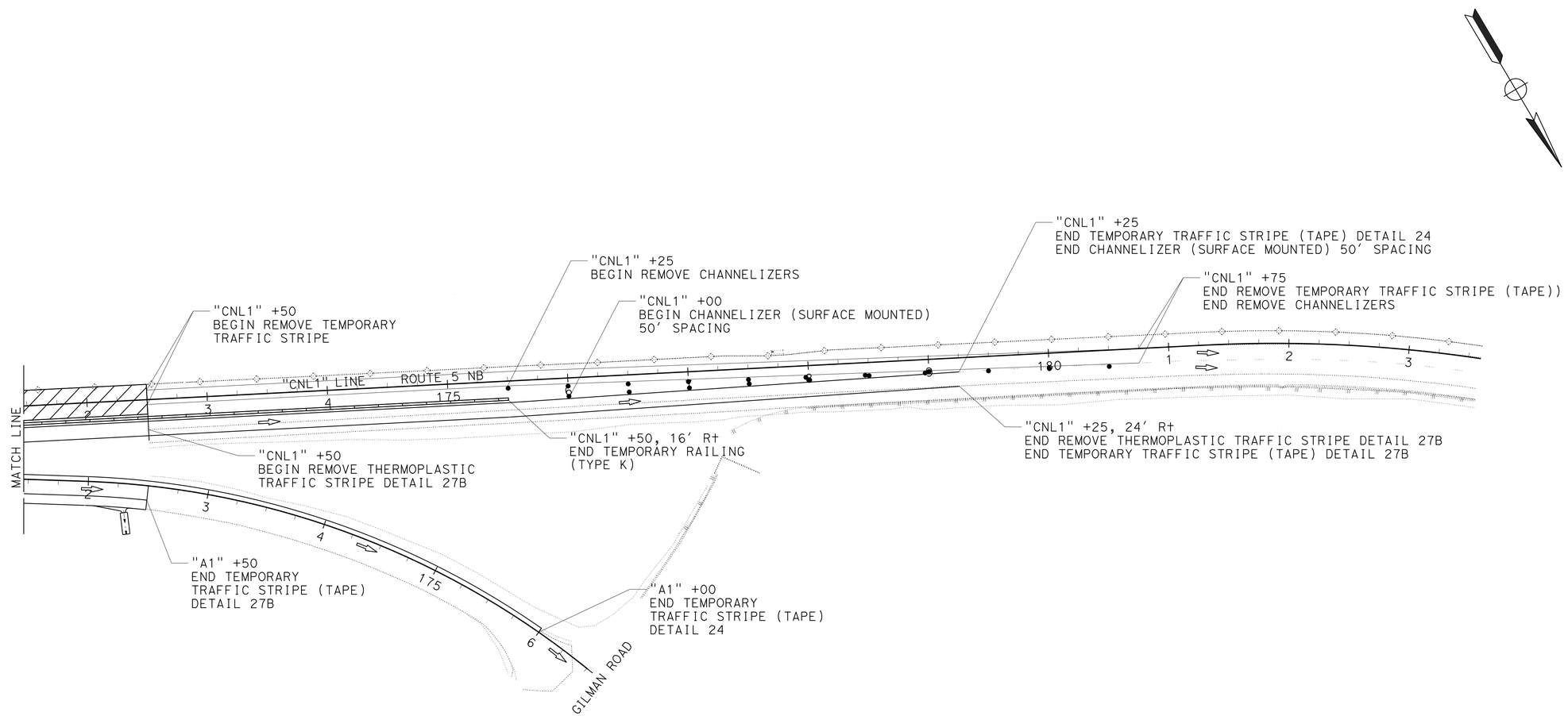

STAGE 3
STAGE CONSTRUCTION
SCALE: 1" = 50'

SC-13

APPROVED FOR STAGE CONSTRUCTION WORK ONLY

REVISED BY	DATE REVISED

CALCULATED-DESIGNED BY: JEFF CARSON
CHECKED BY: ZIDAN ZHANG

FUNCTIONAL SUPERVISOR: AL TRUJILLO

STATE OF CALIFORNIA - DEPARTMENT OF TRANSPORTATION
Caltrans
DESIGN

P:\proj1\02\4F450_plans\pse\24f450ma013.dgn

LAST REVISION 11-22-13 | DATE PLOTTED => 02-DEC-2013 | TIME PLOTTED => 15:41

BORDER LAST REVISED 7/2/2010 | USERNAME => s123119 | DGN FILE => 24f450ma013.dgn | RELATIVE BORDER SCALE IS IN INCHES 0 1 2 3 | UNIT 0316 | PROJECT NUMBER & PHASE 02-1200-0155-1 | EA: 02-4F4501

Dist	COUNTY	ROUTE	POST MILES TOTAL PROJECT	SHEET No.	TOTAL SHEETS
02	Sha	5	R34.3/R36.8	32	72

Zidan M. Zhang 11-22-13
REGISTERED CIVIL ENGINEER DATE

11-22-13
PLANS APPROVAL DATE

REGISTERED PROFESSIONAL ENGINEER
Z. M. ZHANG
No. C69054
Exp. 6-30-14
CIVIL
STATE OF CALIFORNIA

THE STATE OF CALIFORNIA OR ITS OFFICERS OR AGENTS SHALL NOT BE RESPONSIBLE FOR THE ACCURACY OR COMPLETENESS OF SCANNED COPIES OF THIS PLAN SHEET.

STAGE 4 WORK ITEMS:

1. RECONSTRUCT CONCRETE BARRIER (TYPE 60)
2. PAVE FINAL LIFT.
3. PLACE HMA DIKE.
4. REMOVE ALL TEMPORARY RAILING (TYPE K).
5. PLACE FINAL STRIPING AND SIGNING.

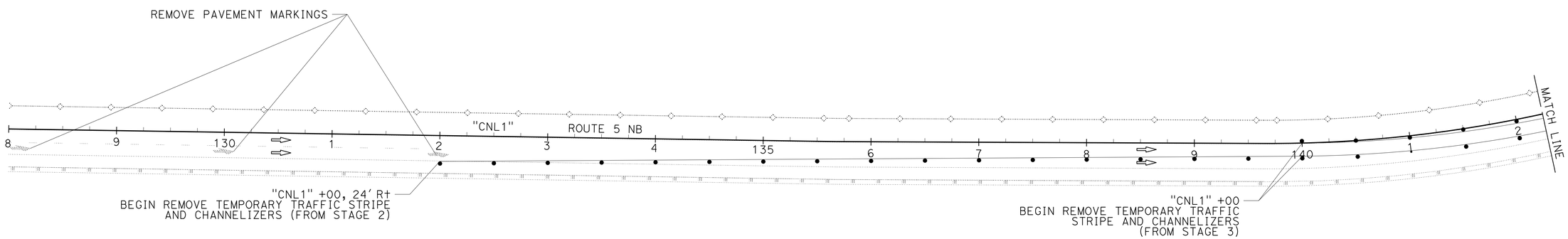

APPROVED FOR STAGE CONSTRUCTION WORK ONLY

STAGE 4
STAGE CONSTRUCTION
SCALE: 1" = 50'

SC-14

REVISED BY | DATE REVISED
JEFF CARSON | ZIDAN ZHANG
CALCULATED-DESIGNED BY | CHECKED BY
FUNCTIONAL SUPERVISOR
AL TRUJILLO

STATE OF CALIFORNIA - DEPARTMENT OF TRANSPORTATION
Caltrans
DESIGN

P:\proj1\02\4F450_plans\pse\24f450ma014.dgn

LAST REVISION 11-22-13 | DATE PLOTTED => 02-DEC-2013 | TIME PLOTTED => 15:41

Dist	COUNTY	ROUTE	POST MILES TOTAL PROJECT	SHEET No.	TOTAL SHEETS
02	Sha	5	R34.3/R36.8	33	72

Zidan M. Zhang 11-22-13
REGISTERED CIVIL ENGINEER DATE

11-22-13
PLANS APPROVAL DATE

REGISTERED PROFESSIONAL ENGINEER
Z. M. ZHANG
No. C69054
Exp. 6-30-14
CIVIL
STATE OF CALIFORNIA

THE STATE OF CALIFORNIA OR ITS OFFICERS OR AGENTS SHALL NOT BE RESPONSIBLE FOR THE ACCURACY OR COMPLETENESS OF SCANNED COPIES OF THIS PLAN SHEET.

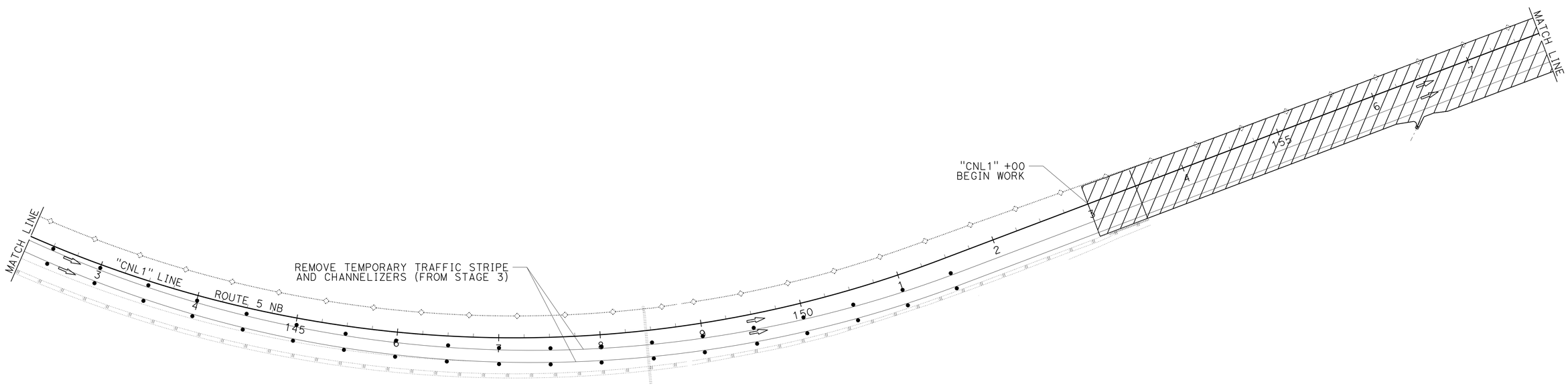

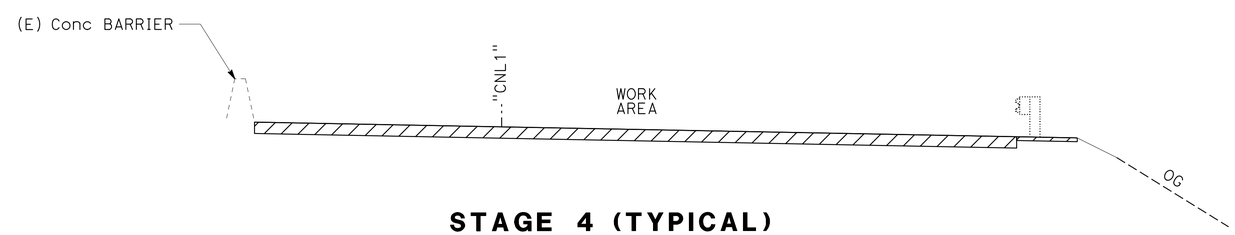

STAGE 4 (TYPICAL)
NO SCALE

STAGE 4
STAGE CONSTRUCTION
SCALE: 1" = 50'

SC-15

APPROVED FOR STAGE CONSTRUCTION WORK ONLY

STATE OF CALIFORNIA - DEPARTMENT OF TRANSPORTATION
Caltrans
DESIGN

FUNCTIONAL SUPERVISOR: AL TRUJILLO
CALCULATED-DESIGNED BY: JEFF CARSON
CHECKED BY: ZIDAN ZHANG
REVISED BY
DATE REVISED

P:\proj1\02\4F450_plans\pse\24f450ma015.dgn

LAST REVISION 11-22-13 | DATE PLOTTED => 02-DEC-2013 | TIME PLOTTED => 15:41

Dist	COUNTY	ROUTE	POST MILES TOTAL PROJECT	SHEET No.	TOTAL SHEETS
02	Sha	5	R34.3/R36.8	34	72

Zidan M. Zhang 11-22-13
REGISTERED CIVIL ENGINEER DATE

11-22-13
PLANS APPROVAL DATE

REGISTERED PROFESSIONAL ENGINEER
Z. M. ZHANG
No. C69054
Exp. 6-30-14
CIVIL
STATE OF CALIFORNIA

THE STATE OF CALIFORNIA OR ITS OFFICERS OR AGENTS SHALL NOT BE RESPONSIBLE FOR THE ACCURACY OR COMPLETENESS OF SCANNED COPIES OF THIS PLAN SHEET.

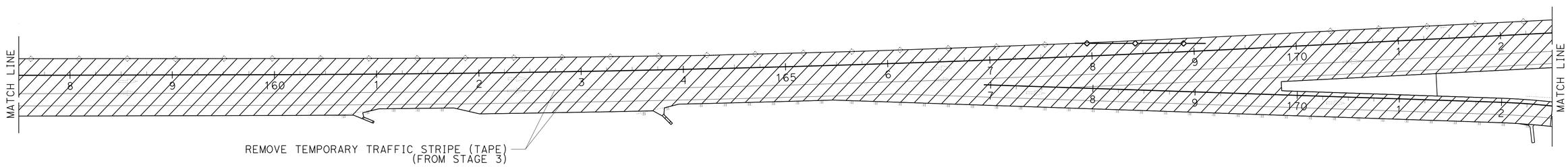

STAGE 4
STAGE CONSTRUCTION
SCALE: 1" = 50'

SC-16

APPROVED FOR STAGE CONSTRUCTION WORK ONLY

REVISED BY
DATE REVISED
JEFF CARSON
ZIDAN ZHANG
CALCULATED-DESIGNED BY
CHECKED BY
FUNCTIONAL SUPERVISOR
AL TRUJILLO

STATE OF CALIFORNIA - DEPARTMENT OF TRANSPORTATION
Caltrans
DESIGN

P:\proj1\02\4F450_plans\pse\24f450ma016.dgn

LAST REVISION 11-22-13
DATE PLOTTED => 02-DEC-2013
TIME PLOTTED => 15:41

Dist	COUNTY	ROUTE	POST MILES TOTAL PROJECT	SHEET No.	TOTAL SHEETS
02	Sha	5	R34.3/R36.8	35	72

Zidan M. Zhang 11-22-13
REGISTERED CIVIL ENGINEER DATE

11-22-13
PLANS APPROVAL DATE

REGISTERED PROFESSIONAL ENGINEER
Z. M. ZHANG
No. C69054
Exp. 6-30-14
CIVIL
STATE OF CALIFORNIA

THE STATE OF CALIFORNIA OR ITS OFFICERS OR AGENTS SHALL NOT BE RESPONSIBLE FOR THE ACCURACY OR COMPLETENESS OF SCANNED COPIES OF THIS PLAN SHEET.

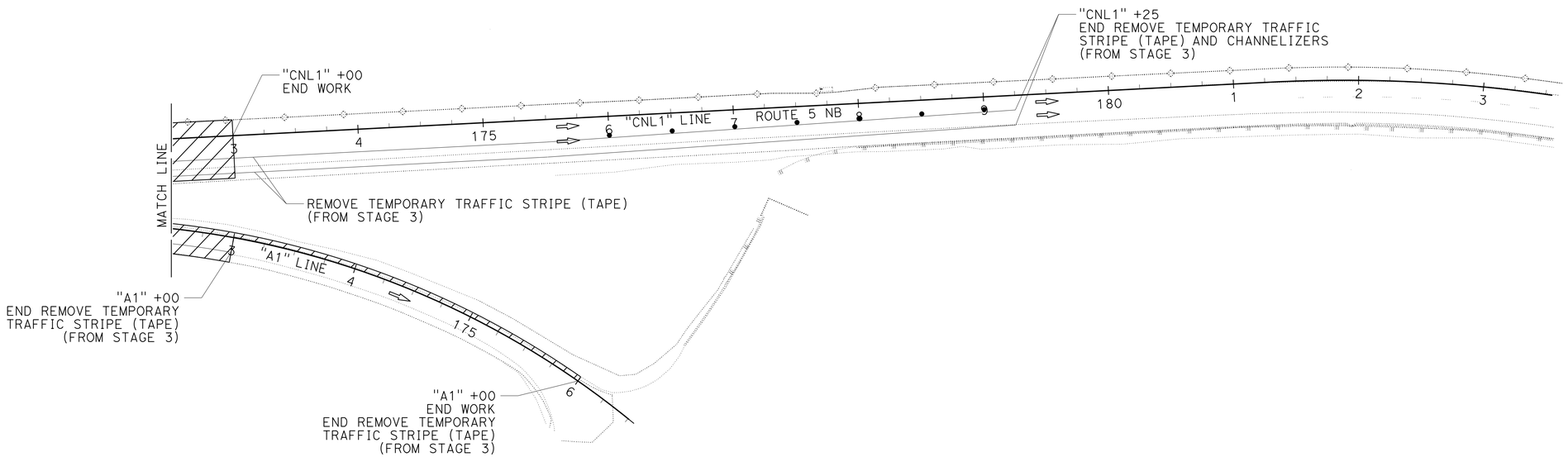

STAGE 4
STAGE CONSTRUCTION
SCALE: 1" = 50'

SC-17

APPROVED FOR STAGE CONSTRUCTION WORK ONLY

REVISED BY	DATE REVISED

CALCULATED-DESIGNED BY: JEFF CARSON
CHECKED BY: ZIDAN ZHANG
FUNCTIONAL SUPERVISOR: AL TRUJILLO

STATE OF CALIFORNIA - DEPARTMENT OF TRANSPORTATION
Caltrans
DESIGN

P:\proj1\02\4F450_plans\pse\24f450ma017.dgn

LAST REVISION 11-22-13 | DATE PLOTTED => 02-DEC-2013 | TIME PLOTTED => 15:41

Dist	COUNTY	ROUTE	POST MILES TOTAL PROJECT	SHEET No.	TOTAL SHEETS
02	Sha	5	R34.3/R36.8	36	72

Zidan M. Zhang 11-22-13
REGISTERED CIVIL ENGINEER DATE

11-22-13
PLANS APPROVAL DATE

REGISTERED PROFESSIONAL ENGINEER Z. M. ZHANG No. C69054 Exp. 6-30-14 CIVIL STATE OF CALIFORNIA

THE STATE OF CALIFORNIA OR ITS OFFICERS OR AGENTS SHALL NOT BE RESPONSIBLE FOR THE ACCURACY OR COMPLETENESS OF SCANNED COPIES OF THIS PLAN SHEET.

NOTE:

1. (N) - NOT A SEPARATE PAY ITEM, FOR INFORMATION ONLY

STAGE 1 CONSTRUCTION AND TRAFFIC HANDLING QUANTITIES

STATION	STAGE	COLD PLANE AC	HMA (TYPE A)		REMOVE CONCRETE BARRIER	TEMPORARY RAILING (TYPE K)
		SQYD	TON	TON (N)	LF	LF
"CNL1" 167+80 TO 169+80	1					200
"CNL1" 167+84 TO 169+12	1				128	
"CNL1" 146+25 TO 149+00	1	137.5	19.8			
"CNL1" 149+00 TO 160+50	1	1086.1	266.8			
"CNL1" 160+50 TO 169+75	1	1079.2	288.6			
"CNL1" 169+75 TO 174+50	1	488.6	110.2			
"CNL1" 174+50 TO 180+75	1	315.2	45			
"CNL1"163+63	1			2.9		
"CNL1"165+50	1			2.8		
TOTAL		3063.9*	730.4*	5.7	128	200 **

* QUANTITY INCLUDED IN ROADWAY SUMMARY OF QUANTITIES SHEET
** QUANTITY INCLUDED IN STAGE 2A THRU STAGE 4

STAGE CONSTRUCTION QUANTITIES

STATION	STAGE	TEMPORARY TRAFFIC STRIPE (TAPE)		CHANNELIZER (SURFACE MOUNTED)	TEMPORARY RAILING (TYPE K)	TEMPORARY PAVEMENT MARKING (TAPE)	OBJECT MARKER (TYPE P)	REMOVE THERMOPLASTIC TRAFFIC STRIPE	TEMPORARY CRASH CUSHION MODULE	*** REMOVE PAVEMENT MARKER	REMARKS
		DETAIL 24	DETAIL 27b					WHITE TRAFFIC STRIPE			
		LF	LF	EA	LF	SQFT	EA	LF	EA	EA	
"CNL1" 132+00 TO 153+00	2a									44	
"CNL1" 132+00 TO 151+00	2a			39							
"CNL1" 132+00 TO 151+50	2a							1950			
"CNL1" 166+25 TO 168+00	2a	175		8							
"CNL1" 164+00 TO 168+00	2a			9							RAMP EXIT
"CNL1" 164+00 TO 180+75	2a							1675		35	
"CNL1" 166+25 TO 168+00	2a			15							
"CNL1" 132+00 TO 168+00	2a		3600								
"CNL1" 146+25 TO 180+75	2a	3450									
"CNL1" 166+25 TO 180+75	2a		1450								
"CNL1" 168+00 TO 180+75	2a			27							
"CNL1" 150+50 TO 164+00	2a				1350						
"CNL1" 150+50	2a								14		
"CNL1" 128+25 TO 132+25	2a					126					TYPE VI ARROW
"CNL1" 151+50	2a						1				
"CNL1" 164+00 TO 175+60	2b				1160						
"CNL1" 152+00	3						1				
"CNL1" 140+00 TO 151+50	3			24							
"CNL1" 140+00 TO 152+00	3			25							
"CNL1" 176+00 TO 179+25	3			7							
"CNL1" 140+00 TO 179+25	3	3925									
"CNL1" 140+00 TO 166+00	3		2600								
"A1" 167+75 TO 176+00	3	825									
"CNL1" 167+75 TO 171+80	3		363								
"CNL1" 166+00 TO 172+50	3	475	650								
"CNL1" 167+75 TO 179+40	3		1165								
"CNL1" 171+38 TO 176+00	3	462									
FROM STAGE 1					200						
SUBTOTAL		9312	9825	154	2710	126	2	3625	14	79	
TOTAL		19,140		154	2710	126	2	3625	14	79	

*** FILL PAVEMENT RECESS WITH ASPHALT

STAGE CONSTRUCTION QUANTITIES

SCQ-1

REVISED BY | DATE REVISED
JEFF CARSON | ZIDAN ZHANG
CALCULATED-DESIGNED BY | CHECKED BY
FUNCTIONAL SUPERVISOR: AL TRUJILLO

STATE OF CALIFORNIA - DEPARTMENT OF TRANSPORTATION
Caltrans DESIGN

P:\proj1\02\4F450_plans\pse\24f450mc001.dgn

LAST REVISION 11-22-13 | DATE PLOTTED => 02-DEC-2013 | TIME PLOTTED => 15:41

Dist	COUNTY	ROUTE	POST MILES TOTAL PROJECT	SHEET No.	TOTAL SHEETS
02	Sha	5	R34.3/R36.8	37	72

Zidan M. Zhang 11-22-13
REGISTERED CIVIL ENGINEER DATE

11-22-13
PLANS APPROVAL DATE

REGISTERED PROFESSIONAL ENGINEER Z. M. ZHANG No. C69054 Exp. 6-30-14 CIVIL STATE OF CALIFORNIA

THE STATE OF CALIFORNIA OR ITS OFFICERS OR AGENTS SHALL NOT BE RESPONSIBLE FOR THE ACCURACY OR COMPLETENESS OF SCANNED COPIES OF THIS PLAN SHEET.

NOTES:

1. RAMP CLOSED PCMS: MOVE PRE-NOTIFICATION PCMS APPROXIMATELY 1000' BEFORE RAMP AND ACTIVATE DURING RAMP CLOSURE.

EXIT 698 CLOSED	FOLLOW DETOUR
FRAME 1	FRAME 2

2. PRE-NOTIFICATION PCMS: PLACE NEAR RAMP AND ACTIVATE APPROXIMATELY 12 HOURS PRIOR TO RAMP CLOSURE.

EXIT WILL BE CLOSED	TODAY (OR TONIGHT) 0 PM - 0 AM
FRAME 1	FRAME 2

3. PLACE 7 DAYS PRIOR TO RAMP CLOSURE.
4. CALIFORNIA SIGN CODES ARE DESIGNATED BY (CA), OTHERWISE, FEDERAL MUTCD SIGN CODES ARE SHOWN.
5. EXACT SIGN LOCATIONS TO BE DETERMINED BY THE ENGINEER.
6. EXISTING UTILITY FACILITIES ARE NOT SHOWN ON THESE PLAN.

CONSTRUCTION AREA SIGNS

SIGN No.	CODE	PANEL SIZE (INCH)	REMARKS	No. OF SIGNS	NUMBER AND SIZE POSTS
A	SC3(CA) SP1	48 x 18 24 x 30	↑ "DETOUR" "EXIT 698"	2	1 - 4" X 6"
B	M4-10 R SP1	48 x 18 24 x 30	"DETOUR" → "EXIT 698"	2	1 - 4" X 6"
C	M4-10 L SP1	48 x 18 24 x 30	← "DETOUR" "EXIT 698"	4	1 - 4" X 6"
D	M4-8A	24 x 18	"END DETOUR"	2	1 - 4" X 4"
E	SC6-4(CA)	48 x 60	"RAMP CLOSED" DATE TIME	1	1 - 4" X 6"

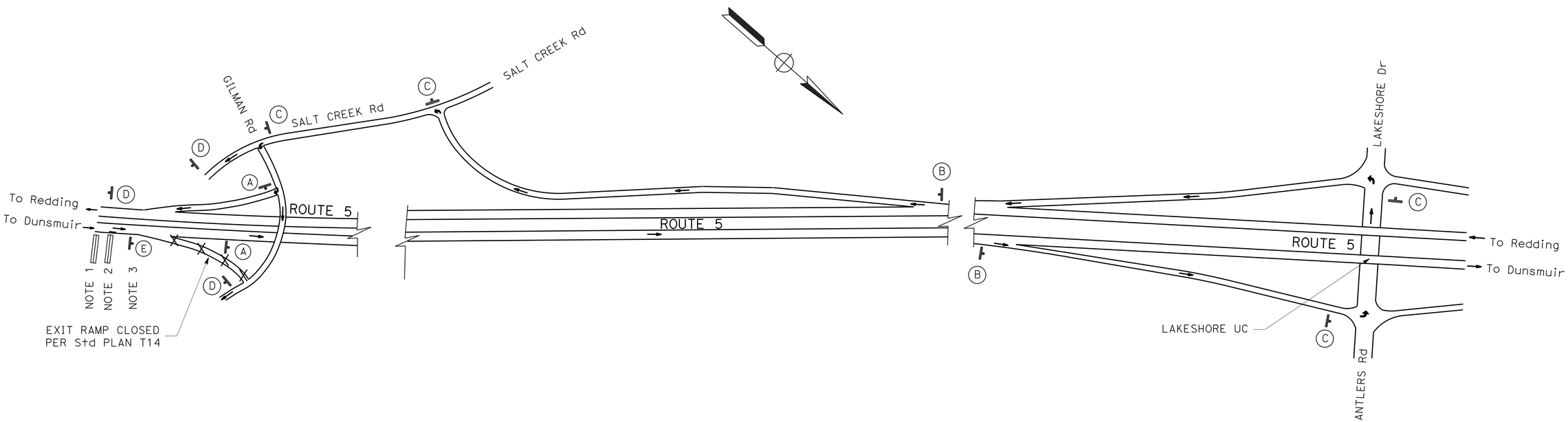

DETOUR FOR CLOSURE OF NB ROUTE 5 EXIT RAMP TO GILMAN ROAD

APPROVED FOR DETOUR WORK ONLY

DETOUR PLAN
NO SCALE

DE-1

REVISED BY | DATE REVISED
JEFF CARSON | ZIDAN ZHANG
CALCULATED-DESIGNED BY | CHECKED BY
FUNCTIONAL SUPERVISOR
AL TRUJILLO

STATE OF CALIFORNIA - DEPARTMENT OF TRANSPORTATION
Caltrans
DESIGN

P:\proj1\02\4F450_plans\pse\24f450mg001.dgn

LAST REVISION 11-22-13 | DATE PLOTTED => 02-DEC-2013 | TIME PLOTTED => 15:41

Dist	COUNTY	ROUTE	POST MILES TOTAL PROJECT	SHEET No.	TOTAL SHEETS
02	Sha	5	R34.3/R36.8	38	72

Zidan M. Zhang 11-22-13
REGISTERED CIVIL ENGINEER DATE

11-22-13
PLANS APPROVAL DATE

REGISTERED PROFESSIONAL ENGINEER Z. M. ZHANG No. C69054 Exp. 6-30-14 CIVIL STATE OF CALIFORNIA

THE STATE OF CALIFORNIA OR ITS OFFICERS OR AGENTS SHALL NOT BE RESPONSIBLE FOR THE ACCURACY OR COMPLETENESS OF SCANNED COPIES OF THIS PLAN SHEET.

LEGEND:

- SINGLE STRIPE MARKER
- STRIPE CHANGE LOCATION
- 1-2 ROADSIDE SIGN
- 1-2 PAVEMENT DELINEATION STRIPE DETAIL No.
- REMOVE ROADSIDE SIGN
- RESET ROADSIDE SIGN
- NEW ROADSIDE SIGN (ONE POST)
- NEW ROADSIDE SIGN (TWO POST)
- EXISTING ROADSIDE SIGN (ONE POST)
- EXISTING ROADSIDE SIGN (TWO POST)
- EXISTING SIGN TO REMAIN
- MILEPOST MARKER
- DELINEATOR (TYPE F-2)
- DELINEATOR (TYPE G-2)
- CONCRETE BARRIER MAKER
- C MARKER (CULVERT)
- REMOVE MARKER
- REMOVE DELINEATOR
- CHANNELIZER (SURFACE MOUNTED)
- TYPE V ARROW

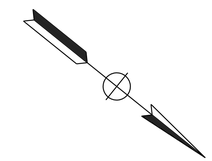

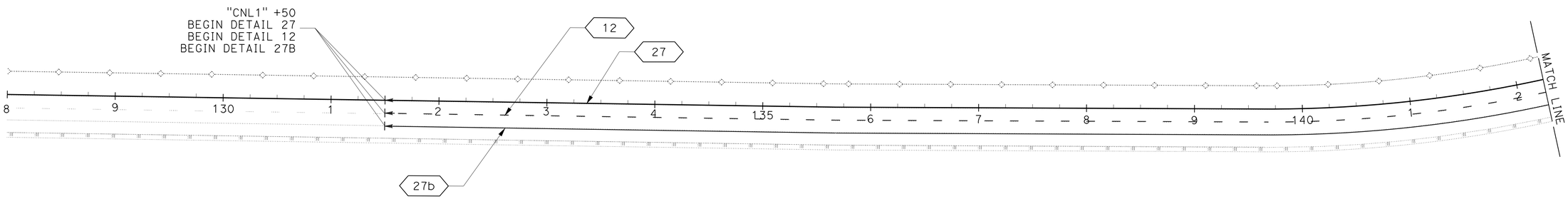

PAVEMENT DELINEATION AND SIGN PLAN

SCALE: 1" = 50'

PD-1

APPROVED FOR PAVEMENT DELINEATION AND SIGN WORK ONLY

REVISED BY | DATE REVISED
JEFF CARSON | ZIDAN ZHANG
CALCULATED-DESIGNED BY | CHECKED BY
FUNCTIONAL SUPERVISOR: AL TRUJILLO

STATE OF CALIFORNIA - DEPARTMENT OF TRANSPORTATION
Caltrans
DESIGN

P:\proj1\02\4F450_plans\pse\24f450na001.dgn

LAST REVISION 11-22-13 | DATE PLOTTED => 02-DEC-2013 | TIME PLOTTED => 15:41

Dist	COUNTY	ROUTE	POST MILES TOTAL PROJECT	SHEET No.	TOTAL SHEETS
02	Sha	5	R34.3/R36.8	39	72

Zidan M. Zhang 11-22-13
REGISTERED CIVIL ENGINEER DATE

11-22-13
PLANS APPROVAL DATE

REGISTERED PROFESSIONAL ENGINEER
Z. M. ZHANG
No. C69054
Exp. 6-30-14
CIVIL
STATE OF CALIFORNIA

THE STATE OF CALIFORNIA OR ITS OFFICERS OR AGENTS SHALL NOT BE RESPONSIBLE FOR THE ACCURACY OR COMPLETENESS OF SCANNED COPIES OF THIS PLAN SHEET.

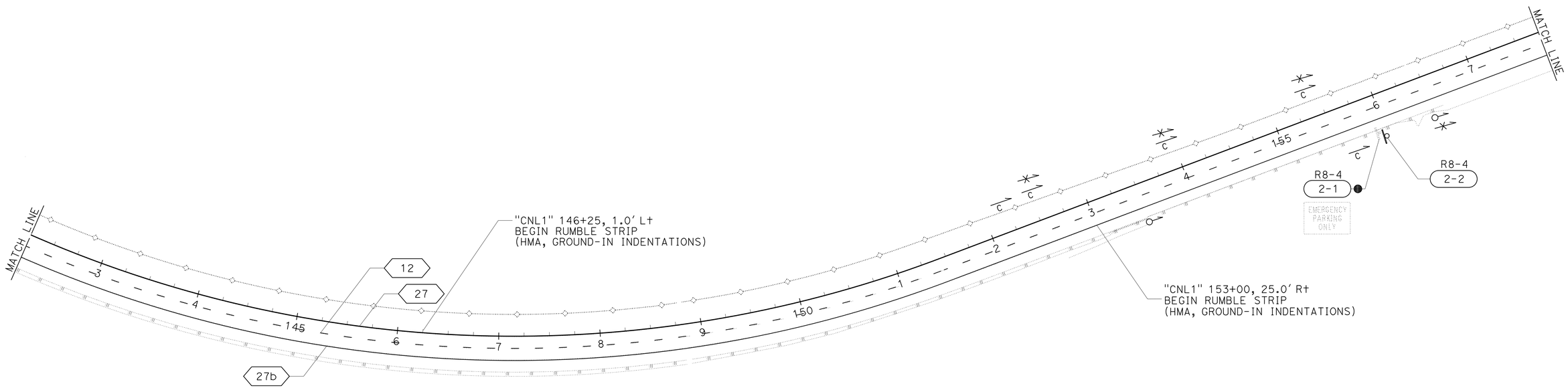

PAVEMENT DELINEATION AND SIGN PLAN

SCALE: 1" = 50'

PD-2

APPROVED FOR PAVEMENT DELINEATION AND SIGN WORK ONLY

CALCULATED-DESIGNED BY	JEFF CARSON	REVISED BY
CHECKED BY	ZIDAN ZHANG	DATE REVISED

FUNCTIONAL SUPERVISOR: AL TRUJILLO

STATE OF CALIFORNIA - DEPARTMENT OF TRANSPORTATION
Caltrans
DESIGN

P:\proj1\02\4F450_plans\pse\24f450na002.dgn

LAST REVISION 11-22-13 | DATE PLOTTED => 02-DEC-2013 | TIME PLOTTED => 15:41

Dist	COUNTY	ROUTE	POST MILES TOTAL PROJECT	SHEET No.	TOTAL SHEETS
02	Sha	5	R34.3/R36.8	40	72

Zidan M. Zhang 11-22-13
REGISTERED CIVIL ENGINEER DATE

11-22-13
PLANS APPROVAL DATE

REGISTERED PROFESSIONAL ENGINEER Z. M. ZHANG No. C69054 Exp. 6-30-14 CIVIL STATE OF CALIFORNIA

THE STATE OF CALIFORNIA OR ITS OFFICERS OR AGENTS SHALL NOT BE RESPONSIBLE FOR THE ACCURACY OR COMPLETENESS OF SCANNED COPIES OF THIS PLAN SHEET.

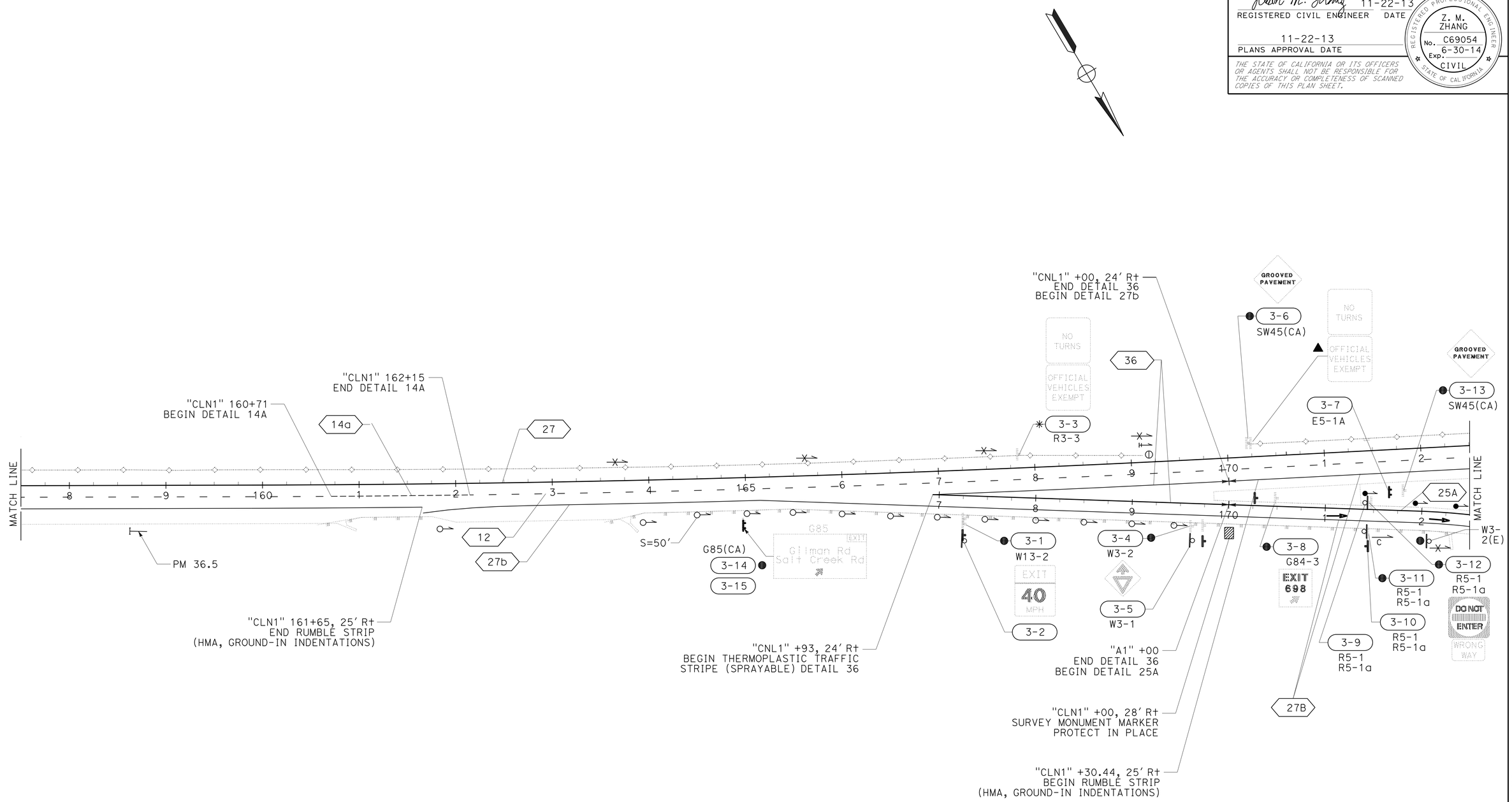

PAVEMENT DELINEATION AND SIGN PLAN

SCALE: 1" = 50'

PD-3

APPROVED FOR PAVEMENT DELINEATION AND SIGN WORK ONLY

CALCULATED-DESIGNED BY	CHECKED BY	REVISED BY	DATE REVISED
JEFF CARSON	ZIDAN ZHANG		

FUNCTIONAL SUPERVISOR: AL TRUJILLO

STATE OF CALIFORNIA - DEPARTMENT OF TRANSPORTATION
Caltrans
DESIGN

P:\proj1\02\4F450_plans\pse\24f450na003.dgn

LAST REVISION 11-22-13
DATE PLOTTED => 02-DEC-2013
TIME PLOTTED => 15:41

Dist	COUNTY	ROUTE	POST MILES TOTAL PROJECT	SHEET No.	TOTAL SHEETS
02	Sha	5	R34.3/R36.8	41	72

Zidan M. Zhang 11-22-13
REGISTERED CIVIL ENGINEER DATE

11-22-13
PLANS APPROVAL DATE

REGISTERED PROFESSIONAL ENGINEER Z. M. ZHANG No. C69054 Exp. 6-30-14 CIVIL STATE OF CALIFORNIA

THE STATE OF CALIFORNIA OR ITS OFFICERS OR AGENTS SHALL NOT BE RESPONSIBLE FOR THE ACCURACY OR COMPLETENESS OF SCANNED COPIES OF THIS PLAN SHEET.

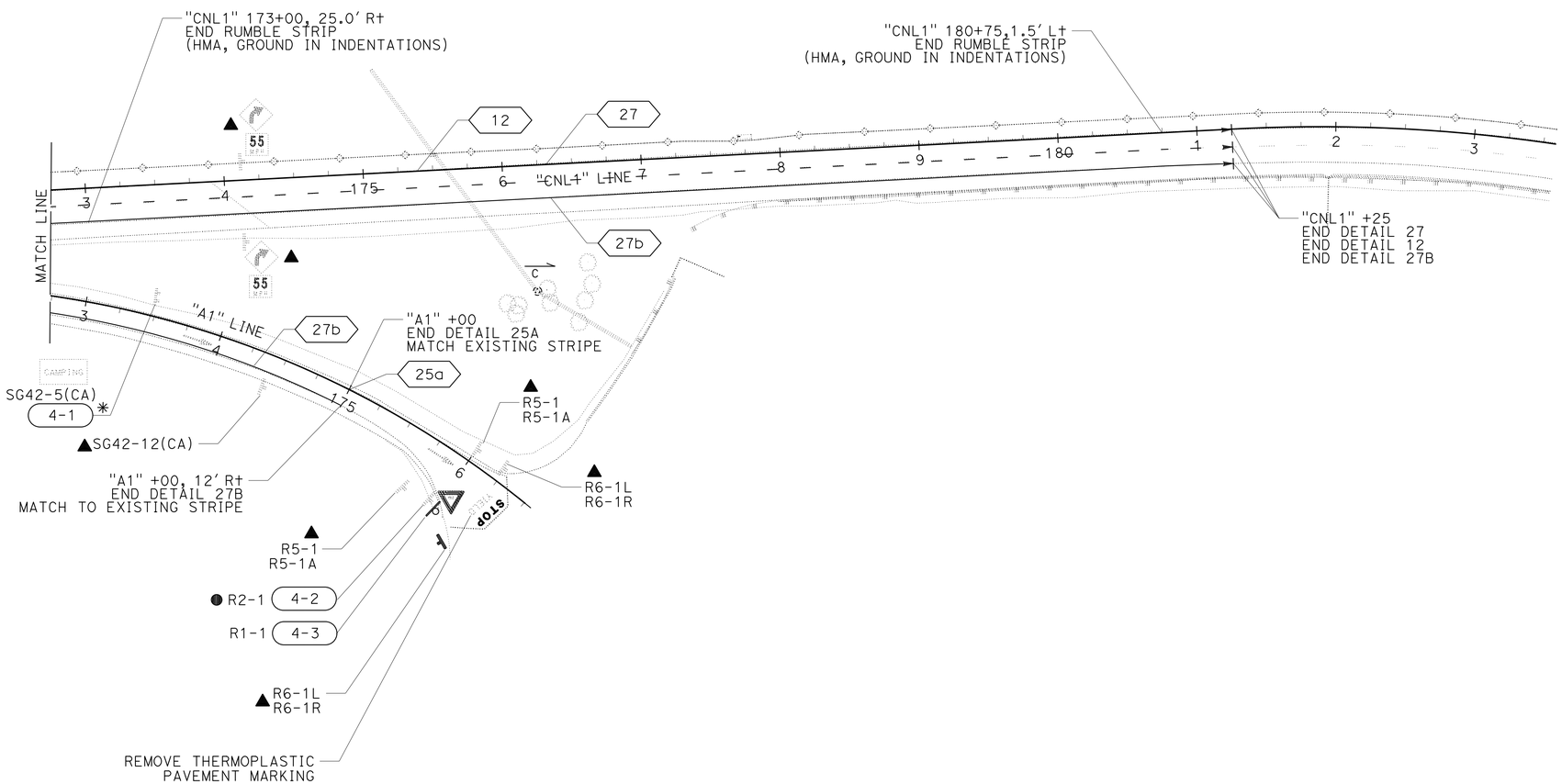

APPROVED FOR STAGE CONSTRUCTION WORK ONLY

PAVEMENT DELINEATION AND SIGN PLAN

SCALE: 1" = 50'

PD-4

REVISED BY	DATE REVISED

CALCULATED-DESIGNED BY	CHECKED BY
JEFF CARSON	ZIDAN ZHANG

FUNCTIONAL SUPERVISOR: AL TRUJILLO

STATE OF CALIFORNIA - DEPARTMENT OF TRANSPORTATION
Caltrans® **DESIGN**

P:\proj1\02\4F450_plans\pse\24f450na004.dgn

LAST REVISION 11-22-13 | DATE PLOTTED => 02-DEC-2013 | TIME PLOTTED => 15:41

Dist	COUNTY	ROUTE	POST MILES TOTAL PROJECT	SHEET No.	TOTAL SHEETS
02	Sha	5	R34.3/R36.8	42	72

Zidan M. Zhang 11-22-13
REGISTERED CIVIL ENGINEER DATE

11-22-13
PLANS APPROVAL DATE

REGISTERED PROFESSIONAL ENGINEER Z. M. ZHANG No. C69054 Exp. 6-30-14 CIVIL STATE OF CALIFORNIA

THE STATE OF CALIFORNIA OR ITS OFFICERS OR AGENTS SHALL NOT BE RESPONSIBLE FOR THE ACCURACY OR COMPLETENESS OF SCANNED COPIES OF THIS PLAN SHEET.

NOTE:

1. (N) - NOT A SEPARATE PAY ITEM, FOR INFORMATION ONLY

CONCRETE BARRIER MARKER (N)

STATION	EA
"CNL1" 169+12	1

REMOVE BARRIER MARKER (N)

STATION	EA
"CNL1" 169+12	1

CULVERT MARKERS

LOCATION	MARKER (CULVERT)	CULVERT MARKER (BARRIER MOUNTED)	REMOVE MARKER	PM
	EA	EA	EA	
"CNL1" 152+25		1		R36.67
"CNL1" 152+45		1	1	R36.67
"CNL1" 153+93		1	1	R36.40
"CNL1" 155+38		1	1	R36.42
"CNL1" 155+70	1			R36.43
"CNL1" 163+64			1	R36.59
"CNL1" 165+60			1	R36.62
"CNL1" 167+56			1	R36.66
"A1" 171+55	1			R36.73
"DFL1" 176+23	1			R36.81
TOTAL	3	4	6*	

* EXISTING CULVERT MARKERS ARE BARRIER MOUNTED.

THERMOPLASTIC PAVEMENT MARKING

DESCRIPTION STATION	PAVEMENT MARKING		REMOVE PAVEMENT MARKING	REMARKS
	EA (N)	SQFT	SQFT	
"A1" 171+25	1	33		TYPE V ARROW
"A1" 172+25	1	33		
"A1" 176+34			24	YIELD
"A1" 176+34	1	22		STOP
TOTAL	3	88	24	

RUMBLE STRIP

STATION	(N) RUMBLE STRIP	RUMBLE STRIP
	LF	STA
"CNL1" 146+25 TO 180+75 L+	3450	34.5
"CNL1" 153+00 TO 161+65 R+	865	8.7
"CNL1" 170+30 TO 173+00 R+	270	2.7
TOTAL	4585	45.9

PAVEMENT DELINEATION

STATION	THERMOPLASTIC TRAFFIC STRIPE (SPRAYABLE)						PAVEMENT MARKER (RETROREFLECTIVE - RECESSED)		
	DETAIL 12	DETAIL 14A	DETAIL 25A	DETAIL 27	DETAIL 27B	DETAIL 36	TYPE C	TYPE G	TYPE H
	LF	LF	LF	LF	LF	LF	EA	EA	EA
"CNL1" 131+50 TO 161+65					3015				
"CNL1" 131+50 TO 181+25				4975					105
"CNL1" 131+50 TO 160+71	2921							105	
"CNL1" 162+15 TO 181+25	1910								
"CNL1" 160+71 TO 162+15		144					4		
"CNL1" 161+65 TO 170+00					835				
"CNL1" 166+93 TO 170+00						614		28	
"A1" 170+00 TO 175+00			500		500				22
"CNL1" 170+00 TO 181+25					1125				
SUBTOTAL	4831	144	500	4975	5475	614	4	133	127
TOTAL	16,539						264		

MARKERS AND DELINEATORS

SHEET No.	MILEPOST MARKER	CHANNELIZER (SURFACE MOUNTED)	REMOVE MARKER	DELINEATOR (CLASS 2)		(N) POST MILE
				TYPE F	TYPE G	
	EA	EA	EA	EA	EA	
PD-2			1	1		
PD-3	1	1	1	13	3	R36.5
CULVERT MARKER			6			
SUBTOTAL				14	3	
TOTAL	1	1	8	18		

PAVEMENT DELINEATION AND SIGN QUANTITIES

PDQ-1

REVISED BY | DATE REVISED
JEFF CARSON | ZIDAN ZHANG
CALCULATED-DESIGNED BY | CHECKED BY
FUNCTIONAL SUPERVISOR
AL TRUJILLO
STATE OF CALIFORNIA - DEPARTMENT OF TRANSPORTATION
Caltrans
DESIGN

P:\proj1\02\4F450_plans\pse\24f450nc001.dgn

LAST REVISION 11-22-13 | DATE PLOTTED => 02-DEC-2013 | TIME PLOTTED => 15:41

Dist	COUNTY	ROUTE	POST MILES TOTAL PROJECT	SHEET No.	TOTAL SHEETS
02	Sha	5	R34.3/R36.8	43	72

Zidan M. Zhang 11-22-13
REGISTERED CIVIL ENGINEER DATE

11-22-13
PLANS APPROVAL DATE

REGISTERED PROFESSIONAL ENGINEER Z. M. ZHANG No. C69054 Exp. 6-30-14 CIVIL STATE OF CALIFORNIA

THE STATE OF CALIFORNIA OR ITS OFFICERS OR AGENTS SHALL NOT BE RESPONSIBLE FOR THE ACCURACY OR COMPLETENESS OF SCANNED COPIES OF THIS PLAN SHEET.

MATERIAL SUMMARY CONTRACTOR FURNISHED SIGNS

SIGN No.	SIGN CODE	SIGN SIZE (L x D)	SINGLE FACED	PREMIUM GRAFFITI FILM	BACKGROUND		LEGEND		DESCRIPTION (REMARKS)
					SHEETING COLOR	RETROREFLECTIVE ASTM TYPE	SHEETING COLOR	RETROREFLECTIVE ASTM TYPE	
2-2	R8-4	48" x 36"	x		WHITE	III	BLACK	II	EMERGENCY PARKING ONLY
3-2	W13-2	48" x 60"	x		YELLOW	III	BLACK	II	EXIT 40 MPH
3-5	W3-1	48" x 48"	x		YELLOW	III	BLACK	II	YIELD
3-7	E5-1A	78" x 60"	x	x	GREEN	III	WHITE	III	EXIT 688
3-9	R5-1 R5-1a	36" x 24" 36" x 36"	x		RED	III	WHITE	III	WRONG WAY DO NOT ENTER
3-10	R5-1 R5-1a	36" x 24" 36" x 36"	x		RED	III	WHITE	III	WRONG WAY DO NOT ENTER
3-15	G85(CA)	180" x 108"	x	x	GREEN	III	WHITE	III	GILMAN RD/SALT CREEK RD

ROADSIDE SIGNS

SHEET No.	SIGN No.	SIGN CODE	PANEL SIZE (in x in)	FURNISH LAMINATED SIGN PANEL (2)/2", TYPE B)	FURNISH SINGLE SHEET ALUMINUM SIGN (0.080"-UNFRAMED)	POST SIZE & LENGTH METAL POST 2.5" x 2.5" (N)	WOOD POST, 4" x 6" (N)	LAMINATED WOOD BOX POST (TYPE L) (N)	ROADSIDE SIGN (ONE POST)	ROADSIDE SIGN (TWO POST)	INSTALL ROADSIDE SIGN LAMINATED WOOD BOX POST	REMOVE ROADSIDE SIGN	RESET ROADSIDE SIGN	SIGN PANEL DESCRIPTION
				SQFT	SQFT	LF	LF	LF	EA	EA	EA	EA	EA	
PD-2	2-1	R8-4										1		EMERGENCY PARKING ONLY
	2-2	R8-4	48" x 36"		12	10			1					EMERGENCY PARKING ONLY
PD-3	3-1	W13-2										1		EXIT 40 MPH
	3-2	W13-2	48" x 60"		20	10			1					EXIT 40 MPH
	3-3	R3-3											1	NO TURNS
	3-4	W3-2										1		YIELD AHEAD
	3-5	W3-1	48" x 48"		16	10			1					STOP AHEAD
	3-6	SW45										1		GROOVED PAVEMENT
	3-7	E5-1A	90" x 60"		37.5		17.18			1				EXIT 688
	3-8	G84-3										1		EXIT 688
	3-9	R5-1	36" x 24"		6	10			1					WRONG WAY
		R5-1a	36" x 36"		9									DO NOT ENTER
	3-10	R5-1	36" x 24"		6	10			1					WRONG WAY
		R5-1a	36" x 36"		9									DO NOT ENTER
	3-11	R5-1 R5-1a										1		WRONG WAY DO NOT ENTER
	3-12	R5-1 R5-1a										1		WRONG WAY DO NOT ENTER
	3-13	SW45										1		GROOVED PAVEMENT
	3-14	G85(CA)										1		GILMAN RD/SALT CREEK RD
	3-15	G85(CA)	180" x 108"	135				25,30			1			GILMAN RD/SALT CREEK RD
PD-4	4-1	SG42-5(CA)				10,10							1	CAMPING
	4-2	R2-1										1		YIELD
	4-3	R1-1	30"			11			1					STOP
TOTAL				135	115.50				6	1	1	10	2	

PAVEMENT DELINEATION AND SIGN QUANTITIES

PDQ-2

REVISED BY	DATE REVISED

CALCULATED-DESIGNED BY	JEFF CARSON
CHECKED BY	ZIDAN ZHANG
FUNCTIONAL SUPERVISOR	AL TRUJILLO

STATE OF CALIFORNIA - DEPARTMENT OF TRANSPORTATION
Caltrans
DESIGN

P:\proj1\02\4F450_plans\pse\24f450nc002.dgn

LAST REVISION 11-22-13 | DATE PLOTTED => 02-DEC-2013 | TIME PLOTTED => 15:41

Dist	COUNTY	ROUTE	POST MILES TOTAL PROJECT	SHEET No.	TOTAL SHEETS
02	Sha	5	R34.3/R36.8	44	72

Zidan M. Zhang 11-22-13
REGISTERED CIVIL ENGINEER DATE

11-22-13
PLANS APPROVAL DATE

REGISTERED PROFESSIONAL ENGINEER Z. M. ZHANG No. C69054 Exp. 6-30-14 CIVIL STATE OF CALIFORNIA

THE STATE OF CALIFORNIA OR ITS OFFICERS OR AGENTS SHALL NOT BE RESPONSIBLE FOR THE ACCURACY OR COMPLETENESS OF SCANNED COPIES OF THIS PLAN SHEET.

NOTES:

1. USE A 2¼" Sq TUBE x 30" LONG, 3/16" THICK ANCHOR FOR 2" POSTS.
   USE A 3" Sq TUBE x 3' LONG, 3/16" THICK ANCHOR FOR 2-1/2 " POSTS.
2. USE A 5/16" CORNER BOLT OR TWO DRIVE RIVETS TO FASTEN ASSEMBLED SIGN AND POST INTO ANCHOR. INSTALL CORNER BOLT OR DRIVE RIVETS INTO THE SIDES FACING TRAFFIC.
3. REMOVE EXISTING AC OR PCC, DRIVE ANCHOR SLEEVE INTO SOIL AND RECAP WITH LIKE MATERIAL, MATCHING EXISTING THICKNESS.
4. 2" POSTS ARE TO BE 1/8" THICK, PERFORATIONS OF 7/16" IN DIAMETER ARE 1" ON CENTER ON ALL SIDES, LENGTHS ARE 10' AND 12'.
5. 2-1/2" POSTS ARE TO BE 1/8" THICK, PERFORATIONS OF 7/16" IN DIAMETER ARE 1" ON CENTER ON ALL SIDES, 2-1/2" POSTS ARE 12' AND 14' IN LENGTH.
6. FOR DETAILS NOT SHOWN, REFER TO THE STANDARD PLANS.
7. 2-1/2" POSTS SHALL BE USED IN SIDEWALK AND HIGH PEDESTRIAN USE PLACEMENTS.
8. ALL ANCHOR SLEEVES SHALL BE EMBEDDED IN PCC, EXCEPT FOR INSTALLATIONS IN PAVEMENTS OR SIDEWALKS.

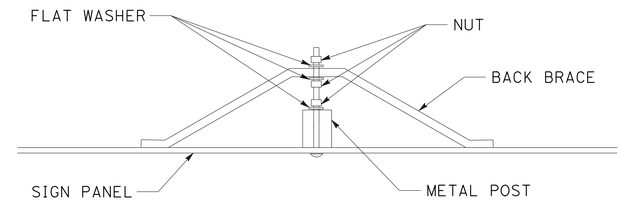

BACK BRACE MOUNTING DETAIL

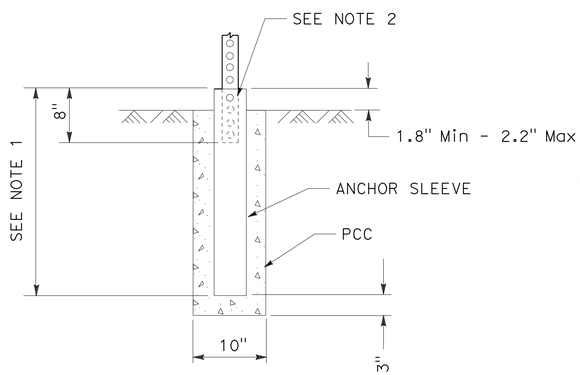

INSTALLATION IN SOIL (PCC)
(SEE NOTE 8)

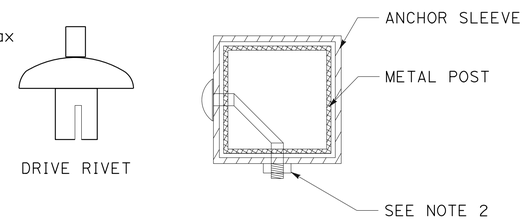

FASTENER DETAILS

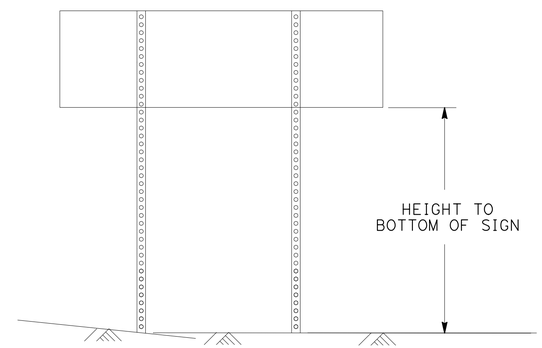

TWO POSTS INSTALLATION
(POST SIZE, SEE CHART BELOW)

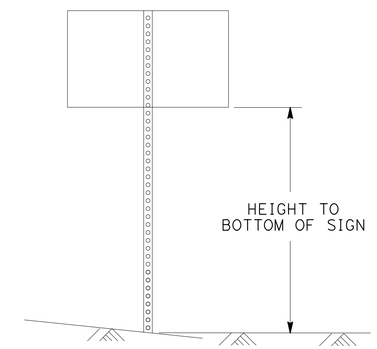

SINGLE POST INSTALLATION
(POST SIZE, SEE CHART BELOW)

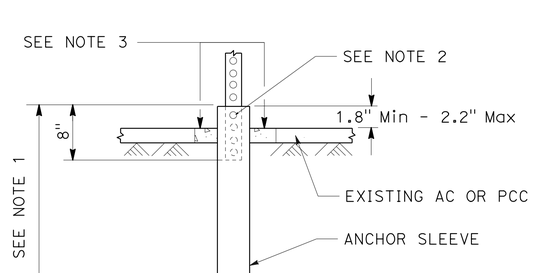

INSTALLATION IN EXISTING AC OR PCC

Max Sq Ft OF SIGN

POST SIZE	60"	72"	84"	96"	108"	120"
2"	18	16	14	12	10	8
2.5"	35	32	28	24	21	21

HEIGHT TO BOTTOM OF SIGN
DOUBLE POST GROUND SIGNS
70 MPH WIND SPEED

Max Sq Ft OF SIGN

POST SIZE	60"	72"	84"	96"	108"	120"
2"	10.5	10	8.7	7.4	6.2	5
2.5"	16	16	16	16	12	12

HEIGHT TO BOTTOM OF SIGN
SINGLE POST GROUND SIGNS
70 MPH WIND SPEED

METAL SIGN POST DETAIL

METAL SIGN POST INSTALLATION DETAILS

SIGN DETAILS
NO SCALE
SD-1

REVISED BY | DATE REVISED
JEFF CARSON | ZIDAN ZHANG
CALCULATED-DESIGNED BY | CHECKED BY
FUNCTIONAL SUPERVISOR
AL TRUJILLO

STATE OF CALIFORNIA - DEPARTMENT OF TRANSPORTATION
Caltrans
DESIGN

P:\proj1\02\4F450_plans\pse\24f450ob001.dgn

LAST REVISION 11-22-13 | DATE PLOTTED => 02-DEC-2013 | TIME PLOTTED => 15:41

Dist	COUNTY	ROUTE	POST MILES TOTAL PROJECT	SHEET No.	TOTAL SHEETS
02	Sha	5	R34.3/R36.8	45	72

Zidan M. Zhang 11-22-13
REGISTERED CIVIL ENGINEER DATE

11-22-13
PLANS APPROVAL DATE

REGISTERED PROFESSIONAL ENGINEER Z. M. ZHANG No. C69054 Exp. 6-30-14 CIVIL STATE OF CALIFORNIA

THE STATE OF CALIFORNIA OR ITS OFFICERS OR AGENTS SHALL NOT BE RESPONSIBLE FOR THE ACCURACY OR COMPLETENESS OF SCANNED COPIES OF THIS PLAN SHEET.

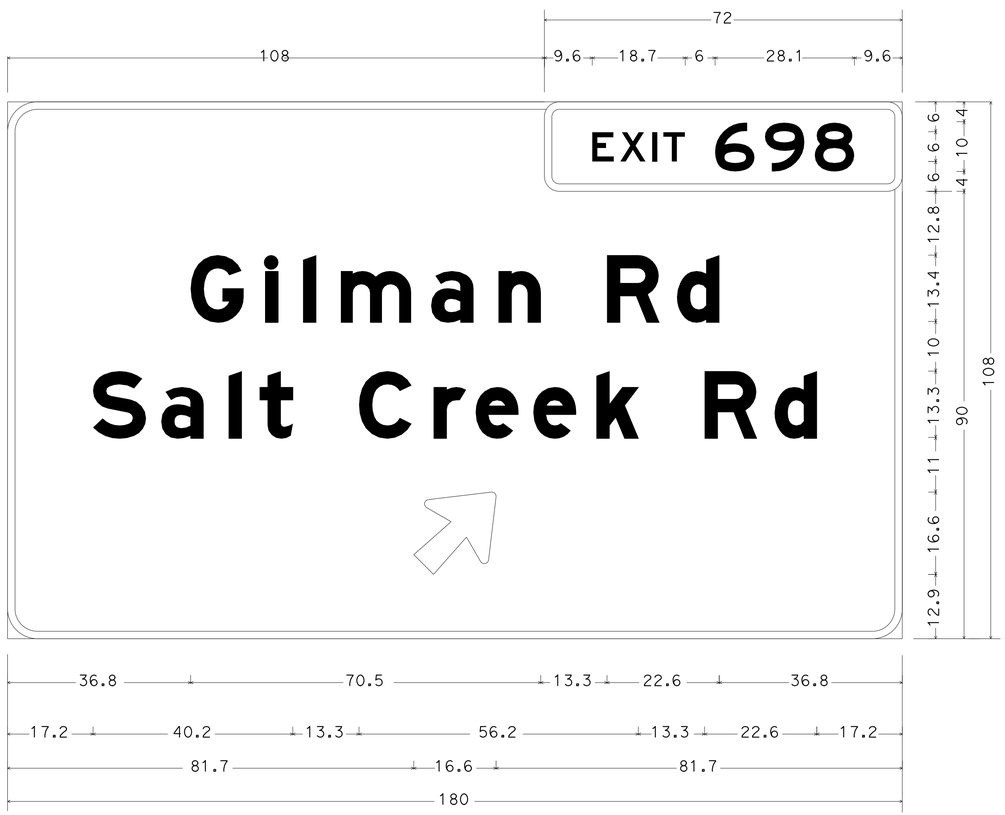

6.0" RADIUS, 1.5" BORDER, WHITE ON GREEN;
3.0" RADIUS, 1.5" BORDER, WHITE ON GREEN;
[EXIT] E; [698] E;
6.0" RADIUS, 1.5" BORDER, WHITE ON GREEN;
[GILMAN RD] E MOD; [SALT CREEK RD] E MOD; ARROW 13.33UC-1L - 20.3" 45{;

3-15
G85(CA)

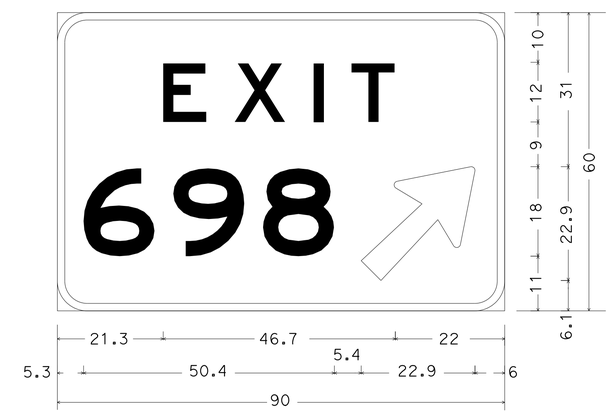

6.0" RADIUS, 1.5" BORDER, WHITE ON GREEN;
[EXIT] E 225} SPACING; [698] E; ARROW CUSTOM - 29.3" 45{;

3-7
E5-1A

SIGN DETAILS

NO SCALE

SD-2

REVISED BY | DATE REVISED
JEFF CARSON | ZIDAN ZHANG
CALCULATED-DESIGNED BY | CHECKED BY
FUNCTIONAL SUPERVISOR
AL TRUJILLO

STATE OF CALIFORNIA - DEPARTMENT OF TRANSPORTATION
Caltrans
DESIGN

P:\proj1\02\4F450_plans\pse\24f450ob002.dgn

LAST REVISION | DATE PLOTTED => 02-DEC-2013
11-22-13 | TIME PLOTTED => 15:41

Dist	COUNTY	ROUTE	POST MILES TOTAL PROJECT	SHEET No.	TOTAL SHEETS
02	Sha	5	R34.3/R36.8	46	72

Zidan M. Zhang 11-22-13
REGISTERED CIVIL ENGINEER DATE

11-22-13
PLANS APPROVAL DATE

REGISTERED PROFESSIONAL ENGINEER Z. M. ZHANG No. C69054 Exp. 6-30-14 CIVIL STATE OF CALIFORNIA

THE STATE OF CALIFORNIA OR ITS OFFICERS OR AGENTS SHALL NOT BE RESPONSIBLE FOR THE ACCURACY OR COMPLETENESS OF SCANNED COPIES OF THIS PLAN SHEET.

NOTE:

1. (N) - NOT A SEPARATE PAY ITEM, FOR INFORMATION ONLY

HOT MIX ASPHALT OVERSIDE DRAIN

SYSTEM & UNIT No.	STATION	PLACE HMA (Misc AREA)	HMA (TYPE A)
		SQYD	TON
2a	"CNL1" 156+25	15.5	5.6
3a	"CNL1" 160+75	15.0	5.4
4a	"CNL1" 163+75	16.0	5.8
6a	"A1" 172+25	6.5	2.3
TOTAL		53.0	19.1*

* QUANTITY INCLUDED IN ROADWAY QUANTITIES

TEMPORARY WATER POLLUTION CONTROL

	Temp DRAINAGE INLET PROTECTION	Temp CONSTRUCTION ENTRANCE	Temp GRAVEL BAG BERM
	EA	EA	LF
TOTAL	7	1	50

CONCRETE BARRIER

STATION	TYPE 60
	LF
"CNL1" 167+84 TO 169+12	128
TOTAL	128

METAL BEAM GUARDRAILING

STATION	RESET MBGR	RESET END ANCHOR ASSEMBLY (TYPE SFT)	(N) BURIED POST ANCHOR	(N) LAYOUT TYPE	VEGETATION CONTROL (MINOR CONRETE)
	LF	EA	EA	LF	CY
"CNL1" 153+50 TO 155+95	245	1		11C	6.6
"CNL1" 160+21 TO 161+77	156	1	1	11C	4.2
"CNL1" 163+53 TO 172+38	885	1	1	11C	23.9
TOTAL	1286	3	2		34.7

REMOVE MBGR RETAINING WALL

STATION	REMOVE RETAINING WALL
	LF
"A1" 167+73.6 TO 168+73.6	100.0
"A1" 169+05.5 TO 169+56.5	51.0
"A1" 169+71.5 TO 170+21.5	50.0
TOTAL	201.0

ROADWAY QUANTITIES

STATION	ROADWAY EXCAVATION	COLD PLANE ASPHALT CONCRETE PAVEMENT	SHOULDER BACKING	CLASS 2 AGGREGATE BASE	HOT MIX ASPHALT (TYPE A)	TACK COAT	PREPARE AND STAIN CONCRETE	MINOR CONCRETE (TEXTURED PAVING)	(N) EMBANKMENT
	CY	SQYD	TON	CY	TON	TON	SQFT	CY	CY
"CNL1" 153+50 TO 172+50	9167			3830.8	6,205.9				15
"A1" 169+83.6 TO 172+50	491			232.3	376.3				
"A1" 172+50 TO 176+00, L+	77.8		54.2	44.4	84				
FROM OVERSIDE DRAIN					19.1				
FROM HMA DIKE (TYPE A)					21.6	6.5			
FROM HMA DIKE (TYPE F)					16.3				
FROM STAGE 1		3063.9			730.4				
"CNL1" 153+00 TO 153+50		291.7			31.2				
"CNL1" 172+50 TO 173+00		258.3			27.9				
"A1" 172+50 TO 173+00		133.3			14.4				
"CNL1" 171+35.3 TO 172+50, 24' R+			13.4						
"CNL1" 169+83.6 TO 171+35.3, 34' R+	72.3			28.8			2,351.4	43.5	
TOTAL	9,808.1	3,747.2	67.6	4,136.2	7,527.1	6.5	2,351.4	43.5	15

PLACE HOT MIX ASPHALT DIKE

STATION	TYPE	
	A	F
	LF	LF
"CNL1" 153+50 TO 156+12		262
"CNL1" 156+12 TO 161+02	490	
"CNL1" 161+02 TO 161+75		73
"CNL1" 161+75 TO 163+95	220	
"CNL1" 163+95 TO 172+05		810
"CNL1" 172+05 TO 172+38	33	
TOTAL	743	1145

SUMMARY OF QUANTITIES
Q-1

REVISED BY | DATE REVISED
JEFF CARSON | ZIDAN ZHANG
CALCULATED-DESIGNED BY | CHECKED BY
FUNCTIONAL SUPERVISOR: AL TRUJILLO
STATE OF CALIFORNIA - DEPARTMENT OF TRANSPORTATION
Caltrans DESIGN
P:\proj1\02\4F450_plans\pse\24f450pa001.dgn

LAST REVISION 11-22-13 | DATE PLOTTED => 02-DEC-2013 | TIME PLOTTED => 15:41

Dist	COUNTY	ROUTE	POST MILES TOTAL PROJECT	SHEET No.	TOTAL SHEETS
02	Sha	5	R34.3/R36.8	47	72

LICENSED LANDSCAPE ARCHITECT

11-22-13
PLANS APPROVAL DATE

LICENSED LANDSCAPE ARCHITECT J. PATRICK SULLIVAN #3125 Signature 07/31/14 Renewal Date 11/22/13 Date STATE OF CALIFORNIA

THE STATE OF CALIFORNIA OR ITS OFFICERS OR AGENTS SHALL NOT BE RESPONSIBLE FOR THE ACCURACY OR COMPLETENESS OF SCANNED COPIES OF THIS PLAN SHEET.

NOTE:

1. FOR ACCURATE RIGHT OF WAY DATA, CONTACT RIGHT OF WAY ENGINEERING AT THE DISTRICT OFFICE.

LEGEND:

HYDROSEED

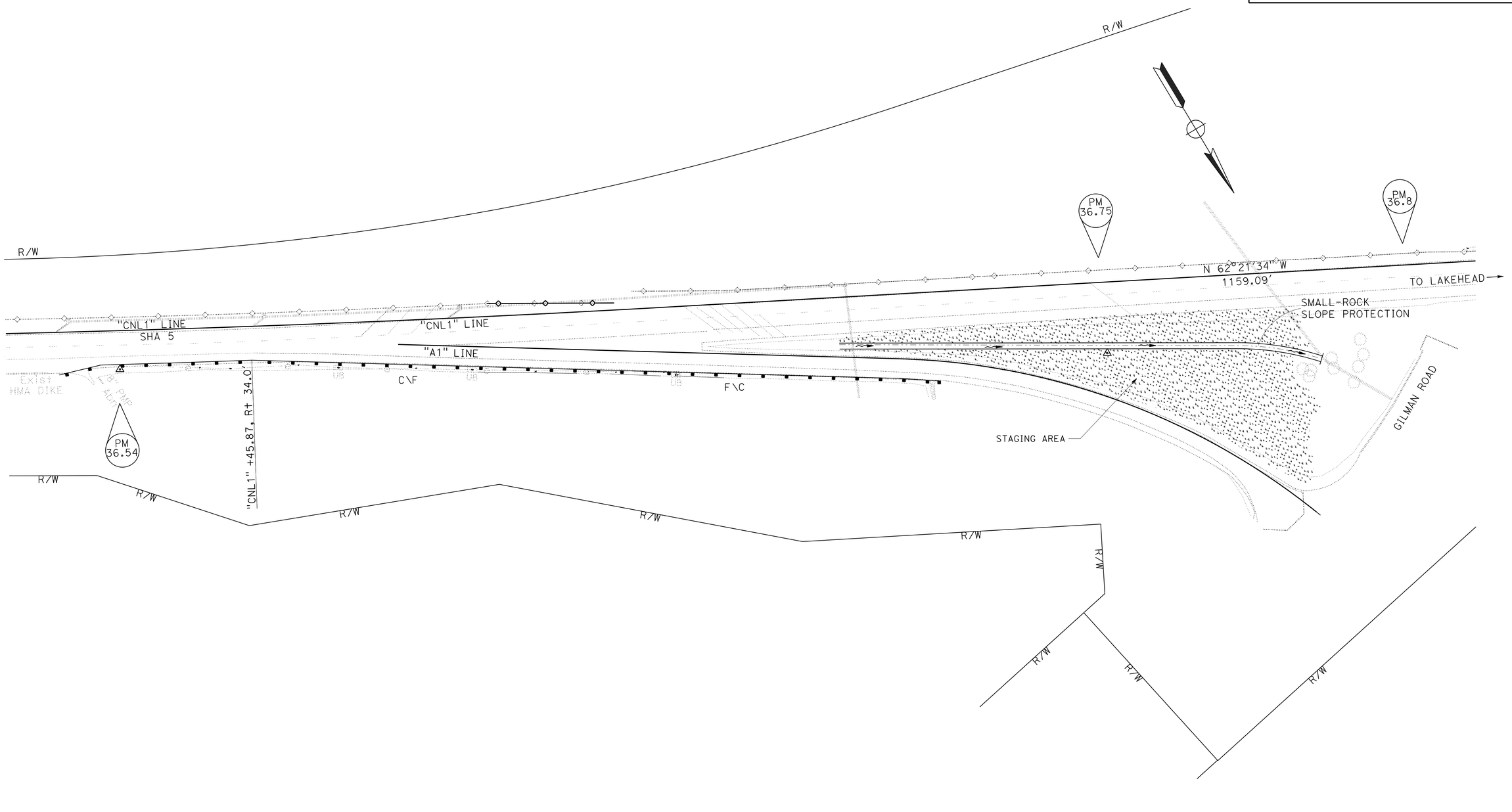

EROSION CONTROL PLAN

SCALE: 1" = 50'

EC-1

APPROVED FOR LANDSCAPE WORK ONLY

J. PATRICK SULLIVAN — REVISED BY
RON FLORY — DATE REVISED
CALCULATED-DESIGNED BY
CHECKED BY
SENIOR LANDSCAPE ARCHITECT
RON FLORY

STATE OF CALIFORNIA - DEPARTMENT OF TRANSPORTATION
Caltrans® LANDSCAPE ARCHITECTURE

P:\proj1\02\4F450_plans\pse\24f450te001.dgn

LAST REVISION 06-28-13 | DATE PLOTTED => 02-DEC-2013 | TIME PLOTTED => 15:41

Dist	COUNTY	ROUTE	POST MILES TOTAL PROJECT	SHEET No.	TOTAL SHEETS
02	Sha	5	R34.3/R36.8	48	72

LICENSED LANDSCAPE ARCHITECT

11-22-13
PLANS APPROVAL DATE

LICENSED LANDSCAPE ARCHITECT J. PATRICK SULLIVAN #3125 Signature 07/31/14 Renewal Date 11/22/13 Date STATE OF CALIFORNIA

THE STATE OF CALIFORNIA OR ITS OFFICERS OR AGENTS SHALL NOT BE RESPONSIBLE FOR THE ACCURACY OR COMPLETENESS OF SCANNED COPIES OF THIS PLAN SHEET.

NOTE:

1. (N) - NOT A SEPARATE PAY ITEM, FOR INFORMATION ONLY

HYDROSEED SEQUENCE/ APPLICATION RATES (N)

SEQUENCE	ITEM	MATERIAL DESCRIPTION	MATERIAL TYPE	APPLICATION RATE (N)
STEP 1	HYDROSEED APPLICATION	PURE LIVE SEED	MIX	102 LB/ACRE
		FIBER	ALTERNATE	2000 LB/ACRE
		SLOW RELEASE FERTLIZER	GRANULAR	100 LB/ACRE
STEP 2	HYDROSEED APPLICATION	COMPOST	RECYCLED WOOD PRODUCTS	1.2 CUYD/ACRE
		FIBER	ALTERNATE	1500 LB/ACRE
		TACKIFIER	PSYLLIUM	200 LB/ACRE

SEED MIX (N)

BOTANICAL NAME (COMMON NAME)	PERCENT GERMINATION (MINIMUM)	POUNDS PURE LIVE SEED PER ACRE (N) (SLOPE MEASUREMENT)
ACHILLEA MILLEFOLIUM (COMMON YARROW)	50	2
BROMUS CARINATUS (CALIFORNIA BROME)	60	25
FESTUCA IDAHOENSIS (WESTERN FESCUE)	80	25
HORDEUM VULGARE UC 937 (WESTERN BARLEY)	90	20
TRIFOLIUM HIRTIUM (ROSE CLOVER)	80	15
VULPIA MICROSTACHYS (THREE WEEKS FESCUE)	60	15
	TOTAL	102

HYDROSEED TOTALS

MATERIAL DESCRIPTION	MATERIAL TYPE	TOTALS	
PURE LIVE SEED	MIX	93.84 LBS (N)	HYDROSEED
FIBER	ALTERNATE	3220 LBS (N)	
SLOW RELEASE FERTLIZER	GRANULAR	92 LBS (N)	
COMPOST	RECYCLED WOOD PRODUCTS	1.10 CY (N)	
TACKIFIER	PSYLLIUM	184 LBS (N)	
FROM GORE AREA STA 171+80 TO 175+90 R†	SUB-TOTAL (SQFT)		32,670
FROM CUT AND FILL AREAS STA 153+50 TO 172+50 R†	SUB-TOTAL (SQFT)		6,970
FROM OVERSIDE DRAIN AREAS STA 171+80 TO 175+90 R†	SUB-TOTAL (SQFT)		436
TOTAL (SQFT)			40,075

EROSION CONTROL QUANTITIES

ECQ-1

REVISED BY | DATE REVISED
J. PATRICK SULLIVAN | RON FLORY
CALCULATED-DESIGNED BY | CHECKED BY
SENIOR LANDSCAPE ARCHITECT | RON FLORY

STATE OF CALIFORNIA - DEPARTMENT OF TRANSPORTATION
Caltrans® LANDSCAPE ARCHITECTURE

P:\proj1\02\4f450_plans\pse\24f450tg001.dgn

LAST REVISION 06-28-13 | DATE PLOTTED => 02-DEC-2013 | TIME PLOTTED => 15:41

Dist	COUNTY	ROUTE	POST MILES TOTAL PROJECT	SHEET No.	TOTAL SHEETS
2	Sha	5	R34.3/R36.8	49	72

ART 11-22-13
REGISTERED ELECTRICAL ENGINEER DATE

11-22-13
PLANS APPROVAL DATE

REGISTERED PROFESSIONAL ENGINEER A.P. ROBLES No. E15293 Exp. 3-31-15 ELECTRICAL STATE OF CALIFORNIA

THE STATE OF CALIFORNIA OR ITS OFFICERS OR AGENTS SHALL NOT BE RESPONSIBLE FOR THE ACCURACY OR COMPLETENESS OF SCANNED COPIES OF THIS PLAN SHEET.

NOTES (THIS SHEET):

1. Exist 1½"C, 2#8.
2. Exist 1½"C, 2#8. REMOVE 2#8. INSTALL 2#8, 1#G.
3. Exist PULL BOX IS BURIED. LOCATE AND REPLACE. DO NOT BURY NEW PULL BOX.
4. INSTALL DEPARTMENT-FURNISHED LIGHTING STANDARD.

LEGEND:

(PB) OBJECT MARKER (TYPE PB)

ABBREVIATIONS:

TCS TRAFFIC COUNT STATION

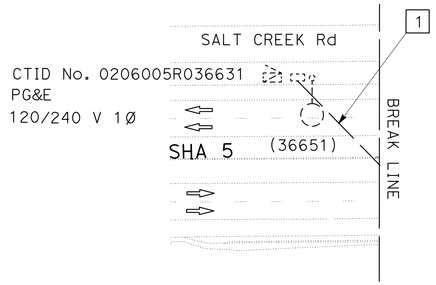

LOOP DETECTORS TO REMAIN IN PLACE AND OPERATIONAL (N)

ID No.	LOCATION	TYPE	DESCRIPTION	EQUIPMENT
R50	Sha-5-R36.678	RAMP	GILMAN Rd NB Off Ramp	1 LOOP

(N) NOT A SEPARATE PAY ITEM. FOR INFORMATION ONLY

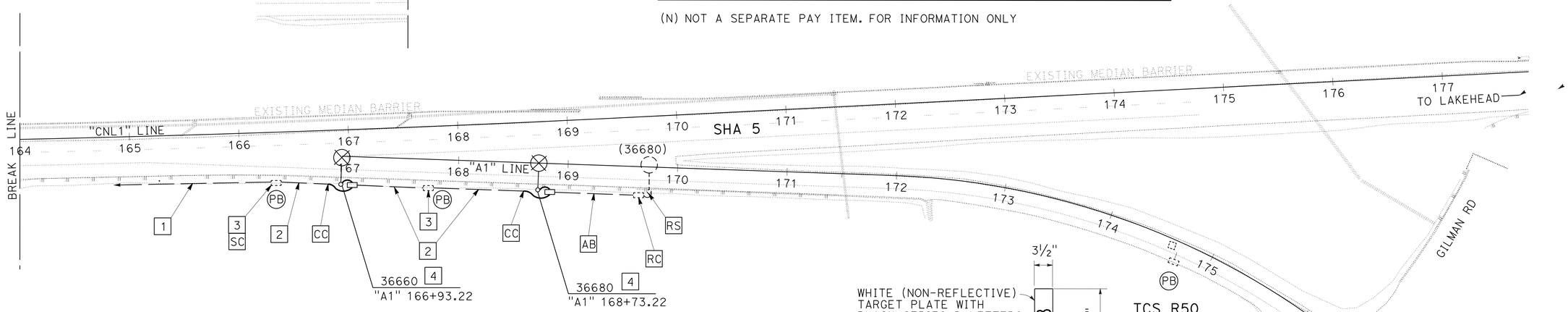

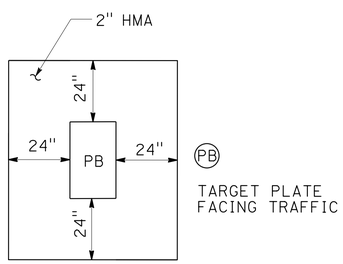

NOTE:
APPLIES TO ALL INSTALLATIONS IN UNPAVED AREAS

PULL BOX PAVING
NO SCALE

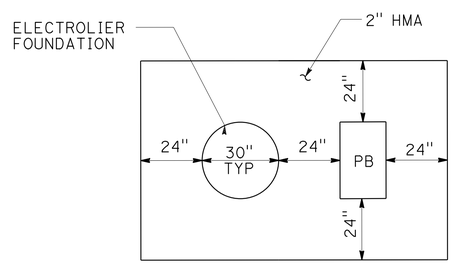

NOTE: APPLIES TO ALL INSTALLATIONS IN UNPAVED AREAS

PULL BOX AND ELECTROLIER PAVING
NO SCALE

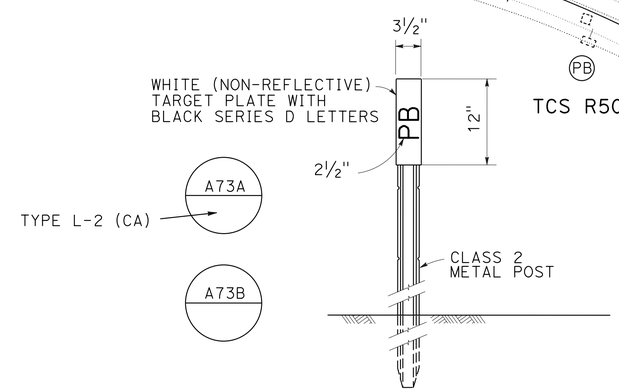

NOTE: MARKERS SHALL COMPLY WITH TYPE L-2 MODIFIED WITH A SNOW POLE BRACKET. PLACE MARKER 2" OUTSIDE PULL BOX PAVING ON SIDE AWAY FROM TRAFFIC. SEE PULL BOX PAVING DETAIL.

OBJECT MARKER (TYPE PB)
NO SCALE

LIGHTING

SCALE: 1" = 50′ **E-1**

APPROVED FOR ELECTRICAL WORK ONLY

REVISED BY | DATE REVISED
ARTURO ROBLES | JIM HANNIGAN
CALCULATED-DESIGNED BY | CHECKED BY
FUNCTIONAL SUPERVISOR: ROB STINGER

STATE OF CALIFORNIA - DEPARTMENT OF TRANSPORTATION
Caltrans® ELECTRICAL DESIGN

P:\proj1\02\4F450_plans\pse\24f450ua001.dgn

LAST REVISION 11-22-13 | DATE PLOTTED => 02-DEC-2013 | TIME PLOTTED => 15:41

Dist	COUNTY	ROUTE	POST MILES TOTAL PROJECT	SHEET No.	TOTAL SHEETS
2	Sha	5	R34.3/R36.8	50	72

ART 11-22-13
REGISTERED ELECTRICAL ENGINEER DATE

11-22-13
PLANS APPROVAL DATE

REGISTERED PROFESSIONAL ENGINEER A.P. ROBLES No. E15293 Exp. 3-31-15 ELECTRICAL STATE OF CALIFORNIA

THE STATE OF CALIFORNIA OR ITS OFFICERS OR AGENTS SHALL NOT BE RESPONSIBLE FOR THE ACCURACY OR COMPLETENESS OF SCANNED COPIES OF THIS PLAN SHEET.

MAINTAIN EXISTING TRAFFIC MANAGEMENT SYSTEM ELEMENTS DURING CONSTRUCTION

TYPE	LOCATION	DESCRIPTION
CMS	Sis-5-R36.10	BLACK OAK (FNBT) (SOUTH OF GILMAN Rd OC

LIGHTING

SHEET No.	INSTALL DEPARTMENT-FURNISHED TYPE 30 ELECTROLIER (N)	LED LUMINAIRE-ROADWAY 2 (N)	RS TYPE 15 ELECTROLIER (N)	FUSED SPLICE CONNECTOR-2 POLE (N)	No. 10 CONDUCTOR (N)	No. 8 CONDUCTOR (N)	No. 8 GROUND (N)	No. 5 PULL BOX (N)	TERMINATE CONDUIT (N)	JOIN CONDUIT (N)	SPLICE CONDUCTORS (N)	PULL BOX AND ELECTROLIER PAVING (N)	PULL BOX PAVING (N)	OBJECT MARKER (TYPE PB) (N)
	EA	EA	EA	EA	LF	LF	LF	EA	EA	EA	EA	EA	EA	EA
E-1	2	2	1	2	150	450	225	3	4	2	1	2	3	3

(N) - NOT A SEPARATE PAY ITEM, FOR INFORMATION ONLY

ELECTRICAL QUANTITIES

E-2

REVISED BY | DATE REVISED
ARTURO ROBLES | JIM HANNIGAN
CALCULATED-DESIGNED BY | CHECKED BY
FUNCTIONAL SUPERVISOR: ROB STINGER

STATE OF CALIFORNIA - DEPARTMENT OF TRANSPORTATION
Caltrans® ELECTRICAL DESIGN

P:\proj1\02\4F450_plans\pse\24f450ua002.dgn

LAST REVISION 11-22-13 | DATE PLOTTED => 02-DEC-2013 | TIME PLOTTED => 15:41

Dist	COUNTY	ROUTE	POST MILES TOTAL PROJECT	SHEET No.	TOTAL SHEETS
02	Sha	5	R34.3/R36.8	51	72

Grace M. Tsushima
REGISTERED CIVIL ENGINEER

July 19, 2013
PLANS APPROVAL DATE

REGISTERED PROFESSIONAL ENGINEER Grace M. Tsushima No. C49814 Exp. 9-30-14 CIVIL STATE OF CALIFORNIA

THE STATE OF CALIFORNIA OR ITS OFFICERS OR AGENTS SHALL NOT BE RESPONSIBLE FOR THE ACCURACY OR COMPLETENESS OF SCANNED COPIES OF THIS PLAN SHEET.

TO ACCOMPANY PLANS DATED 11-22-13

M

Maint	MAINTENANCE
Max	MAXIMUM
MB	METAL BEAM
MBB	METAL BEAM BARRIER
MBGR	METAL BEAM GUARD RAILING
Med	MEDIAN
MGS	MIDWEST GUARDRAIL SYSTEM
MH	MANHOLE
Min	MINIMUM
Misc	MISCELLANEOUS
Misc I & S	MISCELLANEOUS IRON AND STEEL
Mkr	MARKER
Mod	MODIFIED,
	MODIFY
Mon	MONUMENT
MP	METAL PLATE
MPGR	METAL PLATE GUARD RAILING
MR	MOVEMENT RATING
MSE	MECHANICALLY STABILIZED EMBANKMENT
Mt	MOUNTAIN, MOUNT
Mtl	MATERIAL
MVP	MAINTENANCE VEHICLE PULLOUT

N

N	NORTH
NB	NORTHBOUND
No.	NUMBER (MUST HAVE PERIOD)
Nos.	NUMBERS (MUST HAVE PERIOD)
NPS	NOMINAL PIPE SIZE
NS	NEAR SIDE
NSP	NEW STANDARD PLAN
NTS	NOT TO SCALE

O

Oblr	OBLITERATE
OC	OVERCROSSING
OD	OUTSIDE DIAMETER
OF	OUTSIDE FACE
OG	ORIGINAL GROUND
OGAC	OPEN GRADED ASPHALT CONCRETE
OGFC	OPEN GRADED FRICTION COURSE
OH	OVERHEAD
OHWM	ORDINARY HIGH WATER MARK
O-O	OUT TO OUT
Opp	OPPOSITE
OSD	OVERSIDE DRAIN

P

P	PAGE
PAP	PERFORATED ALUMINUM PIPE
PB	PULL BOX
PC	POINT OF CURVATURE,
	PRECAST
PCC	POINT OF COMPOUND CURVE,
	PORTLAND CEMENT CONCRETE
PCMS	PORTABLE CHANGEABLE MESSAGE SIGN
PCP	PERFORATED CONCRETE PIPE,
	PRESTRESSED CONCRETE PIPE
PCVC	POINT OF COMPOUND VERTICAL CURVE
PEC	PERMIT TO ENTER AND CONSTRUCT
Ped	PEDESTRIAN
Ped OC	PEDESTRIAN OVERCROSSING
Ped UC	PEDESTRIAN UNDERCROSSING
Perm Mtl	PERMEABLE MATERIAL

P continued

PG	PROFILE GRADE
PI	POINT OF INTERSECTION
PJP	PARTIAL JOINT PENETRATION
Pkwy	PARKWAY
ℙ,PL	PLATE
P/L	PROPERTY LINE
PM	POST MILE,
	TIME FROM NOON TO MIDNIGHT
PN	PAVING NOTCH
POC	POINT OF HORIZONTAL CURVE
POT	POINT OF TANGENT
POVC	POINT OF VERTICAL CURVE
PP	PIPE PILE,
	PLASTIC PIPE,
	POWER POLE
PPL	PREFORMED PERMEABLE LINER
PPP	PERFORATED PLASTIC PIPE
PRC	POINT OF REVERSE CURVE
PRF	PAVEMENT REINFORCING FABRIC
PRVC	POINT OF REVERSE VERTICAL CURVE
PS&E	PLANS, SPECIFICATIONS AND ESTIMATES
PS, P/S	PRESTRESSED
PSP	PERFORATED STEEL PIPE
PT	POINT OF TANGENCY
PVC	POLYVINYL CHLORIDE
Pvmt	PAVEMENT

Q

Qty	QUANTITY

R

R	RADIUS
R & D	REMOVE AND DISPOSE
R & S	REMOVE AND SALVAGE
R/C	RATE OF CHANGE
RCA	REINFORCED CONCRETE ARCH
RCB	REINFORCED CONCRETE BOX
RCP	REINFORCED CONCRETE PIPE
RCPA	REINFORCED CONCRETE PIPE ARCH
Rd	ROAD
Reinf	REINFORCED,
	REINFORCEMENT,
	REINFORCING
Rel	RELOCATE
Repl	REPLACEMENT
Ret	RETAINING
Rev	REVISED, REVISION
Rdwy	ROADWAY
RHMA	RUBBERIZED HOT MIX ASPHALT
Riv	RIVER
RM	ROAD-MIXED
RP	RADIUS POINT,
	REFERENCE POINT
RR	RAILROAD
RSP	ROCK SLOPE PROTECTION,
	REVISED STANDARD PLAN
Rt	RIGHT
Rte	ROUTE
RW	REDWOOD,
	RETAINING WALL
R/W	RIGHT OF WAY
Rwy	RAILWAY

S

S	SOUTH,
	SUPPLEMENT
SAE	STRUCTURE APPROACH EMBANKMENT
Salv	SALVAGE
SAPP	STRUCTURAL ALUMINUM PLATE PIPE
SB	SOUTHBOUND
SC	SAND CUSHION
SCSP	SLOTTED CORRUGATED STEEL PIPE
SD	STORM DRAIN
Sec	SECOND,
	SECTION
Sep	SEPARATION
SG	SUBGRADE
Shld	SHOULDER
Sht	SHEET
Sim	SIMILAR
℄	STATION LINE
SM	SELECTED MATERIAL
Spec	SPECIAL,
	SPECIFICATIONS
SPP	SLOTTED PLASTIC PIPE
SS	SLOPE STAKE
SSBM	STRAP AND SADDLE BRACKET METHOD
SSD	STRUCTURAL SECTION DRAIN
SSPA	STRUCTURAL STEEL PLATE ARCH
SSPP	STRUCTURAL STEEL PLATE PIPE
SSPPA	STRUCTURAL STEEL PLATE PIPE ARCH
SSRP	STEEL SPIRAL RIB PIPE
St	STREET
Sta	STATION
STBB	SINGLE THRIE BEAM BARRIER
Std	STANDARD
Str	STRUCTURE
Surf	SURFACING
SW	SIDEWALK,
	SOUND WALL
Swr	SEWER
Sym	SYMMETRICAL
S4S	SURFACE 4 SIDES

T

T	SEMI-TANGENT
Tan	TANGENT
TBB	THRIE BEAM BARRIER
Tbr	TIMBER
TC	TOP OF CURB
TCB	TRAFFIC CONTROL BOX
TCE	TEMPORARY CONSTRUCTION EASEMENT
Tel	TELEPHONE
Temp	TEMPORARY
TG	TOP OF GRADE
Tot	TOTAL
TP	TELEPHONE POLE
TPB	TREATED PERMEABLE BASE
TPM	TREATED PERMEABLE MATERIAL
Trans	TRANSITION

T continued

TS	TRANSVERSE,
	TRAFFIC SIGNAL,
	TUBULAR STEEL
Typ	TYPICAL

U

UC	UNDERCROSSING
UD	UNDERDRAIN
UG	UNDERGROUND
UON	UNLESS OTHERWISE NOTED
UP	UNDERPASS

V

V	VALVE,
	DESIGN SPEED
Var	VARIABLE,
	VARIES
VC	VERTICAL CURVE
VCP	VITRIFIED CLAY PIPE
Vert	VERTICAL
Via	VIADUCT
Vol	VOLUME

W

W	WEST,
	WIDTH
WB	WESTBOUND
WH	WEEP HOLE
WM	WIRE MESH
WS	WATER SURFACE
WSP	WELDED STEEL PIPE
Wt	WEIGHT
WV	WATER VALVE
WW	WINGWALL
WWLOL	WINGWALL LAYOUT LINE

X

X Sec	CROSS SECTION
Xing	CROSSING

Y

Yr	YEAR
Yrs	YEARS

UNIT OF MEASUREMENT SYMBOLS:

Some of the symbols used in the project plan quantity tables and in the Bid Item List are:

TABLE A

SYMBOL USED	DEFINITIONS
ACRE	ACRE
CF	CUBIC FOOT
CY	CUBIC YARD
EA	EACH
GAL	GALLON
LB	POUND
LF	LINEAR FOOT
SQFT	SQUARE FOOT
SQYD	SQUARE YARD
STA	100 FEET
TAB	TABLET
TON	2,000 POUNDS

Some of the symbols used in the plans other than in the project plan quantity tables are:

TABLE B

SYMBOL USED	DEFINITIONS
ksi	KIPS PER SQUARE INCH
ksf	KIPS PER SQUARE FOOT
psi	POUNDS PER SQUARE INCH
psf	POUNDS PER SQUARE FOOT
lb/ft^3, pcf	POUNDS PER CUBIC FOOT
tsf	TONS PER SQUARE FOOT
mph, MPH *	MILES PER HOUR
ø	NOMINAL DIAMETER
oz	OUNCE
lb	POUND
kip	1,000 POUNDS
cal	CALORIE
ft	FOOT OR FEET
gal	GALLON

* For use on a sign panel only

STATE OF CALIFORNIA
DEPARTMENT OF TRANSPORTATION

ABBREVIATIONS (SHEET 2 OF 2)

NO SCALE

RSP A10B DATED JULY 19, 2013 SUPERSEDES STANDARD PLAN A10B DATED MAY 20, 2011 - PAGE 2 OF THE STANDARD PLANS BOOK DATED 2010.

REVISED STANDARD PLAN RSP A10B

2010 REVISED STANDARD PLAN RSP A10B

DATE PLOTTED => 02-DEC-2013
TIME PLOTTED => 15:41

Dist	COUNTY	ROUTE	POST MILES TOTAL PROJECT	SHEET No.	TOTAL SHEETS
02	Sha	5	R34.3/R36.8	52	72

REGISTERED CIVIL ENGINEER

July 19, 2013
PLANS APPROVAL DATE

REGISTERED PROFESSIONAL ENGINEER Roberta L. McLaughlin No. C40375 Exp. 3-31-15 CIVIL STATE OF CALIFORNIA

THE STATE OF CALIFORNIA OR ITS OFFICERS OR AGENTS SHALL NOT BE RESPONSIBLE FOR THE ACCURACY OR COMPLETENESS OF SCANNED COPIES OF THIS PLAN SHEET.

TO ACCOMPANY PLANS DATED 11-22-13

EXIT RAMP NEUTRAL AREA (GORE) TREATMENT

DETAIL 36

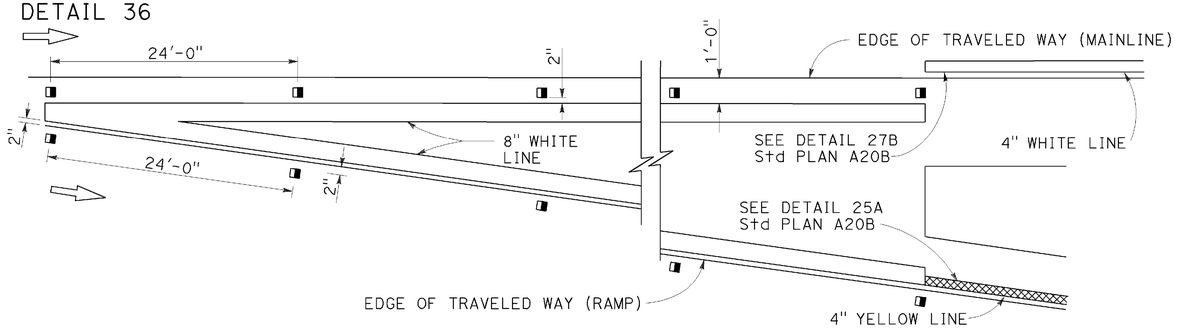

ENTRANCE RAMP NEUTRAL AREA (MERGE) TREATMENT

DETAIL 36A

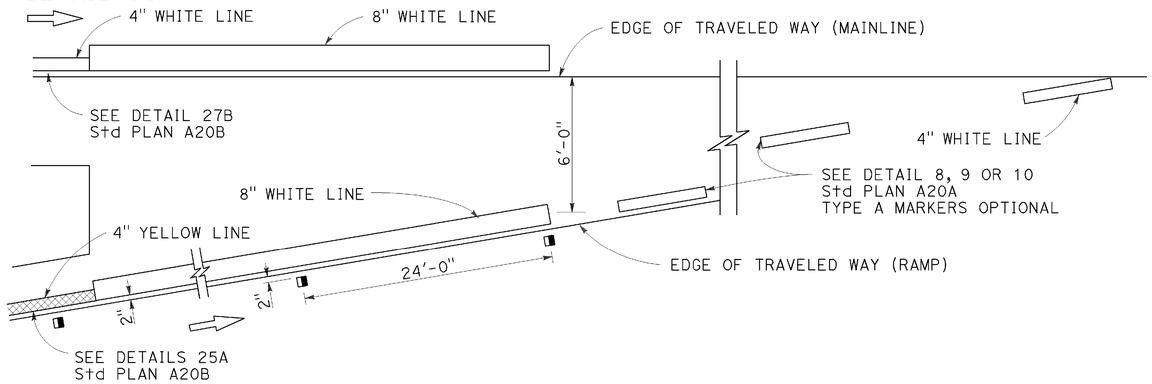

ENTRANCE RAMP NEUTRAL AREA (ACCELERATION LANE) TREATMENT

DETAIL 36B

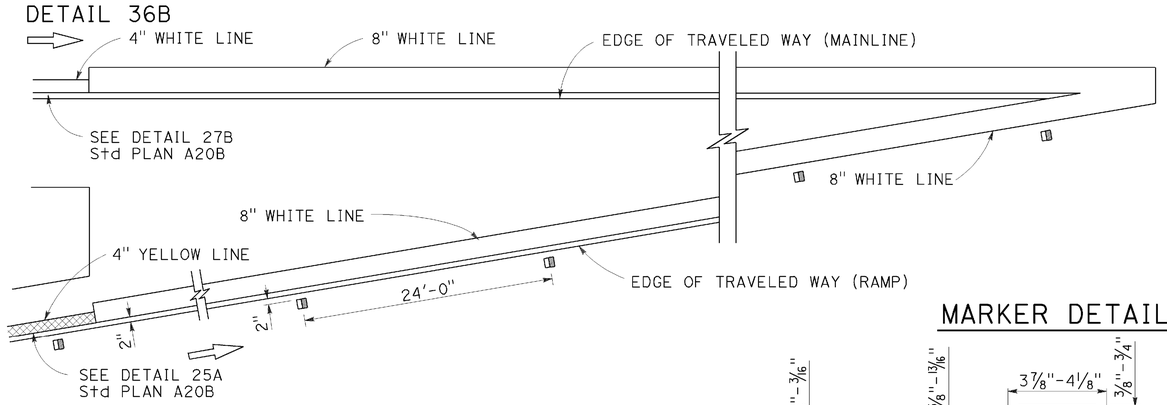

LANE DROP AT EXIT RAMPS

DETAIL 37

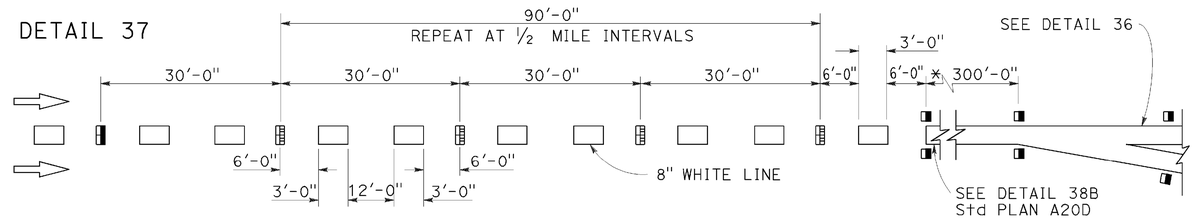

DETAIL 37A

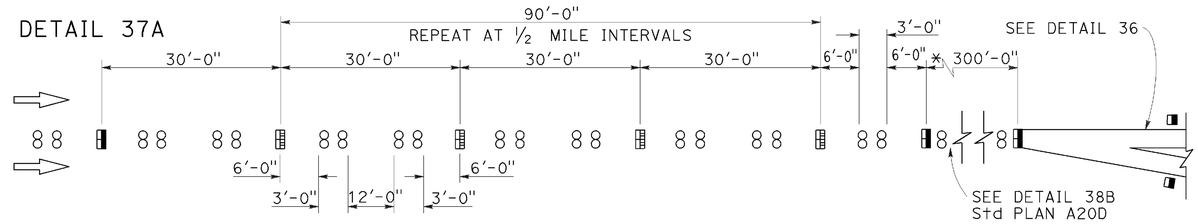

* The solid channelizing line shown may be omitted on short auxiliary lanes where weaving length is critical.

LANE DROP AT INTERSECTIONS

DETAIL 37B

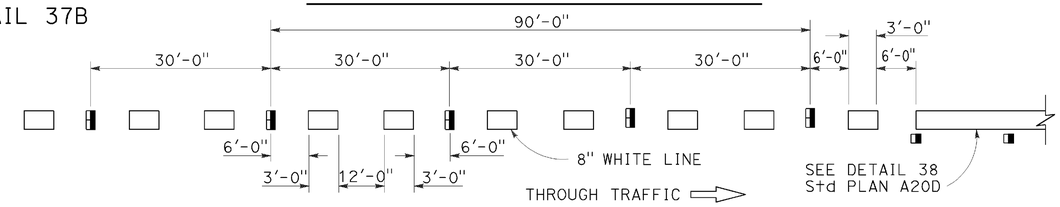

DETAIL 37C

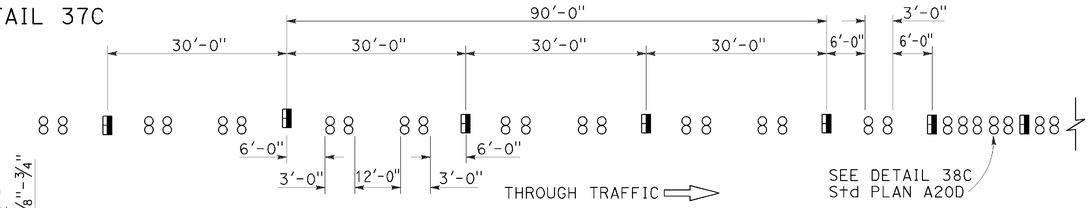

MARKER DETAILS

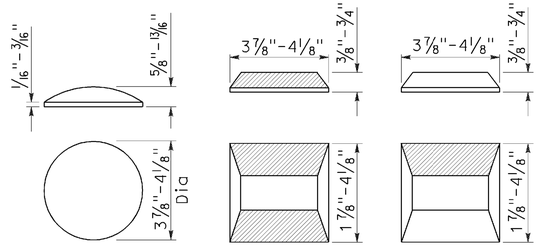

RETROREFLECTIVE FACE

LEGEND:

MARKERS

- ○ TYPE A WHITE NON-REFLECTIVE
- ⊟ TYPE C RED-CLEAR RETROREFLECTIVE
- ◨ TYPE G ONE-WAY CLEAR RETROREFLECTIVE

STATE OF CALIFORNIA
DEPARTMENT OF TRANSPORTATION

PAVEMENT MARKERS AND TRAFFIC LINE TYPICAL DETAILS

NO SCALE

RSP A20C DATED JULY 19, 2013 SUPERSEDES STANDARD PLAN A20C DATED MAY 20, 2011 - PAGE 11 OF THE STANDARD PLANS BOOK DATED 2010.

REVISED STANDARD PLAN RSP A20C

2010 REVISED STANDARD PLAN RSP A20C

Dist	COUNTY	ROUTE	POST MILES TOTAL PROJECT	SHEET No.	TOTAL SHEETS
02	Sha	5	R34.3/R36.8	53	72

REGISTERED CIVIL ENGINEER

April 20, 2012
PLANS APPROVAL DATE

REGISTERED PROFESSIONAL ENGINEER
Roberta L. McLaughlin
No. C40375
Exp. 3-31-13
CIVIL
STATE OF CALIFORNIA

THE STATE OF CALIFORNIA OR ITS OFFICERS OR AGENTS SHALL NOT BE RESPONSIBLE FOR THE ACCURACY OR COMPLETENESS OF SCANNED COPIES OF THIS PLAN SHEET.

TO ACCOMPANY PLANS DATED 11-22-13

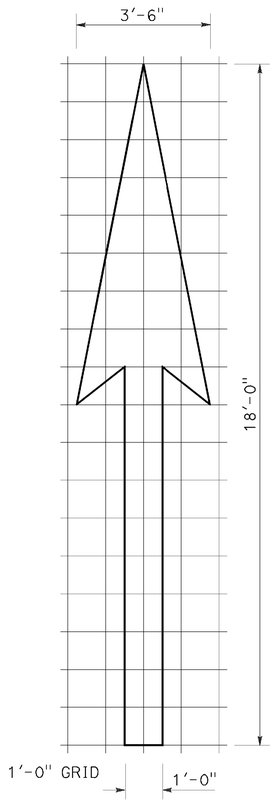

A=25 ft^2

TYPE I 18'-0" ARROW

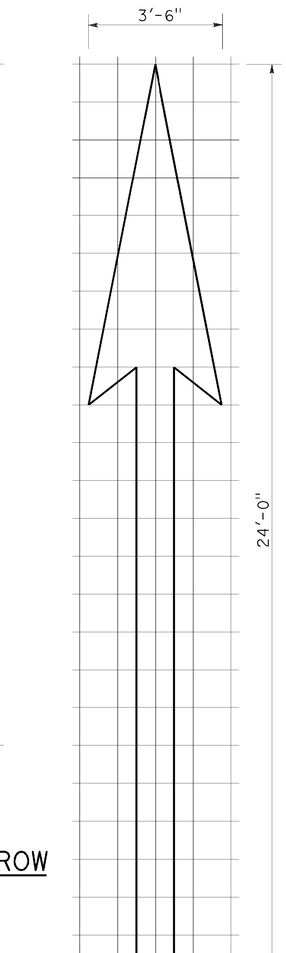

A=31 ft^2

TYPE I 24'-0" ARROW

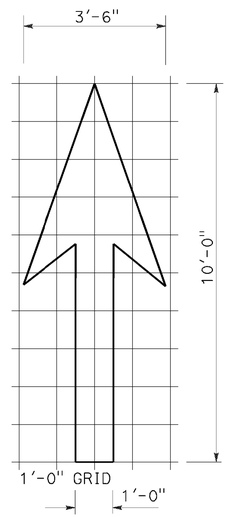

A=14 ft^2

TYPE I 10'-0" ARROW

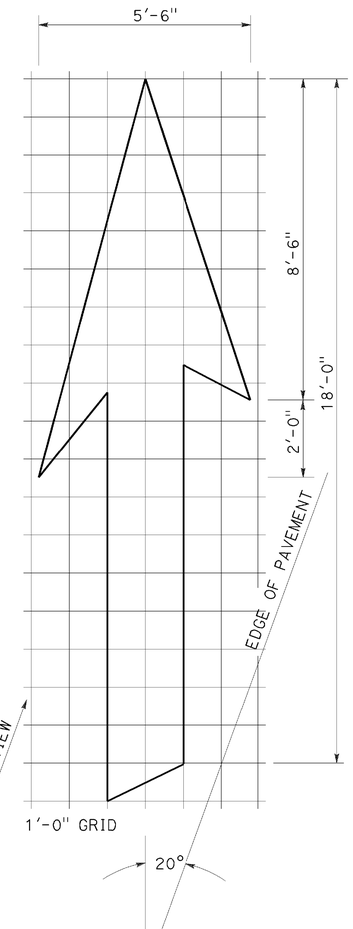

A=42 ft^2

TYPE VI ARROW

Right lane drop arrow
(For left lane,
use mirror image)

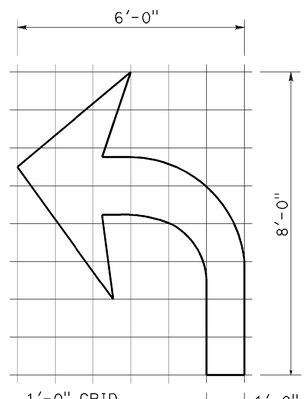

A=15 ft^2

TYPE IV (L) ARROW

(For Type IV (R) arrow,
use mirror image)

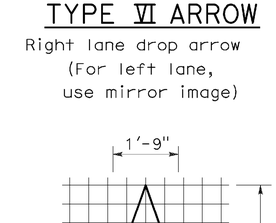

A=3.5 ft^2

BIKE LANE ARROW

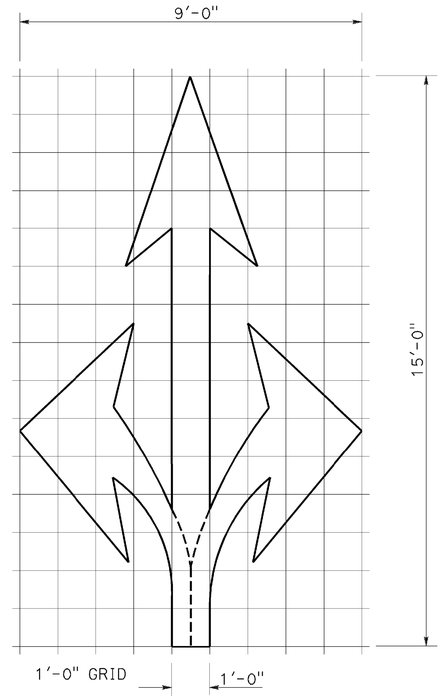

A=36 ft^2

TYPE VIII ARROW

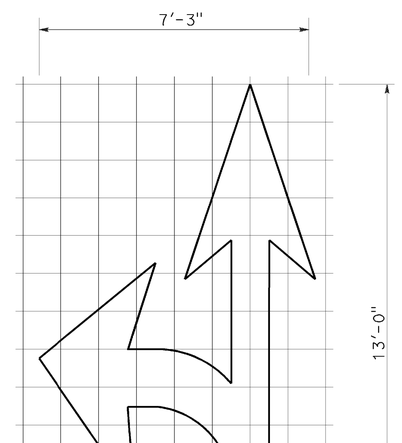

A=27 ft^2

TYPE VII (L) ARROW

(For Type VII (R) arrow,
use mirror image)

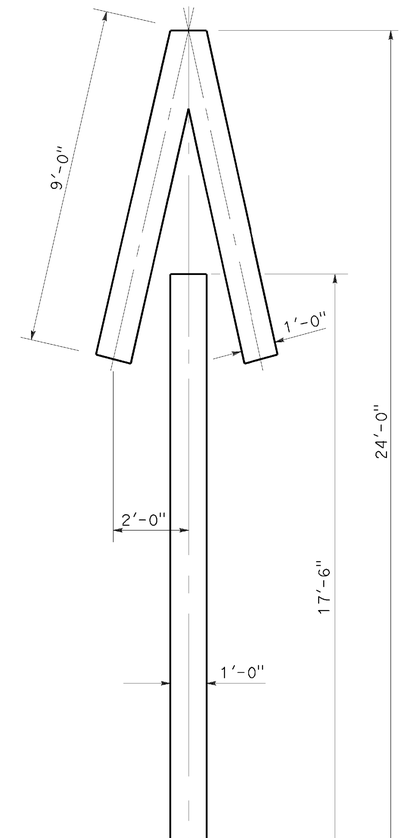

A=33 ft^2

TYPE V ARROW

NOTE:
Minor variations in dimensions
may be accepted by the Engineer.

STATE OF CALIFORNIA
DEPARTMENT OF TRANSPORTATION

PAVEMENT MARKINGS ARROWS

NO SCALE

RSP A24A DATED APRIL 20, 2012 SUPERSEDES STANDARD PLAN A24A
DATED MAY 20, 2011 - PAGE 13 OF THE STANDARD PLANS BOOK DATED 2010.

REVISED STANDARD PLAN RSP A24A

2010 REVISED STANDARD PLAN RSP A24A

Dist	COUNTY	ROUTE	POST MILES TOTAL PROJECT	SHEET No.	TOTAL SHEETS
02	Sha	5	R34.3/R36.8	54	72

Randell D. Hiatt
REGISTERED CIVIL ENGINEER

July 19, 2013
PLANS APPROVAL DATE

REGISTERED PROFESSIONAL ENGINEER
Randell D. Hiatt
No. C50200
Exp. 6-30-15
CIVIL
STATE OF CALIFORNIA

THE STATE OF CALIFORNIA OR ITS OFFICERS OR AGENTS SHALL NOT BE RESPONSIBLE FOR THE ACCURACY OR COMPLETENESS OF SCANNED COPIES OF THIS PLAN SHEET.

TO ACCOMPANY PLANS DATED 11-22-13

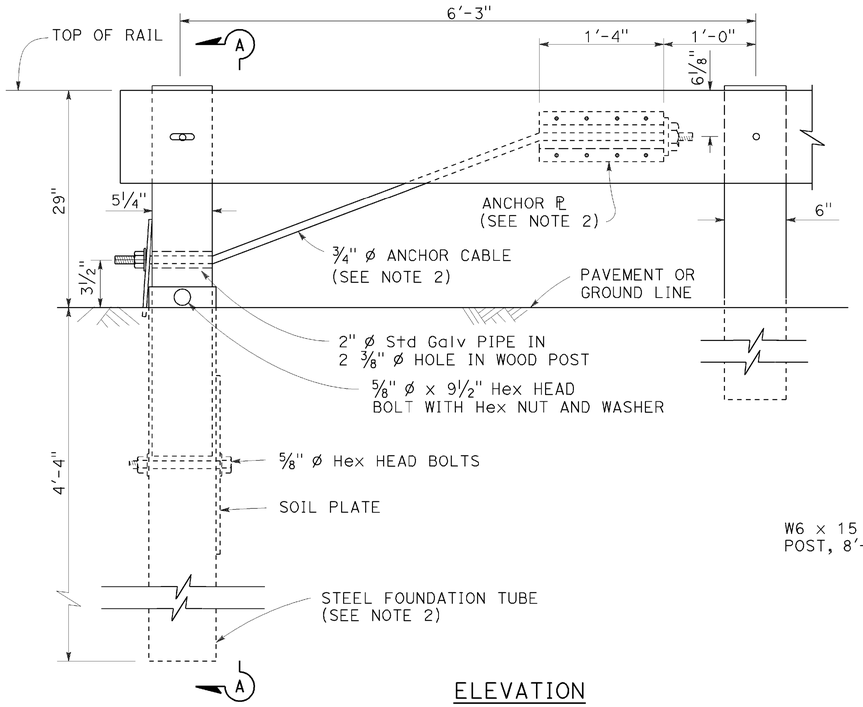

ELEVATION
END ANCHOR
ASSEMBLY (TYPE SFT)

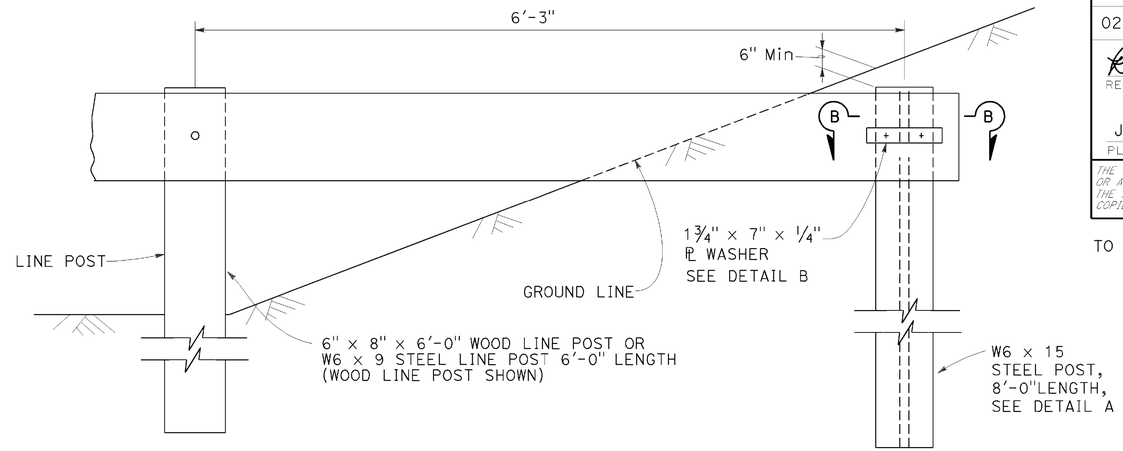

BURIED POST END ANCHOR

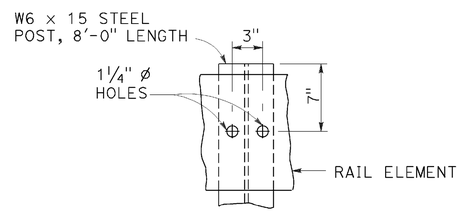

DETAIL A

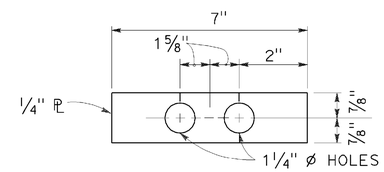

DETAIL B

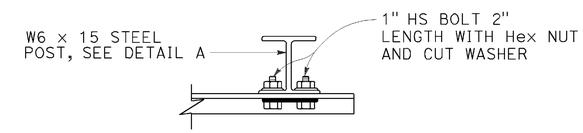

SECTION B-B

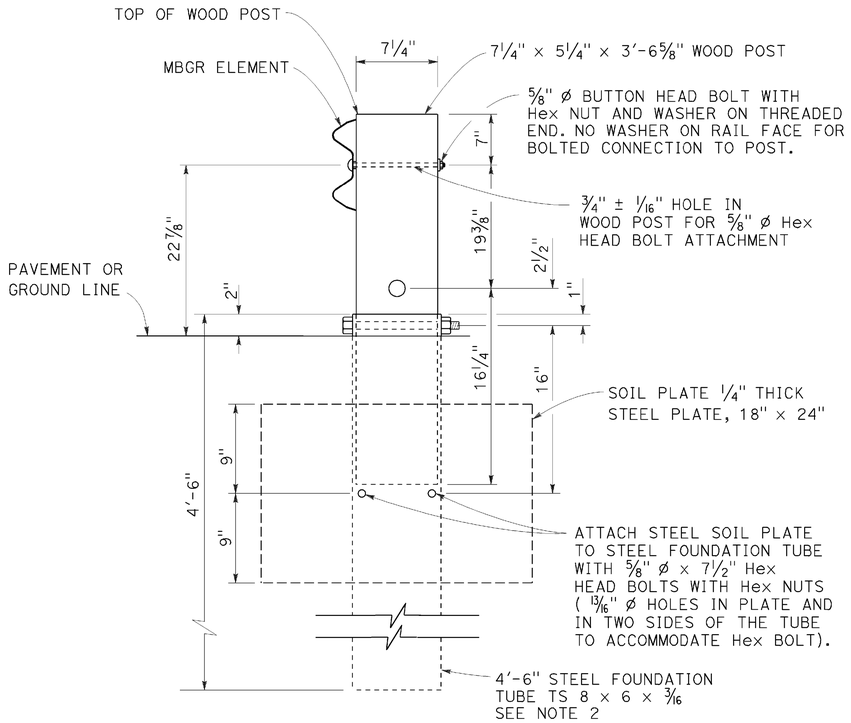

SECTION A-A

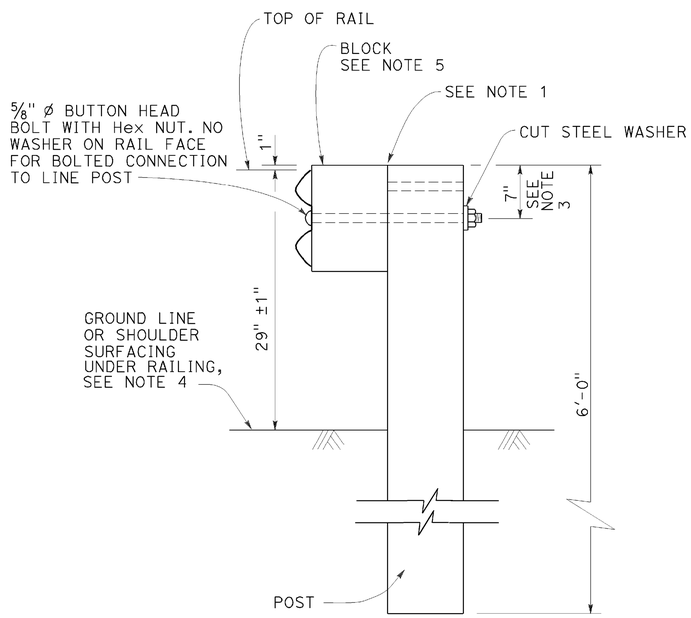

TYPICAL LINE
POST INSTALLATION

NOTES:

1. For wood post and wood block, toenail with 2-16d Galv nails in top of block. For steel post and notched wood or plastic block, notched face of block faces steel post.
2. A 6'-0" Length steel foundation tube, TS 8 x 6 x 3/16, without a soil plate, may be furnished and installed in place of the 4'-6" length steel foundation tube and soil plate shown, Minimum embadment of the 6'-0" length tube shall be 5'-9". A 5/8" ø Hex head bolt and nut shall be installed in the hole in the 6'-0" length tube to keep the wood post from dropping into the tube.
3. To connect railing to 27" terminal system end treatment, transition the top of railing height at a ratio of 120:1 to terminal system end treatment height plus one 12'-6" standard railing section at the transitioned height for a horizontal connection to the end treatment.
4. Install posts in soil.
5. See Revised Standard Plans RSP A77N1 and RSP A77N2 for details.
6. Holes excavation in the slope to construct the buried post end anchor shall be backfilled with selected earth, placed in layers approximately 1'-0" thick. Each layer shall be moistened and thoroughly compacted.

STATE OF CALIFORNIA
DEPARTMENT OF TRANSPORTATION

METAL BEAM GUARD RAILING RECONSTRUCT INSTALLATION

NO SCALE

RSP A77L3 DATED JULY 19, 2013 SUPPLEMENTS THE STANDARD PLANS BOOK DATED 2010.

REVISED STANDARD PLAN RSP A77L3

2010 REVISED STANDARD PLAN RSP A77L3

DATE PLOTTED => 02-DEC-2013
TIME PLOTTED => 15:42

Dist	COUNTY	ROUTE	POST MILES TOTAL PROJECT	SHEET No.	TOTAL SHEETS
02	Sha	5	R34.3/R36.8	55	72

Randell D. Hiatt
REGISTERED CIVIL ENGINEER

July 19, 2013
PLANS APPROVAL DATE

REGISTERED PROFESSIONAL ENGINEER
Randell D. Hiatt
No. C50200
Exp. 6-30-15
CIVIL
STATE OF CALIFORNIA

THE STATE OF CALIFORNIA OR ITS OFFICERS OR AGENTS SHALL NOT BE RESPONSIBLE FOR THE ACCURACY OR COMPLETENESS OF SCANNED COPIES OF THIS PLAN SHEET.

TO ACCOMPANY PLANS DATED 11-22-13

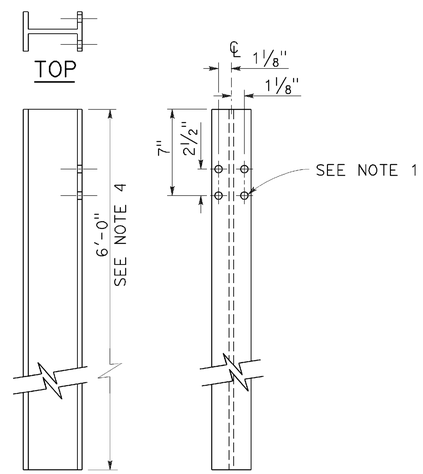

W6 x 9 OR W6 x 8.5
STEEL POST
See Note 4

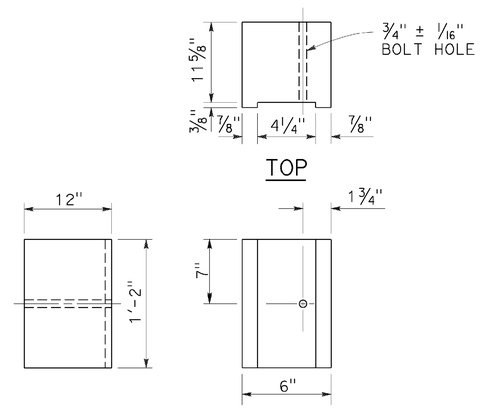

6" x 12"
NOTCHED WOOD BLOCK
See Notes 2 and 3

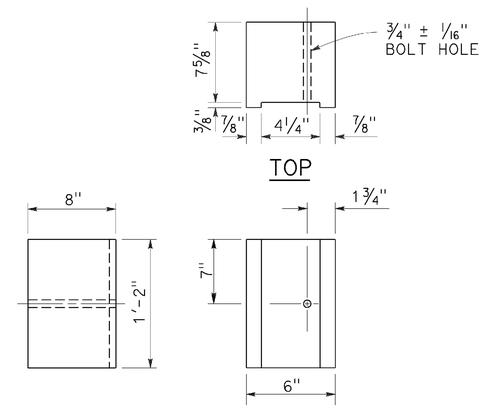

6" x 8"
NOTCHED WOOD BLOCK
Only for use with metal beam guard railing. See Note 5

NOTES:

1. All holes in steel post shall be 13/16" Dia maximum.
2. Dimensions shown for wood block are nominal.
3. Notched face of block faces steel post.
4. 6'-0" length posts to be used for typical roadway installation. 7'-0" length posts to be used for narrow roadway installation. See Revised Standard Plan RSP A77N3.
5. See Revised Standard Plan RSP A77L3 for use of 6" x 8" and 8" x 8" notched wood blocks.
6. This post and 8" x 12" block combination to be used for line post sections of MGS on narrow roadways and where strengthened line post sections of MGS are warranted to shield fixed objects.

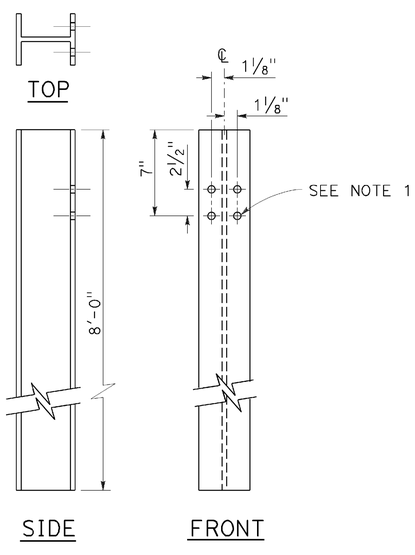

W6 x 15
STEEL POST
See Note 6

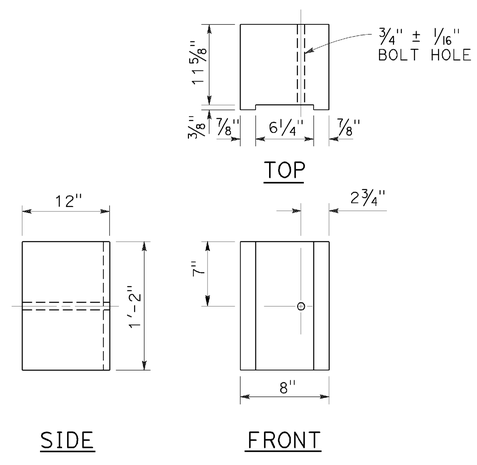

8" x 12"
NOTCHED WOOD BLOCK
See Notes 2 and 3

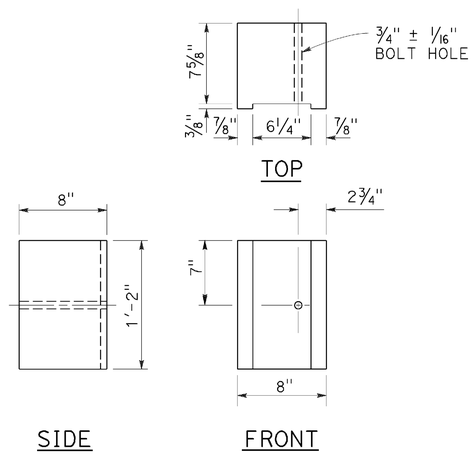

8" x 8"
NOTCHED WOOD BLOCK
Only for use with metal beam guard railing. See Note 5

STATE OF CALIFORNIA
DEPARTMENT OF TRANSPORTATION

MIDWEST GUARDRAIL SYSTEM STEEL POST AND NOTCHED WOOD BLOCK DETAILS

NO SCALE

RSP A77N2 DATED JULY 19, 2013 SUPPLEMENTS THE STANDARD PLANS BOOK DATED 2010.

REVISED STANDARD PLAN RSP A77N2

2010 REVISED STANDARD PLAN RSP A77N2

Dist	COUNTY	ROUTE	POST MILES TOTAL PROJECT	SHEET No.	TOTAL SHEETS
02	Sha	5	R34.3/R36.8	56	72

REGISTERED CIVIL ENGINEER

July 19, 2013
PLANS APPROVAL DATE

REGISTERED PROFESSIONAL ENGINEER
Michael Janzen
No. 44788
Exp. 03-31-14
CIVIL
STATE OF CALIFORNIA

THE STATE OF CALIFORNIA OR ITS OFFICERS OR AGENTS SHALL NOT BE RESPONSIBLE FOR THE ACCURACY OR COMPLETENESS OF SCANNED COPIES OF THIS PLAN SHEET.

TO ACCOMPANY PLANS DATED 11-22-13

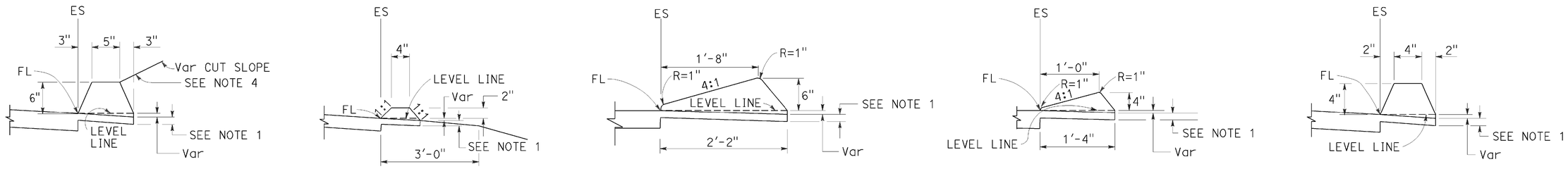

TYPE A
See Note 3

TYPE C

TYPE D

TYPE E

TYPE F
See Note 5

DIKES

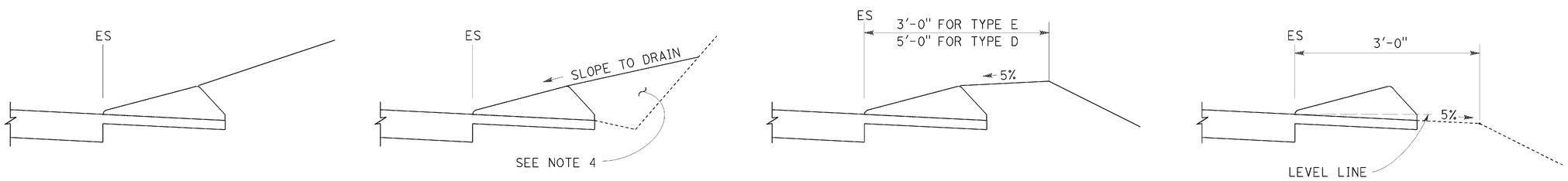

CASE C-1
Cut Slope

CASE C-2
Cut Slope

CASE F

CASE R
See Note 2

TYPE D AND E BACKFILL DETAILS

NOTES:

1. For HMA shoulders only, extend top layer of HMA placed on the shoulder under dike with no joint at the ES. For projects with OGFC shoulders, do not extend OGFC under dike. See project plans for modified dike detail.
2. Case R applies to retrofit only projects where restrictive conditions do not provide enough width for Case F backfill.
3. Type A dike only to be used where restrictive slope conditions do not provide enough width to use Type D or Type E dike.
4. Fill and compact with excavated material to top of dike.
5. Use Type F dike, where dike is required with guard railing installations. See Revised Standard Plan RSP A77N4 for dike positioning details.

DIKE QUANTITIES

TYPE	CUBIC YARDS PER LINEAR FOOT
A	0.0135
C	0.0038
D	0.0293
E	0.0130
F	0.0066

Quantities based on 5% cross slope.

STATE OF CALIFORNIA
DEPARTMENT OF TRANSPORTATION

HOT MIX ASPHALT DIKES

NO SCALE

RSP A87B DATED JULY 19, 2013 SUPERSEDES STANDARD PLAN A87B
DATED MAY 20, 2011 - PAGE 120 OF THE STANDARD PLANS BOOK DATED 2010.

REVISED STANDARD PLAN RSP A87B

2010 REVISED STANDARD PLAN RSP A87B

DIST	COUNTY	ROUTE	POST MILES TOTAL PROJECT	SHEET No.	TOTAL SHEETS
02	Sha	5	R34.3/R36.8	57	72

REGISTERED CIVIL ENGINEER

January 20, 2012
PLANS APPROVAL DATE

REGISTERED PROFESSIONAL ENGINEER
Cornelis M. Hokim
No. C55610
Exp. 12-31-12
CIVIL
STATE OF CALIFORNIA

THE STATE OF CALIFORNIA OR ITS OFFICERS OR AGENTS SHALL NOT BE RESPONSIBLE FOR THE ACCURACY OR COMPLETENESS OF SCANNED COPIES OF THIS PLAN SHEET.

TO ACCOMPANY PLANS DATED 11-22-13

ABBREVIATIONS:

SE SAFETY EDGE

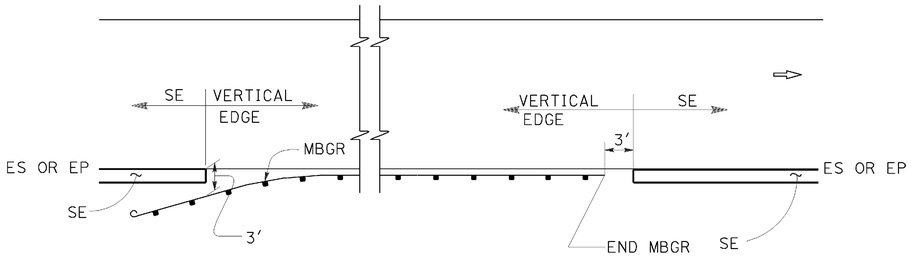

MBGR

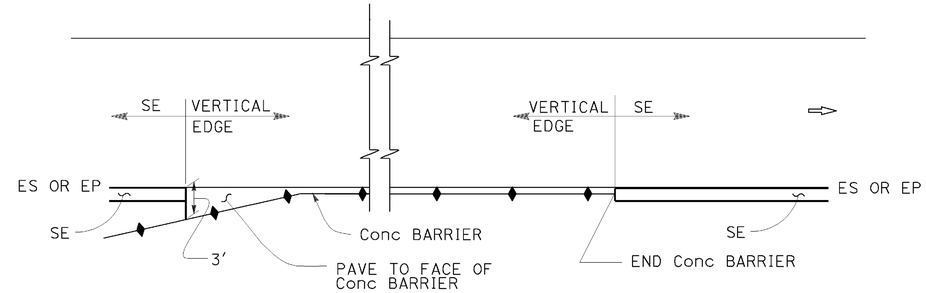

CONCRETE BARRIER

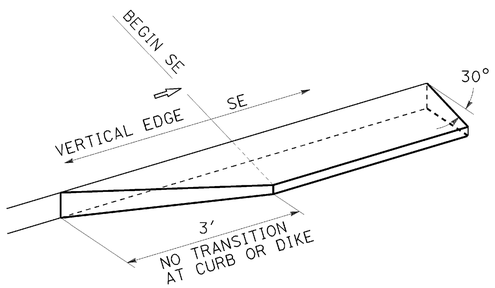

TRANSITION DETAIL
FOR CONCRETE ONLY

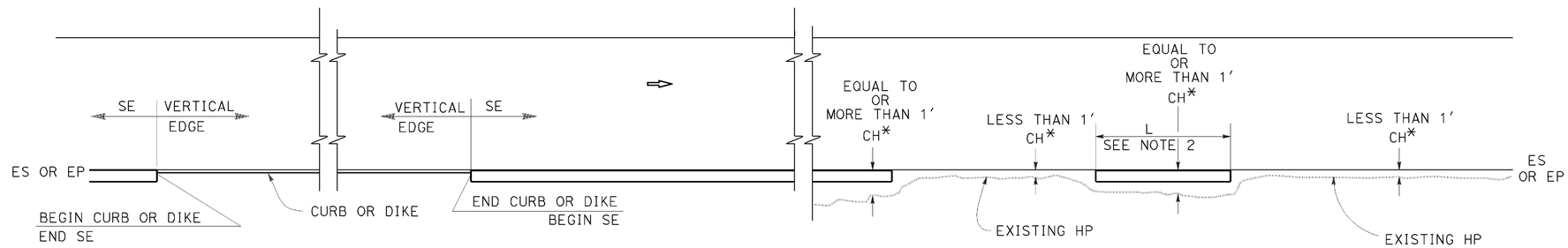

CURB OR DIKE

NARROW SIDE SLOPE

* CH = Distance from ES or EP to existing HP.

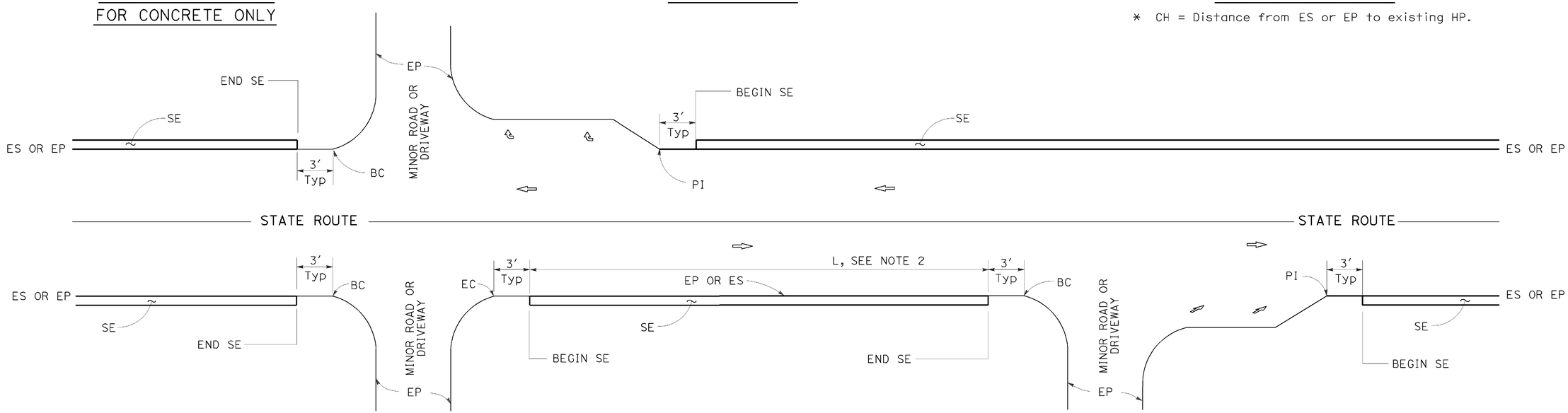

INTERSECTION

MINOR ROADWAY OR DRIVEWAY

DRIVEWAY AND INTERSECTION

NOTES:

1. For details not shown, see Revised Standard Plans RSP P75 and RSP P76.
2. Safety edge is optional when L is less than 30′.

STATE OF CALIFORNIA
DEPARTMENT OF TRANSPORTATION

PAVEMENT EDGE TREATMENTS

NO SCALE

RSP P74 DATED JANUARY 20, 2012 SUPPLEMENTS THE STANDARD PLANS BOOK DATED 2010.

REVISED STANDARD PLAN RSP P74

2010 REVISED STANDARD PLAN RSP P74

DATE PLOTTED => 02-DEC-2013
TIME PLOTTED => 15:42

DIST	COUNTY	ROUTE	POST MILES TOTAL PROJECT	SHEET No.	TOTAL SHEETS
02	Sha	5	R34.3/R36.8	58	72

REGISTERED CIVIL ENGINEER

January 20, 2012
PLANS APPROVAL DATE

REGISTERED PROFESSIONAL ENGINEER Cornelis M. Hakim No. C55610 Exp. 12-31-12 CIVIL STATE OF CALIFORNIA

THE STATE OF CALIFORNIA OR ITS OFFICERS OR AGENTS SHALL NOT BE RESPONSIBLE FOR THE ACCURACY OR COMPLETENESS OF SCANNED COPIES OF THIS PLAN SHEET.

TO ACCOMPANY PLANS DATED 11-22-13

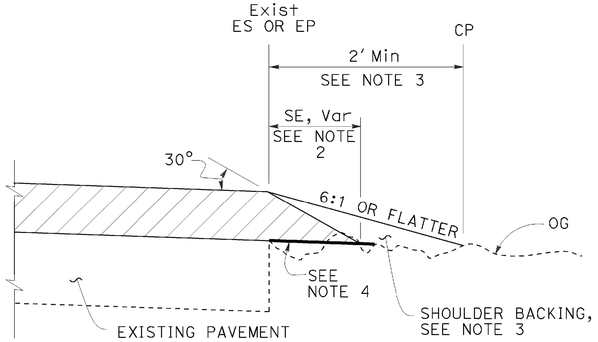

CASE A
Safety Edge

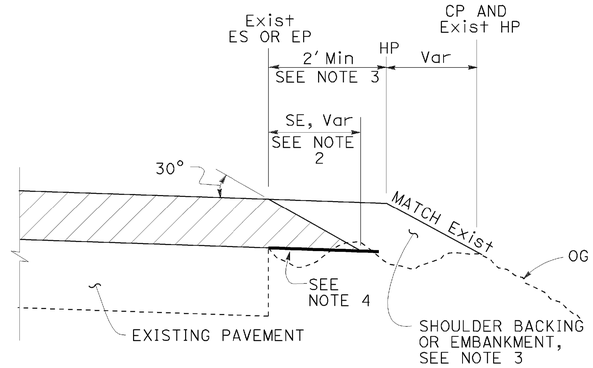

CASE B
Safety Edge

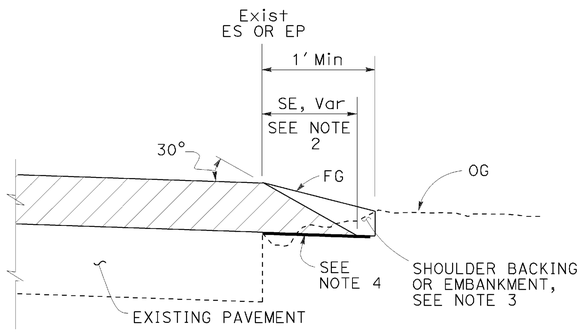

CASE C
Safety Edge

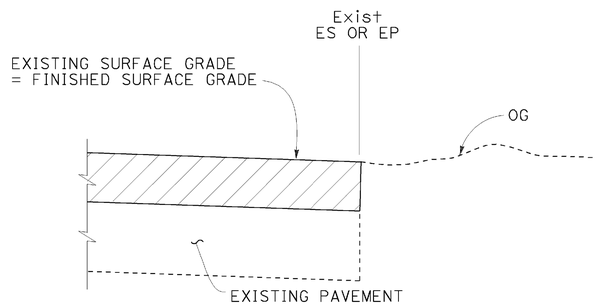

CASE D
Vertical Edge

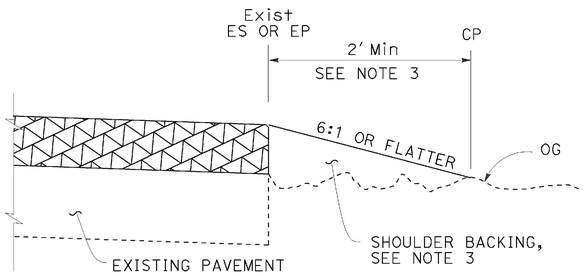

CASE E
Vertical Edge

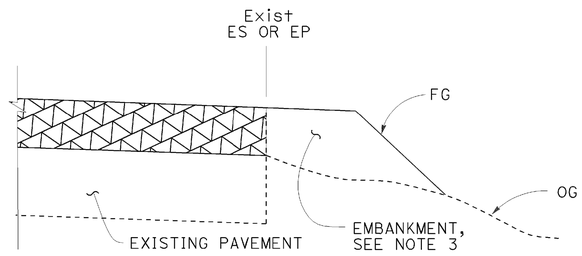

CASE F
Vertical Edge
* See Table A and Revised Std Plan RSP P74

LEGEND:

- HMA OVERLAY
- HMA OR CONCRETE OVERLAY
- CONCRETE OVERLAY

ABBREVIATIONS:

SE SAFETY EDGE
TT TOTAL THICKNESS OF SE

TABLE A
EDGE TREATMENT FOR VARIOUS OVERLAY THICKNESS AND CONDITIONS

	OVERLAY THICKNESS	
FIELD CONDITION	LESS THAN 0.15'	0.15' OR MORE
Exist SLOPE 6:1 OR FLATTER	CASE E	CASE A
Exist SLOPE 3:1 TO 6:1	CASE E	CASE B
Exist SLOPE STEEPER THAN 3:1	CASE F	CASE F
CUT SECTION (REPLACE, COLD PLANE, MILL PAVEMENT)	CASE D	CASE C

ADDITIONAL HMA OR CONCRETE QUANTITIES FOR SE/SIDE/MILE

TYPICAL CROSS SECTION	TT	TOTAL ADDITIONAL MATERIAL FOR SE/SIDE/MILE		
		HMA (TON)	CONCRETE (CY)*	CONCRETE (CY)**
TT	0.15'	NA	NA	NA
	0.20'	13.7	NA	NA
	0.30'	30.9	NA	NA
	0.40'	54.9	NA	NA
	0.45'	69.4	NA	NA
TT 0.43'	0.50'	84.2	NA	NA
	0.60'	113.9	NA	NA
	0.70'	143.6	70.9	94.2
	0.80'	173.3	85.6	112.2
	0.90'	203.0	100.3	130.2
	1.00'	232.7	114.9	148.2
	1.10'	262.4	129.6	166.2
	1.20'	292.1	144.3	184.2

* For Detail "A"
** For Optional Detail "A"

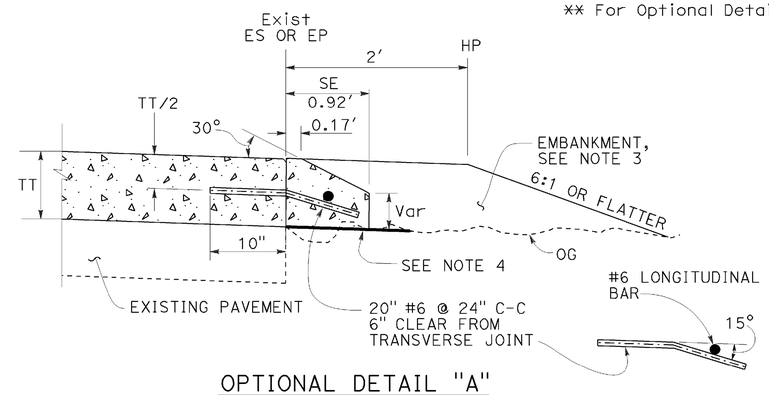

OPTIONAL DETAIL "A"
For concrete overlay
See Note 5

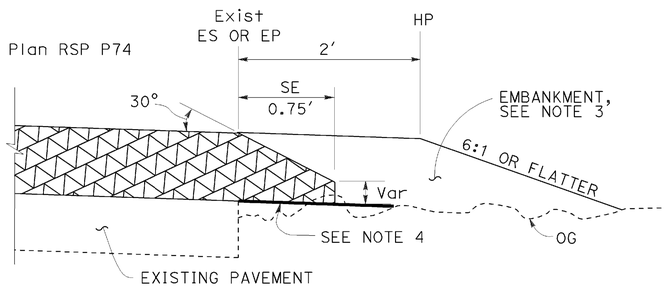

DETAIL "A"
For HMA overlay thickness more than 0.43' or concrete overlay

NOTES:

1. For limits of safety edge and vertical edge treatments, see Revised Standard Plan RSP P74.
2. Details shown for HMA overlay thickness less than 0.43'. See Detail "A" for HMA overlay thickness more than 0.43' or concrete overlay.
3. For locations and limits of shoulder backing or embankment see project plans.
4. Grade existing ground to place safety edge. 1' minimum width
5. Safety edge transverse joint must match overlay transverse joint. End of #6 longitudinal bar must be 2" ±½" clear from transverse joint.
6. Safety edge is not needed in the area of MBGR, barrier, right turn lane and acceleration lane. See Revised Standard Plan RSP P74.

STATE OF CALIFORNIA
DEPARTMENT OF TRANSPORTATION

PAVEMENT EDGE TREATMENTS-OVERLAYS

NO SCALE

RSP P75 DATED JANUARY 20, 2012 SUPPLEMENTS THE STANDARD PLANS BOOK DATED 2010.

2010 REVISED STANDARD PLAN RSP P75

REVISED STANDARD PLAN RSP P75

DIST	COUNTY	ROUTE	POST MILES TOTAL PROJECT	SHEET No.	TOTAL SHEETS
02	Sha	5	R34.3/R36.8	59	72

REGISTERED CIVIL ENGINEER

January 20, 2012
PLANS APPROVAL DATE

REGISTERED PROFESSIONAL ENGINEER Cornelis M. Hakim No. C55610 Exp. 12-31-12 CIVIL STATE OF CALIFORNIA

THE STATE OF CALIFORNIA OR ITS OFFICERS OR AGENTS SHALL NOT BE RESPONSIBLE FOR THE ACCURACY OR COMPLETENESS OF SCANNED COPIES OF THIS PLAN SHEET.

TO ACCOMPANY PLANS DATED 11-22-13

LEGEND:

- HMA PAVEMENT
- HMA OR CONCRETE PAVEMENT
- CONCRETE PAVEMENT

ABBREVIATIONS:

SE SAFETY EDGE
TT TOTAL THICKNESS OF SE
HW HINGE WIDTH, DISTANCE FROM ES OR EP TO HP

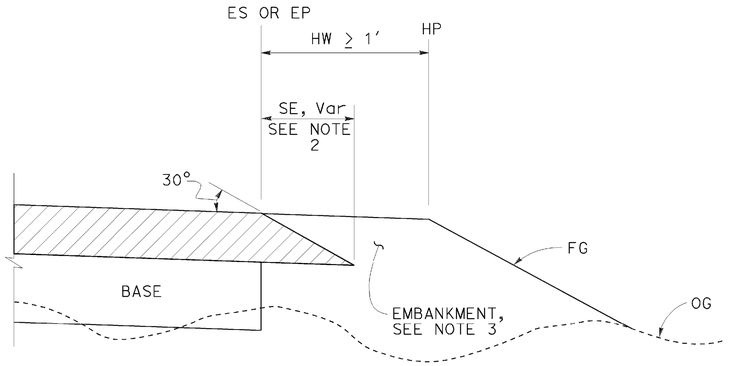

CASE K
Safety Edge - Fill Section, HW ≥ 1′

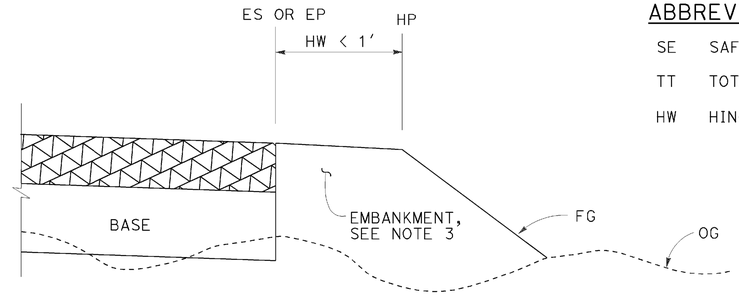

CASE L
Vertical Edge - Fill Section, HW < 1′

FILL SECTION

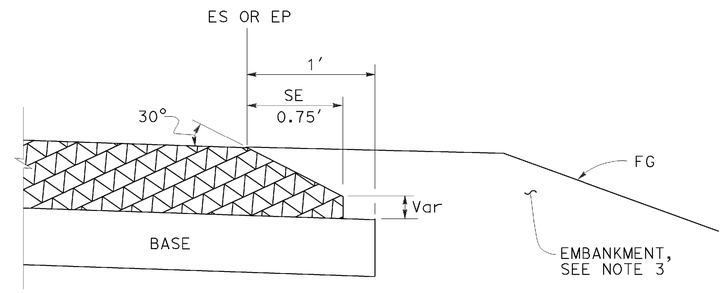

DETAIL "B"
For HMA pavement thickness more than 0.43′ or concrete pavement

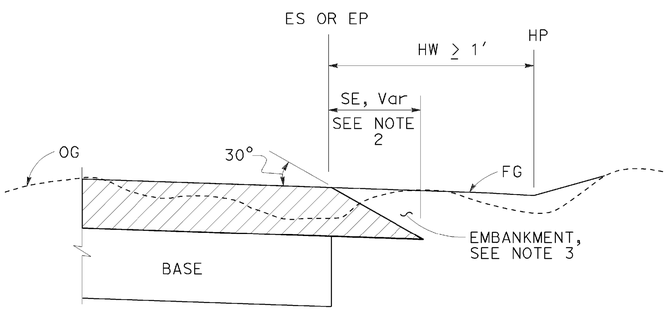

CASE M
Safety Edge - Cut Section, HW ≥ 1′

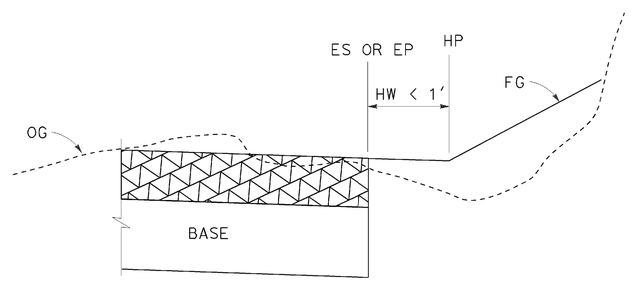

CASE N
Vertical Edge - Cut Section, HW < 1′

CUT SECTION

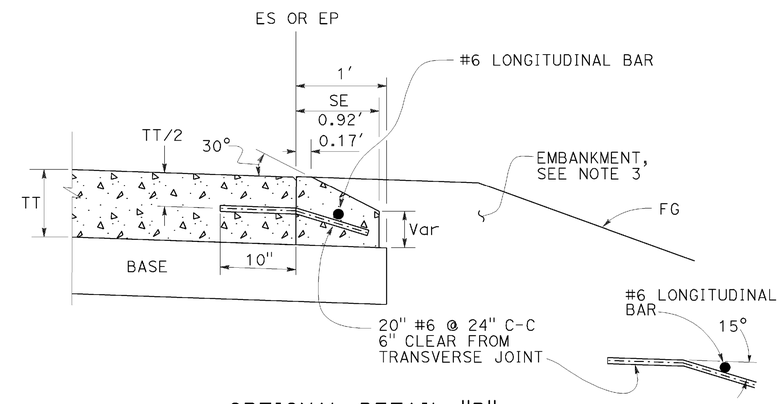

OPTIONAL DETAIL "B"
For concrete pavement
See Note 4

NOTES:

1. For limits of safety edge and vertical edge treatments, see Revised Standard Plan RSP P74
2. Details shown for HMA pavement thickness less than 0.43′. See Detail "B" for HMA pavement thickness more than 0.43′ or concrete pavement.
3. For locations and limits of embankment see project plans.
4. Safety edge transverse joint must match pavement transverse joint. End of #6 longitudinal bar must be 2" ±½" clear from transverse joint.
5. Safety edge is not needed in the area of MBGR, barrier, right turn lane and acceleration lane. See Revised Standard Plan RSP P74.

STATE OF CALIFORNIA
DEPARTMENT OF TRANSPORTATION

PAVEMENT EDGE TREATMENTS-NEW CONSTRUCTION

NO SCALE

RSP P76 DATED JANUARY 20, 2012 SUPPLEMENTS THE STANDARD PLANS BOOK DATED 2010.

REVISED STANDARD PLAN RSP P76

2010 REVISED STANDARD PLAN RSP P76

Dist	COUNTY	ROUTE	POST MILES TOTAL PROJECT	SHEET No.	TOTAL SHEETS
02	Sha	5	R34.3/R36.8	60	72

Raymond Don Tsztoo
REGISTERED CIVIL ENGINEER

April 19, 2013
PLANS APPROVAL DATE

REGISTERED PROFESSIONAL ENGINEER Raymond Don Tsztoo No. C37332 Exp. 6-30-14 CIVIL STATE OF CALIFORNIA

THE STATE OF CALIFORNIA OR ITS OFFICERS OR AGENTS SHALL NOT BE RESPONSIBLE FOR THE ACCURACY OR COMPLETENESS OF SCANNED COPIES OF THIS PLAN SHEET.

TO ACCOMPANY PLANS DATED 11-22-13

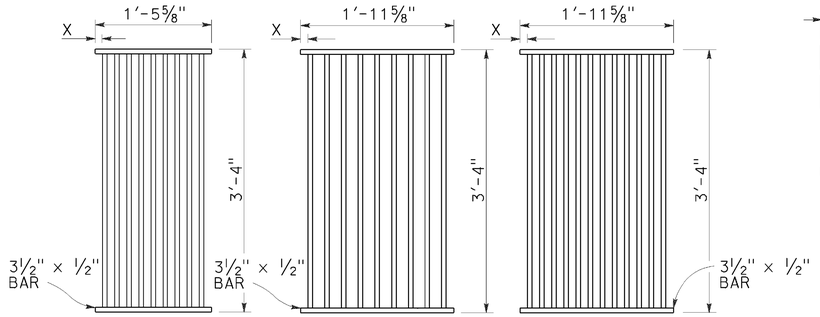

TYPE 18-9

1⅜" Clear spacing. Use within the roadbed on highways where bicycles and pedestrians are excluded.

TYPE 24-9

2" Clear spacing. Use in locations off the roadbed on all types of highways.

TYPE 24-12

1⅜" Clear spacing. Use within the roadbed on highways where bicycles and pedestrians are excluded.

RECTANGULAR GRATE DETAILS

(See table below)

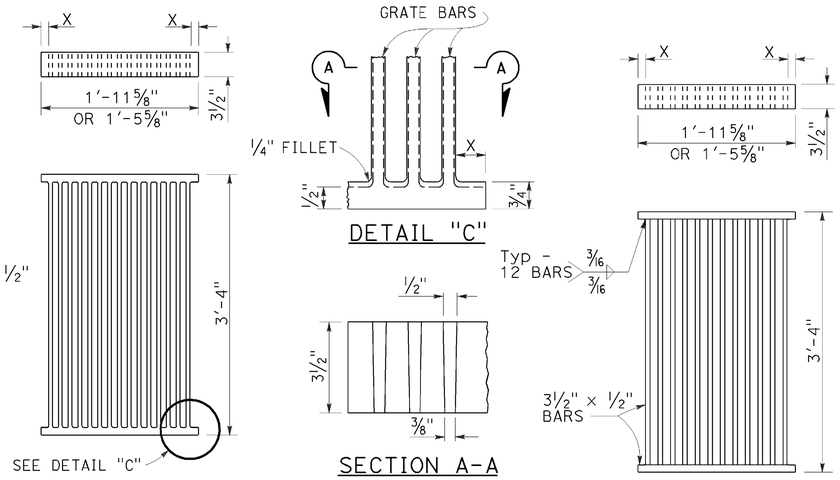

ALTERNATIVE CAST DUCTILE IRON GRATE OR CAST CARBON STEEL GRATE

ALTERNATIVE WELDED GRATE

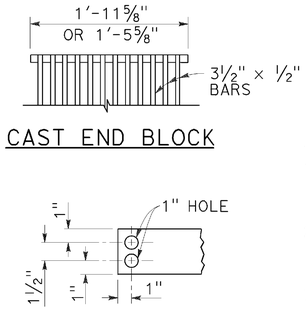

CAST END BLOCK

END OF BAR

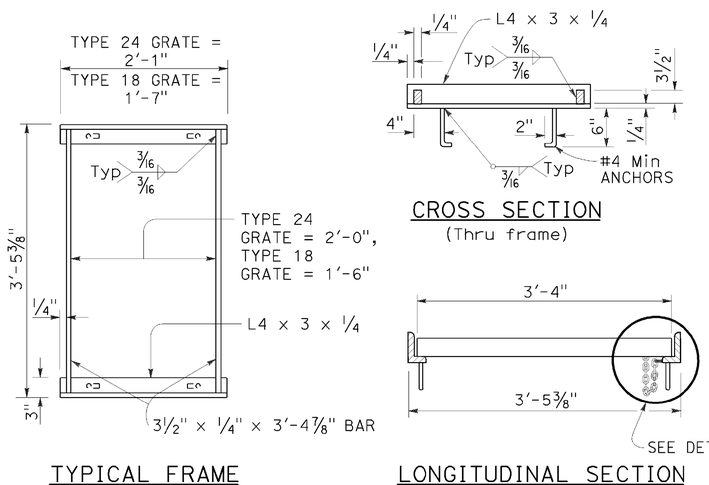

TYPICAL FRAME

CROSS SECTION
(Thru frame)

LONGITUDINAL SECTION
(Thru frame and grate)

RECTANGULAR FRAME DETAILS

(For all rectangular grates)

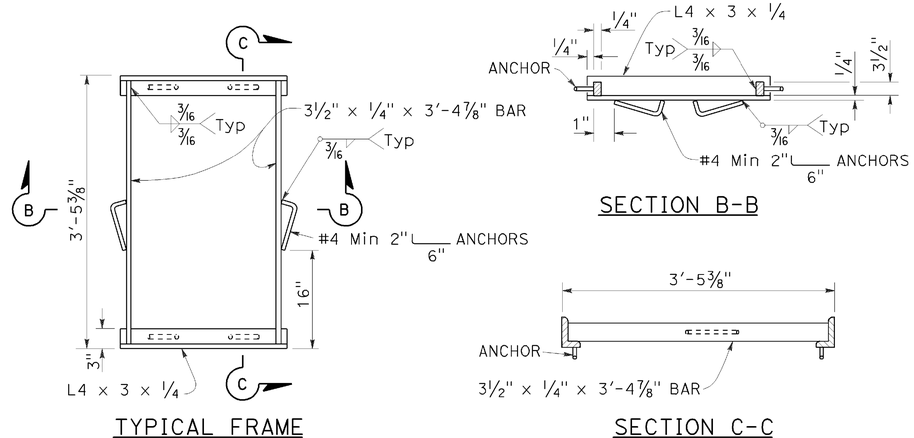

TYPICAL FRAME

SECTION B-B

SECTION C-C

ALTERNATIVE ANCHOR FOR RECTANGULAR FRAME

(For details not shown, See Rectangular Frame Details)

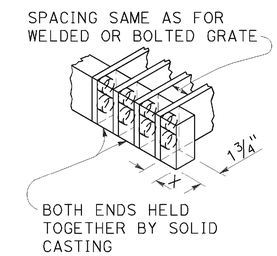

ALTERNATIVE CAST DUCTILE IRON OR CAST CARBON STEEL END BLOCK GRATE

NOTES:

1. Grate type numbers refer to approximate width of grate in inches and number of bars, respectively.
2. Contractor has the option of using cast ductile iron, cast carbon steel, welded, bolted, or cast end block grate.
3. Rounded top of bars optional on all grates.
4. Pipe inlets with a grate shall be placed so that bars parallel direction of principle surface flow.
5. Complete joint penetration butt welds may be substituted for the fillet welds on all anchors.
6. Standard square, hexagon, round or equivalent headed anchors may be substituted for the right angle hooks on the anchors shown on this plan.
7. Grate and frame weights are based on welded grates (weights of face angles, steps, protection bars, etc. are not included).
8. Connect chain to grate and frame only at locations shown on the plans. When chain is required, do not use cast ductile iron grates.

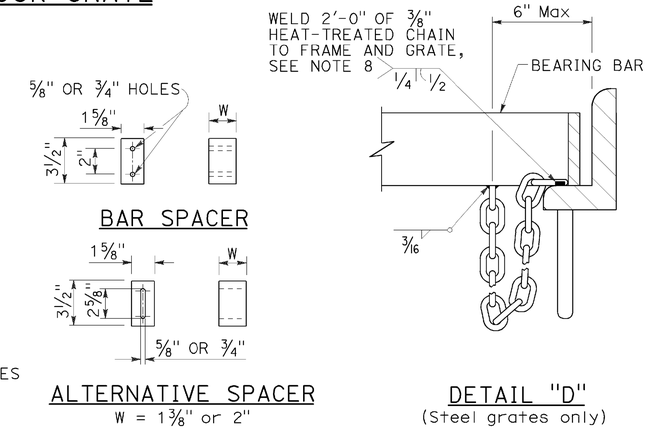

ALTERNATIVE BOLTED GRATE

GRATE BAR SPACING TABLE

TYPE	No. OF BARS	CLEAR BAR SPACING	X
18-9	9	1⅜"	1 1/16"
24-9	9	2"	1 9/16"
24-12	12	1⅜"	1¼"

INLET TYPE	COVER TYPE	WEIGHT LB
OS	PLATE	174
OL-7	PLATE	170
OL-10	PLATE	170
OL-14	PLATE	170
OL-21	PLATE	170
OCP	PLATE	112
OCPI	PLATE	112
OCPI	REDWOOD	42
OMP	PLATE	177
OMPI	PLATE	177

INLET TYPE	GRATE TYPE	No. OF GRATES	WEIGHT LB
GDO	24-12	2	634
GOL-7	24-12	1	326
GOL-10	24-12	1	326
GO,G1,G2,G3,G4 (TYPE 24)	24-9	1	263
	24-12	1	326
G4 (TYPE 18),G5,G6	18-9	1	249
GT1	18-9	2	498
GT2	18-9	2	498
GT3	24-12	2	652
GT4	24-12	2	652
TRASH RACK			22
GRATE CHAIN			3

BASIS FOR Misc IRON & STEEL FINAL PAY WEIGHTS FOR DRAINAGE INLETS

(See Note 7)

STATE OF CALIFORNIA
DEPARTMENT OF TRANSPORTATION

GRATE DETAILS No. 1

NO SCALE

RSP D77A DATED APRIL 19, 2013 SUPERSEDES RSP D77A DATED JULY 20, 2012 AND STANDARD PLAN D77A DATED MAY 20, 2011 - PAGE 164 OF THE STANDARD PLANS BOOK DATED 2010.

REVISED STANDARD PLAN RSP D77A

2010 REVISED STANDARD PLAN RSP D77A

Dist	COUNTY	ROUTE	POST MILES TOTAL PROJECT	SHEET No.	TOTAL SHEETS
02	Sha	5	R34.3/R36.8	61	72

Raymond Don Tsztoo
REGISTERED CIVIL ENGINEER

April 19, 2013
PLANS APPROVAL DATE

REGISTERED PROFESSIONAL ENGINEER Raymond Don Tsztoo No. C37332 Exp. 6-30-14 CIVIL STATE OF CALIFORNIA

THE STATE OF CALIFORNIA OR ITS OFFICERS OR AGENTS SHALL NOT BE RESPONSIBLE FOR THE ACCURACY OR COMPLETENESS OF SCANNED COPIES OF THIS PLAN SHEET.

TO ACCOMPANY PLANS DATED 11-22-13

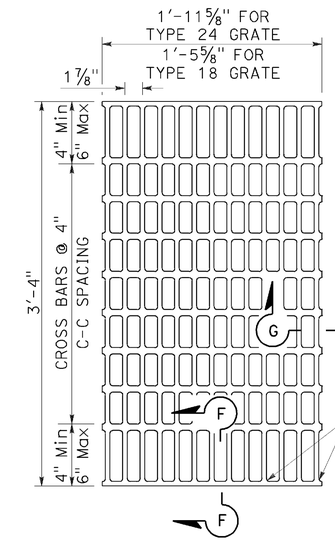

NOTES:

Bearing bars to be 3½" × ¼" bars on 1⅞" centers.

⅜"± ø Cross bars may be fillet welded, resistance welded or electroforged to bearing bars.

Weight of Type 24 grate = 141 LBS.

Weight of Type 18 grate = 107 LBS. (Type 24 grate shown).

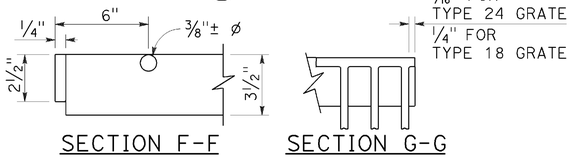

SECTION F-F SECTION G-G

TYPE 18-10 AND 24-13 GRATE

(Welded Steel)

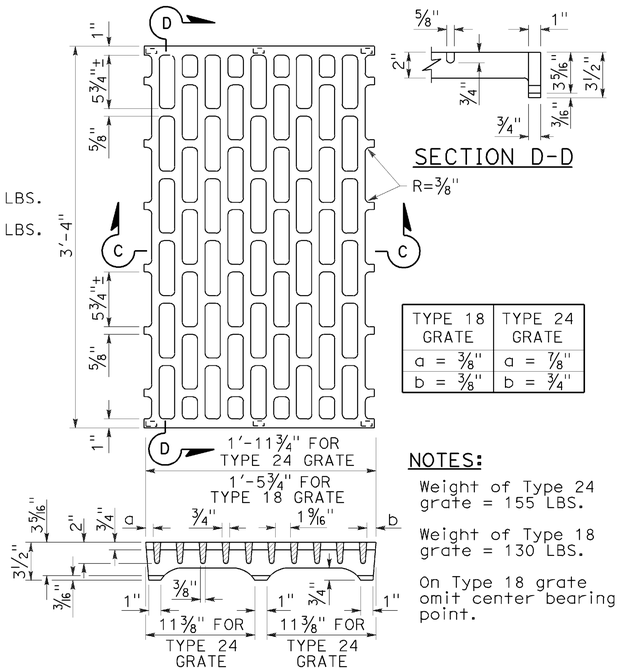

SECTION D-D

TYPE 18 GRATE	TYPE 24 GRATE
a = ⅜"	a = ⅞"
b = ⅜"	b = ¾"

NOTES:

Weight of Type 24 grate = 155 LBS.

Weight of Type 18 grate = 130 LBS.

On Type 18 grate omit center bearing point.

SECTION C-C

TYPE 18-8C AND 24-10C GRATE

(Cast ductile iron)

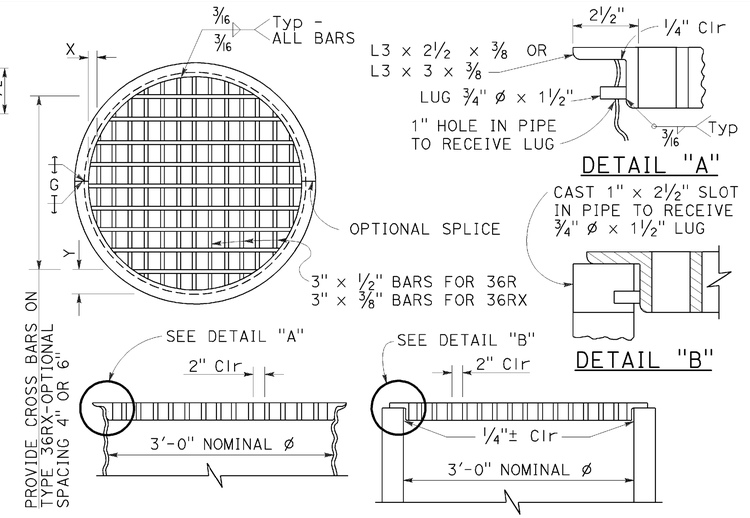

DETAIL "A"

DETAIL "B"

TYPE 36R AND 36RX GRATE DETAILS

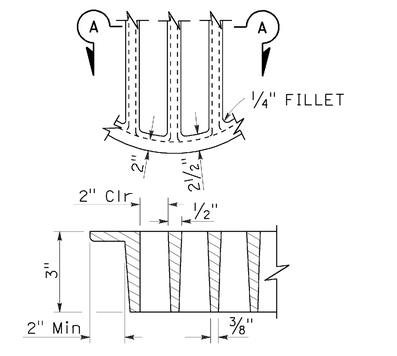

SECTION A-A

ALTERNATIVE CAST DUCTILE IRON GRATE OR CAST CARBON STEEL GRATE TYPE 36R AND 36RX

BASIS FOR Misc IRON AND STEEL FINAL PAY WEIGHTS FOR DRAINAGE INLETS

INLET TYPE	GRATE TYPE	No. OF GRATES	WEIGHT LB
GDO (SEE NOTE 4)	24-10C	2	391
	24-10S	2	456
	24-12X	2	473
	24-13	2	374
GO,GOL,G1,G2, G3,G4 (TYPE 24)	24-10C	1	202
	24-10S	1	229
	24-12X	1	239
	24-13	1	188
G4 (TYPE 18) G5,G6	18-8S	1	187
	18-9X	1	187
	18-10	1	149
GT1,GT2	18-8S	2	374
	18-9X	2	374
	18-10	2	298
GT3,GT4	24-10C	2	404
	24-10S	2	458
	24-12X	2	478
	24-13	2	376
ODI	36RX (Mod)	1	196
GMP,GCP,GCPI	36RX	1	215
ODI	36R (Mod)	1	220
GMP,GCP,GCPI	36R	1	236
TRASH RACK			22
GRATE CHAIN			3

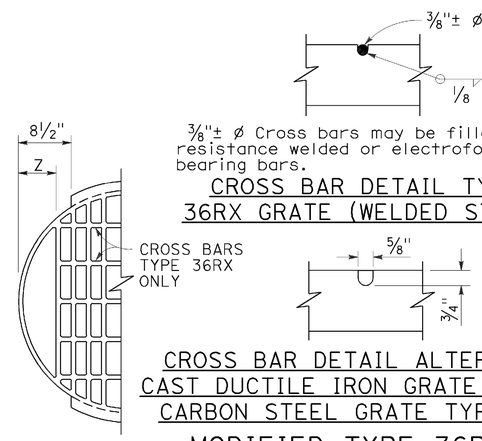

⅜"± ø Cross bars may be fillet welded, resistance welded or electroforged to bearing bars.

CROSS BAR DETAIL TYPE 36RX GRATE (WELDED STEEL)

CROSS BAR DETAIL ALTERNATIVE CAST DUCTILE IRON GRATE OR CAST CARBON STEEL GRATE TYPE 36RX

MODIFIED TYPE 36R AND 36RX GRATE FOR ODI INLET

NOTES:

1. When alternative grates are allowed - Final pay based on alternative with the lesser weight.
2. Use frame shown on Standard Plan D74A, D74B or RSP D77A as appropriate.
3. When Type 24-10S, 24-12X or 24-13 grates are used with GDO Inlets, a ¼" × 3½" × 3'-4⅞" steel bar shall be welded across the center of inlet frame to separate the individual grates.
4. See Revised Standard Plan RSP D77A for connecting chain to welded grate and frame. When chain is required, do not use cast ductile iron grate.

GRATE BAR SPACING TABLE

TYPE	No. OF BARS	CLEAR BAR SPACING	X	Y 4" SPACING	Y 6" SPACING	Z
36R	13	2"	2⅛"	-	-	-
36RX (STEEL)	15	2"	9/16"	3¾"	5¾"	-
36RX (CAST)	13	2"	2⅛"	3¾"	5¾"	-
36R Mod	12	2"	2⅛"	-	-	5"
36RX Mod (STEEL)	13	2"	9/16"	3¾"	5¾"	5 11/16"
36RX Mod (CAST)	12	2"	2⅛"	3¾"	5¾"	5"

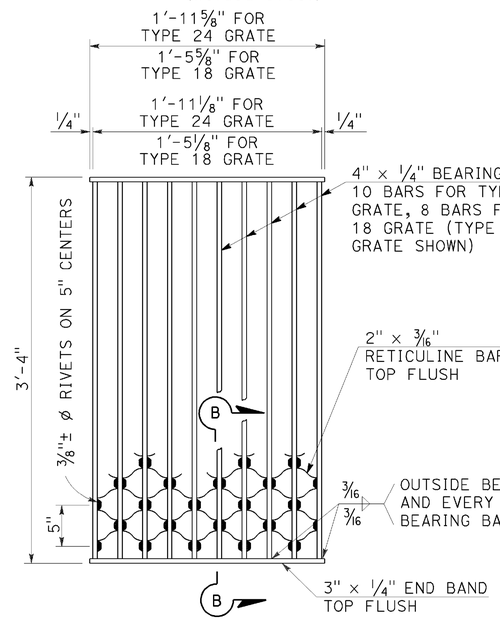

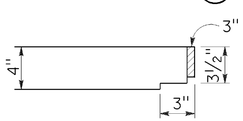

NOTES:

Weight of Type 24 grate = 182 LBS.
Weight of Type 18 grate = 145 LBS.

SECTION B-B

TYPE 18-8S AND 24-10S GRATE

(Welded Steel) Reticuline type

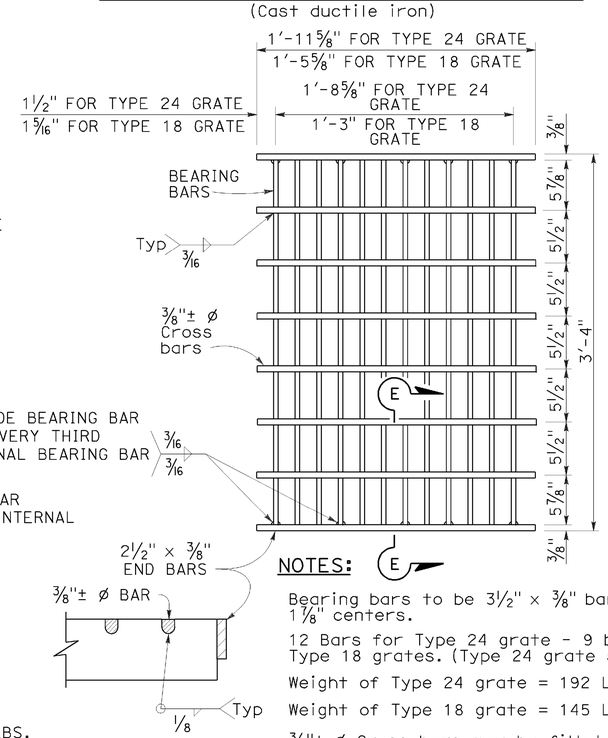

SECTION E-E

NOTES:

Bearing bars to be 3½" × ⅜" bars on 1⅞" centers.

12 Bars for Type 24 grate - 9 bars for Type 18 grates. (Type 24 grate shown).

Weight of Type 24 grate = 192 LBS.

Weight of Type 18 grate = 145 LBS.

⅜"± ø Cross bars may be fillet welded, resistance welded or electroforged to bearing bars.

TYPE 18-9X AND 24-12X GRATE

(Welded Steel)

STATE OF CALIFORNIA
DEPARTMENT OF TRANSPORTATION

GRATE DETAILS No. 2

NO SCALE

RSP D77B DATED APRIL 19, 2013 SUPERSEDES RSP D77B DATED JULY 20, 2012 AND STANDARD PLAN D77B DATED MAY 20, 2011 - PAGE 165 OF THE STANDARD PLANS BOOK DATED 2010.

REVISED STANDARD PLAN RSP D77B

2010 REVISED STANDARD PLAN RSP D77B

DATE PLOTTED => 02-DEC-2013
TIME PLOTTED => 15:43

Dist	COUNTY	ROUTE	POST MILES TOTAL PROJECT	SHEET No.	TOTAL SHEETS
02	Sha	5	R34.3/R36.8	62	72

REGISTERED CIVIL ENGINEER

July 19, 2013
PLANS APPROVAL DATE

REGISTERED PROFESSIONAL ENGINEER Gurinderpal Bhullar No. C48815 Exp. 9-30-14 CIVIL STATE OF CALIFORNIA

THE STATE OF CALIFORNIA OR ITS OFFICERS OR AGENTS SHALL NOT BE RESPONSIBLE FOR THE ACCURACY OR COMPLETENESS OF SCANNED COPIES OF THIS PLAN SHEET.

TO ACCOMPANY PLANS DATED 11-22-13

TABLE 1

TAPER LENGTH CRITERIA AND CHANNELIZING DEVICE SPACING

SPEED (S)	MINIMUM TAPER LENGTH * FOR WIDTH OF OFFSET 12 FEET (W)				MAXIMUM CHANNELIZING DEVICE SPACING		
					X	Y	Z **
	TANGENT 2L	MERGING L	SHIFTING L/2	SHOULDER L/3	TAPER	TANGENT	CONFLICT
mph	ft	ft	ft	ft	ft	ft	ft
20	160	80	40	27	20	40	10
25	250	125	63	42	25	50	12
30	360	180	90	60	30	60	15
35	490	245	123	82	35	70	17
40	640	320	160	107	40	80	20
45	1080	540	270	180	45	90	22
50	1200	600	300	200	50	100	25
55	1320	660	330	220	55	110	27
60	1440	720	360	240	60	120	30
65	1560	780	390	260	65	130	32
70	1680	840	420	280	70	140	35

* - For other offsets, use the following merging taper length formula for L:
For speed of 40 mph or less, $L = WS^2/60$
For speed of 45 mph or more, $L = WS$

Where: L = Taper length in feet
W = Width of offset in feet
S = Posted speed limit, off-peak 85th-percentile speed prior to work starting, or the anticipated operating speed in mph

** - Use for taper and tangent sections where there are no pavement markings or where there is a conflict between existing pavement markings and channelizers (CA).

TABLE 2

LONGITUDINAL BUFFER SPACE AND FLAGGER STATION SPACING

SPEED *	Min D **	DOWNGRADE Min D ***		
		-3%	-6%	-9%
mph	ft	ft	ft	ft
20	115	116	120	126
25	155	158	165	173
30	200	205	215	227
35	250	257	271	287
40	305	315	333	354
45	360	378	400	427
50	425	446	474	507
55	495	520	553	593
60	570	598	638	686
65	645	682	728	785
70	730	771	825	891

* - Speed is posted speed limit, off-peak 85th-percentile speed prior to work starting, or the anticipated operating speed in mph

** - Longitudinal buffer space or flagger station spacing

*** - Use on sustained downgrade steeper than -3 percent and longer than 1 mile.

TABLE 3

ADVANCE WARNING SIGN SPACING

ROAD TYPE	DISTANCE BETWEEN SIGNS *		
	A	B	C
	ft	ft	ft
URBAN - 25 mph OR LESS	100	100	100
URBAN - MORE THAN 25 mph TO 40 mph	250	250	250
URBAN - MORE THAN 40 mph	350	350	350
RURAL	500	500	500
EXPRESSWAY / FREEWAY	1000	1500	2640

* - The distances are approximate, are intended for guidance purposes only, and should be applied with engineering judgment. These distances should be adjusted by the Engineer for field conditions, if necessary, by increasing or decreasing the recommmended distances.

STATE OF CALIFORNIA
DEPARTMENT OF TRANSPORTATION

TRAFFIC CONTROL SYSTEM TABLES FOR LANE AND RAMP CLOSURES

NO SCALE

RSP T9 DATED JULY 19, 2013 SUPERSEDES RSP T9 DATED APRIL 19, 2013 THAT SUPPLEMENTS THE STANDARD PLANS BOOK DATED 2010.

REVISED STANDARD PLAN RSP T9

2010 REVISED STANDARD PLAN RSP T9

DATE PLOTTED => 02-DEC-2013
TIME PLOTTED => 15:43

TO ACCOMPANY PLANS DATED 11-22-13

Dist	COUNTY	ROUTE	POST MILES TOTAL PROJECT	SHEET No.	TOTAL SHEETS
02	Sha	5	R34.3/R36.8	63	72

REGISTERED CIVIL ENGINEER

April 19, 2013
PLANS APPROVAL DATE

REGISTERED PROFESSIONAL ENGINEER Gurinderpal Bhullar No. C48815 Exp. 9-30-14 CIVIL STATE OF CALIFORNIA

THE STATE OF CALIFORNIA OR ITS OFFICERS OR AGENTS SHALL NOT BE RESPONSIBLE FOR THE ACCURACY OR COMPLETENESS OF SCANNED COPIES OF THIS PLAN SHEET.

NOTES:

See Revised Standard Plan RSP T9 for tables.

Use cone spacing X for taper segment, Y for tangent segment or Z for conflict situations, as approriate, per Table 1, unless X, Y, or Z cone spacing is shown on this sheet.

Unless otherwise specified in the special provisions, all temporary warning signs shall have black legend on fluorescent orange background.

California codes are designated by (CA). Otherwise, Federal (MUTCD) codes are shown.

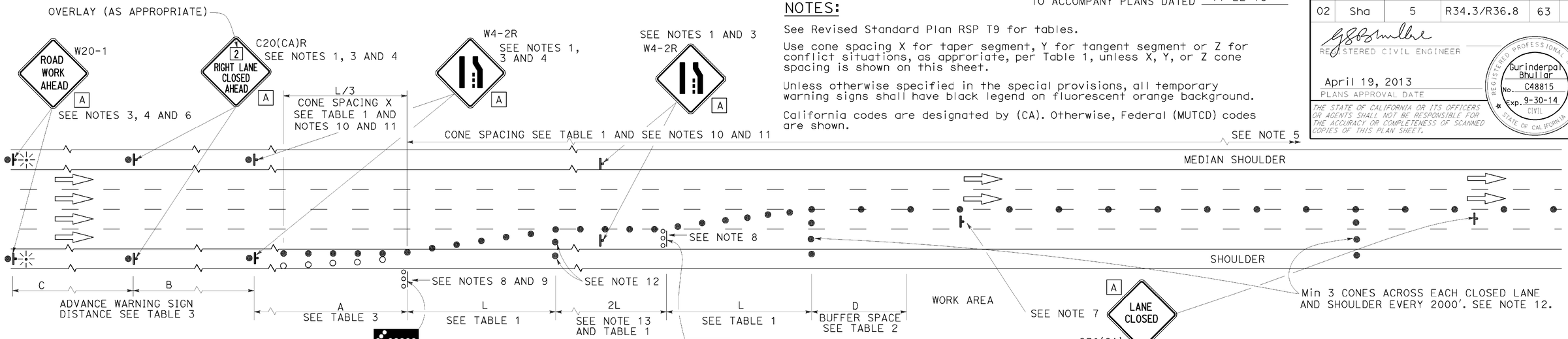

LANE CLOSURE

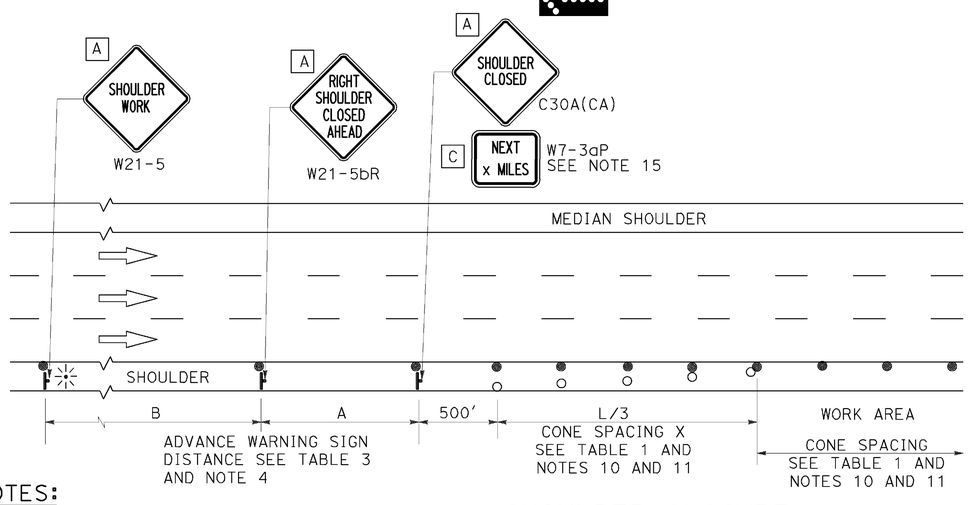

SHOULDER CLOSURE

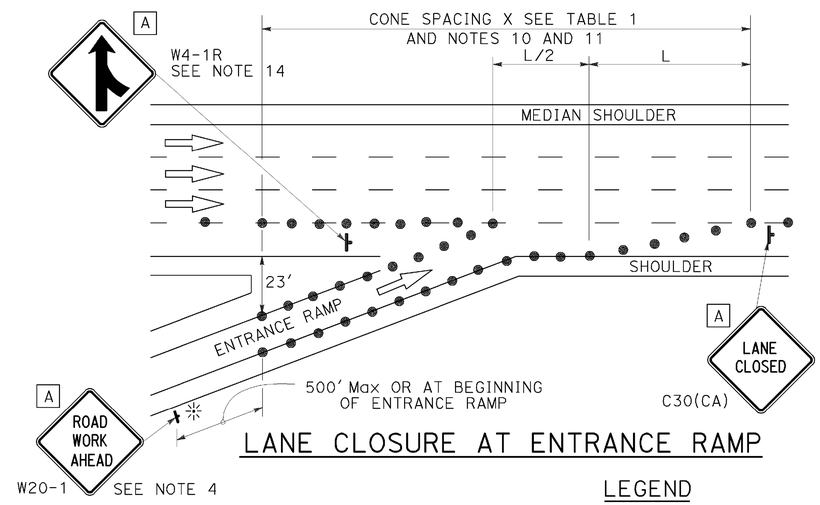

LANE CLOSURE AT ENTRANCE RAMP

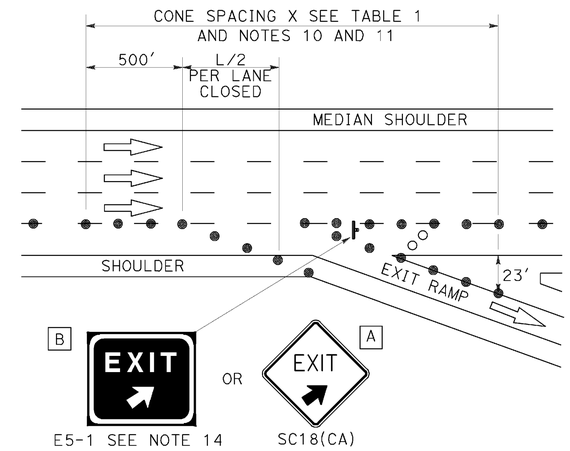

LANE CLOSURE AT EXIT RAMP

NOTES:

1. Median lane closures shall conform to the details as shown except that C20(CA)L and W4-2L signs shall be used.
2. At least one person shall be assigned to provide full time maintenance of traffic control devices for lane closures.
3. Duplicate sign installations are not required:
   a) On opposite shoulder if at least one-half of the available lanes remain open to traffic.
   b) In the median if the width of the median shoulder is less than 8' and the outside lanes are to be closed.
4. Each advance warning sign on each side of the roadway shall be equipped with at least two flags for daytime closure. Each flag shall be at least 16" x 16" in size and shall be orange or fluorescent red-orange in color. Flashing beacons shall be placed at the locations indicated for lane closure during hours of darkness.
5. A G20-2 "END ROAD WORK" sign, with minimum size of 48" x 24" as appropriate, shall be placed at the end of the lane closure unless the end of work area is obvious or ends within a larger project's limits.
6. If the W20-1 sign would follow within 2000' of a stationary W20-1 or G20-1 "ROAD WORK NEXT _____ MILES", use a C20(CA) sign for the first advance warning sign.
7. Place a C30(CA) sign every 2000' throughout length of lane closure.
8. One flashing arrow sign for each lane closed. The flashing arrow signs shall be Type I.
9. A minimum 1500' of sight distance shall be provided where possible for vehicles approaching the first flashing arrow sign. Lane closures shall not begin at top of crest vertical curve or on a horizontal curve.
10. All cones used for lane closures during the hours of darkness shall be fitted with retroreflective bands (or sleeves) as specified in the specifications.
11. Portable delineators, placed at one-half the spacing indicated for traffic cones may be used instead of cones for daytime closures only.
12. Unless otherwise specified in the special provisions, a minimum of 3 cones shall be placed transversely across each closed lane and shoulder at each location where a taper across a traffic lane ends and every 2000' as shown on the "Lane Closure" detail. Two Type II barricades may be used instead of the 3 cones. The transverse alignment of the cones or barricades on the closed shoulder may be shifted from the transverse alignment to provide access to the work.
13. Unless otherwise specified in the special provisions, the 2L tangent shown along lane lines shall be used between the L tapers required for each closed traffic lane.
14. Unless otherwise specified in the special provisions, the E5-1 or SC18(CA) and W4-1 signs shall be used as shown.
15. A W7-3aP "NEXT____MILES" plaque must be used if theshoulder closure extends beyond the distance that can be perceived by road users.

LEGEND

- TRAFFIC CONE
- TRAFFIC CONE (OPTIONAL TAPER)
- TEMPORARY TRAFFIC CONTROL SIGN
- FLASHING ARROW SIGN (FAS)
- FAS SUPPORT OR TRAILER
- PORTABLE FLASHING BEACON

SIGN PANEL SIZE (Min)

A	48" x 48"
B	72" x 60"
C	36" x 30"

STATE OF CALIFORNIA
DEPARTMENT OF TRANSPORTATION

TRAFFIC CONTROL SYSTEM FOR LANE CLOSURE ON FREEWAYS AND EXPRESSWAYS

NO SCALE

RSP T10 DATED APRIL 19, 2013 SUPERSEDES STANDARD PLAN T10 DATED MAY 20, 2011 - PAGE 237 OF THE STANDARD PLANS BOOK DATED 2010.

REVISED STANDARD PLAN RSP T10

2010 REVISED STANDARD PLAN RSP T10

Dist	COUNTY	ROUTE	POST MILES TOTAL PROJECT	SHEET No.	TOTAL SHEETS
02	Sha	5	R34.3/R36.8	64	72

REGISTERED CIVIL ENGINEER

April 19, 2013
PLANS APPROVAL DATE

REGISTERED PROFESSIONAL ENGINEER Gurinderpal Bhullar No. C48815 Exp. 9-30-14 CIVIL STATE OF CALIFORNIA

THE STATE OF CALIFORNIA OR ITS OFFICERS OR AGENTS SHALL NOT BE RESPONSIBLE FOR THE ACCURACY OR COMPLETENESS OF SCANNED COPIES OF THIS PLAN SHEET.

TO ACCOMPANY PLANS DATED 11-22-13

TYPICAL RAMP CLOSURES

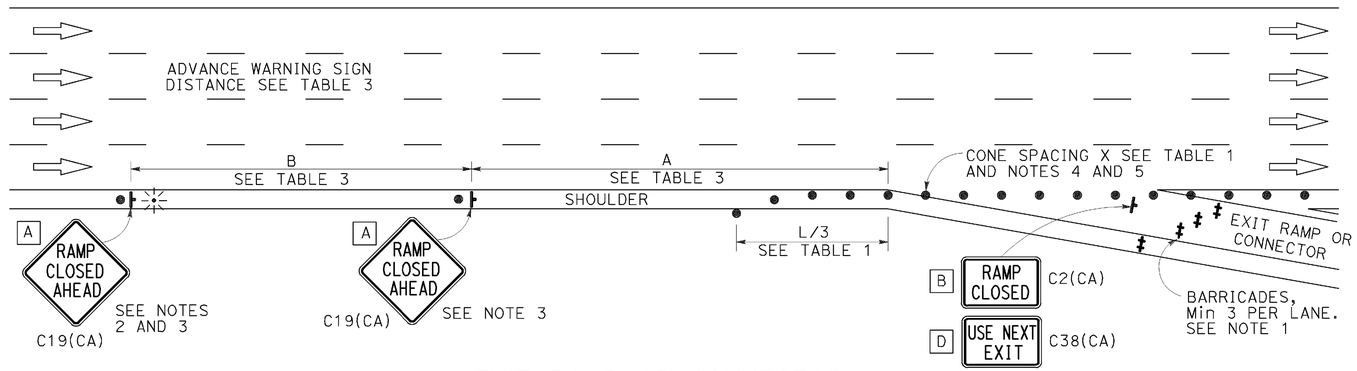

EXIT RAMP OR CONNECTOR

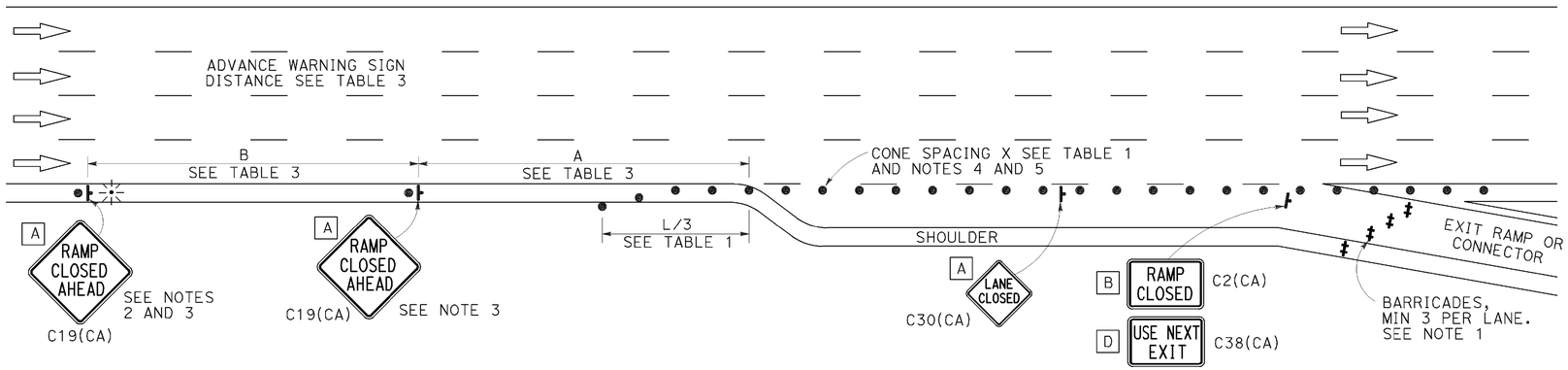

EXIT RAMP OR CONNECTOR WITH ADDITIONAL LANE

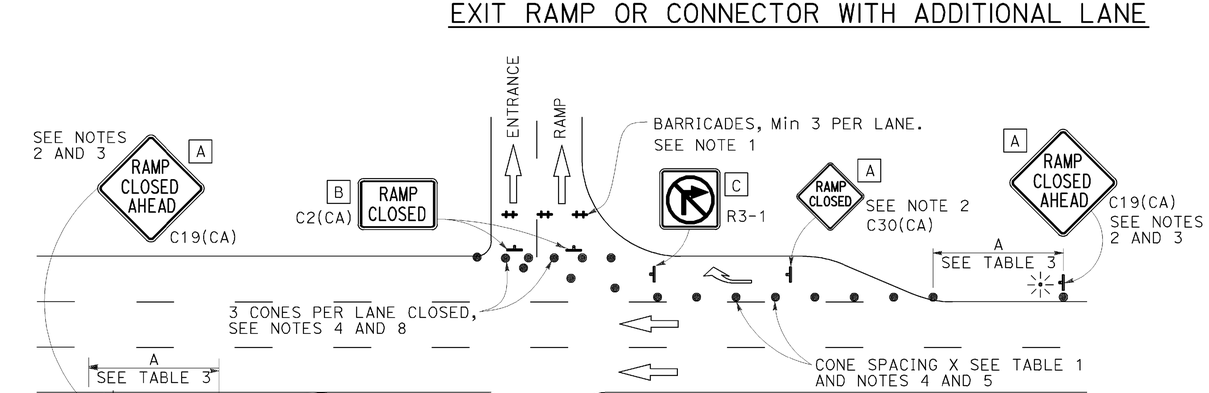

ENTRANCE RAMP WITH TURNING POCKETS

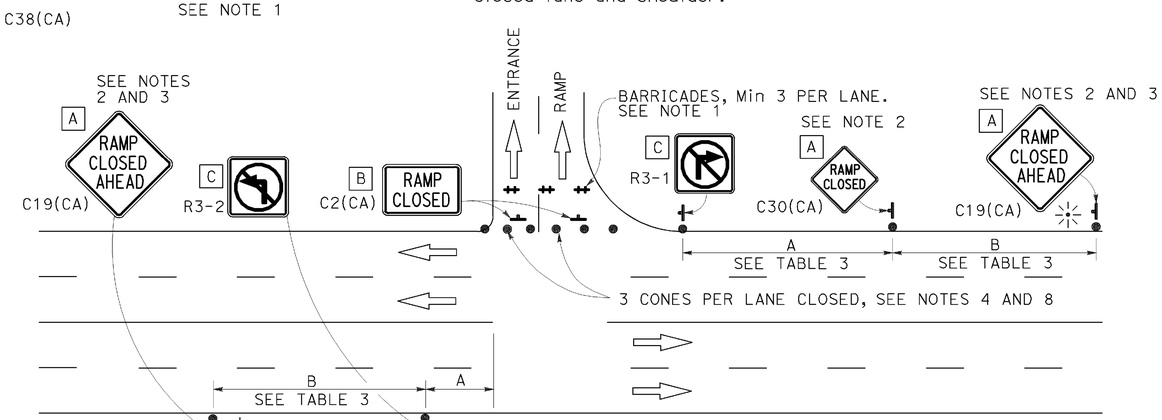

ENTRANCE RAMP WITHOUT TURNING POCKETS

SIGN PANEL SIZE (Min)

- A 48" × 48"
- B 48" × 30"
- C 36" × 36"
- D 48" × 36"

LEGEND

- TRAFFIC CONE
- TEMPORARY TRAFFIC CONTROL SIGN
- BARRICADES
- PORTABLE FLASHING BEACON

NOTES:

1. Barricades shall be Type I, II, or III for closures lasting one week or less and Type III for closures lasting longer than one week.
2. In addition to placing the C19(CA) "RAMP CLOSED AHEAD" and C30(CA) "RAMP CLOSED" signs, black on orange overlay plates with the word "CLOSED" may be mounted, as directed by the Engineer, on all guide signs that refer to the closed ramp. The letter size on the overlay shall be the same as the guide sign.
3. Each advance C19(CA) "RAMP CLOSED AHEAD" sign shall be equipped with at least two flags for daytime closure. Each flag shall be at least 16" × 16" in size and shall be orange or fluorescent red-orange in color. A flashing beacon shall be placed on top of the first C19(CA) sign during hours of darkness.
4. All cones used for ramp closures during the hours of darkness shall be fitted with retroreflective bands (or sleeves) as specified in the specifications.
5. Portable delineators, placed at one-half the spacing indicated for traffic cones, may be used instead of cones for daytime ramp closures only.
6. At least one person shall be assigned to provide full time maintenance of traffic control devices, unless otherwise directed by the Engineer.
7. The existing "EXIT" signs shall be covered during ramp closures.
8. A minimum of 3 cones shall be placed transversely across each closed lane and shoulder.

NOTES:

See Revised Standard Plan RSP T9 for tables.

Use cone spacing X for taper segment, Y for tangent segment or Z for conflict situations, as approriate, per Table 1, unless X, Y, or Z cone spacing is shown on this sheet.

Unless otherwise specified in the special provisions, all temporary warning signs shall have black legend on fluorescent orange background.

California codes are designated by (CA). Otherwise, Federal (MUTCD) codes are shown.

STATE OF CALIFORNIA
DEPARTMENT OF TRANSPORTATION

TRAFFIC CONTROL SYSTEM FOR RAMP CLOSURE

NO SCALE

RSP T14 DATED APRIL 19, 2013 SUPERSEDES STANDARD PLAN T14
DATED MAY 20, 2011 - PAGE 242 OF THE STANDARD PLANS BOOK DATED 2010.

REVISED STANDARD PLAN RSP T14

2010 REVISED STANDARD PLAN RSP T14

DATE PLOTTED => 02-DEC-2013
TIME PLOTTED => 15:43

Dist	COUNTY	ROUTE	POST MILES TOTAL PROJECT	SHEET No.	TOTAL SHEETS
02	Sha	5	R34.3/R36.8	65	72

REGISTERED CIVIL ENGINEER

April 19, 2013
PLANS APPROVAL DATE

REGISTERED PROFESSIONAL ENGINEER
Gurinderpal Bhullar
No. C48815
Exp. 9-30-14
CIVIL
STATE OF CALIFORNIA

THE STATE OF CALIFORNIA OR ITS OFFICERS OR AGENTS SHALL NOT BE RESPONSIBLE FOR THE ACCURACY OR COMPLETENESS OF SCANNED COPIES OF THIS PLAN SHEET.

TO ACCOMPANY PLANS DATED 11-22-13

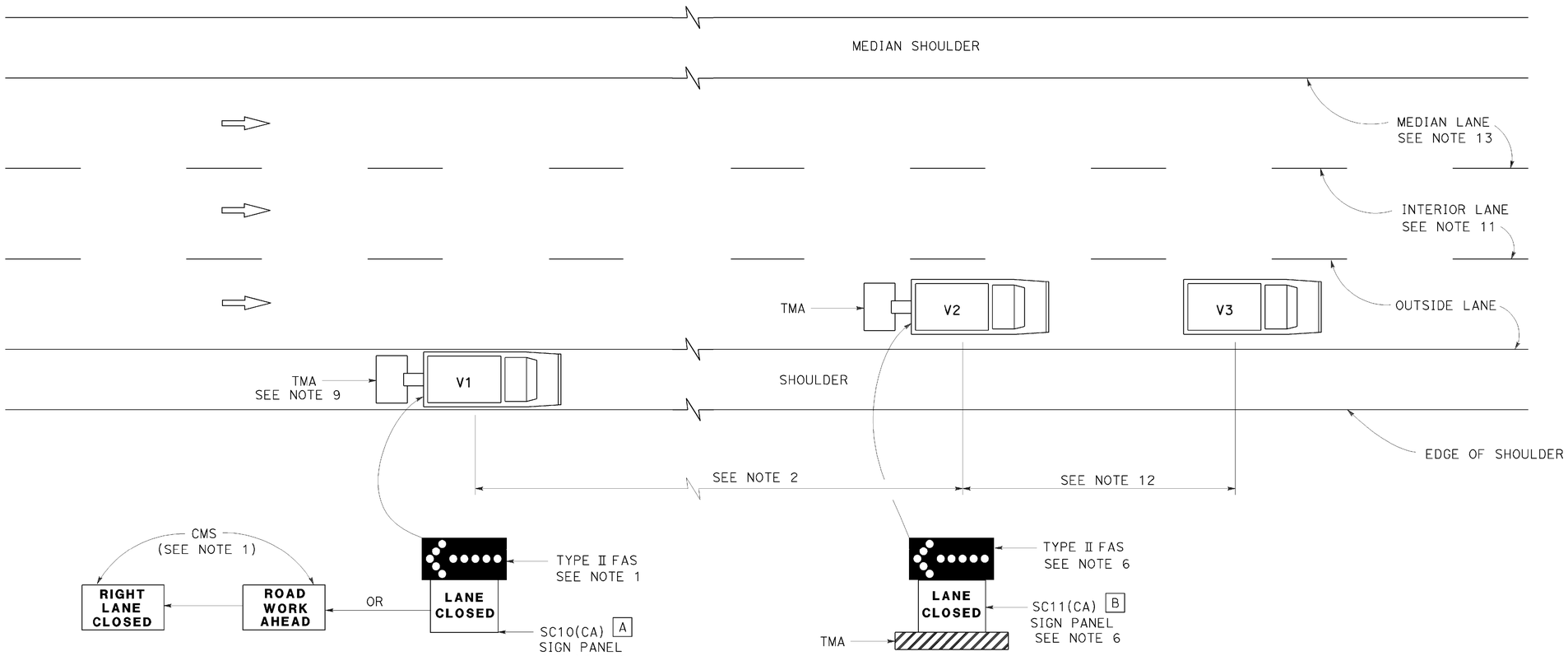

MOVING LANE CLOSURE ON MEDIAN LANE OR OUTSIDE LANE OF MULTILANE HIGHWAYS

SIGN PANEL SIZE (Min)

A 66" x 36"

B 54" x 42"

LEGEND

V1	SIGN VEHICLE
V2	SHADOW VEHICLE
V3	WORK/APPLICATION VEHICLE
	FLASHING ARROW SIGN (FAS)
CMS	CHANGEABLE MESSAGE SIGN
TMA	TRUCK-MOUNTED ATTENUATOR

NOTES:

1. Either a changeable message sign or a SC10(CA) sign panel and a Type II flashing arrow sign shall be mounted on the rear of sign vehicle V1. The changeable message sign shall be sequenced to show the "ROAD WORK AHEAD" message first, followed by the "RIGHT LANE CLOSED" message. For median lane closure, the flashing arrow symbol shall be reversed with the arrowhead on the right and the changeable message sign shall show "LEFT LANE CLOSED".
2. If traffic queues develop, sign vehicle V1 should be positioned upstream from the end of queue. Sign vehicle V1 shall be positioned where highly visible when shoulders are not available.
3. A minimum sight distance of 1500′ should be provided in advance of sign vehicle V1.
4. Sign vehicle V1 should remain at the beginning of horizontal or vertical curves until the other vehicles (V2 and V3) are far enough beyond the curve to resume the minimum sight distance of 1500′.
5. Vehicle-mounted sign panels shall have Type III or above retroreflective sheeting, black on white, or black on fluorescent orange, with 6" minimum series D letters per Caltrans sign specifications.
6. Shadow vehicle V2 shall be equipped with a truck-mounted attenuator. The sign panel shown and a Type II flashing arrow sign shall be mounted on the rear of shadow vehicle V2. For median lane closure the flashing arrow sign symbol shall be displayed with the arrowhead on the right.
7. All vehicles used for lane closures shall be equipped with two-way radios, and the vehicle operators shall maintain communication during the work or application operation.
8. All vehicles shall be equipped with flashing or rotating amber lights.
9. If sign vehicle V1 encroaches into the traffic lane due to insufficient shoulder width, sign vehicle V1 shall be equipped with a truck-mounted attenuator. Sign vehicle V1 shall stay as close to the edge of shoulder as practicable.
10. Where workers would be on foot in the work area, a stationary type lane closure (Revised Standard Plan T10, T11, etc., as applicable) shall be used instead of this plan.
11. For moving lane closure on interior lane of multilane highways, use Revised Standard Plan T16.
12. The spacing between work vehicle(s) and the shadow vehicles, and between each shadow vehicle should be minimized to deter road users from driving in between.
13. When the work/application vehicle V3 occupies the median lane, sign vehicle V1 should drive in the median shoulder and indicate left lane closed ahead.

STATE OF CALIFORNIA
DEPARTMENT OF TRANSPORTATION

TRAFFIC CONTROL SYSTEM FOR MOVING LANE CLOSURE ON MULTILANE HIGHWAYS

NO SCALE

RSP T15 DATED APRIL 19, 2013 SUPERSEDES STANDARD PLAN T15
DATED MAY 20, 2011 - PAGE 243 OF THE STANDARD PLANS BOOK DATED 2010.

REVISED STANDARD PLAN RSP T15

2010 REVISED STANDARD PLAN RSP T15

Dist	COUNTY	ROUTE	POST MILES TOTAL PROJECT	SHEET No.	TOTAL SHEETS
02	Sha	5	R34.3/R36.8	66	72

REGISTERED CIVIL ENGINEER

April 19, 2013
PLANS APPROVAL DATE

REGISTERED PROFESSIONAL ENGINEER Gurinderpal Bhullar No. C48815 Exp. 9-30-14 CIVIL STATE OF CALIFORNIA

THE STATE OF CALIFORNIA OR ITS OFFICERS OR AGENTS SHALL NOT BE RESPONSIBLE FOR THE ACCURACY OR COMPLETENESS OF SCANNED COPIES OF THIS PLAN SHEET.

TO ACCOMPANY PLANS DATED 11-22-13

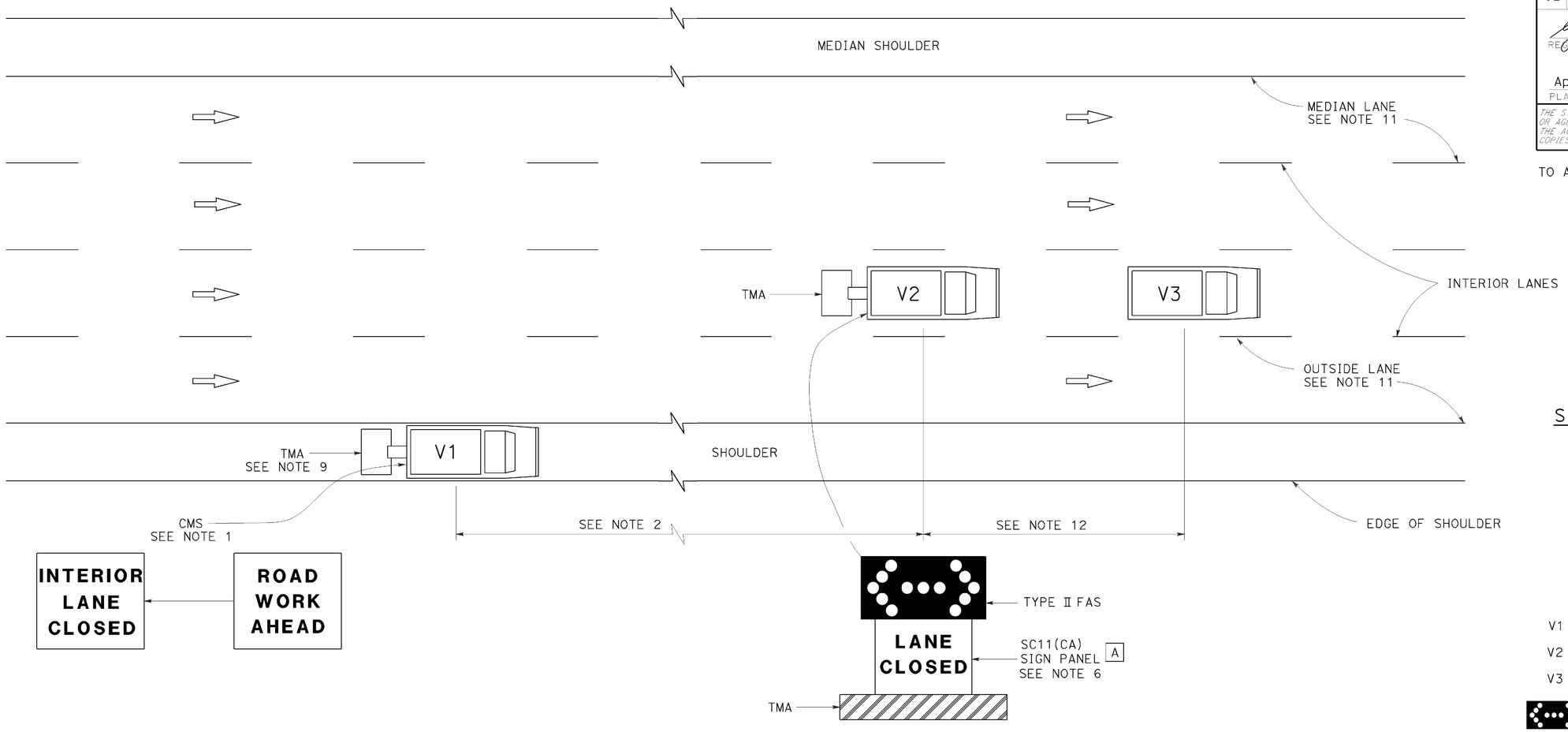

INTERIOR LANE CLOSED

ROAD WORK AHEAD

MOVING LANE CLOSURE ON INTERIOR LANE OF MULTILANE HIGHWAYS

SIGN PANEL SIZE (Min)

A 54" x 42"

LEGEND

V1	SIGN VEHICLE
V2	SHADOW VEHICLE
V3	WORK/APPLICATION VEHICLE
	FLASHING ARROW SIGN (FAS) IN FLASHING DOUBLE ARROW MODE
CMS	CHANGEABLE MESSAGE SIGN
TMA	TRUCK-MOUNTED ATTENUATOR

NOTES:

1. A changeable message sign shall be mounted on the rear of sign vehicle V1. The changeable message sign shall be sequenced to show the "ROAD WORK AHEAD" message first, followed by the "INTERIOR LANE CLOSED" message. The message "CENTER LANE CLOSED" may be used in place of the "INTERIOR LANE CLOSED" message.
2. If traffic queues develop, sign vehicle V1 should be positioned upstream from the end of queue. Sign vehicle V1 shall be positioned where highly visible when shoulders are not available.
3. A minimum sight distance of 1500′ should be provided in advance of sign vehicle V1.
4. Sign vehicle V1 should remain at the beginning of horizontal or vertical curves until the other vehicles (V2 and V3) are far enough beyond the curve to resume the minimum sight distance of 1500′.
5. Vehicle-mounted sign panels shall have Type III or above retroreflective sheeting, black on white, or black on fluorescent orange, with 6" minimum series D letters per Caltrans sign specifications.
6. Shadow vehicle V2 shall be equipped with a truck-mounted attenuator. The sign panel shown and a Type II flashing arrow sign shall be mounted on the rear of shadow vehicle V2.
7. All vehicles used for lane closures shall be equipped with two-way radios, and the vehicle operators shall maintain communication during the work or application operation.
8. All vehicles shall be equipped with flashing or rotating amber lights.
9. If sign vehicle V1 encroaches into the traffic lane due to insufficient shoulder width, sign vehicle V1 shall be equipped with a truck-mounted attenuator. Sign vehicle V1 shall stay as close to the edge of shoulder as practicable.
10. Where workers would be on foot in the work area, a stationary type lane closure (Revised Standard Plan T10, T11 etc., as applicable) shall be used instead of this plan.
11. For moving lane closure on median lane or outside lane of multilane highways, use Revised Standard Plan T15.
12. The spacing between work vehicle(s) and the shadow vehicles, and between each shadow vehicle should be minimized to deter road users from driving in between.

STATE OF CALIFORNIA
DEPARTMENT OF TRANSPORTATION

TRAFFIC CONTROL SYSTEM FOR MOVING LANE CLOSURE ON MULTILANE HIGHWAYS

NO SCALE

RSP T16 DATED APRIL 19, 2013 SUPERSEDES STANDARD PLAN T16
DATED MAY 20, 2011 - PAGE 244 OF THE STANDARD PLANS BOOK DATED 2010.

REVISED STANDARD PLAN RSP T16

2010 REVISED STANDARD PLAN RSP T16

Dist	COUNTY	ROUTE	POST MILES TOTAL PROJECT	SHEET No.	TOTAL SHEETS
02	Sha	5	R34.3/R36.8	67	72

Theresa Gabriel
REGISTERED ELECTRICAL ENGINEER

July 19, 2013
PLANS APPROVAL DATE

REGISTERED PROFESSIONAL ENGINEER
Theresa Aziz Gabriel
No. E15129
Exp. 6-30-14
ELECTRICAL
STATE OF CALIFORNIA

THE STATE OF CALIFORNIA OR ITS OFFICERS OR AGENTS SHALL NOT BE RESPONSIBLE FOR THE ACCURACY OR COMPLETENESS OF SCANNED COPIES OF THIS PLAN SHEET.

TO ACCOMPANY PLANS DATED 11-22-13

LEGEND:

AB	ABANDON. IF APPLIED TO CONDUIT, REMOVE CONDUCTORS
BC	INSTALL PULL BOX IN EXISTING CONDUIT RUN
BP	PEDESTRIAN BARRICADE, TYPE AS INDICATED ON PLAN
CB	INSTALL CONDUIT INTO EXISTING PULL BOX
CC	CONNECT NEW AND EXISTING CONDUIT. REMOVE EXISTING CONDUCTORS AND INSTALL CONDUCTORS AS INDICATED
CF	CONDUIT TO REMAIN FOR FUTURE USE. REMOVE CONDUCTORS. INSTALL PULL TAPE
DH	DETECTOR HANDHOLE
FA	FOUNDATION TO BE ABANDONED
IS	INSTALL SIGN ON SIGNAL MAST ARM
NS	NO SLIP BASE ON STANDARD
PEC	PHOTOELECTRIC CONTROL
PEU	PHOTOELECTRIC UNIT
RC	EQUIPMENT OR MATERIAL TO BE REMOVED AND BECOME THE PROPERTY OF THE CONTRACTOR
RE	REMOVE ELECTROLIER, FUSES AND BALLAST. TAPE ENDS OF CONDUCTORS
RL	RELOCATE EQUIPMENT
RR	REMOVE AND REUSE EQUIPMENT
RS	REMOVE AND SALVAGE EQUIPMENT
SC	SPLICE NEW TO EXISTING CONDUCTORS
SD	SERVICE DISCONNECT
TSP	TELEPHONE SERVICE POINT

ABBREVIATIONS

APS	ACCESSIBLE PEDESTRIAN SIGNAL
BBS	BATTERY BACKUP SYSTEM
BC	BOLT CIRCLE
BPB	BICYCLE PUSH BUTTON
C	CONDUIT
CB	CIRCUIT BREAKER
CCTV	CLOSED CIRCUIT TELEVISION
Ckt	CIRCUIT
CMS	CHANGEABLE MESSAGE SIGN
Ctid	CALTRANS IDENTIFICATION
Comm	COMMUNICATION
DLC	LOOP DETECTOR LEAD-IN CABLE
EMS	EXTINGUISHABLE MESSAGE SIGN
EVUC	EMERGENCY VEHICLE UNIT CABLE
EVUD	EMERGENCY VEHICLE UNIT DETECTOR
FB	FLASHING BEACON
FBCA	FLASHING BEACON CONTROL ASSEMBLY
FBS	FLASHING BEACON WITH SLIP BASE
FO	FIBER OPTIC
G	EQUIPMENT GROUNDING CONDUCTOR
GB	GROUND BUS
GFCI	GROUND FAULT CIRCUIT INTERRUPTER
HAR	HIGHWAY ADVISORY RADIO
Hex	HEXAGONAL
HPS	HIGH PRESSURE SODIUM
IISNS	INTERNALLY ILLUMINATED STREET NAME SIGN
ISL	INDUCTION SIGN LIGHTING
LED	LIGHT EMITTING DIODE
LMA	LUMINAIRE MAST ARM
LPS	LOW PRESSURE SODIUM
Ltg	LIGHTING
Lum	LUMINAIRE
M	METERED
MAT	MAST ARM MOUNTING TOP ATTACHMENT
MAS	MAST ARM MOUNTING SIDE ATTACHMENT
M/M	MULTIPLE TO MULTIPLE TRANSFORMER
Mtg	MOUNTING
MV	MERCURY VAPOR LIGHTING FIXTURE
MVDS	MICROWAVE VEHICLE DETECTION SYSTEM
N	NEUTRAL (GROUNDED CONDUCTOR)
NB	NEUTRAL BUS
NC	NORMALLY CLOSE
NO	NORMALLY OPEN
P	CIRCUIT BREAKER'S POLE
PB	PULL BOX
PBA	PUSH BUTTON ASSEMBLY
PEC	PHOTOELECTRIC CONTROL
Ped	PEDESTRIAN
PEU	PHOTOELECTRIC UNIT
PT	CONDUIT WITH PULL TAPE
RE	RELOCATED EQUIPMENT
RM	RAMP METERING
RWIS	ROADSIDE WEATHER INFORMATION SYSTEM
SB	SLIP BASE
SIC	SIGNAL INTERCONNECT CABLE
Sig	SIGNAL
SMA	SIGNAL MAST ARM
SNS	STREET NAME SIGN
SP	SERVICE POINT
TDC	TELEPHONE DEMARCATION CABINET
TMS	TRAFFIC MONITORING STATION
TOS	TRAFFIC OPERATIONS SYSTEM
Veh	VEHICLE
VIVDS	VIDEO IMAGE VEHICLE DETECTION SYSTEM
WIM	WEIGH-IN-MOTION
Xfmr	TRANSFORMER

SOFFIT AND WALL MOUNTED LUMINAIRES

- PENDANT, 70 W HPS UNLESS OTHERWISE SPECIFIED
- FLUSH, 70 W HPS UNLESS OTHERWISE SPECIFIED
- WALL SURFACE, 70 W HPS UNLESS OTHERWISE SPECIFIED
- EXISTING SOFFIT OR WALL LUMINAIRE TO REMAIN UNMODIFIED
- EXISTING SOFFIT OR WALL LUMINAIRE TO BE MODIFIED AS SPECIFIED

NOTE:
Arrow indicates "street side" of luminaire.

COMMONLY USED SYMBOLS FOR UNITED STATES CUSTOMARY UNITS OF MEASUREMENT:

SYMBOL USED	DEFINITIONS
Ω	OHMS
min	MINUTE
s	SECOND
bps	BITS PER SECOND
Bps	BYTES PER SECOND
A	AMPERE
V	VOLT
V(dc)	VOLT (DIRECT CURRENT)
V(ac)	VOLT (ALTERNATING CURRENT)
FC	FOOT - CANDLE
W	WATTS
VA	VOLT-AMPERE
M	MEGA
k	KILO
m	MILLI
μ	MICRO
P	PICO
Hz	HERTZ

MISCELLANEOUS ELECTROLIERS

NEW	EXISTING	
		LUMINAIRE ON WOOD POLE
		NON-STANDARD ELECTROLIER (SEE PROJECT NOTES OR PROJECT PLANS)
		CITY ELECTROLIER
		ELECTROLIER FOUNDATION (FUTURE INSTALLATION)

NOTES:

1. HPS luminaires shall be 310 W HPS when installed on Type 21, 21D, 30, 31 and 32 Standards, unless otherwise specified. HPS luminaires shall be 200 W when installed on other type standards or poles, unless otherwise specified.
2. LED luminaires shall be 235 W when installed on Type 21, 21D, 30, 31 and 32 Standards, unless otherwise specified. LED luminaires shall be 165 W when installed on other type standards or poles, unless otherwise specified.
3. Luminaires shall be the cutoff type, ANSI Type III medium cutoff lighting distribution, unless otherwise specified.

STANDARD ELECTROLIER

NEW	EXISTING	STANDARD TYPE
		15
		15D
		15 STRUCTURE
		15D STRUCTURE
		21
		21D
		21 STRUCTURE
		21D STRUCTURE
		30
		31
		32

STATE OF CALIFORNIA
DEPARTMENT OF TRANSPORTATION

ELECTRICAL SYSTEMS (LEGEND AND ABBREVIATIONS)

NO SCALE

RSP ES-1A DATED JULY 19, 2013 SUPERSEDES STANDARD PLAN ES-1A DATED MAY 20, 2011 - PAGE 425 OF THE STANDARD PLANS BOOK DATED 2010.

REVISED STANDARD PLAN RSP ES-1A

2010 REVISED STANDARD PLAN RSP ES-1A

DATE PLOTTED => 02-DEC-2013
TIME PLOTTED => 15:44

Dist	COUNTY	ROUTE	POST MILES TOTAL PROJECT	SHEET No.	TOTAL SHEETS
02	Sha	5	R34.3/R36.8	68	72

Theresa Gabriel
REGISTERED ELECTRICAL ENGINEER

July 19, 2013
PLANS APPROVAL DATE

Theresa Aziz Gabriel No. E15129 Exp. 6-30-14 ELECTRICAL — REGISTERED PROFESSIONAL ENGINEER — STATE OF CALIFORNIA

THE STATE OF CALIFORNIA OR ITS OFFICERS OR AGENTS SHALL NOT BE RESPONSIBLE FOR THE ACCURACY OR COMPLETENESS OF SCANNED COPIES OF THIS PLAN SHEET.

TO ACCOMPANY PLANS DATED 11-22-13

CONDUIT

NEW	EXISTING	
		LIGHTING CONDUIT, UNLESS OTHERWISE INDICATED OR NOTED
		TRAFFIC SIGNAL CONDUIT
C	c	COMMUNICATION CONDUIT
T	t	TELEPHONE CONDUIT
F	f	FIRE ALARM CONDUIT
FO	fo	FIBER OPTIC CONDUIT
		CONDUIT TERMINATION
R	r	CONDUIT RISER ATTACHED TO THE STRUCTURE OR SERVICE POLE

SERVICE EQUIPMENT

NEW	EXISTING	
OH	oh	OVERHEAD LINES
U	U	WOOD POLE, "U" INDICATES UTILITY OWNED
		POLE GUY WITH ANCHOR
		UTILITY TRANSFORMER - GROUND MOUNTED
III	III	SERVICE EQUIPMENT ENCLOSURE TYPE. DOOR INDICATES FRONT OF ENCLOSURE
T	t	TELEPHONE DEMARCATION CABINET

POLE-MOUNTED SERVICE DESIGNATION

TYPE H SERVICE, 28'-10" — TYPE OF INSTALLATION AND POLE HEIGHT ABOVE GRADE

FLASHING BEACON

NEW	EXISTING	
R	R	FLASHING BEACON (ONE VEHICLE SIGNAL HEAD WITH BACKPLATE AND VISOR) "R" INDICATES RED INDICATION, "Y" INDICATES YELLOW INDICATION
Y Y	Y Y	FLASHING BEACON WITH TYPE 15-FBS STANDARD AND A SIGN.
R R	R R	FLASHING BEACON WITH TYPES 9, 9A OR 9B SIGN UNLESS OTHERWISE SPECIFIED OR INDICATED

SIGNAL EQUIPMENT

NEW	EXISTING	
C	C	PEDESTRIAN SIGNAL HEAD "C" INDICATES COUNTDOWN PEDESTRIAN HEAD
		PUSH BUTTON ASSEMBLY POST
		PEDESTRIAN BARRICADE
		VEHICLE SIGNAL HEAD (WITH BACKPLATE AND 3-SECTIONS: RED, YELLOW AND GREEN)
		VEHICLE SIGNAL HEAD WITH ANGLE VISOR
PV	PV	MODIFICATIONS OF BASIC SYMBOL: "L" INDICATES ALL NON-ARROW SECTIONS LOUVERED "LG" INDICATES LOUVERED GREEN SECTION ONLY "PV" INDICATES ALL 12" SECTIONS PROGRAMMED VISIBILITY "8" INDICATES ALL 8" SECTIONS (ONLY WHEN SPECIFIED)
		VEHICLE SIGNAL HEAD CONSISTING OF RED, YELLOW AND GREEN LEFT ARROW SECTIONS
		VEHICLE SIGNAL HEAD CONSISTING OF RED AND YELLOW SECTIONS WITH AN UP GREEN ARROW SECTION
		VEHICLE SIGNAL HEAD (5 SECTION) CONSISTING OF RED, YELLOW AND GREEN SECTIONS WITH YELLOW AND GREEN RIGHT ARROW SECTIONS
		TYPE 15TS STANDARD WITH VEHICLE SIGNAL HEAD AND LUMINAIRE
		TYPE 21TS STANDARD WITH VEHICLE SIGNAL HEAD AND LUMINAIRE
		STANDARD WITH LUMINAIRE AND SIGNAL MAST ARMS AND ATTACHED VEHICLE SIGNAL HEADS
		TYPE 1 STANDARD WITH ATTACHED VEHICLE SIGNAL HEADS
		STANDARD WITH A SIGNAL MAST ARM, ATTACHED VEHICLE SIGNAL HEADS AND INTERNALLY ILLUMINATED STREET NAME SIGN
		CONTROLLER ASSEMBLY. DOOR INDICATES FRONT OF CABINET

SIGNAL EQUIPMENT Cont

NEW	EXISTING	
		GUARD POST
		TYPE 1 STANDARD WITH RAMP METERING SIGN
		OPTICAL DETECTOR FOR THE EMERGENCY VEHICLE DETECTION SYSTEM

NOTES:

1. All signal sections shall be 12" unless shown otherwise.
2. Signal heads shall be provided with backplates unless shown otherwise.

ILLUMINATED OVERHEAD SIGN

NEW	EXISTING	
		SINGLE POST, SINGLE ILLUMINATED SIGN, BALANCED BUTTERFLY
		SINGLE POST, DOUBLE ILLUMINATED SIGN, BALANCED BUTTERFLY
		SINGLE POST, SINGLE ILLUMINATED SIGN, FULL CANTILEVER
		DOUBLE POST, SINGLE ILLUMINATED SIGN
		SINGLE ILLUMINATED SIGN MOUNTED ON STRUCTURE
		DOUBLE POST, SINGLE ILLUMINATED SIGN WITH ELECTROLIER

STATE OF CALIFORNIA
DEPARTMENT OF TRANSPORTATION

ELECTRICAL SYSTEMS (LEGEND AND ABBREVIATIONS)

NO SCALE

RSP ES-1B DATED JULY 19, 2013 SUPERSEDES STANDARD PLAN ES-1B DATED MAY 20, 2011 - PAGE 426 OF THE STANDARD PLANS BOOK DATED 2010.

REVISED STANDARD PLAN RSP ES-1B

2010 REVISED STANDARD PLAN RSP ES-1B

Dist	COUNTY	ROUTE	POST MILES TOTAL PROJECT	SHEET No.	TOTAL SHEETS
02	Sha	5	R34.3/R36.8	69	72

Theresa Gabriel
REGISTERED ELECTRICAL ENGINEER

July 19, 2013
PLANS APPROVAL DATE

REGISTERED PROFESSIONAL ENGINEER
Theresa Aziz Gabriel
No. E15129
Exp. 6-30-14
ELECTRICAL
STATE OF CALIFORNIA

THE STATE OF CALIFORNIA OR ITS OFFICERS OR AGENTS SHALL NOT BE RESPONSIBLE FOR THE ACCURACY OR COMPLETENESS OF SCANNED COPIES OF THIS PLAN SHEET.

TO ACCOMPANY PLANS DATED 11-22-13

EQUIPMENT IDENTIFICATION

ILLUMINATED SIGN IDENTIFICATION NUMBER:

SIGN No. 12345
10 ISL SCI 1.0

- SIGN NUMBER - PLACE ON POST OR STRUCTURE
- TRANSFORMER RATING (kVA)
- LIGHTING CONTROL TYPE
- NUMBER AND TYPE OF FIXTURES

DO NOT PLACE ON STANDARD OR STRUCTURE

ELECTROLIER OR EQUIPMENT IDENTIFICATION NUMBER:

12345 - 15'-0"

- MAST ARM LENGTH, IF SHOWN. DO NOT PLACE ON STANDARD OR STRUCTURE
- EQUIPMENT NUMBER - PLACE ON STANDARD OR STRUCTURE. EXISTING EQUIPMENT NUMBERS ARE SHOWN IN PARENTHESIS

CONDUIT AND CONDUCTOR IDENTIFICATION:

1½"C, 2#10, 15#14, 2 DLC, 12P#18

- PAIR
- NUMBER AND SIZE OF CONDUCTORS AND CABLES
- SIZE OF CONDUIT IN INCHES

ø1, ø2, ø2P, etc.	TRAFFIC PHASE IDENTIFICATION FOR SIGNAL FACES, DETECTORS AND PHASE DIAGRAMS
1 2 3	LEGEND NUMBERS
A B C	EQUIPMENT, SIGNAL POLES, INSTALLATION OR ITEMS
1 2 3	CONDUIT RUN NUMBERS

SIGNAL AND LIGHTING STANDARD (TYPICAL DESIGNATION):

19A - 3 - 100

- WIND VELOCITY = 100 mph
- CASE 3 ARM LOADING
- STANDARD TYPE
- STANDARD PLAN SHEET NUMBER
- DETAIL, NUMBER, SECTION, TYPE OR ELEVATION

MISCELLANEOUS EQUIPMENT

NEW	EXISTING	
CMS	cms	CHANGEABLE MESSAGE SIGN
		CLOSED CIRCUIT TELEVISION CAMERA
		HIGHWAY ADVISORY RADIO POLE AND ANTENNA
EMS	ems	EXTINGUISHABLE MESSAGE SIGN
M V	m v	DETECTION DEVICE M = MICROWAVE SENSOR V = VIDEO IMAGE SENSOR

WIRING DIAGRAM LEGEND

- EXTERNAL CONDUCTOR
- CONDUCTOR OR BUS
- TIE POINT
- CONTACTOR COIL
- CONTACTOR, NO CONTACT
- TERMINAL BLOCKS
- CONTACTOR, NC CONTACT
- ENCLOSURE BOND
- GROUNDING ELECTRODE
- CIRCUIT BREAKER
- RECEPTACLE

PULL BOXES

NEW	EXISTING	
		PULL BOX, No. 5 UNLESS OTHERWISE INDICATED OR NOTED
3	9A(21)	PULL BOX, ADDITIONAL DESIGNATIONS OR DESCRIPTIONS

3 No. 3½ PULL BOX
5 No. 5 PULL BOX
6 No. 6 PULL BOX
7 No. 7 (CEILING PULL BOX)
8 No. 8 (PENDANT SOFFIT PULL BOX)
9 No. 9 PULL BOX
9A No. 9A PULL BOX

(C) COMMUNICATIONS PULL BOX
(E) PULL BOX WITH EXTENSION
(S) SPRINKLER CONTROL PULL BOX
(21) ANCHOR BOLTS AND CONDUIT FOR FUTURE INSTALLATION OF TYPE 21 STANDARD
(T) TRAFFIC PULL BOX

VEHICLE DETECTORS

5 J 9 U

- VEHICLE DETECTOR DESIGNATION
- U = UPPER
  L = LOWER
- SLOT NUMBER IN INPUT FILE
- INPUT FILE (I OR J)
- PHASE

NEW	EXISTING	
		TYPE A DETECTOR LOOP. OUTLINE OF SAWCUT SHOWN
		TYPE B DETECTOR LOOP. OUTLINE OF SAWCUT SHOWN
		TYPE C DETECTOR LOOP. OUTLINE OF SAWCUT SHOWN
		TYPE D DETECTOR LOOP. OUTLINE OF SAWCUT SHOWN
		TYPE E DETECTOR LOOP. OUTLINE OF SAWCUT SHOWN
		TYPE Q DETECTOR LOOP. OUTLINE OF SAWCUT SHOWN
		MAGNETIC DETECTOR
DH	dh	DETECTOR HANDHOLE
		MICROWAVE OR VIDEO DETECTION ZONE

STATE OF CALIFORNIA
DEPARTMENT OF TRANSPORTATION

ELECTRICAL SYSTEMS (LEGEND AND ABBREVIATIONS)

NO SCALE

RSP ES-1C DATED JULY 19, 2013 SUPERSEDES STANDARD PLAN ES-1C DATED MAY 20, 2011 - PAGE 427 OF THE STANDARD PLANS BOOK DATED 2010.

REVISED STANDARD PLAN RSP ES-1C

2010 REVISED STANDARD PLAN RSP ES-1C

DIST	COUNTY	ROUTE	POST MILES TOTAL PROJECT	SHEET NO.	TOTAL SHEETS
02	Sha	5	R34.3/R36.8	70	72

Theresa Gabriel
REGISTERED ELECTRICAL ENGINEER

July 19, 2013
PLANS APPROVAL DATE

REGISTERED PROFESSIONAL ENGINEER Theresa Aziz Gabriel No. E15129 Exp. 6-30-14 ELECTRICAL STATE OF CALIFORNIA

THE STATE OF CALIFORNIA OR ITS OFFICERS OR AGENTS SHALL NOT BE RESPONSIBLE FOR THE ACCURACY OR COMPLETENESS OF SCANNED COPIES OF THIS PLAN SHEET.

TO ACCOMPANY PLANS DATED 11-22-13

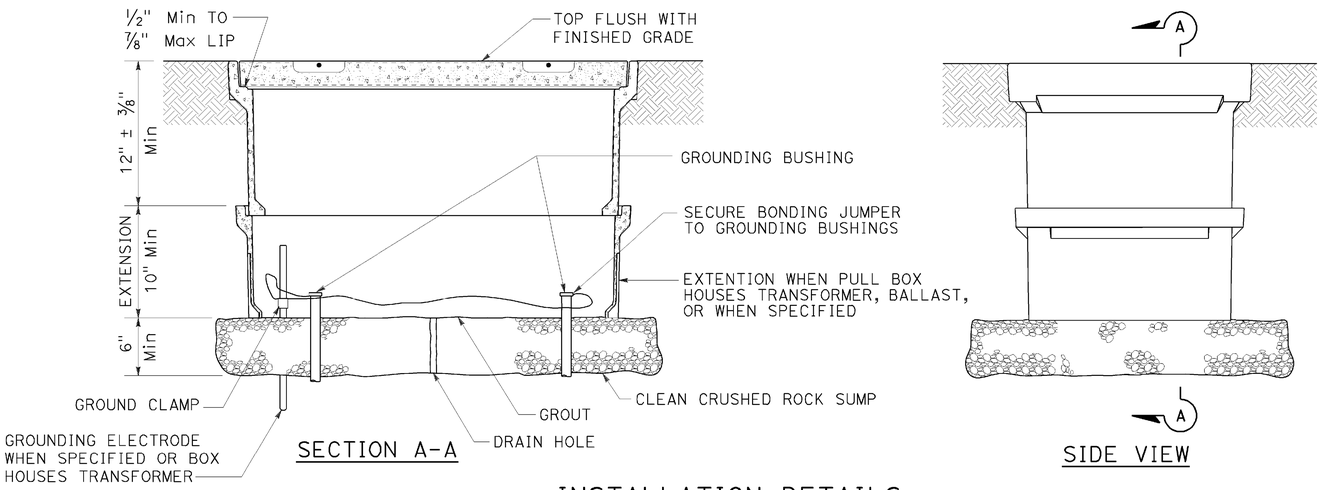

SECTION A-A

SIDE VIEW

INSTALLATION DETAILS

DETAIL A

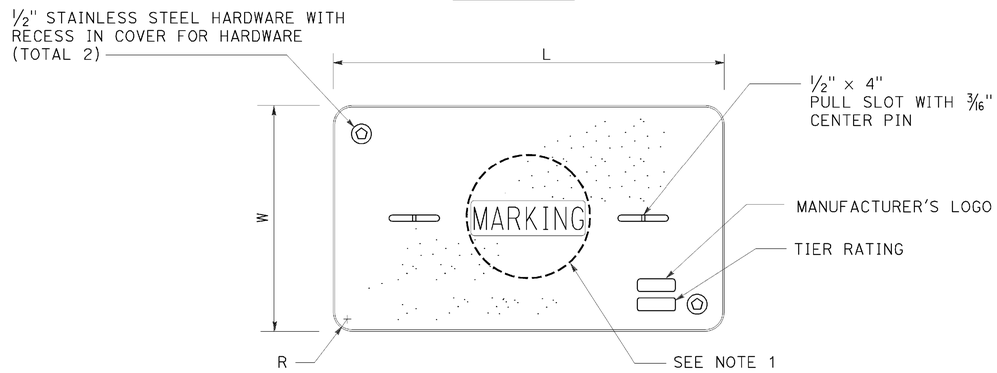

COVER TOP VIEW

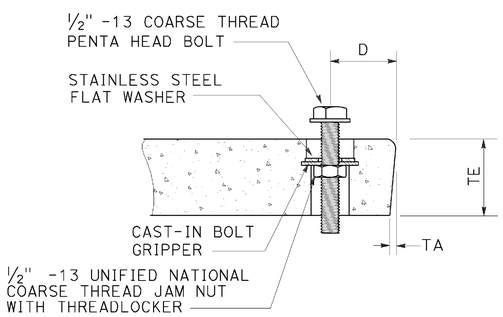

TYPICAL COVER CAPTIVE BOLT

OR SIMILAR

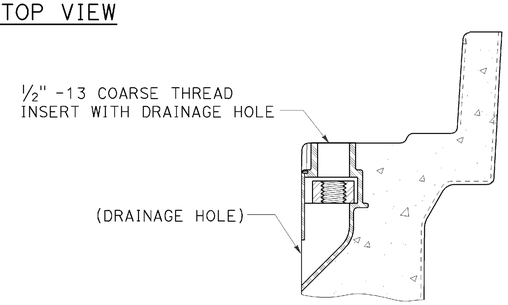

TYPICAL THREADED INSERT

OR SIMILAR

DIMENSION TABLE

PULL BOX	PULL BOX			COVER						
	MINIMUM DEPTH BOX	MINIMUM DEPTH EXTENSION	MAXIMUM WEIGHT	L	W	R	TE	TA	D	MAXIMUM WEIGHT
No. 3½	12"	N/A	40 lb	1′ - 3⅜"	10⅛"	1⅜"	2"	⅛"	1¾"	30 lb
No. 5	12"	10"	55 lb	1′ - 11¼"	1′ - 1¾"	1⅜"	2"	⅛"	1¾"	60 lb
No. 6	12"	10"	70 lb	2′ - 6½"	1′ - 5½"	1⅜"	2"	⅛"	2"	85 lb

NOTES:

1. Pull box covers shall be marked as follows: "SERVICE" Service circuits between service point and service disconnect; "SPRINKLER-CONTROL" sprinkler control circuits, 50 V or less; "CALTRANS" on all pull boxes, except pull boxes marked "SPRINKLER-CONTROL"; and "TELEPHONE" Telephone service;
   - A) No. 3½ pull box.
     - 1) "SIGNAL" - Traffic signal circuits with or without lighting or sign lighting circuits.
     - 2) "LIGHTING" - Lighting or sign lighting circuits where voltage is under 600 V.
   - B) No. 5, 6, 9 or 9A pull box.
     - 1) "TRAFFIC SIGNAL" - Traffic signal circuits with or without lighting or sign lighting circuits.
     - 2) "LIGHTING" - Lighting or sign lighting circuits where voltage is under 600 V.
     - 3) "LIGHTING-HIGH VOLTAGE" - Lighting or sign lighting circuits where voltage is above 600 V.
     - 4) "IRRIGATION" - Circuits to irrigation controller 120 V or more.
     - 5) "RAMP METER" - Ramp meter circuits.
     - 6) "COUNT STATION" - Count or speed monitor circuits.
     - 7) "COMMUNICATIONS" - Communication circuits.
     - 8) "TOS COMMUNICATIONS" - TOS communication line.
     - 9) "TOS POWER" - TOS power.
     - 10) "TDC POWER" - Telephone demarcation cabinet power.
     - 11) "CCTV" - Closed circuit television circuits.
     - 12) "TMS" - Traffic monitoring station circuits.
     - 13) "CMS" - Changeable message sign circuits.
     - 14) "HAR" - Highway advisory radio circuits.
     - 15) "BOOSTER PUMP" - Booster pump circuit.
2. The nominal dimensions of the opening in which the cover sets shall be the same as the cover dimensions except the length and width dimensions shall be ⅛" greater.
3. Covers and boxes shall be interchangeable with California standard male and female gages. When interchanged with a standard male or female gage, the top surfaces shall be flush within ⅛". Top outside radius of covers and pull boxes shall have a ⅛" radius.
4. Pull box extension may be another pull box as long as the bottom edge of the pull box can fit into the cover opening.
5. All dimensions for the cover for non-traffic pull box are nominal values.

STATE OF CALIFORNIA
DEPARTMENT OF TRANSPORTATION

ELECTRICAL SYSTEMS (NON-TRAFFIC PULL BOX)

NO SCALE

RSP ES-8A DATED JULY 19, 2013 SUPERSEDES RSP ES-8A DATED JANUARY 20, 2012 THAT SUPPLEMENTS THE STANDARD PLANS BOOK DATED 2010.

REVISED STANDARD PLAN RSP ES-8A

2010 REVISED STANDARD PLAN RSP ES-8A

DATE PLOTTED => 02-DEC-2013
TIME PLOTTED => 15:44

Dist	COUNTY	ROUTE	POST MILES TOTAL PROJECT	SHEET No.	TOTAL SHEETS
02	Sha	5	R34.3/R36.8	71	72

Theresa Gabriel
REGISTERED ELECTRICAL ENGINEER

July 19, 2013
PLANS APPROVAL DATE

REGISTERED PROFESSIONAL ENGINEER
Theresa Aziz Gabriel
No. E15129
Exp. 6-30-14
ELECTRICAL
STATE OF CALIFORNIA

THE STATE OF CALIFORNIA OR ITS OFFICERS OR AGENTS SHALL NOT BE RESPONSIBLE FOR THE ACCURACY OR COMPLETENESS OF SCANNED COPIES OF THIS PLAN SHEET.

TO ACCOMPANY PLANS DATED 11-22-13

ISOFOOTCANDLE CURVE - MINIMUM

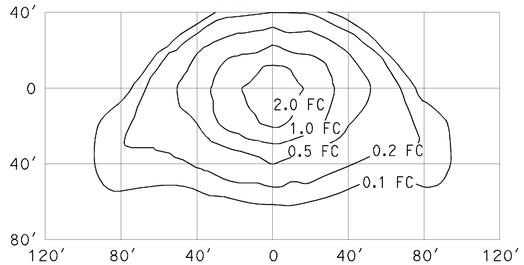

TYPE III MEDIUM CUTOFF

Cutoff Luminaire
34′ Mounting Height
Lamp operated at 22,000 lm
200-W high pressure sodium lamp
ANSI Designation S66

ISOFOOTCANDLE CURVE - MINIMUM

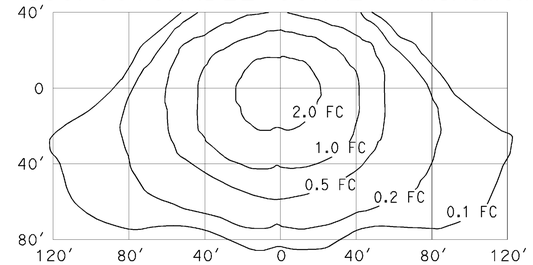

TYPE III MEDIUM CUTOFF

Cutoff Luminaire
40′ Mounting Height
Lamp operated at 37,000 lm
310-W high pressure sodium lamp
ANSI Designation S67

ISOFOOTCANDLE CURVE - MINIMUM

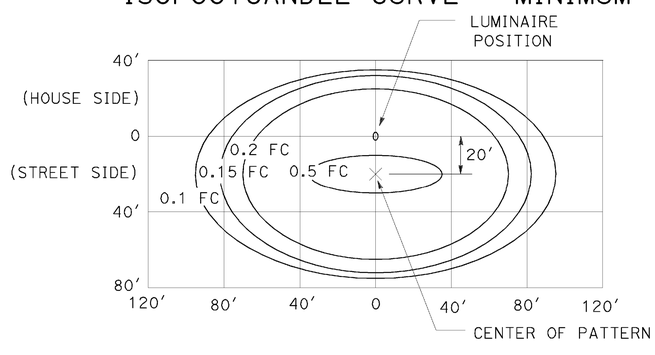

LED LUMINAIRE ROADWAY 1

165-W at 34′ Mounting Height

ISOFOOTCANDLE CURVE - MINIMUM

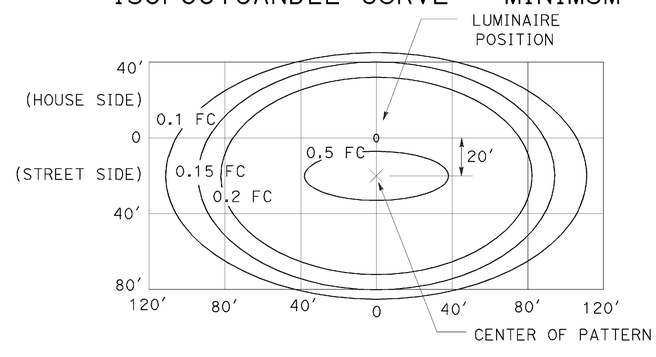

LED LUMINAIRE ROADWAY 2

235-W at 40′ Mounting Height

ISOFOOTCANDLE CURVE - MINIMUM

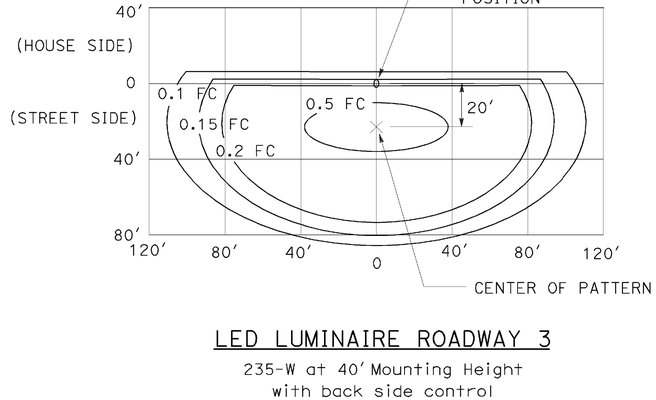

LED LUMINAIRE ROADWAY 3

235-W at 40′ Mounting Height
with back side control

ISOFOOTCANDLE CURVE - MINIMUM

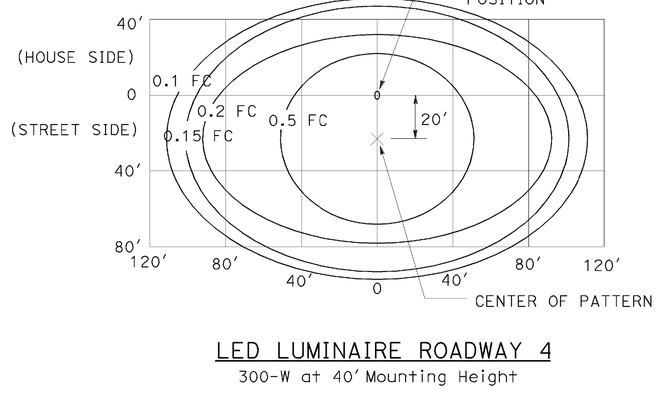

LED LUMINAIRE ROADWAY 4

300-W at 40′ Mounting Height

ISOFOOTCANDLE CURVE - MINIMUM

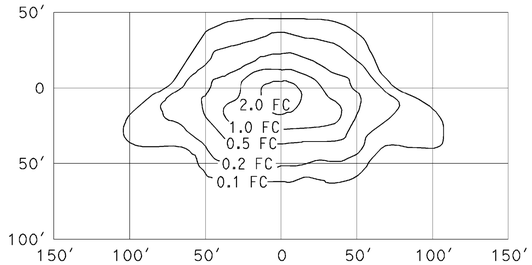

TYPE III MEDIUM CUTOFF

Cutoff Luminaire
30′ Mounting Height
Lamp operated at 16,000 lm
150-W high pressure sodium lamp
ANSI Designation S55

ISOFOOTCANDLE CURVE - MINIMUM

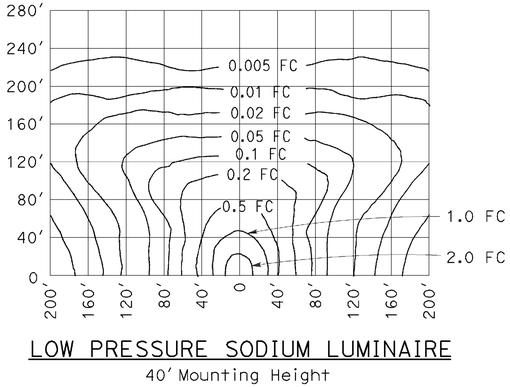

LOW PRESSURE SODIUM LUMINAIRE

40′ Mounting Height
Lamp operated at 33,000 lm
180-W low pressure sodium lamp

STATE OF CALIFORNIA
DEPARTMENT OF TRANSPORTATION

ELECTRICAL SYSTEMS (ISOFOOTCANDLE DIAGRAMS)

NO SCALE

RSP ES-10A DATED JULY 19, 2013 SUPERSEDES RSP ES-10A DATED JULY 20, 2012 THAT SUPPLEMENTS THE STANDARD PLANS BOOK DATED 2010.

REVISED STANDARD PLAN RSP ES-10A

2010 REVISED STANDARD PLAN RSP ES-10A

Dist	COUNTY	ROUTE	POST MILES TOTAL PROJECT	SHEET No.	TOTAL SHEETS
02	Sha	5	R34.3/R36.8	72	72

REGISTERED CIVIL ENGINEER

July 19, 2013
PLANS APPROVAL DATE

REGISTERED PROFESSIONAL ENGINEER
Stanley P. Johnson
No. C57793
Exp. 3-31-14
CIVIL
STATE OF CALIFORNIA

THE STATE OF CALIFORNIA OR ITS OFFICERS OR AGENTS SHALL NOT BE RESPONSIBLE FOR THE ACCURACY OR COMPLETENESS OF SCANNED COPIES OF THIS PLAN SHEET.

TO ACCOMPANY PLANS DATED 11-22-13

STANDARD TYPE	SETBACK (DIMENSION A)
32	30'-0" (Min)
31	20'-0" (Min)
15, 15D, 15-SB, 21, 21D, 30	ARM LENGTH (Min)

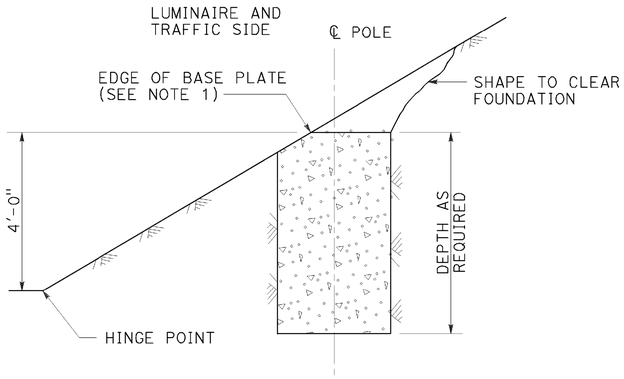

CUT SLOPES
STEEPER THAN 4:1,
LESS THAN 2:1
DETAIL A-1
See Note 2 and 3

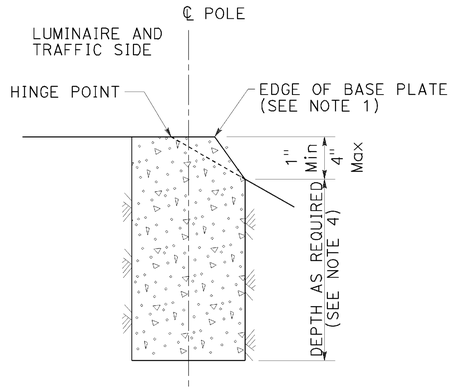

FILL SLOPES
STEEPER THAN 4:1,
LESS THAN 2:1
DETAIL A-2
See Note 2 and 3

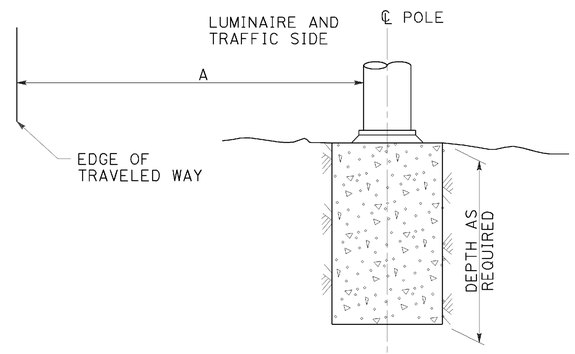

FLAT SECTIONS, CUT OR FILL SLOPES
4:1 OR FLATTER
DETAIL A-3
See Note 2

FOUNDATIONS ADJACENT TO ALL ROADWAYS EXCEPT
IN SIDEWALK, MEDIAN AND ISLAND AREAS
DETAIL A

NOTES:

1. Where a portion of the foundation is above grade, the top edges shall have a 1" chamfer.
2. Slopes shall be horizontal to vertical ratio (Horizontal : Vertical).
3. Horizontal setbacks on cut and fill slopes steeper than 4:1 shall not exceed the distance shown for flat sections.
4. CIDH embedment depth shall be increased beyond standard depths by the diameter of the CIDH.

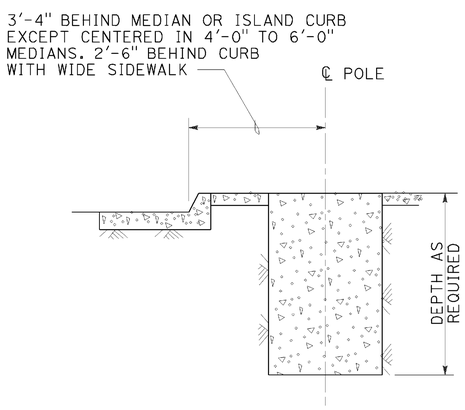

MEDIAN, ISLAND
OR WIDE SIDEWALK
DETAIL B-1
7' Wide and wider

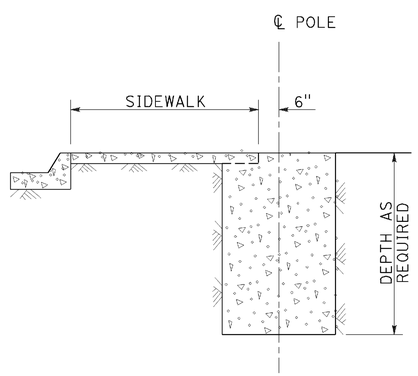

NARROW SIDEWALK
DETAIL B-2
Less than 7' wide

FOUNDATIONS IN SIDEWALK, MEDIAN AND ISLAND AREAS
DETAIL B

STATE OF CALIFORNIA
DEPARTMENT OF TRANSPORTATION

ELECTRICAL SYSTEMS (FOUNDATION INSTALLATIONS)

NO SCALE

RSP ES-11 DATED JULY 19, 2013 SUPERSEDES STANDARD PLAN ES-11
DATED MAY 20, 2011 - PAGE 488 OF THE STANDARD PLANS BOOK DATED 2010.

REVISED STANDARD PLAN RSP ES-11

2010 REVISED STANDARD PLAN RSP ES-11