Dist	COUNTY	ROUTE	POST MILES TOTAL PROJECT	SHEET No.	TOTAL SHEETS
02	Plu	147	8.9/9.3	1	94

STATE OF CALIFORNIA **ACSTP-P147(003)E**

DEPARTMENT OF TRANSPORTATION

PROJECT PLANS FOR CONSTRUCTION ON
STATE HIGHWAY
IN PLUMAS COUNTY
ABOUT 9 MILES NORTH OF CANYON DAM
FROM 0.1 MILE SOUTH TO 0.4 MILE NORTH
OF HAMILTON BRANCH BRIDGE

TO BE SUPPLEMENTED BY STANDARD PLANS 2010

INDEX OF PLANS

SHEET No.	DESCRIPTION
1	TITLE AND LOCATION MAP
2-3	TYPICAL CROSS SECTIONS
4-5	LAYOUTS
6	PROFILES AND SUPERELEVATION DIAGRAMS
7-24	CONSTRUCTION DETAILS
25-26	DRAINAGE DETAILS
27-28	UTILITY PLANS
29	CONSTRUCTION AREA SIGNS
30-31	DETOUR PLANS
32-33	PAVEMENT DELINEATION AND SIGN PLANS
34-35	PAVEMENT DELINEATION DETAILS
36	SIGN DETAILS
37	SIGN QUANTITIES
38-39	SUMMARY OF QUANTITIES
40-46	EROSION CONTROL PLANS AND DETAILS AND QUANTITIES
47-48	ELECTRICAL DETAILS AND QUANTITIES
49-72	REVISED STANDARD PLANS

STRUCTURE PLANS

73-94	STRUCTURES

THE STANDARD PLANS LIST APPLICABLE TO THIS CONTRACT IS INCLUDED IN THE NOTICE TO BIDDERS AND SPECIAL PROVISIONS BOOK.

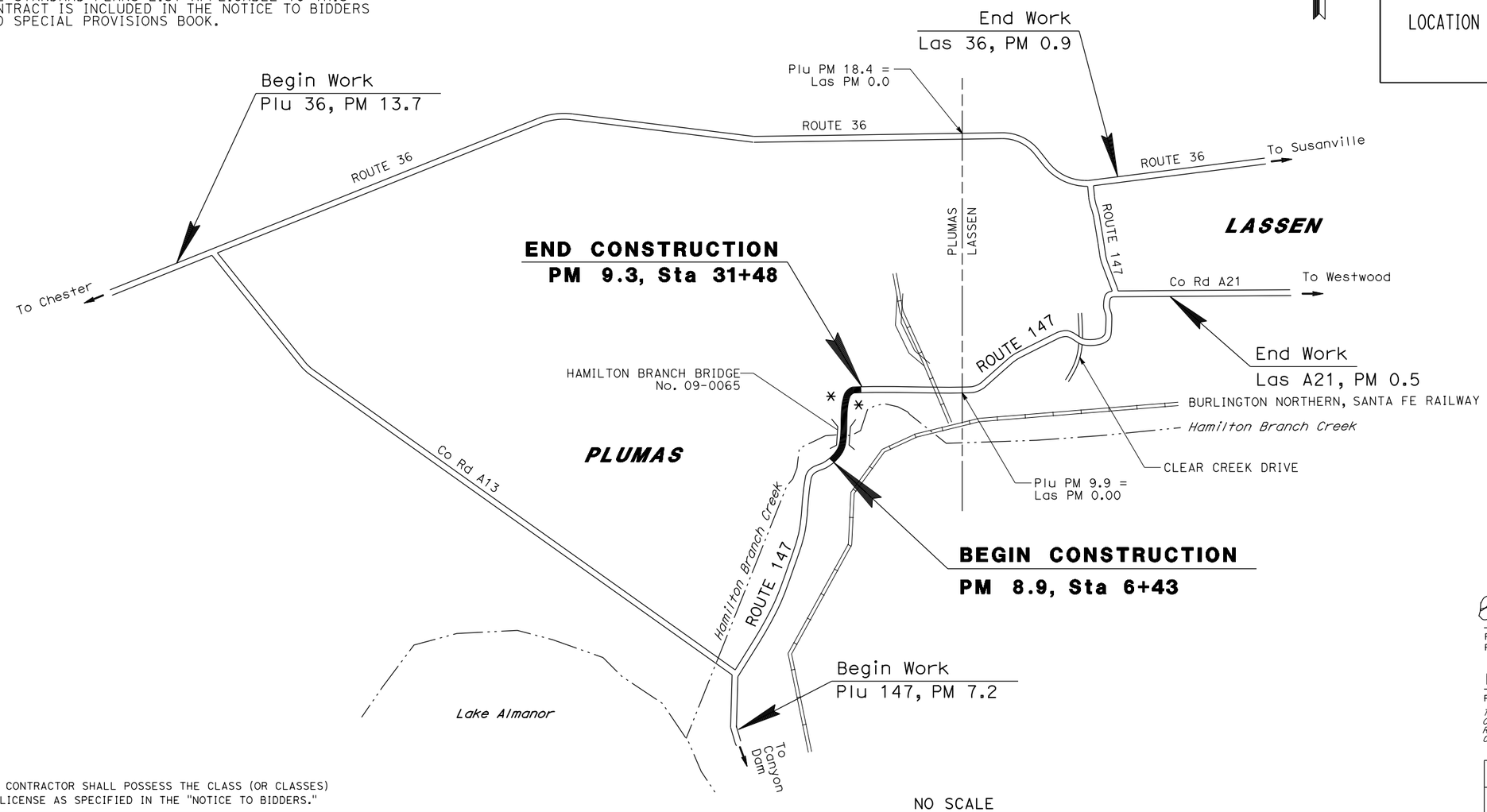

LEGEND:
* ESA LOCATION

NO SCALE

THE CONTRACTOR SHALL POSSESS THE CLASS (OR CLASSES) OF LICENSE AS SPECIFIED IN THE "NOTICE TO BIDDERS."

PROJECT ENGINEER
REGISTERED CIVIL ENGINEER
11-23-15
DATE

November 30, 2015
PLANS APPROVAL DATE

REGISTERED PROFESSIONAL ENGINEER
BYRON STANLEY
No. C60161
Exp. 6-30-16
CIVIL
STATE OF CALIFORNIA

THE STATE OF CALIFORNIA OR ITS OFFICERS OR AGENTS SHALL NOT BE RESPONSIBLE FOR THE ACCURACY OR COMPLETENESS OF SCANNED COPIES OF THIS PLAN SHEET.

CONTRACT No.	**02-4E6404**
PROJECT ID	**0212000011**

PROJECT MANAGER: DEENA MATAGULAY
DESIGN ENGINEER: STEVE TOPAL

P:\proj1\02\4E640_plans\pse\24e640ab001.dgn

LAST REVISION 11-23-15
DATE PLOTTED => 17-DEC-2015
TIME PLOTTED => 07:11

Dist	COUNTY	ROUTE	POST MILES TOTAL PROJECT	SHEET No.	TOTAL SHEETS
02	Plu	147	8.9/9.3	2	94

REGISTERED CIVIL ENGINEER 11-23-15 DATE

11-30-15
PLANS APPROVAL DATE

REGISTERED PROFESSIONAL ENGINEER BYRON STANLEY No. C60161 Exp. 06-30-16 CIVIL STATE OF CALIFORNIA

THE STATE OF CALIFORNIA OR ITS OFFICERS OR AGENTS SHALL NOT BE RESPONSIBLE FOR THE ACCURACY OR COMPLETENESS OF SCANNED COPIES OF THIS PLAN SHEET.

NOTES:

1. DIMENSIONS OF THE PAVEMENT STRUCTURES (STRUCTURAL SECTIONS) ARE SUBJECT TO TOLERANCES SPECIFIED IN THE STANDARD SPECIFICATIONS.
2. SUPERELEVATIONS ARE SHOWN ON THE SUPERELEVATION DIAGRAM.
3. SEE CONSTRUCTION DETAILS FOR ADDITIONAL INFORMATION.

ROUTE 147 DESIGN DESIGNATION

ADT (2015)	1403	D (2012)	61%
ADT (2035)	1423	T (2012)	10%
DHV (2035)	274	V	55 MPH
EAL (2035)	735,400	20-Yr TI	8.5

Pvmt CLIMATE REGION

HIGH MOUNTAIN

ABBREVIATIONS:

TE	TAPERED EDGE
(E)	EXISTING
REW	RAIL ELEMENT WALL
Super	SUPERELEVATION

TYPICAL PAVEMENT STRUCTURAL SECTIONS

1
- Exist "CL1" 9+70 - "CL1" 20+25
  - Var 0.45' TO 1.15' AC
  - 0.33' CRUSHER RUN BASE
- Exist "CL1" 20+25 - "CL1" 31+00
  - 0.30' AC
  - 1.00' FDR (CEMENT TREATED)
  - 0-0.3' CRUSHER RUN BASE

2 — 0.45' HMA (TYPE A)
0.80' Cl 2 AB

3 — 0.30' SHOULDER BACKING

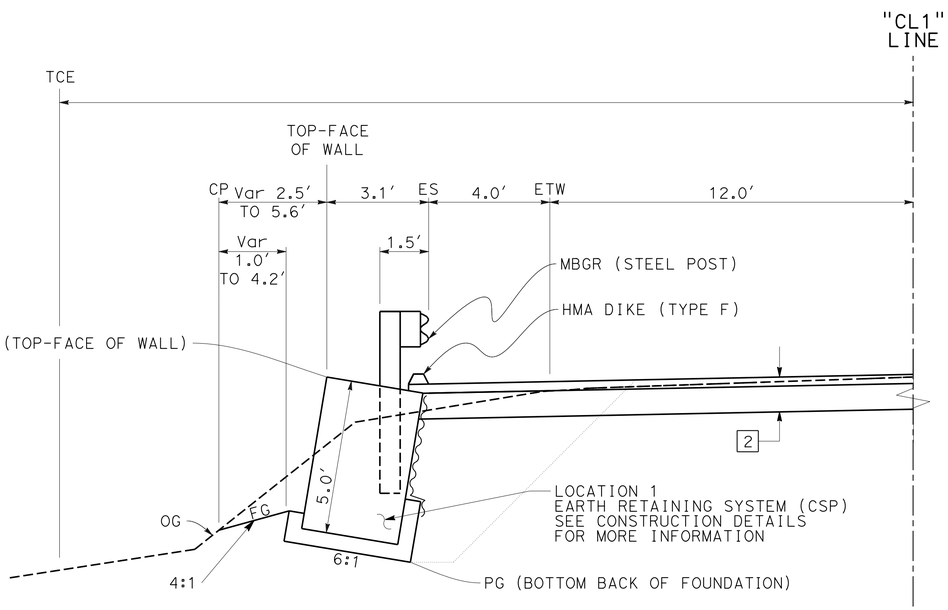

"CL1" 10+18.79 TO "CL1" 11+79.50

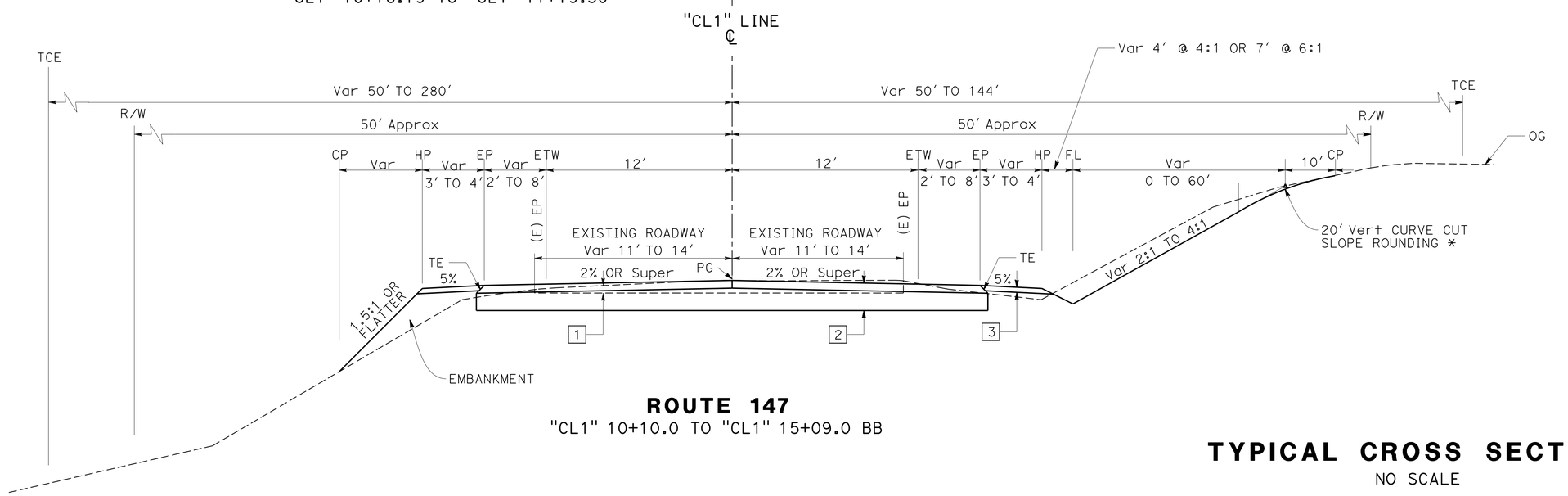

ROUTE 147
"CL1" 10+10.0 TO "CL1" 15+09.0 BB

TYPICAL CROSS SECTIONS
NO SCALE

X-1

REVISED BY	L.W.L.
DATE REVISED	3/20/15
WILL LESLIE	BYRON STANLEY
CALCULATED-DESIGNED BY	
CHECKED BY	
FUNCTIONAL SUPERVISOR	STEVE TOPAL

STATE OF CALIFORNIA - DEPARTMENT OF TRANSPORTATION
Caltrans®
DESIGN

P:\proj\02\4E640_plans\pse\24e640ca001.dgn

LAST REVISION — DATE PLOTTED => 24-NOV-2015 TIME PLOTTED => 09:23

Dist	COUNTY	ROUTE	POST MILES TOTAL PROJECT	SHEET No.	TOTAL SHEETS
02	Plu	147	8.9/9.3	3	94

REGISTERED CIVIL ENGINEER 11-23-15 DATE

11-30-15
PLANS APPROVAL DATE

REGISTERED PROFESSIONAL ENGINEER BYRON STANLEY No. C60161 Exp. 06-30-16 CIVIL STATE OF CALIFORNIA

THE STATE OF CALIFORNIA OR ITS OFFICERS OR AGENTS SHALL NOT BE RESPONSIBLE FOR THE ACCURACY OR COMPLETENESS OF SCANNED COPIES OF THIS PLAN SHEET.

NOTE:

1. RETAIN HMA DIKE (TYPE F) ON HIGH SIDE OF Super FOR SNOW MELT IN WINTER.

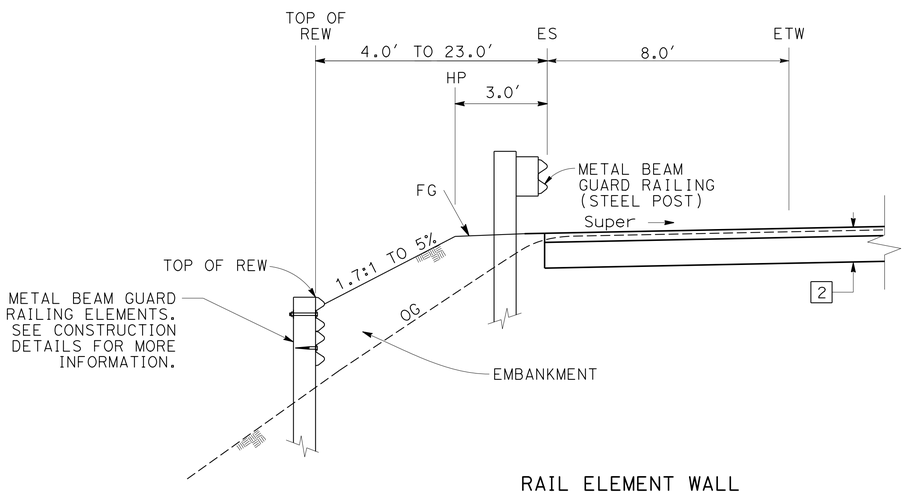

RAIL ELEMENT WALL
"CL1" 20+39.18 TO "CL1" 21+51.79

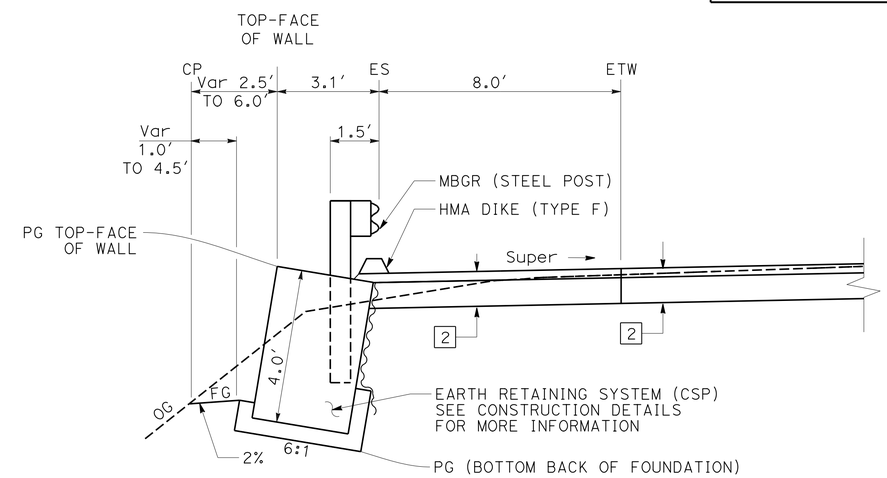

EARTH RETAINING SYSTEM (CSP)
LOCATION 2
"CL1" 22+04.27 TO "CL1"22+89.47

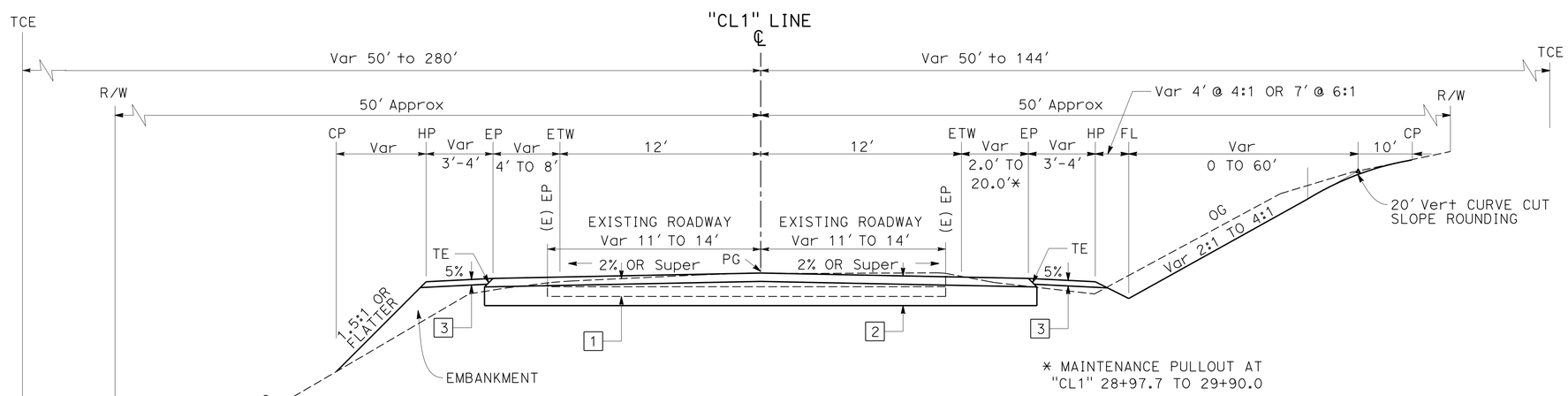

ROUTE 147
"CL1" 18+61.0 EB TO "CL1" 30+70.0

TYPICAL CROSS SECTIONS

NO SCALE

X-2

STATE OF CALIFORNIA - DEPARTMENT OF TRANSPORTATION
Caltrans® **DESIGN**

FUNCTIONAL SUPERVISOR: STEVE TOPAL
CALCULATED-DESIGNED BY: WILL LESLIE
CHECKED BY: BYRON STANLEY
REVISED BY: L.W.L.
DATE REVISED: 3/20/15

P:\proj1\02\4E640_plans\pse\24e640ca002.dgn

LAST REVISION
DATE PLOTTED => 24-NOV-2015
TIME PLOTTED => 09:23

Dist	COUNTY	ROUTE	POST MILES TOTAL PROJECT	SHEET No.	TOTAL SHEETS
02	Plu	147	8.9/9.3	4	94

REGISTERED CIVIL ENGINEER 11-23-15 DATE

11-30-15
PLANS APPROVAL DATE

REGISTERED PROFESSIONAL ENGINEER BYRON STANLEY No. C60161 Exp. 06-30-16 CIVIL STATE OF CALIFORNIA

THE STATE OF CALIFORNIA OR ITS OFFICERS OR AGENTS SHALL NOT BE RESPONSIBLE FOR THE ACCURACY OR COMPLETENESS OF SCANNED COPIES OF THIS PLAN SHEET.

NOTES:

1. FOR ACCURATE RIGHT OF WAY DATA, CONTACT RIGHT OF WAY ENGINEERING AT THE DISTRICT OFFICE.
2. SEE CONSTRUCTION DETAIL SHEETS FOR MORE INFORMATION.
3. SEE WATER POLLUTION CONTROL SHEETS.

LEGEND:

- TFESA — TEMPORARY FENCE (TYPE ESA)
- —xx—xx—TSF—xx— Temp SILT FENCE
- RAIL ELEMENT WALL
- OHWM

ABBREVIATIONS:

MBGR	METAL BEAM GUARDRAIL (STEEL POST)
ERS (CSP)	EARTH RETAINING SYSTEM (CSP)
REW	RAIL ELEMENT WALL
CPACP	COLD PLANE ASPHALT CONCRETE PAVEMENT
OHWM	ORDINARY HIGH WATER MARK
#	NUMBER

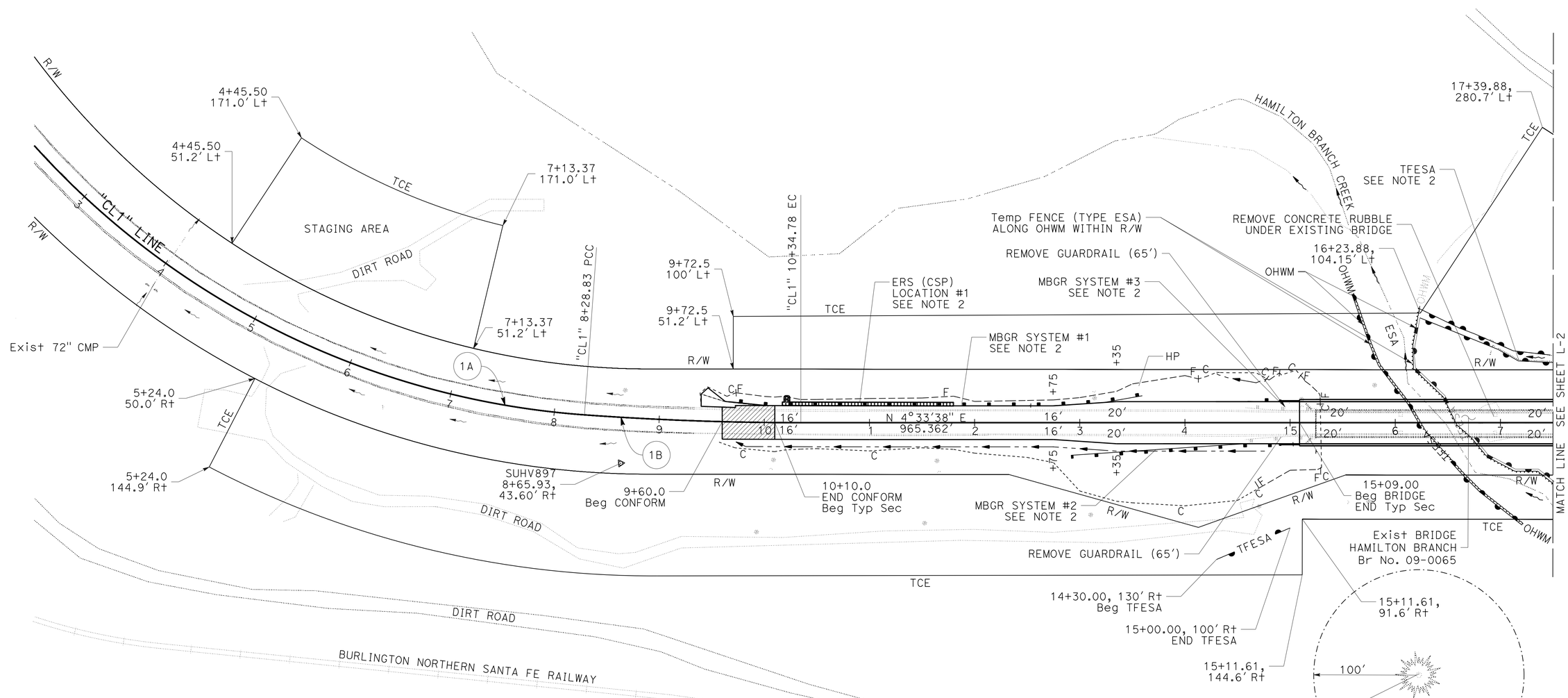

CURVE DATA

No. (#)	R	Δ	T	L
1A	780.00'	56°30'55"	419.24'	769.37'
1B	2850.00'	2°00'37"	103.03'	205.96'

LAYOUT

SCALE: 1" = 50'

L-1

REVISED BY	DATE REVISED
L.W.L.	3/20/15

CALCULATED- WILL LESLIEE
DESIGNED BY BYRON STANLEY
CHECKED BY

FUNCTIONAL SUPERVISOR STEVE TOPAL

STATE OF CALIFORNIA - DEPARTMENT OF TRANSPORTATION
Caltrans® DESIGN

P:\proj1\02\4E640_plans\pse\24e640ea001.dgn

LAST REVISION 11-16-14 | DATE PLOTTED => 24-NOV-2015 TIME PLOTTED => 09:23

Dist	COUNTY	ROUTE	POST MILES TOTAL PROJECT	SHEET No.	TOTAL SHEETS
02	Plu	147	8.9/9.3	5	94

REGISTERED CIVIL ENGINEER 11-23-15 DATE

11-30-15
PLANS APPROVAL DATE

REGISTERED PROFESSIONAL ENGINEER BYRON STANLEY No. C60161 Exp. 06-30-16 CIVIL STATE OF CALIFORNIA

THE STATE OF CALIFORNIA OR ITS OFFICERS OR AGENTS SHALL NOT BE RESPONSIBLE FOR THE ACCURACY OR COMPLETENESS OF SCANNED COPIES OF THIS PLAN SHEET.

NOTES:

1. FOR ACCURATE RIGHT OF WAY DATA, CONTACT RIGHT OF WAY ENGINEERING AT THE DISTRICT OFFICE.
2. SEE CONSTRUCTION DETAIL SHEETS FOR MORE INFORMATION.
3. SEE WATER POLUTION CONTROL SHEETS.
4. SEE UTILITY PLAN SHEETS

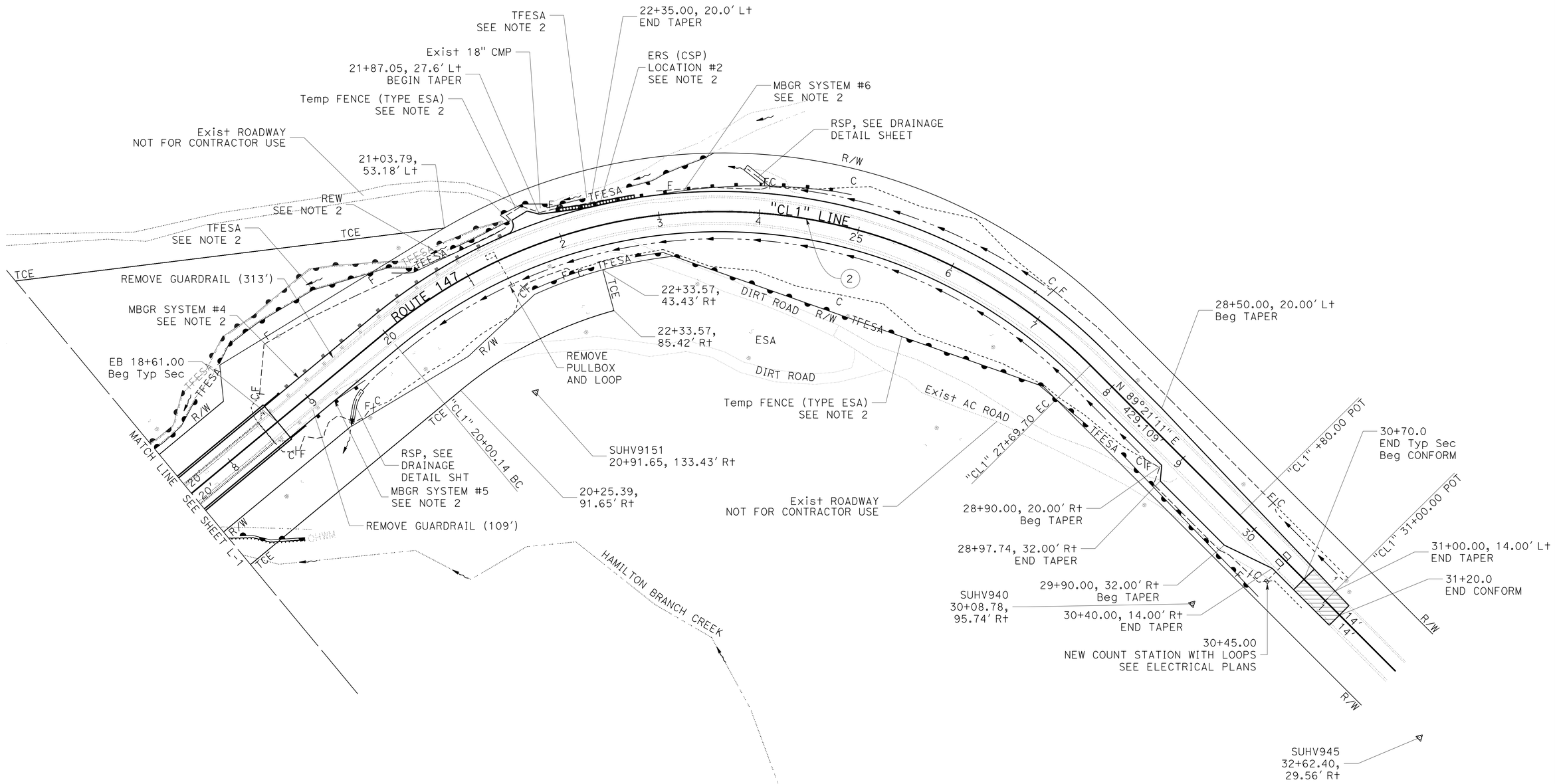

CURVE DATA

No. (#)	R	Δ	T	L
2	520.00′	84°47′33″	474.76′	769.55′

LAYOUT

SCALE: 1" = 50′

L-2

REVISED BY	L.W.L.
DATE REVISED	3/20/15
WILL LESLIE	BYRON STANLEY
CALCULATED-DESIGNED BY	
CHECKED BY	
FUNCTIONAL SUPERVISOR	STEVE TOPAL

STATE OF CALIFORNIA - DEPARTMENT OF TRANSPORTATION
Caltrans
DESIGN

P:\proj1\02\4E640_plans\pse\24e640ea002.dgn

LAST REVISION 11-16-14 DATE PLOTTED => 24-NOV-2015 TIME PLOTTED => 09:23

Dist	COUNTY	ROUTE	POST MILES TOTAL PROJECT	SHEET No.	TOTAL SHEETS
02	Plu	147	8.9/9.3	6	94

REGISTERED CIVIL ENGINEER 11-23-15 DATE

11-30-15
PLANS APPROVAL DATE

REGISTERED PROFESSIONAL ENGINEER BYRON STANLEY No. C60161 Exp. 06-30-16 CIVIL STATE OF CALIFORNIA

THE STATE OF CALIFORNIA OR ITS OFFICERS OR AGENTS SHALL NOT BE RESPONSIBLE FOR THE ACCURACY OR COMPLETENESS OF SCANNED COPIES OF THIS PLAN SHEET.

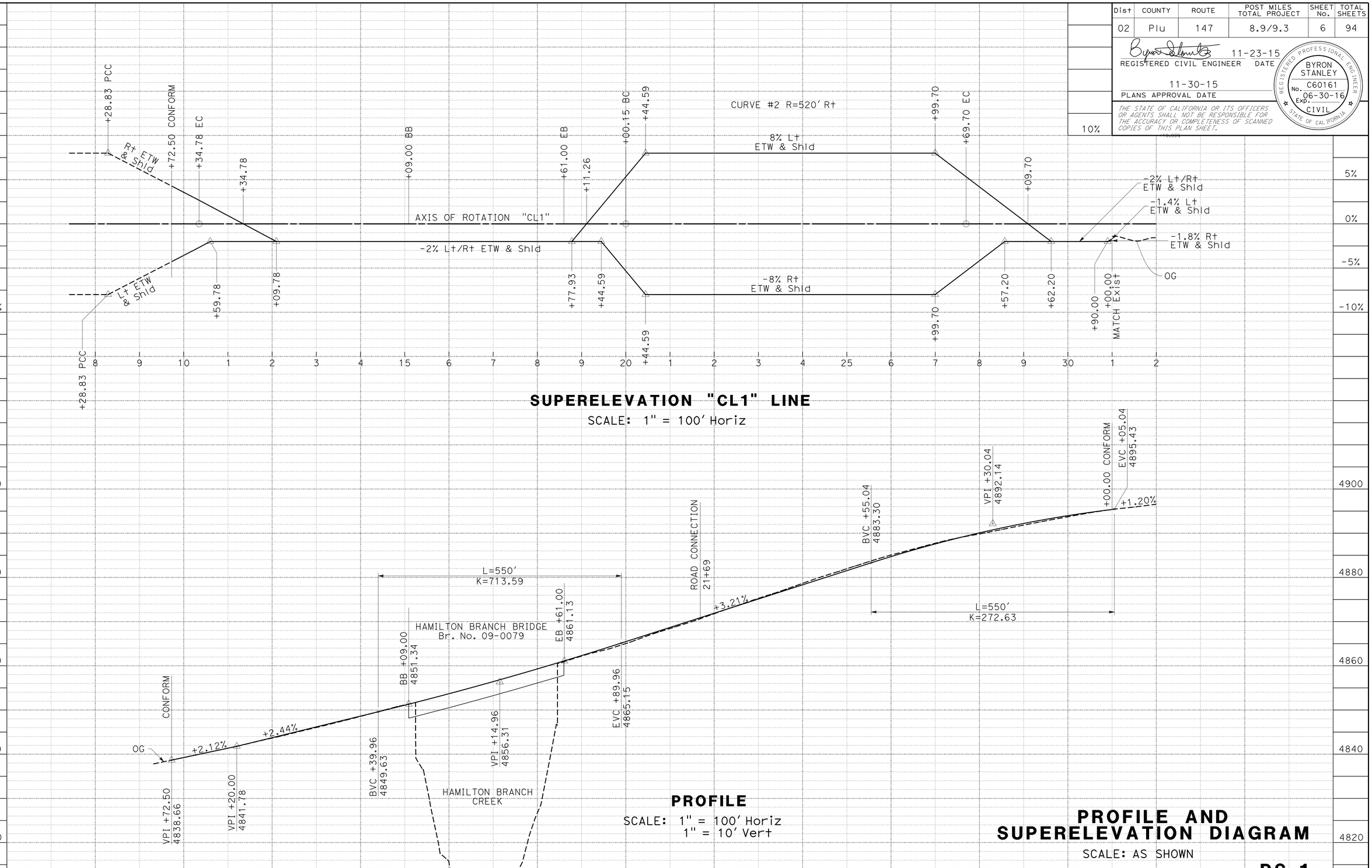

STATION		8	9	10	1	2	3	4	15	6	7	8	9	20	1	2	3	4	25	6	7	8	9	30	1	2	TOTAL
CY	Exc			2910						1178								4088									8176
	Emb			275						1110								196									1581

L.W.L. 3/20/15 REVISED BY DATE REVISED

WILL LESLIE BYRON STANLEY CALCULATED-DESIGNED BY CHECKED BY

STEVE TOPAL FUNCTIONAL SUPERVISOR

STATE OF CALIFORNIA - DEPARTMENT OF TRANSPORTATION
Caltrans DESIGN

P:\proj1\02\4E640_plans\pse\24e640fb001.dgn

LAST REVISION DATE PLOTTED => 24-NOV-2015
11-16-14 TIME PLOTTED => 09:23

Dist	COUNTY	ROUTE	POST MILES TOTAL PROJECT	SHEET No.	TOTAL SHEETS
02	Plu	147	8.9/9.3	7	94

REGISTERED CIVIL ENGINEER 11-23-15 DATE

11-30-15
PLANS APPROVAL DATE

REGISTERED PROFESSIONAL ENGINEER BYRON STANLEY No. C60161 Exp. 06-30-16 CIVIL STATE OF CALIFORNIA

THE STATE OF CALIFORNIA OR ITS OFFICERS OR AGENTS SHALL NOT BE RESPONSIBLE FOR THE ACCURACY OR COMPLETENESS OF SCANNED COPIES OF THIS PLAN SHEET.

NOTE:

1. EXACT LOCTION OF FENCE AS SHOWN OR DETERMINED BY ENGINEER.

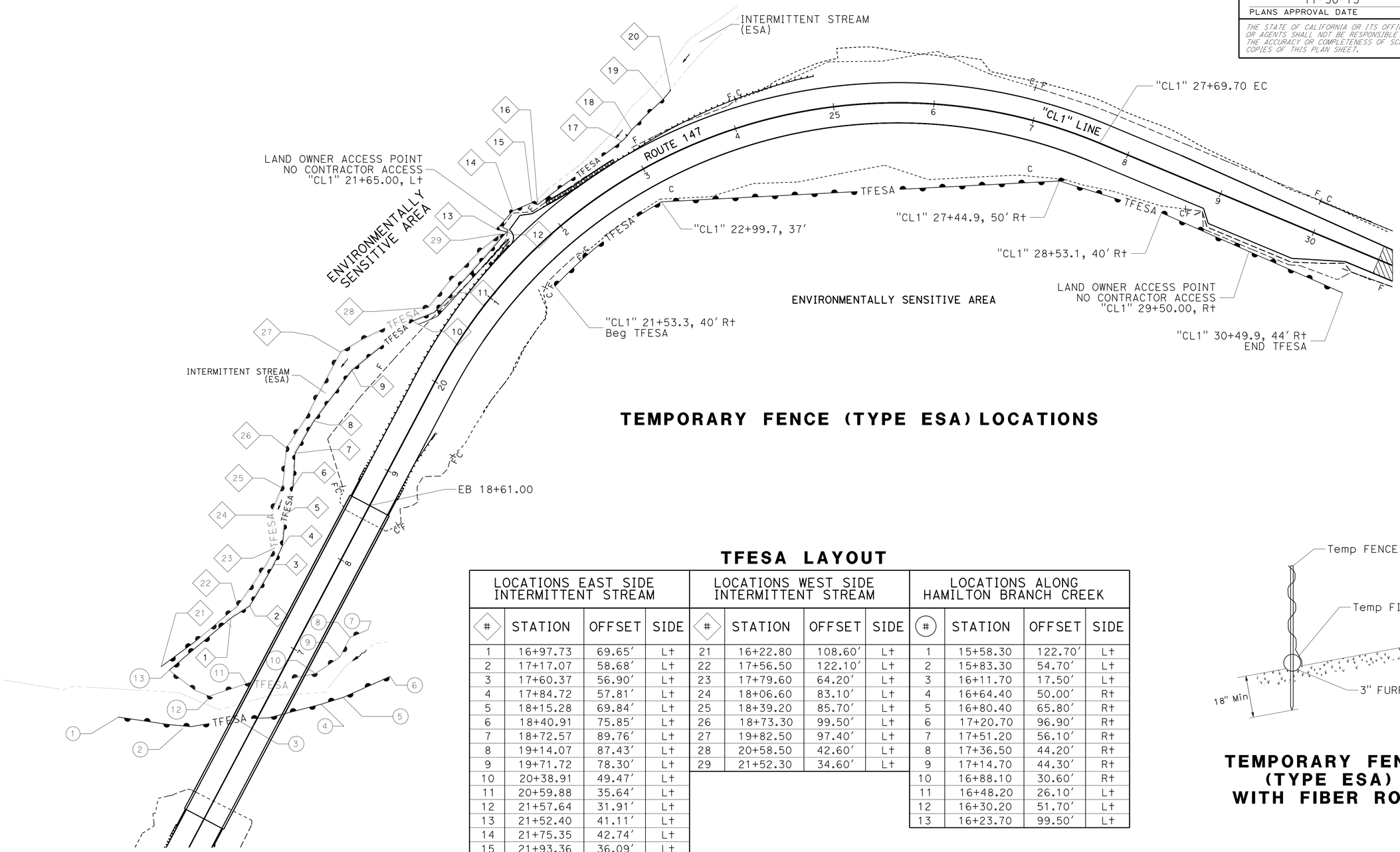

TEMPORARY FENCE (TYPE ESA) LOCATIONS

TFESA LAYOUT

LOCATIONS EAST SIDE INTERMITTENT STREAM				LOCATIONS WEST SIDE INTERMITTENT STREAM				LOCATIONS ALONG HAMILTON BRANCH CREEK			
#	STATION	OFFSET	SIDE	#	STATION	OFFSET	SIDE	#	STATION	OFFSET	SIDE
1	16+97.73	69.65'	Lt	21	16+22.80	108.60'	Lt	1	15+58.30	122.70'	Lt
2	17+17.07	58.68'	Lt	22	17+56.50	122.10'	Lt	2	15+83.30	54.70'	Lt
3	17+60.37	56.90'	Lt	23	17+79.60	64.20'	Lt	3	16+11.70	17.50'	Lt
4	17+84.72	57.81'	Lt	24	18+06.60	83.10'	Lt	4	16+64.40	50.00'	Rt
5	18+15.28	69.84'	Lt	25	18+39.20	85.70'	Lt	5	16+80.40	65.80'	Rt
6	18+40.91	75.85'	Lt	26	18+73.30	99.50'	Lt	6	17+20.70	96.90'	Rt
7	18+72.57	89.76'	Lt	27	19+82.50	97.40'	Lt	7	17+51.20	56.10'	Rt
8	19+14.07	87.43'	Lt	28	20+58.50	42.60'	Lt	8	17+36.50	44.20'	Rt
9	19+71.72	78.30'	Lt	29	21+52.30	34.60'	Lt	9	17+14.70	44.30'	Rt
10	20+38.91	49.47'	Lt					10	16+88.10	30.60'	Rt
11	20+59.88	35.64'	Lt					11	16+48.20	26.10'	Lt
12	21+57.64	31.91'	Lt					12	16+30.20	51.70'	Lt
13	21+52.40	41.11'	Lt					13	16+23.70	99.50'	Lt
14	21+75.35	42.74'	Lt								
15	21+93.36	36.09'	Lt								
16	21+96.30	30.96'	Lt								
17	22+98.69	34.34'	Lt								
18	23+08.12	39.46'	Lt								
19	23+46.07	52.98'	Lt								
20	23+55.55	58.20'	Lt								

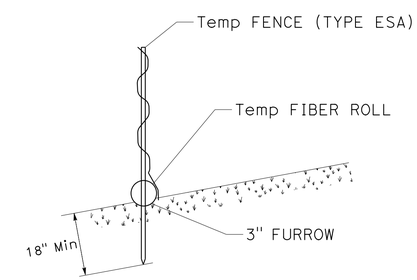

TEMPORARY FENCE (TYPE ESA) WITH FIBER ROLL

APPROVED FOR ESA FENCE WORK ONLY

CONSTRUCTION DETAILS

NO SCALE

C-1

REVISED BY	L.W.L.
DATE REVISED	3/20/15
CALCULATED-DESIGNED BY	WILL LESLIE
CHECKED BY	BYRON STANLEY
FUNCTIONAL SUPERVISOR	STEVE TOPAL

STATE OF CALIFORNIA - DEPARTMENT OF TRANSPORTATION
Caltrans
DESIGN

P:\proj1\02\4E640_plans\pse\24e640ga001.dgn

DATE PLOTTED => 24-NOV-2015
TIME PLOTTED => 09:23

LAST REVISION

Dist	COUNTY	ROUTE	POST MILES TOTAL PROJECT	SHEET No.	TOTAL SHEETS
02	Plu	147	8.9/9.3	8	94

REGISTERED CIVIL ENGINEER 11-23-15 DATE

11-30-15
PLANS APPROVAL DATE

REGISTERED PROFESSIONAL ENGINEER BYRON STANLEY No. C60161 Exp. 06-30-16 CIVIL STATE OF CALIFORNIA

THE STATE OF CALIFORNIA OR ITS OFFICERS OR AGENTS SHALL NOT BE RESPONSIBLE FOR THE ACCURACY OR COMPLETENESS OF SCANNED COPIES OF THIS PLAN SHEET.

NOTE:

1. FOR ACCURATE RIGHT OF WAY DATA, CONTACT RIGHT OF WAY ENGINEERING AT THE DISTRICT OFFICE.

LEGEND:

CONSTRUCTION AREA ACCESS

ABBREVIATIONS:

TFESA TEMPORARY FENCE (TYPE ESA)
OHWM ORDINARY HIGH WATER MARK

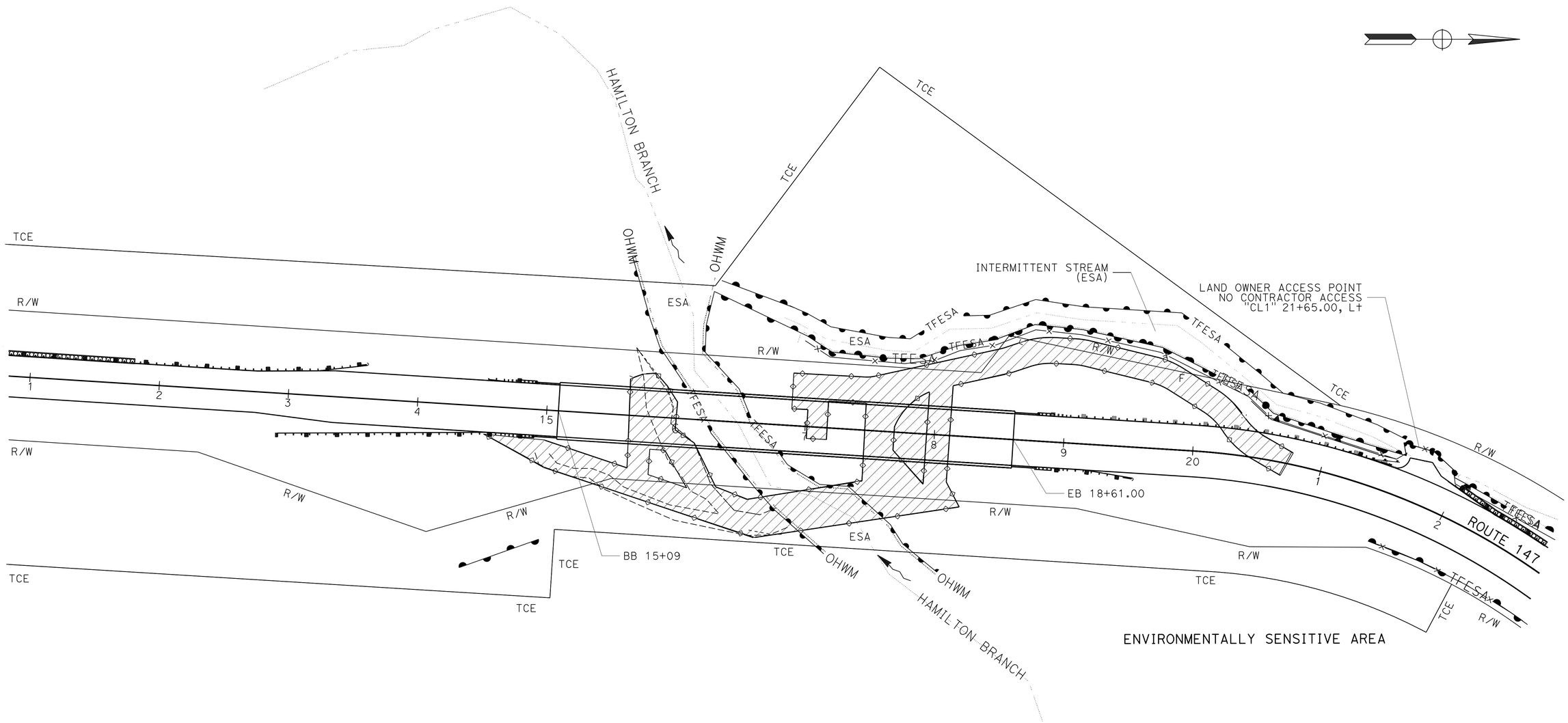

CONSTRUCTION AREA ACCESS

CONSTRUCTION DETAILS

NO SCALE

C-2

REVISED BY	L.W.L.
DATE REVISED	3/20/15
CALCULATED-DESIGNED BY	WILL LESLIE
CHECKED BY	BYRON STANLEY
FUNCTIONAL SUPERVISOR	STEVE TOPAL

STATE OF CALIFORNIA - DEPARTMENT OF TRANSPORTATION
Caltrans
DESIGN

P:\proj1\02\4E640_plans\pse\24e640ga002.dgn

LAST REVISION DATE PLOTTED => 24-NOV-2015 TIME PLOTTED => 09:23

BORDER LAST REVISED 7/2/2010 | USERNAME => s115152 DGN FILE => 24e640ga002.dgn | RELATIVE BORDER SCALE IS IN INCHES 0 1 2 3 | UNIT 0319 | PROJECT NUMBER & PHASE 02 1200 0011 1

Dist	COUNTY	ROUTE	POST MILES TOTAL PROJECT	SHEET No.	TOTAL SHEETS
02	Plu	147	8.9/9.3	9	94

REGISTERED CIVIL ENGINEER 11-23-15 DATE

11-30-15
PLANS APPROVAL DATE

REGISTERED PROFESSIONAL ENGINEER BYRON STANLEY No. C60161 Exp. 06-30-16 CIVIL STATE OF CALIFORNIA

THE STATE OF CALIFORNIA OR ITS OFFICERS OR AGENTS SHALL NOT BE RESPONSIBLE FOR THE ACCURACY OR COMPLETENESS OF SCANNED COPIES OF THIS PLAN SHEET.

NOTES:

1. REINFORCEMENT SHALL HAVE 1-1/2" CLEAR COVER.

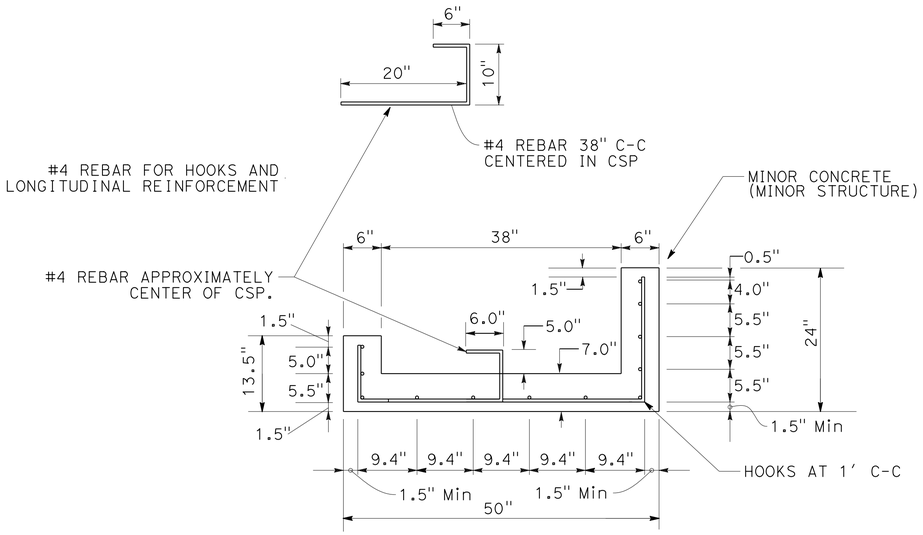

CONCRETE FOUNDATION

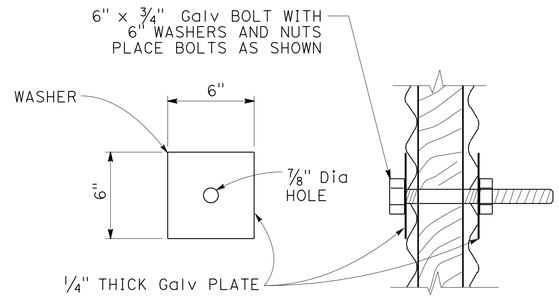

DETAIL A

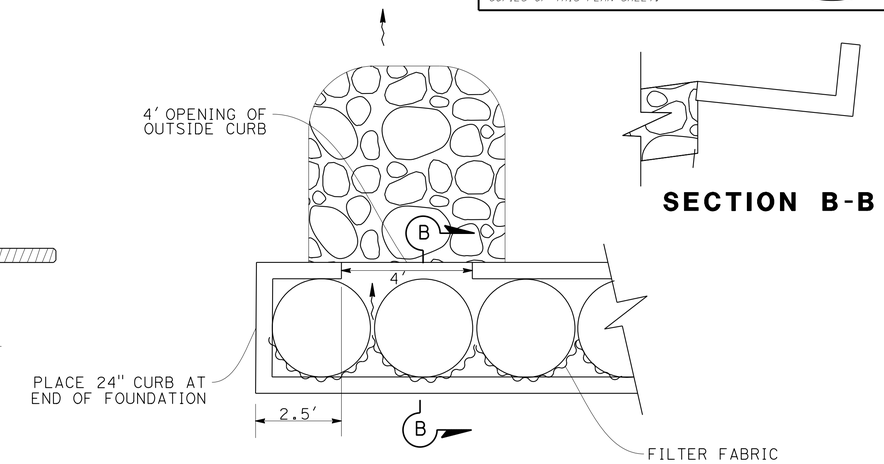

SECTION B-B

CONCRETE FOUNDATION DRAINAGE EXIT

"CL1" 10+21.4
"CL1" 22+07.6

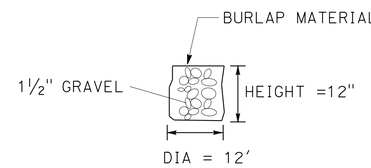

GRAVEL BAG DRAIN

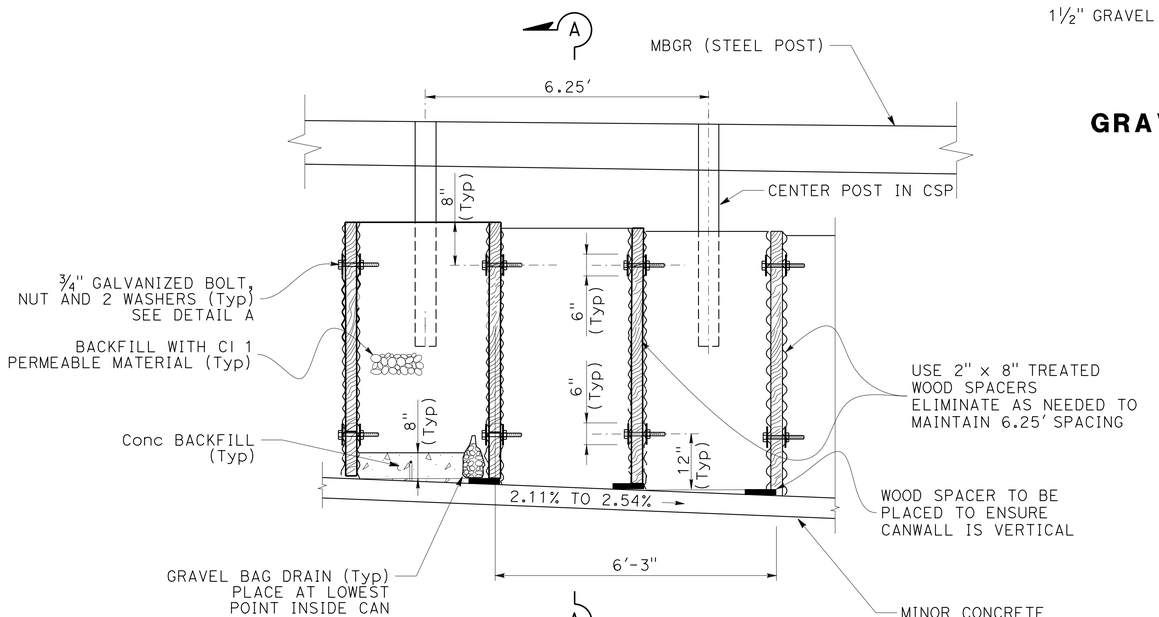

ELEVATION

36" EARTH RETAINING SYSTEM (CORRUGATED STEEL PIPE)

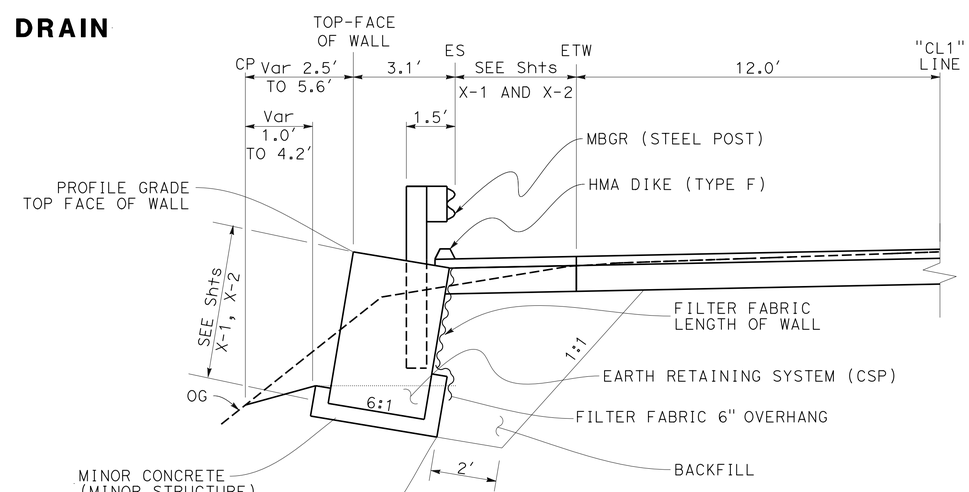

SECTION A-A

CONSTRUCTION DETAILS

NO SCALE

C-3

REVISED BY	DATE REVISED
L.W.L.	3/20/15

CALCULATED-DESIGNED BY: WILL LESLIE
CHECKED BY: BYRON STANLEY
FUNCTIONAL SUPERVISOR: STEVE TOPAL

STATE OF CALIFORNIA - DEPARTMENT OF TRANSPORTATION
Caltrans DESIGN

P:\proj\02\4E640_plans\pse\24e640ga003.dgn

LAST REVISION 11-19-14 DATE PLOTTED => 24-NOV-2015 TIME PLOTTED => 09:23

Dist	COUNTY	ROUTE	POST MILES TOTAL PROJECT	SHEET No.	TOTAL SHEETS
02	Plu	147	8.9/9.3	10	94

REGISTERED CIVIL ENGINEER 11-23-15 DATE

11-30-15
PLANS APPROVAL DATE

REGISTERED PROFESSIONAL ENGINEER
BYRON STANLEY
No. C60161
Exp. 06-30-16
CIVIL
STATE OF CALIFORNIA

THE STATE OF CALIFORNIA OR ITS OFFICERS OR AGENTS SHALL NOT BE RESPONSIBLE FOR THE ACCURACY OR COMPLETENESS OF SCANNED COPIES OF THIS PLAN SHEET.

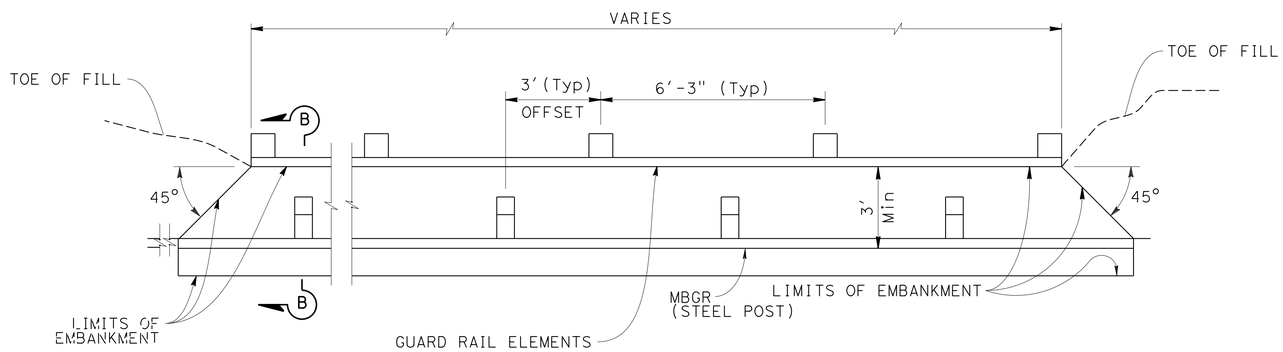

PLAN

RAIL ELEMENT WALL (REW)

"CL1" 20+39.18 TO 21+51.79

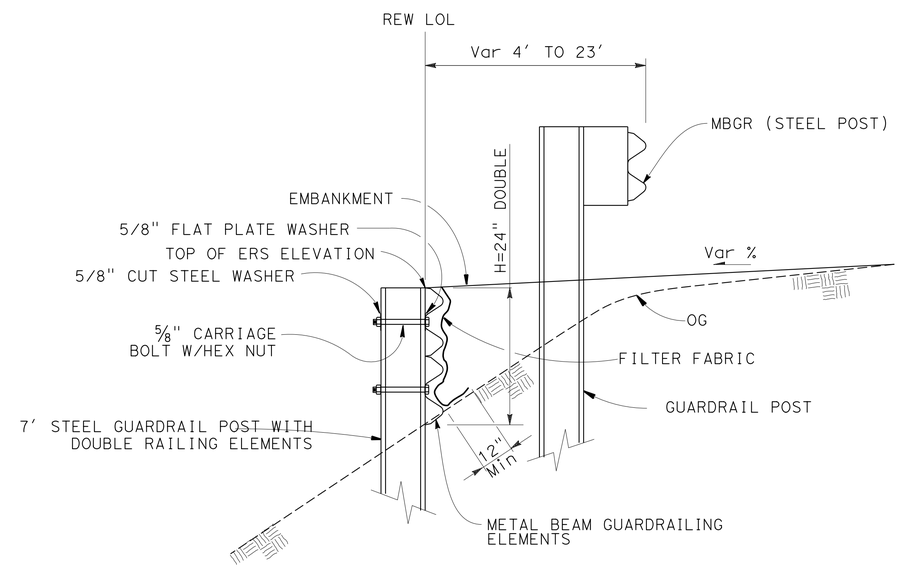

SECTION B-B

CONSTRUCTION DETAILS

NO SCALE

C-4

STATE OF CALIFORNIA - DEPARTMENT OF TRANSPORTATION
Caltrans
DESIGN

FUNCTIONAL SUPERVISOR: STEVE TOPAL
CALCULATED-DESIGNED BY: WILL LESLIE
CHECKED BY: BYRON STANLEY
REVISED BY: L.W.L.
DATE REVISED: 3/20/15

P:\proj1\02\4E640_plans\pse\24e640ga004.dgn

LAST REVISION DATE PLOTTED => 24-NOV-2015
TIME PLOTTED => 09:23

Dist	COUNTY	ROUTE	POST MILES TOTAL PROJECT	SHEET No.	TOTAL SHEETS
02	Plu	147	8.9/9.3	11	94

REGISTERED CIVIL ENGINEER 11-23-15 DATE

11-30-15
PLANS APPROVAL DATE

REGISTERED PROFESSIONAL ENGINEER BYRON STANLEY C60161 No. Exp. 06-30-16 CIVIL STATE OF CALIFORNIA

THE STATE OF CALIFORNIA OR ITS OFFICERS OR AGENTS SHALL NOT BE RESPONSIBLE FOR THE ACCURACY OR COMPLETENESS OF SCANNED COPIES OF THIS PLAN SHEET.

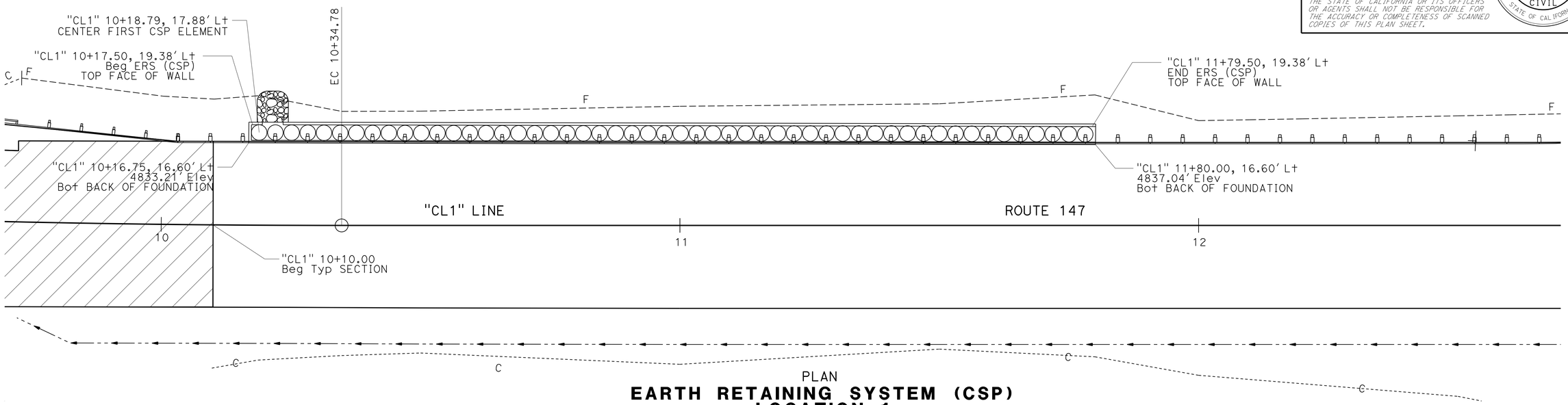

PLAN
EARTH RETAINING SYSTEM (CSP) LOCATION 1
SCALE: 1" = 10'

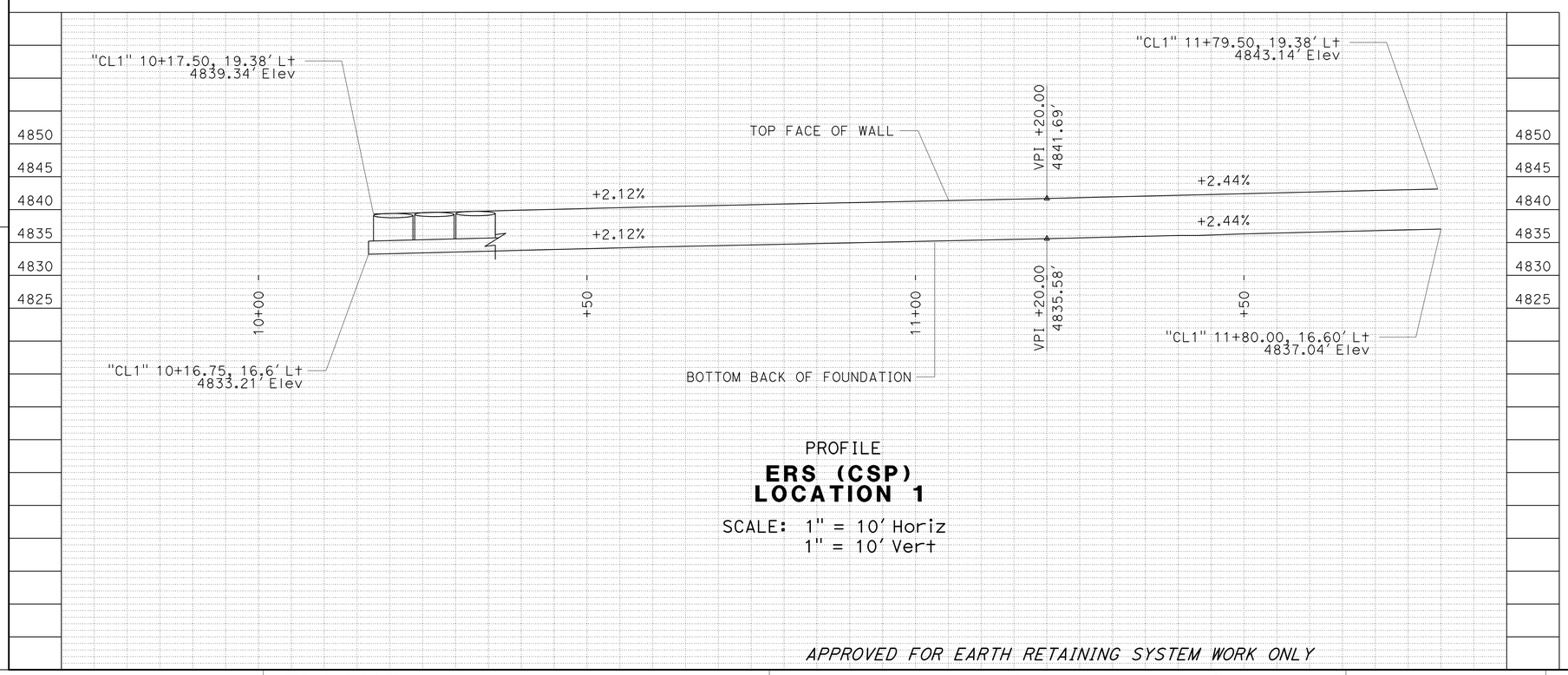

PROFILE
ERS (CSP) LOCATION 1
SCALE: 1" = 10' Horiz
1" = 10' Vert

APPROVED FOR EARTH RETAINING SYSTEM WORK ONLY

WALL ELEVATIONS

Sta "CL1" LINE	Bot BACK OF FOUNDATION* Elev (FT)	TOP FACE OF WALL* Elev (FT)
10+16.75	4833.21	
10+17.50	4833.23	4839.34
10+25.00	4833.42	4839.53
10+34.78	4833.67	4839.78
10+50.00	4834.06	4840.17
10+59.78	4834.31	4840.42
10+70.00	4834.52	4840.63
10+80.00	4834.73	4840.85
10+90.00	4834.94	4841.06
11+00.00	4835.16	4841.27
11+10.00	4835.37	4841.48
11+20.00	4835.58	4841.69
11+30.00	4835.82	4841.94
11+40.00	4836.07	4842.18
11+42.95	4836.14	4842.25
11+50.00	4836.31	4842.42
11+60.00	4836.56	4842.67
11+70.00	4836.8	4842.91
11+79.50	4837.03	4843.14
11+80.00	4837.04	

* SEE Sht C-2 FOR LOCATION.

CONSTRUCTION DETAILS
SCALE: AS SHOWN **C-5**

REVISED BY	DATE REVISED
L.W.L.	3/20/15

CALCULATED-DESIGNED BY: WILL LESLIE
CHECKED BY: BYRON STANLEY
FUNCTIONAL SUPERVISOR: STEVE TOPAL

STATE OF CALIFORNIA - DEPARTMENT OF TRANSPORTATION
Caltrans DESIGN

P:\proj1\02\4E640_plans\pse\24e640ga005.dgn

LAST REVISION DATE PLOTTED => 24-NOV-2015
TIME PLOTTED => 09:23

Dist	COUNTY	ROUTE	POST MILES TOTAL PROJECT	SHEET No.	TOTAL SHEETS
02	Plu	147	8.9/9.3	12	94

REGISTERED CIVIL ENGINEER 11-23-15 DATE

11-30-15
PLANS APPROVAL DATE

REGISTERED PROFESSIONAL ENGINEER BYRON STANLEY No. C60161 Exp. 06-30-16 CIVIL STATE OF CALIFORNIA

THE STATE OF CALIFORNIA OR ITS OFFICERS OR AGENTS SHALL NOT BE RESPONSIBLE FOR THE ACCURACY OR COMPLETENESS OF SCANNED COPIES OF THIS PLAN SHEET.

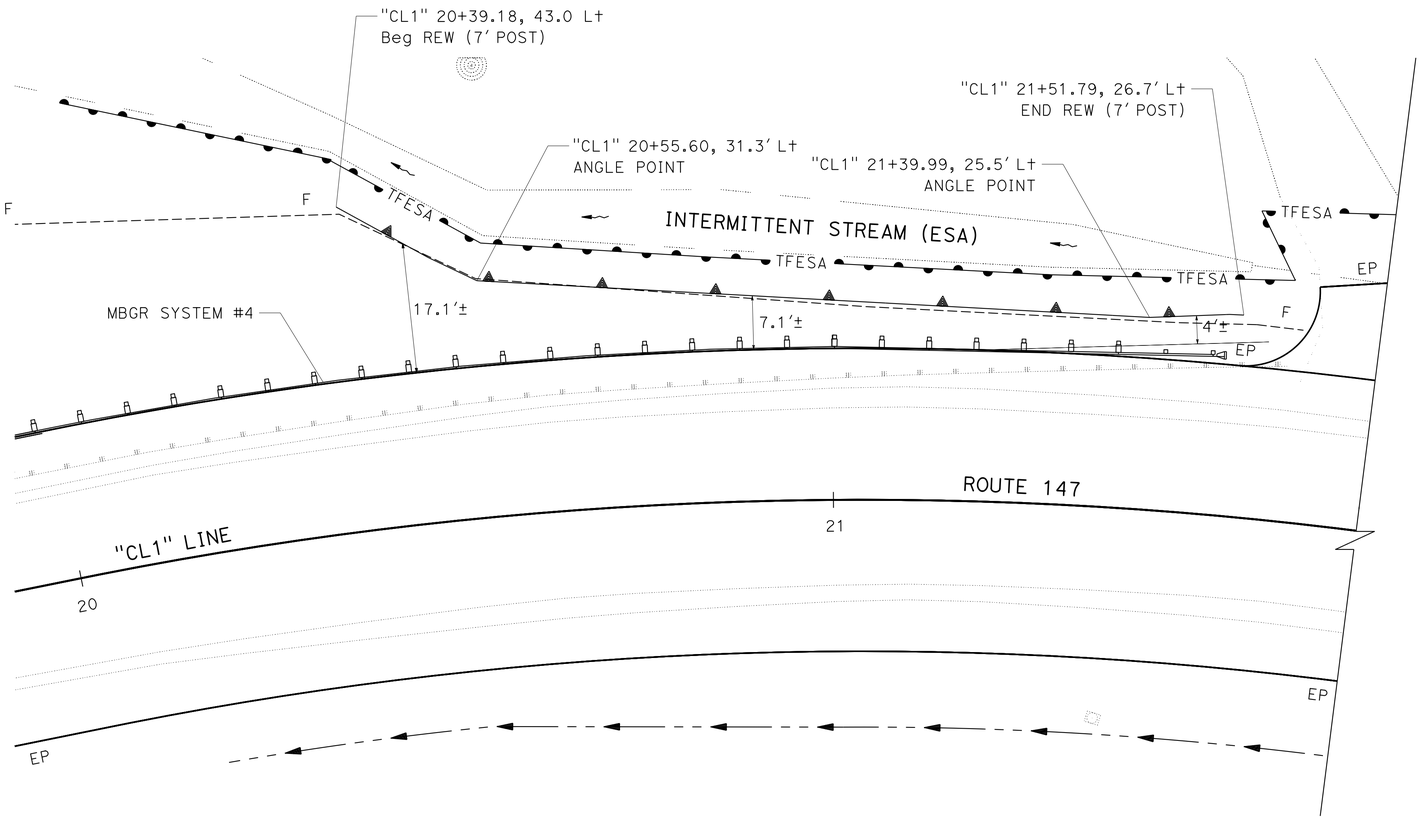

PLAN

RAIL ELEMENT WALL

WALL ELEVATIONS

Sta "CL1" LINE	OFFSET (FT)	TOP Elev (FT)
20+39.50	43.0	4861.31
20+50.00	35.0	4861.27
20+55.75	31.3	4863.29
20+60.00	30.6	4863.81
20+70.00	29.3	4865.83
20+80.00	28.1	4865.84
20+90.00	27.1	4866.98
20+90.99	27.0	4867.09
21+00.00	26.4	4867.83
21+10.00	25.8	4868.63
21+20.00	25.5	4869.26
21+22.47	25.4	4869.42
21+30.00	25.3	4869.90
20+30.74	25.3	4869.98
21+40.00	25.4	4871.25
21+50.00	26.6	4871.97
21+51.79	26.7	4872.07

CONSTRUCTION DETAILS

SCALE: 1" = 10'

C-6

REVISED BY L.W.L. | DATE REVISED 3/20/15
WILL LESLIE | BYRON STANLEY
CALCULATED-DESIGNED BY | CHECKED BY
FUNCTIONAL SUPERVISOR STEVE TOPAL

STATE OF CALIFORNIA - DEPARTMENT OF TRANSPORTATION
Caltrans DESIGN

P:\proj1\02\4E640_plans\pse\24e640ga006.dgn

LAST REVISION | DATE PLOTTED => 24-NOV-2015 | TIME PLOTTED => 09:23

Dist	COUNTY	ROUTE	POST MILES TOTAL PROJECT	SHEET No.	TOTAL SHEETS
02	Plu	147	8.9/9.3	13	94

REGISTERED CIVIL ENGINEER 11-23-15 DATE

11-30-15
PLANS APPROVAL DATE

REGISTERED PROFESSIONAL ENGINEER BYRON STANLEY C60161 No. Exp. 06-30-16 CIVIL STATE OF CALIFORNIA

THE STATE OF CALIFORNIA OR ITS OFFICERS OR AGENTS SHALL NOT BE RESPONSIBLE FOR THE ACCURACY OR COMPLETENESS OF SCANNED COPIES OF THIS PLAN SHEET.

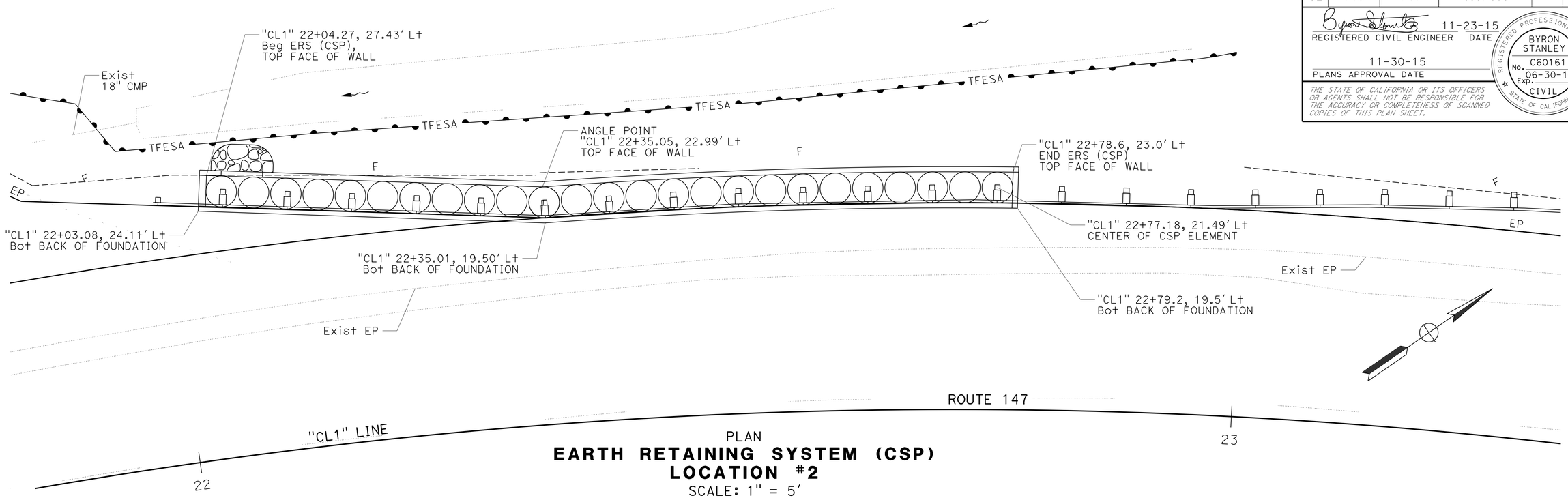

PLAN
EARTH RETAINING SYSTEM (CSP)
LOCATION #2
SCALE: 1" = 5'

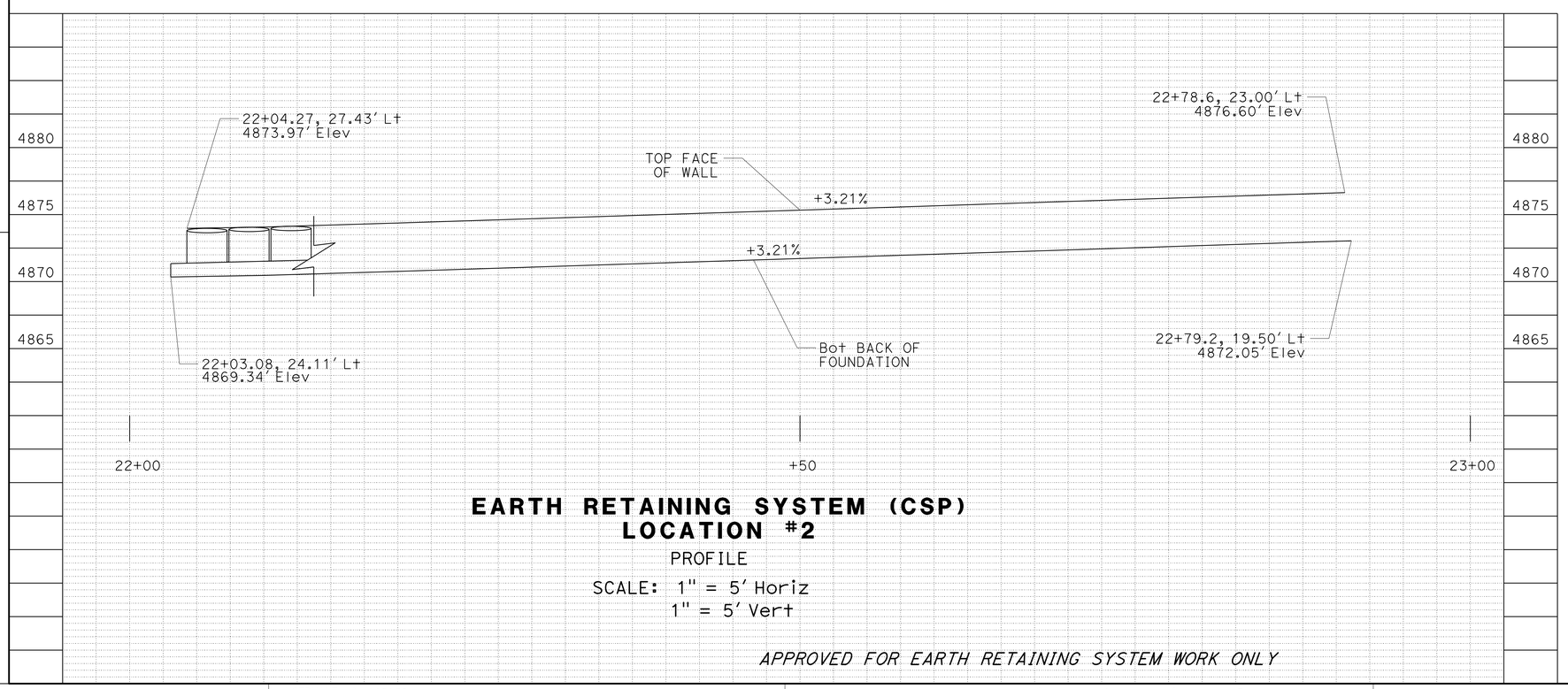

EARTH RETAINING SYSTEM (CSP)
LOCATION #2
PROFILE
SCALE: 1" = 5' Horiz
1" = 5' Vert

APPROVED FOR EARTH RETAINING SYSTEM WORK ONLY

WALL ELEVATIONS

STA	Bot BACK OF FOUNDATION* Elev	TOP FACE OF WALL* Elev
22+03.08	4869.34	
22+04.27	4869.36	4873.97
22+10.00	4869.46	4874.07
22+15.64	4869.62	4874.23
22+15.74	4869.62	4874.23
22+20.00	4869.76	4874.37
22+30.00	4870.08	4874.69
22+40.00	4870.40	4875.01
22+50.00	4870.72	4875.33
22+60.00	4871.04	4875.65
22+70.00	4871.36	4875.98
22+80.00	4871.69	4876.30
22+89.47	4871.99	4876.60
22+91.47	4872.05	

* SEE Sht C-2 FOR LOCATION

CONSTRUCTION DETAILS
SCALE: AS SHOWN

C-7

REVISED BY	DATE REVISED
L.W.L.	3/20/15

CALCULATED-DESIGNED BY: WILL LESLIE
CHECKED BY: BYRON STANLEY
FUNCTIONAL SUPERVISOR: STEVE TOPAL

STATE OF CALIFORNIA - DEPARTMENT OF TRANSPORTATION
Caltrans
DESIGN

P:\proj\02\4E640_plans\pse\24e640ga007.dgn

LAST REVISION DATE PLOTTED => 24-NOV-2015
TIME PLOTTED => 09:23

Dist	COUNTY	ROUTE	POST MILES TOTAL PROJECT	SHEET No.	TOTAL SHEETS
02	Plu	147	8.9/9.3	14	94

REGISTERED CIVIL ENGINEER 11-23-15 DATE

11-30-15
PLANS APPROVAL DATE

REGISTERED PROFESSIONAL ENGINEER BYRON STANLEY No. C60161 Exp. 06-30-16 CIVIL STATE OF CALIFORNIA

THE STATE OF CALIFORNIA OR ITS OFFICERS OR AGENTS SHALL NOT BE RESPONSIBLE FOR THE ACCURACY OR COMPLETENESS OF SCANNED COPIES OF THIS PLAN SHEET.

NOTES:

1. Max 10:1 SLOPE IN FRONT OF GUARDRAIL.
2. STANDARD HARDWARE, ELEMENTS, AND POSTS USED TO CONSTRUCT GUARDRAIL, IS THE SAME AS MIDWEST GUARDRAIL SYSTEM. FOR DETAILS, SEE REVISED STANDARD PLANS A77L2,A77M1, AND A77N2.
3. FOR DETAILS OF STEEL LINE POSTS USED TO CONSTRUCT GUARDRAIL SEE STANDARD PLAN A77N2. FOR 8' POST USE W6 X 15 STEEL POST.
4. A SINGLE LINE POST POST MAY BE OFFSET UP TO 12" INLINE WITH THE GUARDRAIL IF AUTHORIZED.
5. WHEN THERE IS A BREAK POINT IN FRONT OF GUARDRAIL BETWEEN 4'-8' THE HEIGHT WILL BE DETERMINED BY THE ENGINEER.
6. PLACE RUB RAIL (GUARDRAIL ELEMENT) AS SHOWN WHEN HEIGHT OF GUARDRAIL IS MIN 32" ABOVE FINISH GRADE UNDER FACE OF RAIL.
7. FOR BOLTED CONNECTION OF RAIL ELEMENT TO BLOCK AND POST, SEE "RAIL ELEMENT SPLICE DETAIL" AND "SECTON THRU RAIL ELEMENT",
8. TO CONNECT RAILING TO TERMINAL SYSTEM END TREATMENT, TRANSITION THE TOP OF RAILING HEIGHT AT A RATIO OF 120:1 TO TERMINAL SYSTEM END TREATMENT HEIGHT PLUS ONE 12'-6" STANDARD RAILING SECTION AT THE TERMINAL HEIGHT.
9. ADDITIONAL HOLE IN UPPERMOST PORTION OF LINE POST IS FOR POTENTIAL FUTURE ADJUSTMENTS OF RAILING HEIGHT.
10. FOR WOOD POST, TOENAIL BLOCKS TO POST WITH 2-16D GALVANIZED NAILS. BLOCKS MUST HAVE MEANS TO RESIST ROTATION OTHER THAN THROUGH BOLT.
11. DIMENSIONS FOR POST AND BLOCKS ARE NOMINAL.

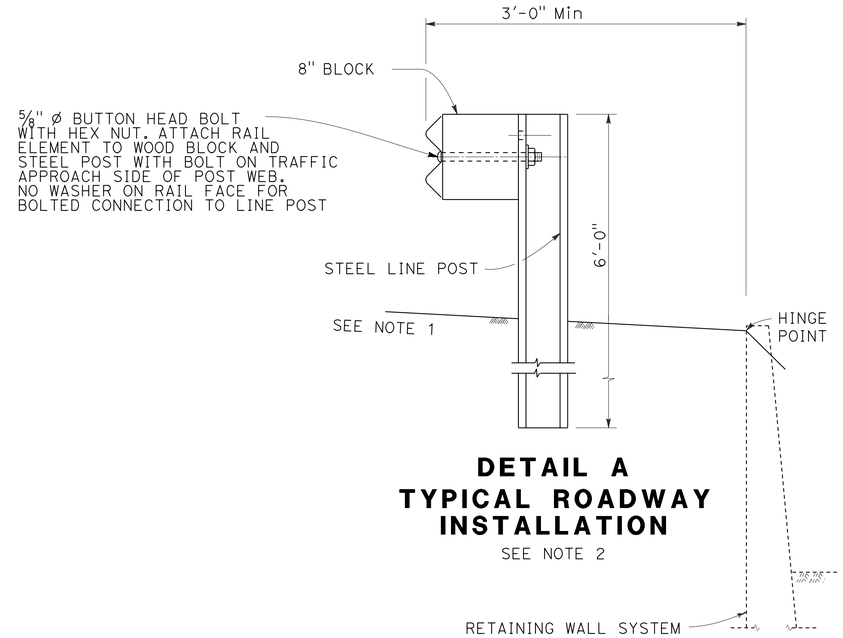

DETAIL A
TYPICAL ROADWAY INSTALLATION

SEE NOTE 2

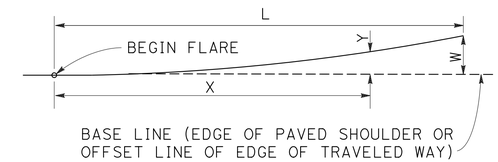

$$Y = \frac{WX^2}{L^2}$$

Y = OFFSET FROM BASE LINE
W = MAXIMUM OFFSET
X = DISTANCE ALONG BASE LINE
L = LENGTH OF FLARE

PARABOLIC FLARE OFFSETS

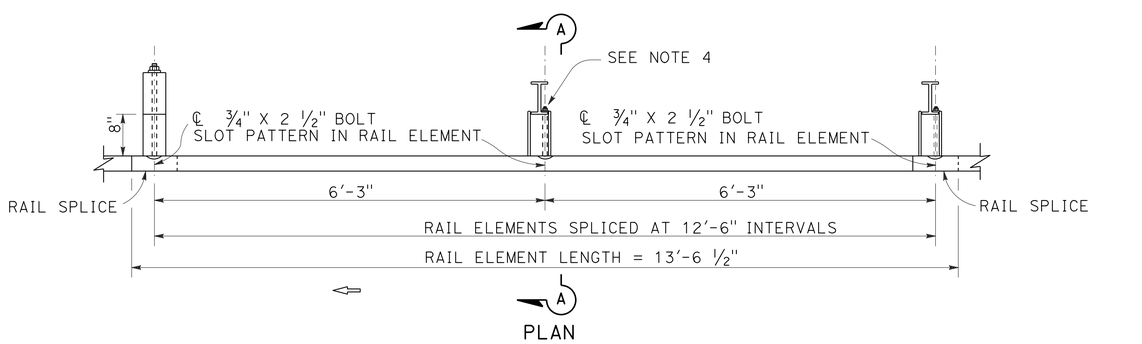

PLAN

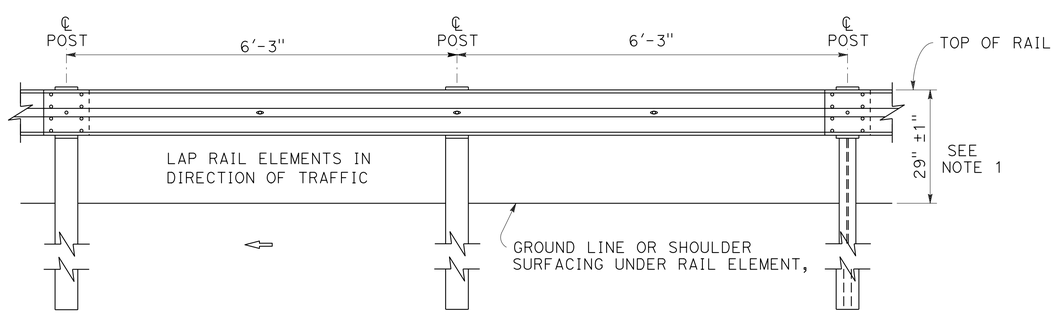

ELEVATION

METAL BEAM GUARD RAILING

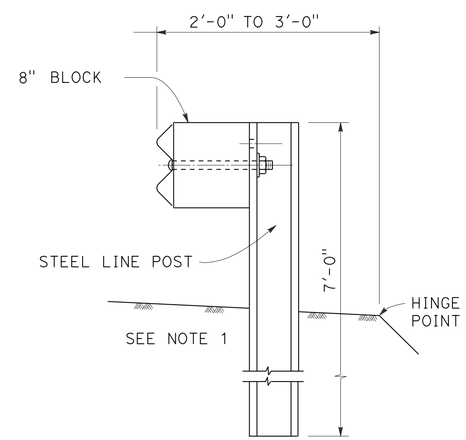

DETAIL B
NARROW ROADWAY INSTALLATION

SEE NOTE 2

POST EMBEDMENT

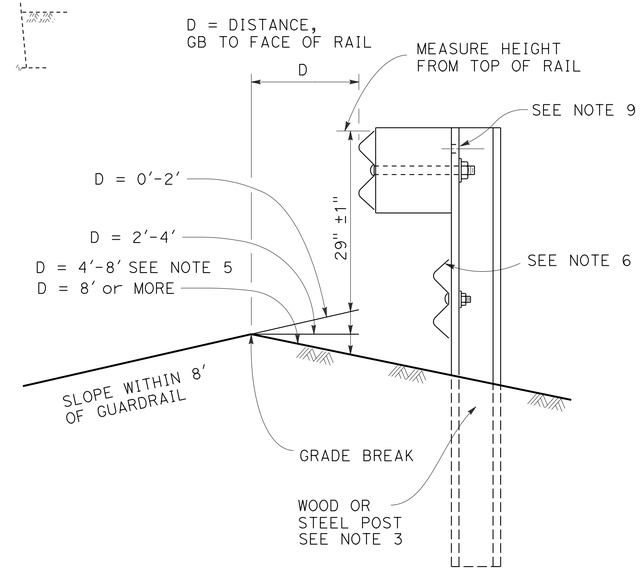

SECTION A-A

MEASURE HEIGHT DETAIL AT GRADE BREAK (GB)

WHEN THERE IS A BREAK POINT IN FRONT OF GUARDRAIL MEASURE HEIGHT OF GUARD RAIL BASED ON DISTANCE FROM GRADE BREAK TO ADJUST FOR TRAJECTORY.

CONSTRUCTION DETAILS
GUARD RAILING
STANDARD RAILING SECTION

NO SCALE

C-8

REVISED BY	L.W.L.
DATE REVISED	3/20/15
CALCULATED-DESIGNED BY	WILL LESLIE
CHECKED BY	BYRON STANLEY
FUNCTIONAL SUPERVISOR	STEVE TOPAL

STATE OF CALIFORNIA - DEPARTMENT OF TRANSPORTATION
Caltrans
DESIGN

P:\proj\02\4E640_plans\pse\24e640ga008.dgn

LAST REVISION
DATE PLOTTED => 24-NOV-2015
TIME PLOTTED => 09:23

Dist	COUNTY	ROUTE	POST MILES TOTAL PROJECT	SHEET No.	TOTAL SHEETS
02	Plu	147	8.9/9.3	15	94

REGISTERED CIVIL ENGINEER 11-23-15 DATE

11-30-15
PLANS APPROVAL DATE

REGISTERED PROFESSIONAL ENGINEER BYRON STANLEY No. C60161 Exp. 06-30-16 CIVIL STATE OF CALIFORNIA

THE STATE OF CALIFORNIA OR ITS OFFICERS OR AGENTS SHALL NOT BE RESPONSIBLE FOR THE ACCURACY OR COMPLETENESS OF SCANNED COPIES OF THIS PLAN SHEET.

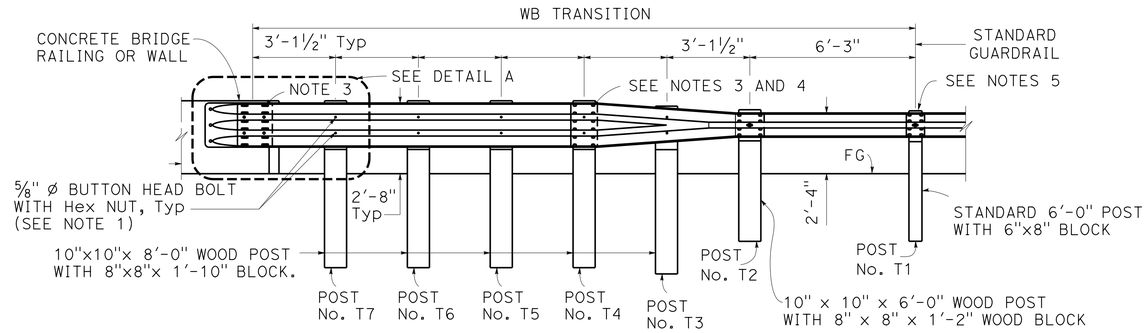

ELEVATION

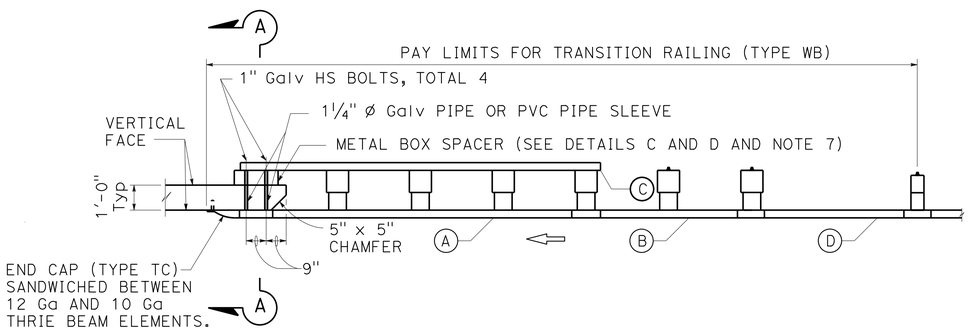

PLAN

TRANSITION RAILING (TYPE WB)

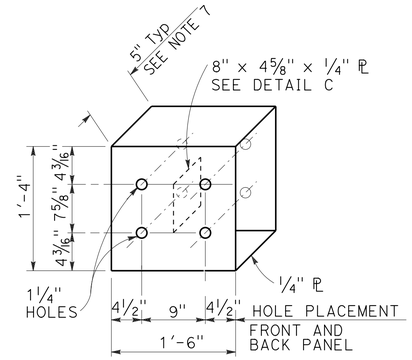

DETAIL D
METAL BOX SPACER

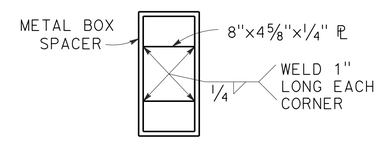

DETAIL C

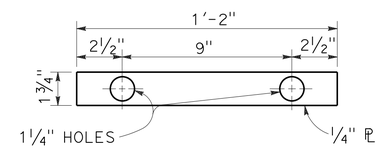

DETAIL B
PLATE 'A'

NOTES:

1. USE ⅝" ø BUTTON HEAD BOLTS AND HEX NUTS FOR CONNECTIONS TO POSTS.
2. TAPER THE TOP OF THE ANCHOR BLOCK AT 4:1 TO 1" ABOVE TOP OF RAIL.
3. EXTERIOR SPLICE BOLT HOLES FOR RAIL ELEMENT SPLICES AT POST NO. T4 AND THE CONNECTION TO THE CONCRETE BARRIER OR RAILING SHALL BE THE STANDARD 13/16" X 1⅛" SLOT SIZE. INTERIOR SPLICE BOLT HOLES AT THESE LOCATIONS MAY BE INCREASED UP TO 1¼" ø. ONLY THE TOP 4 AND THE BOTTOM 4 SPLICE BOLTS WITH WASHERS AND NUTS ARE REQUIRED FOR RAIL SPLICES AT POST NO. T4 AND THE TOP 2 AND THE BOTTOM 2 SPLICE BOLTS ARE REQUIRED AT THE CONNECTION TO THE CONCRETE BARRIER OR RAILING.
4. THE TOP ELEVATION OF POSTS NO. T2 THROUGH NO. T7 SHALL NOT PROJECT MORE THAN 1" ABOVE THE TOP ELEVATION OF THE RAIL ELEMENT.
5. THE GUARD RAILING CONNECTED TO TRANSITION RAILING (TYPE WB) WILL BE A STANDARD RAILING SECTION OF METAL BEAM GUARD RAILING WITH HEIGHT TRANSITION RATIO OF 120:1.
6. END CAP MAY BE INSTALLED OVER 12 Ga AND 10 Ga THRIE BEAM ELEMENTS WHERE TRANSITION RAILING IS INSTALLED ON THE DEPARTURE END OF BRIDGE RAILING.
7. THE DEPTH OF THE METAL BOX SPACER VARIES FROM 5⅛" TO 1½" AND IS DEPENDENT ON THE WIDTH OF THE CONCRETE RAILING OR WALL. THE COMBINED DIMENSION FOR THE DEPTH OF THE METAL BOX SPACER PLUS THE WIDTH OF RAILING OR WALL SHOULD BE 17⅛".

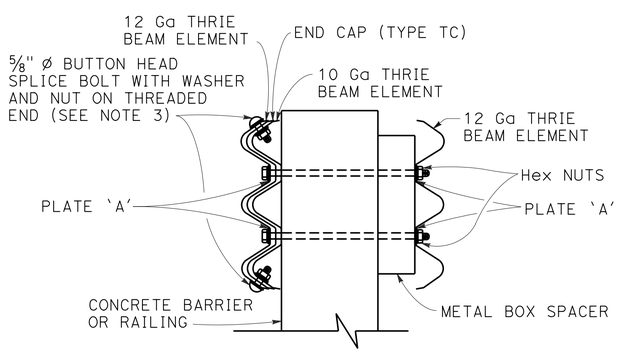

SECTION A-A

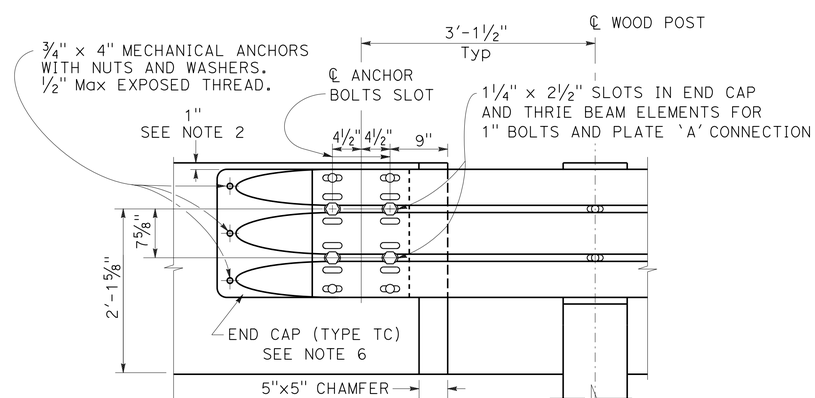

DETAIL A

LEGEND

(A) NESTED THRIE BEAM ELEMENTS (ONE 12 Ga ELEMENT NESTED OVER ONE 10 Ga ELEMENT).

(B) ONE 10 Ga "W" BEAM TO THRIE BEAM ELEMENT.

(C) ONE 12 Ga THRIE BEAM ELEMENT.

(D) ONE 10 Ga "W" BEAM RAIL ELEMENT (7'-3½"LENGTH).

CONSTRUCTION DETAILS GUARD RAILING TRANSITION (TYPE WB)

NO SCALE

C-9

REVISED BY	L.W.L.
DATE REVISED	3/20/15
CALCULATED-DESIGNED BY	WILL LESLIE
CHECKED BY	BYRON STANLEY
FUNCTIONAL SUPERVISOR	STEVE TOPAL

STATE OF CALIFORNIA - DEPARTMENT OF TRANSPORTATION
Caltrans
DESIGN

P:\proj1\02\4E640_plans\pse\24e640ga009.dgn

LAST REVISION DATE PLOTTED => 24-NOV-2015
TIME PLOTTED => 09:23

Dist	COUNTY	ROUTE	POST MILES TOTAL PROJECT	SHEET No.	TOTAL SHEETS
02	Plu	147	8.9/9.3	16	94

REGISTERED CIVIL ENGINEER 11-23-15 DATE

11-30-15
PLANS APPROVAL DATE

REGISTERED PROFESSIONAL ENGINEER BYRON STANLEY C60161 No. 06-30-16 Exp. CIVIL STATE OF CALIFORNIA

THE STATE OF CALIFORNIA OR ITS OFFICERS OR AGENTS SHALL NOT BE RESPONSIBLE FOR THE ACCURACY OR COMPLETENESS OF SCANNED COPIES OF THIS PLAN SHEET.

NOTE:

1. TAPER THE TOP OF THE ANCHOR BLOCK AT 4:1 TO 1" ABOVE TOP OF RAIL.

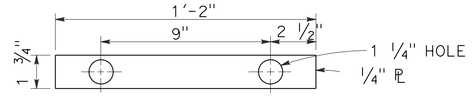

PLATE 'A'

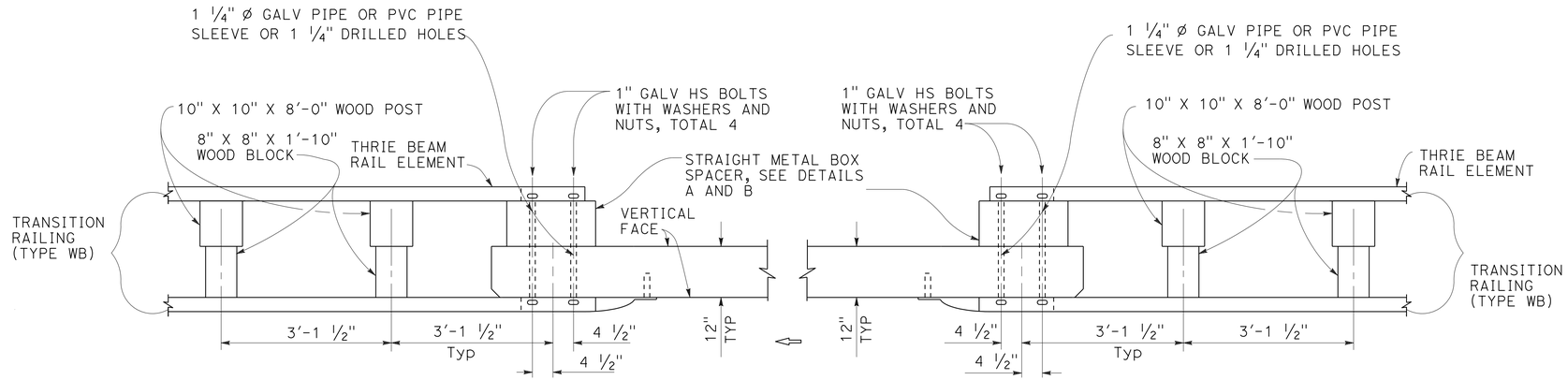

PLAN

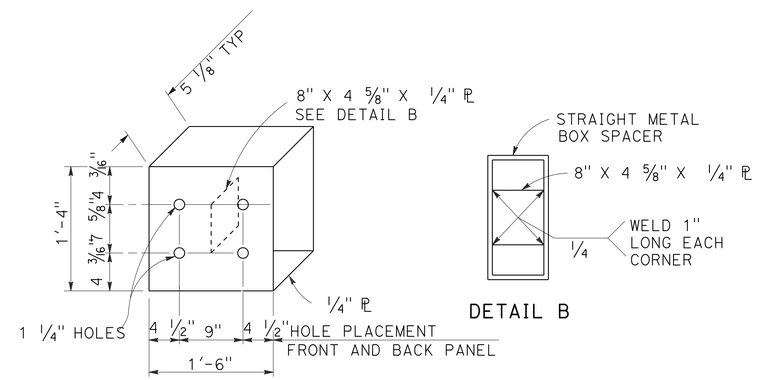

DETAIL A

DETAIL B

STRAIGHT METAL BOX SPACER

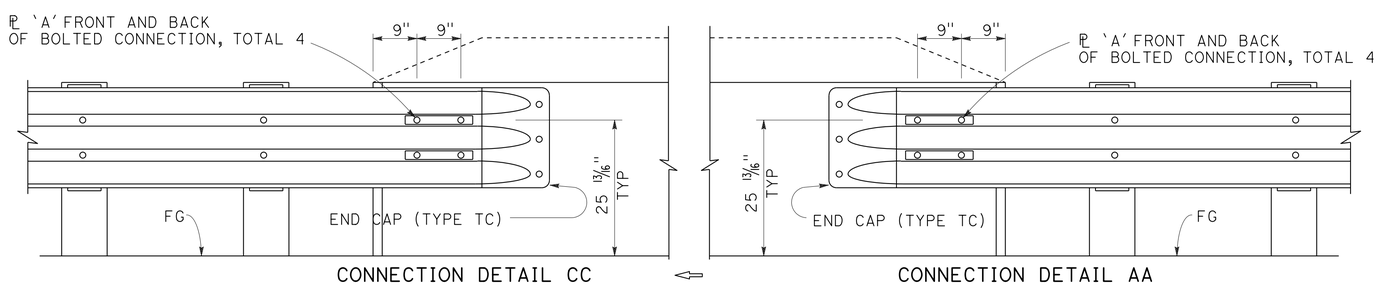

CONNECTION DETAIL CC

CONNECTION DETAIL AA

ELEVATION

GUARD RAILING CONNECTION TO BRIDGE RAILING WITHOUT SIDEWALK

CONSTRUCTION DETAILS METAL BEAM GUARD RAILING CONNECTIONS TO BRIDGE RAILINGS WITHOUT SIDEWALKS DETAILS No. 2

NO SCALE

C-10

REVISED BY	DATE REVISED
L.W.L.	3/20/15

CALCULATED-DESIGNED BY: WILL LESLIE
CHECKED BY: BYRON STANLEY
FUNCTIONAL SUPERVISOR: STEVE TOPAL

STATE OF CALIFORNIA - DEPARTMENT OF TRANSPORTATION
Caltrans® DESIGN

P:\proj1\02\4E40_plans\pse\24e640ga010.dgn

LAST REVISION | DATE PLOTTED => 24-NOV-2015 | TIME PLOTTED => 09:24

Dist	COUNTY	ROUTE	POST MILES TOTAL PROJECT	SHEET No.	TOTAL SHEETS
02	Plu	147	8.9/9.3	17	94

REGISTERED CIVIL ENGINEER 11-23-15 DATE

11-30-15
PLANS APPROVAL DATE

REGISTERED PROFESSIONAL ENGINEER BYRON STANLEY No. C60161 Exp. 06-30-16 CIVIL STATE OF CALIFORNIA

THE STATE OF CALIFORNIA OR ITS OFFICERS OR AGENTS SHALL NOT BE RESPONSIBLE FOR THE ACCURACY OR COMPLETENESS OF SCANNED COPIES OF THIS PLAN SHEET.

NOTES:

1. FOR CURB AND DIKE DETAILS, SEE REVISED STANDARD PLANS RSP A87A. AND RSP A87B.
2. ONLY TYPE C DIKE MAY BE USED UNDER OR IN FRONT OF TERMINAL SYSTEMS, OR WHEN DIKE IS PLACED MORE THAN 2" IN FRONT OF FACE OF MBGR.
3. DIKE OR CURB MUST BE PLACED IN THE STD POSITION UNLESS OTHERWISE SHOWN. THE MAXIMUM HEIGHT OF THE DIKE OR CURB SHALL BE 4" FOR MBGR,
4. GUARDRAIL DELINEATION TO BE USED WHERE SHOWN ON THE PROJECT PLANS.
5. FOR STEEL LINE POSTS, USE 1/4 - 20 SELF-TAPPING SCREWS IN 0.22" DIAMETER HOLES OR 1/4" BOLTS IN 9/32" DIAMETER HOLES.

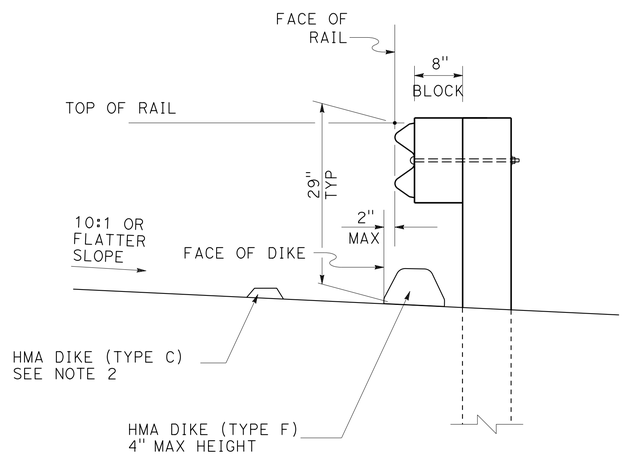

MBGR DIKE POSITIONING

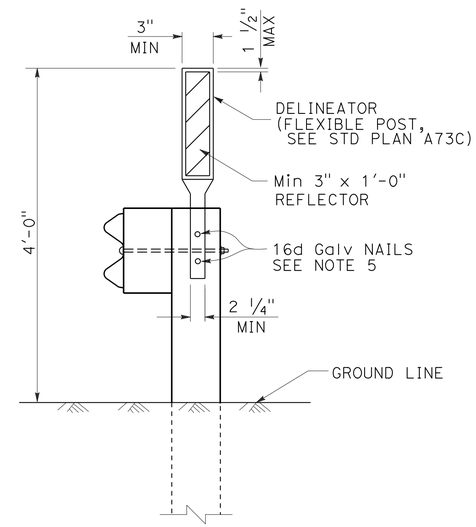

GUARDRAIL DELINEATION

SEE NOTE 4

CONSTRUCTION DETAILS GUARDRAIL TYPICAL DIKE POSITIONING AND DELINEATION DETAILS

NO SCALE

C-11

WILL LESLIE	L.W.L.	CALCULATED-DESIGNED BY	
BYRON STANLEY	3/20/15	CHECKED BY	
REVISED BY		FUNCTIONAL SUPERVISOR	
DATE REVISED		STEVE TOPAL	

STATE OF CALIFORNIA - DEPARTMENT OF TRANSPORTATION
Caltrans
DESIGN

P:\proj1\02\4E640_plans\pse\24e640ga011.dgn

LAST REVISION
DATE PLOTTED => 24-NOV-2015
TIME PLOTTED => 09:24

Dist	COUNTY	ROUTE	POST MILES TOTAL PROJECT	SHEET No.	TOTAL SHEETS
02	Plu	147	8.9/9.3	18	94

REGISTERED CIVIL ENGINEER 11-23-15 DATE

11-30-15
PLANS APPROVAL DATE

REGISTERED PROFESSIONAL ENGINEER BYRON STANLEY No. C60161 Exp. 06-30-16 CIVIL STATE OF CALIFORNIA

THE STATE OF CALIFORNIA OR ITS OFFICERS OR AGENTS SHALL NOT BE RESPONSIBLE FOR THE ACCURACY OR COMPLETENESS OF SCANNED COPIES OF THIS PLAN SHEET.

NOTES:

1. FOR DETAILS NOT SHOWN OF THE ANCHOR PLATE AND ¾" CABLE, SEE RSP A77S3.
2. A 6'-0" LENGTH STEEL FOUNDATION TUBE, TS 8 x 6 x 3/16, WITHOUT A SOIL PLATE, MAY BE FURNISHED AND INSTALLED IN PLACE OF THE 4'-6" LENGTH STEEL FOUNDATION TUBE AND SOIL PLATE SHOWN. MINIMUM EMBEDMENT OF THE 6'-0" LENGTH TUBE SHALL BE 5'-9". A ⅝" Ø HEX HEAD BOLT AND NUT SHALL BE INSTALLED IN THE HOLE IN THE 6'=0" LENGTH TUBE TO KEEP THE WOOD POST FROM DROPPING INTO THE TUBE.
3. INSTALL LINE POST, STEEL FOUNDATION TUBE, AND SOIL PLATE IN SOIL.

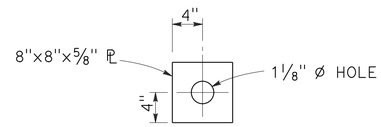

DETAIL A
CABLE CONNECTION END PLATE

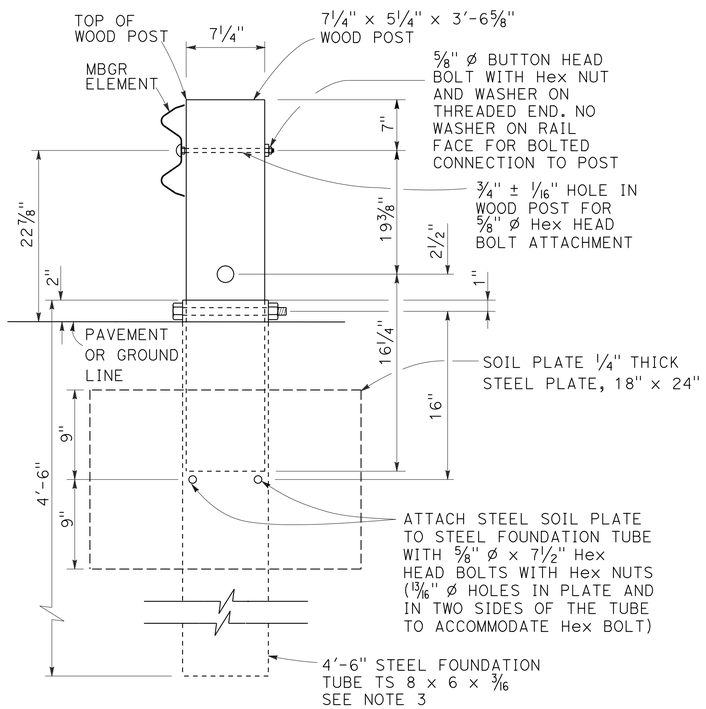

SECTION A-A

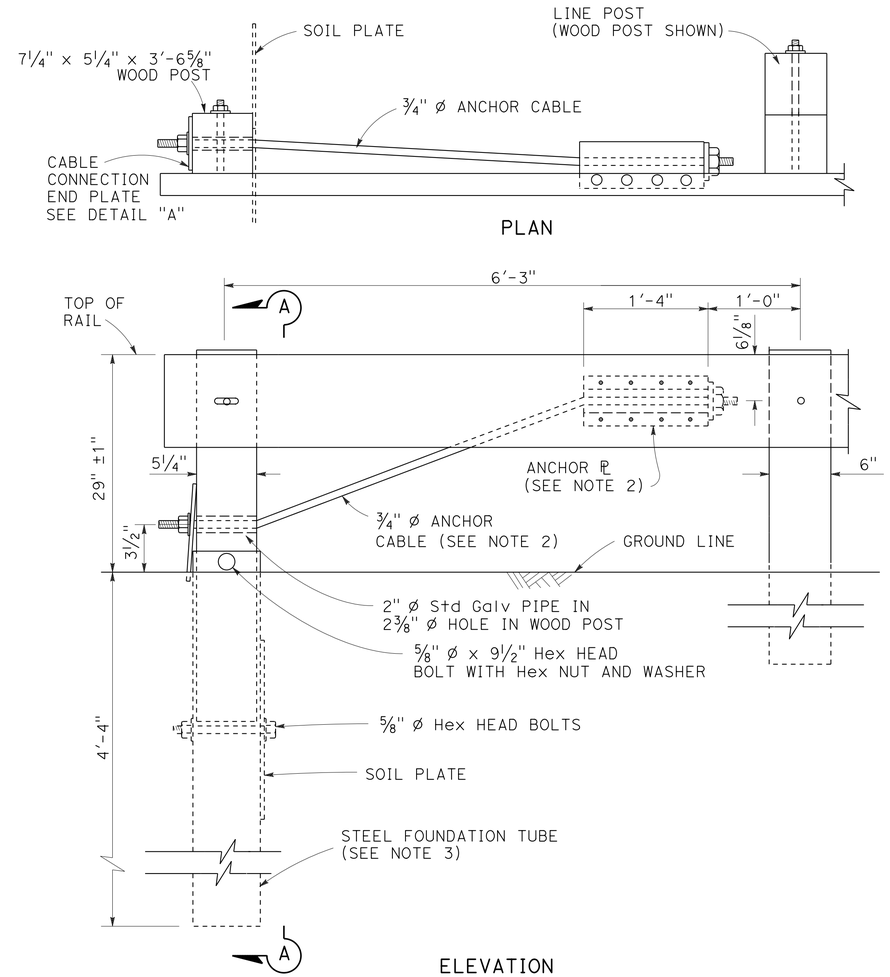

ELEVATION

END ANCHOR ASSEMBLY (TYPE SFT)

CONSTRUCTION DETAILS
METAL BEAM GUARD RAILING
RAIL TENSIONING ASSEMBLY
END ANCHOR ASSEMBLY

NO SCALE

C-12

REVISED BY	DATE REVISED
L.W.L.	3/20/15

CALCULATED-DESIGNED BY: WILL LESLIE
CHECKED BY: BYRON STANLEY
FUNCTIONAL SUPERVISOR: STEVE TOPAL

STATE OF CALIFORNIA - DEPARTMENT OF TRANSPORTATION
Caltrans
DESIGN

P:\proj\02\4E640_plans\pse\24e640ga012.dgn

LAST REVISION
DATE PLOTTED => 24-NOV-2015
TIME PLOTTED => 09:24

Dist	COUNTY	ROUTE	POST MILES TOTAL PROJECT	SHEET No.	TOTAL SHEETS
02	Plu	147	8.9/9.3	19	94

REGISTERED CIVIL ENGINEER 11-23-15 DATE

11-30-15
PLANS APPROVAL DATE

REGISTERED PROFESSIONAL ENGINEER BYRON STANLEY No. C60161 Exp. 06-30-16 CIVIL STATE OF CALIFORNIA

THE STATE OF CALIFORNIA OR ITS OFFICERS OR AGENTS SHALL NOT BE RESPONSIBLE FOR THE ACCURACY OR COMPLETENESS OF SCANNED COPIES OF THIS PLAN SHEET.

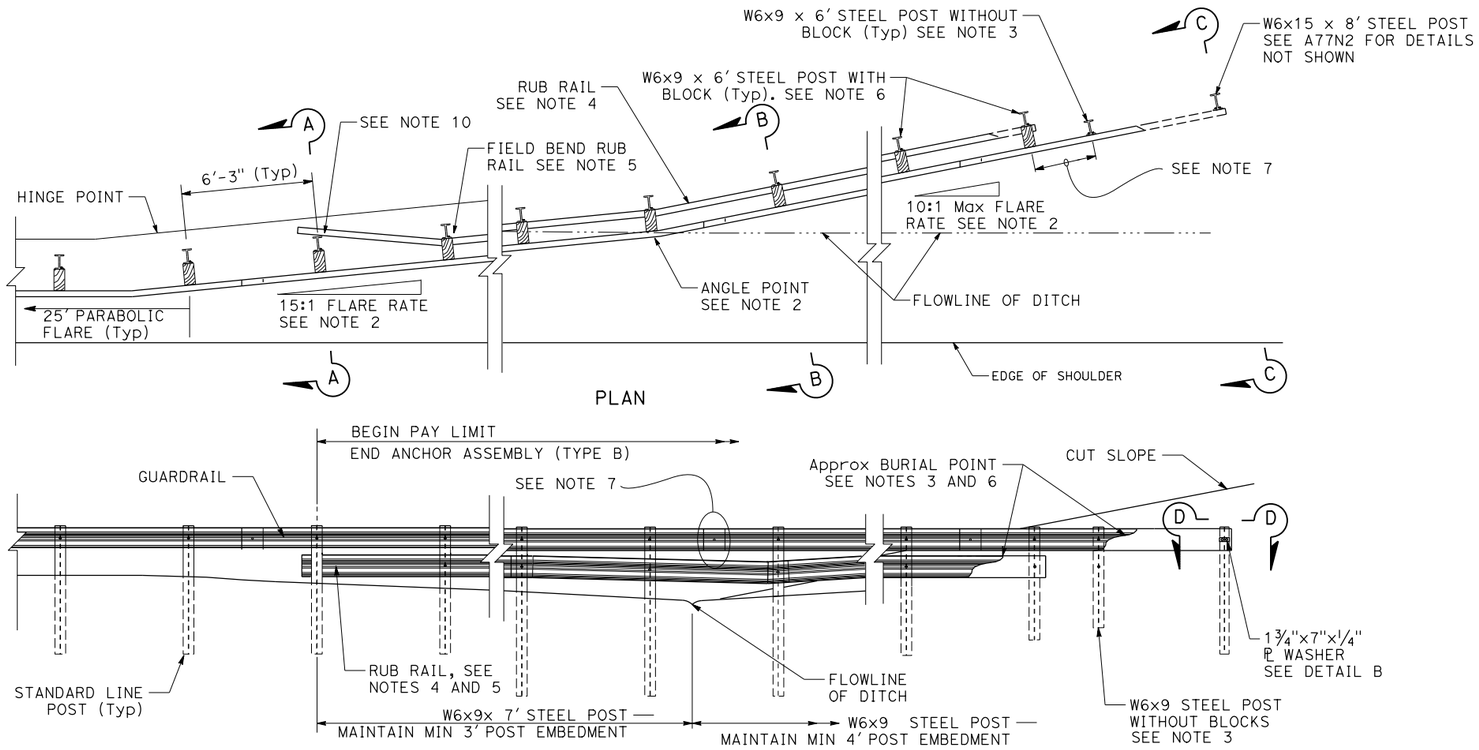

NOTES:

1. ELEVATION OF THE GUARDRAIL SHOULD FOLLOW THE PROFILE GRADE OF THE SHOULDER AND BE NO LOWER THAN 10% OF THE OFFSET FROM THE SHOULDER TO THE RAIL. SEE SECTION B-B AND SECTION C-C.
2. MAXIMUM FLARE RATE OF GUARDRAIL FROM THE SHOULDER TO THE FLOWLINE IS 15:1. FLARE RATE CAN BE INCREASED UP TO 10:1 AFTER CROSSING THE DITCH FLOWLINE.
3. NO BLOCKS ON POSTS WHERE BLOCKS ARE IN CONTACT WITH SOIL.
4. USE STANDARD GUARDRAIL ELEMENTS WITH NO BLOCKS FOR RUB RAIL.
5. BEGIN RUB RAIL WHEN THE HEIGHT OF THE GUARDRAIL IS MORE THAN 32" ABOVE THE GROUND DIRECTLY BELOW THE RAIL. HOLES CUT THOUGH FLANGE OF STEEL POST SHALL BE ¾"Ø AND ON THE TRAILING SIDE OF POST.
6. CONTINUE RUB RAIL UNTIL TOP OF RUB RAIL BURIED IN THE BACKSLOPE.
7. POST SPACING AND ELEMENT SPLICES SHOWN FOR MGS. MAINTAIN 6'-3" SPACING AND SPLICE ELEMENTS AT POSTS FOR MBGR.
8. THE END ANCHOR ASSEMBLY (TYPE B) SHOULD BE INSTALLED IN A NON-TRAVERSABLE SLOPE.
9. ANCHOR POST MAY BE MOVED 1 POST FROM END IF AUTHORIZED.
10. ONE WAY ROADWAYS AT TRAILING END, RUB RAIL MAY REMAIN ON TRAFFIC SIDE OF POST.
11. 6" MIN AT FLOW LINE
12. ROCK ANCHOR OPTION MAY BE AVAILABLE IF AUTHORIZED.
13. EXISTING UTILITY FACILITIES ARE NOT SHOWN ON THESE PLANS.

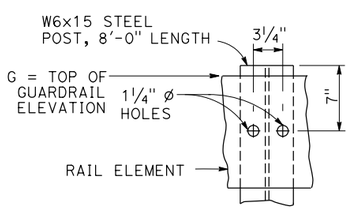

DETAIL A

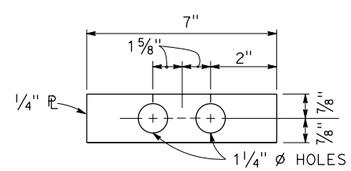

DETAIL B

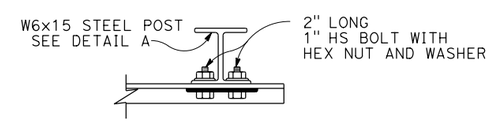

ANCHOR POST DETAIL SECTION D-D

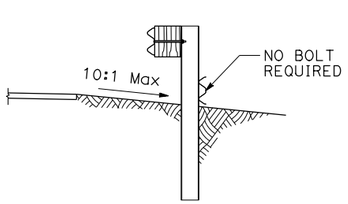

SECTION A-A

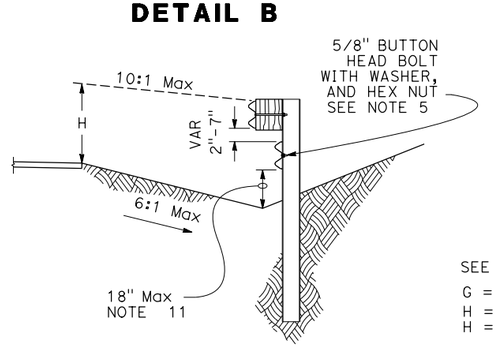

SECTION B-B

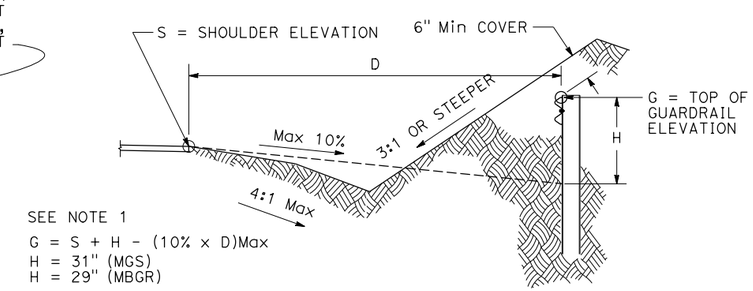

SECTION C-C

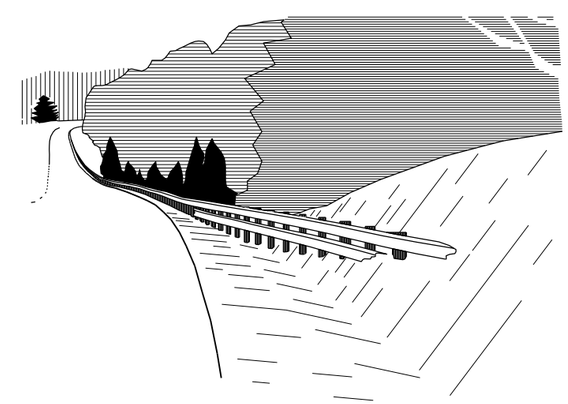

PERSPECTIVE

CONSTRUCTION DETAILS END ANCHOR ASSEMBLY (TYPE B)

NO SCALE

C-13

L.W.L.	3/20/15	REVISED BY	DATE REVISED
WILL LESLIE	BYRON STANLEY	CALCULATED-DESIGNED BY	CHECKED BY
FUNCTIONAL SUPERVISOR	STEVE TOPAL		

STATE OF CALIFORNIA - DEPARTMENT OF TRANSPORTATION
Caltrans® DESIGN

P:\proj11\02\4E640_plans\pse\24e640ga013.dgn

LAST REVISION DATE PLOTTED => 24-NOV-2015 TIME PLOTTED => 11:11

Dist	COUNTY	ROUTE	POST MILES TOTAL PROJECT	SHEET No.	TOTAL SHEETS
02	Plu	147	8.9/9.3	20	94

REGISTERED CIVIL ENGINEER 11-23-15 DATE

11-30-15
PLANS APPROVAL DATE

REGISTERED PROFESSIONAL ENGINEER BYRON STANLEY No. C60161 Exp. 06-30-16 CIVIL STATE OF CALIFORNIA

THE STATE OF CALIFORNIA OR ITS OFFICERS OR AGENTS SHALL NOT BE RESPONSIBLE FOR THE ACCURACY OR COMPLETENESS OF SCANNED COPIES OF THIS PLAN SHEET.

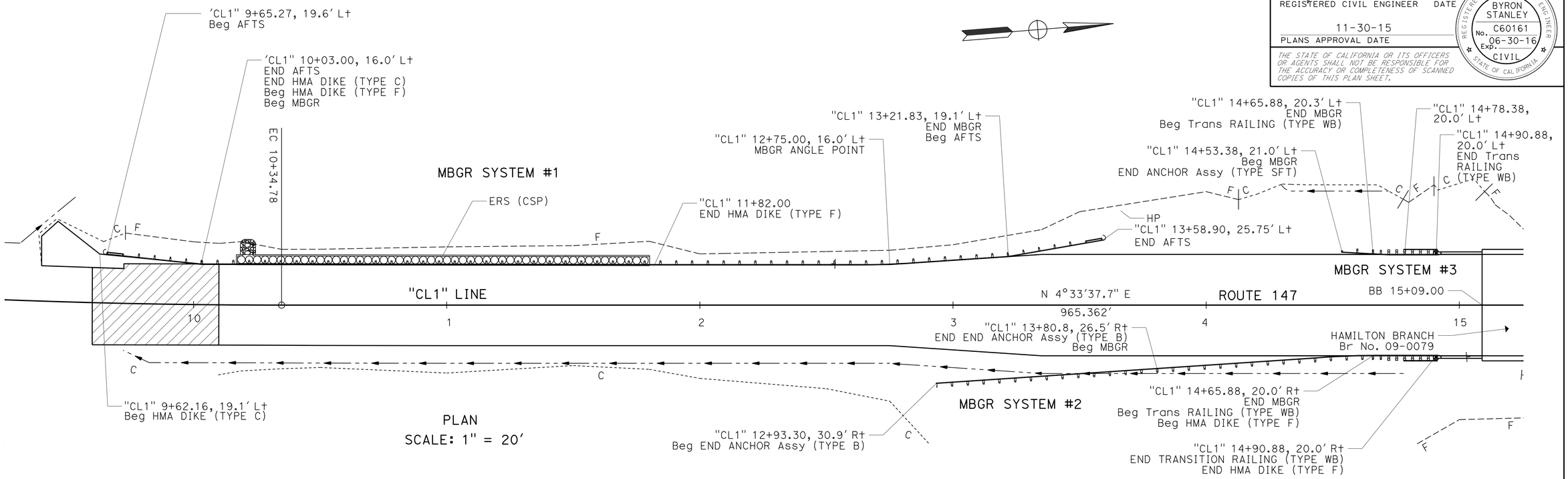

PLAN
SCALE: 1" = 20'

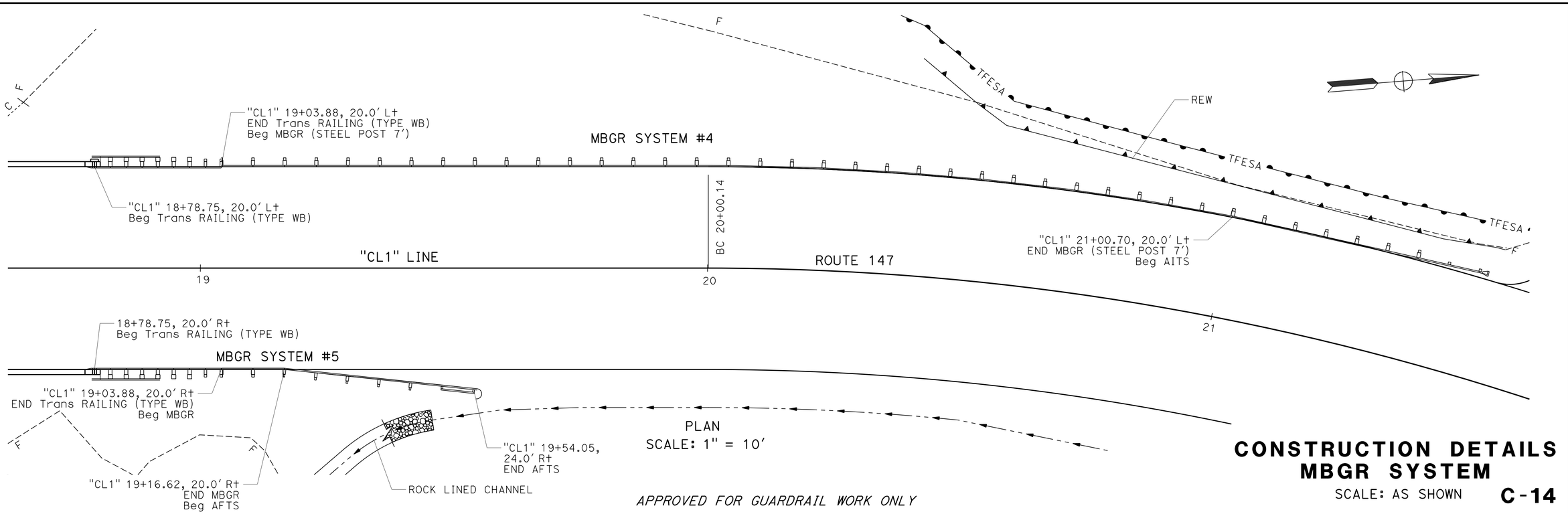

PLAN
SCALE: 1" = 10'

APPROVED FOR GUARDRAIL WORK ONLY

CONSTRUCTION DETAILS
MBGR SYSTEM

SCALE: AS SHOWN **C-14**

REVISED BY	DATE REVISED
L.W.L.	3/20/15

CALCULATED-DESIGNED BY: WILL LESLIE
CHECKED BY: BYRON STANLEY
FUNCTIONAL SUPERVISOR: STEVE TOPAL

STATE OF CALIFORNIA - DEPARTMENT OF TRANSPORTATION
Caltrans®
DESIGN

P:\proj\02\4E640_plans\pse\24e640ga014.dgn

LAST REVISION
DATE PLOTTED => 24-NOV-2015
TIME PLOTTED => 09:24

Dist	COUNTY	ROUTE	POST MILES TOTAL PROJECT	SHEET No.	TOTAL SHEETS
02	Plu	147	8.9/9.3	21	94

REGISTERED CIVIL ENGINEER 11-23-15 DATE

11-30-15
PLANS APPROVAL DATE

REGISTERED PROFESSIONAL ENGINEER BYRON STANLEY No. C60161 Exp. 06-30-16 CIVIL STATE OF CALIFORNIA

THE STATE OF CALIFORNIA OR ITS OFFICERS OR AGENTS SHALL NOT BE RESPONSIBLE FOR THE ACCURACY OR COMPLETENESS OF SCANNED COPIES OF THIS PLAN SHEET.

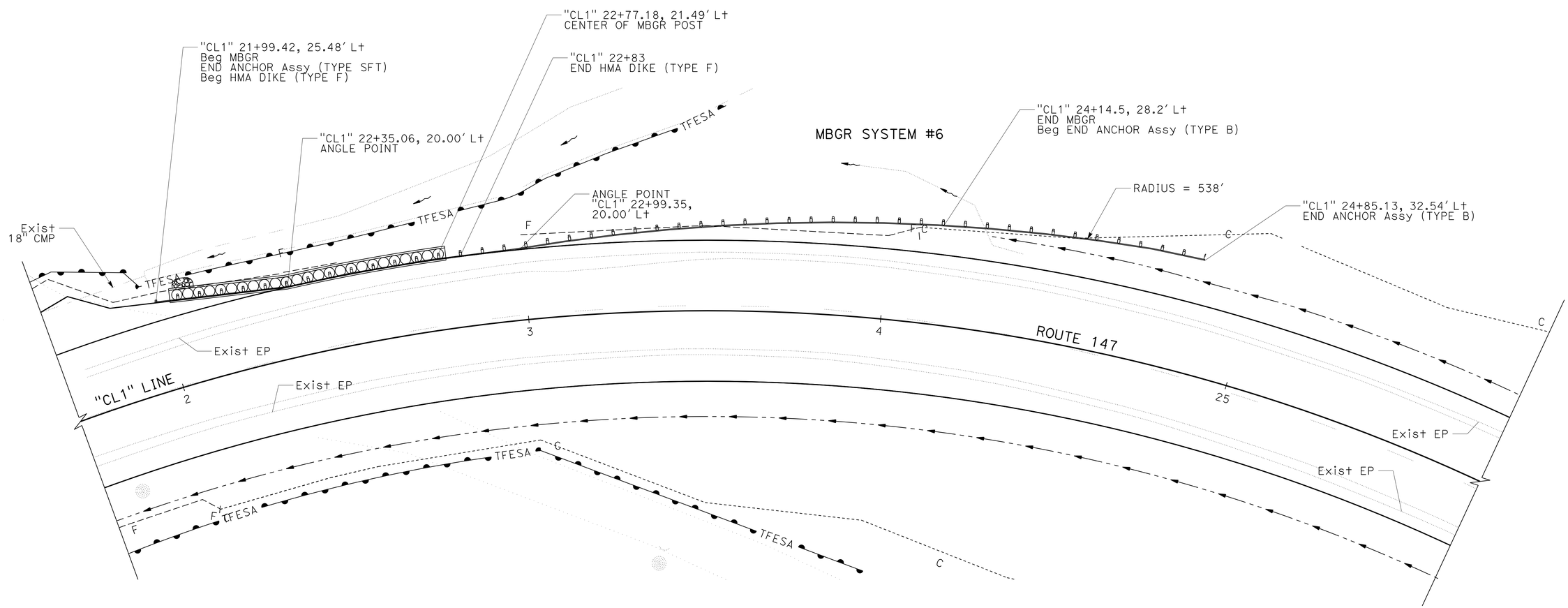

APPROVED FOR GUARDRAIL WORK ONLY

CONSTRUCTION DETAILS
MBGR SYSTEM

NO SCALE

C-15

REVISED BY	L.W.L.
DATE REVISED	3/20/15
CALCULATED-DESIGNED BY	WILL LESLIE
CHECKED BY	BYRON STANLEY
FUNCTIONAL SUPERVISOR	STEVE TOPAL

STATE OF CALIFORNIA - DEPARTMENT OF TRANSPORTATION
Caltrans
DESIGN

P:\proj1\02\4E640_plans\pse\24e640ga015.dgn

LAST REVISION DATE PLOTTED => 24-NOV-2015
TIME PLOTTED => 09:24

Dist	COUNTY	ROUTE	POST MILES TOTAL PROJECT	SHEET No.	TOTAL SHEETS
02	Plu	147	8.9/9.3	22	94

REGISTERED CIVIL ENGINEER 11-23-15 DATE

11-30-15
PLANS APPROVAL DATE

REGISTERED PROFESSIONAL ENGINEER BYRON STANLEY No. C60161 Exp. 06-30-16 CIVIL STATE OF CALIFORNIA

THE STATE OF CALIFORNIA OR ITS OFFICERS OR AGENTS SHALL NOT BE RESPONSIBLE FOR THE ACCURACY OR COMPLETENESS OF SCANNED COPIES OF THIS PLAN SHEET.

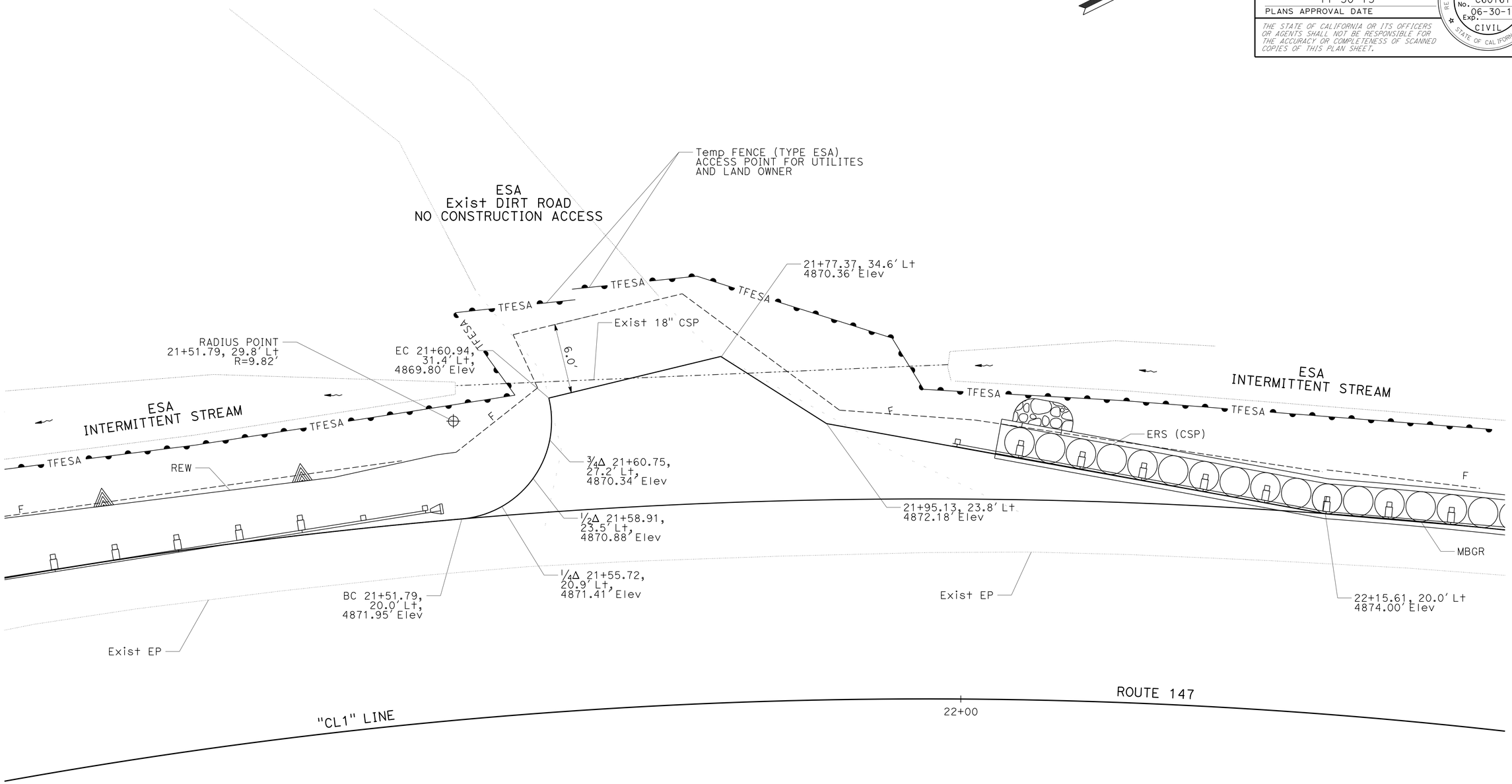

ROAD CONNECTION PAVING

CONSTRUCTION DETAILS

SCALE: 1" = 5'

C-16

CALCULATED-DESIGNED BY	WILL LESLIE	REVISED BY	L.W.L.
CHECKED BY	BYRON STANLEY	DATE REVISED	3/20/15

FUNCTIONAL SUPERVISOR: STEVE TOPAL

STATE OF CALIFORNIA - DEPARTMENT OF TRANSPORTATION
Caltrans
DESIGN

P:\proj1\02\4E640_plans\pse\24e640ga016.dgn

LAST REVISION DATE PLOTTED => 24-NOV-2015
TIME PLOTTED => 09:24

Dist	COUNTY	ROUTE	POST MILES TOTAL PROJECT	SHEET No.	TOTAL SHEETS
02	Plu	147	8.9/9.3	23	94

REGISTERED CIVIL ENGINEER 11-23-15 DATE

11-30-15
PLANS APPROVAL DATE

REGISTERED PROFESSIONAL ENGINEER BYRON STANLEY No. C60161 Exp. 06-30-16 CIVIL STATE OF CALIFORNIA

THE STATE OF CALIFORNIA OR ITS OFFICERS OR AGENTS SHALL NOT BE RESPONSIBLE FOR THE ACCURACY OR COMPLETENESS OF SCANNED COPIES OF THIS PLAN SHEET.

NOTES:

1. FOR DETAILS NOT SHOWN, SEE STRUCTURES PLANS.
2. (N) NOT A PAY ITEM, FOR INFORMATION ONLY.

ROCK SLOPE PROTECTION

LOCATION	(N) LENGTH	(N) WIDTH	(N) DEPTH	ROCK SLOPE PROTECTION (1/2 T, METHOD B)	ROCK SLOPE PROTECTION FABRIC (CLASS 8)
	FT	FT	FT	TON	SQYD
PIER 2	44.5	27.2	3.5	392.3	266.4
PIER 3	44.5	27.2	3.5	363.4	266.4
TOTAL				755.7*	532.8*

*INCLUDED ON QUANTITIES SHEET

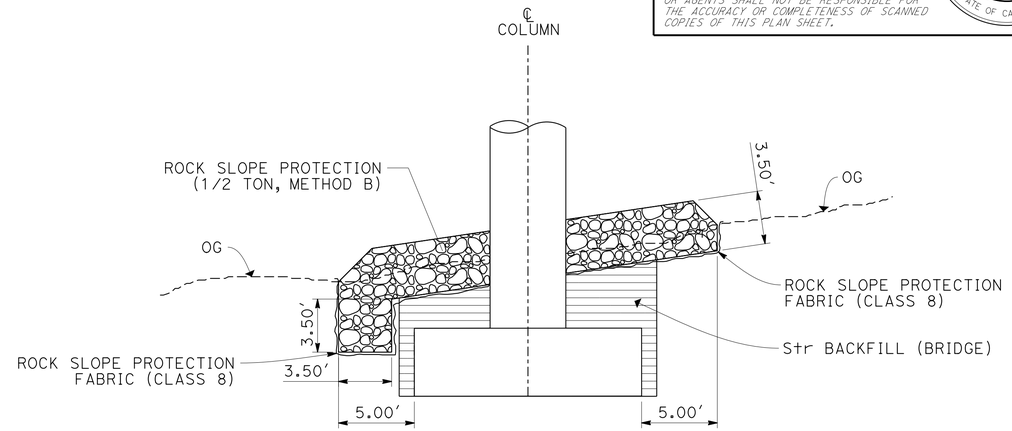

SECTION A-A
PIER 3

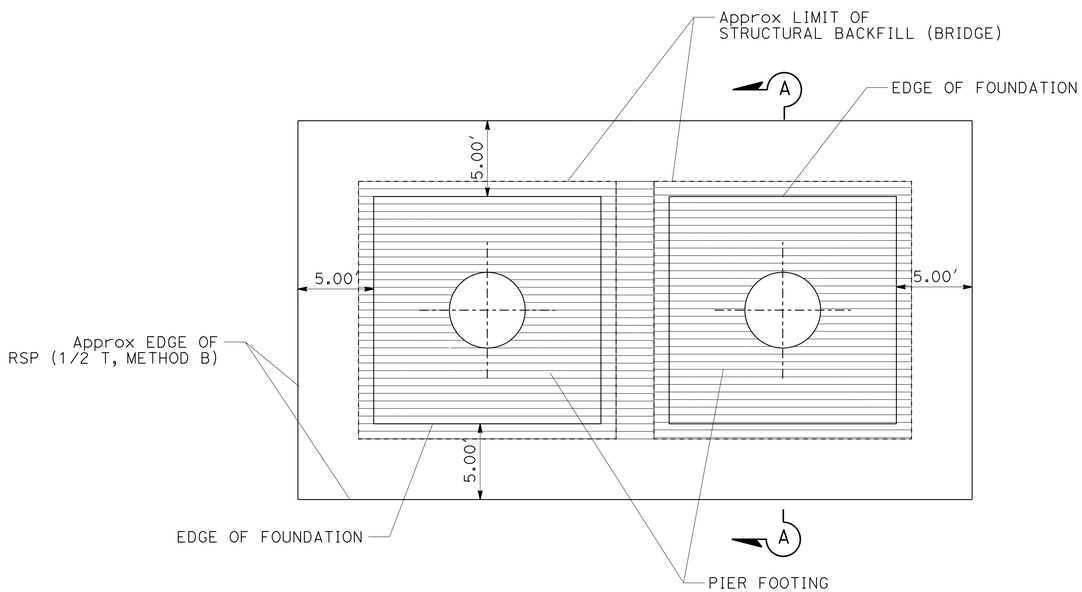

PLAN
PIER (TYPICAL)

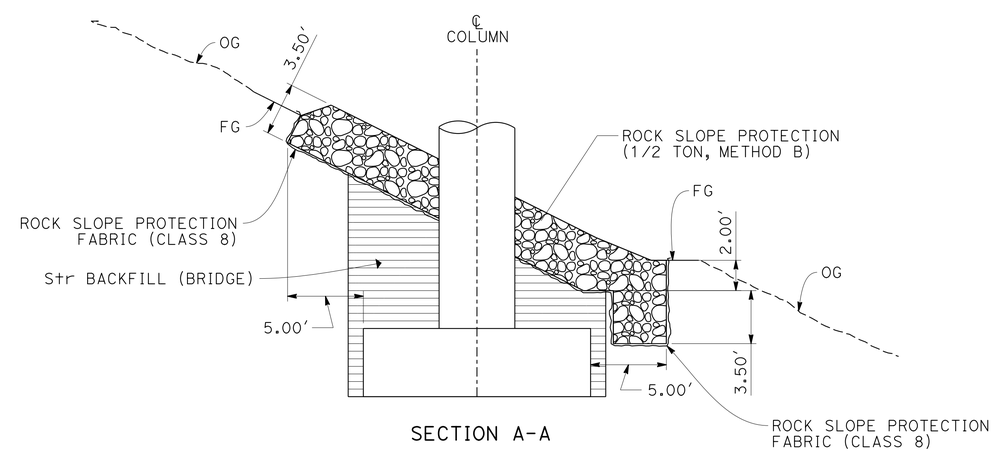

SECTION A-A
PIER 2

CONSTRUCTION DETAILS
ROCK SLOPE PROTECTION

NO SCALE **C-17**

REVISED BY	DATE REVISED
L.W.L.	3/20/15

WILL LESLIE — BYRON STANLEY — CALCULATED-DESIGNED BY — CHECKED BY

FUNCTIONAL SUPERVISOR: STEVE TOPAL

STATE OF CALIFORNIA - DEPARTMENT OF TRANSPORTATION — Caltrans — DESIGN

P:\proj1\02\4E640_plans\pse\24e640ga017.dgn

LAST REVISION — DATE PLOTTED => 24-NOV-2015 — TIME PLOTTED => 09:24

Dist	COUNTY	ROUTE	POST MILES TOTAL PROJECT	SHEET No.	TOTAL SHEETS
02	Plu	147	8.9/9.3	24	94

REGISTERED CIVIL ENGINEER 11-23-15 DATE

11-30-15
PLANS APPROVAL DATE

REGISTERED PROFESSIONAL ENGINEER BYRON STANLEY No. C60161 Exp. 06-30-16 CIVIL STATE OF CALIFORNIA

THE STATE OF CALIFORNIA OR ITS OFFICERS OR AGENTS SHALL NOT BE RESPONSIBLE FOR THE ACCURACY OR COMPLETENESS OF SCANNED COPIES OF THIS PLAN SHEET.

NOTES:

1. GRIND EXISTING SURFACES TO ACCOMODATE A MINIMUM TAPER THICKNESS OF 0.10′ WHEN EITHER:
   A. HMA MATERIAL SUCH AS RUBBERIZED, POLYMER MODIFIED OR OPEN GRADED IS UNSUITABLE FOR RAKING TO A MAXIMUM 0.02′ THICKNESS AT THE CONFORM.
   B. TEMPORARY TAPER WILL BE IN PLACE FOR MORE THAN 14 DAYS.
2. PERMANENT SURFACE MAY BE EXISTING OR NEW PAVEMENT.
3. ROADWAY SURFACE IS THE TOP OF EXISTING SURFACE OR THE TOP OF THE PLANED SURFACE.
4. FOR TEMPORARY TAPERS ON BRIDGE DECKS AND APPROACH SLABS, CONSTRUCT TEMPORARY TAPERS WITH POLYESTER CONCRETE.
5. IF AUTHORIZED, YOU MAY USE ALTERNATIVE MATERIALS OR METHODS TO PRODUCE THE REQUIRED TAPER.

LEGEND:

HMA MATERIAL (TEMPORARY TAPER) (SEE NOTE 4)

IF NECESSARY, COLD PLANE ASPHALT CONCRETE PAVEMENT AND PLACE HMA MATERIAL (SEE NOTE 1)

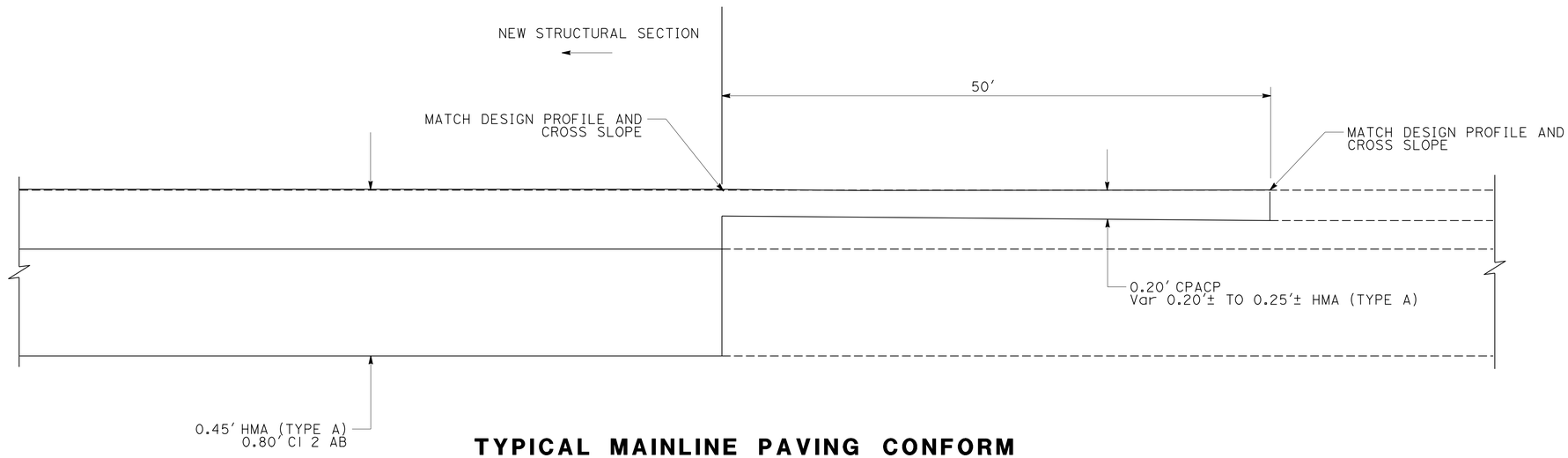

TYPICAL MAINLINE PAVING CONFORM

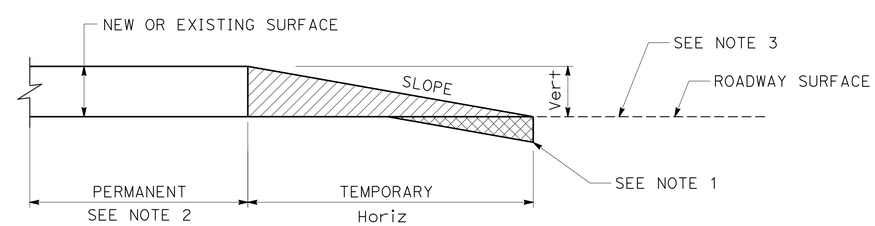

Vert	SLOPE RATIO Horiz/Vert
0-0.10′	70:1
GREATER THAN 0.10′	160:1

TYPICAL PAVING CONFORM FOR TEMPORARY CONSTRUCTION TAPERS

CONSTRUCTION DETAILS

NO SCALE

C-18

REVISED BY	DATE REVISED
L.W.L.	3/20/15

CALCULATED-DESIGNED BY: WILL LESLIE
CHECKED BY: BYRON STANLEY
FUNCTIONAL SUPERVISOR: STEVE TOPAL

STATE OF CALIFORNIA - DEPARTMENT OF TRANSPORTATION
Caltrans® DESIGN

P:\proj\02\4E640_plans\pse\24e640ga018.dgn

DATE PLOTTED => 24-NOV-2015
TIME PLOTTED => 09:24

Dist	COUNTY	ROUTE	POST MILES TOTAL PROJECT	SHEET No.	TOTAL SHEETS
02	Plu	147	8.9/9.3	25	94

REGISTERED CIVIL ENGINEER 11-23-15 DATE

11-30-15
PLANS APPROVAL DATE

REGISTERED PROFESSIONAL ENGINEER BYRON STANLEY No. C60161 Exp. 06-30-16 CIVIL STATE OF CALIFORNIA

THE STATE OF CALIFORNIA OR ITS OFFICERS OR AGENTS SHALL NOT BE RESPONSIBLE FOR THE ACCURACY OR COMPLETENESS OF SCANNED COPIES OF THIS PLAN SHEET.

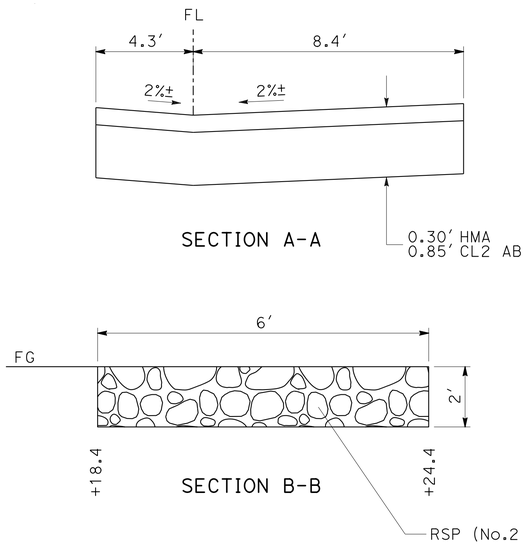

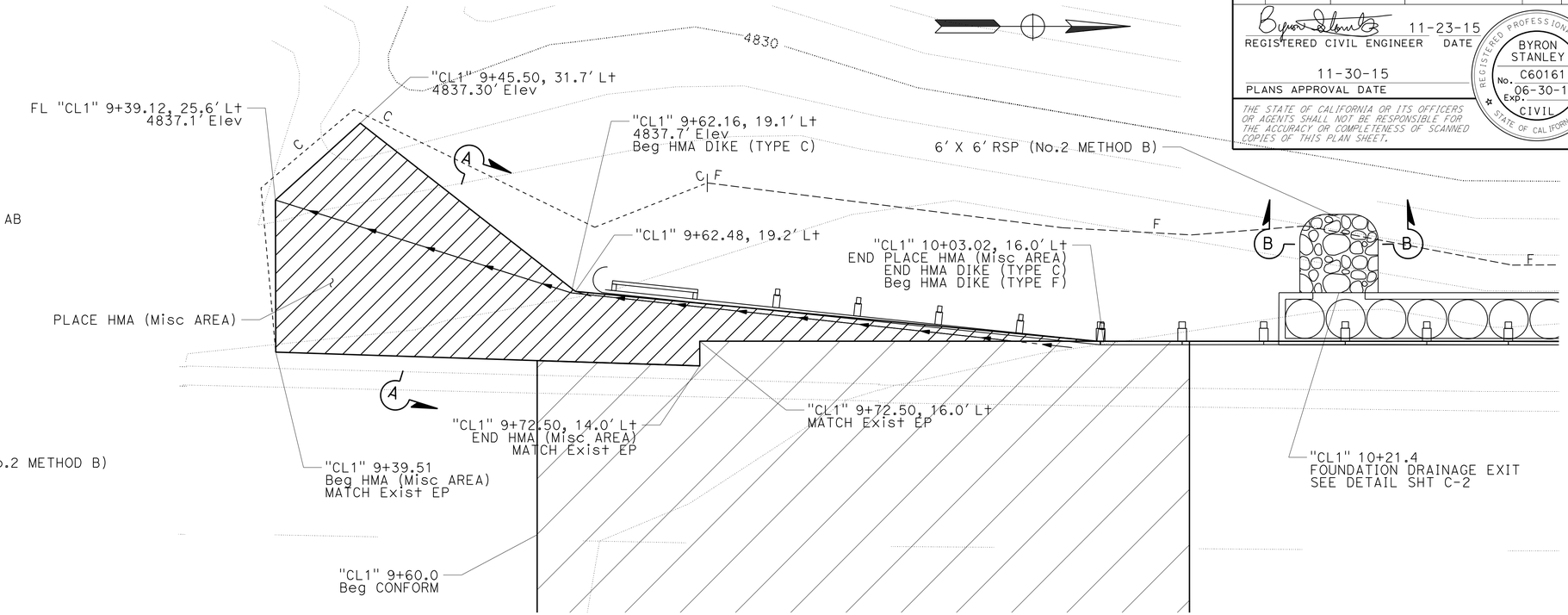

ROCK SLOPE PROTECTION (No. 2, METHOD B)

LOCATION	LENGTH	WIDTH	DEPTH	Vol *
Sta	FT	FT	FT	TON
10+21.4	6′	6′	2′	6.2

* INCLUDED ON QUANTITIES SHEET.

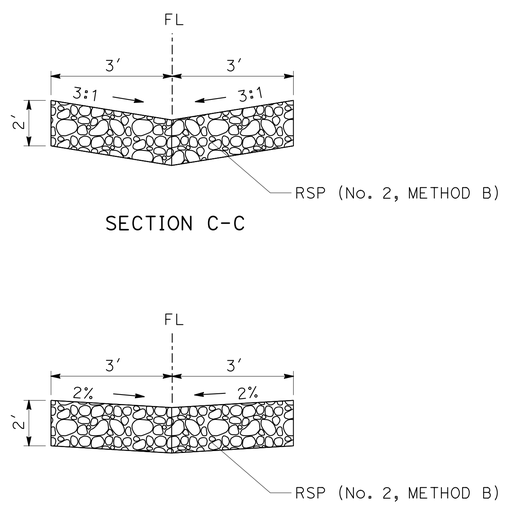

ROCK SLOPE PROTECTION (No. 2, METHOD B)

LENGTH	WIDTH	DEPTH	Vol *
FT	FT	FT	TON
35′	6′	2′	35.8

* INCLUDED ON QUANTITIES SHEET.

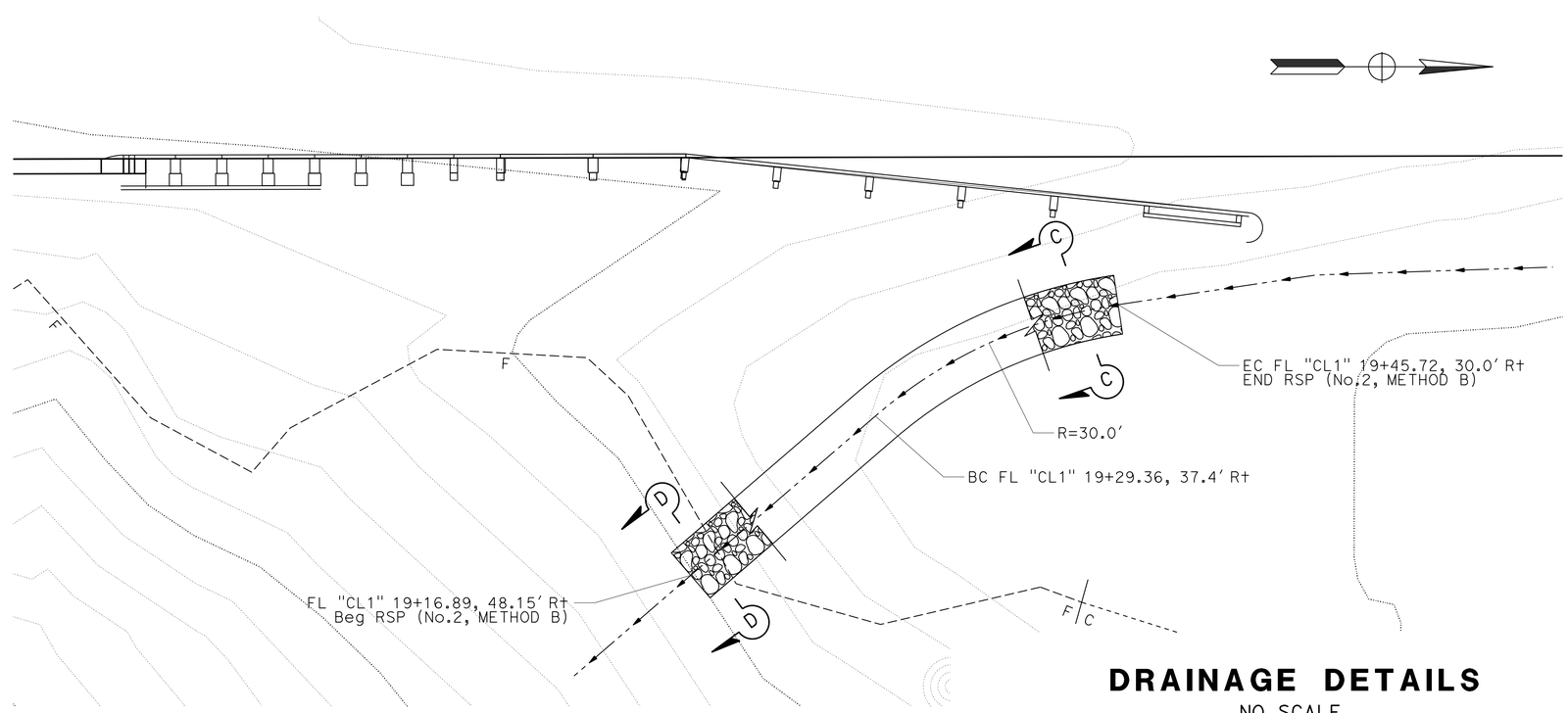

DRAINAGE DETAILS

NO SCALE

DD-1

APPROVED FOR DRAINAGE WORK ONLY

L.W.L. 3/20/15 — REVISED BY / DATE REVISED

WILL LESLIE — BYRON STANLEY — CALCULATED-DESIGNED BY / CHECKED BY

FUNCTIONAL SUPERVISOR: STEVE TOPAL

STATE OF CALIFORNIA - DEPARTMENT OF TRANSPORTATION — DESIGN — Caltrans

P:\proj1\02\4E640_plans\pse\24e640ic001.dgn

LAST REVISION — DATE PLOTTED => 24-NOV-2015 TIME PLOTTED => 09:24

Dist	COUNTY	ROUTE	POST MILES TOTAL PROJECT	SHEET No.	TOTAL SHEETS
02	Plu	147	8.9/9.3	26	94

REGISTERED CIVIL ENGINEER 11-23-15 DATE

11-30-15
PLANS APPROVAL DATE

REGISTERED PROFESSIONAL ENGINEER BYRON STANLEY C60161 No. 06-30-16 Exp. CIVIL STATE OF CALIFORNIA

THE STATE OF CALIFORNIA OR ITS OFFICERS OR AGENTS SHALL NOT BE RESPONSIBLE FOR THE ACCURACY OR COMPLETENESS OF SCANNED COPIES OF THIS PLAN SHEET.

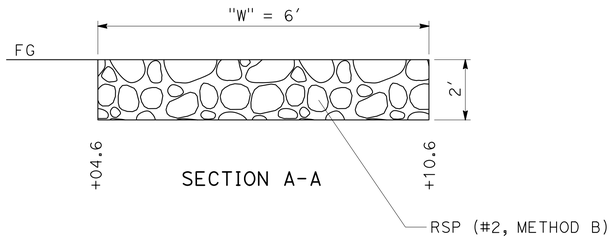

ROCK SLOPE PROTECTION (No. 2, METHOD B)

LOCATION	LENGTH	WIDTH	DEPTH	Vol *
Sta	FT	FT	FT	TON
22+07.6	2.6'	6'	2'	2.7

* INCLUDED ON QUANTITIES SHEET.

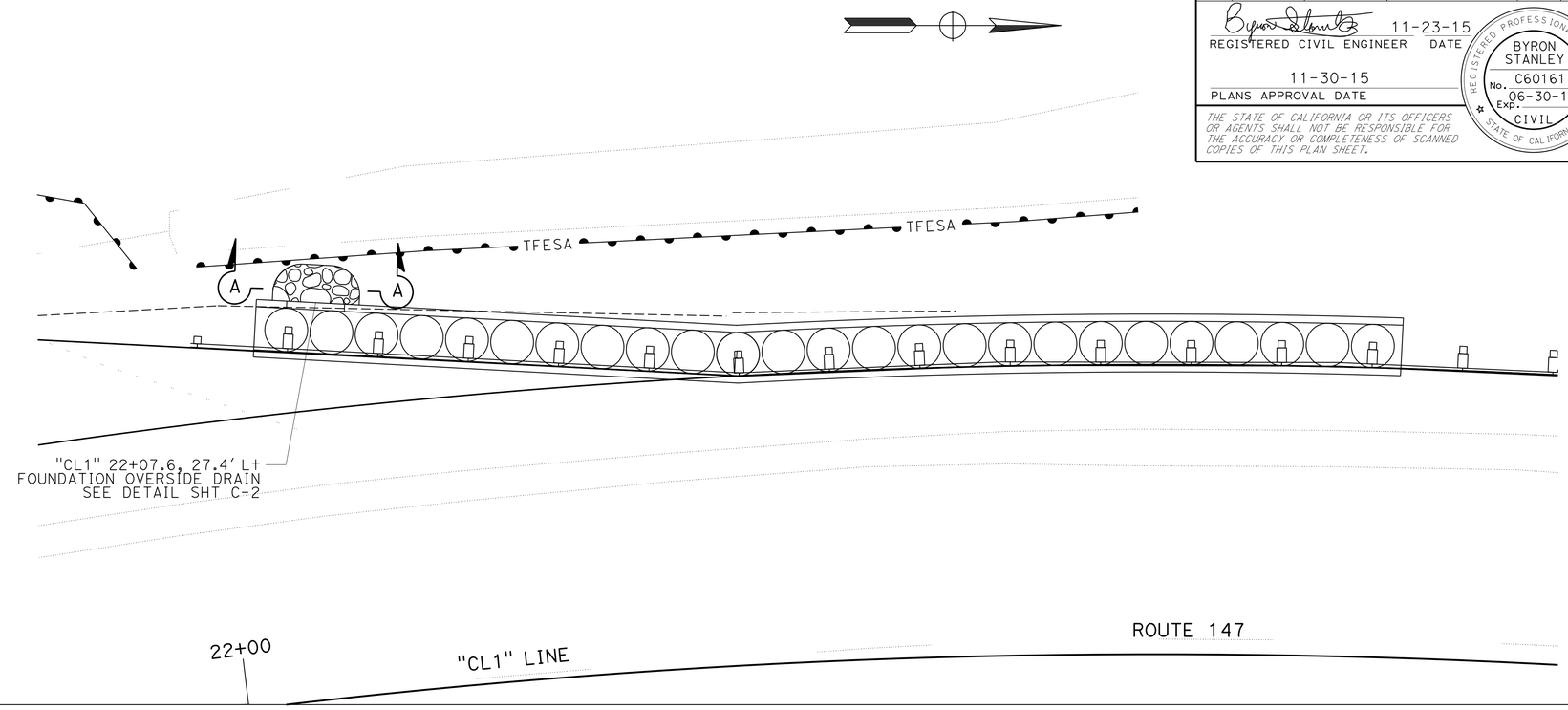

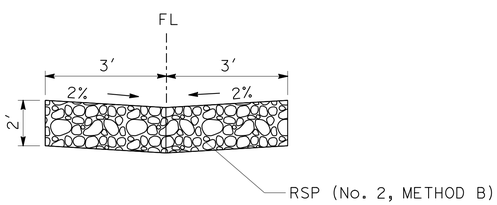

SECTION B-B

ROCK SLOPE PROTECTION (No. 2, METHOD B)

LENGTH	WIDTH	DEPTH	Vol *
FT	FT	FT	TON
23'	6'	2'	23.5

* INCLUDED ON QUANTITIES SHEET.

DRAINAGE DETAILS

NO SCALE

DD-2

APPROVED FOR DRAINAGE WORK ONLY

REVISED BY	L.W.L.
DATE REVISED	3/20/15
CALCULATED-DESIGNED BY	WILL LESLIE
CHECKED BY	BYRON STANLEY
FUNCTIONAL SUPERVISOR	STEVE TOPAL

STATE OF CALIFORNIA - DEPARTMENT OF TRANSPORTATION
Caltrans
DESIGN

P:\proj1\02\4E640_plans\pse\24e640ic002.dgn

LAST REVISION
DATE PLOTTED => 24-NOV-2015
TIME PLOTTED => 09:24

Dist	COUNTY	ROUTE	POST MILES TOTAL PROJECT	SHEET No.	TOTAL SHEETS
02	Plu	147	8.9/9.3	27	94

REGISTERED CIVIL ENGINEER 11-23-15 DATE

11-30-15
PLANS APPROVAL DATE

REGISTERED PROFESSIONAL ENGINEER BYRON STANLEY C60161 Exp. 06-30-16 CIVIL STATE OF CALIFORNIA

THE STATE OF CALIFORNIA OR ITS OFFICERS OR AGENTS SHALL NOT BE RESPONSIBLE FOR THE ACCURACY OR COMPLETENESS OF SCANNED COPIES OF THIS PLAN SHEET.

NOTES:

1. FOR ACCURATE RIGHT OF WAY DATA, CONTACT RIGHT OF WAY ENGINEERING AT THE DISTRICT OFFICE.

LEGEND

—---tv——————--(oh)—	Exist OH CAL-NEVA
——-e————————-(oh)—	Exist OH PG&E
—fo————————(oh)—	Exist OH FRONTIER COMMUNICATIONS
—---jt——————--(oh)—	Exist OH JOINT LINES
	NEW POLE WITH GUY WIRE
	Exist POLE WITH GUY WIRE
—---TV——————--(OH)—	NEW OH CAL-NEVA
——-E————————-E—	NEW OH PG&E
—FO————————(OH)—	NEW OH FRONTIER COMMUNICATIONS
—---JT——————--(OH)—	NEW OH JOINT LINES

ABBREVIATIONS:

CU	COPPER CONDUCTOR
AR	ALUMINUM REINFORCED CONDUCTOR

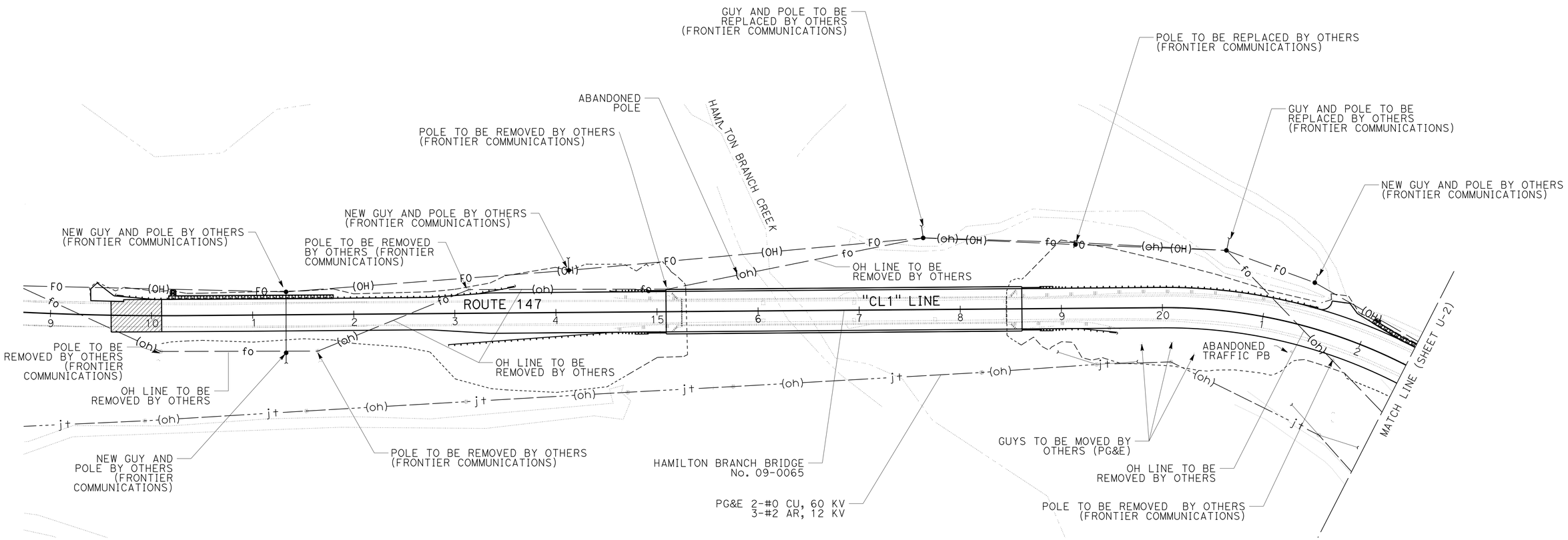

UTILITY PLAN

SCALE: 1" = 50'

U-1

APPROVED FOR UTILITY WORK ONLY

CALCULATED-DESIGNED BY	CHRIS LOAESUNE
CHECKED BY	BYRON STANLEY
REVISED BY	L.W.L.
DATE REVISED	3/20/15
FUNCTIONAL SUPERVISOR	STEVE TOPAL

STATE OF CALIFORNIA - DEPARTMENT OF TRANSPORTATION

DESIGN

Caltrans

P:\proj1\02\4E40_plans\pse\24e640ka001.dgn

LAST REVISION | DATE PLOTTED => 24-NOV-2015 | TIME PLOTTED => 09:24

Dist	COUNTY	ROUTE	POST MILES TOTAL PROJECT	SHEET No.	TOTAL SHEETS
02	Plu	147	8.9/9.3	28	94

REGISTERED CIVIL ENGINEER 11-23-15 DATE

11-30-15
PLANS APPROVAL DATE

REGISTERED PROFESSIONAL ENGINEER BYRON STANLEY C60161 Exp. 06-30-16 CIVIL STATE OF CALIFORNIA

THE STATE OF CALIFORNIA OR ITS OFFICERS OR AGENTS SHALL NOT BE RESPONSIBLE FOR THE ACCURACY OR COMPLETENESS OF SCANNED COPIES OF THIS PLAN SHEET.

NOTES:

1. FOR ACCURATE RIGHT OF WAY DATA, CONTACT RIGHT OF WAY ENGINEERING AT THE DISTRICT OFFICE.
2. ALL COMPLETED UTILITY CHANGES EXPECTED BY 12-31-15.
3. NEW POLE LEFT OF STA 25+05 INSTALLED AT DEPTH SO BANK CAN BE EXCAVATED TO GRADE.

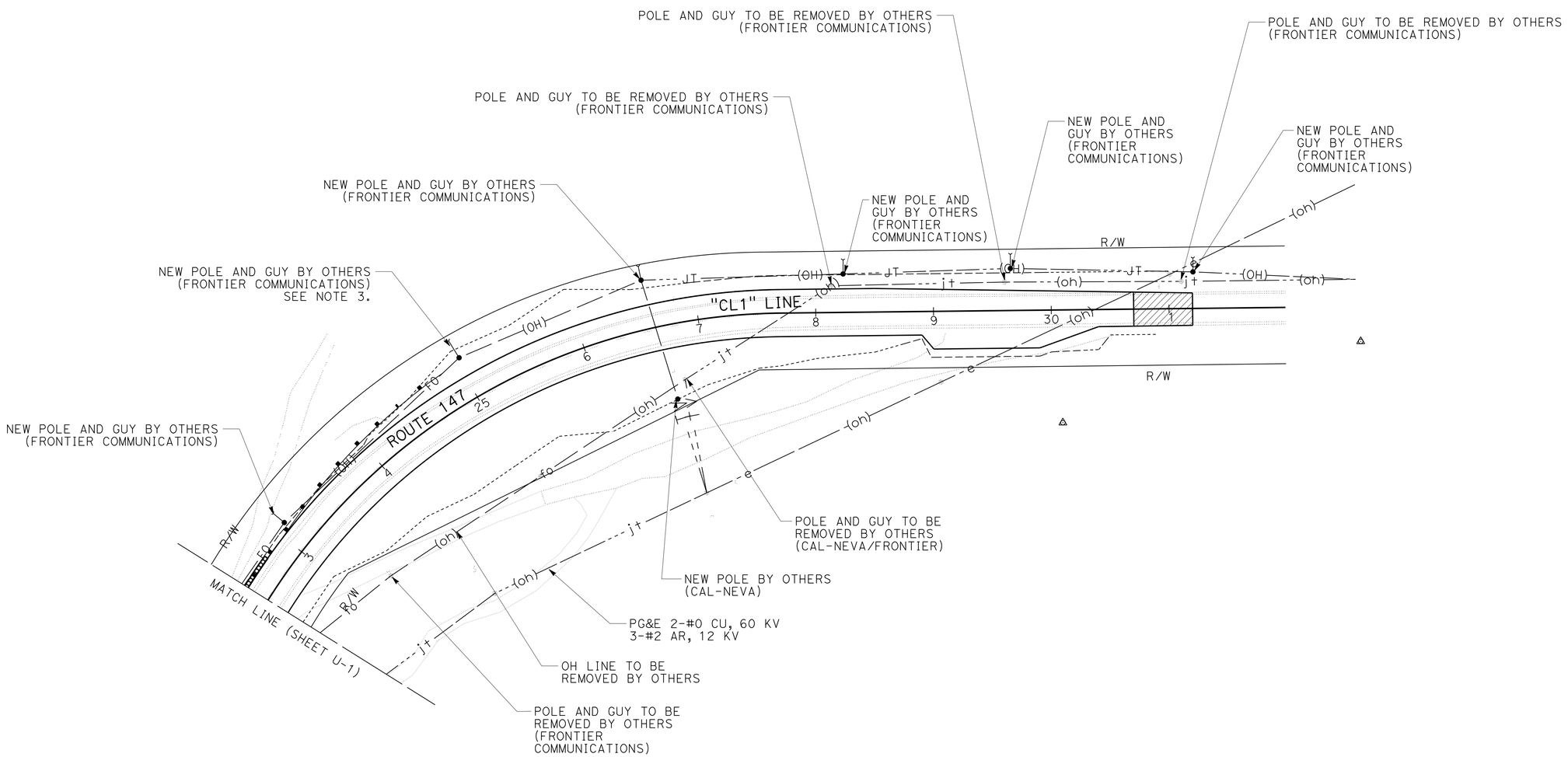

APPROVED FOR UTILITY WORK ONLY

UTILITY PLAN

SCALE: 1" = 50'

U-2

REVISED BY	L.W.L.
DATE REVISED	3/20/15
CHRONOLOGICAL LINE	
CALCULATED-DESIGNED BY	BYRON STANLEY
CHECKED BY	
FUNCTIONAL SUPERVISOR	STEVE TOPAL

STATE OF CALIFORNIA - DEPARTMENT OF TRANSPORTATION

Caltrans

DESIGN

P:\proj1\02\4E640_plans\pse\24e640ka002.dgn

DATE PLOTTED => 24-NOV-2015
TIME PLOTTED => 09:24

LAST REVISION

Dist	COUNTY	ROUTE	POST MILES TOTAL PROJECT	SHEET No.	TOTAL SHEETS
02	Plu	147	8.9/9.3	29	94

REGISTERED CIVIL ENGINEER 11-23-15 DATE

11-30-15
PLANS APPROVAL DATE

REGISTERED PROFESSIONAL ENGINEER BYRON STANLEY No. C60161 Exp. 06-30-16 CIVIL STATE OF CALIFORNIA

THE STATE OF CALIFORNIA OR ITS OFFICERS OR AGENTS SHALL NOT BE RESPONSIBLE FOR THE ACCURACY OR COMPLETENESS OF SCANNED COPIES OF THIS PLAN SHEET.

NOTES:

1. EXACT SIGN LOCATIONS TO BE DETERMINED BY THE ENGINEER.
2. SIGNS SHOWN WITH (CA) INDICATE CALIFORNIA SIGN CODES, OTHERWISE FEDERAL SIGN CODES ARE SHOWN.
3. ALL SIGNS SHALL BE BLACK ON ORANGE.
4. ADDITIONAL CONSTRUCTION AREA SIGNS ARE SHOWN ON SHEETS SC-XX.

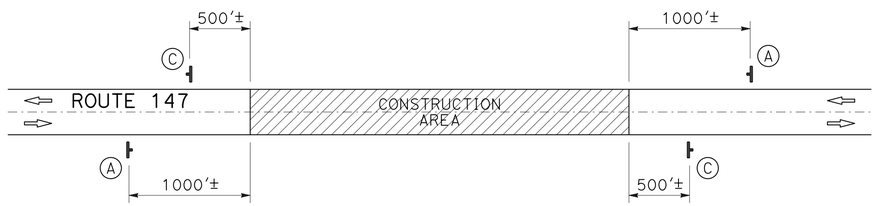

CONSTRUCTION AREA SIGNS

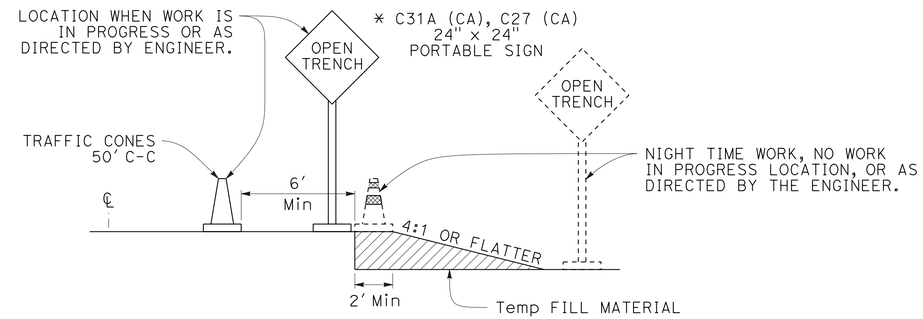

OPEN TRENCH SIGNING AND MARKING

* PLACE AT 450' INTERVALS THROUGH THE OPEN TRENCH AREA. ALTERNATE C27 (CA) (OPEN TRENCH) AND C31A (CA) (NO SHOULDER) SIGNS.

CONSTRUCTION AREA SIGNS (STATIONARY MOUNTED)

SIGN	CODE	PANEL SIZE	SIGN MESSAGE	No. AND SIZE OF POSTS	No. OF SIGNS
A	W20-1	48" X 48"	ROAD WORK AHEAD	2 - 4" X 6"	2
	C23B (CA)	36" X 18"	BRIDGE REPLACEMENT		
C	G20-2	36" X 18"	END ROAD WORK	1 - 4" X 4"	2

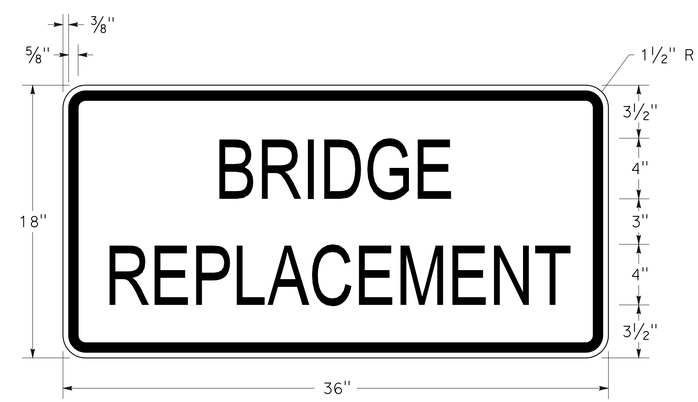

C23B (CA) SIGN PANEL DETAIL

CONSTRUCTION AREA SIGNS

NO SCALE

CS-1

STATE OF CALIFORNIA - DEPARTMENT OF TRANSPORTATION
Caltrans DESIGN

FUNCTIONAL SUPERVISOR: STEVE TOPAL
CALCULATED-DESIGNED BY: WILL LESLIE
CHECKED BY: BYRON STANLEY
REVISED BY: L.W.L.
DATE REVISED: 3/20/15

P:\proj1\02\4E640_plans\pse\24e6401a001.dgn

LAST REVISION 07-23-15 | DATE PLOTTED => 24-NOV-2015 | TIME PLOTTED => 09:24

BORDER LAST REVISED 7/2/2010 | USERNAME => s115152 | DGN FILE => 24e6401a001.dgn | RELATIVE BORDER SCALE IS IN INCHES 0 1 2 3 | UNIT 0319 | PROJECT NUMBER & PHASE 02 1200 0011 1

Dist	COUNTY	ROUTE	POST MILES TOTAL PROJECT	SHEET No.	TOTAL SHEETS
02	Plu	147	8.9/9.3	30	94

REGISTERED CIVIL ENGINEER 11-23-15 DATE

11-30-15
PLANS APPROVAL DATE

REGISTERED PROFESSIONAL ENGINEER BYRON STANLEY No. C60161 Exp. 06-30-16 CIVIL STATE OF CALIFORNIA

THE STATE OF CALIFORNIA OR ITS OFFICERS OR AGENTS SHALL NOT BE RESPONSIBLE FOR THE ACCURACY OR COMPLETENESS OF SCANNED COPIES OF THIS PLAN SHEET.

LEGEND:

- PORTABLE CHANGEABLE MESSAGE SIGNS (PCMS)
- ROAD CLOSURE AREA
- SIGN LOCATION
- DETOUR ROUTE
- DETOUR ROUTE

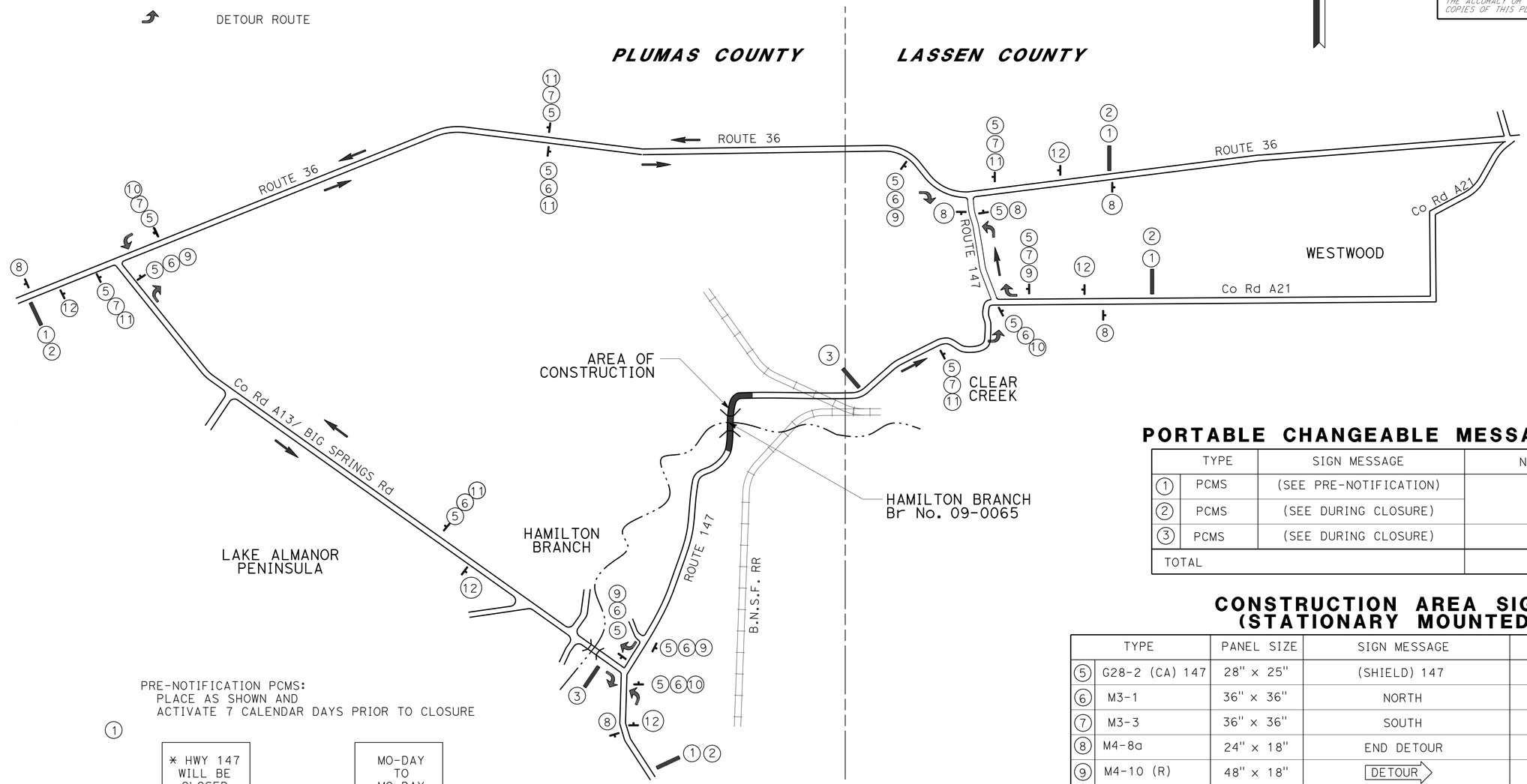

PORTABLE CHANGEABLE MESSAGE SIGNS

	TYPE	SIGN MESSAGE	No. OF SIGNS
1	PCMS	(SEE PRE-NOTIFICATION)	4
2	PCMS	(SEE DURING CLOSURE)	
3	PCMS	(SEE DURING CLOSURE)	2
TOTAL			6

CONSTRUCTION AREA SIGNS (STATIONARY MOUNTED)

	TYPE	PANEL SIZE	SIGN MESSAGE	No. OF SIGNS (EA)
5	G28-2 (CA) 147	28" x 25"	(SHIELD) 147	15
6	M3-1	36" x 36"	NORTH	7
7	M3-3	36" x 36"	SOUTH	8
8	M4-8a	24" x 18"	END DETOUR	5
9	M4-10 (R)	48" x 18"	DETOUR →	5
10	M4-10 (L)	48" x 18"	← DETOUR	4
11	SC3 (CA)	36" x 12"	↑ DETOUR	6
12	W20-2	36" x 36"	DETOUR AHEAD	5

PRE-NOTIFICATION PCMS:
PLACE AS SHOWN AND
ACTIVATE 7 CALENDAR DAYS PRIOR TO CLOSURE

1

FRAME 1	FRAME 2
* HWY 147 WILL BE CLOSED	MO-DAY TO MO-DAY

DURING CLOSURE PCMS:
PLACE AS SHOWN

2

FRAME 1	FRAME 2	FRAME 3
* HWY 147 CLOSED	X MI AHEAD	FOLLOW DETOUR

3

FRAME 1	FRAME 2
* HWY 147 CLOSED AHEAD	TURN AROUND FOLLOW DETOUR

* USE NORTH BOUND AND SOUTH BOUND AS APPROPRIATE.

APPROVED FOR DETOUR WORK ONLY

DETOUR PLAN

NO SCALE

DE-1

REVISED BY	L.W.L.
DATE REVISED	3/20/15
CALCULATED-DESIGNED BY	WILL LESLIE
CHECKED BY	BYRON STANLEY
FUNCTIONAL SUPERVISOR	STEVE TOPAL

STATE OF CALIFORNIA - DEPARTMENT OF TRANSPORTATION
Caltrans
DESIGN

P:\proj1\02^4E640_plans\pse\24e640mg001.dgn

LAST REVISION
DATE PLOTTED => 24-NOV-2015
TIME PLOTTED => 09:24

Dist	COUNTY	ROUTE	POST MILES TOTAL PROJECT	SHEET No.	TOTAL SHEETS
02	Plu	147	8.9/9.3	31	94

REGISTERED CIVIL ENGINEER 11-23-15 DATE

11-30-15
PLANS APPROVAL DATE

REGISTERED PROFESSIONAL ENGINEER BYRON STANLEY No. C60161 Exp. 06-30-16 CIVIL STATE OF CALIFORNIA

THE STATE OF CALIFORNIA OR ITS OFFICERS OR AGENTS SHALL NOT BE RESPONSIBLE FOR THE ACCURACY OR COMPLETENESS OF SCANNED COPIES OF THIS PLAN SHEET.

LEGEND:

● TRAFFIC PLASTIC DRUM

‡ TYPE III BARRICADE (3 IN EACH LANE)

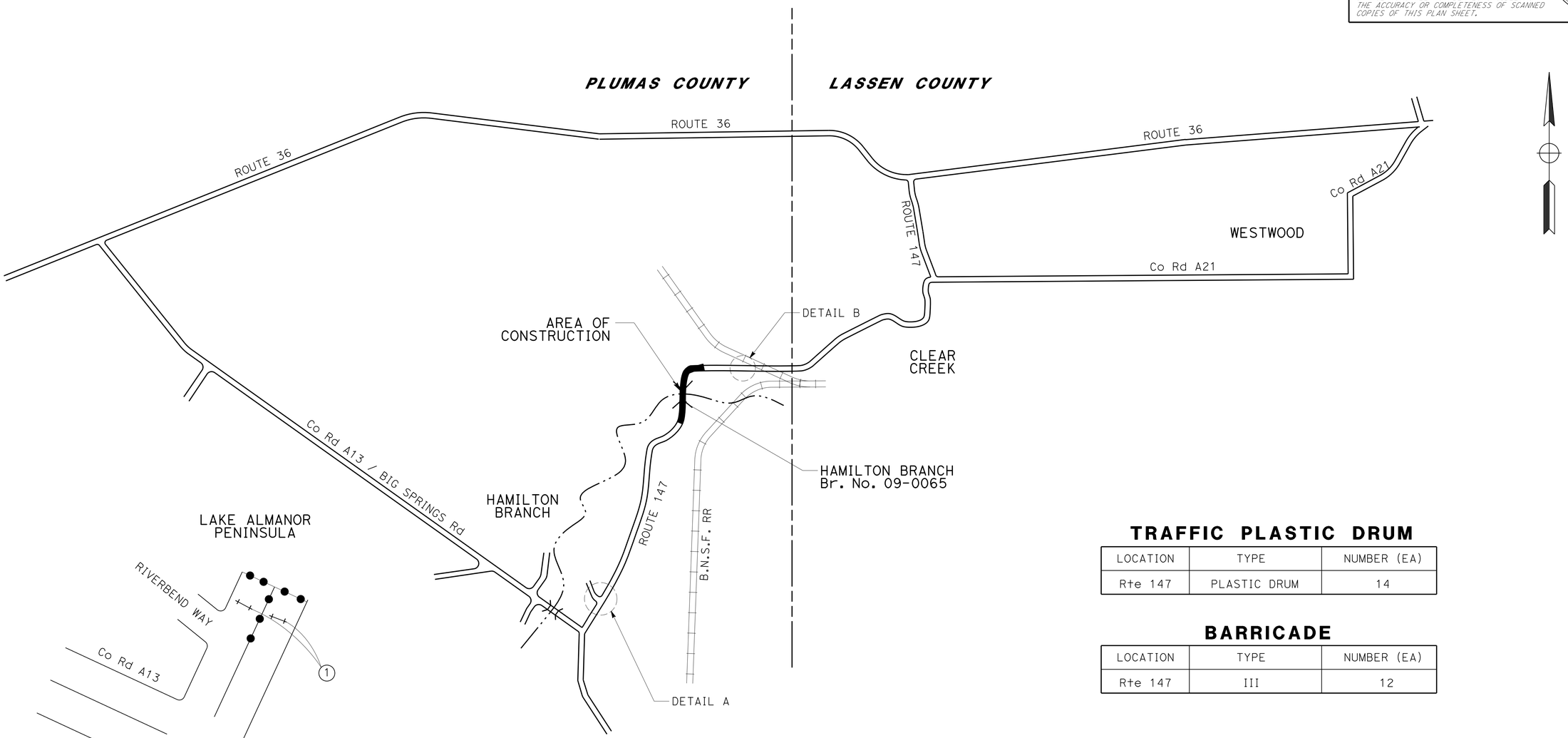

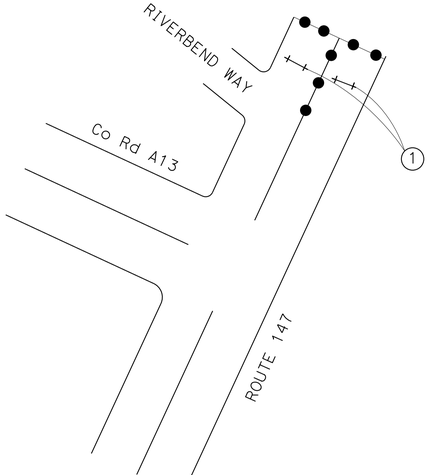

DETAIL A

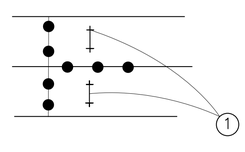

ROUTE 147
DETAIL B

TRAFFIC PLASTIC DRUM

LOCATION	TYPE	NUMBER (EA)
Rte 147	PLASTIC DRUM	14

BARRICADE

LOCATION	TYPE	NUMBER (EA)
Rte 147	III	12

CONSTRUCTION AREA SIGNS (PORTABLE)

SYMBOL	TYPE	PANEL	MESSAGE	No. OF SIGNS
1	R11-2	48" x 30"	"ROAD CLOSED" (BARRICADE MOUNTED)	4

APPROVED FOR DETOUR WORK ONLY

DETOUR PLANS

NO SCALE

DE-2

REVISED BY	L.W.L.
DATE REVISED	3/20/15
CALCULATED-DESIGNED BY	WILL LESLIE
CHECKED BY	BYRON STANLEY
FUNCTIONAL SUPERVISOR	STEVE TOPAL

STATE OF CALIFORNIA - DEPARTMENT OF TRANSPORTATION
Caltrans
DESIGN

P:\proj1\02\4E640_plans\pse\24e640mg002.dgn

LAST REVISION DATE PLOTTED => 24-NOV-2015
TIME PLOTTED => 09:24

Dist	COUNTY	ROUTE	POST MILES TOTAL PROJECT	SHEET No.	TOTAL SHEETS
02	Plu	147	8.9/9.3	32	94

REGISTERED CIVIL ENGINEER 11-23-15 DATE

11-30-15
PLANS APPROVAL DATE

REGISTERED PROFESSIONAL ENGINEER BYRON STANLEY No. C60161 Exp. 06-30-16 CIVIL STATE OF CALIFORNIA

THE STATE OF CALIFORNIA OR ITS OFFICERS OR AGENTS SHALL NOT BE RESPONSIBLE FOR THE ACCURACY OR COMPLETENESS OF SCANNED COPIES OF THIS PLAN SHEET.

NOTE:

1. FOR ACCURATE RIGHT OF WAY DATA, CONTACT RIGHT OF WAY ENGINEERING AT THE DISTRICT OFFICE.

LEGEND

- ● REMOVE ROADSIDE SIGN
- SINGLE STRIPE MARKER
- STRIPE CHANGE LOCATION
- DELINEATOR (TYPE F)
- METAL SIGN (1-POST)
- S DELINEATOR SPACING
- L-1 OBJECT MARKER (TYPE L)

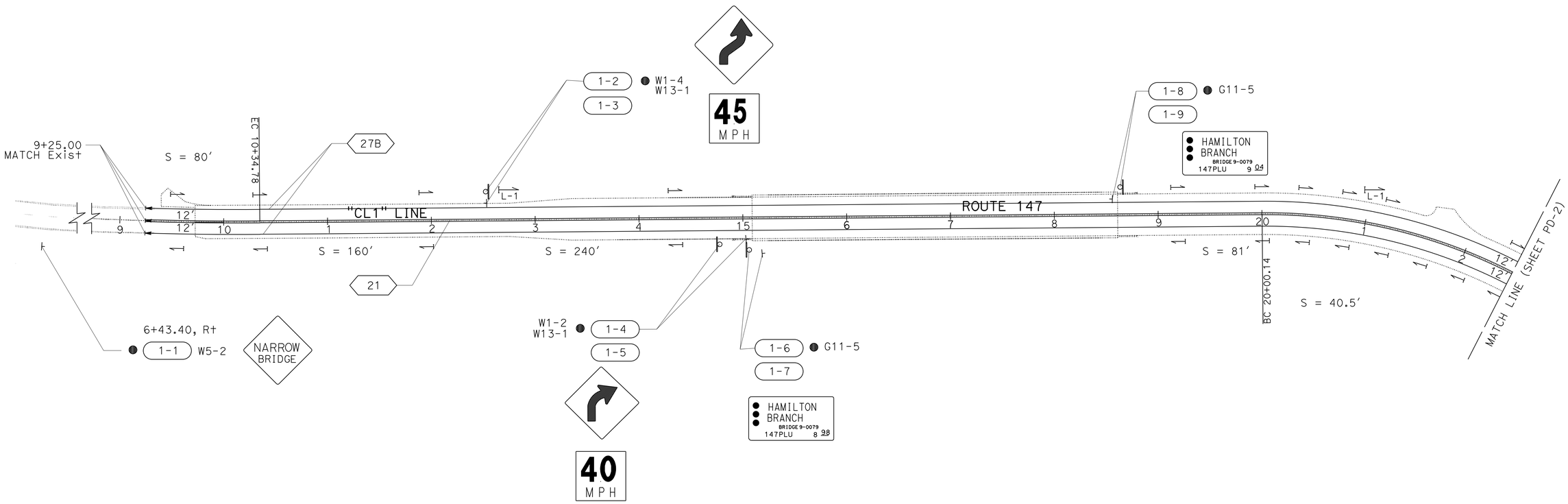

APPROVED FOR PAVEMENT DELINEATION AND SIGN WORK ONLY

PAVEMENT DELINEATION AND SIGN PLAN

SCALE: 1" = 50′

PD-1

REVISED BY	L.W.L.
DATE REVISED	3/20/15
CALCULATED-DESIGNED BY	WILL LESLIE
CHECKED BY	BYRON STANLEY
FUNCTIONAL SUPERVISOR	STEVE TOPAL

STATE OF CALIFORNIA - DEPARTMENT OF TRANSPORTATION
Caltrans
DESIGN

P:\proj1\02\4E640_plans\pse\24e640na001.dgn

LAST REVISION DATE PLOTTED => 24-NOV-2015
TIME PLOTTED => 09:24

Dist	COUNTY	ROUTE	POST MILES TOTAL PROJECT	SHEET No.	TOTAL SHEETS
02	Plu	147	8.9/9.3	33	94

REGISTERED CIVIL ENGINEER 11-23-15 DATE

11-30-15
PLANS APPROVAL DATE

REGISTERED PROFESSIONAL ENGINEER
BYRON STANLEY
No. C60161
Exp. 06-30-16
CIVIL
STATE OF CALIFORNIA

THE STATE OF CALIFORNIA OR ITS OFFICERS OR AGENTS SHALL NOT BE RESPONSIBLE FOR THE ACCURACY OR COMPLETENESS OF SCANNED COPIES OF THIS PLAN SHEET.

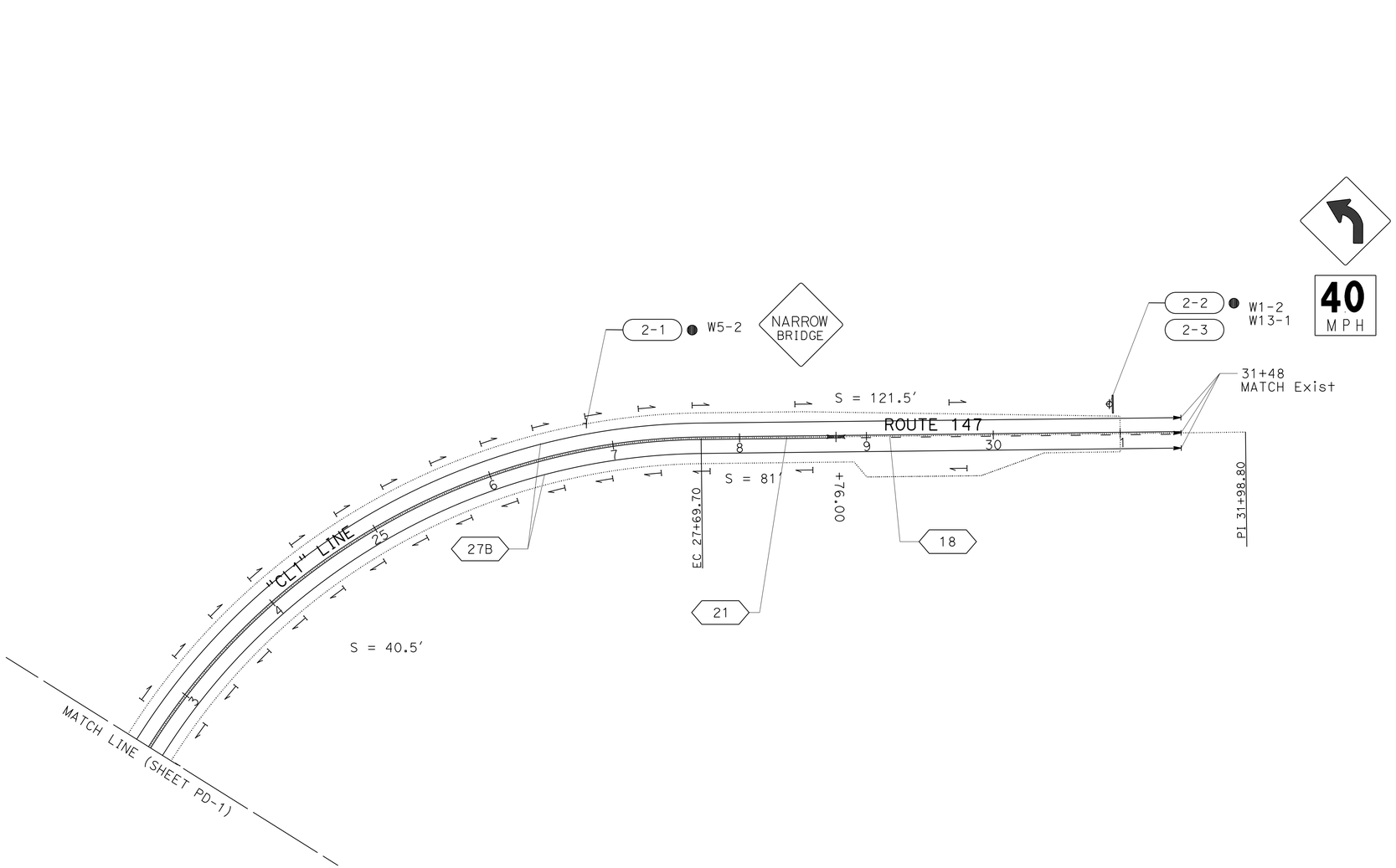

PAVEMENT DELINEATION AND SIGN PLAN

SCALE: 1" = 50'

PD-2

APPROVED FOR PAVEMENT DELINEATION AND SIGN WORK ONLY

CALCULATED-DESIGNED BY	WILL LESLIE	REVISED BY	L.W.L.
CHECKED BY	BYRON STANLEY	DATE REVISED	3/20/15

FUNCTIONAL SUPERVISOR: STEVE TOPAL

STATE OF CALIFORNIA - DEPARTMENT OF TRANSPORTATION
Caltrans® DESIGN

P:\proj1\02\4E640_plans\pse\24e640na002.dgn

LAST REVISION DATE PLOTTED => 24-NOV-2015
TIME PLOTTED => 09:24

Dist	COUNTY	ROUTE	POST MILES TOTAL PROJECT	SHEET No.	TOTAL SHEETS
02	Plu	147	8.9/9.3	34	94

REGISTERED CIVIL ENGINEER 11-23-15 DATE

11-30-15
PLANS APPROVAL DATE

REGISTERED PROFESSIONAL ENGINEER BYRON STANLEY No. C60161 Exp. 06-30-16 CIVIL STATE OF CALIFORNIA

THE STATE OF CALIFORNIA OR ITS OFFICERS OR AGENTS SHALL NOT BE RESPONSIBLE FOR THE ACCURACY OR COMPLETENESS OF SCANNED COPIES OF THIS PLAN SHEET.

LEGEND

⇦ Dir OF TRAFFIC

⟨XXX⟩ TRAFFIC STRIPE DETAIL No.

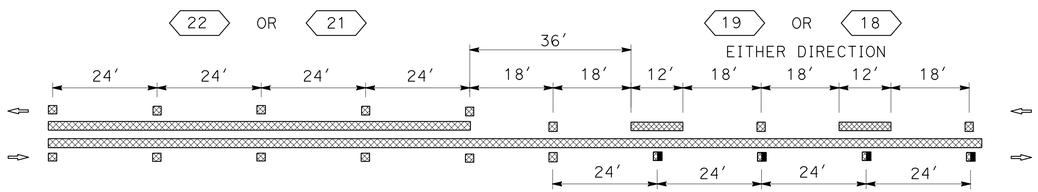

TYPICAL STRIPE TRANSITION DETAIL

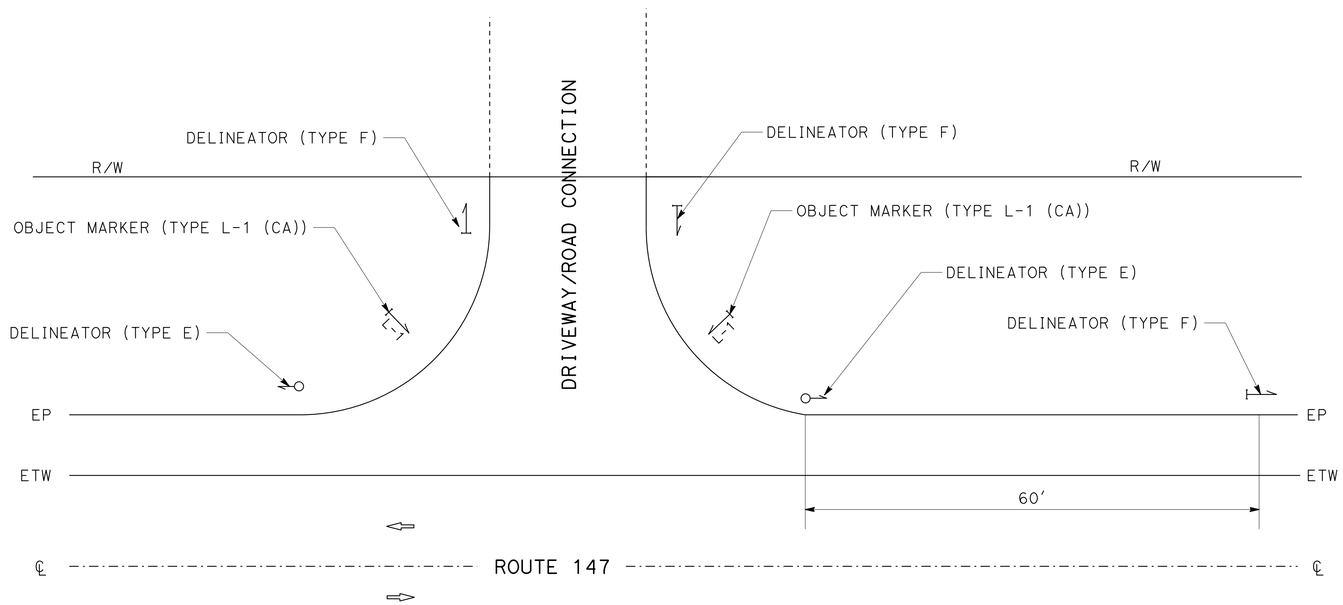

DRIVEWAY / ROAD CONNECTION DELINEATOR PLACEMENT DETAIL

PAVEMENT DELINEATION DETAILS

NO SCALE

PDD-1

STATE OF CALIFORNIA - DEPARTMENT OF TRANSPORTATION
Caltrans® DESIGN

FUNCTIONAL SUPERVISOR: STEVE TOPAL
CALCULATED-DESIGNED BY: WILL LESLIE
CHECKED BY: BYRON STANLEY
REVISED BY: L.W.L.
DATE REVISED: 3/20/15

P:\proj1\02\4E640_plans\pse\24e640nb001.dgn

LAST REVISION DATE PLOTTED => 24-NOV-2015
TIME PLOTTED => 09:24

Dist	COUNTY	ROUTE	POST MILES TOTAL PROJECT	SHEET No.	TOTAL SHEETS
02	Plu	147	8.9/9.3	35	94

REGISTERED CIVIL ENGINEER 11-23-15 DATE

11-30-15
PLANS APPROVAL DATE

REGISTERED PROFESSIONAL ENGINEER
BYRON STANLEY
No. C60161
Exp. 06-30-16
CIVIL
STATE OF CALIFORNIA

THE STATE OF CALIFORNIA OR ITS OFFICERS OR AGENTS SHALL NOT BE RESPONSIBLE FOR THE ACCURACY OR COMPLETENESS OF SCANNED COPIES OF THIS PLAN SHEET.

PAVEMENT DELINEATION QUANTITIES

LINE	STATION	THERMOPLASTIC TRAFFIC STRIPE (SPRAYABLE) 4" YELLOW DETAIL 18	4" YELLOW DETAIL 21	4" WHITE DETAIL 27B	DELINEATOR (CLASS 2) TYPE E	TYPE F	OBJECT MARKER (TYPE L-1)
		LF	LF	LF	EA	EA	EA
"CL1"	9+24.00 TO 28+76.00		1952	3904		50	2
	28+76.00 TO 31+48.00	272		544	2	5	2
SUBTOTALS		272	1952	4448	2	55	
TOTAL		6672			57		4

PAVEMENT DELINEATION QUANTITIES

PDQ-1

STATE OF CALIFORNIA - DEPARTMENT OF TRANSPORTATION
Caltrans DESIGN

FUNCTIONAL SUPERVISOR: STEVE TOPAL
CALCULATED-DESIGNED BY: WILL LESLIE
CHECKED BY: BYRON STANLEY
REVISED BY: L.W.L.
DATE REVISED: 3/20/15

P:\proj1\02\4E640_plans\pse\24e640nc001.dgn

LAST REVISION
DATE PLOTTED => 24-NOV-2015
TIME PLOTTED => 09:24

Dist	COUNTY	ROUTE	POST MILES TOTAL PROJECT	SHEET No.	TOTAL SHEETS
02	Plu	147	8.9/9.3	36	94

REGISTERED CIVIL ENGINEER 11-23-15 DATE

11-30-15
PLANS APPROVAL DATE

REGISTERED PROFESSIONAL ENGINEER BYRON STANLEY No. C60161 Exp. 06-30-16 CIVIL STATE OF CALIFORNIA

THE STATE OF CALIFORNIA OR ITS OFFICERS OR AGENTS SHALL NOT BE RESPONSIBLE FOR THE ACCURACY OR COMPLETENESS OF SCANNED COPIES OF THIS PLAN SHEET.

NOTES:

1. USE A 2¼" Sq TUBE x 30" LONG, 3/16" THICK ANCHOR FOR 2" POSTS.
   USE A 3" Sq TUBE x 3' LONG, 3/16" THICK ANCHOR FOR 2-1/2 " POSTS.
2. USE A 5/16" CORNER BOLT OR TWO DRIVE RIVETS TO FASTEN ASSEMBLED SIGN AND POST INTO ANCHOR. INSTALL CORNER BOLT OR DRIVE RIVETS INTO THE SIDES FACING TRAFFIC.
3. REMOVE EXISTING AC OR PCC, DRIVE ANCHOR SLEEVE INTO SOIL AND RECAP WITH LIKE MATERIAL, MATCHING EXISTING THICKNESS.
4. 2" POSTS ARE TO BE 1/8" THICK, PERFORATIONS OF 7/16" IN DIAMETER ARE 1" ON CENTER ON ALL SIDES, LENGTHS ARE 10' AND 12'.
5. 2-1/2" POSTS ARE TO BE 1/8" THICK, PERFORATIONS OF 7/16" IN DIAMETER ARE 1" ON CENTER ON ALL SIDES, 2-1/2" POSTS ARE 12' AND 14' IN LENGTH.
6. FOR DETAILS NOT SHOWN, REFER TO THE STANDARD PLANS.
7. 2-1/2" POSTS SHALL BE USED IN SIDEWALK AND HIGH PEDESTRIAN USE PLACEMENTS.
8. ALL ANCHOR SLEEVES SHALL BE EMBEDDED IN PCC, EXCEPT FOR INSTALLATIONS IN PAVEMENTS OR SIDEWALKS.

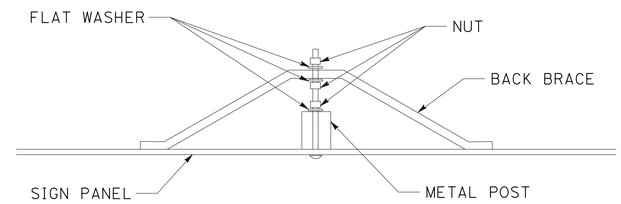

BACK BRACE MOUNTING DETAIL

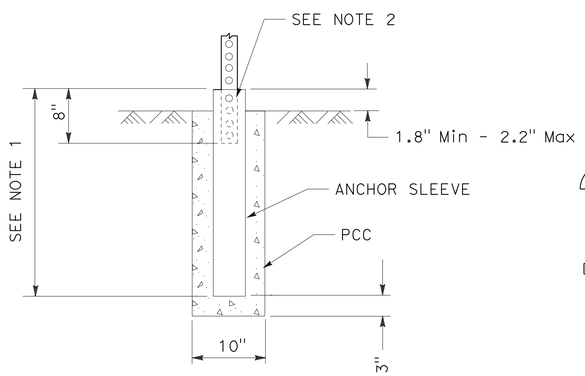

INSTALLATION IN SOIL (PCC)
(SEE NOTE 8)

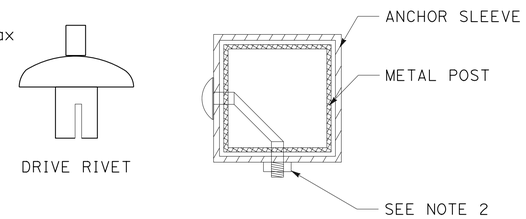

FASTENER DETAILS

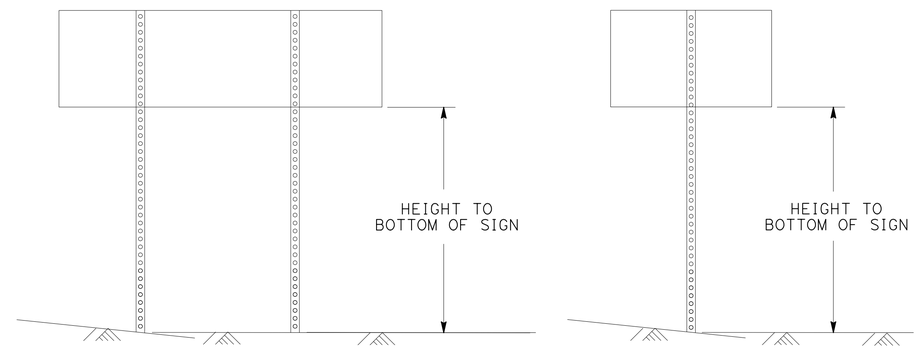

TWO POSTS INSTALLATION
(POST SIZE, SEE CHART BELOW)

SINGLE POST INSTALLATION
(POST SIZE, SEE CHART BELOW)

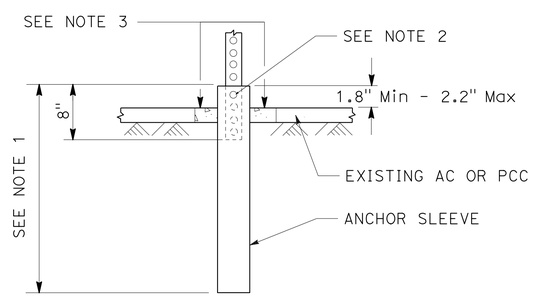

INSTALLATION IN EXISTING AC OR PCC

Max Sq Ft OF SIGN

POST SIZE	60"	72"	84"	96"	108"	120"
2"	18	16	14	12	10	8
2.5"	35	32	28	24	21	21

HEIGHT TO BOTTOM OF SIGN
DOUBLE POST GROUND SIGNS
70 MPH WIND SPEED

Max Sq Ft OF SIGN

POST SIZE	60"	72"	84"	96"	108"	120"
2"	10.5	10	8.7	7.4	6.2	5
2.5"	16	16	16	16	12	12

HEIGHT TO BOTTOM OF SIGN
SINGLE POST GROUND SIGNS
70 MPH WIND SPEED

METAL SIGN POST DETAIL

METAL SIGN POST INSTALLATION DETAILS

SIGN DETAILS

NO SCALE

SD-1

CALCULATED-DESIGNED BY	WILL LESLIE	REVISED BY	L.W.L.
CHECKED BY	BYRON STANLEY	DATE REVISED	3/20/15
FUNCTIONAL SUPERVISOR	STEVE TOPAL		

STATE OF CALIFORNIA - DEPARTMENT OF TRANSPORTATION
Caltrans
DESIGN

P:\proj1\02\4E640_plans\pse\24e640ob001.dgn

LAST REVISION DATE PLOTTED => 24-NOV-2015
TIME PLOTTED => 09:24

Dist	COUNTY	ROUTE	POST MILES TOTAL PROJECT	SHEET No.	TOTAL SHEETS
02	Plu	147	8.9/9.3	37	94

REGISTERED CIVIL ENGINEER 11-23-15 DATE

11-30-15
PLANS APPROVAL DATE

REGISTERED PROFESSIONAL ENGINEER BYRON STANLEY No. C60161 Exp. 06-30-16 CIVIL STATE OF CALIFORNIA

THE STATE OF CALIFORNIA OR ITS OFFICERS OR AGENTS SHALL NOT BE RESPONSIBLE FOR THE ACCURACY OR COMPLETENESS OF SCANNED COPIES OF THIS PLAN SHEET.

NOTE:

1. (N) - NOT A SEPARATE PAY ITEM, FOR INFORMATION ONLY

ABBREVIATIONS:

Fed FEDERAL
Fl FLUORESCENT

ROADSIDE SIGNS

SIGN No.	SIGN CODE		SIGN MESSAGE/DESCRIPTION	PANNEL SIZE	POST SIZE AND LENGTH (N) METAL		ROADSIDE SIGN ONE POST	REMOVE ROADSIDE SIGN
	Fed	CA		In x In	IN	FT	EACH	EACH
1-1	W5-2		NARROW BRIDGE	36 x 36				1
1-2	W1-4		CURVE RIGHT	36 x 36				1
	W13-1		45 MPH	30 x 30				
1-3	W1-4		CURVE RIGHT	36 x 36	2.5 x2.5	12	1	
	W13-1		45 MPH	30 x 30				
1-4	W1-2		CURVE RIGHT	36 x 36				1
	W13-1		40 MPH	30 x 30				
1-5	W1-2		CURVE RIGHT	36 x 36	2.5x2.5	12	1	
	W13-1		40 MPH	30 x 30				
1-6		G11-5	HAMILTON BRANCH, BR 9-65	44 x 24				1
1-7		G11-5	HAMILTON BRANCH, BR 9-0079	44 x 24	2.5x2.5	9	1	
1-8		G11-5	HAMILTON BRANCH, BR 9-65	44 x 24				1
1-9		G11-5	HAMILTON BRANCH, BR 9-0079	44 x 24	2.5x2.5	9	1	
2-1	W5-2		NARROW BRIDGE	36 x 36				1
2-2	W1-2		CURVE LEFT	36 x 36				1
	W13-1		40 MPH	30 x 30				
2-3	W1-2		CURVE LEFT	36 x 36	2.5x2.5	12	1	
	W13-1		40 MPH	30 x 30				
TOTAL							5	7

ROADSIDE SIGN PANEL QUANTITIES

SHEET No.	SIGN No.	SIGN CODE		SIGN MESSAGE/DESCRIPTION	PANNEL SIZE L x D	SINGLE FACED	SIGN FACING MATERIAL BACKGROUND		SIGN FACING MATERIAL LEGEND		RETROREFLECTIVE SHEETING (TYPE XI)	FURNISH SINGLE SHEET ALUMINUM SIGN (0.063"-UNFRAMED) FOR RETOREFLECTIVE SHEETING (TYPE XI)	FURNISH SINGLE SHEET ALUMINUM SIGN (0.063"-UNFRAMED)
		Fed	CA		INCHES		SHEETING COLOR	RETROREFLECTIVE ASTM TYPE	SHEETING COLOR	RETROREFLECTIVE ASTM TYPE	SQFT	SQFT	SQFT
PD-1	1-3	W1-4		CURVE RIGHT	36 x 36	X	Fl YELLOW	XI	BLACK		9.00	9.00	
		W13-1		45 MPH	30 x 30	X	Fl YELLOW	XI	BLACK		6.25	6.25	
	1-5	W1-2		CURVE RIGHT	36 x 36	X	Fl YELLOW	XI	BLACK		9.00	9.00	
		W13-1		40 MPH	30 x 30	X	Fl YELLOW	XI	BLACK		6.25	6.25	
	1-7		G11-5	HAMILTON BRANCH, BR 9-0079	44 x 24	X	WHITE	IX	BLACK				7.33
	1-9		G11-5	HAMILTON BRANCH, BR 9-0079	44 x 24	X	WHITE	IX	BLACK				7.33
PD-2	2-3	W1-2		CURVE LEFT	36 x 36	X	Fl YELLOW	XI	BLACK		9.00	9.00	
		W13-1		40 MPH	30 x 30	X	Fl YELLOW	XI	BLACK		6.25	6.25	
TOTAL											45.75	45.75	14.66

SIGN QUANTITIES

SQ-1

STATE OF CALIFORNIA - DEPARTMENT OF TRANSPORTATION
Caltrans DESIGN

FUNCTIONAL SUPERVISOR: STEVE TOPAL
CALCULATED-DESIGNED BY: WILL LESLIE
CHECKED BY: BYRON STANLEY
REVISED BY: L.W.L.
DATE REVISED: 3/20/15

P:\proj1\02\4E640_plans\pse\24e640oc001.dgn

LAST REVISION
DATE PLOTTED => 24-NOV-2015
TIME PLOTTED => 09:24

Dist	COUNTY	ROUTE	POST MILES TOTAL PROJECT	SHEET No.	TOTAL SHEETS
02	Plu	147	8.9/9.3	38	94

REGISTERED CIVIL ENGINEER 11-23-15 DATE

11-30-15
PLANS APPROVAL DATE

REGISTERED PROFESSIONAL ENGINEER BYRON STANLEY No. C60161 Exp. 06-30-16 CIVIL STATE OF CALIFORNIA

THE STATE OF CALIFORNIA OR ITS OFFICERS OR AGENTS SHALL NOT BE RESPONSIBLE FOR THE ACCURACY OR COMPLETENESS OF SCANNED COPIES OF THIS PLAN SHEET.

NOTE:

1. (N) - NOT A SEPARATE PAY ITEM, FOR INFORMATION ONLY

ROADWAY QUANTITIES

STATION "CL1" LINE		ROADWAY EXCAVATION *	EMBANKMENT (N)	COLD PLANE AC PAVEMENT	SHOULDER BACKING	CLASS 2 AGGREGATE BASE (CY)	HOT MIX ASPHALT (TYPE A)	TACK COAT	PLACE HOT MIX ASPHALT (MISCELANEOUS AREA)	PLACE HOT MIX ASPHALT DIKE (TYPE C)	PLACE HOT MIX ASPHALT DIKE (TYPE F)
Beg	END	CY	CY	SQYD	TON	CY	TON	TON	SQYD	LF	LF
9+60	10+10	74		178		10	41.1	0.10	36.5	41	
10+10	15+09	2913	274		90.1	559	678	0.90			204
18+61	29+80	5145	1300		188.0	1535	1778	2.10			84
29+80	31+20	125	7	156	20.2		31	0.55			
TOTAL		8257*	1581	334	298.3	2104	2499	3.65	36.5	41	288

* INCLUDES 2466 CY OF ROADWAY STRUCTURAL SECTION

ROCK SLOPE PROTECTION

DESCRIPTION	ROCK SLOPE PROTECTION 1/2 T, METHOD B (TON)	ROCK SLOPE PROTECTION No. 2, METHOD B (TON)	ROCK SLOPE PROTECTION FABRIC (CLASS 8)	SHEET No.
	TON	TON	SQYD	
BRIDGE PIERS	755.7		532.8	C-16
Fdn DRAINAGE EXIT		6.2		DD-1
DRAINAGE DITCH		35.8		DD-1
Fdn DRAINAGE EXIT		2.7		DD-2
DRAINAGE DITCH		23.5		DD-2
TOTAL	755.7	62.2	532.8	

RETAINING WALL QUANTITIES

LOCATION	STATION "CL1" LINE				EARTH RETAINING SYSTEM (CORRUGATED STEEL PIPE)	RAIL ELEMENT WALL	LENGTH OF CSP UNIT (N)	NUMBER OF CSP UNITS (N)	AMOUNT OF CONCRETE FOR FOUNDATION (MINOR STRUCTURE) (N)	AMOUNT OF CONCRETE BOTTOM OF CSP (MINOR STRUCTURE) (N)
No.	Beg	END	L+	R+	SQFT	SQFT	FT	EA	CY	CY
1	10+18.79	11+79.50	X		803.6		5	52	21	11
	20+39.18	21+51.79	X			244				
2	22+04.27	22+89.47	X		313.4		4	25	10	5
TOTAL					1117	244				

METAL BEAM GUARDRAIL QUANTITIES

SYSTEM No.	STATION "CL1" LINE				REMOVE GUARDRAIL	TREATED WOOD WASTE	METAL BEAM GUARDRAIL (STEEL POST 6')	METAL BEAM GUARDRAIL (STEEL POST 7')	ALTERNATIVE FLARED TERMINAL SYSTEM	ALTERNATIVE IN-LINE TERMINAL SYSTEM	END ANCHOR ASSEMBLY (TYPE SFT)	END ANCHOR ASSEMBLY (TYPE B)	TRANSITION RAILING (TYPE WB)
	Beg	END	L+	R+	LF	LB	LF	FT	EA	EA	EA	LF	EA
1	9+65.27	13+62.38	X				300.0		1				
2	12+93.30	14+90.88		X	65	1452	87.5					87.5	1
3	14+53.38	14+90.88	X		65	1452	12.5				1		1
4	18+78.75	21+55.18	X		313	1661		200.0		1			1
5	18+78.75	19+54.05		X	109	990	12.5		1				1
6	20+99.42	24+85.13	X				212.0				1	75.0	
TOTAL					552	5555	624.5	200.0	3	1	2	162.5	4

SUMMARY OF QUANTITIES
Q-1

L.W.L.	3/20/15		
REVISED BY	DATE REVISED		
WILL LESLIE	BYRON STANLEY		
CALCULATED-DESIGNED BY	CHECKED BY		
FUNCTIONAL SUPERVISOR	STEVE TOPAL		

STATE OF CALIFORNIA - DEPARTMENT OF TRANSPORTATION
Caltrans® DESIGN

P:\proj1\02\4E640_plans\pse\24e640pa001.dgn

LAST REVISION | DATE PLOTTED => 24-NOV-2015 | TIME PLOTTED => 14:53

Dist	COUNTY	ROUTE	POST MILES TOTAL PROJECT	SHEET No.	TOTAL SHEETS
02	Plu	147	8.9/9.3	39	94

REGISTERED CIVIL ENGINEER 11-23-15 DATE

11-30-15
PLANS APPROVAL DATE

REGISTERED PROFESSIONAL ENGINEER BYRON STANLEY No. C60161 Exp. 06-30-16 CIVIL STATE OF CALIFORNIA

THE STATE OF CALIFORNIA OR ITS OFFICERS OR AGENTS SHALL NOT BE RESPONSIBLE FOR THE ACCURACY OR COMPLETENESS OF SCANNED COPIES OF THIS PLAN SHEET.

NOTE:

1. (N) - NOT A SEPARATE PAY ITEM, FOR INFORMATION ONLY

STORMWATER

STATION		Temp CONSTRUCTION ENTRANCE	Temp SILT FENCE	Temp FIBER ROLL	Temp REINFORCED SILT FENCE	Temp CHECK DAM	Temp GRAVEL BAG BERM	Temp COVER
Beg	END	EA	LF	LF	LF	LF	LF	SQYD
9+00.00	31+00.00	2	1000	2563	300	75	90	1000
TOTAL		2	1000	2563	300	75	90	1000

TEMPORARY FENCE (TYPE ESA)

DESCRIPTION	LF	SHEET
9+72 TO 17+50	560	L-1
17+50 TO 31+00	2003	L-2
TOTAL	2563	

REMOVE CONCRETE

DESCRIPTION	CY	SHEET
CONCRETE RUBBLE UNDER EXISTING BRIDGE		
17+00	30	L-1
TOTAL	30	

SUMMARY OF QUANTITIES
Q-2

REVISED BY	L.W.L.		
DATE REVISED	3/20/15		
WILL LESLIE			
BYRON STANLEY			
CALCULATED-DESIGNED BY			
CHECKED BY			
FUNCTIONAL SUPERVISOR			
STEVE TOPAL			

STATE OF CALIFORNIA - DEPARTMENT OF TRANSPORTATION
Caltrans DESIGN

P:\proj1\02\4E640_plans\pse\24e640pa002.dgn

DATE PLOTTED => 24-NOV-2015
TIME PLOTTED => 09:24

Dist	COUNTY	ROUTE	POST MILES TOTAL PROJECT	SHEET No.	TOTAL SHEETS
02	Plu	147	8.9/9.3	40	94

LICENSED LANDSCAPE ARCHITECT

11-30-15
PLANS APPROVAL DATE

LICENSED LANDSCAPE ARCHITECT
RONALD MARTIN FLORY
#4981
Expires
09-30-16
Renewal Date
11-23-15
Date
STATE OF CALIFORNIA

THE STATE OF CALIFORNIA OR ITS OFFICERS OR AGENTS SHALL NOT BE RESPONSIBLE FOR THE ACCURACY OR COMPLETENESS OF SCANNED COPIES OF THIS PLAN SHEET.

NOTE:

1. (N) - NOT A SEPARATE PAY ITEM, FOR INFORMATION ONLY

EROSION CONTROL (TYPE 1)

SEQUENCE	ITEM	MATERIAL DESCRIPTION	MATERIAL TYPE	APPLICATION RATE	DEPTH
STEP 1	ROUGHEN SLOPE(N)	SCARIFY/TRACKWALK	--	--	2"
STEP 2	COMPOST SOCK	8" Dia BURLAP	2	--	--
STEP 3	COMPOST	MEDIUM TEXTURE	1 OR 3	270 CY/ACRE	2"
STEP 4	HYDROSEED (SEED MIX "UPLAND")	PURE LIVE SEED	"UPLAND"	57 LB/ACRE	--
		FIBER	WOOD	500 LB/ACRE	--
		ORGANIC FERTILIZER	SLOW RELEASE	1500 LB/ACRE	--
STEP 5	HYDROMULCH (TYPE 1)	FIBER	WOOD	2,000 LB/ACRE	--
		TACKIFIER	PSYLLIUM	175 LB/ACRE	--

EROSION CONTROL (TYPE 2)

SEQUENCE	ITEM	MATERIAL DESCRIPTION	MATERIAL TYPE	APPLICATION RATE	DEPTH
STEP 1	HYDROSEED (SEED MIX "SWALE")	PURE LIVE SEED	"SWALE"	40 LB/ACRE	--
		COMPOST/MEDIUM TEXTURE	1	135 LB/ACRE	--
		ORGANIC FERTILIZER	SLOW RELEASE	1500 LB/ACRE	--
STEP 2	HYDROMULCH (TYPE 2)	FIBER	WOOD	1200 LB/ACRE	--
		TACKIFIER	PSYLLIUM	175 LB/ACRE	--

EROSION CONTROL (TYPE 3)

SEQUENCE	ITEM	MATERIAL DESCRIPTION	MATERIAL TYPE	APPLICATION RATE	DEPTH
STEP 1	RECP (NETTING)(FLAP)	COCONUT COIR	TYPE B	--	--
STEP 2	COMPOST SOCK	8" Dia BURLAP	2	--	--
STEP 3	COMPOST	MEDIUM TEXTURE	1,2,OR 3	270 CY/ACRE	2"
STEP 4	HYDROSEED (SEED MIX "UPLAND")	PURE LIVE SEED	"UPLAND"	57 LB/ACRE	--
		FIBER	WOOD	500 LB/ACRE	--
		ORGANIC FERTILIZER	SLOW RELEASE	1500 LB/ACRE	--
STEP 5	HYDROMULCH (TYPE 1)	FIBER	WOOD	2000 LB/ACRE	--
		TACKIFIER	PSYLLIUM	175 LB/ACRE	--

SEED MIX "UPLAND"

SEED	BOTANICAL NAME (COMMON NAME)	PERCENT GERMINATION (MINIMUM)	POUNDS PURE LIVE SEED PER ACRE (SLOPE MEASUREMENT)
MIX	ACHILLEA MILLEFOLIUM (WHITE YARROW)	80	2
	BROMUS CARINATUS (CALIFORNIA BROME)	85	15
	CEANOTHUS INTEGERMUS (DEER BRUSH) (COLD STRATIFIED)	90	4
	ELYMUS GLAUCUS (BLUE WILD RYE)	85	8
	ERICAMERIA NAUSEOSA (RUBBER RABBITBRUSH)	70	2
	ERIOGONUM UMBELLATUM (SULPHER-FLOWERED BUCKWHEAT)	80	10
	LUPINUS BICOLOR (INOCULATED) (MINIATURE LUPINE)	80	5
	LUPINUS ARGENTEUS VAR. HETERANTHUS (INOCULATED) (SILVERLEAF LUPINE)	80	4
	VULPIA MICHROSTACHYS (SIX WEEKS FESCUE)	80	7
		TOTAL	57

SEED MIX "SWALE"

SEED	BOTANICAL NAME (COMMON NAME)	PERCENT GERMINATION (MINIMUM)	POUNDS PURE LIVE SEED PER ACRE (SLOPE MEASUREMENT)
MIX	ASCLEPIAS FASCICULARIS (NARROW-LEAF MILKWEED)	80	5
	BROMUS CARINATUS (CALIFORNIA BROME)	85	15
	DESCHAMPSIA CAESPITOSA (TUFTED HAIRGRASS)	85	2
	ELYMUS GLAUCUS (BLUE WILDRYE)	85	8
	FESTUCA RUBRA (RED FESCUE)	80	3
	VULPIA MICHROSTACHYS (SIX WEEKS FESCUE)	80	7
		TOTAL	40

EROSION CONTROL LEGEND AND DETAILS

ECL-1

REVISED BY | DATE REVISED
ROBIN SOLARI | LOGAN MOORE
CALCULATED-DESIGNED BY | CHECKED BY
SENIOR LANDSCAPE ARCHITECT | RON FLORY

STATE OF CALIFORNIA - DEPARTMENT OF TRANSPORTATION
Caltrans® LANDSCAPE ARCHITECTURE

P:\proj1\02x4E640_plans\pse\24e640tc001.dgn

LAST REVISION 11-16-15 | DATE PLOTTED => 24-NOV-2015 | TIME PLOTTED => 09:24

Dist	COUNTY	ROUTE	POST MILES TOTAL PROJECT	SHEET No.	TOTAL SHEETS
02	Plu	147	8.9/9.3	41	94

LICENSED LANDSCAPE ARCHITECT

11-30-15
PLANS APPROVAL DATE

LICENSED LANDSCAPE ARCHITECT
RONALD MARTIN FLORY
#4981
09-30-16
Renewal Date
11-23-15
Date
STATE OF CALIFORNIA

THE STATE OF CALIFORNIA OR ITS OFFICERS OR AGENTS SHALL NOT BE RESPONSIBLE FOR THE ACCURACY OR COMPLETENESS OF SCANNED COPIES OF THIS PLAN SHEET.

NOTE:

1. FOR ACCURATE RIGHT OF WAY DATA, CONTACT RIGHT OF WAY ENGINEERING AT THE DISTRICT OFFICE.

LEGEND:

- EROSION CONTROL (TYPE 1)
- EROSION CONTROL (TYPE 2)
- EROSION CONTROL (TYPE 3)
- COMPOST SOCK

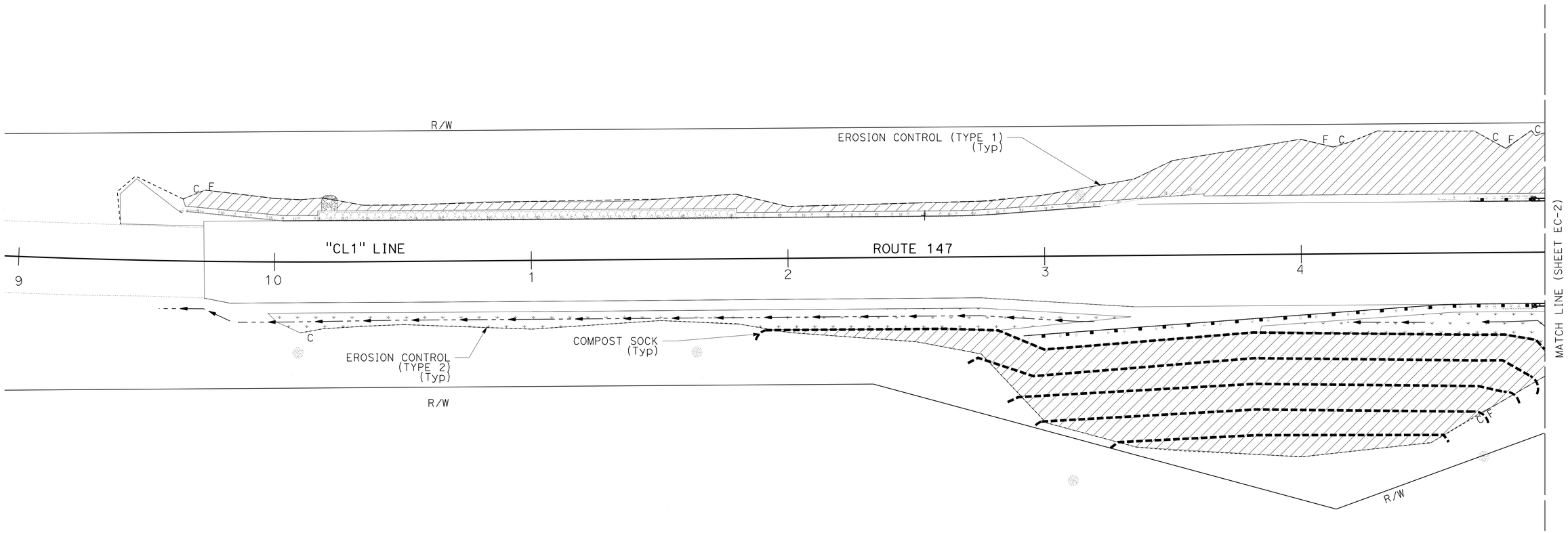

EROSION CONTROL PLAN

SCALE: 1" = 20'

EC-1

APPROVED FOR EROSION CONTROL WORK ONLY

REVISED BY	DATE REVISED

CALCULATED-DESIGNED BY: ROBIN SOLARI
CHECKED BY: LOGAN MOORE
SENIOR LANDSCAPE ARCHITECT: RON FLORY

STATE OF CALIFORNIA - DEPARTMENT OF TRANSPORTATION
Caltrans® LANDSCAPE ARCHITECTURE

P:\proj1\02\4E640_plans\pse\24e640te001.dgn

LAST REVISION 11-16-15 | DATE PLOTTED => 24-NOV-2015 | TIME PLOTTED => 09:24

Dist	COUNTY	ROUTE	POST MILES TOTAL PROJECT	SHEET No.	TOTAL SHEETS
02	Plu	147	8.9/9.3	42	94

LICENSED LANDSCAPE ARCHITECT

11-30-15
PLANS APPROVAL DATE

LICENSED LANDSCAPE ARCHITECT
RONALD MARTIN FLORY
#4981
09-30-16
Renewal Date
11-23-15
Date
STATE OF CALIFORNIA

THE STATE OF CALIFORNIA OR ITS OFFICERS OR AGENTS SHALL NOT BE RESPONSIBLE FOR THE ACCURACY OR COMPLETENESS OF SCANNED COPIES OF THIS PLAN SHEET.

NOTE:

1. FOR ACCURATE RIGHT OF WAY DATA, CONTACT RIGHT OF WAY ENGINEERING AT THE DISTRICT OFFICE.

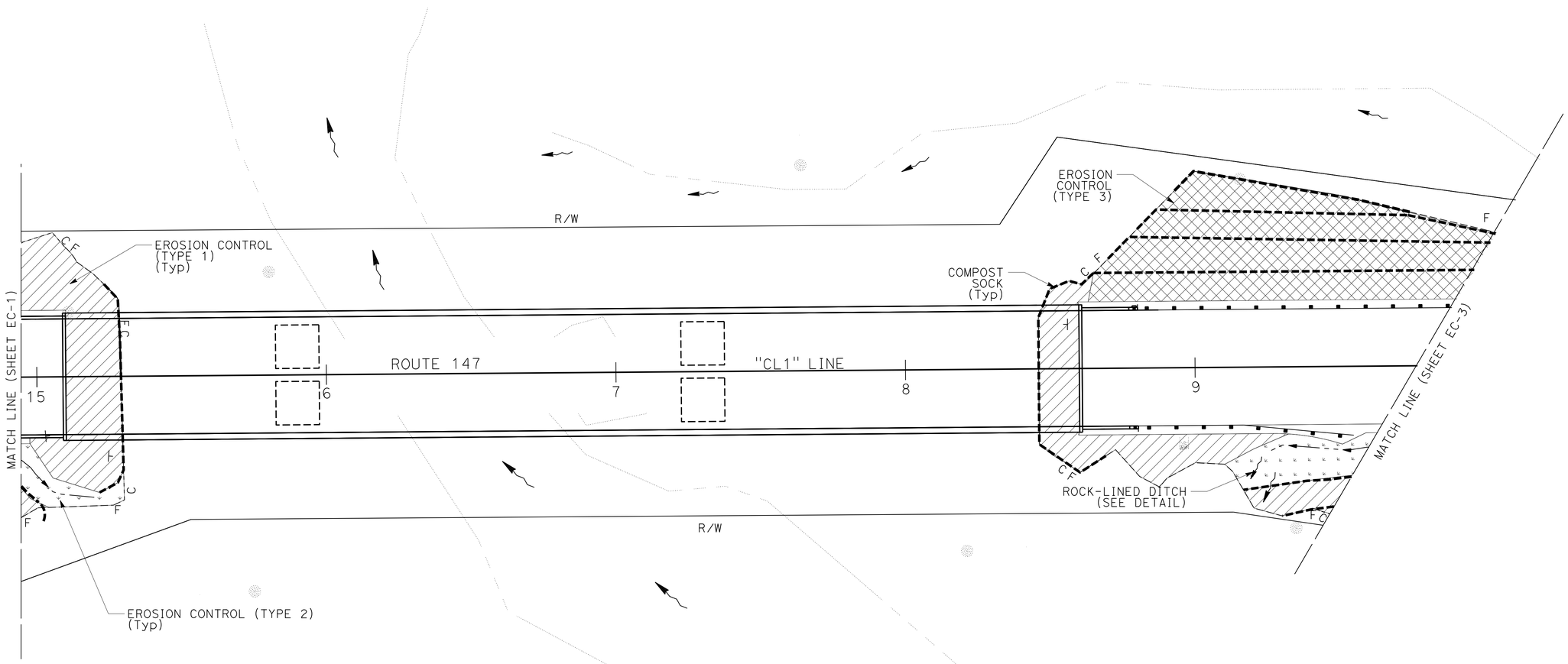

EROSION CONTROL PLAN

SCALE: 1" = 20'

EC-2

APPROVED FOR EROSION CONTROL WORK ONLY

STATE OF CALIFORNIA - DEPARTMENT OF TRANSPORTATION
LANDSCAPE ARCHITECTURE

SENIOR LANDSCAPE ARCHITECT: RON FLORY
CALCULATED-DESIGNED BY: ROBIN SOLARI
CHECKED BY: LOGAN MOORE
REVISED BY
DATE REVISED

P:\proj\02\4E640_plans\pse\24e640te002.dgn

LAST REVISION 11-16-15
DATE PLOTTED => 24-NOV-2015
TIME PLOTTED => 09:24

Dist	COUNTY	ROUTE	POST MILES TOTAL PROJECT	SHEET No.	TOTAL SHEETS
02	Plu	147	8.9/9.3	43	94

LICENSED LANDSCAPE ARCHITECT

11-30-15

PLANS APPROVAL DATE

LICENSED LANDSCAPE ARCHITECT
RONALD MARTIN FLORY
#4981
Expires
09-30-16
Renewal Date
11-23-15
Date
STATE OF CALIFORNIA

THE STATE OF CALIFORNIA OR ITS OFFICERS OR AGENTS SHALL NOT BE RESPONSIBLE FOR THE ACCURACY OR COMPLETENESS OF SCANNED COPIES OF THIS PLAN SHEET.

NOTE:

1. FOR ACCURATE RIGHT OF WAY DATA, CONTACT RIGHT OF WAY ENGINEERING AT THE DISTRICT OFFICE.

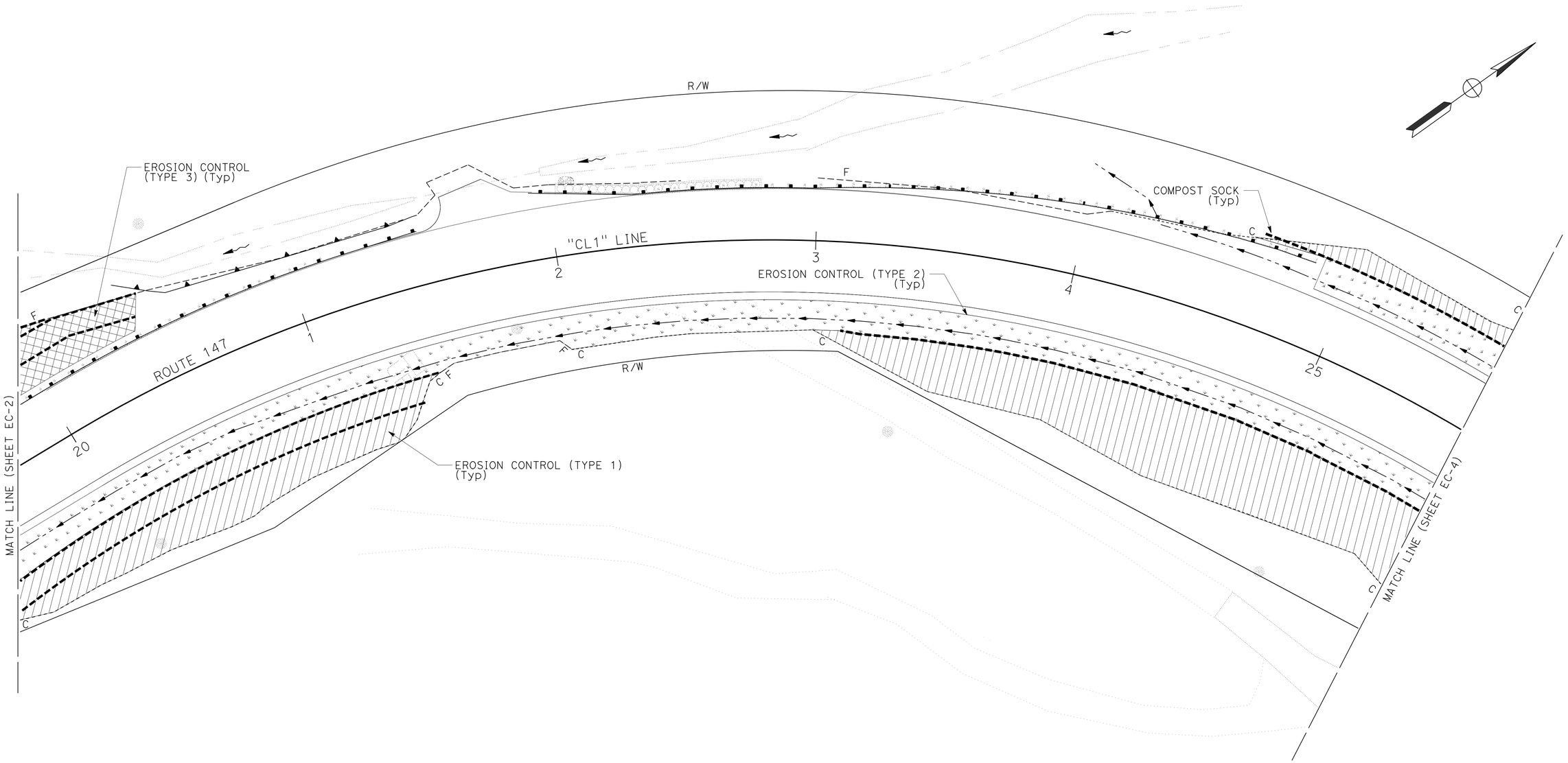

APPROVED FOR EROSION CONTROL WORK ONLY

EROSION CONTROL PLAN

SCALE: 1" = 20'

EC-3

REVISED BY	DATE REVISED
ROBIN SOLARI	LOGAN MOORE

CALCULATED-DESIGNED BY
CHECKED BY
SENIOR LANDSCAPE ARCHITECT
RON FLORY

STATE OF CALIFORNIA - DEPARTMENT OF TRANSPORTATION
Caltrans® LANDSCAPE ARCHITECTURE

P:\proj1\02\4E640_plans\pse\24e640te003.dgn

LAST REVISION 11-16-15
DATE PLOTTED => 24-NOV-2015
TIME PLOTTED => 09:24

Dist	COUNTY	ROUTE	POST MILES TOTAL PROJECT	SHEET No.	TOTAL SHEETS
02	Plu	147	8.9/9.3	44	94

LICENSED LANDSCAPE ARCHITECT

11-30-15
PLANS APPROVAL DATE

LICENSED LANDSCAPE ARCHITECT
RONALD MARTIN FLORY
#4981
09-30-16
Renewal Date
11-23-15
Date
STATE OF CALIFORNIA

THE STATE OF CALIFORNIA OR ITS OFFICERS OR AGENTS SHALL NOT BE RESPONSIBLE FOR THE ACCURACY OR COMPLETENESS OF SCANNED COPIES OF THIS PLAN SHEET.

NOTE:

1. FOR ACCURATE RIGHT OF WAY DATA, CONTACT RIGHT OF WAY ENGINEERING AT THE DISTRICT OFFICE.

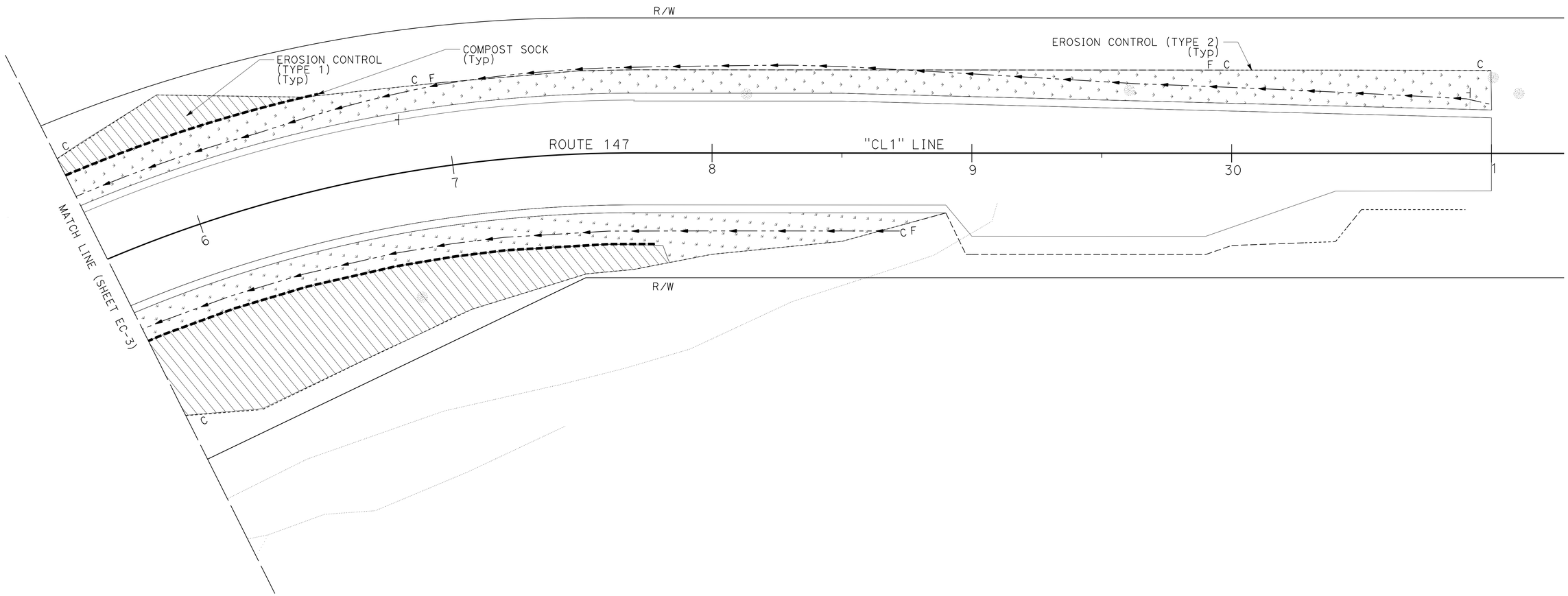

EROSION CONTROL PLAN

SCALE: 1" = 20'

EC-4

APPROVED FOR EROSION CONTROL WORK ONLY

REVISED BY | DATE REVISED

ROBIN SOLARI | LOGAN MOORE

CALCULATED-DESIGNED BY | CHECKED BY

SENIOR LANDSCAPE ARCHITECT

RON FLORY

STATE OF CALIFORNIA - DEPARTMENT OF TRANSPORTATION

Caltrans® LANDSCAPE ARCHITECTURE

P:\proj1\02\4E640_plans\pse\24e640te004.dgn

LAST REVISION 11-16-15 | DATE PLOTTED => 24-NOV-2015 | TIME PLOTTED => 09:24

BORDER LAST REVISED 7/2/2010 | USERNAME => s115152 | DGN FILE => 24e640te004.dgn | RELATIVE BORDER SCALE IS IN INCHES 0 1 2 3 | UNIT 0382 | PROJECT NUMBER & PHASE 02 1200 001 1

Dist	COUNTY	ROUTE	POST MILES TOTAL PROJECT	SHEET No.	TOTAL SHEETS
02	Plu	147	8.9/9.3	45	94

LICENSED LANDSCAPE ARCHITECT

11-30-15
PLANS APPROVAL DATE

LICENSED LANDSCAPE ARCHITECT
RONALD MARTIN FLORY
#4981
Expires
09-30-16
Renewal Date
11-23-15
Date
STATE OF CALIFORNIA

THE STATE OF CALIFORNIA OR ITS OFFICERS OR AGENTS SHALL NOT BE RESPONSIBLE FOR THE ACCURACY OR COMPLETENESS OF SCANNED COPIES OF THIS PLAN SHEET.

NOTE:

1. COMPOST SOCK NOT SHOWN.

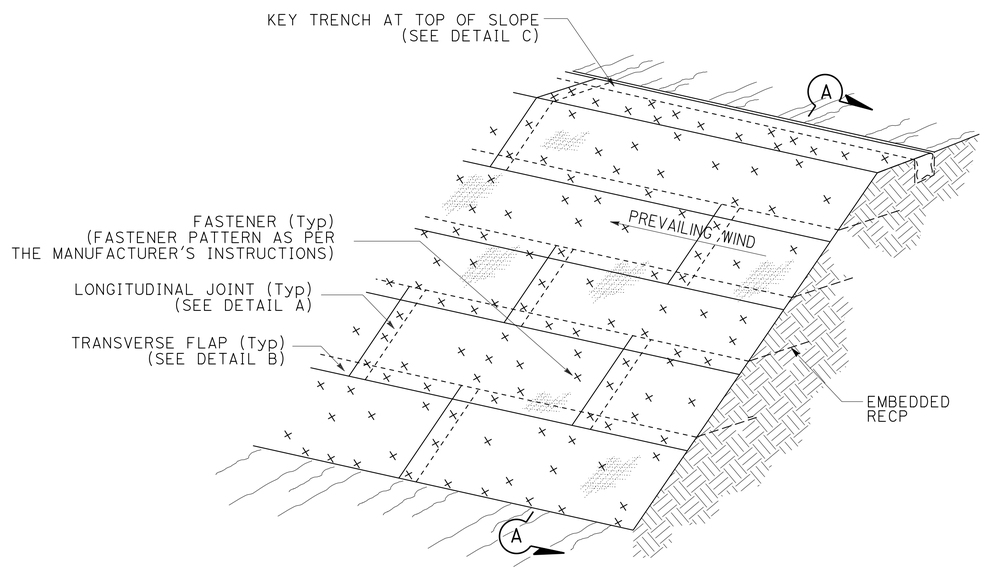

ISOMETRIC
RECP (NETTING) (FLAP)

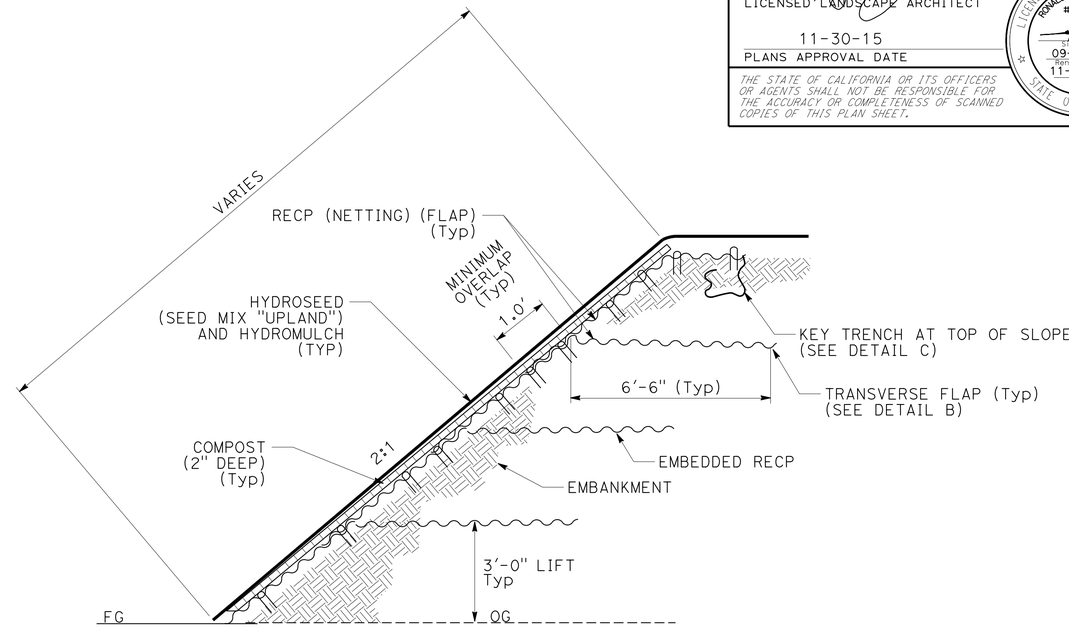

SECTION A-A
RECP (NETTING) (FLAP)

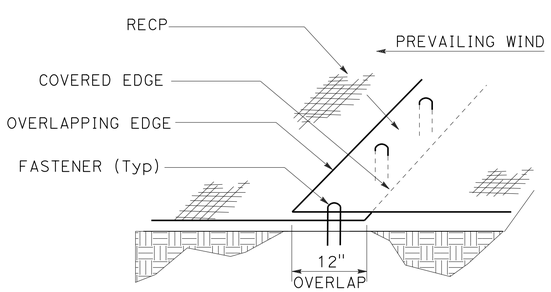

PERSPECTIVE
DETAIL A
LONGITUDINAL JOINT

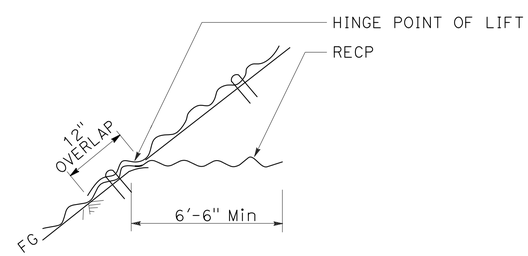

SECTION
DETAIL B
TRANSVERSE FLAP

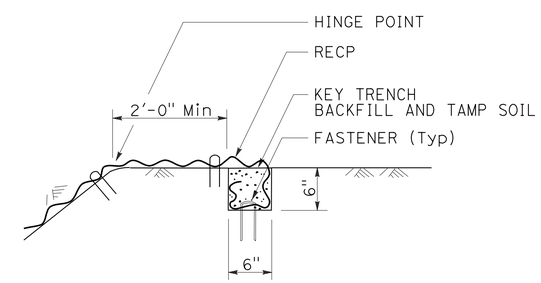

SECTION
DETAIL C
KEY TRENCH AT TOP OF SLOPE

EROSION CONTROL (TYPE 3)

EROSION CONTROL DETAILS
NO SCALE

ECD-1

REVISED BY | DATE REVISED
ROBIN SOLARI | LOGAN MOORE
CALCULATED-DESIGNED BY | CHECKED BY
SENIOR LANDSCAPE ARCHITECT | RON FLORY
STATE OF CALIFORNIA - DEPARTMENT OF TRANSPORTATION
Caltrans® LANDSCAPE ARCHITECTURE

P:\proj1\02\4E640_plans\pse\24e640tf001.dgn

LAST REVISION 11-16-15 | DATE PLOTTED => 24-NOV-2015 | TIME PLOTTED => 09:24

Dist	COUNTY	ROUTE	POST MILES TOTAL PROJECT	SHEET No.	TOTAL SHEETS
02	Plu	147	8.9/9.3	46	94

LICENSED LANDSCAPE ARCHITECT

11-30-15
PLANS APPROVAL DATE

LICENSED LANDSCAPE ARCHITECT
RONALD MARTIN FLORY
#4981
09-30-16
Renewal Date
11-23-15
Date
STATE OF CALIFORNIA

THE STATE OF CALIFORNIA OR ITS OFFICERS OR AGENTS SHALL NOT BE RESPONSIBLE FOR THE ACCURACY OR COMPLETENESS OF SCANNED COPIES OF THIS PLAN SHEET.

NOTE:

1. (N) - NOT A SEPARATE PAY ITEM, FOR INFORMATION ONLY

EROSION CONTROL QUANTITIES

DESCRIPTION	SHEET	LOCATION			ITEM								REMARKS
					ROUGHEN SLOPE (N)	COMPOST	RECP (NETTING) (FLAP)	HYDROSEED (SEED MIX "UPLAND")	HYDROSEED (SEED MIX "SWALE")	HYDROMULCH (TYPE 1)	HYDROMULCH (TYPE 2)	COMPOST SOCK	
		STATION	L†	R†	SQFT	SQFT	SQFT	SQFT	SQFT	SQFT	SQFT	LF	
EROSION CONTROL (TYPE 1)	EC-1,2	"CL1" 9+64 TO 15+29	X		5637	5637		5637		5637		34	35 CY COMPOST**
	EC-1,2	"CL1" 11+93 TO 15+04		X	9575	9575		9575		9575		44	59 CY COMPOST**
	EC-2	"CL1" 14+97 TO 15+30		X	2815	2815		2815		2815		1084	18 CY COMPOST**
	EC-2	"CL1" 18+46 TO 18+65	X		387	387		387		387		46	3 CY COMPOST**
	EC-2	"CL1" 18+46 TO 19+32		X	1093	1093		1093		1093		54	7 CY COMPOST**
	EC-2,3	"CL1" 19+16 TO 21+45		X	4554	4554		4554		4554		414	28 CY COMPOST**
	EC-3,4	"CL1" 23+00 TO 27+84		X	11,202	11,202		11,202		11,202		436	69 CY COMPOST**
	EC-3,4	"CL1" 24+61 TO 26+51	X		1530	1530		1530		1530		204	10 CY COMPOST**
EROSION CONTROL (TYPE 2)	EC-1	"CL1" 9+97 TO 13+33		X					1986		1986		
	EC-1,2	"CL1" 13+84 TO 15+30		X					1102		1102		
	EC-2,3,4	"CL1" 19+10 TO 28+90		X					7116		7116		
	EC-3,4	"CL1" 24+88 TO 31+00	X						7180		7180		
EROSION CONTROL (TYPE 3)	EC-2,3	"CL1" 18+63 TO 20+46	X			5939	7200	5939		5939		590	37 CY COMPOST**
				TOTALS	36,793	42,732	7200	42,732	17,384	42,732	17,384	2906	266 CY COMPOST**

** QUANTITY DOES NOT INCLUDE COMPOST SOCK

EROSION CONTROL QUANTITIES

ECQ-1

REVISED BY | DATE REVISED
ROBIN SOLARI | LOGAN MOORE
CALCULATED-DESIGNED BY | CHECKED BY
SENIOR LANDSCAPE ARCHITECT
RON FLORY

STATE OF CALIFORNIA - DEPARTMENT OF TRANSPORTATION
Caltrans® LANDSCAPE ARCHITECTURE

P:\proj1\02\4E640_plans\pse\24e640tg001.dgn

LAST REVISION 11-16-15 | DATE PLOTTED => 24-NOV-2015 | TIME PLOTTED => 09:24

Dist	COUNTY	ROUTE	POST MILES TOTAL PROJECT	SHEET No.	TOTAL SHEETS
2	Plu	147	8.9/9.3	47	94

ART 11-23-15
REGISTERED ELECTRICAL ENGINEER DATE

11-30-15
PLANS APPROVAL DATE

REGISTERED PROFESSIONAL ENGINEER A.P. ROBLES No. E15293 Exp. 3-31-17 ELECTRICAL STATE OF CALIFORNIA

THE STATE OF CALIFORNIA OR ITS OFFICERS OR AGENTS SHALL NOT BE RESPONSIBLE FOR THE ACCURACY OR COMPLETENESS OF SCANNED COPIES OF THIS PLAN SHEET.

NOTE:

1. FOR ACCURATE RIGHT OF WAY DATA, CONTACT RIGHT OF WAY ENGINEERING AT THE DISTRICT OFFICE.

LEGEND:

(PB) OBJECT MARKER (TYPE PB) AND PULL BOX PAVING

LEGEND (THIS SHEET ONLY):

[1] No. 5 TRAFFIC PULL BOX WITH TAMPER RESISTANT COVER. COIL 10′ OF LOOP CONDUCTORS IN PULL BOX.

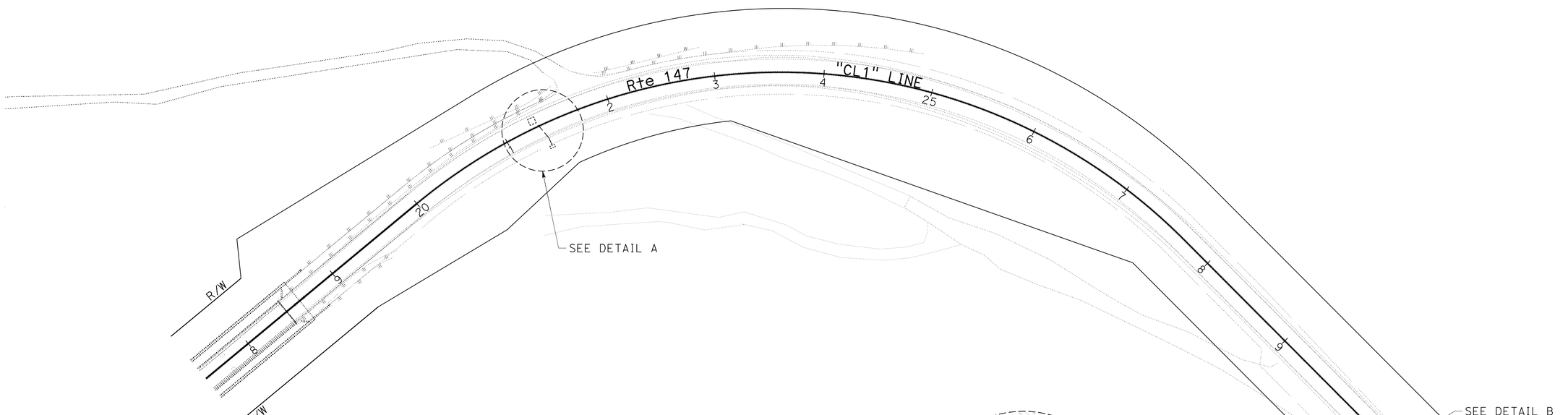

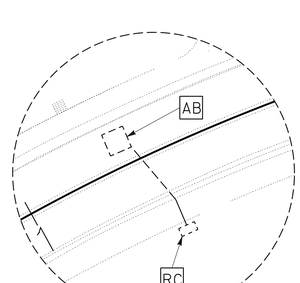

DETAIL A
NO SCALE

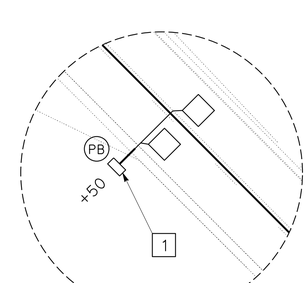

DETAIL B
NO SCALE

TRAFFIC COUNT STATION

SCALE: 1" = 50′

APPROVED FOR ELECTRICAL WORK ONLY

E-1

REVISED BY | DATE REVISED
ARTURO P. ROBLES | KAREN LAW
CALCULATED-DESIGNED BY | CHECKED BY
FUNCTIONAL SUPERVISOR: ROB STINGER

STATE OF CALIFORNIA - DEPARTMENT OF TRANSPORTATION
Caltrans® **ELECTRICAL DESIGN**

P:\proj1\02\4E640_plans\pse\24e640ua001.dgn

LAST REVISION 11-23-15 | DATE PLOTTED => 24-NOV-2015 | TIME PLOTTED => 09:24

Dist	COUNTY	ROUTE	POST MILES TOTAL PROJECT	SHEET No.	TOTAL SHEETS
2	Plu	147	8.9/9.3	48	94

ART 11-23-15
REGISTERED ELECTRICAL ENGINEER DATE

11-30-15
PLANS APPROVAL DATE

REGISTERED PROFESSIONAL ENGINEER A.P. ROBLES No. E15293 Exp. 3-31-17 ELECTRICAL STATE OF CALIFORNIA

THE STATE OF CALIFORNIA OR ITS OFFICERS OR AGENTS SHALL NOT BE RESPONSIBLE FOR THE ACCURACY OR COMPLETENESS OF SCANNED COPIES OF THIS PLAN SHEET.

NOTE:

(N) - NOT A SEPARATE PAY ITEM, FOR INFORMATION ONLY.

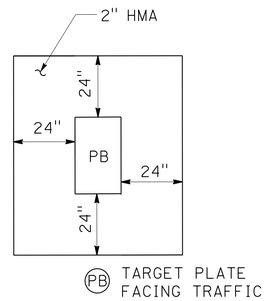

PULL BOX PAVING

TRAFFIC COUNT STATION

SHEET No.	(N) TYPE A LOOP DETECTOR	(N) No. 5 TRAFFIC PULL BOX
	EA	EA
E-1	2	1

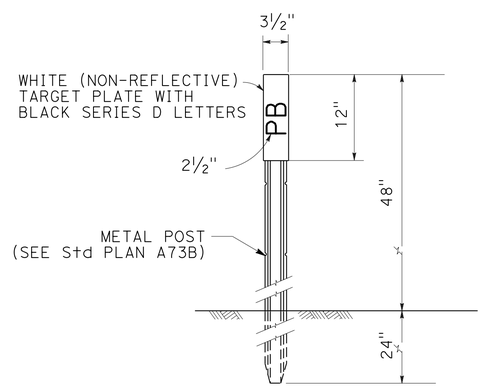

NOTE: PLACE MARKER 2" OUTSIDE PULL BOX PAVING ON SIDE AWAY FROM TRAFFIC. SEE PULL BOX PAVING DETAIL. INSTALL SNOW POLE BRACKET.

OBJECT MARKER (TYPE PB)

ELECTRICAL DETAILS AND QUANTITIES

NO SCALE

E-2

REVISED BY | DATE REVISED
ARTURO P. ROBLES | KAREN LAW
CALCULATED-DESIGNED BY | CHECKED BY
FUNCTIONAL SUPERVISOR: ROB STINGER

STATE OF CALIFORNIA - DEPARTMENT OF TRANSPORTATION
Caltrans® ELECTRICAL DESIGN

P:\proj1\02\4E640_plans\pse\24e640ua002.dgn

LAST REVISION 11-23-15 | DATE PLOTTED => 24-NOV-2015 | TIME PLOTTED => 09:24

M

Maint	MAINTENANCE
Max	MAXIMUM
MB	METAL BEAM
MBB	METAL BEAM BARRIER
MBGR	METAL BEAM GUARD RAILING
Med	MEDIAN
MGS	MIDWEST GUARDRAIL SYSTEM
MH	MANHOLE
Min	MINIMUM
Misc	MISCELLANEOUS
Misc I & S	MISCELLANEOUS IRON AND STEEL
Mkr	MARKER
Mod	MODIFIED,
	MODIFY
Mon	MONUMENT
MP	METAL PLATE
MPGR	METAL PLATE GUARD RAILING
MR	MOVEMENT RATING
MSE	MECHANICALLY STABILIZED EMBANKMENT
Mt	MOUNTAIN, MOUNT
Mtl	MATERIAL
MVP	MAINTENANCE VEHICLE PULLOUT

N

N	NORTH
NB	NORTHBOUND
No.	NUMBER (MUST HAVE PERIOD)
Nos.	NUMBERS (MUST HAVE PERIOD)
NPS	NOMINAL PIPE SIZE
NS	NEAR SIDE
NSP	NEW STANDARD PLAN
NTS	NOT TO SCALE

O

Oblr	OBLITERATE
OC	OVERCROSSING
OD	OUTSIDE DIAMETER
OF	OUTSIDE FACE
OG	ORIGINAL GROUND
OGAC	OPEN GRADED ASPHALT CONCRETE
OGFC	OPEN GRADED FRICTION COURSE
OH	OVERHEAD
OHWM	ORDINARY HIGH WATER MARK
O-O	OUT TO OUT
Opp	OPPOSITE
OSD	OVERSIDE DRAIN

P

P	PAGE
PAP	PERFORATED ALUMINUM PIPE
PB	PULL BOX
PC	POINT OF CURVATURE,
	PRECAST
PCC	POINT OF COMPOUND CURVE,
	PORTLAND CEMENT CONCRETE
PCMS	PORTABLE CHANGEABLE MESSAGE SIGN
PCP	PERFORATED CONCRETE PIPE,
	PRESTRESSED CONCRETE PIPE
PCVC	POINT OF COMPOUND VERTICAL CURVE
PEC	PERMIT TO ENTER AND CONSTRUCT
Ped	PEDESTRIAN
Ped OC	PEDESTRIAN OVERCROSSING
Ped UC	PEDESTRIAN UNDERCROSSING
Perm Mtl	PERMEABLE MATERIAL

P continued

PG	PROFILE GRADE
PI	POINT OF INTERSECTION
PJP	PARTIAL JOINT PENETRATION
Pkwy	PARKWAY
₱,PL	PLATE
P/L	PROPERTY LINE
PM	POST MILE,
	TIME FROM NOON TO MIDNIGHT
PN	PAVING NOTCH
POC	POINT OF HORIZONTAL CURVE
POT	POINT OF TANGENT
POVC	POINT OF VERTICAL CURVE
PP	PIPE PILE,
	PLASTIC PIPE,
	POWER POLE
PPL	PREFORMED PERMEABLE LINER
PPP	PERFORATED PLASTIC PIPE
PRC	POINT OF REVERSE CURVE
PRF	PAVEMENT REINFORCING FABRIC
PRVC	POINT OF REVERSE VERTICAL CURVE
PS&E	PLANS, SPECIFICATIONS AND ESTIMATES
PS, P/S	PRESTRESSED
PSP	PERFORATED STEEL PIPE
PT	POINT OF TANGENCY
PVC	POLYVINYL CHLORIDE
Pvmt	PAVEMENT

Q

Qty	QUANTITY

R

R	RADIUS
R & D	REMOVE AND DISPOSE
R & S	REMOVE AND SALVAGE
R/C	RATE OF CHANGE
RCA	REINFORCED CONCRETE ARCH
RCB	REINFORCED CONCRETE BOX
RCP	REINFORCED CONCRETE PIPE
RCPA	REINFORCED CONCRETE PIPE ARCH
Rd	ROAD
Reinf	REINFORCED,
	REINFORCEMENT,
	REINFORCING
Rel	RELOCATE
Repl	REPLACEMENT
Ret	RETAINING
Rev	REVISED, REVISION
Rdwy	ROADWAY
RHMA	RUBBERIZED HOT MIX ASPHALT
Riv	RIVER
RM	ROAD-MIXED
RP	RADIUS POINT,
	REFERENCE POINT
RR	RAILROAD
RSP	ROCK SLOPE PROTECTION,
	REVISED STANDARD PLAN
Rt	RIGHT
Rte	ROUTE
RW	REDWOOD,
	RETAINING WALL
R/W	RIGHT OF WAY
Rwy	RAILWAY

S

S	SOUTH,
	SUPPLEMENT
SAE	STRUCTURE APPROACH EMBANKMENT
Salv	SALVAGE
SAPP	STRUCTURAL ALUMINUM PLATE PIPE
SB	SOUTHBOUND
SC	SAND CUSHION
SCSP	SLOTTED CORRUGATED STEEL PIPE
SD	STORM DRAIN
Sec	SECOND,
	SECTION
Sep	SEPARATION
SG	SUBGRADE
Shld	SHOULDER
Sht	SHEET
Sim	SIMILAR
℄	STATION LINE
SM	SELECTED MATERIAL
Spec	SPECIAL,
	SPECIFICATIONS
SPP	SLOTTED PLASTIC PIPE
SS	SLOPE STAKE
SSBM	STRAP AND SADDLE BRACKET METHOD
SSD	STRUCTURAL SECTION DRAIN
SSPA	STRUCTURAL STEEL PLATE ARCH
SSPP	STRUCTURAL STEEL PLATE PIPE
SSPPA	STRUCTURAL STEEL PLATE PIPE ARCH
SSRP	STEEL SPIRAL RIB PIPE
St	STREET
Sta	STATION
STBB	SINGLE THRIE BEAM BARRIER
Std	STANDARD
Str	STRUCTURE
Surf	SURFACING
SW	SIDEWALK,
	SOUND WALL
Swr	SEWER
Sym	SYMMETRICAL
S4S	SURFACE 4 SIDES

T

T	SEMI-TANGENT
Tan	TANGENT
TBB	THRIE BEAM BARRIER
Tbr	TIMBER
TC	TOP OF CURB
TCB	TRAFFIC CONTROL BOX
TCE	TEMPORARY CONSTRUCTION EASEMENT
Tel	TELEPHONE
Temp	TEMPORARY
TG	TOP OF GRADE
Tot	TOTAL
TP	TELEPHONE POLE
TPB	TREATED PERMEABLE BASE
TPM	TREATED PERMEABLE MATERIAL
Trans	TRANSITION

T continued

TS	TRANSVERSE,
	TRAFFIC SIGNAL,
	TUBULAR STEEL
Typ	TYPICAL

U

UC	UNDERCROSSING
UD	UNDERDRAIN
UG	UNDERGROUND
UON	UNLESS OTHERWISE NOTED
UP	UNDERPASS

V

V	VALVE,
	DESIGN SPEED
Var	VARIABLE,
	VARIES
VC	VERTICAL CURVE
VCP	VITRIFIED CLAY PIPE
Vert	VERTICAL
Via	VIADUCT
Vol	VOLUME

W

W	WEST,
	WIDTH
WB	WESTBOUND
WH	WEEP HOLE
WM	WIRE MESH
WS	WATER SURFACE
WSP	WELDED STEEL PIPE
Wt	WEIGHT
WV	WATER VALVE
WW	WINGWALL
WWLOL	WINGWALL LAYOUT LINE

X

X Sec	CROSS SECTION
Xing	CROSSING

Y

Yr	YEAR
Yrs	YEARS

Dist	COUNTY	ROUTE	POST MILES TOTAL PROJECT	SHEET No.	TOTAL SHEETS
02	Plu	147	8.9/9.3	49	94

Grace M. Tsushima
REGISTERED CIVIL ENGINEER

July 19, 2013
PLANS APPROVAL DATE

REGISTERED PROFESSIONAL ENGINEER — Grace M. Tsushima — No. C49814 — Exp. 9-30-14 — CIVIL — STATE OF CALIFORNIA

THE STATE OF CALIFORNIA OR ITS OFFICERS OR AGENTS SHALL NOT BE RESPONSIBLE FOR THE ACCURACY OR COMPLETENESS OF SCANNED COPIES OF THIS PLAN SHEET.

TO ACCOMPANY PLANS DATED 11-30-15

UNIT OF MEASUREMENT SYMBOLS:

Some of the symbols used in the project plan quantity tables and in the Bid Item List are:

TABLE A

SYMBOL USED	DEFINITIONS
ACRE	ACRE
CF	CUBIC FOOT
CY	CUBIC YARD
EA	EACH
GAL	GALLON
LB	POUND
LF	LINEAR FOOT
SQFT	SQUARE FOOT
SQYD	SQUARE YARD
STA	100 FEET
TAB	TABLET
TON	2,000 POUNDS

Some of the symbols used in the plans other than in the project plan quantity tables are:

TABLE B

SYMBOL USED	DEFINITIONS
ksi	KIPS PER SQUARE INCH
ksf	KIPS PER SQUARE FOOT
psi	POUNDS PER SQUARE INCH
psf	POUNDS PER SQUARE FOOT
lb/ft^3, pcf	POUNDS PER CUBIC FOOT
tsf	TONS PER SQUARE FOOT
mph, MPH *	MILES PER HOUR
ø	NOMINAL DIAMETER
oz	OUNCE
lb	POUND
kip	1,000 POUNDS
cal	CALORIE
ft	FOOT OR FEET
gal	GALLON

* For use on a sign panel only

STATE OF CALIFORNIA
DEPARTMENT OF TRANSPORTATION

ABBREVIATIONS (SHEET 2 OF 2)

NO SCALE

RSP A10B DATED JULY 19, 2013 SUPERSEDES STANDARD PLAN A10B DATED MAY 20, 2011 - PAGE 2 OF THE STANDARD PLANS BOOK DATED 2010.

REVISED STANDARD PLAN RSP A10B

2010 REVISED STANDARD PLAN RSP A10B

DATE PLOTTED => 24-NOV-2015
TIME PLOTTED => 09:24

REFERENCE: CALTRANS SOIL & ROCK LOGGING, CLASSIFICATION, AND PRESENTATION MANUAL (2010)

Dist	COUNTY	ROUTE	POST MILES TOTAL PROJECT	SHEET No.	TOTAL SHEETS
02	Plu	147	8.9/9.3	50	94

CERTIFIED ENGINEERING GEOLOGIST

October 30, 2015
PLANS APPROVAL DATE

REGISTERED GEOLOGIST
CHRIS A. RISDEN
CERTIFIED ENGINEERING GEOLOGIST
No. 2541
Exp. 9-30-17
STATE OF CALIFORNIA

THE STATE OF CALIFORNIA OR ITS OFFICERS OR AGENTS SHALL NOT BE RESPONSIBLE FOR THE ACCURACY OR COMPLETENESS OF SCANNED COPIES OF THIS PLAN SHEET.

TO ACCOMPANY PLANS DATED 11-30-15

ABBREVIATION:

GWS = Ground Water Surface

CEMENTATION

DESCRIPTION	CRITERIA
WEAK	CRUMBLES OR BREAKS WITH HANDLING OR LITTLE FINGER PRESSURE.
MODERATE	CRUMBLES OR BREAKS WITH CONSIDERABLE FINGER PRESSURE.
STRONG	WILL NOT CRUMBLE OR BREAK WITH FINGER PRESSURE.

BOREHOLE IDENTIFICATION

SYMBOL	HOLE TYPE	DESCRIPTION
Size	A	AUGER BORING (HOLLOW OR SOLID STEM BUCKET)
Size	R RW RC P	ROTARY DRILLED BORING (CONVENTIONAL) ROTARY DRILLED WITH SELF-CASING WIRE-LINE ROTARY CORE WITH CONTINUOUSLY-SAMPLED, SELF-CASING WIRE-LINE ROTARY PERCUSSION BORING (AIR)
Size	R RC	ROTARY DRILLED DIAMOND CORE ROTARY DRILLED DIAMOND CORE, CONTINUOUSLY SAMPLED
Size	HD HA	HAND DRIVEN (1-INCH SOIL TUBE) HAND AUGER
●	D	DYNAMIC CONE PENETRATION BORING
▲	CPT	CONE PENETRATION TEST (ASTM D 5778)
⬚	O	OTHER (NOTE ON LOTB)

Note: Size in inches.

CONSISTENCY OF COHESIVE SOILS

DESCRIPTION	SHEAR STRENGTH (tsf)	POCKET PENETROMETER MEASUREMENT, PP, (tsf)	TORVANE MEASUREMENT, TV, (tsf)	VANE SHEAR MEASUREMENT, VS, (tsf)
VERY SOFT	LESS THAN 0.12	LESS THAN 0.25	LESS THAN 0.12	LESS THAN 0.12
SOFT	0.12 - 0.25	0.25 - 0.5	0.12 - 0.25	0.12 - 0.25
MEDIUM STIFF	0.25 - 0.5	0.5 - 1	0.25 - 0.5	0.25 - 0.5
STIFF	0.5 - 1	1 - 2	0.5 - 1	0.5 - 1
VERY STIFF	1 - 2	2 - 4	1 - 2	1 - 2
HARD	GREATER THAN 2	GREATER THAN 4	GREATER THAN 2	GREATER THAN 2

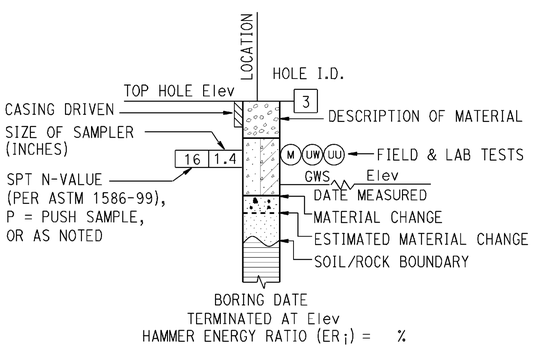

ROTARY BORING

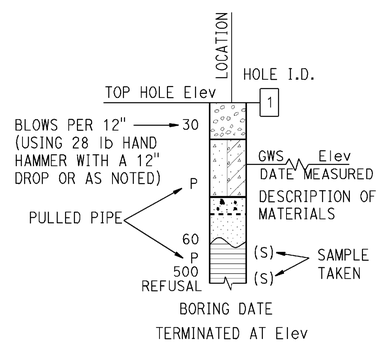

HAND BORING

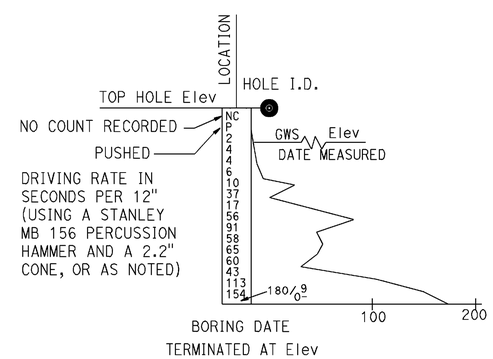

DYNAMIC CONE PENETRATION BORING

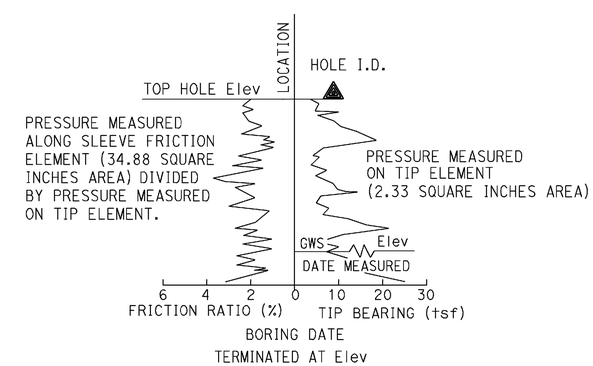

CONE PENETRATION TEST (CPT) BORING

STATE OF CALIFORNIA
DEPARTMENT OF TRANSPORTATION

LEGEND - SOIL (SHEET 1 OF 2)

NO SCALE

RSP A10F DATED OCTOBER 30, 2015 SUPERSEDES STANDARD PLAN A10F DATED MAY 20, 2011 - PAGE 6 OF THE STANDARD PLANS BOOK DATED 2010.

REVISED STANDARD PLAN RSP A10F

2010 REVISED STANDARD PLAN RSP A10F

DATE PLOTTED => 24-NOV-2015
TIME PLOTTED => 09:25

REFERENCE: CALTRANS SOIL & ROCK LOGGING, CLASSIFICATION, AND PRESENTATION MANUAL (2010)

Dist	COUNTY	ROUTE	POST MILES TOTAL PROJECT	SHEET No.	TOTAL SHEETS
02	Plu	147	8.9/9.3	51	94

CERTIFIED ENGINEERING GEOLOGIST

October 30, 2015
PLANS APPROVAL DATE

REGISTERED GEOLOGIST — CHRIS A. RISDEN — CERTIFIED ENGINEERING GEOLOGIST — No. 2541 Exp. 9-30-17 — STATE OF CALIFORNIA

THE STATE OF CALIFORNIA OR ITS OFFICERS OR AGENTS SHALL NOT BE RESPONSIBLE FOR THE ACCURACY OR COMPLETENESS OF SCANNED COPIES OF THIS PLAN SHEET.

TO ACCOMPANY PLANS DATED 11-30-15

GROUP SYMBOLS AND NAMES

GRAPHIC/SYMBOL	GROUP NAMES	GRAPHIC/SYMBOL	GROUP NAMES
GW	WELL-GRADED GRAVEL WELL-GRADED GRAVEL WITH SAND	CL	LEAN CLAY LEAN CLAY WITH SAND LEAN CLAY WITH GRAVEL SANDY LEAN CLAY SANDY LEAN CLAY WITH GRAVEL GRAVELLY LEAN CLAY GRAVELLY LEAN CLAY WITH SAND
GP	POORLY-GRADED GRAVEL POORLY-GRADED GRAVEL WITH SAND		
GW-GM	WELL-GRADED GRAVEL WITH SILT WELL-GRADED GRAVEL WITH SILT AND SAND	CL-ML	SILTY CLAY SILTY CLAY WITH SAND SILTY CLAY WITH GRAVEL SANDY SILTY CLAY SANDY SILTY CLAY WITH GRAVEL GRAVELLY SILTY CLAY GRAVELLY SILTY CLAY WITH SAND
GW-GC	WELL-GRADED GRAVEL WITH CLAY (OR SILTY CLAY) WELL-GRADED GRAVEL WITH CLAY AND SAND (OR SILTY CLAY AND SAND)		
GP-GM	POORLY-GRADED GRAVEL WITH SILT POORLY-GRADED GRAVEL WITH SILT AND SAND	ML	SILT SILT WITH SAND SILT WITH GRAVEL SANDY SILT SANDY SILT WITH GRAVEL GRAVELLY SILT GRAVELLY SILT WITH SAND
GP-GC	POORLY-GRADED GRAVEL WITH CLAY (OR SILTY CLAY) POORLY-GRADED GRAVEL WITH CLAY AND SAND (OR SILTY CLAY AND SAND)		
GM	SILTY GRAVEL SILTY GRAVEL WITH SAND	OL	ORGANIC LEAN CLAY ORGANIC LEAN CLAY WITH SAND ORGANIC LEAN CLAY WITH GRAVEL SANDY ORGANIC LEAN CLAY SANDY ORGANIC LEAN CLAY WITH GRAVEL GRAVELLY ORGANIC LEAN CLAY GRAVELLY ORGANIC LEAN CLAY WITH SAND
GC	CLAYEY GRAVEL CLAYEY GRAVEL WITH SAND		
GC-GM	SILTY, CLAYEY GRAVEL SILTY, CLAYEY GRAVEL WITH SAND	OL	ORGANIC SILT ORGANIC SILT WITH SAND ORGANIC SILT WITH GRAVEL SANDY ORGANIC SILT SANDY ORGANIC SILT WITH GRAVEL GRAVELLY ORGANIC SILT GRAVELLY ORGANIC SILT WITH SAND
SW	WELL-GRADED SAND WELL-GRADED SAND WITH GRAVEL		
SP	POORLY-GRADED SAND POORLY-GRADED SAND WITH GRAVEL	CH	FAT CLAY FAT CLAY WITH SAND FAT CLAY WITH GRAVEL SANDY FAT CLAY SANDY FAT CLAY WITH GRAVEL GRAVELLY FAT CLAY GRAVELLY FAT CLAY WITH SAND
SW-SM	WELL-GRADED SAND WITH SILT WELL-GRADED SAND WITH SILT AND GRAVEL		
SW-SC	WELL-GRADED SAND WITH CLAY (OR SILTY CLAY) WELL-GRADED SAND WITH CLAY AND GRAVEL (OR SILTY CLAY AND GRAVEL)	MH	ELASTIC SILT ELASTIC SILT WITH SAND ELASTIC SILT WITH GRAVEL SANDY ELASTIC SILT SANDY ELASTIC SILT WITH GRAVEL GRAVELLY ELASTIC SILT GRAVELLY ELASTIC SILT WITH SAND
SP-SM	POORLY-GRADED SAND WITH SILT POORLY-GRADED SAND WITH SILT AND GRAVEL		
SP-SC	POORLY-GRADED SAND WITH CLAY (OR SILTY CLAY) POORLY-GRADED SAND WITH CLAY AND GRAVEL (OR SILTY CLAY AND GRAVEL)	OH	ORGANIC FAT CLAY ORGANIC FAT CLAY WITH SAND ORGANIC FAT CLAY WITH GRAVEL SANDY ORGANIC FAT CLAY SANDY ORGANIC FAT CLAY WITH GRAVEL GRAVELLY ORGANIC FAT CLAY GRAVELLY ORGANIC FAT CLAY WITH SAND
SM	SILTY SAND SILTY SAND WITH GRAVEL		
SC	CLAYEY SAND CLAYEY SAND WITH GRAVEL	OH	ORGANIC ELASTIC SILT ORGANIC ELASTIC SILT WITH SAND ORGANIC ELASTIC SILT WITH GRAVEL SANDY ORGANIC ELASTIC SILT SANDY ORGANIC ELASTIC SILT WITH GRAVEL GRAVELLY ORGANIC ELASTIC SILT GRAVELLY ORGANIC ELASTIC SILT WITH SAND
SC-SM	SILTY, CLAYEY SAND SILTY, CLAYEY SAND WITH GRAVEL		
PT	PEAT	OL/OH	ORGANIC SOIL ORGANIC SOIL WITH SAND ORGANIC SOIL WITH GRAVEL SANDY ORGANIC SOIL SANDY ORGANIC SOIL WITH GRAVEL GRAVELLY ORGANIC SOIL GRAVELLY ORGANIC SOIL WITH SAND
	COBBLES COBBLES AND BOULDERS BOULDERS		

FIELD AND LABORATORY TESTING

- (C) CONSOLIDATION (ASTM D2435)
- (CL) COLLAPSE POTENTIAL (ASTM D4546)
- (CP) COMPACTION CURVE (CTM 216)
- (CR) CORROSIVITY TESTING (CTM 643, CTM 422, CTM 417)
- (CU) CONSOLIDATED UNDRAINED TRIAXIAL (ASTM D4767)
- (DS) DIRECT SHEAR (ASTM D3080)
- (EI) EXPANSION INDEX (ASTM D4829)
- (M) MOISTURE CONTENT (ASTM D2216)
- (OC) ORGANIC CONTENT-% (ASTM D2974)
- (P) PERMEABILITY (CTM 220)
- (PA) PARTICLE SIZE ANALYSIS (ASTM D422)
- (PI) PLASTICITY INDEX (AASHTO T 90) LIQUID LIMIT (AASHTO T 89)
- (PL) POINT LOAD INDEX (ASTM D5731)
- (PM) PRESSURE METER
- (R) R-VALUE (CTM 301)
- (SE) SAND EQUIVALENT (CTM 217)
- (SG) SPECIFIC GRAVITY (AASHTO T 100)
- (SL) SHRINKAGE LIMIT (ASTM D4943)
- (SW) SWELL POTENTIAL (ASTM D4546)
- (UC) UNCONFINED COMPRESSION-SOIL (ASTM D2166) UNCONFINED COMPRESSION-ROCK (ASTM D7012 - METHOD C)
- (UU) UNCONSOLIDATED UNDRAINED TRIAXIAL (ASTM D2850)
- (UW) UNIT WEIGHT (ASTM D7263 - METHOD B)

APPARENT DENSITY OF COHESIONLESS SOILS

DESCRIPTION	SPT N_{60} (BLOWS / 12 INCHES)
VERY LOOSE	0 - 5
LOOSE	5 - 10
MEDIUM DENSE	10 - 30
DENSE	30 - 50
VERY DENSE	GREATER THAN 50

MOISTURE

DESCRIPTION	CRITERIA
DRY	NO DISCERNABLE MOISTURE
MOIST	MOISTURE PRESENT, BUT NO FREE WATER
WET	VISIBLE FREE WATER

PERCENT OR PROPORTION OF SOILS

DESCRIPTION	CRITERIA
TRACE	PARTICLES ARE PRESENT BUT ESTIMATED TO BE LESS THAN 5%
FEW	5% - 10%
LITTLE	15% - 25%
SOME	30% - 45%
MOSTLY	50% - 100%

PARTICLE SIZE

DESCRIPTION		SIZE
BOULDER		GREATER THAN 12"
COBBLE		3" - 12"
GRAVEL	COARSE	3/4" - 3"
	FINE	1/5" - 3/4"
SAND	COARSE	1/16" - 1/5"
	MEDIUM	1/64" - 1/16"
	FINE	1/300" - 1/64"
SILT AND CLAY		LESS THAN 1/300"

STATE OF CALIFORNIA
DEPARTMENT OF TRANSPORTATION

LEGEND - SOIL (SHEET 2 OF 2)

NO SCALE

RSP A10G DATED OCTOBER 30, 2015 SUPERSEDES STANDARD PLAN A10G DATED MAY 20, 2011 - PAGE 7 OF THE STANDARD PLANS BOOK DATED 2010.

REVISED STANDARD PLAN RSP A10G

2010 REVISED STANDARD PLAN RSP A10G

DATE PLOTTED => 24-NOV-2015
TIME PLOTTED => 09:25

Dist	COUNTY	ROUTE	POST MILES TOTAL PROJECT	SHEET No.	TOTAL SHEETS
02	Plu	147	8.9/9.3	52	94

REGISTERED CIVIL ENGINEER

July 19, 2013
PLANS APPROVAL DATE

REGISTERED PROFESSIONAL ENGINEER Roberta L. McLaughlin No. C40375 Exp. 3-31-15 CIVIL STATE OF CALIFORNIA

THE STATE OF CALIFORNIA OR ITS OFFICERS OR AGENTS SHALL NOT BE RESPONSIBLE FOR THE ACCURACY OR COMPLETENESS OF SCANNED COPIES OF THIS PLAN SHEET.

TO ACCOMPANY PLANS DATED 11-30-15

EXIT RAMP NEUTRAL AREA (GORE) TREATMENT

DETAIL 36

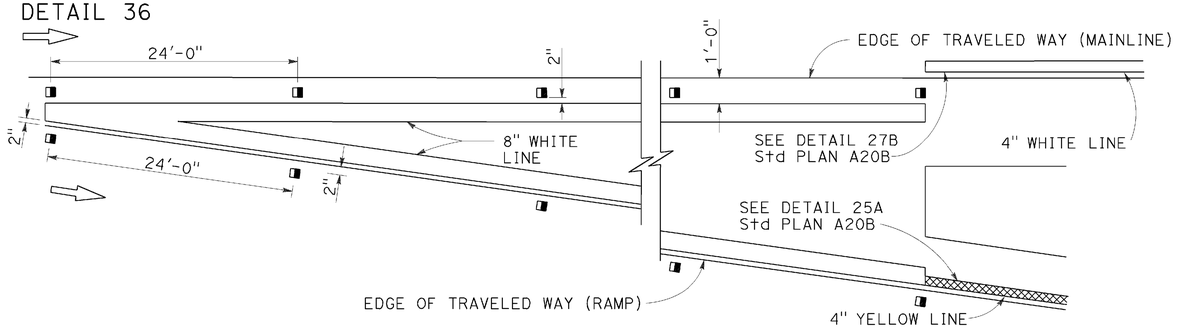

ENTRANCE RAMP NEUTRAL AREA (MERGE) TREATMENT

DETAIL 36A

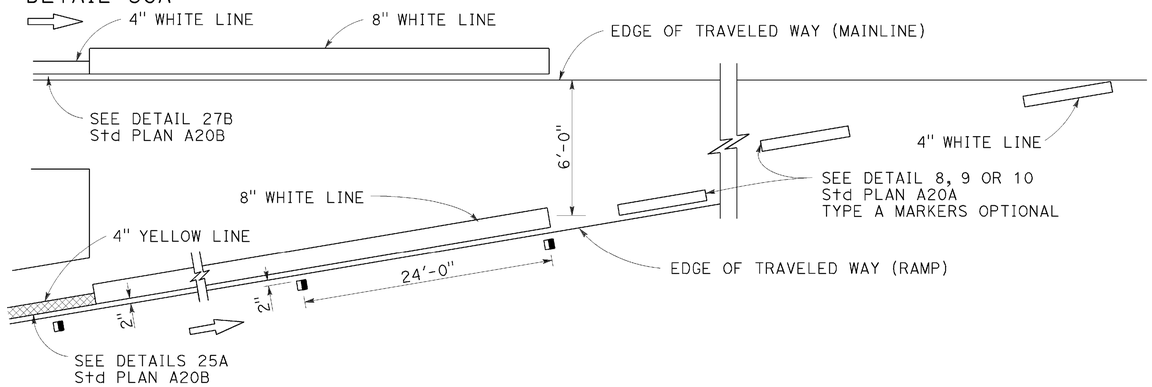

ENTRANCE RAMP NEUTRAL AREA (ACCELERATION LANE) TREATMENT

DETAIL 36B

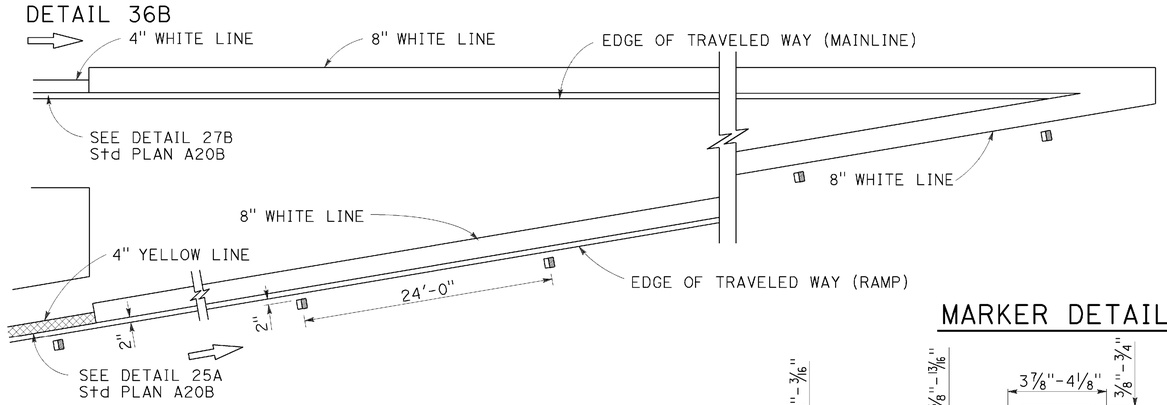

MARKER DETAILS

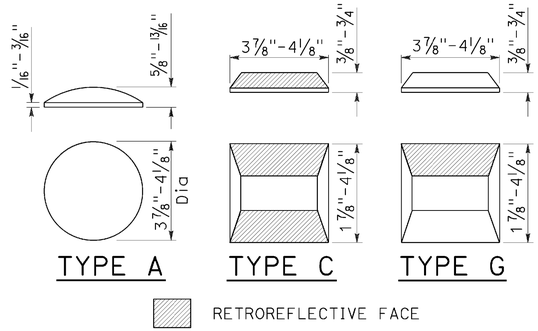

LEGEND:

MARKERS

- ○ TYPE A WHITE NON-REFLECTIVE
- ⊟ TYPE C RED-CLEAR RETROREFLECTIVE
- ◨ TYPE G ONE-WAY CLEAR RETROREFLECTIVE

LANE DROP AT EXIT RAMPS

DETAIL 37

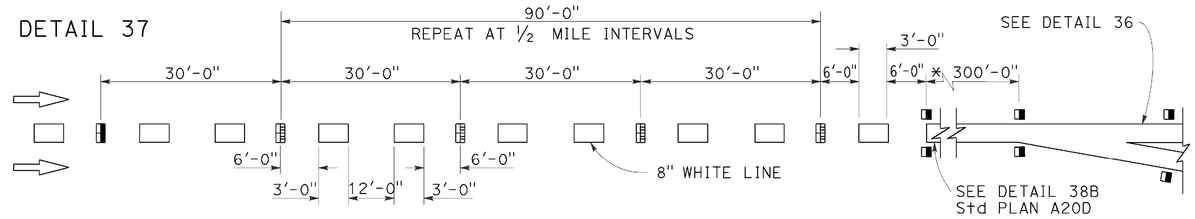

DETAIL 37A

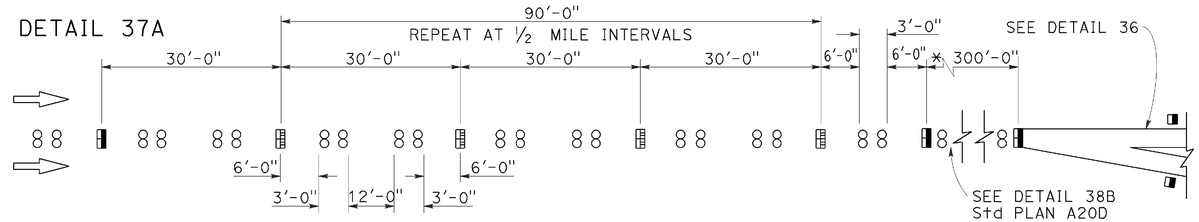

* The solid channelizing line shown may be omitted on short auxiliary lanes where weaving length is critical.

LANE DROP AT INTERSECTIONS

DETAIL 37B

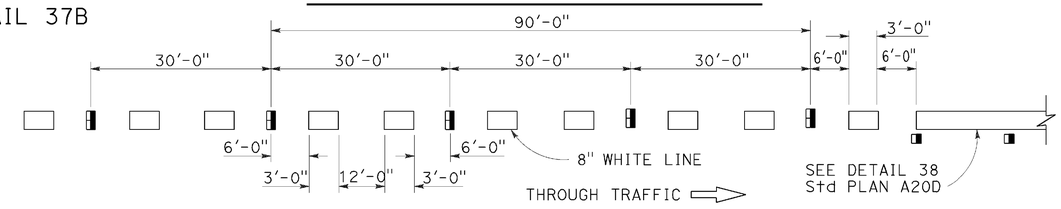

DETAIL 37C

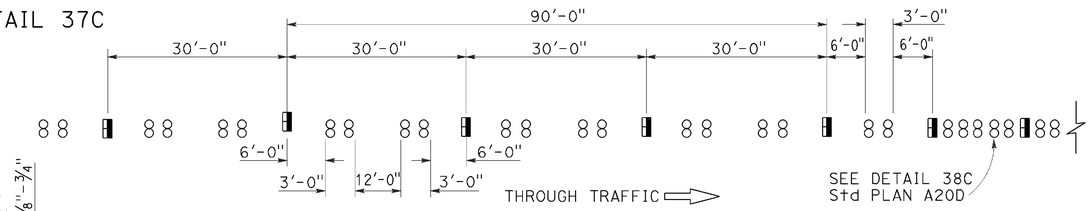

STATE OF CALIFORNIA
DEPARTMENT OF TRANSPORTATION

PAVEMENT MARKERS AND TRAFFIC LINE TYPICAL DETAILS

NO SCALE

RSP A20C DATED JULY 19, 2013 SUPERSEDES STANDARD PLAN A20C DATED MAY 20, 2011 - PAGE 11 OF THE STANDARD PLANS BOOK DATED 2010.

REVISED STANDARD PLAN RSP A20C

2010 REVISED STANDARD PLAN RSP A20C

DATE PLOTTED => 24-NOV-2015
TIME PLOTTED => 09:26

Dist	COUNTY	ROUTE	POST MILES TOTAL PROJECT	SHEET No.	TOTAL SHEETS
02	Plu	147	8.9/9.3	53	94

Randell D. Hiatt
REGISTERED CIVIL ENGINEER

July 19, 2013
PLANS APPROVAL DATE

REGISTERED PROFESSIONAL ENGINEER Randell D. Hiatt No. C50200 Exp. 6-30-15 CIVIL STATE OF CALIFORNIA

THE STATE OF CALIFORNIA OR ITS OFFICERS OR AGENTS SHALL NOT BE RESPONSIBLE FOR THE ACCURACY OR COMPLETENESS OF SCANNED COPIES OF THIS PLAN SHEET.

TO ACCOMPANY PLANS DATED 11-30-15

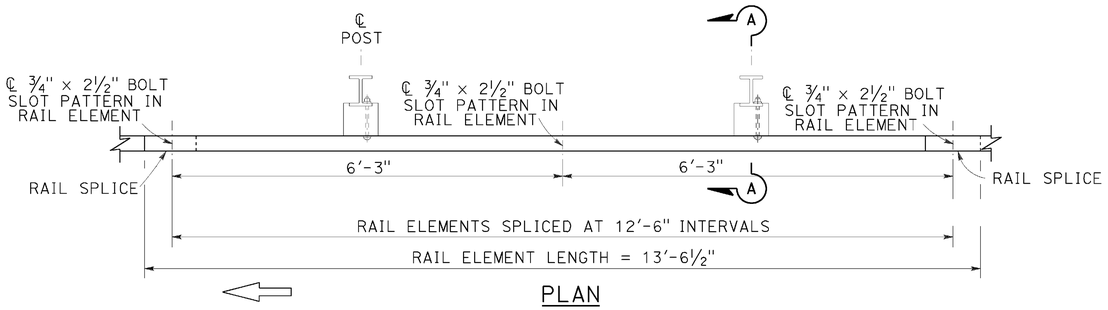

PLAN

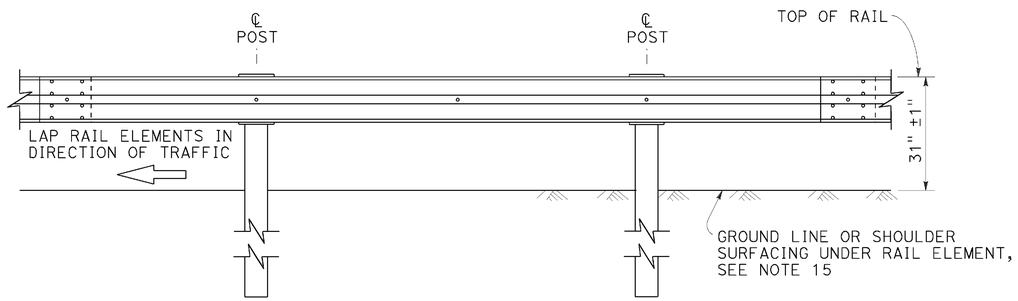

ELEVATION

MIDWEST GUARDRAIL SYSTEM WITH STEEL POSTS AND NOTCHED WOOD OR NOTCHED RECYCLED PLASTIC BLOCKS

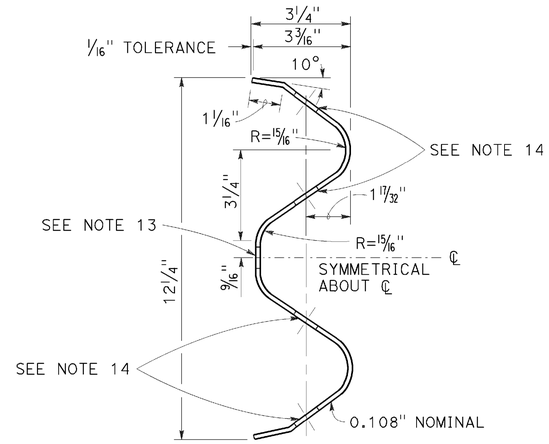

SECTION THRU RAIL ELEMENT

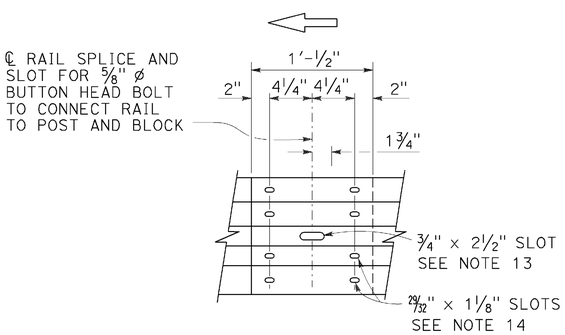

ELEVATION

RAIL ELEMENT SPLICE DETAIL

a) Connect the over lapped end of the rail elements with ⅝" ø × 1⅜" button head oval shoulder splice bolts inserted into the 29/32" × 1⅛" slots and bolted together with ⅝" ø recessed hex nuts. Recess of hex nut points toward rail element. A total of 8 bolts and nuts are to be used at each rail splice connection.

b) The ends of the rail elements are to be overlapped in the direction of traffic (see details).

c) Where end cap is to be attached to the end of a rail element, a total of 4 of the above described splice bolts and nuts are to be used.

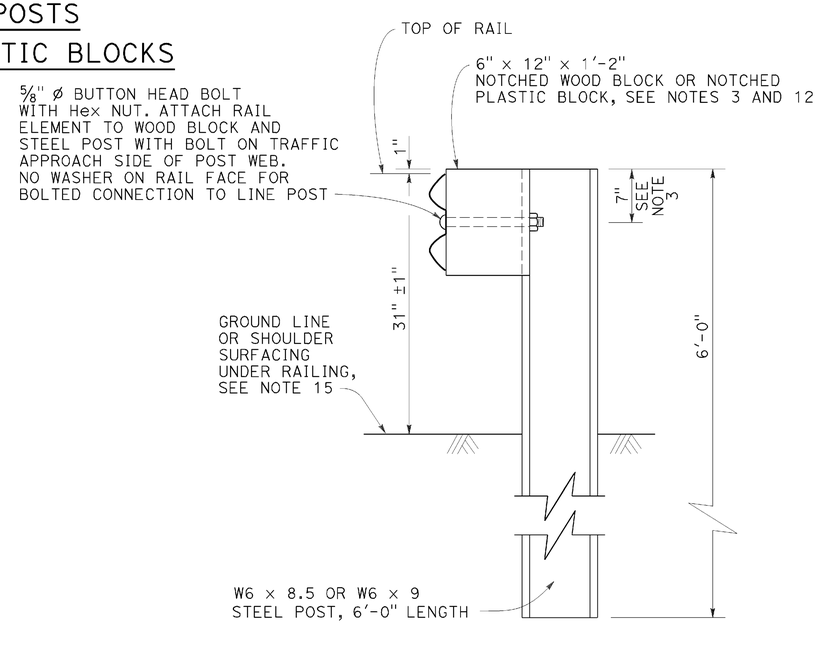

SECTION A-A

TYPICAL STEEL LINE POST INSTALLATION

See Note 4

NOTES:

1. For details of wood post installations, see Revised Standard Plan RSP A77L1.
2. For details of standard hardware used to construct MGS, see Revised Standard Plan RSP A77M1.
3. For details of steel posts and notched wood blocks used to construct MGS, see Revised Standard Plan RSP A77N2.
4. For additional installation details, see Revised Standard Plan RSP A77N3.
5. MGS post spacing to be 6'-3" center to center, except as otherwise noted.
6. For MGS typical layouts, see the A77P, A77Q and A77R Series of Standard Plans.
7. If railing is connected to terminal system end treatment, use 31" height terminal system end treatment.
8. For MGS end anchor details, see Revised Standard Plans RSP A77S1 and RSP A77T2.
9. For details of MGS transition to bridge railing, see Revised Standard Plan RSP A77U4.
10. For additional details of MGS connection to bridge railings, see Revised Standard Plans RSP A77U1, RSP A77U2 and RSP A77V1.
11. For dike positioning and MGS delineation details, see Revised Standard Plan RSP A77N4.
12. Notched face of block faces steel post.
13. Slotted hole for bolted connection of rail element to block and post. See "Section Thru Rail Element".
14. Slotted holes for splice bolts to overlap ends of rail element. See "Section Thru Rail Element".
15. Install posts in soil.

STATE OF CALIFORNIA
DEPARTMENT OF TRANSPORTATION

MIDWEST GUARDRAIL SYSTEM STANDARD RAILING SECTION (STEEL POST WITH NOTCHED WOOD OR NOTCHED RECYCLED PLASTIC BLOCK)

NO SCALE

RSP A77L2 DATED JULY 19, 2013 SUPPLEMENTS THE STANDARD PLANS BOOK DATED 2010.

REVISED STANDARD PLAN RSP A77L2

2010 REVISED STANDARD PLAN RSP A77L2

DATE PLOTTED => 24-NOV-2015
TIME PLOTTED => 09:26

Dist	COUNTY	ROUTE	POST MILES TOTAL PROJECT	SHEET No.	TOTAL SHEETS
02	Plu	147	8.9/9.3	54	94

Randell D. Hiatt
REGISTERED CIVIL ENGINEER

July 19, 2013
PLANS APPROVAL DATE

REGISTERED PROFESSIONAL ENGINEER
Randell D. Hiatt
No. C50200
Exp. 6-30-15
CIVIL
STATE OF CALIFORNIA

THE STATE OF CALIFORNIA OR ITS OFFICERS OR AGENTS SHALL NOT BE RESPONSIBLE FOR THE ACCURACY OR COMPLETENESS OF SCANNED COPIES OF THIS PLAN SHEET.

TO ACCOMPANY PLANS DATED 11-30-15

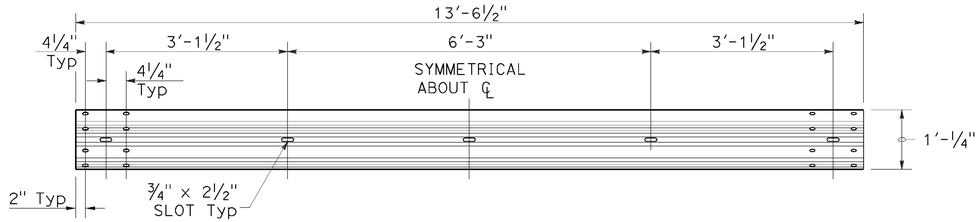

TYPICAL RAIL ELEMENT

NOTE:

1. Slotted holes for splice bolts to overlap ends of rail element.

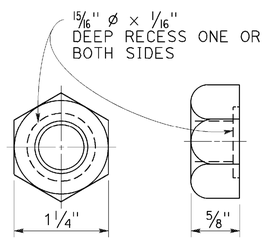

⅝" ø RECESS NUT

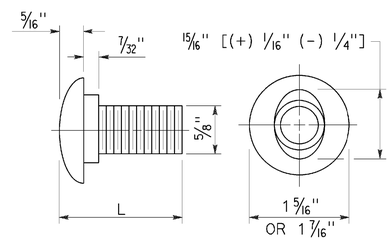

⅝" ø BUTTON HEAD BOLT

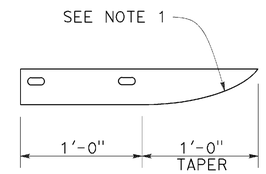

PLAN

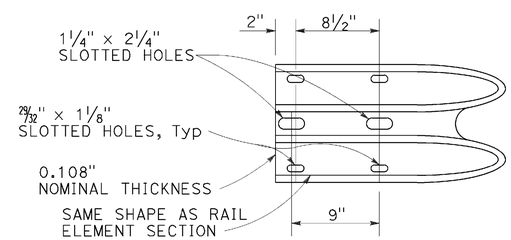

ELEVATION

END CAP
(TYPE A)

BUTTON HEAD BOLT

L	THREAD LENGTH
1⅜"	FULL THREAD LENGTH
2"	FULL THREAD LENGTH
10"	4" Min THREAD LENGTH
18"	4" Min THREAD LENGTH
20"	4" Min THREAD LENGTH
22"	4" Min THREAD LENGTH
26"	4" Min THREAD LENGTH
36"	4" Min THREAD LENGTH
** 2¾"	2" Min THREAD LENGTH
** 19"	4" Min THREAD LENGTH

** For nested rail applications.

STATE OF CALIFORNIA
DEPARTMENT OF TRANSPORTATION

MIDWEST GUARDRAIL SYSTEM STANDARD HARDWARE

NO SCALE

RSP A77M1 DATED JULY 19, 2013 SUPPLEMENTS THE STANDARD PLANS BOOK DATED 2010.

REVISED STANDARD PLAN RSP A77M1

2010 REVISED STANDARD PLAN RSP A77M1

DATE PLOTTED => 24-NOV-2015
TIME PLOTTED => 09:26

Dist	COUNTY	ROUTE	POST MILES TOTAL PROJECT	SHEET No.	TOTAL SHEETS
02	Plu	147	8.9/9.3	55	94

Randell D. Hiatt
REGISTERED CIVIL ENGINEER

November 15, 2013
PLANS APPROVAL DATE

REGISTERED PROFESSIONAL ENGINEER
Randell D. Hiatt
No. C50200
Exp. 6-30-15
CIVIL
STATE OF CALIFORNIA

THE STATE OF CALIFORNIA OR ITS OFFICERS OR AGENTS SHALL NOT BE RESPONSIBLE FOR THE ACCURACY OR COMPLETENESS OF SCANNED COPIES OF THIS PLAN SHEET.

TO ACCOMPANY PLANS DATED 11-30-15

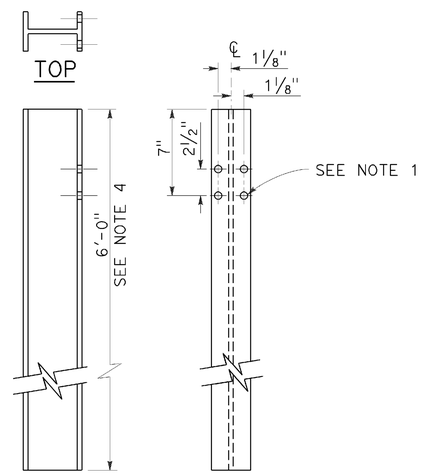

W6 x 9 OR W6 x 8.5
STEEL POST
See Note 4

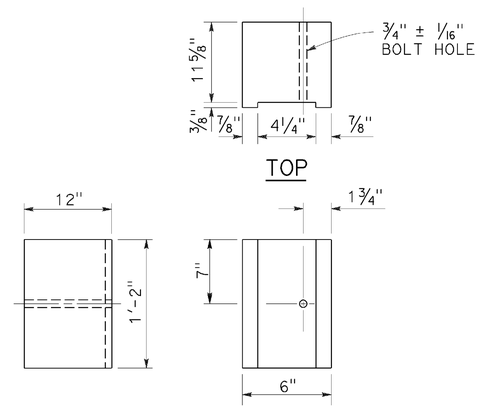

6" x 12"
NOTCHED WOOD BLOCK
See Notes 2 and 3

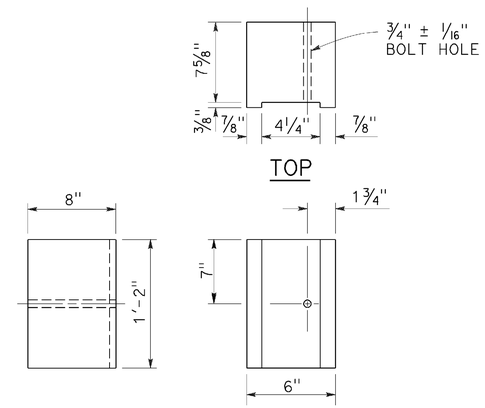

6" x 8"
NOTCHED WOOD BLOCK
Only for use with metal beam guard railing. See Note 5

NOTES:

1. All holes in steel post shall be 13/16" Dia maximum.
2. Dimensions shown for wood block are nominal.
3. Notched face of block faces steel post.
4. 6'-0" length posts to be used for typical roadway installation. See Revised Standard Plan RSP A77N3.
5. See Revised Standard Plan RSP A77L3 for use of 6" x 8" and 8" x 8" notched wood blocks.
6. This post and 8" x 12" block combination to be used for line post sections of MGS on narrow roadways and where strengthened line post sections of MGS are warranted to shield fixed objects.

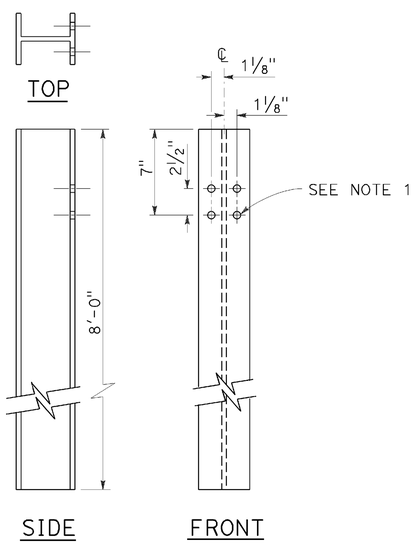

W6 x 15
STEEL POST
See Note 6

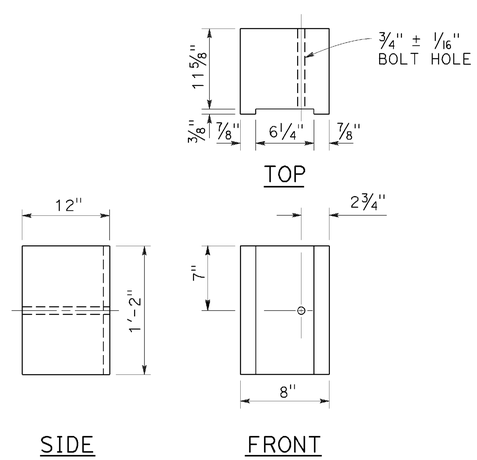

8" x 12"
NOTCHED WOOD BLOCK
See Notes 2 and 3

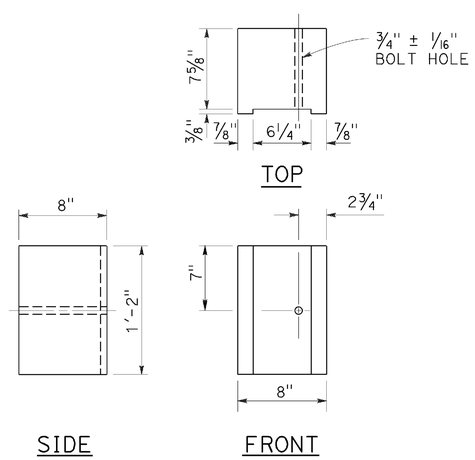

8" x 8"
NOTCHED WOOD BLOCK
Only for use with metal beam guard railing. See Note 5

STATE OF CALIFORNIA
DEPARTMENT OF TRANSPORTATION

MIDWEST GUARDRAIL SYSTEM STEEL POST AND NOTCHED WOOD BLOCK DETAILS

NO SCALE

RSP A77N2 DATED NOVEMBER 15, 2013 SUPERSEDES RSP A77N2
DATED JULY 19, 2013 THAT SUPPLEMENTS THE STANDARD PLANS BOOK DATED 2010.

REVISED STANDARD PLAN RSP A77N2

2010 REVISED STANDARD PLAN RSP A77N2

DATE PLOTTED => 24-NOV-2015
TIME PLOTTED => 09:27

Dist	COUNTY	ROUTE	POST MILES TOTAL PROJECT	SHEET No.	TOTAL SHEETS
02	Plu	147	8.9/9.3	56	94

Randell D. Hiatt
REGISTERED CIVIL ENGINEER

November 15, 2013
PLANS APPROVAL DATE

REGISTERED PROFESSIONAL ENGINEER
Randell D. Hiatt
No. C50200
Exp. 6-30-15
CIVIL
STATE OF CALIFORNIA

THE STATE OF CALIFORNIA OR ITS OFFICERS OR AGENTS SHALL NOT BE RESPONSIBLE FOR THE ACCURACY OR COMPLETENESS OF SCANNED COPIES OF THIS PLAN SHEET.

TO ACCOMPANY PLANS DATED 11-30-15

NOTE:

See Revised Standard Plans RSP A77S1, RSP A77S2 and RSP A77T1 for typical use of anchor cable and anchor plate.

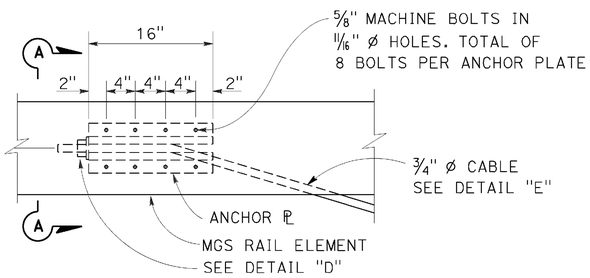

ANCHOR PLATE DETAIL
(MGS shown, TBB similar)

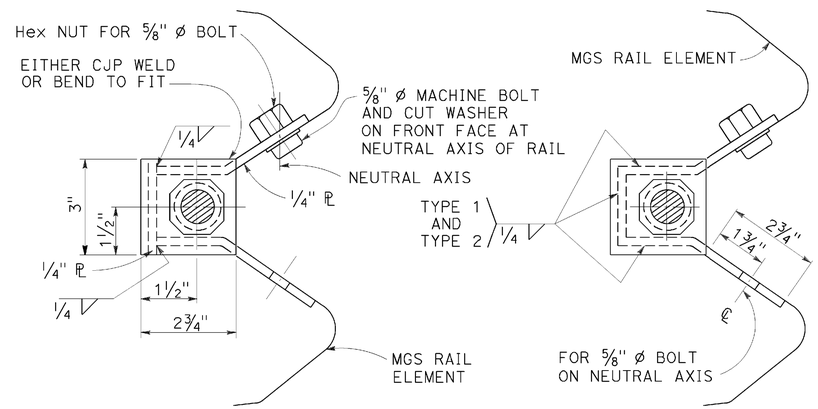

NOTE:
Dimensioning applies to both types.

SECTION A-A
(ALTERNATIVE TYPE 1)

SECTION A-A
(ALTERNATIVE TYPE 2)

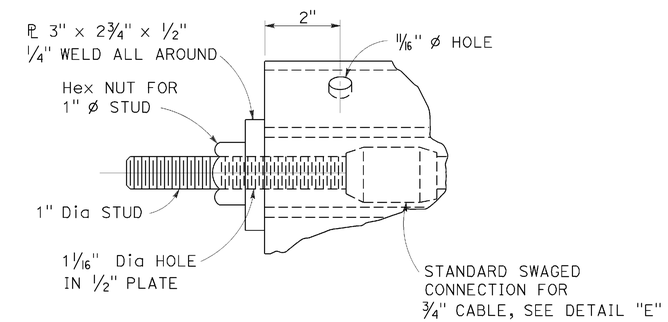

DETAIL "D"

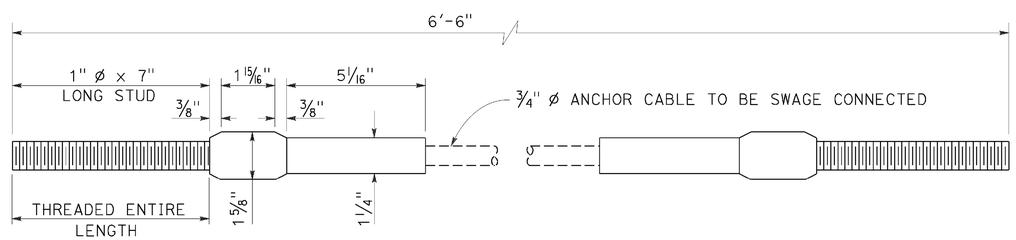

ANCHOR CABLE WITH
SWAGED FITTING AND STUD
DETAIL "E"

STATE OF CALIFORNIA
DEPARTMENT OF TRANSPORTATION

METAL RAILING ANCHOR CABLE AND ANCHOR PLATE DETAILS

NO SCALE

RSP A77S3 DATED NOVEMBER 15, 2013 SUPERSEDES RSP A77S3
DATED JULY 19, 2013 THAT SUPPLEMENTS THE STANDARD PLANS BOOK DATED 2010.

REVISED STANDARD PLAN RSP A77S3

2010 REVISED STANDARD PLAN RSP A77S3

DATE PLOTTED => 24-NOV-2015
TIME PLOTTED => 09:27

Dist	COUNTY	ROUTE	POST MILES TOTAL PROJECT	SHEET No.	TOTAL SHEETS
02	Plu	147	8.9/9.3	57	94

Randell D. Hiatt
REGISTERED CIVIL ENGINEER

July 19, 2013
PLANS APPROVAL DATE

REGISTERED PROFESSIONAL ENGINEER
Randell D. Hiatt
No. C50200
Exp. 6-30-15
CIVIL
STATE OF CALIFORNIA

THE STATE OF CALIFORNIA OR ITS OFFICERS OR AGENTS SHALL NOT BE RESPONSIBLE FOR THE ACCURACY OR COMPLETENESS OF SCANNED COPIES OF THIS PLAN SHEET.

TO ACCOMPANY PLANS DATED 11-30-15

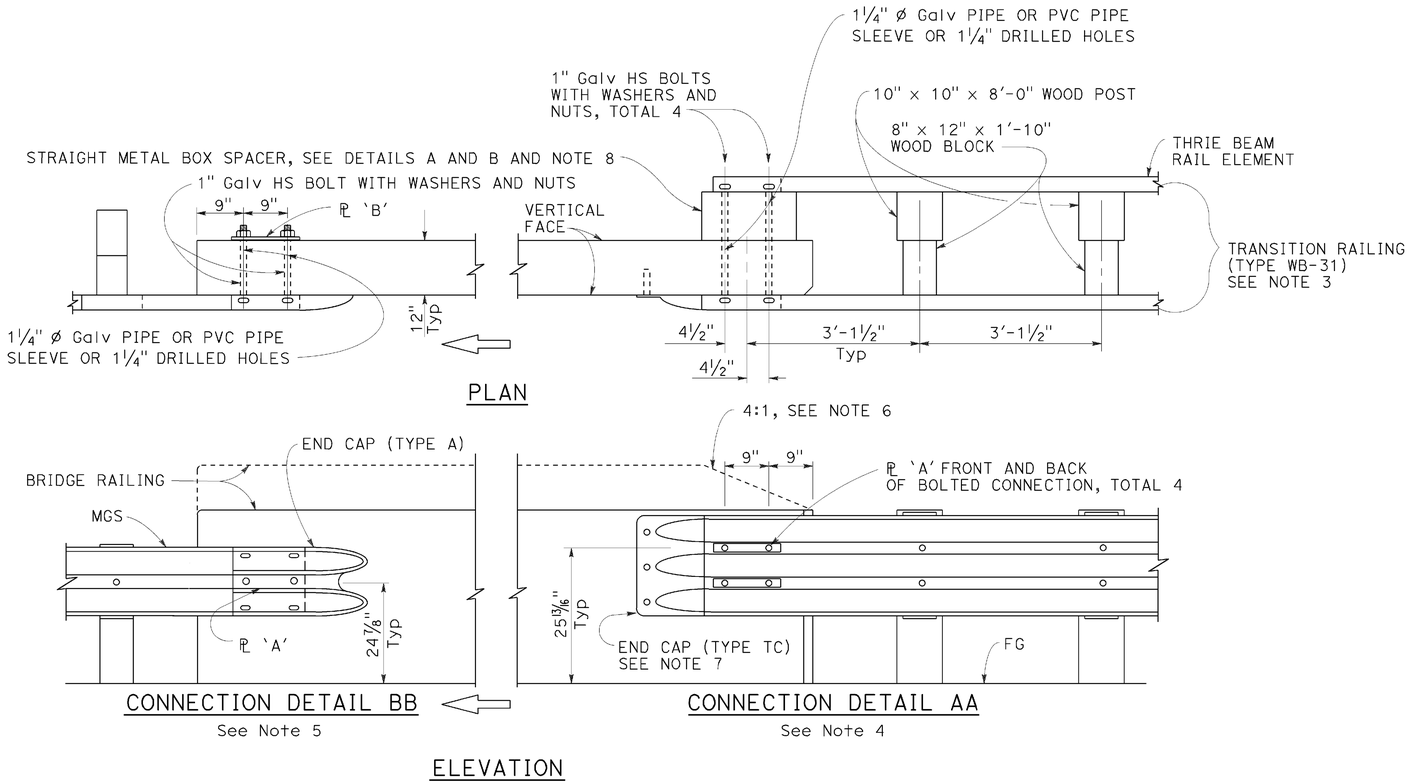

MIDWEST GUARDRAIL SYSTEM CONNECTION TO BRIDGE RAILING WITHOUT SIDEWALK

NOTES:

1. See Revised Standard Plan RSP A77U2 for additional connection details to bridges without sidewalks.
2. Additional details of posts, blocks and hardware are shown on Revised Standard Plans RSP A77M1, RSP A77N1 and RSP A77N2.
3. For additional details of Transition Railing (Type WB-31), see Revised Standard Plan RSP A77U4. Transition Railing (Type WB-31) transitions the 12 gauge MGS railing section to a heavier gage nested thrie beam railing section which is connected to the concrete bridge railing.
4. For typical use of Connection Detail AA, see Layout Types 12A and 12B on Revised Standard Plan RSP A77Q1, Layout Types 12C and 12D on Revised Standard Plan RSP A77Q2, and Layout Type 12E on Revised Standard Plan RSP A77Q3.
5. For typical use of Connection Detail BB, see Layout Type 12D (structure departure railing connection) on Revised Standard Plan RSP A77Q2 and Layout Type 12DD on Revised Standard Plan RSP A77Q5.
6. Where the height of the bridge railing exceeds the height of the thrie beam railing by more than 1" at Connection Detail AA, taper the top of the end of the bridge railing at 4:1 to match the top elevation of the thrie beam rail.
7. For details of End Cap (Type TC), see Revised Standard Plan RSP A77U4.
8. See Revised Standard Plan RSP A77U4 for additional details regarding depth dimension for straight metal box spacer.

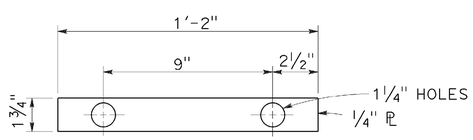

PLATE 'A'

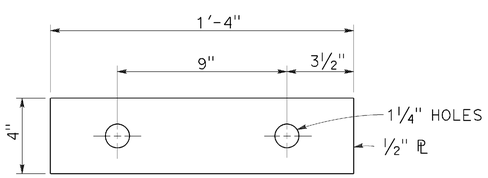

PLATE 'B'
(For backside of connection BB)

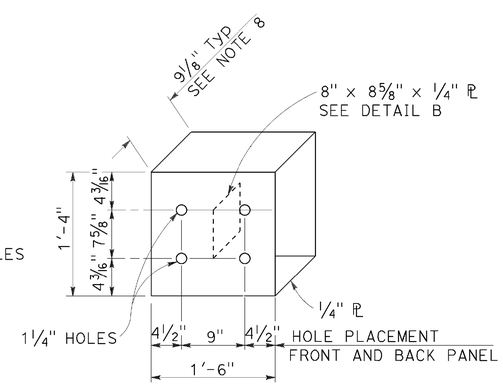

DETAIL A

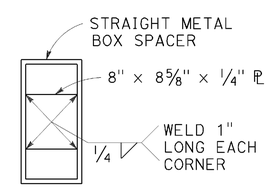

DETAIL B

STRAIGHT METAL BOX SPACER

STATE OF CALIFORNIA
DEPARTMENT OF TRANSPORTATION

MIDWEST GUARDRAIL SYSTEM CONNECTIONS TO BRIDGE RAILINGS WITHOUT SIDEWALKS DETAILS No. 1

NO SCALE

RSP A77U1 DATED JULY 19, 2013 SUPPLEMENTS THE STANDARD PLANS BOOK DATED 2010.

REVISED STANDARD PLAN RSP A77U1

2010 REVISED STANDARD PLAN RSP A77U1

DATE PLOTTED => 24-NOV-2015
TIME PLOTTED => 09:28

Dist	COUNTY	ROUTE	POST MILES TOTAL PROJECT	SHEET No.	TOTAL SHEETS
02	Plu	147	8.9/9.3	58	94

Randell D. Hiatt
REGISTERED CIVIL ENGINEER

July 19, 2013
PLANS APPROVAL DATE

REGISTERED PROFESSIONAL ENGINEER
Randell D. Hiatt
No. C50200
Exp. 6-30-15
CIVIL
STATE OF CALIFORNIA

THE STATE OF CALIFORNIA OR ITS OFFICERS OR AGENTS SHALL NOT BE RESPONSIBLE FOR THE ACCURACY OR COMPLETENESS OF SCANNED COPIES OF THIS PLAN SHEET.

TO ACCOMPANY PLANS DATED 11-30-15

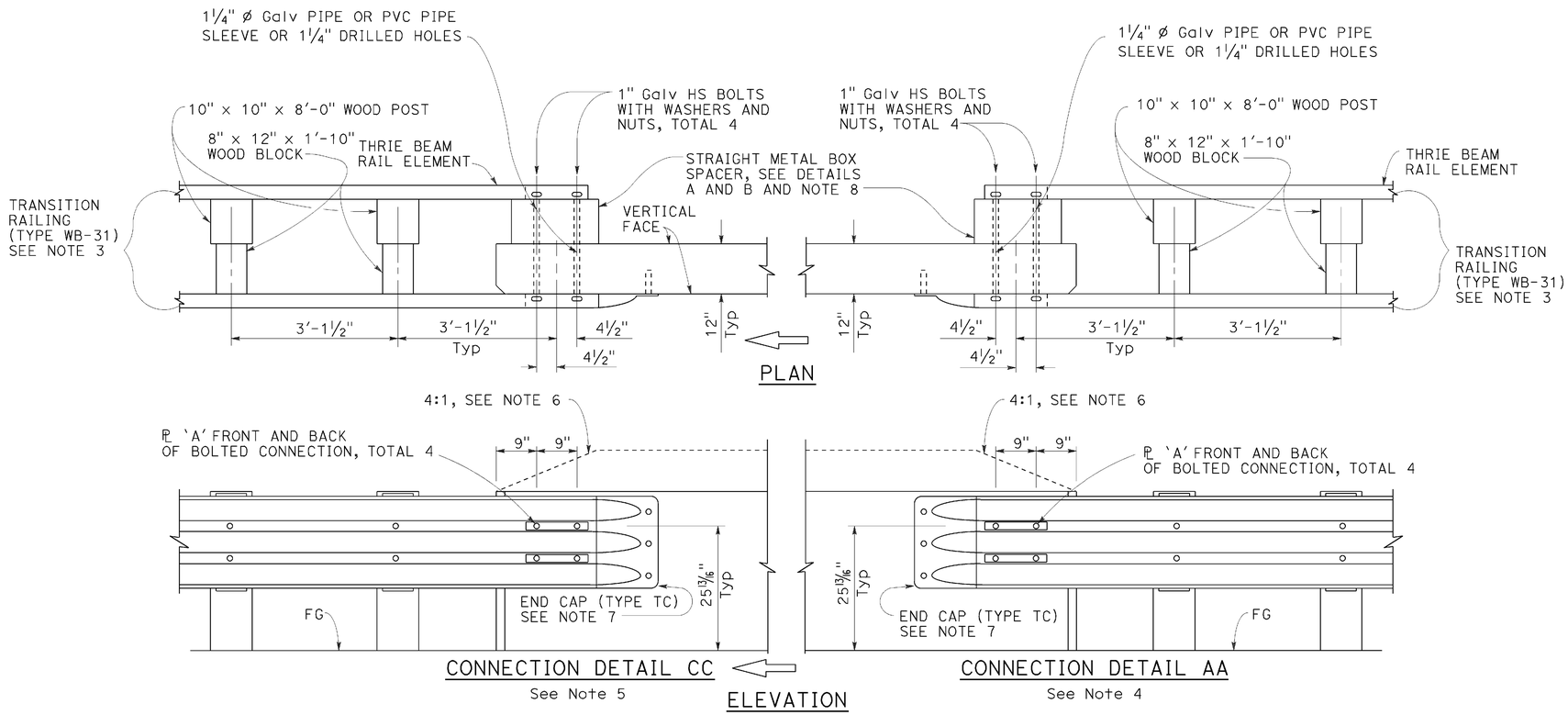

MIDWEST GUARDRAIL SYSTEM CONNECTION TO BRIDGE RAILING WITHOUT SIDEWALK

NOTES:

1. See Revised Standard Plan RSP A77U1 for additional connection details to bridges without sidewalks.
2. Additional details of posts, blocks and hardware are shown on Revised Standard Plans RSP A77M1, RSP A77N1 and RSP A77N2.
3. For additional details of Transition Railing (Type WB-31), see Revised Standard Plan RSP A77U4. Transition Railing (Type WB-31) transitions the 12 gauge MGS railing section to a heavier gage nested thrie beam railing section which is connected to the concrete bridge railing.
4. For typical use of Connection Detail AA, see Layout Types 12A and 12B on Revised Standard Plan RSP A77Q1, Layout Types 12C and 12D on Revised Standard Plan RSP A77Q2, and Layout Type 12E on Revised Standard Plan RSP A77Q3.
5. For typical use of Connection Detail CC, see Layout Types 12AA and 12BB on Revised Standard Plan RSP A77Q4 and Layout Type 12CC on Revised Standard Plan RSP A77Q5.
6. Where the height of the bridge railing exceeds the height of the thrie beam railing by more than 1" at Connection Detail AA and connection Detail CC, taper the top of the end of the bridge railing at 4:1 to match the top elevation of the thrie beam railing.
7. For details of End Cap (Type TC), see Revised Standard Plan RSP A77U4.
8. See Revised Standard Plan RSP A77U4 for additional details regarding depth dimension for straight metal box spacer.

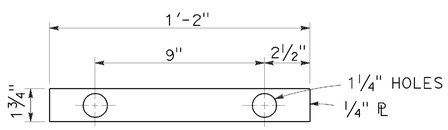

PLATE 'A'

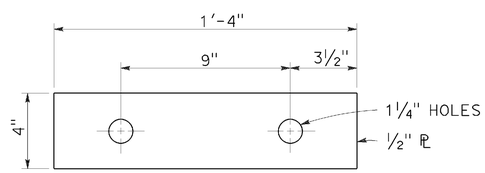

PLATE 'B'
(For backside of connection BB)

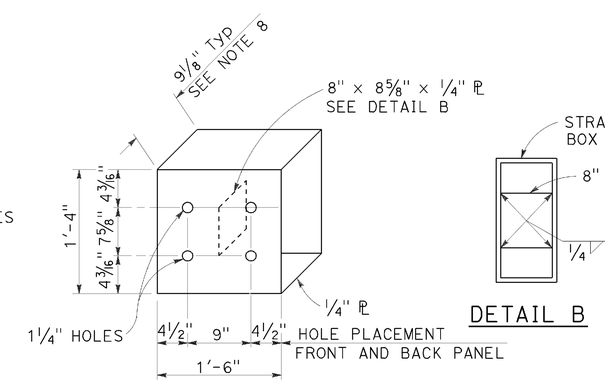

STATE OF CALIFORNIA
DEPARTMENT OF TRANSPORTATION

MIDWEST GUARDRAIL SYSTEM CONNECTIONS TO BRIDGE RAILINGS WITHOUT SIDEWALKS DETAILS No. 2

NO SCALE

RSP A77U2 DATED JULY 19, 2013 SUPPLEMENTS THE STANDARD PLANS BOOK DATED 2010.

REVISED STANDARD PLAN RSP A77U2

2010 REVISED STANDARD PLAN RSP A77U2

DATE PLOTTED => 24-NOV-2015
TIME PLOTTED => 09:28

Dist	COUNTY	ROUTE	POST MILES TOTAL PROJECT	SHEET No.	TOTAL SHEETS
02	Plu	147	8.9/9.3	59	94

REGISTERED CIVIL ENGINEER

January 15, 2016
PLANS APPROVAL DATE

REGISTERED PROFESSIONAL ENGINEER
Michael Janzen
No. 44788
Exp. 3-31-16
CIVIL
STATE OF CALIFORNIA

THE STATE OF CALIFORNIA OR ITS OFFICERS OR AGENTS SHALL NOT BE RESPONSIBLE FOR THE ACCURACY OR COMPLETENESS OF SCANNED COPIES OF THIS PLAN SHEET.

TO ACCOMPANY PLANS DATED 11-30-15

2015 REVISED STANDARD PLAN RSP A87B

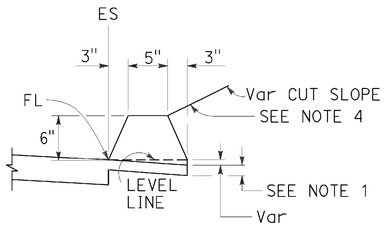

TYPE A
See Notes 3 and 5

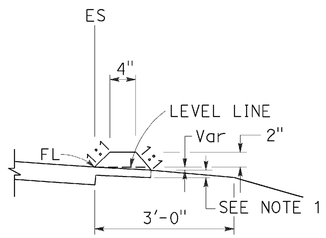

TYPE C

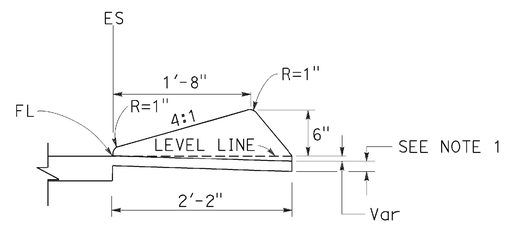

TYPE D

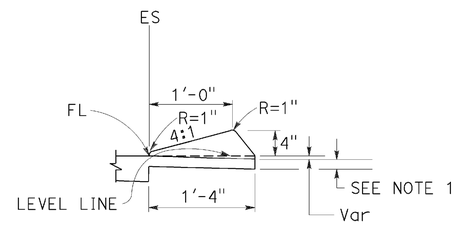

TYPE E

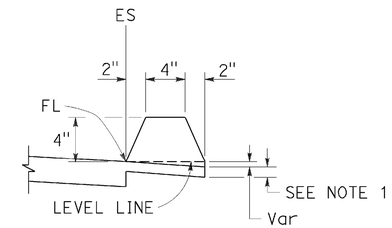

TYPE F
See Note 5

DIKES

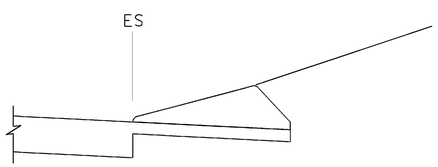

CASE C-1
Cut Slope

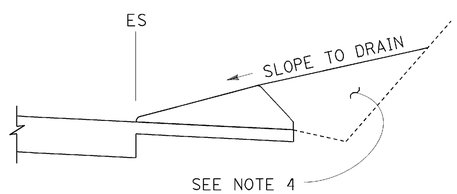

CASE C-2
Cut Slope

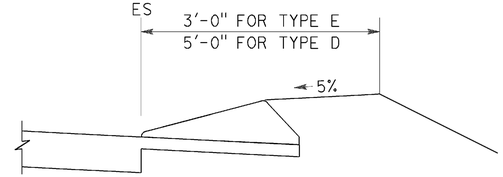

CASE F

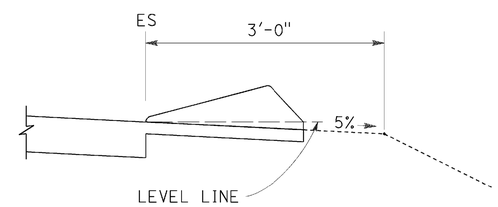

CASE R
See Note 2

TYPE D AND E BACKFILL DETAILS

NOTES:

1. For HMA shoulders only, extend top layer of HMA placed on the shoulder under dike with no joint at the ES. For projects with OGFC shoulders, do not extend OGFC under dike. See project plans for modified dike detail.
2. Case R applies to retrofit only projects where restrictive conditions do not provide enough width for Case F backfill.
3. Type A dike only to be used where restrictive slope conditions do not provide enough width to use Type D or Type E dike.
4. Fill and compact with excavated material to top of dike.
5. Use Type A or F dike, where dike is required with guardrail installations. See Standard Plan A77N4 for dike positioning details. See Standard Plan A77N3 for hinge point offsets with guardrail.

DIKE QUANTITIES

TYPE	CUBIC YARDS PER LINEAR FOOT
A	0.0135
C	0.0038
D	0.0293
E	0.0130
F	0.0066

Quantities based on 5% cross slope.

STATE OF CALIFORNIA
DEPARTMENT OF TRANSPORTATION

HOT MIX ASPHALT DIKES

NO SCALE

RSP A87B DATED JANUARY 15, 2016 SUPERSEDES STANDARD PLAN A87B DATED OCTOBER 30, 2015 - PAGE 126 OF THE STANDARD PLANS BOOK DATED 2015.

REVISED STANDARD PLAN RSP A87B

DATE PLOTTED => 03-FEB-2016
TIME PLOTTED => 10:22

Dist	COUNTY	ROUTE	POST MILES TOTAL PROJECT	SHEET No.	TOTAL SHEETS
02	Plu	147	8.9/9.3	60	94

Srikanth Balasubramanian
REGISTERED CIVIL ENGINEER

October 30, 2015
PLANS APPROVAL DATE

REGISTERED PROFESSIONAL ENGINEER Srikanth N. Balasubramanian No. C56426 Exp. 6-30-17 CIVIL STATE OF CALIFORNIA

THE STATE OF CALIFORNIA OR ITS OFFICERS OR AGENTS SHALL NOT BE RESPONSIBLE FOR THE ACCURACY OR COMPLETENESS OF SCANNED COPIES OF THIS PLAN SHEET.

TO ACCOMPANY PLANS DATED 11-30-15

ABBREVIATIONS:

TE TAPERED EDGE

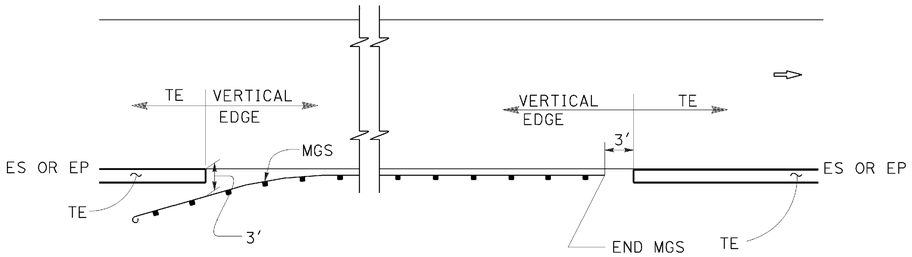

MGS

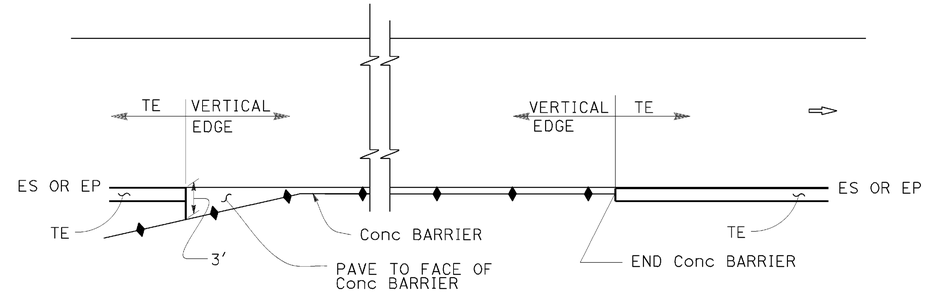

CONCRETE BARRIER

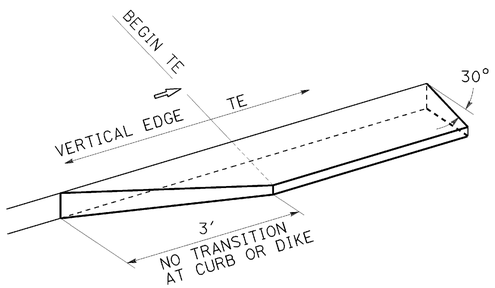

TRANSITION DETAIL FOR CONCRETE ONLY

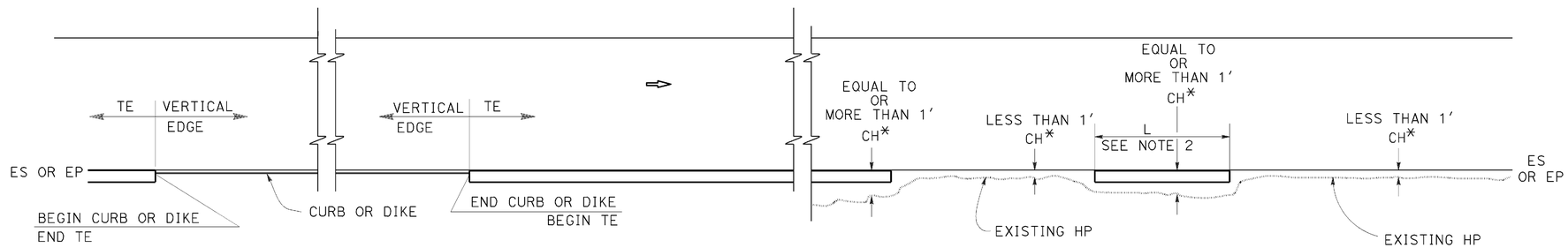

CURB OR DIKE

NARROW SIDE SLOPE

* CH = Distance from ES or EP to existing HP.

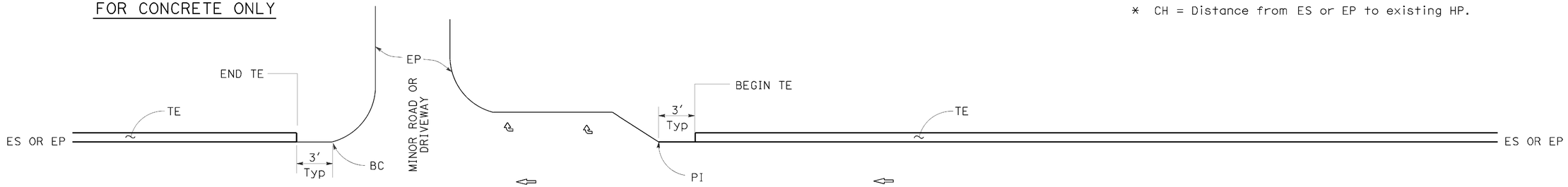

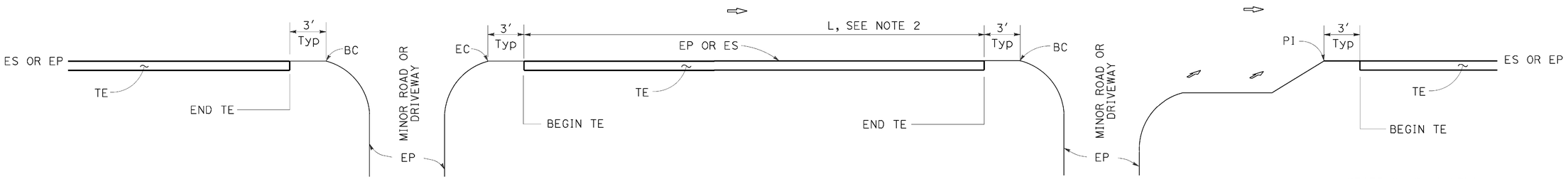

INTERTECTION

MINOR ROADWAY OR DRIVEWAY

DRIVEWAY AND INTERSECTION

STATE OF CALIFORNIA
DEPARTMENT OF TRANSPORTATION

PAVEMENT EDGE TREATMENTS

NO SCALE

NOTES:

1. For details not shown, see Revised Standard Plans RSP P75 and RSP P76.
2. Tapered edge is optional when L is less than 30′.

RSP P74 DATED OCTOBER 30, 2015 SUPERSEDES RSP P74 DATED NOVEMBER 15, 2013 AND RSP P74 DATED JANUARY 20, 2012 THAT SUPPLEMENTS THE STANDARD PLANS BOOK DATED 2010.

REVISED STANDARD PLAN RSP P74

2010 REVISED STANDARD PLAN RSP P74

DATE PLOTTED => 24-NOV-2015
TIME PLOTTED => 09:29

Dist	COUNTY	ROUTE	POST MILES TOTAL PROJECT	SHEET No.	TOTAL SHEETS
02	Plu	147	8.9/9.3	61	94

REGISTERED CIVIL ENGINEER

October 30, 2015
PLANS APPROVAL DATE

REGISTERED PROFESSIONAL ENGINEER Srikanth N. Balasubramanian No. C56426 Exp. 6-30-17 CIVIL STATE OF CALIFORNIA

THE STATE OF CALIFORNIA OR ITS OFFICERS OR AGENTS SHALL NOT BE RESPONSIBLE FOR THE ACCURACY OR COMPLETENESS OF SCANNED COPIES OF THIS PLAN SHEET.

TO ACCOMPANY PLANS DATED 11-30-15

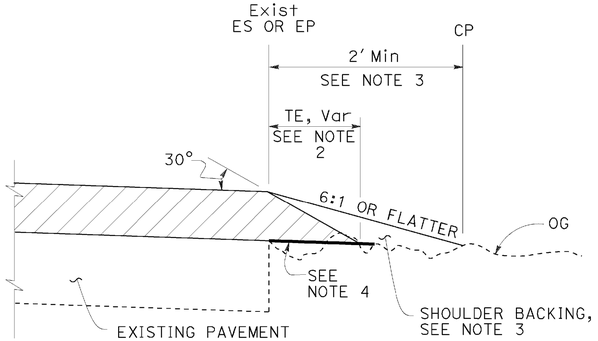

CASE A
Tapered Edge

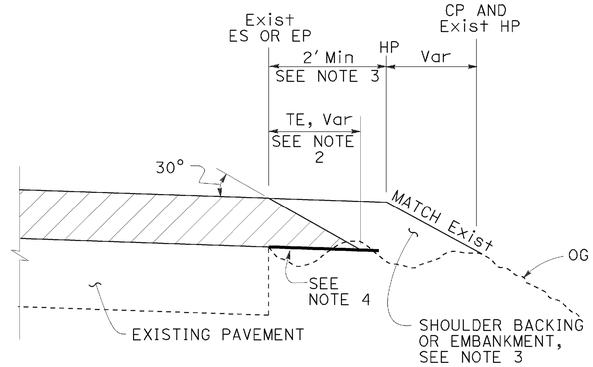

CASE B
Tapered Edge

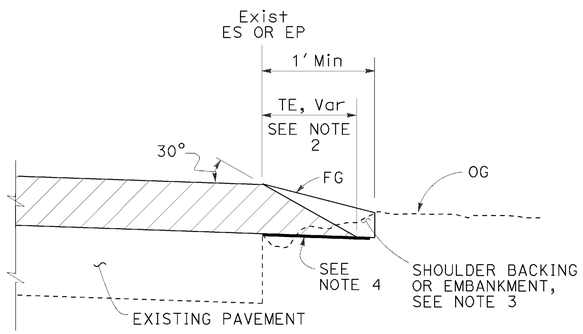

CASE C
Tapered Edge

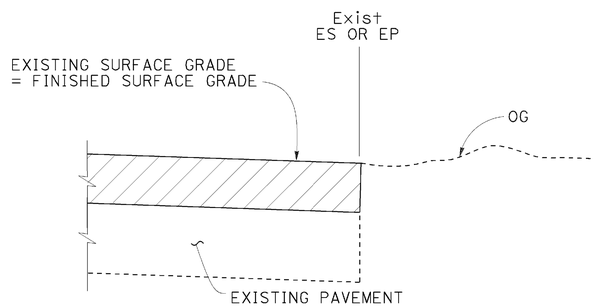

CASE D
Vertical Edge

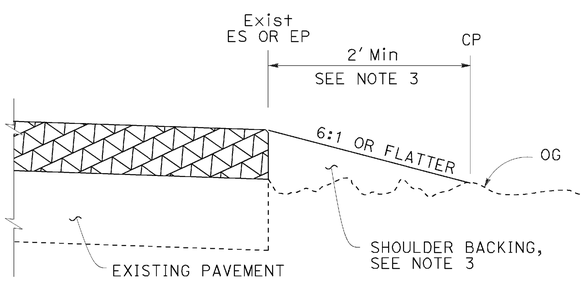

CASE E
Vertical Edge

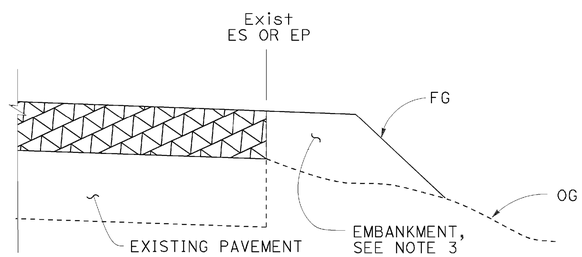

CASE F
Vertical Edge
* See Table A and Revised Std Plan RSP P74

LEGEND:

- HMA OVERLAY
- HMA OR CONCRETE OVERLAY
- CONCRETE OVERLAY

ABBREVIATIONS:

TE TAPERED EDGE
TT TOTAL THICKNESS OF TE

TABLE A
EDGE TREATMENT FOR VARIOUS OVERLAY THICKNESS AND CONDITIONS

	OVERLAY THICKNESS	
FIELD CONDITION	LESS THAN 0.15'	0.15' OR MORE
Exist SLOPE 6:1 OR FLATTER	CASE E	CASE A
Exist SLOPE 3:1 TO 6:1	CASE E	CASE B
Exist SLOPE STEEPER THAN 3:1	CASE F	CASE F
CUT SECTION (REPLACE, COLD PLANE, MILL PAVEMENT)	CASE D	CASE C

ADDITIONAL HMA OR CONCRETE QUANTITIES FOR TE/SIDE/MILE

TYPICAL CROSS SECTION	TT	TOTAL ADDITIONAL MATERIAL FOR TE/SIDE/MILE		
		HMA (TON)	CONCRETE (CY)*	CONCRETE (CY)**
TT	0.15'	7.7	NA	NA
	0.20'	13.7	NA	NA
	0.30'	30.9	NA	NA
	0.40'	54.9	NA	NA
	0.45'	69.4	NA	NA
TT 0.43'	0.50'	84.2	NA	NA
	0.60'	113.9	NA	NA
	0.70'	143.6	70.9	94.2
	0.80'	173.3	85.6	112.2
	0.90'	203.0	100.3	130.2
	1.00'	232.7	114.9	148.2
	1.10'	262.4	129.6	166.2
	1.20'	292.1	144.3	184.2

* For Detail "A"
** For Optional Detail "A"

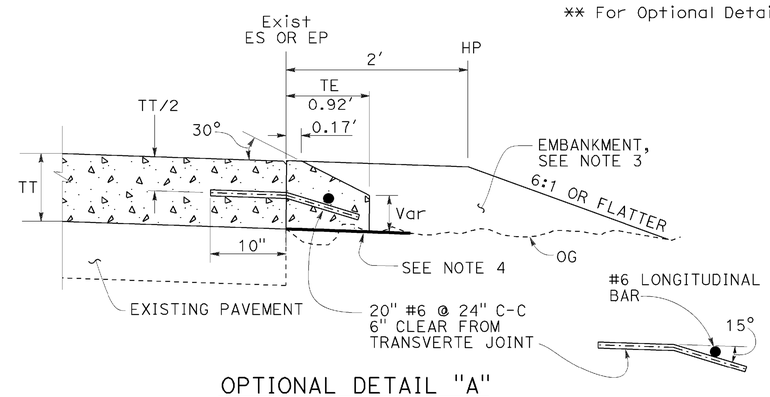

OPTIONAL DETAIL "A"
For concrete overlay
See Note 5

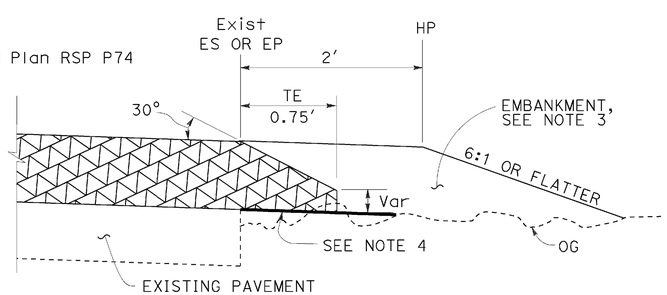

DETAIL "A"
For HMA overlay thickness more than 0.43' or concrete overlay

NOTES:

1. For limits of tapered edge and vertical edge treatments, see Revised Standard Plan RSP P74.
2. Details shown for HMA overlay thickness less than 0.43'. See Detail "A" for HMA overlay thickness more than 0.43' or concrete overlay.
3. For locations and limits of shoulder backing or embankment see project plans.
4. Grade existing ground to place tapered edge. 1' minimum width
5. Tapered edge transverse joint must match overlay transverse joint. End of #6 longitudinal bar must be 2" ±½" clear from transverse joint.
6. Tapered edge is not needed in the area of MGS, barrier, right turn lane and acceleration lane. See Revised Standard Plan RSP P74.

STATE OF CALIFORNIA
DEPARTMENT OF TRANSPORTATION

PAVEMENT EDGE TREATMENTS-OVERLAYS

NO SCALE

RSP P75 DATED OCTOBER 30, 2015 SUPERSEDES RSP P75 DATED NOVEMBER 15, 2013 AND RSP P75 DATED JANUARY 20, 2012 THAT SUPPLEMENTS THE STANDARD PLANS BOOK DATED 2010.

REVISED STANDARD PLAN RSP P75

2010 REVISED STANDARD PLAN RSP P75

DATE PLOTTED => 24-NOV-2015
TIME PLOTTED => 09:29

Dist	COUNTY	ROUTE	POST MILES TOTAL PROJECT	SHEET No.	TOTAL SHEETS
02	Plu	147	8.9/9.3	62	94

REGISTERED CIVIL ENGINEER

October 30, 2015
PLANS APPROVAL DATE

REGISTERED PROFESSIONAL ENGINEER Srikanth N. Balasubramanian No. C56426 Exp. 6-30-17 CIVIL STATE OF CALIFORNIA

THE STATE OF CALIFORNIA OR ITS OFFICERS OR AGENTS SHALL NOT BE RESPONSIBLE FOR THE ACCURACY OR COMPLETENESS OF SCANNED COPIES OF THIS PLAN SHEET.

TO ACCOMPANY PLANS DATED 11-30-15

LEGEND:

- HMA PAVEMENT
- HMA OR CONCRETE PAVEMENT
- CONCRETE PAVEMENT

ABBREVIATIONS:

TE TAPERED EDGE

TT TOTAL THICKNESS OF TE

HW HINGE WIDTH, DISTANCE FROM ES OR EP TO HP

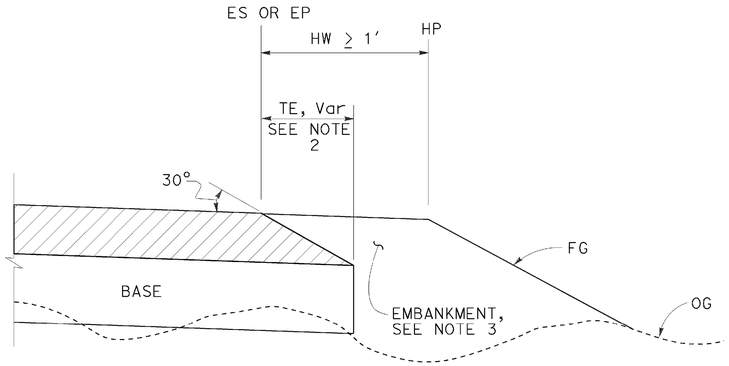

CASE K
Tapered Edge - Fill Section, HW ≥ 1′

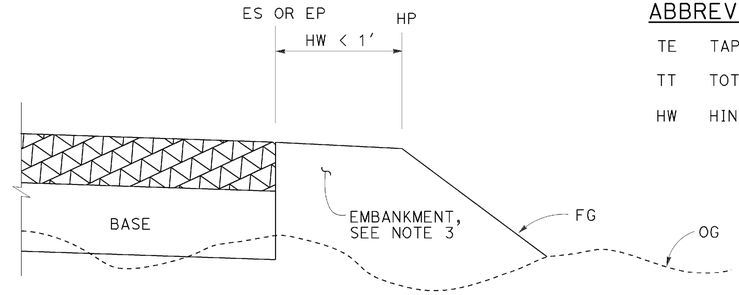

CASE L
Vertical Edge - Fill Section, HW < 1′

FILL SECTION

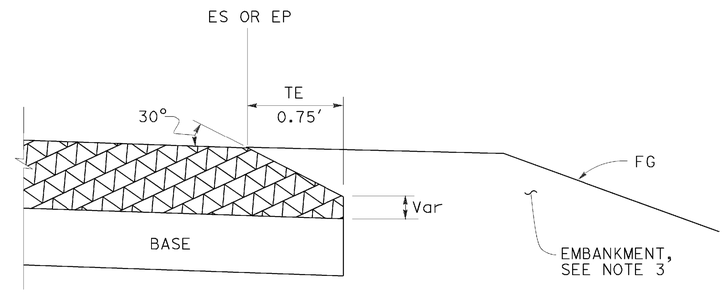

DETAIL "B"
For HMA pavement thickness more than 0.43′ or concrete pavement

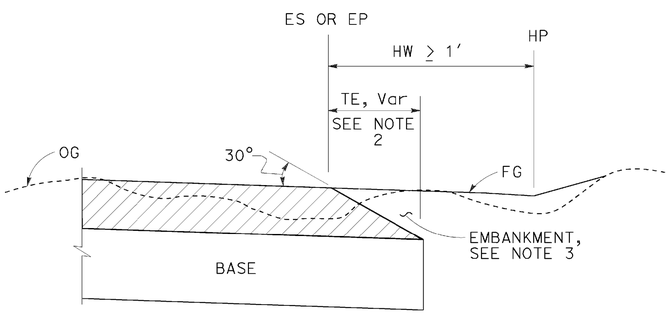

CASE M
Tapered Edge - Cut Section, HW ≥ 1′

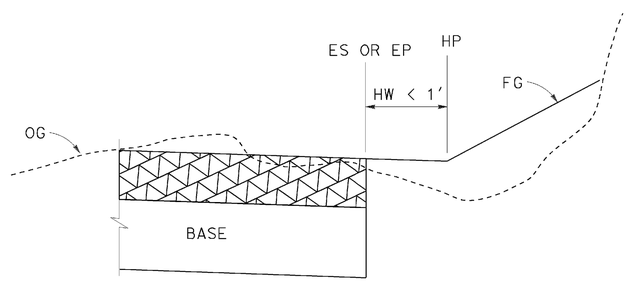

CASE N
Vertical Edge - Cut Section, HW < 1′

CUT SECTION

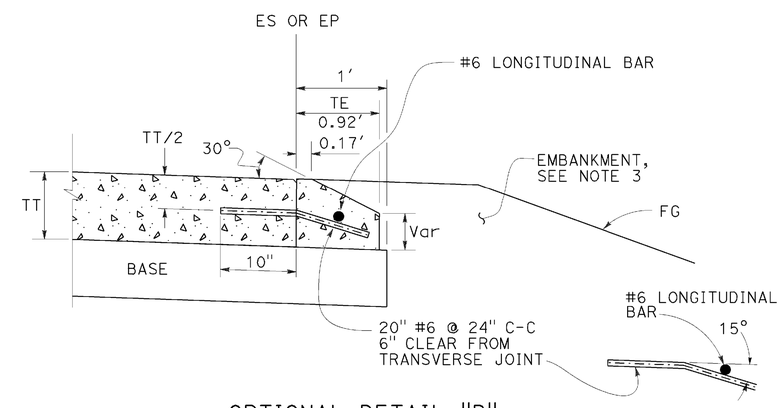

OPTIONAL DETAIL "B"
For concrete pavement
See Note 4

NOTES:

1. For limits of tapered edge and vertical edge treatments, see Revised Standard Plan RSP P74
2. Details shown for HMA pavement thickness less than 0.43′. See Detail "B" for HMA pavement thickness more than 0.43′ or concrete pavement.
3. For locations and limits of embankment see project plans.
4. Tapered edge transverse joint must match pavement transverse joint. End of #6 longitudinal bar must be 2" ±½" clear from transverse joint.
5. Tapered edge is not needed in the area of MGS, barrier, right turn lane and acceleration lane. See Revised Standard Plan RSP P74.

STATE OF CALIFORNIA
DEPARTMENT OF TRANSPORTATION

PAVEMENT EDGE TREATMENTS-NEW CONSTRUCTION

NO SCALE

RSP P76 DATED OCTOBER 30, 2015 SUPERSEDES RSP P76 DATED NOVEMBER 15, 2013 AND RSP P76 DATED JANUARY 20, 2012 THAT SUPPLEMENTS THE STANDARD PLANS BOOK DATED 2010.

REVISED STANDARD PLAN RSP P76

2010 REVISED STANDARD PLAN RSP P76

DATE PLOTTED => 24-NOV-2015
TIME PLOTTED => 09:30

Dist	COUNTY	ROUTE	POST MILES TOTAL PROJECT	SHEET No.	TOTAL SHEETS
02	Plu	147	8.9/9.3	63	94

LICENSED LANDSCAPE ARCHITECT

July 19, 2013
PLANS APPROVAL DATE

THE STATE OF CALIFORNIA OR ITS OFFICERS OR AGENTS SHALL NOT BE RESPONSIBLE FOR THE ACCURACY OR COMPLETENESS OF SCANNED COPIES OF THIS PLAN SHEET.

LICENSED LANDSCAPE ARCHITECT
Gregory A. Balzer 2576
02-28-15
Renewal Date
7-19-13
Date
STATE OF CALIFORNIA

TO ACCOMPANY PLANS DATED 11-30-15

2010 REVISED STANDARD PLAN RSP H1

A

AB	AGGREGATE BASE
ABS	ACRYLONITRILE-BUTADIENE-STYRENE
AC	ASPHALT CONCRETE
ACC	ARMOR-CLAD CONDUCTORS
Adj	ADJACENT/ADJUSTABLE
AIC	AUXILIARY IRRIGATION CONTROLLER
Alt	ALTERNATIVE
AMEND	AMENDMENT
ARV	AIR RELEASE VALVE
AUTO	AUTOMATIC
AUX	AUXILIARY
AVB	ATMOSPHERIC VACUUM BREAKER

B

B&B	BALLED AND BURLAPPED
B/B	BRASS/BRONZE
B/B/PL	BRASS/BRONZE/PLASTIC
B/PL	BRASS/PLASTIC
BFM	BONDED FIBER MATRIX
Bit Ctd	BITUMINOUS COATED
BP	BOOSTER PUMP
BPA	BACKFLOW PREVENTER ASSEMBLY
BPE	BACKFLOW PREVENTER ENCLOSURE
BV	BALL VALVE

C

C	CONDUIT
CAP	CORRUGATED ALUMINUM PIPE
CARV	COMBINATION AIR RELEASE VALVE
CB	COUPLING BAND
CCA	CAM COUPLER ASSEMBLY
CEC	CONTROLLER ENCLOSURE CABINET
CHDPE	CORRUGATED HIGH DENSITY POLYETHYLENE
CL	CHAIN LINK
CNC	CONTROL AND NEUTRAL CONDUCTORS
Conc	CONCRETE
CP	COPPER PIPE
CS	COMPOST SOCK
CSP	CORRUGATED STEEL PIPE
CST	CENTER STRIP
CV	CHECK VALVE

D

Dia	DIAMETER
DIP	DUCTILE IRON PIPE
DIT	DRIP IRRIGATION TUBING
DG	DECOMPOSED GRANITE
DN	DIAMETER NOMINAL
DVA	DRIP VALVE ASSEMBLY

E

EC	EROSION CONTROL
ECTC	EROSION CONTROL TECHNOLOGY COUNCIL
Elect	ELECTRIC/ELECTRICAL
Elev	ELEVATION
ELL	ELBOW
ENCL	ENCLOSURE
EP	EDGE OF PAVEMENT
ES	EDGE OF SHOULDER
EST	END STRIP
ESTB	ESTABLISHMENT
ETW	EDGE OF TRAVELED WAY

F

F	FULL CIRCLE
F/P	FULL/PART CIRCLE
FCV	FLOW CONTROL VALVE
FERT	FERTILIZER
FG	FINISHED GRADE
FH	FLEXIBLE HOSE
FIPT	FEMALE IRON PIPE THREAD
FIS	FERTILIZER INJECTOR SYSTEM
FL	FLOW LINE
FR	FIBER ROLL
FS	FLOW SENSOR
FSC	FLOW SENSOR CABLE
FV	FLUSH VALVE

G

Galv	GALVANIZED
GARV	GARDEN VALVE
GARVA	GARDEN VALVE ASSEMBLY
GM	GRAVEL MULCH
GPH	GALLONS PER HOUR
GPM	GALLONS PER MINUTE
GSP	GALVANIZED STEEL PIPE
GV	GATE VALVE

H

H	HALF CIRCLE
HDPE	HIGH DENSITY POLYETHYLENE
HP	HORSEPOWER/HINGE POINT
HPL	HIGH PRESSURE LINE
Hwy	HIGHWAY

I

IC	IRRIGATION CONTROLLER
ICC	IRRIGATION CONTROLLER(S) IN CONTROLLER ENCLOSURE CABINET
ID	INSIDE DIAMETER
IFS	IRRIGATION FILTRATION SYSTEM
IPS	IRON PIPE SIZE
IPT	IRON PIPE THREAD
Irr	IRRIGATION

L

L	LENGTH

M

Max	MAXIMUM
MBGR	METAL BEAM GUARD RAILING
MCV	MANUAL CONTROL VALVE
MIC	MASTER IRRIGATION CONTROLLER
Min	MINIMUM
MIPT	MALE IRON PIPE THREAD
Misc	MISCELLANEOUS
Mtl	MATERIAL
MVP	MAINTENANCE VEHICLE PULLOUT

N

NCN	NO COMMON NAME
NL	NOZZLE LINE
No.	NUMBER
NPT	NATIONAL PIPE THREAD

O

O/C	ON CENTER
OD	OUTSIDE DIAMETER
OL	OVERLAP

P

P	PART CIRCLE
PB	PULL BOX
PCC	PORTLAND CEMENT CONCRETE
PE	POLYETHYLENE
Pkt	PACKET
PL	PLASTIC
PLS	PURE LIVE SEED
PLT	PLANT/PLANTING
PLT ESTB	PLANT ESTABLISHMENT
PM	POST MILE
PR	PRESSURE RATED
PRLV	PRESSURE RELIEF VALVE
PRV	PRESSURE REGULATING VALVE
PVC	POLYVINYL CHLORIDE
Pvmt	PAVEMENT

Q

Q	QUARTER CIRCLE
QCV	QUICK COUPLING VALVE

R

R	RADIUS
RCP	REINFORCED CONCRETE PIPE
RCV	REMOTE CONTROL VALVE
RCVM	REMOTE CONTROL VALVE (MASTER)
RCVMF	REMOTE CONTROL VALVE (MASTER) W/FLOW SENSOR
RCVP	REMOTE CONTROL VALVE W/PRESSURE REGULATOR
RCW	RECYCLED WATER
RECP	ROLLED EROSION CONTROL PRODUCT
REQ	REQUIRED
RICS	REMOTE IRRIGATION CONTROL SYSTEM
R/W	RIGHT OF WAY

S

S	SLIP
SCH	SCHEDULE
SF	STATE-FURNISHED
Shld	SHOULDER
Sq	SQUARE
SST	SIDE STRIP
Sta	STATION
Std	STANDARD
SW	SIDEWALK/SOUND WALL

T

T	THIRD CIRCLE/THREAD
TLS	TRUCK LOADING STANDPIPE
TQ	THREE QUARTER CIRCLE
TRM	TURF REINFORCEMENT MAT
TT	TWO-THIRDS CIRCLE
TWSA	TREE WELL SPRINKLER ASSEMBLY
Typ	TYPICAL

U

UG	UNDERGROUND

W

W	WIDTH
W/	WITH
WM	WATER METER
WS	WYE STRAINER
WSA	WYE STRAINER ASSEMBLY
WSP	WELDED STEEL PIPE
WWM	WELDED WIRE MESH

NOTE:

For additional abbreviations, see Standard Plans A10A and A10B.

STATE OF CALIFORNIA
DEPARTMENT OF TRANSPORTATION

LANDSCAPE AND EROSION CONTROL ABBREVIATIONS

NO SCALE

RSP H1 DATED JULY 19, 2013 SUPERSEDES STANDARD PLAN H1
DATED MAY 20, 2011 - PAGE 218 OF THE STANDARD PLANS BOOK DATED 2010.

REVISED STANDARD PLAN RSP H1

DATE PLOTTED => 24-NOV-2015
TIME PLOTTED => 09:30

Dist	COUNTY	ROUTE	POST MILES TOTAL PROJECT	SHEET No.	TOTAL SHEETS
02	Plu	147	8.9/9.3	64	94

REGISTERED CIVIL ENGINEER

July 19, 2013
PLANS APPROVAL DATE

REGISTERED PROFESSIONAL ENGINEER Gurinderpal Bhullar No. C48815 Exp. 9-30-14 CIVIL STATE OF CALIFORNIA

THE STATE OF CALIFORNIA OR ITS OFFICERS OR AGENTS SHALL NOT BE RESPONSIBLE FOR THE ACCURACY OR COMPLETENESS OF SCANNED COPIES OF THIS PLAN SHEET.

TO ACCOMPANY PLANS DATED 11-30-15

2010 REVISED STANDARD PLAN RSP T9

TABLE 1

TAPER LENGTH CRITERIA AND CHANNELIZING DEVICE SPACING

SPEED (S)	MINIMUM TAPER LENGTH * FOR WIDTH OF OFFSET 12 FEET (W)				MAXIMUM CHANNELIZING DEVICE SPACING		
					X	Y	Z **
	TANGENT 2L	MERGING L	SHIFTING L/2	SHOULDER L/3	TAPER	TANGENT	CONFLICT
mph	ft	ft	ft	ft	ft	ft	ft
20	160	80	40	27	20	40	10
25	250	125	63	42	25	50	12
30	360	180	90	60	30	60	15
35	490	245	123	82	35	70	17
40	640	320	160	107	40	80	20
45	1080	540	270	180	45	90	22
50	1200	600	300	200	50	100	25
55	1320	660	330	220	55	110	27
60	1440	720	360	240	60	120	30
65	1560	780	390	260	65	130	32
70	1680	840	420	280	70	140	35

* - For other offsets, use the following merging taper length formula for L:
For speed of 40 mph or less, $L = WS^2/60$
For speed of 45 mph or more, $L = WS$

Where: L = Taper length in feet
W = Width of offset in feet
S = Posted speed limit, off-peak 85th-percentile speed prior to work starting, or the anticipated operating speed in mph

** - Use for taper and tangent sections where there are no pavement markings or where there is a conflict between existing pavement markings and channelizers (CA).

TABLE 2

LONGITUDINAL BUFFER SPACE AND FLAGGER STATION SPACING

SPEED *	Min D **	DOWNGRADE Min D ***		
		-3%	-6%	-9%
mph	ft	ft	ft	ft
20	115	116	120	126
25	155	158	165	173
30	200	205	215	227
35	250	257	271	287
40	305	315	333	354
45	360	378	400	427
50	425	446	474	507
55	495	520	553	593
60	570	598	638	686
65	645	682	728	785
70	730	771	825	891

* - Speed is posted speed limit, off-peak 85th-percentile speed prior to work starting, or the anticipated operating speed in mph

** - Longitudinal buffer space or flagger station spacing

*** - Use on sustained downgrade steeper than -3 percent and longer than 1 mile.

TABLE 3

ADVANCE WARNING SIGN SPACING

ROAD TYPE	DISTANCE BETWEEN SIGNS *		
	A	B	C
	ft	ft	ft
URBAN - 25 mph OR LESS	100	100	100
URBAN - MORE THAN 25 mph TO 40 mph	250	250	250
URBAN - MORE THAN 40 mph	350	350	350
RURAL	500	500	500
EXPRESSWAY / FREEWAY	1000	1500	2640

* - The distances are approximate, are intended for guidance purposes only, and should be applied with engineering judgment. These distances should be adjusted by the Engineer for field conditions, if necessary, by increasing or decreasing the recommmended distances.

STATE OF CALIFORNIA
DEPARTMENT OF TRANSPORTATION

TRAFFIC CONTROL SYSTEM TABLES FOR LANE AND RAMP CLOSURES

NO SCALE

RSP T9 DATED JULY 19, 2013 SUPERSEDES RSP T9 DATED APRIL 19, 2013 THAT SUPPLEMENTS THE STANDARD PLANS BOOK DATED 2010.

REVISED STANDARD PLAN RSP T9

DATE PLOTTED => 24-NOV-2015
TIME PLOTTED => 09:31

Dist	COUNTY	ROUTE	POST MILES TOTAL PROJECT	SHEET No.	TOTAL SHEETS
02	Plu	147	8.9/9.3	65	94

Devinder Singh
REGISTERED CIVIL ENGINEER

October 30, 2015
PLANS APPROVAL DATE

REGISTERED PROFESSIONAL ENGINEER
Devinder Singh
No. C50470
Exp. 6-30-17
CIVIL
STATE OF CALIFORNIA

THE STATE OF CALIFORNIA OR ITS OFFICERS OR AGENTS SHALL NOT BE RESPONSIBLE FOR THE ACCURACY OR COMPLETENESS OF SCANNED COPIES OF THIS PLAN SHEET.

TO ACCOMPANY PLANS DATED 11-30-15

NOTES:

See Revised Standard Plan RSP T9 for tables.

Use cone spacing X for taper segment, Y for tangent segment or Z for conflict situations, as approriate, per Table 1, unless X, Y, or Z cone spacing is shown on this sheet.

Unless otherwise specified in the special provisions, all temporary warning signs shall have black legend on fluorescent orange background.

California codes are designated by (CA). Otherwise, Federal (MUTCD) codes are shown.

TYPICAL LANE CLOSURE WITH REVERSIBLE CONTROL

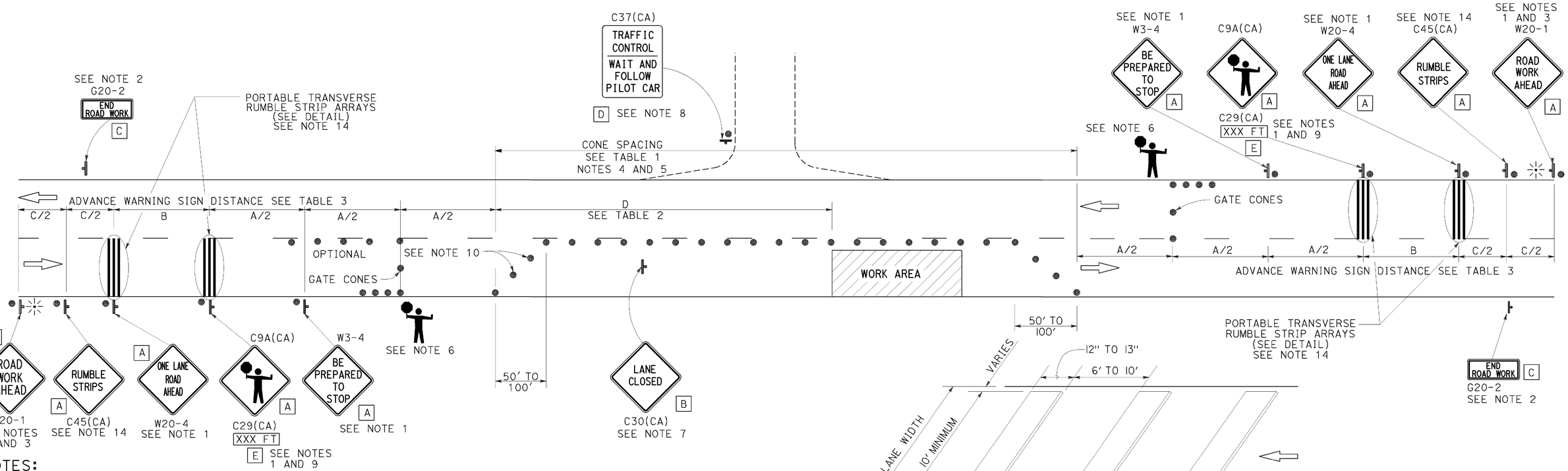

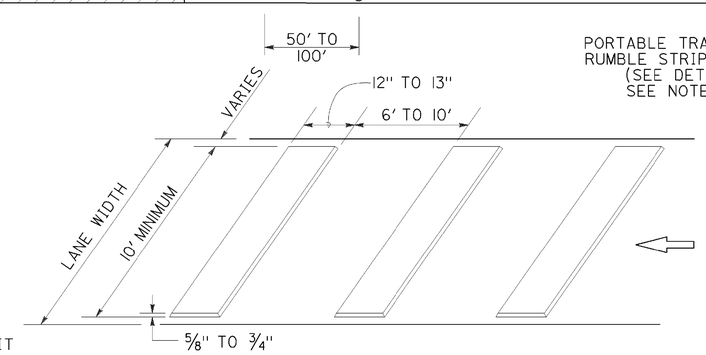

PORTABLE TRANSVERSE RUMBLE STRIP ARRAY DETAIL

NOTES:

1. Each advance warning sign in each direction of travel shall be equipped with at least two flags for daytime closure. Each flag shall be at least 16" x 16" in size and shall be orange or fluorescent red-orange in color. Flashing beacons shall be placed at the locations indicated for lane closure during hours of darkness.
2. A G20-2 "END ROAD WORK" sign, as appropriate, shall be placed at the end of the lane control unless the end of work area is obvious, or ends within a larger project's limits.
3. If the W20-1 sign would follow within 2000' of a stationary W20-1 or G20-1 "ROAD WORK NEXT _____ MILES", use a W20-4 sign for the first advance warning sign.
4. All cones used for lane closures during the hours of darkness shall be fitted with retroreflective bands (or sleeves) as specified in the specifications.
5. Portable delineators, placed at one-half the spacing indicated for traffic cones, may be used instead of cones for daytime closures only.
6. Additional advance flaggers may be required. Flagger should stand in a conspicuous place, be visible to approaching traffic as well as approaching vehicles after the first vehicle has stopped. During the hours of darkness, the flagging-station and flagger shall be illuminated and clearly visible to approaching traffic. The illumination footprint of the lighting on the ground shall be at least 20' in diameter. Place a minimum of four cones at 50' intervals in advance of flagger station as shown.
7. Place C30(CA) "LANE CLOSED" sign at 500' to 1000' intervals throughout extended work areas. They are optional if the work area is visible from the flagger station.
8. When a pilot car is used, place a C37(CA) "TRAFFIC CONTROL-WAIT AND FOLLOW PILOT CAR" sign with black legend on white background at all intersections, driveways and alleys without a flagger within traffic control area. Signs shall be clean and visible at all times. Where traffic can not be effectively self-regulated, at least one flagger shall be used at each intersection within traffic control area.
9. An optional C29(CA) sign may be placed below the C9A(CA) sign.
10. Either traffic cones or barricades shall be placed on the taper. Barricades shall be Type I, II, or III.
11. The color of the portable transverse rumble strips shall be black or orange. Use 2 arrays, each array shall consist of 3 rumble strips.
12. Portable transverse rumble strips shall not be placed on sharp horizontal or vertical curves nor shall they be placed through pedestrian crossings.
13. If the portable transverse rumble strips become out of alignment (skewed) by more than 6 inches, measured from one end to the other, they shall be readjusted to bring the placement back to the original location.
14. Portable transverse rumble strips are not required if any one of the following conditions is satisfied:
    A. Work duration occupies a location for four hours or less
    B. Posted speed limit is below 45 MPH
    C. Work is of emergency nature
    D. Work zone is in snow or icy weather conditions

SIGN PANEL SIZE (Min)

A	48" x 48"
B	30" x 30"
C	36" x 18"
D	36" x 42"
E	20" x 7"

LEGEND

- TRAFFIC CONE
- TEMPORARY TRAFFIC CONTROL SIGN
- PORTABLE FLASHING BEACON
- FLAGGER

STATE OF CALIFORNIA
DEPARTMENT OF TRANSPORTATION

TRAFFIC CONTROL SYSTEM FOR LANE CLOSURE ON TWO LANE CONVENTIONAL HIGHWAYS

NO SCALE

RSP T13 DATED OCTOBER 30, 2015 SUPERSEDES RSP T13 DATED OCTOBER 17, 2014, RSP T13 DATED JULY 18, 2014 AND RSP T13 DATED APRIL 19, 2013 AND STANDARD PLAN T13 DATED MAY 20, 2011 - PAGE 241 OF THE STANDARD PLANS BOOK DATED 2010.

REVISED STANDARD PLAN RSP T13

2010 REVISED STANDARD PLAN RSP T13

DATE PLOTTED => 24-NOV-2015
TIME PLOTTED => 09:31

Dist	COUNTY	ROUTE	POST MILES TOTAL PROJECT	SHEET No.	TOTAL SHEETS
02	Plu	147	8.9/9.3	66	94

REGISTERED CIVIL ENGINEER

July 19, 2013
PLANS APPROVAL DATE

REGISTERED PROFESSIONAL ENGINEER Marc Friedheim No. C57968 Exp. 6-30-14 CIVIL STATE OF CALIFORNIA

THE STATE OF CALIFORNIA OR ITS OFFICERS OR AGENTS SHALL NOT BE RESPONSIBLE FOR THE ACCURACY OR COMPLETENESS OF SCANNED COPIES OF THIS PLAN SHEET.

TO ACCOMPANY PLANS DATED 11-30-15

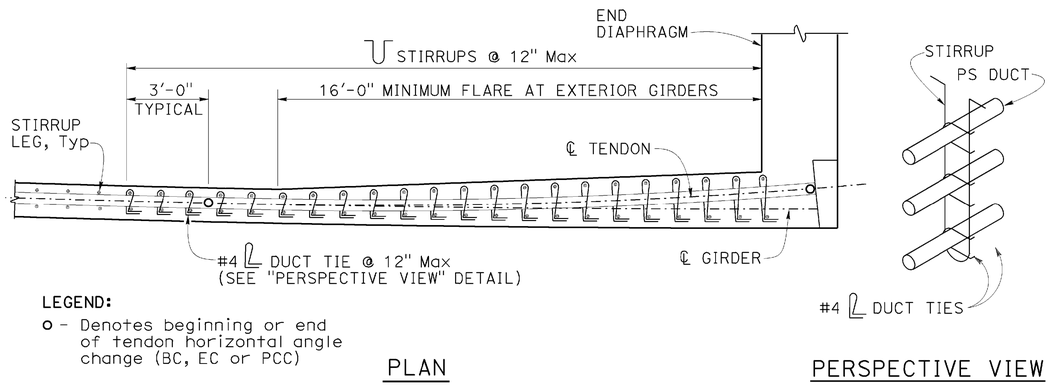

LEGEND:
o - Denotes beginning or end of tendon horizontal angle change (BC, EC or PCC)

DUCT TIES AT TENDON HORIZONTAL ANGLE CHANGES
DETAIL 5-1

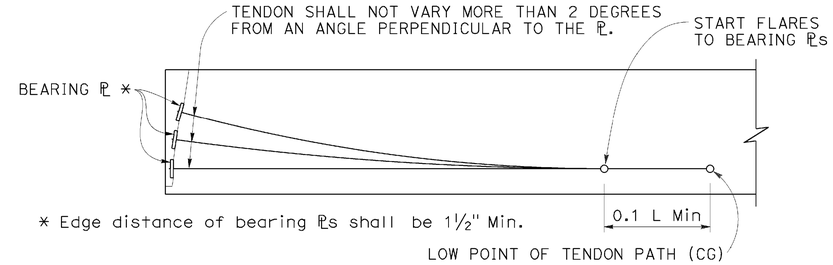

ELEVATION - BEARING PLATE AND PRESTRESSING PATH
DETAIL 5-2

NOTES FOR DETAIL 5-1

1. Tendon horizontal angle change at end diaphragm shown. Duct tie placement similar for other locations where tendon horizontal angle changes occur. For curved girders place duct ties at tendon angle changes where ℄ tendon radius is smaller than ℄ girder radius.
2. Adjacent duct ties may be staggered to facilitate placement if stirrup spacing is less than 12 inches.
3. Place closed end of duct ties toward inside of tendon curve.
4. Wrap duct ties around both stirrup legs.
5. Individual duct ties may only be used to anchor one duct.

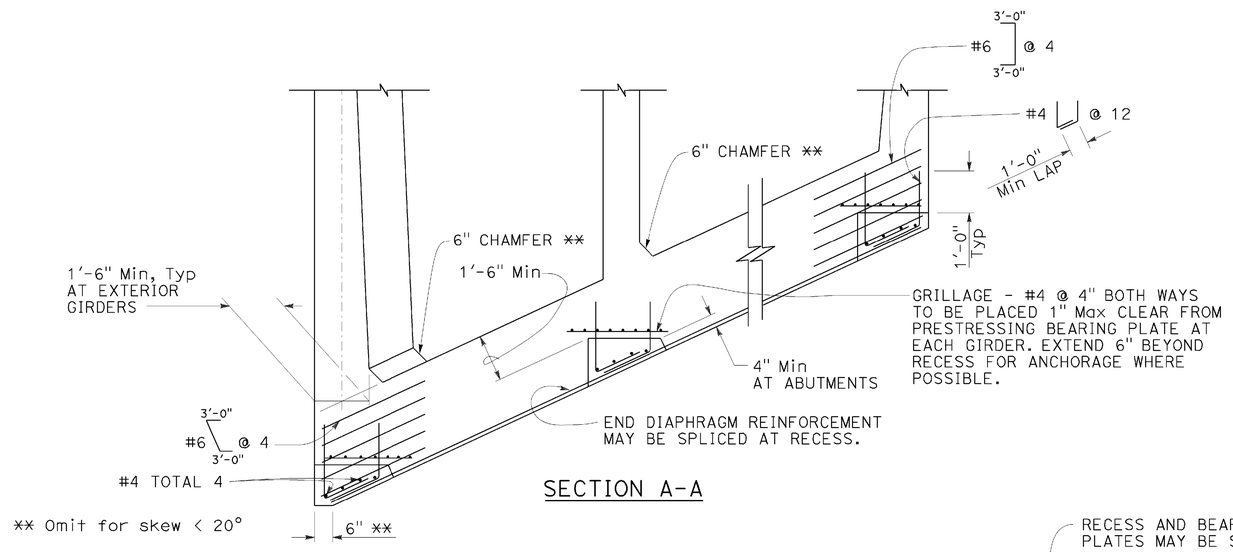

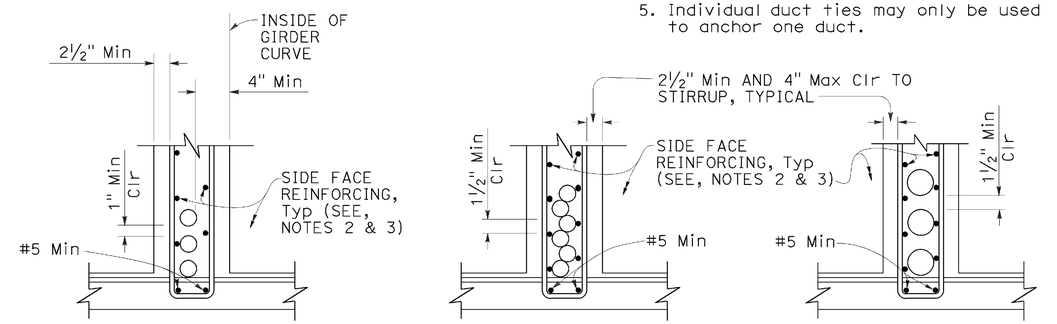

CLEARANCE REQUIREMENTS FOR DUCTS
DETAIL 5-4

NOTES FOR DETAIL 5-4:

1. ⊔ Stirrups may also be used.
2. For additional details, see Standard Plan B7-1, and Project Plans.
3. Bar reinforcing which interferes with prestressing ducts may be adjusted as approved by the Engineer.

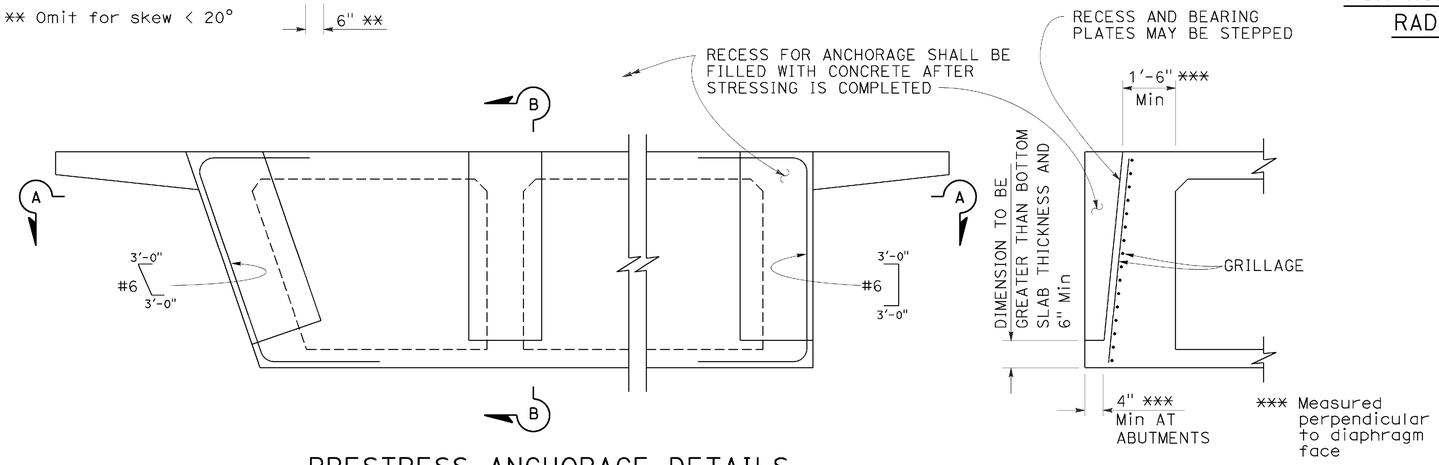

PRESTRESS ANCHORAGE DETAILS AT END DIAPHRAGMS
DETAIL 5-3

STATE OF CALIFORNIA
DEPARTMENT OF TRANSPORTATION

CAST-IN-PLACE POST-TENSIONED GIRDER DETAILS

NO SCALE

RSP B8-5 DATED JULY 19, 2013 SUPERSEDES STANDARD PLAN B8-5 DATED MAY 20, 2011 - PAGE 291 OF THE STANDARD PLANS BOOK DATED 2010.

REVISED STANDARD PLAN RSP B8-5

2010 REVISED STANDARD PLAN RSP B8-5

DATE PLOTTED => 24-NOV-2015
TIME PLOTTED => 09:32

Dist	COUNTY	ROUTE	POST MILES TOTAL PROJECT	SHEET No.	TOTAL SHEETS
02	Plu	147	8.9/9.3	67	94

Theresa Gabriel
REGISTERED ELECTRICAL ENGINEER

October 30, 2015
PLANS APPROVAL DATE

REGISTERED PROFESSIONAL ENGINEER Theresa Aziz Gabriel No. E15129 Exp. 6-30-16 ELECTRICAL STATE OF CALIFORNIA

THE STATE OF CALIFORNIA OR ITS OFFICERS OR AGENTS SHALL NOT BE RESPONSIBLE FOR THE ACCURACY OR COMPLETENESS OF SCANNED COPIES OF THIS PLAN SHEET.

TO ACCOMPANY PLANS DATED 11-30-15

LEGEND:

- AB — ABANDON. IF APPLIED TO CONDUIT, REMOVE CONDUCTORS
- BC — INSTALL PULL BOX IN EXISTING CONDUIT RUN
- BP — PEDESTRIAN BARRICADE, TYPE AS INDICATED ON PLAN
- CB — INSTALL CONDUIT INTO EXISTING PULL BOX
- CC — CONNECT NEW AND EXISTING CONDUIT. REMOVE EXISTING CONDUCTORS AND INSTALL CONDUCTORS AS INDICATED
- CF — CONDUIT TO REMAIN FOR FUTURE USE. REMOVE CONDUCTORS. INSTALL PULL TAPE
- DH — DETECTOR HANDHOLE
- FA — FOUNDATION TO BE ABANDONED
- IS — INSTALL SIGN ON SIGNAL MAST ARM
- NS — NO SLIP BASE ON STANDARD
- PEC — PHOTOELECTRIC CONTROL
- PEU — PHOTOELECTRIC UNIT
- RC — EQUIPMENT OR MATERIAL TO BE REMOVED AND BECOME THE PROPERTY OF THE CONTRACTOR
- RE — REMOVE ELECTROLIER, FUSES AND BALLAST. TAPE ENDS OF CONDUCTORS
- RL — RELOCATE EQUIPMENT
- RR — REMOVE AND REUSE EQUIPMENT
- RS — REMOVE AND SALVAGE EQUIPMENT
- SC — SPLICE NEW TO EXISTING CONDUCTORS
- SD — SERVICE DISCONNECT
- TSP — TELEPHONE SERVICE POINT

ABBREVIATIONS

AC+	UNDERGROUNDED CONDUCTOR
APS	ACCESSIBLE PEDESTRIAN SIGNAL
Batt	BATTERY
BBS	BATTERY BACKUP SYSTEM
BC	BOLT CIRCLE
Blk	BLACK
BP	BYPASS
BPB	BICYCLE PUSH BUTTON
C	CONDUIT
CB	CIRCUIT BREAKER
CCTV	CLOSED CIRCUIT TELEVISION
Ckt	CIRCUIT
CMS	CHANGEABLE MESSAGE SIGN
Ctid	CALTRANS IDENTIFICATION
Comm	COMMUNICATION
Cntl	CONTROL
DF	DEPARTMENT-FURNISHED
DLC	LOOP DETECTOR LEAD-IN CABLE
EMS	EXTINGUISHABLE MESSAGE SIGN
EVUC	EMERGENCY VEHICLE UNIT CABLE
EVUD	EMERGENCY VEHICLE UNIT DETECTOR
FB	FLASHING BEACON
FBCA	FLASHING BEACON CONTROL ASSEMBLY
FBS	FLASHING BEACON WITH SLIP BASE
FO	FIBER OPTIC
G	EQUIPMENT GROUNDING CONDUCTOR
GB	GROUND BUS
GFCI	GROUND FAULT CIRCUIT INTERRUPTER
Grn	GREEN
HAR	HIGHWAY ADVISORY RADIO
Hex	HEXAGONAL
HPS	HIGH PRESSURE SODIUM
IISNS	INTERNALLY ILLUMINATED STREET NAME SIGN
ISL	INDUCTION SIGN LIGHTING
LED	LIGHT EMITTING DIODE
LMA	LUMINAIRE MAST ARM
LPS	LOW PRESSURE SODIUM
Ltg	LIGHTING
Lum	LUMINAIRE
M	METERED
MAT	MAST ARM MOUNTING TOP ATTACHMENT
MAS	MAST ARM MOUNTING SIDE ATTACHMENT
MBPS	MANUAL BYPASS SWITCH
M/M	MULTIPLE TO MULTIPLE TRANSFORMER
Mtg	MOUNTING
MV	MERCURY VAPOR LIGHTING FIXTURE
MVDS	MICROWAVE VEHICLE DETECTION SYSTEM
N	NEUTRAL (GROUNDED CONDUCTOR)
NB	NEUTRAL BUS
NC	NORMALLY CLOSE
NO	NORMALLY OPEN
P	CIRCUIT BREAKER'S POLE
PB	PULL BOX
PBA	PUSH BUTTON ASSEMBLY
PEC	PHOTOELECTRIC CONTROL
Ped	PEDESTRIAN
PEU	PHOTOELECTRIC UNIT
PT	CONDUIT WITH PULL TAPE
PTR	POWER TRANSFER RELAY
RE	RELOCATED EQUIPMENT
RM	RAMP METERING
RWIS	ROADSIDE WEATHER INFORMATION SYSTEM
SB	SLIP BASE
SIC	SIGNAL INTERCONNECT CABLE
Sig	SIGNAL
SMA	SIGNAL MAST ARM
SNS	STREET NAME SIGN
SP	SERVICE POINT
TB	TERMINAL BOARD
TDC	TELEPHONE DEMARCATION CABINET
Temp	TEMPERATURE
TMS	TRAFFIC MONITORING STATION
TOS	TRAFFIC OPERATIONS SYSTEM
UPS	UNINTERRUPTABLE POWER SUPPLY
UPSC	UNINTERRUPTABLE POWER SUPPLY CONTROLLER
Veh	VEHICLE
VIVDS	VIDEO IMAGE VEHICLE DETECTION SYSTEM
Wht	WHITE
WIM	WEIGH-IN-MOTION
Xfmr	TRANSFORMER

SOFFIT AND WALL-MOUNTED LUMINAIRES

- PENDANT SOFFIT LUMINAIRE, 70 W HPS UNLESS OTHERWISE SPECIFIED
- FLUSH-MOUNTED SOFFIT LUMINAIRE, 70 W HPS UNLESS OTHERWISE SPECIFIED
- WALL-MOUNTED LUMINAIRE, 70 W HPS UNLESS OTHERWISE SPECIFIED
- EXISTING SOFFIT OR WALL-MOUNTED LUMINAIRE TO REMAIN UNMODIFIED
- EXISTING SOFFIT OR WALL-MOUNTED LUMINAIRE TO BE MODIFIED AS SPECIFIED

NOTE:
Arrow indicates "street side" of luminaire.

COMMONLY USED SYMBOLS FOR UNITED STATES CUSTOMARY UNITS OF MEASUREMENT:

SYMBOL	DEFINITIONS
Ω	OHMS
min	MINUTE
s	SECOND
bps	BITS PER SECOND
Bps	BYTES PER SECOND
A	AMPERE
V	VOLT
V(dc)	VOLT (DIRECT CURRENT)
V(ac)	VOLT (ALTERNATING CURRENT)
FC	FOOT - CANDLE
W	WATTS
VA	VOLT-AMPERE
M	MEGA
k	KILO
m	MILLI
μ	MICRO
P	PICO
Hz	HERTZ

MISCELLANEOUS ELECTROLIERS

NEW	EXISTING	
		LUMINAIRE ON WOOD POLE
		NON-STANDARD ELECTROLIER (SEE PROJECT LEGEND)
		CITY ELECTROLIER
		ELECTROLIER FOUNDATION (FUTURE INSTALLATION)

NOTES:

1. LED luminaires shall be 235 W when installed on Type 21, 21D, 30, 31 and 32 Standards, unless otherwise specified. LED luminaires shall be 165 W when installed on other type standards or poles, unless otherwise specified.
2. Luminaires shall be the cutoff type, ANSI Type III medium cutoff lighting distribution, unless otherwise specified.

STANDARD ELECTROLIER

NEW	EXISTING	STANDARD TYPE
		15
		15D
		15 STRUCTURE
		15D STRUCTURE
		21
		21D
		21 STRUCTURE
		21D STRUCTURE
		30
		31
		32

STATE OF CALIFORNIA
DEPARTMENT OF TRANSPORTATION

ELECTRICAL SYSTEMS (LEGEND AND ABBREVIATIONS)

NO SCALE

RSP ES-1A DATED OCTOBER 30, 2015 SUPERSEDES RSP ES-1A DATED JULY 19, 2013 AND STANDARD PLAN ES-1A DATED MAY 20, 2011 - PAGE 425 OF THE STANDARD PLANS BOOK DATED 2010.

REVISED STANDARD PLAN RSP ES-1A

2010 REVISED STANDARD PLAN RSP ES-1A

DATE PLOTTED => 24-NOV-2015
TIME PLOTTED => 09:32

Dist	COUNTY	ROUTE	POST MILES TOTAL PROJECT	SHEET No.	TOTAL SHEETS
02	Plu	147	8.9/9.3	68	94

Theresa Gabriel
REGISTERED ELECTRICAL ENGINEER

October 30, 2015
PLANS APPROVAL DATE

REGISTERED PROFESSIONAL ENGINEER Theresa Aziz Gabriel No. E15129 Exp. 6-30-16 ELECTRICAL STATE OF CALIFORNIA

THE STATE OF CALIFORNIA OR ITS OFFICERS OR AGENTS SHALL NOT BE RESPONSIBLE FOR THE ACCURACY OR COMPLETENESS OF SCANNED COPIES OF THIS PLAN SHEET.

TO ACCOMPANY PLANS DATED 11-30-15

CONDUIT

NEW	EXISTING	
		LIGHTING CONDUIT, UNLESS OTHERWISE INDICATED OR NOTED
		TRAFFIC SIGNAL CONDUIT
C	c	COMMUNICATION CONDUIT
T	t	TELEPHONE CONDUIT
F	f	FIRE ALARM CONDUIT
FO	fo	FIBER OPTIC CONDUIT
		CONDUIT TERMINATION
R	r	CONDUIT RISER ATTACHED TO THE STRUCTURE OR SERVICE POLE

SERVICE EQUIPMENT

NEW	EXISTING	
OH	oh	OVERHEAD LINES
U	U	WOOD POLE, "U" INDICATES UTILITY OWNED
		POLE GUY WITH ANCHOR
		UTILITY TRANSFORMER - GROUND MOUNTED
III	III	SERVICE EQUIPMENT ENCLOSURE TYPE. DOOR INDICATES FRONT OF ENCLOSURE
T	t	TELEPHONE DEMARCATION CABINET

POLE-MOUNTED SERVICE DESIGNATION

TYPE H SERVICE, 28'-10" — TYPE OF INSTALLATION AND POLE HEIGHT ABOVE GRADE

FLASHING BEACON

NEW	EXISTING	
R	R	FLASHING BEACON (ONE VEHICLE SIGNAL HEAD WITH BACKPLATE AND VISOR) "R" INDICATES RED INDICATION, "Y" INDICATES YELLOW INDICATION
Y Y	Y Y	FLASHING BEACON WITH TYPE 15-FBS STANDARD AND A SIGN.
R R	R R	FLASHING BEACON WITH TYPES 9, 9A OR 9B SIGN UNLESS OTHERWISE SPECIFIED OR INDICATED

SIGNAL EQUIPMENT

NEW	EXISTING	
		PEDESTRIAN SIGNAL HEAD
		PUSH BUTTON ASSEMBLY POST
		PEDESTRIAN BARRICADE
		VEHICLE SIGNAL HEAD (WITH BACKPLATE AND 3-SECTIONS: RED, YELLOW AND GREEN)
		VEHICLE SIGNAL HEAD WITH ANGLE VISOR
PV	PV	MODIFICATIONS OF BASIC SYMBOL: "L" INDICATES ALL NON-ARROW SECTIONS LOUVERED "LG" INDICATES LOUVERED GREEN SECTION ONLY "PV" INDICATES ALL 12" SECTIONS PROGRAMMED VISIBILITY "8" INDICATES ALL 8" SECTIONS (ONLY WHEN SPECIFIED)
		VEHICLE SIGNAL HEAD CONSISTING OF RED, YELLOW AND GREEN LEFT ARROW SECTIONS
		VEHICLE SIGNAL HEAD CONSISTING OF RED AND YELLOW SECTIONS WITH AN UP GREEN ARROW SECTION
		VEHICLE SIGNAL HEAD (5 SECTION) CONSISTING OF RED, YELLOW AND GREEN SECTIONS WITH YELLOW AND GREEN RIGHT ARROW SECTIONS
		TYPE 15TS STANDARD WITH VEHICLE SIGNAL HEAD AND LUMINAIRE
		TYPE 21TS STANDARD WITH VEHICLE SIGNAL HEAD AND LUMINAIRE
		STANDARD WITH LUMINAIRE AND SIGNAL MAST ARMS AND ATTACHED VEHICLE SIGNAL HEADS
		TYPE 1 STANDARD WITH ATTACHED VEHICLE SIGNAL HEADS
		STANDARD WITH A SIGNAL MAST ARM, ATTACHED VEHICLE SIGNAL HEADS AND INTERNALLY ILLUMINATED STREET NAME SIGN
		CONTROLLER ASSEMBLY. DOOR INDICATES FRONT OF CABINET

SIGNAL EQUIPMENT Cont

NEW	EXISTING	
		GUARD POST
		TYPE 1 STANDARD WITH RAMP METERING SIGN
		OPTICAL DETECTOR FOR THE EMERGENCY VEHICLE DETECTION

NOTES:

1. All signal sections shall be 12" unless shown otherwise.
2. Signal heads shall be provided with backplates unless shown otherwise.

ILLUMINATED OVERHEAD SIGN

NEW	EXISTING	
		SINGLE POST, SINGLE ILLUMINATED SIGN, BALANCED BUTTERFLY
		SINGLE POST, DOUBLE ILLUMINATED SIGN, BALANCED BUTTERFLY
		SINGLE POST, SINGLE ILLUMINATED SIGN, FULL CANTILEVER
		DOUBLE POST, SINGLE ILLUMINATED SIGN
		SINGLE ILLUMINATED SIGN MOUNTED ON STRUCTURE
		DOUBLE POST, SINGLE ILLUMINATED SIGN WITH ELECTROLIER

STATE OF CALIFORNIA
DEPARTMENT OF TRANSPORTATION

ELECTRICAL SYSTEMS (LEGEND AND ABBREVIATIONS)

NO SCALE

RSP ES-1B DATED OCTOBER 30, 2015 SUPERSEDES RSP ES-1B DATED JULY 19, 2013 AND STANDARD PLAN ES-1B DATED MAY 20, 2011 - PAGE 426 OF THE STANDARD PLANS BOOK DATED 2010.

REVISED STANDARD PLAN RSP ES-1B

2010 REVISED STANDARD PLAN RSP ES-1B

DATE PLOTTED => 24-NOV-2015
TIME PLOTTED => 09:33

Dist	COUNTY	ROUTE	POST MILES TOTAL PROJECT	SHEET No.	TOTAL SHEETS
02	Plu	147	8.9/9.3	69	94

Theresa Gabriel
REGISTERED ELECTRICAL ENGINEER

October 30, 2015
PLANS APPROVAL DATE

REGISTERED PROFESSIONAL ENGINEER Theresa Aziz Gabriel No. E15129 Exp. 6-30-16 ELECTRICAL STATE OF CALIFORNIA

THE STATE OF CALIFORNIA OR ITS OFFICERS OR AGENTS SHALL NOT BE RESPONSIBLE FOR THE ACCURACY OR COMPLETENESS OF SCANNED COPIES OF THIS PLAN SHEET.

TO ACCOMPANY PLANS DATED 11-30-15

EQUIPMENT IDENTIFICATION

ILLUMINATED SIGN IDENTIFICATION NUMBER:

SIGN No. 12345
10 ISL SCI 1.0

- SIGN NUMBER - PLACE ON POST OR STRUCTURE
- TRANSFORMER RATING (kVA)
- LIGHTING CONTROL TYPE
- NUMBER AND TYPE OF FIXTURES

} DO NOT PLACE ON STANDARD OR STRUCTURE

ELECTROLIER OR EQUIPMENT IDENTIFICATION NUMBER:

12345 - 15'-0"

- MAST ARM LENGTH, IF SHOWN. DO NOT PLACE ON STANDARD OR STRUCTURE
- EQUIPMENT NUMBER - PLACE ON STANDARD OR STRUCTURE. EXISTING EQUIPMENT NUMBERS ARE SHOWN IN PARENTHESIS

CONDUIT AND CONDUCTOR IDENTIFICATION:

1½"C, 2#10, 15#14, 2 DLC, 12P#18 (PAIR)

- NUMBER AND SIZE OF CONDUCTORS AND CABLES
- SIZE OF CONDUIT IN INCHES

ø1, ø2, ø2P, etc.	TRAFFIC PHASE IDENTIFICATION FOR SIGNALS, DETECTORS AND PHASE DIAGRAMS
1 2 3	LEGEND NUMBERS
A B C	EQUIPMENT, SIGNAL POLES, INSTALLATION OR ITEMS
1 2 3	CONDUIT RUN NUMBERS

SIGNAL AND LIGHTING STANDARD (TYPICAL DESIGNATION):

19A - 3 - 100

- WIND VELOCITY = 100 mph
- CASE 3 ARM LOADING
- STANDARD TYPE
- STANDARD PLAN SHEET NUMBER
- DETAIL, NUMBER, SECTION, TYPE OR ELEVATION

MISCELLANEOUS EQUIPMENT

NEW	EXISTING	
CMS	cms	CHANGEABLE MESSAGE SIGN
		CLOSED CIRCUIT TELEVISION CAMERA
		HIGHWAY ADVISORY RADIO POLE AND ANTENNA
EMS	ems	LED EXTINGUISHABLE MESSAGE SIGN
M V	m v	DETECTION DEVICE M = MICROWAVE SENSOR V = VIDEO IMAGE SENSOR

WIRING DIAGRAM LEGEND

----	EXTERNAL CONDUCTOR
	CONDUCTOR OR BUS
	TIE POINT
	CONTACTOR COIL
	CONTACTOR, NO CONTACT
	TERMINAL BLOCKS
	CONTACTOR, NC CONTACT
	ENCLOSURE BOND
	GROUNDING ELECTRODE
	CIRCUIT BREAKER
	RECEPTACLE

PULL BOXES

NEW	EXISTING	
		PULL BOX, No. 5 UNLESS OTHERWISE INDICATED OR NOTED
3	9A(21)	PULL BOX, ADDITIONAL DESIGNATIONS OR DESCRIPTIONS

3 No. 3½ PULL BOX
5 No. 5 PULL BOX
6 No. 6 PULL BOX
7 No. 7 (CEILING PULL BOX)
8 No. 8 (PENDANT SOFFIT PULL BOX)
9 No. 9 PULL BOX
9A No. 9A PULL BOX

(C) COMMUNICATIONS PULL BOX
(E) PULL BOX WITH EXTENSION
(S) SPRINKLER CONTROL PULL BOX
(21) ANCHOR BOLTS AND CONDUIT FOR FUTURE INSTALLATION OF TYPE 21 STANDARD
(T) TRAFFIC PULL BOX

VEHICLE DETECTORS

5 J 9 U

- VEHICLE DETECTOR DESIGNATION
- U = UPPER
  L = LOWER
- SLOT NUMBER IN INPUT FILE
- INPUT FILE (I OR J)
- PHASE

NEW	EXISTING	
		TYPE A LOOP DETECTOR. OUTLINE OF SAWCUT SHOWN
		TYPE B LOOP DETECTOR. OUTLINE OF SAWCUT SHOWN
		TYPE C LOOP DETECTOR. OUTLINE OF SAWCUT SHOWN
		TYPE D LOOP DETECTOR. OUTLINE OF SAWCUT SHOWN
		TYPE E LOOP DETECTOR. OUTLINE OF SAWCUT SHOWN
		TYPE Q LOOP DETECTOR. OUTLINE OF SAWCUT SHOWN
DH	dh	DETECTOR HANDHOLE
		MICROWAVE OR VIDEO DETECTION ZONE

STATE OF CALIFORNIA
DEPARTMENT OF TRANSPORTATION

ELECTRICAL SYSTEMS (LEGEND AND ABBREVIATIONS)

NO SCALE

RSP ES-1C DATED OCTOBER 30, 2015 SUPERSEDES RSP ES-1C DATED JULY 19, 2013 AND STANDARD PLAN ES-1C DATED MAY 20, 2011 - PAGE 427 OF THE STANDARD PLANS BOOK DATED 2010.

REVISED STANDARD PLAN RSP ES-1C

2010 REVISED STANDARD PLAN RSP ES-1C

DATE PLOTTED => 24-NOV-2015
TIME PLOTTED => 09:33

Dist	COUNTY	ROUTE	POST MILES TOTAL PROJECT	SHEET No.	TOTAL SHEETS
02	Plu	147	8.9/9.3	70	94

Theresa Gabriel
REGISTERED ELECTRICAL ENGINEER

October 30, 2015
PLANS APPROVAL DATE

REGISTERED PROFESSIONAL ENGINEER Theresa Aziz Gabriel No. E15129 Exp. 6-30-16 ELECTRICAL STATE OF CALIFORNIA

THE STATE OF CALIFORNIA OR ITS OFFICERS OR AGENTS SHALL NOT BE RESPONSIBLE FOR THE ACCURACY OR COMPLETENESS OF SCANNED COPIES OF THIS PLAN SHEET.

TO ACCOMPANY PLANS DATED 11-30-15

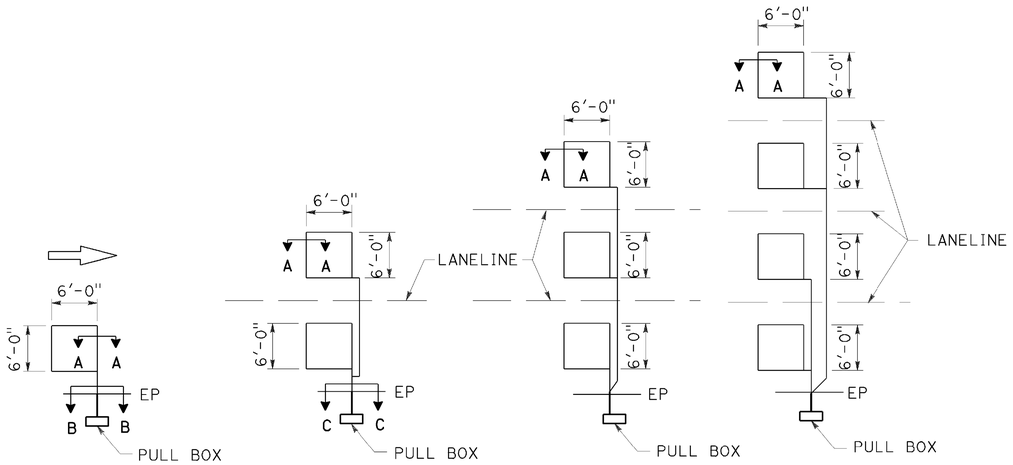

TYPE 1A INSTALLATION | TYPE 2A INSTALLATION | TYPE 3A INSTALLATION | TYPE 4A INSTALLATION

SAWCUT DETAILS

Type A loop detector configurations illustrated

1. 1A thru 4A = 1 Type A loop configuration in each lane.
2. 1B thru 4B = 1 Type B loop configuration in each lane.
3. 1C = 1 Type C loop configuration entering lanes as required.
4. 1D thru 4D = 1 Type D loop configuration in each lane.
5. 1E thru 4E = 1 Type E loop configuration in each lane.
6. 1Q thru 4Q = 1 Type Q loop configuration in each lane.
   Use Type A, B, C, D, E or Q loop detector configurations only when specified or shown on plans.

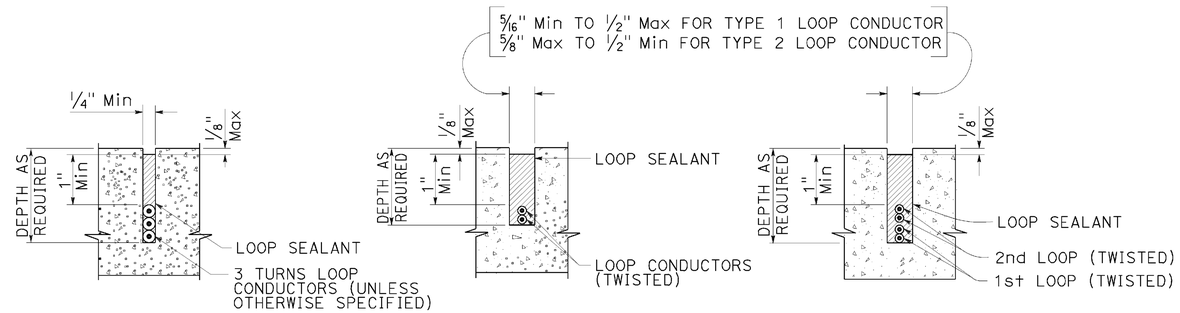

SECTION A-A | SECTION B-B | SECTION C-C

SLOT DETAILS - TYPE 1 AND TYPE 2 LOOP CONDUCTOR

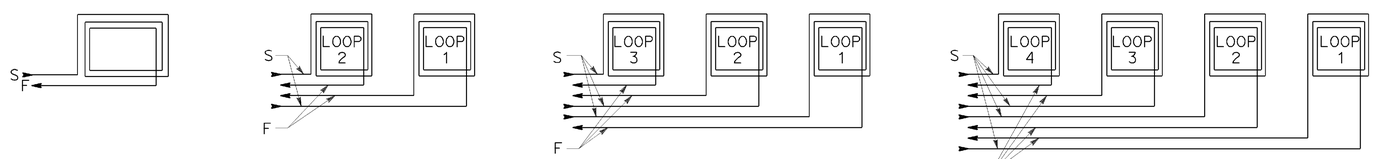

WINDING DETAILS

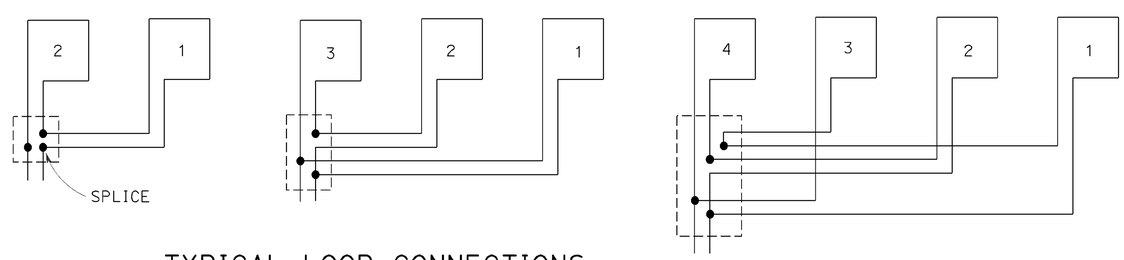

TYPICAL LOOP CONNECTIONS

Dashed lines represent the pull box

ABBREVIATIONS:

S - START
F - FINISH

STATE OF CALIFORNIA
DEPARTMENT OF TRANSPORTATION

ELECTRICAL SYSTEMS (LOOP DETECTORS)

NO SCALE

RSP ES-5A DATED OCTOBER 30, 2015 SUPERSEDES STANDARD PLAN ES-5A DATED MAY 20, 2011 - PAGE 448 OF THE STANDARD PLANS BOOK DATED 2010.

REVISED STANDARD PLAN RSP ES-5A

2010 REVISED STANDARD PLAN RSP ES-5A

DATE PLOTTED => 24-NOV-2015
TIME PLOTTED => 09:33

Dist	COUNTY	ROUTE	POST MILES TOTAL PROJECT	SHEET No.	TOTAL SHEETS
02	Plu	147	8.9/9.3	71	94

Theresa Gabriel
REGISTERED ELECTRICAL ENGINEER

October 30, 2015
PLANS APPROVAL DATE

REGISTERED PROFESSIONAL ENGINEER Theresa Aziz Gabriel No. E15129 Exp. 6-30-16 ELECTRICAL STATE OF CALIFORNIA

THE STATE OF CALIFORNIA OR ITS OFFICERS OR AGENTS SHALL NOT BE RESPONSIBLE FOR THE ACCURACY OR COMPLETENESS OF SCANNED COPIES OF THIS PLAN SHEET.

TO ACCOMPANY PLANS DATED 11-30-15

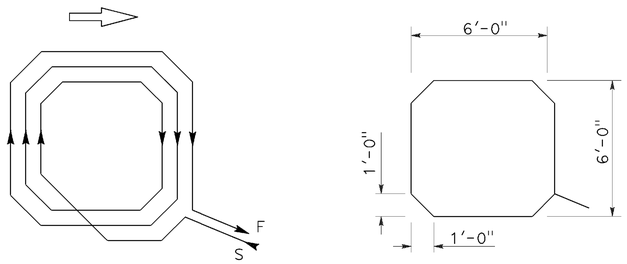

WINDING DETAIL SAWCUT DETAIL

TYPE A LOOP DETECTOR CONFIGURATION

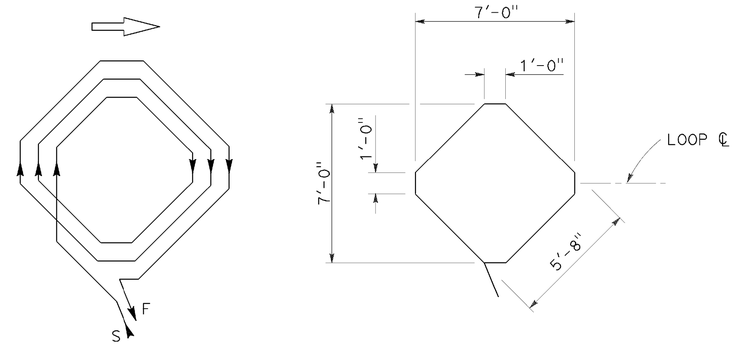

WINDING DETAIL SAWCUT DETAIL

TYPE B LOOP DETECTOR CONFIGURATION

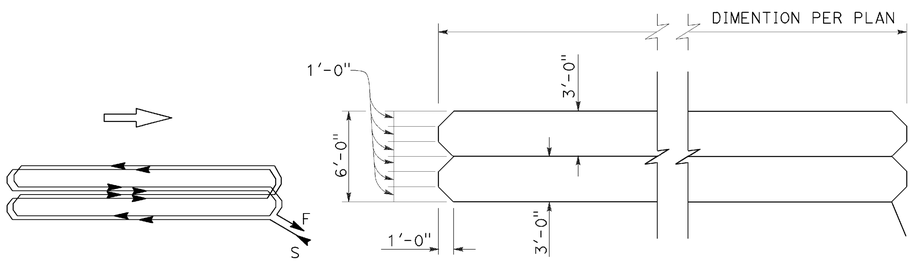

WINDING DETAIL SAWCUT DETAIL

TYPE C LOOP DETECTOR CONFIGURATION

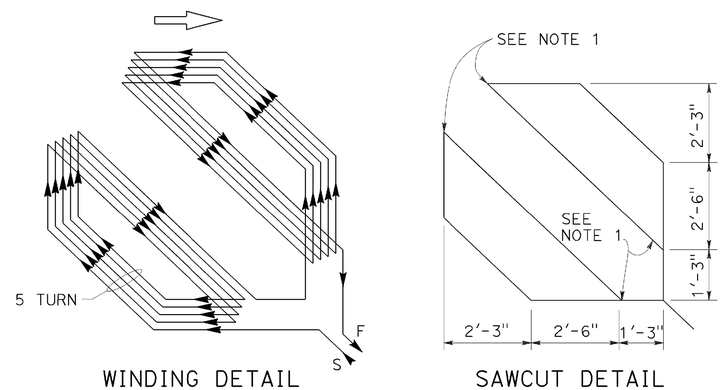

WINDING DETAIL SAWCUT DETAIL

TYPE D LOOP DETECTOR CONFIGURATION

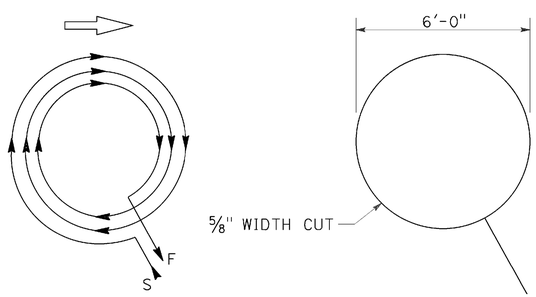

WINDING DETAIL SAWCUT DETAIL

TYPE E LOOP DETECTOR CONFIGURATION

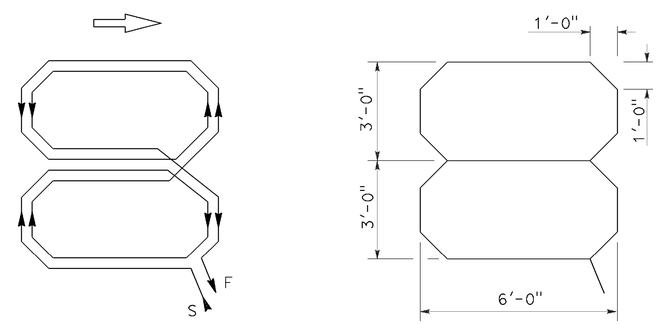

WINDING DETAIL SAWCUT DETAIL

TYPE Q LOOP DETECTOR CONFIGURATION

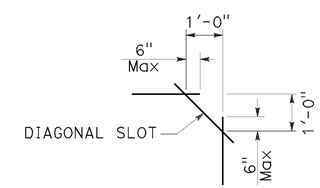

PLAN VIEW OF DIAGONAL SLOT AT CORNERS

NOTES:

1. Round corners of acute angle sawcuts to prevent damage to conductors.
2. Typical distance separating loops from edge to edge is 10' for Type A, B, D and E installation in single lane.
3. Use Type D loops for limit line detector installations in left turn and bicycle lanes.

STATE OF CALIFORNIA
DEPARTMENT OF TRANSPORTATION

ELECTRICAL SYSTEMS (DETECTORS)

NO SCALE

RSP ES-5B DATED OCTOBER 30, 2015 SUPERSEDES RSP ES-5B DATED JULY 19, 2013 AND STANDARD PLAN ES-5B DATED MAY 20, 2011 - PAGE 449 OF THE STANDARD PLANS BOOK DATED 2010.

REVISED STANDARD PLAN RSP ES-5B

2010 REVISED STANDARD PLAN RSP ES-5B

DATE PLOTTED => 24-NOV-2015
TIME PLOTTED => 09:34

DIST	COUNTY	ROUTE	POST MILES TOTAL PROJECT	SHEET NO.	TOTAL SHEETS
02	Plu	147	8.9/9.3	72	94

Theresa Gabriel
REGISTERED ELECTRICAL ENGINEER

October 30, 2015
PLANS APPROVAL DATE

REGISTERED PROFESSIONAL ENGINEER Theresa Aziz Gabriel No. E15129 Exp. 6-30-16 ELECTRICAL STATE OF CALIFORNIA

THE STATE OF CALIFORNIA OR ITS OFFICERS OR AGENTS SHALL NOT BE RESPONSIBLE FOR THE ACCURACY OR COMPLETENESS OF SCANNED COPIES OF THIS PLAN SHEET.

TO ACCOMPANY PLANS DATED 11-30-15

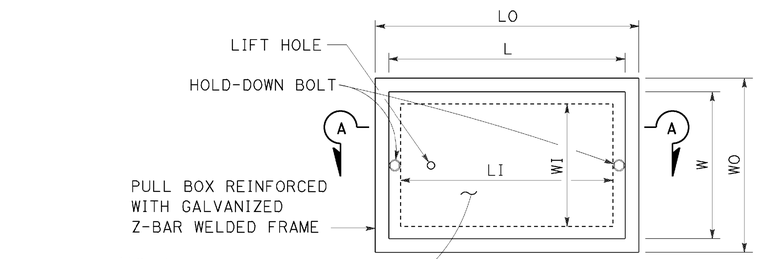

TOP VIEW

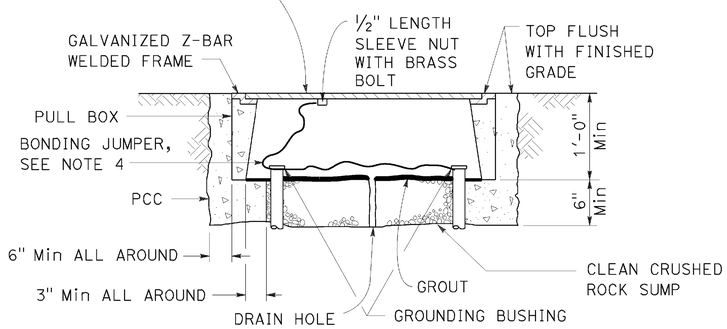

SECTION A-A

No. 3½(T), No. 5(T) AND No. 6(T) TRAFFIC PULL BOX

NOTES:

1. Traffic pull box shall be provided with steel cover and special concrete footing. Steel cover shall have embossed non-skid pattern.
2. Steel reinforcing shall be as regularly used in the standard products of the respective manufacturer.
3. Pull box covers shall be marked as follows: "SERVICE" Service circuits between service point and service disconnect; "SPRINKLER-CONTROL" Sprinkler control circuits, 50 V or less; "CALTRANS" On all pull boxes, except pull boxes marked "SPRINKLER-CONTROL"; and "TELEPHONE" Telephone service.
   A) No. 3½(T) pull box.
      1) "SIGNAL" - Traffic signal circuits with or without lighting or sign lighting circuits.
      2) "LIGHTING" - Lighting or sign lighting circuits where voltage is under 600 V.
   B) No. 5(T) or 6(T) pull box.
      1) "TRAFFIC SIGNAL" - Traffic signal circuits with or without lighting or sign lighting circuits.
      2) "LIGHTING" - Lighting or sign lighting circuits where voltage is under 600 V.
      3) "LIGHTING-HIGH VOLTAGE" - Lighting or sign lighting circuits where voltage is above 600 V.
      4) "IRRIGATION" - Circuits to irrigation controller 120 V or more.
      5) "RAMP METER" - Ramp meter circuits.
      6) "COUNT STATION" - Count or speed monitor circuits.
      7) "COMMUNICATION" - Communication circuits.
      8) "TOS COMMUNICATIONS" - TOS communications line.
      9) "TOS POWER" - TOS power.
      10) "TDC POWER" - Telephone demarcation cabinet power.
      11) "CCTV" - Closed circuit television circuits.
      12) "TMS" - Traffic monitoring station circuits.
      13) "CMS" - Changeable message sign circuits.
      14) "HAR" - Highway advisory radio circuits.
      15) "BOOSTER PUMP" - Booster pump circuit.
4. Bonding jumper for metal covers shall be 3' long, minimum.
5. The nominal dimensions of the opening in which the cover sets shall be the same as the cover dimensions except the length and width dimensions shall be ⅛" greater.
6. Covers and boxes shall be interchangeable with California standard male and female gages. When interchanged with a standard male or female gage, the top surfaces shall be flush within ⅛".

DIMENSION TABLE

PULL BOX	PULL BOX						COVER	
	MINIMUM * THICKNESS	MINIMUM DEPTH BOX AND EXTENSION	LO	LI	WO	WI	L **	W **
No. 3½(T)	1½"	1'-0"	1'-10" - 1'-11"	1'-5" - 1'-6½"	1'-3" - 1'-4"	10" - 1'-0"	1'-8" -1'-8½"	1'-1" - 1'-2"
No. 5(T)	1¾"	1'-0"	2'-5" - 2'-6"	2'-0" - 2'-1"	1'-6" - 1'-7"	1'-1" - 1'-2"	2'-3" - 2'-3½"	1'-4" - 1'-4½"
No. 6(T)	2"	1'-0"	2'-11" - 3'-1"	2'-6" - 2'-7"	1'-10" - 2'-0"	1'-5" - 1'-6"	2'-9" - 2'-9½"	1'-8" - 1'-8½"

* EXCLUDING CONDUIT WEB ** TOP DIMENSION

STATE OF CALIFORNIA
DEPARTMENT OF TRANSPORTATION

ELECTRICAL SYSTEMS (TRAFFIC PULL BOX)

NO SCALE

RSP ES-8B DATED OCTOBER 30, 2015 SUPERSEDES RSP ES-8B DATED JULY 19, 2013 AND RSP ES-8B DATED JANUARY 20, 2012 THAT SUPPLEMENTS THE STANDARD PLANS BOOK DATED 2010.

REVISED STANDARD PLAN RSP ES-8B

2010 REVISED STANDARD PLAN RSP ES-8B

DATE PLOTTED => 24-NOV-2015
TIME PLOTTED => 09:34

DIST	COUNTY	ROUTE	POST MILES TOTAL PROJECT	SHEET No.	TOTAL SHEETS
02	Plu	147	8.9/9.3	73	94

P. Vijitakula 2-3-15
REGISTERED CIVIL ENGINEER DATE

11-30-15
PLANS APPROVAL DATE

REGISTERED PROFESSIONAL ENGINEER P. VIJITAKULA No. 54701 Exp. 12-31-15 CIVIL STATE OF CALIFORNIA

The State of California or its officers or agents shall not be responsible for the accuracy or completeness of scanned copies of this plan sheet.

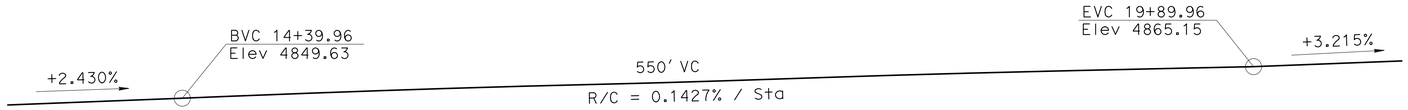

PROFILE GRADE

NO SCALE

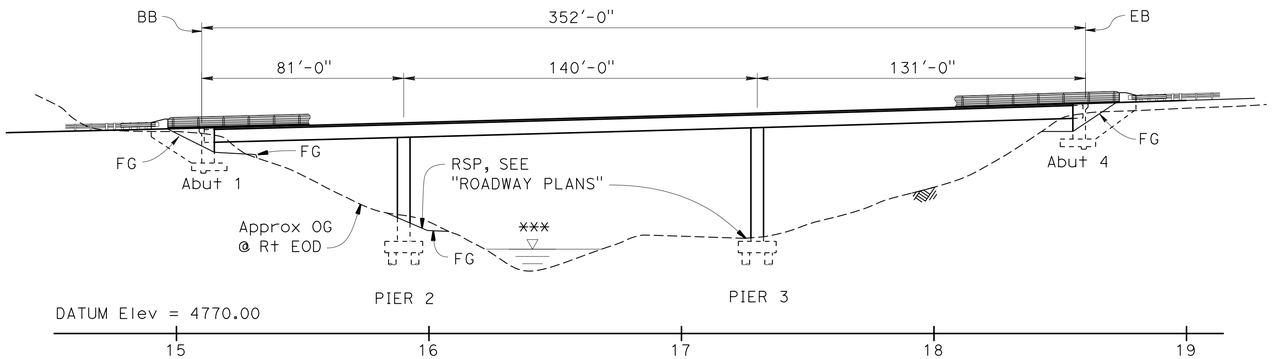

ELEVATION

1" = 30'

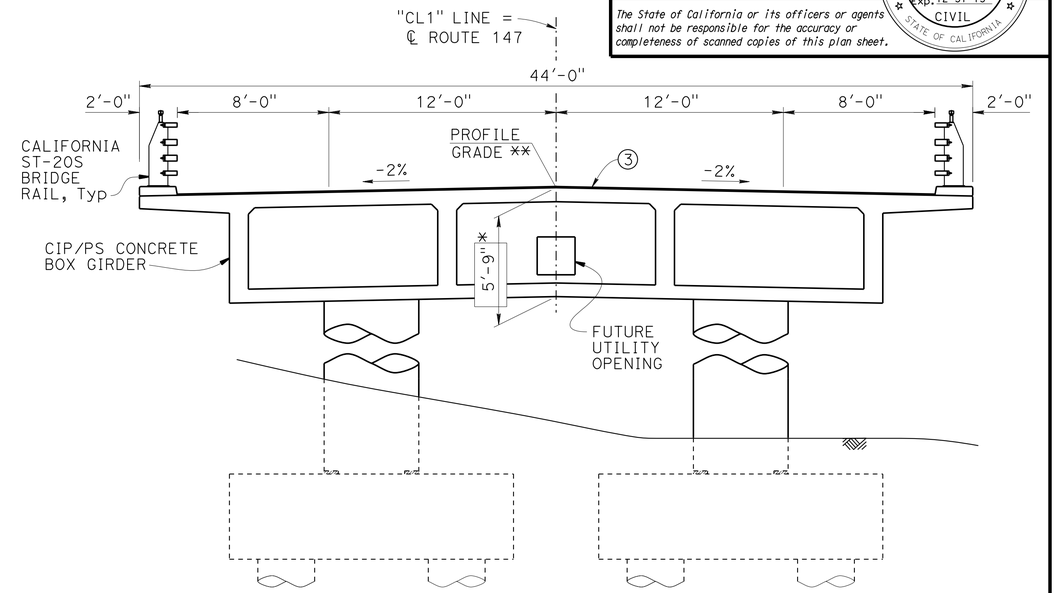

TYPICAL SECTION

¼" = 1'-0"

QUANTITIES

LEAD COMPLIANCE PLAN	LUMP	SUM
WORK AREA MONITORING (BRIDGE)	LUMP	SUM
PREPARE CONCRETE BRIDGE DECK SURFACE	14,100	SQFT
FURNISH POLYESTER CONCRETE OVERLAY	1,056	CF
PLACE POLYESTER CONCRETE OVERLAY	14,100	SQFT
BRIDGE REMOVAL	LUMP	SUM
STRUCTURE EXCAVATION (BRIDGE)	869	CY
STRUCTURE EXCAVATION (ROCK) (TYPE D)	488	CY
STRUCTURE BACKFILL (BRIDGE)	346	CY
36" CAST-IN-DRILLED-HOLE CONCRETE PILING	644	LF
PRESTRESSING CAST-IN-PLACE CONCRETE	LUMP	SUM
STRUCTURAL CONCRETE, BRIDGE FOOTING	300	CY
STRUCTURAL CONCRETE, BRIDGE	1,431	CY
JOINT SEAL ASSEMBLY (MR 2 1/2")	42	LF
JOINT SEAL ASSEMBLY (MR 3 1/2")	42	LF
BAR REINFORCING STEEL (BRIDGE)	232,913	LB
BAR REINFORCING STEEL (EPOXY COATED) (BRIDGE)	164,342	LB
STAIN GALVANIZED SURFACES	LUMP	SUM
CALIFORNIA ST-20S BRIDGE RAIL	781	LF

NOTES:

① Paint "HAMILTON BRANCH BRIDGE"

② Paint "BRIDGE No. 09-0079"

③ ¾" Polyester Concrete Overlay

* Structure depth shown does not include thickness of overlay.

** Profile grade elevation is at top of ¾" polyester overlay.

*** For Hydrologic Summary, see "FOUNDATION PLAN" sheet

—·—·— Indicates existing structure

INDEX TO PLANS

SHEET NO.	TITLE
1.	GENERAL PLAN
2.	DECK CONTOURS
3.	FOUNDATION PLAN
4.	ABUTMENT 1 LAYOUT
5.	ABUTMENT 4 LAYOUT
6.	ABUTMENT DETAILS
7.	PIER DETAILS NO. 1
8.	PIER DETAILS NO. 2
9.	TYPICAL SECTION
10.	GIRDER LAYOUT
11.	GIRDER REINFORCEMENT
12.	STRIP JOINT SEAL ASSEMBLY MAXIMUM MOVEMENT RATING = 4"
13.	CALIFORNIA ST-20S BRIDGE RAIL DETAILS NO. 1
14.	CALIFORNIA ST-20S BRIDGE RAIL DETAILS NO. 2
15.	CALIFORNIA ST-20S BRIDGE RAIL DETAILS NO. 3
16.	CALIFORNIA ST-20S BRIDGE RAIL DETAILS NO. 4
17.	LOG OF TEST BORINGS NO. 1 OF 6
18.	LOG OF TEST BORINGS NO. 2 OF 6
19.	LOG OF TEST BORINGS NO. 3 OF 6
20.	LOG OF TEST BORINGS NO. 4 OF 6
21.	LOG OF TEST BORINGS NO. 5 OF 6
22.	LOG OF TEST BORINGS NO. 6 OF 6

STANDARD PLANS DATED 2010

	A10A	ABBREVIATIONS (SHEET 1 OF 2)
RSP	A10B	ABBREVIATIONS (SHEET 2 OF 2)
	A10C	LINES AND SYMBOLS (SHEET 1 OF 3)
	A10D	LINES AND SYMBOLS (SHEET 2 OF 3)
	A10E	LINES AND SYMBOLS (SHEET 3 OF 3)
	A10F	LEGEND - SOIL (SHEET 1 OF 2)
	A10G	LEGEND - SOIL (SHEET 2 OF 2)
	A10H	LEGEND - ROCK
	A62C	LIMITS OF PAYMENT FOR EXCAVATION AND BACKFILL BRIDGE
	A78F1	DOUBLE THRIE BEAM BARRIER CONNECTIONS TO BRIDGE RAILINGS WITHOUT SIDEWALKS
	A78F2	SINGLE THRIE BEAM BARRIER CONNECTIONS TO BRIDGE RAILINGS WITHOUT SIDEWALKS
	B0-1	BRIDGE DETAILS
	B0-3	BRIDGE DETAILS
	B0-5	BRIDGE DETAILS
	B0-13	BRIDGE DETAILS
	B7-1	BOX GIRDER DETAILS
	B7-10	UTILITY OPENING - BOX GIRDER
RSP	B8-5	CAST-IN PLACE PRESTRESSED GIRDER DETAILS

STANDARD PLAN SHEET No.

DETAIL No.

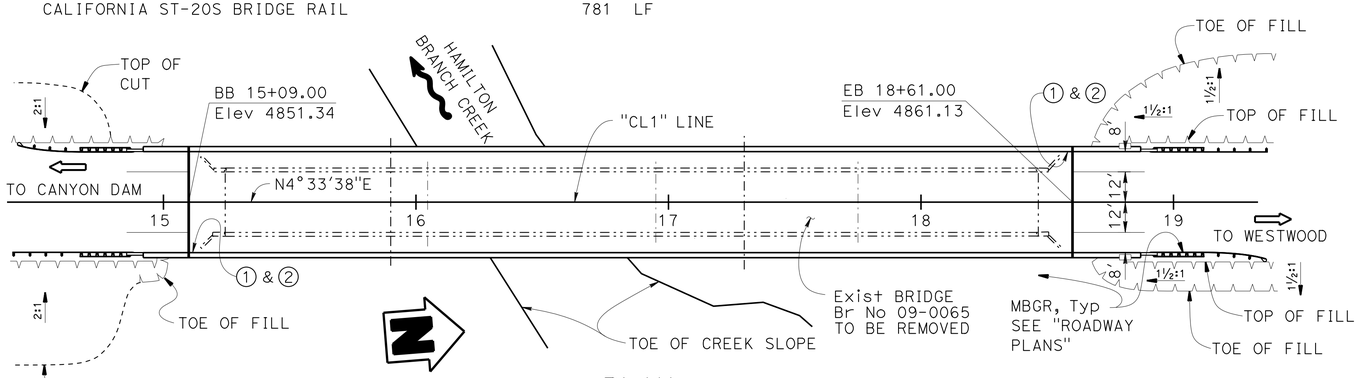

PLAN

1" = 30'

For "GENERAL NOTES", see "DECK CONTOURS" sheet.

Jeff Sims
DESIGN ENGINEER

	BY	CHECKED
DESIGN	P. Vijitakula	K. Harper
DETAILS	J. Tang	K. Harper
QUANTITIES	K.Stillmunkes/A.Pearson E.Watson	V.Shostak/G.Thornton G.Lawson

LOAD & RESISTANCE FACTOR DESIGN — LIVE LOADING: HL93 w/ 'Low-Boy' and Permit Design Vehicle

	BY	CHECKED
LAYOUT	P. Vijitakula	K. Harper
SPECIFICATIONS	D. Klein	PLANS AND SPECS COMPARED D. Klein

ORIGINAL SCALE IN INCHES FOR REDUCED PLANS 0 1 2 3

STATE OF CALIFORNIA
DEPARTMENT OF TRANSPORTATION

DIVISION OF ENGINEERING SERVICES
STRUCTURE DESIGN
DESIGN BRANCH 1

BRIDGE NO. 09-0079
POST MILE 8.98

HAMILTON BRANCH BRIDGE (REPLACE)
GENERAL PLAN

UNIT: 3576
PROJECT NUMBER & PHASE: 02120000111 CONTRACT NO.: 02-4E6404

DISREGARD PRINTS BEARING EARLIER REVISION DATES

REVISION DATES 04/26/14 11/19/15 12/08/14

SHEET 1 OF 22

USERNAME => s115152 DATE PLOTTED => 24-NOV-2015 TIME PLOTTED => 09:35

STRUCTURES DESIGN GENERAL PLAN SHEET (ENGLISH) (REV.09-01-10)

FILE => 09-0079-a-gp(alt 3)_gp.dgn

DIST	COUNTY	ROUTE	POST MILES TOTAL PROJECT	SHEET No.	TOTAL SHEETS
02	Plu	147	8.9/9.3	74	94

P. Vijitakula 2-3-15
REGISTERED CIVIL ENGINEER DATE

11-30-15
PLANS APPROVAL DATE

REGISTERED PROFESSIONAL ENGINEER
P. VIJITAKULA
No. 54701
Exp. 12-31-15
CIVIL
STATE OF CALIFORNIA

The State of California or its officers or agents shall not be responsible for the accuracy or completeness of scanned copies of this plan sheet.

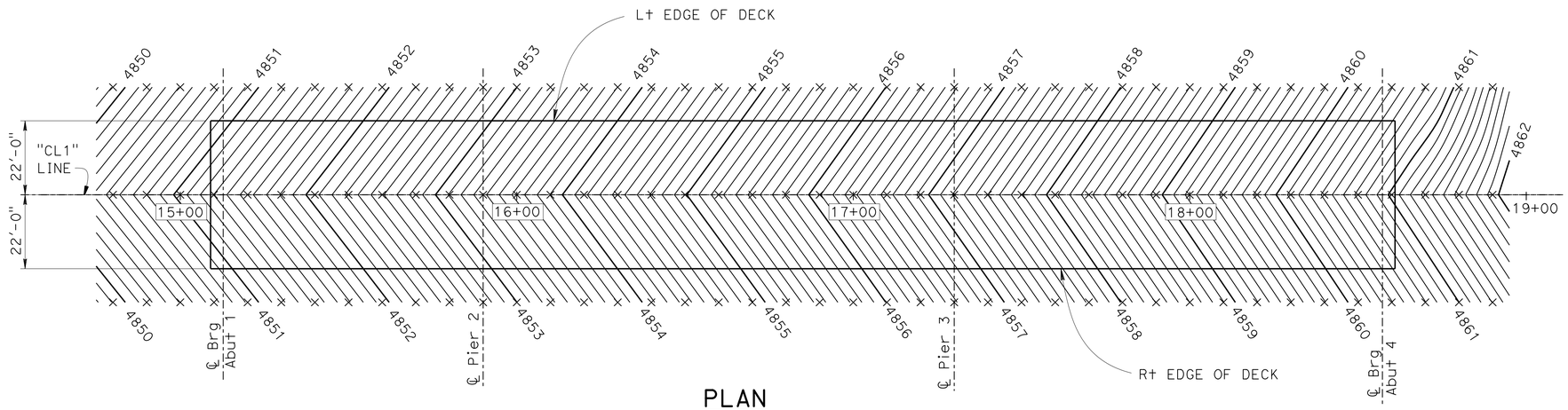

PLAN
1" = 20'

NOTES:

1. Contours are for top of concrete deck, and have been adjusted by lowering ¾" from profile grade for polyester overlay.
2. Contours do not include camber.
3. Contour interval = 0.10'.

× - Indicates 10' Intervals along station line.

GENERAL NOTES
LOAD AND RESISTANCE FACTOR DESIGN

DESIGN: AASHTO LRFD Bridge Design Specifications, 2012 edition with California Amendments

SEISMIC DESIGN: Caltrans Seismic Design Criteria (SDC), Version 1.7, dated Apri 2013

DEAD LOAD: Includes 35 psf for future wearing surface.

LIVE LOADING: HL93 and permit design load.

SEISMIC LOADING: Soil Profile: V_{S30} = 1850 ft/sec
Moment Magnitude: M_{Max} = 6.5
Peak Ground Acceleration (PGA) = 0.37g

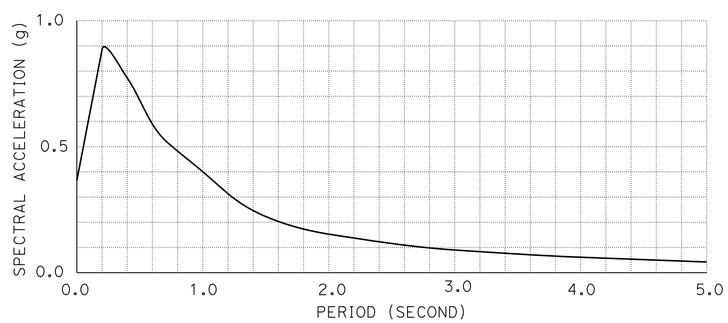

CONCRETE: f_y = 60 ksi
f'_c = 3.6 ksi
n = 8
See prestressing notes.

PILE DATA TABLE

SUPPORT LOCATION	PILE TYPE	NOMINAL RESISTANCE (Kips)		SPECIFIED TIP ELEVATION (ft)
		COMPRESSION	TENSION	
PIER 2	36" CIDH	1030	0	4762.0
PIER 3	36" CIDH	1050	0	4762.0

SPREAD FOOTING DATA TABLE

SUPPORT LOCATION	Service Permissible Net (2) Contact Stress (settlement) (ksf)	Strength/Construction (3) Factored Gross Nominal Bearing Resistance, Φ_b = 0.45 (ksf)	Extreme Event (3) Factored Gross Nominal Bearing Resistance, Φ_b = 1.00 (ksf)
Abut 1	4.0	9.0	N/A
Abut 4	4.0	9.0	N/A

NOTES:
1. Controlling load combination is the one resulting in the highest ratio of $q_{g,u}/q_R$ for foundations on soil, or $q_{g,max}/q_R$ for foundations on rock.
2. Controlling load combinations for Service Limit State is the one resulting in the highest ratio of $q_{g,n}/q_{pn}$ for foundations on soil, or $q_{g,max}/q_R$ for foundations on rock.
3. Controlling load combination for Strength, Construction, and Extreme Event Limit State is the one resulting in the highest ratio of $q_{g,u}/q_R$ for foundations on soil, or $q_{g,max}/q_R$ for foundations on rock.

	BY	CHECKED
DESIGN	P. Vijitakula	K. Harper
DETAILS	J. Zhou	K. Harper
QUANTITIES	A. Pearson	G. Thornton

STATE OF CALIFORNIA
DEPARTMENT OF TRANSPORTATION

DIVISION OF ENGINEERING SERVICES
STRUCTURE DESIGN
DESIGN BRANCH 1

BRIDGE NO. 09-0079
POST MILE 8.98

HAMILTON BRANCH BRIDGE (REPLACE)
DECK CONTOURS

STRUCTURES DESIGN DETAIL SHEET (ENGLISH) (REV. 09-01-10)

ORIGINAL SCALE IN INCHES FOR REDUCED PLANS 0 1 2 3

UNIT: 3576
PROJECT NUMBER & PHASE: 02120000111
CONTRACT NO.: 02-4E6404

DISREGARD PRINTS BEARING EARLIER REVISION DATES

REVISION DATES 02-03-14 07-28-14 11-26-14 12-04-14

SHEET 2 OF 22

FILE => 09-0079-b-dc.dgn

USERNAME => s175152 DATE PLOTTED => 24-NOV-2015 TIME PLOTTED => 09:35

DIST	COUNTY	ROUTE	POST MILES TOTAL PROJECT	SHEET No.	TOTAL SHEETS
02	Plu	147	8.9/9.3	75	94

P. Vijitakula 2-3-15
REGISTERED CIVIL ENGINEER DATE

11-30-15
PLANS APPROVAL DATE

REGISTERED PROFESSIONAL ENGINEER
P. VIJITAKULA
No. 54701
Exp. 12-31-15
CIVIL
STATE OF CALIFORNIA

The State of California or its officers or agents shall not be responsible for the accuracy or completeness of scanned copies of this plan sheet.

HYDROLOGIC SUMMARY

Drainage Area : 172 Square Mile

	Design Flood	Base Flood	Overtopping Flood/Flood of Record
Frequency	50-Yr	100-Yr	N/A
Discharge	N/A	6900 cfs	N/A
Water surface elevation at bridge	N/A	4806.81 ft	N/A

Flood plain data are based upon information available when the plans were prepared and are shown to meet federal requirements. The accuracy of said information is not warranted by the State and interested or affected parties should make their own investigation.

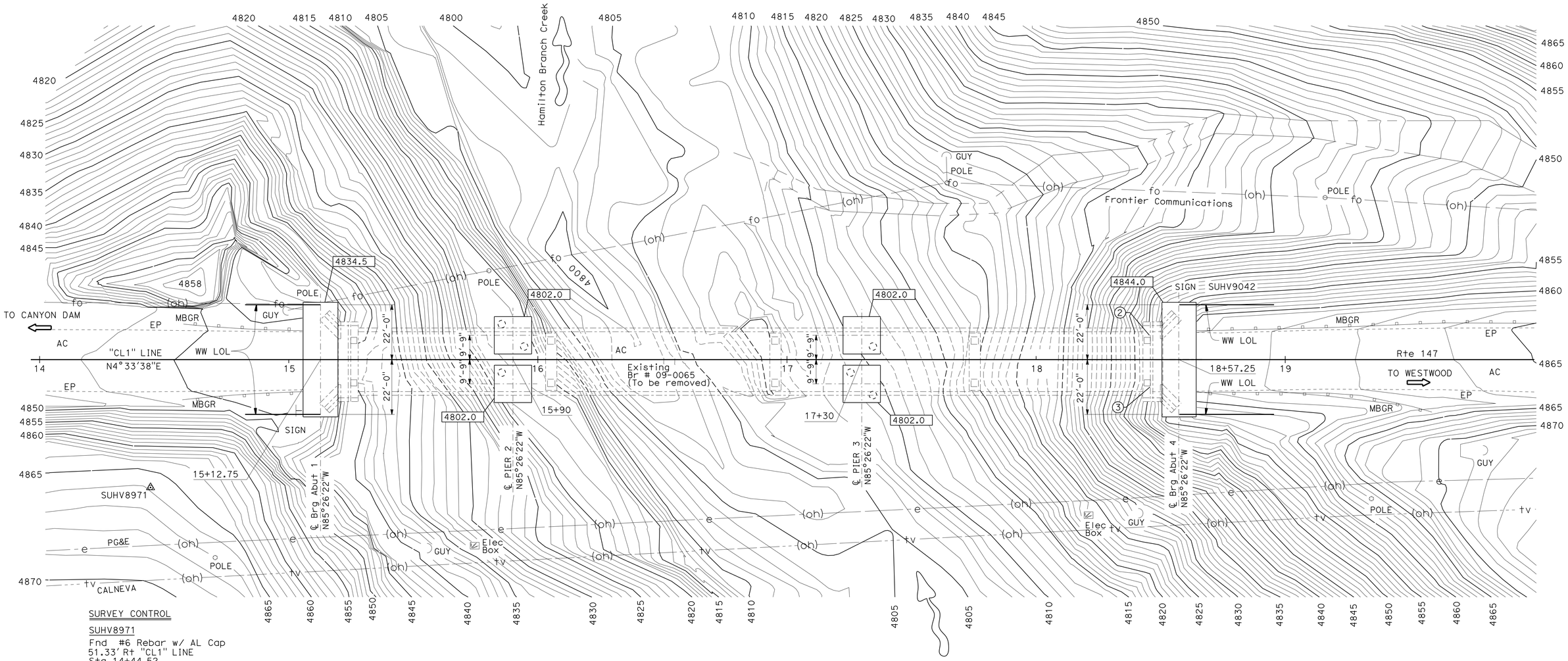

SURVEY CONTROL

SUHV8971
Fnd #6 Rebar w/ AL Cap
51.33' Rt "CL1" LINE
Sta 14+44.52
N 1,990,741.39
E 6,819,648.48
Elev=4865.85

SUHV9042
Fnd #6 Rebar w/ AL Cap
14.86' Lt "CL1" LINE
Sta 18+58.22
N 1,991,159.05
E 6,819,615.40
Elev=4859.98

Bridge Location #09-0065 (PN Points)
1. Unknown
2. 09.76' Lt "CL1" Line, Sta 18+45.47, Elev=4860.33
3. 10.99' Rt "CL1" Line, Sta 18+45.71, Elev=4860.60
4. Unknown

NOTE: For an ordinary high water mark location, see "LAYOUT SHEET L-1" on "ROADWAY PLANS".

LEGEND:

Indicates CIDH pile, not all piles shown

Indicates bottom of footing elevation

PRELIMINARY INVESTIGATION SECTION

SCALE	VERT.DATUM NAVD88	PHOTOGRAMMETRY AS OF: X			
1"=20'	HORZ.DATUM NAD83 (91.35)	SURVEYED	BY DISTRICT	CHECKED	BY DON IVY 05/2014
ALIGNMENT TIES Dist. Traverse Sheet		DRAFTED	BY SHARON ZHENG 05/2014	CHECKED	BY LAWRENCE LEW05/2014

	BY	CHECKED
DESIGN	P. Vijitakula	K. Harper
DETAILS	B. Huddleston	K. Harper
QUANTITIES	E. Watson	G. Lawson

STATE OF CALIFORNIA
DEPARTMENT OF TRANSPORTATION

DIVISION OF ENGINEERING SERVICES
STRUCTURE DESIGN
DESIGN BRANCH 1

BRIDGE NO. 09-0079
POST MILE 8.98

HAMILTON BRANCH BRIDGE (REPLACE)
FOUNDATION PLAN

STRUCTURES DESIGN DETAIL SHEET (ENGLISH) (REV. 09-01-10)

ORIGINAL SCALE IN INCHES FOR REDUCED PLANS 0 1 2 3

UNIT: 3576
PROJECT NUMBER & PHASE: 02120000111
CONTRACT NO.: 02-4E6404

DISREGARD PRINTS BEARING EARLIER REVISION DATES

REVISION DATES: 05/16/14 11-26-14 12-04-14 11/19/15

SHEET 3 OF 22

FILE => 09-0079-e-fpl01.dgn

USERNAME => s115152 DATE PLOTTED => 24-NOV-2015 TIME PLOTTED => 09:35

DIST	COUNTY	ROUTE	POST MILES TOTAL PROJECT	SHEET No.	TOTAL SHEETS
02	Plu	147	8.9/9.3	76	94

P. Vijitakula 2-3-15
REGISTERED CIVIL ENGINEER DATE

11-30-15
PLANS APPROVAL DATE

REGISTERED PROFESSIONAL ENGINEER P. VIJITAKULA No. 54701 Exp. 12-31-15 CIVIL STATE OF CALIFORNIA

The State of California or its officers or agents shall not be responsible for the accuracy or completeness of scanned copies of this plan sheet.

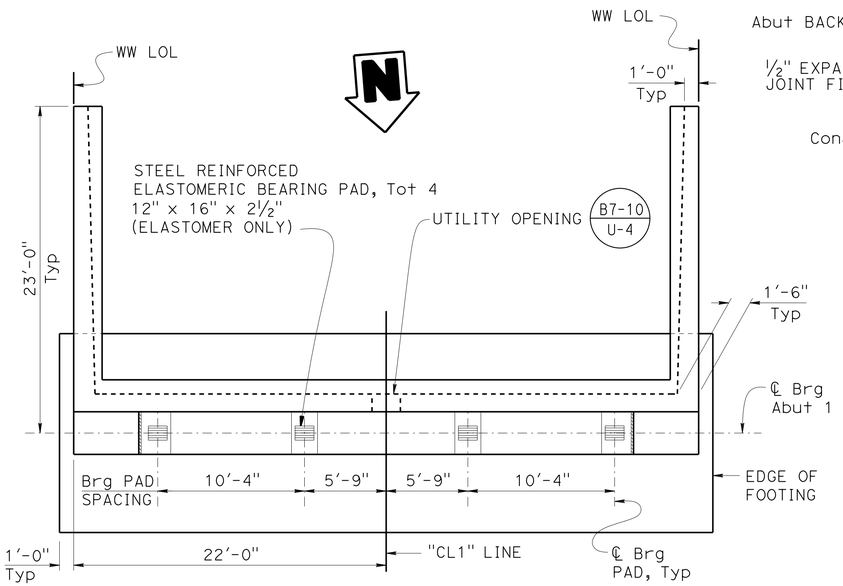

PLAN
3/16" = 1'-0"

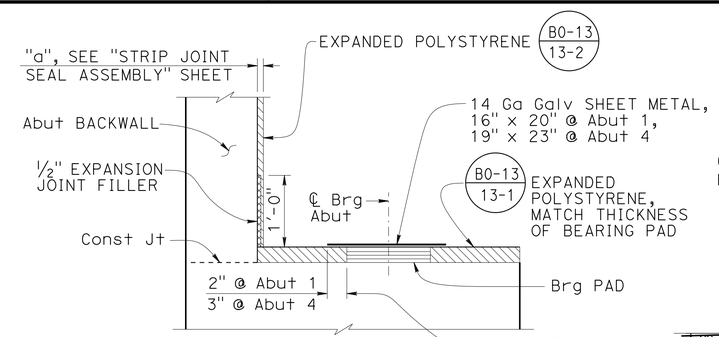

DETAIL X
NO SCALE

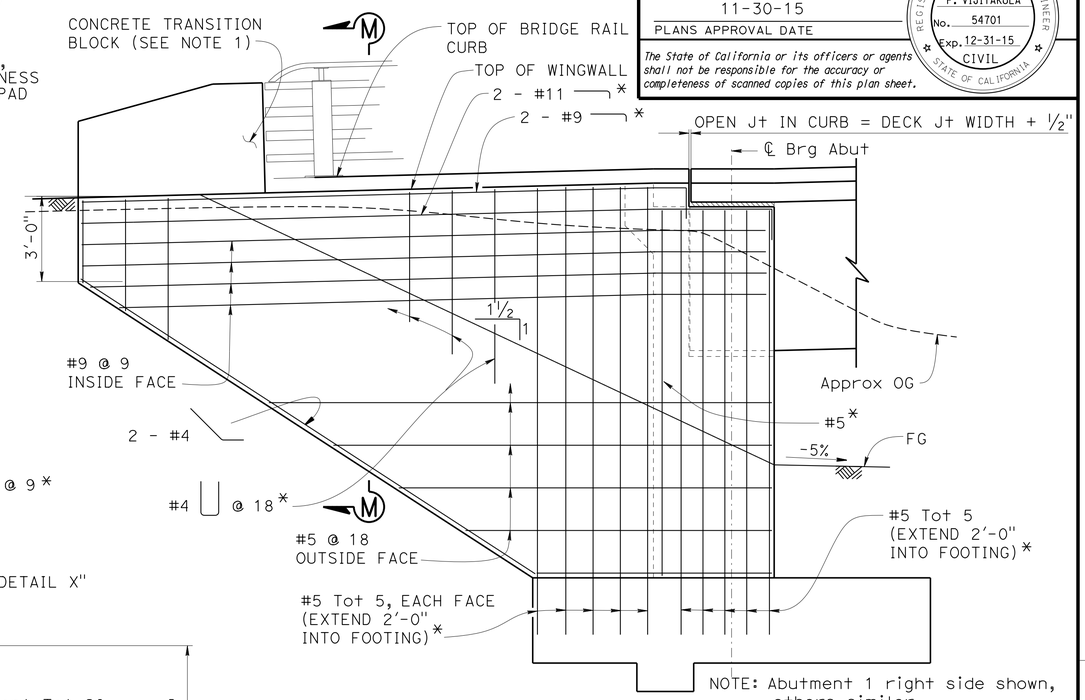

NOTE: Abutment 1 right side shown, others similer.

WINGWALL ELEVATION
3/8" = 1'-0"

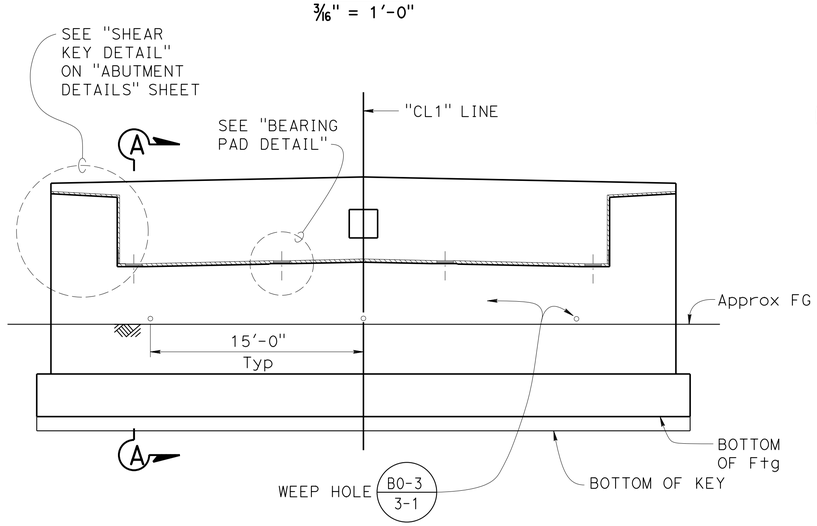

ELEVATION
3/16" = 1'-0"

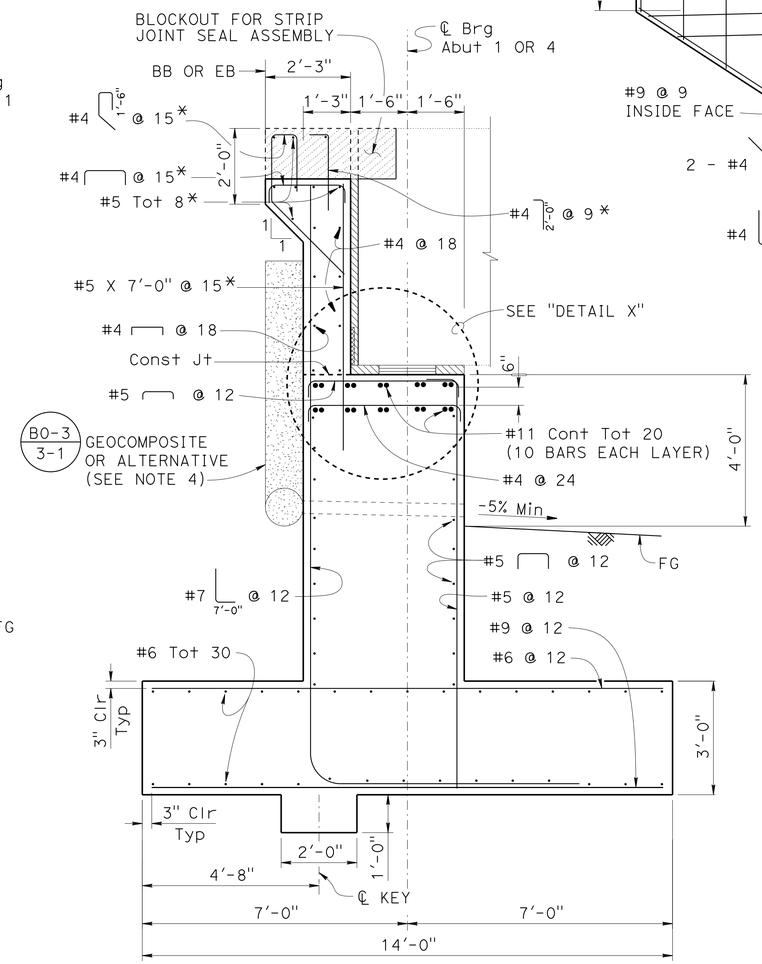

NOTE: Abutment 1 shown, Abutment 4 is similar.

SECTION A-A
½" = 1'-0"

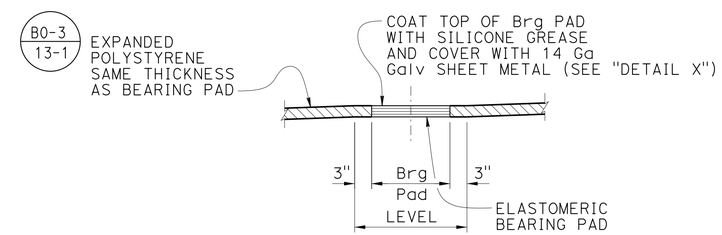

BEARING PAD DETAIL
NO SCALE

NOTES:
1. For bridge rail details, see "CALIFORNIA ST-20S BRIDGE RAIL DETAILS NO. 1-4" sheets.
2. For Joint Seal Assembly, see 'STRIP JOINT SEAL ASSEMBLY MAXIMUM MOVEMENT RATING = 4'"sheet. For joint information and "a" dimensions, see Table 1 on "ABUTMENT 4 LAYOUT" sheet.
3. For "SECTION M-M", see "ABUTMENT DETAILS" sheet.
4. For Geocomposite Drain Alternative, see "ABUTMENT 4 LAYOUT" sheet.

* Indicates epoxy coated reinforcement

	BY	CHECKED
DESIGN	P. Vijitakula	K. Harper
DETAILS	B. Huddleston	K. Harper
QUANTITIES	A. Pearson	G. Thornton

STATE OF CALIFORNIA
DEPARTMENT OF TRANSPORTATION

DIVISION OF ENGINEERING SERVICES
STRUCTURE DESIGN
DESIGN BRANCH 1

BRIDGE NO. 09-0079
POST MILE 8.98

HAMILTON BRANCH BRIDGE (REPLACE)
ABUTMENT 1 LAYOUT

STRUCTURES DESIGN DETAIL SHEET (ENGLISH) (REV. 09-01-10)

ORIGINAL SCALE IN INCHES FOR REDUCED PLANS 0 1 2 3

UNIT: 3576
PROJECT NUMBER & PHASE: 02120000111
CONTRACT NO.: 02-4E6404

DISREGARD PRINTS BEARING EARLIER REVISION DATES

REVISION DATES: 6-5-14 02/26/15 12-01-15

SHEET 4 OF 22

FILE => 09-0079-f-a01_lo1.dgn

USERNAME => s115152 DATE PLOTTED => 24-NOV-2015 TIME PLOTTED => 09:35

DIST	COUNTY	ROUTE	POST MILES TOTAL PROJECT	SHEET No.	TOTAL SHEETS
02	Plu	147	8.9/9.3	77	94

P. Vijitakula 2-3-15
REGISTERED CIVIL ENGINEER DATE

11-30-15
PLANS APPROVAL DATE

REGISTERED PROFESSIONAL ENGINEER P. VIJITAKULA No. 54701 Exp. 12-31-15 CIVIL STATE OF CALIFORNIA

The State of California or its officers or agents shall not be responsible for the accuracy or completeness of scanned copies of this plan sheet.

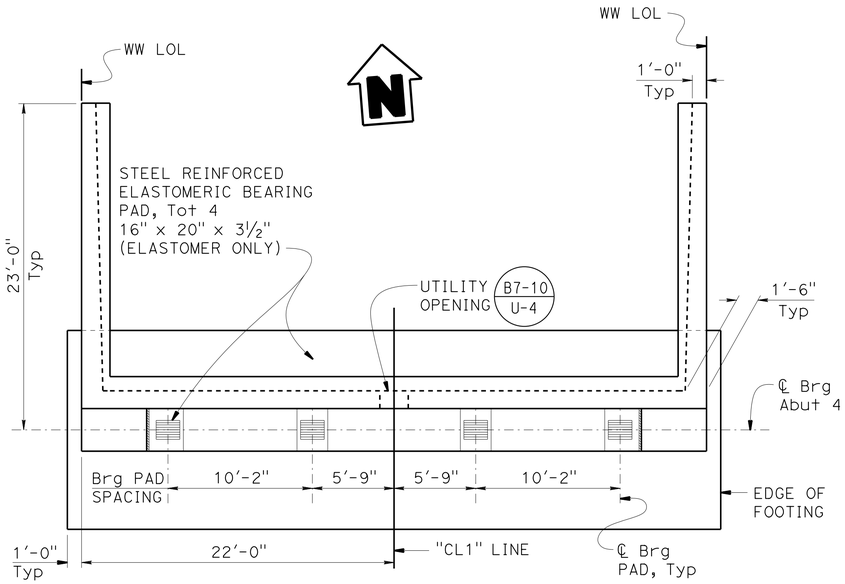

PLAN

3/16" = 1'-0"

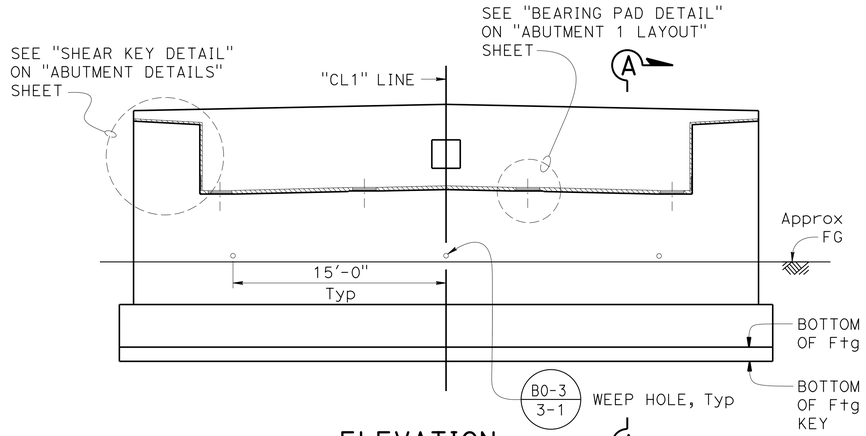

ELEVATION

3/16" = 1'-0"

NOTES:

1. For "SECTION A-A" and "WING WALL ELEVATION", see "ABUTMENT 1 LAYOUT" sheet.
2. Bridge railing not shown.

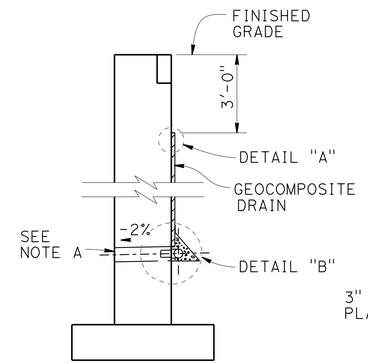

WALL SECTION

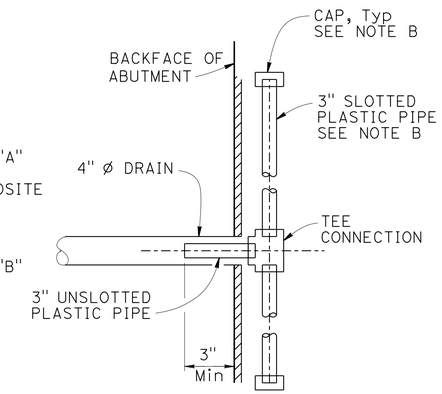

SECTION B-B

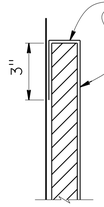

DETAIL "A"

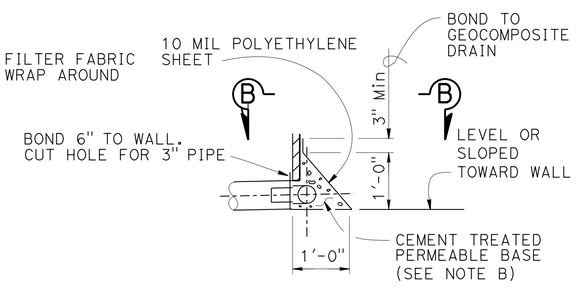

DETAIL "B"

ALTERNATIVE TO BRIDGE DETAIL B0-3 / 3-1

WEEP HOLE AND GEOCOMPOSITE DRAIN

NO SCALE

NOTES:

A. 4" Ø drains located 3"± above finished grade.

B. Geocomposite drain, cement treated permeable base, and 3" Ø slotted plastic pipe continuous behind abutment. Cap ends of pipe. Provide "Tee" connection at each 4" Ø drain.

TABLE 1

JOINT INFORMATION			"a" DIMENSIONS		
LOCATION	MOVEMENT RATING (MR)	SKEW	WINTER	SPRING & FALL	SUMMER
Abut 1	2½"	0	1¾"	1½"	1¼"
Abut 4	3½"	0	2½"	2"	1½"

DESIGN	BY P. Vijitakula	CHECKED K. Harper	
DETAILS	BY B. Huddleston	CHECKED K. Harper	
QUANTITIES	BY A. Pearson	CHECKED G. Thornton	

STATE OF CALIFORNIA
DEPARTMENT OF TRANSPORTATION

DIVISION OF ENGINEERING SERVICES
STRUCTURE DESIGN
DESIGN BRANCH 1

BRIDGE NO. 09-0079
POST MILE 8.98

HAMILTON BRANCH BRIDGE (REPLACE)
ABUTMENT 4 LAYOUT

STRUCTURES DESIGN DETAIL SHEET (ENGLISH) (REV. 09-01-10)

ORIGINAL SCALE IN INCHES FOR REDUCED PLANS 0 1 2 3

UNIT: 3576
PROJECT NUMBER & PHASE: 02120000111
CONTRACT NO.: 02-4E6404

DISREGARD PRINTS BEARING EARLIER REVISION DATES

REVISION DATES 6-9-14 11/19/15 02-26-15

SHEET 5 OF 22

FILE => 09-0079-f-a04_l01.dgn

USERNAME => s115152 DATE PLOTTED => 24-NOV-2015 TIME PLOTTED => 09:35

DIST	COUNTY	ROUTE	POST MILES TOTAL PROJECT	SHEET No.	TOTAL SHEETS
02	Plu	147	8.9/9.3	78	94

P. Vijitakula 2-3-15
REGISTERED CIVIL ENGINEER DATE

11-30-15
PLANS APPROVAL DATE

REGISTERED PROFESSIONAL ENGINEER
P. VIJITAKULA
No. 54701
Exp. 12-31-15
CIVIL
STATE OF CALIFORNIA

The State of California or its officers or agents shall not be responsible for the accuracy or completeness of scanned copies of this plan sheet.

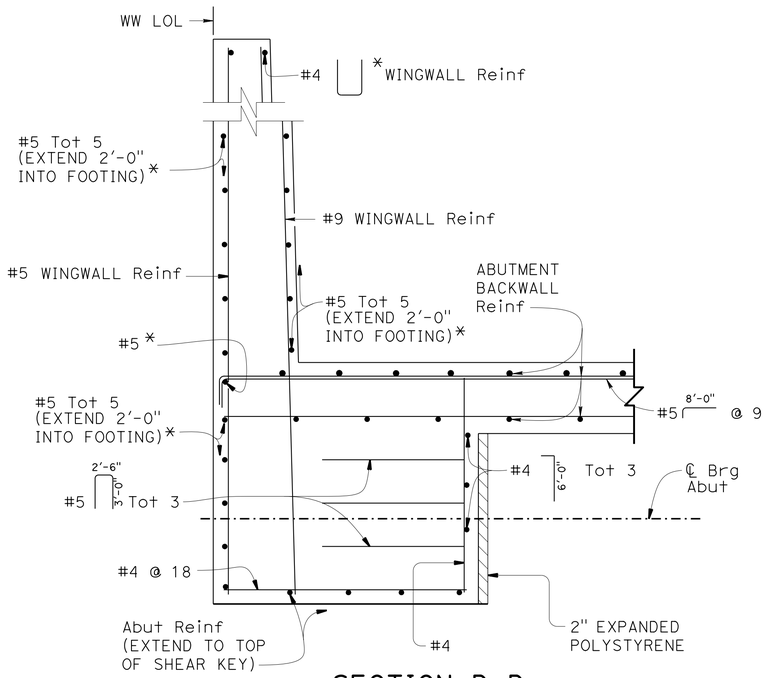

SECTION D-D

¾" = 1'-0"

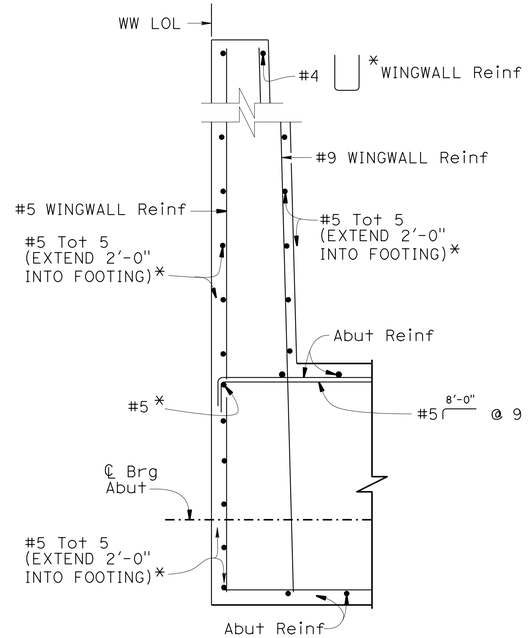

SECTION C-C

¾" = 1'-0"

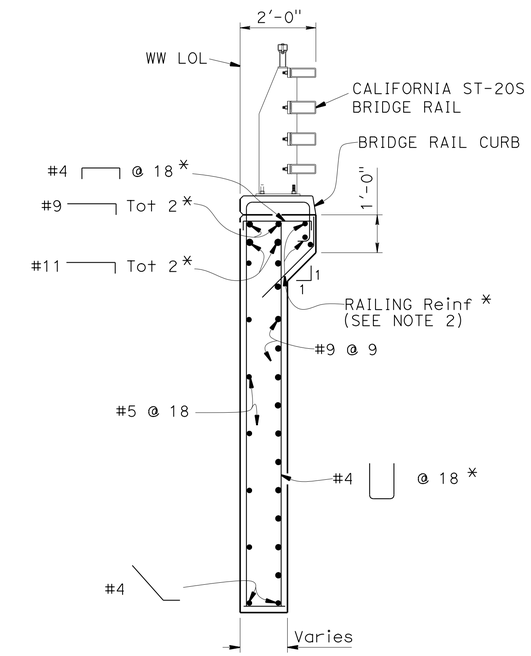

SECTION M-M

½" = 1'-0"

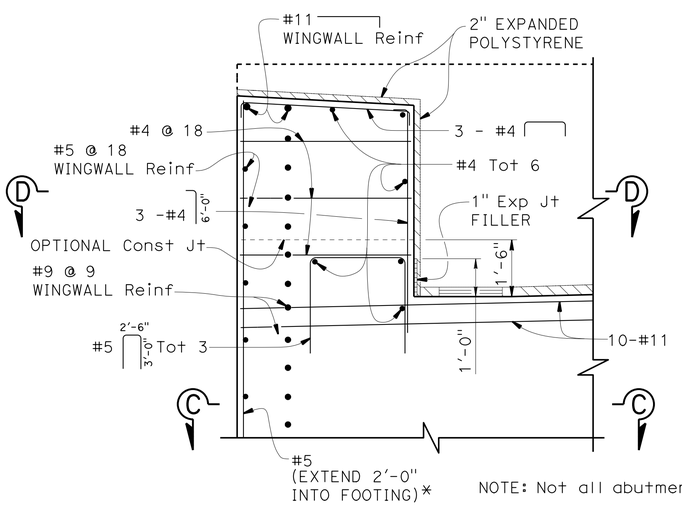

NOTE: Not all abutment reinforcement shown.

SHEAR KEY DETAIL

½" = 1'-0"

NOTES:

1. For location of "SECTION M-M", see "ABUTMENT 1 LAYOUT" sheet.
2. For bridge rail details not shown, see "CALIFORNIA ST-20S BRIDGE RAIL DETAILS" NO 1 - 4 sheets.

* Indicates Epoxy Coated Reinforcement.

	BY	CHECKED
DESIGN	P. Vijitakula	K. Harper
DETAILS	B. Huddleston	K. Harper
QUANTITIES	A. Pearson	G. Thornton

STATE OF CALIFORNIA
DEPARTMENT OF TRANSPORTATION

DIVISION OF ENGINEERING SERVICES
STRUCTURE DESIGN
DESIGN BRANCH 1

BRIDGE NO. 09-0079
POST MILE 8.98

HAMILTON BRANCH BRIDGE (REPLACE)
ABUTMENT DETAILS

STRUCTURES DESIGN DETAIL SHEET (ENGLISH) (REV. 09-01-10)

ORIGINAL SCALE IN INCHES FOR REDUCED PLANS 0 1 2 3

UNIT: 3576
PROJECT NUMBER & PHASE: 02120000111
CONTRACT NO.: 02-4E6404

DISREGARD PRINTS BEARING EARLIER REVISION DATES

REVISION DATES: 7-1-14 7-24-14 12-02-14 12-08-14

SHEET 6 OF 22

FILE => 09-0079-f-abtdt01.dgn

USERNAME => s115152 DATE PLOTTED => 24-NOV-2015 TIME PLOTTED => 09:35

DIST	COUNTY	ROUTE	POST MILES TOTAL PROJECT	SHEET No.	TOTAL SHEETS
02	Plu	147	8.9/9.3	79	94

P. Vijitakula 2-3-15
REGISTERED CIVIL ENGINEER DATE

11-30-15
PLANS APPROVAL DATE

REGISTERED PROFESSIONAL ENGINEER P. VIJITAKULA No. 54701 Exp. 12-31-15 CIVIL STATE OF CALIFORNIA

The State of California or its officers or agents shall not be responsible for the accuracy or completeness of scanned copies of this plan sheet.

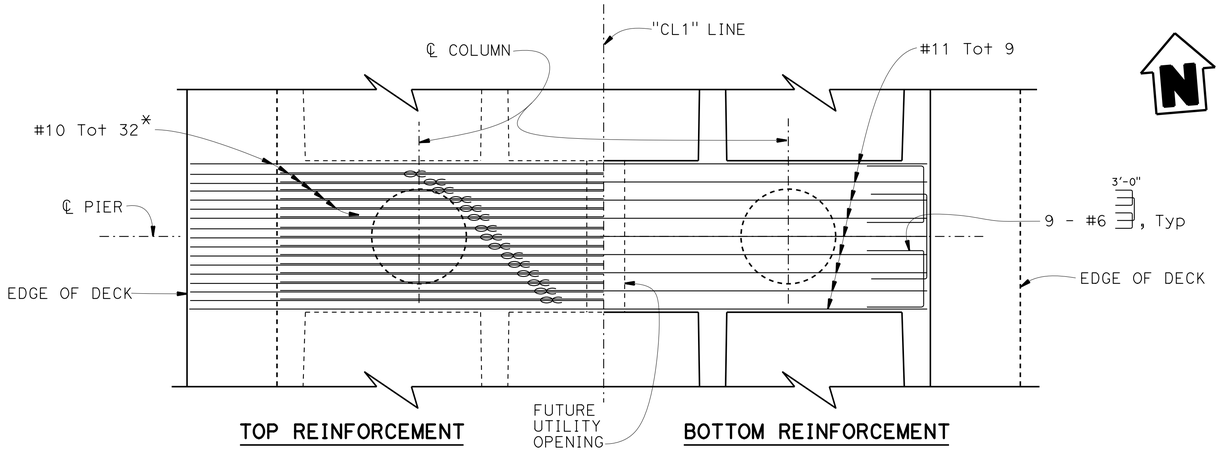

PLAN OF CAP
1/4" = 1'-0"

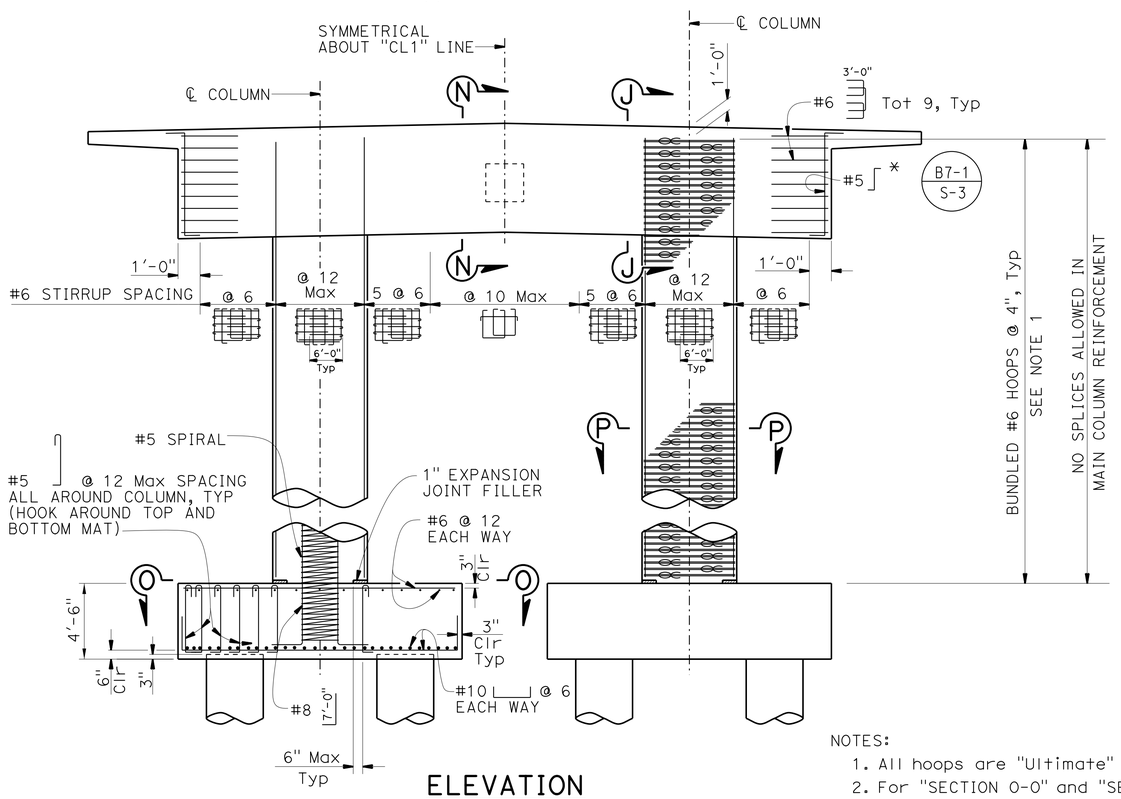

ELEVATION
1/4" = 1'-0"

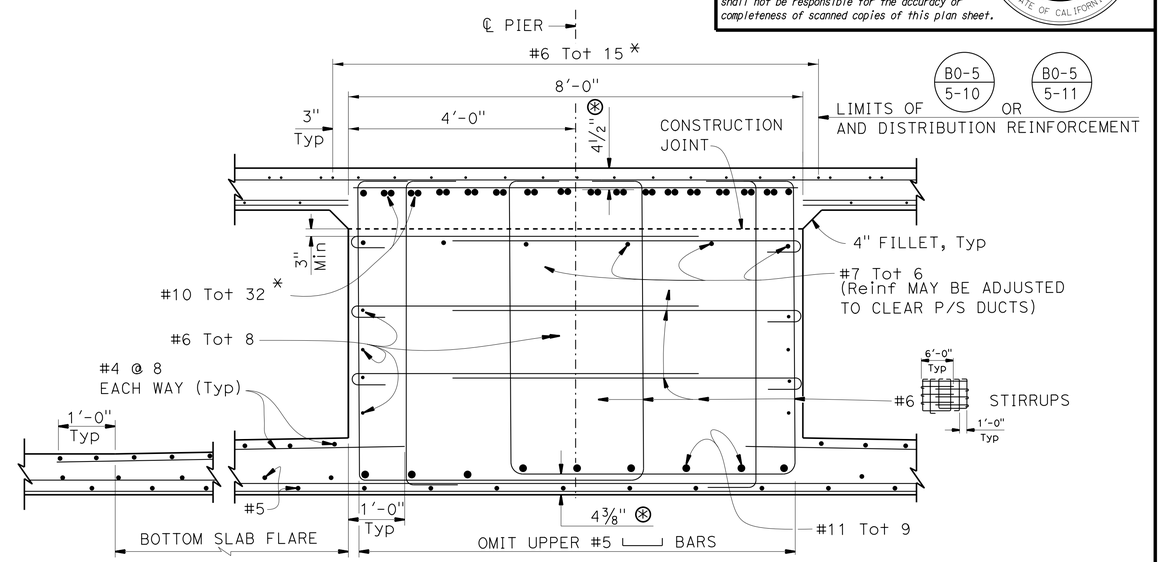

SECTION J-J
3/4" = 1'-0"

⊗ Clearance to main cap reinforcement

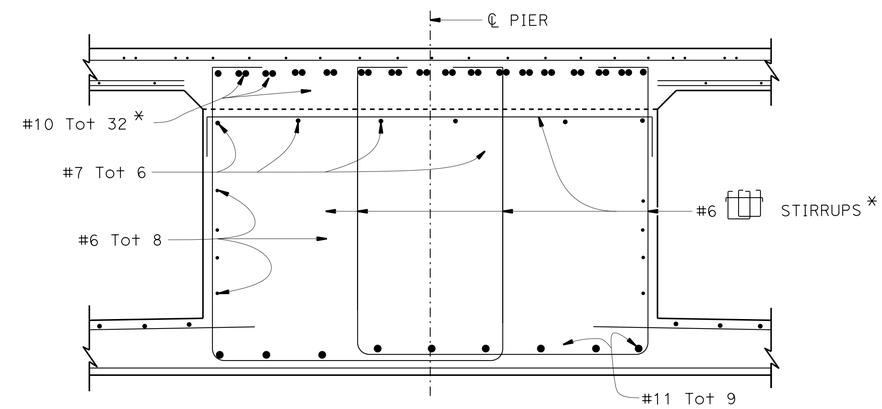

SECTION N-N
3/4" = 1'-0"

NOTE: For details not shown, see "SECTION J-J".

NOTES:
1. All hoops are "Ultimate" butt spliced continuous.
2. For "SECTION O-O" and "SECTION P-P", see "PIER DETAILS NO. 2" sheet.
3. Structure Excavation at piers shall be paid for as "STRUCTURE EXCAVATION (ROCK) (TYPE D)".

Indicates bundled bars.
* Indicates epoxy coated reinforcement. Only vertical legs of stirrups need to be epoxy caoted.

	BY	CHECKED
DESIGN	P. Vijitakula	K. Harper
DETAILS	J. Zhou	K. Harper
QUANTITIES	K. Stillmunkes	V. Shostak

STATE OF CALIFORNIA
DEPARTMENT OF TRANSPORTATION

DIVISION OF ENGINEERING SERVICES
STRUCTURE DESIGN
DESIGN BRANCH 1

BRIDGE NO. 09-0079
POST MILE 8.98

HAMILTON BRANCH BRIDGE (REPLACE)
PIER DETAILS NO. 1

STRUCTURES DESIGN DETAIL SHEET (ENGLISH) (REV. 09-01-10)

ORIGINAL SCALE IN INCHES FOR REDUCED PLANS 0 1 2 3

UNIT: 3576
PROJECT NUMBER & PHASE: 02120000111
CONTRACT NO.: 02-4E6404

DISREGARD PRINTS BEARING EARLIER REVISION DATES

REVISION DATES: 05/22/14 11/19/15 12/08/15

SHEET 7 OF 22

FILE => 09-0079-f-pier-dt01.dgn

USERNAME => s115152 DATE PLOTTED => 24-NOV-2015 TIME PLOTTED => 09:35

DIST	COUNTY	ROUTE	POST MILES TOTAL PROJECT	SHEET No.	TOTAL SHEETS
02	Plu	147	8.9/9.3	80	94

P. Vijitakula 2-3-15
REGISTERED CIVIL ENGINEER DATE

11-30-15
PLANS APPROVAL DATE

REGISTERED PROFESSIONAL ENGINEER
P. VIJITAKULA
No. 54701
Exp. 12-31-15
CIVIL
STATE OF CALIFORNIA

The State of California or its officers or agents shall not be responsible for the accuracy or completeness of scanned copies of this plan sheet.

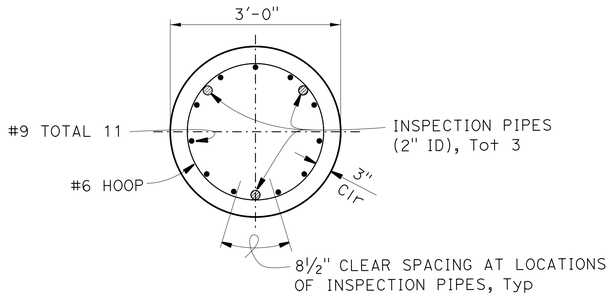

SECTION K-K
¾" = 1'-0"

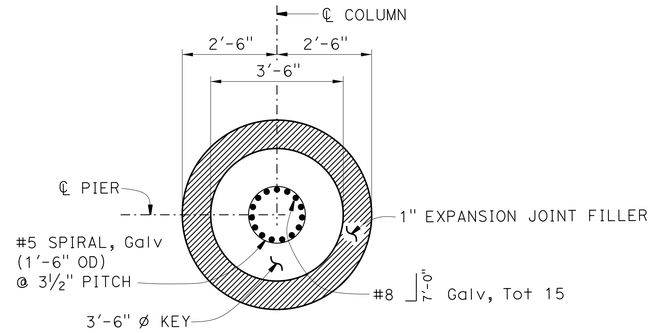

SECTION O-O
½" = 1'-0"

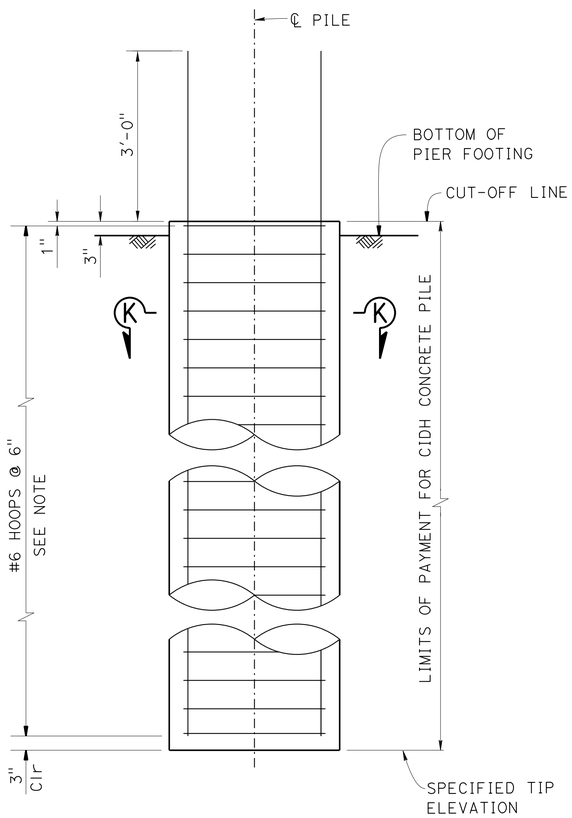

NOTE: #6 hoops made continuous with service butt splice.

ELEVATION

36" ø CIDH CONCRETE PILE
¾" = 1'-0"

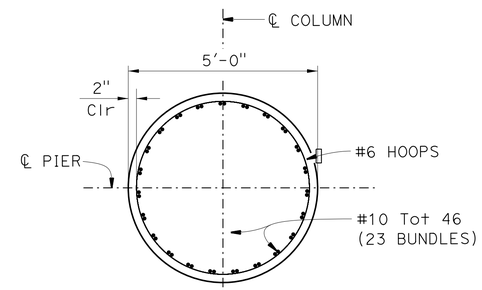

SECTION P-P
½" = 1'-0"

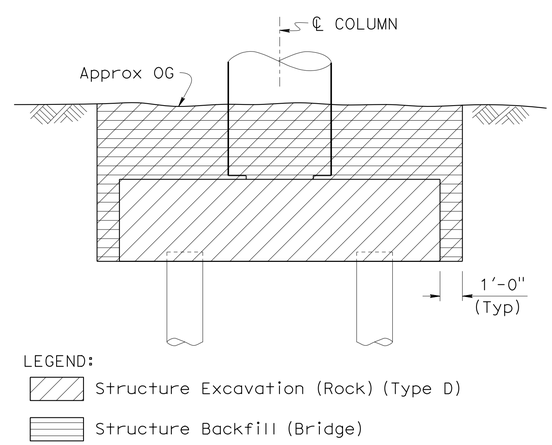

LIMITS OF PAYMENT FOR EXCAVATION AND BACKFILL AT PIERS
NO SCALE

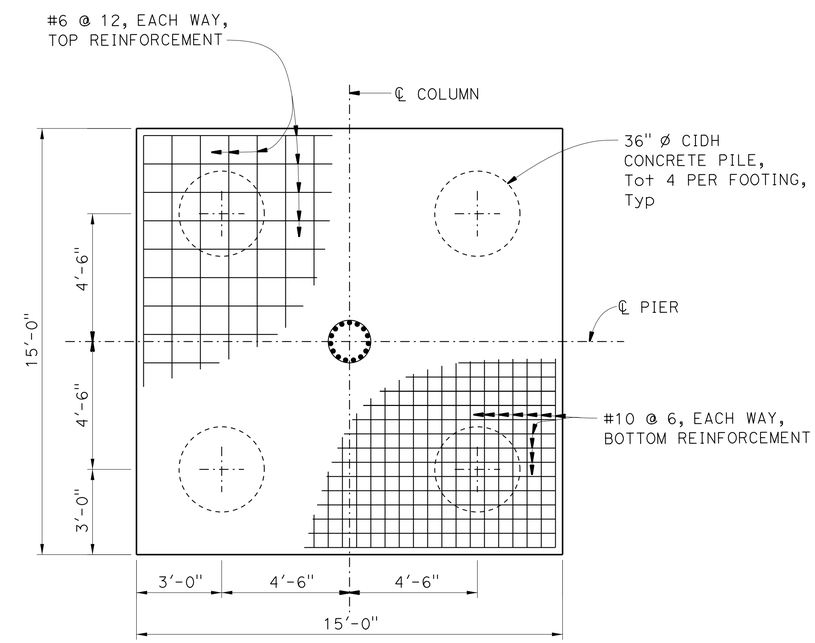

FOOTING PLAN
⅜" = 1'-0"

DESIGN	BY P. Vijitakula	CHECKED K. Harper	
DETAILS	BY J. Zhou	CHECKED K. Harper	
QUANTITIES	BY A. Pearson	CHECKED G. Thornton	

STATE OF CALIFORNIA
DEPARTMENT OF TRANSPORTATION

DIVISION OF ENGINEERING SERVICES
STRUCTURE DESIGN
DESIGN BRANCH 1

BRIDGE NO. 09-0079
POST MILE 8.98

HAMILTON BRANCH BRIDGE (REPLACE)
PIER DETAILS NO. 2

STRUCTURES DESIGN DETAIL SHEET (ENGLISH) (REV. 09-01-10)

ORIGINAL SCALE IN INCHES FOR REDUCED PLANS 0 1 2 3

UNIT: 3576
PROJECT NUMBER & PHASE: 02120000111
CONTRACT NO.: 02-4E6404

DISREGARD PRINTS BEARING EARLIER REVISION DATES

REVISION DATES: 06/19/14 05/11/15 12-08-14

SHEET 8 OF 22

USERNAME => s115152 DATE PLOTTED => 24-NOV-2015 TIME PLOTTED => 09:35

FILE => 09-0079-f-pier-dt02.dgn

DIST	COUNTY	ROUTE	POST MILES TOTAL PROJECT	SHEET No.	TOTAL SHEETS
02	Plu	147	8.9/9.3	81	94

P. Vijitakula 2-3-15
REGISTERED CIVIL ENGINEER DATE

11-30-15
PLANS APPROVAL DATE

REGISTERED PROFESSIONAL ENGINEER
P. VIJITAKULA
No. 54701
Exp. 12-31-15
CIVIL
STATE OF CALIFORNIA

The State of California or its officers or agents shall not be responsible for the accuracy or completeness of scanned copies of this plan sheet.

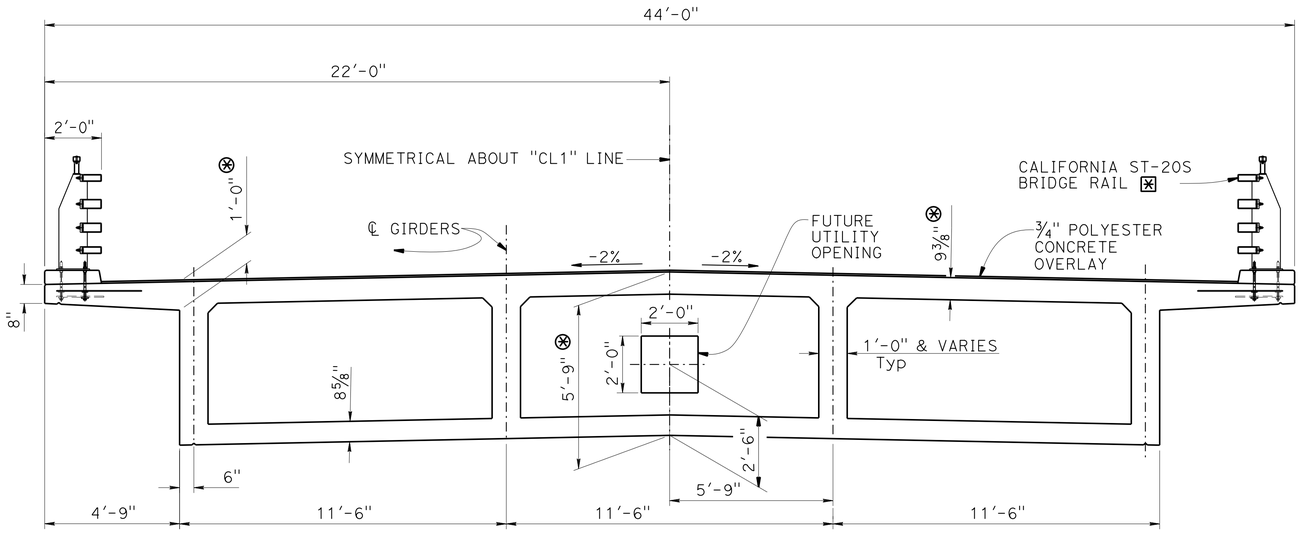

TYPICAL SECTION

3/8" = 1'-0"

NOTES:

- ⊛ Dimension does not include 3/4" polyester concrete overlay.
- ⊠ Stain galvanized surfaces on bridge rail.
- * Indicates Epoxy Coated Reinforcement.

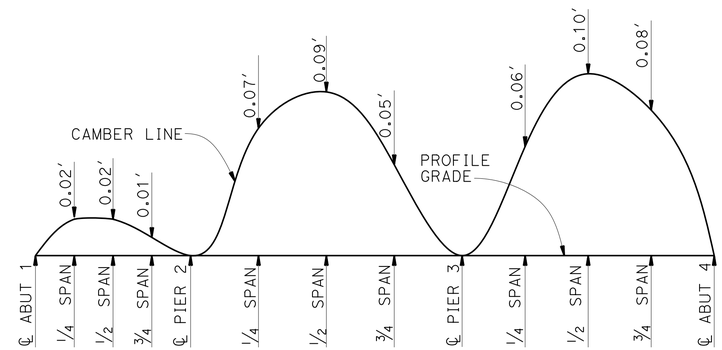

NOTE: Does not include allowance for falsework settlement

CAMBER DIAGRAM

No Scale

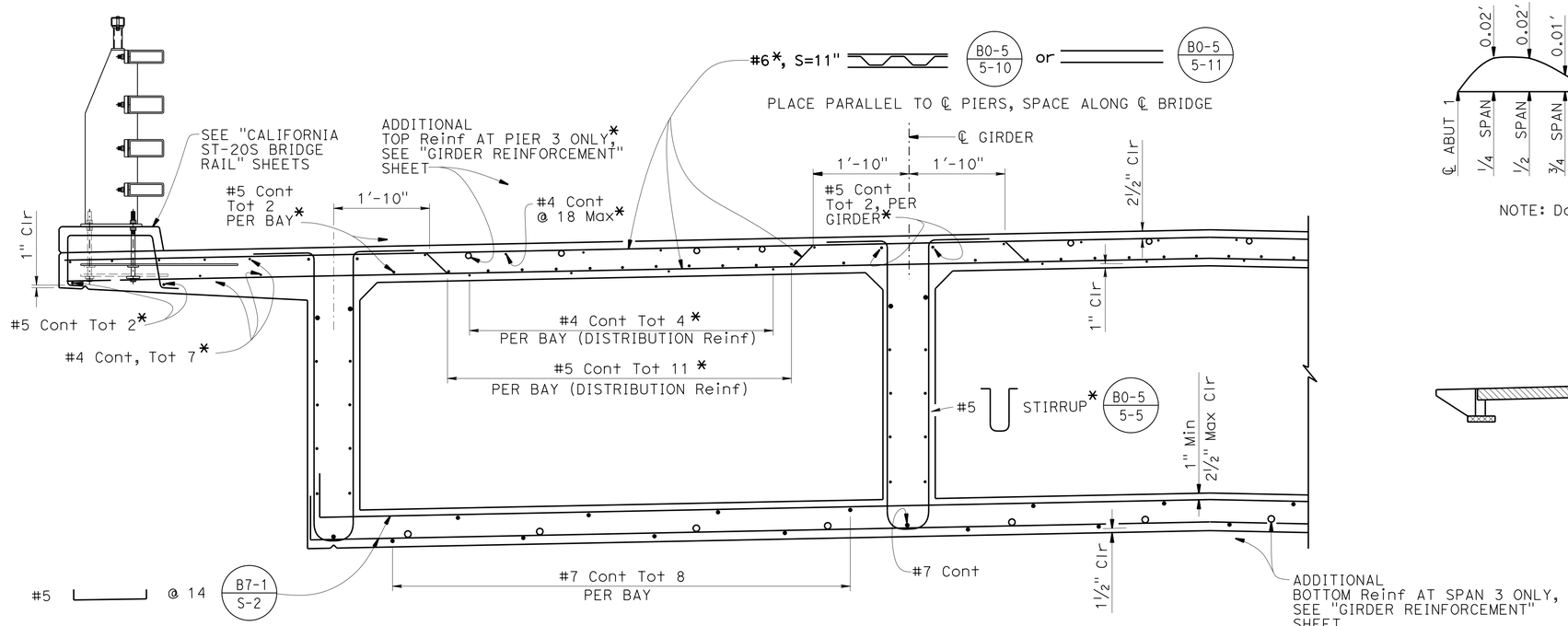

PART TYPICAL SECTION B0-5 B7-1 B8-5

3/4" = 1'-0"

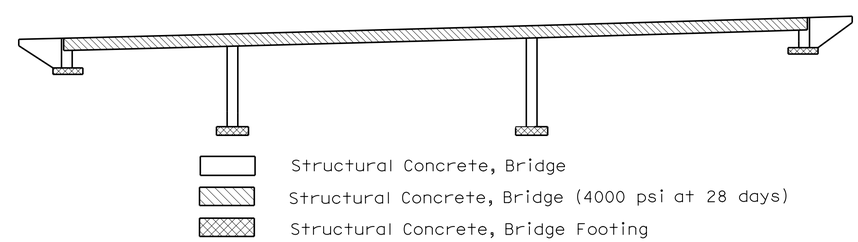

CONCRETE STRENGTH AND TYPE LIMITS

No Scale

	BY	CHECKED
DESIGN	P. Vijitakula	K. Harper
DETAILS	J. Zhou	K. Harper
QUANTITIES	K. Stillmunkes	V. Shostak

STATE OF CALIFORNIA
DEPARTMENT OF TRANSPORTATION

DIVISION OF ENGINEERING SERVICES
STRUCTURE DESIGN
DESIGN BRANCH 1

BRIDGE NO. 09-0079
POST MILE 8.98

HAMILTON BRANCH BRIDGE (REPLACE)
TYPICAL SECTION

STRUCTURES DESIGN DETAIL SHEET (ENGLISH) (REV. 09-01-10)

ORIGINAL SCALE IN INCHES FOR REDUCED PLANS 0 1 2 3

UNIT: 3576
PROJECT NUMBER & PHASE: 02120000111
CONTRACT NO.: 02-4E6404

DISREGARD PRINTS BEARING EARLIER REVISION DATES

REVISION DATES: 06/23/14 12/03/14 02/26/15

SHEET 9 OF 22

FILE => 09-0079-f-ts.dgn

USERNAME => s115152 DATE PLOTTED => 24-NOV-2015 TIME PLOTTED => 09:35

DIST	COUNTY	ROUTE	POST MILES TOTAL PROJECT	SHEET No.	TOTAL SHEETS
02	Plu	147	8.9/9.3	82	94

P. Vijitakula 2-3-15
REGISTERED CIVIL ENGINEER DATE

11-30-15
PLANS APPROVAL DATE

REGISTERED PROFESSIONAL ENGINEER P. VIJITAKULA No. 54701 Exp. 12-31-15 CIVIL STATE OF CALIFORNIA

The State of California or its officers or agents shall not be responsible for the accuracy or completeness of scanned copies of this plan sheet.

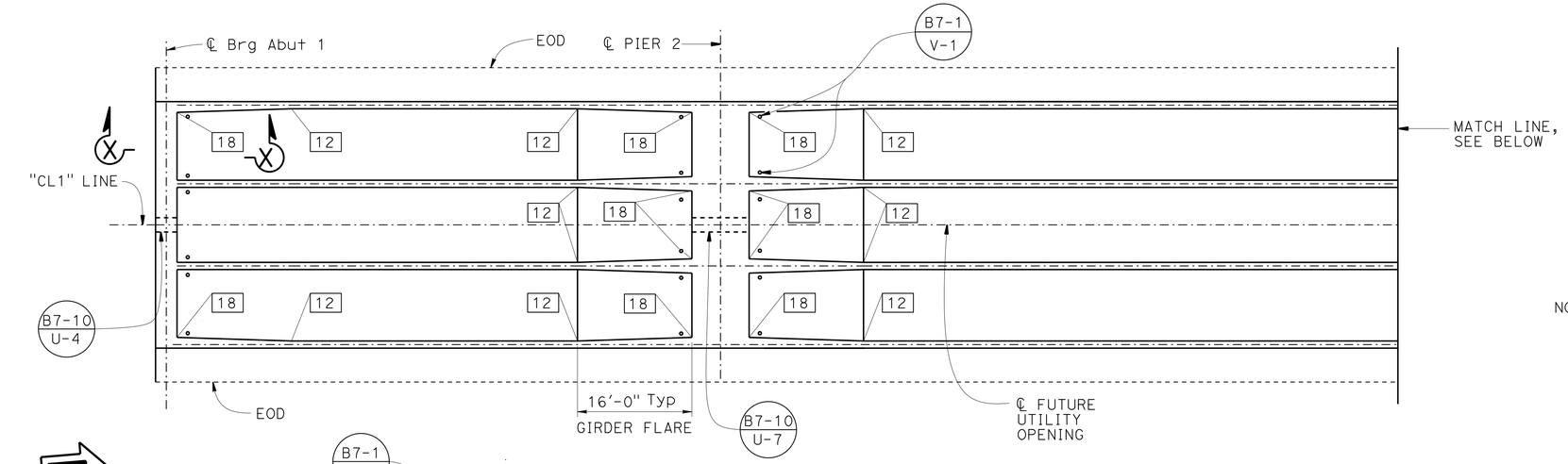

NOTE: For "Section X-X", see "GIRDER REINFORCEMENT" sheet.

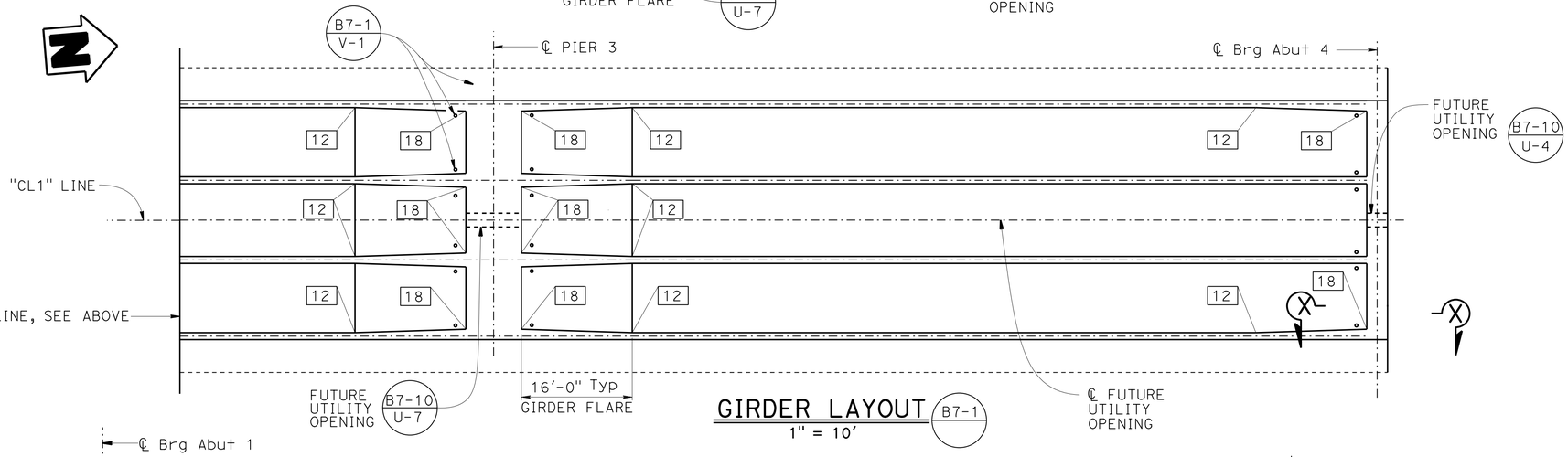

GIRDER LAYOUT (B7-1)

1" = 10'

PRESTRESSING NOTES

270 KSI Low Relaxation Strand:

Pjack = 8500 kips

Anchor Set = 3/8 in

Total Number of Girders = 4

Distribution of prestress force (Pjack) between girders shall not exceed the ratio of 3:2. Maximum final force variation between girders shall not exceed 725 kips.

Concrete: f'_c = 4000 psi @ 28 days

f'_{ci} = 3500 psi @ time of stressing

Contractor shall submit elongation calculations based on initial stress at

⊠ = 0.835 times jacking stress.

Stressing must be performed from Abut 4 end.

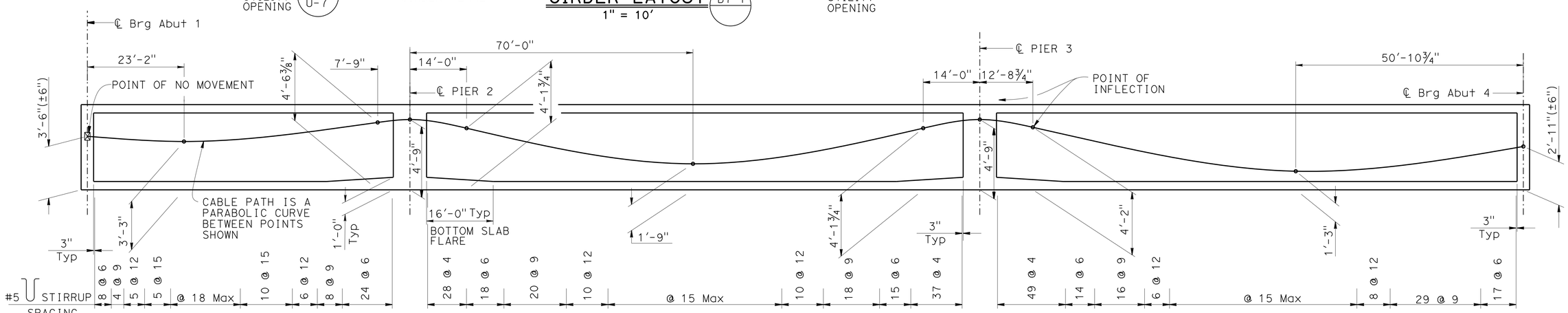

LONGITUDINAL SECTION (B8-5)

NO SCALE

DESIGN	BY P. Vijitakula	CHECKED K. Harper	
DETAILS	BY J. Zhou	CHECKED K. Harper	
QUANTITIES	BY K. Stillmunkes	CHECKED V. Shostak	

STATE OF CALIFORNIA
DEPARTMENT OF TRANSPORTATION

DIVISION OF ENGINEERING SERVICES
STRUCTURE DESIGN
DESIGN BRANCH 1

BRIDGE NO. 09-0079
POST MILE 8.98

HAMILTON BRANCH BRIDGE (REPLACE)
GIRDER LAYOUT

STRUCTURES DESIGN DETAIL SHEET (ENGLISH) (REV. 09-01-10)

ORIGINAL SCALE IN INCHES FOR REDUCED PLANS 0 1 2 3

UNIT: 3576
PROJECT NUMBER & PHASE: 02120000111
CONTRACT NO.: 02-4E6404

DISREGARD PRINTS BEARING EARLIER REVISION DATES

REVISION DATES 06/02/14 07/24/14 12/03/14 12/08/14

SHEET 10 OF 22

FILE => 09-0079-g-lo.dgn

USERNAME => s115152 DATE PLOTTED => 24-NOV-2015 TIME PLOTTED => 09:35

DIST	COUNTY	ROUTE	POST MILES TOTAL PROJECT	SHEET No.	TOTAL SHEETS
02	Plu	147	8.9/9.3	83	94

P. Vijitakula 2-3-15
REGISTERED CIVIL ENGINEER DATE

11-30-15
PLANS APPROVAL DATE

REGISTERED PROFESSIONAL ENGINEER
P. VIJITAKULA
No. 54701
Exp. 12-31-15
CIVIL
STATE OF CALIFORNIA

The State of California or its officers or agents shall not be responsible for the accuracy or completeness of scanned copies of this plan sheet.

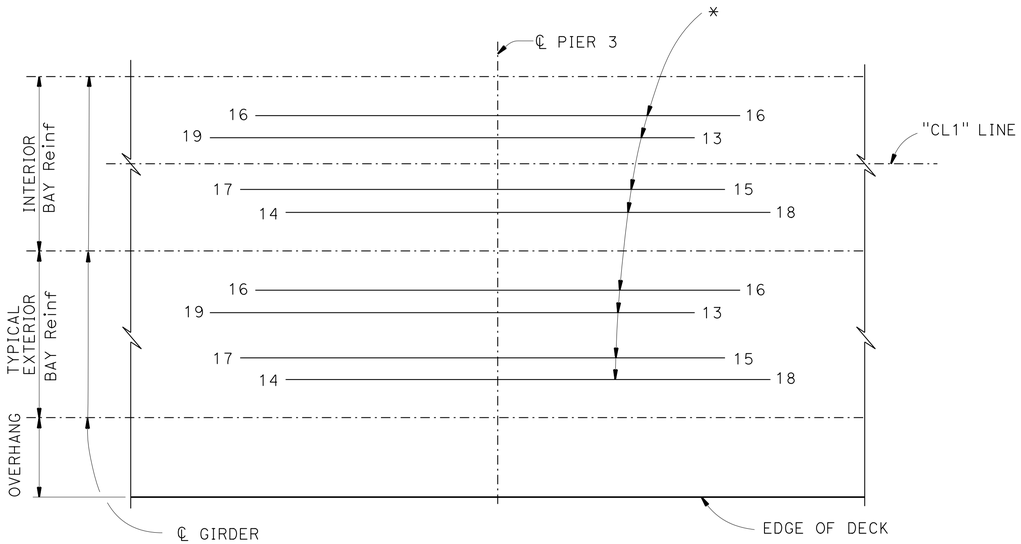

TOP REINFORCEMENT

1" = 5'-0"

NOTES:

1. All reinforcement #8 unless otherwise noted.
2. No lap splices allowed.
3. Number at ends of bars indicate the distance in feet from centerline of span for bottom reinforcement and centerline pier for top reinforcement.
4. For other longitudinal reinforcement, see "TYPICAL SECTION" sheet.
5. For location of "SECTION X-X", see "GIRDER LAYOUT" sheet.
6. Diaphragm reinforcement may be adjusted as necessary to accomodate installation of the Joint Seal Assembly as directed by the Engineer.

* Indicates epoxy coated reinforcement.

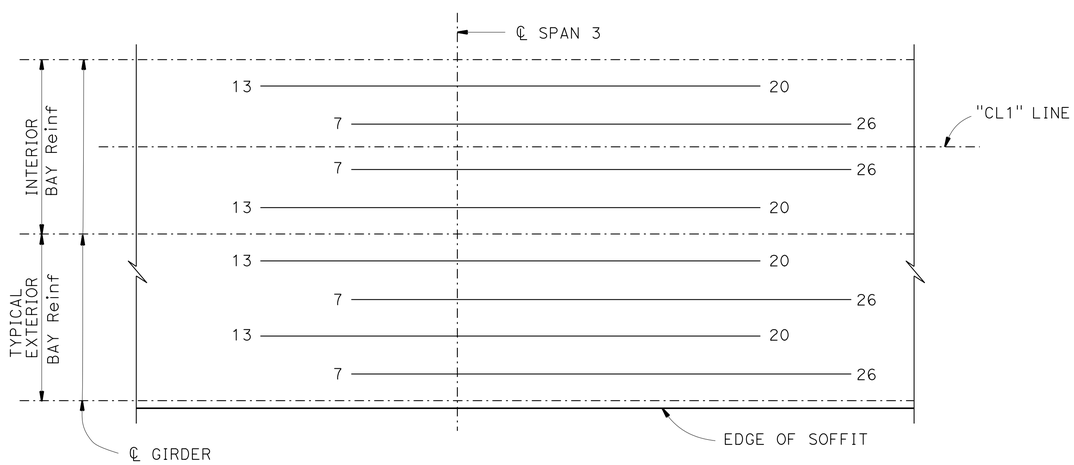

BOTTOM REINFORCEMENT

1" = 5'-0"

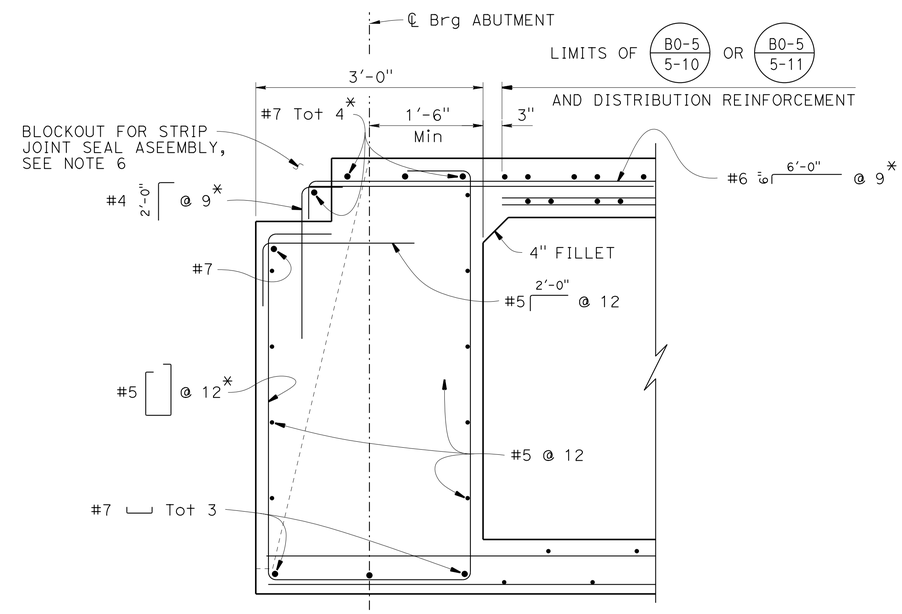

SECTION X-X B8-5

1" = 1'-0"

DESIGN	BY P. Vijitakula	CHECKED K. Harper	
DETAILS	BY J. Zhou	CHECKED K. Harper	
QUANTITIES	BY K. Stillmunkes	CHECKED V. Shostak	

STATE OF CALIFORNIA
DEPARTMENT OF TRANSPORTATION

DIVISION OF ENGINEERING SERVICES
STRUCTURE DESIGN
DESIGN BRANCH 1

BRIDGE NO. 09-0079
POST MILE 8.98

HAMILTON BRANCH BRIDGE (REPLACE)
GIRDER REINFORCEMENT

STRUCTURES DESIGN DETAIL SHEET (ENGLISH) (REV. 09-01-10)

ORIGINAL SCALE IN INCHES FOR REDUCED PLANS 0 1 2 3

UNIT: 3576
PROJECT NUMBER & PHASE: 02120000111
CONTRACT NO.: 02-4E6404

DISREGARD PRINTS BEARING EARLIER REVISION DATES

REVISION DATES 06/30/14 12/08/14 12/03/14

SHEET 11 OF 22

FILE => 09-0079-greinf.dgn

USERNAME => s115152 DATE PLOTTED => 24-NOV-2015 TIME PLOTTED => 09:35

DIST	COUNTY	ROUTE	POST MILES TOTAL PROJECT	SHEET No.	TOTAL SHEETS
02	Plu	147	8.9/9.3	84	94

P. Vijitakula 2-3-15
REGISTERED CIVIL ENGINEER DATE

11-30-15
PLANS APPROVAL DATE

REGISTERED PROFESSIONAL ENGINEER
P. VIJITAKULA
No. 54701
Exp. 12-31-15
CIVIL
STATE OF CALIFORNIA

The State of California or its officers or agents shall not be responsible for the accuracy or completeness of electronic copies of this plan sheet.

The components of this Bridge Standard Drawing have been prepared under the responsible charge of the Technical Owner, a registered civil engineer in the State of California. Refer to: http://dot.ca.gov/hq/esc/techpubs/manual/bridgemanuals/bridge-standard-detail-sheets/index.html The selection and proper application of the component design and any modifications shown have been prepared under the responsible charge of the registered civil engineer for the project.

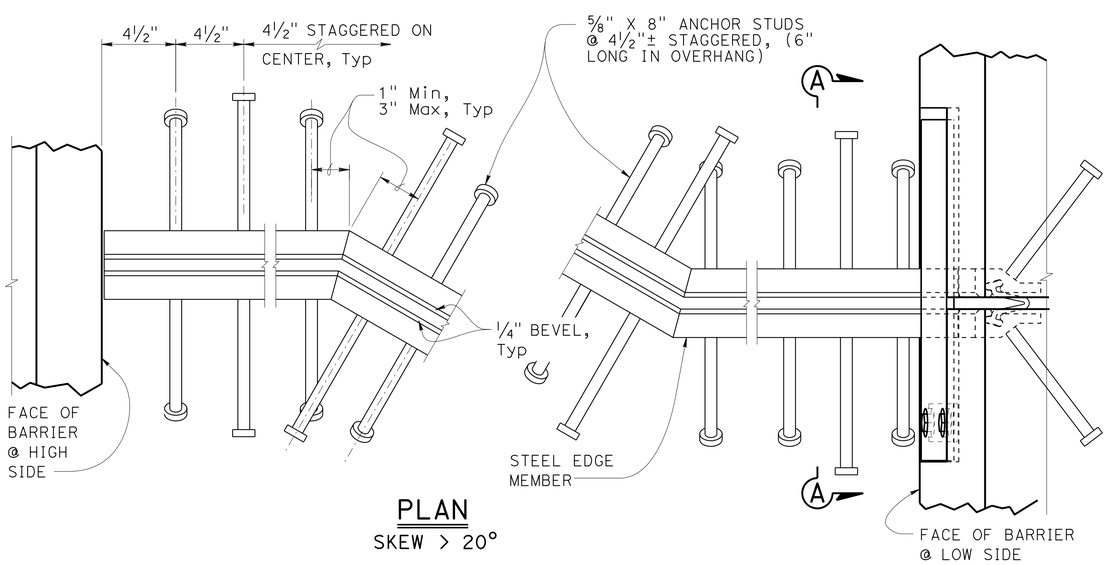

PLAN
SKEW > 20°

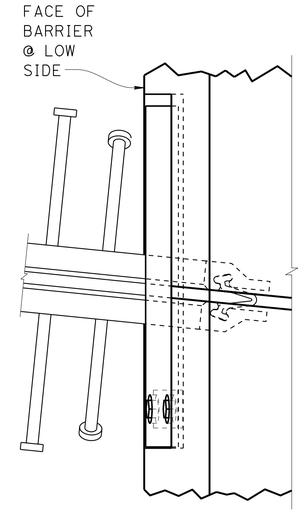

PLAN
SKEW ≤ 20°

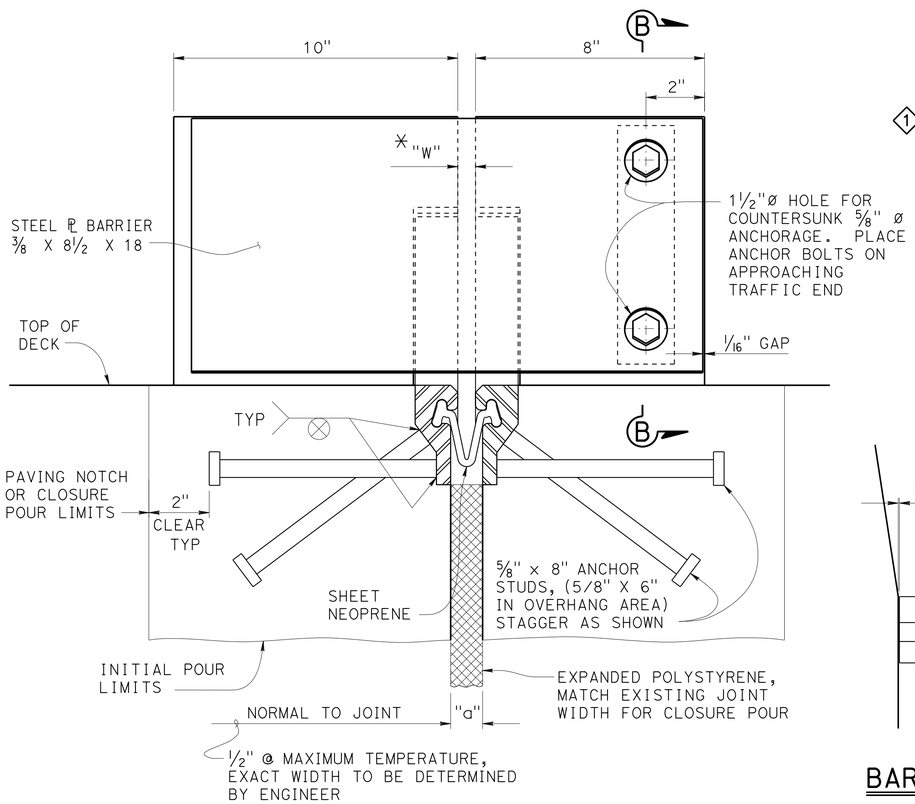

SECTION A-A

JOINT INFORMATION			"a" DIMENSIONS		
LOCATION	MOVEMENT RATING (MR)	SKEW	WINTER	SPRING & FALL	SUMMER

1

* TO SET MINIMUM JOINT OPENING "W"

$$"W" = \begin{cases} \tfrac{1}{2}"+[(\text{Max Str temperature in °F})-(\text{actual Str temperature in °F})]*(a_C \text{ or } a_S)(12)(\text{contributory L in feet}) \\ \tfrac{1}{2}" \text{ Minimum} \\ a_C = 0.0000060 \\ a_S = 0.0000065 \end{cases}$$

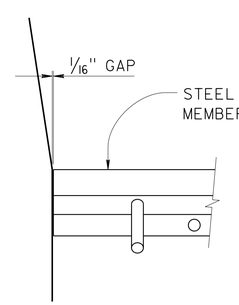

BARRIER DETAIL
HIGH SIDE

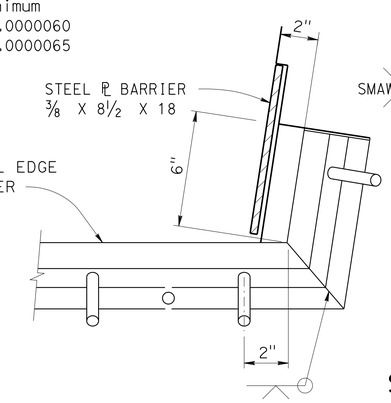

BARRIER DETAIL
LOW SIDE

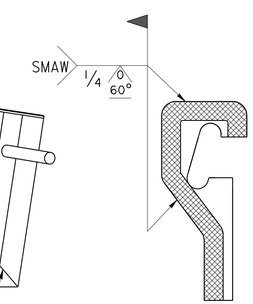

SCHEMATIC FIELD
WELD DETAIL

NOTE:
SHADED AREAS
TO BE WELDED

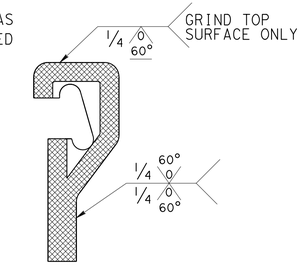

SCHEMATIC SHOP
WELD DETAIL

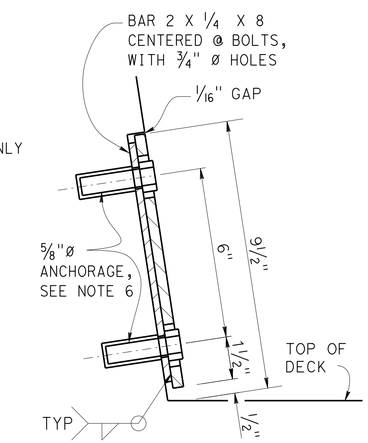

SECTION B-B

SCHEMATIC STEEL EDGE MEMBER

NOTES:

1. Alternatively, fillet or complete penetration welds may be used at anchor studs.
2. Alternate types of anchor studs may be permitted subject to the authorization by the Engineer.
3. Joint seal assembly to be used in conjunction with closure pour. (See other sheets for limits). Closure pour shall not be placed until final deck surface is within the tolerances specified.
4. Use joint at crown of roadway, at any change in traverse slope in deck and at changes in horizontal direction. Place other joints at or near lanes. All metal parts to be painted or galvanized after fabrication.
5. Sheet Neoprene shall be fabricated in one continuous piece and shall be fabricated to bend around corners. Field splices of the neoprene are not allowed.
6. Insert assembly or expansion anchorage for ⅝" x 1¾" bolts. Use installation bolts extended ½" minimum past nut and coat with bond breaker, after concrete has cured, remove installation bolts, install HS bolts and sheet neoprene.
7. Sidewalk Detail similar to Barrier Detail on low side at both sides if the roadway is crowned or if the difference in elevation between the ends of the seal is 0.5′ or less.
8. a_C, a_S, are the thermal expansion coefficients for concrete and steel respectively.
9. Anchor studs shall conform to ASTM 108.

SPECIAL DETAILS

NO SCALE

REVISED STANDARD DRAWING

FILE NO. xs8-010

APPROVAL DATE July 2014

1 DOES NOT APPLY

STATE OF CALIFORNIA
DEPARTMENT OF TRANSPORTATION

DIVISION OF ENGINEERING SERVICES

BRIDGE NO. 09-0079
POST MILE 8.98

HAMILTON BRANCH BRIDGE (REPLACE)
STRIP JOINT SEAL ASSEMBLY
MAXIMUM MOVEMENT RATING = 4"

DS OSD 2147A (ENGLISH STANDARD DRAWING "XS" BORDER REV. (02-02-11)

ORIGINAL SCALE IN INCHES FOR REDUCED PLANS 0 1 2 3

UNIT: 3576
PROJECT NUMBER & PHASE: 02120000111
CONTRACT NO.: 02-4E6404

DISREGARD PRINTS BEARING EARLIER REVISION DATES

REVISION DATES: 6-23-14 | 11/23/15 | 11/30/15

SHEET 12 OF 22

FILE => 09-0079-t-xs08-010.dgn

USERNAME => s115152 DATE PLOTTED => 24-NOV-2015 TIME PLOTTED => 09:35

DIST	COUNTY	ROUTE	POST MILES TOTAL PROJECT	SHEET No.	TOTAL SHEETS
02	Plu	147	8.9/9.3	85	94

P. Vijitakula 2-3-15
REGISTERED CIVIL ENGINEER DATE

11-30-15
PLANS APPROVAL DATE

REGISTERED PROFESSIONAL ENGINEER
P. VIJITAKULA
No. 54701
Exp. 12-31-15
CIVIL
STATE OF CALIFORNIA

The State of California or its officers or agents shall not be responsible for the accuracy or completeness of electronic copies of this plan sheet.

The components of this Bridge Standard Drawing have been prepared under the responsible charge of the Technical Owner, a registered civil engineer in the State of California. Refer to: http://dot.ca.gov/hq/esc/techpubs/manual/bridgemanuals/bridge-standard-detail-sheets/index.html The selection and proper application of the component design and any modifications shown have been prepared under the responsible charge of the registered civil engineer for the project.

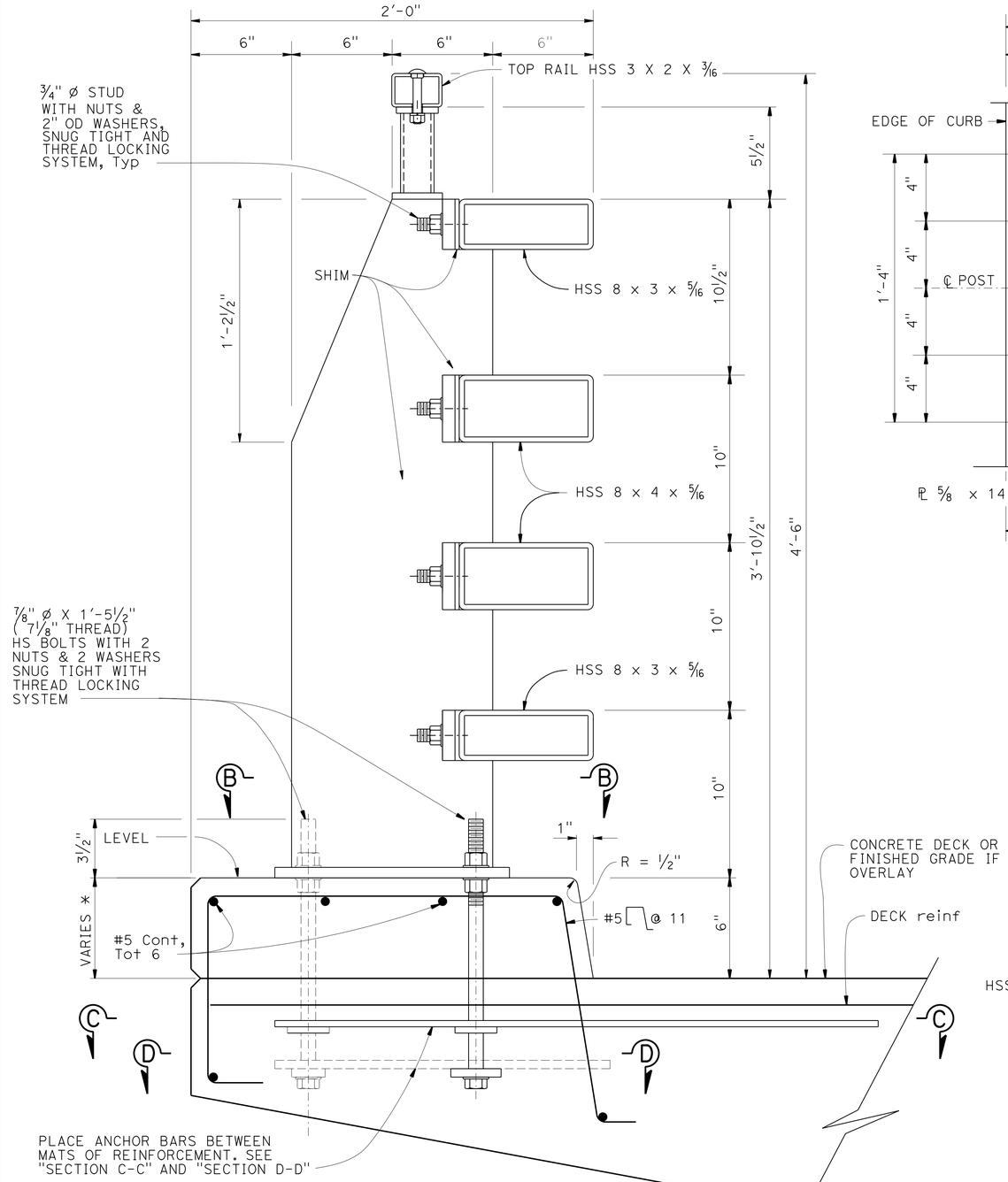

* DIMENSION VARIES WITH ROADWAY CROSS SLOPE AND WITH THICKNESS OF OVERLAY IF APPLICABLE.

TYPICAL SECTION
3" = 1'-0"

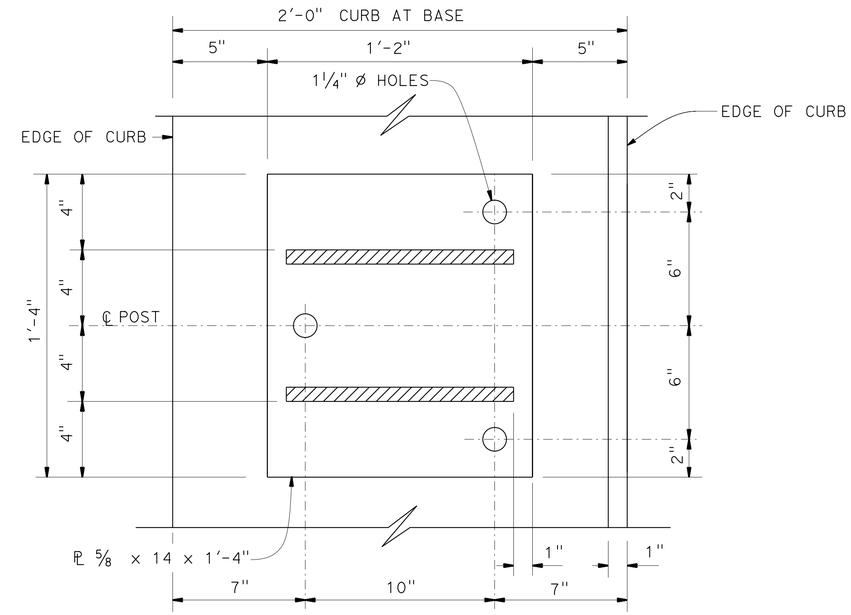

SECTION B-B
3' = 1'-0"

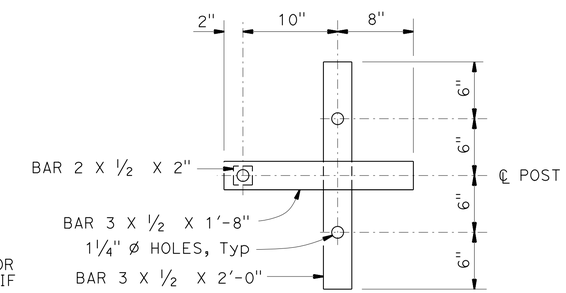

SECTION D-D
1 1/2" = 1'-0"

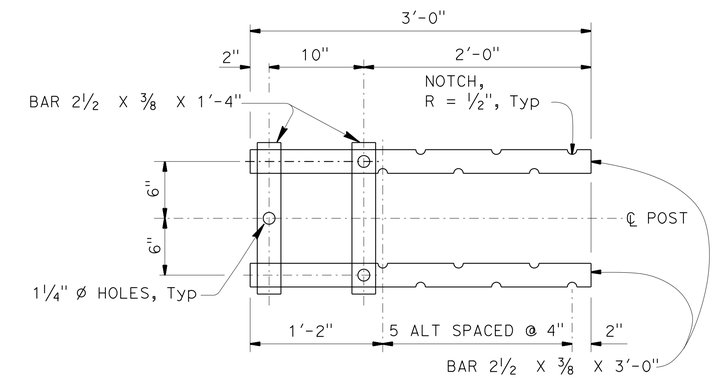

SECTION C-C
1 1/2" = 1'-0"

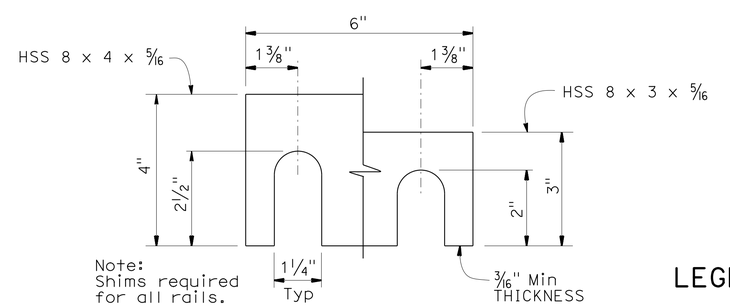

Note: Shims required for all rails.

SHIM DETAIL
6" = 1'-0"

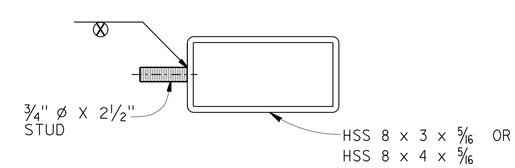

RAIL SECTION AT POST
3" = 1'-0"

LEGEND:

⊗ INDICATES STUD WELD

STANDARD DRAWING

FILE NO. xs16-120-1

APPROVAL DATE January 2015

STATE OF CALIFORNIA
DEPARTMENT OF TRANSPORTATION

DIVISION OF ENGINEERING SERVICES

BRIDGE NO. 09-0079
POST MILE 8.98

HAMILTON BRANCH BRIDGE (REPLACE)
CALIFORNIA ST-20S BRIDGE RAIL
DETAILS NO. 1

DS OSD 2147A (ENGLISH STANDARD DRAWING "XS" BORDER REV. (02-02-11)

ORIGINAL SCALE IN INCHES FOR REDUCED PLANS 0 1 2 3

UNIT: 3576
PROJECT NUMBER & PHASE: 02120000111
CONTRACT NO.: 02-4E6404

DISREGARD PRINTS BEARING EARLIER REVISION DATES

REVISION DATES 6-13-14 11/19/15 1-14-15

SHEET 13 OF 22

FILE => 09-0079-w-br-det01.dgn

USERNAME => s115152 DATE PLOTTED => 24-NOV-2015 TIME PLOTTED => 09:36

DIST	COUNTY	ROUTE	POST MILES TOTAL PROJECT	SHEET No.	TOTAL SHEETS
02	Plu	147	8.9/9.3	86	94

P. Vijitakula 2-3-15
REGISTERED CIVIL ENGINEER DATE

11-30-15
PLANS APPROVAL DATE

REGISTERED PROFESSIONAL ENGINEER
P. VIJITAKULA
No. 54701
Exp. 12-31-15
CIVIL
STATE OF CALIFORNIA

The State of California or its officers or agents shall not be responsible for the accuracy or completeness of electronic copies of this plan sheet.

The components of this Bridge Standard Drawing have been prepared under the responsible charge of the Technical Owner, a registered civil engineer in the State of California. Refer to: http://dot.ca.gov/hq/esc/techpubs/manual/bridgemanuals/bridge-standard-detail-sheets/index.html
The selection and proper application of the component design and any modifications shown have been prepared under the responsible charge of the registered civil engineer for the project.

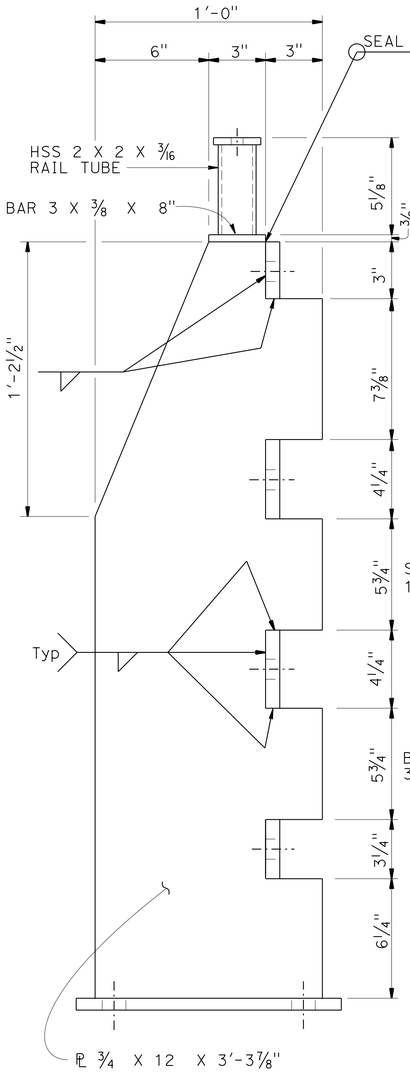

SECTION E-E

3" = 1'-0"

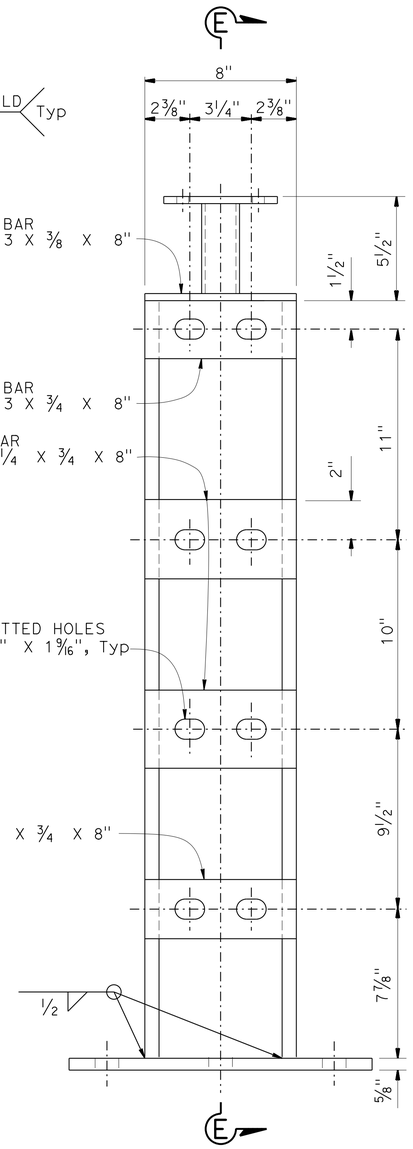

ELEVATION

3" = 1'-0"

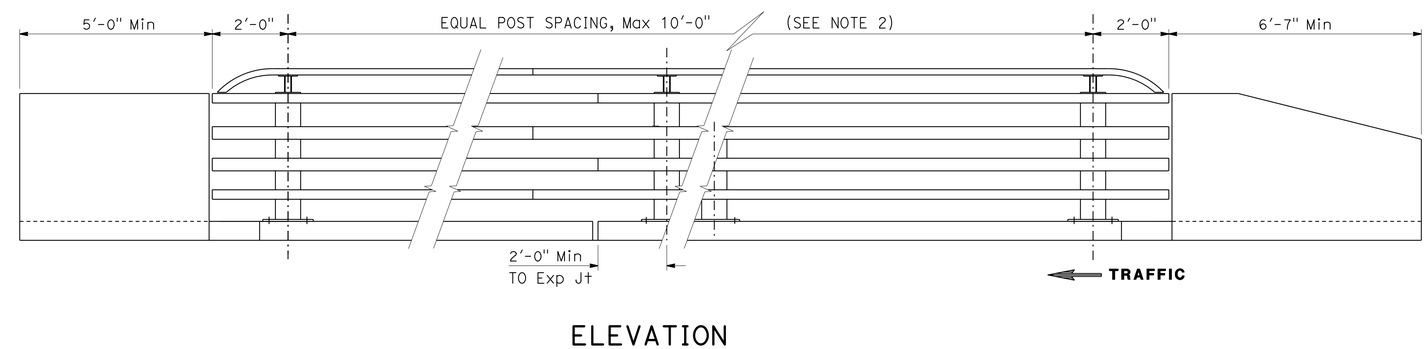

ELEVATION

1/2" = 1'-0"

NOTES:

1. For approach and departure end details, see "DETAILS No. 3" sheet.
2. Post spacing and/or block length to be adjusted to fit bridge length or wingwall length.
3. All horizontal members are parallel to longitudinal profile grade of deck.
4. Posts are normal to profile grade of structure.
5. Posts are vertical to the transverse cross section.

HAMILTON BRANCH BRIDGE (REPLACE)

CALIFORNIA ST-20S BRIDGE RAIL

DETAILS NO. 2

STANDARD DRAWING

FILE NO. xs16-120-2

APPROVAL DATE January 2015

STATE OF CALIFORNIA DEPARTMENT OF TRANSPORTATION

DIVISION OF ENGINEERING SERVICES

BRIDGE NO. 09-0079

POST MILE 8.98

DS OSD 2147A (ENGLISH STANDARD DRAWING "XS" BORDER REV. (02-02-11)

ORIGINAL SCALE IN INCHES FOR REDUCED PLANS 0 1 2 3

UNIT: 3576
PROJECT NUMBER & PHASE: 02120000111
CONTRACT NO.: 02-4E6404

DISREGARD PRINTS BEARING EARLIER REVISION DATES

REVISION DATES 6-13-14 11/19/15 1-14-15

SHEET 14 OF 22

FILE => 09-0079-w-br-det02.dgn

USERNAME => s115152 DATE PLOTTED => 24-NOV-2015 TIME PLOTTED => 09:36

DIST	COUNTY	ROUTE	POST MILES TOTAL PROJECT	SHEET No.	TOTAL SHEETS
02	Plu	147	8.9/9.3	87	94

P. Vijitakula 2-3-15
REGISTERED CIVIL ENGINEER DATE

11-30-15
PLANS APPROVAL DATE

REGISTERED PROFESSIONAL ENGINEER P. VIJITAKULA No. 54701 Exp. 12-31-15 CIVIL STATE OF CALIFORNIA

The State of California or its officers or agents shall not be responsible for the accuracy or completeness of electronic copies of this plan sheet.

The components of this Bridge Standard Drawing have been prepared under the responsible charge of the Technical Owner, a registered civil engineer in the State of California Refer to: http://dot.ca.gov/hq/esc/techpubs/manual/bridgemanuals/bridge-standard-detail-sheets/index.html The selection and proper application of the component design and any modifications shown have been prepared under the responsible charge of the registered civil engineer for the project.

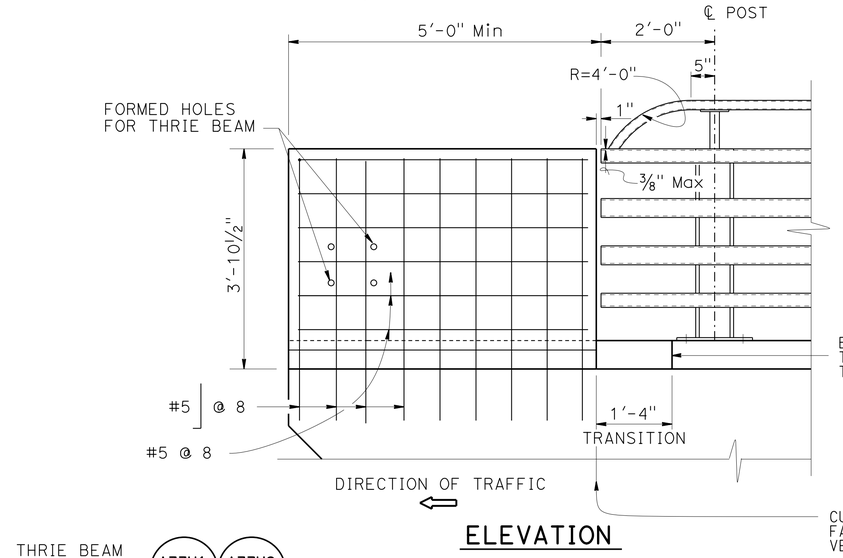

ELEVATION

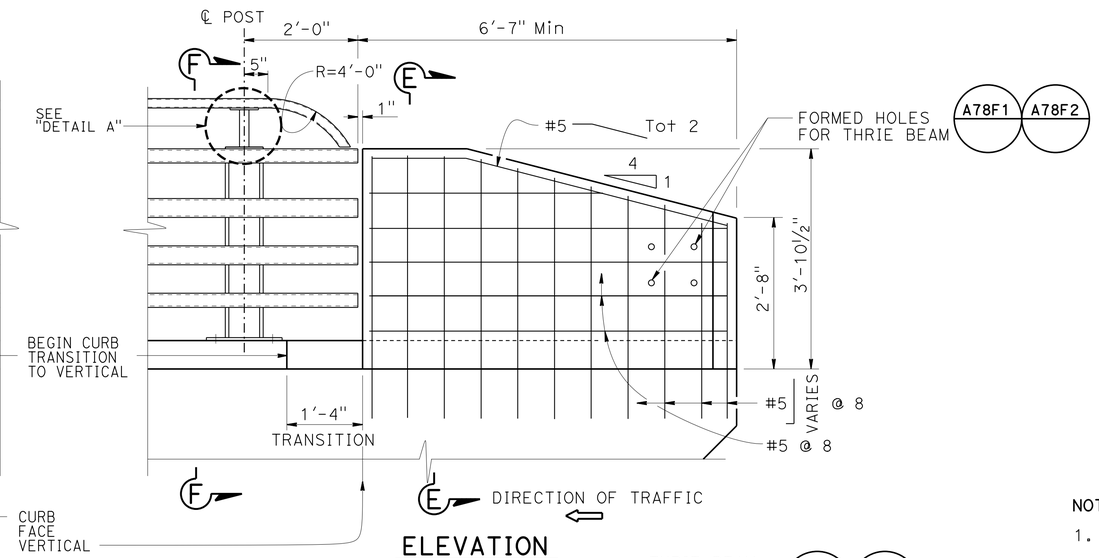

ELEVATION

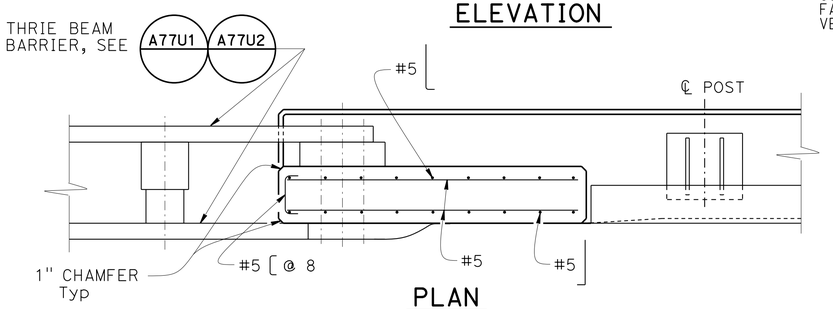

PLAN

END BLOCK DETAIL

3/4" = 1'-0"

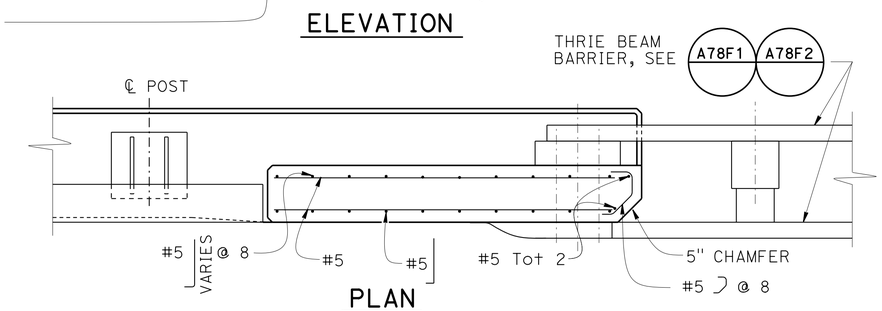

PLAN

TRANSITION BLOCK DETAIL

3/4" = 1'-0"

NOTES:

1. Anchor bolts may be tack welded (shop or field) to anchorage.
2. Each rail length must be continuous over a minimum of two posts.
3. The fabricator must check that the tubular sleeve splices conform to the dimensions indicated to assure proper clearance.
4. Except for expansion splices, not more than one splice permitted per same side of post.

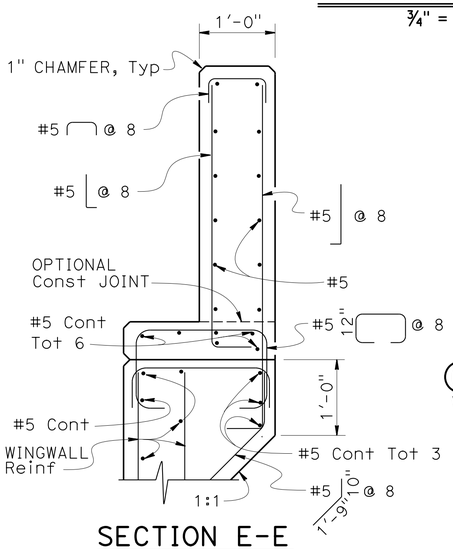

SECTION E-E

1" = 1'-0"

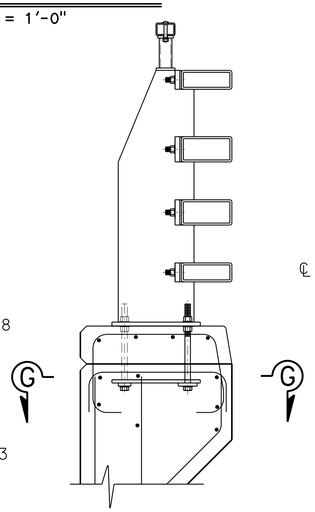

SECTION F-F

NO SCALE

NOTE:
For details not shown, see "SECTION E-E"

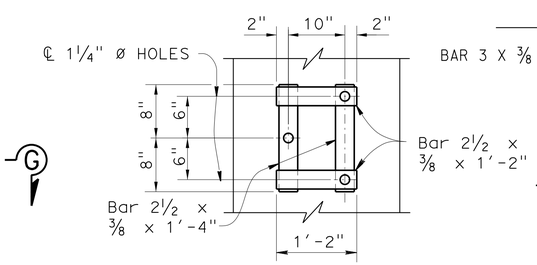

VIEW G-G

NO SCALE

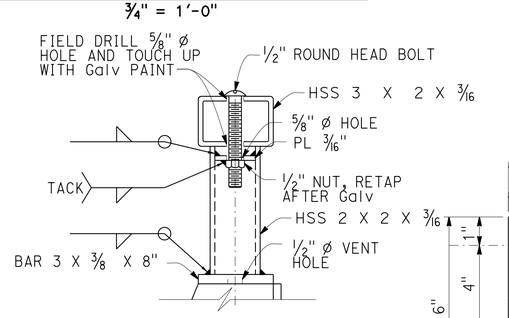

SECTION H-H ALTERNATIVE

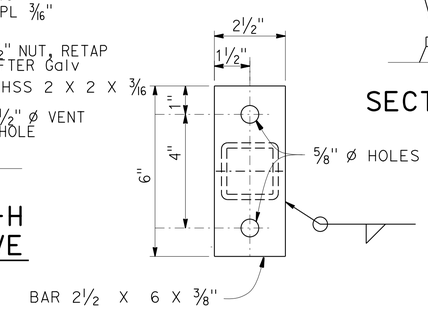

SECTION A-A

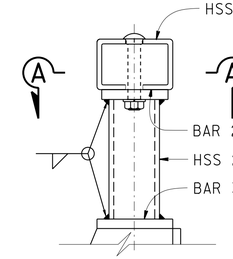

SECTION H-H

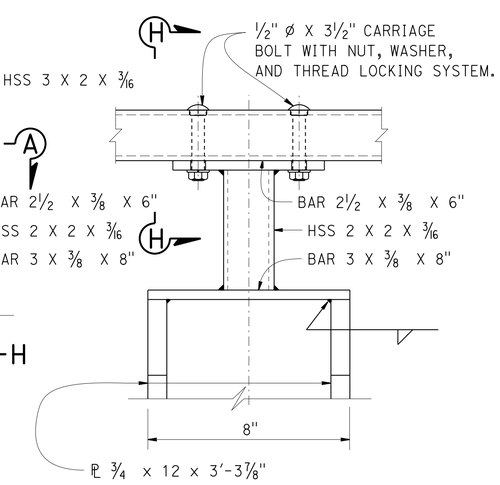

DETAIL A

RAIL CONNECTION DETAILS

NO SCALE

STANDARD DRAWING

FILE NO. xs16-120-3

APPROVAL DATE January 2015

STATE OF CALIFORNIA DEPARTMENT OF TRANSPORTATION

DIVISION OF ENGINEERING SERVICES

BRIDGE NO. 09-0079

POST MILE 8.98

HAMILTON BRANCH BRIDGE (REPLACE)

CALIFORNIA ST-20S BRIDGE RAIL

DETAILS NO. 3

DS OSD 2147A (ENGLISH STANDARD DRAWING "XS" BORDER REV. (02-02-11)

ORIGINAL SCALE IN INCHES FOR REDUCED PLANS 0 1 2 3

UNIT: 3576
PROJECT NUMBER & PHASE: 02120000111
CONTRACT NO.: 02-4E6404

DISREGARD PRINTS BEARING EARLIER REVISION DATES

REVISION DATES: 6-11-14 11/19/15 1-14-15

SHEET 15 OF 22

FILE => 09-0079-w-br-det03.dgn

USERNAME => s115152 DATE PLOTTED => 24-NOV-2015 TIME PLOTTED => 09:36

DIST	COUNTY	ROUTE	POST MILES TOTAL PROJECT	SHEET No.	TOTAL SHEETS
02	Plu	147	8.9/9.3	88	94

REGISTERED CIVIL ENGINEER — DATE 2-3-15

11-30-15
PLANS APPROVAL DATE

REGISTERED PROFESSIONAL ENGINEER — P. VIJITAKULA No. 54701 Exp. 12-31-15 CIVIL — STATE OF CALIFORNIA

The State of California or its officers or agents shall not be responsible for the accuracy or completeness of electronic copies of this plan sheet.

The components of this Bridge Standard Drawing have been prepared under the responsible charge of the Technical Owner, a registered civil engineer in the State of California. Refer to: http://dot.ca.gov/hq/esc/techpubs/manual/bridgemanuals/bridge-standard-detail-sheets/index.html The selection and proper application of the component design and any modifications shown have been prepared under the responsible charge of the registered civil engineer for the project.

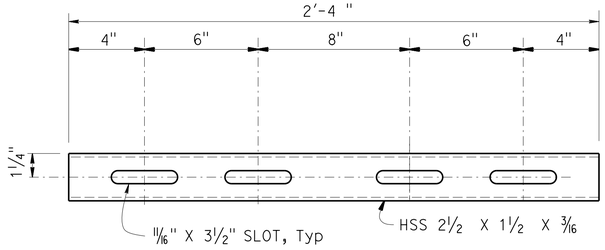

(FOR HSS 3 X 2 X 3/16 RAIL)

STANDARD SLEEVE DETAIL

3" = 1'-0"

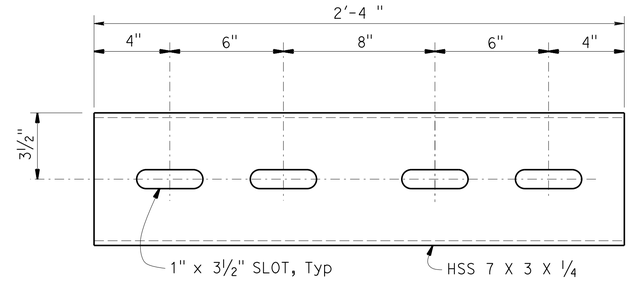

(FOR HSS 8 X 4 X 5/16 RAIL)

STANDARD SLEEVE DETAIL

3" = 1'-0"

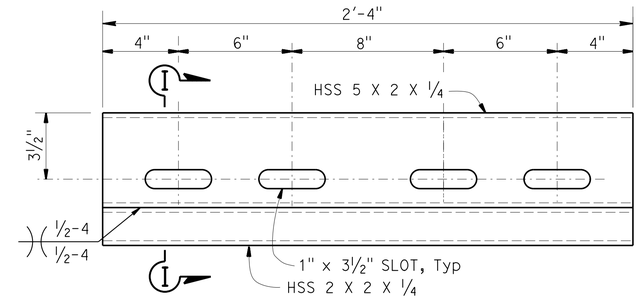

(FOR HSS 8 X 3 X 5/16 RAIL)

STANDARD SLEEVE DETAIL

3" = 1'-0"

NOTES:

1. HS bolts with nut and washers, snug tightened, and thread locking system.
2. Use ½"ø X 3 5/16 (HSS 8 X 2 X 3/16)
   Use ¾"ø X 4 5/16 (HSS 8 X 3 X 5/16)
   Use ¾"ø X 5 5/16 (HSS 8 X 4 X 5/16)

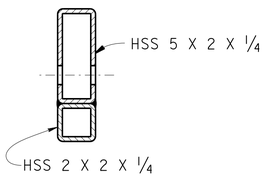

SECTION I-I

3" = 1'-0"

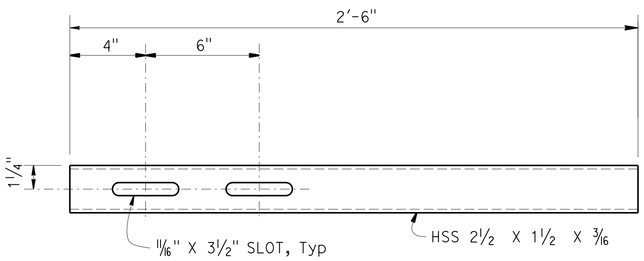

(FOR HSS 3 X 2 X 3/16 RAIL)

EXPANSION SLEEVE DETAIL

3" = 1'-0"

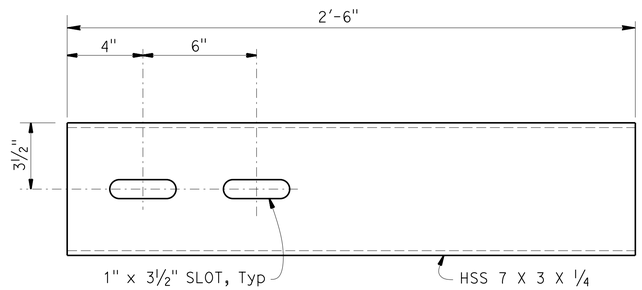

(FOR HSS 8 X 4 X 5/16 RAIL)

EXPANSION SLEEVE DETAIL

3" = 1'-0"

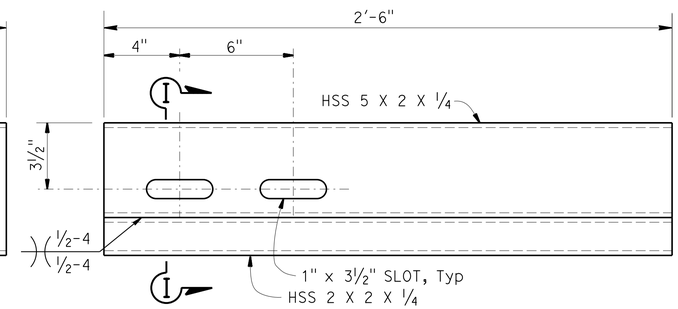

(FOR HSS 8 X 3 X 5/16 RAIL)

EXPANSION SLEEVE DETAIL

3" = 1'-0"

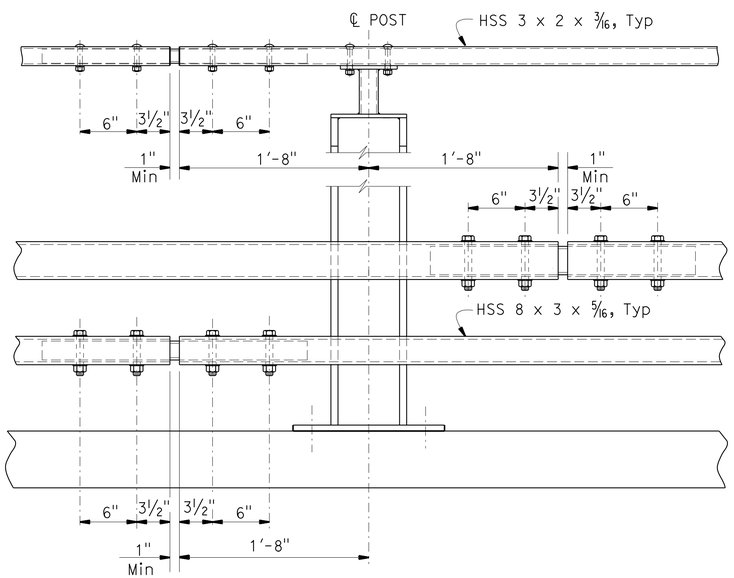

STANDARD SPLICE

1½"= 1'-0"

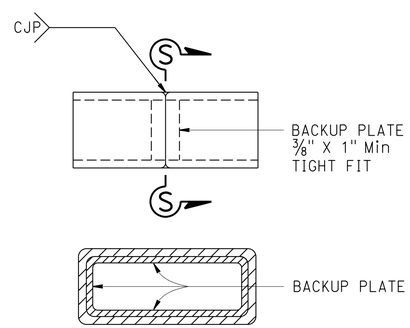

SECTION S-S

ALTERNATE TUBE WELDED SPLICE

3" = 1'-0"

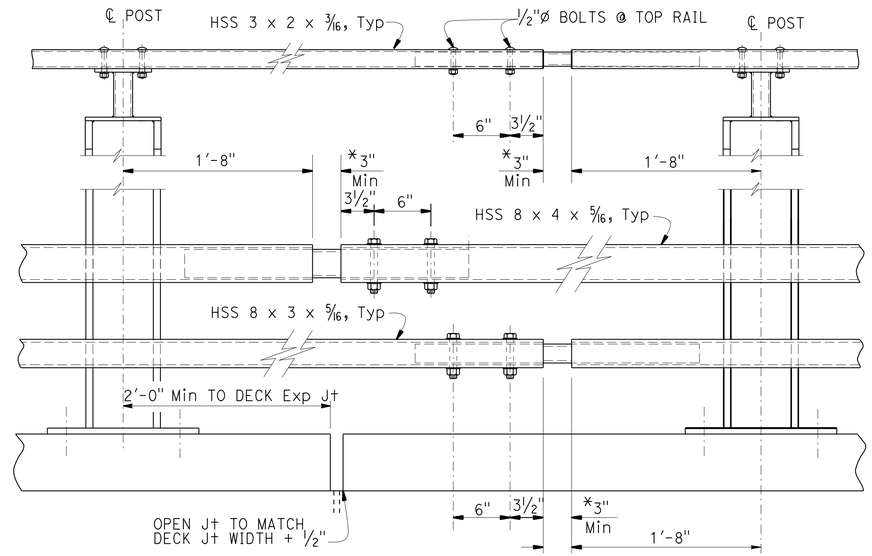

EXPANSION SPLICE

1½"= 1'-0"
* MATCH DECK OR WALL JOINT

STANDARD DRAWING

FILE NO. xs16-120-4

APPROVAL DATE January 2015

STATE OF CALIFORNIA DEPARTMENT OF TRANSPORTATION

DIVISION OF ENGINEERING SERVICES

BRIDGE NO. 09-0079

POST MILE 8.98

HAMILTON BRANCH BRIDGE (REPLACE)

CALIFORNIA ST-20S BRIDGE RAIL

DETAILS NO. 4

DS OSD 2147A (ENGLISH STANDARD DRAWING "XS" BORDER REV. (02-02-11)

ORIGINAL SCALE IN INCHES FOR REDUCED PLANS 0 1 2 3

UNIT: 3576
PROJECT NUMBER & PHASE: 02120000111
CONTRACT NO.: 02-4E6404

DISREGARD PRINTS BEARING EARLIER REVISION DATES

REVISION DATES: 6-14-14 10-28-14 1-14-15 11/19/15

SHEET 16 OF 22

FILE => 09-0079-w-br-det04.dgn

USERNAME => s115152 DATE PLOTTED => 24-NOV-2015 TIME PLOTTED => 09:36

DIST	COUNTY	ROUTE	POST MILES TOTAL PROJECT	SHEET No	TOTAL SHEETS
02	Plu	147	8.9/9.3	89	94

Jacqueline A. Martin 8-22-14
PROFESSIONAL GEOLOGIST

11-30-15
PLANS APPROVAL DATE

PROFESSIONAL GEOLOGIST
Jacqueline A. Martin
No. 8705
Exp. 10-31-14
STATE OF CALIFORNIA

The State of California or its officers or agents shall not be responsible for the accuracy or completeness of electronic copies of this plan sheet.

This LOTB sheet was prepared in accordance with the Caltrans Soil & Rock Logging, Classification, & Presentation Manual (2010 Edition).

See 2010 Standard Plans A10F and A10G for Soil Legend, and A10H for Rock Legend.

BENCH MARK

SUHV8971

Fnd #6 Rebar w/ AL Cap
51.33′ Rt "CL" LINE
Sta 14+44.52
N 1,990,741.39
E 6,819,648.48
Elev=4865.85

SUHV9042

Fnd #6 Rebar w/ AL Cap
14.86′ Lt "CL" LINE
Sta 18+58.22
N 1,991,159.05
E 6,819,615.40
Elev=4859.98

Vertical Datum: NAVD88

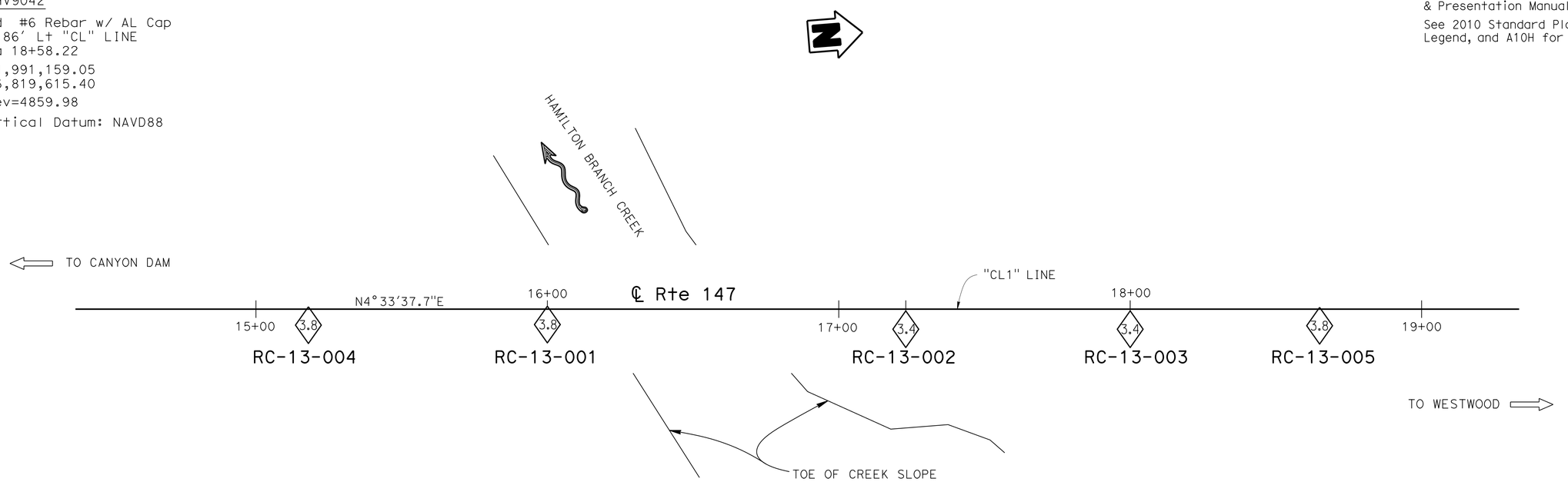

PLAN
1" = 20′

Notes:

1. Groundwater was measured during the field investigation in Boring RC-13-002 at an approximate elevation of 4800 feet. No attempts were made to measure groundwater in Borings RC-13-001, RC-13-003 through RC-13-005.
2. Casing was installed through the bridge deck for Borings RC-13-001 through RC-13-003. Refer to the LOTB sheets for bottom of casing elevations.
3. Hard and very hard BOULDERS (up to 5 feet) and COBBLES were seen in and on the banks of the river channel. Very hard Rock Slope Protection (up to 8 feet) exists on the banks of the river channel and is being used as armor protection for the existing Abutment 1, Pier 2 and Pier 3.
4. Rock core samples from the 2013 subsurface investigation are available for viewing by the bidders at the California Department of Transportation, 5900 Folsom BLVD, Sacramento CA 95819.

USERNAME => s115152 DATE PLOTTED => 24-NOV-2015 TIME PLOTTED => 09:36

ENGINEERING SERVICES	MATERIALS AND GEOTECHNICAL SERVICES	STATE OF CALIFORNIA DEPARTMENT OF TRANSPORTATION	DIVISION OF ENGINEERING SERVICES STRUCTURE DESIGN DESIGN BRANCH 1	BRIDGE NO. 09-0079 POST MILE 8.98	HAMILTON BRANCH BRIDGE (REPLACE)
FUNCTIONAL SUPERVISOR NAME: R. Buell	DRAWN BY: F. Nguyen CHECKED BY: J. Kaump	FIELD INVESTIGATION BY: J. Thorne/J. Martin			LOG OF TEST BORINGS 1 OF 6

OGS CIVIL LOG OF TEST BORINGS SHEET

ORIGINAL SCALE IN INCHES FOR REDUCED PLANS 0 1 2 3

UNIT: 3643
PROJECT NUMBER & PHASE: 02120000111 CONTRACT NO.: 02-4E6404

DISREGARD PRINTS BEARING EARLIER REVISION DATES

REVISION DATES: ~~03-06-14~~ 10/27/14 12/03/14

SHEET 17 OF 22

FILE => 09-0079-z-lotslof6.dgn

DIST	COUNTY	ROUTE	POST MILES TOTAL PROJECT	SHEET No	TOTAL SHEETS
02	Plu	147	8.9/9.3	90	94

Jacqueline A. Martin 8-22-14
PROFESSIONAL GEOLOGIST

11-30-15
PLANS APPROVAL DATE

PROFESSIONAL GEOLOGIST Jacqueline A. Martin No. 8705 Exp. 10-31-14 STATE OF CALIFORNIA

The State of California or its officers or agents shall not be responsible for the accuracy or completeness of electronic copies of this plan sheet.

This LOTB sheet was prepared in accordance with the Caltrans Soil & Rock Logging, Classification, & Presentation Manual (2010 Edition).

See 2010 Standard Plans A10F and A10G for Soil Legend, and A10H for Rock Legend.

FOR PLAN VIEW, SEE
"LOG OF TEST BORINGS 1 OF 6"

5.5' Rt Sta 15+18.0
℄ Rte 147

RC-13-004

4851.4'

4850 — 4840 — 4830 — 4820 — 4810 — 4800 — 4790 — 4780 — 4770 — 4760 — 4750

3.8 Asphalt concrete (12") over Roadbase (4").
CLAYEY GRAVEL with SAND and COBBLES (GC); medium dense; dark reddish brown; moist; fine and coarse angular GRAVEL; some from fine to coarse SAND; little fines; Approx 20% BASALT COBBLES, Approx 4 to 6", hard; (FILL).
-BASALT BOULDER; Approx 1.7'; hard.
CLAYEY GRAVEL with SAND and COBBLES (GC); medium dense; brown; fine and coarse angular GRAVEL; little from fine to coarse SAND; little fines; Approx 20% BASALT COBBLES, Approx 4 to 6", hard; rootlets; (FILL).
- very loose.
- dense.
- medium dense.

15 ⅊.4
8 ⅊.4
2 ⅊.4
35 ⅊.4
20 ⅊.4 (CR)

IGNEOUS ROCK (BASALT); dark reddish gray; decomposed; soft; (CLAYEY GRAVEL with SAND (GC); medium dense; moist; fine and coarse subangular GRAVEL; little fine and medium SAND; little fines; white mineral filled vesicles).
- slightly and moderately weathered; moderately hard and hard; trace vesicles (¼"); CLAY infilling from Elev 4829.4' to Elev 4829.1'.

REC=80%
RQD=24%

20/2 ⅊.4

IGNEOUS ROCK (vesicular BASALT); very dark gray and dark reddish gray; slightly weathered and fresh; hard; slightly and moderately fractured (dips 30°-70°); vesicles (¼"-1").
- soft; decomposed; (CLAYEY GRAVEL with SAND (GC); moist; fine and coarse subrounded and subangular GRAVEL; little from fine to coarse SAND; little fines; white mineral filled vesicles.
- slightly weathered and fresh; hard; moderately and intensely fractured (dips 30°-70°); UC= 5761 psi.
- trace vesicles (⅛") from Elev 4818.4' to Elev 4817.4' and from Elev 4816.4' to Elev 4814.4'.

REC=92%
RQD=70%
REC=84%
RQD=84%
REC=88%
RQD=70%
REC=98%
RQD=98%

(SG)

- vesicles (⅛"-1.5").
IGNEOUS ROCK (BASALT); gray; fresh; hard; slightly and moderately fractured (dips 30°); trace vesicles (⅛"); UC= 14,963 psi.
IGNEOUS ROCK (vesicular BASALT); dark gray and dark reddish gray; slightly weathered and fresh; hard; slightly fractured (dips 30°-50°); vesicles (⅛"-1").
IGNEOUS ROCK (BASALT); dark gray; fresh; hard; slightly fractured (dips 50°-70°); trace vesicles (1/16"); UC= 17,223 psi.

REC=96%
RQD=86%
REC=86%
RQD=72%

IGNEOUS ROCK (vesicular BASALT); dark reddish brown; moderately and intensely weathered; moderately hard and moderately soft; very intensely fractured; vesicles (⅛"-½"); vesicles filled with yellow weathered mineral.
-dark gray; fresh; hard; slightly fractured (dips 80°).
IGNEOUS ROCK (BASALT); gray; fresh; hard; slightly fractured (dips 30°); trace vesicles (1/16"); UC= 11,318 psi.

REC=96%
RQD=94%
REC=90%
RQD=54%

IGNEOUS ROCK (vesicular BASALT); dark reddish gray and dark gray; slightly and moderately weathered; hard and moderately hard; intensely fractured (dip 30°-50°); vesicles (⅛"-½"); trace brownish yellow mineral filled vesicles.
- gray; fresh; hard; slightly fractured (dips 40°).

REC=84%
RQD=42%
REC=100%
RQD=100%

IGNEOUS ROCK (BASALT); gray; fresh; hard; slightly fractured; trace vesicles (⅛"); UC= 10,931 psi.
IGNEOUS ROCK (vesicular BASALT); gray; fresh and slightly weathered; hard; slightly fractured; vesicles (⅛"-½"); trace white weathered mineral filled vesicles.
- moderately fractured.
- dark reddish gray; moderately hard and moderately soft; intensely fractured.
- hard; slightly fractured.
- moderately hard and moderately soft; intensely fractured.

REC=70%
RQD=50%
REC=72%
RQD=48%
REC=16%
RQD=10%
REC=0%
RQD=0%
REC=20%
RQD=0%

8-23-13
Terminated at Elev 4751.4'
ERi = 71%

15+00 — 16+00 — 17+00

PROFILE
Horiz: 1" = 10'
Vert: 1" = 10'

ENGINEERING SERVICES	MATERIALS AND GEOTECHNICAL SERVICES	STATE OF CALIFORNIA DEPARTMENT OF TRANSPORTATION	DIVISION OF ENGINEERING SERVICES STRUCTURE DESIGN DESIGN BRANCH 1	BRIDGE NO. 09-0079 POST MILE 8.98	HAMILTON BRANCH BRIDGE (REPLACE)
FUNCTIONAL SUPERVISOR NAME: R. Buell	DRAWN BY: F. Nguyen CHECKED BY: J. Kaump	FIELD INVESTIGATION BY: J. Thorne			LOG OF TEST BORINGS 2 OF 6

OGS CIVIL LOG OF TEST BORINGS SHEET

ORIGINAL SCALE IN INCHES FOR REDUCED PLANS 0 1 2 3

UNIT: 3643
PROJECT NUMBER & PHASE: 02120000111
CONTRACT NO.: 02-4E6404

DISREGARD PRINTS BEARING EARLIER REVISION DATES

REVISION DATES: 03-06-14 12/03/14 08-21-14

SHEET 18 OF 22

FILE => 09-0079-z-lots2of6.dgn

USERNAME => s115152 DATE PLOTTED => 24-NOV-2015 TIME PLOTTED => 09:36

DIST	COUNTY	ROUTE	POST MILES TOTAL PROJECT	SHEET No	TOTAL SHEETS
02	Plu	147	8.9/9.3	91	94

Jacqueline A. Martin 8-22-14
PROFESSIONAL GEOLOGIST

11-30-15
PLANS APPROVAL DATE

PROFESSIONAL GEOLOGIST Jacqueline A. Martin No. 8705 Exp. 10-31-14 STATE OF CALIFORNIA

The State of California or its officers or agents shall not be responsible for the accuracy or completeness of electronic copies of this plan sheet.

This LOTB sheet was prepared in accordance with the Caltrans Soil & Rock Logging, Classification, & Presentation Manual (2010 Edition).

See 2010 Standard Plans A10F and A10G for Soil Legend, and A10H for Rock Legend.

FOR PLAN VIEW, SEE
"LOG OF TEST BORINGS 1 OF 6"

5.3′ Rt Sta 16+00.0
℄ Rte 147

RC-13-001

4853.8′

3.8 ASPHALT CONCRETE (3") over PORTLAND CEMENT CONCRETE (11").

Air.

CR CLAYEY GRAVEL with SAND (GC); dark reddish brown; moist; from angular to subrounded fine and coarse GRAVEL; some fine to coarse SAND; little fines; oxide staining.

REC=92% RQD=16% IGNEOUS ROCK (BASALT); very dark gray to dark reddish brown; slightly weathered; hard and moderately hard; intensely fractured.

REC=76% RQD=64% - dark reddish brown; decomposed; soft (GRAVELLY lean CLAY with SAND (CL); stiff; moist; some fine and coarse subrounded and subangular GRAVEL; little fine SAND; PP= 1.5 - 2.0 tsf).

REC=62% RQD=30% IGNEOUS ROCK (BASALT); very dark gray; slightly weathered; hard; slightly fractured (dips ~70°); vesicles (1/4") with alternating layers (Approx 0.5′ thick) of dark reddish brown; decomposed; soft (CLAYEY GRAVEL with SAND (GC); stiff; moist; fine and coarse subrounded and subangular GRAVEL; little fine and medium SAND; some fines; PP= 1.5 tsf); UC= 8116 psi.

REC=64% RQD=50%

REC=100% RQD=96% IGNEOUS ROCK (BASALT); very dark gray; fresh; hard; very slightly fractured; fractures filled with CLAY and fine subangular GRAVEL; trace vesicles (1/4"); UC= 14,501 psi.

REC=40% RQD=30% IGNEOUS ROCK (BASALT); dark gray to dark reddish brown; decomposed; moderately hard and soft; (CLAYEY GRAVEL with SAND (GC); stiff; moist; fine and coarse subangular and angular GRAVEL; little from fine to coarse SAND; little fines; PP= 2.0 tsf).

REC=84% RQD=56% IGNEOUS ROCK (BASALT); very dark gray; fresh; hard; moderately and slightly fractured; slightly vesicular (1/8" - 1/2"); UC= 4502 psi.

REC=100% RQD=76% - slightly weathered; moderately and intensely fractured (dips ~30°); fractures infilled (2-4") with CLAY, SAND and rounded fine and coarse GRAVELS; trace vesicles (1/8" - 1/4"); UC= 4502 psi.

REC=48% RQD=14% - dark grayish brown; intensely weathered; from hard to moderately soft; intensely and very intensely fractured (dips ~70°); fractures infilled with CLAY (1" thick), slightly vesicular (1/8" - 1/4"); vesicles filled with CLAY.

REC=92% RQD=60% IGNEOUS ROCK (vesicular BASALT); very dark gray; slightly weathered; hard; slightly fractured; vesicles (1/8" - 1/2") filled with white mineral; UC= 1949 psi.

REC=92% RQD=88% - dark red; slightly weathered; hard; moderately and intensely fractured; vesicles (1/8" - 1/2").
- dark reddish gray; slightly fractured (dips ~50°).
- CLAY infilling (3" thick).
- UC= 3341 psi.

REC=100% RQD=88%

REC=100% RQD=78% - gray.

REC=90% RQD=52% - dark reddish gray; UC= 3872 psi.
- intensely fractured.
- gray; slightly fractured.

REC=88% RQD=70% - reddish brown and gray; intensely fractured.
- gray; slightly fractured (dips ~ 50°).

REC=30% RQD=24%

REC=100% RQD=76%

REC=84% RQD=62% - dark reddish gray; intensely fractured (dips ~ 30°- 50°).

REC=100% RQD=100% IGNEOUS ROCK (vesicular BASALT); gray; fresh; hard; slightly fractured (dips ~30°); vesicles (1/8" - 1/2").

REC=82% RQD=58% - gray and grayish brown; slightly weathered; hard; very intensely fractured (dips ~ 30°- 50°); trace vesicles (1/8"-1/4")

REC=96% RQD=78% IGNEOUS ROCK (BASALT); gray and dark reddish gray; fresh and slightly weathered; hard; moderately fractured (dips ~ 30°- 50°); trace vesicles (1/8"-1/4").

REC=70% RQD=33% - intensely fractured.

8-22-13
Terminated at Elev 4705.8′
ERi = 71%

4860 4850 4840 4830 4820 4810 4800 4790 4780 4770 4760 4750 4740 4730 4720 4710 4700

15+50 16+50 17+50

PROFILE
Horiz: 1" = 10′
Vert: 1" = 10′

ENGINEERING SERVICES	MATERIALS AND GEOTECHNICAL SERVICES	STATE OF CALIFORNIA DEPARTMENT OF TRANSPORTATION	DIVISION OF ENGINEERING SERVICES STRUCTURE DESIGN DESIGN BRANCH 1	BRIDGE NO. 09-0079 POST MILE 8.98	HAMILTON BRANCH BRIDGE (REPLACE) LOG OF TEST BORINGS 3 OF 6
FUNCTIONAL SUPERVISOR NAME: R. Buell	DRAWN BY: F. Nguyen CHECKED BY: J. Kaump	FIELD INVESTIGATION BY: J. Thorne/ J. Martin			

OGS CIVIL LOG OF TEST BORINGS SHEET

ORIGINAL SCALE IN INCHES FOR REDUCED PLANS 0 1 2 3

UNIT: 3643
PROJECT NUMBER & PHASE: 02120000111 CONTRACT NO.: 02-4E6404

DISREGARD PRINTS BEARING EARLIER REVISION DATES → REVISION DATES ~~03-06-14~~ 12/03/14 ~~08-21-14~~ SHEET 19 OF 22

FILE => 09-0079-z-lots3of6.dgn

USERNAME => s115152 DATE PLOTTED => 24-NOV-2015 TIME PLOTTED => 09:36

DIST	COUNTY	ROUTE	POST MILES TOTAL PROJECT	SHEET No	TOTAL SHEETS
02	Plu	147	8.9/9.3	92	94

Jacqueline A. Martin 8-22-14
PROFESSIONAL GEOLOGIST

11-30-15
PLANS APPROVAL DATE

PROFESSIONAL GEOLOGIST Jacqueline A. Martin No. 8705 Exp. 10-31-14 STATE OF CALIFORNIA

The State of California or its officers or agents shall not be responsible for the accuracy or completeness of electronic copies of this plan sheet.

This LOTB sheet was prepared in accordance with the Caltrans Soil & Rock Logging, Classification, & Presentation Manual (2010 Edition).

See 2010 Standard Plans A10F and A10G for Soil Legend, and A10H for Rock Legend.

FOR PLAN VIEW, SEE
"LOG OF TEST BORINGS 1 OF 6"

6.9' Rt Sta 17+23.0
℄ Rte 147

RC-13-002

4857.1'

3.4 ASPHALT CONCRETE (3") over PORTLAND CEMENT CONCRETE (bridge deck 11").

Air

4860 4850 4840 4830 4820 4810 4800 4790 4780 4770 4760 4750 4740 4730 4720 4710 4700 4690

IGNEOUS ROCK (vesicular BASALT); gray; fresh and slightly weathered; hard; moderately and intensely fractured (dip ~30°); vesicles (1/4"-1/2").

REC=100% RQD=75% — CLAYEY GRAVEL with SAND (GC); dark yellowish brown; moist; fine and coarse subangular and subrounded GRAVEL; little from fine to coarse subrounded SAND; little fines.

IGNEOUS ROCK (BASALT); gray and reddish gray; fresh and slightly weathered; hard; moderately and intensely fractured (dips ~30°); trace vesicles (1/16"); UC= 5,472 psi.

REC=66% RQD=30% — GWS Elev 4800' 8-22-13 — IGNEOUS ROCK (vesicular BASALT); gray; slightly weathered; hard; moderately fractured (dips ~30°); vesicles (1/4"-1/2") with alternating layers (Approx 1.0' thick) of dark reddish brown; decomposed; soft; (CLAYEY GRAVEL with SAND (GC); very stiff; moist; fine and coarse subangular and angular GRAVEL; little fine and medium SAND; little fines); PP= 3.5 tsf.

REC=70% RQD=32% — SG — - vesicles filled with white mineral.
- UC= 5,305 psi.

REC=70% RQD=36%

REC=90% RQD=34%

REC=90% RQD=90% — IGNEOUS ROCK (vesicular BASALT); reddish gray and dark reddish gray; slightly weathered; hard; slightly fractured; vesicles (1/4"- 1/2"); trace white mineral filled vesicles.

REC=94% RQD=94% — IGNEOUS ROCK (BASALT); gray; slightly weathered and fresh; hard; slightly fractured; trace vesicles; UC= 7303 psi.

REC=70% RQD=36% — IGNEOUS ROCK (vesicular BASALT); reddish gray; moderately weathered; moderately hard and hard; intensely fractured; vesicles (1/8" - 1/4"); vesicles filled with white mineral.

REC=100% RQD=16% — - reddish gray and gray; slightly weathered; hard; moderately fractured (dips ~30°; vesicles (1/4" - 1/2"); trace white mineral in vesicles.
- moderately weathered; moderately hard and hard; intensely fractured; vesicles (1/8"-1/4"); vesicles filled with white mineral.

REC=100% RQD=60% — - gray; slightly weathered; hard; moderately fractured (dips ~30°-70°); fractures filled with thin lean CLAY (CL); vesicles (1/16"-1/4").

REC=100% RQD=64% — - UC= 2540 psi.

REC=78% RQD=18% — IGNEOUS ROCK (BASALT); gray; fresh; hard; intensely fractured; trace vesicles with alternating layers (0.5' thick) of Poorly-graded SAND with SILT and GRAVEL (SP-SM); dark reddish brown; moist; fine and medium SAND; little fine BASALT GRAVEL.

REC=100% RQD=40% — IGNEOUS ROCK (BASALT); dark yellowish brown; decomposed; soft; (Poorly-graded SAND with SILT (SP-SM); dark reddish brown; moist; trace fine subrounded BASALT GRAVEL).

SANDY lean CLAY (CL); soft; red; moist; some fine SAND; PP= 0.25 tsf.

M PA PI — - BOULDER (METAVOLCANIC); dark greenish gray; slightly weathered and fresh; very hard; Approx 13".

Fat CLAY (CH); hard; yellowish red; moist; PP= 4.0 tsf.

- SANDY fat CLAY with GRAVEL and COBBLES (CH); stiff; yellowish red; moist; some fine and medium SAND; little fine subangular and subrounded GRAVEL; heavy oxide staining; 5% METAVOLCANIC COBBLES; 4"; very hard and hard; slightly weathered and fresh; PP= 1.5 tsf.

M PA — SILTY SAND (SM); yellowish red and strong brown; moist; fine and medium SAND; little fines; heavy oxide staining.
- yellowish brown; fine SAND; some fines; oxide staining.
- trace fine and coarse, subrounded and rounded GRAVEL; oxide staining.
- yellowish red and strong brown; moist; fine and medium SAND; little fines; heavy oxide staining.

SILTY SAND with GRAVEL (SM); gray; moist; fine and medium SAND; little fines; little fine subrounded and rounded GRAVEL; oxide staining.

M DS — SILTY SAND (SM); yellowish red and strong brown; moist; fine and medium SAND; little fines; heavy oxide staining.
SILTY GRAVEL with SAND (GM); yellowish brown and strong red; fine subrounded and rounded GRAVEL; little fine and medium SAND; little fines; oxide staining.

REC=100% RQD=46% — METAMORPHIC ROCK (METAVOLCANIC); moderately bedded; strong brown; decomposed; soft and very soft; (CLAYEY GRAVEL with SAND (GC); moist; fine and coarse hard subangular GRAVEL; little fine SAND; trace hard METAVOLCANIC COBBLES; heavy oxide staining; black mineral).
- dark greenish gray; fresh; hard and very hard.
- strong brown; decomposed; soft and very soft (fat CLAY with SAND (CH); hard; moist; fine SAND; trace coarse angular METAVOLCANIC GRAVEL; heavy oxide staining; trace mineral; polished surfaces; PP= 4.0 tsf.

REC=100% RQD=62% — - dark greenish gray; fresh; hard and very hard; healed QUARTZ veins (1/8"-1" thick); dips 80°; trace randomly oriented calcite veins (1/8" -1/4" thick).

REC=82% RQD=26% — - strong brown; decomposed; soft and very soft (fat CLAY with SAND (CH); hard; moist; fine SAND; trace coarse angular METAVOLCANIC GRAVEL; heavy oxide staining; trace trace mineral; polished surfaces; PP> 4.0 tsf).
- dark greenish gray; fresh; hard and very hard; healed QUARTZ veins (1/8"-1/4" thick); dip 80°; trace randomly oriented calcite veins (1/8"-1/4" thick).
- yellowish brown; decomposed; (SILTY SAND (SM); moist; fine SAND; some fines; trace fine subangular GRAVEL).
- dark greenish gray; fresh; hard and very hard.
- yellowish brown; decomposed; soft; (SILTY SAND (SM); moist; fine SAND; some fines; trace subangular GRAVEL).

8-21-13
Terminated at Elev 4697.1'
ERi = 86%

17+00 18+00 19+00

PROFILE
Horiz: 1" = 10'
Vert: 1" = 10'

ENGINEERING SERVICES	MATERIALS AND GEOTECHNICAL SERVICES	STATE OF CALIFORNIA DEPARTMENT OF TRANSPORTATION	DIVISION OF ENGINEERING SERVICES STRUCTURE DESIGN DESIGN BRANCH 1	BRIDGE NO. 09-0079 POST MILE 8.98	HAMILTON BRANCH BRIDGE (REPLACE)
FUNCTIONAL SUPERVISOR NAME: R. Buell	DRAWN BY: F. Nguyen CHECKED BY: J. Kaump	FIELD INVESTIGATION BY: J. Martin			LOG OF TEST BORINGS 4 OF 6

OGS CIVIL LOG OF TEST BORINGS SHEET

ORIGINAL SCALE IN INCHES FOR REDUCED PLANS 0 1 2 3

UNIT: 3643
PROJECT NUMBER & PHASE: 02120000111 CONTRACT NO.: 02-4E6404

DISREGARD PRINTS BEARING EARLIER REVISION DATES → REVISION DATES 03-06-14 12/03/14 08-21-14

SHEET 20 OF 22

FILE => 09-0079-z-lots4of6.dgn

USERNAME => s115152 DATE PLOTTED => 24-NOV-2015 TIME PLOTTED => 09:36

DIST	COUNTY	ROUTE	POST MILES TOTAL PROJECT	SHEET No	TOTAL SHEETS
02	Plu	147	8.9/9.3	93	94

Jacqueline A. Martin 8-22-14
PROFESSIONAL GEOLOGIST

11-30-15
PLANS APPROVAL DATE

PROFESSIONAL GEOLOGIST Jacqueline A. Martin No. 8705 Exp. 10-31-14 STATE OF CALIFORNIA

The State of California or its officers or agents shall not be responsible for the accuracy or completeness of electronic copies of this plan sheet.

This LOTB sheet was prepared in accordance with the Caltrans Soil & Rock Logging, Classification, & Presentation Manual (2010 Edition).

See 2010 Standard Plans A10F and A10G for Soil Legend, and A10H for Rock Legend.

FOR PLAN VIEW, SEE
"LOG OF TEST BORINGS 1 OF 6"

6.8' Rt Sta 18+00.0
℄ Rte 147

RC-13-003

4859.1'

3.4 ASPHALT CONCRETE (3") over PORTLAND CEMENT CONCRETE (bridge deck) (11").
Air.

SILTY SAND (SM); gray and strong brown; moist; fine and medium SAND; some fines; trace fine subangular GRAVEL; trace oxide staining.

CR

IGNEOUS ROCK (BASALT); gray and reddish brown; intensely weathered; soft; very intensely fractured.
-dark yellowish brown and gray; decomposed; soft and very soft; (lean CLAY with GRAVEL (CL); very stiff; moist; little fine subangular and angular GRAVEL; PP= 2.5 tsf).
-gray and reddish brown; intensely weathered; soft.
IGNEOUS ROCK (BASALT); gray; slightly weathered; hard; moderately and slightly fractured; trace vesicles (1/4"-1/2"); UC= 9654 psi.
-very dark gray; decomposed; soft; (Poorly-graded GRAVEL with CLAY and SAND (GP-GC); moist; fine angular BASALT GRAVEL; little medium and coarse SAND; weathered white mineral).
-gray; slightly weathered; hard; intensely fractured; trace vesicles (1/4"- 1/2").
-reddish brown; intensely weathered; soft; very intensely fractured; weathered white mineral in vesicles.
-slightly weathered; hard; slightly fractured; trace vesicles with infilling of white mineral; vesicles (1/8"-1/2").
-decomposed; very soft; (SANDY SILT (ML); very soft; dark brown; moist; some fine SAND; PP= 0.25 tsf.
IGNEOUS ROCK (BASALT); dark gray and very dark gray; slightly weathered; hard; moderately fractured (dips 20°); thin infilling of CLAY in fracture and in vesicles; trace vesicles (1/16"-1/2"); UC= 8512 psi.
-dark reddish brown; intensely weathered; moderately hard; intensely and moderately fractured; UC= 8512 psi.
-healed fracture (dips ~70°-85°).
-gray; decomposed; soft; (SILT (ML); very soft; gray; moist; PP= 0.25 tsf).
IGNEOUS ROCK (BASALT); gray; fresh; hard and very hard; very slightly fractured; trace vesicles (1/16"-1"); UC= 9383 psi.
-moderately thick infill of lean CLAY (CL); very soft; reddish brown; moist; PP= 0.25 tsf.
-reddish brown; slightly weathered and intensely weathered; moderately hard and soft; intensely fractured; vesicles (1/8"-1/4") filled with white mineral.
-gray; fresh and slightly weathered; hard; moderately fractured; healed fracture (dips 85°-vertical).
-reddish brown; moderately and intensely weathered; hard; moderately and intensely fractured; thick and moderately thick (Approx 4") lean CLAY (CL) infilling; very soft; moist; PP=0.25 tsf.
IGNEOUS ROCK (vesicular BASALT); gray; slightly weathered; hard; moderately and slightly fractured; vesicles (1/16"-1.5"); trace white mineral in vesicles; UC= 4436 psi.
IGNEOUS ROCK (BASALT/ANDESITE); gray; slightly weathered and fresh; hard and very hard; slightly fractured (dips ~75°); trace vesicles (1/4"-1.5").
- UC= 11,645 psi.

SG

- unfractured; UC= 12,408 psi.

IGNEOUS ROCK (BASALT); gray; slightly weathered; hard; slightly fractured; slightly vesicular (1/8"-1/4").
-dark reddish brown; decomposed; soft; (GRAVELLY lean CLAY (CL); medium stiff; moist; abundance of white mineral in vesicles (1/4); PP= 1.0 tsf).
-gray and grayish brown; slightly weathered and fresh; hard; moderately fractured, slightly vesicular (1/16"-1.0"); trace weathered white mineral in vesicles.

IGNEOUS ROCK (BASALT); dark reddish brown; intensely weathered and decomposed; moderately hard and soft; (CLAYEY GRAVEL with SAND (GC); stiff; moist; fine and coarse subrounded GRAVEL; little fine and medium SAND; white mineral in vesicles; PP= 1.25 tsf).

IGNEOUS ROCK (vesicular BASALT); gray; slightly weathered; hard; moderately fractured (dips ~ 30°- 50°); trace CLAY infilling (1/8" thick); vesicles (1/16"-1/2").

IGNEOUS ROCK (BASALT); dark reddish brown; intensely weathered and decomposed; moderately hard and soft; (CLAYEY GRAVEL with SAND (GC); stiff; moist; fine and coarse subrounded GRAVEL; little fine and medium SAND; white mineral in vesicles; PP= 1.25 tsf).
BOULDER (METAVOLCANIC); dark greenish gray; intensely and slightly weathered; moderately hard and hard; Approx 13".
Fat CLAY (CH); hard; dark reddish brown; moist; trace fine subangular GRAVEL; PP= 4.0 tsf.
SANDY fat CLAY with GRAVEL (CH); hard; yellowish red; moist; some fine and medium SAND; little fine subangular GRAVEL; heavy oxide staining; PP= 4.0 tsf.

SILTY SAND (SM); very dense; yellowish brown; moist; fine and medium SAND; some fines; trace iron oxide staining.

REC=92%	RQD=12%
REC=94%	RQD=40%
REC=94%	RQD=18%
REC=88%	RQD=54%
REC=80%	RQD=42%
REC=100%	RQD=82%
REC=100%	RQD=58%
REC=100%	RQD=56%
REC=100%	RQD=80%
REC=96%	RQD=96%
REC=100%	RQD=100%
REC=100%	RQD=100%
REC=100%	RQD=100%
REC=100%	RQD=64%
REC=74%	RQD=58%
REC=40%	RQD=6%
REC=100%	RQD=46%
REC=78%	RQD=8%

41 1.4
62 1.4

8-24-13
Terminated at Elev 4707.6'
ERi = 86%

4860 4850 4840 4830 4820 4810 4800 4790 4780 4770 4760 4750 4740 4730 4720 4710 4700

17+00 19+00 21+00

PROFILE
Horiz: 1" = 20'
Vert: 1" = 10'

ENGINEERING SERVICES	MATERIALS AND GEOTECHNICAL SERVICES	STATE OF CALIFORNIA DEPARTMENT OF TRANSPORTATION	DIVISION OF ENGINEERING SERVICES STRUCTURE DESIGN DESIGN BRANCH 1	BRIDGE NO. 09-0079 POST MILE 8.98	HAMILTON BRANCH BRIDGE (REPLACE) LOG OF TEST BORINGS 5 OF 6
FUNCTIONAL SUPERVISOR NAME: R. Buell	DRAWN BY: F. Nguyen CHECKED BY: J. Kaump	FIELD INVESTIGATION BY: J. Martin			

OGS CIVIL LOG OF TEST BORINGS SHEET

ORIGINAL SCALE IN INCHES FOR REDUCED PLANS 0 1 2 3

UNIT: 3643
PROJECT NUMBER & PHASE: 02120000111 CONTRACT NO.: 02-4E6404

DISREGARD PRINTS BEARING EARLIER REVISION DATES

REVISION DATES: 03-06-14 10/27/14 12/03/14

SHEET 21 OF 22

FILE => 09-0079-z-lots5of6.dgn

USERNAME => s115152 DATE PLOTTED => 24-NOV-2015 TIME PLOTTED => 09:36

DIST	COUNTY	ROUTE	POST MILES TOTAL PROJECT	SHEET No	TOTAL SHEETS
02	Plu	147	8.9/9.3	94	94

Jacqueline A. Martin 8-22-14
PROFESSIONAL GEOLOGIST

11-30-15
PLANS APPROVAL DATE

PROFESSIONAL GEOLOGIST Jacqueline A. Martin No. 8705 Exp. 10-31-14 STATE OF CALIFORNIA

The State of California or its officers or agents shall not be responsible for the accuracy or completeness of electronic copies of this plan sheet.

This LOTB sheet was prepared in accordance with the Caltrans Soil & Rock Logging, Classification, & Presentation Manual (2010 Edition).

See 2010 Standard Plans A10F and A10G for Soil Legend, and A10H for Rock Legend.

FOR PLAN VIEW, SEE
"LOG OF TEST BORINGS 1 OF 6"

5.7' Rt Sta 18+65.0
℄ Rte 147

RC-13-005

4861.0'

3.8 ASPHALT CONCRETE (9.5") over AGGREGATE BASE (10").

CLAYEY GRAVEL with SAND (GC); very dark brown; moist; fine and coarse subangular to subrounded GRAVEL; some from fine to coarse subangular and subrounded SAND; some fines, trace hard COBBLES (BASALT), 3-5"; rootlets; (FILL).

- loose.
- medium dense.

IGNEOUS ROCK (BASALT); gray; slightly weathered and fresh; hard; moderately and slightly fractured; vesicles (1/8"-1/2").
- from Elev 4844.5' to Elev 4844.2', CLAYEY GRAVEL with SAND (GC); dense; reddish brown; fine and coarse, subrounded and subangular GRAVEL; little fine and medium SAND; some fines; rootlets.

IGNEOUS ROCK (BASALT); reddish brown; soft; decomposed; (CLAYEY GRAVEL with SAND and COBBLES (GC); dense and medium dense; brown; moist; fine and coarse subrounded and subangular GRAVEL; little fine and medium SAND; some fines; COBBLES Approx 20%, BASALT, 3-5", hard).

IGNEOUS ROCK (BASALT); reddish brown; decomposed; soft; (CLAYEY GRAVEL with SAND and COBBLES (GC); medium dense; moist; fine and coarse subangular and angular GRAVEL; little from fine to coarse subrounded and subangular SAND; some fines; Approx 20% BASALT COBBLES; 3-4"; hard, slightly weathered.

IGNEOUS ROCK (BASALT); gray; intensely weathered; moderately hard; very intensely fractured.
- slightly weathered and fresh; hard; slightly fractured (dip ~ 65°); UC= 4927 psi.

IGNEOUS ROCK (vesicular BASALT); very dark red and strong brown; intensely weathered and decomposed; moderately soft; vesicles (1/8"-1/4"); trace weathered white mineral in vesicles (CLAYEY GRAVEL with SAND and COBBLES (GC); very dense; moist; fine and coarse subangular and subrounded GRAVEL; some from fine to coarse subrounded to subangular SAND; little fines, Approx 30% BASALT COBBLES; slightly weathered; hard).

- gray; slightly weathered and fresh; hard; slightly fractured (dips 40°); UC= 6337 psi.
- very dark red and strong brown; intensely weathered and decomposed; moderately soft; vesicles (1/8"-1/4"); white mineral in vesicles; (CLAYEY GRAVEL with SAND (GC); moist; fine and coarse subangular and subrounded GRAVEL; little from fine to coarse subrounded to subangular SAND; little fines; Approx 30% BASALT COBBLES, Approx 4"; slightly weathered; hard).
- gray; slightly weathered; hard; moderately fractured (dips 30°-45°); very thin infill of CLAY in fractures; vesicles (1/16"-1.0").
- slightly weathered and fresh; hard and very hard; slightly fractured (dips 60°-70°); vesicles (1/4"-1 1/2"); UC= 11,855 psi.

IGNEOUS ROCK (BASALT); gray; fresh; hard; unfractured; trace vesicles (1/8").
- UC= 13,120 psi.
- UC= 11,156 psi.
- trace vesicles (1/8" - 1/2").
- moderately fractured (dips 60°).

IGNEOUS ROCK (vesicular BASALT); gray and strong brown; intensely weathered and slightly weathered; moderately soft and hard; moderately fractured and intensely fractured (dips 30°-50°); fractures with moderately thick infilling of lean CLAY (CL); vesicles (1/4"-1/2"); some filled with white mineral.

Elev	Recovery	Blows
4857.5		7 | 1.4
4855.0		11 | 1.4
4852.5	REC=64% RQD=50%	
4850.0		29 | 1.4
4847.5	REC=80% RQD=0%	
4845.0		19 | 1.4
4842.5	REC=6% RQD=0%	
4840.0		11 | 1.4
4837.5	REC=30% RQD=0%	
4835.0		24 | 1.4
4832.5	REC=20% RQD=0%	
4830.0		15 | 1.4
4827.5	REC=57% RQD=34%	
4825.0	REC=88% RQD=38%	
4822.5	REC=68% RQD=0%	
4820.0		50/0.2 | 1.4
4817.5	REC=96% RQD=50%	
4815.0	REC=96% RQD=64%	
4812.5	REC=90% RQD=46%	
4810.0	REC=100% RQD=66%	
4807.5	REC=100% RQD=100%	
4805.0	REC=100% RQD=100%	
4802.5	REC=100% RQD=100%	
4800.0	REC=100% RQD=90%	
4797.5	REC=90% RQD=66%	

8-26-13
Terminated at Elev 4761.0'
ERi = 71%

4860 4850 4840 4830 4820 4810 4800 4790 4780 4770 4760

18+00 20+00 22+00

PROFILE
Horiz: 1" = 20'
Vert: 1" = 10'

ENGINEERING SERVICES	MATERIALS AND GEOTECHNICAL SERVICES	STATE OF CALIFORNIA DEPARTMENT OF TRANSPORTATION	DIVISION OF ENGINEERING SERVICES STRUCTURE DESIGN DESIGN BRANCH 1	BRIDGE NO. 09-0079 POST MILE 8.98	HAMILTON BRANCH BRIDGE (REPLACE) LOG OF TEST BORINGS 6 OF 6
FUNCTIONAL SUPERVISOR NAME: R. Buell	DRAWN BY: F. Nguyen CHECKED BY: J. Kaump	FIELD INVESTIGATION BY: J. Martin			

OGS CIVIL LOG OF TEST BORINGS SHEET

ORIGINAL SCALE IN INCHES FOR REDUCED PLANS 0 1 2 3

UNIT: 3643
PROJECT NUMBER & PHASE: 02120000111 CONTRACT NO.: 02-4E6404

DISREGARD PRINTS BEARING EARLIER REVISION DATES → REVISION DATES 03-06-14 10/27/14 12/03/14 SHEET 22 OF 22

FILE => 09-0079-z-lots6of6.dgn

USERNAME => s115152 DATE PLOTTED => 24-NOV-2015 TIME PLOTTED => 09:36