Dist	COUNTY	ROUTE	POST MILES TOTAL PROJECT	SHEET No.	TOTAL SHEETS
02	Tri	3	30.8/31.1	1	49

STATE OF CALIFORNIA

DEPARTMENT OF TRANSPORTATION

PROJECT PLANS FOR CONSTRUCTION ON

STATE HIGHWAY

IN TRINITY COUNTY AT WEAVERVILLE FROM ROUTE 299 TO 0.2 MILE NORTH OF CENTER STREET

TO BE SUPPLEMENTED BY STANDARD PLANS DATED 2010

INDEX OF SHEETS

SHEET No.	DESCRIPTION
1	TITLE AND LOCATION MAP
2-3	TYPICAL CROSS SECTIONS
4-5	LAYOUTS
6-9	PROFILES
10-16	CONSTRUCTION DETAILS
17-18	DRAINAGE PLAN
19-20	DRAINAGE PROFILE
21	DRAINAGE DETAILS
22	DRAINAGE QUANTITIES
23-24	UTILITY PLAN
25	UTILITY DETAILS
26	CONSTRUCTION AREA SIGNS
27	DETOUR PLAN
28	PAVEMENT DELINEATION AND SIGN PLAN
29	PAVEMENT DELINEATION QUANTITIES
30	SIGN DETAILS
31-32	SIGN QUANTITIES
33-34	SUMMARY OF QUANTITIES
35	EROSION CONTROL PLAN
36-49	REVISED STANDARD PLANS

THE STANDARD PLANS LIST APPLICABLE TO THIS CONTRACT IS INCLUDED IN THE NOTICE TO BIDDERS AND SPECIAL PROVISIONS BOOK.

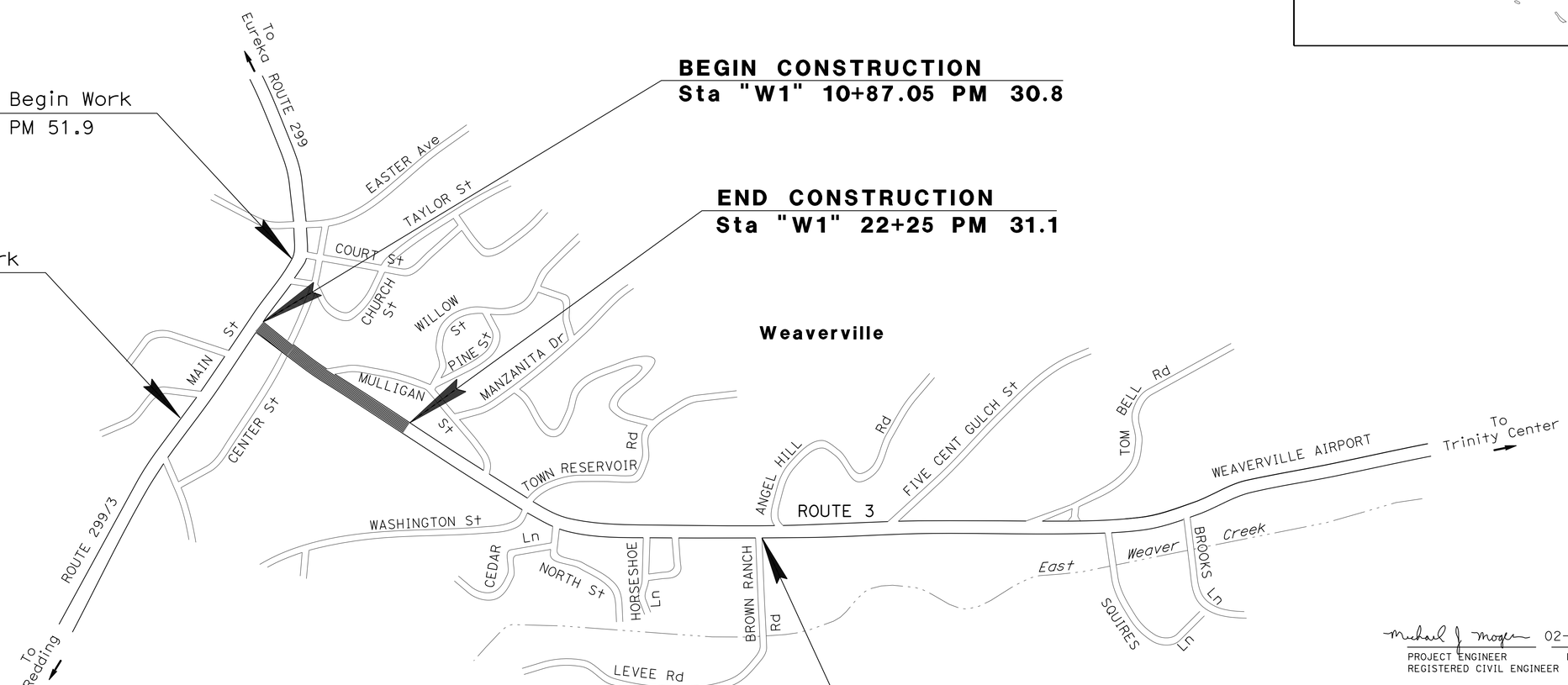

PROJECT MANAGER: STEVE ROGERS

DESIGN ENGINEER: JULIE CASEY

P:\proj\02\4E600_plans\pse\24e600ab001.dgn

Michael J Mogen 02-05-15

PROJECT ENGINEER REGISTERED CIVIL ENGINEER — DATE

REGISTERED PROFESSIONAL ENGINEER — MIKE MOGEN — No. C67018 — Exp. 09-30-16 — CIVIL — STATE OF CALIFORNIA

February 5, 2015

PLANS APPROVAL DATE

THE STATE OF CALIFORNIA OR ITS OFFICERS OR AGENTS SHALL NOT BE RESPONSIBLE FOR THE ACCURACY OR COMPLETENESS OF SCANNED COPIES OF THIS PLAN SHEET.

THE CONTRACTOR SHALL POSSESS THE CLASS (OR CLASSES) OF LICENSE AS SPECIFIED IN THE "NOTICE TO BIDDERS."

NO SCALE

CONTRACT No.	02-4E6004
PROJECT ID	0200020328

LAST REVISION 02-10-15 — DATE PLOTTED => 11-MAR-2015 — TIME PLOTTED => 14:09

Dist	COUNTY	ROUTE	POST MILES TOTAL PROJECT	SHEET No.	TOTAL SHEETS
02	Tri	3	30.8/31.1	2	49

REGISTERED CIVIL ENGINEER 02-05-15 DATE

02-05-15
PLANS APPROVAL DATE

REGISTERED PROFESSIONAL ENGINEER MIKE MOGEN No. 67018 Exp. 09-30-16 CIVIL STATE OF CALIFORNIA

THE STATE OF CALIFORNIA OR ITS OFFICERS OR AGENTS SHALL NOT BE RESPONSIBLE FOR THE ACCURACY OR COMPLETENESS OF SCANNED COPIES OF THIS PLAN SHEET.

NOTES:

1. DIMENSIONS OF THE PAVEMENT STRUCTURES (STRUCTURAL SECTIONS) ARE SUBJECT TO TOLERANCES SPECIFIED IN THE STANDARD SPECIFICATIONS.
2. FOR ACCURATE RIGHT OF WAY DATA, CONTACT RIGHT OF WAY ENGINEERING AT THE DISTRICT OFFICE.
3. SIDEWALK CONCRETE DEPTH IN DRIVEWAYS SHALL BE 0.5′ MINIMUM

ABBREVIATIONS:

BSW BACK OF SIDEWALK
(E) EXISTING

DESIGN DESIGNATION:

ADT (2011)	3500	D	59%
ADT (2023)	3510	T	5%
DHV	452	V	35 mph
ESAL	560800	TI_{10}	8.5

CLIMATE REGION:

LOW MOUNTAIN

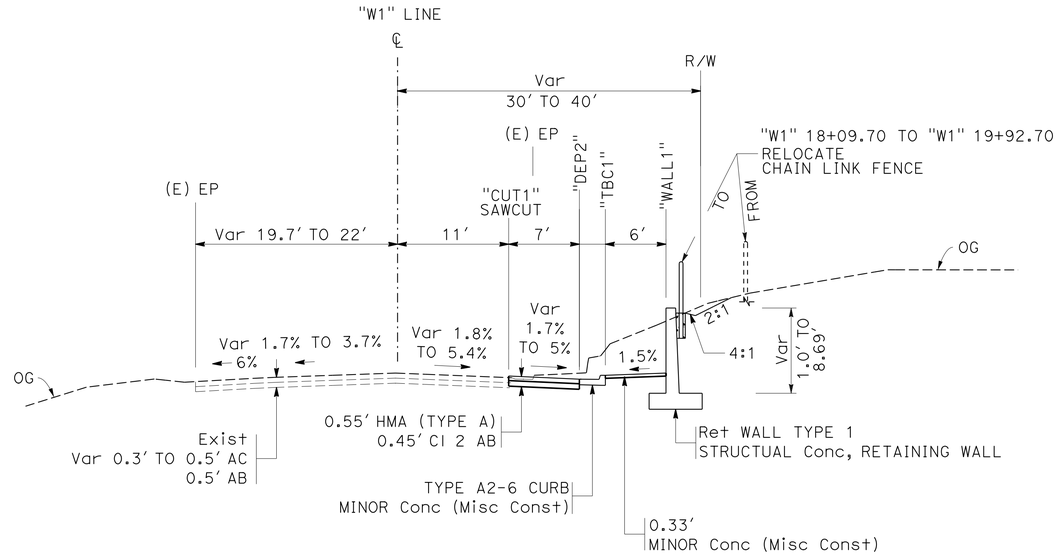

"W1" 17+95.00 TO "W1" 20+55.00

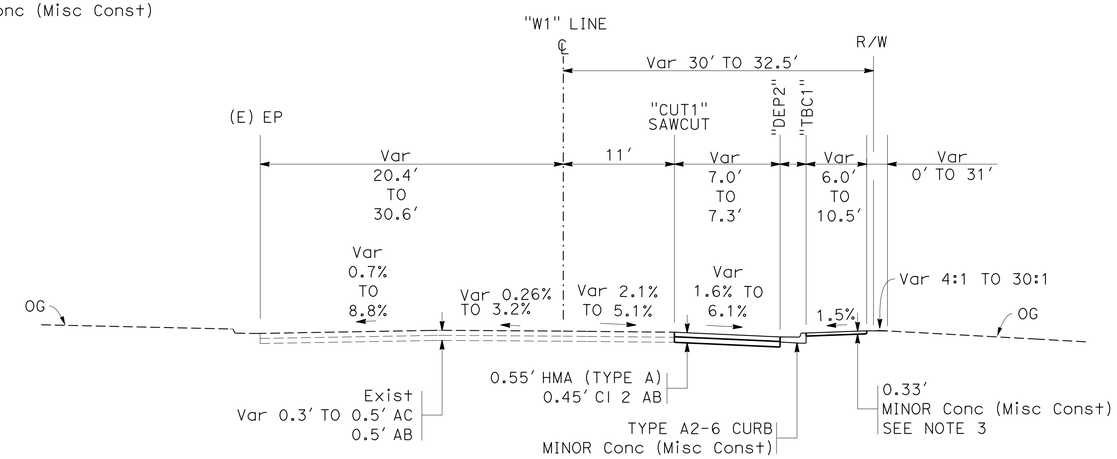

"W1" 12+92.71 TO "W1" 17+95.00

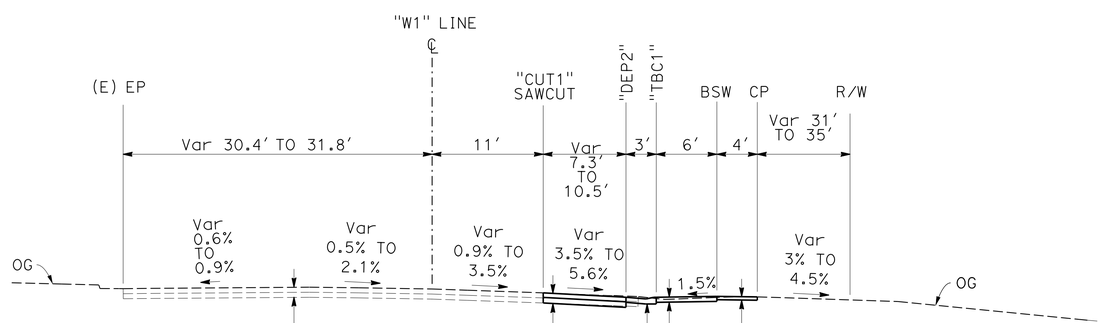

"W1" 11+76.00 TO "W1" 12+92.71

ROUTE 3

TYPICAL CROSS SECTIONS

NO SCALE

X-1

REVISED BY	DATE REVISED
JAVED IQBAL	MIKE MOGEN
CALCULATED-DESIGNED BY	CHECKED BY
FUNCTIONAL SUPERVISOR	JULIE CASEY

STATE OF CALIFORNIA - DEPARTMENT OF TRANSPORTATION
Caltrans
DESIGN

P:\proj1\02\4E600_plans\pse\24e600ca001.dgn

LAST REVISION 02-05-15 | DATE PLOTTED => 11-MAR-2015 | TIME PLOTTED => 14:09

Dist	COUNTY	ROUTE	POST MILES TOTAL PROJECT	SHEET No.	TOTAL SHEETS
02	Tri	3	30.8/31.1	3	49

REGISTERED CIVIL ENGINEER 02-05-15 DATE

02-05-15
PLANS APPROVAL DATE

REGISTERED PROFESSIONAL ENGINEER MIKE MOGEN No. 67018 Exp. 09-30-16 CIVIL STATE OF CALIFORNIA

THE STATE OF CALIFORNIA OR ITS OFFICERS OR AGENTS SHALL NOT BE RESPONSIBLE FOR THE ACCURACY OR COMPLETENESS OF SCANNED COPIES OF THIS PLAN SHEET.

NOTES:

1. DIMENSIONS OF THE PAVEMENT STRUCTURES (STRUCTURAL SECTIONS) ARE SUBJECT TO TOLERANCES SPECIFIED IN THE STANDARD SPECIFICATIONS.
2. FOR ACCURATE RIGHT OF WAY DATA, CONTACT RIGHT OF WAY ENGINEERING AT THE DISTRICT OFFICE.

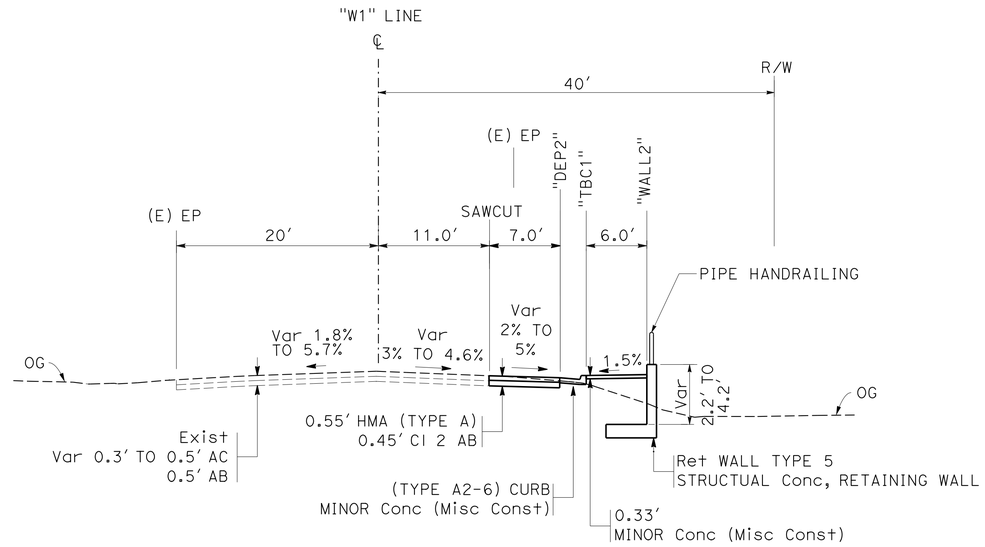

"W1" 21+51.00 TO "W1" 21+75.00

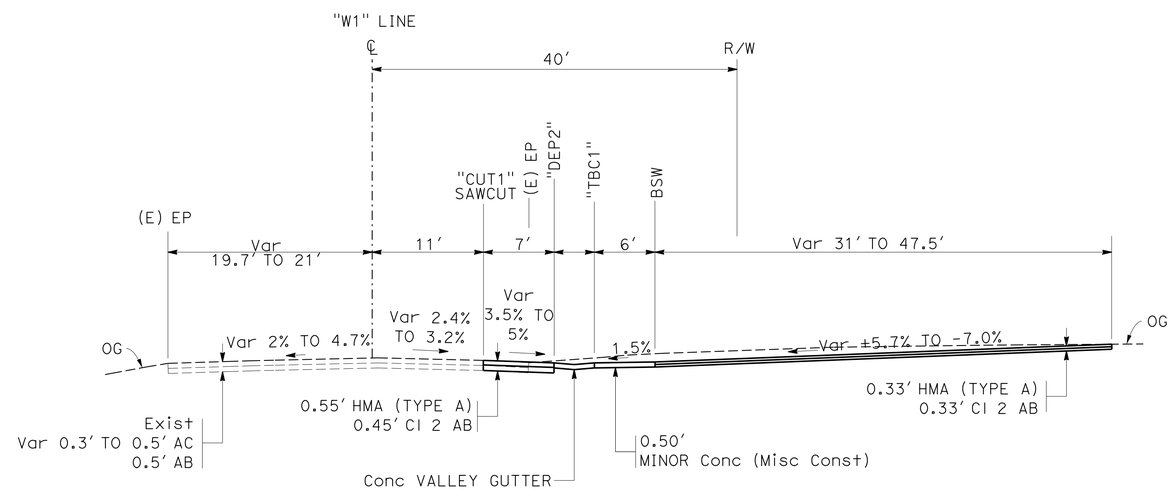

"W1" 20+65.00 TO "W1" 21+51.00

TYPICAL CROSS SECTIONS

NO SCALE

ROUTE 3

X-2

REVISED BY	DATE REVISED
JAVED IQBAL	MIKE MOGEN
CALCULATED-DESIGNED BY	CHECKED BY
FUNCTIONAL SUPERVISOR	JULIE CASEY

STATE OF CALIFORNIA - DEPARTMENT OF TRANSPORTATION
Caltrans® DESIGN

P:\proj1\02\4E600_plans\pse\24e600ca002.dgn

LAST REVISION 02-06-15 | DATE PLOTTED => 11-MAR-2015 TIME PLOTTED => 14:09

Dist	COUNTY	ROUTE	POST MILES TOTAL PROJECT	SHEET No.	TOTAL SHEETS
02	Tri	3	30.8/31.1	4	49

Michael J Mogen 02-05-15
REGISTERED CIVIL ENGINEER DATE

02-05-15
PLANS APPROVAL DATE

REGISTERED PROFESSIONAL ENGINEER MIKE MOGEN No. 67018 Exp. 09-30-16 CIVIL STATE OF CALIFORNIA

THE STATE OF CALIFORNIA OR ITS OFFICERS OR AGENTS SHALL NOT BE RESPONSIBLE FOR THE ACCURACY OR COMPLETENESS OF SCANNED COPIES OF THIS PLAN SHEET.

NOTE:

1. FOR ACCURATE RIGHT OF WAY, CONTACT RIGHT OF WAY ENGINEERING AT THE DISTRICT OFFICE.
2. ALL WORK TO BE A MINIMUM OF 6" FROM THE FACE OF THE EXISTING BUILDING

ABBREVIATIONS:

TBC TOP BACK OF CURB
DEP DESIGN EDGE OF PAVEMENT

LEGEND:

- TCE
- PIPE HANDRAILING
- PLACE HMA Misc AREA)
- RETAINING WALL
- GROOVE RAMP BORDER
- EXISTING UTILITY POLE
- ROCK BLANKET

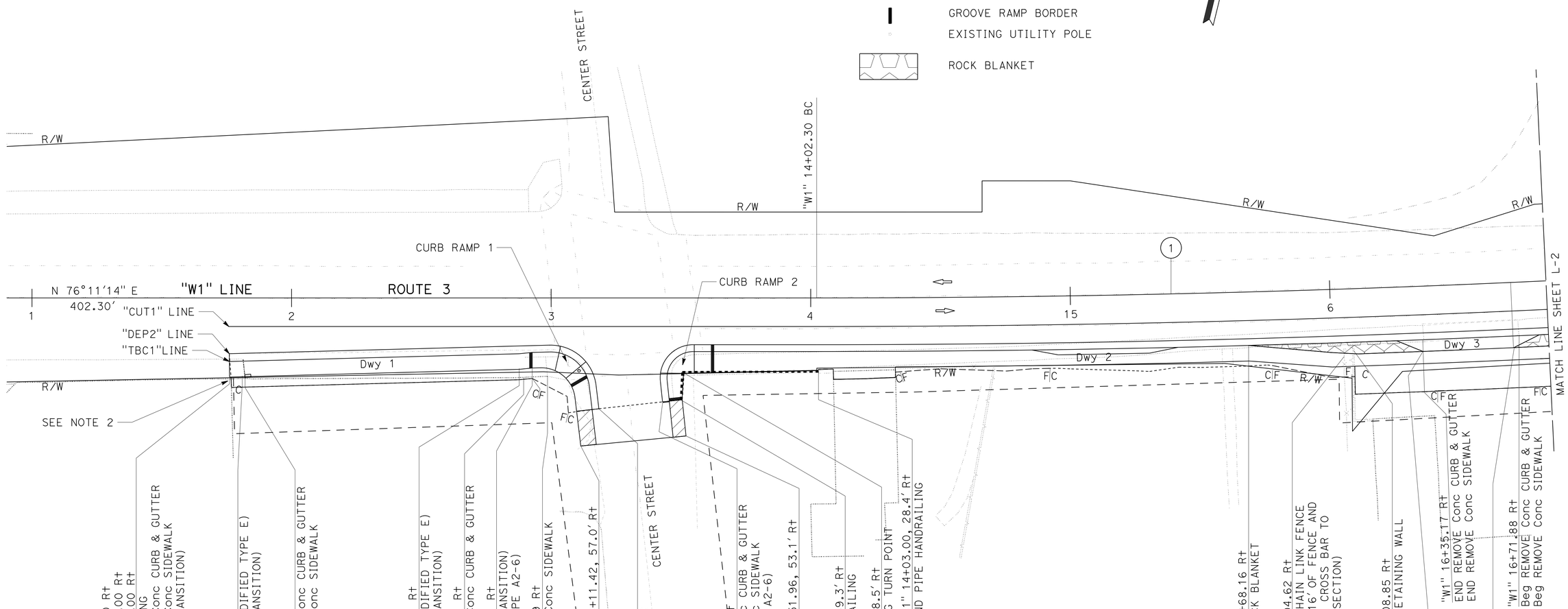

CURVE DATA

No. ⊕	R	Δ	T	L
1	6000'	03°05'59"	162.34'	324.61'

LAYOUT

SCALE: 1" = 20'

L-1

REVISED BY	DATE REVISED
JAVED IQBAL	MIKE MOGEN

CALCULATED-DESIGNED BY | CHECKED BY

FUNCTIONAL SUPERVISOR: JULIE CASEY

STATE OF CALIFORNIA - DEPARTMENT OF TRANSPORTATION
Caltrans® DESIGN

P:\proj1\02\4E600_plans\pse\24e600ea001.dgn

LAST REVISION 02-05-15 | DATE PLOTTED => 11-MAR-2015 | TIME PLOTTED => 14:09

Dist	COUNTY	ROUTE	POST MILES TOTAL PROJECT	SHEET No.	TOTAL SHEETS
02	Tri	3	30.8/31.1	5	49

Michael J. Mogen 02-05-15
REGISTERED CIVIL ENGINEER DATE

02-05-15
PLANS APPROVAL DATE

REGISTERED PROFESSIONAL ENGINEER
MIKE MOGEN
No. 67018
Exp. 09-30-16
CIVIL
STATE OF CALIFORNIA

THE STATE OF CALIFORNIA OR ITS OFFICERS OR AGENTS SHALL NOT BE RESPONSIBLE FOR THE ACCURACY OR COMPLETENESS OF SCANNED COPIES OF THIS PLAN SHEET.

NOTES:

1. FOR ACCURATE RIGHT OF WAY DATA, CONTACT RIGHT OF WAY ENGINEERING AT THE DISTRICT OFFICE.
2. RETAINING WALL TYPE "5" AND RETURN WALL TYPE "D" WILL RECEIVE COLORED CONCRETE FEDERAL STANDARD 595C-10371

CURVE DATA

No. ⊕	R	Δ	T	L
1	6000′	03°05′59″	162.34′	324.61′

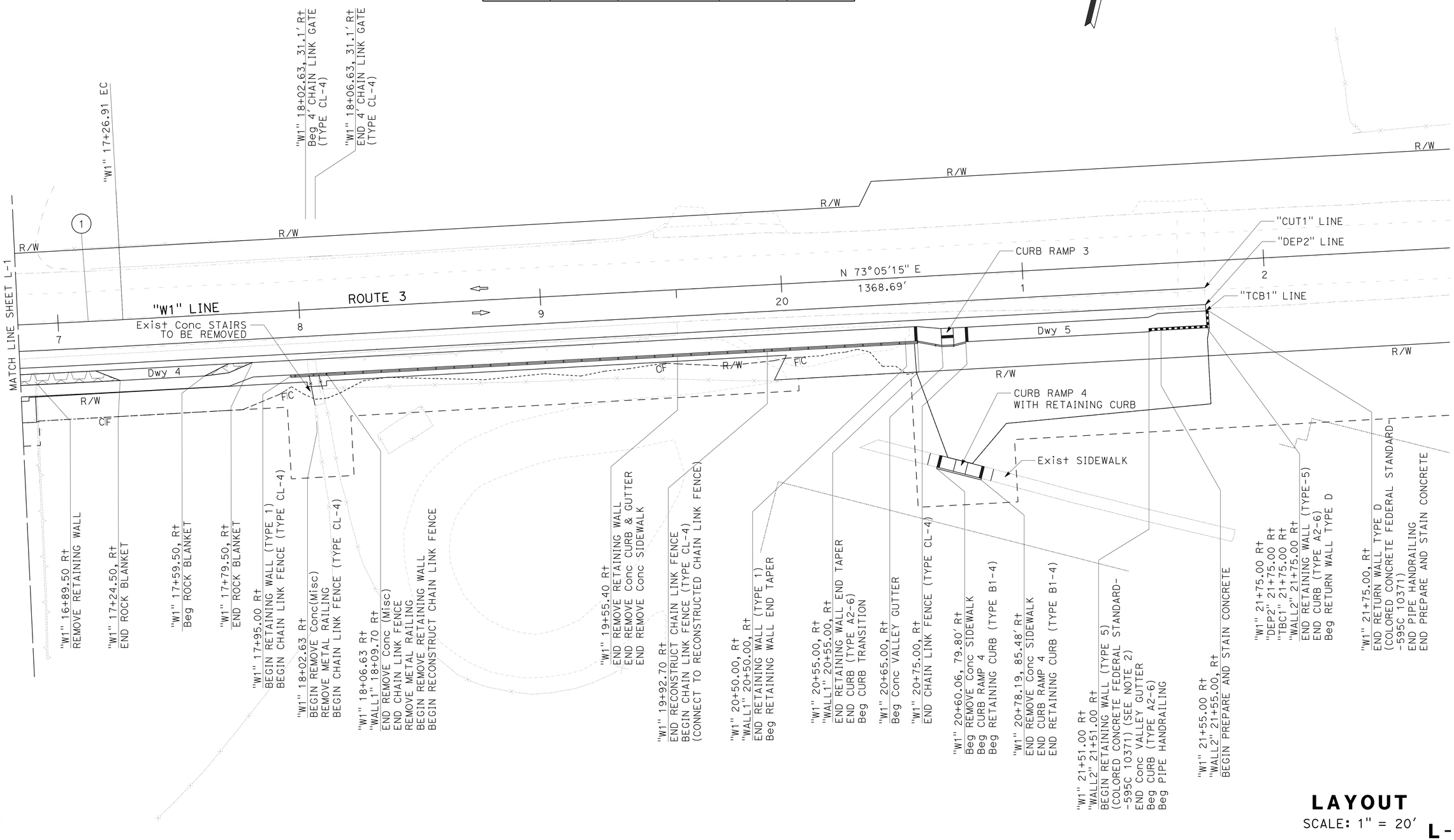

LAYOUT

SCALE: 1" = 20′

L-2

REVISED BY	DATE REVISED
JAVED IQBAL	MIKE MOGEN
CALCULATED-DESIGNED BY	CHECKED BY
FUNCTIONAL SUPERVISOR	JULIE CASEY

STATE OF CALIFORNIA - DEPARTMENT OF TRANSPORTATION
Caltrans® **DESIGN**

P:\proj1\02\4E600_plans\pse\24e600ea002.dgn

LAST REVISION 02-05-15 | DATE PLOTTED => 11-MAR-2015 | TIME PLOTTED => 14:09

Dist	COUNTY	ROUTE	POST MILES TOTAL PROJECT	SHEET No.	TOTAL SHEETS
02	Tri	3	30.8/31.1	6	49

Michael J. Mogen 02-05-15
REGISTERED CIVIL ENGINEER DATE

02-05-15
PLANS APPROVAL DATE

REGISTERED PROFESSIONAL ENGINEER MIKE MOGEN No. 67018 Exp. 09-30-16 CIVIL STATE OF CALIFORNIA

THE STATE OF CALIFORNIA OR ITS OFFICERS OR AGENTS SHALL NOT BE RESPONSIBLE FOR THE ACCURACY OR COMPLETENESS OF SCANNED COPIES OF THIS PLAN SHEET.

ABBREVIATIONS:

VPI VERTICAL POINT OF INTERSECTION
VPOT VERTICAL POINT OF TANGENCY
TBC TOP BACK OF CURB
DEP DESIGN EDGE OF PAVEMENT

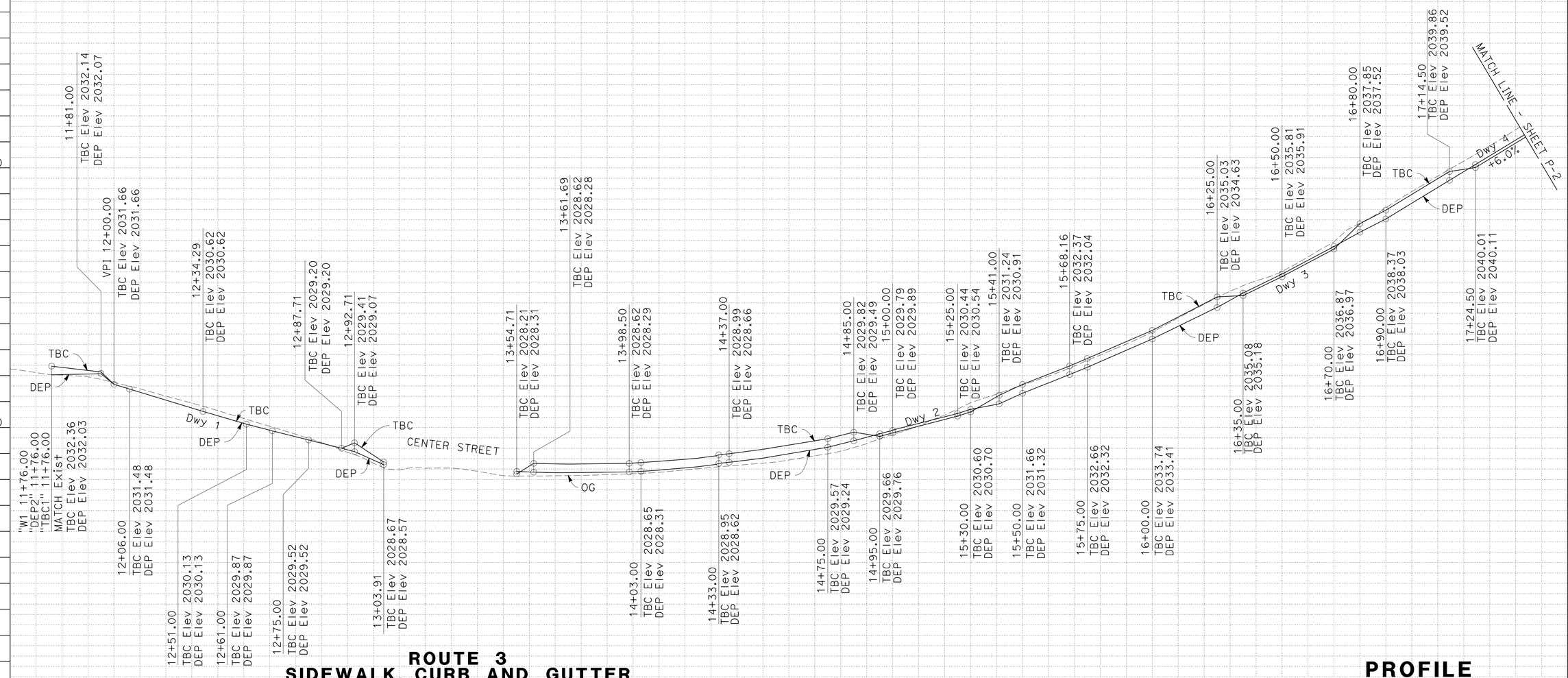

ROUTE 3
SIDEWALK, CURB AND GUTTER

"DEP2" LINE
"TBC1" LINE

PROFILE

SCALE: 1" = 20' Horiz
1" = 2' Vert

P-1

REVISED BY | DATE REVISED
JAVED IQBAL | MIKE MOGEN
CALCULATED-DESIGNED BY | CHECKED BY
FUNCTIONAL SUPERVISOR: JULIE CASEY

STATE OF CALIFORNIA - DEPARTMENT OF TRANSPORTATION
Caltrans
DESIGN

P:\proj\02\4E600_plans\pse\24e600fb001.dgn

LAST REVISION 02-05-15 | DATE PLOTTED => 11-MAR-2015 | TIME PLOTTED => 14:09

BORDER LAST REVISED 7/2/2010 | USERNAME => s115152 | DGN FILE => 24e600fb001.dgn | RELATIVE BORDER SCALE IS IN INCHES 0 1 2 3 | UNIT 0318 | PROJECT NUMBER & PHASE 02-0002-0328-1 | EA: 02-4E600

Dist	COUNTY	ROUTE	POST MILES TOTAL PROJECT	SHEET No.	TOTAL SHEETS
02	Tri	3	30.8/31.1	7	49

REGISTERED CIVIL ENGINEER 02-05-15 DATE

02-05-15
PLANS APPROVAL DATE

REGISTERED PROFESSIONAL ENGINEER MIKE MOGEN No. 67018 Exp. 09-30-16 CIVIL STATE OF CALIFORNIA

THE STATE OF CALIFORNIA OR ITS OFFICERS OR AGENTS SHALL NOT BE RESPONSIBLE FOR THE ACCURACY OR COMPLETENESS OF SCANNED COPIES OF THIS PLAN SHEET.

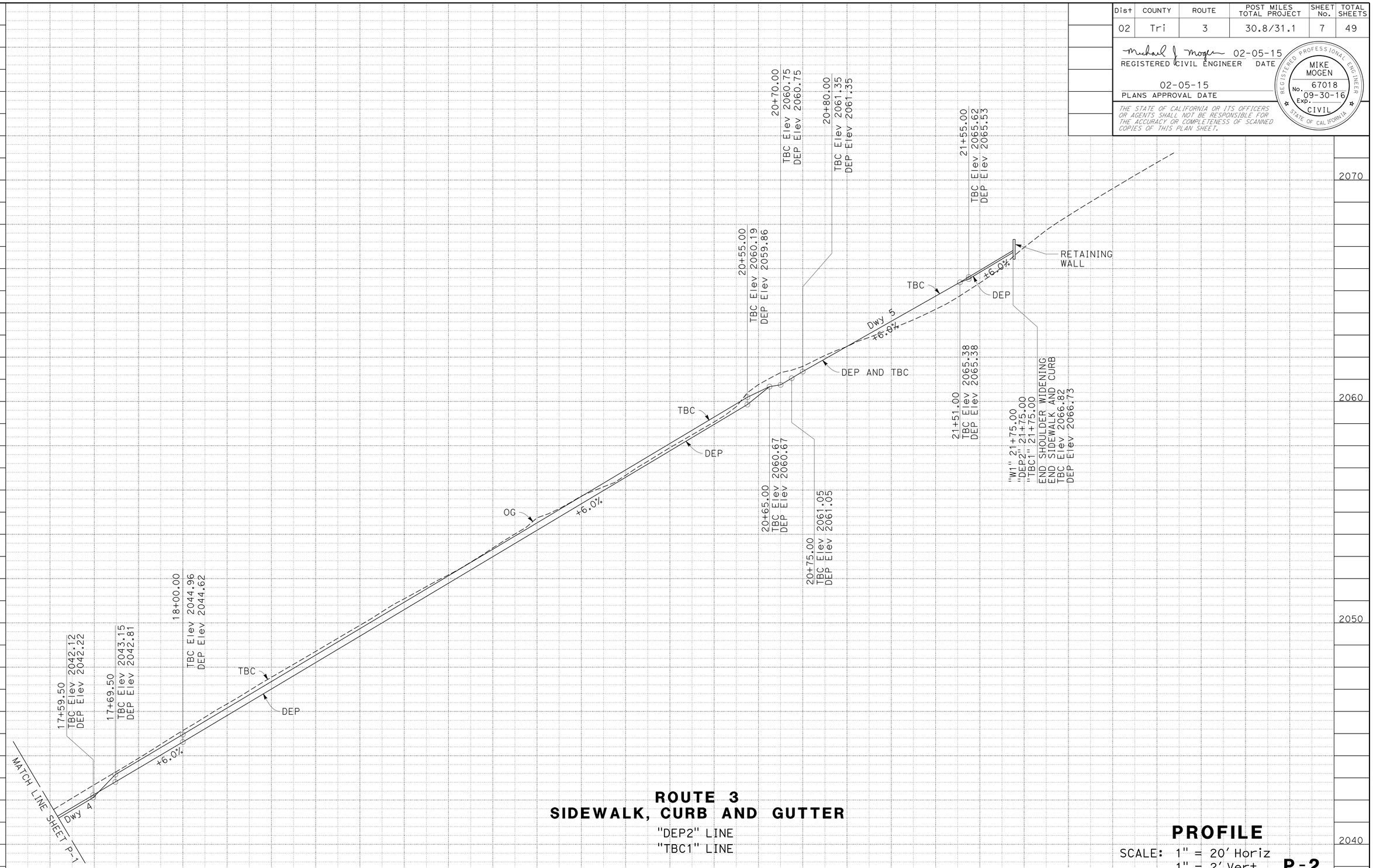

ROUTE 3
SIDEWALK, CURB AND GUTTER
"DEP2" LINE
"TBC1" LINE

PROFILE
SCALE: 1" = 20' Horiz
1" = 2' Vert

P-2

STATION		18	19	20	21	22	23	TOTAL
CY	Exc	51	298		86	9		444
	Emb	9	0		14	4		27

REVISED BY | DATE REVISED
JAVED IQBAL | MIKE MOGEN
CALCULATED-DESIGNED BY | CHECKED BY
FUNCTIONAL SUPERVISOR: JULIE CASEY

STATE OF CALIFORNIA - DEPARTMENT OF TRANSPORTATION
Caltrans DESIGN

P:\proj1\02\4E600_plans\pse\24e600fb002.dgn

LAST REVISION 02-05-15 | DATE PLOTTED => 11-MAR-2015 | TIME PLOTTED => 14:09

Dist	COUNTY	ROUTE	POST MILES TOTAL PROJECT	SHEET No.	TOTAL SHEETS
02	Tri	3	30.8/31.1	8	49

REGISTERED CIVIL ENGINEER 02-05-15 DATE

02-05-15
PLANS APPROVAL DATE

REGISTERED PROFESSIONAL ENGINEER MIKE MOGEN No. 67018 Exp. 09-30-16 CIVIL STATE OF CALIFORNIA

THE STATE OF CALIFORNIA OR ITS OFFICERS OR AGENTS SHALL NOT BE RESPONSIBLE FOR THE ACCURACY OR COMPLETENESS OF SCANNED COPIES OF THIS PLAN SHEET.

TYPE-1 RETAINING WALL

STATION	"H"
"WALL1" 17+95.00	1.17′
"WALL1" 18+15.00	6.35′
"WALL1" 18+35.00	7.82′
"WALL1" 18+55.00	8.09′
"WALL1" 18+75.00	8.35′
"WALL1" 18+95.00	8.62′
"WALL1" 19+15.00	8.69′
"WALL1" 19+35.00	8.50′
"WALL1" 19+55.00	8.07′
"WALL1" 19+75.00	7.53′
"WALL1" 19+95.00	7.00′
"WALL1" 20+15.00	6.47′
"WALL1" 20+35.00	4.87′
"WALL1" 20+55.00	2.96′

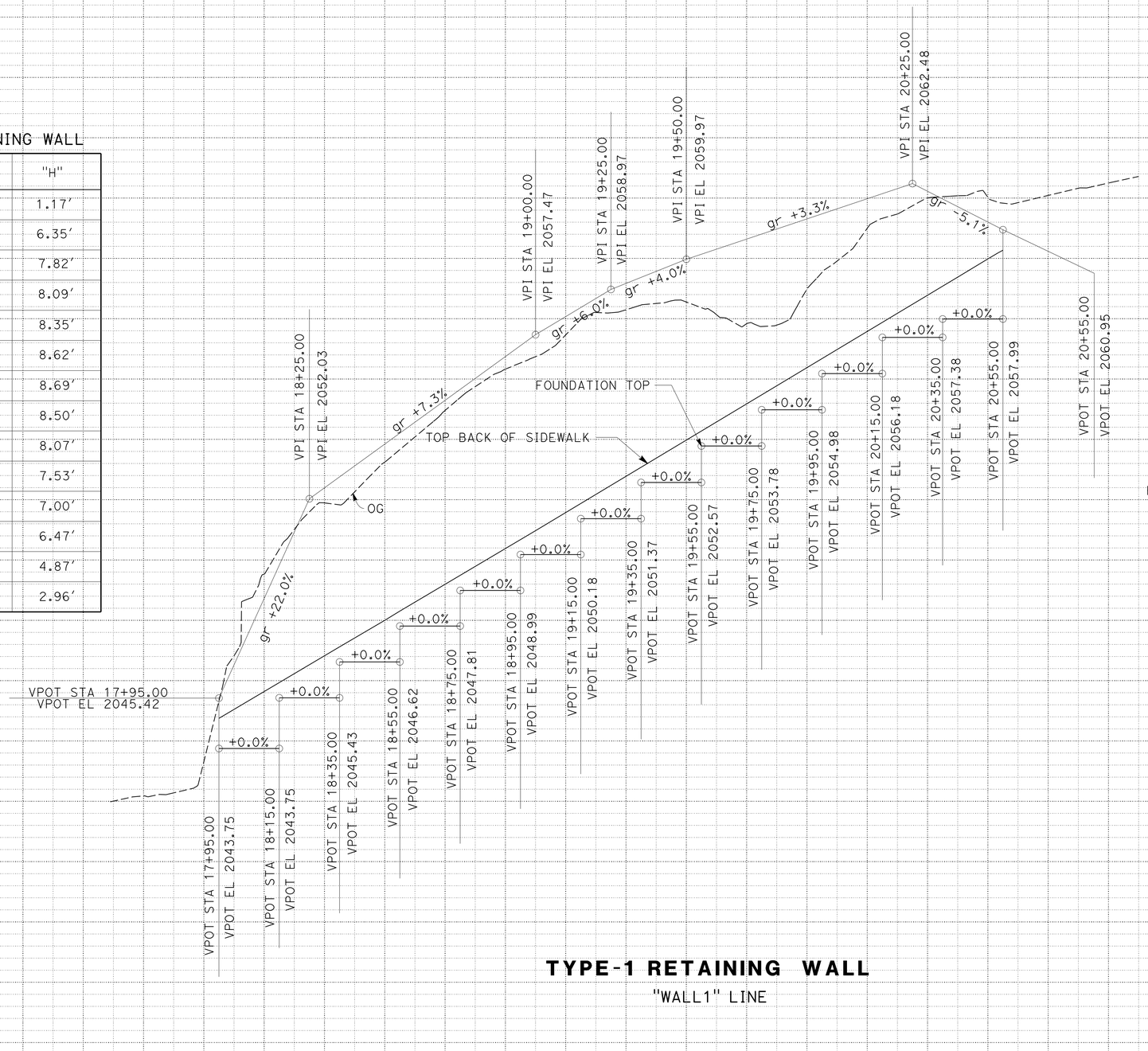

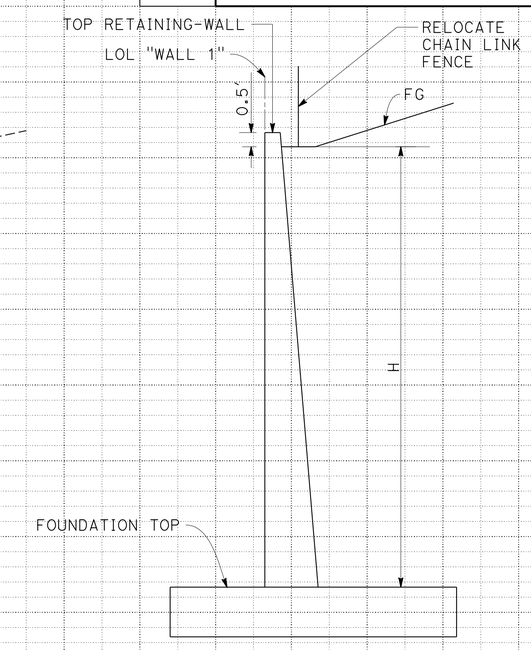

TYPE-1 RETAINING WALL
NO SCALE

TYPE-1 RETAINING WALL

"WALL1" LINE

PROFILE

SCALE: 1" = 20′ Horiz
1" = 2′ Vert

P-3

STATION		17+50	18+50	19+50	20+50	TOTAL
CY	Exc		386			423
	Emb		250			270

REVISED BY	DATE REVISED
JAVED IQBAL	MIKE MOGEN

CALCULATED-DESIGNED BY / CHECKED BY

FUNCTIONAL SUPERVISOR: JULIE CASEY

STATE OF CALIFORNIA - DEPARTMENT OF TRANSPORTATION
Caltrans DESIGN

P:\proj1\02\4E600_plans\pse\24e600fb003.dgn

LAST REVISION 02-05-15 | DATE PLOTTED => 11-MAR-2015 | TIME PLOTTED => 14:09

Dist	COUNTY	ROUTE	POST MILES TOTAL PROJECT	SHEET No.	TOTAL SHEETS
02	Tri	3	30.8/31.1	9	49

Michael J. Mogen 02-05-15
REGISTERED CIVIL ENGINEER DATE

02-05-15
PLANS APPROVAL DATE

REGISTERED PROFESSIONAL ENGINEER
MIKE MOGEN
No. 67018
Exp. 09-30-16
CIVIL
STATE OF CALIFORNIA

THE STATE OF CALIFORNIA OR ITS OFFICERS OR AGENTS SHALL NOT BE RESPONSIBLE FOR THE ACCURACY OR COMPLETENESS OF SCANNED COPIES OF THIS PLAN SHEET.

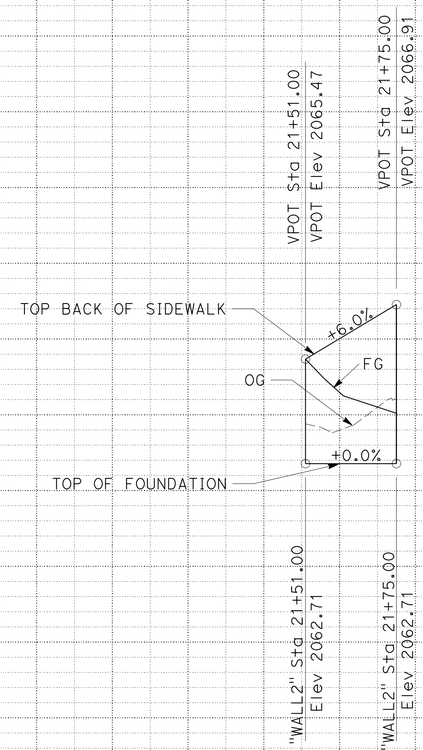

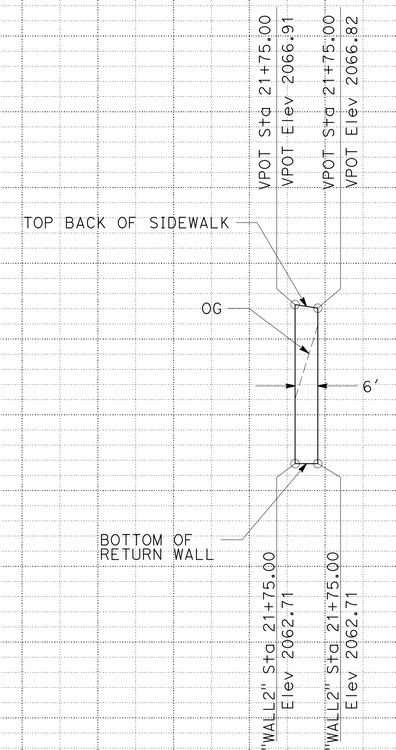

RETURN WALL TYPE D

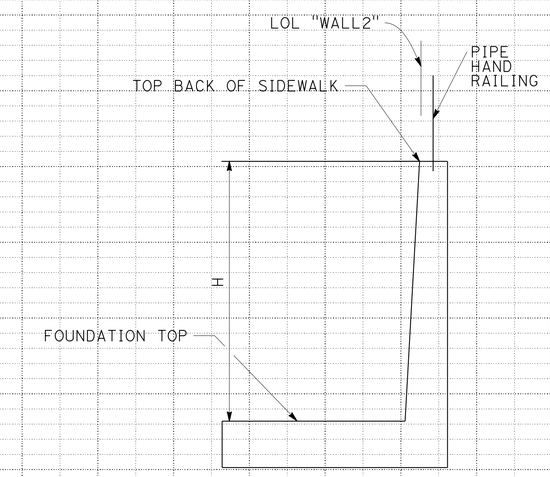

TYPE-5 RETAINING WALL
NO SCALE

TYPE-5 RETAINING WALL

STATION	"H"
"WALL2" 21+51.00	2.76
"WALL2" 21+55.00	3.00'
"WALL2" 21+60.00	3.30'
"WALL2" 21+75.00	4.20'

RETAINING WALL
"WALL2" LINE

PROFILE
SCALE: 1" = 20' Horiz
1" = 2' Vert

P-4

STATION		21+51	21+75	TOTAL
CY	Exc	16		44
	Emb	16		37

REVISED BY | DATE REVISED
JAVED IQBAL | MIKE MOGEN
CALCULATED-DESIGNED BY | CHECKED BY
FUNCTIONAL SUPERVISOR: JULIE CASEY
STATE OF CALIFORNIA - DEPARTMENT OF TRANSPORTATION
Caltrans DESIGN

P:\proj1\02\4E600_plans\pse\24e600fb004.dgn

LAST REVISION 02-05-15 | DATE PLOTTED => 11-MAR-2015 | TIME PLOTTED => 14:09

Dist	COUNTY	ROUTE	POST MILES TOTAL PROJECT	SHEET No.	TOTAL SHEETS
02	Tri	3	30.8/31.1	10	49

REGISTERED CIVIL ENGINEER 02-05-15 DATE

02-05-15
PLANS APPROVAL DATE

REGISTERED PROFESSIONAL ENGINEER MIKE MOGEN No. 67018 Exp. 09-30-16 CIVIL STATE OF CALIFORNIA

THE STATE OF CALIFORNIA OR ITS OFFICERS OR AGENTS SHALL NOT BE RESPONSIBLE FOR THE ACCURACY OR COMPLETENESS OF SCANNED COPIES OF THIS PLAN SHEET.

LEGEND

- DETECTABLE WARNING SURFACE
- DIRECTION OF FLOW
- PIPE HANDRAILING
- EXISTING CROSS WALK
- PLACE HMA Misc AREA DEPTH=0.33'
- ROCK BLANKET

ABBREVIATIONS

DEP	DESIGN EDGE OF PAVEMENT
LG	LIP OF GUTTER
TBC	TOP BACK OF CURB
BSW	BACK OF SIDEWALK

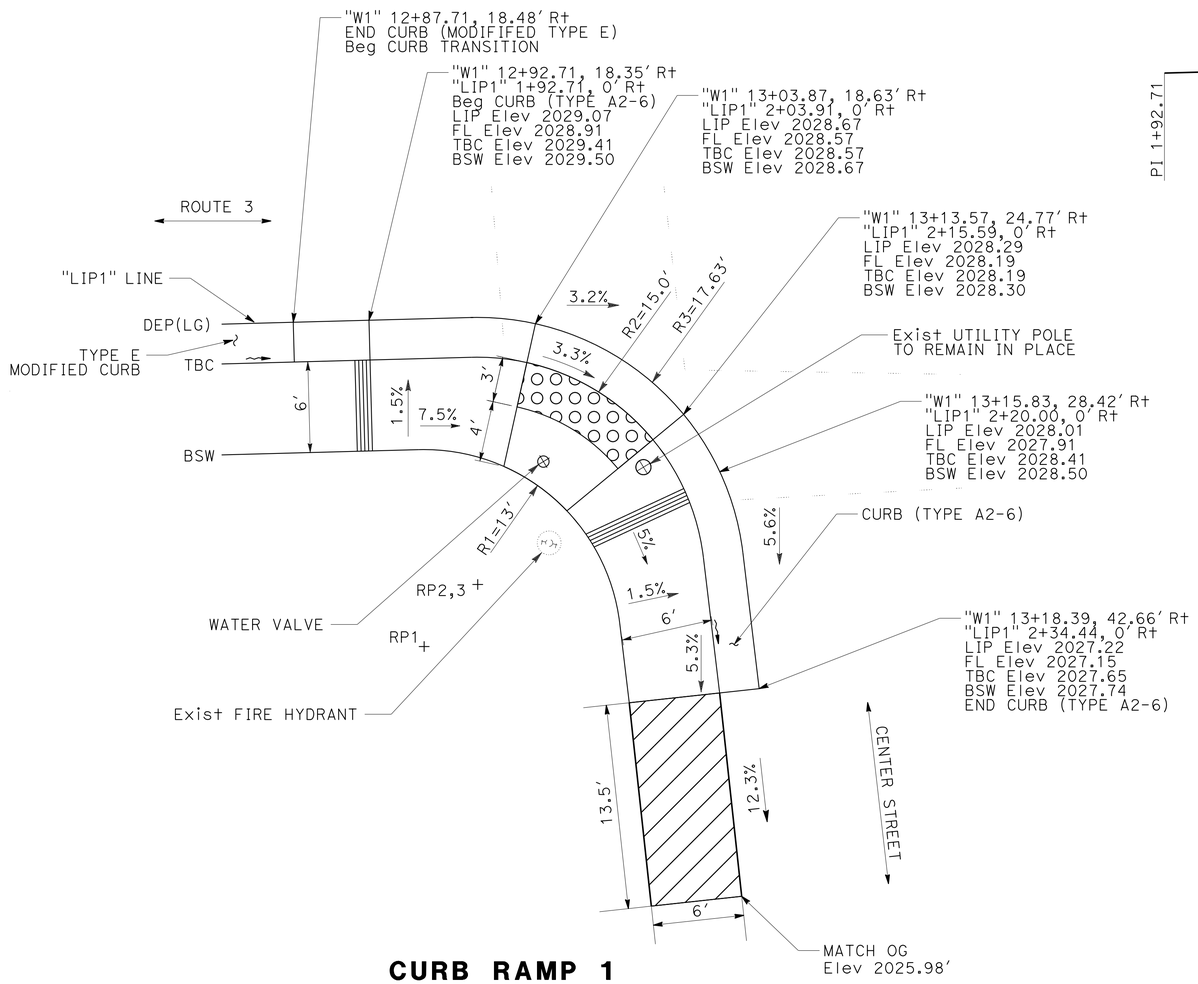

CURB RAMP 1

MODIFIED "CASE C"

RP	STATION
RP1	"W1" 12+96.28, 39.90' Rt
RP2,3	"W1" 12+99.82, 35.79' Rt

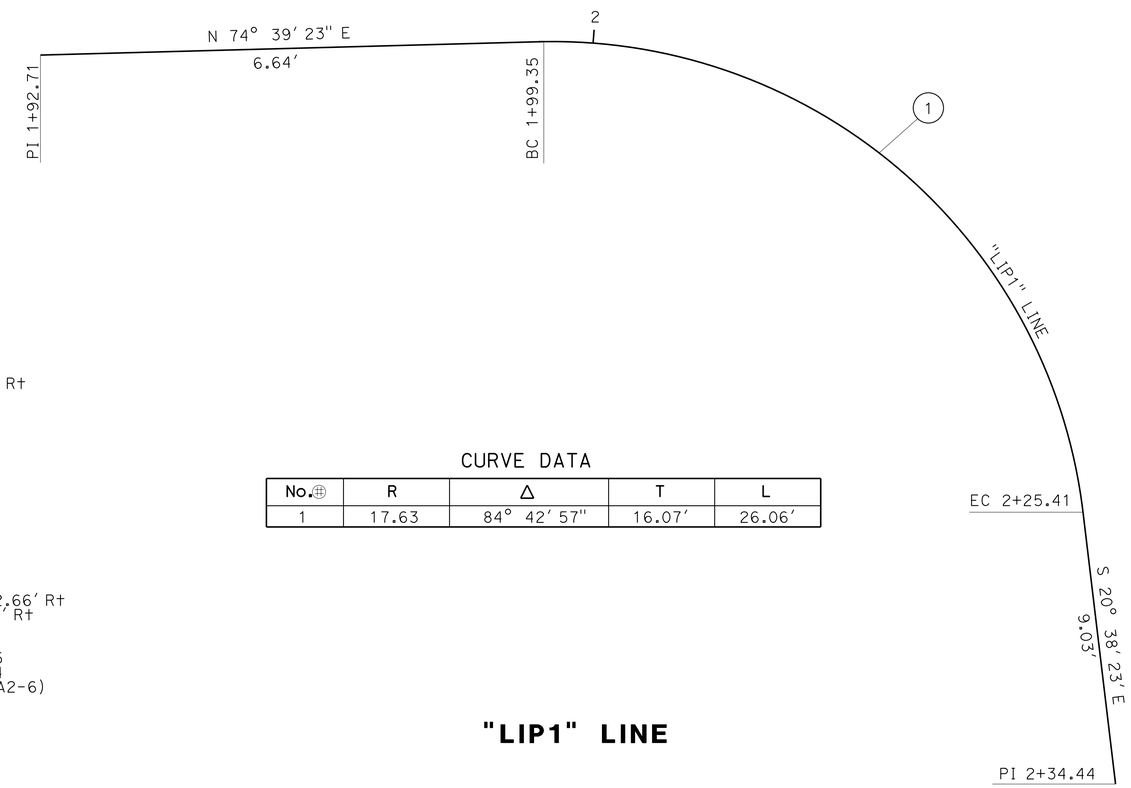

CURVE DATA

No.	R	Δ	T	L
1	17.63	84° 42' 57"	16.07'	26.06'

"LIP1" LINE

CONSTRUCTION DETAILS

NO SCALE

C-1

REVISED BY	DATE REVISED

CALCULATED-DESIGNED BY	CHECKED BY
JAVED IQBAL	MIKE MOGEN

FUNCTIONAL SUPERVISOR: JULIE CASEY

STATE OF CALIFORNIA - DEPARTMENT OF TRANSPORTATION
Caltrans
DESIGN

P:\proj1\02\4E600_plans\pse\24e600ga001.dgn

LAST REVISION 02-05-15 | DATE PLOTTED => 11-MAR-2015 | TIME PLOTTED => 14:09

Dist	COUNTY	ROUTE	POST MILES TOTAL PROJECT	SHEET No.	TOTAL SHEETS
02	Tri	3	30.8/31.1	11	49

Michael J Mogen 02-05-15
REGISTERED CIVIL ENGINEER DATE

02-05-15
PLANS APPROVAL DATE

REGISTERED PROFESSIONAL ENGINEER
MIKE MOGEN
No. 67018
Exp. 09-30-16
CIVIL
STATE OF CALIFORNIA

THE STATE OF CALIFORNIA OR ITS OFFICERS OR AGENTS SHALL NOT BE RESPONSIBLE FOR THE ACCURACY OR COMPLETENESS OF SCANNED COPIES OF THIS PLAN SHEET.

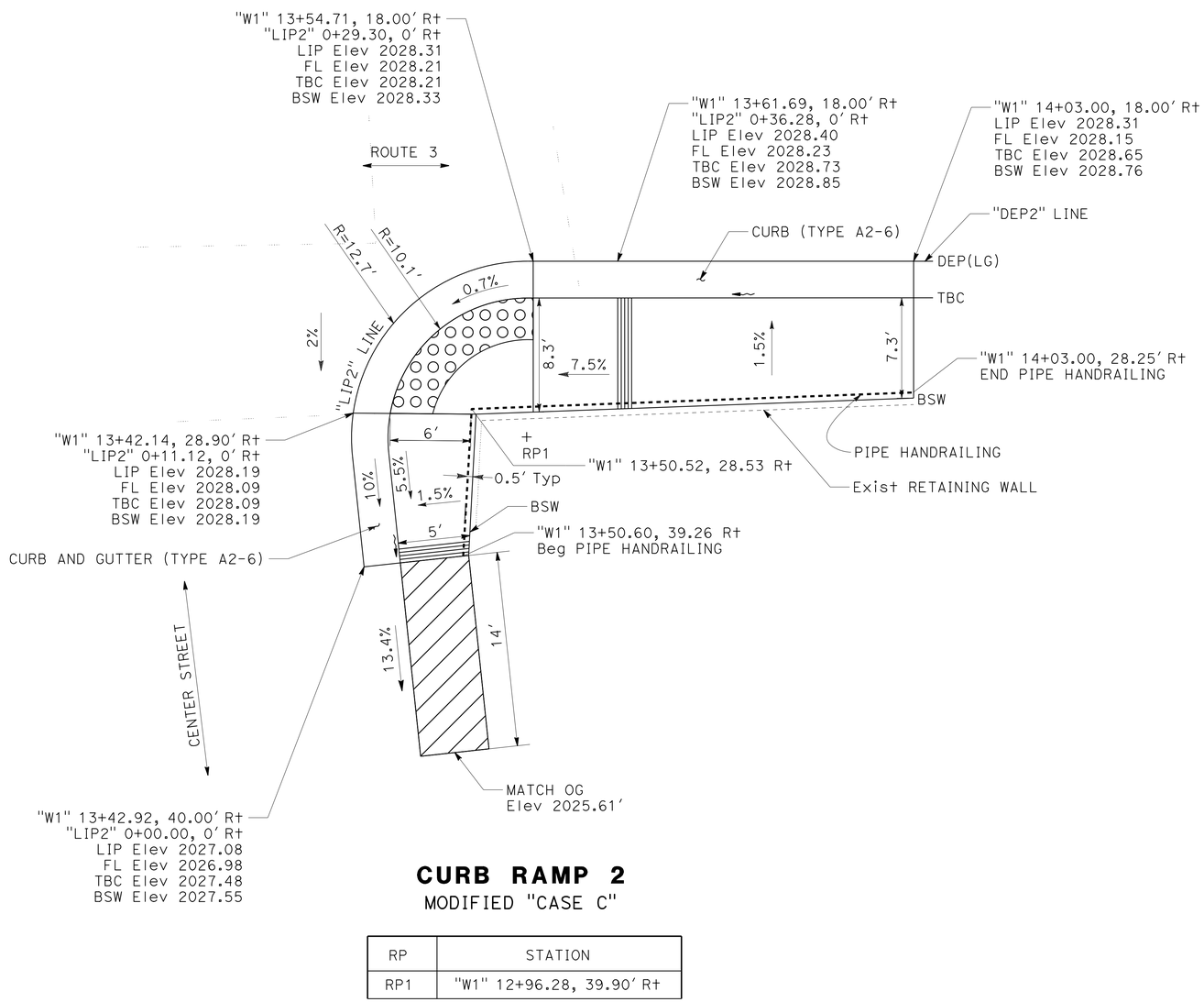

CURB RAMP 2

MODIFIED "CASE C"

RP	STATION
RP1	"W1" 12+96.28, 39.90' Rt

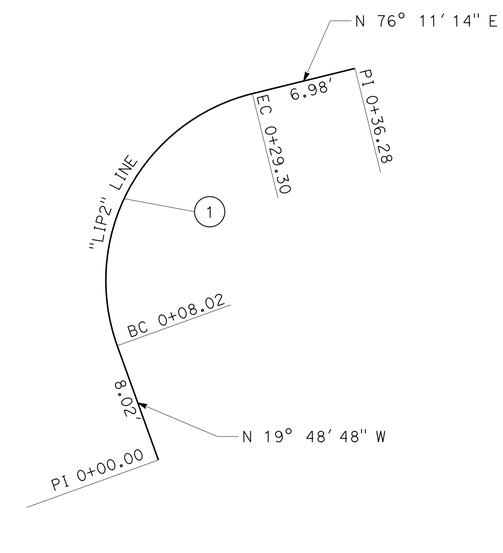

CURVE DATA

No.⊕	R	Δ	T	L
1	12.70'	96° 00' 02"	14.10'	21.28'

"LIP2" LINE

CONSTRUCTION DETAILS

NO SCALE

C-2

REVISED BY | DATE REVISED
JAVED IQBAL | MIKE MOGEN
CALCULATED-DESIGNED BY | CHECKED BY
FUNCTIONAL SUPERVISOR: JULIE CASEY
STATE OF CALIFORNIA - DEPARTMENT OF TRANSPORTATION
Caltrans DESIGN
P:\proj1\02\4E600_plans\pse\24e600ga002.dgn

LAST REVISION 02-05-15 | DATE PLOTTED => 11-MAR-2015 | TIME PLOTTED => 14:09

Dist	COUNTY	ROUTE	POST MILES TOTAL PROJECT	SHEET No.	TOTAL SHEETS
02	Tri	3	30.8/31.1	12	49

Michael J Mogen 02-05-15
REGISTERED CIVIL ENGINEER DATE

02-05-15
PLANS APPROVAL DATE

REGISTERED PROFESSIONAL ENGINEER MIKE MOGEN No. 67018 Exp. 09-30-16 CIVIL STATE OF CALIFORNIA

THE STATE OF CALIFORNIA OR ITS OFFICERS OR AGENTS SHALL NOT BE RESPONSIBLE FOR THE ACCURACY OR COMPLETENESS OF SCANNED COPIES OF THIS PLAN SHEET.

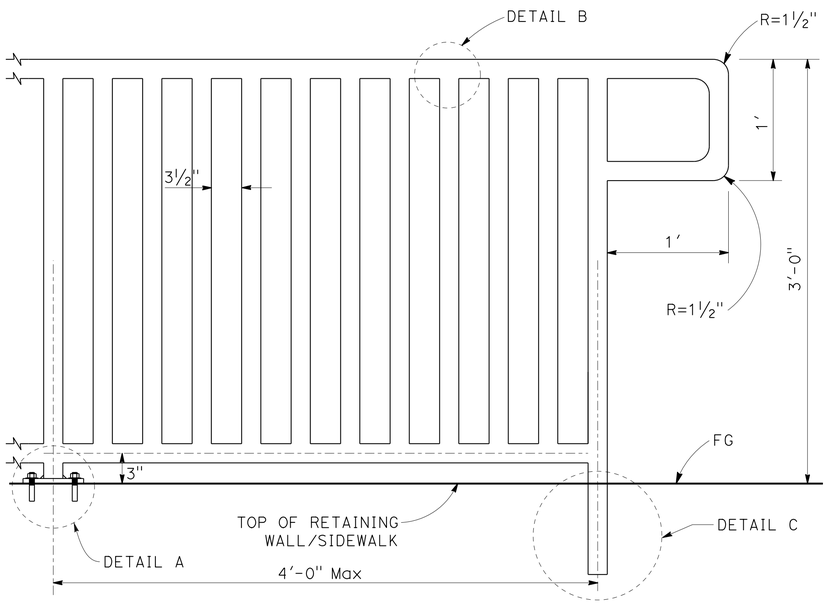

PIPE HANDRAILING

"W1" 13+50.00, 39.26' Rt TO 13+50.52, 28.53' Rt
"W1" 13+50.52, 28.53' Rt TO 14+03.00, 28.25' Rt
"W1" 21+51.00, 27.13' Rt TO 21+75.00, 27.13' Rt
"W1" 21+75.00, 27.13' Rt TO 21+75.00, 20.63' Rt

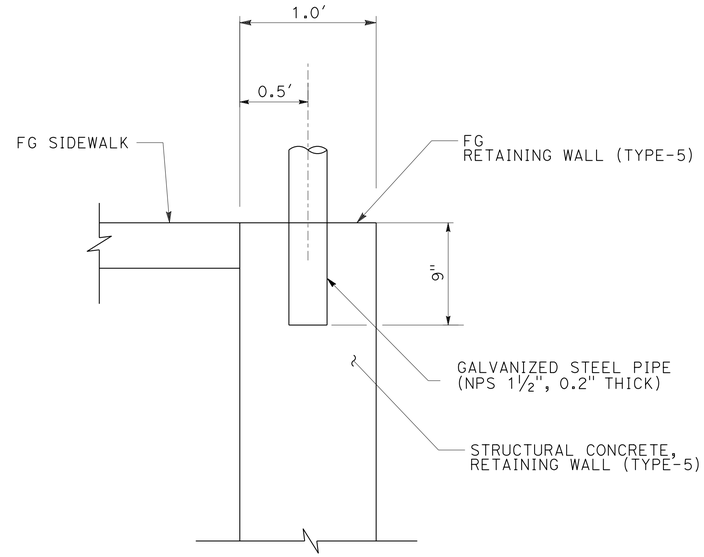

DETAIL C

(TYPICAL RETAINING WALL CONNECTIONS)

"W1" 21+55.00 TO 21+75.00

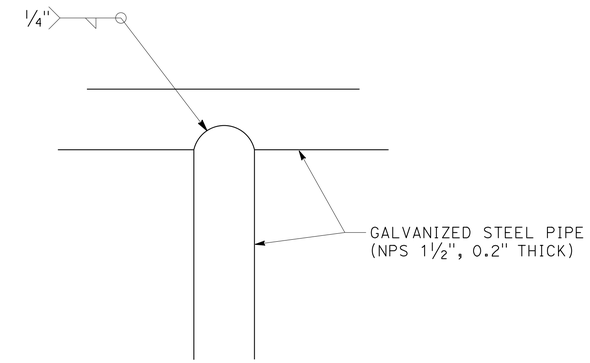

DETAIL B

TYPICAL

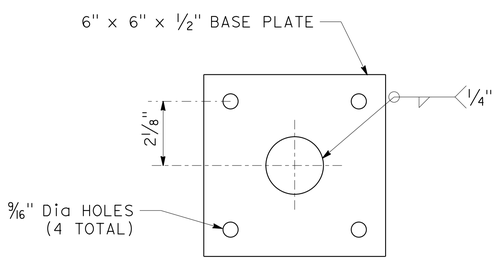

PLAN

6" x 6" x ½" BASE PLATE

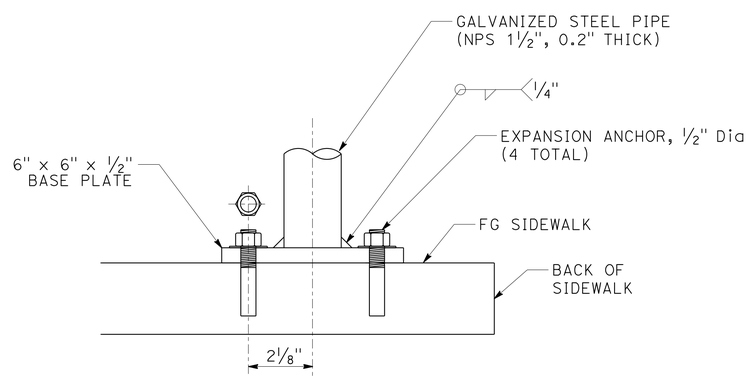

ELEVATION

DETAIL A

(TYPICAL Exist & NEW SIDEWALK CONNECTIONS)

"W1" 13+50.00 TO 14+03.00

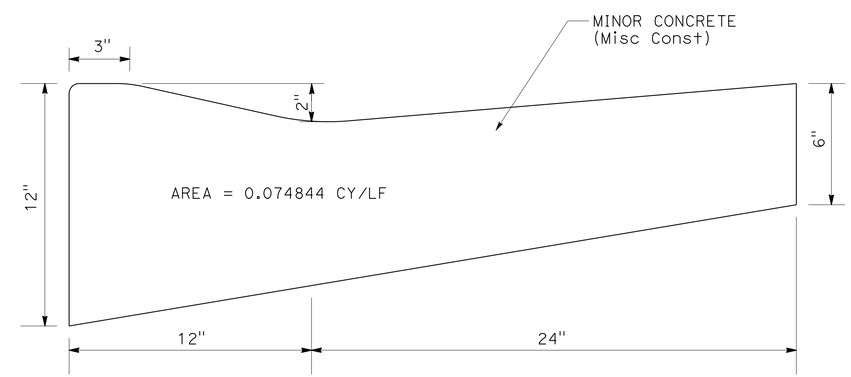

CURB (MODIFIED TYPE E)

"W1" 11+81.00 TO 12+87.71 Rt

CONSTRUCTION DETAILS

NO SCALE

C-3

REVISED BY	DATE REVISED
JAVED IQBAL	MIKE MOGEN
CALCULATED-DESIGNED BY	CHECKED BY
FUNCTIONAL SUPERVISOR	JULIE CASEY

STATE OF CALIFORNIA - DEPARTMENT OF TRANSPORTATION
Caltrans DESIGN

P:\proj1\02\4E600_plans\pse\24e600ga003.dgn

LAST REVISION 02-05-15 | DATE PLOTTED => 11-MAR-2015 | TIME PLOTTED => 14:09

Dist	COUNTY	ROUTE	POST MILES TOTAL PROJECT	SHEET No.	TOTAL SHEETS
02	Tri	3	30.8/31.1	13	49

REGISTERED CIVIL ENGINEER 02-05-15 DATE

02-05-15
PLANS APPROVAL DATE

REGISTERED PROFESSIONAL ENGINEER MIKE MOGEN No. 67018 Exp. 09-30-16 CIVIL STATE OF CALIFORNIA

THE STATE OF CALIFORNIA OR ITS OFFICERS OR AGENTS SHALL NOT BE RESPONSIBLE FOR THE ACCURACY OR COMPLETENESS OF SCANNED COPIES OF THIS PLAN SHEET.

NOTES:

1. SEE Std PLANS FOR ADDITIONAL DETAILS NOT SHOWN

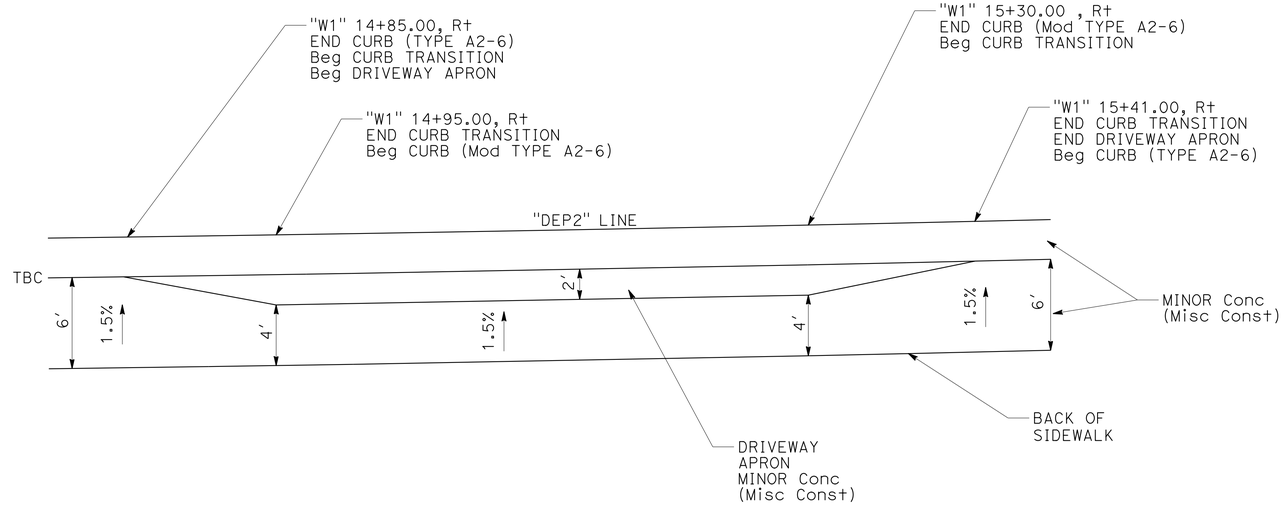

DRIVEWAY 2

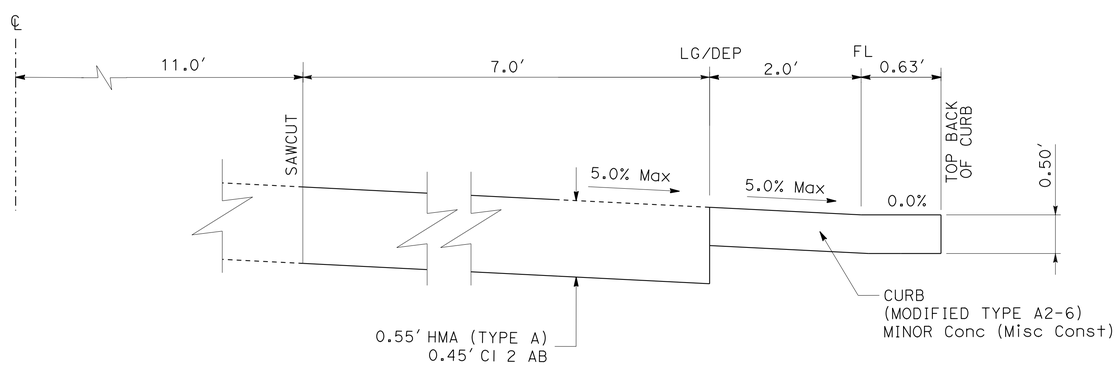

CURB (Mod TYPE A2-6)

"W1" 14+95.00 TO 15+30.00 Rt
"W1" 16+35.00 TO 16+70.00 Rt
"W1" 17+24.50 TO 17+59.50 Rt

CONSTRUCTION DETAILS

NO SCALE

C-4

STATE OF CALIFORNIA - DEPARTMENT OF TRANSPORTATION
Caltrans DESIGN

FUNCTIONAL SUPERVISOR: JULIE CASEY
CALCULATED-DESIGNED BY: JAVED IQBAL
CHECKED BY: MIKE MOGEN
REVISED BY
DATE REVISED

P:\proj1\02\4E600_plans\pse\24e600ga004.dgn

LAST REVISION 02-05-15
DATE PLOTTED => 11-MAR-2015
TIME PLOTTED => 14:09

Dist	COUNTY	ROUTE	POST MILES TOTAL PROJECT	SHEET No.	TOTAL SHEETS
02	Tri	3	30.8/31.1	14	49

REGISTERED CIVIL ENGINEER 02-05-15 DATE

02-05-15
PLANS APPROVAL DATE

REGISTERED PROFESSIONAL ENGINEER MIKE MOGEN No. 67018 Exp. 09-30-16 CIVIL STATE OF CALIFORNIA

THE STATE OF CALIFORNIA OR ITS OFFICERS OR AGENTS SHALL NOT BE RESPONSIBLE FOR THE ACCURACY OR COMPLETENESS OF SCANNED COPIES OF THIS PLAN SHEET.

NOTES:

1. DRIVEWAY APRON AND SIDEWALK WIHTIN DRIVEWAY SHALL HAVE A CONCRETE THICKNESS OF 0.5′ MINIMUM.

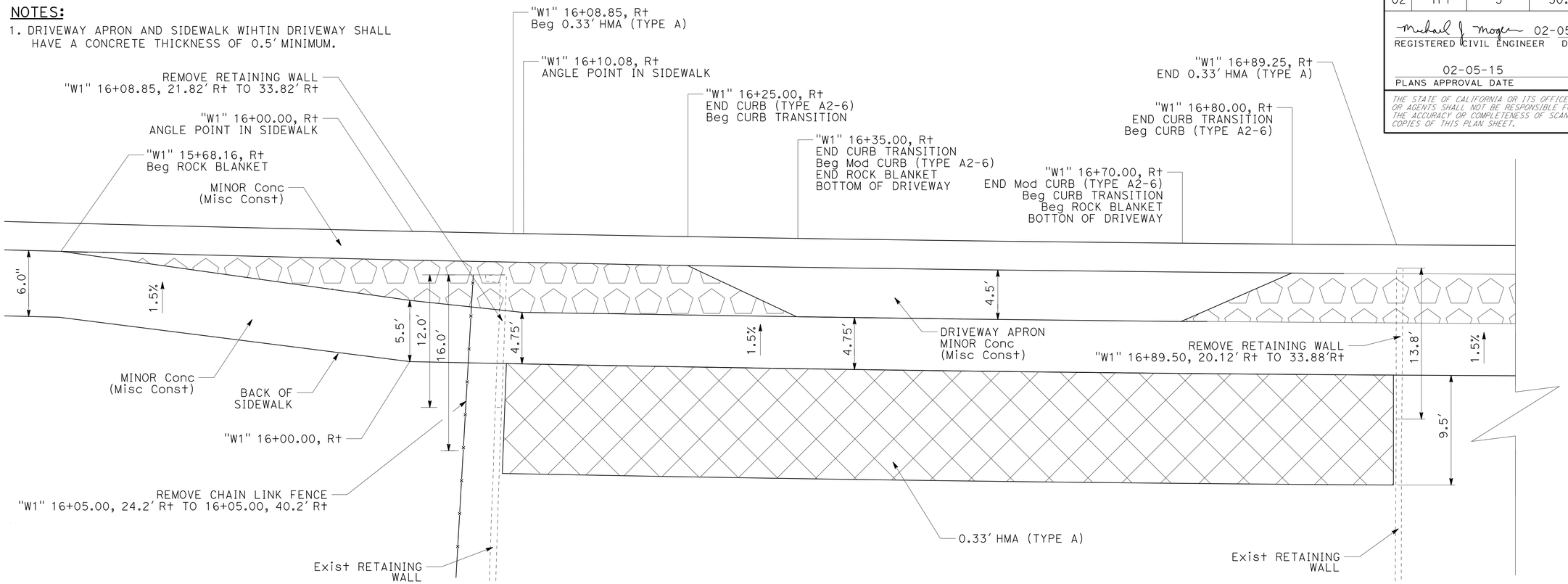

DRIVEWAY 3

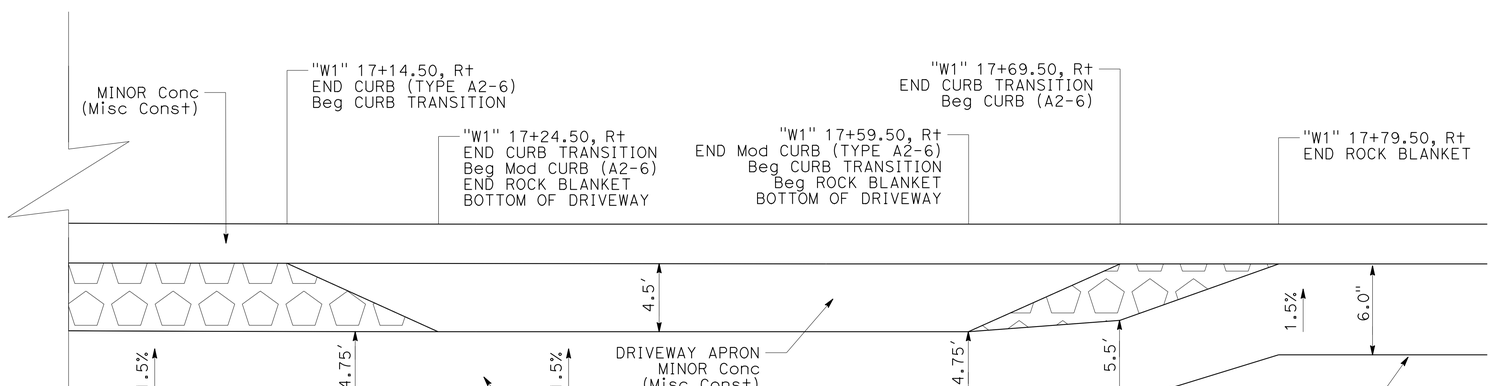

DRIVEWAY 4

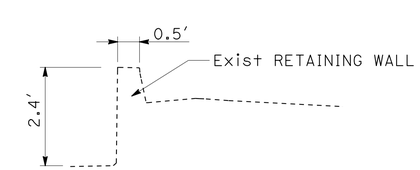

SECTION
RETAINING WALL (Conc BLOCK)
"W1" 16+89.50, 20.12′ R+ TO 33.88′R+

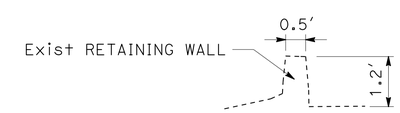

SECTION
RETAINING WALL (Conc BLOCK)
"W1" 16+08.85, 21.82′ R+ TO 33.82′ R+

CONSTRUCTION DETAILS

NO SCALE

C-5

REVISED BY	DATE REVISED
JAVED IQBAL	MIKE MOGEN
CALCULATED-DESIGNED BY	CHECKED BY
FUNCTIONAL SUPERVISOR	JULIE CASEY

STATE OF CALIFORNIA - DEPARTMENT OF TRANSPORTATION
Caltrans
DESIGN

P:\proj1\02\4E600_plans\pse\24e600ga005.dgn

LAST REVISION 02-05-15 | DATE PLOTTED => 11-MAR-2015 | TIME PLOTTED => 14:09

Dist	COUNTY	ROUTE	POST MILES TOTAL PROJECT	SHEET No.	TOTAL SHEETS
02	Tri	3	30.8/31.1	15	49

Michael J Mogen 02-05-15
REGISTERED CIVIL ENGINEER DATE

02-05-15
PLANS APPROVAL DATE

REGISTERED PROFESSIONAL ENGINEER MIKE MOGEN No. 67018 Exp. 09-30-16 CIVIL STATE OF CALIFORNIA

THE STATE OF CALIFORNIA OR ITS OFFICERS OR AGENTS SHALL NOT BE RESPONSIBLE FOR THE ACCURACY OR COMPLETENESS OF SCANNED COPIES OF THIS PLAN SHEET.

LEGEND:

0.5' RETAINING CRUB

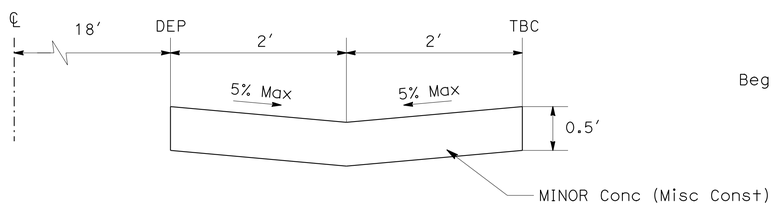

Conc VALLEY GUTTER

"W1" 20+65.00 R+ TO 21+51.00 R+

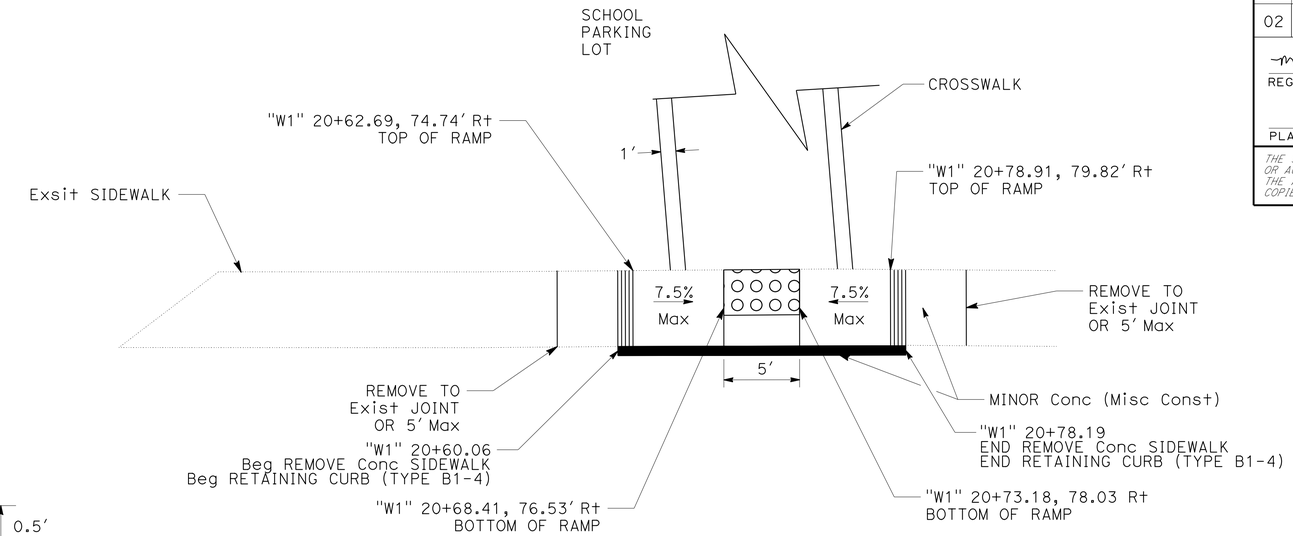

CURB RAMP 4

CURB RAMP (CASE C)
"W1" 20+55.00 TO 20+96.00

NOTES:

1. COBBLES SHALL BE PLACED TO MINIMIZE MORTAR EXPOSURE TO THE TOP SURFACE.
2. REINFORCING BARS SHALL HAVE A MINIMUM 2" CLEARANCE FROM ALL CONCRETE EDGES.
3. CONCRETE HEADERS LOCATED AS SHOWN ON THE PLANS.
4. MORTER MUST BE POLYMER -MODIFIED.
5. FOR LOCATIONS AND AREA REQUIREMENTS, SEE SHEET L-1 AND L-2

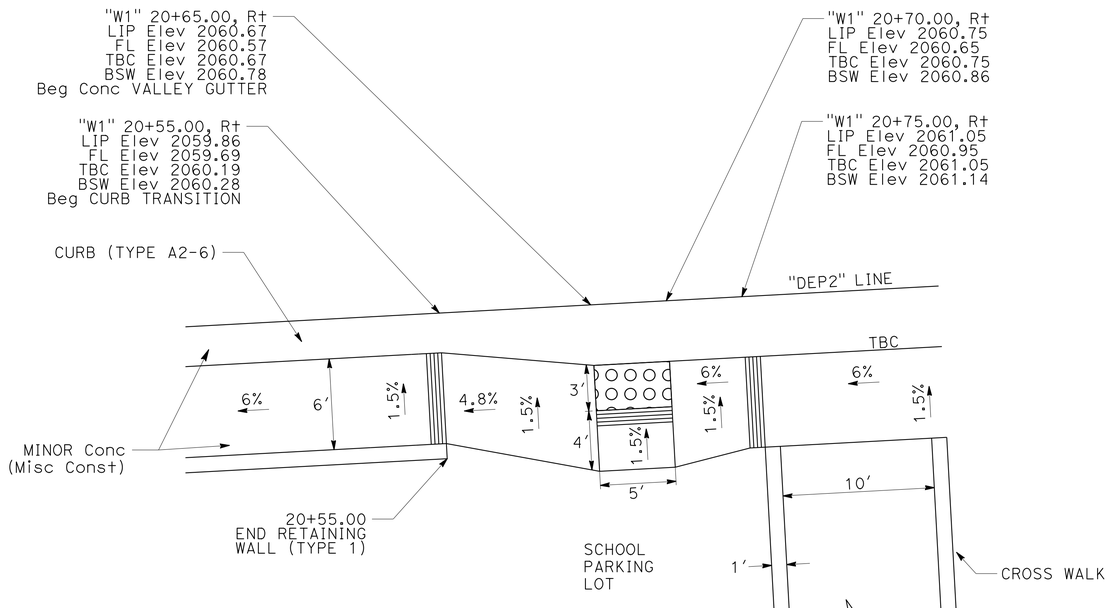

CURB RAMP 3

CASE "B"
"W1" 20+55.00 R+ TO 20+75.00 R+

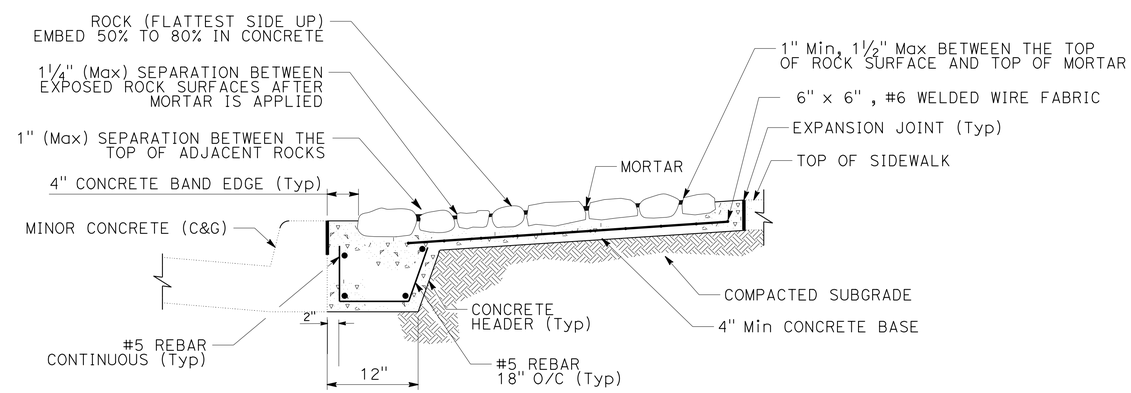

ROCK BLANKET

"W1" 15+68.16, R+ TO 16+35.00, R+
"W1" 16+69.71, R+ TO 17+24.50, R+
"W1" 17+59.50, R+ TO 17+79.50, R+

CONSTRUCTION DETAILS

NO SCALE

C-6

REVISED BY | DATE REVISED
JAVED IQBAL | MIKE MOGEN
CALCULATED-DESIGNED BY | CHECKED BY
FUNCTIONAL SUPERVISOR | JULIE CASEY

STATE OF CALIFORNIA - DEPARTMENT OF TRANSPORTATION
Caltrans
DESIGN

P:\proj\02\4E600_plans\pse\24e600ga006.dgn

LAST REVISION 02-05-15 | DATE PLOTTED => 11-MAR-2015 | TIME PLOTTED => 14:09

Dist	COUNTY	ROUTE	POST MILES TOTAL PROJECT	SHEET No.	TOTAL SHEETS
02	Tri	3	30.8/31.1	16	49

Michael J. Mogen 02-05-15
REGISTERED CIVIL ENGINEER DATE

02-05-15
PLANS APPROVAL DATE

REGISTERED PROFESSIONAL ENGINEER MIKE MOGEN No. 67018 Exp. 09-30-16 CIVIL STATE OF CALIFORNIA

THE STATE OF CALIFORNIA OR ITS OFFICERS OR AGENTS SHALL NOT BE RESPONSIBLE FOR THE ACCURACY OR COMPLETENESS OF SCANNED COPIES OF THIS PLAN SHEET.

NOTES:

1. USE STONE VENEER CORNER PIECES AT ALL CORNERS.

ABBREVIATIONS:

EQ EQUAL

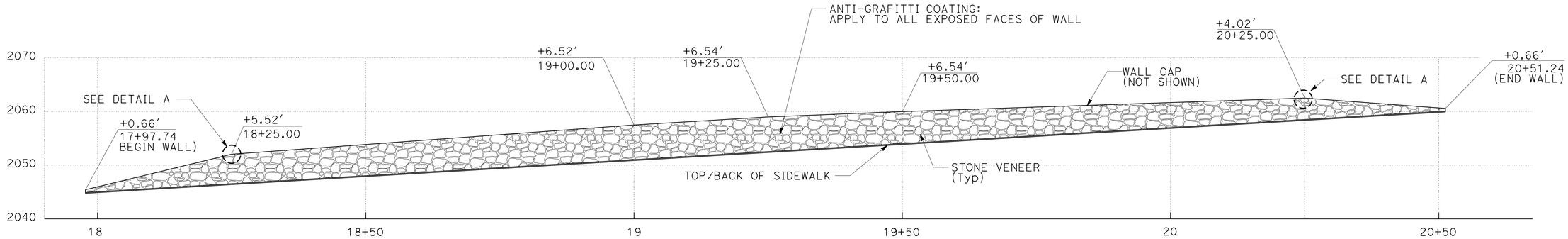

ELEVATION

RETAINING WALL (TYPE 1)

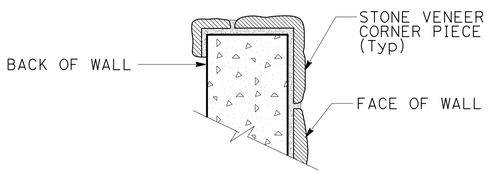

PLAN/SECTION
(BEGIN WALL AND END WALL)(Typ)

RETAINING WALL (TYPE 1)

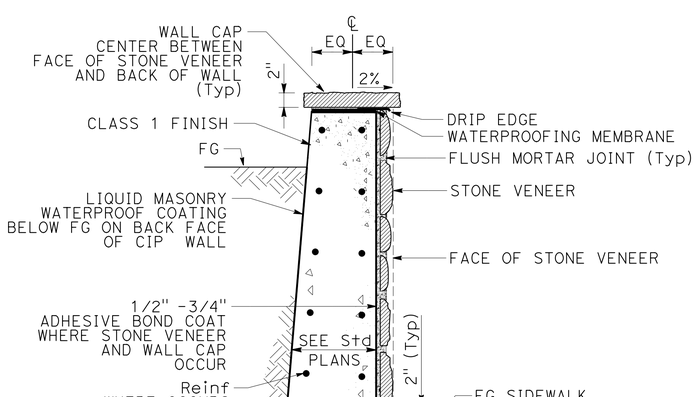

TYPICAL SECTION

RETAINING WALL (TYPE 1)

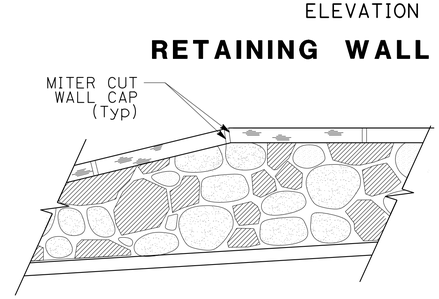

ELEVATION

DETAIL A

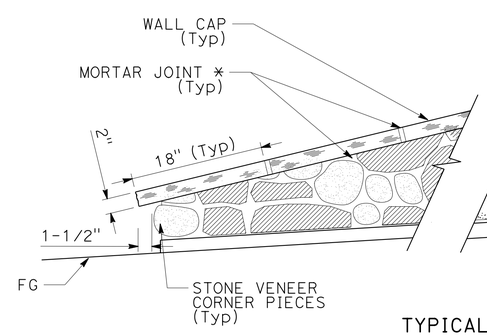

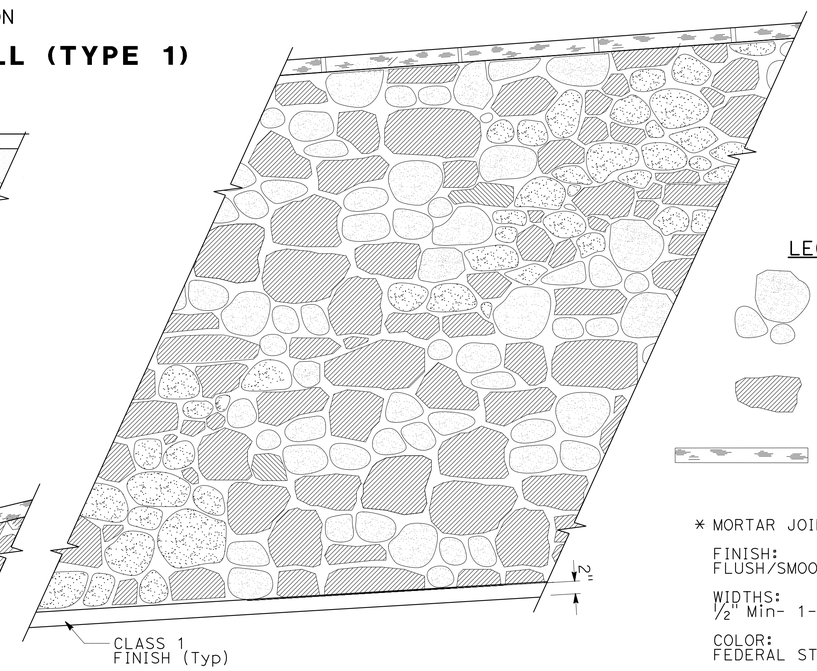

TYPICAL ELEVATION

RETAINING WALL (TYPE 1)

LEGEND

RIVER ROCK
STONE VENEER
(60%)

FIELDSTONE
STONE VENEER
(40%)

(WALL CAP)
SIZE: 14"W X 18" L X 2" THICK
TEXTURE: FLAGSTONE WITH
CHISELED EDGES
COLOR: 595C FSTD 22563

* MORTAR JOINTS

FINISH:
FLUSH/SMOOTH BRUSHED

WIDTHS:
½" Min- 1-1/2" Max (VARIES)

COLOR:
FEDERAL STANDARD 595C 36492

STONE VENEER

CONSTRUCTION DETAILS

NO SCALE

C-7

REVISED BY	DATE REVISED

CALCULATED-DESIGNED BY
CHECKED BY

FUNCTIONAL SUPERVISOR: JULIE CASEY

JAVED IQBAL
MIKE MOGEN

STATE OF CALIFORNIA - DEPARTMENT OF TRANSPORTATION
Caltrans
DESIGN

P:\proj1\02\4E600_plans\pse\24e600ga007.dgn

LAST REVISION 02-05-15 | DATE PLOTTED => 11-MAR-2015 | TIME PLOTTED => 14:09

Dist	COUNTY	ROUTE	POST MILES TOTAL PROJECT	SHEET No.	TOTAL SHEETS
02	Tri	3	30.8/31.1	17	49

Michael J Mogen 02-05-15
REGISTERED CIVIL ENGINEER DATE

02-05-15
PLANS APPROVAL DATE

REGISTERED PROFESSIONAL ENGINEER
MIKE MOGEN
No. 67018
Exp. 09-30-16
CIVIL
STATE OF CALIFORNIA

THE STATE OF CALIFORNIA OR ITS OFFICERS OR AGENTS SHALL NOT BE RESPONSIBLE FOR THE ACCURACY OR COMPLETENESS OF SCANNED COPIES OF THIS PLAN SHEET.

NOTES:

1. SEE UTILITY PLANS.
2. FOR ACCURATE RIGHT OF WAY, CONTACT RIGHT OF WAY ENGINEERING AT THE DISTRICT OFFICE

LEGEND:

- - - - - - - TCE

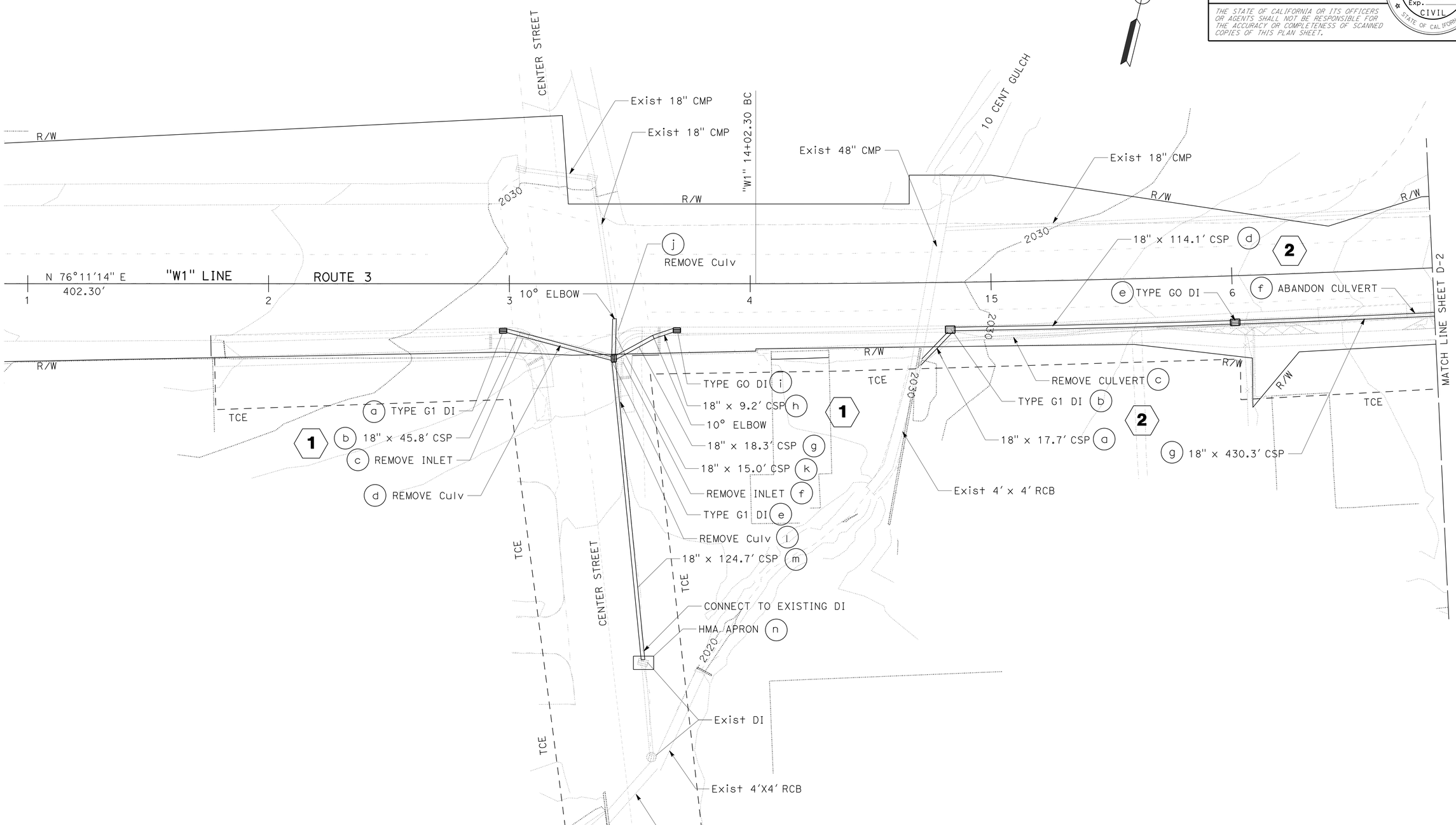

DRAINAGE PLAN

SCALE: 1" = 20'

D-1

APPROVED FOR DRAINAGE WORK ONLY

REVISED BY | DATE REVISED
JAVED IQBAL | MIKE MOGEN
CALCULATED-DESIGNED BY | CHECKED BY
FUNCTIONAL SUPERVISOR: JULIE CASEY

STATE OF CALIFORNIA - DEPARTMENT OF TRANSPORTATION
Caltrans
DESIGN

P:\proj1\02\4E600_plans\pse\24e600ia001.dgn

LAST REVISION 02-05-15 | DATE PLOTTED => 11-MAR-2015 | TIME PLOTTED => 14:09

BORDER LAST REVISED 7/2/2010 | USERNAME => s115152 | DGN FILE => 24e600ia001.dgn | RELATIVE BORDER SCALE IS IN INCHES 0 1 2 3 | UNIT 0318 | PROJECT NUMBER & PHASE 02-0002-0328-1 | EA: 02-4E600

Dist	COUNTY	ROUTE	POST MILES TOTAL PROJECT	SHEET No.	TOTAL SHEETS
02	Tri	3	30.8/31.1	18	49

Michael J Mogen 02-05-15
REGISTERED CIVIL ENGINEER DATE

02-05-15
PLANS APPROVAL DATE

REGISTERED PROFESSIONAL ENGINEER
MIKE MOGEN
No. 67018
Exp. 09-30-16
CIVIL
STATE OF CALIFORNIA

THE STATE OF CALIFORNIA OR ITS OFFICERS OR AGENTS SHALL NOT BE RESPONSIBLE FOR THE ACCURACY OR COMPLETENESS OF SCANNED COPIES OF THIS PLAN SHEET.

NOTE:

1. FOR ACCURATE RIGHT OF WAY DATA, CONTACT RIGHT OF WAY ENGINEERING AT THE DISTRICT OFFICE.

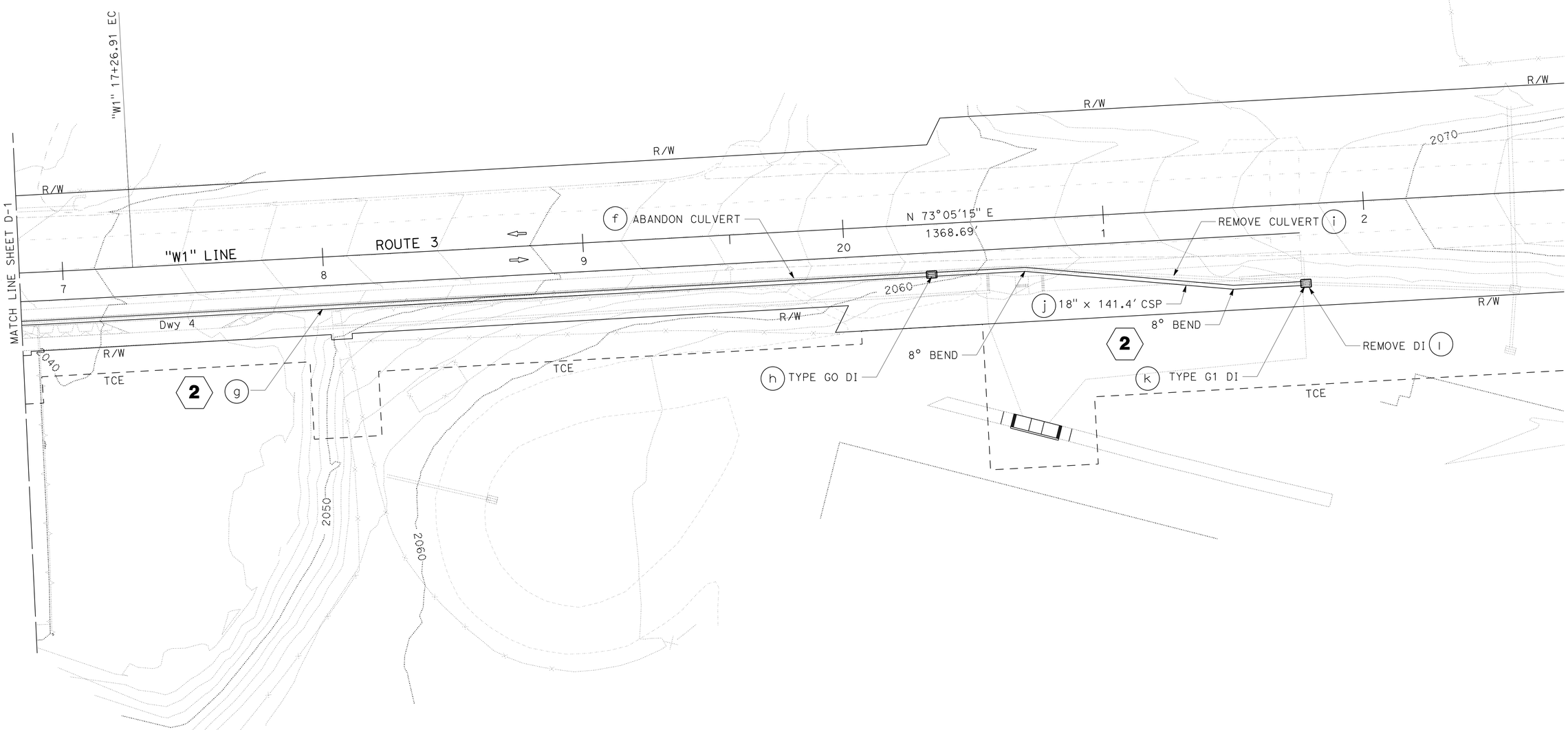

APPROVED FOR DRAINAGE WORK ONLY

DRAINAGE PLAN

SCALE: 1" = 20'

D-2

STATE OF CALIFORNIA - DEPARTMENT OF TRANSPORTATION
Caltrans
DESIGN

FUNCTIONAL SUPERVISOR: JULIE CASEY
CALCULATED-DESIGNED BY: JAVED IQBAL
CHECKED BY: MIKE MOGEN
REVISED BY
DATE REVISED

P:\proj1\02\4E600_plans\pse\24e600ia002.dgn

LAST REVISION 02-05-15
DATE PLOTTED => 11-MAR-2015
TIME PLOTTED => 14:09

BORDER LAST REVISED 7/2/2010
USERNAME => s115152
DGN FILE => 24e600ia002.dgn
RELATIVE BORDER SCALE IS IN INCHES 0 1 2 3
UNIT 0318
PROJECT NUMBER & PHASE 02-0002-0328-1 EA: 02-4E600

Dist	COUNTY	ROUTE	POST MILES TOTAL PROJECT	SHEET No.	TOTAL SHEETS
02	Tri	3	30.8/31.1	19	49

Michael J. Mogen 02-05-15
REGISTERED CIVIL ENGINEER DATE

02-05-15
PLANS APPROVAL DATE

REGISTERED PROFESSIONAL ENGINEER MIKE MOGEN No. 67018 Exp. 09-30-16 CIVIL STATE OF CALIFORNIA

THE STATE OF CALIFORNIA OR ITS OFFICERS OR AGENTS SHALL NOT BE RESPONSIBLE FOR THE ACCURACY OR COMPLETENESS OF SCANNED COPIES OF THIS PLAN SHEET.

ABBREVIATIONS:

SL LONGITUDINAL SLOPE
SX CROSS SLOPE

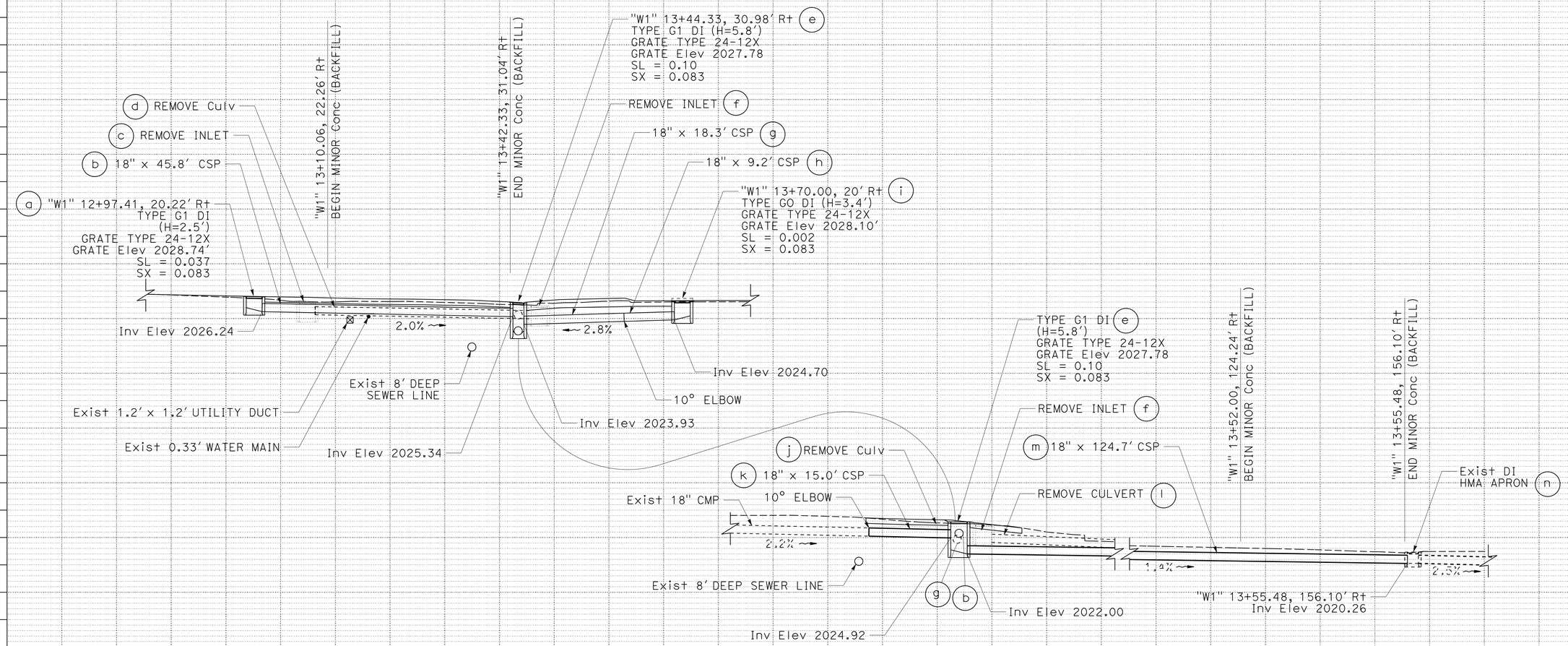

DRAINAGE SYSTEM (1)

"W1" 12+95.00 TO 13+75.73

DRAINAGE PROFILES

SCALE: 1" = 10'

DP-1

REVISED BY | DATE REVISED
JAVED IQBAL | MIKE MOGEN
CALCULATED-DESIGNED BY | CHECKED BY
FUNCTIONAL SUPERVISOR | JULIE CASEY

STATE OF CALIFORNIA - DEPARTMENT OF TRANSPORTATION
Caltrans DESIGN

P:\proj1\02\4E600_plans\pse\24e600ib001.dgn

LAST REVISION 02-05-15 | DATE PLOTTED => 11-MAR-2015 | TIME PLOTTED => 14:09

Dist	COUNTY	ROUTE	POST MILES TOTAL PROJECT	SHEET No.	TOTAL SHEETS
02	Tri	3	30.8/31.1	20	49

REGISTERED CIVIL ENGINEER 02-05-15 DATE

02-05-15
PLANS APPROVAL DATE

REGISTERED PROFESSIONAL ENGINEER MIKE MOGEN No. 67018 Exp. 09-30-16 CIVIL STATE OF CALIFORNIA

THE STATE OF CALIFORNIA OR ITS OFFICERS OR AGENTS SHALL NOT BE RESPONSIBLE FOR THE ACCURACY OR COMPLETENESS OF SCANNED COPIES OF THIS PLAN SHEET.

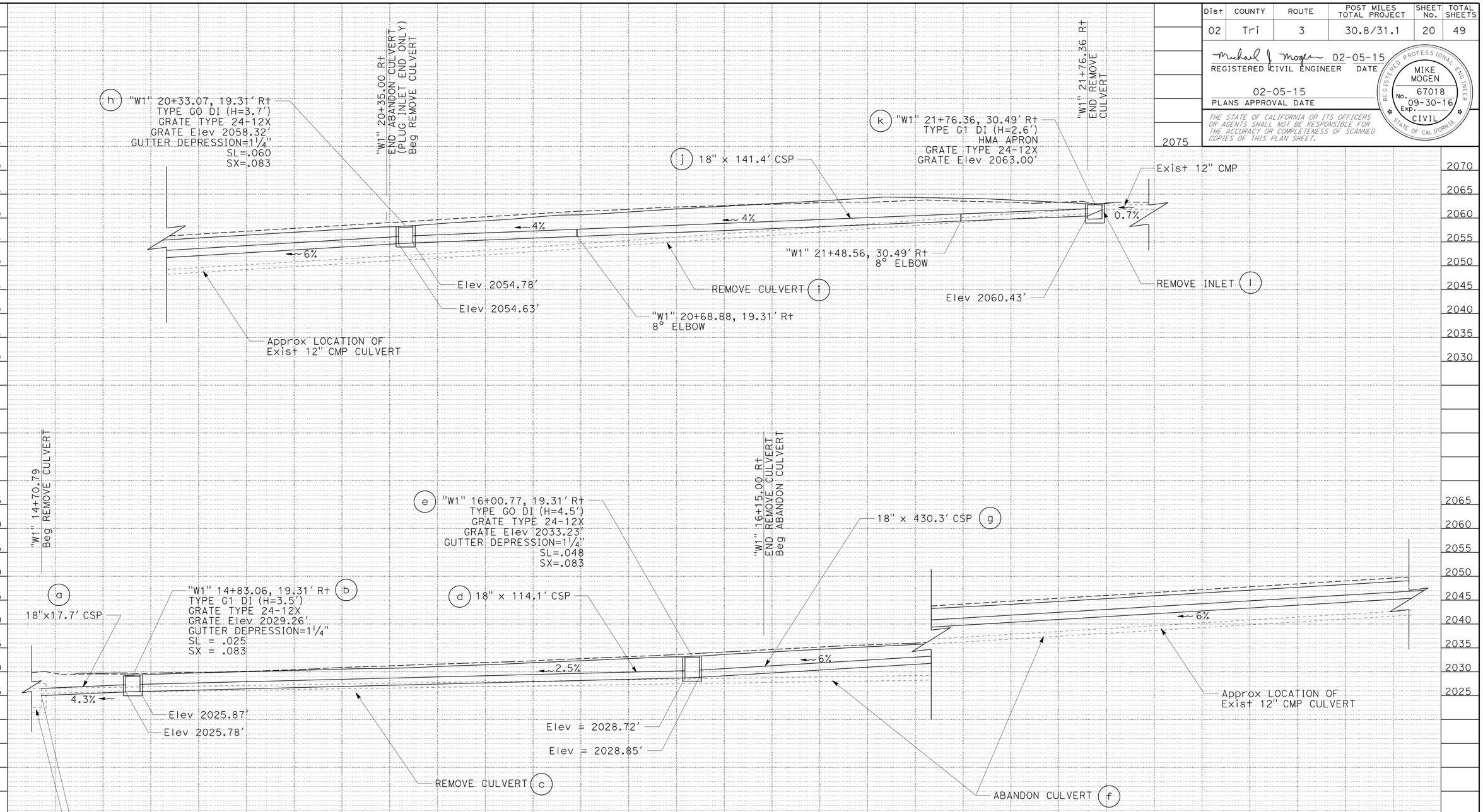

DRAINAGE SYSTEM 2

"W1" 21+76.36 TO 21+76.36

DRAINAGE PROFILES

SCALE: 1" = 10'

DP-2

REVISED BY | DATE REVISED
JAVED IQBAL | MIKE MOGEN
CALCULATED-DESIGNED BY | CHECKED BY
FUNCTIONAL SUPERVISOR: JULIE CASEY

STATE OF CALIFORNIA - DEPARTMENT OF TRANSPORTATION
Caltrans
DESIGN

P:\proj1\02\4E600_plans\pse\24e600ib002.dgn

LAST REVISION 02-05-15 | DATE PLOTTED => 11-MAR-2015 | TIME PLOTTED => 14:09

BORDER LAST REVISED 7/2/2010 | USERNAME => s115152 | DGN FILE => 24e600ib002.dgn | RELATIVE BORDER SCALE IS IN INCHES 0 1 2 3 | UNIT 0318 | PROJECT NUMBER & PHASE 02-0002-0328-1 | EA: 02-4E600

Dist	COUNTY	ROUTE	POST MILES TOTAL PROJECT	SHEET No.	TOTAL SHEETS
02	Tri	3	30.8/31.1	21	49

REGISTERED CIVIL ENGINEER 02-05-15 DATE

02-05-15
PLANS APPROVAL DATE

REGISTERED PROFESSIONAL ENGINEER MIKE MOGEN No. 67018 Exp. 09-30-16 CIVIL STATE OF CALIFORNIA

THE STATE OF CALIFORNIA OR ITS OFFICERS OR AGENTS SHALL NOT BE RESPONSIBLE FOR THE ACCURACY OR COMPLETENESS OF SCANNED COPIES OF THIS PLAN SHEET.

NOTES:

1. FOR ADDITIONAL DETAILS NOT SHOWN, SEE STANDARD PLANS.

LEGEND:

CONCRETE BACKFILL (PIPE TRENCH)

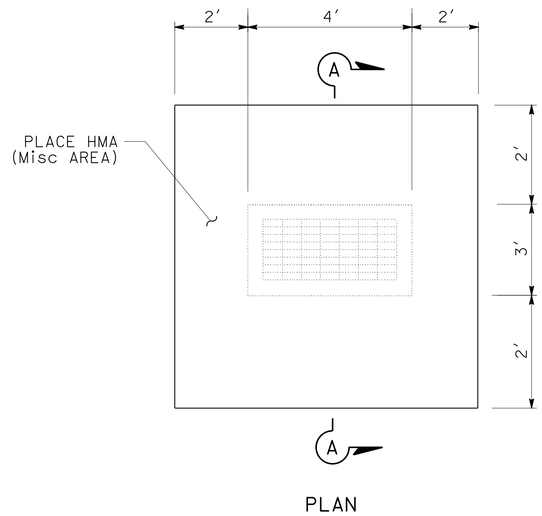

PLAN

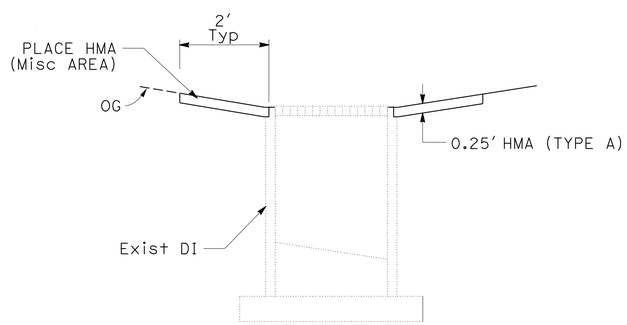

SECTION A-A

HMA APRON

DRAINAGE SYSTEM No. 1 n
2 k

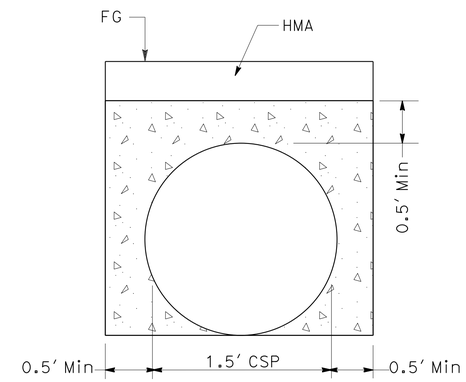

CONCRETE BACKFILL (PIPE TRENCH)

DRAINAGE SYSTEM No. 1 b m

DRAINAGE DETAILS

NO SCALE

DD-1

REVISED BY	DATE REVISED

CALCULATED-DESIGNED BY	CHECKED BY
JAVED IQBAL	MIKE MOGEN

FUNCTIONAL SUPERVISOR: JULIE CASEY

STATE OF CALIFORNIA - DEPARTMENT OF TRANSPORTATION
Caltrans DESIGN

P:\proj1\02\4E600_plans\pse\24e600ic001.dgn

LAST REVISION 02-05-15 | DATE PLOTTED => 11-MAR-2015 | TIME PLOTTED => 14:09

Dist	COUNTY	ROUTE	POST MILES TOTAL PROJECT	SHEET No.	TOTAL SHEETS
02	Tri	3	30.8/31.1	22	49

REGISTERED CIVIL ENGINEER 02-05-15 DATE

02-05-15
PLANS APPROVAL DATE

REGISTERED PROFESSIONAL ENGINEER MIKE MOGEN No. 67018 Exp. 09-30-16 CIVIL STATE OF CALIFORNIA

THE STATE OF CALIFORNIA OR ITS OFFICERS OR AGENTS SHALL NOT BE RESPONSIBLE FOR THE ACCURACY OR COMPLETENESS OF SCANNED COPIES OF THIS PLAN SHEET.

DRAINAGE INLET MARKER

DRAINAGE SYSTEM No.	STATION	POSTMILE	L	M	R	DRAINAGE INLET MARKER EA	REMARKS
1a	"W1" 12+97.41	30.91			X	1	DRAINAGE INLET MARKER (STAMPED CONCRETE IMPRINT), "NO DUMPING DRAINS TO CREEK"
1e	"W1" 13+44.33	30.92			X	1	DRAINAGE INLET MARKER (STAMPED CONCRETE IMPRINT), "NO DUMPING DRAINS TO CREEK"
1i	"W1" 13+70.00	30.92			X	1	DRAINAGE INLET MARKER (STAMPED CONCRETE IMPRINT), "NO DUMPING DRAINS TO CREEK"
2b	"W1" 14+83.06	30.94			X	1	DRAINAGE INLET MARKER (STAMPED CONCRETE IMPRINT), "NO DUMPING DRAINS TO CREEK"
2e	"W1" 16+00.77	31.96			X	1	DRAINAGE INLET MARKER (STAMPED CONCRETE IMPRINT), "NO DUMPING DRAINS TO CREEK"
2h	"W1" 20+33.07	31.04			X	1	DRAINAGE INLET MARKER (STAMPED CONCRETE IMPRINT), "NO DUMPING DRAINS TO CREEK"
					TOTAL	6	

DRAINAGE QUANTITIES

DRAINAGE SHEET No.	DRAINAGE SYSTEM No.	DRAINAGE UNIT No.	REMOVE CULVERT LF	ABANDON CULVERT EA	REMOVE INLET EA	HOT MIX ASPHALT (TYPE A) TON *	PLACE HOT MIX ASPHALT (MISCELLANEOUS AREA) SQYD *	MINOR CONCRETE (MINOR STRUCTURE) CY	18" CORRUGATED STEEL PIPE (.079" THICK) LF	CONCRETE BACKFILL (PIPE TRENCH) CY	MISCELLANEOUS IRON AND STEEL LB	8" CORRUGATED STEEL PIPE ELBOW EA (N)	10" CORRUGATED STEEL PIPE ELBOW EA (N)	DRAINAGE SYSTEM No.	DRAINAGE UNIT No.	STATION	DESCRIPTION
D-1	1	a						1			239			1	a	12+96.90	G1 DI, H=2.5′; GRATE TYPE 24-12X
		b							46	4					b		
		c			1										c		Exist G1 DRAINAGE INLET
		d	38.0												d		Exist 18" CMP
		e						1.5			239				e	13+43.33	G1 DI, H=5.8′
		f			1										f		Exist G1 DRAINAGE INLET
		g							20						g		
		h							10				1		h		
		i						1.3			239				i	13+76.98	GO DI, H=3.4′; GRATE TYPE 24-12X
		j	16.2												j		Exist 18" CMP
		k							16				1		k		
		l	19.8												l		Exist 18" CMP
		m							126	3.6					m		
		n				0.8	4.9								n		HMA APRON
D-1	2	a							18					2	a		
		b						1.1			239				b	14+83.06	G1 DI, H=3.5′; GRATE TYPE 24-12X
		c	151.2												c		12" CMP CULVERT
D-2		d							116						d		
		e						1.6			239				e	16+00.77	GO DI, H=4.5′
		f		1											f		PLUG THE INLET END OF THE ABANDON 12" x 420′ CULVERT
		g							432						g		
		h						1.4			239				h	20+33.07	GO DI, H=3.7′, GRATE TYPE 24-12X
		i	147.1												i		12" CMP CULVERT
		j							142			2			j		
		k				0.8	4.9	0.9			239				k	21+76.36	G1 DI, H=2.6′, HMA APRON, GRATE TYPE 24-12X
		l			1										l		
	TOTAL		372.3	1	3	1.6	9.8	8.8	926	7.6	1673	2	2				

(N) - NOT A SEPARATE PAY ITEM, FOR INFORMATION ONLY
* - ITEM SUBTOTAL SUMMARIZED ON SHEET Q-1

DRAINAGE QUANTITIES
DQ-1

REVISED BY | DATE REVISED
JAVED IQBAL | MIKE MOGEN
CALCULATED-DESIGNED BY | CHECKED BY
FUNCTIONAL SUPERVISOR: JULIE CASEY
STATE OF CALIFORNIA - DEPARTMENT OF TRANSPORTATION
Caltrans DESIGN

P:\proj1\02\4E600_plans\pse\24e600id001.dgn

LAST REVISION 02-10-15 | DATE PLOTTED => 11-MAR-2015 | TIME PLOTTED => 14:09

Dist	COUNTY	ROUTE	POST MILES TOTAL PROJECT	SHEET No.	TOTAL SHEETS
02	Tri	3	30.8/31.1	23	49

REGISTERED CIVIL ENGINEER 02-05-15 DATE

02-05-15
PLANS APPROVAL DATE

REGISTERED PROFESSIONAL ENGINEER MIKE MOGEN No. 67018 Exp. 09-30-16 CIVIL STATE OF CALIFORNIA

THE STATE OF CALIFORNIA OR ITS OFFICERS OR AGENTS SHALL NOT BE RESPONSIBLE FOR THE ACCURACY OR COMPLETENESS OF SCANNED COPIES OF THIS PLAN SHEET.

NOTES:

1. FOR ACCURATE RIGHT OF WAY, CONTACT RIGHT OF ENGINEERING AT THE DISTRICT OFFICE

ABBREVIATIONS:

(E) EXISTING

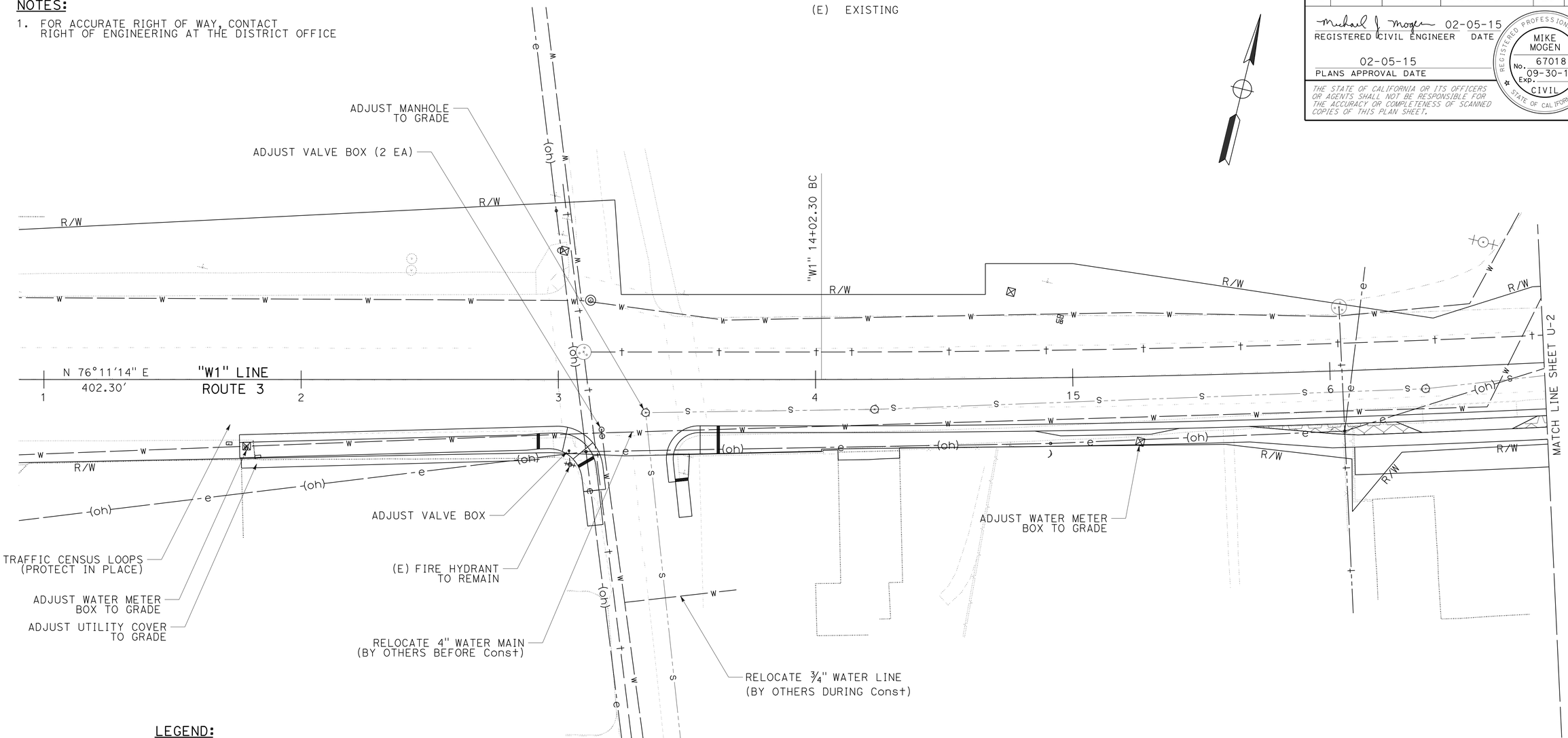

LEGEND:

WATER METER	WATER LINE (E)
UTILITY BOX	SEWER LINE (E)
DRAINAGE INLET	ELECTRICAL CONDUIT (E)
WATER VALVE	ELECTRICAL LINE (OVERHEAD) (E)
UTILITY MANHOLE	TELEPHONE CONDUIT (E)
SEWER MANHOLE	
ROADSIDE SIGN SINGLE POST	
FIRE HYDRANT	
DRAINAGE INLET	
UTILITY POLE	

APPROVED FOR UTILITY WORK ONLY

UTILITY PLAN

SCALE: 1" = 20'

U-1

REVISED BY | DATE REVISED
JAVED IQBAL | MIKE MOGEN
CALCULATED-DESIGNED BY | CHECKED BY
FUNCTIONAL SUPERVISOR | JULIE CASEY

STATE OF CALIFORNIA - DEPARTMENT OF TRANSPORTATION
Caltrans
DESIGN

P:\proj1\02\4E600_plans\pse\24e600ka001.dgn

LAST REVISION 02-05-15 | DATE PLOTTED => 11-MAR-2015 | TIME PLOTTED => 14:09

Dist	COUNTY	ROUTE	POST MILES TOTAL PROJECT	SHEET No.	TOTAL SHEETS
02	Tri	3	30.8/31.1	24	49

Michael J. Mogen 02-05-15
REGISTERED CIVIL ENGINEER DATE

02-05-15
PLANS APPROVAL DATE

REGISTERED PROFESSIONAL ENGINEER
MIKE MOGEN
No. 67018
Exp. 09-30-16
CIVIL
STATE OF CALIFORNIA

THE STATE OF CALIFORNIA OR ITS OFFICERS OR AGENTS SHALL NOT BE RESPONSIBLE FOR THE ACCURACY OR COMPLETENESS OF SCANNED COPIES OF THIS PLAN SHEET.

NOTES:

1. FOR ACCURATE RIGHT OF WAY DATA, CONTACT RIGHT OF WAY ENGINEERING AT THE DISTRICT OFFICE.

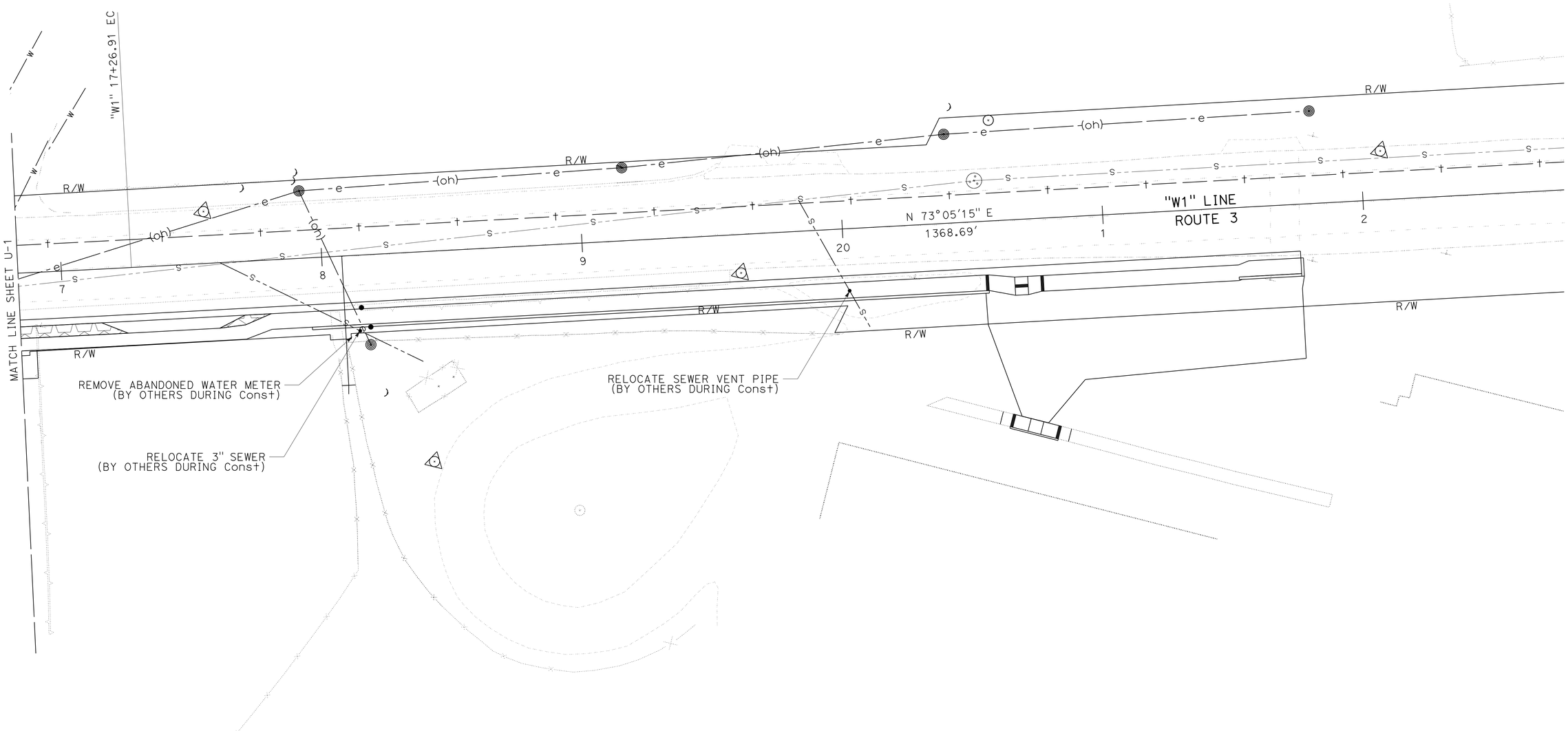

UTILITY PLAN

SCALE: 1" = 20'

U-2

APPROVED FOR UTILITY WORK ONLY

REVISED BY	DATE REVISED

CALCULATED-DESIGNED BY	CHECKED BY
JAVED IQBAL	MIKE MOGEN

FUNCTIONAL SUPERVISOR: JULIE CASEY

STATE OF CALIFORNIA - DEPARTMENT OF TRANSPORTATION
Caltrans
DESIGN

P:\proj\02\4E600_plans\pse\24e600ka002.dgn

LAST REVISION 02-05-15 | DATE PLOTTED => 11-MAR-2015 | TIME PLOTTED => 14:09

Dist	COUNTY	ROUTE	POST MILES TOTAL PROJECT	SHEET No.	TOTAL SHEETS
02	Tri	3	30.8/31.1	25	49

Michael J Mogen 02-05-15
REGISTERED CIVIL ENGINEER DATE

02-05-15
PLANS APPROVAL DATE

REGISTERED PROFESSIONAL ENGINEER
MIKE MOGEN
No. 67018
Exp. 09-30-16
CIVIL
STATE OF CALIFORNIA

THE STATE OF CALIFORNIA OR ITS OFFICERS OR AGENTS SHALL NOT BE RESPONSIBLE FOR THE ACCURACY OR COMPLETENESS OF SCANNED COPIES OF THIS PLAN SHEET.

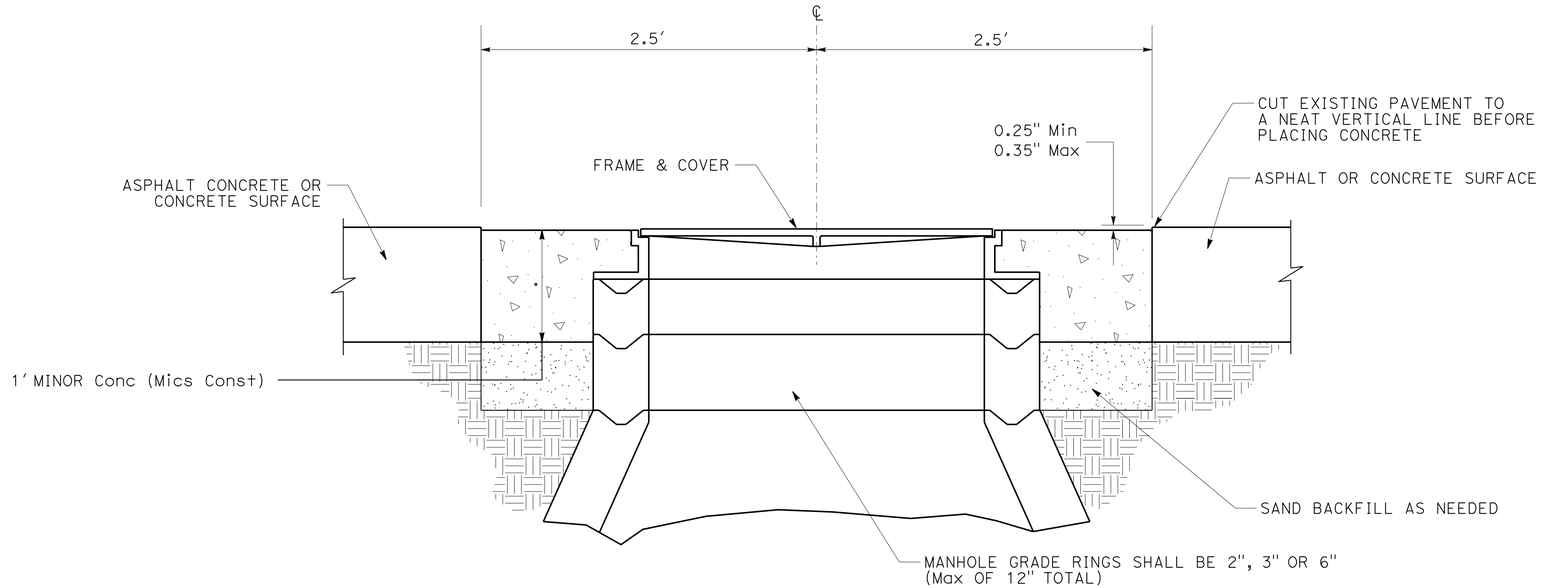

ADJUST UTILITY COVER TO GRADE

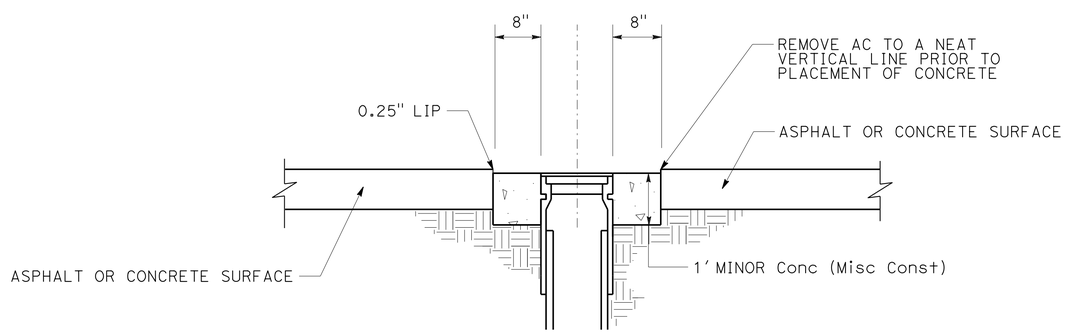

ADJUST UTILITY FRAME AND COVER

UTILITY DETAILS

NO SCALE

UD-1

REVISED BY	DATE REVISED

CALCULATED-DESIGNED BY	CHECKED BY
JAVED IQBAL	MIKE MOGEN

FUNCTIONAL SUPERVISOR: JULIE CASEY

STATE OF CALIFORNIA - DEPARTMENT OF TRANSPORTATION
Caltrans
DESIGN

P:\proj1\02\4E600_plans\pse\24e600kb001.dgn

LAST REVISION 02-05-15 | DATE PLOTTED => 11-MAR-2015 | TIME PLOTTED => 14:09

Dist	COUNTY	ROUTE	POST MILES TOTAL PROJECT	SHEET No.	TOTAL SHEETS
02	Tri	3	30.8/31.1	26	49

REGISTERED CIVIL ENGINEER 02-05-15 DATE

02-05-15
PLANS APPROVAL DATE

REGISTERED PROFESSIONAL ENGINEER MIKE MOGEN No. 67018 Exp. 09-30-16 CIVIL STATE OF CALIFORNIA

THE STATE OF CALIFORNIA OR ITS OFFICERS OR AGENTS SHALL NOT BE RESPONSIBLE FOR THE ACCURACY OR COMPLETENESS OF SCANNED COPIES OF THIS PLAN SHEET.

NOTES:

1. EXACT LOCATION OF ALL SIGNS TO BE DETERMINED BY THE ENGINEER.
2. CALIFORNIA CODES ARE DESIGNATED BY (CA), OTHERWISE FEDERAL CODES ARE SHOWN.

LEGEND

ONE POST STATIONARY MOUNTED SIGN

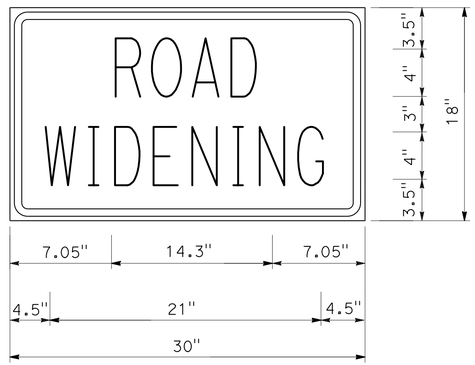

1.5" RADIUS, 0.6" BORDERS, 0.4" INDENT, BLACK ON ORANGE;

C23B SIGN PANEL DETAIL

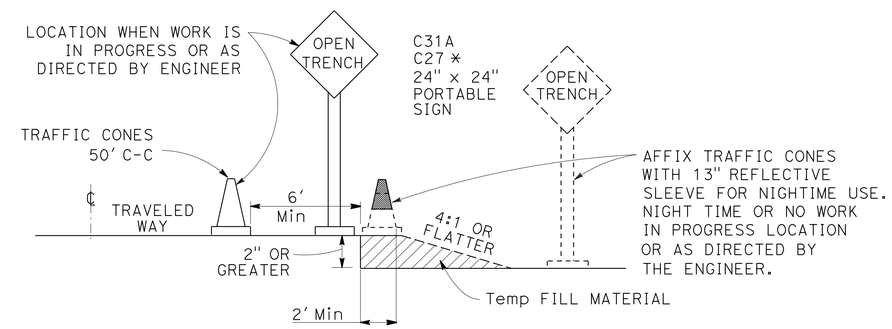

OPEN TRENCH SIGNING AND MARKING

NO SCALE

* PLACE AT 250' INTERVALS THROUGH THE OPEN TRENCH AREA, ALTERNATE C27 (OPEN TRENCH) AND C31A (NO SHOULDER) SIGNS

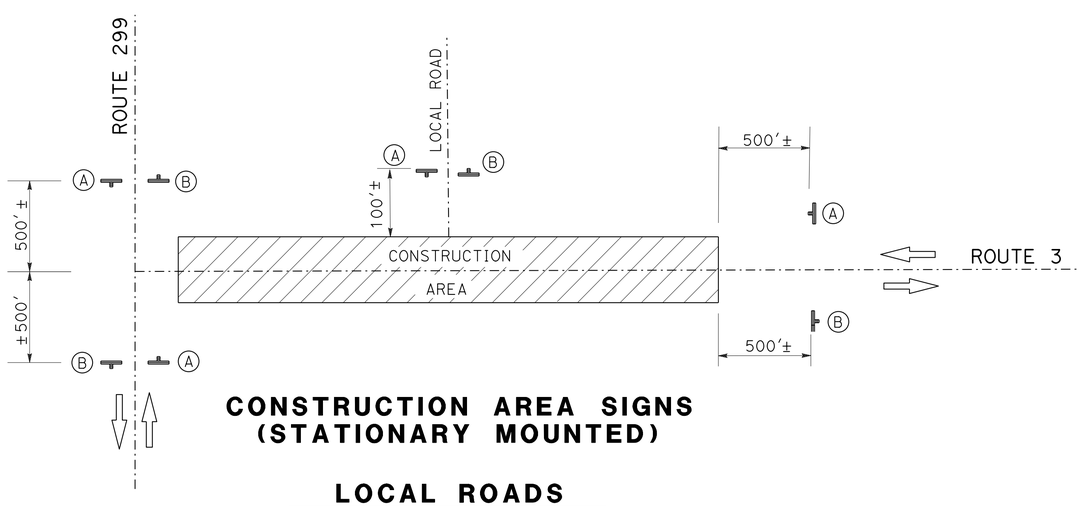

CONSTRUCTION AREA SIGNS (STATIONARY MOUNTED)

LOCAL ROADS

PM	LOCATION
30.91	CENTER St - Lt
30.91	CENTER St - Rt
30.97	MULLIGAN St - Lt
31.21	MULLIGAN St - Lt

CONSTRUCTION AREA SIGNS (STATIONARY MOUNTED)

TYPE	CODE	PANEL SIZE	SIGN MESSAGE	NUMBER AND SIZE OF POST	No. OF SIGNS
A	W20-1 C23B(CA)	48" x 48" 30" x 18"	ROAD WORK AHEAD ROAD WIDENING	1-4" x 6"	7
B	G20-2	36" x 18"	END ROAD WORK	1-4" x 4"	7

CONSTRUCTION AREA SIGNS

NO SCALE

CS-1

REVISED BY | DATE REVISED
JAVED IQBAL | MIKE MOGEN
CALCULATED-DESIGNED BY | CHECKED BY
FUNCTIONAL SUPERVISOR: JULIE CASEY

STATE OF CALIFORNIA - DEPARTMENT OF TRANSPORTATION
Caltrans® DESIGN

P:\proj1\02\4E600_plans\pse\24e6001a001.dgn

LAST REVISION 02-05-15 | DATE PLOTTED => 11-MAR-2015 TIME PLOTTED => 14:09

Dist	COUNTY	ROUTE	POST MILES TOTAL PROJECT	SHEET No.	TOTAL SHEETS
02	Tri	3	30.8/31.1	27	49

Michael J. Mogen 02-05-15
REGISTERED CIVIL ENGINEER DATE

02-05-15
PLANS APPROVAL DATE

REGISTERED PROFESSIONAL ENGINEER MIKE MOGEN No. 67018 Exp. 09-30-16 CIVIL STATE OF CALIFORNIA

THE STATE OF CALIFORNIA OR ITS OFFICERS OR AGENTS SHALL NOT BE RESPONSIBLE FOR THE ACCURACY OR COMPLETENESS OF SCANNED COPIES OF THIS PLAN SHEET.

NOTES:

1. CALIFORNIA SIGN CODES ARE DESIGNATED BY (CA), OTHERWISE, FEDERAL MUTCD SIGN CODES ARE SHOWN.
2. EXACT SIGN AND TEMPORARY CROSSWALK LOCATION TO BE DETERMINED BY THE ENGINEER.

LEGEND:

- DIRECTION OF TRAFFIC
- PEDESTRIAN DETOUR ROUTE
- XXX SIDEWALK CLOSURE
- SIGN MOUNTED ON TYPE II BARRICADE

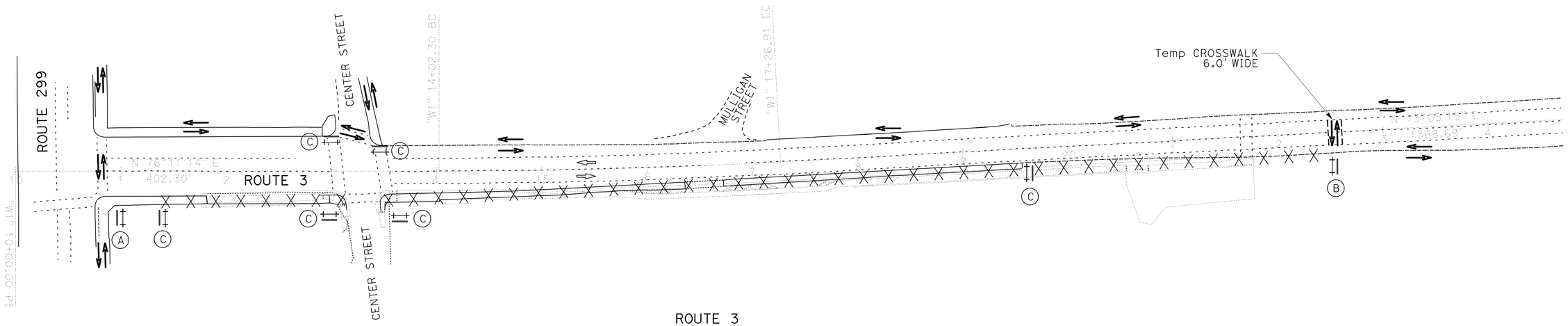

ROUTE 3
PEDESTRIAN DETOUR

DETOUR SIGNS

SIGN No. ◯	CODE	PANEL SIZE (INCH)	REMARKS	No. (EA)
A	R9-11	24 x 12	"SIDEWALK CLOSED AHEAD" ← "CROSS HERE"	1
B	R9-11	24 x 12	"SIDEWALK CLOSED AHEAD" → "CROSS HERE"	1
C	R9-9	30 x 18	"SIDEWALK" "CLOSED"	6

APPROVED FOR DETOUR WORK ONLY

DETOUR PLAN

NO SCALE **DE-1**

REVISED BY | DATE REVISED
JAVED IQBAL | MIKE MOGEN
CALCULATED-DESIGNED BY | CHECKED BY
FUNCTIONAL SUPERVISOR
JULIE CASEY

STATE OF CALIFORNIA - DEPARTMENT OF TRANSPORTATION
Caltrans
DESIGN

P:\proj1\02\4E600_plans\pse\24e600mg001.dgn

LAST REVISION 02-05-15 | DATE PLOTTED => 11-MAR-2015 | TIME PLOTTED => 14:09

Dist	COUNTY	ROUTE	POST MILES TOTAL PROJECT	SHEET No.	TOTAL SHEETS
02	Tri	3	30.8/31.1	28	49

REGISTERED CIVIL ENGINEER 02-05-15 DATE

02-05-15
PLANS APPROVAL DATE

REGISTERED PROFESSIONAL ENGINEER MIKE MOGEN No. 67018 Exp. 09-30-16 CIVIL STATE OF CALIFORNIA

THE STATE OF CALIFORNIA OR ITS OFFICERS OR AGENTS SHALL NOT BE RESPONSIBLE FOR THE ACCURACY OR COMPLETENESS OF SCANNED COPIES OF THIS PLAN SHEET.

NOTES:

1. CALIFORNIA SIGN CODES ARE DESIGNATED BY (CA), OTHERWISE, FEDERAL MUTCD SIGN CODES ARE SHOWN.
2. EXACT SIGN LOCATIONS TO BE DETERMINED BY THE ENGINEER.

LEGEND:

- X-X — PAVEMENT DELINEATION STRIPE DETAIL No.
- LL — LIMIT LINE
- CW — 10' WIDE CROSSWALK
- STRIPE END/START LOCATION
- DIRECTION OF TRAFFIC
- TYPE IV ARROW
- RESET ROADSIDE SIGN (METAL POST)
- NEW ROADSIDE SIGN
- REMOVE SIGN PANEL
- REMOVE ROADSIDE SIGN
- RELOCATE ROADSIDE SIGN
- ROADSIDE SIGN (METAL POST)
- ROADSIDE SIGN (WOOD POST)
- Exist ROADSIDE SIGN

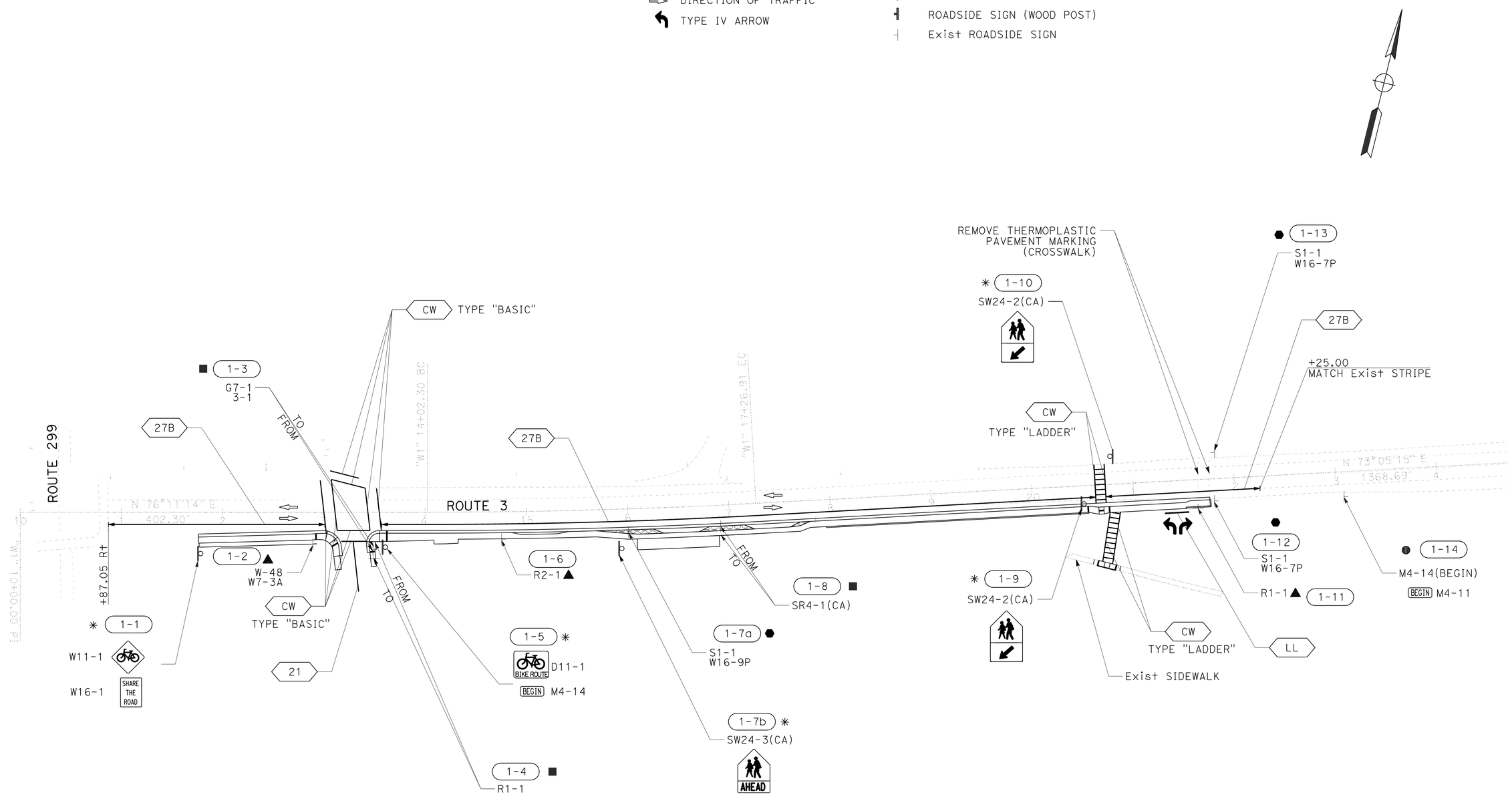

PAVEMENT DELINEATION AND SIGN PLAN

SCALE: 1" = 50'

PD-1

APPROVED FOR PAVEMENT DELINEATION AND SIGN WORK ONLY

CALCULATED-DESIGNED BY	JAVED IQBAL	REVISED BY
CHECKED BY	MIKE MOGEN	DATE REVISED

FUNCTIONAL SUPERVISOR: JULIE CASEY

STATE OF CALIFORNIA - DEPARTMENT OF TRANSPORTATION

Caltrans® DESIGN

P:\proj1\02\4E600_plans\pse\24e600na001.dgn

LAST REVISION 02-05-15 | DATE PLOTTED => 11-MAR-2015 | TIME PLOTTED => 14:09

Dist	COUNTY	ROUTE	POST MILES TOTAL PROJECT	SHEET No.	TOTAL SHEETS
02	Tri	3	30.8/31.1	29	49

Michael J. Mogen 02-05-15
REGISTERED CIVIL ENGINEER DATE

02-05-15
PLANS APPROVAL DATE

REGISTERED PROFESSIONAL ENGINEER
MIKE MOGEN
No. 67018
Exp. 09-30-16
CIVIL
STATE OF CALIFORNIA

THE STATE OF CALIFORNIA OR ITS OFFICERS OR AGENTS SHALL NOT BE RESPONSIBLE FOR THE ACCURACY OR COMPLETENESS OF SCANNED COPIES OF THIS PLAN SHEET.

TEMPORARY PAVEMENT MARKING (PAINT)(2 COAT)

APPROXIMATE LOCATION	TEMPORARY PAVEMENT MARKING (PAINT) (2 COAT)	NOTES
	SQFT	
"W1" 22+55.00	48	Temp CROSS WALK SR-3 (1'-0" YELLOW LINE)
TOTAL	48	

THERMOPLASTIC PAVEMENT MARKING

APPROXIMATE LOCATION	THERMOPLASTIC PAVEMENT MARKING	REMOVE THERMOPLASTIC PAVEMENT MARKING	NOTES
	SQFT	SQFT	
INTERSECTION OF SR-3/CENTER STREET	306		CROSSWALKS (1'-0" YELLOW LINE)
"W1" 20+70.00 AND 20+78.00	175		CROSSWALK (1'-0" YELLOW LINE) SCHOOL PARKING LOT
"W1" 20+80.00 AND 20+88.00 SR-3	133		CROSSWALK (1'-0" YELLOW LINE)
"W1" 21+31.00 TO 21+55.00 R†	24		LIMIT LINE (1'-0" WHITE LINE)
"W1" 21+34.00 R†, TYPE IV ARROW L†	15		SCHOOL DRIVEWAY
"W1" 21+48.00 R†, TYPE IV ARROW R†	15		SCHOOL DRIVEWAY
"W1" 21+70.00, CROSSWALK SR-3		151	Exist CROSSWALK (1'-0" YELLOW LINE)
"W1" 22+55.00, Temp CROSSWALK SR-3			Temp CROSSWALK (1'-0" YELLOW LINE)
TOTAL	668	151	

THERMOPLASTIC TRAFFIC STRIPE (SPRAYABLE)

STATION	LOCATION	DETAIL 27B	DETAIL 21
		LF	
"W1" 10+87 TO 13+01	NB/SB	214	
"W1" 13+56 TO 20+80	NB/SB	724	
"W1" 20+88 TO 222+25	NB/SB	137	
CENTER STREET EAST OF SR-3	EB/WB		100
SUBTOTAL		1075	100
TOTAL		1175	

PAVEMENT DELINEATION QUANTITIES

PDQ-1

REVISED BY | DATE REVISED
JAVED IQBAL | MIKE MOGEN
CALCULATED-DESIGNED BY | CHECKED BY
FUNCTIONAL SUPERVISOR: JULIE CASEY

STATE OF CALIFORNIA - DEPARTMENT OF TRANSPORTATION
Caltrans® DESIGN

P:\proj1\02\4E600_plans\pse\24e600nc001.dgn

LAST REVISION 02-10-15 | DATE PLOTTED => 11-MAR-2015 | TIME PLOTTED => 14:09

Dist	COUNTY	ROUTE	POST MILES TOTAL PROJECT	SHEET No.	TOTAL SHEETS
02	Tri	3	30.8/31.1	30	49

REGISTERED CIVIL ENGINEER 02-05-15 DATE

02-05-15
PLANS APPROVAL DATE

REGISTERED PROFESSIONAL ENGINEER MIKE MOGEN No. 67018 Exp. 09-30-16 CIVIL STATE OF CALIFORNIA

THE STATE OF CALIFORNIA OR ITS OFFICERS OR AGENTS SHALL NOT BE RESPONSIBLE FOR THE ACCURACY OR COMPLETENESS OF SCANNED COPIES OF THIS PLAN SHEET.

NOTES:

1. USE A 2¼" Sq TUBE x 30" LONG, 3/16" THICK ANCHOR FOR 2" POSTS.
   USE A 3" Sq TUBE x 3' LONG, 3/16" THICK ANCHOR FOR 2-1/2 " POSTS.
2. USE A 5/16" CORNER BOLT OR TWO DRIVE RIVETS TO FASTEN ASSEMBLED SIGN AND POST INTO ANCHOR. INSTALL CORNER BOLT OR DRIVE RIVETS INTO THE SIDES FACING TRAFFIC.
3. REMOVE EXISTING AC OR PCC, DRIVE ANCHOR SLEEVE INTO SOIL AND RECAP WITH LIKE MATERIAL, MATCHING EXISTING THICKNESS.
4. 2" POSTS ARE TO BE 1/8" THICK, PERFORATIONS OF 7/16" IN DIAMETER ARE 1" ON CENTER ON ALL SIDES, LENGTHS ARE 10' AND 12'.
5. 2-1/2" POSTS ARE TO BE 1/8" THICK, PERFORATIONS OF 7/16" IN DIAMETER ARE 1" ON CENTER ON ALL SIDES, 2-1/2" POSTS ARE 12' AND 14' IN LENGTH.
6. FOR DETAILS NOT SHOWN, REFER TO THE STANDARD PLANS.
7. 2-1/2" POSTS SHALL BE USED IN SIDEWALK AND HIGH PEDESTRIAN USE PLACEMENTS.
8. ALL ANCHOR SLEEVES SHALL BE EMBEDDED IN PCC, EXCEPT FOR INSTALLATIONS IN PAVEMENTS OR SIDEWALKS.

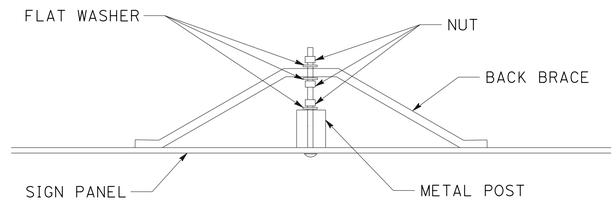

BACK BRACE MOUNTING DETAIL

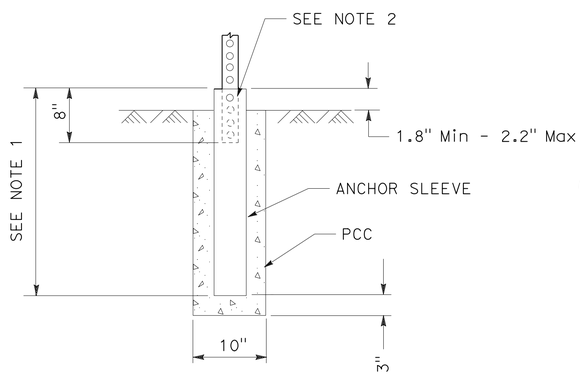

INSTALLATION IN SOIL (PCC)
(SEE NOTE 8)

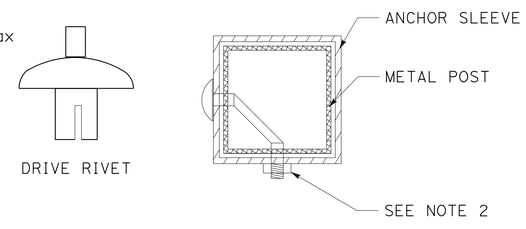

FASTENER DETAILS

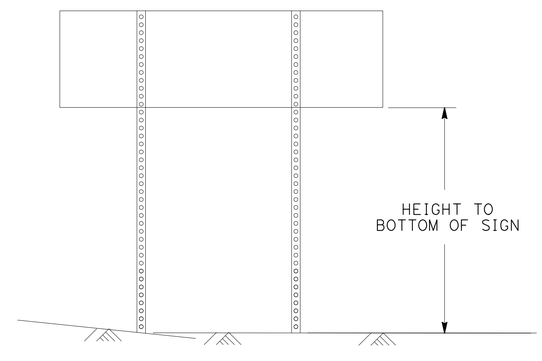

TWO POSTS INSTALLATION
(POST SIZE, SEE CHART BELOW)

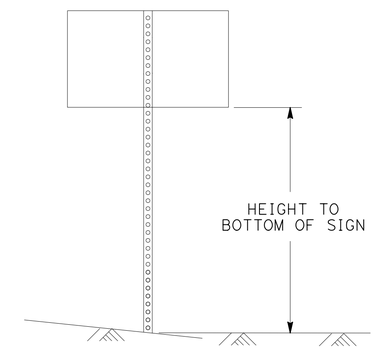

SINGLE POST INSTALLATION
(POST SIZE, SEE CHART BELOW)

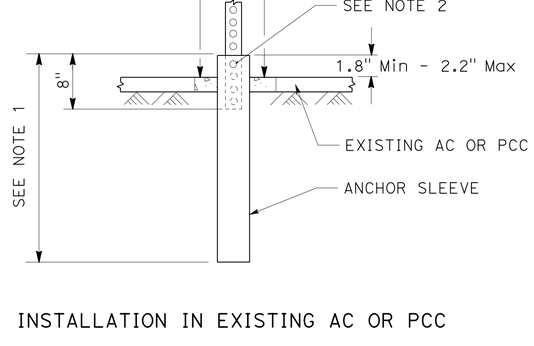

INSTALLATION IN EXISTING AC OR PCC

Max Sq Ft OF SIGN

POST SIZE	60"	72"	84"	96"	108"	120"
2"	18	16	14	12	10	8
2.5"	35	32	28	24	21	21

HEIGHT TO BOTTOM OF SIGN
DOUBLE POST GROUND SIGNS
70 MPH WIND SPEED

Max Sq Ft OF SIGN

POST SIZE	60"	72"	84"	96"	108"	120"
2"	10.5	10	8.7	7.4	6.2	5
2.5"	16	16	16	16	12	12

HEIGHT TO BOTTOM OF SIGN
SINGLE POST GROUND SIGNS
70 MPH WIND SPEED

METAL SIGN POST DETAIL

METAL SIGN POST INSTALLATION DETAILS

SIGN DETAILS
NO SCALE
SD-1

REVISED BY | DATE REVISED
JAVED IQBAL | MIKE MOGEN
CALCULATED-DESIGNED BY | CHECKED BY
FUNCTIONAL SUPERVISOR
JULIE CASEY

STATE OF CALIFORNIA - DEPARTMENT OF TRANSPORTATION
Caltrans
DESIGN

P:\proj1\02\4E600_plans\pse\24e600b001.dgn

LAST REVISION 02-05-15 | DATE PLOTTED => 11-MAR-2015 | TIME PLOTTED => 14:09

Dist	COUNTY	ROUTE	POST MILES TOTAL PROJECT	SHEET No.	TOTAL SHEETS
02	Tri	3	30.8/31.1	31	49

REGISTERED CIVIL ENGINEER 02-05-15 DATE

02-05-15
PLANS APPROVAL DATE

REGISTERED PROFESSIONAL ENGINEER MIKE MOGEN No. 67018 Exp. 09-30-16 CIVIL STATE OF CALIFORNIA

THE STATE OF CALIFORNIA OR ITS OFFICERS OR AGENTS SHALL NOT BE RESPONSIBLE FOR THE ACCURACY OR COMPLETENESS OF SCANNED COPIES OF THIS PLAN SHEET.

NOTES:

1. EXACT LOCATION AND POSITION OF ROADSIDE SIGN TO BE DETERMINED BY THE ENGINEER.
2. POST SIZE AND LENGTH GIVEN ARE APPROXIMATE.
3. CALIFORNIA CODES ARE DESIGNATED BY (CA), OTHERWISE FEDERAL CODES ARE SHOWN.
4. (N) NOT A SEPARATE PAY ITEM, FOR INFORMATION ONLY.
5. "C" DIM = VERTICAL CLEARANCE EP TO BOTTOM OF SIGN PANEL.
6. POST DIMENSIONS CALCULATED ASSUMING CLOSEST EDGE OF SIGN IS 3' FROM EP OR BACK OF GUARD RAIL POST.

ROADSIDE SIGNS (Exist)

SIGN No. (#-##)	SIGN CODE	PANEL SIZE In x In	REMOVE ROADSIDE SIGN (WOOD POST)	RELOCATE ROADSIDE SIGN	RESET ROADSIDE SIGN	REMOVE SIGN PANEL	TREATED WOOD WASTE	ROADSIDE SIGN ONE POST	ROADSIDE SIGN TWO POST	(N) "C" DIM	(N) POST SIZE AND LENGTH (LF) METAL POST (NEW) 2½" x 2½"	Exist WOOD POST 4" x 4"	Exist WOOD POST 4" x 6"	Exist WOOD POST 6" x 6"	Exist WOOD POST 6" x 8"	COMMENTS
			EA	EA	EA	EA	LB	EA	EA	FT						
1-2	W-48	24 x 36			1		77				10.7		13.5			REPLACE WOOD POST WITH METAL POST
	W7-3A	24 x 12														
1-3	G7-1	24 x 12		1			38				8.7	10				REPLACE WOOD POST WITH METAL POST
	3-1	18 x 24														
1-4	R1-1	30 x 30		1			60				10.2		10.5			REPLACE WOOD POST WITH METAL POST
1-6	R2-1	36 x 48			1		72				10		12.5			REPLACE WOOD POST WITH METAL POST
1-7a	S1-1	36 x 36	1				48					12.5				
	W16-9P	24 x 12														
1-8	SR4-1(CA)	24 x 48		1			69				10		12.0			REPLACE WOOD POST WITH METAL POST
1-11	R1-1	30 x 30			1		63				10		11.0			REPLACE WOOD POST WITH METAL POST
1-12	S1-1	36 x 36	1				72						12.5			
	W16-7P	24 x 12														
1-13	S1-1	36 x 36	1				72						12.5			REPLACE WOOD POST WITH METAL POST
	W16-7P	24 x 12														
1-14	M4-14	12 x 6				1							11.5			REMOVE PLAQUE "BEGIN" (M4-14) ONLY
	D11-1	24 x 18														
TOTAL			3	3	3	1	571									

SIGN QUANTITIES

SQ-1

REVISED BY | DATE REVISED
JAVED IQBAL | MIKE MOGEN
CALCULATED-DESIGNED BY | CHECKED BY
FUNCTIONAL SUPERVISOR
JULIE CASEY

STATE OF CALIFORNIA - DEPARTMENT OF TRANSPORTATION
Caltrans
DESIGN

P:\proj\02\4E600_plans\pse\24e600oc001.dgn

LAST REVISION 02-10-15 | DATE PLOTTED => 11-MAR-2015 | TIME PLOTTED => 14:09

Dist	COUNTY	ROUTE	POST MILES TOTAL PROJECT	SHEET No.	TOTAL SHEETS
02	Tri	3	30.8/31.1	32	49

Michael J Mogen 02-05-15
REGISTERED CIVIL ENGINEER DATE

02-05-15
PLANS APPROVAL DATE

REGISTERED PROFESSIONAL ENGINEER MIKE MOGEN No. 67018 Exp. 09-30-16 CIVIL STATE OF CALIFORNIA

THE STATE OF CALIFORNIA OR ITS OFFICERS OR AGENTS SHALL NOT BE RESPONSIBLE FOR THE ACCURACY OR COMPLETENESS OF SCANNED COPIES OF THIS PLAN SHEET.

NOTES:

1. (N) - NOT A SEPARATE PAY ITEM, FOR INFORMATION ONLY

ABBREVIATIONS

L	LENGTH OF SIGN
D	DEPTH OF SIGN
FY	FLUORESCENT YELLOW

ROADSIDE SIGNS (NEW)

SIGN No. (#-##)	SIGN CODE	PANEL SIZE In x In	REMOVE ROADSIDE SIGN (EA)	TREATED WOOD WASTE (LBS)	ROADSIDE SIGN ONE POST (EA)	ROADSIDE SIGN TWO POST (EA)	(N) "C" DIM (FT)	(N) POST SIZE AND LENGTH (LF) METAL POST 2½" x 2½"	WOOD POST 4" x 4"	WOOD POST 4" x 6"	WOOD POST 6" x 6"	WOOD POST 6" x 8"	COMMENTS
1-1	W11-1	24 x 24			1			11.7					
	W16.1	18 x 24											
1-5	D11-1	24 x 18			1			9.7					
	M4-14	12 x 6											
1-7b	SW24-3(CA)	36 x 48			1			11.7					
1-9	SW24-2(CA)	36 x 48			1			11.7					
1-10	SW24-2(CA)	36 x 48			1			11.7					
		TOTAL			5								

ROADSIDE SIGN PANEL QUANTITIES

SIGN No. (#-##)	SIGN CODE	SIGN MESSAGE/ DESCRIPTION	SIGN SIZE L x D (In x In)	SINGLE FACED	SIGN FACING MATERIAL: BACKGROUND SHEETING COLOR	BACKGROUND RETROREFLECTIVE ASTM TYPE	LEGEND SHEETING COLOR	LEGEND RETROREFLECTIVE ASTM TYPE	PROTECTIVE FILM STANDARD	PROTECTIVE FILM PREMIUM	FURNISH SINGLE SHEET ALUMINUM SIGN FOR RETROREFLECTIVE SHEETING (TYPE XI): UNFRAMED 0.063"	UNFRAMED 0.080"	FRAMED 0.063"	FRAMED 0.080"	RETROREFLECTIVE SHEETING (TYPE XI)
1-1	W11-1	BICYCLE (SYMBOL)	24 x 24	X	FY	XI	BLACK			X		4.0			4.0
	W16.1	SHARE THE ROAD	18 x 24	X	FY	XI	BLACK			X		3.0			3.0
1-5	D11-1	BICYCLE (SYMBOL), BIKE ROUTE	24 x 18	X	FY	XI	BLACK			X		3.0			3.0
	M4-14	BEGIN	12 x 6	X	FY	XI	BLACK			X		0.5			0.5
1-7b	SW24-3(CA)	SCHOOL (SYMBOL), AHEAD	36 x 48	X	FY	XI	BLACK			X		12.0			12.0
1-9	SW24-2(CA)	SCHOOL CROSSWALK WARNING ASSEMBLY	36 x 48	X	FY	XI	BLACK			X		12.0			12.0
1-10	SW24-2(CA)	SCHOOL CROSSWALK WARNING ASSEMBLY	36 x 48	X	FY	XI	BLACK			X		12.0			12.0
										GRAND TOTAL (SQFT)		46.5			46.5

SIGN QUANTITIES
SQ-2

REVISED BY | DATE REVISED
JAVED IQBAL | MIKE MOGEN
CALCULATED-DESIGNED BY | CHECKED BY
FUNCTIONAL SUPERVISOR: JULIE CASEY
STATE OF CALIFORNIA - DEPARTMENT OF TRANSPORTATION
Caltrans® DESIGN
P:\proj1\02\4E600_plans\pse\24e600oc002.dgn

LAST REVISION 02-10-15 | DATE PLOTTED => 11-MAR-2015 | TIME PLOTTED => 14:09

Dist	COUNTY	ROUTE	POST MILES TOTAL PROJECT	SHEET No.	TOTAL SHEETS
02	Tri	3	30.8/31.1	33	49

Michael J. Mogen 02-05-15
REGISTERED CIVIL ENGINEER DATE

02-05-15
PLANS APPROVAL DATE

REGISTERED PROFESSIONAL ENGINEER MIKE MOGEN No. 67018 Exp. 09-30-16 CIVIL STATE OF CALIFORNIA

THE STATE OF CALIFORNIA OR ITS OFFICERS OR AGENTS SHALL NOT BE RESPONSIBLE FOR THE ACCURACY OR COMPLETENESS OF SCANNED COPIES OF THIS PLAN SHEET.

ADJUST UTILITY COVER

STATION	ADJUST VALVE BOX	ADJUST WATER METER BOX TO GRADE	ADJUST MANHOLE TO GRADE	ADJUST UTILITY COVER TO GRADE
	EA	EA	EA	EA
"W1" 11+82.00 R+				1
"W1" 11+78.00 R+		1		
"W1" 13+01.00 R+	1			
"W1" 13+15.97 R+	2			
"W1" 13+33.90 R+			1	
"W1" 15+27.00 R+		1		
TOTAL	3	2	1	1

REMOVE CONCRETE

STATION	REMOVE Conc SIDEWALK	REMOVE Conc CURB AND GUTTER	REMOVE Conc (Misc)
	SQYD	LF	CY
"W1" 11+76.00 TO 11+82.50 R+	5	6.5	
"W1" 12+89.41 TO 13+18.18 R+		35.0	
"W1" 12+98.09 TO 13+18.18 R+	11		
"W1" 13+42.95 TO 16+35.17′ R+	187		
"W1" 13+42.95 TO 13+58.50 R+		27.5	
"W1" 13+58.50 TO 16+35.17 R+		277.4	
"W1" 16+71.88 TO 19+55.44 R+	168	283.6	
"W1" 18+02.63 TO 18+06.63 R+ STAIR CASE Conc			1.4
"W1" 20+63.00 TO 20+82.00 R+	9		
TOTAL	380.0	630	1.4

FENCE AND RAILING

STATION	REMOVE CHAIN LINK FENCE	RECONSTRUCT CHAIN LINK FENCE	REMOVE METAL RAILING	CHAIN LINK FENCE (TYPE CL-4)	4′ CHAIN LINK GATE (TYPE CL-4)	PIPE HANDRAILING
	LF	LF	LF	LF	EA	LF
"W1" 13+50.00, 39.3′ R+ TO 13+50.52, 28.5′ R+						10.7
"W1" 13+50.00, 28.5′ R+ TO 14+03.00, 28.4′ R+						52.5
"W1" 16+05.00, 24.2′ R+ TO 16+05.00, 40.2′ R+	16					
"W1" 17+95.00, 27.1′ R+ TO 18+02.63, 27.1′ R+				7.5		
"W1" 18+02.63, 27.1′ R+ TO 18+04.42, 39.7′ R+				12.5		
"W1" 18+02.63, 31.1′ R+ TO 18+06.63, 31.1′ R+					1	
"W1" 18+02.63 R+ (STAIR CASE RAILING)			15			
"W1" 18+06.63 R+ (STAIR CASE RAILING)			15			
"W1" 18+06.63, 27.1′ R+ TO 18+07.97, 33.2′ R+				6.0		
"W1" 18+06.63, 27.1′ R+ TO 19+92.70, 27.4′ R+		186				
"W1" 19+92.70, 27.1′ R+ TO 20+75.00, 28.5′ R+				83		
"W1" 21+51.00, 27.1′ R+ TO 21+75.00, 27.1′ R+						24.5
"W1" 21+75.00, 27.1′ R+ TO 21+75.00, 22.1′ R+						6.5
TOTAL	16	186	30	109	1	94.2

RETAINING WALL

STATION	STRUCTURE EXCAVATION (RETAINING WALL)	STRUCTURE BACKFILL (RETAINING WALL)	STRUCTURAL CONCRETE, RETAINING WALL	BAR REINFORCING STEEL	REMOVE RETAINING WALL	PREPARE AND STAIN CONCRETE	STONE VENEER	ANTI-GRAFFITI COATING	DESCRIPTION
	CY	CY	CY	LB	LF	SQFT	SQFT	SQFT	
"W1" 16+08.85, 21.8′ R+ TO 16+08.85, 33.8′ R+					12				
"W1" 16+89.50, 20.0′ R+ TO 16+89.50, 33.9′ R+					13.8				
"W1" 18+06.63, 19.5′ R+ TO 19+55.40, 19.5′ R+					148.8				
"WALL1" 17+95.00 TO 20+55.00	386	250	150	18,200			1300	1300	RETAINING WALL TYPE-1 (CASE 2)
"WALL2" 21+51.00 TO 21+75.00	16	16	10	800		40		40	RETAINING WALL TYPE-5 (CASE 1)
"WALL2" 21+75.00 TO 21+75.00	2	2	1	100		10		10	RETURN WALL TYPE D
TOTAL	404	268	161	19,100	174.6	50	1300	1350	

SUMMARY OF QUANTITIES
Q-1

REVISED BY	DATE REVISED	CALCULATED-DESIGNED BY	CHECKED BY	FUNCTIONAL SUPERVISOR
JAVED IQBAL	MIKE MOGEN			JULIE CASEY

STATE OF CALIFORNIA - DEPARTMENT OF TRANSPORTATION
Caltrans DESIGN

P:\proj1\02\4E600_plans\pse\24e600pa001.dgn

LAST REVISION 02-10-15 | DATE PLOTTED => 11-MAR-2015 | TIME PLOTTED => 14:09

Dist	COUNTY	ROUTE	POST MILES TOTAL PROJECT	SHEET No.	TOTAL SHEETS
02	Tri	3	30.8/31.1	34	49

Michael J. Mogen 02-05-15
REGISTERED CIVIL ENGINEER DATE

02-05-15
PLANS APPROVAL DATE

REGISTERED PROFESSIONAL ENGINEER MIKE MOGEN No. 67018 Exp. 09-30-16 CIVIL STATE OF CALIFORNIA

THE STATE OF CALIFORNIA OR ITS OFFICERS OR AGENTS SHALL NOT BE RESPONSIBLE FOR THE ACCURACY OR COMPLETENESS OF SCANNED COPIES OF THIS PLAN SHEET.

NOTES:

1. (N) - NOT A SEPARATE PAY ITEM, FOR INFORMATION ONLY

MINOR CONCRETE (MISCELLANEOUS CONSTRUCTION)

STATION/LOCATION	CURB (TYPE A2-6)	CURB (TYPE B1-4)	CURB (MODIFIED TYPE E)	CONCRETE VALLEY GUTTER	SIDEWALK	DRIVEWAY APRON
	CY	CY	CY	CY	CY	CY
"W1" 11+76.00 TO 12+87.71 R†			8.4		12.8	
"W1" 12+87.71 TO 13+18.39 R†	2.5				2.4	
"W1" 13+42.92 TO 20+55.00 R†	43.1				48.1	
"W1" 20+55.00 TO 21+51.00 R†				7.1	10.9	
"W1" 21+51.00 TO 21+75.00 R†	1.4				1.6	
"W1" 20+60.06 TO 20+78.19 R†		0.5				
DRIVEWAY 2					4.5	1.7
DRIVEWAY 3					4.6	4.2
DRIVEWAY 4						4.2
SUBTOTAL	47.0	0.5	8.4	7.1	84.9	10.1
TOTAL	158					

DETECTABLE WARNING SURFACE

LOCATION	AREA	COMMENT
	SQFT	
DETAIL 1	30	ADA RAMP AT SOUTH WEST CORNER OF CENTER STREET
DETAIL 2	55	ADA RAMP AT SOUTH EAST CORNER OF CENTER STREET
DETAIL 3	15	ADA RAMP AT ELEMENTARY SCHOOL DRIVEWAY
DETAIL 4	15	ADA RAMP IN FRONT OF ELEMENTARY SCHOOL BUILDING
TOTAL	115	

ROADWAY ITEMS

STATION	LOCATION	ROADWAY EXCAVATION	(N) EMBANKMENT	CLASS 2 AGGREGATE BASE	HOT MIX ASPHALT (TYPE A)	PLACE HMA (Misc AREA)	ROCK BLANKET	COMMENTS
	R†/L†	CY	CY	CY	TON	SQYD	SQFT	
"W1" 11+76.00 TO 22+00.00	R†	720	50	132	350			
"W1" 11+76.00 TO 12+92.71	R†				15	50		HMA CONFORM AT BACK OF SIDEWALK
"W1" 13+15.00	R†				2	10		HMA RAMP AT END OF SIDEWALK ON CENTER STREET
"W1" 13+45.00	R†				2	12		HMA RAMP AT END OF SIDEWALK ON CENTER STREET
"W1" 15+68.16 TO 16+35.00	R†						190	DRIVEWAY 3
"W1" 16+70.00 TO 17+24.50	R†				20		200	BETWEEN DRIVEWAY-3 AND DRIVEWAY-4
"W1" 17+59.50 TO 17+79.50	R†						38	DRIVEWAY 4
"W1" 20+55.00 TO 21+75.00	R†			85	85			ELEMENTARY SCHOOL PARKING LOT
FROM DRAINAGE QUANTITIES					1.6	9.8		SEE SHEET DQ-1
	TOTAL	720	50	217	475.6	81.8	428	

SUMMARY OF QUANTITIES
Q-2

REVISED BY	DATE REVISED
JAVED IQBAL	MIKE MOGEN
CALCULATED-DESIGNED BY	CHECKED BY
FUNCTIONAL SUPERVISOR	JULIE CASEY

STATE OF CALIFORNIA - DEPARTMENT OF TRANSPORTATION
Caltrans® DESIGN

P:\proj1\02\4E600_plans\pse\24e600pa002.dgn

LAST REVISION 02-10-15 | DATE PLOTTED => 11-MAR-2015 | TIME PLOTTED => 14:09

Dist	COUNTY	ROUTE	POST MILES TOTAL PROJECT	SHEET No.	TOTAL SHEETS
02	Tri	03	30.8/31.1	35	49

LICENSED LANDSCAPE ARCHITECT

02-05-15
PLANS APPROVAL DATE

LICENSED LANDSCAPE ARCHITECT
RONALD MARTIN FLORY
#4981
Signature
09-30-16
Renewal Date
02-05-15
Date
STATE OF CALIFORNIA

THE STATE OF CALIFORNIA OR ITS OFFICERS OR AGENTS SHALL NOT BE RESPONSIBLE FOR THE ACCURACY OR COMPLETENESS OF SCANNED COPIES OF THIS PLAN SHEET.

NOTE:

1. FOR ACCURATE RIGHT OF WAY DATA, CONTACT RIGHT OF WAY ENGINEERING AT THE DISTRICT OFFICE.

LEGEND:

LIMITS OF EROSION CONTROL TYPE 1

TCE

EROSION CONTROL (TYPE 1)

SEQUENCE	ITEM	MATERIAL		APPLICATION RATE	QUANTITY	COMMENTS
		DESCRIPTION	TYPE			
STEP 1	COMPOST	MEDIUM TEXTURE	TYPE 1	270 CY/SQFT	2530 SQFT	14.6 CY (APPLY AT 2" DEEP)
STEP 2	EROSION CONTROL (DRY SEED) (SQFT)	SEED	MIX 1	56 LB/ACRE	2530 SQFT	SPREAD SEED EVENLY AND RAKE INTO COMPOST ½" DEEP

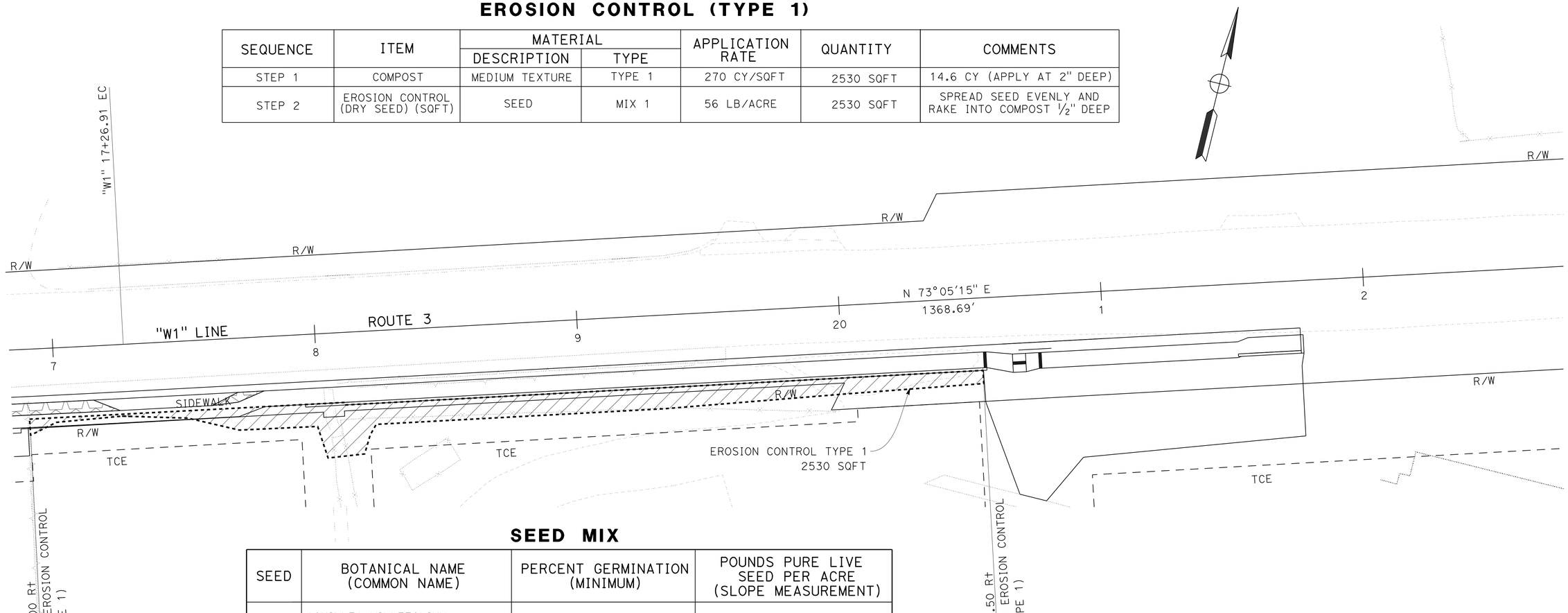

SEED MIX

SEED	BOTANICAL NAME (COMMON NAME)	PERCENT GERMINATION (MINIMUM)	POUNDS PURE LIVE SEED PER ACRE (SLOPE MEASUREMENT)
MIX 1	ACHILLEA MILLEFOLIUM (WHITE YARROW)	80	2
	BROMUS CARINATUS (CALIFORNIA BROME)	80	20
	ESCHSCHOLZIA CALIFORNICA (CALIFORNIA POPPY)	80	10
	FESTUCA CALIFORNICA (CALIFORNIA FESCUE)	70	1
	LUPINUS NANUS (INOCULATED) (SKY LUPINE)	80	15
	VULPIA MICROSTACHYS (SMALL FESCUE)	90	8
		TOTAL	56

EROSION CONTROL PLAN

SCALE: 1" = 20'

EC-1

APPROVED FOR EROSION CONTROL WORK ONLY

REVISED BY | DATE REVISED
ROBIN SOLARI | RON FLORY
CALCULATED-DESIGNED BY | CHECKED BY
SENIOR LANDSCAPE ARCHITECT
RON FLORY

STATE OF CALIFORNIA - DEPARTMENT OF TRANSPORTATION
Caltrans® LANDSCAPE ARCHITECTURE

P:\proj1\02\4E600\ plans\pse\24e600te001.dgn

LAST REVISION 02-10-15
DATE PLOTTED => 11-MAR-2015
TIME PLOTTED => 14:09

M

Maint	MAINTENANCE
Max	MAXIMUM
MB	METAL BEAM
MBB	METAL BEAM BARRIER
MBGR	METAL BEAM GUARD RAILING
Med	MEDIAN
MGS	MIDWEST GUARDRAIL SYSTEM
MH	MANHOLE
Min	MINIMUM
Misc	MISCELLANEOUS
Misc I & S	MISCELLANEOUS IRON AND STEEL
Mkr	MARKER
Mod	MODIFIED, MODIFY
Mon	MONUMENT
MP	METAL PLATE
MPGR	METAL PLATE GUARD RAILING
MR	MOVEMENT RATING
MSE	MECHANICALLY STABILIZED EMBANKMENT
Mt	MOUNTAIN, MOUNT
Mtl	MATERIAL
MVP	MAINTENANCE VEHICLE PULLOUT

N

N	NORTH
NB	NORTHBOUND
No.	NUMBER (MUST HAVE PERIOD)
Nos.	NUMBERS (MUST HAVE PERIOD)
NPS	NOMINAL PIPE SIZE
NS	NEAR SIDE
NSP	NEW STANDARD PLAN
NTS	NOT TO SCALE

O

Oblr	OBLITERATE
OC	OVERCROSSING
OD	OUTSIDE DIAMETER
OF	OUTSIDE FACE
OG	ORIGINAL GROUND
OGAC	OPEN GRADED ASPHALT CONCRETE
OGFC	OPEN GRADED FRICTION COURSE
OH	OVERHEAD
OHWM	ORDINARY HIGH WATER MARK
O-O	OUT TO OUT
Opp	OPPOSITE
OSD	OVERSIDE DRAIN

P

P	PAGE
PAP	PERFORATED ALUMINUM PIPE
PB	PULL BOX
PC	POINT OF CURVATURE, PRECAST
PCC	POINT OF COMPOUND CURVE, PORTLAND CEMENT CONCRETE
PCMS	PORTABLE CHANGEABLE MESSAGE SIGN
PCP	PERFORATED CONCRETE PIPE, PRESTRESSED CONCRETE PIPE
PCVC	POINT OF COMPOUND VERTICAL CURVE
PEC	PERMIT TO ENTER AND CONSTRUCT
Ped	PEDESTRIAN
Ped OC	PEDESTRIAN OVERCROSSING
Ped UC	PEDESTRIAN UNDERCROSSING
Perm Mtl	PERMEABLE MATERIAL

P continued

PG	PROFILE GRADE
PI	POINT OF INTERSECTION
PJP	PARTIAL JOINT PENETRATION
Pkwy	PARKWAY
₱,PL	PLATE
P/L	PROPERTY LINE
PM	POST MILE, TIME FROM NOON TO MIDNIGHT
PN	PAVING NOTCH
POC	POINT OF HORIZONTAL CURVE
POT	POINT OF TANGENT
POVC	POINT OF VERTICAL CURVE
PP	PIPE PILE, PLASTIC PIPE, POWER POLE
PPL	PREFORMED PERMEABLE LINER
PPP	PERFORATED PLASTIC PIPE
PRC	POINT OF REVERSE CURVE
PRF	PAVEMENT REINFORCING FABRIC
PRVC	POINT OF REVERSE VERTICAL CURVE
PS&E	PLANS, SPECIFICATIONS AND ESTIMATES
PS, P/S	PRESTRESSED
PSP	PERFORATED STEEL PIPE
PT	POINT OF TANGENCY
PVC	POLYVINYL CHLORIDE
Pvmt	PAVEMENT

Q

Qty	QUANTITY

R

R	RADIUS
R & D	REMOVE AND DISPOSE
R & S	REMOVE AND SALVAGE
R/C	RATE OF CHANGE
RCA	REINFORCED CONCRETE ARCH
RCB	REINFORCED CONCRETE BOX
RCP	REINFORCED CONCRETE PIPE
RCPA	REINFORCED CONCRETE PIPE ARCH
Rd	ROAD
Reinf	REINFORCED, REINFORCEMENT, REINFORCING
Rel	RELOCATE
Repl	REPLACEMENT
Ret	RETAINING
Rev	REVISED, REVISION
Rdwy	ROADWAY
RHMA	RUBBERIZED HOT MIX ASPHALT
Riv	RIVER
RM	ROAD-MIXED
RP	RADIUS POINT, REFERENCE POINT
RR	RAILROAD
RSP	ROCK SLOPE PROTECTION, REVISED STANDARD PLAN
Rt	RIGHT
Rte	ROUTE
RW	REDWOOD, RETAINING WALL
R/W	RIGHT OF WAY
Rwy	RAILWAY

S

S	SOUTH, SUPPLEMENT
SAE	STRUCTURE APPROACH EMBANKMENT
Salv	SALVAGE
SAPP	STRUCTURAL ALUMINUM PLATE PIPE
SB	SOUTHBOUND
SC	SAND CUSHION
SCSP	SLOTTED CORRUGATED STEEL PIPE
SD	STORM DRAIN
Sec	SECOND, SECTION
Sep	SEPARATION
SG	SUBGRADE
Shld	SHOULDER
Sht	SHEET
Sim	SIMILAR
₺	STATION LINE
SM	SELECTED MATERIAL
Spec	SPECIAL, SPECIFICATIONS
SPP	SLOTTED PLASTIC PIPE
SS	SLOPE STAKE
SSBM	STRAP AND SADDLE BRACKET METHOD
SSD	STRUCTURAL SECTION DRAIN
SSPA	STRUCTURAL STEEL PLATE ARCH
SSPP	STRUCTURAL STEEL PLATE PIPE
SSPPA	STRUCTURAL STEEL PLATE PIPE ARCH
SSRP	STEEL SPIRAL RIB PIPE
St	STREET
Sta	STATION
STBB	SINGLE THRIE BEAM BARRIER
Std	STANDARD
Str	STRUCTURE
Surf	SURFACING
SW	SIDEWALK, SOUND WALL
Swr	SEWER
Sym	SYMMETRICAL
S4S	SURFACE 4 SIDES

T

T	SEMI-TANGENT
Tan	TANGENT
TBB	THRIE BEAM BARRIER
Tbr	TIMBER
TC	TOP OF CURB
TCB	TRAFFIC CONTROL BOX
TCE	TEMPORARY CONSTRUCTION EASEMENT
Tel	TELEPHONE
Temp	TEMPORARY
TG	TOP OF GRADE
Tot	TOTAL
TP	TELEPHONE POLE
TPB	TREATED PERMEABLE BASE
TPM	TREATED PERMEABLE MATERIAL
Trans	TRANSITION

T continued

TS	TRANSVERSE, TRAFFIC SIGNAL, TUBULAR STEEL
Typ	TYPICAL

U

UC	UNDERCROSSING
UD	UNDERDRAIN
UG	UNDERGROUND
UON	UNLESS OTHERWISE NOTED
UP	UNDERPASS

V

V	VALVE, DESIGN SPEED
Var	VARIABLE, VARIES
VC	VERTICAL CURVE
VCP	VITRIFIED CLAY PIPE
Vert	VERTICAL
Via	VIADUCT
Vol	VOLUME

W

W	WEST, WIDTH
WB	WESTBOUND
WH	WEEP HOLE
WM	WIRE MESH
WS	WATER SURFACE
WSP	WELDED STEEL PIPE
Wt	WEIGHT
WV	WATER VALVE
WW	WINGWALL
WWLOL	WINGWALL LAYOUT LINE

X

X Sec	CROSS SECTION
Xing	CROSSING

Y

Yr	YEAR
Yrs	YEARS

Dist	COUNTY	ROUTE	POST MILES TOTAL PROJECT	SHEET No.	TOTAL SHEETS
02	Tri	3	30.8/31.3	36	49

Grace M. Tsushima
REGISTERED CIVIL ENGINEER

July 19, 2013
PLANS APPROVAL DATE

REGISTERED PROFESSIONAL ENGINEER Grace M. Tsushima No. C49814 Exp. 9-30-14 CIVIL STATE OF CALIFORNIA

THE STATE OF CALIFORNIA OR ITS OFFICERS OR AGENTS SHALL NOT BE RESPONSIBLE FOR THE ACCURACY OR COMPLETENESS OF SCANNED COPIES OF THIS PLAN SHEET.

TO ACCOMPANY PLANS DATED 02-05-15

UNIT OF MEASUREMENT SYMBOLS:

Some of the symbols used in the project plan quantity tables and in the Bid Item List are:

TABLE A

SYMBOL USED	DEFINITIONS
ACRE	ACRE
CF	CUBIC FOOT
CY	CUBIC YARD
EA	EACH
GAL	GALLON
LB	POUND
LF	LINEAR FOOT
SQFT	SQUARE FOOT
SQYD	SQUARE YARD
STA	100 FEET
TAB	TABLET
TON	2,000 POUNDS

Some of the symbols used in the plans other than in the project plan quantity tables are:

TABLE B

SYMBOL USED	DEFINITIONS
ksi	KIPS PER SQUARE INCH
ksf	KIPS PER SQUARE FOOT
psi	POUNDS PER SQUARE INCH
psf	POUNDS PER SQUARE FOOT
lb/ft^3, pcf	POUNDS PER CUBIC FOOT
tsf	TONS PER SQUARE FOOT
mph, MPH *	MILES PER HOUR
ø	NOMINAL DIAMETER
oz	OUNCE
lb	POUND
kip	1,000 POUNDS
cal	CALORIE
ft	FOOT OR FEET
gal	GALLON

* For use on a sign panel only

STATE OF CALIFORNIA
DEPARTMENT OF TRANSPORTATION

ABBREVIATIONS (SHEET 2 OF 2)

NO SCALE

RSP A10B DATED JULY 19, 2013 SUPERSEDES STANDARD PLAN A10B DATED MAY 20, 2011 - PAGE 2 OF THE STANDARD PLANS BOOK DATED 2010.

REVISED STANDARD PLAN RSP A10B

2010 REVISED STANDARD PLAN RSP A10B

DATE PLOTTED => 11-MAR-2015
TIME PLOTTED => 14:09

Dist	COUNTY	ROUTE	POST MILES TOTAL PROJECT	SHEET No.	TOTAL SHEETS
02	Tri	3	30.8/31.3	37	49

REGISTERED CIVIL ENGINEER

April 20, 2012
PLANS APPROVAL DATE

REGISTERED PROFESSIONAL ENGINEER
Roberta L. McLaughlin
No. C40375
Exp. 3-31-13
CIVIL
STATE OF CALIFORNIA

THE STATE OF CALIFORNIA OR ITS OFFICERS OR AGENTS SHALL NOT BE RESPONSIBLE FOR THE ACCURACY OR COMPLETENESS OF SCANNED COPIES OF THIS PLAN SHEET.

TO ACCOMPANY PLANS DATED 02-05-15

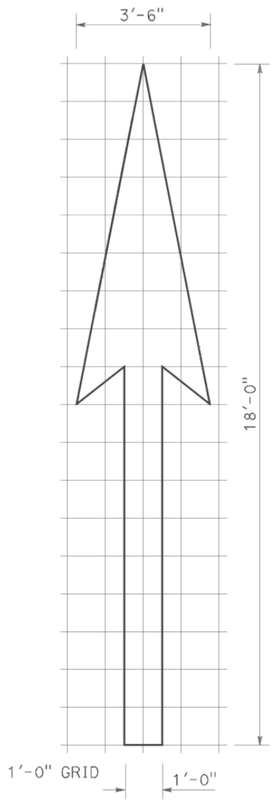

A=25 ft^2

TYPE I 18'-0" ARROW

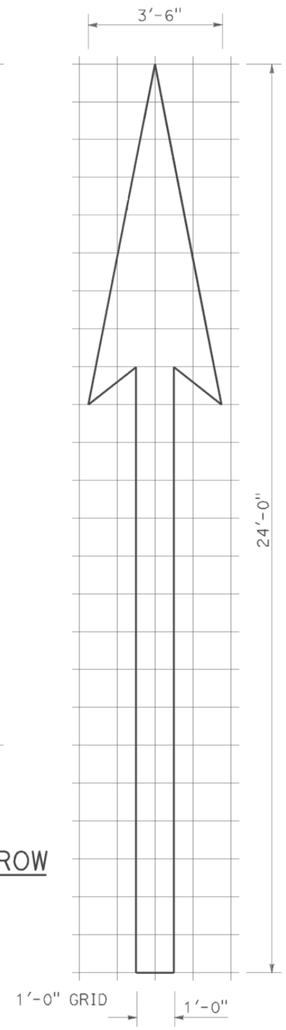

A=31 ft^2

TYPE I 24'-0" ARROW

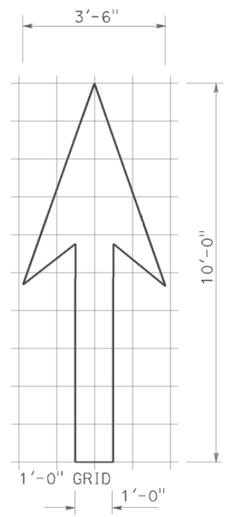

A=14 ft^2

TYPE I 10'-0" ARROW

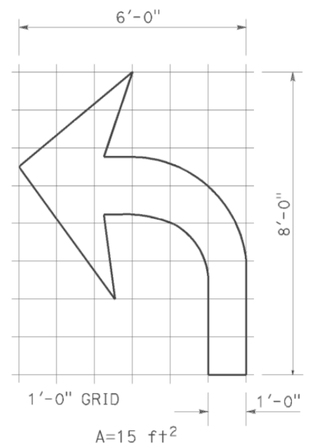

A=15 ft^2

TYPE IV (L) ARROW

(For Type IV (R) arrow, use mirror image)

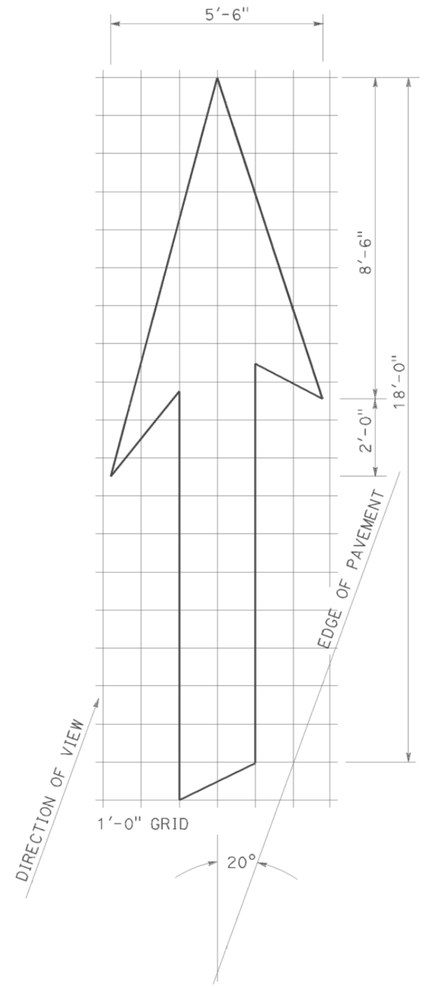

A=42 ft^2

TYPE VI ARROW

Right lane drop arrow
(For left lane, use mirror image)

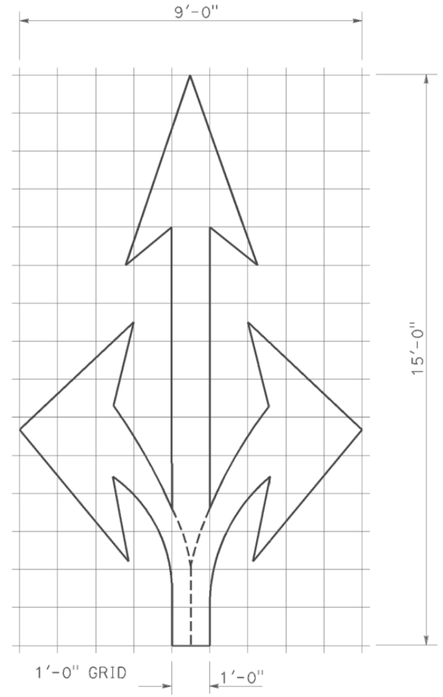

A=36 ft^2

TYPE VIII ARROW

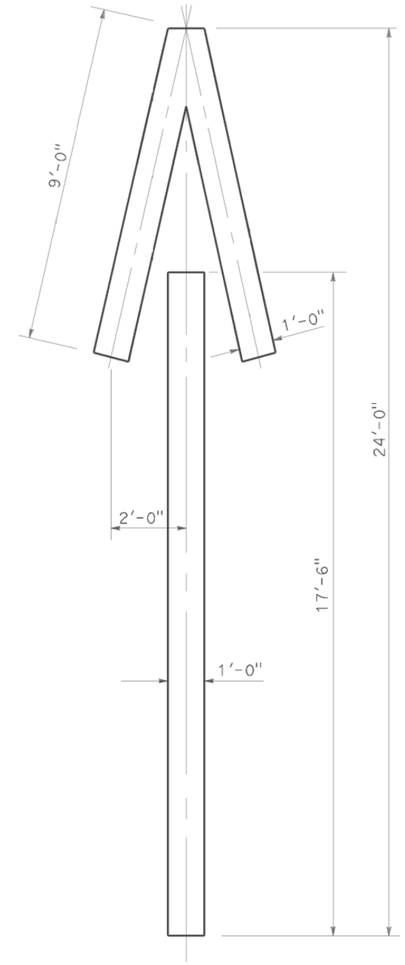

A=33 ft^2

TYPE V ARROW

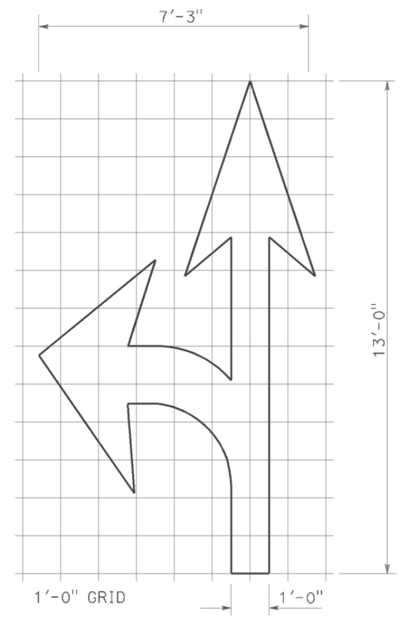

A=27 ft^2

TYPE VII (L) ARROW

(For Type VII (R) arrow, use mirror image)

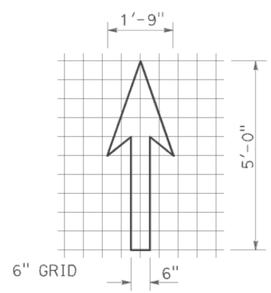

A=3.5 ft^2

BIKE LANE ARROW

NOTE:
Minor variations in dimensions may be accepted by the Engineer.

STATE OF CALIFORNIA
DEPARTMENT OF TRANSPORTATION

PAVEMENT MARKINGS ARROWS

NO SCALE

RSP A24A DATED APRIL 20, 2012 SUPERSEDES STANDARD PLAN A24A DATED MAY 20, 2011 - PAGE 13 OF THE STANDARD PLANS BOOK DATED 2010.

REVISED STANDARD PLAN RSP A24A

2010 REVISED STANDARD PLAN RSP A24A

DATE PLOTTED => 11-MAR-2015
TIME PLOTTED => 14:09

Dist	COUNTY	ROUTE	POST MILES TOTAL PROJECT	SHEET No.	TOTAL SHEETS
02	Tri	3	30.8/31.3	38	49

REGISTERED CIVIL ENGINEER

July 20, 2012
PLANS APPROVAL DATE

REGISTERED PROFESSIONAL ENGINEER
Roberta L. McLaughlin
No. C40375
Exp. 3-31-13
CIVIL
STATE OF CALIFORNIA

THE STATE OF CALIFORNIA OR ITS OFFICERS OR AGENTS SHALL NOT BE RESPONSIBLE FOR THE ACCURACY OR COMPLETENESS OF SCANNED COPIES OF THIS PLAN SHEET.

TO ACCOMPANY PLANS DATED 02-05-15

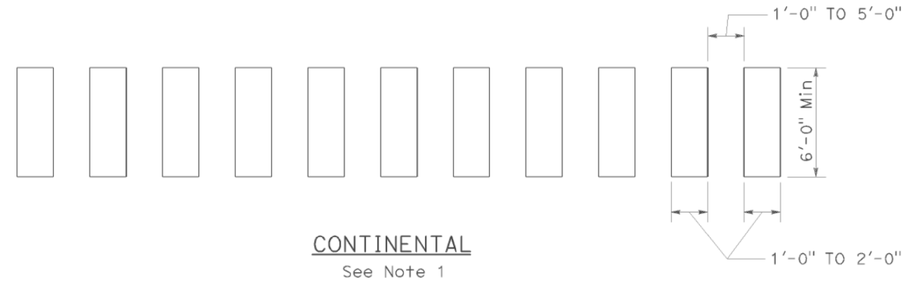

CONTINENTAL
See Note 1

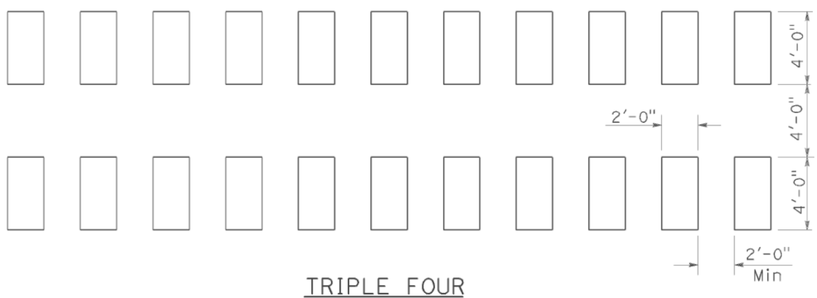

TRIPLE FOUR
See Note 1

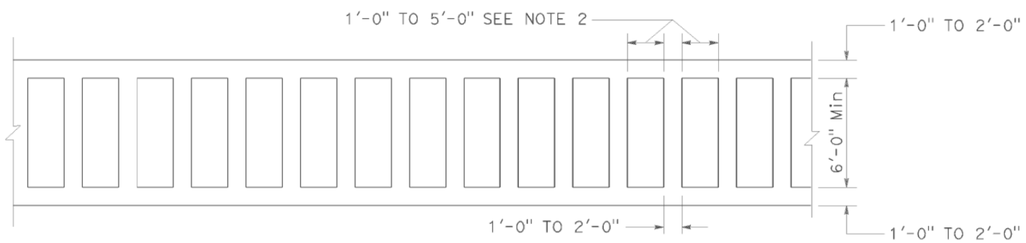

LADDER

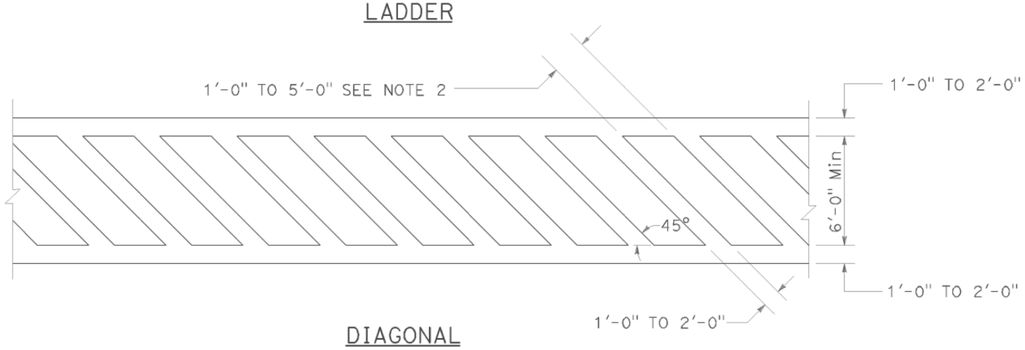

DIAGONAL

HIGHER VISIBILITY CROSSWALKS

NOTES:

1. Spaces between markings should be placed in wheel tracks of each lane.
2. Spacings not to exceed 2.5 times width of longitudinal line.
3. All crosswalk markings must be white except for those near schools must be yellow.

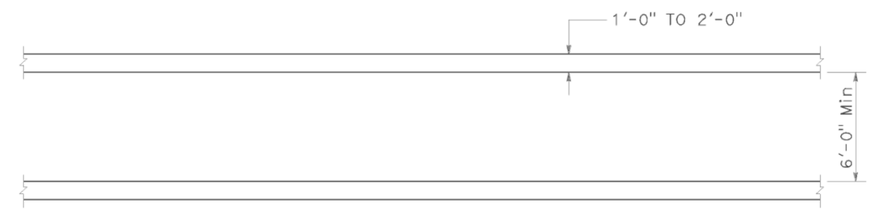

BASIC

STATE OF CALIFORNIA
DEPARTMENT OF TRANSPORTATION

PAVEMENT MARKINGS CROSSWALKS

NO SCALE

RSP A24F DATED JULY 20, 2012 SUPPLEMENTS THE STANDARD PLANS BOOK DATED 2010.

REVISED STANDARD PLAN RSP A24F

2010 REVISED STANDARD PLAN RSP A24F

DATE PLOTTED => 11-MAR-2015
TIME PLOTTED => 14:10

USERNAME => s115152
DGN FILE => 24e600va003.dgn

P:\proj1\02\4E600_plans\pse\24e600va003.dgn

6-28-12

Dist	COUNTY	ROUTE	POST MILES TOTAL PROJECT	SHEET No.	TOTAL SHEETS
02	Tri	3	30.8/31.3	39	49

REGISTERED CIVIL ENGINEER

July 18, 2014
PLANS APPROVAL DATE

REGISTERED PROFESSIONAL ENGINEER Glenn DeCou No. C34547 Exp. 9-30-15 CIVIL STATE OF CALIFORNIA

THE STATE OF CALIFORNIA OR ITS OFFICERS OR AGENTS SHALL NOT BE RESPONSIBLE FOR THE ACCURACY OR COMPLETENESS OF SCANNED COPIES OF THIS PLAN SHEET.

TO ACCOMPANY PLANS DATED 02-05-15

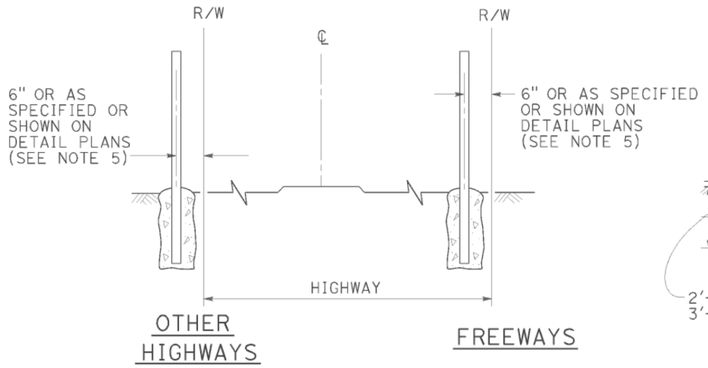

FENCE LOCATION

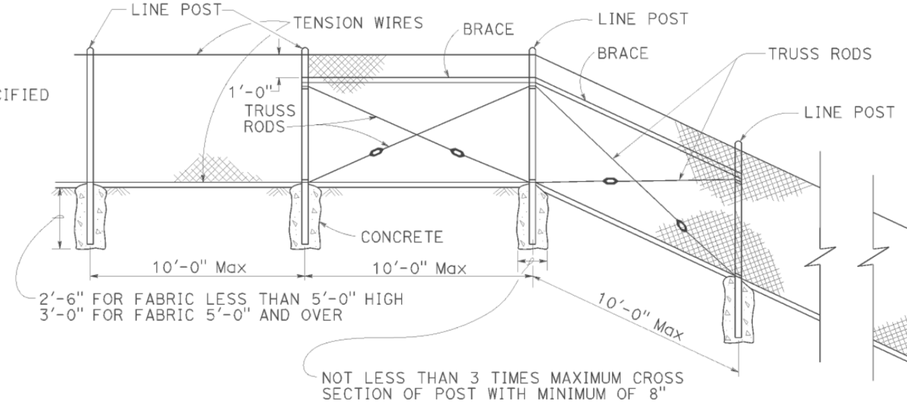

CHAIN LINK FENCE ON SHARP BREAK IN GRADE

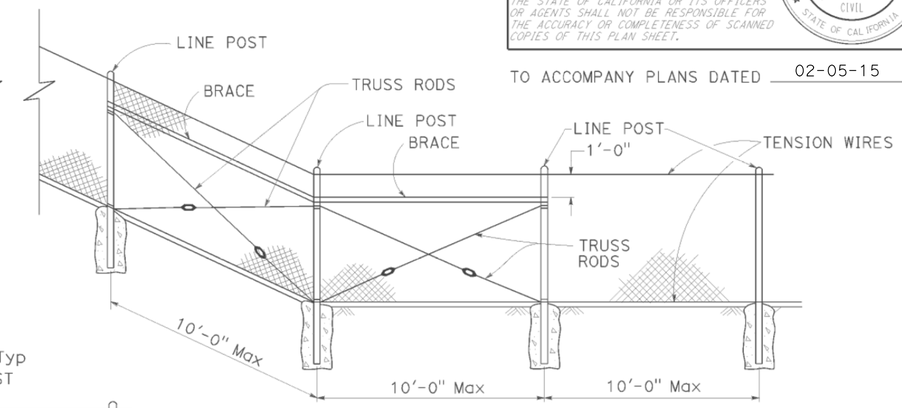

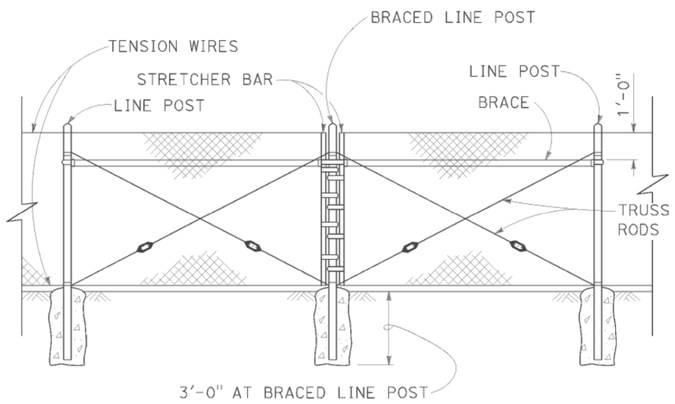

BRACED LINE POST INSTALLATION

Braced line post at intervals not exceeding 1000'

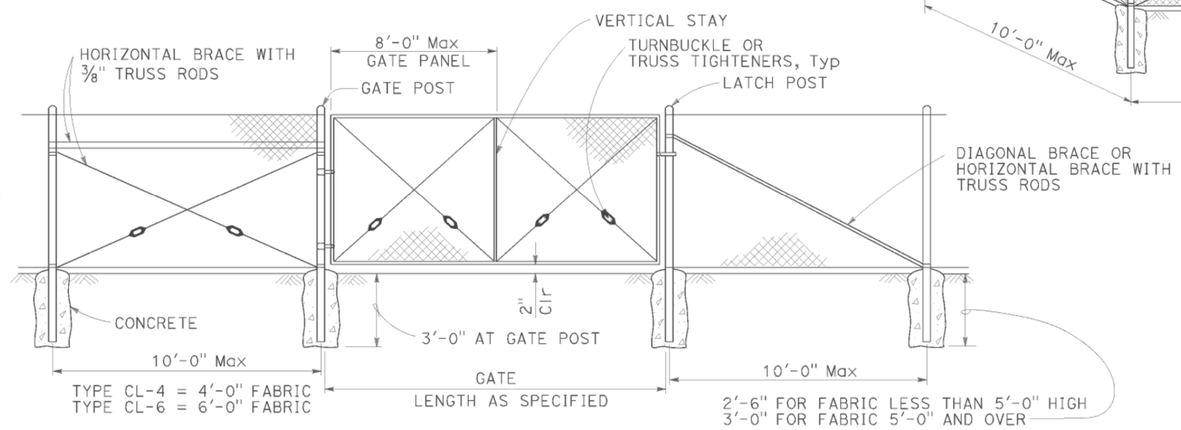

CHAIN LINK GATE INSTALLATION

GATE POST			
FENCE HEIGHT	GATE WIDTHS	ROUND OD PIPE	WEIGHT (lb/ft)
6'-0" AND LESS	UP THRU 6'-0"	2.875"	5.80
	OVER 6'-0" THRU 12'-0"	4.500"	10.80
	OVER 12'-0" THRU 18'-0"	5.563"	14.63
	OVER 18'-0" TO 24'-0" Max	6.625"	18.99
OVER 6'-0" TO 8'-0" Max	UP THRU 6'-0"	3.500"	7.58
	OVER 6'-0" THRU 12'-0"	5.563"	14.63
	OVER 12'-0" THRU 18'-0"	6.625"	18.99
	OVER 18'-0" TO 24'-0" Max	8.625"	28.58

Above post dimensions and weights are minimums. Larger sizes may be used upon approval.

NOTES:

1. The table below shows minimum sized posts and braces complying with the specifications. Larger or heavier post and brace sizes may be used upon approval.
2. Sections shown in the tables must also comply with the strength requirements and other provisions of the Specifications.
3. Other sections which comply with the strength requirements and other provisions of the Specifications may be used upon approval.
4. Options exercised shall be uniform on any one project.
5. Offset to be 2'-0" at monument locations, measured at right angles to R/W lines. Taper to achieve offset to be at least 20'-0" long.
6. See Revised Standard Plan RSP A85B for Brace, Stretcher Bar, and Truss Tightener Details.

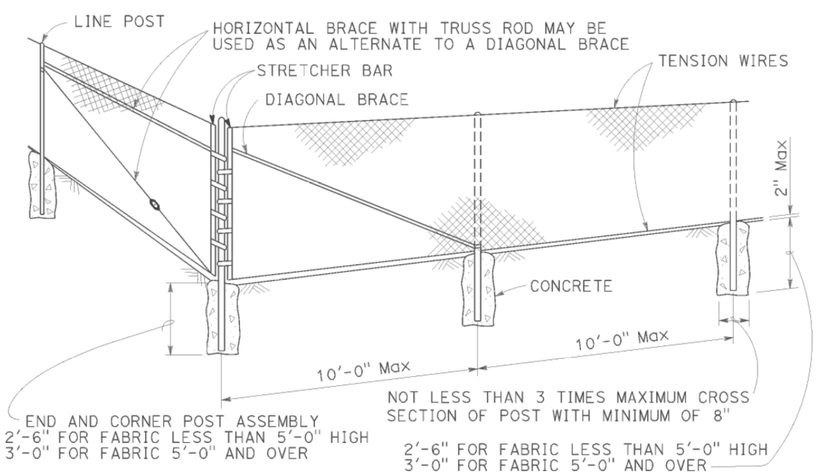

CORNER POST

TYPICAL MEMBER DIMENSIONS (See Notes)										
FENCE HEIGHT	LINE POSTS				END, LATCH AND CORNER POSTS		BRACES			
	ROUND OD PIPE	WEIGHT (lb/ft)	ROLL FORMED		ROUND OD PIPE	WEIGHT (lb/ft)	ROUND OD PIPE	WEIGHT (lb/ft)	ROLL FORMED	
			SECTION	WEIGHT (lb/ft)					SECTION	WEIGHT (lb/ft)
6'-0" AND LESS	1.900"	2.72	1.875" x 1.625"	1.85	2.375"	3.65	1.66"	2.27	1.625" x 1.25"	1.35
OVER 6'-0" TO 8'-0" Max	2.375"	3.65	2.25" x 1.70"	2.78	2.875"	5.80	1.66"	2.27	1.625" x 1.25"	1.35

RSP A85 DATED JULY 18, 2014 SUPERSEDES STANDARD PLAN A85
DATED MAY 20, 2011 - PAGE 112 OF THE STANDARD PLANS BOOK DATED 2010.

STATE OF CALIFORNIA
DEPARTMENT OF TRANSPORTATION

CHAIN LINK FENCE

NO SCALE

REVISED STANDARD PLAN RSP A85

2010 REVISED STANDARD PLAN RSP A85

DATE PLOTTED => 11-MAR-2015
TIME PLOTTED => 14:10

USERNAME => s115152
DGN FILE => 24e600va004.dgn

P:\proj1\02\4E600_plans\pse\24e600va004.dgn

7-1-14

Dist	COUNTY	ROUTE	POST MILES TOTAL PROJECT	SHEET No.	TOTAL SHEETS
02	Tri	3	30.8/31.3	40	49

REGISTERED CIVIL ENGINEER

July 19, 2013
PLANS APPROVAL DATE

REGISTERED PROFESSIONAL ENGINEER
Michael Janzen
No. 44788
Exp. 03-31-14
CIVIL
STATE OF CALIFORNIA

THE STATE OF CALIFORNIA OR ITS OFFICERS OR AGENTS SHALL NOT BE RESPONSIBLE FOR THE ACCURACY OR COMPLETENESS OF SCANNED COPIES OF THIS PLAN SHEET.

TO ACCOMPANY PLANS DATED 02-05-15

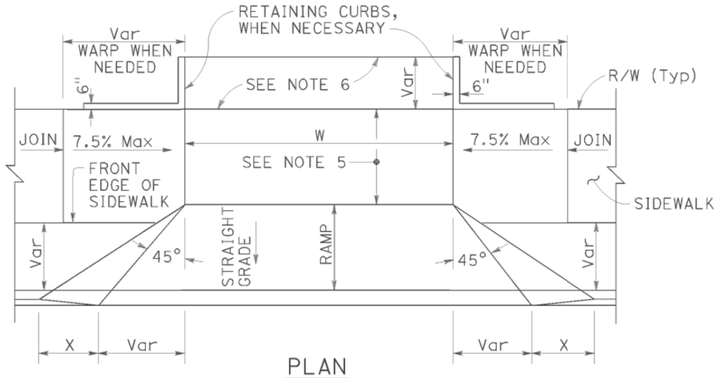

PLAN

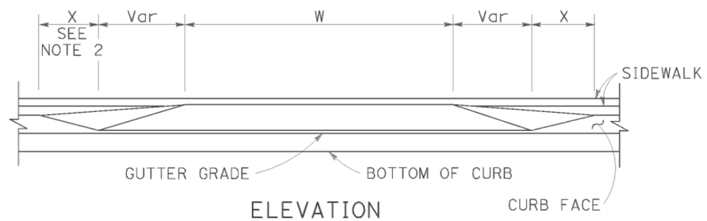

ELEVATION

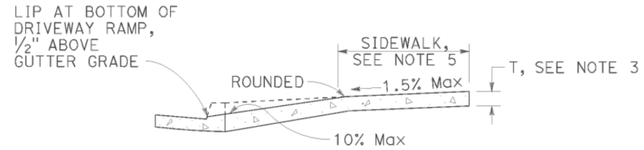

CASE A

Typical driveway, sidewalk not depressed

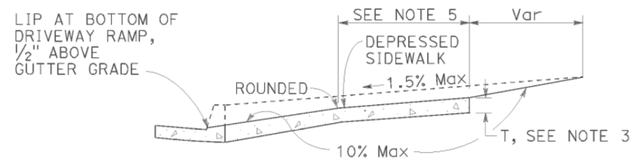

CASE B

Driveway with depressed sidewalk

SECTIONS

DRIVEWAYS

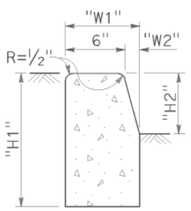

TYPE A1 CURBS

See Table A

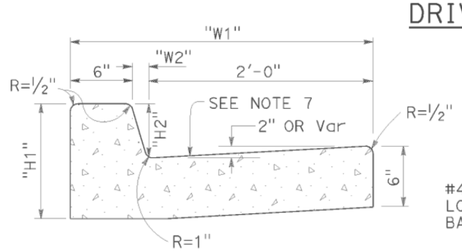

TYPE A2 CURBS

See Table A

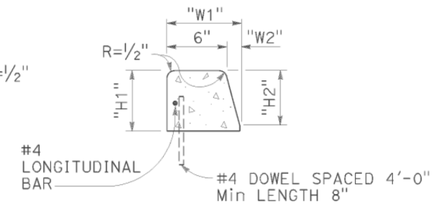

TYPE A3 CURBS

Superimposed on existing pavement
See Table A

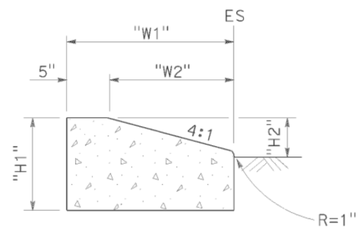

TYPE D CURBS

See Table A

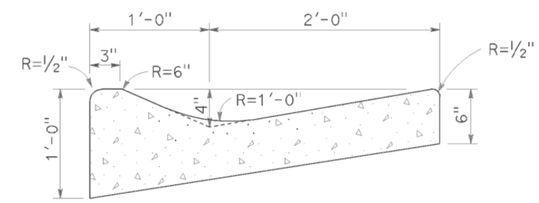

TYPE E CURB

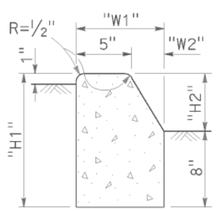

TYPE B1 CURBS

See Table A

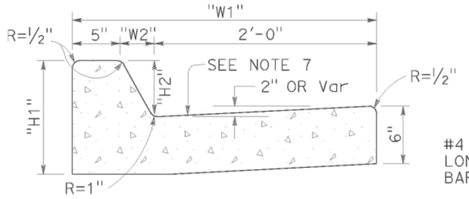

TYPE B2 CURBS

See Table A

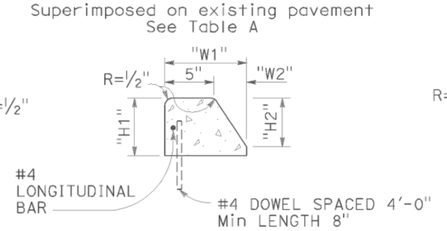

TYPE B3 CURBS

Superimposed on existing pavement
See Table A

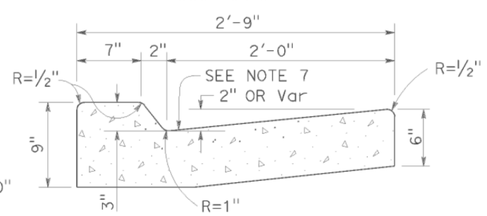

TYPE B4 CURBS

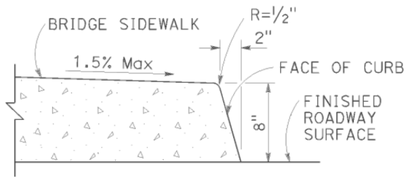

TYPE H CURB

On Bridges

CURBS

TABLE A

CURB TYPE	DIMENSIONS			
	"H1"	"H2"	"W1"	"W2"
A1-6	1'-2"	6"	7½"	1½"
A1-8	1'-4"	8"	8"	2"
A2-6	1'-0"	6"	2'-7½"	1½"
A2-8	1'-2"	8"	2'-8"	2"
A3-6	6"	5"	7¼"	1¼"
A3-8	8"	7"	7¾"	1¾"
B1-4	1'-0"	4"	7½"	2½"
B1-6	1'-2"	6"	9"	4"
B2-4	10"	4"	2'-7½"	2½"
B2-6	1'-0"	6"	2'-9"	4"
B3-4	4"	3"	7"	2"
B3-6	6"	5"	8½"	3½"
D-4	10"	4"	1'-6"	1'-1"
D-6	1'-0"	6"	2'-2"	1'-9"

CURB QUANTITIES

TYPE	CUBIC YARDS PER LINEAR FOOT
A1-6	0.02585
A1-8	0.03084
A2-6	0.05903
A2-8	0.06379
A3-6	0.01036
A3-8	0.01435
B1-4	0.02185
B1-6	0.02930
B2-4	0.05515
B2-6	0.06171
B3-4	0.00641
B3-6	0.01074
B4	0.05709
D-4	0.04083
D-6	0.06804
E	0.06661

NOTES:

1. Case A driveway section typically applies.
2. X=3'-0" except for curb heights over 10" where 4:1 slopes shall be used on curb slope.
3. Sidewalk and ramp thickness "T" at driveway shall be 4" for residental and 6" for commercial.
4. Difference in slope of the driveway ramp and the slope of a line between the gutter and a point on the roadway 5'-0" from gutter line shall not exceed 15%. Reduce driveway ramp slope, not gutter slope, where required.
5. Minimum width of clear passageway for sidewalk shall be 4'-2".
6. Retaining curbs and acquisition of construction easement may be necessary for narrow sidewalks or curb heights in excess of 6".
7. Across the pedestrian route at curb ramp locations, the gutter pan slope shall not exceed 1" of depth for each 2'-0" of width.

STATE OF CALIFORNIA
DEPARTMENT OF TRANSPORTATION

CURBS AND DRIVEWAYS

NO SCALE

RSP A87A DATED JULY 19, 2013 SUPERSEDES STANDARD PLAN A87A
DATED MAY 20, 2011 - PAGE 119 OF THE STANDARD PLANS BOOK DATED 2010.

REVISED STANDARD PLAN RSP A87A

2010 REVISED STANDARD PLAN RSP A87A

DATE PLOTTED => 11-MAR-2015
TIME PLOTTED => 14:10

Dist	COUNTY	ROUTE	POST MILES TOTAL PROJECT	SHEET No.	TOTAL SHEETS
02	Tri	3	30.8/31.3	41	49

REGISTERED CIVIL ENGINEER

March 21, 2014
PLANS APPROVAL DATE

REGISTERED PROFESSIONAL ENGINEER
Hector David Cordova
No. C41957
Exp. 3-31-14
CIVIL
STATE OF CALIFORNIA

THE STATE OF CALIFORNIA OR ITS OFFICERS OR AGENTS SHALL NOT BE RESPONSIBLE FOR THE ACCURACY OR COMPLETENESS OF SCANNED COPIES OF THIS PLAN SHEET.

TO ACCOMPANY PLANS DATED 02-05-15

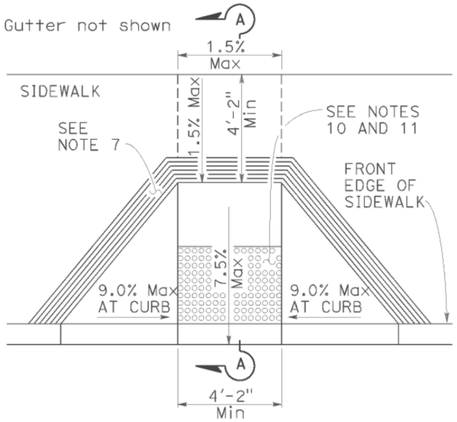

CASE A

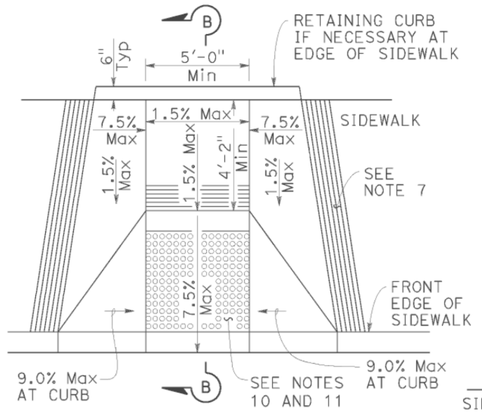

CASE B

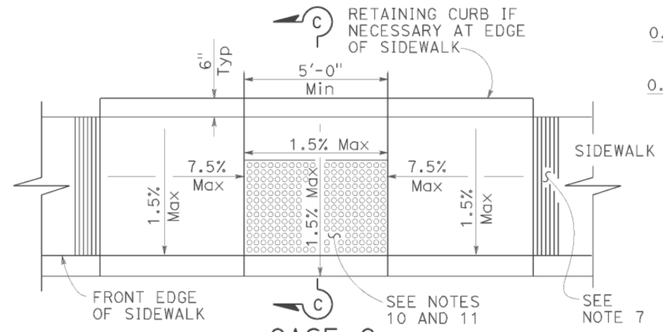

CASE C

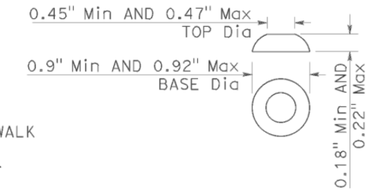

RAISED TRUNCATED DOME

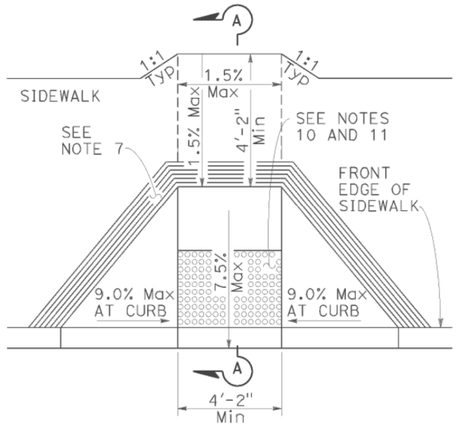

CASE D

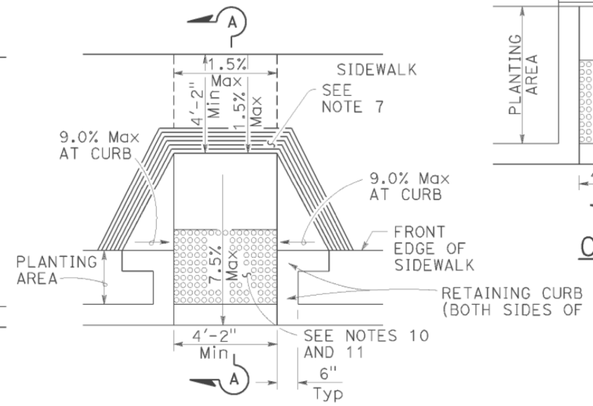

CASE E

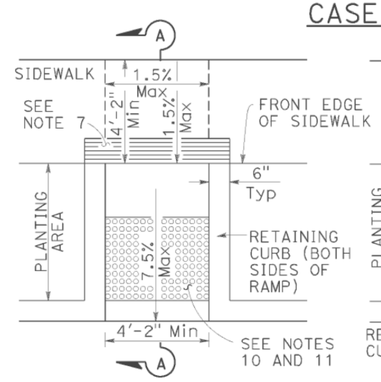

CASE F

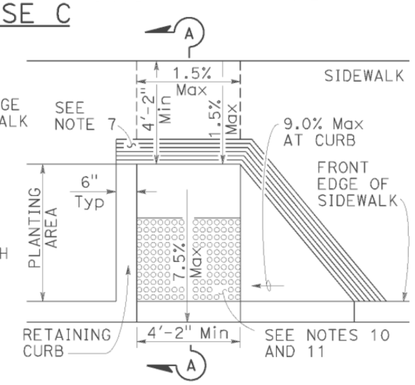

CASE G

See Note 4

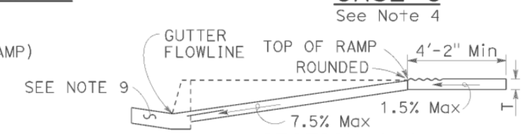

SECTION A-A

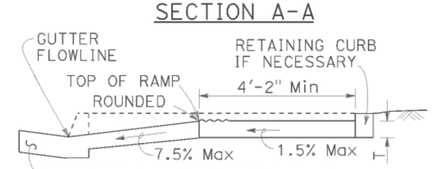

SECTION B-B

Depress entire sidewalk as required

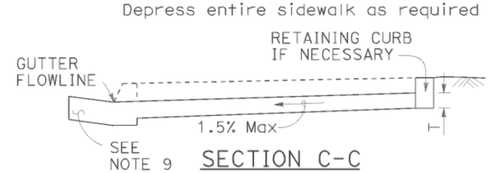

SECTION C-C

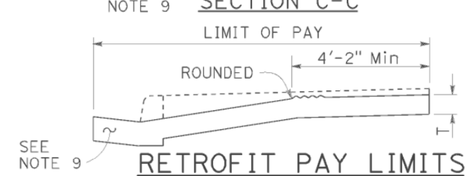

RETROFIT PAY LIMITS

Existing curb and sidewalk

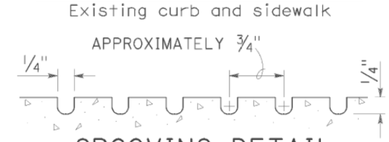

GROOVING DETAIL

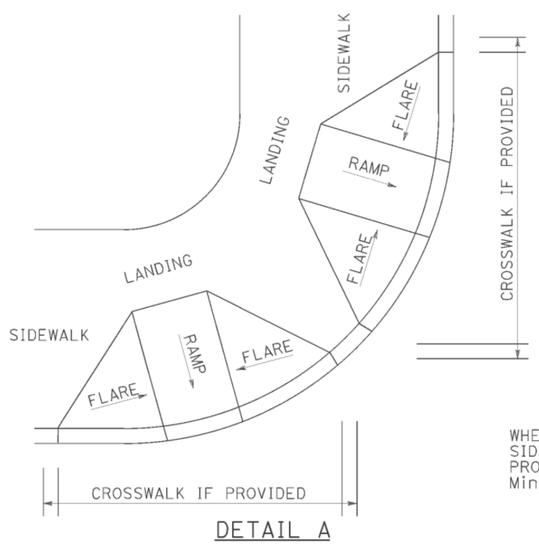

DETAIL A

TYPICAL TWO-RAMP CORNER INSTALLATION

See Note 1

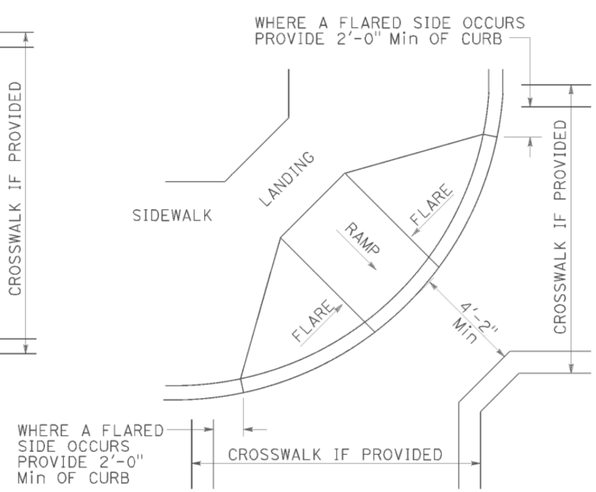

DETAIL B

TYPICAL ONE-RAMP CORNER INSTALLATION

See Notes 1 and 3

NOTES:

1. As site conditions dictate, Case A through Case G curb ramps may be used for corner installations similar to those shown in Detail A and Detail B. The case of curb ramps used in Detail A do not have to be the same. Case A through Case G curb ramps also may be used at mid block locations, as site conditions dictate.
2. If distance from curb to back of sidewalk is too short to accommodate ramp and 4'-2" platform (landing) as shown in Case A, the sidewalk may be depressed longitudinally as in Case B, or C or may be widened as in Case D.
3. When ramp is located in center of curb return, crosswalk configuration must be similar to that shown for Detail B.
4. As site conditions dictate, the retaining curb side and the flared side of the Case G ramp shall be constructed in reversed position.
5. If located on a curve, the sides of the ramp need not be parallel, but the minimum width of the ramp shall be 4'-2".
6. Side slope of ramp flares vary uniformly from a maximum of 9.0% at curb to conform with longitudinal sidewalk slope adjacent to top of the ramp, except in Case C and Case F.
7. The curb ramp shall be outlined, as shown, with a 1'-0" wide border with 1/4" grooves approximately 3/4" on center. See grooving detail.
8. Transitions from ramps and landing to walks, gutters or streets shall be flush (no lip) and free of abrupt changes.
9. Counter slopes of adjoining gutters and road surfaces immediately adjacent to and within 24 inches of the curb ramp shall not be steeper than 1:20 (5.0%). Gutter pan slope shall not exceed 1" of depth for each 2'-0" of width.
10. Curb ramps shall have a detectable warning surface that extends the full width and 3'-0" depth of the ramp. A 4'-0" wide detectable warning surface may be used on a 4'-2" wide curb ramp. Detectable Warning Surfaces shall conform to the requirements in the Standard Specifications.
11. The edge of the detectable warning surface nearest the street shall be between 6" and 8" from the gutter flowline.
12. Sidewalk and ramp thickness, "T", shall be 3½" minimum.
13. Utility pull boxes, manholes, vaults and all other utility facilities within the boundaries of the curb ramp will be relocated or adjusted to grade by the owner prior to, or in conjunction with, curb ramp construction.
14. Detectable warning surface may have to be cut to allow removal of utility covers while maintaining full detectable warning width and depth.

RAISED TRUNCATED DOME PATTERN (IN-LINE)

DETECTABLE WARNING SURFACE

See Note 10

STATE OF CALIFORNIA
DEPARTMENT OF TRANSPORTATION

CURB RAMP DETAILS

NO SCALE

RSP A88A DATED MARCH 21, 2014 SUPERSEDES RSP A88A DATED JULY 19, 2013 AND STANDARD PLAN A88A DATED MAY 20, 2011 - PAGE 121 OF THE STANDARD PLANS BOOK DATED 2010.

REVISED STANDARD PLAN RSP A88A

2010 REVISED STANDARD PLAN RSP A88A

DATE PLOTTED => 11-MAR-2015
TIME PLOTTED => 14:10

TO ACCOMPANY PLANS DATED 02-02-15

Dist	COUNTY	ROUTE	POST MILES TOTAL PROJECT	SHEET No.	TOTAL SHEETS
02	Tri	3	30.8/31.3	42	49

REGISTERED CIVIL ENGINEER

October 19, 2012
PLANS APPROVAL DATE

REGISTERED PROFESSIONAL ENGINEER Glenn DeCou No. C34547 Exp. 9-30-13 CIVIL STATE OF CALIFORNIA

THE STATE OF CALIFORNIA OR ITS OFFICERS OR AGENTS SHALL NOT BE RESPONSIBLE FOR THE ACCURACY OR COMPLETENESS OF SCANNED COPIES OF THIS PLAN SHEET.

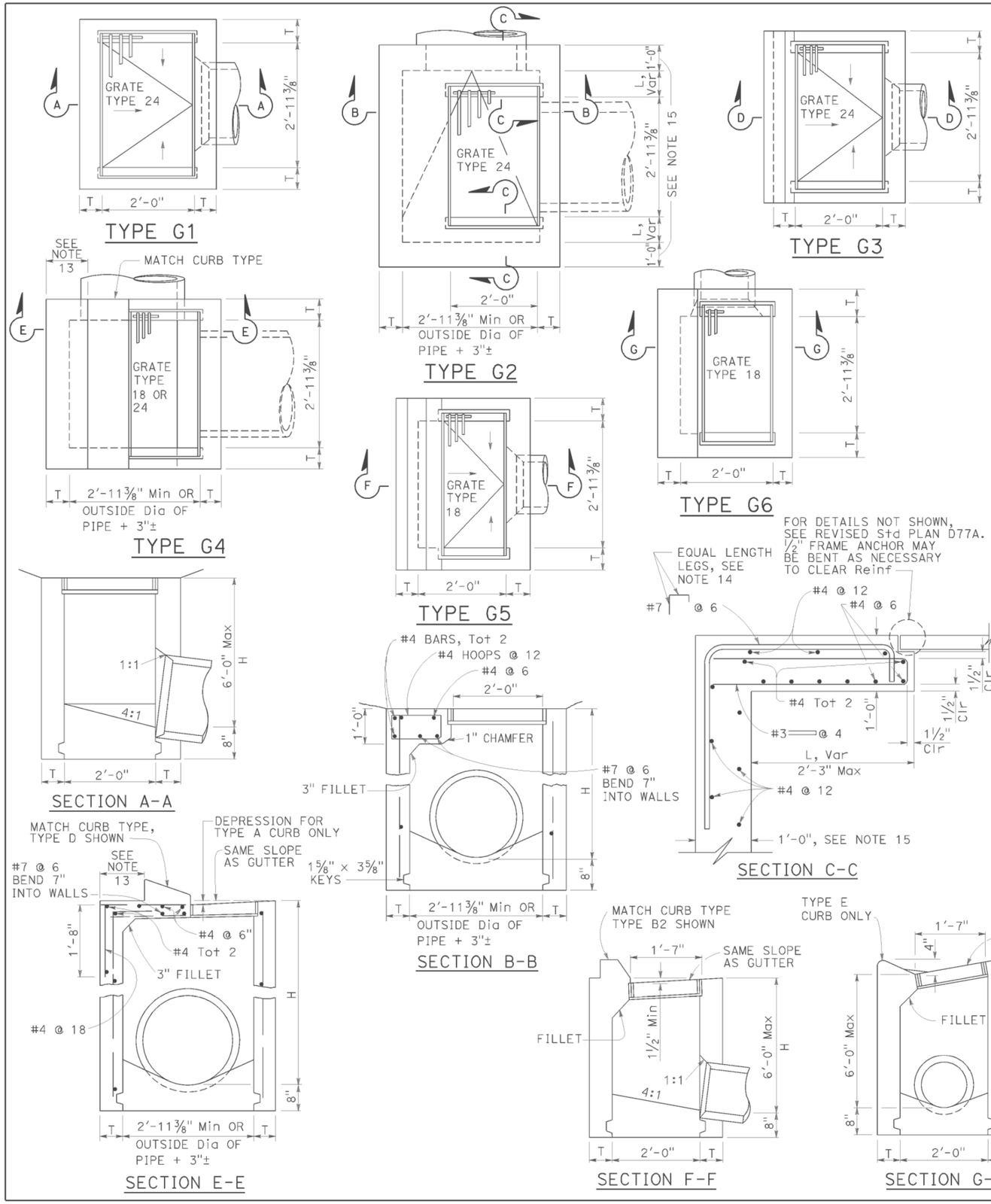

NOTES:

1. "H" is the difference in elevation between the outlet pipe flow line and the normal gutter grade line undepressed.
2. For "T" wall thickness, see Table A below.
3. Wall reinforcing not required when "H" is 8'-0" or less and the unsupported width or length is 7'-0" or less. Walls exceeding these limits shall be reinforced with #4 bars @ 1'-6" ± centers placed 1½" clear to inside of box unless otherwise shown.
4. Inlet bottom reinforcing not required. See Standard Plan D74C for alternative reinforced bottom and alternative half round bottom.
5. Steps-None required where "H" is less than 2'-6". Where "H" is 2'-6" or more, install steps with lowest rung 1'-0" above the floor and highest rung not more than 6" below top of inlet. The distance between steps shall not exceed 1'-0" and shall be uniform throughout the length of the wall. Place steps in the wall without an opening. Steps inserts may be substituted for the bar steps. Step inserts shall comply with State Industrial Safety requirements. See Standard Plan D74C for step details.
6. Details shown apply to both metal and concrete pipe.
7. Pipe(s) can be placed in any wall.
8. Curb section shall match adjacent curb.
9. Basin floors shall have wood trowel finish and a minimum slope of 12:3 from all directions toward outlet pipe.
10. Set inlet so that grate bars are parallel to direction of principal surface flow.
11. See Revised Standard Plans D77A and D77B for grate and frame details and weights of miscellaneous iron and steel.
12. See Standard Plan D78A for gutter depression details.
13. This dimenison will vary with different grates, curbs types, box width and wall thickness.
14. Bar may be rotated as necessary to clear opening. Where "L" is 6" or less, bar may be omitted.
15. Where "L" is 6" or less, wall thickness shall be as shown in Table A.
16. Cast-in-place inlets to be formed around all pipes/stubs intersecting the inlet, and concrete poured in one continuous operation. Precast inlets shall have mortared connections conforming to details for Type GCP Inlet shown on Standard Plan D75B. See Standard Specifications for mortar composition.

TABLE A

CONCRETE QUANTITIES				
TYPE	H=3'-0" TO 8'-0" (T=6")		H=8'-1" TO 20'-0" (T=8")	
	H=3'-0" (CY)	ADDITIONAL PCC PER FOOT (CY)	H=8'-1" (CY)	ADDITIONAL PCC PER FOOT (CY)
G-1	0.95	0.220	See Note A	SEE NOTE A
G-2*	1.31	0.255	3.50	0.357
G-3	1.03	0.220	See Note A	SEE NOTE A
G-4* (TYPE 24)	1.27	0.255	3.48	0.357
G-4* (TYPE 18)	1.30	0.255	3.50	0.357
G-5	1.02	0.220	SEE NOTE A	SEE NOTE A
G-6	1.04	0.220	SEE NOTE A	SEE NOTE A

TABLE BASED ON 8" FLOOR SLAB. NO DEDUCTIONS ARE TO BE MADE TO THESE QUANTITIES BECAUSE OF PIPE OPENINGS, DIFFERENT FLOOR ALTERNATIVES OR DIFFERENT CURB TYPES. * QUANTITIES FOR TYPE G-2 AND G-4 INLETS BASED ON THE MINIMUM INTERIOR DIMENSIONS.

NOTE A:

Maximum allowable height 6'-0".

STATE OF CALIFORNIA
DEPARTMENT OF TRANSPORTATION

DRAINAGE INLETS

NO SCALE

RSP D73 DATED OCTOBER 19, 2012 SUPERSEDES STANDARD PLAN D73 DATED MAY 20, 2011 - PAGE 156 OF THE STANDARD PLANS BOOK DATED 2010.

REVISED STANDARD PLAN RSP D73

2010 REVISED STANDARD PLAN RSP D73

DATE PLOTTED => 11-MAR-2015
TIME PLOTTED => 14:10

Dist	COUNTY	ROUTE	POST MILES TOTAL PROJECT	SHEET No.	TOTAL SHEETS
02	Tri	3	30.8/31.3	43	49

Raymond Don Tsztoo
REGISTERED CIVIL ENGINEER

April 19, 2013
PLANS APPROVAL DATE

REGISTERED PROFESSIONAL ENGINEER Raymond Don Tsztoo No. C37332 Exp. 6-30-14 CIVIL STATE OF CALIFORNIA

THE STATE OF CALIFORNIA OR ITS OFFICERS OR AGENTS SHALL NOT BE RESPONSIBLE FOR THE ACCURACY OR COMPLETENESS OF SCANNED COPIES OF THIS PLAN SHEET.

TO ACCOMPANY PLANS DATED 02-05-15

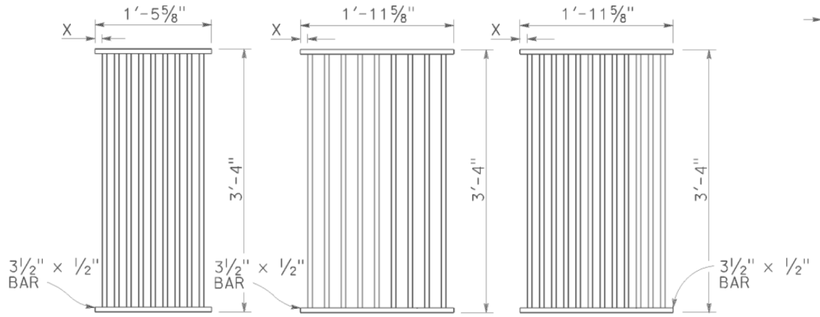

TYPE 18-9

1⅜" Clear spacing. Use within the roadbed on highways where bicycles and pedestrians are excluded.

TYPE 24-9

2" Clear spacing. Use in locations off the roadbed on all types of highways.

TYPE 24-12

1⅜" Clear spacing. Use within the roadbed on highways where bicycles and pedestrians are excluded.

RECTANGULAR GRATE DETAILS

(See table below)

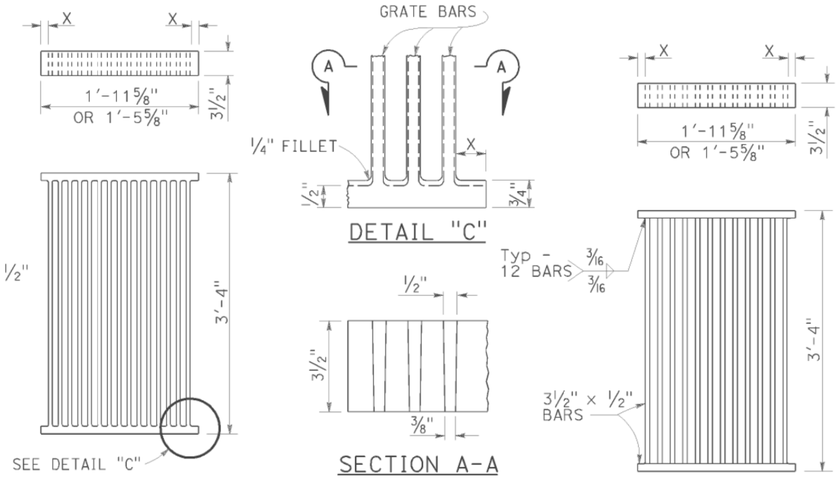

ALTERNATIVE CAST DUCTILE IRON GRATE OR CAST CARBON STEEL GRATE

ALTERNATIVE WELDED GRATE

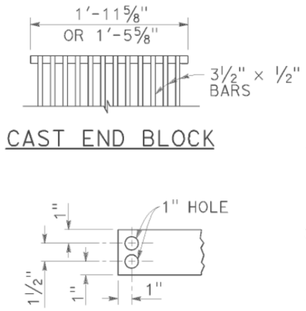

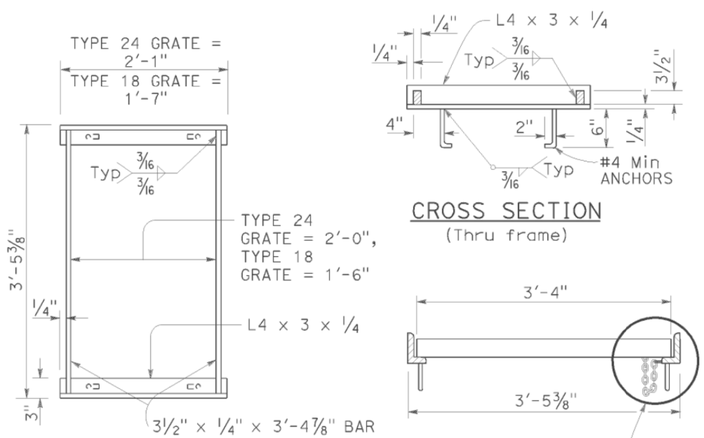

RECTANGULAR FRAME DETAILS

(For all rectangular grates)

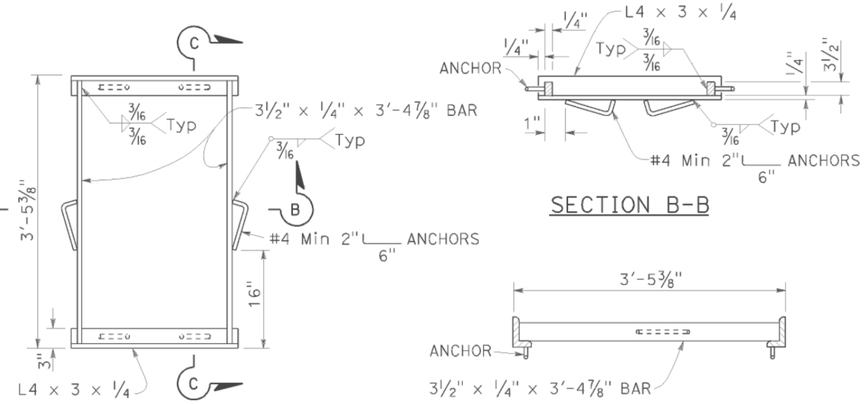

ALTERNATIVE ANCHOR FOR RECTANGULAR FRAME

(For details not shown, See Rectangular Frame Details)

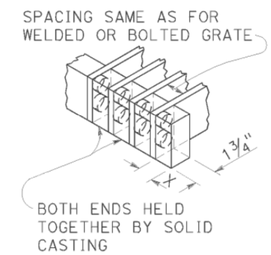

ALTERNATIVE CAST DUCTILE IRON OR CAST CARBON STEEL END BLOCK GRATE

NOTES:

1. Grate type numbers refer to approximate width of grate in inches and number of bars, respectively.
2. Contractor has the option of using cast ductile iron, cast carbon steel, welded, bolted, or cast end block grate.
3. Rounded top of bars optional on all grates.
4. Pipe inlets with a grate shall be placed so that bars parallel direction of principle surface flow.
5. Complete joint penetration butt welds may be substituted for the fillet welds on all anchors.
6. Standard square, hexagon, round or equivalent headed anchors may be substituted for the right angle hooks on the anchors shown on this plan.
7. Grate and frame weights are based on welded grates (weights of face angles, steps, protection bars, etc. are not included).
8. Connect chain to grate and frame only at locations shown on the plans. When chain is required, do not use cast ductile iron grates.

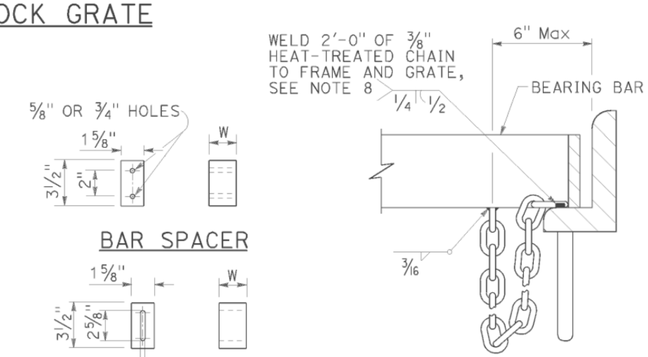

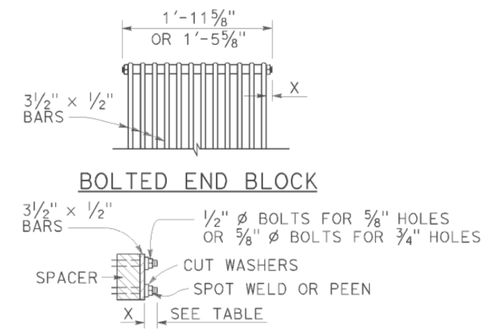

ALTERNATIVE BOLTED GRATE

GRATE BAR SPACING TABLE

TYPE	No. OF BARS	CLEAR BAR SPACING	X
18-9	9	1⅜"	1 1/16"
24-9	9	2"	1 9/16"
24-12	12	1⅜"	1¼"

INLET TYPE	COVER TYPE	WEIGHT LB
OS	PLATE	174
OL-7	PLATE	170
OL-10	PLATE	170
OL-14	PLATE	170
OL-21	PLATE	170
OCP	PLATE	112
OCPI	PLATE	112
OCPI	REDWOOD	42
OMP	PLATE	177
OMPI	PLATE	177

INLET TYPE	GRATE TYPE	No. OF GRATES	WEIGHT LB
GDO	24-12	2	634
GOL-7	24-12	1	326
GOL-10	24-12	1	326
GO,G1,G2,G3,G4 (TYPE 24)	24-9	1	263
	24-12	1	326
G4 (TYPE 18),G5,G6	18-9	1	249
GT1	18-9	2	498
GT2	18-9	2	498
GT3	24-12	2	652
GT4	24-12	2	652
TRASH RACK			22
GRATE CHAIN			3

BASIS FOR Misc IRON & STEEL FINAL PAY WEIGHTS FOR DRAINAGE INLETS

(See Note 7)

STATE OF CALIFORNIA
DEPARTMENT OF TRANSPORTATION

GRATE DETAILS No. 1

NO SCALE

RSP D77A DATED APRIL 19, 2013 SUPERSEDES RSP D77A DATED JULY 20, 2012 AND STANDARD PLAN D77A DATED MAY 20, 2011 - PAGE 164 OF THE STANDARD PLANS BOOK DATED 2010.

REVISED STANDARD PLAN RSP D77A

2010 REVISED STANDARD PLAN RSP D77A

DATE PLOTTED => 11-MAR-2015
TIME PLOTTED => 14:10

Dist	COUNTY	ROUTE	POST MILES TOTAL PROJECT	SHEET No.	TOTAL SHEETS
02	Tri	3	30.8/31.3	44	49

REGISTERED CIVIL ENGINEER

April 19, 2013
PLANS APPROVAL DATE

Raymond Don Tsztoo No. C37332 Exp. 6-30-14 CIVIL STATE OF CALIFORNIA REGISTERED PROFESSIONAL ENGINEER

THE STATE OF CALIFORNIA OR ITS OFFICERS OR AGENTS SHALL NOT BE RESPONSIBLE FOR THE ACCURACY OR COMPLETENESS OF SCANNED COPIES OF THIS PLAN SHEET.

TO ACCOMPANY PLANS DATED 02-05-15

2010 REVISED STANDARD PLAN RSP D77B

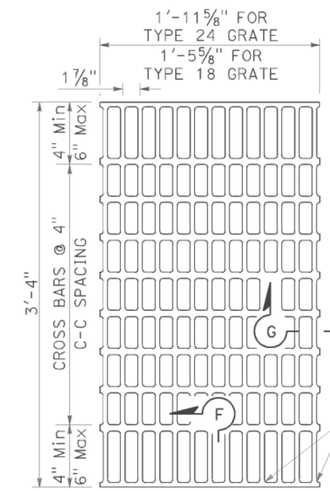

NOTES:

Bearing bars to be 3½" × ¼" bars on 1⅞" centers.

⅜"± ø Cross bars may be fillet welded, resistance welded or electroforged to bearing bars.

Weight of Type 24 grate = 141 LBS.

Weight of Type 18 grate = 107 LBS. (Type 24 grate shown).

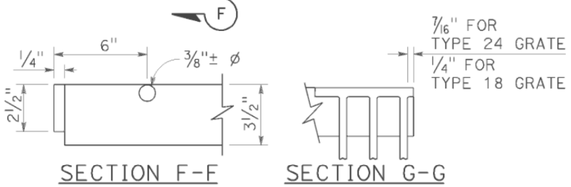

SECTION F-F SECTION G-G

TYPE 18-10 AND 24-13 GRATE

(Welded Steel)

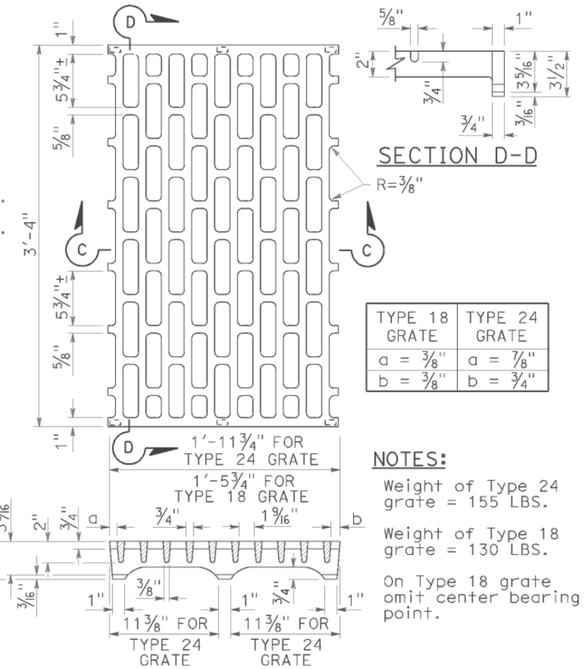

TYPE 18 GRATE	TYPE 24 GRATE
a = ⅜"	a = ⅞"
b = ⅜"	b = ¾"

NOTES:

Weight of Type 24 grate = 155 LBS.

Weight of Type 18 grate = 130 LBS.

On Type 18 grate omit center bearing point.

SECTION C-C

TYPE 18-8C AND 24-10C GRATE

(Cast ductile iron)

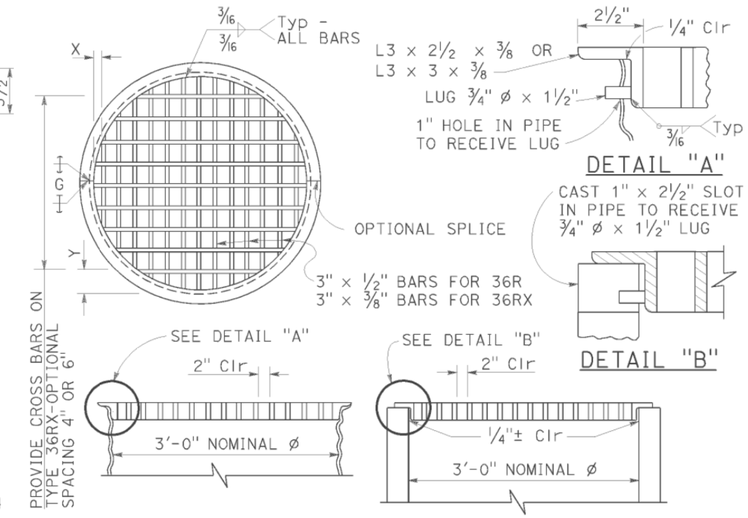

DETAIL "A" DETAIL "B"

TYPE 36R AND 36RX GRATE DETAILS

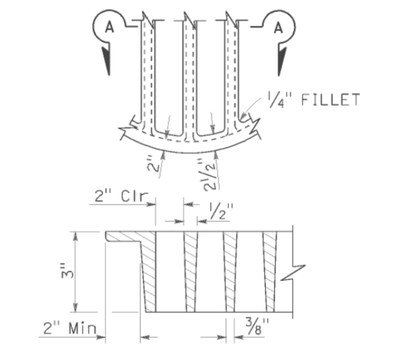

SECTION A-A

ALTERNATIVE CAST DUCTILE IRON GRATE OR CAST CARBON STEEL GRATE TYPE 36R AND 36RX

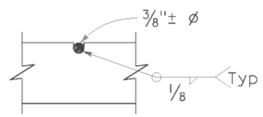

⅜"± ø Cross bars may be fillet welded, resistance welded or electroforged to bearing bars.

CROSS BAR DETAIL TYPE 36RX GRATE (WELDED STEEL)

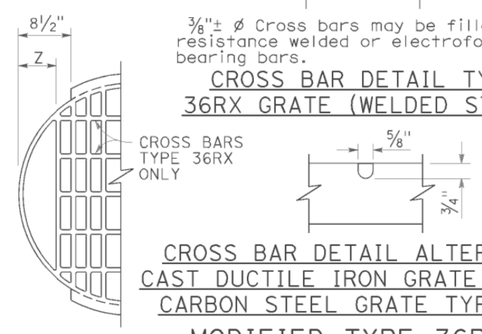

CROSS BAR DETAIL ALTERNATIVE CAST DUCTILE IRON GRATE OR CAST CARBON STEEL GRATE TYPE 36RX

MODIFIED TYPE 36R AND 36RX GRATE FOR ODI INLET

BASIS FOR Misc IRON AND STEEL FINAL PAY WEIGHTS FOR DRAINAGE INLETS

INLET TYPE	GRATE TYPE	No. OF GRATES	WEIGHT LB
GDO (SEE NOTE 4)	24-10C	2	391
	24-10S	2	456
	24-12X	2	473
	24-13	2	374
GO,GOL,G1,G2, G3,G4 (TYPE 24)	24-10C	1	202
	24-10S	1	229
	24-12X	1	239
	24-13	1	188
G4 (TYPE 18) G5,G6	18-8S	1	187
	18-9X	1	187
	18-10	1	149
GT1,GT2	18-8S	2	374
	18-9X	2	374
	18-10	2	298
GT3,GT4	24-10C	2	404
	24-10S	2	458
	24-12X	2	478
	24-13	2	376
ODI	36RX (Mod)	1	196
GMP,GCP,GCPI	36RX	1	215
ODI	36R (Mod)	1	220
GMP,GCP,GCPI	36R	1	236
TRASH RACK			22
GRATE CHAIN			3

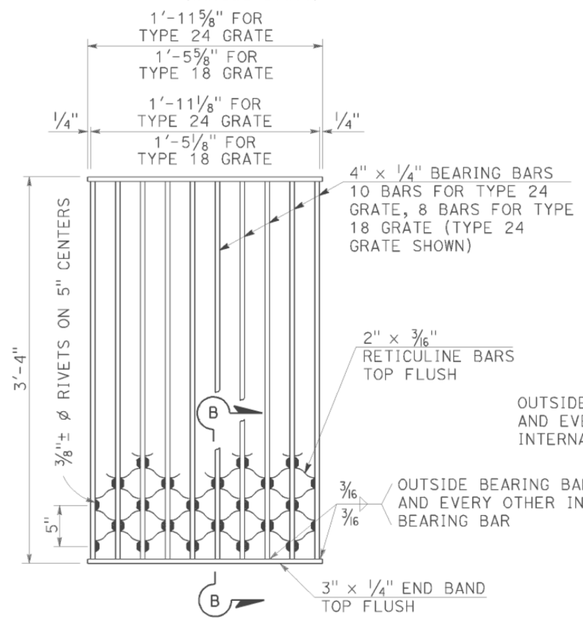

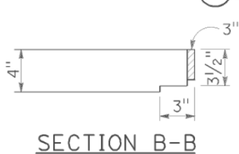

NOTES:

Weight of Type 24 grate = 182 LBS.
Weight of Type 18 grate = 145 LBS.

SECTION B-B

TYPE 18-8S AND 24-10S GRATE

(Welded Steel) Reticuline type

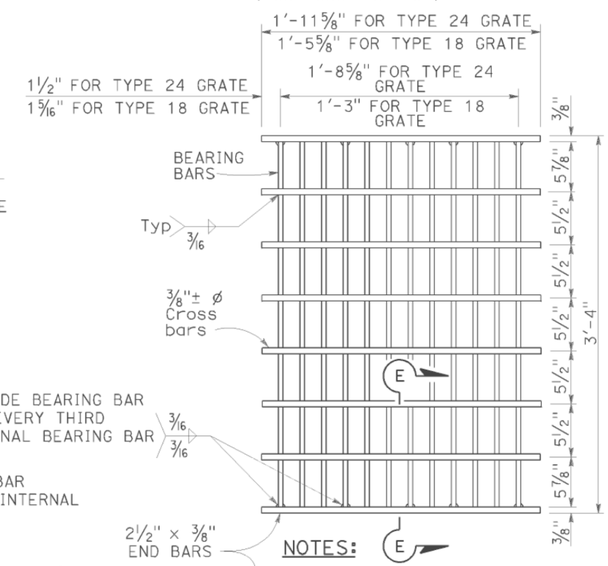

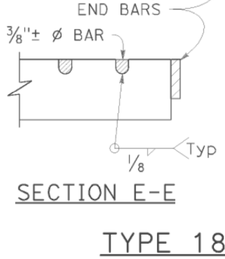

SECTION E-E

NOTES:

Bearing bars to be 3½" × ⅜" bars on 1⅞" centers.

12 Bars for Type 24 grate - 9 bars for Type 18 grates. (Type 24 grate shown).

Weight of Type 24 grate = 192 LBS.

Weight of Type 18 grate = 145 LBS.

⅜"± ø Cross bars may be fillet welded, resistance welded or electroforged to bearing bars.

TYPE 18-9X AND 24-12X GRATE

(Welded Steel)

NOTES:

1. When alternative grates are allowed - Final pay based on alternative with the lesser weight.
2. Use frame shown on Standard Plan D74A, D74B or RSP D77A as appropriate.
3. When Type 24-10S, 24-12X or 24-13 grates are used with GDO Inlets, a ¼" × 3½" × 3'-4⅞" steel bar shall be welded across the center of inlet frame to separate the individual grates.
4. See Revised Standard Plan RSP D77A for connecting chain to welded grate and frame. When chain is required, do not use cast ductile iron grate.

GRATE BAR SPACING TABLE

TYPE	No. OF BARS	CLEAR BAR SPACING	X	Y 4" SPACING	Y 6" SPACING	Z
36R	13	2"	2⅛"	-	-	-
36RX (STEEL)	15	2"	9/16"	3¾"	5¾"	-
36RX (CAST)	13	2"	2⅛"	3¾"	5¾"	-
36R Mod	12	2"	2⅛"	-	-	5"
36RX Mod (STEEL)	13	2"	9/16"	3¾"	5¾"	5 11/16"
36RX Mod (CAST)	12	2"	2⅛"	3¾"	5¾"	5"

STATE OF CALIFORNIA
DEPARTMENT OF TRANSPORTATION

GRATE DETAILS No. 2

NO SCALE

RSP D77B DATED APRIL 19, 2013 SUPERSEDES RSP D77B DATED JULY 20, 2012 AND STANDARD PLAN D77B DATED MAY 20, 2011 - PAGE 165 OF THE STANDARD PLANS BOOK DATED 2010.

REVISED STANDARD PLAN RSP D77B

DATE PLOTTED => 11-MAR-2015
TIME PLOTTED => 14:10

Dist	COUNTY	ROUTE	POST MILES TOTAL PROJECT	SHEET No.	TOTAL SHEETS
02	Tri	3	30.8/31.3	45	49

REGISTERED CIVIL ENGINEER

July 19, 2013
PLANS APPROVAL DATE

REGISTERED PROFESSIONAL ENGINEER
Gurinderpal Bhullar
No. C48815
Exp. 9-30-14
CIVIL
STATE OF CALIFORNIA

THE STATE OF CALIFORNIA OR ITS OFFICERS OR AGENTS SHALL NOT BE RESPONSIBLE FOR THE ACCURACY OR COMPLETENESS OF SCANNED COPIES OF THIS PLAN SHEET.

TO ACCOMPANY PLANS DATED 02-05-15

2010 REVISED STANDARD PLAN RSP T9

TABLE 1

TAPER LENGTH CRITERIA AND CHANNELIZING DEVICE SPACING

SPEED (S)	MINIMUM TAPER LENGTH * FOR WIDTH OF OFFSET 12 FEET (W)				MAXIMUM CHANNELIZING DEVICE SPACING		
					X	Y	Z **
	TANGENT 2L	MERGING L	SHIFTING L/2	SHOULDER L/3	TAPER	TANGENT	CONFLICT
mph	ft	ft	ft	ft	ft	ft	ft
20	160	80	40	27	20	40	10
25	250	125	63	42	25	50	12
30	360	180	90	60	30	60	15
35	490	245	123	82	35	70	17
40	640	320	160	107	40	80	20
45	1080	540	270	180	45	90	22
50	1200	600	300	200	50	100	25
55	1320	660	330	220	55	110	27
60	1440	720	360	240	60	120	30
65	1560	780	390	260	65	130	32
70	1680	840	420	280	70	140	35

* - For other offsets, use the following merging taper length formula for L:
For speed of 40 mph or less, $L = WS^2/60$
For speed of 45 mph or more, $L = WS$

Where: L = Taper length in feet
W = Width of offset in feet
S = Posted speed limit, off-peak 85th-percentile speed prior to work starting, or the anticipated operating speed in mph

** - Use for taper and tangent sections where there are no pavement markings or where there is a conflict between existing pavement markings and channelizers (CA).

TABLE 2

LONGITUDINAL BUFFER SPACE AND FLAGGER STATION SPACING

SPEED *	Min D **	DOWNGRADE Min D ***		
		-3%	-6%	-9%
mph	ft	ft	ft	ft
20	115	116	120	126
25	155	158	165	173
30	200	205	215	227
35	250	257	271	287
40	305	315	333	354
45	360	378	400	427
50	425	446	474	507
55	495	520	553	593
60	570	598	638	686
65	645	682	728	785
70	730	771	825	891

* - Speed is posted speed limit, off-peak 85th-percentile speed prior to work starting, or the anticipated operating speed in mph

** - Longitudinal buffer space or flagger station spacing

*** - Use on sustained downgrade steeper than -3 percent and longer than 1 mile.

TABLE 3

ADVANCE WARNING SIGN SPACING

ROAD TYPE	DISTANCE BETWEEN SIGNS *		
	A	B	C
	ft	ft	ft
URBAN - 25 mph OR LESS	100	100	100
URBAN - MORE THAN 25 mph TO 40 mph	250	250	250
URBAN - MORE THAN 40 mph	350	350	350
RURAL	500	500	500
EXPRESSWAY / FREEWAY	1000	1500	2640

* - The distances are approximate, are intended for guidance purposes only, and should be applied with engineering judgment. These distances should be adjusted by the Engineer for field conditions, if necessary, by increasing or decreasing the recommmended distances.

STATE OF CALIFORNIA
DEPARTMENT OF TRANSPORTATION

TRAFFIC CONTROL SYSTEM TABLES FOR LANE AND RAMP CLOSURES

NO SCALE

RSP T9 DATED JULY 19, 2013 SUPERSEDES RSP T9 DATED APRIL 19, 2013 THAT SUPPLEMENTS THE STANDARD PLANS BOOK DATED 2010.

REVISED STANDARD PLAN RSP T9

DATE PLOTTED => 11-MAR-2015
TIME PLOTTED => 14:10

Dist	COUNTY	ROUTE	POST MILES TOTAL PROJECT	SHEET No.	TOTAL SHEETS
02	Tri	3	30.8/31.3	46	49

Devinder Singh
REGISTERED CIVIL ENGINEER

October 17, 2014
PLANS APPROVAL DATE

REGISTERED PROFESSIONAL ENGINEER
Devinder Singh
No. C50470
Exp. 6-30-15
CIVIL
STATE OF CALIFORNIA

THE STATE OF CALIFORNIA OR ITS OFFICERS OR AGENTS SHALL NOT BE RESPONSIBLE FOR THE ACCURACY OR COMPLETENESS OF SCANNED COPIES OF THIS PLAN SHEET.

TO ACCOMPANY PLANS DATED 02-05-15

2010 REVISED STANDARD PLAN RSP T13

NOTES:

See Revised Standard Plan RSP T9 for tables.

Use cone spacing X for taper segment, Y for tangent segment or Z for conflict situations, as approriate, per Table 1, unless X, Y, or Z cone spacing is shown on this sheet.

Unless otherwise specified in the special provisions, all temporary warning signs shall have black legend on fluorescent orange background.

California codes are designated by (CA). Otherwise, Federal (MUTCD) codes are shown.

TYPICAL LANE CLOSURE WITH REVERSIBLE CONTROL

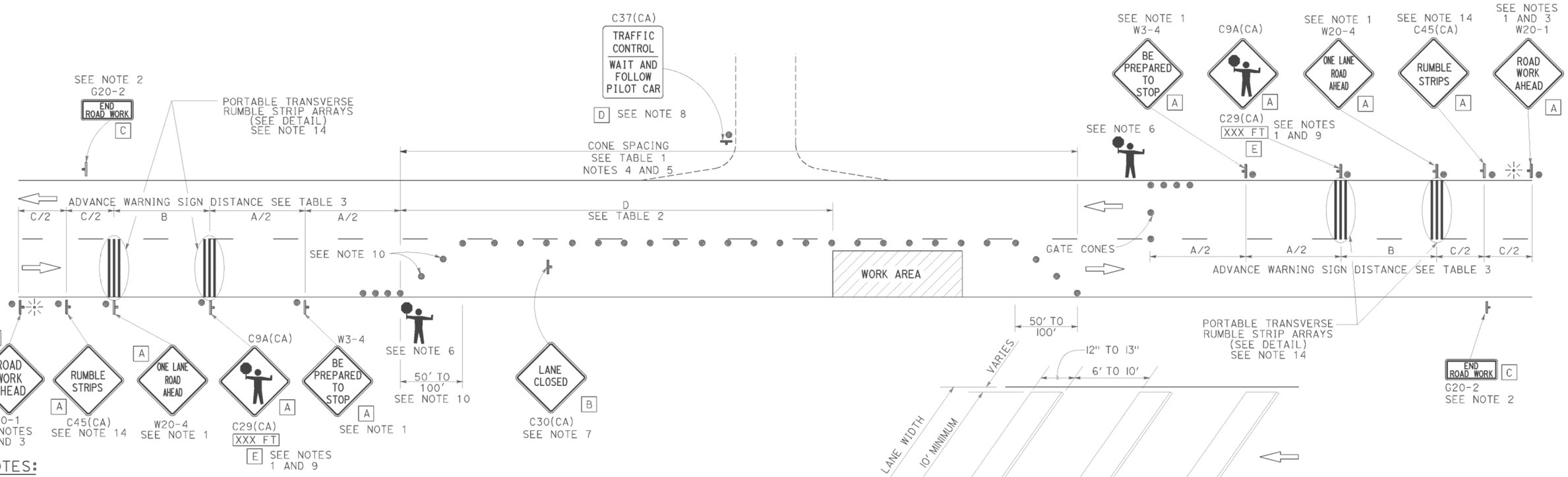

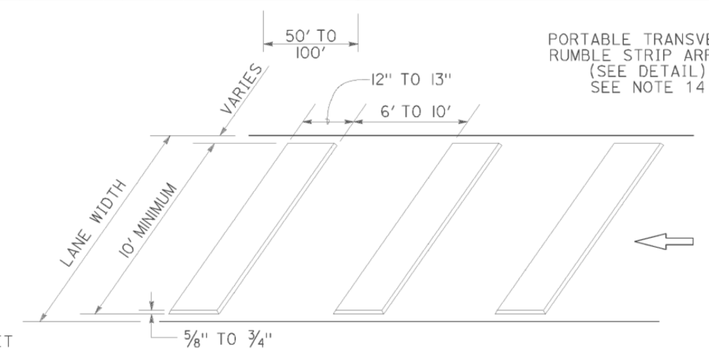

PORTABLE TRANSVERSE RUMBLE STRIP ARRAY DETAIL

NOTES:

1. Each advance warning sign in each direction of travel shall be equipped with at least two flags for daytime closure. Each flag shall be at least 16" x 16" in size and shall be orange or fluorescent red-orange in color. Flashing beacons shall be placed at the locations indicated for lane closure during hours of darkness.
2. A G20-2 "END ROAD WORK" sign, as appropriate, shall be placed at the end of the lane control unless the end of work area is obvious, or ends within a larger project's limits.
3. If the W20-1 sign would follow within 2000' of a stationary W20-1 or G20-1 "ROAD WORK NEXT _____ MILES", use a W20-4 sign for the first advance warning sign.
4. All cones used for lane closures during the hours of darkness shall be fitted with retroreflective bands (or sleeves) as specified in the specifications.
5. Portable delineators, placed at one-half the spacing indicated for traffic cones, may be used instead of cones for daytime closures only.
6. Additional advance flaggers may be required. Flagger should stand in a conspicuous place, be visible to approaching traffic as well as approaching vehicles after the first vehicle has stopped. During the hours of darkness, the flagging-station and flagger shall be illuminated and clearly visible to approaching traffic. The illumination footprint of the lighting on the ground shall be at least 20' in diameter. Place a minimum of four cones at 50' intervals in advance of flagger station as shown.
7. Place C30(CA) "LANE CLOSED" sign at 500' to 1000' intervals throughout extended work areas. They are optional if the work area is visible from the flagger station.
8. When a pilot car is used, place a C37(CA) "TRAFFIC CONTROL-WAIT AND FOLLOW PILOT CAR" sign with black legend on white background at all intersections, driveways and alleys without a flagger within traffic control area. Signs shall be clean and visible at all times. Where traffic can not be effectively self-regulated, at least one flagger shall be used at each intersection within traffic control area.
9. An optional C29(CA) sign may be placed below the C9A(CA) sign.
10. Either traffic cones or barricades shall be placed on the taper. Barricades shall be Type I, II, or III.
11. The color of the portable transverse rumble strips shall be black or orange. Use 2 arrays, each array shall consist of 3 rumble strips.
12. Portable transverse rumble strips shall not be placed on sharp horizontal or vertical curves nor shall they be placed through pedestrian crossings.
13. If the portable transverse rumble strips become out of alignment (skewed) by more than 6 inches, measured from one end to the other, they shall be readjusted to bring the placement back to the original location.
14. Portable transverse rumble strips are not required if any one of the following conditions is satisfied:
    A. Work duration occupies a location for four hours or less
    B. Posted speed limit is below 45 MPH
    C. Work is of emergency nature
    D. Work zone is in snow or icy weather conditions

LEGEND

- TRAFFIC CONE
- TEMPORARY TRAFFIC CONTROL SIGN
- PORTABLE FLASHING BEACON
- FLAGGER

SIGN PANEL SIZE (Min)

A	48" x 48"
B	30" x 30"
C	36" x 18"
D	36" x 42"
E	20" x 7"

STATE OF CALIFORNIA
DEPARTMENT OF TRANSPORTATION

TRAFFIC CONTROL SYSTEM FOR LANE CLOSURE ON TWO LANE CONVENTIONAL HIGHWAYS

NO SCALE

RSP T13 DATED OCTOBER 17, 2014 SUPERSEDES RSP T13 DATED JULY 18, 2014 AND RSP T13 DATED APRIL 19, 2013 AND STANDARD PLAN T13 DATED MAY 20, 2011 - PAGE 241 OF THE STANDARD PLANS BOOK DATED 2010.

REVISED STANDARD PLAN RSP T13

DATE PLOTTED => 11-MAR-2015
TIME PLOTTED => 14:10

Dist	COUNTY	ROUTE	POST MILES TOTAL PROJECT	SHEET No.	TOTAL SHEETS
02	Tri	3	30.8/31.3	47	49

TO ACCOMPANY PLANS DATED 02-02-15

REGISTERED CIVIL ENGINEER

April 20, 2012
PLANS APPROVAL DATE

REGISTERED PROFESSIONAL ENGINEER Gary Wang No. C58298 Exp. 6-30-12 CIVIL STATE OF CALIFORNIA

THE STATE OF CALIFORNIA OR ITS OFFICERS OR AGENTS SHALL NOT BE RESPONSIBLE FOR THE ACCURACY OR COMPLETENESS OF SCANNED COPIES OF THIS PLAN SHEET.

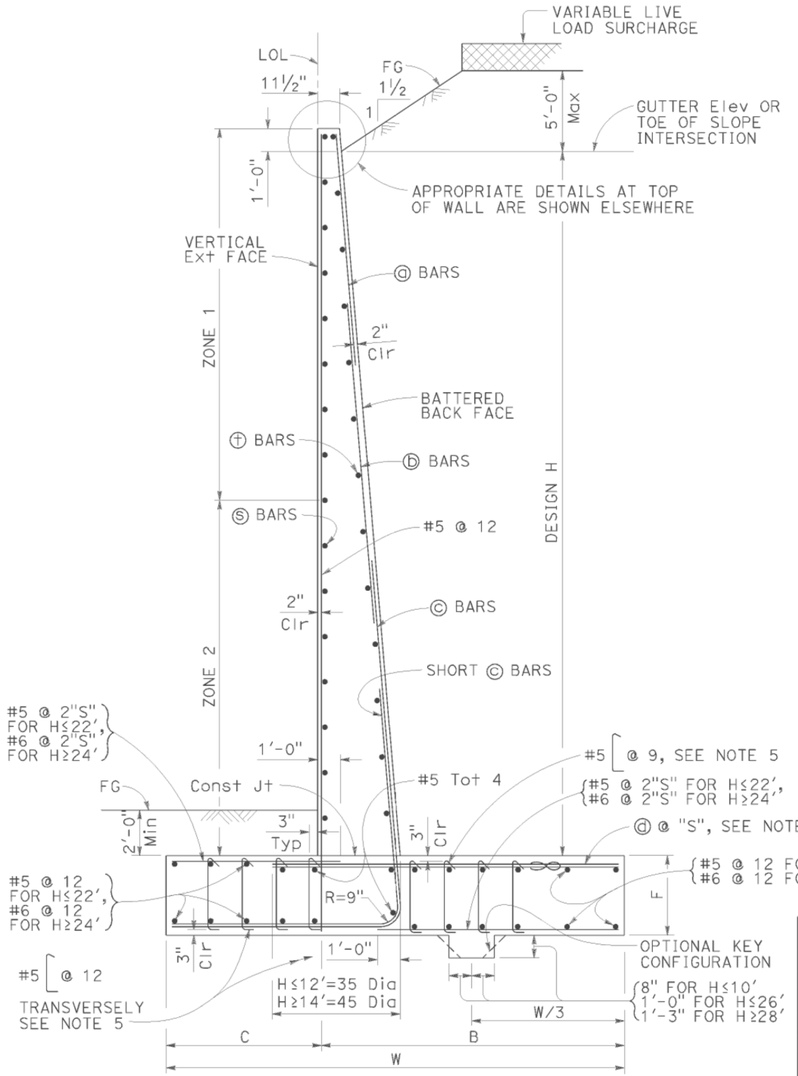

TYPICAL SECTION

DESIGN CONDITIONS:

Design H may be exceeded by 6" before going to the next size. Special footing design is required where foundation material is incapable of supporting bearing stress listed in the table.

DESIGN NOTES:

DESIGN: AASHTO LRFD Bridge Design Specifications, 4th Edition with California Amendments

LS: Varied surcharge on level ground surface

DC: Stem Architectural Treatment of thickness up to 6" of concrete (75 psf) considered

SEISMIC: $k_h = 0.2$
$k_v = 0.0$

SOIL: $\phi = 34°$
$\gamma = 120$ pcf

REINFORCED CONCRETE: $f'c = 3{,}600$ psi
$fy = 60{,}000$ psi

LOAD COMBINATIONS AND LIMIT STATES:

Service I $Q = 1.00DC+1.00EV+1.00EH+1.00LS$
Strength I $Q = \alpha DC+\phi EV+\eta EH+1.75LS$
Extreme I $Q = 1.00DC+1.00EV+1.00EH+1.00EQD+1.00EQE$

Where:

Q: Force Effects
α: 1.25 or 0.90, Whichever Controls Design
ø: 1.35 or 1.00, Whichever Controls Design
η: 1.50 or 0.90, Whichever Controls Design
DC: Dead Load of Structure Components
EH: Horizontal Earth Fill Pressure
EV: Vertical Earth Pressure from Earth Fill Weight
LS: Live Load Surcharge
EQE: Seismic Earth Pressure
EQD: Soil and Structural and Nonstructural Components Inertia

SYMBOLS:

Ser - service limit state I
Str - strength limit state I
Ext - extreme event limit state I
B' - effective footing width (ft)
q_o' - net bearing stress (ksf), OG assumed to be FG at toe
q_o - gross uniform bearing stress (ksf)
h1 = Top of footing to top of short ⓒ bar
h2 = Top of footing to top of ⓒ bar
h3 = Top of footing to top of ⓑ bar
Zone 1 = Top half of stem height
Zone 2 = Bottom half of stem height
∞ - Bundle of two bars

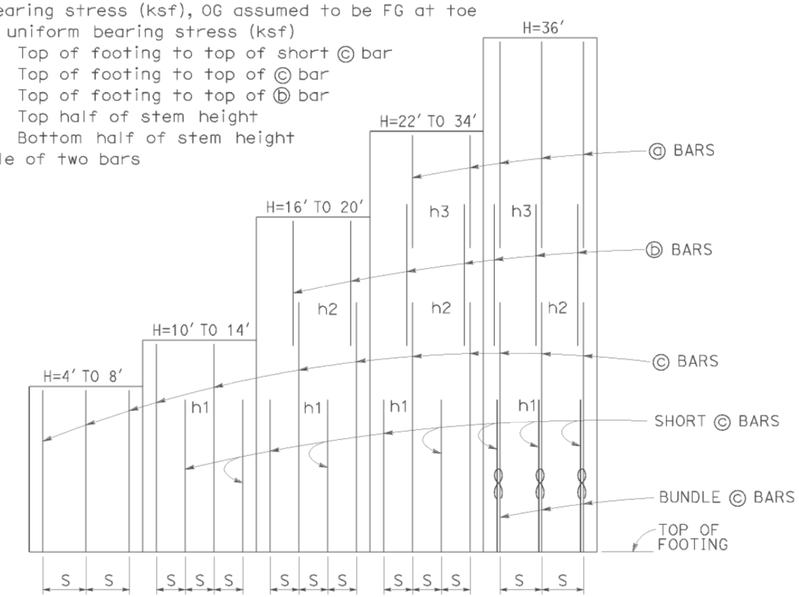

ELEVATION

TABLE OF REINFORCING STEEL, DIMENSIONS AND DATA

DESIGN H	4'	6'	8'	10'	12'	14'	16'	18'	20'	22'	24'	26'	28'	30'	32'	34'	36'
W	6'-5"	7'-3"	8'-3"	9'-3"	10'-8"	12'-6"	13'-9"	15'-1"	16'-6"	17'-10"	19'-3"	20'-4"	21'-5"	22'-8"	23'-11"	25'-1"	26'-4"
C	2'-2"	2'-6"	3'-0"	3'-6"	3'-8"	3'-11"	4'-0"	4'-7"	5'-3"	6'-0"	7'-0"	7'-9"	8'-3"	8'-8"	9'-0"	9'-6"	9'-10"
B	4'-3"	4'-9"	5'-3"	5'-9"	7'-0"	8'-7"	9'-9"	10'-6"	11'-3"	11'-10"	12'-3"	12'-7"	13'-2"	14'-0"	14'-11"	15'-7"	16'-6"
F	1'-4"	1'-4"	1'-4"	1'-6"	1'-6"	1'-6"	1'-8"	2'-0"	2'-4"	2'-9"	3'-2"	3'-0"	3'-0"	3'-0"	3'-3"	3'-3"	3'-3"
BATTER	½: 12	½: 12	½: 12	½: 12	½: 12	½: 12	½: 12	½: 12	½: 12	½: 12	⅝: 12	¾: 12	1 : 12	1 : 12	1⅛: 12	1⅛: 12	1⅛: 12
SPACING "S"	16"	16"	16"	8"	8"	7"	7"	7"	6"	6"	7"	7"	7"	6"	6"	6"	8"
ⓐ BARS	-	-	-	-	-	-	-	-	-	#5	#5	#5	#5	#5	#5	#6	#6
ⓑ BARS	-	-	-	-	-	-	#5	#5	#5	#7	#7	#7	#8	#8	#8	#9	#9
ⓒ BARS	#5	#5	#6	#5	#6	#6	#7	#8	#8	#9	#10	#10	#10	#10	#10	#11	#11
ⓓ BARS	#5	#5	#6	#5	#6	#8	#9	#9	#9	#10	#11	#9	#9	#9	#10	#10	#9
h1	-	-	-	4'-2"	4'-7"	6'-2"	7'-3"	8'-6"	8'-8"	9'-8"	11'-0"	12'-2"	14'-0"	13'-0"	15'-10"	14'-6"	12'-0"
h2	-	-	-	-	-	-	10'-6"	12'-9"	14'-2"	13'-8"	17'-0"	18'-6"	17'-10"	18'-9"	20'-3"	21'-0"	17'-0"
h3	-	-	-	-	-	-	-	-	-	15'-6"	17'-9"	19'-6"	21'-8"	23'-0"	24'-8"	25'-6"	24'-8"
No. of Toe Stirrups	0	0	0	0	0	0	0	0	0	0	0	6	6	7	7	7	8
No. of Heel Stirrups	0	0	0	0	0	0	0	0	0	0	0	6	6	6	6	6	6
ZONE 1 ⓢ BARS	#5 @ 18	#5 @ 18	#5 @ 18	#5 @ 18	#5 @ 18	#5 @ 18	#5 @ 18	#5 @ 18	#5 @ 18	#5 @ 18	#5 @ 18	#5 @ 12	#5 @ 12	#5 @ 12	#5 @ 12	#5 @ 12	#5 @ 12
ZONE 2 ⓢ BARS	#5 @ 18	#5 @ 18	#5 @ 18	#5 @ 18	#5 @ 18	#5 @ 18	#5 @ 12	#5 @ 12	#5 @ 12	#5 @ 12	#5 @ 12	#6 @ 12	#6 @ 12	#6 @ 12	#7 @ 12	#7 @ 12	#7 @ 12
ZONE 1 ⓣ BARS	#4 @ 18	#4 @ 18	#4 @ 18	#4 @ 18	#4 @ 18	#4 @ 18	#4 @ 18	#4 @ 18	#4 @ 18	#4 @ 18	#4 @ 18	#4 @ 18	#4 @ 12	#4 @ 12	#4 @ 12	#4 @ 12	#4 @ 12
ZONE 2 ⓣ BARS	#4 @ 18	#4 @ 18	#4 @ 18	#4 @ 18	#4 @ 18	#4 @ 18	#4 @ 18	#4 @ 18	#4 @ 18	#4 @ 18	#4 @ 12	#4 @ 12	#5 @ 12	#5 @ 12	#5 @ 12	#5 @ 12	#5 @ 12
Ser: B', q_o'	4.3, 0.8	4.9, 1.1	5.6, 1.3	7.1, 1.5	8.0, 1.8	9.3, 2.1	10.6, 2.3	11.9, 2.5	13.3, 2.6	14.6, 2.8	15.9, 2.9	17.0, 3.0	18.0, 3.1	19.3, 3.3	20.4, 3.5	21.5, 3.7	22.7, 3.9
Str: B', q_o	2.4, 2.2	2.4, 2.7	2.7, 3.2	3.0, 3.7	4.3, 3.8	5.9, 3.8	7.0, 4.1	7.9, 4.3	9.0, 4.5	9.9, 4.7	10.8, 4.9	11.6, 5.0	12.3, 5.2	13.3, 5.4	14.2, 5.7	15.0, 5.9	16.0, 6.1
Ext: B', q_o	4.1, 1.5	3.9, 2.1	3.8, 2.8	3.5, 3.9	3.6, 4.9	4.2, 5.5	4.6, 6.3	5.0, 7.0	5.6, 7.4	6.0, 8.0	6.5, 8.4	6.9, 8.6	7.2, 9.2	7.7, 9.6	8.1, 10.4	8.4, 10.9	8.9, 11.3

NOTES:

1. For details not shown and drainage notes see RSP B3-5
2. For wall stem joint details see B0-3/3-3 and B0-3/3-4
3. At ⓒ bars:
   H ≤ 6', no splices are allowed within 1'-8" above the top of footing.
   H > 6', no splices are allowed within H/4 above the top of footing.
4. Bundle ⓓ bars for H = 36'.
5. Hook stirrups around & space with alternating transverse reinforcement at 2 x "S".

STATE OF CALIFORNIA
DEPARTMENT OF TRANSPORTATION

RETAINING WALL TYPE 1 (CASE 3)

NO SCALE

RSP B3-1C DATED APRIL 20, 2012 SUPPLEMENTS THE STANDARD PLANS BOOK DATED 2010.

REVISED STANDARD PLAN RSP B3-1C

2010 REVISED STANDARD PLAN RSP B3-1C

DATE PLOTTED => 11-MAR-2015
TIME PLOTTED => 14:11

Dist	COUNTY	ROUTE	POST MILES TOTAL PROJECT	SHEET No.	TOTAL SHEETS
02	Tri	3	30.8/31.3	48	49

REGISTERED CIVIL ENGINEER

April 20, 2012
PLANS APPROVAL DATE

REGISTERED PROFESSIONAL ENGINEER Gary Wang No. C58298 Exp. 6-30-12 CIVIL STATE OF CALIFORNIA

THE STATE OF CALIFORNIA OR ITS OFFICERS OR AGENTS SHALL NOT BE RESPONSIBLE FOR THE ACCURACY OR COMPLETENESS OF SCANNED COPIES OF THIS PLAN SHEET.

TO ACCOMPANY PLANS DATED 02-05-15

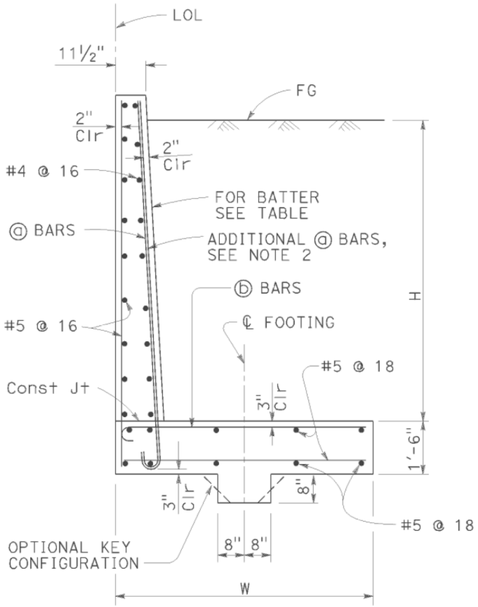

SPREAD FOOTING SECTION

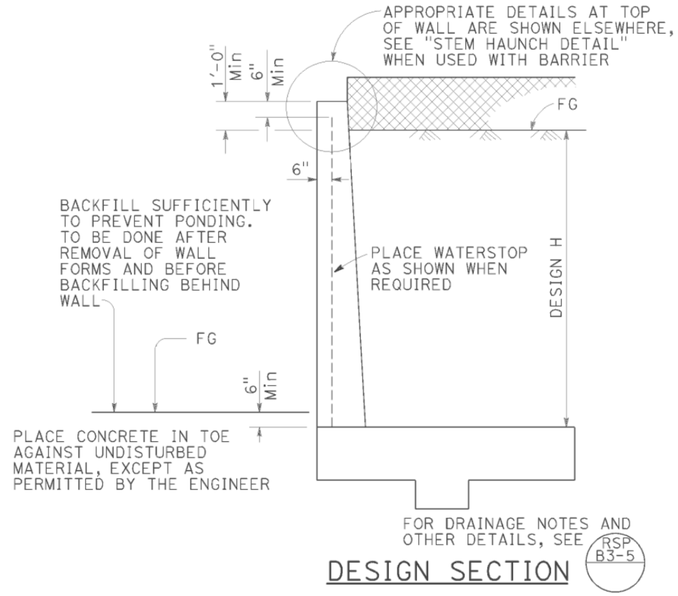

DESIGN SECTION

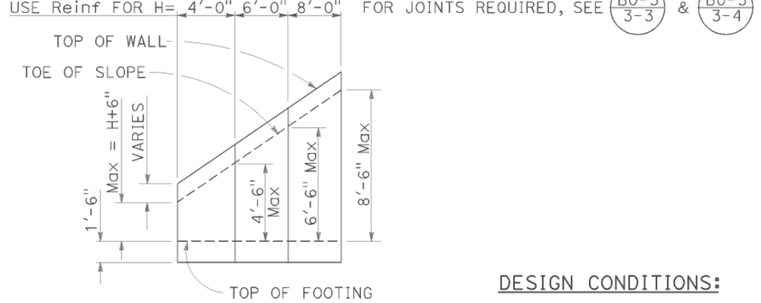

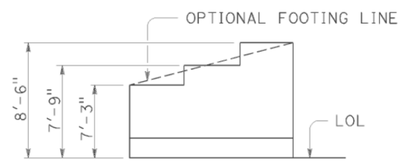

TYPICAL LAYOUT EXAMPLE

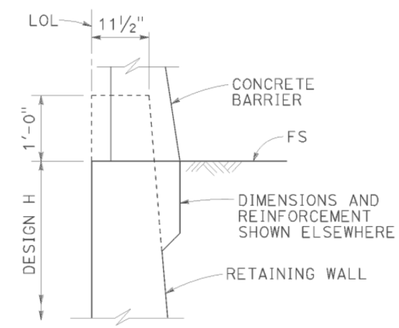

STEM HAUNCH DETAIL

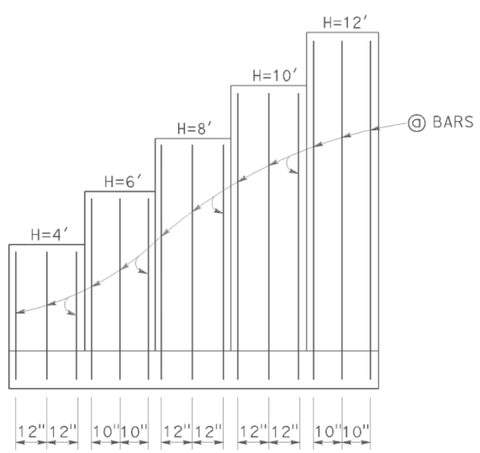

ELEVATION

SYMBOLS:

Ser - service limit state I
Str - strength limit state I
Ext I - extreme event limit state I
Ext II - extreme event limit state II
B' - effective footing width (ft)
q_o' - net bearing stress (ksf), OG assumed to be FG at toe
q_o - gross uniform bearing stress (ksf)

TABLE OF REINFORCING STEEL, DIMENSIONS AND DATA

DESIGN H	4'	6'	8'	10'	12'
W	7'-3"	7'-9"	8'-6"	9'-6"	10'-6"
BATTER	NONE	NONE	100 : 2	100 : 3	100 : 4
ⓐ BARS	#7 @ 12	#7 @ 10	#7 @ 12	#7 @ 12	#7 @ 10
ⓑ BARS	#7 @ 12	#7 @ 10	#8 @ 12	#9 @ 12	#10 @ 10
Ser: B', q_o'	6.2, 1.4	6.1, 1.8	6.4, 2.1	7.0, 2.5	7.7, 2.8
Str: B', q_o	6.2, 2.4	6.1, 2.9	5.3, 3.0	6.0, 3.5	6.6, 4.0
Ext I: B', q_o	4.4, 1.5	4.1, 2.2	4.0, 3.1	4.1, 3.9	4.2, 4.8
Ext II: B', q_o	2.5, 2.7	3.1, 3.0	3.8, 3.2	4.9, 3.3	5.8, 3.5

DESIGN CONDITIONS:

Design H may be exceeded by 6" before going to the next size. Special footing design is required where foundation material is incapable of supporting bearing stress listed in the table.

DESIGN NOTES:

DESIGN: AASHTO LRFD Bridge Design Specifications, 4th Edition with California Amendments

LS: Varied surcharge on level ground surface

DC: Stem Architectural Treatment of thickness up to 6" of concrete (75 psf) considered

CT: 54 kip transverse force applied at He = 32", distributed over 10 feet at the top of wall and 1 : 1 distribution down and outward. Distribution below footing taken no less than 40'.

SEISMIC: $k_h = 0.2$
$k_v = 0.0$

SOIL: $\phi = 34°$
$\gamma = 120$ pcf

REINFORCED CONCRETE: f'c = 3,600 psi
fy = 60,000 psi

LOAD COMBINATIONS AND LIMIT STATES:

Service I	Q = 1.00DC+1.00EV+1.00EH+1.00LS
Strength I	Q = αDC+βEV+ηEH+1.75LS
Extreme I	Q = 1.00DC+1.00EV+1.00EH+1.00EQD+1.00EQE
Extreme II	Q = 1.00DC+1.00EV+1.00EH+1.00CT

Where:

Q:	Force Effects
α:	1.25 or 0.90, Whichever Controls Design
β:	1.35 or 1.00, Whichever Controls Design
η:	1.50 or 0.90, Whichever Controls Design
DC:	Dead Load of Structure Components
EH:	Horizontal Earth Fill Pressure
EV:	Vertical Earth Pressure from Earth Fill Weight
LS:	Live Load Surcharge
EQE:	Seismic Earth Pressure
EQD:	Soil and Structural and Nonstructural Components Inertia
CT:	Vehicular Collision Force

NOTES:

1. At ⓐ bars:
   H ≤ 6', no splices are allowed within 1'-8" above the top of footing.
   H > 6', no splices are allowed within H/4 above the top of footing.

2. Provide #6 @ 8" ⓐ bars in addition to tabulated ⓐ bars over a distance of 8'-0" measured from all expansion joints, begin wall and end wall locations.

STATE OF CALIFORNIA
DEPARTMENT OF TRANSPORTATION

RETAINING WALL TYPE 5 (CASE 1)

NO SCALE

RSP B3-4A DATED APRIL 20, 2012 SUPPLEMENTS THE STANDARD PLANS BOOK DATED 2010.

REVISED STANDARD PLAN RSP B3-4A

2010 REVISED STANDARD PLAN RSP B3-4A

DATE PLOTTED => 11-MAR-2015
TIME PLOTTED => 14:11

Dist	COUNTY	ROUTE	POST MILES TOTAL PROJECT	SHEET No.	TOTAL SHEETS
02	Tri	3	30.8/31.3	49	49

REGISTERED CIVIL ENGINEER

April 20, 2012
PLANS APPROVAL DATE

Gary Wang No. C58298 Exp. 6-30-12 CIVIL — REGISTERED PROFESSIONAL ENGINEER — STATE OF CALIFORNIA

THE STATE OF CALIFORNIA OR ITS OFFICERS OR AGENTS SHALL NOT BE RESPONSIBLE FOR THE ACCURACY OR COMPLETENESS OF SCANNED COPIES OF THIS PLAN SHEET.

TO ACCOMPANY PLANS DATED 02-05-15

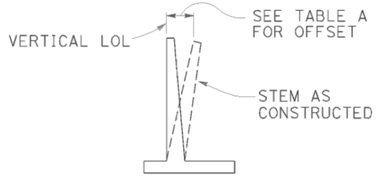

APPROXIMATE WALL OFFSET VALUES

Values for offseting forms to be determined by the Engineer.

TABLE A

H	OFFSET
4'-12'	H/200
14'-16'	H/160
18'-20'	H/140
22'-24'	H/130
26'-36'	2½"

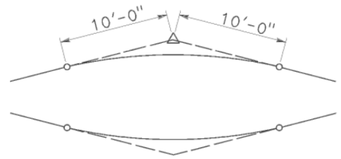

20'-0" VC AT TOP OF WALL SLOPE CHANGE

Where shown on the plans

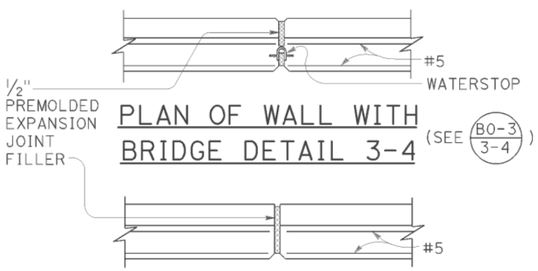

PLAN OF WALL WITH BRIDGE DETAIL 3-4

(SEE B0-3 / 3-4)

PLAN OF WALL WITH EXPANSION JOINT ONLY

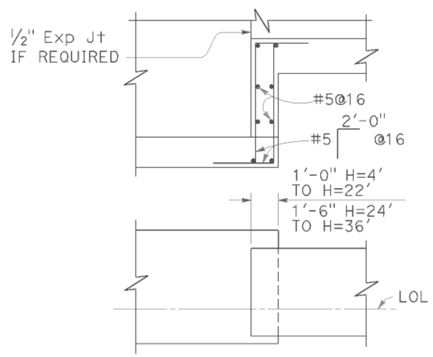

FOOTING STEP

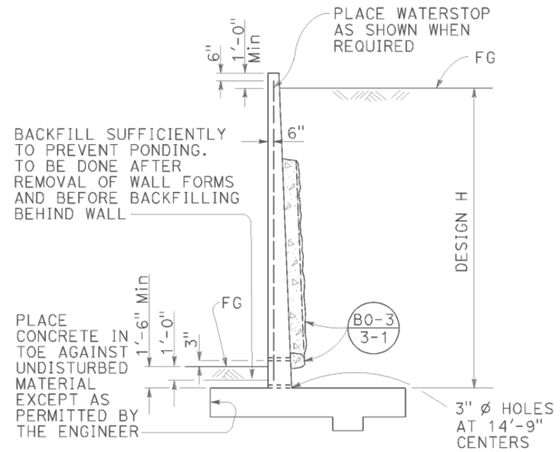

DESIGN AND DRAINAGE

DESIGN CONDITIONS:

Design "H" may be exceeded by 6" before going to the next size. Special footing design is required where foundation material is incapable of supporting bearing stress listed in table

Return wall not required unless shown elsewhere

DESIGN NOTES:

DESIGN: AASHTO LRFD Bridge Design Specifications, 4th edition with California Amendments

LIVE LOAD: Surcharge on level ground surface

SOIL: ϕ = 34°
γ = 120 pcf

REINFORCED CONCRETE: fy = 60,000 psi
fc' = 3,600 psi

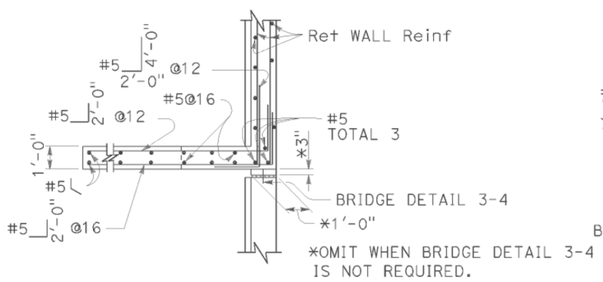

PLAN

(For return wall Type "A")

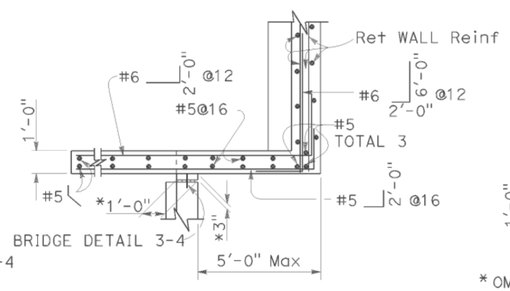

PLAN

(For return wall Type "B")

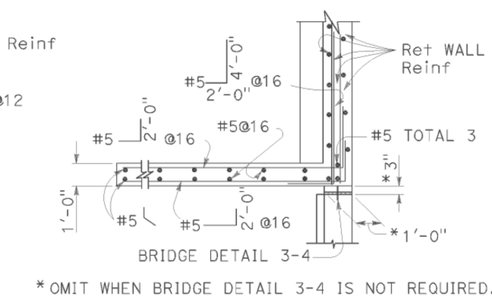

PLAN

(For return wall Type "C")

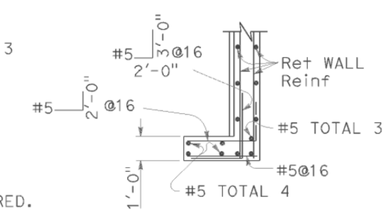

PLAN

(For return wall Type "D")

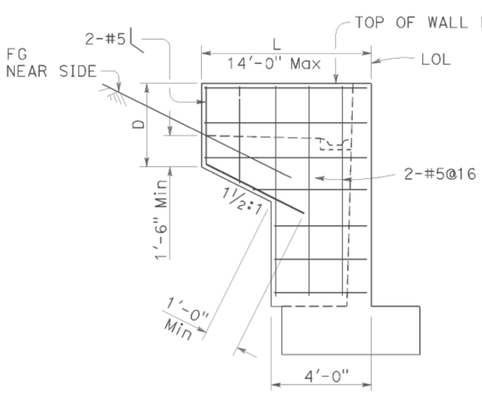

ELEVATION

RETURN WALL TYPE "A"

Use where H=8' or less

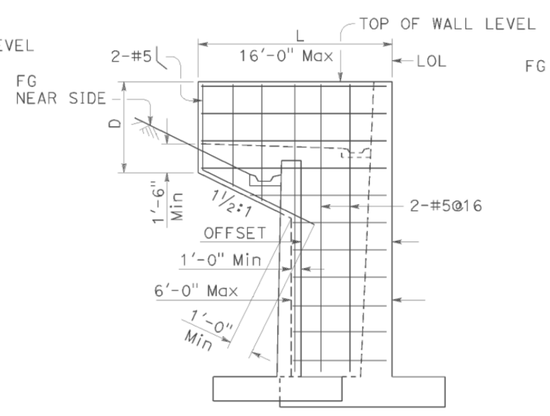

ELEVATION

RETURN WALL TYPE "B"

Use where H=10' or more on offset walls

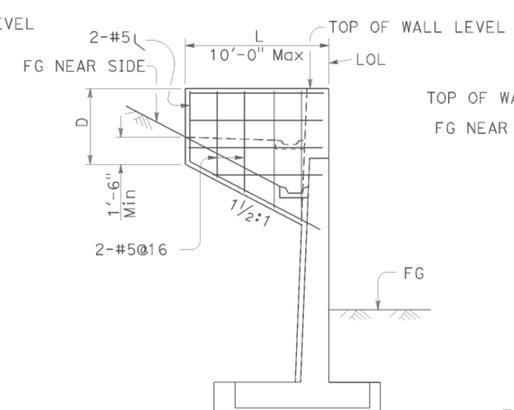

ELEVATION

RETURN WALL TYPE "C"

Use where H=10' or more on straight walls

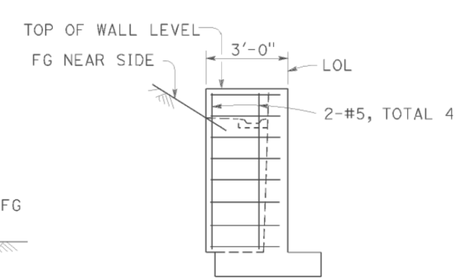

ELEVATION

RETURN WALL TYPE "D"

Use where H=6' or less

STATE OF CALIFORNIA
DEPARTMENT OF TRANSPORTATION

RETAINING WALL DETAILS No. 1

NO SCALE

RSP B3-5 DATED APRIL 20, 2012 SUPERSEDES STANDARD PLAN B3-5 DATED MAY 20, 2011 - PAGE 277 OF THE STANDARD PLANS BOOK DATED 2010.

REVISED STANDARD PLAN RSP B3-5

2010 REVISED STANDARD PLAN RSP B3-5

DATE PLOTTED => 11-MAR-2015
TIME PLOTTED => 14:11