ACNHP-P044(051)E

Dist	COUNTY	ROUTE	POST MILES TOTAL PROJECT	SHEET No.	TOTAL SHEETS
02	Sha	44	R4.2/R14.5	1	70

STATE OF CALIFORNIA

DEPARTMENT OF TRANSPORTATION

PROJECT PLANS FOR CONSTRUCTION ON

STATE HIGHWAY

IN SHASTA COUNTY AT AND NEAR PALO CEDRO FROM 0.1 MILE WEST OF STILLWATER CREEK BRIDGE TO 0.1 MILE EAST OF BEAR CREEK BRIDGE

TO BE SUPPLEMENTED BY STANDARD PLANS DATED MAY 2010

INDEX OF PLANS

SHEET No.	DESCRIPTION
1	TITLE AND LOCATION MAP
2	TYPICAL CROSS SECTIONS
3-11	CONSTRUCTION DETAILS
12-25	DRAINAGE PLANS, PROFILES, DETAILS AND QUANTITIES
26	CONSTRUCTION AREA SIGNS
27-28	DETOUR PLANS
29-30	PAVEMENT DELINEATION PLANS, DETAILS AND QUANTITIES
31-36	SIGN PLANS, DETAILS AND QUANTITIES
37-39	SUMMARY OF QUANTITIES
40	LANDSCAPE PLAN
41-43	ELECTRICAL PLANS
44-70	REVISED STANDARD PLANS

THE STANDARD PLANS LIST APPLICABLE TO THIS CONTRACT IS INCLUDED IN THE NOTICE TO BIDDERS AND SPECIAL PROVISIONS BOOK.

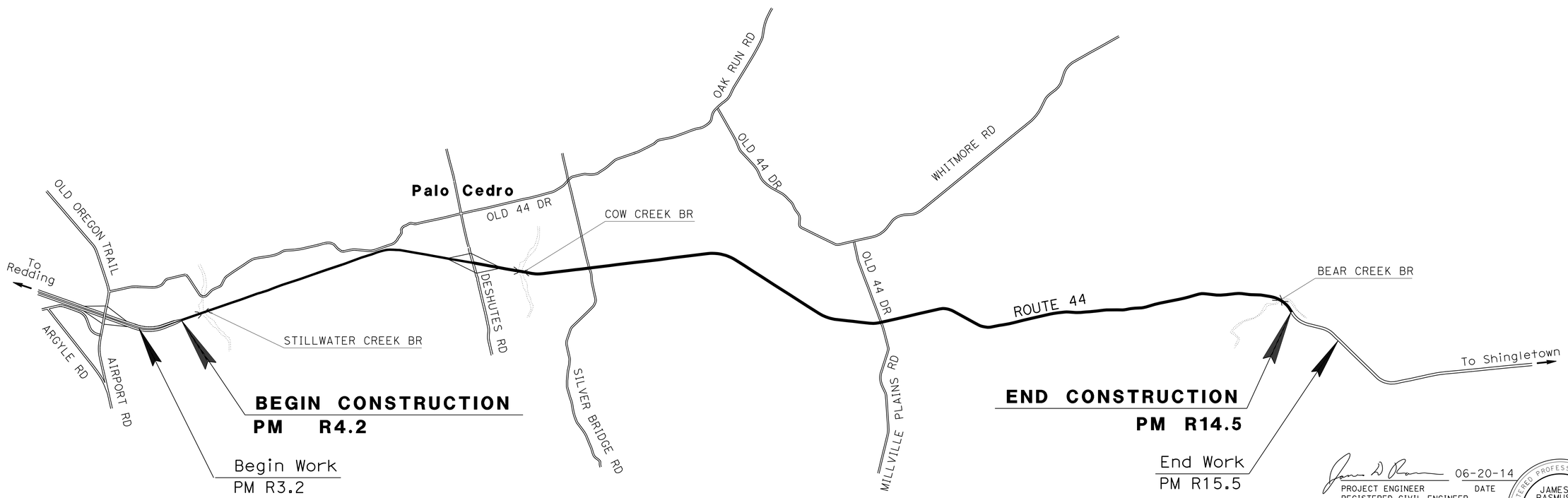

NO SCALE

06-20-14
PROJECT ENGINEER REGISTERED CIVIL ENGINEER — DATE

REGISTERED PROFESSIONAL ENGINEER JAMES D. RASMUSSEN No. C76401 Exp. 12-31-14 CIVIL STATE OF CALIFORNIA

JUNE 24, 2014
PLANS APPROVAL DATE

THE STATE OF CALIFORNIA OR ITS OFFICERS OR AGENTS SHALL NOT BE RESPONSIBLE FOR THE ACCURACY OR COMPLETENESS OF SCANNED COPIES OF THIS PLAN SHEET.

THE CONTRACTOR SHALL POSSESS THE CLASS (OR CLASSES) OF LICENSE AS SPECIFIED IN THE "NOTICE TO BIDDERS."

CONTRACT No.	02-4E4304
PROJECT ID	0200020284

PROJECT MANAGER: PHIL BAKER
DESIGN ENGINEER: JOHN MARTIN

P:\proj1\02\4E430_plans\pse\0200020284db001.dgn

LAST REVISION 06-20-14 — DATE PLOTTED => 25-JUL-2014 TIME PLOTTED => 12:20

Dist	COUNTY	ROUTE	POST MILES TOTAL PROJECT	SHEET No.	TOTAL SHEETS
02	Sha	44	R4.2/R14.5	2	70

REGISTERED CIVIL ENGINEER 06-19-14 DATE

06-24-14
PLANS APPROVAL DATE

REGISTERED PROFESSIONAL ENGINEER JAMES D. RASMUSSEN No. 76401 Exp. 12/31/14 CIVIL STATE OF CALIFORNIA

THE STATE OF CALIFORNIA OR ITS OFFICERS OR AGENTS SHALL NOT BE RESPONSIBLE FOR THE ACCURACY OR COMPLETENESS OF SCANNED COPIES OF THIS PLAN SHEET.

NOTES:

1. DIMENSIONS OF THE PAVEMENT (STRUCTURAL SECTIONS) ARE SUBJECT TO THE TOLERANCES SPECIFIED IN THE STANDARD SPECIFICATIONS.
2. REPLACE AC SURFACING PRIOR TO AC OVERLAY OPERATIONS OR AS DIRECTED BY ENGINEER.
3. NO SHOULDER BACKING WHERE SHOULDER BACKING WIDTH IS LESS THAN 1'.

ABBREVIATIONS:

RHMA-O RUBBERIZED HOT MIX ASPHALT (OPEN GRADE)
RHMA-G RUBBERIZED HOT MIX ASPHALT (TYPE G)

DESIGN DESIGNATION (ROUTE 44)

ADT (2014) = 5800
ADT (2034) = 7600
DHV (2014)= 580
DHV (2034)= 760
D = 71%
T = 4%
V = 55 MPH & 65 MPH

PAVEMENT CLIMATE REGION

INLAND VALLEY

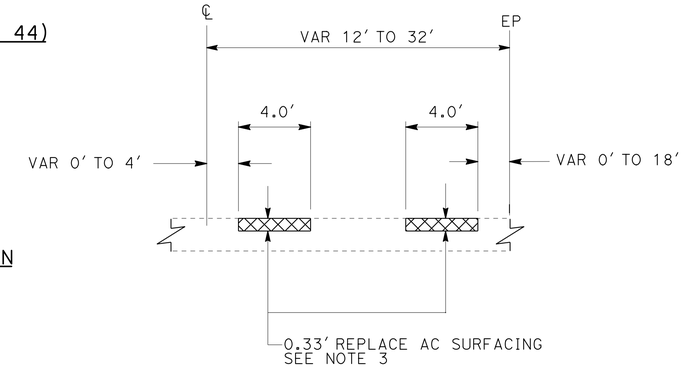

REPLACE AC SURFACING (TYPICAL BOTH DIRECTIONS)

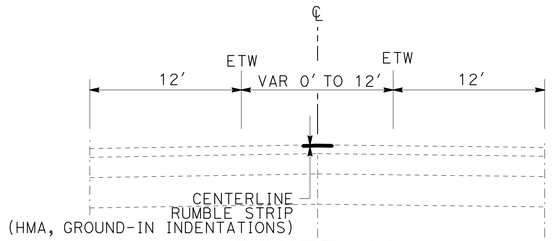

ROUTE 44
SHA PM R4.25 TO SHA PM R5.22

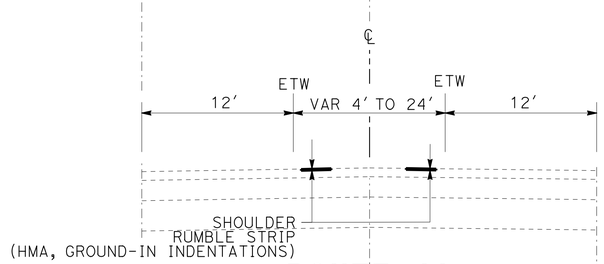

ROUTE 44
SHA PM R4.20 TO SHA PM R4.25

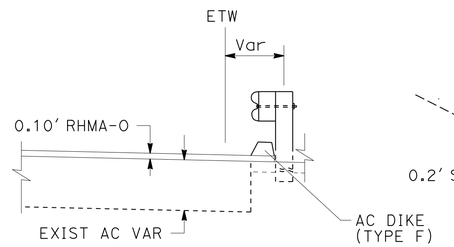

DIKE LOCATION
PM R14.34 TO PM R14.44 BB

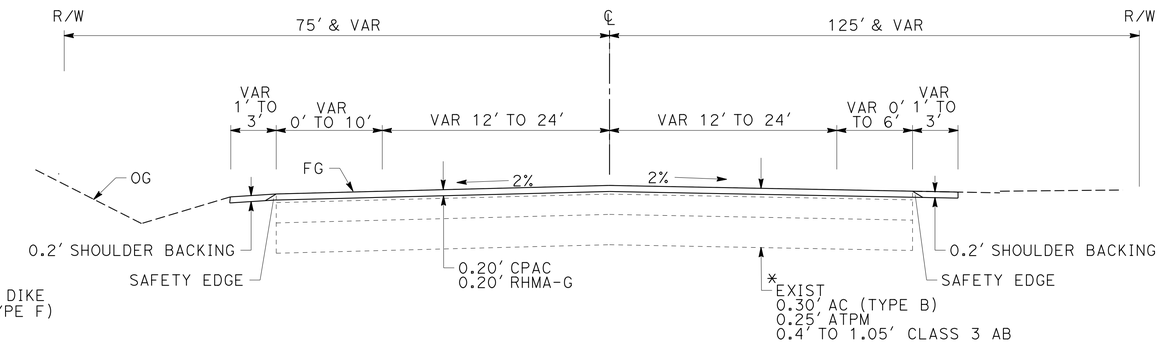

ROUTE 44
SHA PM R14.41 EB TO SHA PM R14.50

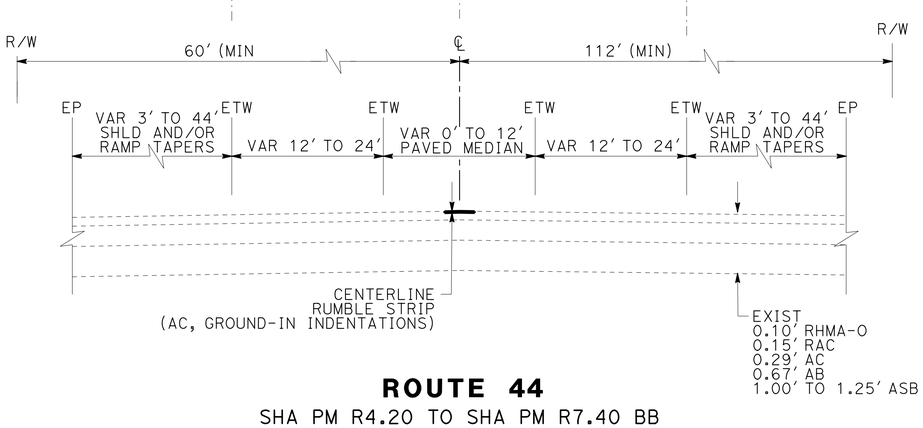

ROUTE 44
SHA PM R4.20 TO SHA PM R7.40 BB

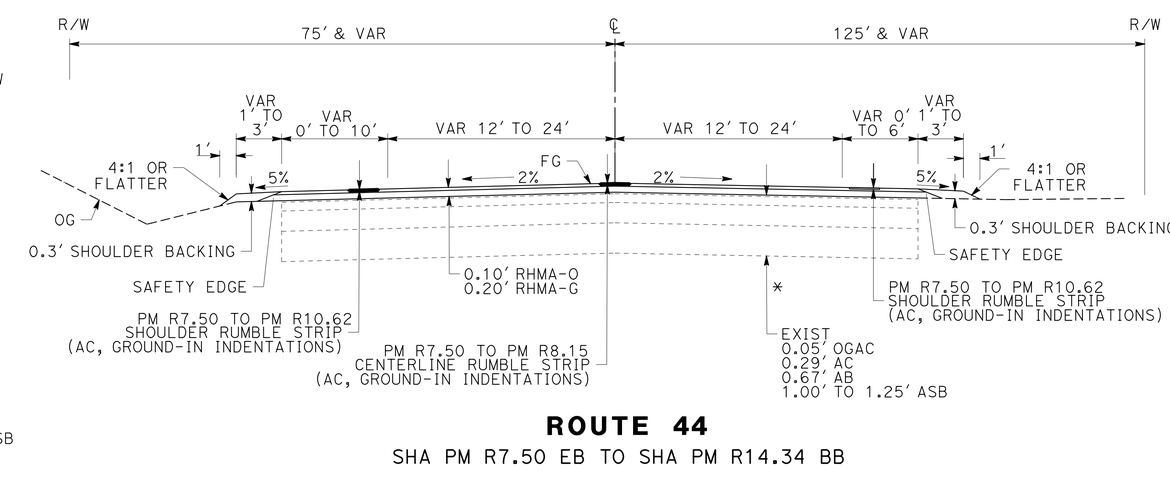

PM 13.20 TO PM 13.58
PM 14.00 TO PM 14.17
* EXIST
0.15 AC (TYPE A)
PRF
0' TO 0.80 AC (TYPE A)
0.05' OGAC
0.29' AC
0.67' AB
1.00' TO 1.25' ASB

PM 13.58 TO PM 14.00
* EXIST
0.95' AC (TYPE A)
0.05' OGAC
0.29' AC
0.67' AB
1.00' TO 1.25' ASB

PM 14.00 TO PM 14.50
* EXIST
0.30' AC (TYPE B)
0.25' ATPM
0.4' TO 1.05' CLASS 3 AB

ROUTE 44
SHA PM R7.50 EB TO SHA PM R14.34 BB

TYPICAL CROSS SECTIONS
NO SCALE

X-1

REVISED BY | DATE REVISED
JOLENA ASTIN | JIM RASMUSSEN
CALCULATED-DESIGNED BY | CHECKED BY
FUNCTIONAL SUPERVISOR | JOHN MARTIN

STATE OF CALIFORNIA - DEPARTMENT OF TRANSPORTATION
DESIGN
Caltrans

P:\proj1\02\4E430_plans\pse\0200020284ca001.dgn

LAST REVISION 08-01-13 | DATE PLOTTED => 25-JUL-2014 | TIME PLOTTED => 12:20

Dist	COUNTY	ROUTE	POST MILES TOTAL PROJECT	SHEET No.	TOTAL SHEETS
02	Sha	44	R4.2/R14.5	3	70

REGISTERED CIVIL ENGINEER 06-19-14 DATE

06-24-14
PLANS APPROVAL DATE

REGISTERED PROFESSIONAL ENGINEER JAMES D. RASMUSSEN No. 76401 Exp. 12/31/14 CIVIL STATE OF CALIFORNIA

THE STATE OF CALIFORNIA OR ITS OFFICERS OR AGENTS SHALL NOT BE RESPONSIBLE FOR THE ACCURACY OR COMPLETENESS OF SCANNED COPIES OF THIS PLAN SHEET.

NOTE:

1. CENTERLINE RUMBLE STRIP (HMA, GROUND-IN INDENTATIONS) MUST BE CONSTRUCTED PRIOR TO INSTALLING FINAL TRAFFIC STRIPES.

LEGEND:

- RETRO-REFLECTIVE PAVEMENT MARKER
- DIRECTION OF TRAVEL
- CLRS CENTERLINE RUMBLE STRIP (HMA, GROUND-IN INDENTATIONS)
- TRAFFIC STRIPE

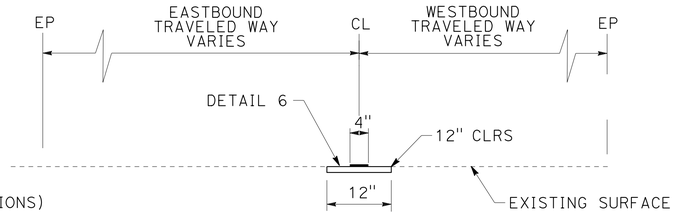

SECTION A-A

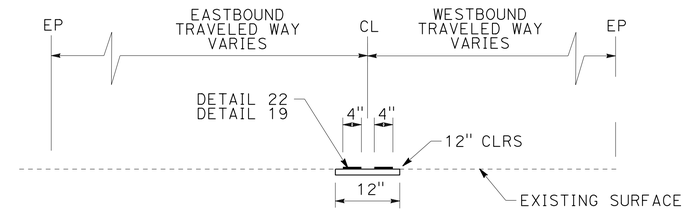

SECTION B-B

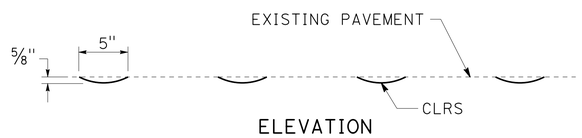

ELEVATION

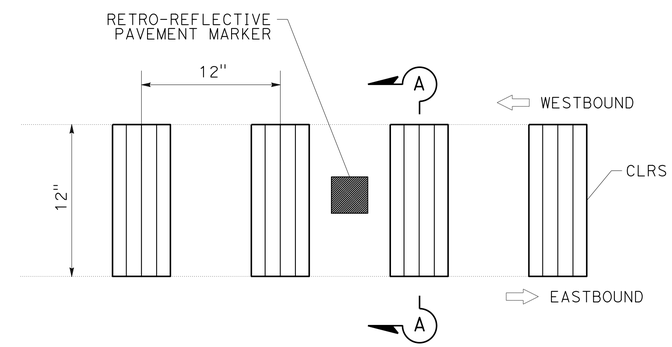

CENTERLINE RUMBLE STRIP (HMA, GROUND-IN INDENTATIONS) DETAIL 6

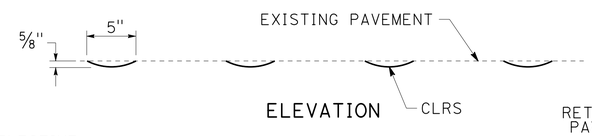

ELEVATION

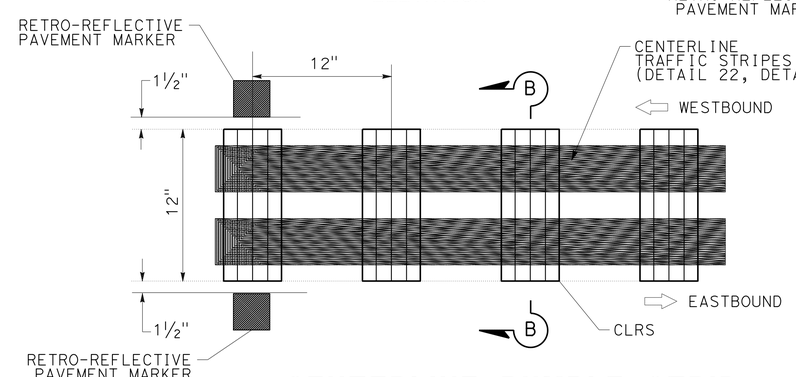

CENTERLINE RUMBLE STRIP (HMA, GROUND-IN INDENTATIONS) DETAIL 19, DETAIL 22

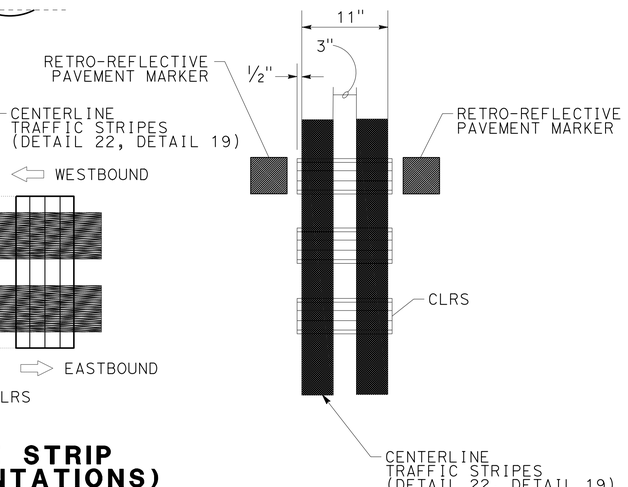

ALIGNED WITH DETAIL 6

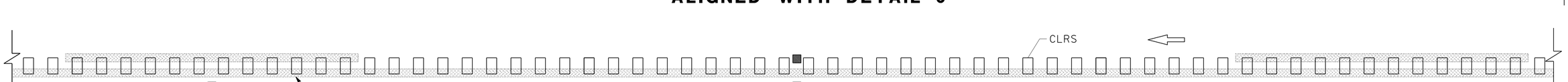

ALIGNED WITH DETAIL 19

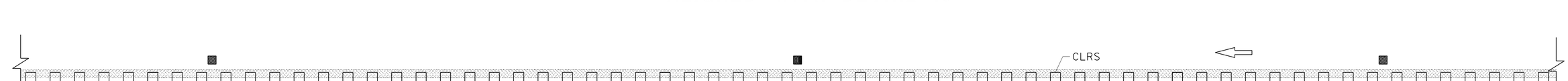

ALIGNED WITH DETAIL 22

CONSTRUCTION DETAILS

NO SCALE

CENTERLINE RUMBLE STRIP (HMA, GROUND-IN INDENTATIONS) DETAILS

C-1

REVISED BY	DATE REVISED

CALCULATED-DESIGNED BY	CHECKED BY
JOLENA ASTIN	JIM RASMUSSEN

FUNCTIONAL SUPERVISOR: JOHN MARTIN

STATE OF CALIFORNIA - DEPARTMENT OF TRANSPORTATION
Caltrans DESIGN

P:\proj1\02\4E430_plans\pse\0200020284ga001.dgn

LAST REVISION 02-28-14 | DATE PLOTTED => 25-JUL-2014 | TIME PLOTTED => 12:20

Dist	COUNTY	ROUTE	POST MILES TOTAL PROJECT	SHEET No.	TOTAL SHEETS
02	Sha	44	R4.2/R14.5	4	70

REGISTERED CIVIL ENGINEER 06-19-14 DATE

06-24-14
PLANS APPROVAL DATE

REGISTERED PROFESSIONAL ENGINEER JAMES D. RASMUSSEN No. 76401 Exp. 12/31/14 CIVIL STATE OF CALIFORNIA

THE STATE OF CALIFORNIA OR ITS OFFICERS OR AGENTS SHALL NOT BE RESPONSIBLE FOR THE ACCURACY OR COMPLETENESS OF SCANNED COPIES OF THIS PLAN SHEET.

NOTES:

1. EXACT RUMBLE STRIP LOCATIONS SHALL BE DETERMINED BY THE ENGINEER.
2. NO RUMBLE STRIP TO BE INSTALLED ON CONCRETE BRIDGES OR APPROACH SLABS.
3. (N) - NOT A SEPERATE PAY ITEM, FOR INFORMATION ONLY.

LEGEND:

CLRS CENTERLINE RUMBLE STRIP (HMA, GROUND-IN INDENTATIONS)

SHRS SHOULDER RUMBLE STRIP (HMA, GROUND-IN INDENTATIONS)

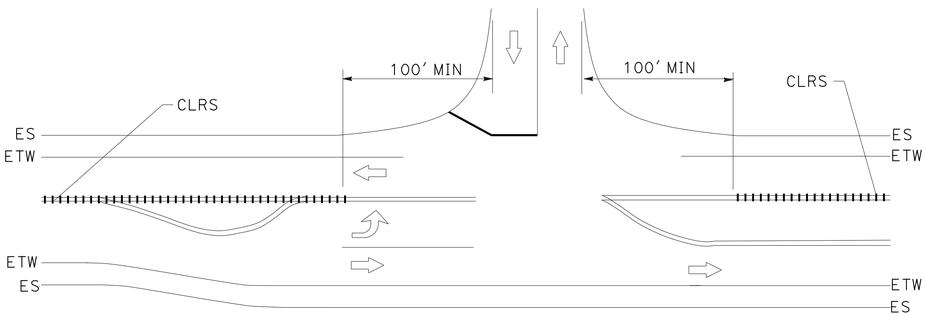

CENTERLINE RUMBLE STRIP (HMA, GROUND-IN INDENTATIONS) AT INTERSECTION WITH ONE LEFT TURN POCKET

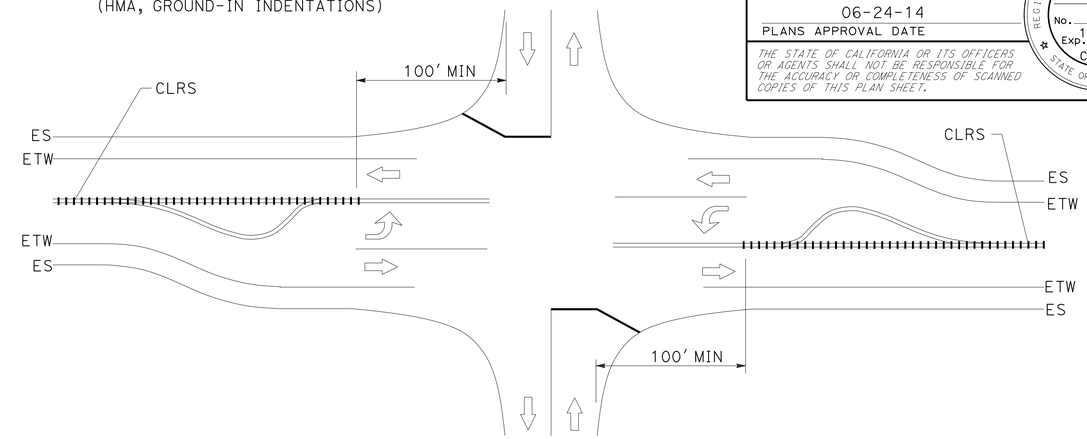

CENTERLINE RUMBLE STRIP (HMA, GROUND-IN INDENTATIONS) AT INTERSECTION WITH LEFT TURN POCKETS

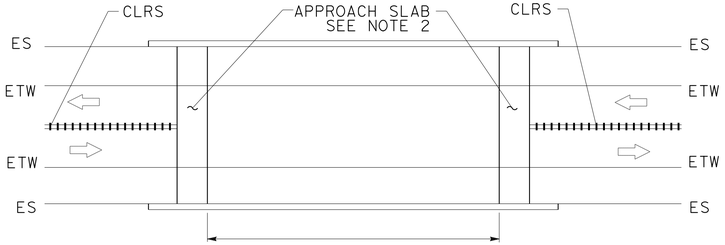

CENTERLINE RUMBLE STRIP (HMA, GROUND-IN INDENTATIONS) AT BRIDGE STRUCTURE

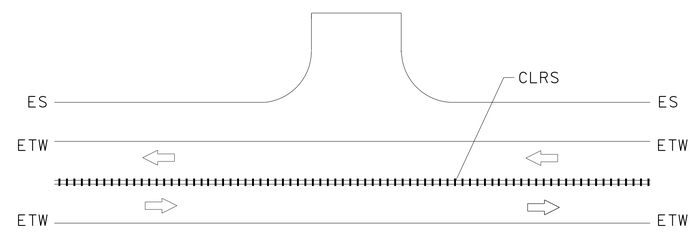

CENTERLINE RUMBLE STRIP (HMA, GROUND-IN INDENTATIONS) AT DRIVEWAY APPROACH

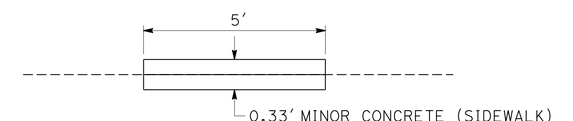

CONTROLLER WALKWAY DETAIL

NOTE: SEE E-2 SHEET FOR PLAN VIEW

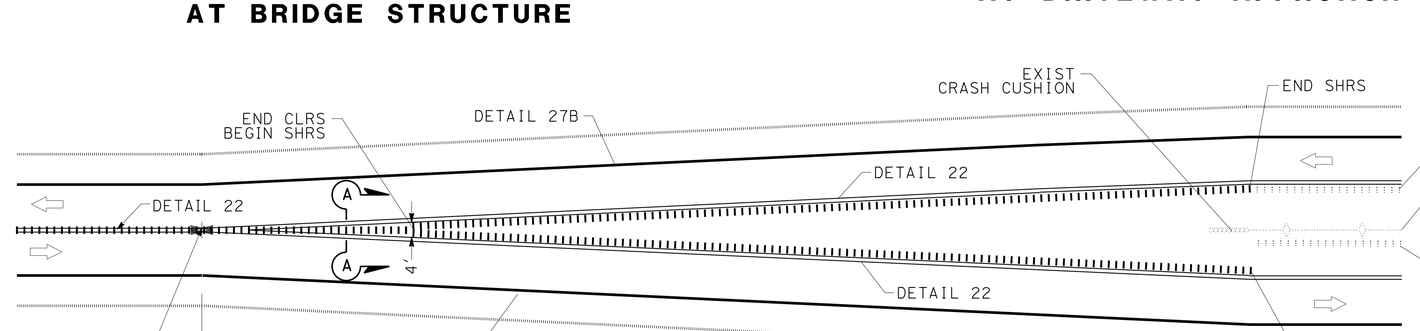

BEGINNING/ENDING OF FREEWAY

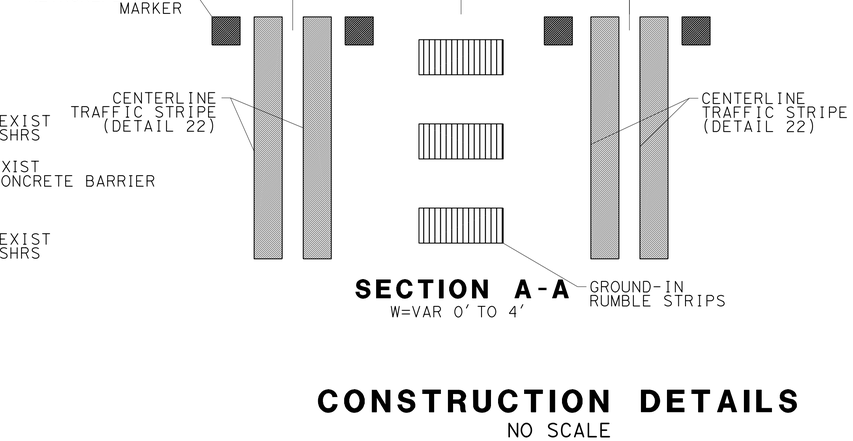

SECTION A-A

W=VAR 0' TO 4'

CONSTRUCTION DETAILS

NO SCALE

C-2

REVISED BY	DATE REVISED
JOLENA ASTIN	JIM RASMUSSEN
CALCULATED-DESIGNED BY	CHECKED BY
FUNCTIONAL SUPERVISOR	JOHN MARTIN

STATE OF CALIFORNIA - DEPARTMENT OF TRANSPORTATION

Caltrans® DESIGN

P:\proj1\02\4E430_plans\pse\0200020284ga002.dgn

LAST REVISION 02-28-14 | DATE PLOTTED => 25-JUL-2014 | TIME PLOTTED => 12:21

Dist	COUNTY	ROUTE	POST MILES TOTAL PROJECT	SHEET No.	TOTAL SHEETS
02	Sha	44	R4.2/R14.5	5	70

REGISTERED CIVIL ENGINEER 06-19-14 DATE

06-24-14
PLANS APPROVAL DATE

REGISTERED PROFESSIONAL ENGINEER JAMES D. RASMUSSEN No. 76401 Exp. 12/31/14 CIVIL STATE OF CALIFORNIA

THE STATE OF CALIFORNIA OR ITS OFFICERS OR AGENTS SHALL NOT BE RESPONSIBLE FOR THE ACCURACY OR COMPLETENESS OF SCANNED COPIES OF THIS PLAN SHEET.

ABBREVIATION

PEC PERMIT TO ENTER AND CONSTRUCT

LEGEND:

COLD PLANE AC PAVEMENT (VARIABLE 0′ TO 0.30′)

0.30′ CPAC
0.10′ RHMA-O
0.20′ RHMA-G

CONFORM

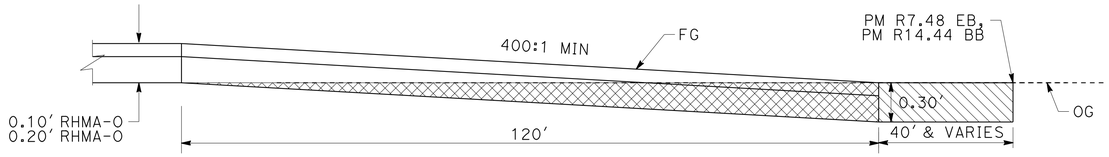

ELEVATION

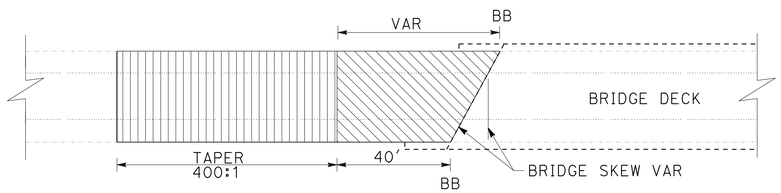

PLAN

APPROACH SHOWN
DEPARTURE SIMILAR

MAINLINE CONFORM DETAIL
PM R7.48 EB, PM R14.34 BB

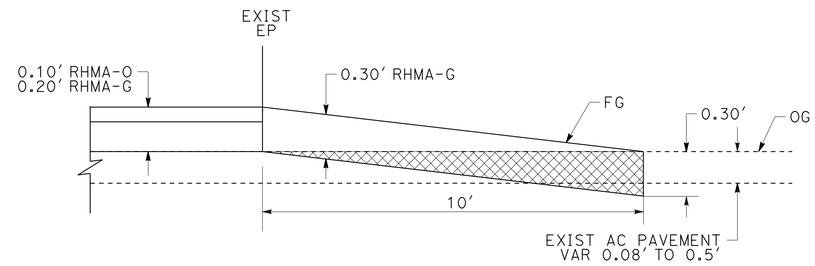

ROAD CONNECTION CONFORM
DRIVEWAY CONFORM

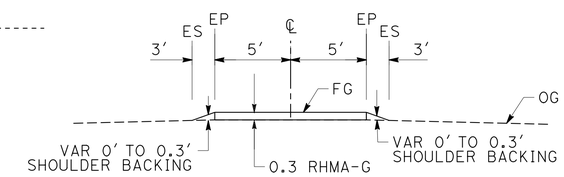

SECTION A-A

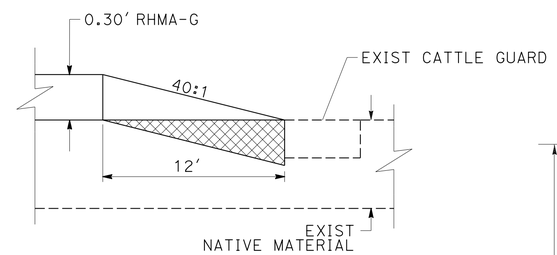

DETAIL A

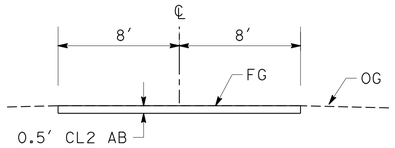

SECTION B-B

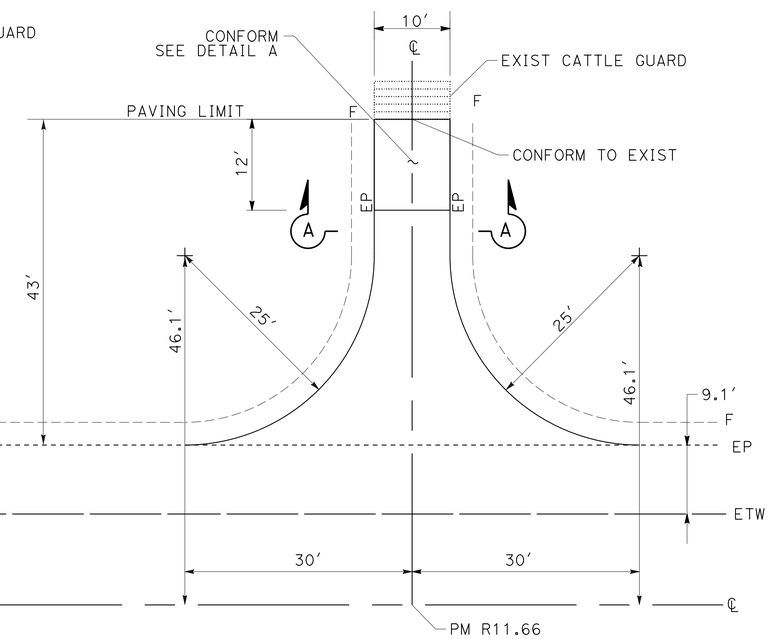

DRIVEWAY DETAIL
PM R11.66
NO SCALE

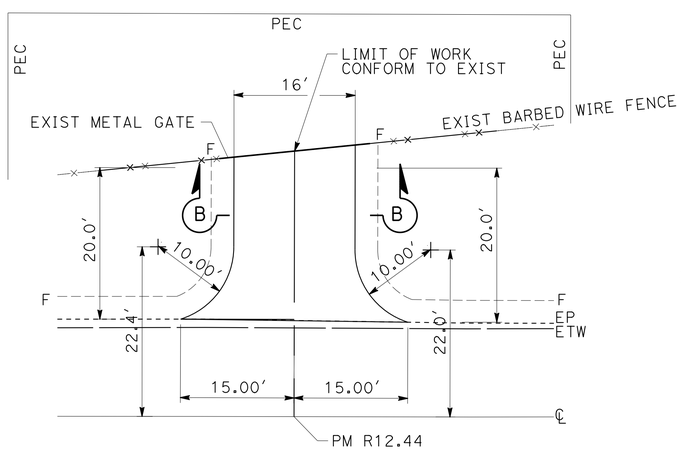

DRIVEWAY DETAIL
PM R12.44
NO SCALE

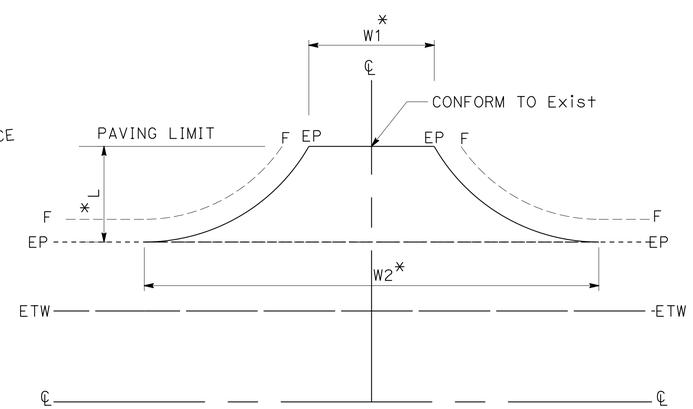

TYPICAL DRIVEWAY DETAIL

NOTE:

* SEE DRIVEWAY QUANTITY SUMMARY TABLE FOR LENGTHS AND WIDTHS.

CONSTRUCTION DETAILS
NO SCALE

C-3

REVISED BY	DATE REVISED
JOLENA ASTIN	JIM RASMUSSEN
CALCULATED-DESIGNED BY	CHECKED BY
FUNCTIONAL SUPERVISOR	JOHN MARTIN

STATE OF CALIFORNIA - DEPARTMENT OF TRANSPORTATION
Caltrans
DESIGN

P:\proj\02\4E430_plans\pse\0200020284ga003.dgn

LAST REVISION 08-01-13 | DATE PLOTTED => 25-JUL-2014 | TIME PLOTTED => 12:21

Dist	COUNTY	ROUTE	POST MILES TOTAL PROJECT	SHEET No.	TOTAL SHEETS
02	Sha	44	R4.2/R14.5	6	70

Dwight D Winterlin 06-24-14
REGISTERED CIVIL ENGINEER DATE

06-24-14
PLANS APPROVAL DATE

REGISTERED PROFESSIONAL ENGINEER DWIGHT WINTERLIN No. C68438 Exp. 9-30-15 CIVIL STATE OF CALIFORNIA

THE STATE OF CALIFORNIA OR ITS OFFICERS OR AGENTS SHALL NOT BE RESPONSIBLE FOR THE ACCURACY OR COMPLETENESS OF SCANNED COPIES OF THIS PLAN SHEET.

ABBREVIATIONS:

TR THRIE BEAM TO GUARD RAILING TRANSITION

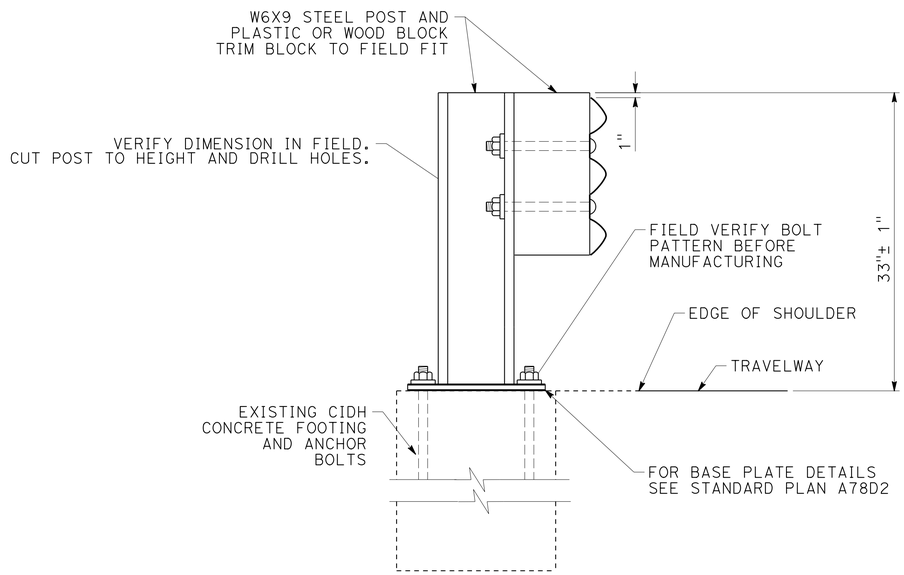

DETAIL A
STEEL POST ON
EXIST CIDH CONCRETE FOOTING

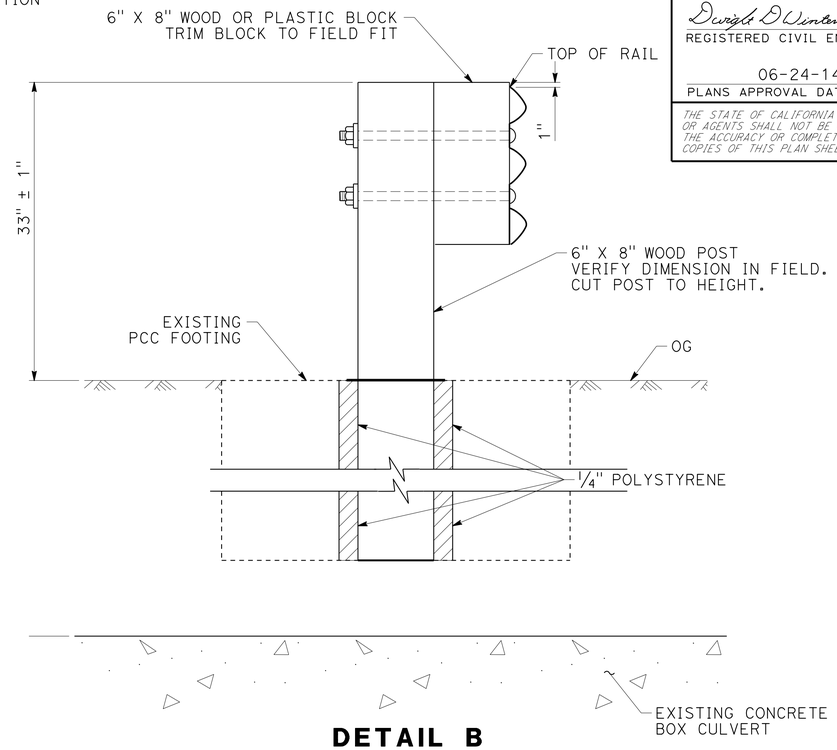

DETAIL B
WOOD POST IN
EXIST PCC FOOTING

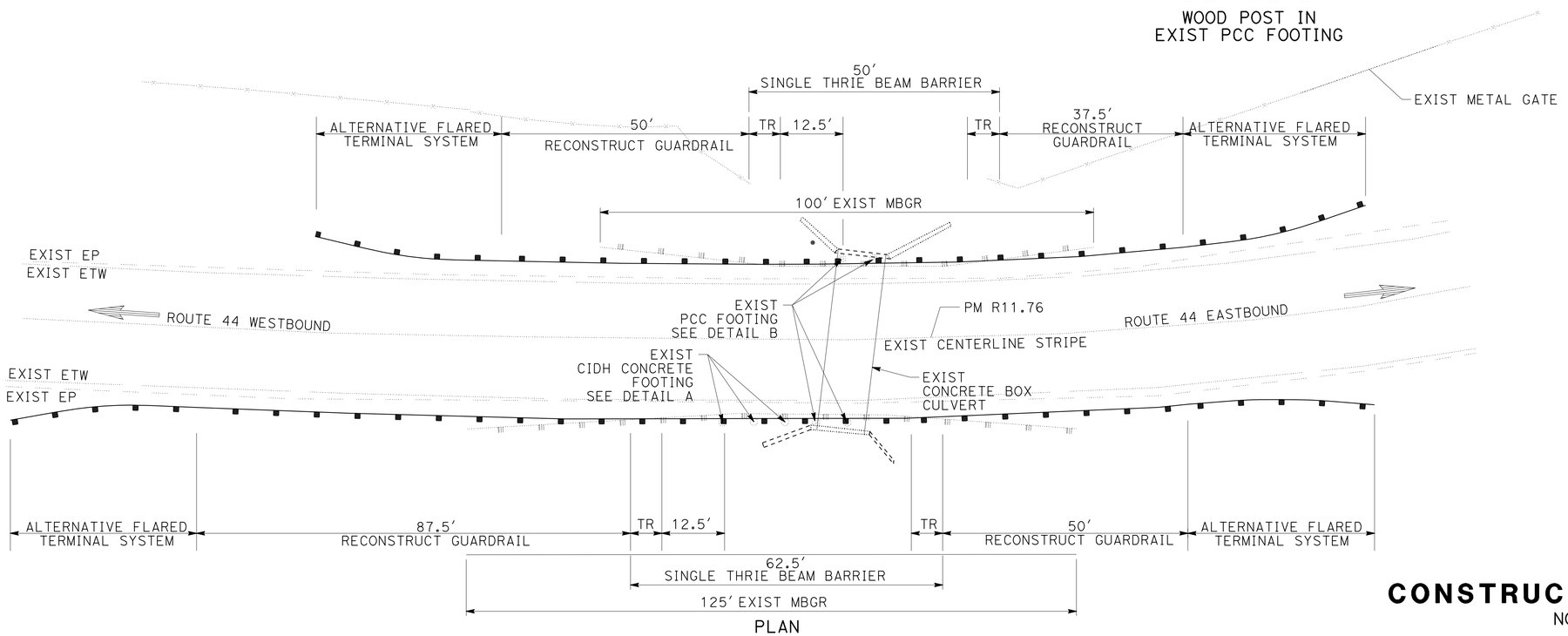

PLAN

CONSTRUCTION DETAILS
NO SCALE

C-4

REVISED BY	DATE REVISED

DWIGHT WINTERLIN — JOHN HART
CALCULATED-DESIGNED BY — CHECKED BY
FUNCTIONAL SUPERVISOR — JOHN MARTIN

STATE OF CALIFORNIA - DEPARTMENT OF TRANSPORTATION
Caltrans® DESIGN

P:\proj1\02\4E430_plans\pse\0200020284ga004.dgn

LAST REVISION 08-01-13 | DATE PLOTTED => 25-JUL-2014 | TIME PLOTTED => 12:21

Dist	COUNTY	ROUTE	POST MILES TOTAL PROJECT	SHEET No.	TOTAL SHEETS
02	Sha	44	R4.2/R14.5	7	70

Dwight D Winterlin 06-24-14
REGISTERED CIVIL ENGINEER DATE

06-24-14
PLANS APPROVAL DATE

REGISTERED PROFESSIONAL ENGINEER DWIGHT WINTERLIN No. C68438 Exp. 9-30-15 CIVIL STATE OF CALIFORNIA

THE STATE OF CALIFORNIA OR ITS OFFICERS OR AGENTS SHALL NOT BE RESPONSIBLE FOR THE ACCURACY OR COMPLETENESS OF SCANNED COPIES OF THIS PLAN SHEET.

NOTES:

1. FOR DETAILS OF STANDARD HARDWARE USED TO CONSTRUCT GUARDRAIL SEE REVISED STANDARD PLAN RSP A77M1.
2. FOR DETAILS OF POSTS (WOOD OR STEEL) AND BLOCKS (WOOD OR PLASTIC) USED TO CONSTRUCT METAL BEAM GUARDRAIL, SEE REVISED STANDARD PLAN RSP A77N1 OR RSP A77N2.
3. A SINGLE LINE POST MAY BE OFFSET UP TO 12" INLINE WITH THE GUARDRAIL.
4. FOR CURB AND DIKE DETAILS, SEE REVISED STANDARD PLANS RSP A87A AND RSP A87B
5. PLACE TYPE F DIKE UNDER GUARDRAIL AND PLACE TYPE C DIKE IF MORE THAN 2" IN FRONT OF FACE OF GUARDRAIL.
6. ADDITIONAL HOLE IN UPPERMOST PORTION OF LINE POST IS FOR POTENTIAL FUTURE ADJUSTMENTS OF RAILING HEIGHT. SEE REVISED STANDARD PLAN RSP A77N1 OR RSP A77N2.
7. MAX 2 EXISTING POSTS MAY BE REMOVED.
8. GUARDRAIL ELEMENT ON BACK OF POST NOT REQUIRED IF NEW TRANSITION IS COMPLETED WITHIN 20 WORKING DAYS FROM POST REMOVAL.
9. MAX 2" OF ADDITIONAL BLOCKING MAY BE ADDED BETWEEN RAIL ELEMENT AND EXISTING POST OR ANCHOR BLOCK TO ACCOMODATE FORM WORK.
10. ATTACH END CAP FLUSH TO EXISTING ANCHOR BLOCK WITHIN CLEAR RECOVERY ZONE FOR OPPOSING TRAFFIC.
11. USE 2 EA x 1" HIGH STRENGTH THROUGH BOLTS TO ATTACH RAILING TO EXISTING ANCHOR BLOCK. USE EXISTING ℙ WASHERS FOR CONNECTION.

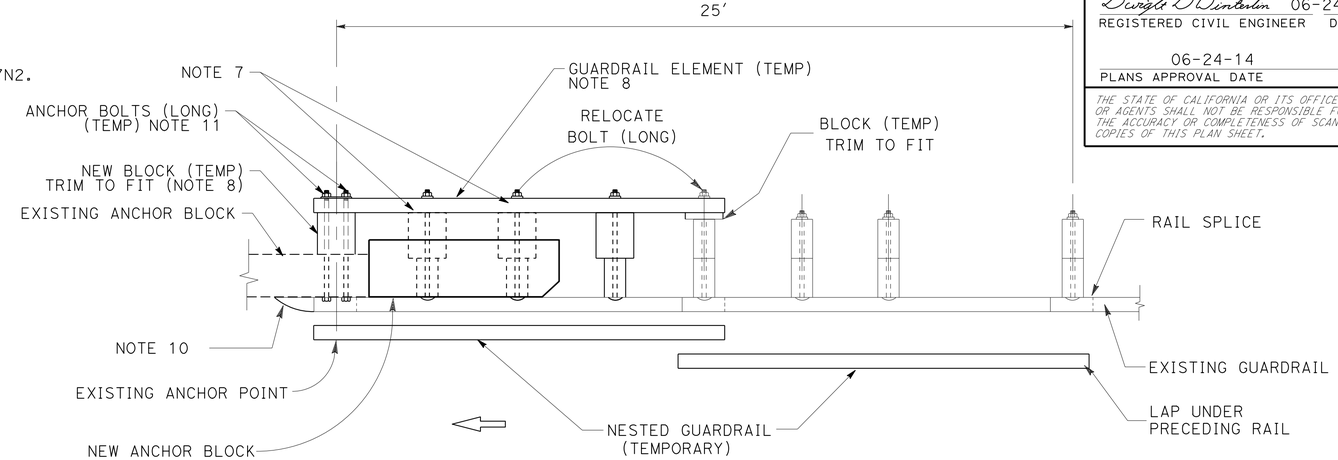

TEMPORARY NESTED GUARDRAIL AT ANCHOR BLOCK TO ACCOMODATE CONSTRUCTION OF CONCRETE BARRIER (TRANSITION)

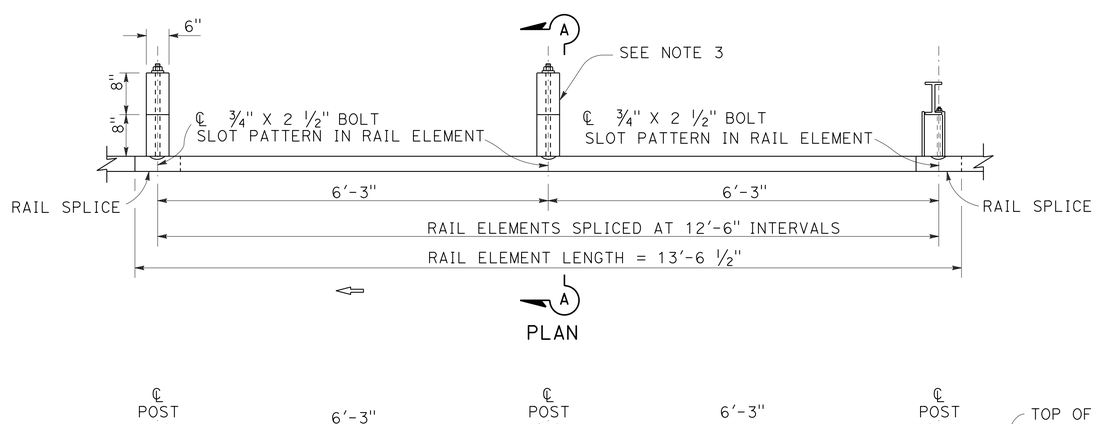

PLAN

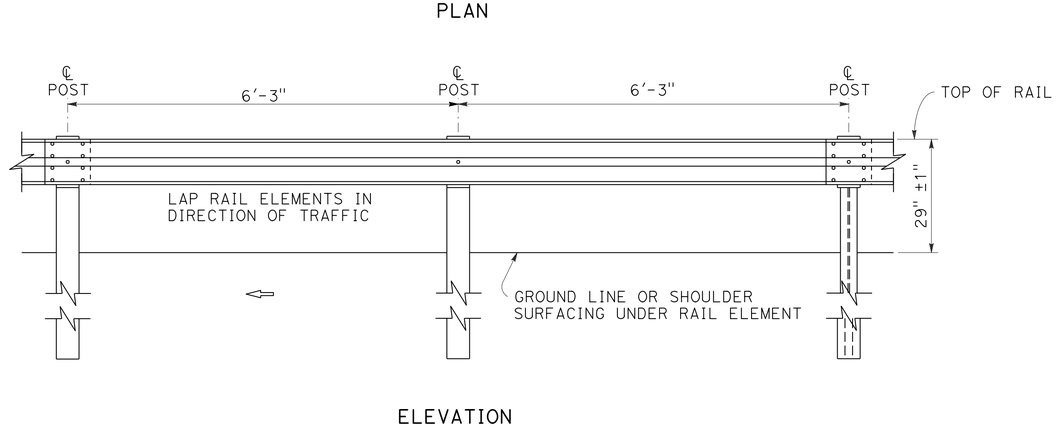

ELEVATION

METAL BEAM GUARD RAILING

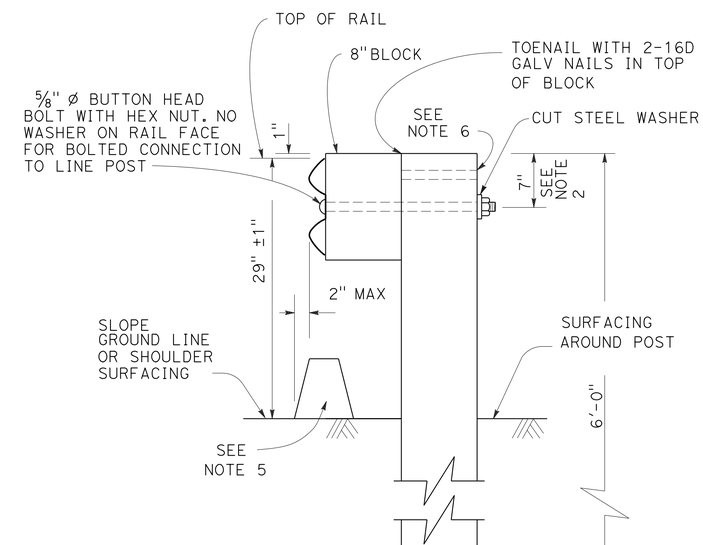

SECTION A-A

TYPICAL LINE POST INSTALLATION

CONSTRUCTION DETAILS

NO SCALE

C-5

REVISED BY	DATE REVISED

CALCULATED-DESIGNED BY: DWIGHT WINTERLIN
CHECKED BY: JOHN HART
FUNCTIONAL SUPERVISOR: JOHN MARTIN

STATE OF CALIFORNIA - DEPARTMENT OF TRANSPORTATION
Caltrans
DESIGN

P:\proj1\02\4E430_plans\pse\0200020284ga005.dgn

LAST REVISION 03-31-14 | DATE PLOTTED => 25-JUL-2014 | TIME PLOTTED => 12:21

Dist	COUNTY	ROUTE	POST MILES TOTAL PROJECT	SHEET No.	TOTAL SHEETS
02	Sha	44	R4.2/R14.5	8	70

Dwight D Winterlin 06-24-14
REGISTERED CIVIL ENGINEER DATE

06-24-14
PLANS APPROVAL DATE

REGISTERED PROFESSIONAL ENGINEER
DWIGHT WINTERLIN
No. C68438
Exp. 9-30-15
CIVIL
STATE OF CALIFORNIA

THE STATE OF CALIFORNIA OR ITS OFFICERS OR AGENTS SHALL NOT BE RESPONSIBLE FOR THE ACCURACY OR COMPLETENESS OF SCANNED COPIES OF THIS PLAN SHEET.

NOTES:

1. THESE INSTALLATION DETAILS APPLICABLE TO WOOD AND STEEL LINE POST INSTALLATIONS.
2. MAX 10:1 SLOPE IN FRONT OF GUARDRAIL.
3. FOR POST AND BLOCK DETAILS SEE RSP A77N1 AND A77N2.
4. FOLLOW MANUFACTURER'S INSTRUCTIONS FOR TERMINAL FLARES.

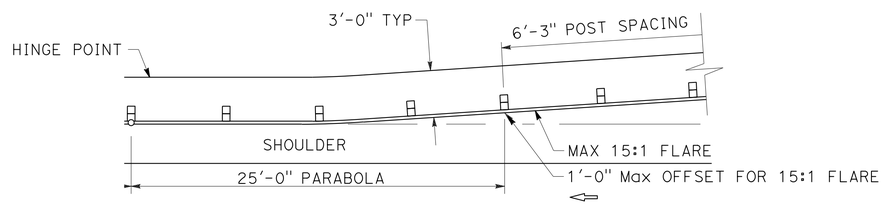

GUARDRAIL WITH FLARED ALIGNMENT

SEE NOTE 4

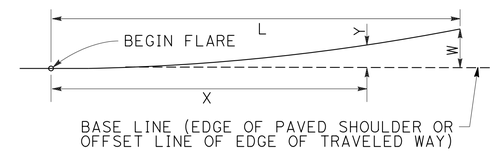

$$Y = \frac{WX^2}{L^2}$$

Y = OFFSET FROM BASE LINE
W = MAXIMUM OFFSET
X = DISTANCE ALONG BASE LINE
L = LENGTH OF FLARE

PARABOLIC FLARE OFFSETS

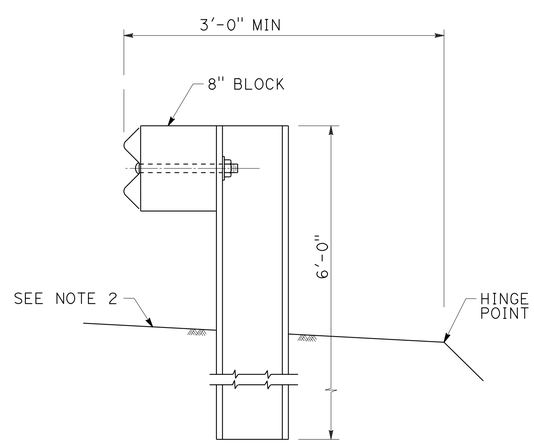

TYPICAL ROADWAY INSTALLATION

SEE NOTE 1

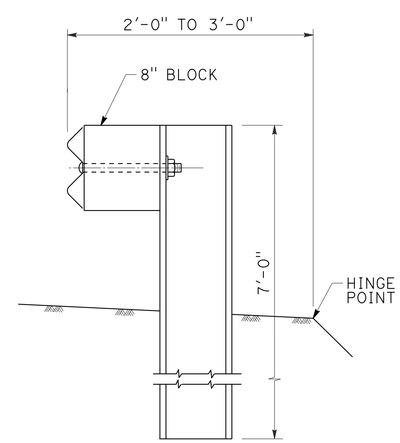

NARROW ROADWAY INSTALLATION

SEE NOTE 1

POST EMBEDMENT

CONSTRUCTION DETAILS

NO SCALE

C-6

STATE OF CALIFORNIA - DEPARTMENT OF TRANSPORTATION
Caltrans DESIGN

FUNCTIONAL SUPERVISOR: JOHN MARTIN
CALCULATED-DESIGNED BY: DWIGHT WINTERLIN
CHECKED BY: JOHN HART
REVISED BY
DATE REVISED

P:\proj1\02^4E430^_plans\pse\0200020284ga006.dgn

LAST REVISION 03-31-14
DATE PLOTTED => 25-JUL-2014
TIME PLOTTED => 12:21

Dist	COUNTY	ROUTE	POST MILES TOTAL PROJECT	SHEET No.	TOTAL SHEETS
02	Sha	44	R4.2/R14.5	9	70

Dwight D Winterlin 06-24-14
REGISTERED CIVIL ENGINEER DATE

06-24-14
PLANS APPROVAL DATE

REGISTERED PROFESSIONAL ENGINEER
DWIGHT WINTERLIN
No. C68438
Exp. 9-30-15
CIVIL
STATE OF CALIFORNIA

THE STATE OF CALIFORNIA OR ITS OFFICERS OR AGENTS SHALL NOT BE RESPONSIBLE FOR THE ACCURACY OR COMPLETENESS OF SCANNED COPIES OF THIS PLAN SHEET.

NOTES:

1. NEST ALL RAILS AT EXISTING RAIL LAPS
2. WHEN A POST IS REMOVED AND THE RAIL ELEMENTS ARE NESTED, THE NESTED ELEMENTS MUST BE SUPPORTED BY A MIN OF 2 POST EACH SIDE OF THE MISSING POST OR ADD ADDITIONAL LENGTH OF NESTED ELEMENTS.
3. USING CASE 3, A SECOND ADJACENT POST CAN BE REMOVED IF THE NESTED RAIL ELEMENTS ARE SUPPORTED BY A MIN OF 2 POSTS EACH SIDE OF THE MISSING POSTS. THE 2-POST OPTION USES CASE 3 BUT NOT SHOWN.
4. FOR STEEL LINE POSTS, USE 1/4 - 20 SELF-TAPPING SCREWS IN 0.22" DIAMETER HOLES OR 1/4" BOLTS IN 9/32" DIAMETER HOLES.

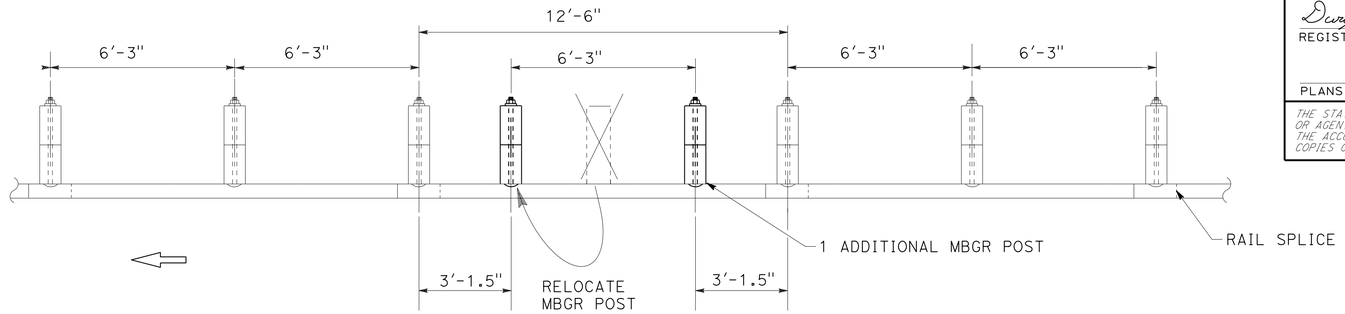

CASE 1

(ONE POST CONFLICT, MOVE THE POST AND ADD ONE POST)
(NO NESTED RAIL REQUIRED)

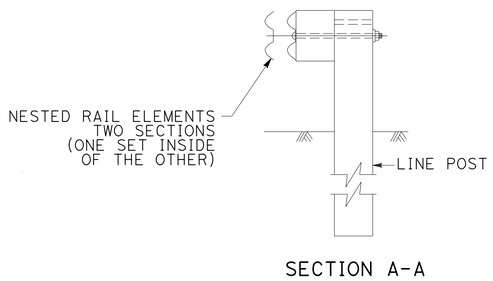

TYPICAL RAILING OVERLAP INSTALLATION AT POST

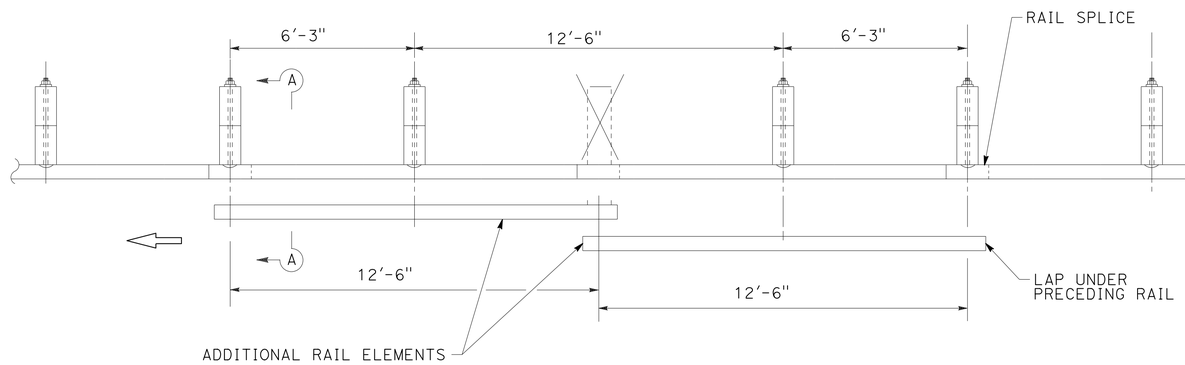

CASE 2

(ONE POST OMITTED AT JUNCTION OF TWO ELEMENTS)
(NEST TWO LENGTHS OF RAIL REQUIRED)

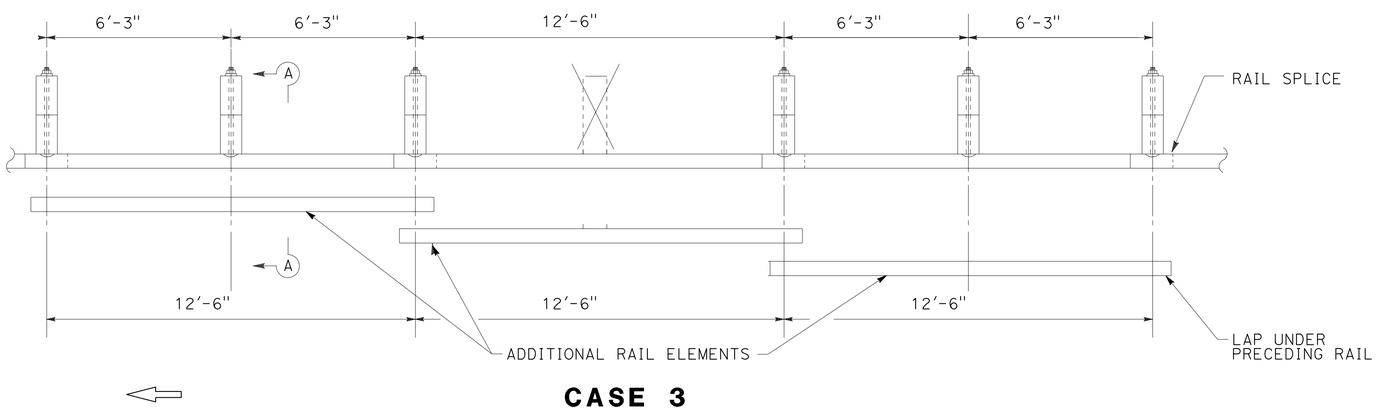

CASE 3

(ONE POST OMITTED AT CENTER OF OF ELEMENT)
(NEST THREE LENGTHS OF RAIL REQUIRED)
(ONE ADDITIONAL POST MAY BE OMITTED SEE NOTE 3)

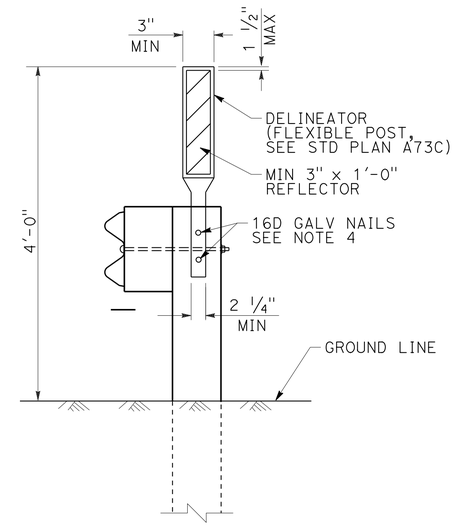

GUARDRAIL DELINEATION

LONG SPAN NESTED GUARD RAILING

CONSTRUCTION DETAILS

NO SCALE

C-7

REVISED BY	DATE REVISED

DWIGHT WINTERLIN — JOHN HART
CALCULATED-DESIGNED BY — CHECKED BY
FUNCTIONAL SUPERVISOR — JOHN MARTIN

STATE OF CALIFORNIA - DEPARTMENT OF TRANSPORTATION
Caltrans
DESIGN

P:\proj1\02\4E430_plans\pse\0200020284ga007.dgn

LAST REVISION 05-24-14 | DATE PLOTTED => 25-JUL-2014 | TIME PLOTTED => 12:21

Dist	COUNTY	ROUTE	POST MILES TOTAL PROJECT	SHEET No.	TOTAL SHEETS
02	Sha	44	R4.2/R14.5	10	70

Dwight D Winterlin 06-24-14
REGISTERED CIVIL ENGINEER DATE

06-24-14
PLANS APPROVAL DATE

REGISTERED PROFESSIONAL ENGINEER DWIGHT WINTERLIN No. C68438 Exp. 9-30-15 CIVIL STATE OF CALIFORNIA

THE STATE OF CALIFORNIA OR ITS OFFICERS OR AGENTS SHALL NOT BE RESPONSIBLE FOR THE ACCURACY OR COMPLETENESS OF SCANNED COPIES OF THIS PLAN SHEET.

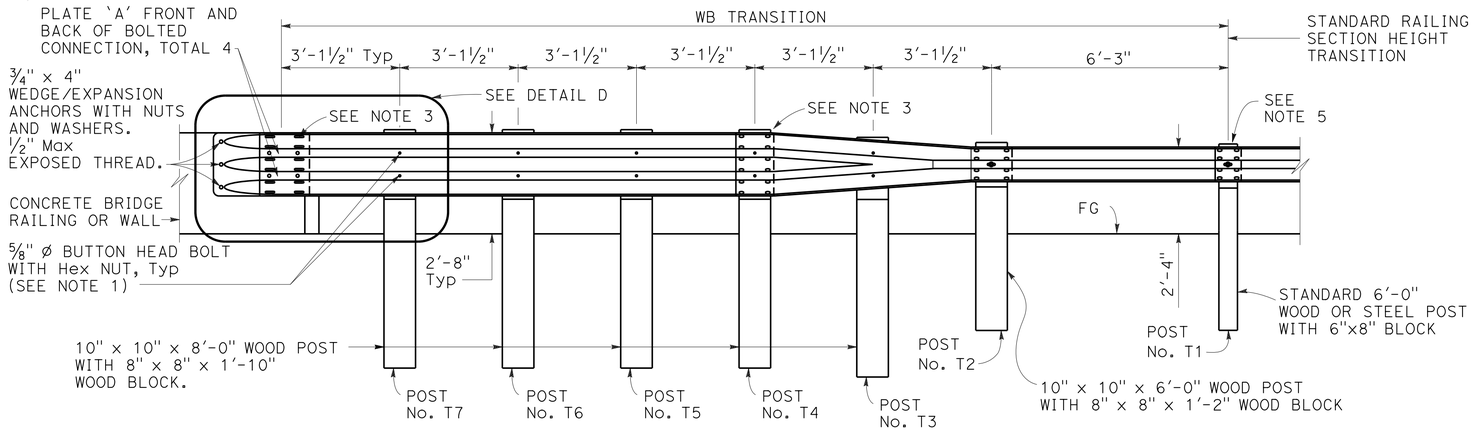

ELEVATION

LEGEND

(A) NESTED THRIE BEAM ELEMENTS (ONE 12 GAUGE ELEMENT NESTED OVER ONE 10 GAUGE ELEMENT).

(B) ONE 10 GAUGE "W" BEAM TO THRIE BEAM ELEMENT.

(C) ONE 12 GAUGE THRIE BEAM ELEMENT.

(D) ONE 10 GAUGE "W" BEAM RAIL ELEMENT (7'-3½" LENGTH)

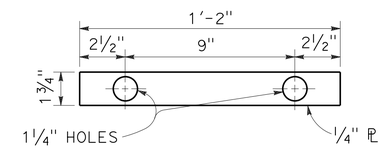

DETAIL C
PLATE 'A'

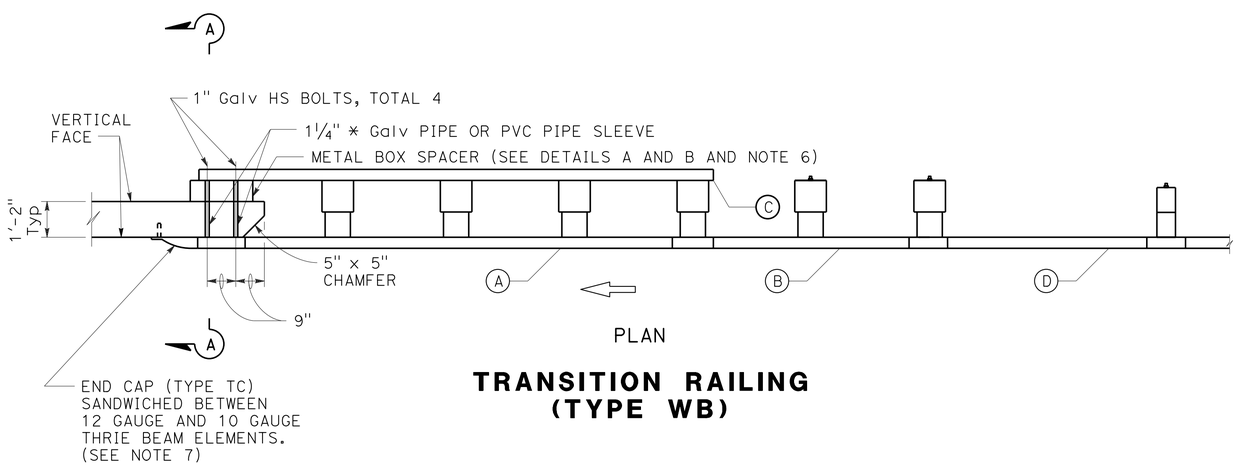

PLAN

TRANSITION RAILING
(TYPE WB)

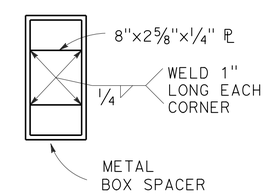

DETAIL B

NOTES:

1. USE ⅝" Dia BUTTON HEAD BOLTS AND HEX NUTS FOR CONNECTIONS TO POSTS.
2. THE NESTED RAIL ELEMENTS, END CAP, AND 'W' BEAM TO THRIE BEAM ELEMENT MAY BE SPLICED TOGETHER PRIOR TO BOLTING THE ELEMENTS TO THE WOOD POST AND CONCRETE BARRIER OR RAILING.
3. EXTERIOR SPLICE BOLT HOLES FOR RAIL ELEMENT SPLICES AT POST NO. T4 AND THE CONNECTION TO THE CONCRETE BARRIER OR RAILING SHALL BE THE STANDARD 13/16" X 1 ⅛" SLOT SIZE. INTERIOR SPLICE BOLT HOLES AT THESE LOCATIONS MAY BE INCREASED UP TO 1 ¼" *. ONLY THE TOP 4 AND THE BOTTOM 4 SPLICE BOLTS WITH WASHERS AND NUTS ARE REQUIRED FOR RAIL SPLICES AT POST NO. T4 AND THE CONNECTION TO THE CONCRETE BARRIER OR RAILING.
4. THE TOP ELEVATION OF POSTS NO. T2 THROUGH NO. T7 SHALL NOT PROJECT MORE THAN 1" ABOVE THE TOP ELEVATION OF THE RAIL ELEMENT.
5. THE GUARD RAILING CONNECTED TO TRANSITION RAILING (TYPE WB) WILL BE A STANDARD RAILING SECTION OF METAL BEAM GUARD RAILING WITH HEIGHT TRANSITION RATIO OF 120:1
6. THE DEPTH OF THE METAL BOX SPACER VARIES FROM THE 5 ⅛" TO 1 ½" AND IS DEPENDENT ON THE WIDTH OF THE CONCRETE RAILING OR WALL. THE COMBINED DIMENSION FOR THE DEPTH OF THE METAL BOX SPACER PLUS THE WIDTH OF RAILING OR WALL SHOULD BE 17 ⅛".
7. END CAP MAY BE INSTALLED OVER 12 GAUGE AND 10 GAUGE THRIE BEAM ELEMENTS WHERE TRANSITION RAILING IS INSTALLED ON THE DEPARTURE END OF BRIDGE RAILING. SEE STANDARD PLAN A78C1 FOR TYPE TC END CAP.
8. EXISTING UTILITY FACILITIES ARE NOT SHOWN ON THESE PLANS

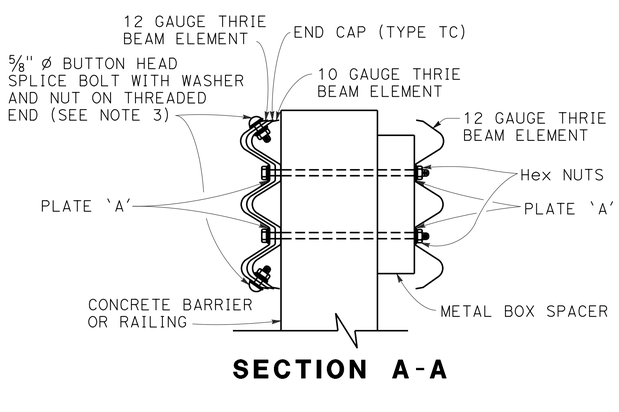

SECTION A-A

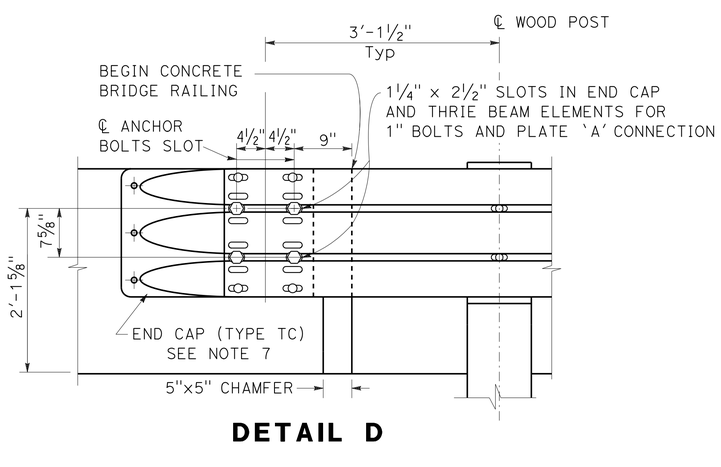

DETAIL D

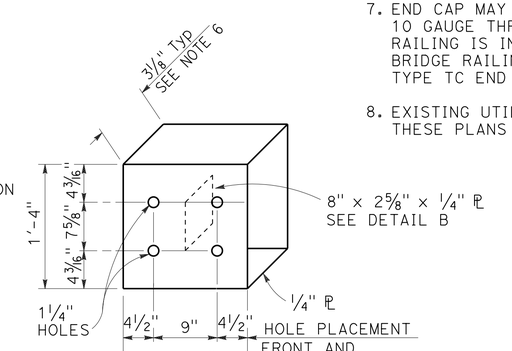

DETAIL A
STRAIGHT METAL BOX SPACER

CONSTRUCTION DETAILS
TRANSITION RAILING (TYPE WB)

NO SCALE

C-8

REVISED BY | DATE REVISED
DWIGHT WINTERLIN | JOHN HART
CALCULATED-DESIGNED BY | CHECKED BY
FUNCTIONAL SUPERVISOR | JOHN MARTIN
STATE OF CALIFORNIA - DEPARTMENT OF TRANSPORTATION
Caltrans® DESIGN

P:\proj1\02\4E430_plans\pse\0200020284ga008.dgn

LAST REVISION 06-05-14 | DATE PLOTTED => 25-JUL-2014 | TIME PLOTTED => 12:21

Dist	COUNTY	ROUTE	POST MILES TOTAL PROJECT	SHEET No.	TOTAL SHEETS
02	Sha	44	R4.2/R14.5	11	70

Dwight D Winterlin 06-24-14
REGISTERED CIVIL ENGINEER DATE

06-24-14
PLANS APPROVAL DATE

REGISTERED PROFESSIONAL ENGINEER
DWIGHT WINTERLIN
No. C68438
Exp. 9-30-15
CIVIL
STATE OF CALIFORNIA

THE STATE OF CALIFORNIA OR ITS OFFICERS OR AGENTS SHALL NOT BE RESPONSIBLE FOR THE ACCURACY OR COMPLETENESS OF SCANNED COPIES OF THIS PLAN SHEET.

NOTES:

1. FOR WB CONNECTION DETAILS NOT SHOWN, SEE REVISED STANDARD PLANS RSP A77Q1, RSP A77Q4, RSP A77U2.
2. DEPENDENT DIMENSIONS WILL BE VERIFIED IN THE FIELD BEFORE FABRICATING ANY END CONNECTION TO CONFORM WITH EXISTING PAVED CONDITIONS.
3. ALL PLATES AND BOLTS ARE GALVANIZED.
4. TAPER ELEVATION TO MATCH EXISTING AT MAX 4:1.

LEGEND:

- - - - - - INDICATES EXISTING STRUCTURE

——— INDICATES NEW CONSTRUCTION

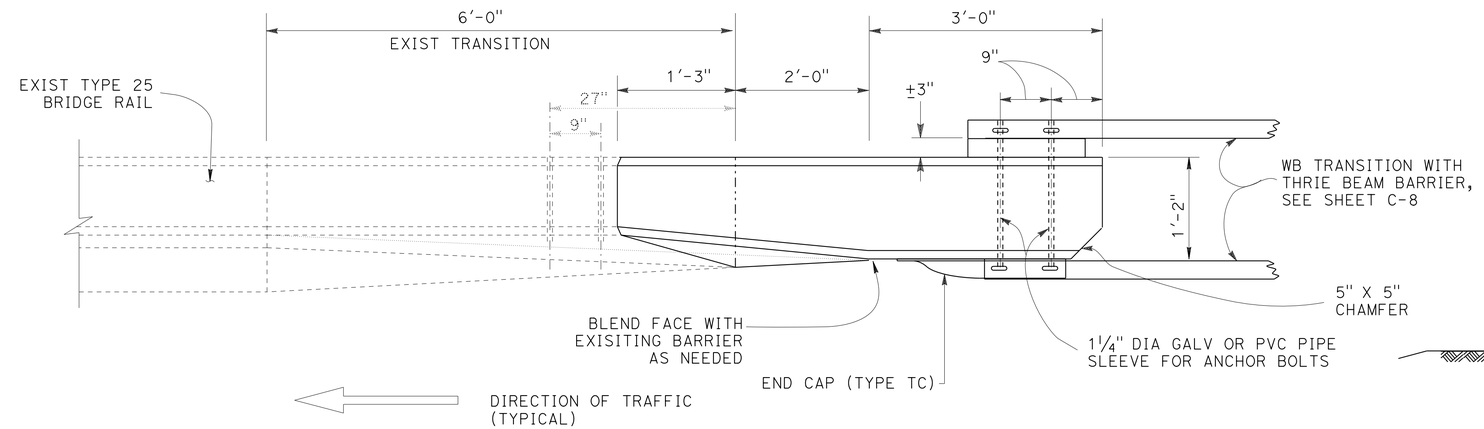

PLAN

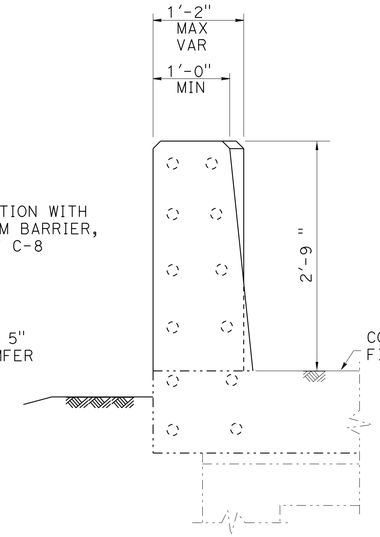

SECTION B-B

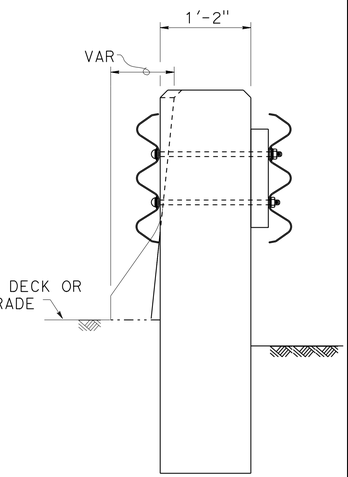

SECTION C-C

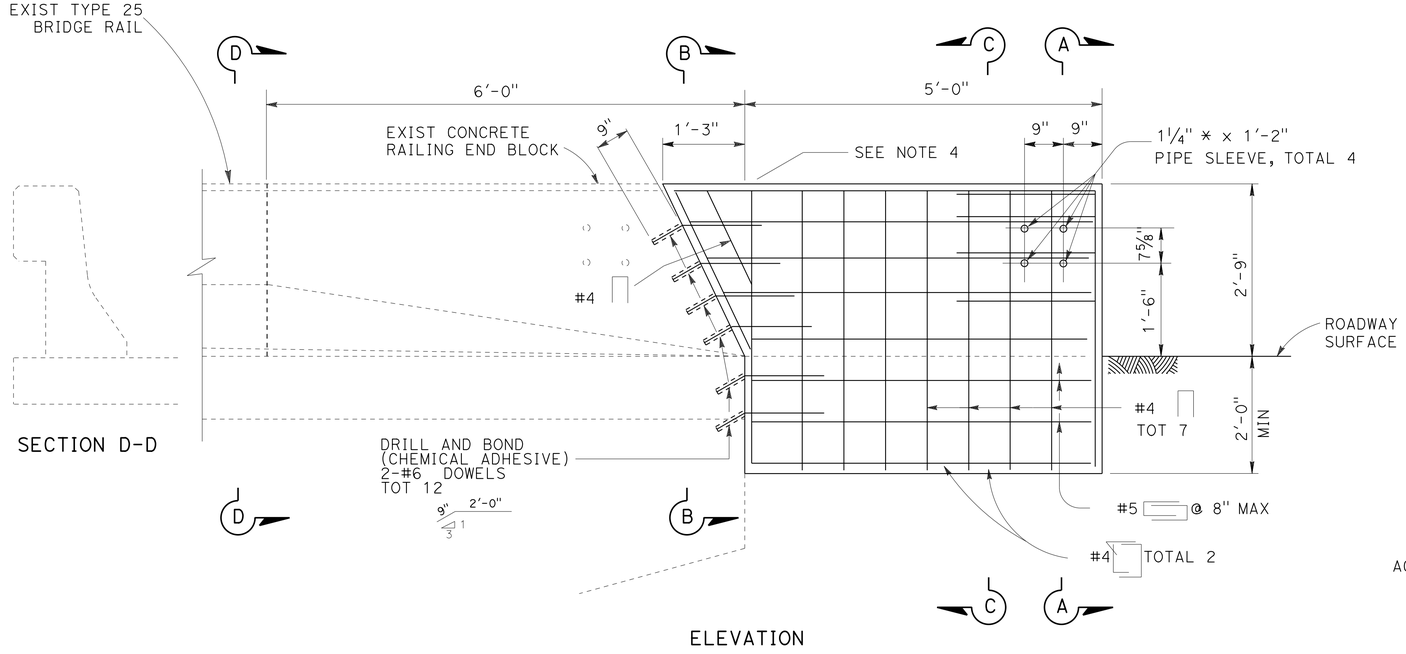

SECTION D-D

ELEVATION

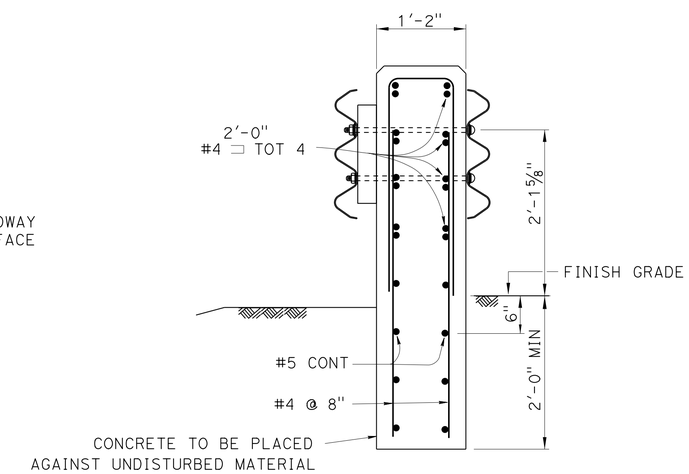

SECTION A-A

CONCRETE BARRIER (TRANSITION ANCHOR BLOCK)

TRANSITION BLOCK TYPE 25

CONSTRUCTION DETAILS

NO SCALE

C-9

REVISED BY | DATE REVISED
DWIGHT WINTERLIN | JOHN HART
CALCULATED-DESIGNED BY | CHECKED BY
FUNCTIONAL SUPERVISOR | JOHN MARTIN

STATE OF CALIFORNIA - DEPARTMENT OF TRANSPORTATION
Caltrans
DESIGN

P:\proj1\02\4E430_plans\pse\0200020284ga009.dgn

LAST REVISION 05-29-14 | DATE PLOTTED => 25-JUL-2014 | TIME PLOTTED => 12:21

Dist	COUNTY	ROUTE	POST MILES TOTAL PROJECT	SHEET No.	TOTAL SHEETS
02	Sha	44	R4.2/R14.5	12	70

REGISTERED CIVIL ENGINEER 06-19-14 DATE

06-24-14
PLANS APPROVAL DATE

REGISTERED PROFESSIONAL ENGINEER JAMES D. RASMUSSEN No. 76401 Exp. 12/31/14 CIVIL STATE OF CALIFORNIA

THE STATE OF CALIFORNIA OR ITS OFFICERS OR AGENTS SHALL NOT BE RESPONSIBLE FOR THE ACCURACY OR COMPLETENESS OF SCANNED COPIES OF THIS PLAN SHEET.

NOTE:

1. ELEVATIONS ARE ASSUMED AND ARE TO BE USED FOR THIS SHEET ONLY.

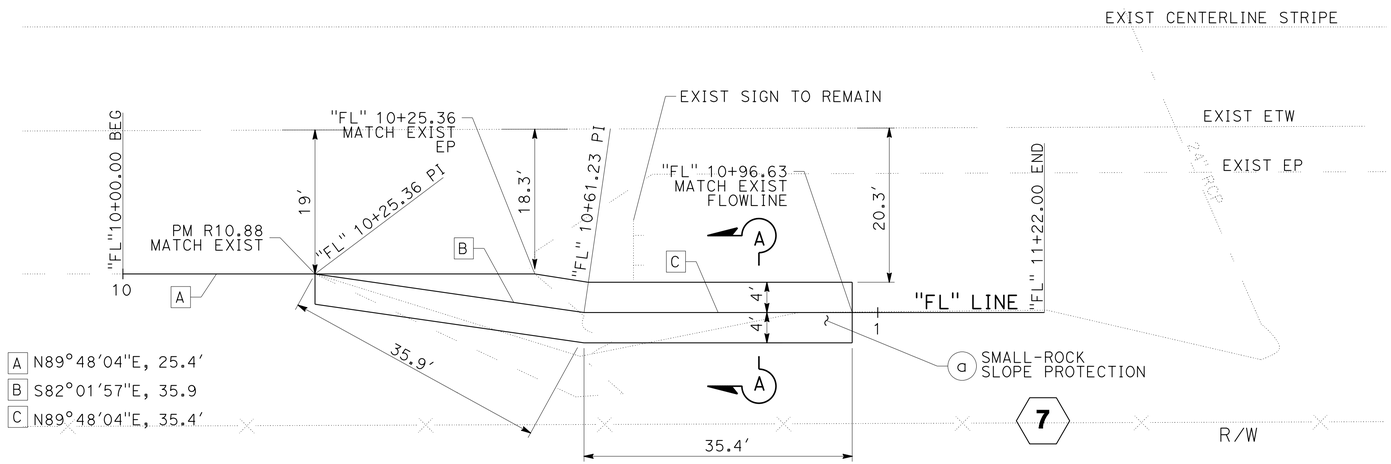

PLAN
SCALE: 1" = 10'

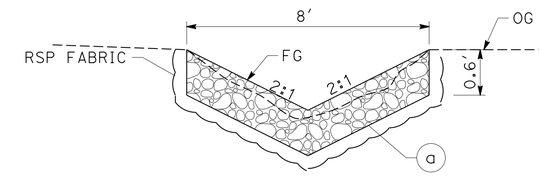

SECTION A-A

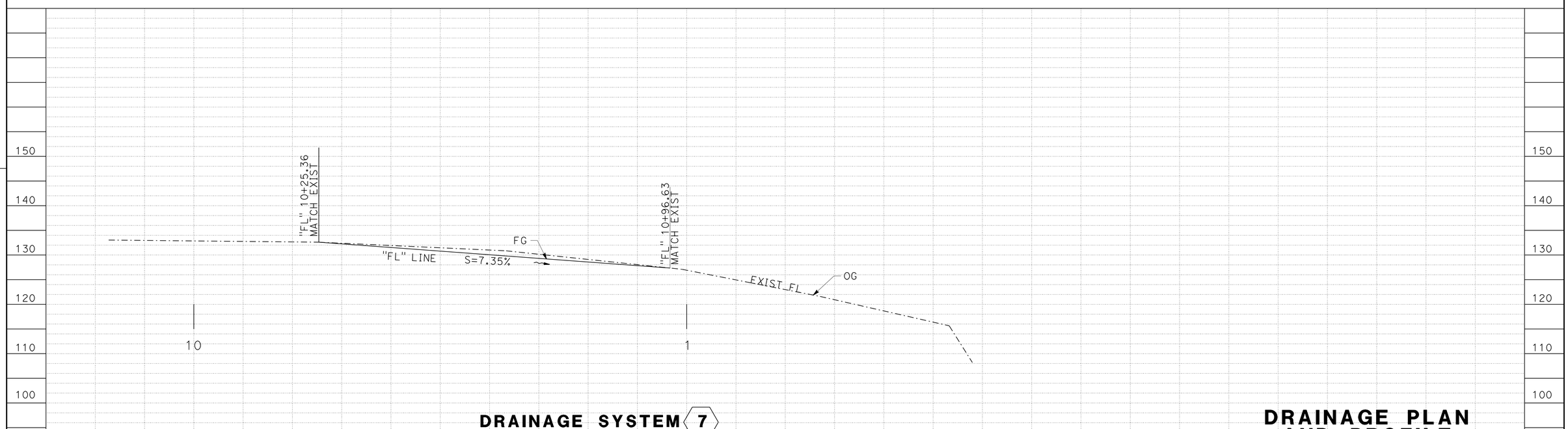

DRAINAGE SYSTEM 7
PM R10.88
SCALE: 1" = 10' HORIZ
1" = 10' VERT

APPROVED FOR DRAINAGE WORK ONLY

DRAINAGE PLAN AND PROFILE
SCALE: AS SHOWN

D-1

REVISED BY | DATE REVISED
JOLENA ASTIN | JIM RASMUSSEN
CALCULATED-DESIGNED BY | CHECKED BY
FUNCTIONAL SUPERVISOR
JOHN MARTIN

STATE OF CALIFORNIA - DEPARTMENT OF TRANSPORTATION
Caltrans
DESIGN

P:\proj1\02\4E430_plans\pse\0200020284ia001.dgn

LAST REVISION 08-01-13 | DATE PLOTTED => 25-JUL-2014 TIME PLOTTED => 12:21

Dist	COUNTY	ROUTE	POST MILES TOTAL PROJECT	SHEET No.	TOTAL SHEETS
02	Sha	44	R4.2/R14.5	13	70

REGISTERED CIVIL ENGINEER 06-19-14 DATE

06-24-14
PLANS APPROVAL DATE

REGISTERED PROFESSIONAL ENGINEER JAMES D. RASMUSSEN No. 76401 Exp. 12/31/14 CIVIL STATE OF CALIFORNIA

THE STATE OF CALIFORNIA OR ITS OFFICERS OR AGENTS SHALL NOT BE RESPONSIBLE FOR THE ACCURACY OR COMPLETENESS OF SCANNED COPIES OF THIS PLAN SHEET.

NOTES:

1. THIS PLAN IS ACCURATE FOR DITCH WORK ONLY.
2. SEE STANDARD PLANS FOR VEGETATION CONTROL DETAILS AND SHEET Q-3 FOR VEGETATION CONTROL QUANTITIES.
3. SEE SHEET C-4 THRU C-7 FOR METAL BEAM GUARDRAILING DETAILS AND SEE SHEET Q-3 FOR METAL BEAM GUARDRAILING QUANTITIES.
4. LIMITS OF RSP ARE APPROXIMATE: THE ENGINEER SHALL VERIFY LIMITS PRIOR TO PLACEMENT.

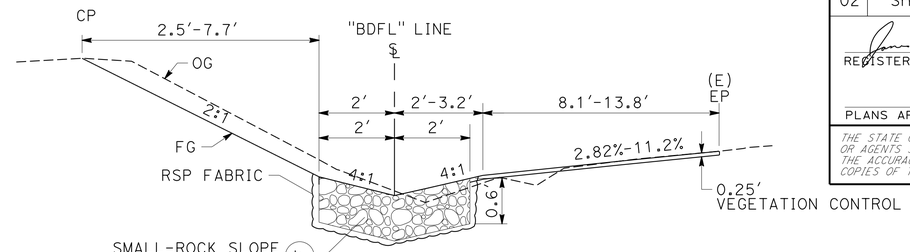

"BDFL" 720+81.48 TO "BDFL" 721+85.62

"BDFL" TYPICAL SECTION

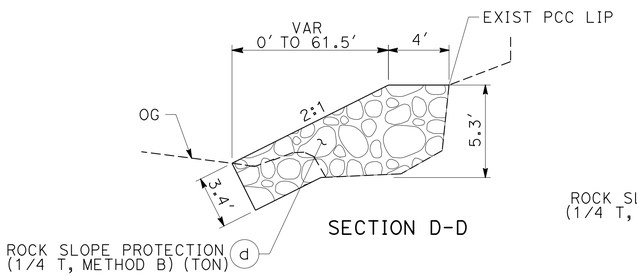

SECTION D-D

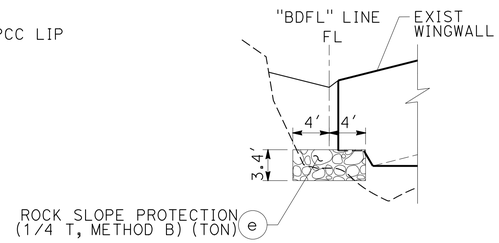

SECTION E-E

A	S29°38'58"E, 11.55'
B	S77°22'02"E, 17.88'
C	S74°19'39"E, 38.59'
D	S86°05'30"E, 33.05'
E	S36°09'49"E, 22.61'

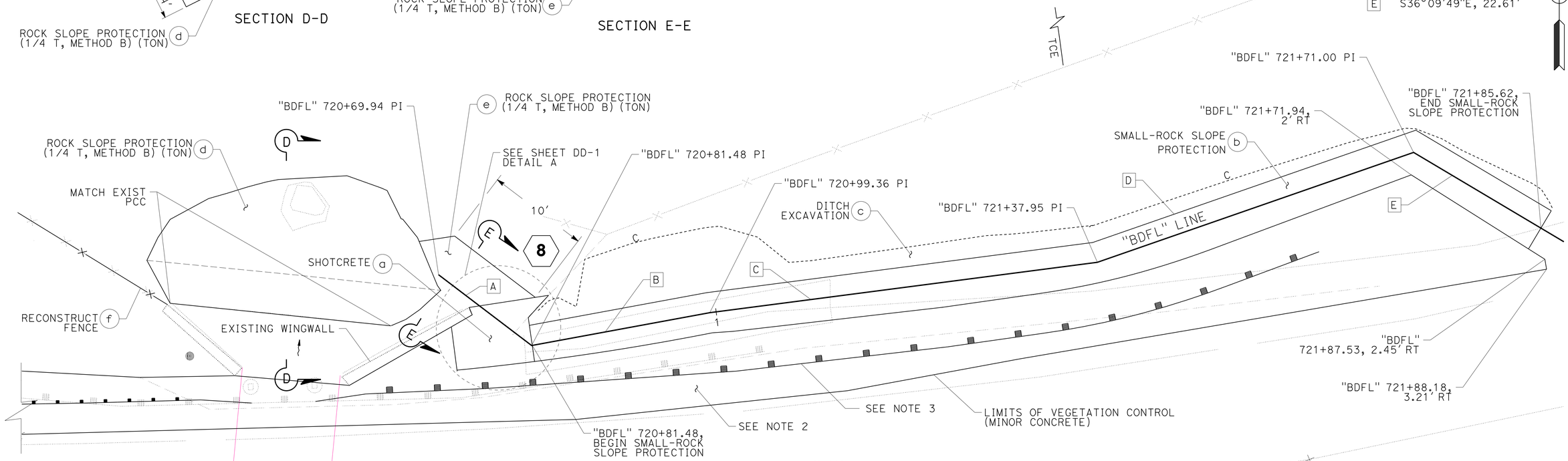

PLAN
DRAINAGE SYSTEM (8)
SCALE: 1" = 5'

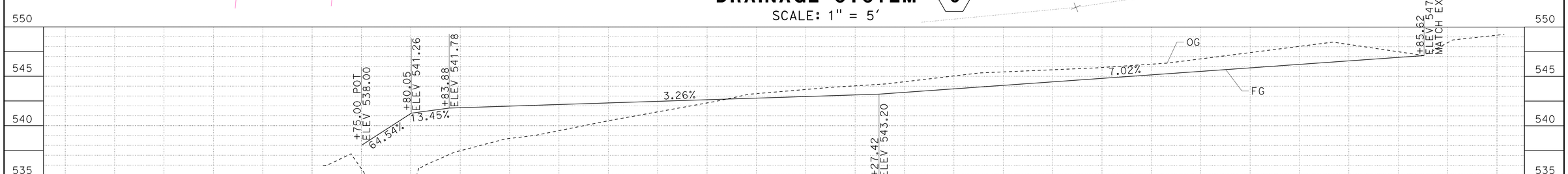

"BDFL" LINE PROFILE
PM R11.76
SCALE: 1" = 5' Horiz
1" = 5' Vert

DRAINAGE PLAN AND PROFILE
SCALE: AS SHOWN

D-2

REVISED BY	DATE REVISED
JOLENA ASTIN	JIM RASMUSSEN

CALCULATED-DESIGNED BY / CHECKED BY

FUNCTIONAL SUPERVISOR: JOHN MARTIN

STATE OF CALIFORNIA - DEPARTMENT OF TRANSPORTATION
DESIGN

P:\proj1\02\4E430_plans\pse\0200020284ia002.dgn

LAST REVISION 05-24-14 | DATE PLOTTED => 25-JUL-2014 | TIME PLOTTED => 12:21

Dist	COUNTY	ROUTE	POST MILES TOTAL PROJECT	SHEET No.	TOTAL SHEETS
02	Sha	44	R4.2/R14.5	14	70

REGISTERED CIVIL ENGINEER 06-19-14 DATE

06-24-14
PLANS APPROVAL DATE

REGISTERED PROFESSIONAL ENGINEER JAMES D. RASMUSSEN No. 76401 Exp. 12/31/14 CIVIL STATE OF CALIFORNIA

THE STATE OF CALIFORNIA OR ITS OFFICERS OR AGENTS SHALL NOT BE RESPONSIBLE FOR THE ACCURACY OR COMPLETENESS OF SCANNED COPIES OF THIS PLAN SHEET.

NOTE:

1. FOR ACCURATE RIGHT OF WAY DATA, CONTACT RIGHT OF WAY ENGINEERING AT THE DISTRICT OFFICE.

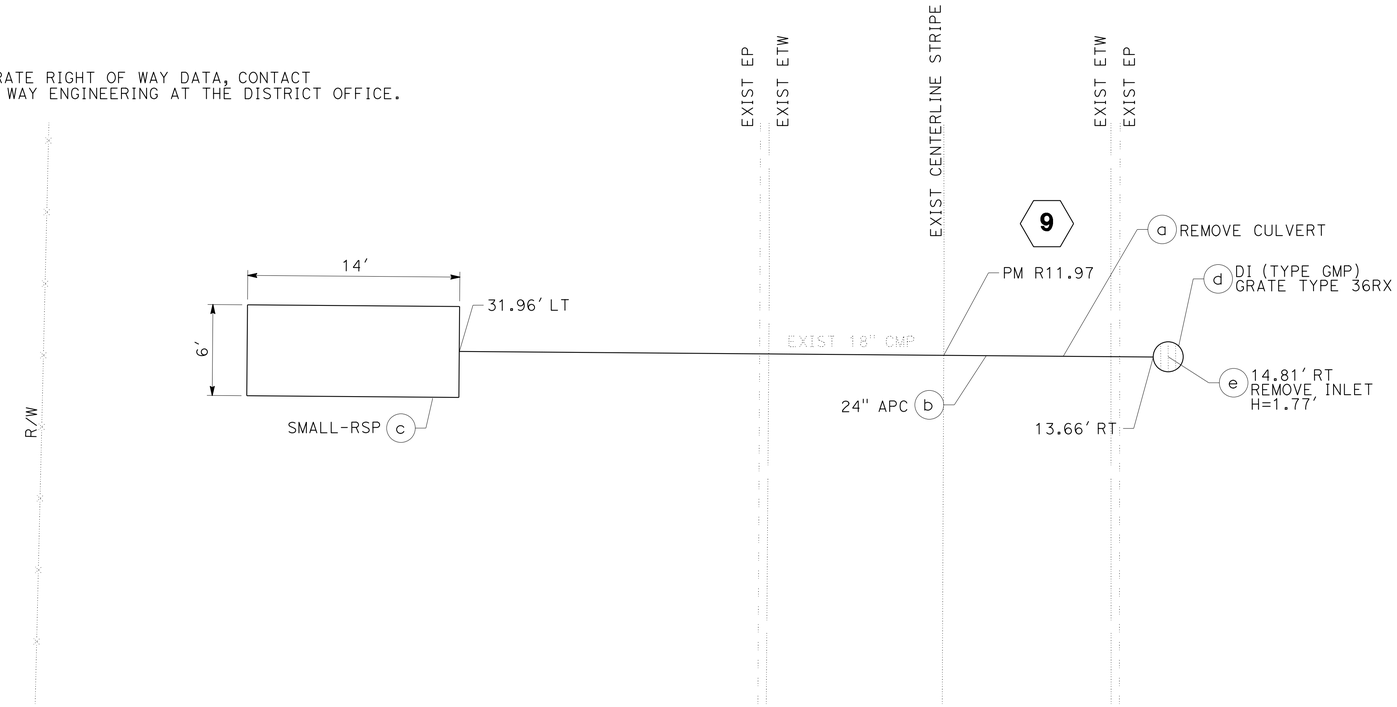

PLAN
SCALE: 1" = 5'

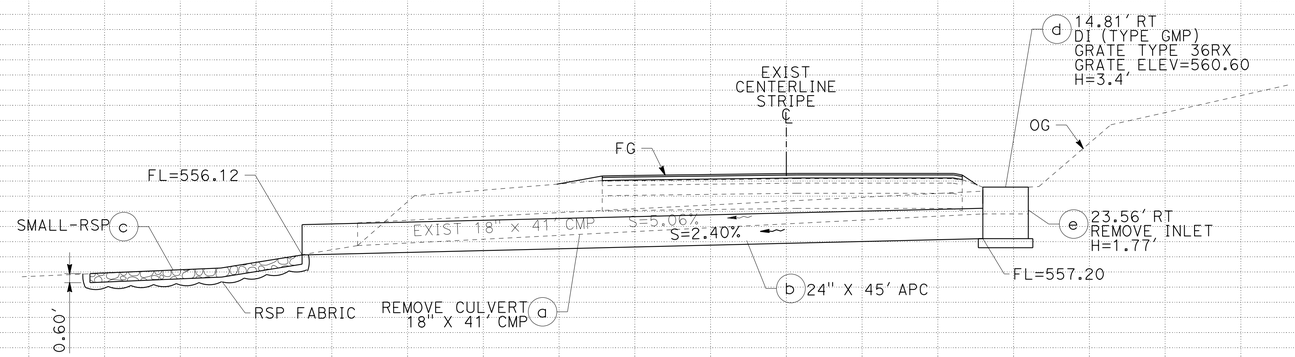

DRAINAGE SYSTEM NO. 9
PM R11.97
SCALE: 1" = 5' HORIZ
1" = 5' VERT

APPROVED FOR DRAINAGE WORK ONLY

DRAINAGE PLAN AND PROFILE

SCALE: AS SHOWN

D-3

REVISED BY | DATE REVISED
JOLENA ASTIN | JIM RASMUSSEN
CALCULATED-DESIGNED BY | CHECKED BY
FUNCTIONAL SUPERVISOR: JOHN MARTIN

STATE OF CALIFORNIA - DEPARTMENT OF TRANSPORTATION
Caltrans
DESIGN

P:\proj1\02\4E430_plans\pse\02000020284ia003.dgn

LAST REVISION | DATE PLOTTED => 25-JUL-2014 | TIME PLOTTED => 12:21
10-06-13

Dist	COUNTY	ROUTE	POST MILES TOTAL PROJECT	SHEET No.	TOTAL SHEETS
02	Sha	44	R4.2/R14.5	15	70

REGISTERED CIVIL ENGINEER 06-19-14 DATE

06-24-14
PLANS APPROVAL DATE

REGISTERED PROFESSIONAL ENGINEER JAMES D. RASMUSSEN No. 76401 Exp. 12/31/14 CIVIL STATE OF CALIFORNIA

THE STATE OF CALIFORNIA OR ITS OFFICERS OR AGENTS SHALL NOT BE RESPONSIBLE FOR THE ACCURACY OR COMPLETENESS OF SCANNED COPIES OF THIS PLAN SHEET.

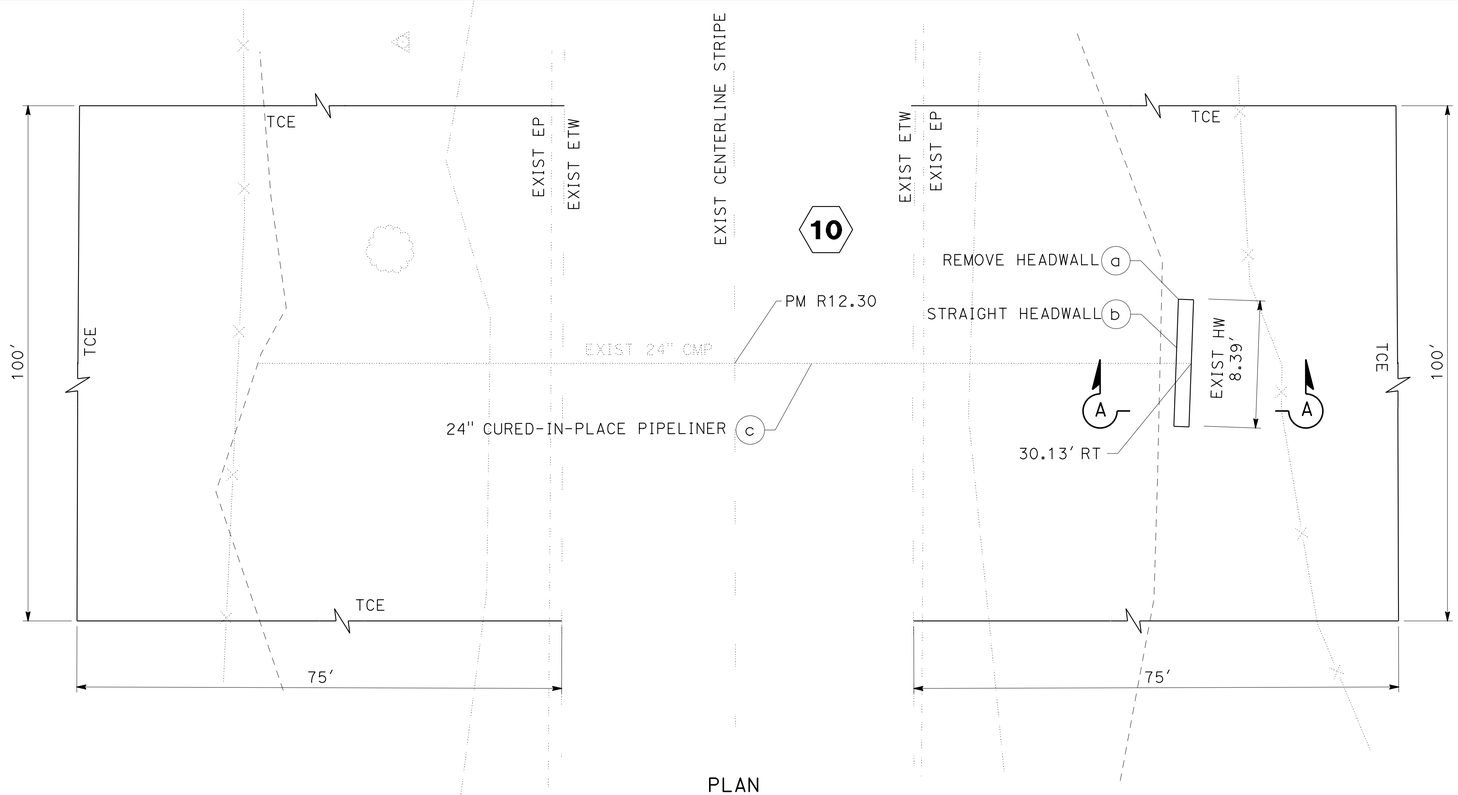

PLAN
SCALE: 1" = 5'

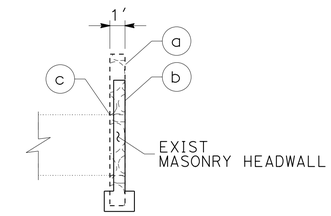

SECTION A-A

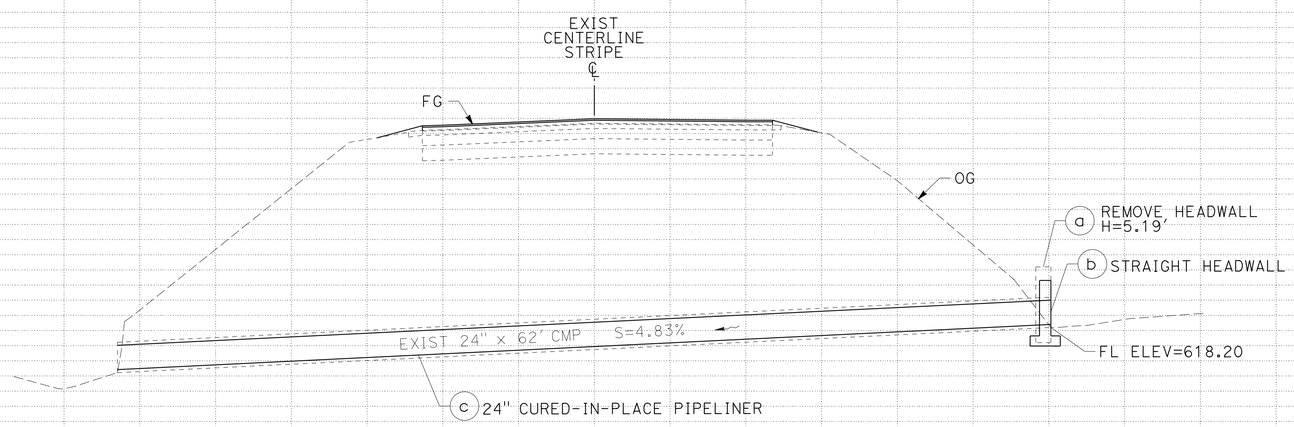

DRAINAGE SYSTEM NO. 10
PM R12.30
SCALE: 1" = 5' HORIZ
1" = 5' VERT

APPROVED FOR DRAINAGE WORK ONLY

DRAINAGE PLAN AND PROFILE

SCALE: AS SHOWN

D-4

REVISED BY | DATE REVISED
JOLENA ASTIN | JIM RASMUSSEN
CALCULATED-DESIGNED BY | CHECKED BY
FUNCTIONAL SUPERVISOR: JOHN MARTIN

STATE OF CALIFORNIA - DEPARTMENT OF TRANSPORTATION
Caltrans
DESIGN

P:\proj1\02\4E430_plans\pse\02000020284ia004.dgn

LAST REVISION | DATE PLOTTED => 25-JUL-2014
10-06-13 | TIME PLOTTED => 12:21

Dist	COUNTY	ROUTE	POST MILES TOTAL PROJECT	SHEET No.	TOTAL SHEETS
02	Sha	44	R4.2/R14.5	16	70

REGISTERED CIVIL ENGINEER 06-19-14 DATE

06-24-14
PLANS APPROVAL DATE

REGISTERED PROFESSIONAL ENGINEER JAMES D. RASMUSSEN No. 76401 Exp. 12/31/14 CIVIL STATE OF CALIFORNIA

THE STATE OF CALIFORNIA OR ITS OFFICERS OR AGENTS SHALL NOT BE RESPONSIBLE FOR THE ACCURACY OR COMPLETENESS OF SCANNED COPIES OF THIS PLAN SHEET.

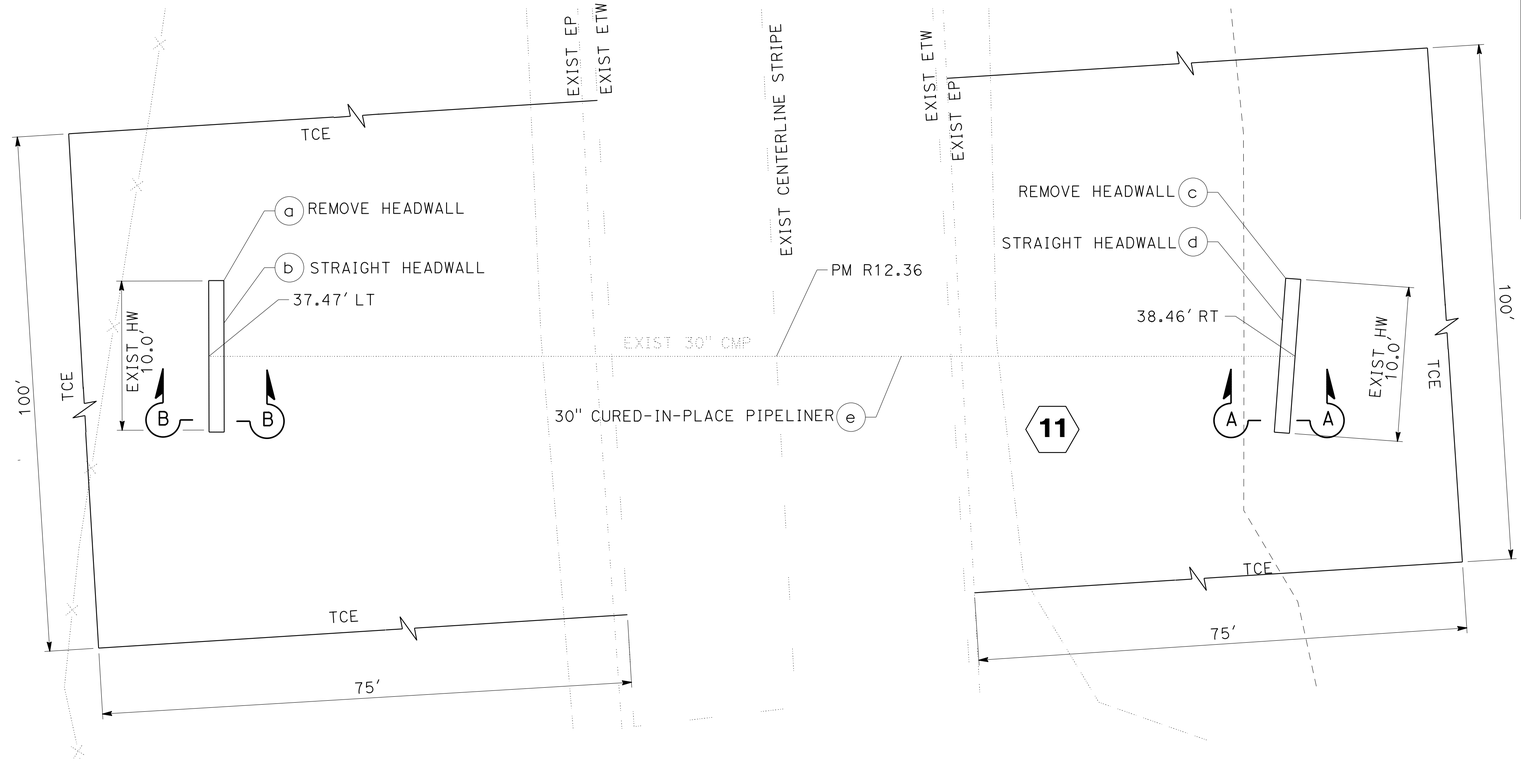

PLAN
SCALE: 1" = 5'

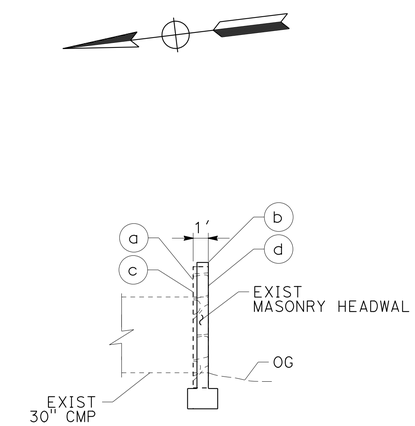

SECTION A-A
SECTION B-B (MIRROR)

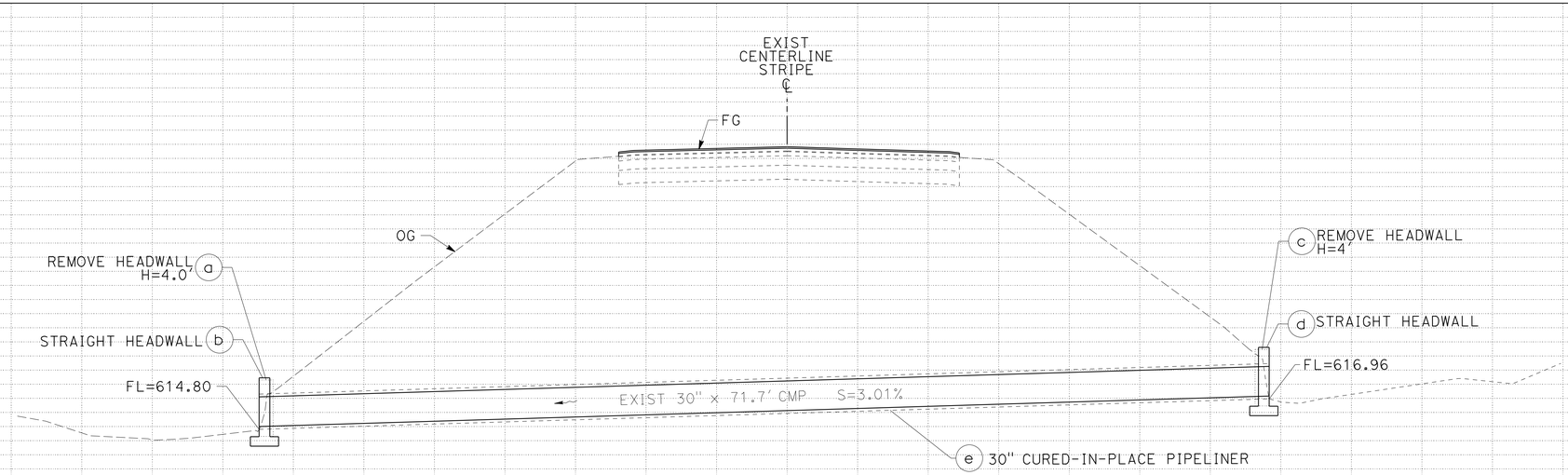

DRAINAGE SYSTEM NO. 11
PM R12.36
SCALE: 1" = 5' HORIZ
1" = 5' VERT

DRAINAGE PLAN AND PROFILE

SCALE: AS SHOWN

APPROVED FOR DRAINAGE WORK ONLY

D-5

REVISED BY | DATE REVISED
JOLENA ASTIN | JIM RASMUSSEN
CALCULATED-DESIGNED BY | CHECKED BY
FUNCTIONAL SUPERVISOR: JOHN MARTIN

STATE OF CALIFORNIA - DEPARTMENT OF TRANSPORTATION
Caltrans **DESIGN**

P:\proj1\02\4E430_plans\pse\02000020284ia005.dgn

LAST REVISION | DATE PLOTTED => 25-JUL-2014 | TIME PLOTTED => 12:21
02-27-14

Dist	COUNTY	ROUTE	POST MILES TOTAL PROJECT	SHEET No.	TOTAL SHEETS
02	Sha	44	R4.2/R14.5	17	70

REGISTERED CIVIL ENGINEER 06-19-14 DATE

06-24-14
PLANS APPROVAL DATE

REGISTERED PROFESSIONAL ENGINEER JAMES D. RASMUSSEN No. 76401 Exp. 12/31/14 CIVIL STATE OF CALIFORNIA

THE STATE OF CALIFORNIA OR ITS OFFICERS OR AGENTS SHALL NOT BE RESPONSIBLE FOR THE ACCURACY OR COMPLETENESS OF SCANNED COPIES OF THIS PLAN SHEET.

NOTE:

1. ELEVATIONS ARE ASSUMED AND TO BE USED FOR THIS SHEET ONLY.

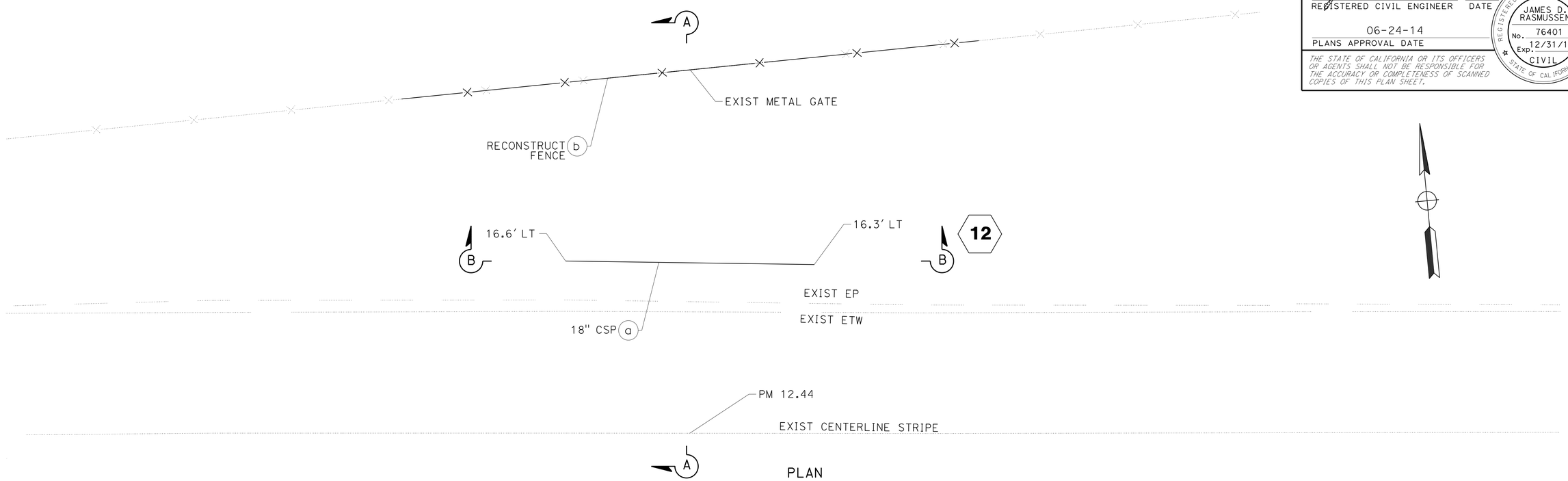

PLAN

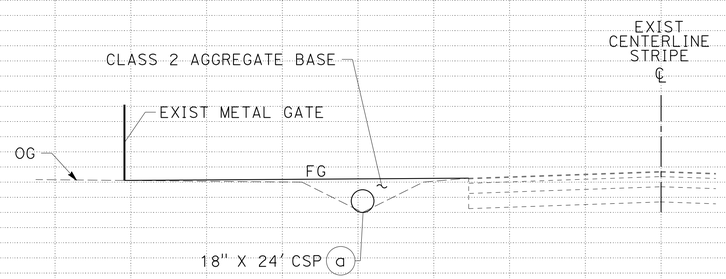

SECTION A-A

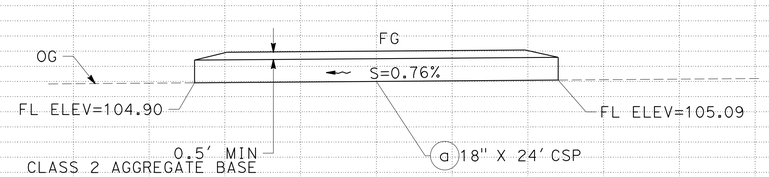

SECTION B-B

DRAINAGE SYSTEM NO. 12
PM R12.44
SCALE: 1" = 5' HORIZ
1" = 5' VERT

APPROVED FOR DRAINAGE WORK ONLY

DRAINAGE PLAN AND PROFILES

SCALE: AS SHOWN

D-6

REVISED BY	DATE REVISED
JOLENA ASTIN	JIM RASMUSSEN
CALCULATED-DESIGNED BY	CHECKED BY
FUNCTIONAL SUPERVISOR	JOHN MARTIN

STATE OF CALIFORNIA - DEPARTMENT OF TRANSPORTATION
Caltrans
DESIGN

P:\proj1\02\4E430_plans\pse\02000020284ia006.dgn

LAST REVISION DATE PLOTTED => 25-JUL-2014
02-27-14 TIME PLOTTED => 12:21

Dist	COUNTY	ROUTE	POST MILES TOTAL PROJECT	SHEET No.	TOTAL SHEETS
02	Sha	44	R4.2/R14.5	18	70

REGISTERED CIVIL ENGINEER 06-19-14 DATE

06-24-14
PLANS APPROVAL DATE

REGISTERED PROFESSIONAL ENGINEER JAMES D. RASMUSSEN No. 76401 Exp. 12/31/14 CIVIL STATE OF CALIFORNIA

THE STATE OF CALIFORNIA OR ITS OFFICERS OR AGENTS SHALL NOT BE RESPONSIBLE FOR THE ACCURACY OR COMPLETENESS OF SCANNED COPIES OF THIS PLAN SHEET.

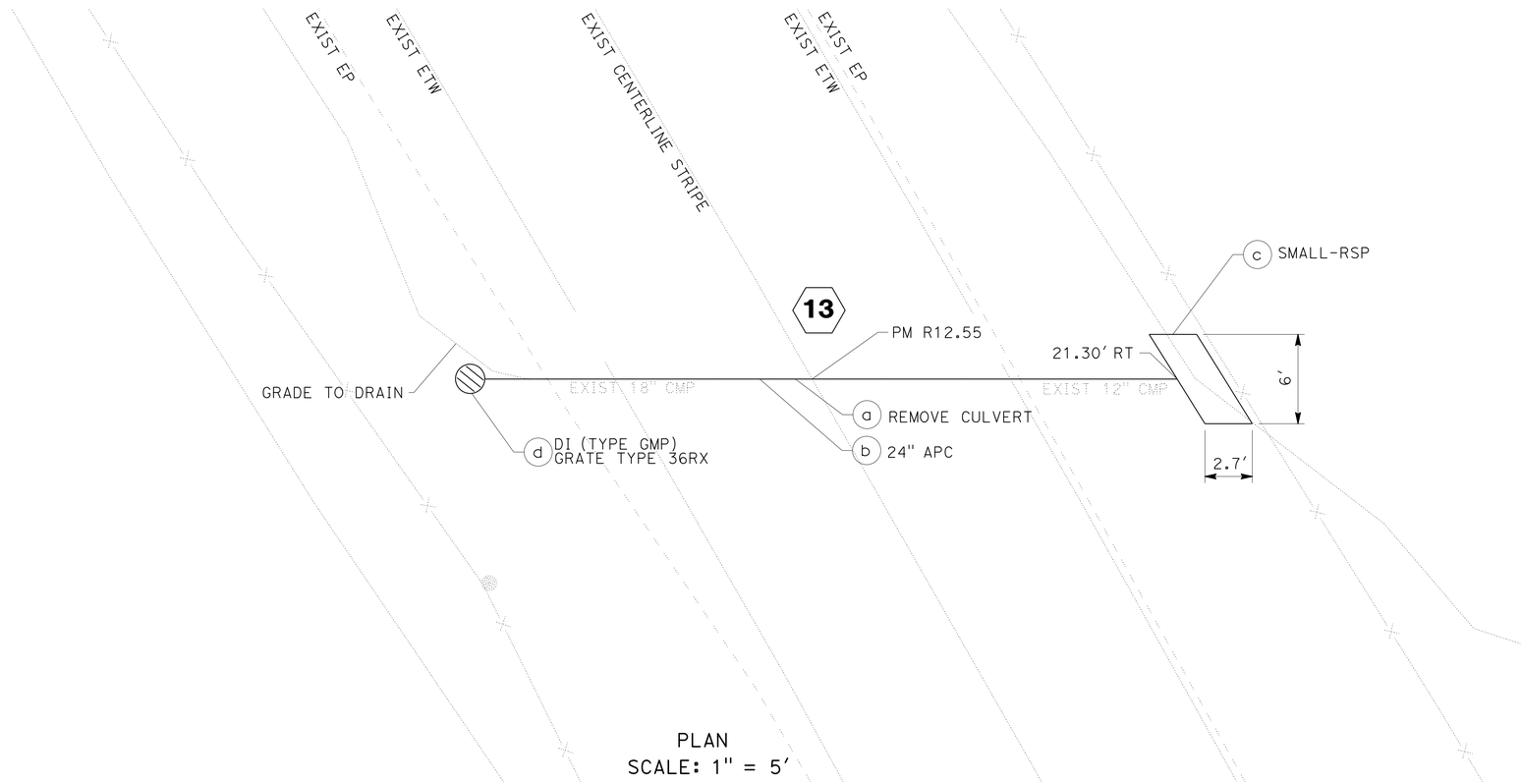

PLAN
SCALE: 1" = 5'

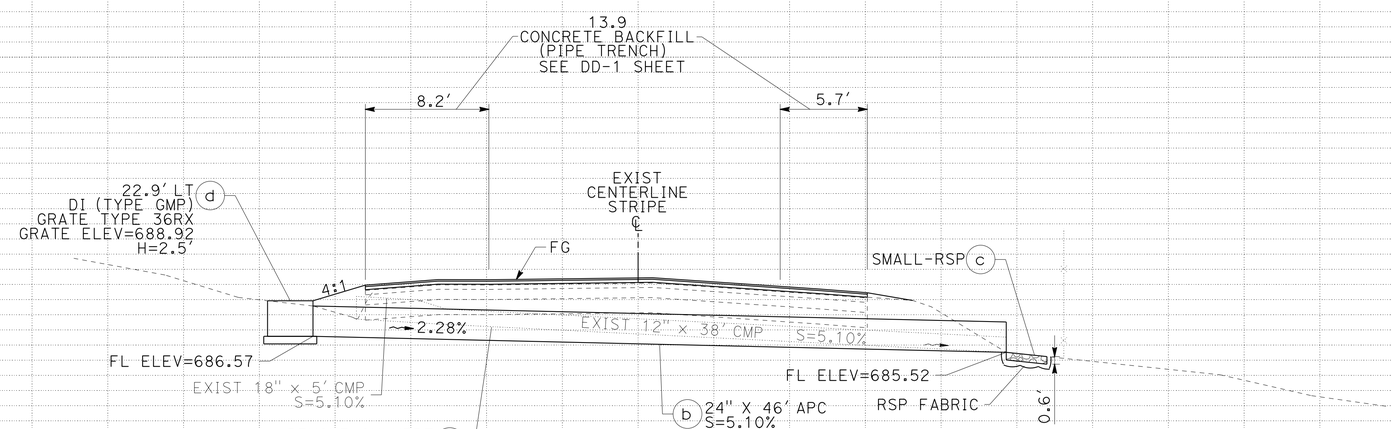

DRAINAGE SYSTEM NO. 13
PM R12.55
SCALE: 1" = 5' HORIZ
1" = 5' VERT

DRAINAGE PLAN AND PROFILE

SCALE: AS SHOWN

APPROVED FOR DRAINAGE WORK ONLY

D-7

REVISED BY	DATE REVISED
JOLENA ASTIN	JIM RASMUSSEN
CALCULATED-DESIGNED BY	CHECKED BY
FUNCTIONAL SUPERVISOR	JOHN MARTIN

STATE OF CALIFORNIA - DEPARTMENT OF TRANSPORTATION
Caltrans
DESIGN

P:\proj1\02\4E430_plans\pse\02000020284ia007.dgn

LAST REVISION DATE PLOTTED => 25-JUL-2014
10-06-13 TIME PLOTTED => 12:21

Dist	COUNTY	ROUTE	POST MILES TOTAL PROJECT	SHEET No.	TOTAL SHEETS
02	Sha	44	R4.2/R14.5	19	70

REGISTERED CIVIL ENGINEER 06-19-14 DATE

06-24-14
PLANS APPROVAL DATE

REGISTERED PROFESSIONAL ENGINEER
JAMES D. RASMUSSEN
No. 76401
Exp. 12/31/14
CIVIL
STATE OF CALIFORNIA

THE STATE OF CALIFORNIA OR ITS OFFICERS OR AGENTS SHALL NOT BE RESPONSIBLE FOR THE ACCURACY OR COMPLETENESS OF SCANNED COPIES OF THIS PLAN SHEET.

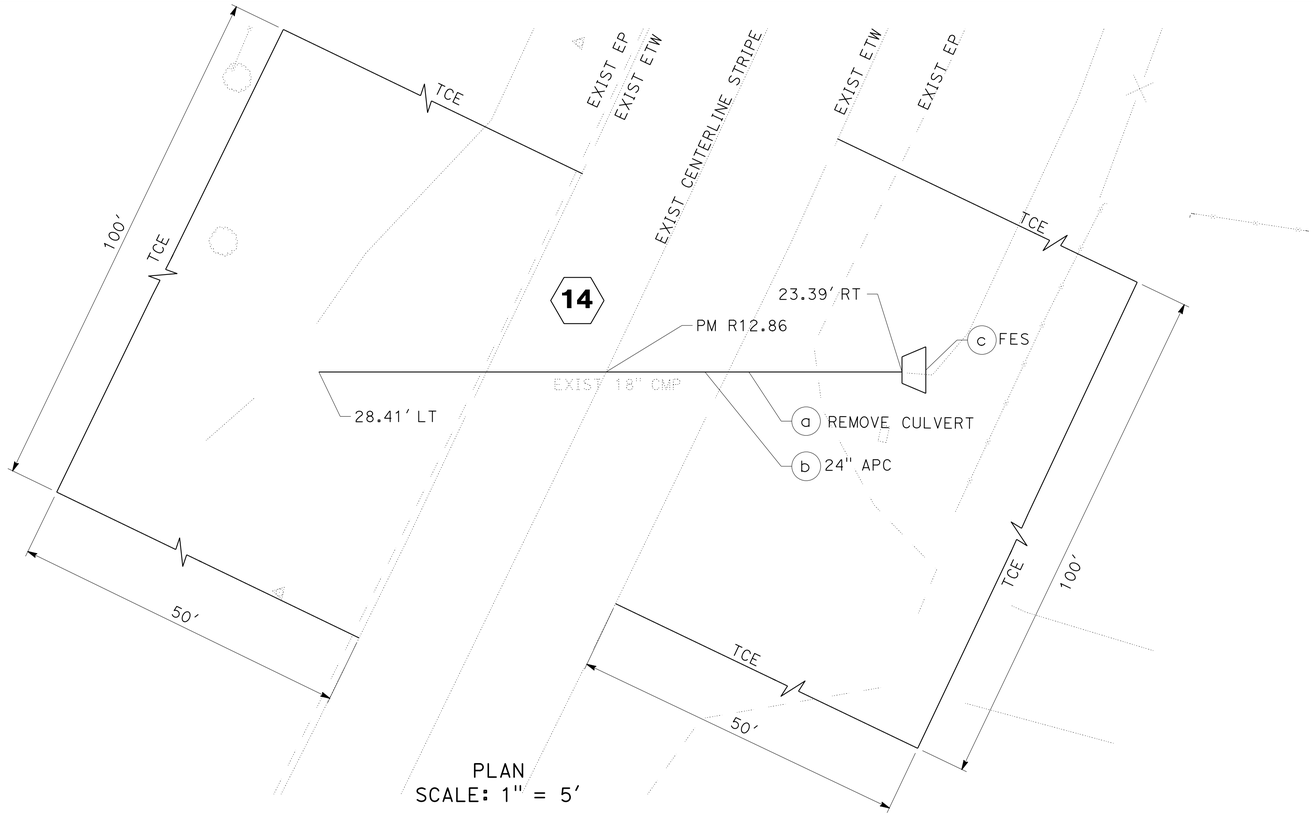

PLAN
SCALE: 1" = 5'

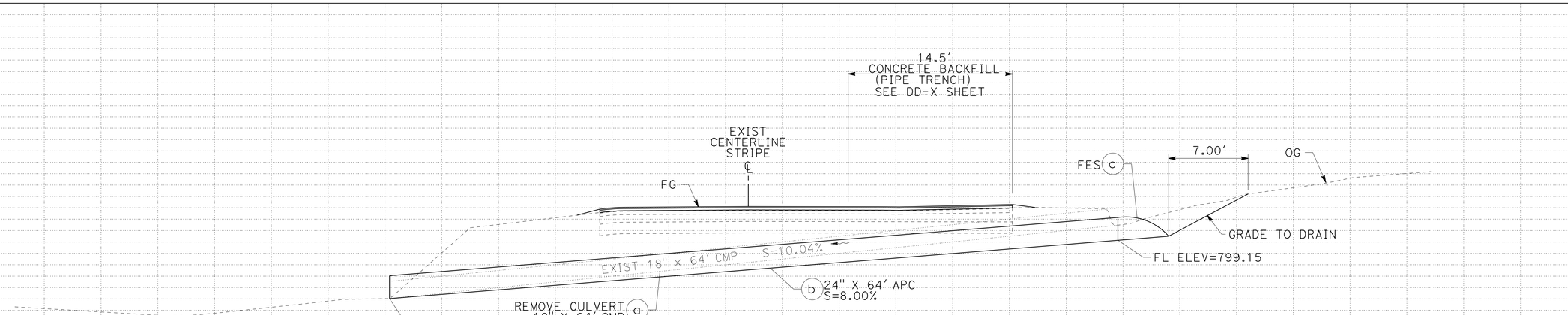

DRAINAGE SYSTEM NO. 14
PM R12.86
SCALE: 1" = 5' HORIZ
1" = 5' VERT

DRAINAGE PLAN AND PROFILE

SCALE: AS SHOWN

D-8

APPROVED FOR DRAINAGE WORK ONLY

REVISED BY	DATE REVISED

CALCULATED-DESIGNED BY: JOLENA ASTIN
CHECKED BY: JIM RASMUSSEN
FUNCTIONAL SUPERVISOR: JOHN MARTIN

STATE OF CALIFORNIA - DEPARTMENT OF TRANSPORTATION
Caltrans
DESIGN

P:\proj1\02\4E430_plans\pse\02000020284ia008.dgn

LAST REVISION DATE PLOTTED => 25-JUL-2014
10-06-13 TIME PLOTTED => 12:21

Dist	COUNTY	ROUTE	POST MILES TOTAL PROJECT	SHEET No.	TOTAL SHEETS
02	Sha	44	R4.2/R14.5	20	70

REGISTERED CIVIL ENGINEER 06-19-14 DATE

06-24-14
PLANS APPROVAL DATE

REGISTERED PROFESSIONAL ENGINEER
JAMES D. RASMUSSEN
No. 76401
Exp. 12/31/14
CIVIL
STATE OF CALIFORNIA

THE STATE OF CALIFORNIA OR ITS OFFICERS OR AGENTS SHALL NOT BE RESPONSIBLE FOR THE ACCURACY OR COMPLETENESS OF SCANNED COPIES OF THIS PLAN SHEET.

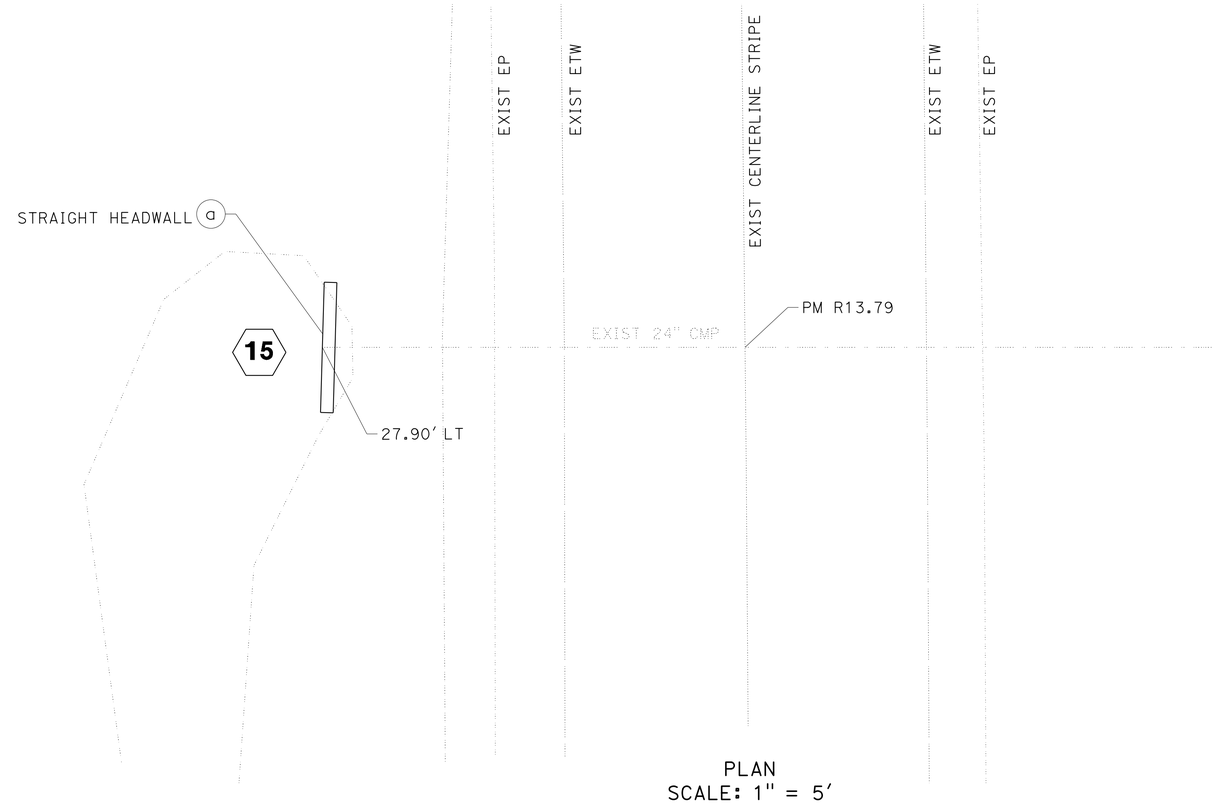

PLAN
SCALE: 1" = 5'

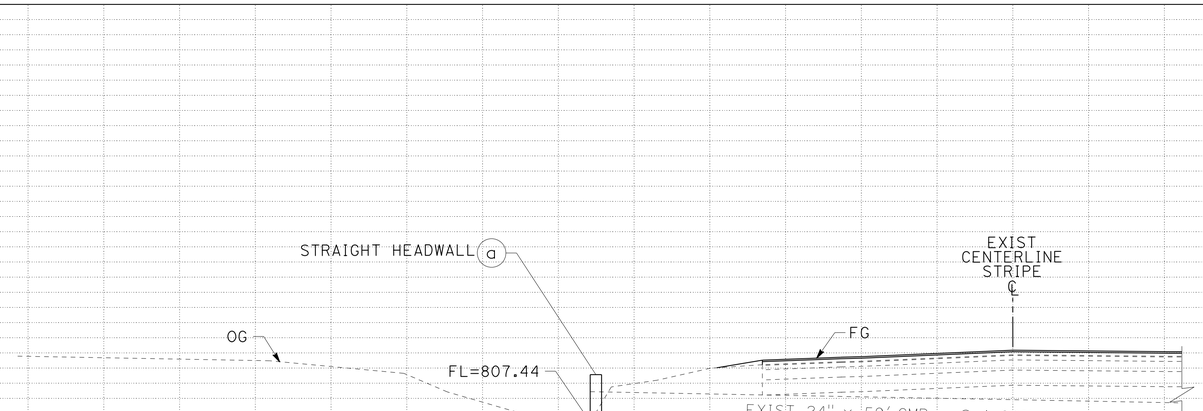

DRAINAGE SYSTEM NO. 15
PM R13.79
SCALE: 1" = 5' HORIZ
1" = 5' VERT

APPROVED FOR DRAINAGE WORK ONLY

DRAINAGE PLAN AND PROFILE

SCALE: AS SHOWN

D-9

REVISED BY | DATE REVISED
JOLENA ASTIN | JIM RASMUSSEN
CALCULATED-DESIGNED BY | CHECKED BY
FUNCTIONAL SUPERVISOR: JOHN MARTIN

STATE OF CALIFORNIA - DEPARTMENT OF TRANSPORTATION
Caltrans
DESIGN

P:\proj1\02\4E430_plans\pse\02000020284ia009.dgn

LAST REVISION 10-06-13 | DATE PLOTTED => 25-JUL-2014 | TIME PLOTTED => 12:21

Dist	COUNTY	ROUTE	POST MILES TOTAL PROJECT	SHEET No.	TOTAL SHEETS
02	Sha	44	R4.2/R14.5	21	70

REGISTERED CIVIL ENGINEER 06-19-14 DATE

06-24-14
PLANS APPROVAL DATE

REGISTERED PROFESSIONAL ENGINEER JAMES D. RASMUSSEN No. 76401 Exp. 12/31/14 CIVIL STATE OF CALIFORNIA

THE STATE OF CALIFORNIA OR ITS OFFICERS OR AGENTS SHALL NOT BE RESPONSIBLE FOR THE ACCURACY OR COMPLETENESS OF SCANNED COPIES OF THIS PLAN SHEET.

NOTE:

1. FOR ACCURATE RIGHT OF WAY DATA, CONTACT RIGHT OF WAY ENGINEERING AT THE DISTRICT OFFICE.

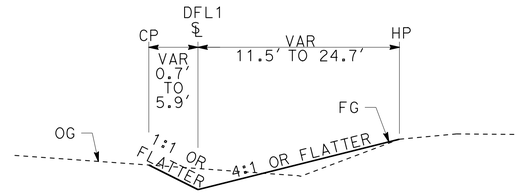

"DFL1" 838+19.29 TO "DFL1" 841+75.00

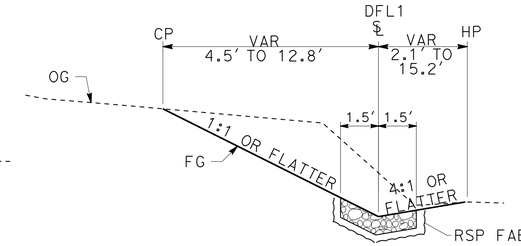

"DFL1" 841+75.00 TO "DFL1" 843+59.44

CURVE DATA

No. ⊕	R	Δ	T	L	BC	EC
1	17.25	24°17′60"	3.71	7.32	837+60.64	837+67.95
2	50.92	16°26′13"	7.35	14.61	837+77.37	837+91.97
3	1169.67	12°27′02"	117.58	234.23	838+77.59	841+11.82
4	1593.71	50°15′40"	31.31	58.55	842+34.49	842+93.04
5	60.29	34°19′29"	18.62	36.12	843+22.28	843+58.39
6	102.41	19°07′05"	17.25	34.17	843+72.98	844+07.15

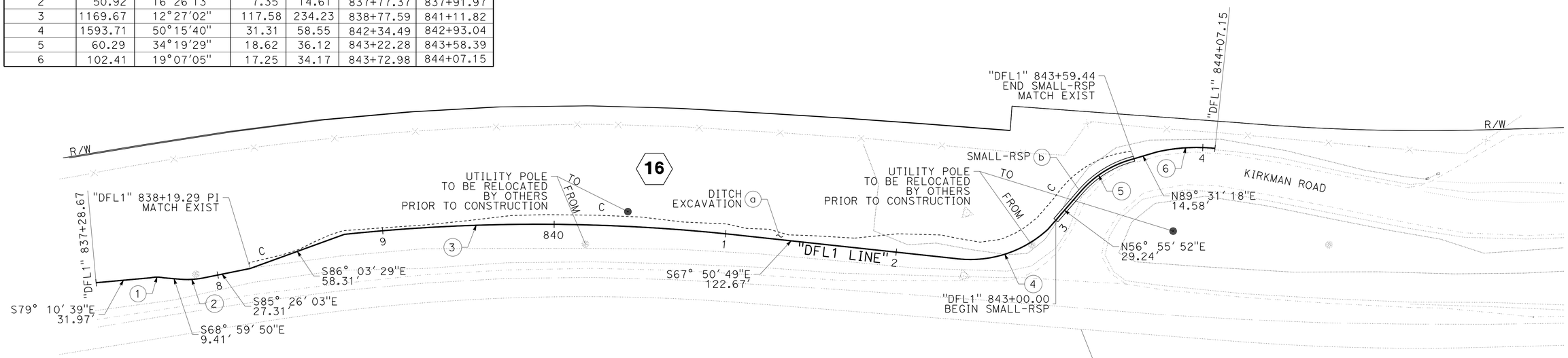

PLAN

"DFL1" LINE

SCALE: 1" = 30′ Horiz

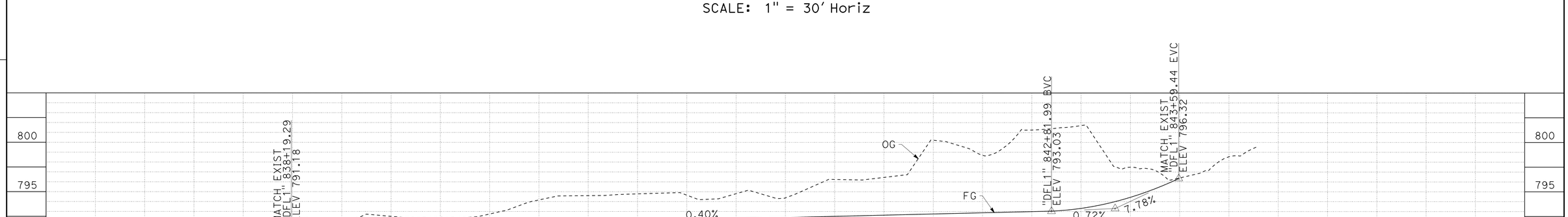

"DFL1" LINE PROFILE
DRAINAGE SYSTEM NO. 16
PM R14.17
SCALE: 1" = 30′ Horiz
1" = 5′ Vert

DRAINAGE PLAN AND PROFILE

NO SCALE

D-10

REVISED BY	DATE REVISED
JOLENA ASTIN	JIM RASMUSSEN
CALCULATED-DESIGNED BY	CHECKED BY
FUNCTIONAL SUPERVISOR	JOHN MARTIN

STATE OF CALIFORNIA - DEPARTMENT OF TRANSPORTATION
DESIGN
Caltrans

P:\proj1\02\4E430_plans\pse\02000020284ia010.dgn

LAST REVISION 11-18-13 | DATE PLOTTED => 25-JUL-2014 | TIME PLOTTED => 12:21

Dist	COUNTY	ROUTE	POST MILES TOTAL PROJECT	SHEET No.	TOTAL SHEETS
02	Sha	44	R4.2/R14.5	22	70

REGISTERED CIVIL ENGINEER 06-19-14 DATE

06-24-14
PLANS APPROVAL DATE

REGISTERED PROFESSIONAL ENGINEER JAMES D. RASMUSSEN No. 76401 Exp. 12/31/14 CIVIL STATE OF CALIFORNIA

THE STATE OF CALIFORNIA OR ITS OFFICERS OR AGENTS SHALL NOT BE RESPONSIBLE FOR THE ACCURACY OR COMPLETENESS OF SCANNED COPIES OF THIS PLAN SHEET.

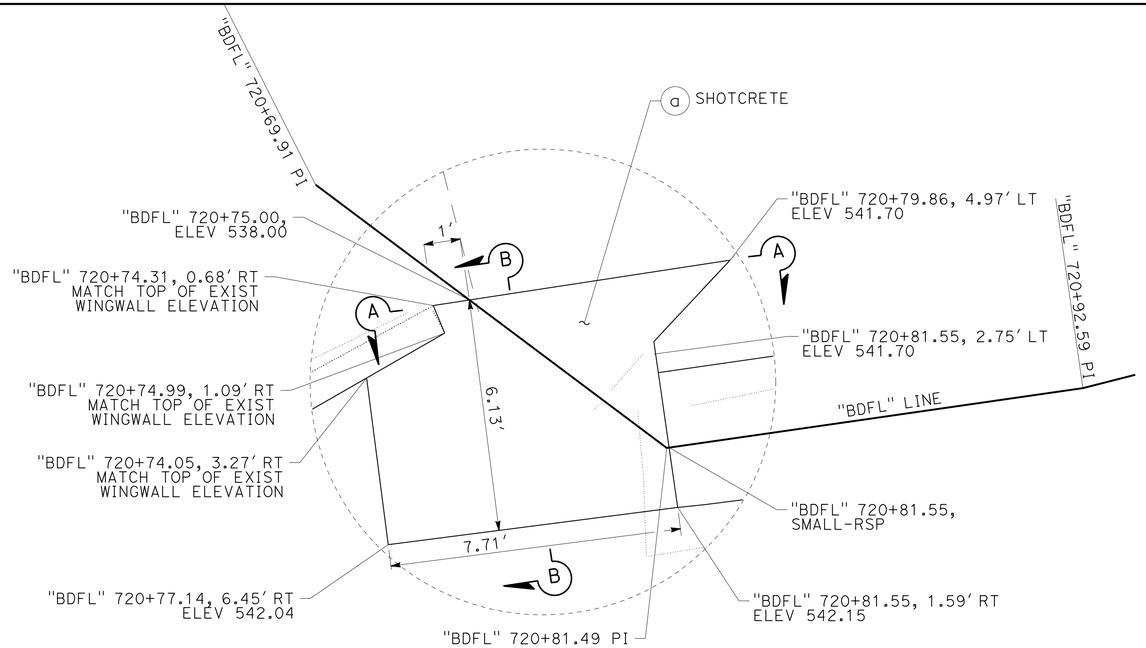

PLAN
DETAIL A

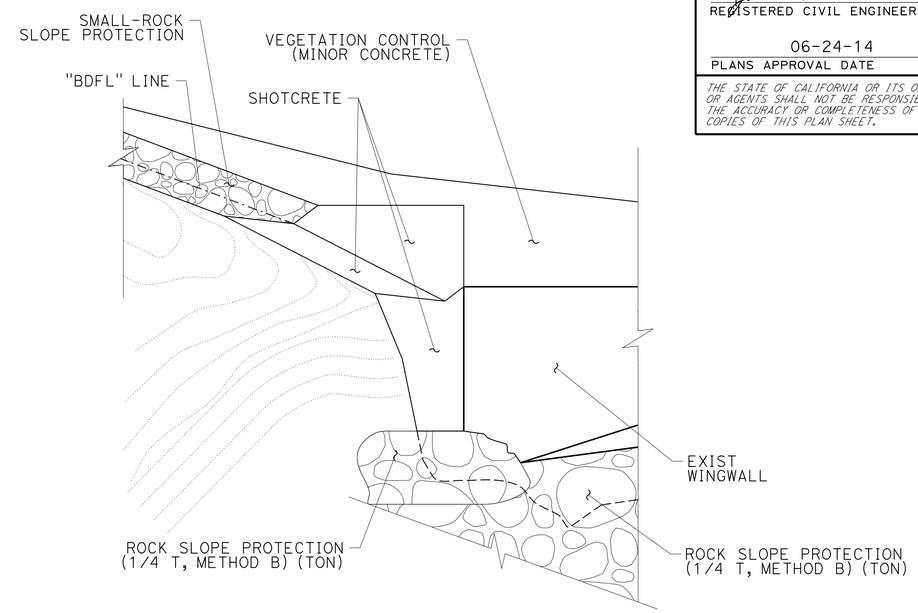

SHOTCRETE ISOMETRIC

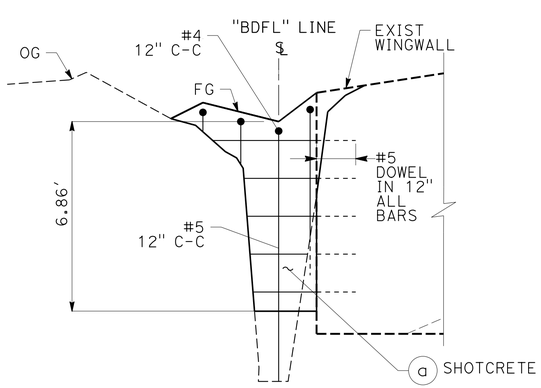

SECTION A-A

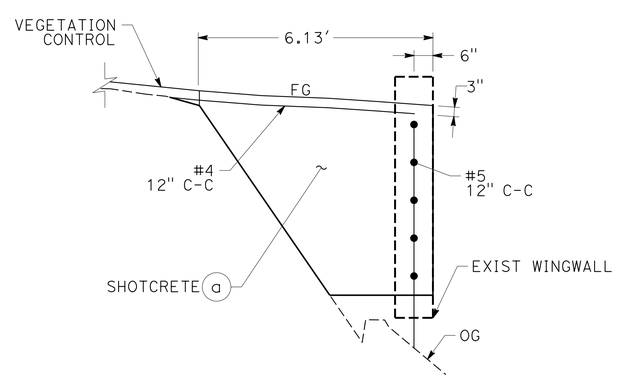

SECTION B-B

DRAINAGE SYSTEM (8) DETAILS
PM R11.76

CONCRETE BACKFILL (PIPE TRENCH)

DRAINAGE SYSTEM NO.	PM	LENGTH (LF)	DIMENSION (FT)	
			"A"	"B"
13(b)	R12.55	11.7	3.33	3.13
14(b)	R12.86	14.5	3.33	2.88

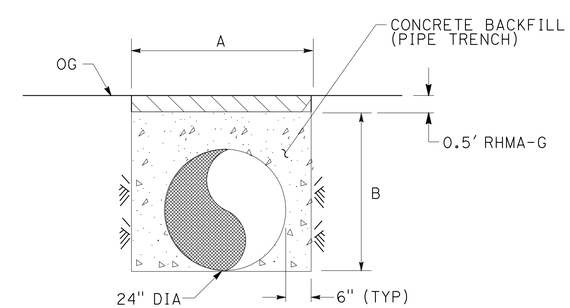

CONCRETE BACKFILL (PIPE TRENCH)

DRAINAGE DETAILS

NO SCALE

DD-1

REVISED BY	DATE REVISED

CALCULATED-DESIGNED BY	CHECKED BY
JOLENA ASTIN	JIM RASMUSSEN

FUNCTIONAL SUPERVISOR: JOHN MARTIN

STATE OF CALIFORNIA - DEPARTMENT OF TRANSPORTATION
Caltrans® DESIGN

P:\proj1\02\4E430_plans\pse\0200020284ic001.dgn

LAST REVISION 02-19-14 | DATE PLOTTED => 25-JUL-2014 | TIME PLOTTED => 12:21

Dist	COUNTY	ROUTE	POST MILES TOTAL PROJECT	SHEET No.	TOTAL SHEETS
02	Sha	44	R4.2/R14.5	23	70

REGISTERED CIVIL ENGINEER 06-19-14 DATE

06-24-14
PLANS APPROVAL DATE

REGISTERED PROFESSIONAL ENGINEER
JAMES D. RASMUSSEN
No. 76401
Exp. 12/31/14
CIVIL
STATE OF CALIFORNIA

THE STATE OF CALIFORNIA OR ITS OFFICERS OR AGENTS SHALL NOT BE RESPONSIBLE FOR THE ACCURACY OR COMPLETENESS OF SCANNED COPIES OF THIS PLAN SHEET.

NOTE:

1. FOR ACCURATE RIGHT OF WAY DATA, CONTACT RIGHT OF WAY ENGINEERING AT THE DISTRICT OFFICE.
2. LIMITS OF RSP ARE APPROXIMATE: THE ENGINEER SHALL VERIFY LIMITS PRIOR TO PLACEMENT.

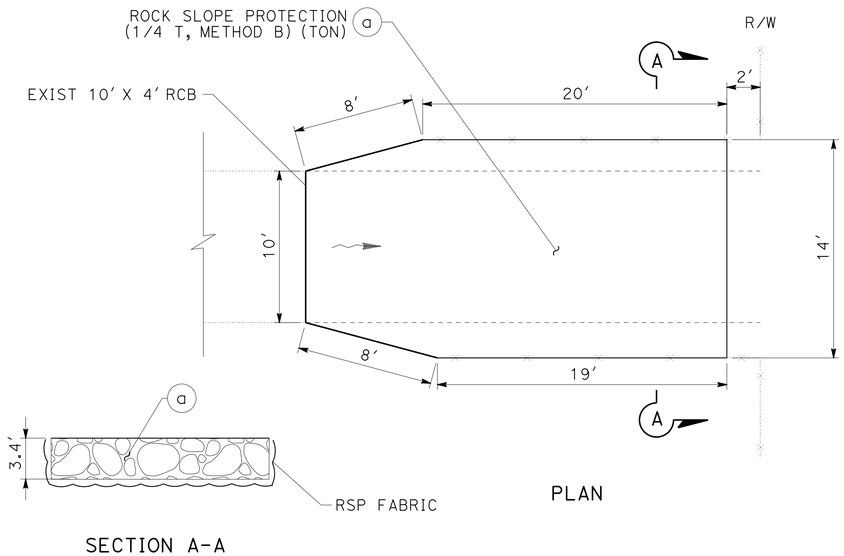

DRAINAGE SYSTEM NO. 3
PM R9.08

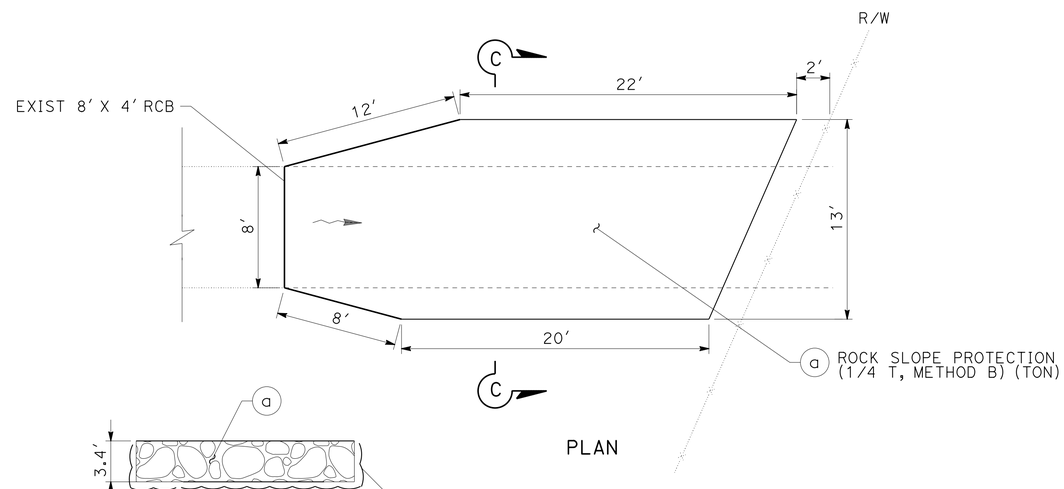

DRAINAGE SYSTEM NO. 6
PM R9.98

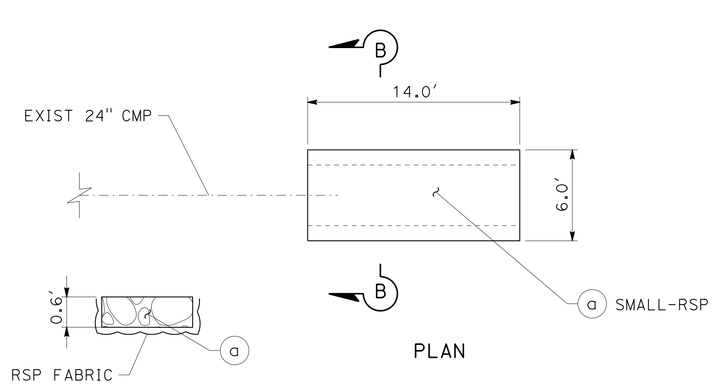

DRAINAGE SYSTEM NO. 5
PM R9.91

DRAINAGE DETAILS
NO SCALE

DD-2

REVISED BY	DATE REVISED
JOLENA ASTIN	JIM RASMUSSEN
CALCULATED-DESIGNED BY	CHECKED BY
FUNCTIONAL SUPERVISOR	JOHN MARTIN

STATE OF CALIFORNIA - DEPARTMENT OF TRANSPORTATION
Caltrans® DESIGN

P:\proj1\02\4E430_plans\pse\0200020284ic002.dgn

LAST REVISION 08-01-13 | DATE PLOTTED => 25-JUL-2014 | TIME PLOTTED => 12:21

Dist	COUNTY	ROUTE	POST MILES TOTAL PROJECT	SHEET No.	TOTAL SHEETS
02	Sha	44	R4.2/R14.5	24	70

REGISTERED CIVIL ENGINEER 06-19-14 DATE

06-24-14
PLANS APPROVAL DATE

REGISTERED PROFESSIONAL ENGINEER JAMES D. RASMUSSEN No. 76401 Exp. 12/31/14 CIVIL STATE OF CALIFORNIA

THE STATE OF CALIFORNIA OR ITS OFFICERS OR AGENTS SHALL NOT BE RESPONSIBLE FOR THE ACCURACY OR COMPLETENESS OF SCANNED COPIES OF THIS PLAN SHEET.

NOTE:

1. (N) - NOT A SEPARATE PAY ITEM, FOR INFORMATION ONLY

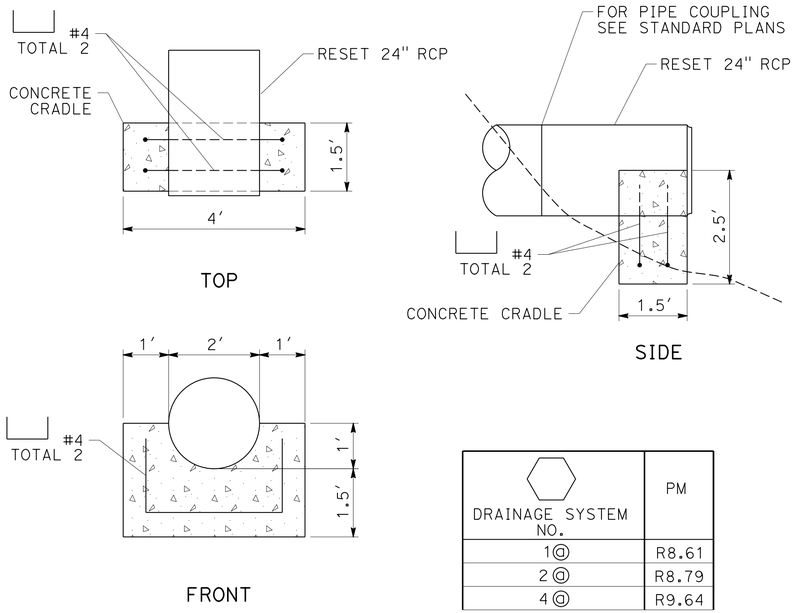

DRAINAGE SYSTEM NO.	PM
1ⓐ	R8.61
2ⓐ	R8.79
4ⓐ	R9.64

CONCRETE CRADLE DETAIL 1 ⓐ 2 ⓐ 4 ⓐ

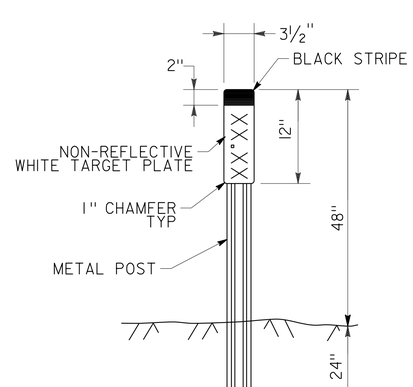

NOTES:

1. SEE STANDARD PLAN A73B FOR METAL POST DETAILS
2. PLACE MARKER (CULVERT) 1 FOOT FROM EP.
3. EXACT MARKER LOCATION TO BE DETERMINED BY THE ENGINEER.

MARKER (CULVERT)

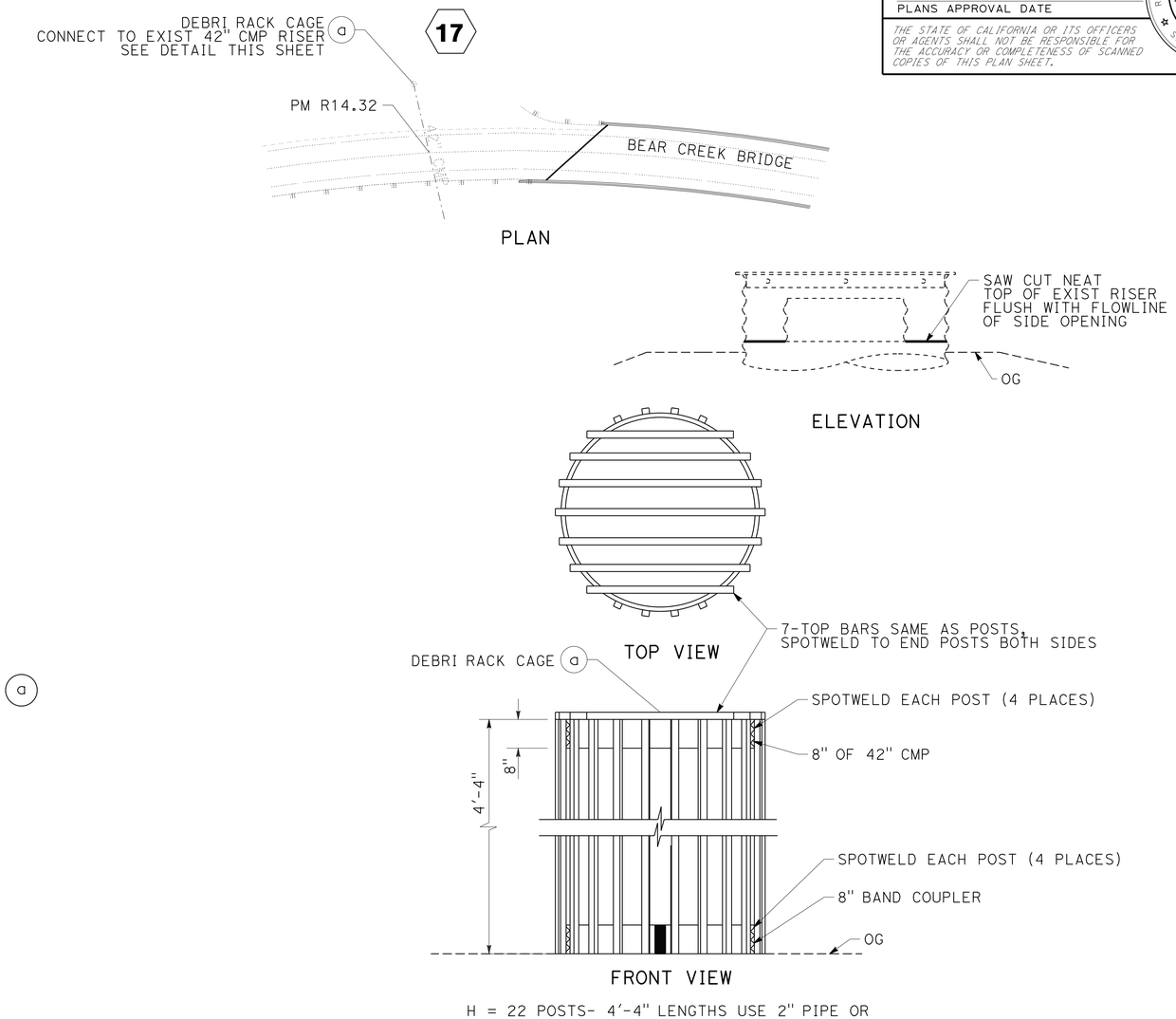

H = 22 POSTS- 4'-4" LENGTHS USE 2" PIPE OR L2 X 2 X 3/16 (GALVANIZED STEEL OR ALUMINUM)

DEBRIS RACK CAGE DETAIL
DRAINAGE SYSTEM 17 ⓐ
PM R14.32

DRAINAGE DETAILS

NO SCALE

DD-3

REVISED BY	DATE REVISED
JOLENA ASTIN	JIM RASMUSSEN
CALCULATED-DESIGNED BY	CHECKED BY
FUNCTIONAL SUPERVISOR	JOHN MARTIN

STATE OF CALIFORNIA - DEPARTMENT OF TRANSPORTATION
Caltrans
DESIGN

P:\proj1\02\4E430_plans\pse\02000020284ic003.dgn

LAST REVISION 10-06-13 | DATE PLOTTED => 25-JUL-2014 | TIME PLOTTED => 12:21

Dist	COUNTY	ROUTE	POST MILES TOTAL PROJECT	SHEET No.	TOTAL SHEETS
02	Sha	44	R4.2/R14.5	25	70

REGISTERED CIVIL ENGINEER 06-19-14 DATE

06-24-14
PLANS APPROVAL DATE

REGISTERED PROFESSIONAL ENGINEER JAMES D. RASMUSSEN No. 76401 Exp. 12/31/14 CIVIL STATE OF CALIFORNIA

THE STATE OF CALIFORNIA OR ITS OFFICERS OR AGENTS SHALL NOT BE RESPONSIBLE FOR THE ACCURACY OR COMPLETENESS OF SCANNED COPIES OF THIS PLAN SHEET.

NOTES:

1. "T" = WALL THICKNESS (INCHES) REQUIRED BEFORE APPLICATION OF COATING/LINING REQUIREMENT
2. APPLY COATING/LINING TREATMENT TO BOTH INTERIOR AND EXTERIOR OF CULVERT PIPE IN ACCORDANCE WITH SPECIFICATIONS

ABBREVIATIONS:

PC POLYMERIC COATING

ALTERNATIVE PIPE CULVERT ALLOWABLE PIPE MATERIAL AND PROTECTION

DESIGNATION	CSP (TYPE 1)		CSP (TYPE 2)	
	T[1] (IN)	COATING LINING[2]	T[1] (IN)	COATING LINING[2]
24" APC	0.109	PC	0.168	NONE

DRAINAGE SHEET NO.	DRAINAGE SYSTEM NO.	DRAINAGE UNIT NO.	REMOVE CULVERT (LF)	REMOVE INLET	RESTE 24" REINFORCED CONCRETE PIPE	REMOVE HEADWALL	RECONSTRUCT FENCE	CLEANING, INSPECTING, AND PREPARING CULVERT (LF)	24" CURED-IN-PLACE PIPELINER	30" CURED-IN-PLACE PIPELINER	CONCRETE BACKFILL (PIPE TRENCH)	DITCH EXCAVATION	MINOR CONCRETE (MINOR STRUCTURE)	SHOTCRETE	24" ALTERNATIVE PIPE CUVERT	18" CORRUGATED STEEL PIPE (0.109" THICK)	STEEL FLARED END SECTION	36" CORRUGATED STEEL PIPE INLET (0.109" THICK)	ROCK SLOPE PROTECTION (1/4 T, METHOD B) (TON)	SMALL-ROCK SLOPE PROTECTION	ROCK SLOPE PROTECTION FABRIC (CLASS 8)	MISC IRON AND STEEL	(N) MAX COVER	DRAINAGE SYSTEM NO.	DRAINAGE UNIT NO.	POST MILE	DESCRIPTION
			LF	EA	EA	EA	LF	LF	LF	CY	CY	CY	CY	CY	LF	LF	EA	LF	CY	CY	SQYD	LB					
DD-3	1	a			1								0.47											1	a	R8.61	RESET 24" RCP
DD-3	2	a			1								0.47											2	a	R8.79	RESET 24" RCP
DD-2	3	a																	47.1		73.7			3	a	R9.08	RSP
DD-3	4	a			1								0.47											4	a	R9.64	RESET 24" RCP
DD-2	5	a																		1.9	12.0			5	a	R9.91	RSP
DD-2	6	a																	66		93.9			6	a	R9.98	RSP
D-1	7	a																		12.7	73.7			7	a	R10.88	RSP
D-2	8	a												6.2										8	a	R11.76	SHOTCRETE
D-2	8	b																		9.3	60.2			8	b	R11.76	RSP
D-2	8	c										14.4												8	c	R11.76	DITCH EXCAVATION
D-2	8	d																	26.8					8	d	R11.76	RSP
D-2	8	e																	6.3					8	e	R11.76	RSP
D-2	8	f					25																	8	f	R11.76	RECONSTRUCT FENCE
D-3	9	a	41																					9	a	R11.97	REMOVE CULVERT 18" X 41' CMP
D-3	9	b													45								2.27	9	b	R11.97	24" X 41' APC
D-3	9	c																		1.9	12.0			9	c	R11.97	RSP
D-3	9	d											0.30					3.9				215		9	d	R11.97	DI (TYPE GMP), (1) GRATE TYPE 36RX
D-3	9	e		1																				9	e	R11.97	REMOVE INLET, H=1.77'
D-4	10	a				1																		10	a	R12.30	REMOVE HEADWALL (MASONRY) (H=5.19')
D-4	10	b											1.20											10	b	R12.30	STRAIGHT HEADWALL
D-4	10	c						62.0	62															10	c	R12.30	24" CURED-IN-PLACE PIPELINER
D-5	11	a				1																		11	a	R12.36	REMOVE HEADWALL (MASONRY) (H=4.00')
D-5	11	b											1.52											11	b	R12.36	STRAIGHT HEADWALL
D-5	11	c				1																		11	c	R12.36	REMOVE HEADWALL (MASONRY) (H=4.00')
D-5	11	d											1.52											11	d	R12.36	STRAIGHT HEADWALL
D-5	11	e						71.7		71.7														11	e	R12.36	30" CURED-IN-PLACE PIPELINER
D-6	12	a														24								12	a	R12.44	18" X 24' CSP
D-6	12	b					56																	12	b	R12.44	RECONSTRUCT FENCE
D-7	13	a	43																					13	a	R12.55	REMOVE CULVERT 18" X 5' CMP & 12" X 38' CMP
D-7	13	b									2.1				46								2.31	13	b	R12.55	24" X 46' APC
D-7	13	c																		0.4	3.2			13	c	R12.55	RSP
D-7	13	d											0.30					3.0				215		13	d	R12.55	DI (TYPE GMP), (1) GRATE TYPE 36RX
D-8	14	a	64																					14	a	R12.86	REMOVE CULVERT 18" X 64' CMP
D-8	14	b									2.9				64								4.47	14	b	R12.86	24" X 64' APC
D-8	14	c															1							14	c	R12.86	FES
D-9	15	a											1.20											15	a	R13.79	STRAIGHT HEADWALL
D-10	16	a										399.0												16	a	R14.17	DITCH EXCAVATION
D-10	16	b																		12.3	28.4			16	b	R14.17	RSP
DD-3	17	a																				512		17	a	R14.32	DEBRI RACK CAGE (H=4.33')
		TOTAL	148	1	3	3	81	133.7	62	71.7	5.0	413.4	7.45 *	6.2	155	24	1	6.9	146.2	38.5	357.1	942					

* ADDITIONAL QUANTITIES SHOWN ELSEWHERE.
(N) - NOT A SEPARATE PAY ITEM, FOR INFORMATION ONLY

DRAINAGE QUANTITIES DQ-1

REVISED BY | DATE REVISED
JOLENA ASTIN | JIM RASMUSSEN
CALCULATED-DESIGNED BY | CHECKED BY
FUNCTIONAL SUPERVISOR: JOHN MARTIN

STATE OF CALIFORNIA - DEPARTMENT OF TRANSPORTATION
Caltrans DESIGN

P:\proj1\02\4E430_plans\pse\02000202841d001.dgn

LAST REVISION 11-19-13 | DATE PLOTTED => 25-JUL-2014 | TIME PLOTTED => 12:21

Dist	COUNTY	ROUTE	POST MILES TOTAL PROJECT	SHEET No.	TOTAL SHEETS
02	Sha	44	R4.2/R14.5	26	70

REGISTERED CIVIL ENGINEER 06-19-14 DATE

06-24-14
PLANS APPROVAL DATE

REGISTERED PROFESSIONAL ENGINEER JAMES D. RASMUSSEN No. 76401 Exp. 12/31/14 CIVIL STATE OF CALIFORNIA

THE STATE OF CALIFORNIA OR ITS OFFICERS OR AGENTS SHALL NOT BE RESPONSIBLE FOR THE ACCURACY OR COMPLETENESS OF SCANNED COPIES OF THIS PLAN SHEET.

NOTES:

1. EXACT LOCATION OF ALL SIGNS TO BE DETERMINED BY THE ENGINEER.
2. CALIFORNIA CODES ARE DESIGNATED BY (CA), OTHERWISE FEDERAL CODES ARE SHOWN.
3. ALL CONSTRUCTION AREA SIGNS EXCEPT C40(CA) AND SPECIAL SHALL HAVE A BLACK LEGEND WITH AN ORANGE BACKGROUND.

CONSTRUCTION AREA SIGNS (STATIONARY MOUNTED)

TYPE	CODE	PANEL SIZE	SIGN MESSAGE	NUMBER AND SIZE OF POST	No. OF SIGNS
A	W20-1 C23B(CA)	48" x 48" 48" x 24"	ROAD WORK AHEAD HIGHWAY RESURFACING	1 - 4" x 6"	3
B	C40(CA)	108" x 42"	TRAFFIC FINES DOUBLED IN CONSTRUCTION ZONES	2 - 4" x 6"	3
C	G20-2	36" x 18"	END ROAD WORK	1 - 4" x 4"	19
D	W11-1 W16-1P	48" x 48" 24" x 30"	BICYCLE (SYMBOL) SHARE THE ROAD	1 - 4" x 6"	5
E	W20-1	48" x 48"	ROAD WORK AHEAD	1 - 4" x 6"	16

ROAD CONNECTIONS

Rte	PM	LOCATION	SIDE LT	SIDE RT
44	R4.99	STILLWATER ROAD	X	X
	R5.93	GILBERT DRIVE		X
	R8.05	SILVER BRIDGE ROAD	X	X
	R10.77	MILLVILLE PLAINS ROAD		X
	R10.77	OLD 44 DRIVE	X	
	R12.07	FLINT RIDGE ROAD		X
	R12.50	BASCOM ROAD	X	X
	R12.66	OAK TERRACE LANE	X	
	R12.97	SKYLIGHT RIDGE	X	
	R13.79	SOUTH COW CREEK ROAD	X	
	R14.17	KIRKMAN WAY	X	

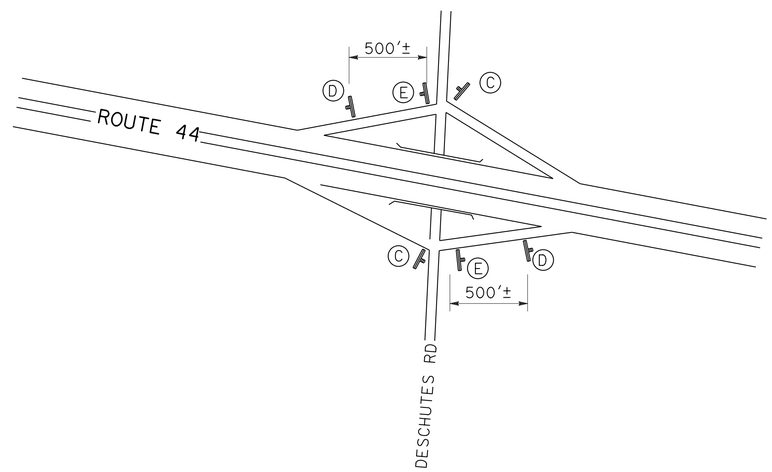

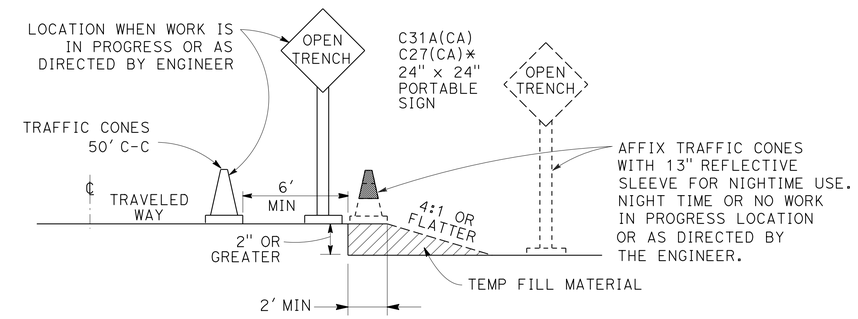

OPEN TRENCH SIGNING AND MARKING

* PLACE AT 250' INTERVALS THROUGH THE OPEN TRENCH AREA, ALTERNATE C27(CA) (OPEN TRENCH) AND C31A(CA) (NO SHOULDER) SIGNS

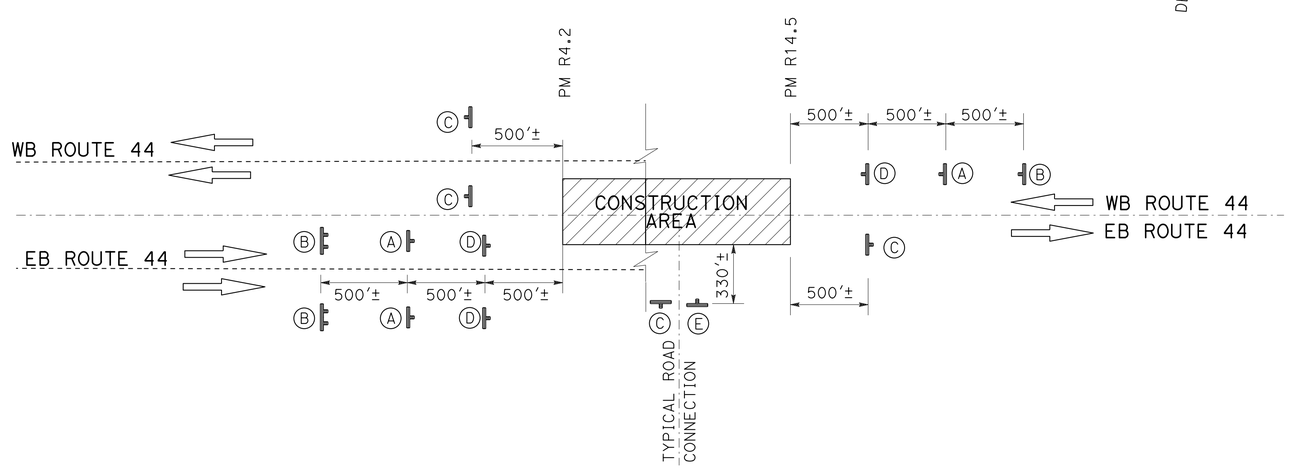

CONSTRUCTION AREA SIGNS (STATIONARY MOUNTED)

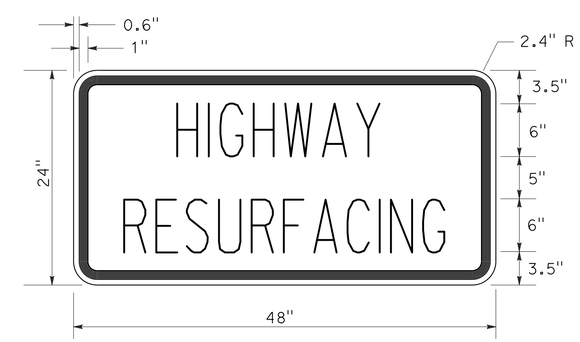

C23B (CA) SIGN PANEL DETAIL

CONSTRUCTION AREA SIGNS

NO SCALE

CS-1

REVISED BY | DATE REVISED
JOLENA ASTIN | JIM RASMUSSEN
CALCULATED-DESIGNED BY | CHECKED BY
FUNCTIONAL SUPERVISOR: JOHN MARTIN

STATE OF CALIFORNIA - DEPARTMENT OF TRANSPORTATION
Caltrans
DESIGN

P:\proj1\02\4E430_plans\pse\02000202841a001.dgn

LAST REVISION 07-31-13 | DATE PLOTTED => 25-JUL-2014 | TIME PLOTTED => 12:21

Dist	COUNTY	ROUTE	POST MILES TOTAL PROJECT	SHEET No.	TOTAL SHEETS
02	Sha	44	R4.2/R14.5	27	70

REGISTERED CIVIL ENGINEER 06-19-14 DATE

06-24-14
PLANS APPROVAL DATE

REGISTERED PROFESSIONAL ENGINEER JAMES D. RASMUSSEN No. 76401 Exp. 12/31/14 CIVIL STATE OF CALIFORNIA

THE STATE OF CALIFORNIA OR ITS OFFICERS OR AGENTS SHALL NOT BE RESPONSIBLE FOR THE ACCURACY OR COMPLETENESS OF SCANNED COPIES OF THIS PLAN SHEET.

NOTES:

1. PRE-NOTIFICATION PCMS: PLACE NEAR RAMP AND ACTIVATE APPROXIMATELY 12 HOURS PRIOR TO RAMP CLOSURE.

FRAME 1	FRAME 2
EXIT WILL BE CLOSED	TODAY (OR TONIGHT) XX:XXPM - XX:XXAM

2. RAMP CLOSED PCMS: MOVE PRE-NOTIFICATION PCMS APPROXIMATELY 1000 FEET BEFORE RAMP AND ACTIVATE DURING RAMP CLOSURE.

FRAME 1	FRAME 2
EXIT XXX OR ROAD NAME CLOSED	FOLLOW DETOUR

3. PLACE 7 DAYS PRIOR TO RAMP CLOSURE.
4. ADD SIGN(S) SPACED EQUALLY BETWEEN INTERCHANGES WITH MAXIMUM SPACING AT 5 MILES.
5. EXACT SIGN LOCATION TO BE DETERMINED BY THE ENGINEER.
6. EXISTING UTILITY FACILITIES ARE NOT SHOWN ON THESE PLANS.
7. RAMP CLOSED PCMS: PLACE BEFORE OPEN ON-RAMP AND ACTIVATE DURING RAMP CLOSURE.

FRAME 1	FRAME 2
EB 44 ON RAMP CLOSED	FOLLOW DETOUR

CONSTRUCTION AREA SIGNS (PORTABLE SIGNS)

SIGN NO. ◯	CODE	PANEL SIZE (INCH)	REMARKS	NO. (EA)
Ⓐ	G28-2 (44) (CA) M3-2 M4-10L	24" x 24" 24" x 12" 48" x 18"	ROUTE SHIELD (44) EAST DETOUR (LT ARROW)	2
Ⓑ	G28-2 (44) (CA) M3-2 SC3 (CA)	24" x 24" 24" x 12" 48" x 18"	ROUTE SHIELD (44) EAST DETOUR (UP ARROW)	2
Ⓒ	G28-2 (44) (CA) M3-2 M4-10R	24" x 24" 24" x 12" 48" x 18"	ROUTE SHIELD (44) EAST DETOUR (RT ARROW)	2
Ⓓ	M4-8A	24" x 18"	END DETOUR	4
Ⓔ	M4-10L	48" x 18"	DETOUR (LT ARROW)	2
Ⓕ*	SC6-3 (CA)	48" x 48"	RAMP CLOSED - DATE TIME	3
Ⓖ	M4-10R SP1	48" x 18" 48" x 24"	DETOUR (RT ARROW) "DESCHUTES ROAD"	2
Ⓗ	M4-10L SP1	48" x 18" 48" x 24"	DETOUR (LT ARROW) "DESCHUTES ROAD"	3
Ⓙ	SC3 (CA) SP1	48" x 48" 48" x 24"	DETOUR (UP ARROW) "DESCHUTES ROAD"	3
Ⓚ	G28-2 (44) (CA) M4-10L M3-4	24" x 24" 48" x 18" 24" x 12"	ROUTE SHIELD (44) DETOUR (LT ARROW) WEST	5
Ⓛ*	G28-2 (44) (CA) SC6-3 (CA) M3-4	24" x 24" 48" x 48" 24" x 12"	ROUTE SHIELD (44) RAMP CLOSED - DATE TIME WEST	2
Ⓜ	G28-2 (44) (CA) M4-10R M3-4	24" x 24" 48" x 18" 24" x 12"	ROUTE SHIELD (44) DETOUR (RT ARROW) WEST	1
Ⓝ	G28-2 (44) (CA) SC3 (CA) M3-4	24" x 24" 48" x 48" 24" x 12"	ROUTE SHIELD (44) DETOUR (UP ARROW) WEST	2
			TOTAL	33

* SEE NOTE 3

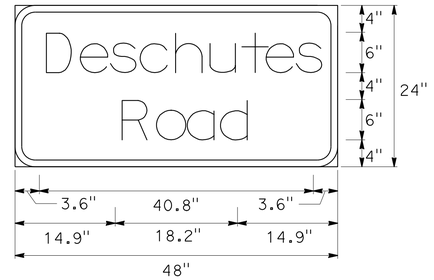

3.0" RADIUS, 1.0" BORDER, BLACK ON ORANGE;
[DESCHUTES] D; [ROAD] D;

SP1

LEGEND:

PORTABLE CHANGEABLE MESSAGE SIGN

CONSTRUCTION AREA SIGN (PORTABLE)

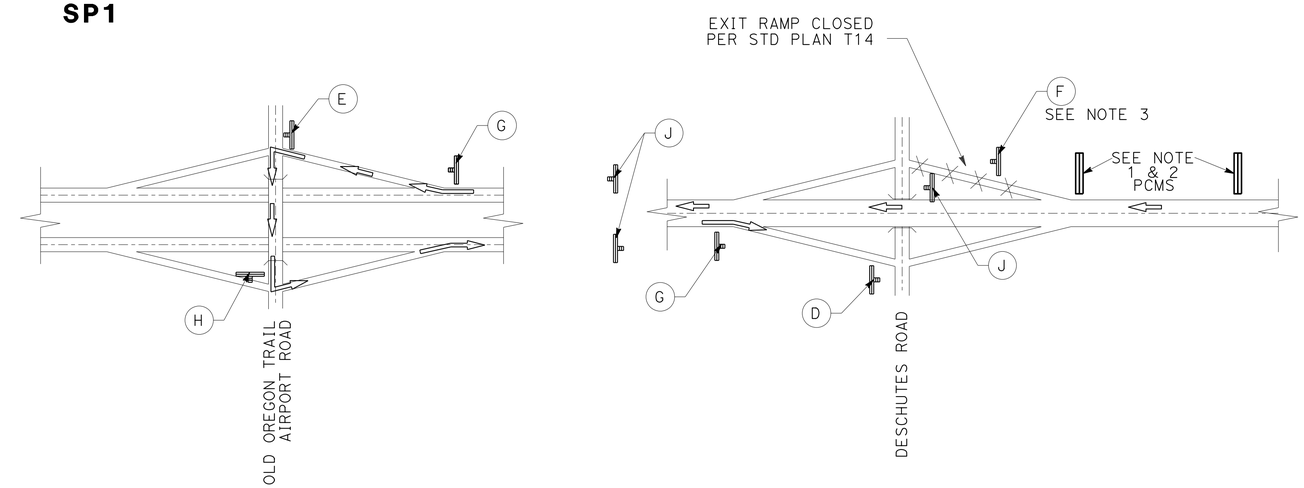

DETOUR FOR CLOSURE OF WB 44 TO DESCHUTES RD

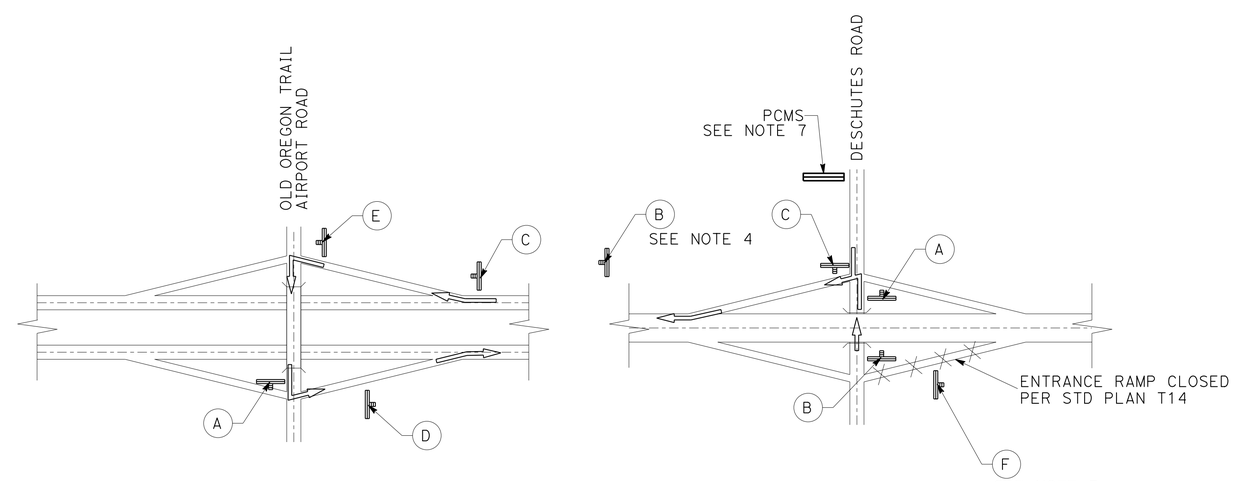

DETOUR FOR CLOSURE OF EB 44 FROM DESCHUTES RD

DETOUR PLAN

NO SCALE

DE-1

REVISED BY	DATE REVISED
JOLENA ASTIN	JIM RASMUSSEN
CALCULATED-DESIGNED BY	CHECKED BY
FUNCTIONAL SUPERVISOR	JOHN MARTIN

STATE OF CALIFORNIA - DEPARTMENT OF TRANSPORTATION
Caltrans
DESIGN

P:\proj1\02\4E430_plans\pse\0200020284mg001.dgn

LAST REVISION 05-28-14 | DATE PLOTTED => 25-JUL-2014 | TIME PLOTTED => 12:21

Dist	COUNTY	ROUTE	POST MILES TOTAL PROJECT	SHEET No.	TOTAL SHEETS
02	Sha	44	R4.2/R14.5	28	70

REGISTERED CIVIL ENGINEER 06-19-14 DATE

06-24-14
PLANS APPROVAL DATE

REGISTERED PROFESSIONAL ENGINEER JAMES D. RASMUSSEN No. 76401 Exp. 12/31/14 CIVIL STATE OF CALIFORNIA

THE STATE OF CALIFORNIA OR ITS OFFICERS OR AGENTS SHALL NOT BE RESPONSIBLE FOR THE ACCURACY OR COMPLETENESS OF SCANNED COPIES OF THIS PLAN SHEET.

NOTES:

1. PRE-NOTIFICATION PCMS: PLACE NEAR RAMP AND ACTIVATE APPROXIMATELY 12 HOURS PRIOR TO RAMP CLOSURE.

EXIT WILL BE CLOSED	TODAY (OR TONIGHT) XX:XXPM - XX:XXAM
FRAME 1	FRAME 2

2. RAMP CLOSED PCMS: MOVE PRE-NOTIFICATION PCMS APPROXIMATELY 1000 FEET BEFORE RAMP AND ACTIVATE DURING RAMP CLOSURE.

RAMP TO DESCHUTES CLOSED	FOLLOW DETOUR
FRAME 1	FRAME 2

3. PLACE 7 DAYS PRIOR TO RAMP CLOSURE.
4. ADD SIGN(S) SPACED EQUALLY BETWEEN INTERCHANGES.
5. EXACT SIGN LOCATION TO BE DETERMINED BY THE ENGINEER.
6. EXISTING UTILITY FACILITIES ARE NOT SHOWN ON THESE PLANS.
7. SEE DETAIL SHEET DE-1 FOR CONSTRUCTION AREA SIGN TABLE

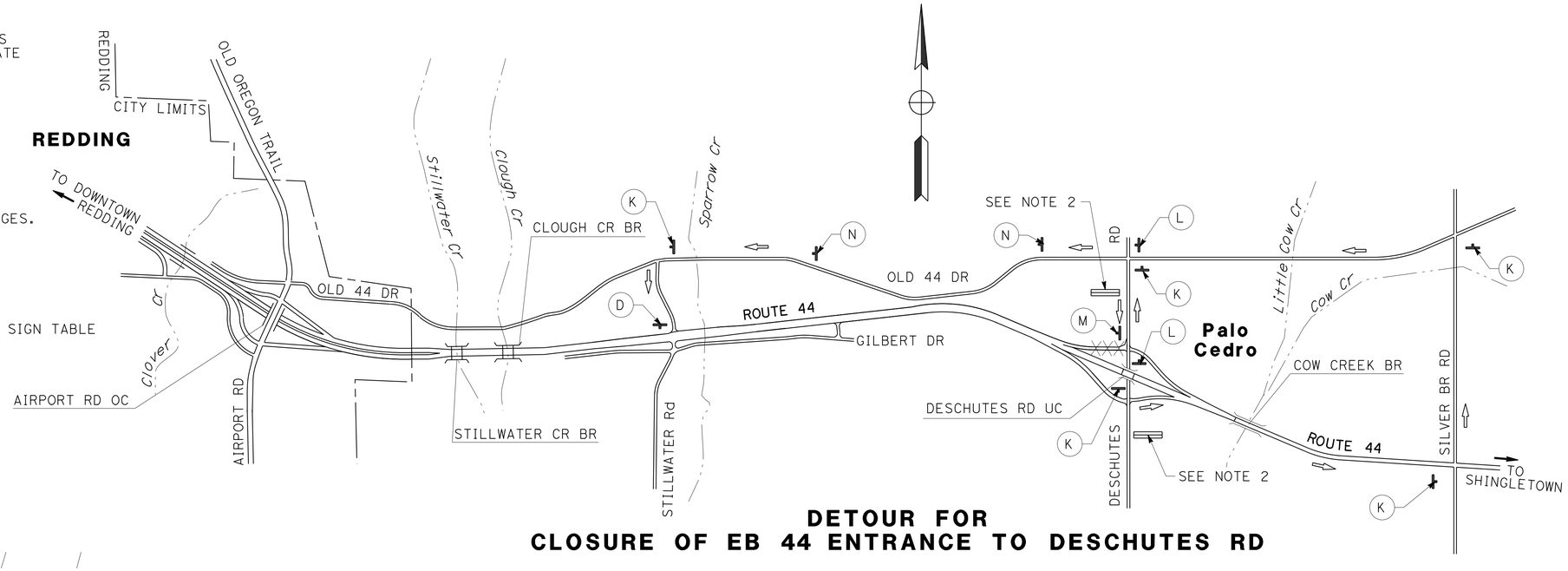

DETOUR FOR
CLOSURE OF EB 44 ENTRANCE TO DESCHUTES RD

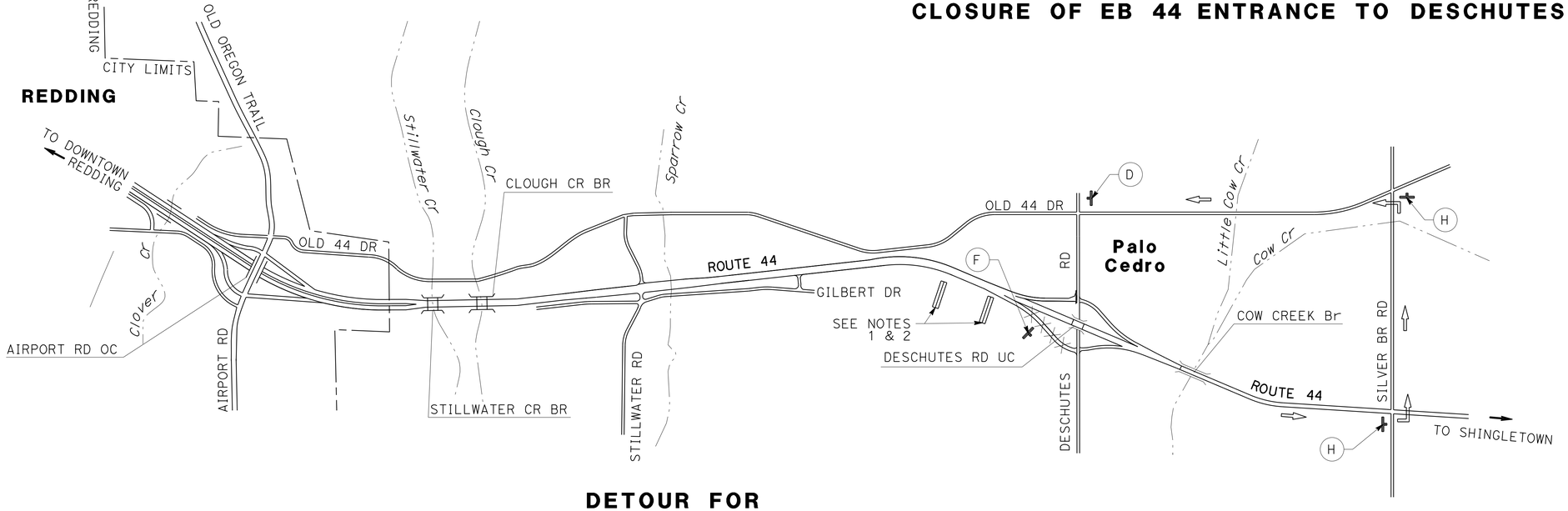

DETOUR FOR
CLOSURE OF EB 44 EXIT TO DESCHUTES RD

DETOUR PLAN
NO SCALE

DE-2

REVISED BY	DATE REVISED
JOLENA ASTIN	JIM RASMUSSEN
CALCULATED-DESIGNED BY	CHECKED BY
FUNCTIONAL SUPERVISOR	JOHN MARTIN

STATE OF CALIFORNIA - DEPARTMENT OF TRANSPORTATION
Caltrans
DESIGN

P:\proj1\02\4E430_plans\pse\0200020284mg002.dgn

LAST REVISION 05-28-14 | DATE PLOTTED => 25-JUL-2014 | TIME PLOTTED => 12:21

Dist	COUNTY	ROUTE	POST MILES TOTAL PROJECT	SHEET No.	TOTAL SHEETS
02	Sha	44	R4.2/R14.5	29	70

REGISTERED CIVIL ENGINEER 06-19-14 DATE

06-24-14
PLANS APPROVAL DATE

REGISTERED PROFESSIONAL ENGINEER JAMES D. RASMUSSEN No. 76401 Exp. 12/31/14 CIVIL STATE OF CALIFORNIA

THE STATE OF CALIFORNIA OR ITS OFFICERS OR AGENTS SHALL NOT BE RESPONSIBLE FOR THE ACCURACY OR COMPLETENESS OF SCANNED COPIES OF THIS PLAN SHEET.

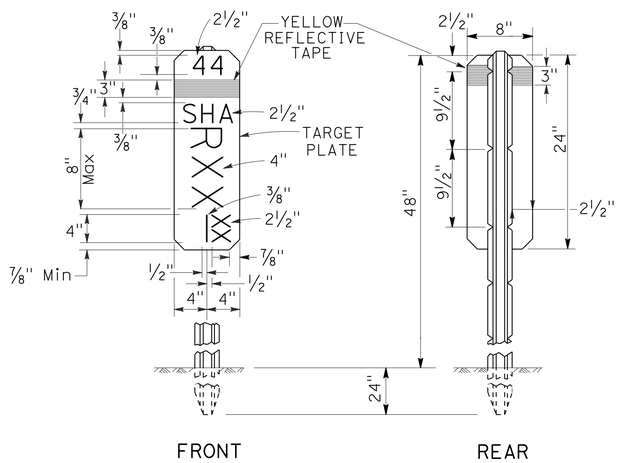

FRONT REAR

NOTES:

1. THE MARKER SHALL BE WHITE (NON-REFLECTIVE) TARGET PLATE WITH BLACK SERIES D NUMERALS AND LETTERS.
2. A POST MILE PREFIX, SUCH AS "R", SHALL APPLY ONLY WHEN DIRECTED BY THE ENGINEER.
3. "BK" (BACK), "AH" (AHEAD), OR A BLANK SPACE SHALL APPLY AS DIRECTED BY THE ENGINEER.
4. ALL INFORMATION SHALL BE IN ENGLISH UNITS (MILES).

MILEPOST MARKER DETAIL

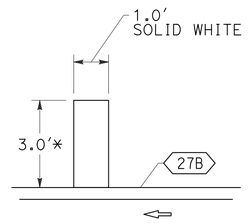

DETAIL A
HALF MILE STRIPE
* ACTUAL LENGTH MAY VARY DUE TO PAVEMENT WIDTH

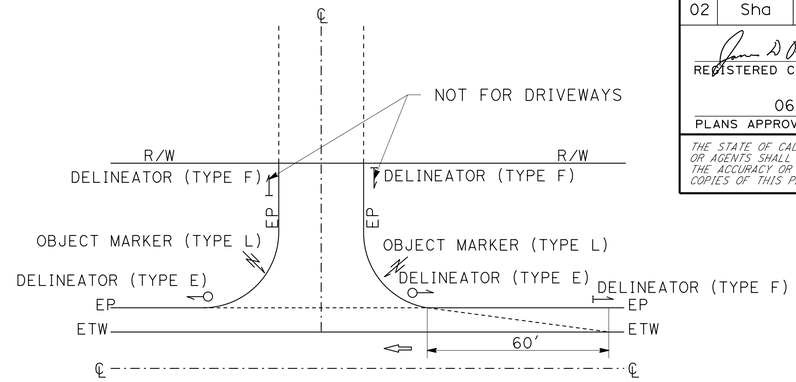

DRIVEWAY AND MINOR ROAD CONNECTION
DELINEATOR PLACEMENT DETAIL

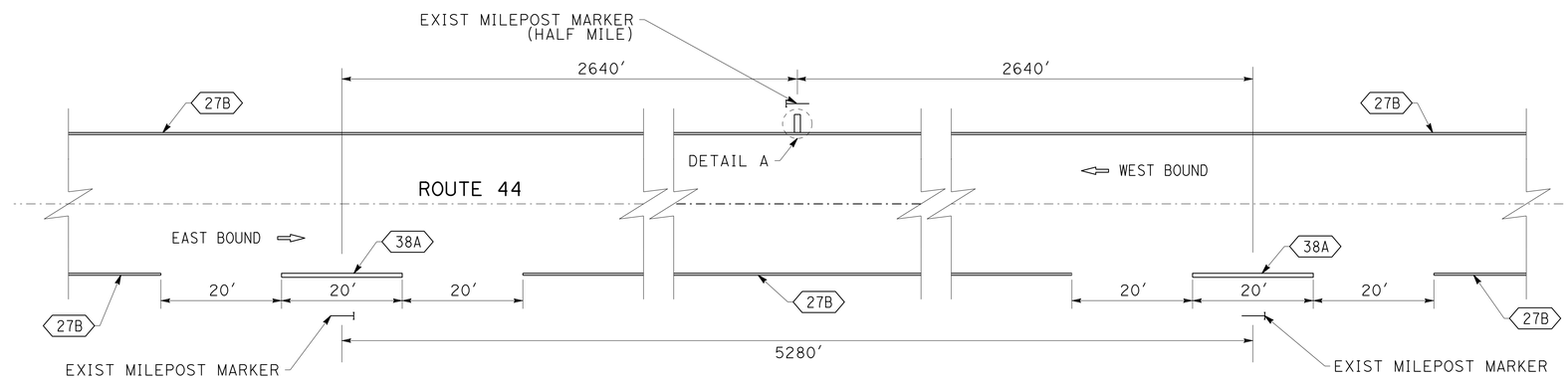

TYPICAL HALF MILE AND MILEPOST STRIPE

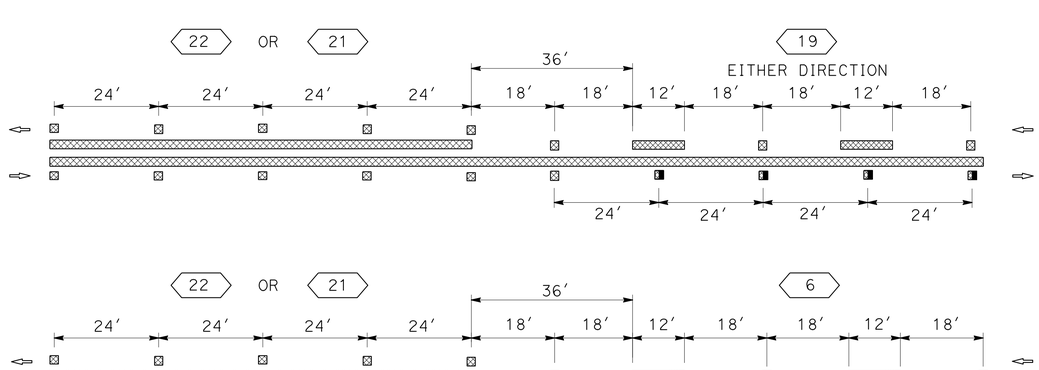

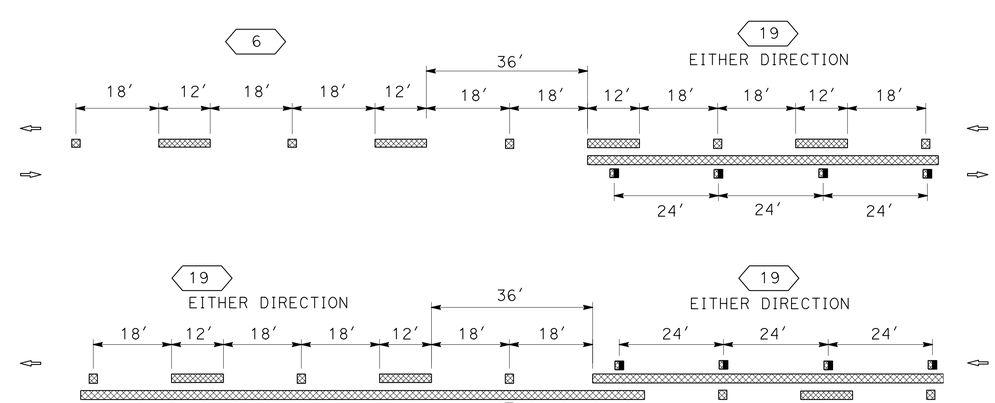

TYPICAL STRIPE TRANSITION DETAILS

PAVEMENT DELINEATION DETAILS

NO SCALE

PDD-1

STATE OF CALIFORNIA - DEPARTMENT OF TRANSPORTATION
Caltrans® DESIGN

FUNCTIONAL SUPERVISOR: JOHN MARTIN
CALCULATED-DESIGNED BY: JOLENA ASTIN
CHECKED BY: JIM RASMUSSEN
REVISED BY / DATE REVISED

P:\proj\02\4E430_plans\pse\0200020284nb001.dgn

LAST REVISION 07-31-13 | DATE PLOTTED => 25-JUL-2014 | TIME PLOTTED => 12:21

NOTE:

1. EXACT LOCATION OF DELINEATORS AND OBJECT MARKERS TO BE DETERMINED BY ENGINEER.

Dist	COUNTY	ROUTE	POST MILES TOTAL PROJECT	SHEET No.	TOTAL SHEETS
02	Sha	44	R4.2/R14.5	30	70

REGISTERED CIVIL ENGINEER 06-19-14 DATE

06-24-14
PLANS APPROVAL DATE

REGISTERED PROFESSIONAL ENGINEER JAMES D. RASMUSSEN No. 76401 Exp. 12/31/14 CIVIL STATE OF CALIFORNIA

THE STATE OF CALIFORNIA OR ITS OFFICERS OR AGENTS SHALL NOT BE RESPONSIBLE FOR THE ACCURACY OR COMPLETENESS OF SCANNED COPIES OF THIS PLAN SHEET.

PAVEMENT DELINEATION QUANTITIES

CO-RTE	POST MILE	THERMOPLASTIC TRAFFIC STRIPE (SPRAYABLE)									PAVEMENT MARKER (RETROREFLECTIVE)						PAVEMENT MARKER (RETROREFLECTIVE-RECESSED)					
		DETAIL 6	DETAIL 27B	DETAIL 27C	DETAIL 19	DETAIL 21	DETAIL 22	DETAIL 29	DETAIL 38	DETAIL 38A	TYPE G	TYPE D				TYPE H	TYPE G	TYPE D				TYPE H
											DETAIL 38	DETAIL 6	DETAIL 19	DETAIL 22	DETAIL 29	DETAIL 19	DETAIL 38	DETAIL 6	DETAIL 19	DETAIL 22	DETAIL 29	DETAIL 19
		LF	LF	LF	LF	LF	LF	LF	LF	LF	EA	EA	EA	EA	EA	EA	EA	EA	EA	EA	EA	EA
SHA-44	PM R4.2 TO PM R7.5	4910			1056		25,661					106	12	1085		23						
	PM R7.5 TO PM R10.77	9958	33,940	1045	8416		3897	4330	2239		102	210	97	199	5	184						
	PM R10.77 TO R14.5	2556	39,864	613	4689	465	28,744	2217	1552	280							70	56	58	1194	1	107
SUBTOTAL		176,152									102	1714				207	70	1309				107
TOTAL		176,152									2023						1486					

MILEPOST MARKER

CO-RTE	POSTMILE	MILEPOST MARKER
		EA
SHA-44	R7.5	1
	R8.0	1
	R8.5	1
	R9.0	1
	R9.5	1
	R10.0	1
	R10.5	1
	R11.0	1
	R11.5	1
	R12.0	1
	R12.5	1
	R13.0	1
	R13.5	1
	R14.0	1
	R14.5	1
	TOTAL	15

MARKER (CULVERT)

CO-RTE	POSTMILE	EB/WB	MARKER (CULVERT)
			EA
SHA-44	R7.59	EB/WB	2
	R8.29	EB	1
	R8.41	EB	1
	R8.61	EB/WB	2
	R8.81	EB/WB	2
	R8.83	EB/WB	2
	R8.96	EB/WB	2
	R9.08	EB/WB	2
	R9.29	EB/WB	2
	R9.57	EB/WB	2
	R9.64	WB	1
	R9.76	WB	1
	R9.91	EB/WB	2
	R9.98	EB/WB	2
	R10.10	EB/WB	2
	R10.21	EB/WB	2
	R10.36	EB/WB	2
	R10.41	EB/WB	2
	R10.69	EB/WB	2
	R11.76	EB/WB	2
	R11.97	EB/WB	2
	R12.30	EB/WB	2
	R12.36	EB/WB	2
	R12.55	EB/WB	2
	R12.70	EB/WB	2
	R12.78	EB/WB	2
	R12.86	EB	1
	R13.38	EB/WB	2
	R13.48	EB/WB	2
	R13.73	EB/WB	2
		TOTAL	55

REMOVE THERMOPLASTIC PAVEMENT MARKING AND THERMOPLASTIC PAVEMENT MARKING

CO-RTE	PM	LT	MID	RT	L (LF)	REMOVE THERMOPLASTIC PAVEMENT MARKING (SQFT)	THERMOPLASTIC PAVEMENT MARKING (SQFT)	REMARKS
SHA-44	R7.50	X			3	3	3	HALF MILEPOST MARKER
	R7.99		X			42	42	TYPE III (L) ARROW
	R8.04		X			42	42	TYPE III (L) ARROW
	R8.05	X				22	22	STOP
	R8.05	X			45	30	30	ROAD CONNECTION LIMIT LINE
	R8.05			X		22	22	STOP
	R8.05			X	42	28	28	ROAD CONNECTION LIMIT LINE
	R8.07		X			15	15	TYPE III (L) ARROW
	R8.50				3	3	3	HALF MILEPOST MARKER
	R9.50				3	3	3	HALF MILEPOST MARKER
	R10.50				3	3	3	HALF MILEPOST MARKER
	R11.50				2	2	2	HALF MILEPOST MARKER
	R12.55		X			42	42	TYPE III (L) ARROW
	R12.56			X		42	42	TYPE III (R) ARROW
	R12.57	X				22	22	STOP
	R12.57	X			38	25	25	ROAD CONNECTION LIMIT LINE
	R12.57	X			20	13	13	ROAD CONNECTION LIMIT LINE
	R12.57	X				22	22	STOP
	R12.57	X			38	25	25	ROAD CONNECTION LIMIT LINE
	R12.58			X		3	3	STOP
	R12.58			X	37	25	25	ROAD CONNECTION LIMIT LINE
	R12.59			X		42	42	TYPE III (R) ARROW
	R12.59		X			42	42	TYPE III (L) ARROW
	R12.71			X		42	42	TYPE III (R) ARROW
	R13.50				3	3	3	HALF MILEPOST MARKER
	R14.50				3	3	3	HALF MILEPOST MARKER
					TOTAL	566	566	

NOTE: NO HALF MILEPOST MARKING FOR PM R12.5, DUE TO INSUFFICIENT PAVEMENT WIDTH.

OBJECT MARKERS AND DELINEATORS

CO-RTE	BEG PM	END PM	DELINEATOR (CLASS 1)	DELINEATOR (CLASS 2)		OBJECT MARKER (TYPE P) (N)	OBJECT MARKER (TYPE L-1)	OBJECT MARKER (TYPE L-2)
			TYPE F	TYPE F	TYPE E			
			EA	EA		EA	EA	EA
SHA-44	R4.2	R14.5	18	160	12	2	7	7
TOTAL			18	172		2	14	

(N) - NOT A SEPARATE PAY ITEM, FOR INFORMATION ONLY

PAVEMENT DELINEATION QUANTITIES

PDQ-1

REVISED BY | DATE REVISED
JOLENA ASTIN | JIM RASMUSSEN
CALCULATED-DESIGNED BY | CHECKED BY
FUNCTIONAL SUPERVISOR | JOHN MARTIN

STATE OF CALIFORNIA - DEPARTMENT OF TRANSPORTATION
Caltrans® DESIGN

P:\proj1\02\4E430_plans\pse\0200020284nc001.dgn

LAST REVISION 05-24-14 | DATE PLOTTED => 25-JUL-2014 | TIME PLOTTED => 12:21

Dist	COUNTY	ROUTE	POST MILES TOTAL PROJECT	SHEET No.	TOTAL SHEETS
02	Sha	44	R7.5/R14.5	31	70

Frank J. Rivas 06-19-14
REGISTERED CIVIL ENGINEER DATE

06-24-14
PLANS APPROVAL DATE

REGISTERED PROFESSIONAL ENGINEER
FRANK RIVAS
No. 53592
Exp. 6/30/15
CIVIL
STATE OF CALIFORNIA

THE STATE OF CALIFORNIA OR ITS OFFICERS OR AGENTS SHALL NOT BE RESPONSIBLE FOR THE ACCURACY OR COMPLETENESS OF SCANNED COPIES OF THIS PLAN SHEET.

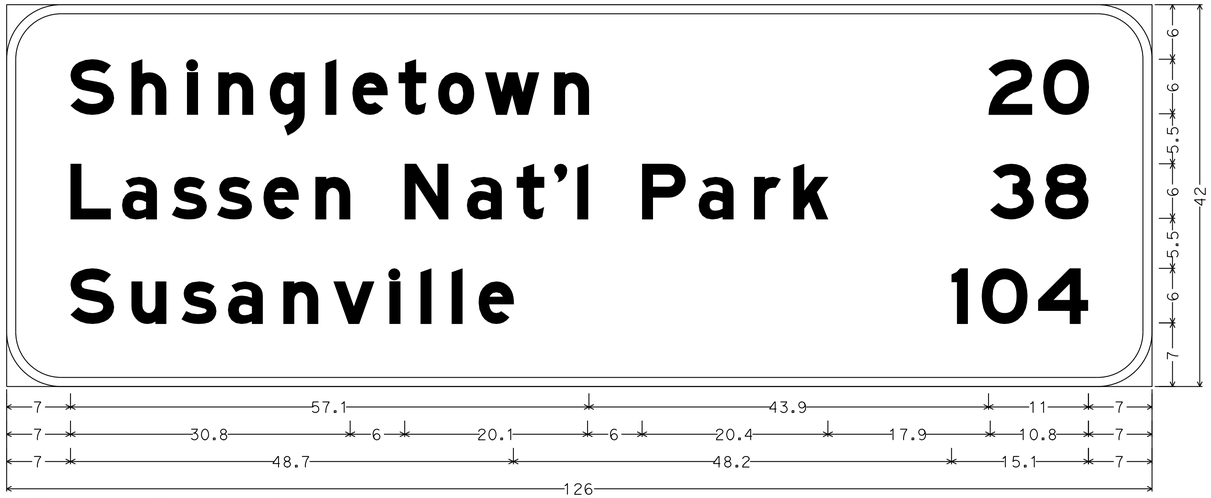

6.0" Radius, 1.0" Border, White on Green;
[Shingletown] E Mod; [Lassen Nat'l Park] E Mod; [Susanville] E Mod; [20] E Mod; [38] E Mod; [104] E Mod;

PM R7.57
G5(Ca)

12.0" Radius, 2.0" Border, White on Green;
[Deschutes Rd] E Mod; [1] E; [MILE] E;

PM R7.89
G83(Ca)

SIGN DETAILS

NO SCALE

SD-1

REVISED BY	DATE REVISED

CALCULATED-DESIGNED BY	FRANK RIVAS
CHECKED BY	ROB STINGER
FUNCTIONAL SUPERVISOR	ROB STINGER

STATE OF CALIFORNIA - DEPARTMENT OF TRANSPORTATION
Caltrans® TRAFFIC OPS

P:\proj\02\4E430_plans\pse\0200020284ob001.dgn

LAST REVISION 06-19-14 | DATE PLOTTED => 25-JUL-2014 | TIME PLOTTED => 12:21

Dist	COUNTY	ROUTE	POST MILES TOTAL PROJECT	SHEET No.	TOTAL SHEETS
02	Sha	44	R7.5/R14.5	32	70

Frank J. Rivas 06-19-14
REGISTERED CIVIL ENGINEER DATE

06-24-14
PLANS APPROVAL DATE

REGISTERED PROFESSIONAL ENGINEER
FRANK RIVAS
No. 53592
Exp. 6/30/15
CIVIL
STATE OF CALIFORNIA

THE STATE OF CALIFORNIA OR ITS OFFICERS OR AGENTS SHALL NOT BE RESPONSIBLE FOR THE ACCURACY OR COMPLETENESS OF SCANNED COPIES OF THIS PLAN SHEET.

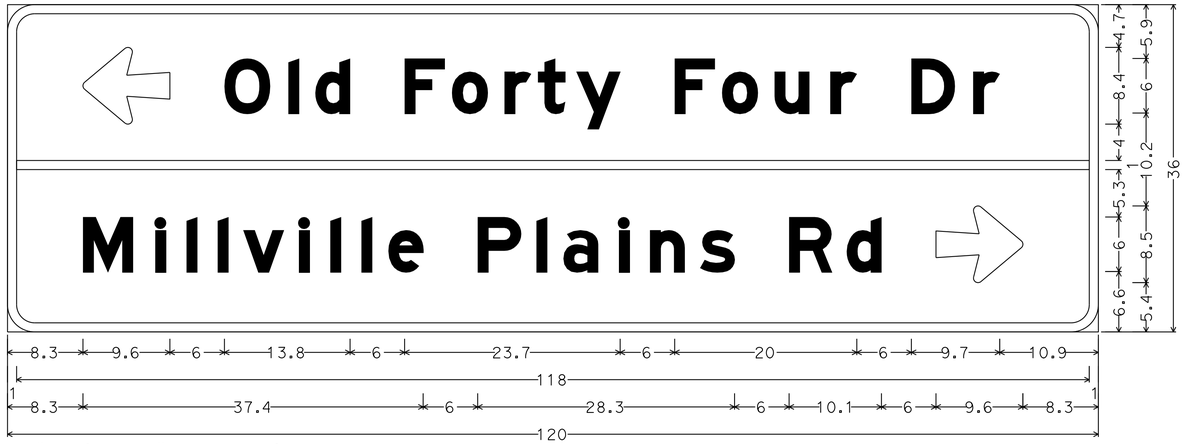

3.0" Radius, 1.0" Border, White on Green;
Arrow 6UC-1L - 9.6" 180{; [Old Forty Four Dr] E Mod; [Millville Plains Rd] E Mod; Arrow 6UC-1L - 9.6" 0{;

PM R10.65
G8(Ca)

3.0" Radius, 1.0" Border, White on Green;
Arrow 6UC-2LH - 9.6" 180{; [Millville] E Mod; [Whitmore] E Mod; [1] E Mod; [17] E Mod;

PM R10.73
G1(Ca)

6.0" Radius, 1.0" Border, White on Green;
[Shingletown] E Mod; [Lassen Nat'l Park] E Mod; [Susanville] E Mod; [17] E Mod; [35] E Mod; [101] E Mod;

PM R10.90
G5(Ca)

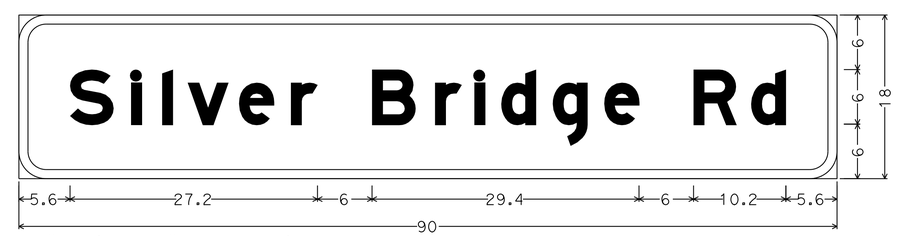

3.0" Radius, 1.0" Border, White on Green;
[Silver Bridge Rd] E Mod;

PM R7.99 & PM R8.10
G7(Ca)

SIGN DETAILS

NO SCALE **SD-2**

REVISED BY	DATE REVISED

FRANK RIVAS — ROB STINGER
CALCULATED-DESIGNED BY — CHECKED BY
FUNCTIONAL SUPERVISOR — ROB STINGER

STATE OF CALIFORNIA - DEPARTMENT OF TRANSPORTATION
Caltrans® TRAFFIC OPS

P:\proj1\02\4E430_plans\pse\0200020284ob002.dgn

LAST REVISION 06-19-14 | DATE PLOTTED => 25-JUL-2014 | TIME PLOTTED => 12:21

Dist	COUNTY	ROUTE	POST MILES TOTAL PROJECT	SHEET No.	TOTAL SHEETS
02	Sha	44	R7.5/R14.5	33	70

REGISTERED CIVIL ENGINEER 06-19-14 DATE

06-24-14
PLANS APPROVAL DATE

REGISTERED PROFESSIONAL ENGINEER FRANK RIVAS No. 53592 Exp. 6/30/15 CIVIL STATE OF CALIFORNIA

THE STATE OF CALIFORNIA OR ITS OFFICERS OR AGENTS SHALL NOT BE RESPONSIBLE FOR THE ACCURACY OR COMPLETENESS OF SCANNED COPIES OF THIS PLAN SHEET.

NOTES:

1. USE A 2¼" Sq TUBE x 30" LONG, 3/16" THICK ANCHOR FOR 2" POSTS.
   USE A 3" Sq TUBE x 3' LONG, 3/16" THICK ANCHOR FOR 2-1/2 " POSTS.
2. USE A 5/16" CORNER BOLT OR TWO DRIVE RIVETS TO FASTEN ASSEMBLED SIGN AND POST INTO ANCHOR. INSTALL CORNER BOLT OR DRIVE RIVETS INTO THE SIDES FACING TRAFFIC.
3. REMOVE EXISTING AC OR PCC, DRIVE ANCHOR SLEEVE INTO SOIL AND RECAP WITH LIKE MATERIAL, MATCHING EXISTING THICKNESS.
4. 2" POSTS ARE TO BE 1/8" THICK, PERFORATIONS OF 7/16" IN DIAMETER ARE 1" ON CENTER ON ALL SIDES, LENGTHS ARE 10' AND 12'.
5. 2-1/2" POSTS ARE TO BE 1/8" THICK, PERFORATIONS OF 7/16" IN DIAMETER ARE 1" ON CENTER ON ALL SIDES, 2-1/2" POSTS ARE 12' AND 14' IN LENGTH.
6. FOR DETAILS NOT SHOWN, REFER TO THE STANDARD PLANS.
7. 2-1/2" POSTS SHALL BE USED IN SIDEWALK AND HIGH PEDESTRIAN USE PLACEMENTS.
8. ALL ANCHOR SLEEVES SHALL BE EMBEDDED IN PCC, EXCEPT FOR INSTALLATIONS IN PAVEMENTS OR SIDEWALKS.

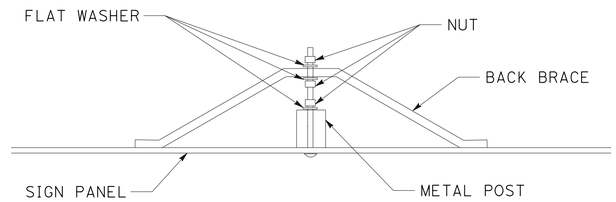

BACK BRACE MOUNTING DETAIL

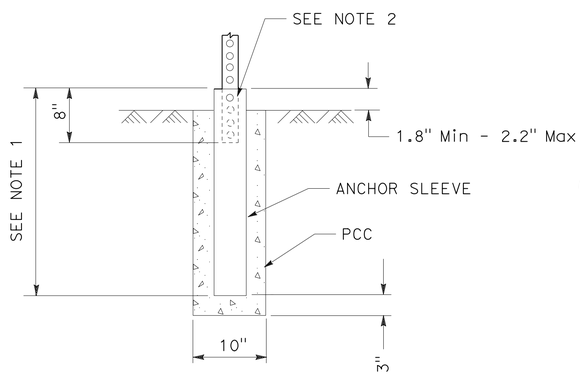

INSTALLATION IN SOIL (PCC)
(SEE NOTE 8)

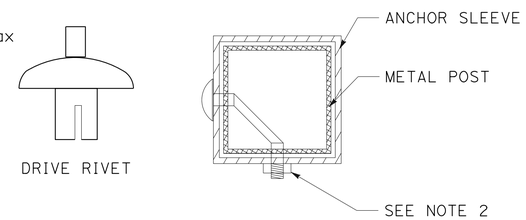

FASTENER DETAILS

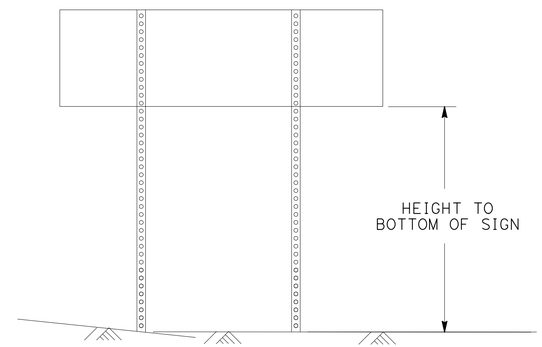

TWO POSTS INSTALLATION
(POST SIZE, SEE CHART BELOW)

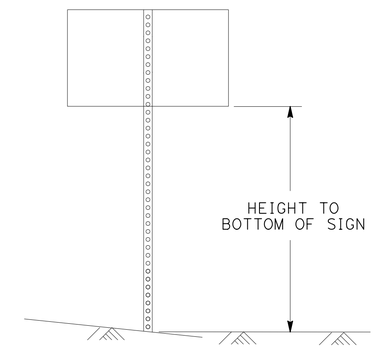

SINGLE POST INSTALLATION
(POST SIZE, SEE CHART BELOW)

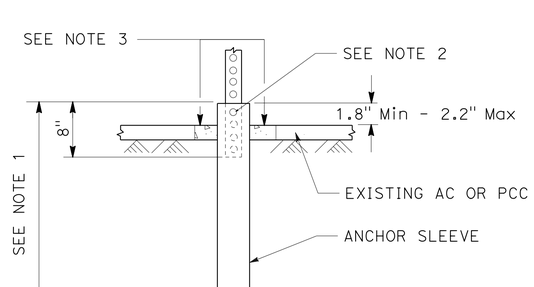

INSTALLATION IN EXISTING AC OR PCC

Max Sq Ft OF SIGN

POST SIZE	60"	72"	84"	96"	108"	120"
2"	18	16	14	12	10	8
2.5"	35	32	28	24	21	21

HEIGHT TO BOTTOM OF SIGN
DOUBLE POST GROUND SIGNS
70 MPH WIND SPEED

Max Sq Ft OF SIGN

POST SIZE	60"	72"	84"	96"	108"	120"
2"	10.5	10	8.7	7.4	6.2	5
2.5"	16	16	16	16	12	12

HEIGHT TO BOTTOM OF SIGN
SINGLE POST GROUND SIGNS
70 MPH WIND SPEED

METAL SIGN POST DETAIL

METAL SIGN POST INSTALLATION DETAILS

SIGN DETAILS
NO SCALE

SD-3

REVISED BY | DATE REVISED
FRANK RIVAS | ROB STINGER
CALCULATED-DESIGNED BY | CHECKED BY
FUNCTIONAL SUPERVISOR | ROB STINGER

STATE OF CALIFORNIA - DEPARTMENT OF TRANSPORTATION
Caltrans® TRAFFIC OPS

P:\proj1\02\4E430_plans\pse\0200020284ob003.dgn

LAST REVISION 06-19-14 | DATE PLOTTED => 25-JUL-2014 | TIME PLOTTED => 12:21

Dist	COUNTY	ROUTE	POST MILES TOTAL PROJECT	SHEET No.	TOTAL SHEETS
02	Sha	44	R7.5/R14.5	34	70

Frank J. Rivas 06-19-14
REGISTERED CIVIL ENGINEER DATE

06-24-14
PLANS APPROVAL DATE

REGISTERED PROFESSIONAL ENGINEER
FRANK RIVAS
No. 53592
Exp. 6/30/15
CIVIL
STATE OF CALIFORNIA

THE STATE OF CALIFORNIA OR ITS OFFICERS OR AGENTS SHALL NOT BE RESPONSIBLE FOR THE ACCURACY OR COMPLETENESS OF SCANNED COPIES OF THIS PLAN SHEET.

NOTE:

1. CALIFORNIA CODES ARE DESIGNATED BY (Ca). OTHERWISE FEDERAL MUTCD CODES ARE SHOWN.

ROADSIDE SIGNS

POSTMILE	DIRECTION	SIGN CODE	PANEL SIZE in x in	POST SIZE & LENGTH (ft)(N) METAL POST (2½" x 2½")	WOOD POST (6" x 6")	LAMINATED WOOD BOX (TYPE L)	REMOVE ROADSIDE SIGN (EA)	REMOVE ROADSIDE SIGN PANEL (EA)	INSTALL ROADSIDE SIGN PANEL ON EXISTING POST (EA)	INSTALL ROADSIDE SIGN (LAMINATED WOOD BOX POST)	ROADSIDE SIGN - ONE POST (EA)	ROADSIDE SIGN - TWO POST (EA)	NOTES
R7.57	FEBT	G5(Ca)	96 x 42				1						
R7.57	FEBT	G5(Ca)	126 x 42		14′,15′							1	
R7.89	FWBT	G83(Ca)	216 x 78				1						
		D9-8	30 x 30										
		D9-7	30 x 30										
R7.89	FWBT	G83(Ca)	204 x 78			20′,20′				1			
		D9-8	30 x 30										
		D9-7	30 x 30										
R7.99	FEBT	G7(Ca)	90 x 18				1						
R7.99	FEBT	G7(Ca)	90 x 18	8′,9′								1	
R8.00	FWBT	G81-64A(Ca)	108 x 18					1					
		G81-64(Ca)	108 x 60					1					
R8.00	FWBT	G81-64A(Ca)	108 x 18						1				
		G81-64(Ca)	108 x 60						1				
R8.10	FWBT	G7(Ca)	90 x 18				1						
R8.10	FWBT	G7(Ca)	90 x 18	7.5′5.5′								1	
R10.55	FEBT	SPL	96 x 48				1						
R10.62	FWBT	G28(44)(Ca)	25 x 24						1				PLACE ON LEFT POST OF Exist. G5(Ca)
		G50(Ca)	21 x 9						1				PLACE ON LEFT POST OF Exist. G5(Ca)
R10.65	FEBT	G8(Ca)	120 x 36				1						
		G66-56(Ca)	24 x 24										
		G57(Ca)	21 x 15										
R10.65	FEBT	G8(Ca)	120 x 36		13.5′,14.5′							1	
		G66-56(Ca)	24 x 24										
		G57(Ca)	21 x 15										
R10.73	FEBT	G1(Ca)	78 x 30				1						
R10.73	FEBT	G1(Ca)	84 x 30	8′,9′								1	
R10.90	FEBT	G5(Ca)	126 x 42				1						
R10.90	FEBT	G5(Ca)	126 x 42		14′,15′							1	
		G28(44)(Ca)	25 x 24										
		G49(Ca)	21 x 9										
R11.60	FWBT	S32(Ca)	36 x 30	9′							1		
		S32-1(Ca)	15 x 18										
						SHEET TOTAL	8	2	4	1	1	6	

SIGN QUANTITIES
SQ-1

REVISED BY | DATE REVISED
FRANK RIVAS | ROB STINGER
CALCULATED-DESIGNED BY | CHECKED BY
FUNCTIONAL SUPERVISOR: ROB STINGER

STATE OF CALIFORNIA - DEPARTMENT OF TRANSPORTATION
Caltrans® TRAFFIC OPS

P:\proj1\02\4E430_plans\pse\0200020284od001.dgn

LAST REVISION 06-19-14 | DATE PLOTTED => 25-JUL-2014 | TIME PLOTTED => 12:21

Dist	COUNTY	ROUTE	POST MILES TOTAL PROJECT	SHEET No.	TOTAL SHEETS
02	Sha	44	R7.5/R14.5	35	70

Frank J. Rivas 06-19-14
REGISTERED CIVIL ENGINEER DATE

06-24-14
PLANS APPROVAL DATE

REGISTERED PROFESSIONAL ENGINEER FRANK RIVAS No. 53592 Exp. 6/30/15 CIVIL STATE OF CALIFORNIA

THE STATE OF CALIFORNIA OR ITS OFFICERS OR AGENTS SHALL NOT BE RESPONSIBLE FOR THE ACCURACY OR COMPLETENESS OF SCANNED COPIES OF THIS PLAN SHEET.

NOTE:

1. CALIFORNIA CODES ARE DESIGNATED BY (Ca). OTHERWISE FEDERAL MUTCD CODES ARE SHOWN.

ROADSIDE SIGNS (CONTINUED)

POSTMILE	DIRECTION	SIGN CODE	PANEL SIZE in x in	POST SIZE & LENGTH (ft)(N) METAL POST (2½" x 2½")	WOOD POST (6" x 6")	LAMINATED WOOD BOX (TYPE L)	REMOVE ROADSIDE SIGN (EA)	REMOVE ROADSIDE SIGN PANEL (EA)	INSTALL ROADSIDE SIGN PANEL ON EXISTING POST (EA)	INSTALL ROADSIDE SIGN (LAMINATED WOOD BOX POST) (EA)	ROADSIDE SIGN - ONE POST (EA)	ROADSIDE SIGN - TWO POST (EA)	NOTES
R12.50	FEBT	W2-2(LT)	30 x 30				1						
		W64(Ca)	30 x 30										
R12.50	FEBT	W2-2(LT)	36 x 36	11.5′							1		
R12.52	FEBT	S3-1	36 x 36	11.5′							1		
R12.67	FWBT	S3-1	36 x 36	10.5′							1		
R12.69	FWBT	W2-2(RT)	30 x 30				1						
R12.69	FWBT	W2-2(RT)	36 x 36	12′							1		
R12.95	FEBT	S32(Ca)	36 x 30	9′							1		
		S32-1(Ca)	15 x 18										
R14.02	FWBT	W8-4	36 x 36				1						
R14.02	FWBT	W8-4	36 x 36	12′							1		
R14.03	FWBT	G50(Ca)	21 x 9				1						
		G28(44)(Ca)	25 x 24										
R14.03	FWBT	G50(Ca)	21 x 9	9′							1		
		G28(44)(Ca)	25 x 24										
						SHEET TOTAL	4				7		
						GRAND TOTAL	12	2	4	1	8	6	

SIGN QUANTITIES
SQ-2

REVISED BY | DATE REVISED
FRANK RIVAS | ROB STINGER
CALCULATED-DESIGNED BY | CHECKED BY
FUNCTIONAL SUPERVISOR: ROB STINGER

STATE OF CALIFORNIA - DEPARTMENT OF TRANSPORTATION
Caltrans® TRAFFIC OPS

P:\proj1\02\4E430_plans\pse\0200020284od002.dgn

LAST REVISION 06-19-14 | DATE PLOTTED => 25-JUL-2014 TIME PLOTTED => 12:21

Dist	COUNTY	ROUTE	POST MILES TOTAL PROJECT	SHEET No.	TOTAL SHEETS
02	Sha	44	R7.5/R14.5	36	70

Frank J. Rivas 06-19-14
REGISTERED CIVIL ENGINEER DATE

06-24-14
PLANS APPROVAL DATE

REGISTERED PROFESSIONAL ENGINEER
FRANK RIVAS
No. 53592
Exp. 6/30/15
CIVIL
STATE OF CALIFORNIA

THE STATE OF CALIFORNIA OR ITS OFFICERS OR AGENTS SHALL NOT BE RESPONSIBLE FOR THE ACCURACY OR COMPLETENESS OF SCANNED COPIES OF THIS PLAN SHEET.

NOTE:

1. CALIFORNIA CODES ARE DESIGNATED BY (Ca). OTHERWISE FEDERAL MUTCD CODES ARE SHOWN.

ABBREVIATIONS:

FYG FLORESCENT YELLOW GREEN

CONTRACTOR FURNISHED SIGNS

POSTMILE	SIGN CODE	SIGN SIZE L x D (In x In)	SINGLE FACED	DOUBLE FACED	SIGN FACING MATERIAL						SIGN PANEL SUBSTRATE MATERIAL (SQFT) ROADSIDE			DESCRIPTION (REMARKS)
					BACKGROUND		LEGEND		PROTECTIVE FILM		SINGLE-SHEET ALUMINUM			
					SHEETING COLOR	RETROREFLECTIVE ASTM TYPE	SHEETING COLOR	RETROREFLECTIVE ASTM TYPE	STANDARD	PREMIUM	0.063" - UNFRAMED	0.080" - FRAMED	LAMINATED PANEL (2½" - TYPE B)	
R7.57	G5(Ca)	126 x 42	X		GREEN	III	WHITE	III		X		36.8		Shingletown 20, Lassen Nat'l Park 38, Susanville 104
R7.89	G83(Ca)	204 x 78	X		GREEN	III	WHITE	III		X			110.5	Deschutes Rd, 1 MILE
R7.89	D9-8	30 x 30	X		BLUE	III	WHITE	III			6.3			Food Symbol
R7.89	D9-7	30 x 30	X		BLUE	III	WHITE	III			6.3			Fuel Symbol
R7.99	G7(Ca)	90 x 18	X		GREEN	III	WHITE	III		X		11.3		Silver Bridge Rd
R8.00	G81-64A(Ca)	108 x 18	X		YELLOW	III	BLACK	II		X		13.5		WHEN FLASHING
R8.00	G81-64(Ca)	108 x 60	X		BLUE	III	WHITE	III		X		45		TRAFFIC INFO, TUNE RADIO TO, 1610 AM
R8.10	G7(Ca)	90 x 18	X		GREEN	III	WHITE	III		X		11.3		Silver Bridge Rd
R10.62	G28(44)(Ca)	25 x 24	X		GREEN	III	WHITE	III			4.2			44 Route Shield
R10.62	G50(Ca)	21 x 9	X		GREEN	III	WHITE	III			1.3			WEST
R10.65	G8(Ca)	120 x 36	X		GREEN	III	WHITE	III		X		30		180° Arrow Old Forty Four Dr, Millville Plains Rd 0° Arrow
R10.65	G66-56(Ca)	24 x 24	X		BLUE	III	WHITE	III			4			STAA Symbol
R10.65	G57(Ca)	21 x 15	X		BLUE	III	WHITE	III			2.2			END
R10.73	G1(Ca)	84 x 30	X		GREEN	III	WHITE	III		X		19.6		180° Arrow, Millville 1, Whitmore 17
R10.90	G5(Ca)	126 x 42	X		GREEN	III	WHITE	III		X		36.8		Shingletown 17, Lassen Nat'l Park 35, Susanville 101
R10.90	G28(44)(Ca)	25 x 24	X		GREEN	III	WHITE	III			4.2			44 Route Shield
R10.90	G49(Ca)	21 x 9	X		GREEN	III	WHITE	III			1.3			EAST
R11.60	S32(Ca)	36 x 30	X		PANTONE	III	WHITE	III			7.5			Adopt-A-Highway
R11.60	S32A(Ca)	10 x 12	X		PANTONE	III	WHITE	III			0.8			Adopt-A-Highway Symbol
R11.60	S32-1(Ca)	15 x 18	X		PANTONE	III	WHITE	III			1.9			Litter Removal Symbol
R12.50	W2-2(LT)	36 x 36	X		YELLOW	III	BLACK	II			9			Intersection Symbol
R12.52	S3-1	36 x 36	X		FYG	III	BLACK/RED	III			9			School Bus Stop Ahead
R12.67	S3-1	36 x 36	X		FYG	III	BLACK/RED	III			9			School Bus Stop Ahead
R12.69	W2-2(RT)	36 x 36	X		YELLOW	III	BLACK	II			9			Intersection Symbol
R12.95	S32(Ca)	36 x 30	X		PANTONE	III	WHITE	III			7.5			Adopt-A-Highway
R12.95	S32A(Ca)	10 x 12	X		PANTONE	III	WHITE	III			0.8			Adopt-A-Highway Symbol
R12.95	S32-1(Ca)	15 x 18	X		PANTONE	III	WHITE	III			1.9			Litter Removal Symbol
R14.02	W8-4	36 x 36	X		YELLOW	III	BLACK	III			9			SOFT SHOULDER
R14.03	G50(Ca)	25 x 24	X		GREEN	III	WHITE	III			1.3			WEST
R14.03	G28(44)(Ca)	21 x 9	X		GREEN	III	WHITE	III			4.2			44 Route Shield
										TOTAL (SQFT)	100.7	204.3	110.5	

SIGN QUANTITIES
SQ-3

REVISED BY | DATE REVISED
FRANK RIVAS | ROB STINGER
CALCULATED-DESIGNED BY | CHECKED BY
FUNCTIONAL SUPERVISOR: ROB STINGER

STATE OF CALIFORNIA - DEPARTMENT OF TRANSPORTATION
Caltrans® TRAFFIC OPS

P:\proj1\02\4E430_plans\pse\0200020284od003.dgn

LAST REVISION 06-19-14 | DATE PLOTTED => 25-JUL-2014 | TIME PLOTTED => 12:21

Dist	COUNTY	ROUTE	POST MILES TOTAL PROJECT	SHEET No.	TOTAL SHEETS
02	Sha	44	R4.2/R14.5	37	70

REGISTERED CIVIL ENGINEER 06-19-14 DATE

06-24-14
PLANS APPROVAL DATE

REGISTERED PROFESSIONAL ENGINEER JAMES D. RASMUSSEN No. 76401 Exp. 12/31/14 CIVIL STATE OF CALIFORNIA

THE STATE OF CALIFORNIA OR ITS OFFICERS OR AGENTS SHALL NOT BE RESPONSIBLE FOR THE ACCURACY OR COMPLETENESS OF SCANNED COPIES OF THIS PLAN SHEET.

NOTE:

1. (N) - NOT A SEPARATE PAY ITEM, FOR INFORMATION ONLY

ROADWAY QUANTITIES SUMMARY

CO-RTE	POST LIMITS BEG PM	POST LIMITS END PM	(N) LENGTH LF	(N) WIDTH LF	COLD PLANE ASPHALT CONCRETE PAVEMENT SQYD	SHOULDER BACKING TON	RUBBERIZED HOT MIX ASPHALT (GAP GRADED) TON	RUBBERIZED HOT MIX ASPHALT (OPEN GRADED) TON	CENTERLINE RUMBLE STRIP (HMA, GROUND-IN INDENTATIONS) STA	SHOULDER RUMBLE STRIP (HMA, GROUND-IN INDENTATIONS) STA	TACK COAT TON	(N) SAFETY EDGE LF	MINOR CONCRETE SIDEWALK CY	REMARKS
Sha-44	R4.17	R4.25	422.4							8.4				
	R4.25	R7.38	16,896						145					
	R7.50	R7.59	475.2	61-41	761.3	23.2	396.8	180.4	5	9.5	1.34	475		CONFORM AT COW CREEK BRIDGE EB
	R7.59	R7.92	1742.4	37-39		105.9	1091.5	496.1	17	34.8	3.67	1742		
	R7.92	R8.15	1214.4	42-44		71.5	867.4	394.3	6		2.92	1214	1.1	SILVER BRIDGE INTERSECTION
	R8.15	R8.17	105.6	39		6.9	68.0	30.9		2.1	0.23	106		
	R8.17	R8.47	1584.0	41		95.6	1071.6	487.1		31.7	3.60	1584		
	R8.47	R8.75	1478.4	39		88.7	951.4	432.4		29.6	3.20	1478		
	R8.75	R9.00	1320.0	40		78.4	874.2	397.4		26.4	2.95	1320		PULL OUT EB
	R9.00	R9.14	739.2	39		40.5	475.7	216.2		14.8	1.60	739		
	R9.14	R9.34	1056.0	41		61.1	714.4	324.7		21.1	2.40	1056		
	R9.34	R9.68	1795.2	43		109.4	1273.7	579.0		35.9	4.29	1795		
	R9.68	R9.89	1108.8	40		64.6	731.8	332.6		22.2	2.47	1109		
	R9.89	R10.08	1003.2	43		57.7	711.8	323.5		20.1	2.40	1003		
	R10.08	R10.44	1900.8	41		116.2	1285.9	584.5		38.0	4.33	1901		
	R10.44	R10.50	316.8	42		12.9	219.5	99.8		6.3	0.74	317		
	R10.50	R10.62	633.6	42		33.6	439.1	199.6		12.7	1.48	634		
	R10.62	R10.92	1584.0	34-60		95.6	1278.5	580.3			4.30	1848		MILLVILLE PLAINS RD/PULL OUT EB
	R10.92	R11.60	3590.4	29		226.5	1700.6	773.0			5.73	3590		
	R11.60	R11.78	950.4	12-26		54.2	302.5	137.5			1.01	950		
	R11.78	R11.92	739.2	26		40.5	320.2	145.6			1.08	739		
	R11.92	R12.09	897.6	21-25		50.8	333.9	151.8			1.13	898		
	R12.09	R12.14	264.0	19-27		9.4	102.3	46.5			0.34	264		
	R12.14	R12.28	739.2	23-25		40.5	295.3	134.2			0.99	739		
	R12.28	R12.32	211.2	13-27		6.0	69.4	31.5			0.24	211		
	R12.32	R12.87	2904.0	22-26		181.7	1135.7	516.2			3.82	2904		
	R12.87	R12.96	475.2	23-33		23.2	221.8	100.8			0.75	475		
	R12.96	R13.11	792.0	29-35		43.9	417.1	189.6			1.41	792		TRUCK PULL OUT EB
	R13.11	R13.27	844.8	22-26		47.3	328.0	149.1			1.10	845		
	R13.27	R14.14	4593.6	28-34		292.0	2372.7	1078.5			7.99	4594		
	R14.14	R14.23	475.2	21-43		23.2	249.5	113.4			0.84	475		
	R14.23	R14.34	1151.0	32-36	707.1	67.3	653.6	297.1			2.20	1151		BEAR CREEK BB, CONFORM
	R14.41	R14.42	52.8	40-44	248.0	2.3	36.8				0.07	53		BEAR CREEK EB, CONFORM
	R14.42	R14.45	158.4	18-50	602.6	6.9	89.5				0.18	158		
	R14.45	R14.50	264.0	54	1577.6	11.5	234.3				0.46	264		
	R7.50	R14.50	36,960				438.0							SAFETY EDGE
MAINLINE QUANTITIES SUBTOTAL					3896.6	2189.0	21,752.5	9523.6	173	313.6	71.26		1.1	
DRIVEWAY QUANTITIES TOTAL					3444.2	21.4	767.2				1.70			
TOTAL					7340.8	2210.4	22,519.70	9523.6	173	313.6	72.96		1.1	

SUMMARY OF QUANTITIES

Q-1

REVISED BY | DATE REVISED
JOLENA ASTIN | JIM RASMUSSEN
CALCULATED-DESIGNED BY | CHECKED BY
FUNCTIONAL SUPERVISOR: JOHN MARTIN

STATE OF CALIFORNIA - DEPARTMENT OF TRANSPORTATION
Caltrans DESIGN

P:\proj1\02\4E430_plans\pse\0200020284pa001.dgn

LAST REVISION 07-31-13 | DATE PLOTTED => 25-JUL-2014 | TIME PLOTTED => 12:21

Dist	COUNTY	ROUTE	POST MILES TOTAL PROJECT	SHEET No.	TOTAL SHEETS
02	Sha	44	R4.2/R14.5	38	70

REGISTERED CIVIL ENGINEER 06-19-14 DATE

06-24-14
PLANS APPROVAL DATE

REGISTERED PROFESSIONAL ENGINEER JAMES D. RASMUSSEN No. 76401 Exp. 12/31/14 CIVIL STATE OF CALIFORNIA

THE STATE OF CALIFORNIA OR ITS OFFICERS OR AGENTS SHALL NOT BE RESPONSIBLE FOR THE ACCURACY OR COMPLETENESS OF SCANNED COPIES OF THIS PLAN SHEET.

NOTE:

1. (N) - NOT A SEPARATE PAY ITEM, FOR INFORMATION ONLY

ROAD CONNECTION AND DRIVEWAY QUANTITIES SUMMARY

CO-RTE	LT/RT	POST LIMITS	(N) WIDTH W1-W2	(N) LENGTH	COLD PLANE ASPHALT CONCRETE PAVEMENT	SHOULDER BACKING	CLASS 2 AGGREGATE BASE	RUBBERIZED HOT MIX ASPHALT (GAP GRADED)	TACK COAT
			LF	LF	SQYD	TON	CY	TON	TON
SHA-44	LT	R8.05	102-124	10	125.9			28.0	0.07
	RT	R8.05	116-248	10	201.9			45.0	0.10
	LT	R10.77	70-198	10	148.8			33.1	0.07
	RT	R10.77	49-103	10	83.9			18.7	0.04
	LT	R11.19	30-58	10	49.3			11.0	0.02
	LT	R11.30	47-77	10	69.3			15.4	0.03
	LT	R11.38	24-46	10	39.4			8.8	0.02
	RT	R11.40	19-45	10	35.3			7.9	0.02
	RT	R11.42	20-50	10	38.5			8.6	0.02
	RT	R11.46	17-43	10	33.8			7.5	0.02
	LT	R11.53	28-106	10	74.3			16.5	0.04
	RT	R11.62	24-96	10	66.3			14.8	0.03
	LT	R11.66	258-268	10	292.6	21.4		65.2	0.15
	RT	R11.82	56-88	10	79.7			17.8	0.04
	LT	R 11.91	28-142	10	94.7			21.1	0.05
	RT	R12.06	62-114	10	98.3			21.9	0.05
	LT	R12.10	83-189	10	151.2			33.7	0.07
	RT	R12.27	51-99	10	83.1			18.5	0.04
	LT	R12.44	16-30	20			6.6		
	LT	R12.48	70-120	10	105.4			23.5	0.05
	LT	R12.50	29-115	10	80.5			17.9	0.04
	RT	R12.50	30-52	10	45.1			10.0	0.02
	LT	R12.66	54-100	10	85.4			19.0	0.04
	RT	R12.90	39-69	10	59.5			13.3	0.03
	LT	R12.97	63-129	10	106.4			23.7	0.05
	RT	R13.04	43-97	10	77.7			17.3	0.04
	LT	R13.09	23-55	10	43.2			9.6	0.02
	RT	R13.17	21-129	10	83.1			18.5	0.04
	RT	R 13.21	22-40	10	34.5			7.7	0.02
	LT	R13.27	25-43	10	37.4			8.3	0.02
	LT	R13.34	18-42	10	33.5			7.5	0.02
	LT	R13.47	29-49	10	43.6			9.7	0.02
	RT	R13.48	21-55	10	42.5			9.5	0.02
	RT	R13.53	29-51	10	44.3			9.9	0.02
	RT	R13.69	30-52	10	45.0			10.0	0.02
	RT	R13.77	39-75	10	63.3			14.1	0.03
	LT	R13.78	155-329	10	268.4			59.8	0.14
	RT	R13.88	27-51	10	43.2			9.6	0.02
	RT	R14.00	26-54	10	44.5			9.9	0.02
	RT	R14.10	55-107	10	90.4			20.1	0.05
	LT	R14.17	34-76	10	61.0			13.6	0.03
	RT	R14.17	31-53	10	46.5			10.4	0.02
	RT	R14.19	27-53	10	44.6			9.9	0.02
	RT	R14.20	32-56	10	48.9			10.9	0.02
				TOTAL	* 3444.2	*21.4	6.6	*767.2	*1.70

* ADDITIONAL QUANTITIES SHOWN ON Q-1

REPLACE ASPHALT CONCRETE SURFACING

CO-RTE	DIRECTION	POST MILE LIMITS	LOCATION	(N) NO. OF DIGOUTS	(N) AVG LENGTH	(N) WIDTH	(N) DEPTH	(N) HOT MIX ASPHALT (TYPE A)	REPLACE AC SURFACING
		PM - PM			LF	LF	LF	TON	CY
SAH-44	EB	R7.5-R8.0	MAINLINE	26	100	4	0.33	283	127
		R8.0-R9.0		56	100	4	0.33	610	274
		R9.0-R10.0		36	100	4	0.33	392	176
		R10.0-R11.0		52	100	4	0.33	566	254
		R11.0-R12.0		40	100	4	0.33	437	196
		R12.0-R13.0		44	100	4	0.33	479	215
		R13.0-R14.0		56	100	4	0.33	610	274
		R14.0-R14.5		30	100	4	0.33	327	147
	WB	R7.5-R8.0	MAINLINE	26	100	4	0.33	283	127
		R8.0-R9.0		56	100	4	0.33	610	274
		R9.0-R10.0		48	100	4	0.33	523	235
		R10.0-R11.0		60	100	4	0.33	653	293
		R11.0-R12.0		40	100	4	0.33	437	196
		R12.0-R13.0		52	100	4	0.33	566	254
		R13.0-R14.0		56	100	4	0.33	610	274
		R14.0-R14.5		18	100	4	0.33	196	88
TOTAL									3404

SUMMARY OF QUANTITIES

Q-2

REVISED BY | DATE REVISED
JOLENA ASTIN | JIM RASMUSSEN
CALCULATED-DESIGNED BY | CHECKED BY
FUNCTIONAL SUPERVISOR: JOHN MARTIN

STATE OF CALIFORNIA - DEPARTMENT OF TRANSPORTATION
Caltrans DESIGN

P:\proj1\02\4E430_plans\pse\0200020284pa002.dgn

LAST REVISION 11-14-13 | DATE PLOTTED => 25-JUL-2014 | TIME PLOTTED => 12:21

Dist	COUNTY	ROUTE	POST MILES TOTAL PROJECT	SHEET No.	TOTAL SHEETS
02	Sha	44	R4.2/R14.5	39	70

REGISTERED CIVIL ENGINEER 06-19-14 DATE

06-24-14
PLANS APPROVAL DATE

REGISTERED PROFESSIONAL ENGINEER JAMES D. RASMUSSEN No. 76401 Exp. 12/31/14 CIVIL STATE OF CALIFORNIA

THE STATE OF CALIFORNIA OR ITS OFFICERS OR AGENTS SHALL NOT BE RESPONSIBLE FOR THE ACCURACY OR COMPLETENESS OF SCANNED COPIES OF THIS PLAN SHEET.

TEMPORARY FIBER ROLL

POST MILES	LF
R11.76	120
R14.17	600
TOTAL	720

TREATED WOOD WASTE

POST MILE	SIGNS	MBGR
	LB	LB
R7.37 TO R14.34		17,514
R7.57 TO R14.03	1479	
SUBTOTAL	1479	17,514
TOTAL	18,993	

METAL BEAM GUARD RAIL ITEMS

CO-RTE	POST MILE	DIRECTION	REMOVE GUARDRAIL	REMOVE ASPHALT CONCRETE DIKE	RECONSTRUCT GUARDRAIL	RECONSTRUCT TERMINAL SYSTEM	RECONSTRUCT TRANSITION RAILING (TYPE WB)	RECONSTRUCT BURIED POST END ANCHOR	HOT MIX ASPHALT (TYPE A)	PLACE HOT MIX ASPHALT DIKE (TYPE F)	MINOR CONCRETE (MINOR STRUCTURE)	DRILL AND BOND (CHEMICAL ADHESIVE)	ALTERNATIVE FLARED TERMINAL SYSTEM	VEGETATION CONTROL (MINOR CONRETE)	SINGLE THRIE BEAM BARRIER	TRANSITION RAILING (TYPE WB)	(N) WOOD POST	RECONSTRUCT GUARD RAIL (7' POST)	(N) STEEL POST ON EXIST CIDH FOUNDATION	COMMENTS
			LF	LF	LF	EA	EA	EA	TON	LF	CY	EA	EA	SQYD	FT	EA	EA	LF	EA	
SHA-44	R7.37	EB APPROACH	12.5		25	1					1.2	12		48		1				SRT, TRANSITION ANCHOR BLOCK
	R7.37	WB DEPARTURE	12.5		12.5	1					1.2	12		43		1				SRT, TRANSITION ANCHOR BLOCK
	R7.49	EB DEPARTURE			12.5	1					1.2	12		16		1				ET, TRANSITION ANCHOR BLOCK
	R7.49	WB APPROACH	12.5		50	1					1.2	12		58		1				SRT, TRANSITION ANCHOR BLOCK
	R11.76	EB APPROACH			87.5								1	103	37.5			25	3	SEE DETAIL A, SHEET C-4
	R11.76	EB DEPARTURE			50								1	83	25		2	25		
	R11.76	WB APPROACH			37.5								1	78	25					
	R11.76	WB DEPARTURE			50								1	83	25		2	25		
	R14.34	EB APPROACH		240	625		1	1	3.5	240				288						
	R14.34	WB DEPARTURE			25		1						1	48						
	DRAINAGE QUANTITIES SHEET DQ-1										7.45									
TOTAL			37.5	240	975	4	2		3.5	240	11.85	48	5	848	112.5	4		75		

SUMMARY OF QUANTITIES

Q-3

REVISED BY	DATE REVISED

CALCULATED-DESIGNED BY	CHECKED BY
JOLENA ASTIN	JIM RASMUSSEN

FUNCTIONAL SUPERVISOR: JOHN MARTIN

STATE OF CALIFORNIA - DEPARTMENT OF TRANSPORTATION

Caltrans DESIGN

P:\proj\02\4E430_plans\pse\0200020284pa003.dgn

LAST REVISION 07-31-13 | DATE PLOTTED => 25-JUL-2014 | TIME PLOTTED => 12:21

Dist	COUNTY	ROUTE	POST MILES TOTAL PROJECT	SHEET No.	TOTAL SHEETS
02	Sha	44	R4.2/R14.5	40	70

LICENSED LANDSCAPE ARCHITECT

06-24-14
PLANS APPROVAL DATE

LICENSED LANDSCAPE ARCHITECT J. PATRICK SULLIVAN #3125 Signature 07/31/16 Renewal Date 06/26/14 Date STATE OF CALIFORNIA

THE STATE OF CALIFORNIA OR ITS OFFICERS OR AGENTS SHALL NOT BE RESPONSIBLE FOR THE ACCURACY OR COMPLETENESS OF SCANNED COPIES OF THIS PLAN SHEET.

SEED MIX (N)

BOTANICAL NAME (COMMON NAME)	PERCENT GERMINATION (MINIMUM)	POUNDS PURE LIVE SEED PER ACRE (N) (SLOPE MEASUREMENT)
ELYMUS GLAUCUS (CALIF. WILD RYE)	70	15
FESTUCA IDAHOENSIS (WESTERN FESCUE)	70	20
HORDEMUM VULGARE UC 937 (COMMON BARLEY COVER CROP)	70	30
SECALE CERALE 'MODESTO' (WINTER COVER RYE)	70	30
VULPIA MICROSTACHYS (SMALL FESCUE)	80	25
	TOTAL	120

EROSION CONTROL (DRY SEED) / STRAW SEQUENCE / APPLICATION RATES (N)

SEQUENCE	ITEM	MATERIAL		APPLICATION RATE (N)
		DESCRIPTION	TYPE	
STEP 1	DRY SEED APPLICATION	PURE LIVE SEED	MIX	120 LB/ACRE
STEP 2	FERTILIZER APPLICATION	SLOW RELEASE FERTLIZER	GRANULAR 15-15-15	200 LB/ACRE
STEP 3	STRAW APPLICATION	STRAW	RICE	8000 LB/ACRE

EROSION CONTROL QUANTITIES

SHEET	LOCATION			DESCRIPTION	EROSION CONTROL (DRY SEED)	STRAW
		L+	R+		SQFT	SQFT
D-1	"FL" STA 10+00 TO 11+22		X	DRY APPLIED SEEDS & FERTILIZER	450	450
D-2	"DBFL" STA 720+81 TO 721+85	X		DRY APPLIED SEEDS & FERTILIZER	1270	1270
D-3	PM R11.97	X	X	DRY APPLIED SEEDS & FERTILIZER	450	450
D-4	PM R12.30	X	X	DRY APPLIED SEEDS & FERTILIZER	450	450
D-5	PM R12.36	X	X	DRY APPLIED SEEDS & FERTILIZER	600	600
D-6	PM R12.44	X		DRY APPLIED SEEDS & FERTILIZER	330	330
D-7	PM R12.55	X	X	DRY APPLIED SEEDS & FERTILIZER	600	600
D-8	PM R12.86	X	X	DRY APPLIED SEEDS & FERTILIZER	600	600
D-9	PM R13.79	X		DRY APPLIED SEEDS & FERTILIZER	300	300
D-10	"DFL1" STA 838+25 TO 843+60	X		DRY APPLIED SEEDS & FERTILIZER	16,900	16,900
DD-2	PM R9.08	X		DRY APPLIED SEEDS & FERTILIZER	300	300
DD-2	PM R9.91	X		DRY APPLIED SEEDS & FERTILIZER	300	300
DD-2	PM R9.98	X		DRY APPLIED SEEDS & FERTILIZER	300	300
DD-3	PM R8.61	X		DRY APPLIED SEEDS & FERTILIZER	300	300
DD-3	PM R8.79	X		DRY APPLIED SEEDS & FERTILIZER	300	300
DD-3	PM R9.64	X		DRY APPLIED SEEDS & FERTILIZER	300	300
DD-3	PM R14.32	X		DRY APPLIED SEEDS & FERTILIZER	300	300
				TOTALS	24,050	24,050

NOTES:
1. APPLY STRAW 2" THICK OR SUFFICIENT TO COVER SEEDS & FERTILIZER.
2. AT THE OPTION OF THE CONTRACTOR, RICE STRAW CAN BE HAND APPLIED.
3. STRAW MUST BE WEED FREE.

EROSION CONTROL QUANTITIES

ECQ-1

REVISED BY | DATE REVISED
J. PATRICK SULLIVAN | RON FLORY
CALCULATED-DESIGNED BY | CHECKED BY
SENIOR LANDSCAPE ARCHITECT | RON FLORY
STATE OF CALIFORNIA - DEPARTMENT OF TRANSPORTATION
Caltrans® LANDSCAPE ARCHITECTURE

P:\proj1\02\4E430_plans\pse\0200020284tg001.dgn

LAST REVISION 05-25-14 | DATE PLOTTED => 25-JUL-2014 | TIME PLOTTED => 12:21

Dist	COUNTY	ROUTE	POST MILES TOTAL PROJECT	SHEET No.	TOTAL SHEETS
02	Sha	44	R4.2/R14.5	41	70

ART 06-19-14
REGISTERED ELECTRICAL ENGINEER DATE

06-24-14
PLANS APPROVAL DATE

REGISTERED PROFESSIONAL ENGINEER A.P. ROBLES No. E15293 Exp. 3-31-15 ELECTRICAL STATE OF CALIFORNIA

THE STATE OF CALIFORNIA OR ITS OFFICERS OR AGENTS SHALL NOT BE RESPONSIBLE FOR THE ACCURACY OR COMPLETENESS OF SCANNED COPIES OF THIS PLAN SHEET.

NOTES:

1. FOR ACCURATE RIGHT OF WAY DATA, CONTACT RIGHT OF WAY ENGINEERING AT THE DISTRICT OFFICE.
2. REUSE SHOULDER TERMINATION ON EXISTING INSTALLATIONS.
3. COIL 10′ OF CONDUCTORS IN PULL BOX.

LEGEND

1. 2"C, 4 DLC, 2 STC.
2. SUBPANEL TYPE III-AF SERVICE ENCLOSURE WITHOUT METERING SECTION, SEE WIRING DIAGRAM, SHEET E-2.
3. HAR FLASHING BEACON CONTROLLER CABINET.
4. SERVICE EQUIPMENT ENCLOSURE. ADD 30 A, 240 V, 2P CB (TCS).
5. ADD 2#8, 1#8 G.
6. FRONTIER COMMUNICATONS No. 1320.
7. EXISTING TELEPHONE CABLE IN CONDUIT.
8. 2 TELEPHONE CABLES IN CONDUIT.
9. 1½"C, 2#8, 1#8 G.
10. 2"C, PT.
11. 2"C, TELEPHONE CABLE.
12. 2"C, 2#8, 1#8 G, 2#12, 1#12 G (TDC).
13. 1½"C, 2#12, 1#12 G.
14. 3"C, 4DLC, 2 STC. 3"C, 2#8, 1#8 G.

LEGEND:

TCS	TRAFFIC COUNT STATION
(PB)	OBJECT MARKER (TYPE PB) AND PULL BOX PAVING
STC	SCREENED TRANSMISSION CABLE

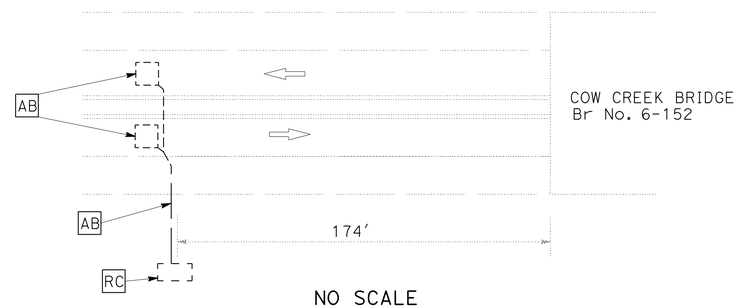

NO SCALE

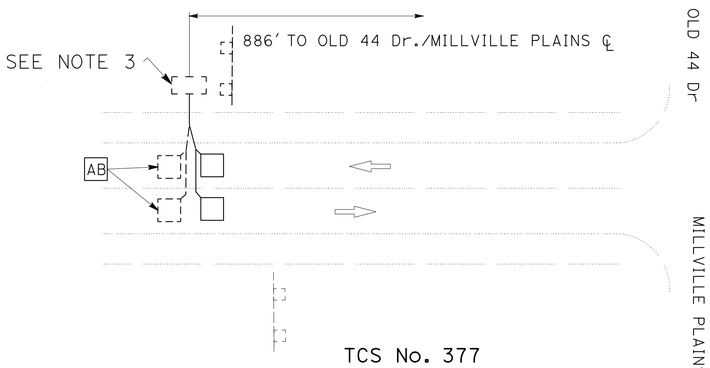

TCS No. 377
NO SCALE

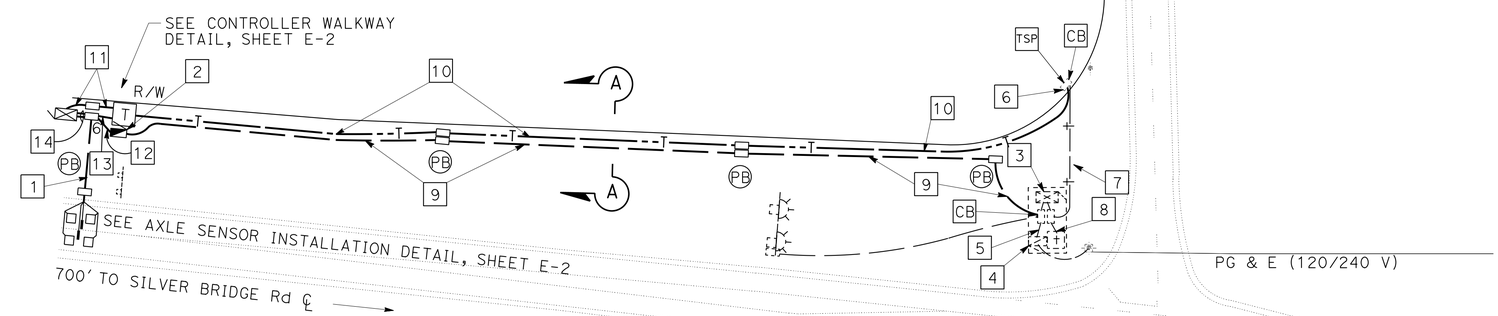

TCS No. 210

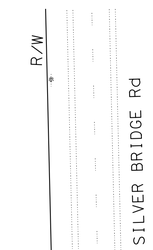

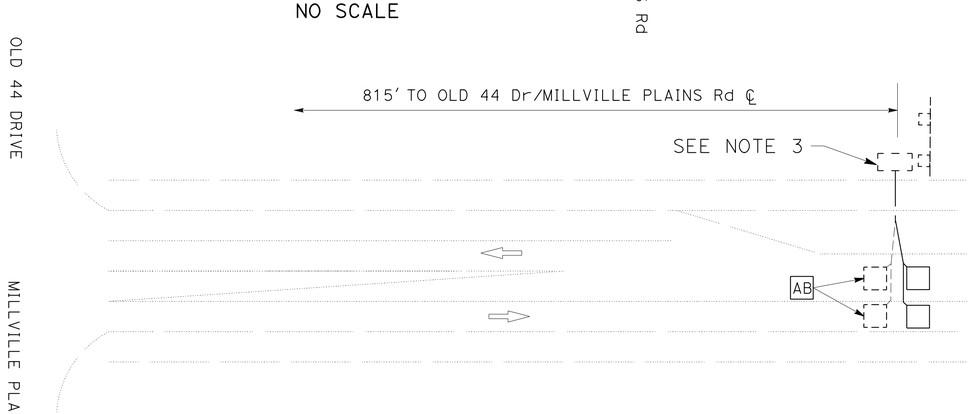

TCS No. 378
NO SCALE

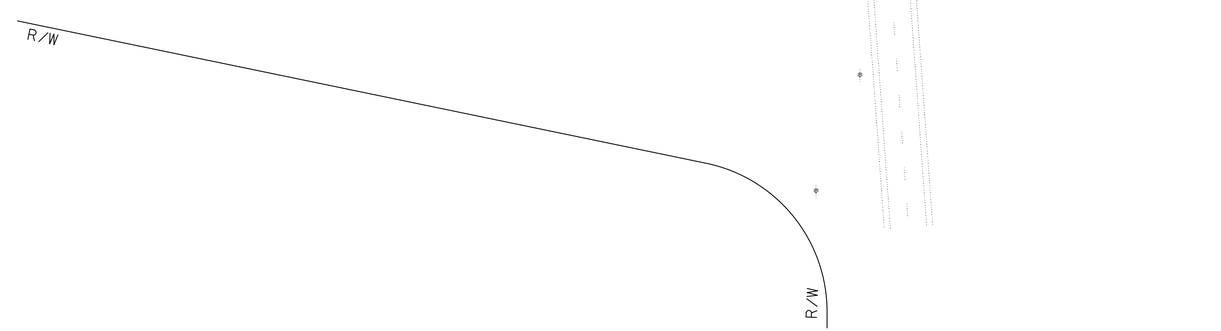

APPROVED FOR ELECTRICAL WORK ONLY

TRAFFIC COUNT STATION

SCALE: 1" = 50′ **E-1**

REVISED BY	ARTURO P. ROBLES
DATE REVISED	KAREN LAW
CALCULATED-DESIGNED BY	FUNCTIONAL SUPERVISOR
CHECKED BY	ROB STINGER

STATE OF CALIFORNIA - DEPARTMENT OF TRANSPORTATION
Caltrans® **ELECTRICAL DESIGN**

P:\proj\02\4E430_plans\pse\0200020284ua001.dgn

LAST REVISION 06-19-14 | DATE PLOTTED => 25-JUL-2014 | TIME PLOTTED => 12:21

Dist	COUNTY	ROUTE	POST MILES TOTAL PROJECT	SHEET No.	TOTAL SHEETS
02	Sha	44	R4.2/R14.5	42	70

ART 06-19-14
REGISTERED ELECTRICAL ENGINEER DATE

06-24-14
PLANS APPROVAL DATE

REGISTERED PROFESSIONAL ENGINEER A.P. ROBLES No. E15293 Exp. 3-31-15 ELECTRICAL STATE OF CALIFORNIA

THE STATE OF CALIFORNIA OR ITS OFFICERS OR AGENTS SHALL NOT BE RESPONSIBLE FOR THE ACCURACY OR COMPLETENESS OF SCANNED COPIES OF THIS PLAN SHEET.

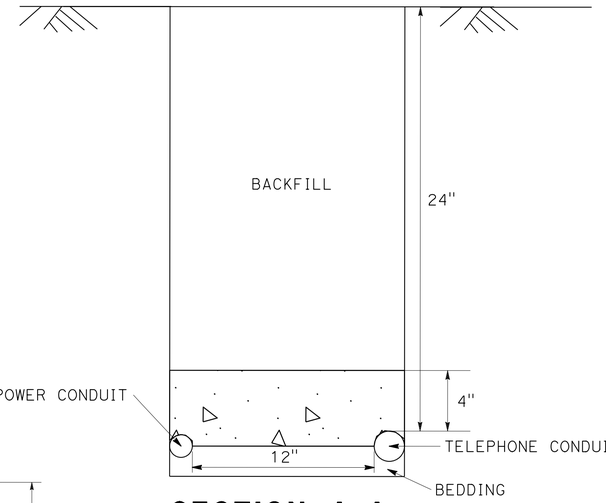

SECTION A-A

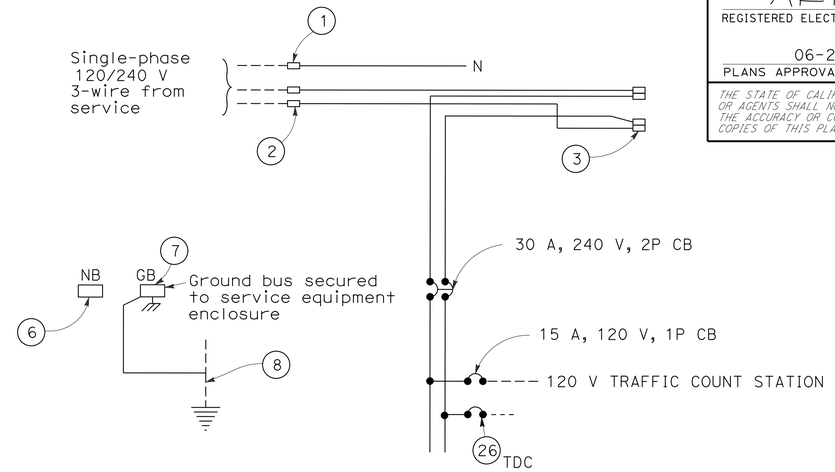

SUBPANEL WIRING DIAGRAM

FOR ADDITIONAL INFORMATION SEE RSP ES-2D

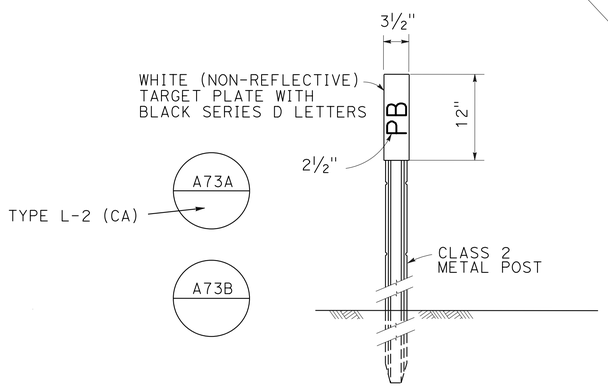

OBJECT MARKER (TYPE PB)

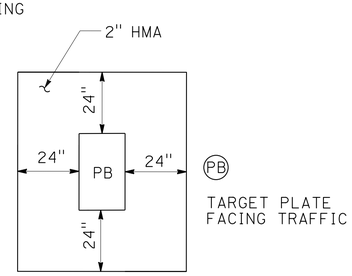

NOTE: APPLIES TO ALL INSTALLATIONS IN UNPAVED AREAS

PULL BOX PAVING

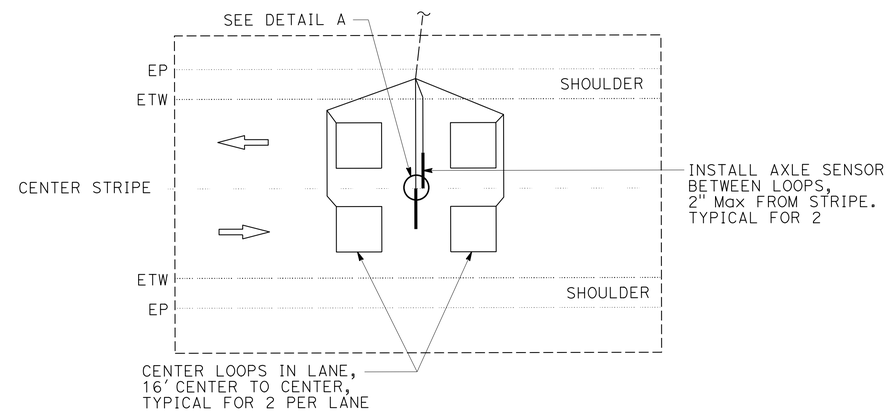

AXLE SENSOR INSTALLATION

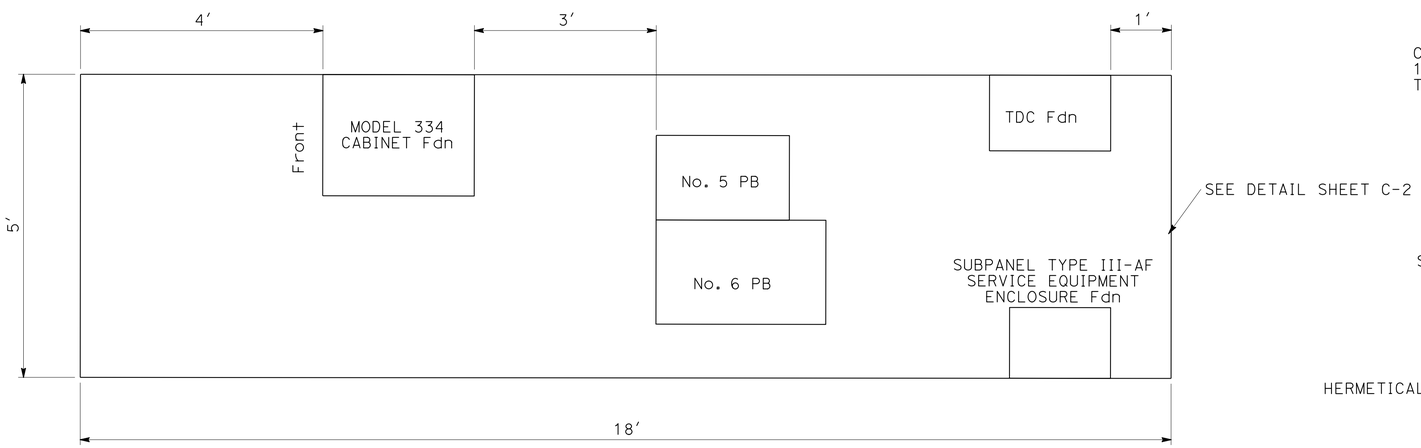

CONTROLLER WALKWAY

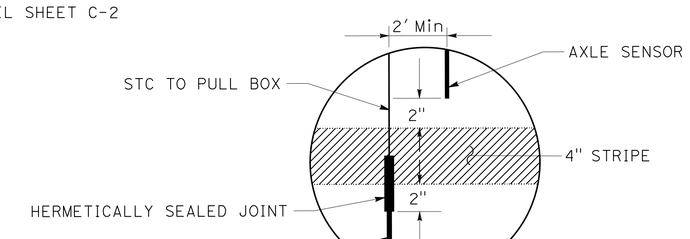

DETAIL A

ELECTRICAL DETAILS

NO SCALE **E-2**

ARTURO P. ROBLES — REVISED BY — DATE REVISED
KAREN LAW — CALCULATED-DESIGNED BY — CHECKED BY
ROB STINGER — FUNCTIONAL SUPERVISOR

STATE OF CALIFORNIA - DEPARTMENT OF TRANSPORTATION
Caltrans® ELECTRICAL DESIGN

P:\proj\02\4E430_plans\pse\0200020284ua002.dgn

LAST REVISION 06-19-14 | DATE PLOTTED => 25-JUL-2014 | TIME PLOTTED => 12:21

Dist	COUNTY	ROUTE	POST MILES TOTAL PROJECT	SHEET No.	TOTAL SHEETS
02	Sha	44	R4.2/R14.5	43	70

ART 06-19-14
REGISTERED ELECTRICAL ENGINEER DATE

06-24-14
PLANS APPROVAL DATE

REGISTERED PROFESSIONAL ENGINEER A.P. ROBLES No. E15293 Exp. 3-31-15 ELECTRICAL STATE OF CALIFORNIA

THE STATE OF CALIFORNIA OR ITS OFFICERS OR AGENTS SHALL NOT BE RESPONSIBLE FOR THE ACCURACY OR COMPLETENESS OF SCANNED COPIES OF THIS PLAN SHEET.

EXISTING TRAFFIC MANAGEMENT SYSTEM ELEMENTS TO BE MAINTAINED

TYPE	LOCATION	DESCRIPTION
HAR FLASHER	Sha-44-R8.0	NEAR SILVER BRIDGE Rd FWBT

LOOP DETECTORS TO REMAIN IN PLACE AND OPERATIONAL

ID No.	LOCATION	TYPE	DESCRIPTION	EQUIPMENT
193	Sha-44-R4.30	CONTROL	100' W OF STILLWATER Crk Br	2 LOOPS 4 PIEZOS
R109	Sha-44-R6.81	RAMP	DESCHUTES Rd EB OFF-RAMP	1 LOOP
R110	Sha-44-R6.838	RAMP	DESCHUTES Rd WB ON-RAMP	1 LOOP
318	Sha-44-R6.691	RAMP	1526 W OF DESCHUTES Rd CL	3 LOOPS
R111	Sha-44-R7.23	RAMP	DESCHUTES Rd EB ON-RAMP	1 LOOP
R112	Sha-44-R7.21	RAMP	DESCHUTES Rd WB OFF-RAMP	1 LOOP

THE ITEMS ON THIS TABLE ARE NOT SEPARATE PAY ITEMS. FOR INFORMATION ONLY

TRAFFIC COUNT STATION

SHEET No.	TRENCHING AND BACKFILL	WARNING TAPE	1½" TYPE 3 CONDUIT	2" TYPE 3 CONDUIT	PULL BOXES	#12 CONDUCTORS	#12 GROUND	#8 CONDUCTORS	#8 GROUND	AXLE SENSORS	LOOP DETECTORS	DLC	STC	TELEPHONE CABLE
	LF	LF	LF	LF	EA	LF	LF	LF	LF	EA	EA	LF	LF	LF
E-1	700	700	700	750	8	20	10	1400	700	2	8	200	200	20

THE ITEMS ON THIS TABLE ARE NOT SEPARATE PAY ITEMS. FOR INFORMATION ONLY.

ELECTRICAL QUANTITIES
E-3

REVISED BY | DATE REVISED
ARTURO P. ROBLES | KAREN LAW
CALCULATED-DESIGNED BY | CHECKED BY
FUNCTIONAL SUPERVISOR: ROB STINGER

STATE OF CALIFORNIA - DEPARTMENT OF TRANSPORTATION
Caltrans® ELECTRICAL DESIGN

P:\proj1\02\4E430_plans\pse\0200020284ua003.dgn

LAST REVISION 06-19-14 | DATE PLOTTED => 25-JUL-2014 TIME PLOTTED => 12:21

M

Maint	MAINTENANCE
Max	MAXIMUM
MB	METAL BEAM
MBB	METAL BEAM BARRIER
MBGR	METAL BEAM GUARD RAILING
Med	MEDIAN
MGS	MIDWEST GUARDRAIL SYSTEM
MH	MANHOLE
Min	MINIMUM
Misc	MISCELLANEOUS
Misc I & S	MISCELLANEOUS IRON AND STEEL
Mkr	MARKER
Mod	MODIFIED, MODIFY
Mon	MONUMENT
MP	METAL PLATE
MPGR	METAL PLATE GUARD RAILING
MR	MOVEMENT RATING
MSE	MECHANICALLY STABILIZED EMBANKMENT
Mt	MOUNTAIN, MOUNT
Mtl	MATERIAL
MVP	MAINTENANCE VEHICLE PULLOUT

N

N	NORTH
NB	NORTHBOUND
No.	NUMBER (MUST HAVE PERIOD)
Nos.	NUMBERS (MUST HAVE PERIOD)
NPS	NOMINAL PIPE SIZE
NS	NEAR SIDE
NSP	NEW STANDARD PLAN
NTS	NOT TO SCALE

O

Oblr	OBLITERATE
OC	OVERCROSSING
OD	OUTSIDE DIAMETER
OF	OUTSIDE FACE
OG	ORIGINAL GROUND
OGAC	OPEN GRADED ASPHALT CONCRETE
OGFC	OPEN GRADED FRICTION COURSE
OH	OVERHEAD
OHWM	ORDINARY HIGH WATER MARK
O-O	OUT TO OUT
Opp	OPPOSITE
OSD	OVERSIDE DRAIN

P

P	PAGE
PAP	PERFORATED ALUMINUM PIPE
PB	PULL BOX
PC	POINT OF CURVATURE, PRECAST
PCC	POINT OF COMPOUND CURVE, PORTLAND CEMENT CONCRETE
PCMS	PORTABLE CHANGEABLE MESSAGE SIGN
PCP	PERFORATED CONCRETE PIPE, PRESTRESSED CONCRETE PIPE
PCVC	POINT OF COMPOUND VERTICAL CURVE
PEC	PERMIT TO ENTER AND CONSTRUCT
Ped	PEDESTRIAN
Ped OC	PEDESTRIAN OVERCROSSING
Ped UC	PEDESTRIAN UNDERCROSSING
Perm Mtl	PERMEABLE MATERIAL

P continued

PG	PROFILE GRADE
PI	POINT OF INTERSECTION
PJP	PARTIAL JOINT PENETRATION
Pkwy	PARKWAY
℄,PL	PLATE
P/L	PROPERTY LINE
PM	POST MILE, TIME FROM NOON TO MIDNIGHT
PN	PAVING NOTCH
POC	POINT OF HORIZONTAL CURVE
POT	POINT OF TANGENT
POVC	POINT OF VERTICAL CURVE
PP	PIPE PILE, PLASTIC PIPE, POWER POLE
PPL	PREFORMED PERMEABLE LINER
PPP	PERFORATED PLASTIC PIPE
PRC	POINT OF REVERSE CURVE
PRF	PAVEMENT REINFORCING FABRIC
PRVC	POINT OF REVERSE VERTICAL CURVE
PS&E	PLANS, SPECIFICATIONS AND ESTIMATES
PS, P/S	PRESTRESSED
PSP	PERFORATED STEEL PIPE
PT	POINT OF TANGENCY
PVC	POLYVINYL CHLORIDE
Pvmt	PAVEMENT

Q

Qty	QUANTITY

R

R	RADIUS
R & D	REMOVE AND DISPOSE
R & S	REMOVE AND SALVAGE
R/C	RATE OF CHANGE
RCA	REINFORCED CONCRETE ARCH
RCB	REINFORCED CONCRETE BOX
RCP	REINFORCED CONCRETE PIPE
RCPA	REINFORCED CONCRETE PIPE ARCH
Rd	ROAD
Reinf	REINFORCED, REINFORCEMENT, REINFORCING
Rel	RELOCATE
Repl	REPLACEMENT
Ret	RETAINING
Rev	REVISED, REVISION
Rdwy	ROADWAY
RHMA	RUBBERIZED HOT MIX ASPHALT
Riv	RIVER
RM	ROAD-MIXED
RP	RADIUS POINT, REFERENCE POINT
RR	RAILROAD
RSP	ROCK SLOPE PROTECTION, REVISED STANDARD PLAN
Rt	RIGHT
Rte	ROUTE
RW	REDWOOD, RETAINING WALL
R/W	RIGHT OF WAY
Rwy	RAILWAY

S

S	SOUTH, SUPPLEMENT
SAE	STRUCTURE APPROACH EMBANKMENT
Salv	SALVAGE
SAPP	STRUCTURAL ALUMINUM PLATE PIPE
SB	SOUTHBOUND
SC	SAND CUSHION
SCSP	SLOTTED CORRUGATED STEEL PIPE
SD	STORM DRAIN
Sec	SECOND, SECTION
Sep	SEPARATION
SG	SUBGRADE
Shld	SHOULDER
Sht	SHEET
Sim	SIMILAR
₤	STATION LINE
SM	SELECTED MATERIAL
Spec	SPECIAL, SPECIFICATIONS
SPP	SLOTTED PLASTIC PIPE
SS	SLOPE STAKE
SSBM	STRAP AND SADDLE BRACKET METHOD
SSD	STRUCTURAL SECTION DRAIN
SSPA	STRUCTURAL STEEL PLATE ARCH
SSPP	STRUCTURAL STEEL PLATE PIPE
SSPPA	STRUCTURAL STEEL PLATE PIPE ARCH
SSRP	STEEL SPIRAL RIB PIPE
St	STREET
Sta	STATION
STBB	SINGLE THRIE BEAM BARRIER
Std	STANDARD
Str	STRUCTURE
Surf	SURFACING
SW	SIDEWALK, SOUND WALL
Swr	SEWER
Sym	SYMMETRICAL
S4S	SURFACE 4 SIDES

T

T	SEMI-TANGENT
Tan	TANGENT
TBB	THRIE BEAM BARRIER
Tbr	TIMBER
TC	TOP OF CURB
TCB	TRAFFIC CONTROL BOX
TCE	TEMPORARY CONSTRUCTION EASEMENT
Tel	TELEPHONE
Temp	TEMPORARY
TG	TOP OF GRADE
Tot	TOTAL
TP	TELEPHONE POLE
TPB	TREATED PERMEABLE BASE
TPM	TREATED PERMEABLE MATERIAL
Trans	TRANSITION

T continued

TS	TRANSVERSE, TRAFFIC SIGNAL, TUBULAR STEEL
Typ	TYPICAL

U

UC	UNDERCROSSING
UD	UNDERDRAIN
UG	UNDERGROUND
UON	UNLESS OTHERWISE NOTED
UP	UNDERPASS

V

V	VALVE, DESIGN SPEED
Var	VARIABLE, VARIES
VC	VERTICAL CURVE
VCP	VITRIFIED CLAY PIPE
Vert	VERTICAL
Via	VIADUCT
Vol	VOLUME

W

W	WEST, WIDTH
WB	WESTBOUND
WH	WEEP HOLE
WM	WIRE MESH
WS	WATER SURFACE
WSP	WELDED STEEL PIPE
Wt	WEIGHT
WV	WATER VALVE
WW	WINGWALL
WWLOL	WINGWALL LAYOUT LINE

X

X Sec	CROSS SECTION
Xing	CROSSING

Y

Yr	YEAR
Yrs	YEARS

Dist	COUNTY	ROUTE	POST MILES TOTAL PROJECT	SHEET No.	TOTAL SHEETS
02	Sha	44	R4.2/R14.5	44	70

Grace M. Tsushima
REGISTERED CIVIL ENGINEER

July 19, 2013
PLANS APPROVAL DATE

REGISTERED PROFESSIONAL ENGINEER Grace M. Tsushima No. C49814 Exp. 9-30-14 CIVIL STATE OF CALIFORNIA

THE STATE OF CALIFORNIA OR ITS OFFICERS OR AGENTS SHALL NOT BE RESPONSIBLE FOR THE ACCURACY OR COMPLETENESS OF SCANNED COPIES OF THIS PLAN SHEET.

TO ACCOMPANY PLANS DATED 06-24-14

UNIT OF MEASUREMENT SYMBOLS:

Some of the symbols used in the project plan quantity tables and in the Bid Item List are:

TABLE A

SYMBOL USED	DEFINITIONS
ACRE	ACRE
CF	CUBIC FOOT
CY	CUBIC YARD
EA	EACH
GAL	GALLON
LB	POUND
LF	LINEAR FOOT
SQFT	SQUARE FOOT
SQYD	SQUARE YARD
STA	100 FEET
TAB	TABLET
TON	2,000 POUNDS

Some of the symbols used in the plans other than in the project plan quantity tables are:

TABLE B

SYMBOL USED	DEFINITIONS
ksi	KIPS PER SQUARE INCH
ksf	KIPS PER SQUARE FOOT
psi	POUNDS PER SQUARE INCH
psf	POUNDS PER SQUARE FOOT
lb/ft^3, pcf	POUNDS PER CUBIC FOOT
tsf	TONS PER SQUARE FOOT
mph, MPH *	MILES PER HOUR
ø	NOMINAL DIAMETER
oz	OUNCE
lb	POUND
kip	1,000 POUNDS
cal	CALORIE
ft	FOOT OR FEET
gal	GALLON

* For use on a sign panel only

STATE OF CALIFORNIA
DEPARTMENT OF TRANSPORTATION

ABBREVIATIONS (SHEET 2 OF 2)

NO SCALE

RSP A10B DATED JULY 19, 2013 SUPERSEDES STANDARD PLAN A10B DATED MAY 20, 2011 - PAGE 2 OF THE STANDARD PLANS BOOK DATED 2010.

REVISED STANDARD PLAN RSP A10B

2010 REVISED STANDARD PLAN RSP A10B

DATE PLOTTED => 25-JUL-2014
TIME PLOTTED => 12:21

Dist	COUNTY	ROUTE	POST MILES TOTAL PROJECT	SHEET No.	TOTAL SHEETS
02	Sha	44	R4.2/R14.5	45	70

REGISTERED CIVIL ENGINEER

July 20, 2012
PLANS APPROVAL DATE

REGISTERED PROFESSIONAL ENGINEER
Roberta L. McLaughlin
No. C40375
Exp. 3-31-13
CIVIL
STATE OF CALIFORNIA

THE STATE OF CALIFORNIA OR ITS OFFICERS OR AGENTS SHALL NOT BE RESPONSIBLE FOR THE ACCURACY OR COMPLETENESS OF SCANNED COPIES OF THIS PLAN SHEET.

TO ACCOMPANY PLANS DATED 06-24-14

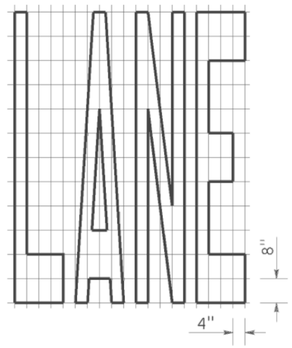

A=24 ft^2

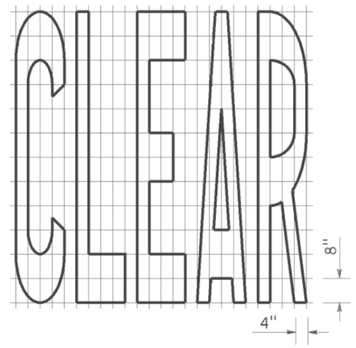

A=27 ft^2

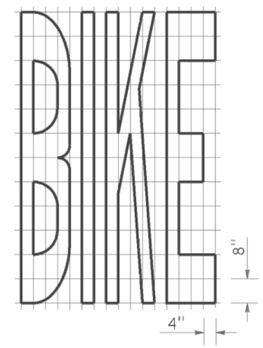

A=21 ft^2

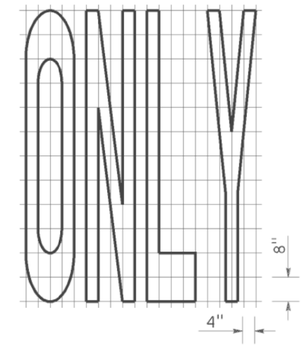

A=22 ft^2

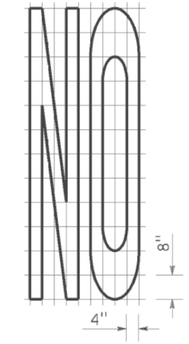

A=14 ft^2

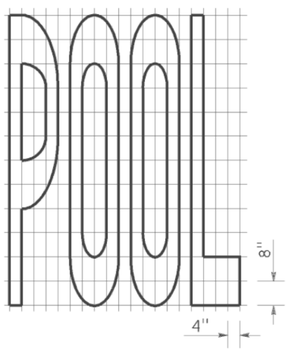

A=23 ft^2

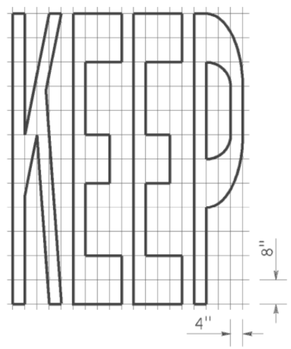

A=24 ft^2

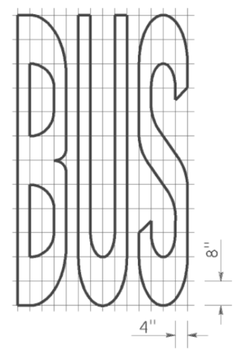

A=20 ft^2

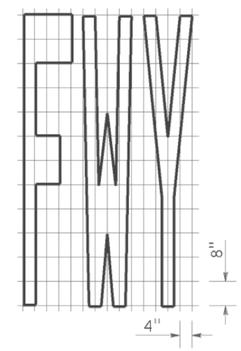

A=16 ft^2

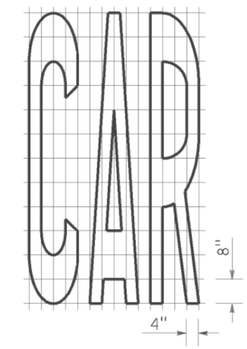

A=17 ft^2

WORD MARKINGS			
ITEM	ft^2	ITEM	ft^2
LANE	24	NO	14
POOL	23	BIKE	21
CAR	17	BUS	20
CLEAR	27	ONLY	22
KEEP	24	FWY	16

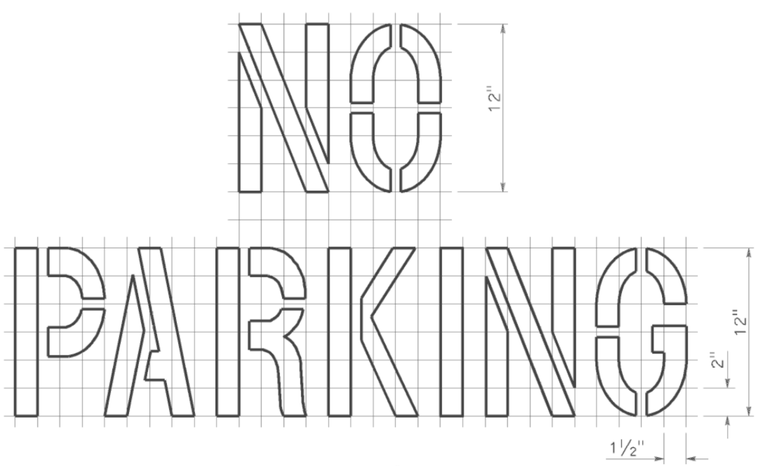

A=2 ft^2
See Notes 6 and 7

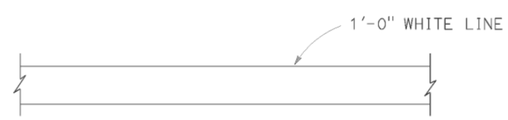

LIMIT LINE (STOP LINE)

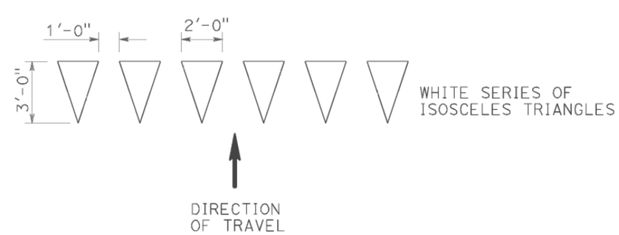

YIELD LINE

NOTES:

1. If a message consists of more than one word, it should read "UP", i.e., the first word should be nearest the driver.
2. The space between words should be at least four times the height of the characters for low speed roads, but not more than ten times the height of the characters. The space may be reduced appropriately where there is limited space because of local conditions.
3. Minor variations in dimensions may be accepted by the Engineer.
4. Portions of a letter, number or symbol may be separated by connecting segments not to exceed 2" in width.
5. The words "NO PARKING" pavement marking is to be used for parking facilities. For typical locations of markings, see Standard Plans A90A and A90B.
6. The words "NO PARKING", shall be painted in white letters no less than 1'-0" high on a contrasting background and located so that it is visible to traffic enforcement officials.

STATE OF CALIFORNIA
DEPARTMENT OF TRANSPORTATION

PAVEMENT MARKINGS WORDS, LIMIT AND YIELD LINES

NO SCALE

RSP A24E DATED JULY 20, 2012 SUPERSEDES STANDARD PLAN A24E
DATED MAY 20, 2011 - PAGE 17 OF THE STANDARD PLANS BOOK DATED 2010.

REVISED STANDARD PLAN RSP A24E

2010 REVISED STANDARD PLAN RSP A24E

DATE PLOTTED => 25-JUL-2014
TIME PLOTTED => 12:21

Dist	COUNTY	ROUTE	POST MILES TOTAL PROJECT	SHEET No.	TOTAL SHEETS
02	Sha	44	R4.2/R14.5	46	70

Randell D. Hiatt
REGISTERED CIVIL ENGINEER

July 19, 2013
PLANS APPROVAL DATE

REGISTERED PROFESSIONAL ENGINEER
Randell D. Hiatt
No. C50200
Exp. 6-30-15
CIVIL
STATE OF CALIFORNIA

THE STATE OF CALIFORNIA OR ITS OFFICERS OR AGENTS SHALL NOT BE RESPONSIBLE FOR THE ACCURACY OR COMPLETENESS OF SCANNED COPIES OF THIS PLAN SHEET.

TO ACCOMPANY PLANS DATED 06-24-14

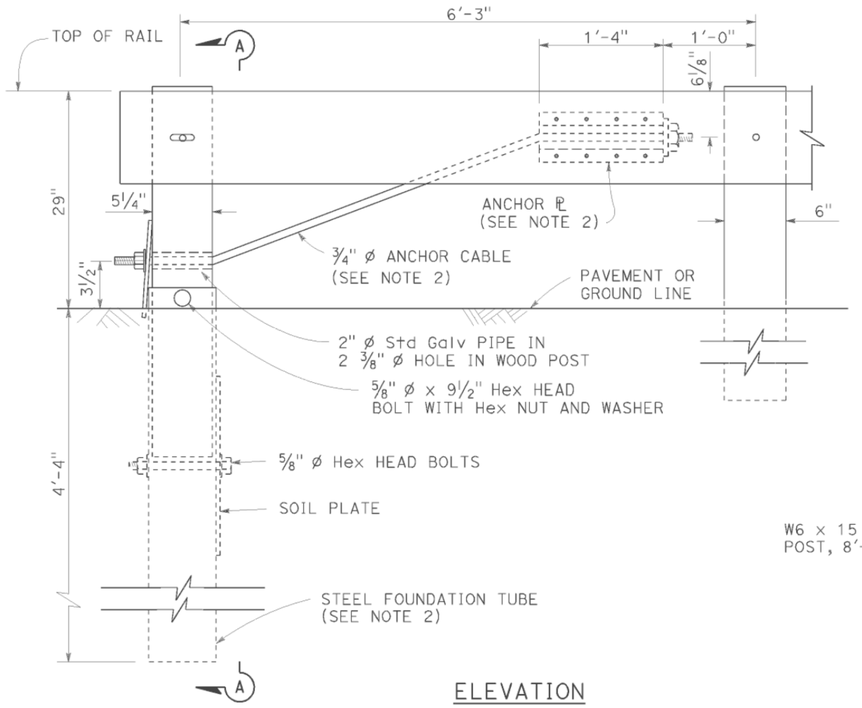

ELEVATION
END ANCHOR
ASSEMBLY (TYPE SFT)

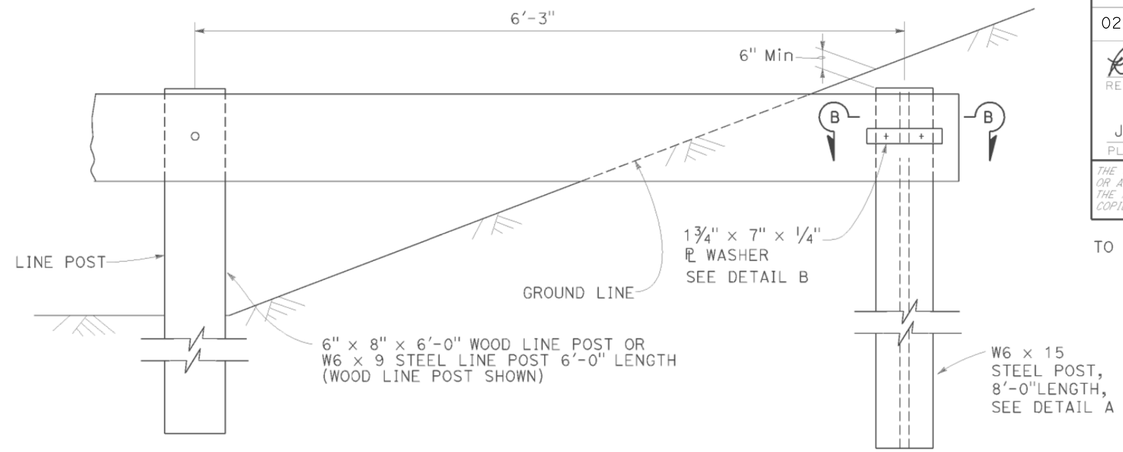

BURIED POST END ANCHOR

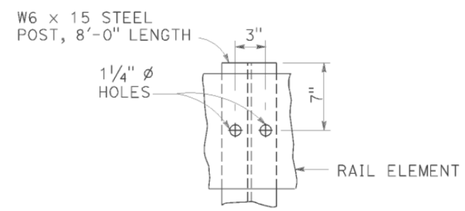

DETAIL A

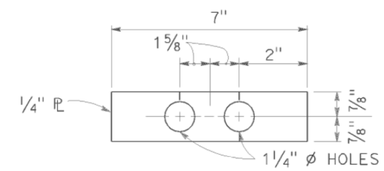

DETAIL B

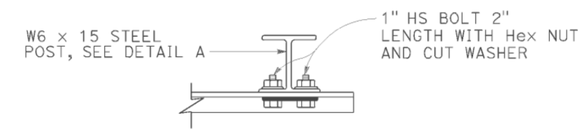

SECTION B-B

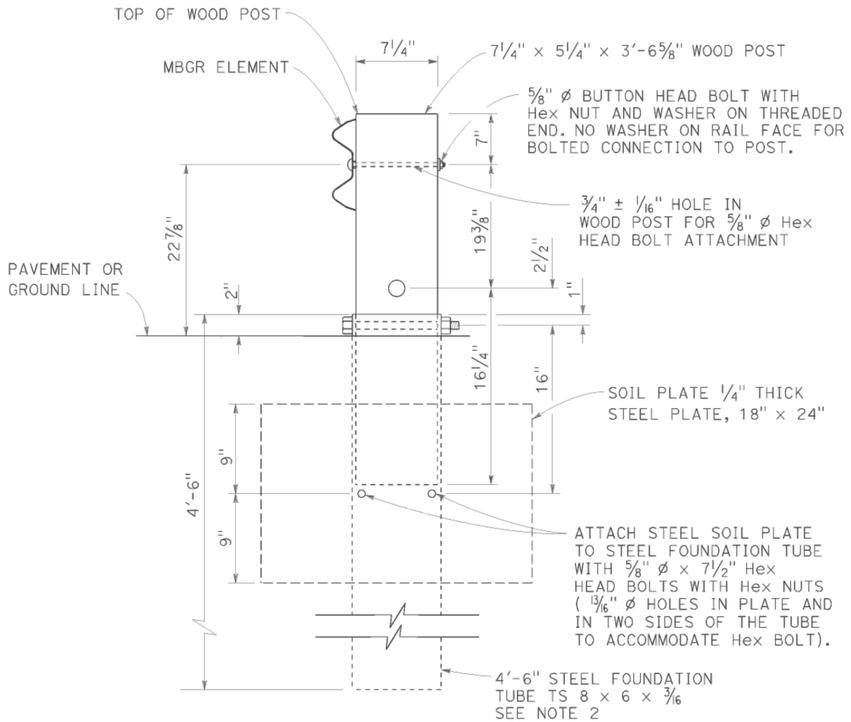

SECTION A-A

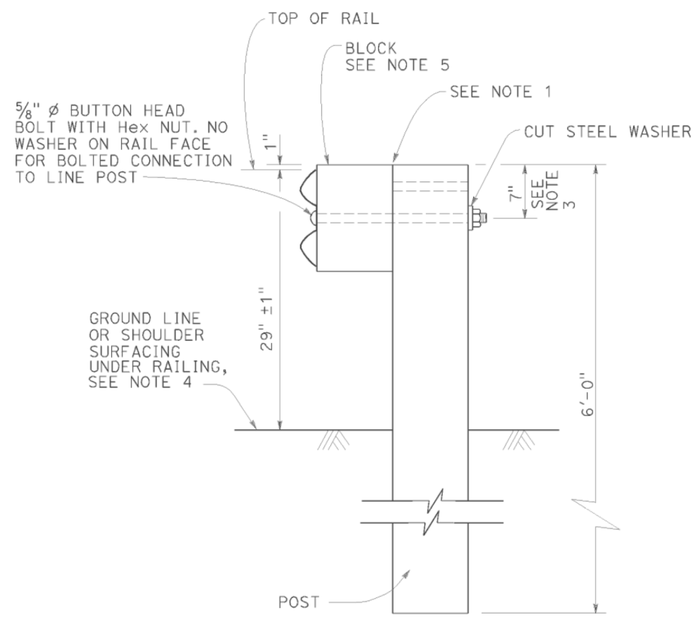

TYPICAL LINE
POST INSTALLATION

NOTES:

1. For wood post and wood block, toenail with 2-16d Galv nails in top of block. For steel post and notched wood or plastic block, notched face of block faces steel post.
2. A 6'-0" Length steel foundation tube, TS 8 x 6 x 3/16, without a soil plate, may be furnished and installed in place of the 4'-6" length steel foundation tube and soil plate shown, Minimum embadment of the 6'-0" length tube shall be 5'-9". A 5/8" ø Hex head bolt and nut shall be installed in the hole in the 6'-0" length tube to keep the wood post from dropping into the tube.
3. To connect railing to 27" terminal system end treatment, transition the top of railing height at a ratio of 120:1 to terminal system end treatment height plus one 12'-6" standard railing section at the transitioned height for a horizontal connection to the end treatment.
4. Install posts in soil.
5. See Revised Standard Plans RSP A77N1 and RSP A77N2 for details.
6. Holes excavation in the slope to construct the buried post end anchor shall be backfilled with selected earth, placed in layers approximately 1'-0" thick. Each layer shall be moistened and thoroughly compacted.

STATE OF CALIFORNIA
DEPARTMENT OF TRANSPORTATION

METAL BEAM GUARD RAILING RECONSTRUCT INSTALLATION

NO SCALE

RSP A77L3 DATED JULY 19, 2013 SUPPLEMENTS THE STANDARD PLANS BOOK DATED 2010.

REVISED STANDARD PLAN RSP A77L3

2010 REVISED STANDARD PLAN RSP A77L3

DATE PLOTTED => 25-JUL-2014
TIME PLOTTED => 12:21

Dist	COUNTY	ROUTE	POST MILES TOTAL PROJECT	SHEET No.	TOTAL SHEETS
02	Sha	44	R4.2/R14.5	47	70

Randell D. Hiatt
REGISTERED CIVIL ENGINEER

July 19, 2013
PLANS APPROVAL DATE

REGISTERED PROFESSIONAL ENGINEER
Randell D. Hiatt
No. C50200
Exp. 6-30-15
CIVIL
STATE OF CALIFORNIA

THE STATE OF CALIFORNIA OR ITS OFFICERS OR AGENTS SHALL NOT BE RESPONSIBLE FOR THE ACCURACY OR COMPLETENESS OF SCANNED COPIES OF THIS PLAN SHEET.

TO ACCOMPANY PLANS DATED 06-24-14

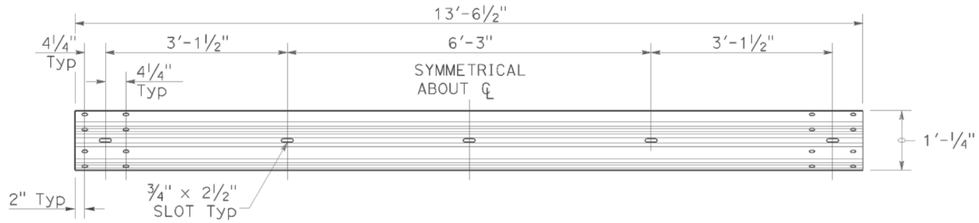

TYPICAL RAIL ELEMENT

NOTE:

1. Slotted holes for splice bolts to overlap ends of rail element.

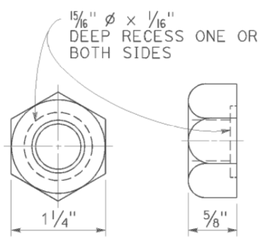

⅝" Ø RECESS NUT

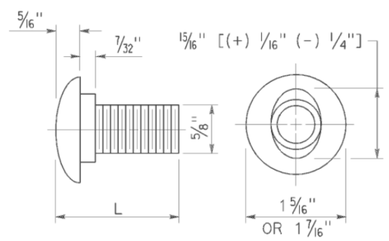

⅝" Ø BUTTON HEAD BOLT

BUTTON HEAD BOLT

L	THREAD LENGTH
1⅜"	FULL THREAD LENGTH
2"	FULL THREAD LENGTH
10"	4" Min THREAD LENGTH
18"	4" Min THREAD LENGTH
20"	4" Min THREAD LENGTH
22"	4" Min THREAD LENGTH
26"	4" Min THREAD LENGTH
36"	4" Min THREAD LENGTH
** 2¾"	2" Min THREAD LENGTH
** 19"	4" Min THREAD LENGTH

** For nested rail applications.

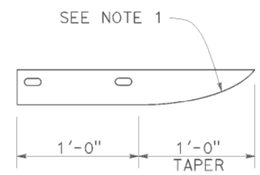

PLAN

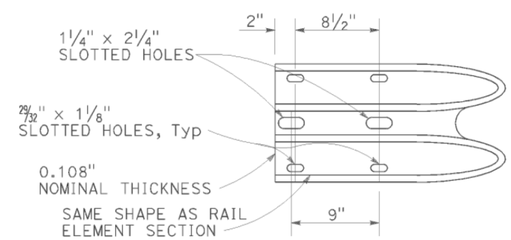

ELEVATION

END CAP
(TYPE A)

STATE OF CALIFORNIA
DEPARTMENT OF TRANSPORTATION

MIDWEST GUARDRAIL SYSTEM STANDARD HARDWARE

NO SCALE

RSP A77M1 DATED JULY 19, 2013 SUPPLEMENTS THE STANDARD PLANS BOOK DATED 2010.

REVISED STANDARD PLAN RSP A77M1

2010 REVISED STANDARD PLAN RSP A77M1

DATE PLOTTED => 25-JUL-2014
TIME PLOTTED => 12:22

Dist	COUNTY	ROUTE	POST MILES TOTAL PROJECT	SHEET No.	TOTAL SHEETS
02	Sha	44	R4.2/R14.5	48	70

Randell D. Hiatt
REGISTERED CIVIL ENGINEER

July 19, 2013
PLANS APPROVAL DATE

REGISTERED PROFESSIONAL ENGINEER
Randell D. Hiatt
No. C50200
Exp. 6-30-15
CIVIL
STATE OF CALIFORNIA

THE STATE OF CALIFORNIA OR ITS OFFICERS OR AGENTS SHALL NOT BE RESPONSIBLE FOR THE ACCURACY OR COMPLETENESS OF SCANNED COPIES OF THIS PLAN SHEET.

TO ACCOMPANY PLANS DATED 06-24-14

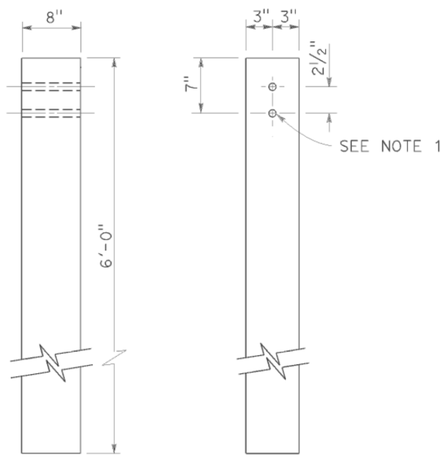

SIDE FRONT

6" x 8" WOOD POST
See Note 3

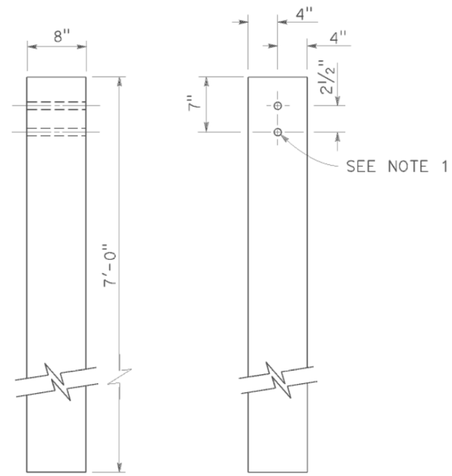

SIDE FRONT

8" x 8" WOOD POST
See Note 4

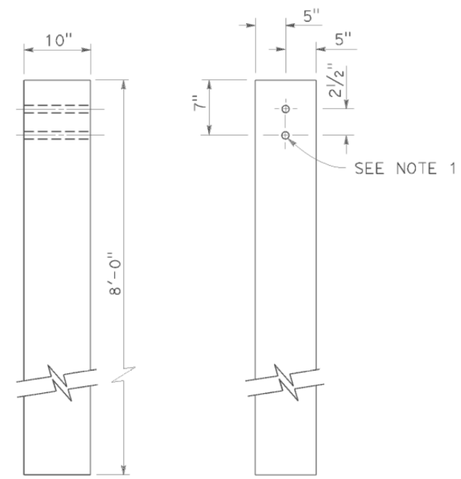

SIDE FRONT

10" x 10" WOOD POST
See Note 5

NOTES:

1. All holes in wood posts and blocks shall be ¾" Dia ± 1/16".
2. Dimensions shown for wood post are nominal.
3. This post and block combination used for standard line post sections of MGS.
4. This post and 8" x 12" block combination used for line post sections of MGS on narrow roadways.
5. This post and 8" x 12" block combination is typically used where strengthened line post sections of MGS are warranted to shield fixed objects.
6. See Revised Standard Plan RSP A77L3 for use of 6" x 8" and 8" x 8" wood blocks.

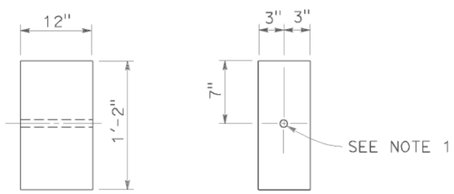

SIDE FRONT

6" x 12" WOOD BLOCK
See Note 3

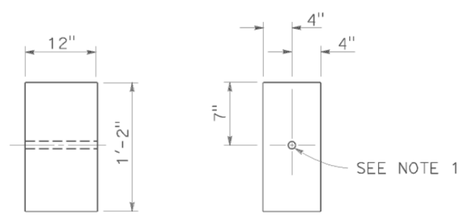

SIDE FRONT

8" x 12" WOOD BLOCK

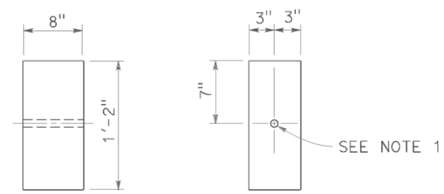

SIDE FRONT

6" x 8" WOOD BLOCK
Only for use with metal beam guard rail see Note 6

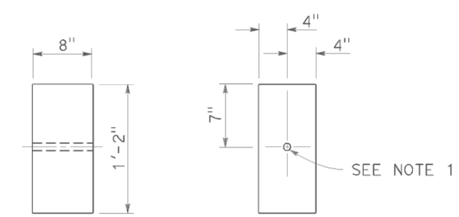

SIDE FRONT

8" x 8" WOOD BLOCK
Only for use with metal beam guard rail see Note 6

STATE OF CALIFORNIA
DEPARTMENT OF TRANSPORTATION

MIDWEST GUARDRAIL SYSTEM WOOD POST AND WOOD BLOCK DETAILS

NO SCALE

RSP A77N1 DATED JULY 19, 2013 SUPPLEMENTS THE STANDARD PLANS BOOK DATED 2010.

REVISED STANDARD PLAN RSP A77N1

2010 REVISED STANDARD PLAN RSP A77N1

DATE PLOTTED => 25-JUL-2014
TIME PLOTTED => 12:22

Dist	COUNTY	ROUTE	POST MILES TOTAL PROJECT	SHEET No.	TOTAL SHEETS
02	Sha	44	R4.2/R14.5	49	70

Randell D. Hiatt
REGISTERED CIVIL ENGINEER

November 15, 2013
PLANS APPROVAL DATE

REGISTERED PROFESSIONAL ENGINEER
Randell D. Hiatt
No. C50200
Exp. 6-30-15
CIVIL
STATE OF CALIFORNIA

THE STATE OF CALIFORNIA OR ITS OFFICERS OR AGENTS SHALL NOT BE RESPONSIBLE FOR THE ACCURACY OR COMPLETENESS OF SCANNED COPIES OF THIS PLAN SHEET.

TO ACCOMPANY PLANS DATED 06-24-14

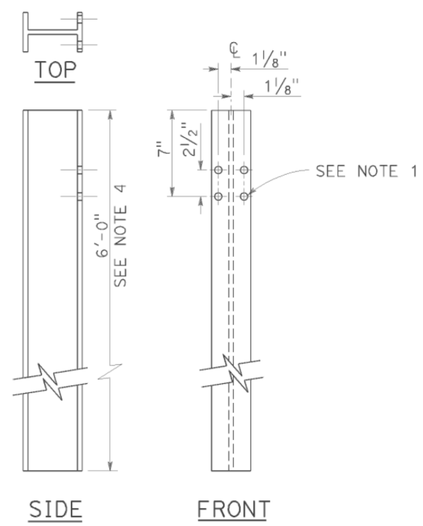

W6 x 9 OR W6 x 8.5
STEEL POST
See Note 4

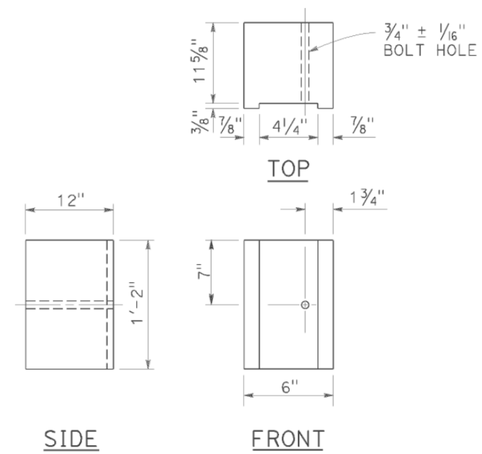

6" x 12"
NOTCHED WOOD BLOCK
See Notes 2 and 3

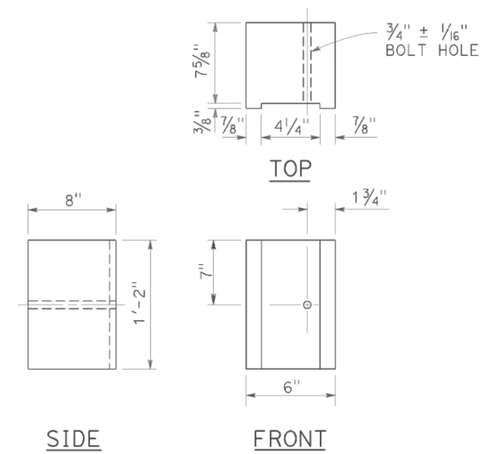

6" x 8"
NOTCHED WOOD BLOCK
Only for use with metal beam guard railing. See Note 5

NOTES:

1. All holes in steel post shall be 13/16" Dia maximum.
2. Dimensions shown for wood block are nominal.
3. Notched face of block faces steel post.
4. 6'-0" length posts to be used for typical roadway installation. See Revised Standard Plan RSP A77N3.
5. See Revised Standard Plan RSP A77L3 for use of 6" x 8" and 8" x 8" notched wood blocks.
6. This post and 8" x 12" block combination to be used for line post sections of MGS on narrow roadways and where strengthened line post sections of MGS are warranted to shield fixed objects.

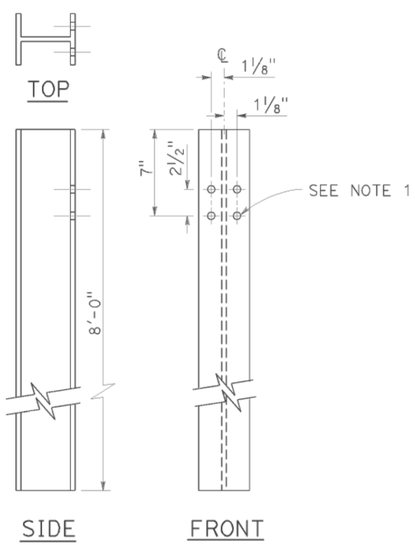

W6 x 15
STEEL POST
See Note 6

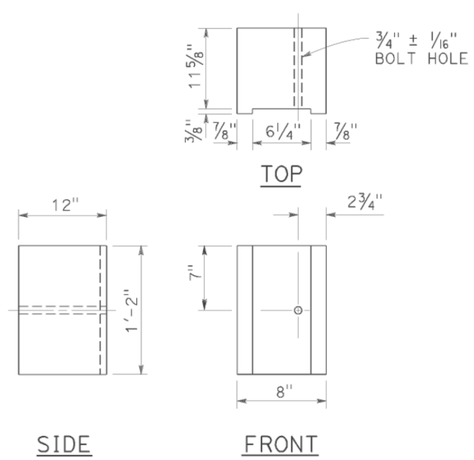

8" x 12"
NOTCHED WOOD BLOCK
See Notes 2 and 3

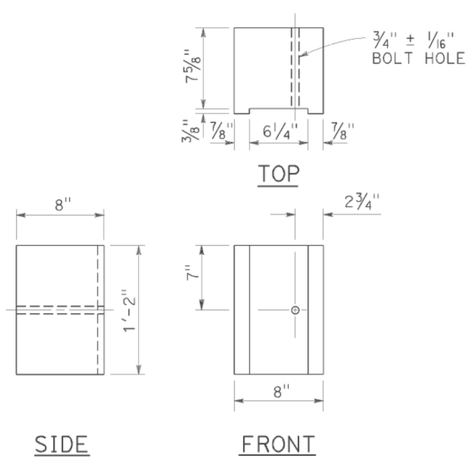

8" x 8"
NOTCHED WOOD BLOCK
Only for use with metal beam guard railing. See Note 5

STATE OF CALIFORNIA
DEPARTMENT OF TRANSPORTATION

MIDWEST GUARDRAIL SYSTEM STEEL POST AND NOTCHED WOOD BLOCK DETAILS

NO SCALE

RSP A77N2 DATED NOVEMBER 15, 2013 SUPERSEDES RSP A77N2
DATED JULY 19, 2013 THAT SUPPLEMENTS THE STANDARD PLANS BOOK DATED 2010.

REVISED STANDARD PLAN RSP A77N2

2010 REVISED STANDARD PLAN RSP A77N2

DATE PLOTTED => 25-JUL-2014
TIME PLOTTED => 12:22

Dist	COUNTY	ROUTE	POST MILES TOTAL PROJECT	SHEET No.	TOTAL SHEETS
02	Sha	44	R4.2/R14.5	50	70

Randell D. Hiatt
REGISTERED CIVIL ENGINEER

July 19, 2013
PLANS APPROVAL DATE

REGISTERED PROFESSIONAL ENGINEER
Randell D. Hiatt
No. C50200
Exp. 6-30-15
CIVIL
STATE OF CALIFORNIA

THE STATE OF CALIFORNIA OR ITS OFFICERS OR AGENTS SHALL NOT BE RESPONSIBLE FOR THE ACCURACY OR COMPLETENESS OF SCANNED COPIES OF THIS PLAN SHEET.

TO ACCOMPANY PLANS DATED 06-24-14

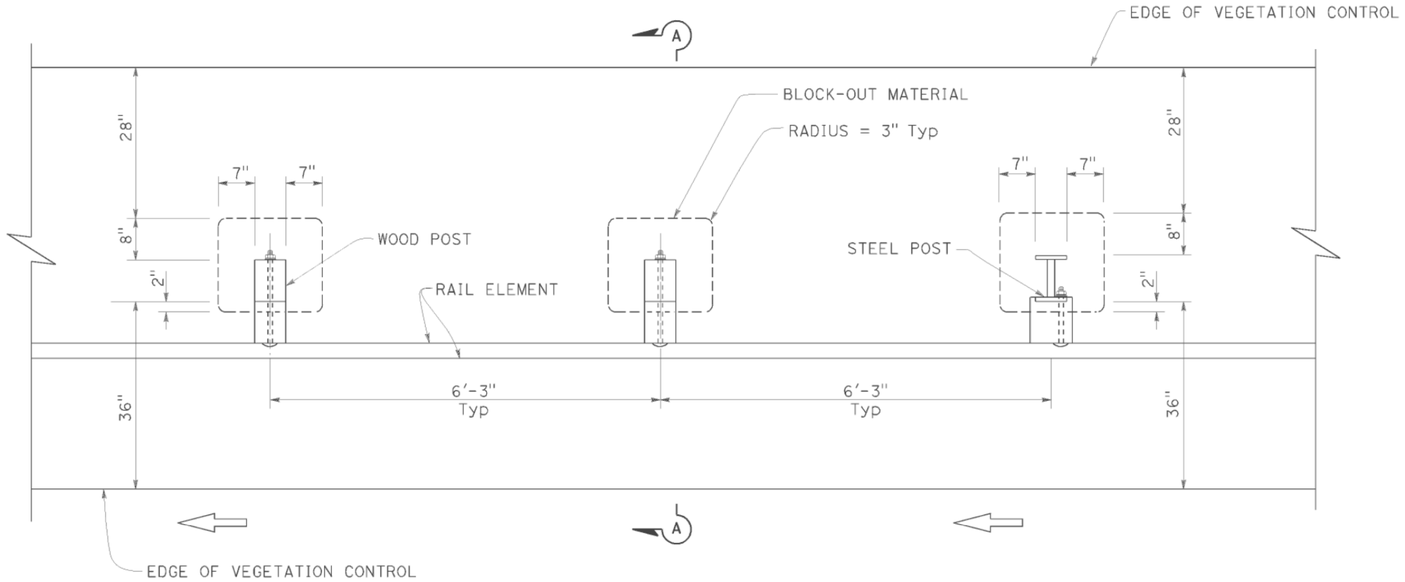

PLAN

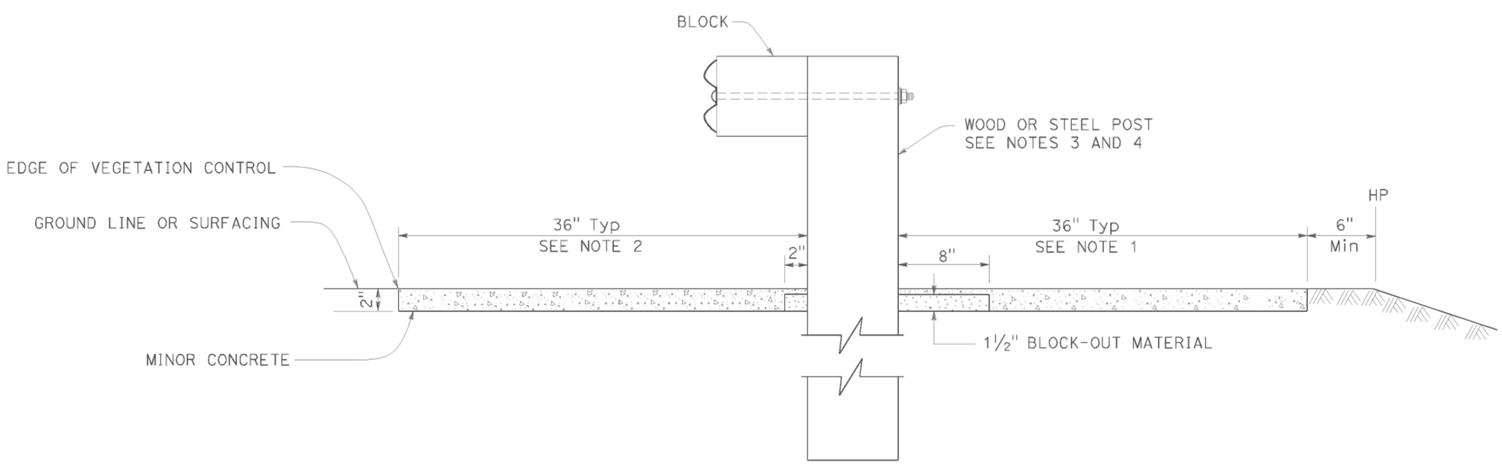

SECTION A-A

NOTES:

1. Where the distance between back of post and hinge point is less than 42", construct vegetation control to 6" from hinge point while maintaining the 8" block-out at back of post. If the 8" block-out at back of post can not be maintained, construct vegetation control flush with the back edge of post.
2. Where dike is constructed under railing, construct vegetation control to back edge of dike. Where paved shoulder is constructed within 36" in front of the post, construct vegetation control to the edge of paved shoulder.
3. For wood post sizes, see Revised Standard Plan RSP A77N1.
4. For steel post sizes, see Revised Standard Plan RSP A77N2.
5. For details not shown, see Revised Standard Plans RSP A77L1 and RSP A77L2.

STATE OF CALIFORNIA
DEPARTMENT OF TRANSPORTATION

MIDWEST GUARDRAIL SYSTEM TYPICAL VEGETATION CONTROL STANDARD RAILING SECTION

NO SCALE

RSP A77N5 DATED JULY 19, 2013 SUPPLEMENTS THE STANDARD PLANS BOOK DATED 2010.

REVISED STANDARD PLAN RSP A77N5

2010 REVISED STANDARD PLAN RSP A77N5

DATE PLOTTED => 25-JUL-2014
TIME PLOTTED => 12:22

Dist	COUNTY	ROUTE	POST MILES TOTAL PROJECT	SHEET No.	TOTAL SHEETS
02	Sha	44	R4.2/R14.5	51	70

Randell D. Hiatt
REGISTERED CIVIL ENGINEER

July 19, 2013
PLANS APPROVAL DATE

REGISTERED PROFESSIONAL ENGINEER
Randell D. Hiatt
No. C50200
Exp. 6-30-15
CIVIL
STATE OF CALIFORNIA

THE STATE OF CALIFORNIA OR ITS OFFICERS OR AGENTS SHALL NOT BE RESPONSIBLE FOR THE ACCURACY OR COMPLETENESS OF SCANNED COPIES OF THIS PLAN SHEET.

TO ACCOMPANY PLANS DATED 06-24-14

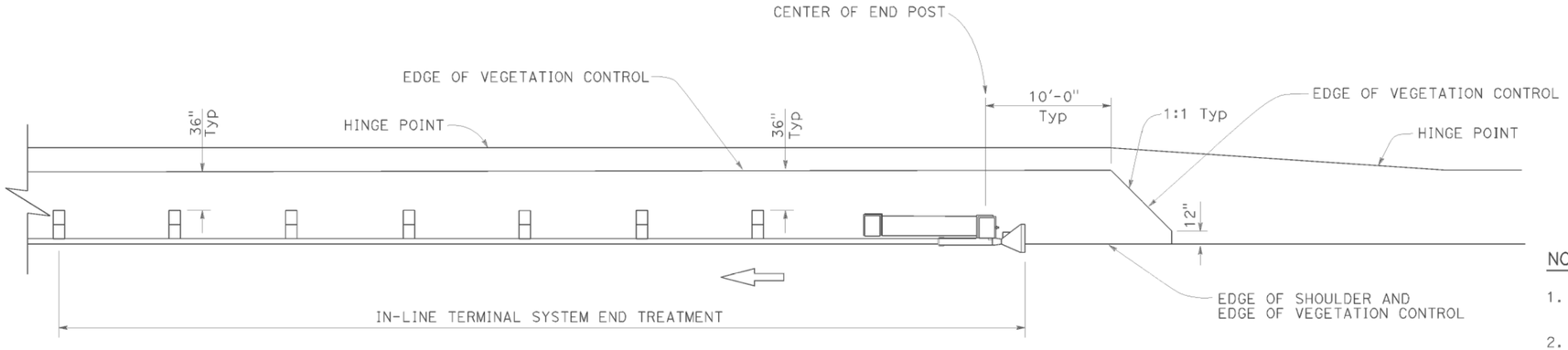

PLAN

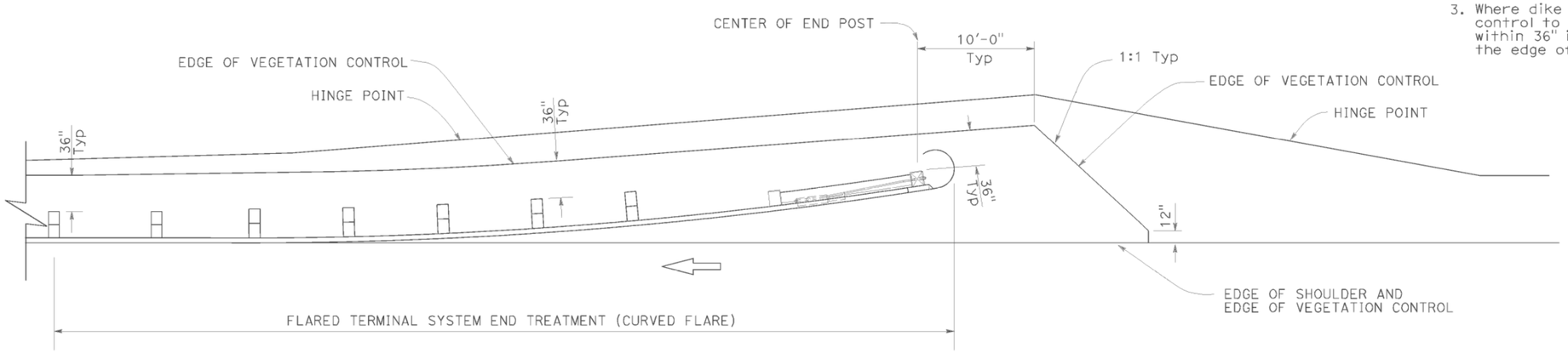

PLAN

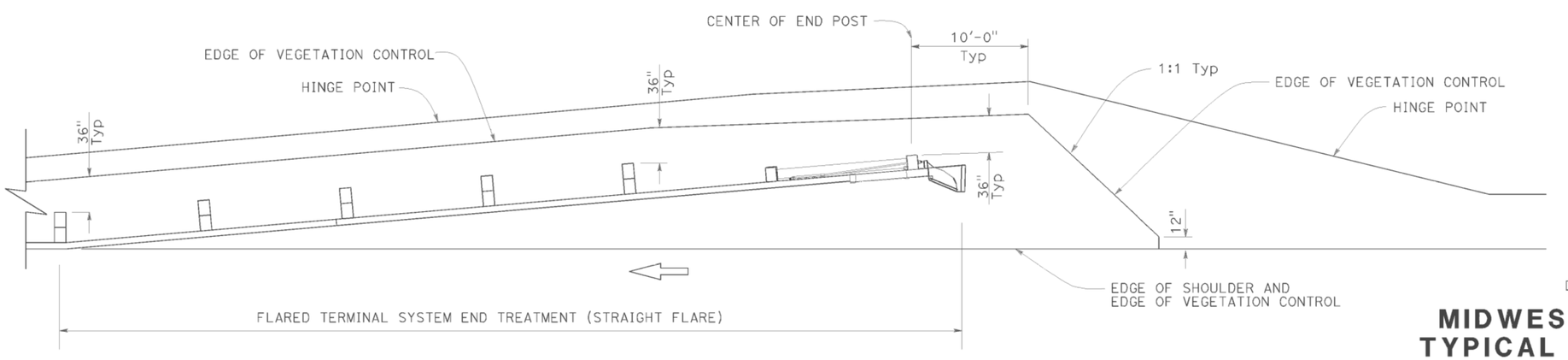

PLAN

NOTES:

1. See Revised Standard Plan RSP A77N5 for additional vegetation control details.
2. Where the distance between back of post and hinge point is less than 42", construct vegetation control to 6" from hinge point while maintaining the 8" block-out at back of post. If the 8" block-out at back of post can not be maintained, construct vegetation control flush with the back edge of post.
3. Where dike is constructed under railing, construct vegetation control to back edge of dike. Where paved shoulder is constructed within 36" in front of the post, construct vegetation control to the edge of paved shoulder.

STATE OF CALIFORNIA
DEPARTMENT OF TRANSPORTATION

MIDWEST GUARDRAIL SYSTEM TYPICAL VEGETATION CONTROL FOR TERMINAL SYSTEM END TREATMENTS

NO SCALE

RSP A77N6 DATED JULY 19, 2013 SUPPLEMENTS THE STANDARD PLANS BOOK DATED 2010.

REVISED STANDARD PLAN RSP A77N6

2010 REVISED STANDARD PLAN RSP A77N6

DATE PLOTTED => 25-JUL-2014
TIME PLOTTED => 12:22

Dist	COUNTY	ROUTE	POST MILES TOTAL PROJECT	SHEET No.	TOTAL SHEETS
02	Sha	44	R4.2/R14.5	52	70

Randell D. Hiatt
REGISTERED CIVIL ENGINEER

July 19, 2013
PLANS APPROVAL DATE

REGISTERED PROFESSIONAL ENGINEER
Randell D. Hiatt
No. C50200
Exp. 6-30-15
CIVIL
STATE OF CALIFORNIA

THE STATE OF CALIFORNIA OR ITS OFFICERS OR AGENTS SHALL NOT BE RESPONSIBLE FOR THE ACCURACY OR COMPLETENESS OF SCANNED COPIES OF THIS PLAN SHEET.

TO ACCOMPANY PLANS DATED 06-24-14

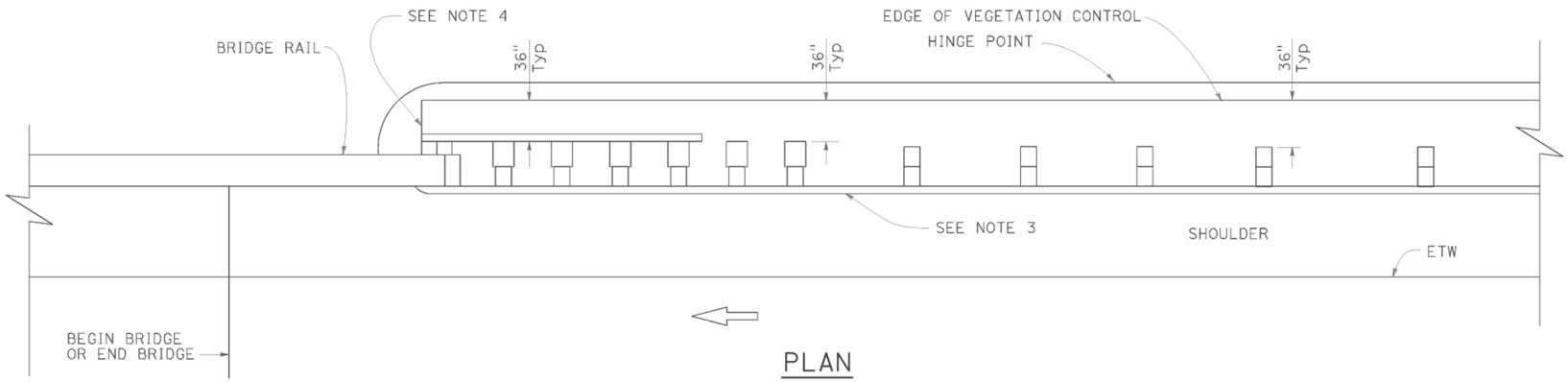

PLAN

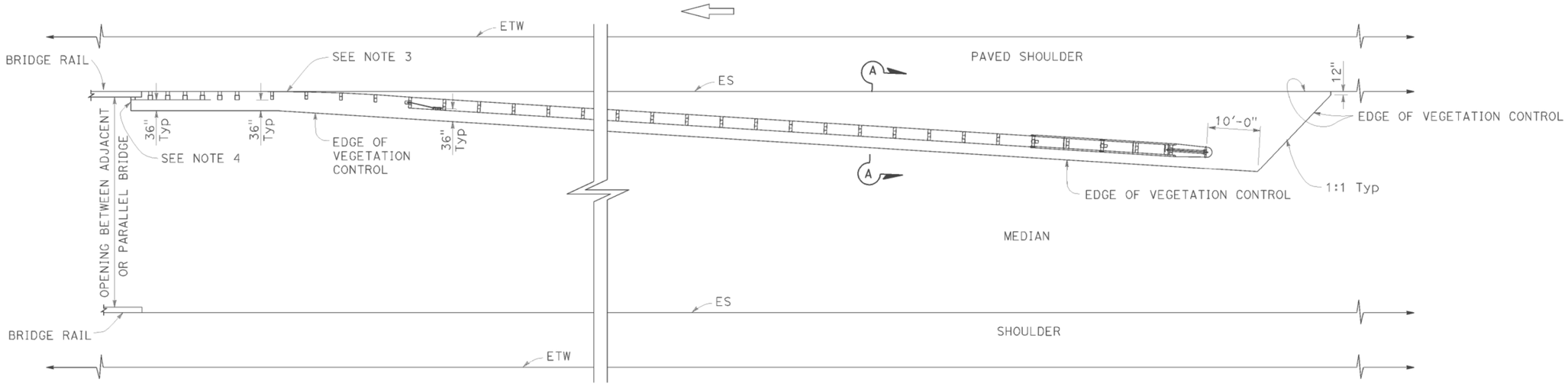

PLAN

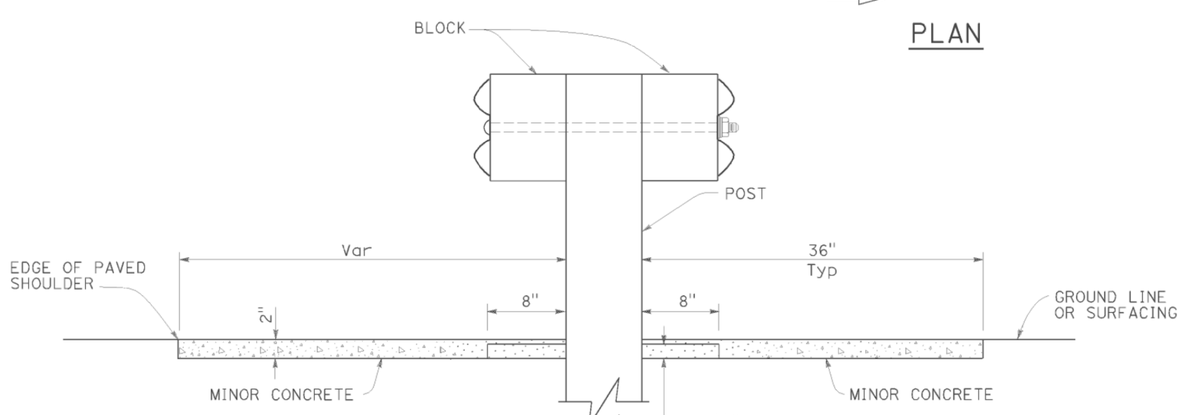

SECTION A-A

NOTES:

1. See Revised Standard Plan RSP A77N5 for additional vegetation control details.
2. Where the distance between back of post and hinge point is less than 42", construct vegetation control to 6" from hinge point while maintaining the 8" block-out at back of post. If the 8" block-out at back of post can not be maintained, construct vegetation control flush with the back edge of post.
3. Where dike is constructed under railing, construct vegetation control to back edge of dike. Where paved shoulder is constructed within 36" in front of the post, construct vegetation control to the edge of paved shoulder.
4. End vegetation control at end of backside rail element.

STATE OF CALIFORNIA
DEPARTMENT OF TRANSPORTATION

MIDWEST GUARDRAIL SYSTEM TYPICAL VEGETATION CONTROL AT STRUCTURE APPROACH

NO SCALE

RSP A77N7 DATED JULY 19, 2013 SUPPLEMENTS THE STANDARD PLANS BOOK DATED 2010.

REVISED STANDARD PLAN RSP A77N7

2010 REVISED STANDARD PLAN RSP A77N7

DATE PLOTTED => 25-JUL-2014
TIME PLOTTED => 12:22

Dist	COUNTY	ROUTE	POST MILES TOTAL PROJECT	SHEET No.	TOTAL SHEETS
02	Sha	44	R4.2/R14.5	53	70

Randell D. Hiatt
REGISTERED CIVIL ENGINEER

July 19, 2013
PLANS APPROVAL DATE

REGISTERED PROFESSIONAL ENGINEER Randell D. Hiatt No. C50200 Exp. 6-30-15 CIVIL STATE OF CALIFORNIA

THE STATE OF CALIFORNIA OR ITS OFFICERS OR AGENTS SHALL NOT BE RESPONSIBLE FOR THE ACCURACY OR COMPLETENESS OF SCANNED COPIES OF THIS PLAN SHEET.

TO ACCOMPANY PLANS DATED 06-24-14

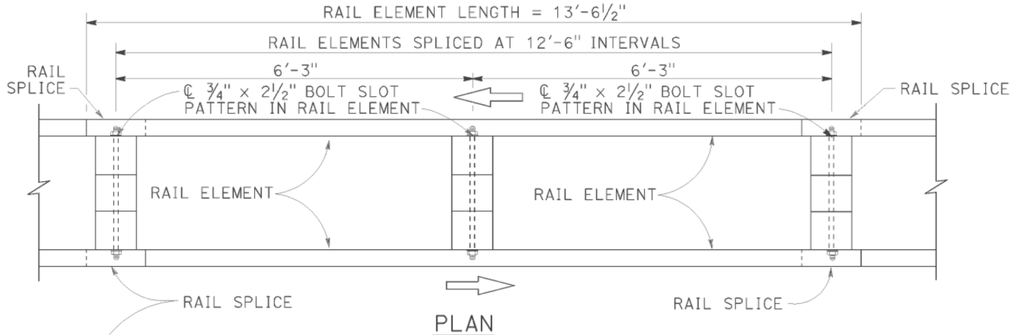

PLAN

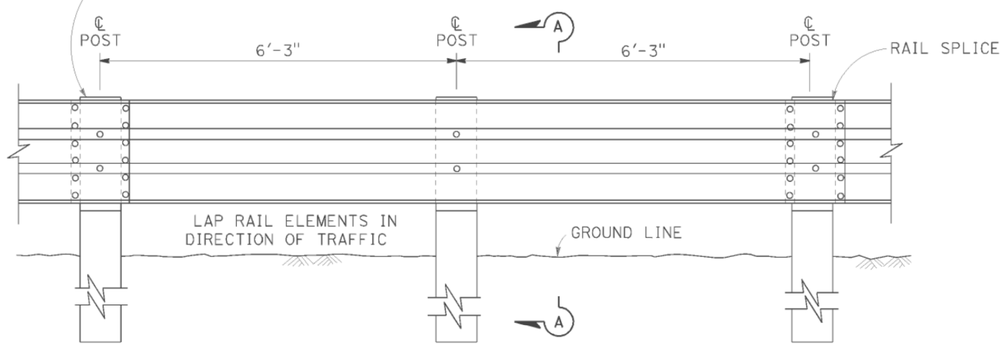

ELEVATION

DOUBLE THRIE BEAM BARRIER

(Wood post and blocks)
See Note 1

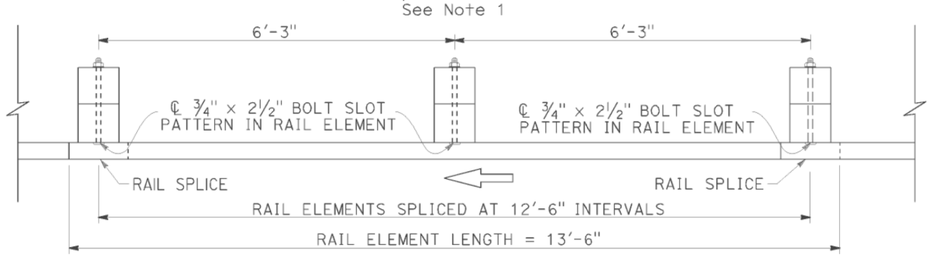

PLAN

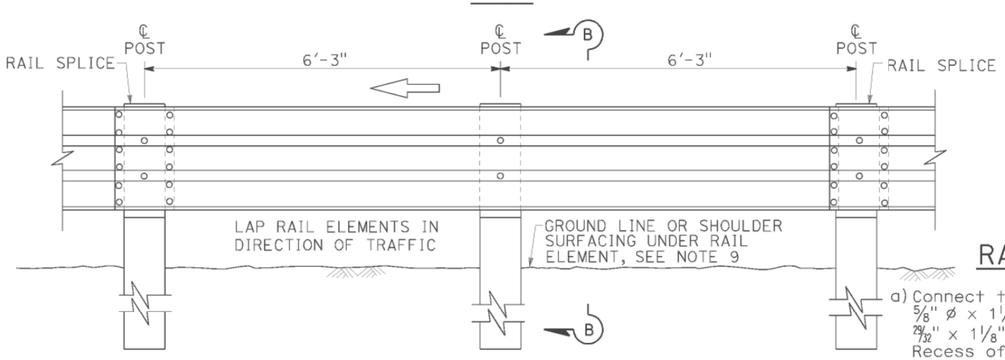

ELEVATION

SINGLE THRIE BEAM BARRIER

(Wood post and blocks)
See Note 1

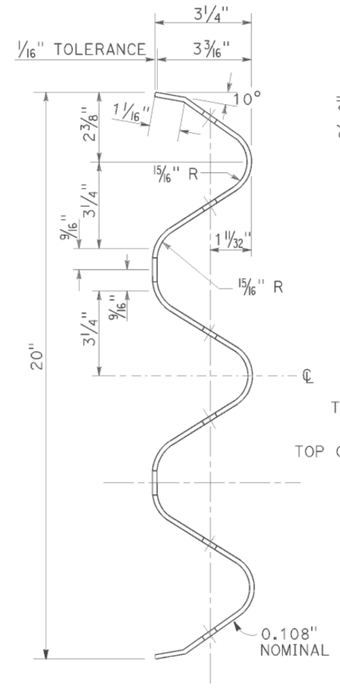

SECTION THRU
RAIL ELEMENT

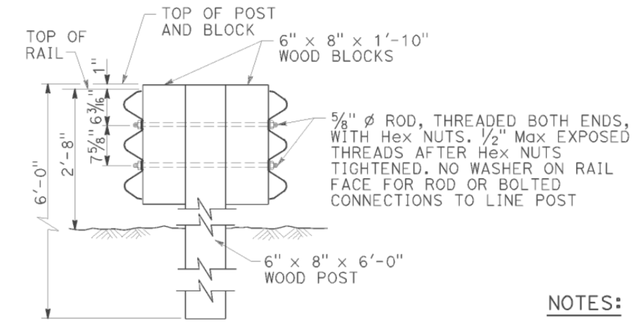

SECTION A-A

TYPICAL WOOD LINE POST INSTALLATION

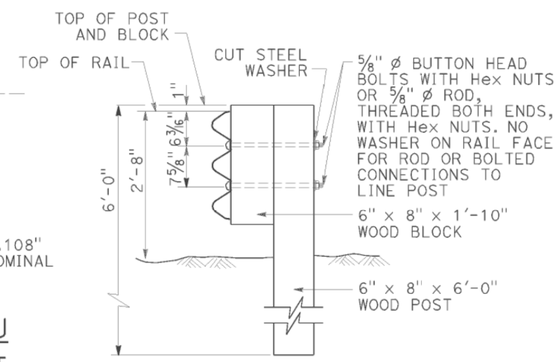

Where bolts are used, install so that the threaded end of the bolts and nuts are placed away from traffic side of rail.

SECTION B-B

TYPICAL WOOD LINE POST INSTALLATION

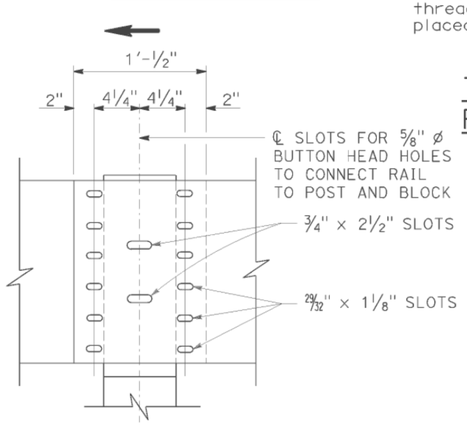

ELEVATION

RAIL ELEMENT SPLICE DETAIL

a) Connect the overlapped ends of the thrie beam rail elements with ⅝" ø x 1¼" button head oval shoulder bolts inserted into the 29/32" x 1⅛" slots and bolted together with ⅝" ø recessed hex nuts. Recess of hex nut points toward rail element. A total of 12 bolts and nuts are to be used at each rail splice connection.

b) The ends of the rail elements are to be overlapped in the direction of traffic (see details).

c) Where end cap is to be attached to the end of a rail element, a total of 4 of the above described splice bolts and nuts are to be used. Where a return cap is to be attached to the ends of rail elements, a total of 8 of the above described splice bolts and nuts are to be used.

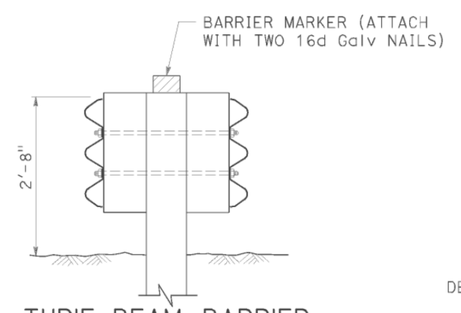

THRIE BEAM BARRIER DELINEATION

See Note 8

NOTES:

1. For details of steel post thrie beam barrier, see Standard Plan A78B.
2. For details of standard hardware, posts and blocks used to construct thrie beam barrier, see Standard Plan A78C1 and Revised Standard Plan RSP A78C2.
3. Thrie beam barrier post spacing to be 6'-3" center to center, except as otherwise noted.
4. Top of barrier rail to be 2'-8" above ground line or shoulder surfacing under the rail element.
5. For barrier end treatments and barrier connections, see Standard Plans A78E3 and A78G, and Revised Standard Plans RSP A78E1, RSP A78E2 RSP A77Q1, RSP A77Q2 and RSP A78H.
6. For connection to Concrete Barrier (Type 60), see Standard Plans A78I.
7. For details of thrie beam barrier on bridge see Standard Plan A78D2. For details of thrie beam barrier at fixed object, see Revised Standard Plan RSP A78D1.
8. Median barrier delineation to be used when required by the Special Provisions. Spacing of barrier markers to match spacing of raised pavement markers on adjacent median edgeline pavement delineation.
9. Install posts in soil.

STATE OF CALIFORNIA
DEPARTMENT OF TRANSPORTATION

THRIE BEAM BARRIER STANDARD BARRIER RAILING SECTION (WOOD POST WITH WOOD BLOCK)

NO SCALE

RSP A78A DATED JULY 19, 2013 SUPERSEDES STANDARD PLAN A78A DATED MAY 20, 2011 - PAGE 89 OF THE STANDARD PLANS BOOK DATED 2010.

REVISED STANDARD PLAN RSP A78A

2010 REVISED STANDARD PLAN RSP A78A

DATE PLOTTED => 25-JUL-2014
TIME PLOTTED => 12:22

Dist	COUNTY	ROUTE	POST MILES TOTAL PROJECT	SHEET No.	TOTAL SHEETS
02	Sha	44	R4.2/R14.5	54	70

Randell D. Hiatt
REGISTERED CIVIL ENGINEER

July 19, 2013
PLANS APPROVAL DATE

REGISTERED PROFESSIONAL ENGINEER
Randell D. Hiatt
No. C50200
Exp. 6-30-15
CIVIL
STATE OF CALIFORNIA

THE STATE OF CALIFORNIA OR ITS OFFICERS OR AGENTS SHALL NOT BE RESPONSIBLE FOR THE ACCURACY OR COMPLETENESS OF SCANNED COPIES OF THIS PLAN SHEET.

TO ACCOMPANY PLANS DATED 06-24-14

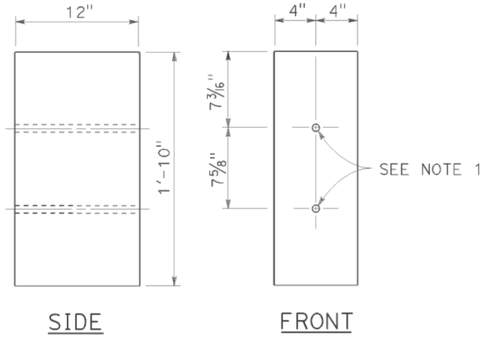

8" x 12"
WOOD BLOCK

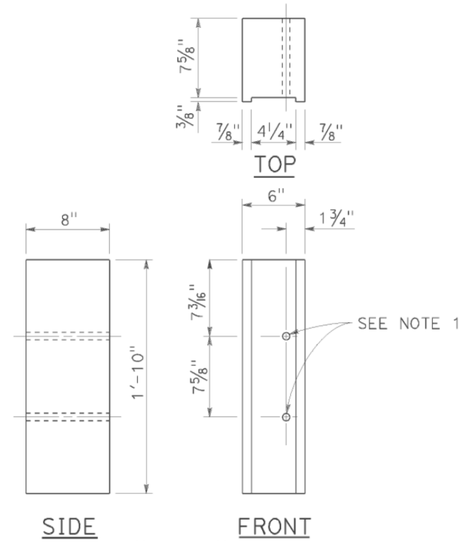

6" x 8"
NOTCHED WOOD BLOCK
See Notes 3 and 5

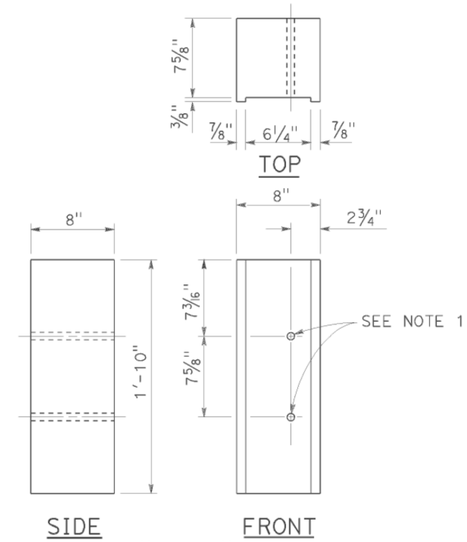

8" x 8"
NOTCHED WOOD BLOCK
See Notes 4 and 5

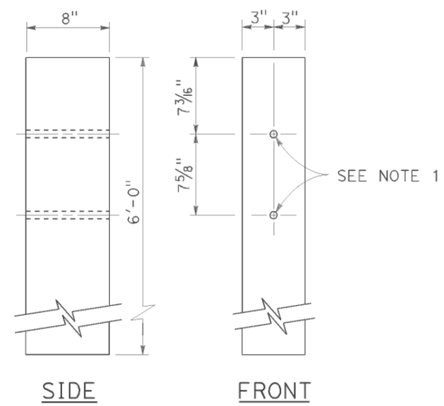

6" x 8"
WOOD POST

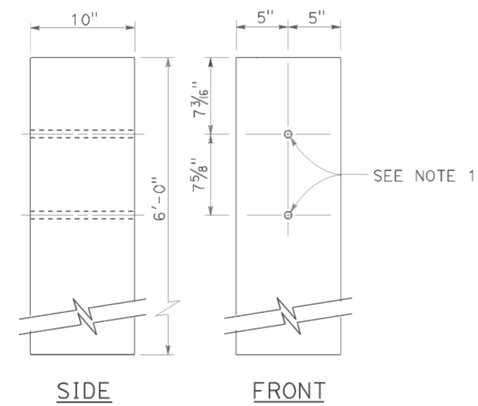

10" x 10"
WOOD POST

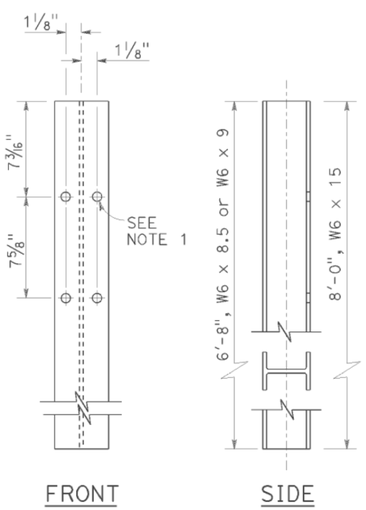

STEEL POST
W6 x 9 or W6 x 8.5 and W6 x 15

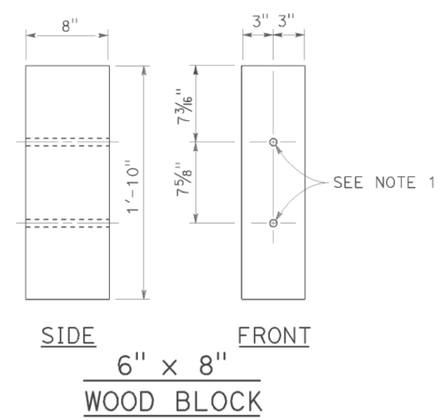

6" x 8"
WOOD BLOCK

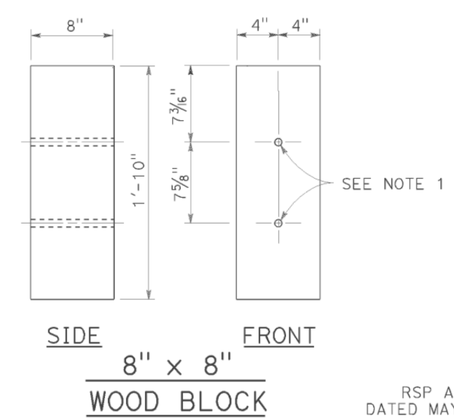

8" x 8"
WOOD BLOCK

NOTES:

1. All holes in steel post to be 13/16" Dia maximum. Holes in wood posts and wood blocks to be 3/4" Dia ±1/16".
2. Dimensions shown for wood post are nominal.
3. For use with W6 x 8.5 or W6 x 9 steel post.
4. For use with W6 x 15 steel post.
5. Notched face of block faces steel post.

STATE OF CALIFORNIA
DEPARTMENT OF TRANSPORTATION

THRIE BEAM BARRIER POST AND BLOCK DETAILS

NO SCALE

RSP A78C2 DATED JULY 19, 2013 SUPERSEDES STANDARD PLAN A78C2 DATED MAY 20, 2011 - PAGE 92 OF THE STANDARD PLANS BOOK DATED 2010.

REVISED STANDARD PLAN RSP A78C2

2010 REVISED STANDARD PLAN RSP A78C2

DATE PLOTTED => 25-JUL-2014
TIME PLOTTED => 12:22

Dist	COUNTY	ROUTE	POST MILES TOTAL PROJECT	SHEET No.	TOTAL SHEETS
02	Sha	44	R4.2/R14.5	55	70

Randell D. Hiatt
REGISTERED CIVIL ENGINEER

July 19, 2013
PLANS APPROVAL DATE

REGISTERED PROFESSIONAL ENGINEER
Randell D. Hiatt
No. C50200
Exp. 6-30-15
CIVIL
STATE OF CALIFORNIA

THE STATE OF CALIFORNIA OR ITS OFFICERS OR AGENTS SHALL NOT BE RESPONSIBLE FOR THE ACCURACY OR COMPLETENESS OF SCANNED COPIES OF THIS PLAN SHEET.

TO ACCOMPANY PLANS DATED 06-24-14

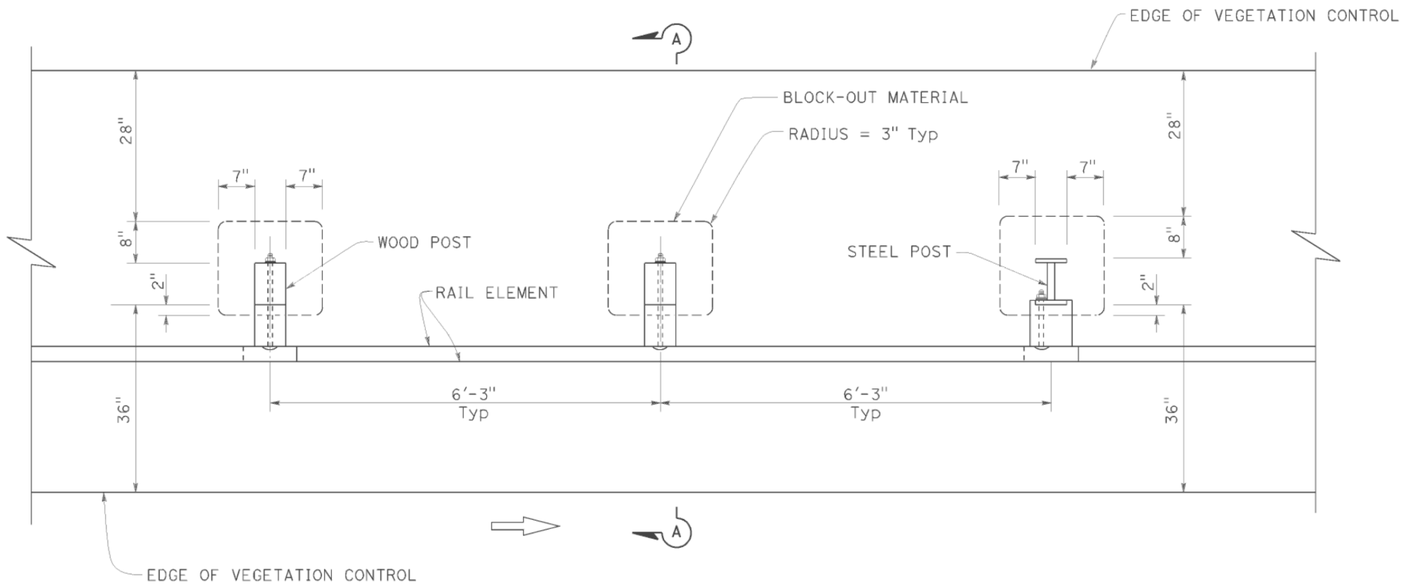

PLAN

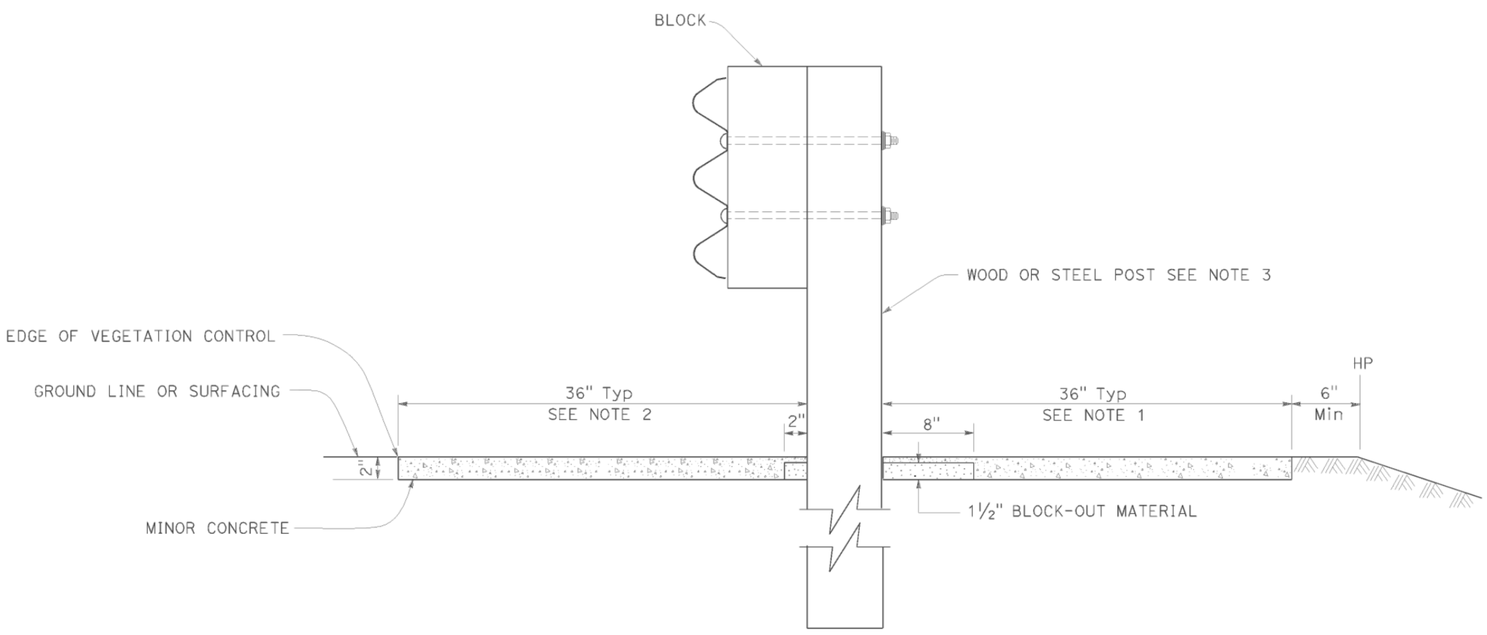

SECTION A-A

NOTES:

1. Where the distance between back of post and hinge point is less than 42", construct vegetation control to 6" from hinge point while maintaining the 8" block-out at back of post. If the 8" block-out at back of post can not be maintained, construct vegetation control flush with the back edge of post.
2. Where dike is constructed under barrier, construct vegetation control to back edge of dike. Where paved shoulder is constructed within 36" in front of the post, construct vegetation control to the edge of paved shoulder.
3. For wood and steel post sizes, see Revised Standard Plan RSP A77N2.
4. For details not shown, see Standard Plan A78B and Revised Standard Plan RSP A78A.

STATE OF CALIFORNIA
DEPARTMENT OF TRANSPORTATION

SINGLE THRIE BEAM BARRIER TYPICAL VEGETATION CONTROL STANDARD BARRIER RAILING SECTION

NO SCALE

RSP A78C3 DATED JULY 19, 2013 SUPERSEDES STANDARD PLAN A78C3
DATED MAY 20, 2011 - PAGE 93 OF THE STANDARD PLANS BOOK DATED 2010.

REVISED STANDARD PLAN RSP A78C3

2010 REVISED STANDARD PLAN RSP A78C3

DATE PLOTTED => 25-JUL-2014
TIME PLOTTED => 12:22

Dist	COUNTY	ROUTE	POST MILES TOTAL PROJECT	SHEET No.	TOTAL SHEETS
02	Sha	44	R4.2/R14.5	56	70

REGISTERED CIVIL ENGINEER

July 19, 2013
PLANS APPROVAL DATE

REGISTERED PROFESSIONAL ENGINEER
Michael Janzen
No. 44788
Exp. 03-31-14
CIVIL
STATE OF CALIFORNIA

THE STATE OF CALIFORNIA OR ITS OFFICERS OR AGENTS SHALL NOT BE RESPONSIBLE FOR THE ACCURACY OR COMPLETENESS OF SCANNED COPIES OF THIS PLAN SHEET.

TO ACCOMPANY PLANS DATED 06-24-14

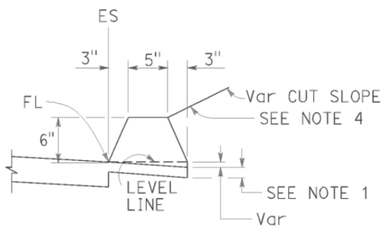

TYPE A
See Note 3

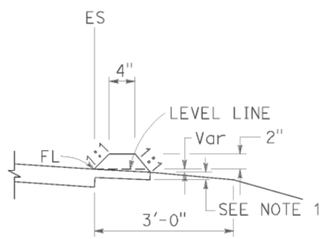

TYPE C

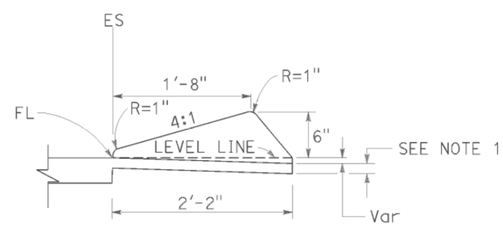

TYPE D

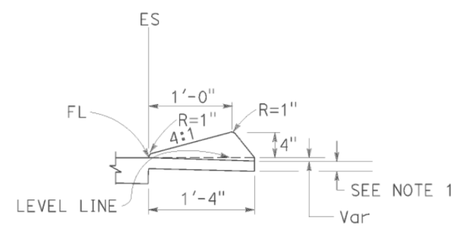

TYPE E

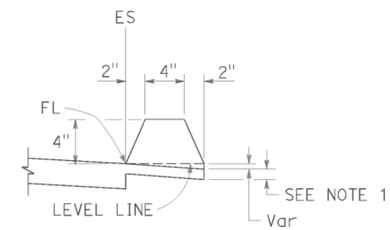

TYPE F
See Note 5

DIKES

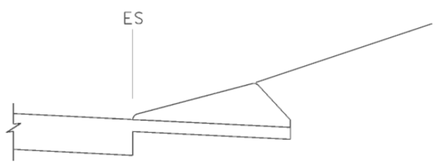

CASE C-1
Cut Slope

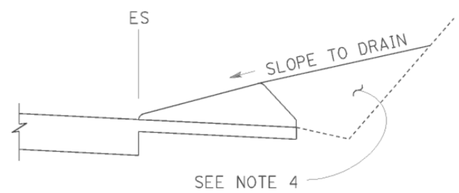

CASE C-2
Cut Slope

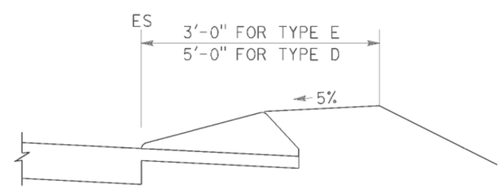

CASE F

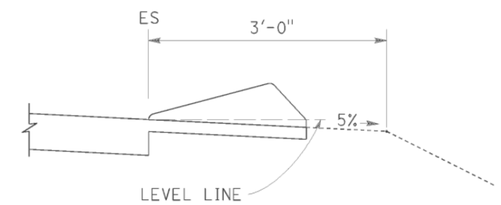

CASE R
See Note 2

TYPE D AND E BACKFILL DETAILS

NOTES:

1. For HMA shoulders only, extend top layer of HMA placed on the shoulder under dike with no joint at the ES. For projects with OGFC shoulders, do not extend OGFC under dike. See project plans for modified dike detail.
2. Case R applies to retrofit only projects where restrictive conditions do not provide enough width for Case F backfill.
3. Type A dike only to be used where restrictive slope conditions do not provide enough width to use Type D or Type E dike.
4. Fill and compact with excavated material to top of dike.
5. Use Type F dike, where dike is required with guard railing installations. See Revised Standard Plan RSP A77N4 for dike positioning details.

DIKE QUANTITIES

TYPE	CUBIC YARDS PER LINEAR FOOT
A	0.0135
C	0.0038
D	0.0293
E	0.0130
F	0.0066

Quantities based on 5% cross slope.

STATE OF CALIFORNIA
DEPARTMENT OF TRANSPORTATION

HOT MIX ASPHALT DIKES

NO SCALE

RSP A87B DATED JULY 19, 2013 SUPERSEDES STANDARD PLAN A87B
DATED MAY 20, 2011 - PAGE 120 OF THE STANDARD PLANS BOOK DATED 2010.

REVISED STANDARD PLAN RSP A87B

2010 REVISED STANDARD PLAN RSP A87B

DATE PLOTTED => 25-JUL-2014
TIME PLOTTED => 12:23

DIST	COUNTY	ROUTE	POST MILES TOTAL PROJECT	SHEET No.	TOTAL SHEETS
02	Sha	44	R4.2/R14.5	57	70

REGISTERED CIVIL ENGINEER

November 15, 2013
PLANS APPROVAL DATE

REGISTERED PROFESSIONAL ENGINEER Cornelis M. Hakim No. C55610 Exp. 12-31-14 CIVIL STATE OF CALIFORNIA

THE STATE OF CALIFORNIA OR ITS OFFICERS OR AGENTS SHALL NOT BE RESPONSIBLE FOR THE ACCURACY OR COMPLETENESS OF SCANNED COPIES OF THIS PLAN SHEET.

TO ACCOMPANY PLANS DATED 06-24-14

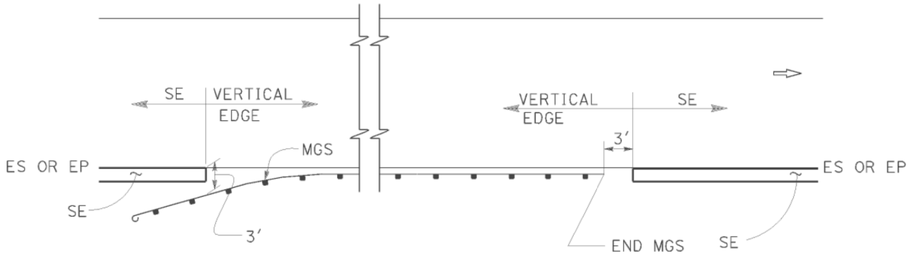

MGS

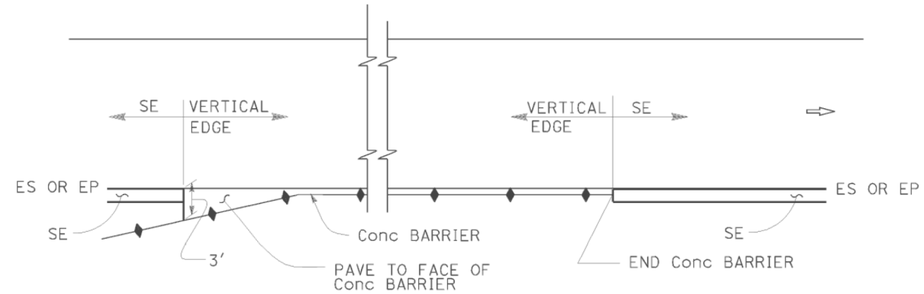

CONCRETE BARRIER

ABBREVIATIONS:

SE SAFETY EDGE

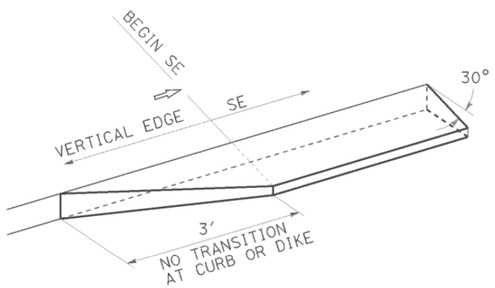

TRANSITION DETAIL FOR CONCRETE ONLY

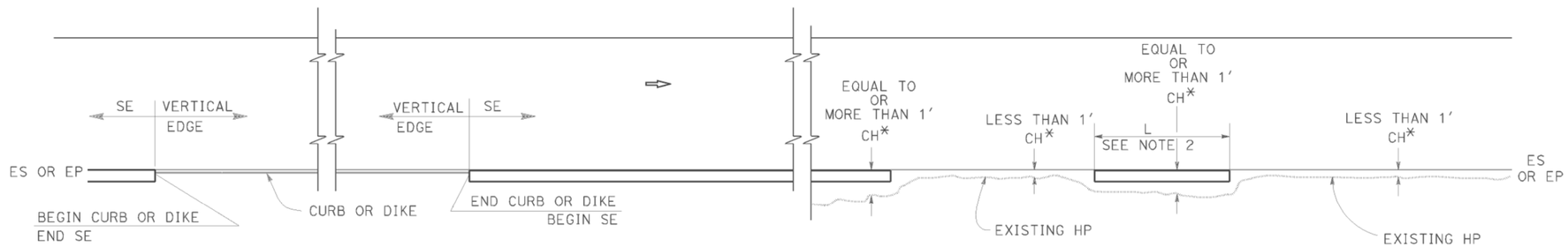

CURB OR DIKE

NARROW SIDE SLOPE

* CH = Distance from ES or EP to existing HP.

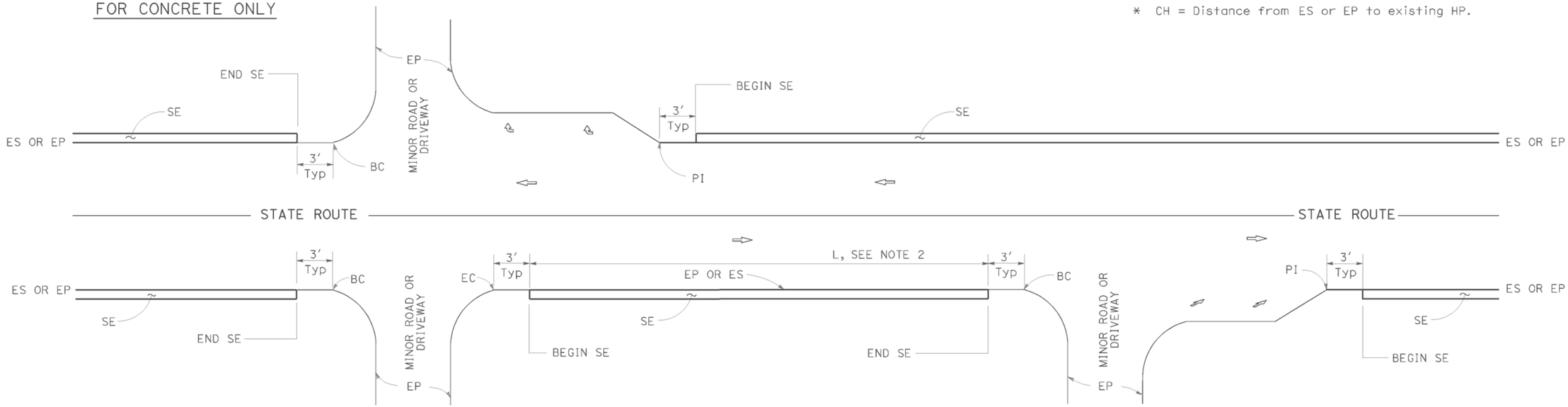

INTERSECTION

MINOR ROADWAY OR DRIVEWAY

DRIVEWAY AND INTERSECTION

NOTES:

1. For details not shown, see Revised Standard Plans RSP P75 and RSP P76.
2. Safety edge is optional when L is less than 30'.

STATE OF CALIFORNIA
DEPARTMENT OF TRANSPORTATION

PAVEMENT EDGE TREATMENTS

NO SCALE

RSP P74 DATED NOVEMBER 15, 2013 SUPERSEDES RSP P74 DATED JANUARY 20, 2012 THAT SUPPLEMENTS THE STANDARD PLANS BOOK DATED 2010.

REVISED STANDARD PLAN RSP P74

2010 REVISED STANDARD PLAN RSP P74

DATE PLOTTED => 25-JUL-2014
TIME PLOTTED => 12:23

DIST	COUNTY	ROUTE	POST MILES TOTAL PROJECT	SHEET No.	TOTAL SHEETS
02	Sha	44	R4.2/R14.5	58	70

REGISTERED CIVIL ENGINEER

November 15, 2013
PLANS APPROVAL DATE

REGISTERED PROFESSIONAL ENGINEER
Cornelis M. Hakim
No. C55610
Exp. 12-31-14
CIVIL
STATE OF CALIFORNIA

THE STATE OF CALIFORNIA OR ITS OFFICERS OR AGENTS SHALL NOT BE RESPONSIBLE FOR THE ACCURACY OR COMPLETENESS OF SCANNED COPIES OF THIS PLAN SHEET.

TO ACCOMPANY PLANS DATED 06-24-14

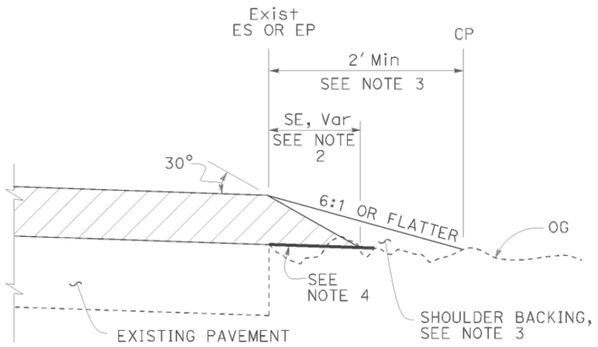

CASE A
Safety Edge

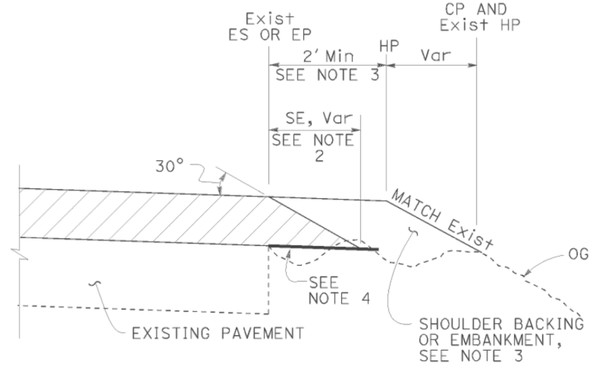

CASE B
Safety Edge

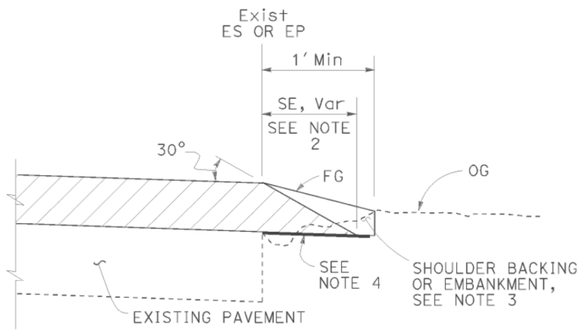

CASE C
Safety Edge

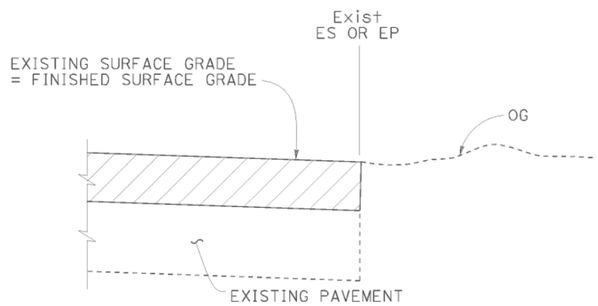

CASE D
Vertical Edge

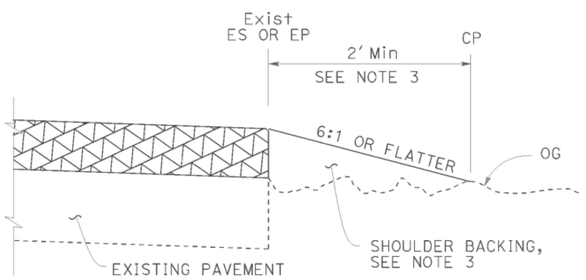

CASE E
Vertical Edge

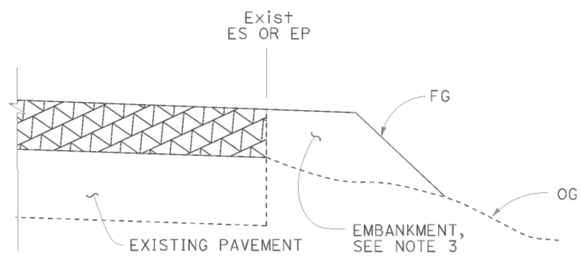

CASE F
Vertical Edge
* See Table A and Revised Std Plan RSP P74

LEGEND:

- HMA OVERLAY
- HMA OR CONCRETE OVERLAY
- CONCRETE OVERLAY

ABBREVIATIONS:

SE SAFETY EDGE
TT TOTAL THICKNESS OF SE

TABLE A
EDGE TREATMENT FOR VARIOUS OVERLAY THICKNESS AND CONDITIONS

	OVERLAY THICKNESS	
FIELD CONDITION	LESS THAN 0.15'	0.15' OR MORE
Exist SLOPE 6:1 OR FLATTER	CASE E	CASE A
Exist SLOPE 3:1 TO 6:1	CASE E	CASE B
Exist SLOPE STEEPER THAN 3:1	CASE F	CASE F
CUT SECTION (REPLACE, COLD PLANE, MILL PAVEMENT)	CASE D	CASE C

ADDITIONAL HMA OR CONCRETE QUANTITIES FOR SE/SIDE/MILE

TYPICAL CROSS SECTION	TT	TOTAL ADDITIONAL MATERIAL FOR SE/SIDE/MILE		
		HMA (TON)	CONCRETE (CY)*	CONCRETE (CY)**
TT	0.15'	NA	NA	NA
	0.20'	13.7	NA	NA
	0.30'	30.9	NA	NA
	0.40'	54.9	NA	NA
	0.45'	69.4	NA	NA
TT 0.43'	0.50'	84.2	NA	NA
	0.60'	113.9	NA	NA
	0.70'	143.6	70.9	94.2
	0.80'	173.3	85.6	112.2
	0.90'	203.0	100.3	130.2
	1.00'	232.7	114.9	148.2
	1.10'	262.4	129.6	166.2
	1.20'	292.1	144.3	184.2

* For Detail "A"
** For Optional Detail "A"

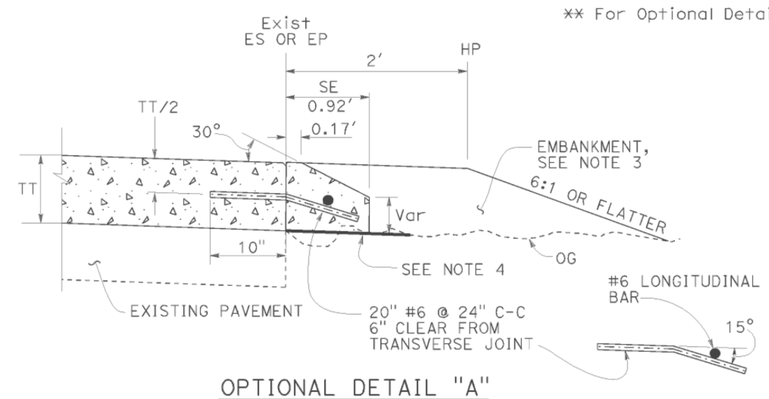

OPTIONAL DETAIL "A"
For concrete overlay
See Note 5

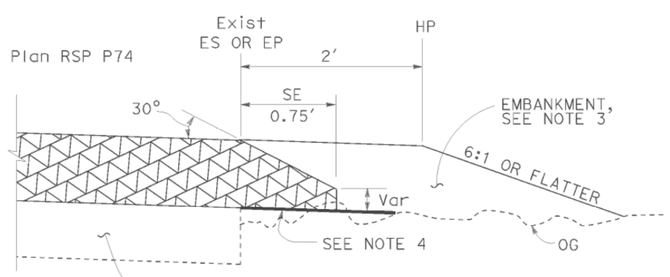

DETAIL "A"
For HMA overlay thickness more than 0.43' or concrete overlay

NOTES:

1. For limits of safety edge and vertical edge treatments, see Revised Standard Plan RSP P74.
2. Details shown for HMA overlay thickness less than 0.43'. See Detail "A" for HMA overlay thickness more than 0.43' or concrete overlay.
3. For locations and limits of shoulder backing or embankment see project plans.
4. Grade existing ground to place safety edge. 1' minimum width
5. Safety edge transverse joint must match overlay transverse joint. End of #6 longitudinal bar must be 2" ±½" clear from transverse joint.
6. Safety edge is not needed in the area of MGS, barrier, right turn lane and acceleration lane. See Revised Standard Plan RSP P74.

STATE OF CALIFORNIA
DEPARTMENT OF TRANSPORTATION

PAVEMENT EDGE TREATMENTS-OVERLAYS

NO SCALE

RSP P75 DATED NOVEMBER 15, 2013 SUPERSEDES RSP P75 DATED JANUARY 20, 2012 THAT SUPPLEMENTS THE STANDARD PLANS BOOK DATED 2010.

REVISED STANDARD PLAN RSP P75

2010 REVISED STANDARD PLAN RSP P75

DATE PLOTTED => 25-JUL-2014
TIME PLOTTED => 12:23

Dist	COUNTY	ROUTE	POST MILES TOTAL PROJECT	SHEET No.	TOTAL SHEETS
02	Sha	44	R4.2/R14.5	59	70

Raymond Don Tsztoo
REGISTERED CIVIL ENGINEER

April 19, 2013
PLANS APPROVAL DATE

REGISTERED PROFESSIONAL ENGINEER Raymond Don Tsztoo No. C37332 Exp. 6-30-14 CIVIL STATE OF CALIFORNIA

THE STATE OF CALIFORNIA OR ITS OFFICERS OR AGENTS SHALL NOT BE RESPONSIBLE FOR THE ACCURACY OR COMPLETENESS OF SCANNED COPIES OF THIS PLAN SHEET.

TO ACCOMPANY PLANS DATED 06-24-14

2010 REVISED STANDARD PLAN RSP D77B

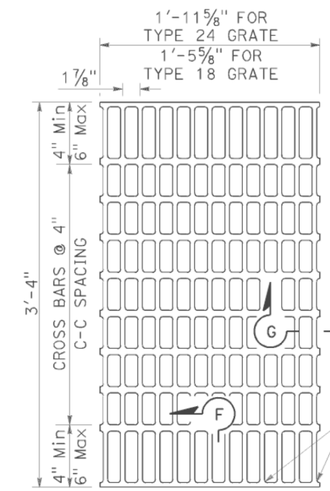

NOTES:

Bearing bars to be 3½" × ¼" bars on 1⅞" centers.

⅜"± ø Cross bars may be fillet welded, resistance welded or electroforged to bearing bars.

Weight of Type 24 grate = 141 LBS.

Weight of Type 18 grate = 107 LBS. (Type 24 grate shown).

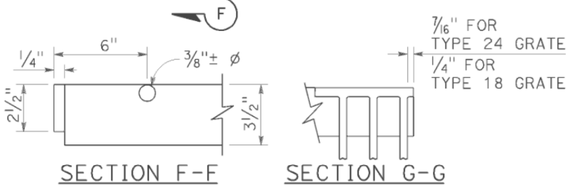

SECTION F-F SECTION G-G

TYPE 18-10 AND 24-13 GRATE

(Welded Steel)

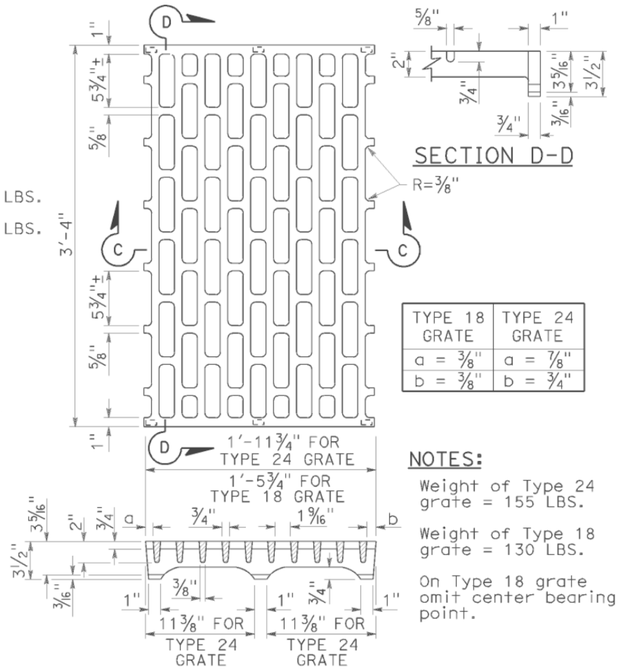

SECTION D-D

TYPE 18 GRATE	TYPE 24 GRATE
a = ⅜"	a = ⅞"
b = ⅜"	b = ¾"

NOTES:

Weight of Type 24 grate = 155 LBS.

Weight of Type 18 grate = 130 LBS.

On Type 18 grate omit center bearing point.

SECTION C-C

TYPE 18-8C AND 24-10C GRATE

(Cast ductile iron)

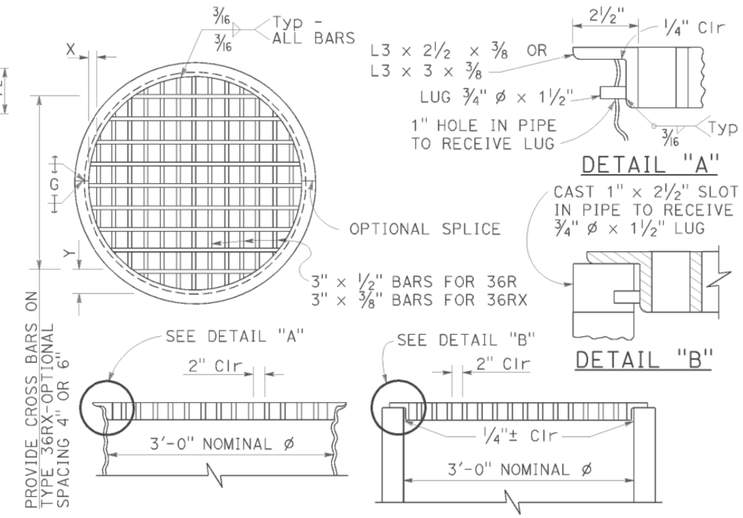

TYPE 36R AND 36RX GRATE DETAILS

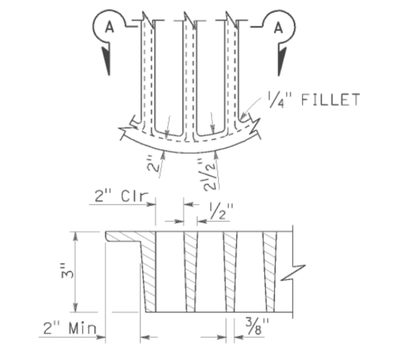

SECTION A-A

ALTERNATIVE CAST DUCTILE IRON GRATE OR CAST CARBON STEEL GRATE TYPE 36R AND 36RX

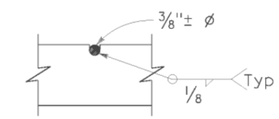

⅜"± ø Cross bars may be fillet welded, resistance welded or electroforged to bearing bars.

CROSS BAR DETAIL TYPE 36RX GRATE (WELDED STEEL)

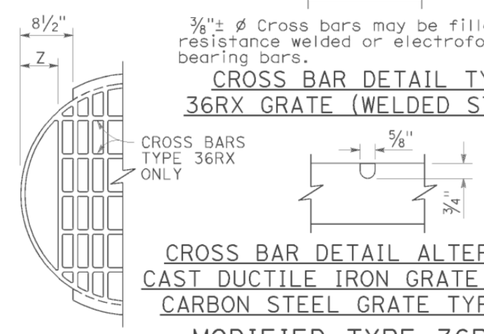

CROSS BAR DETAIL ALTERNATIVE CAST DUCTILE IRON GRATE OR CAST CARBON STEEL GRATE TYPE 36RX

MODIFIED TYPE 36R AND 36RX GRATE FOR ODI INLET

BASIS FOR Misc IRON AND STEEL FINAL PAY WEIGHTS FOR DRAINAGE INLETS

INLET TYPE	GRATE TYPE	No. OF GRATES	WEIGHT LB
GDO (SEE NOTE 4)	24-10C	2	391
	24-10S	2	456
	24-12X	2	473
	24-13	2	374
GO,GOL,G1,G2, G3,G4 (TYPE 24)	24-10C	1	202
	24-10S	1	229
	24-12X	1	239
	24-13	1	188
G4 (TYPE 18) G5,G6	18-8S	1	187
	18-9X	1	187
	18-10	1	149
GT1,GT2	18-8S	2	374
	18-9X	2	374
	18-10	2	298
GT3,GT4	24-10C	2	404
	24-10S	2	458
	24-12X	2	478
	24-13	2	376
ODI	36RX (Mod)	1	196
GMP,GCP,GCPI	36RX	1	215
ODI	36R (Mod)	1	220
GMP,GCP,GCPI	36R	1	236
TRASH RACK			22
GRATE CHAIN			3

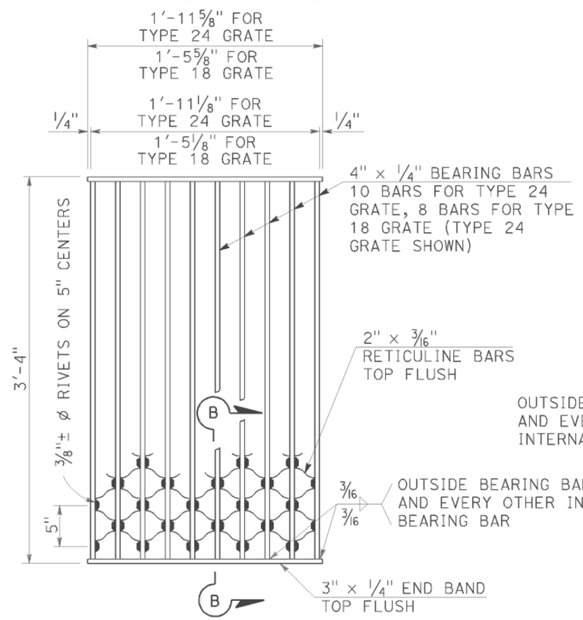

NOTES:

Weight of Type 24 grate = 182 LBS.
Weight of Type 18 grate = 145 LBS.

SECTION B-B

TYPE 18-8S AND 24-10S GRATE

(Welded Steel) Reticuline type

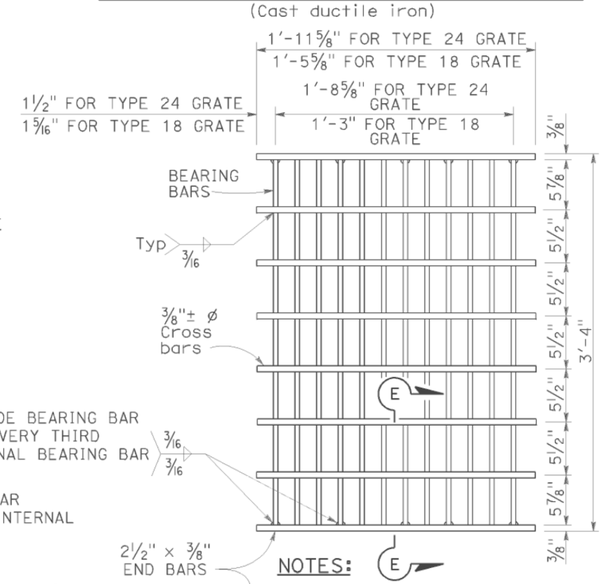

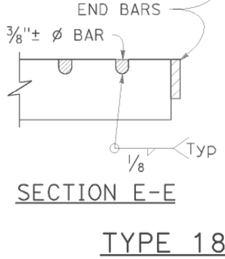

SECTION E-E

NOTES:

Bearing bars to be 3½" × ⅜" bars on 1⅞" centers.

12 Bars for Type 24 grate - 9 bars for Type 18 grates. (Type 24 grate shown).

Weight of Type 24 grate = 192 LBS.

Weight of Type 18 grate = 145 LBS.

⅜"± ø Cross bars may be fillet welded, resistance welded or electroforged to bearing bars.

TYPE 18-9X AND 24-12X GRATE

(Welded Steel)

NOTES:

1. When alternative grates are allowed - Final pay based on alternative with the lesser weight.
2. Use frame shown on Standard Plan D74A, D74B or RSP D77A as appropriate.
3. When Type 24-10S, 24-12X or 24-13 grates are used with GDO Inlets, a ¼" × 3½" × 3'-4⅞" steel bar shall be welded across the center of inlet frame to separate the individual grates.
4. See Revised Standard Plan RSP D77A for connecting chain to welded grate and frame. When chain is required, do not use cast ductile iron grate.

GRATE BAR SPACING TABLE

TYPE	No. OF BARS	CLEAR BAR SPACING	X	Y 4" SPACING	Y 6" SPACING	Z
36R	13	2"	2⅛"	–	–	–
36RX (STEEL)	15	2"	9/16"	3¾"	5¾"	–
36RX (CAST)	13	2"	2⅛"	3¾"	5¾"	–
36R Mod	12	2"	2⅛"	–	–	5"
36RX Mod (STEEL)	13	2"	9/16"	3¾"	5¾"	5 11/16"
36RX Mod (CAST)	12	2"	2⅛"	3¾"	5¾"	5"

STATE OF CALIFORNIA
DEPARTMENT OF TRANSPORTATION

GRATE DETAILS No. 2

NO SCALE

RSP D77B DATED APRIL 19, 2013 SUPERSEDES RSP D77B DATED JULY 20, 2012 AND STANDARD PLAN D77B DATED MAY 20, 2011 - PAGE 165 OF THE STANDARD PLANS BOOK DATED 2010.

REVISED STANDARD PLAN RSP D77B

DATE PLOTTED => 25-JUL-2014
TIME PLOTTED => 12:23

Dist	COUNTY	ROUTE	POST MILES TOTAL PROJECT	SHEET No.	TOTAL SHEETS
02	Sha	44	R4.2/R14.5	60	70

REGISTERED CIVIL ENGINEER

July 19, 2013
PLANS APPROVAL DATE

REGISTERED PROFESSIONAL ENGINEER Gurinderpal Bhullar No. C48815 Exp. 9-30-14 CIVIL STATE OF CALIFORNIA

THE STATE OF CALIFORNIA OR ITS OFFICERS OR AGENTS SHALL NOT BE RESPONSIBLE FOR THE ACCURACY OR COMPLETENESS OF SCANNED COPIES OF THIS PLAN SHEET.

TO ACCOMPANY PLANS DATED 06-24-14

TABLE 1

TAPER LENGTH CRITERIA AND CHANNELIZING DEVICE SPACING

SPEED (S)	MINIMUM TAPER LENGTH * FOR WIDTH OF OFFSET 12 FEET (W)				MAXIMUM CHANNELIZING DEVICE SPACING		
					X	Y	Z **
	TANGENT 2L	MERGING L	SHIFTING L/2	SHOULDER L/3	TAPER	TANGENT	CONFLICT
mph	ft	ft	ft	ft	ft	ft	ft
20	160	80	40	27	20	40	10
25	250	125	63	42	25	50	12
30	360	180	90	60	30	60	15
35	490	245	123	82	35	70	17
40	640	320	160	107	40	80	20
45	1080	540	270	180	45	90	22
50	1200	600	300	200	50	100	25
55	1320	660	330	220	55	110	27
60	1440	720	360	240	60	120	30
65	1560	780	390	260	65	130	32
70	1680	840	420	280	70	140	35

* - For other offsets, use the following merging taper length formula for L:
For speed of 40 mph or less, $L = WS^2/60$
For speed of 45 mph or more, $L = WS$

Where: L = Taper length in feet
W = Width of offset in feet
S = Posted speed limit, off-peak 85th-percentile speed prior to work starting, or the anticipated operating speed in mph

** - Use for taper and tangent sections where there are no pavement markings or where there is a conflict between existing pavement markings and channelizers (CA).

TABLE 2

LONGITUDINAL BUFFER SPACE AND FLAGGER STATION SPACING

SPEED *	Min D **	DOWNGRADE Min D ***		
		-3%	-6%	-9%
mph	ft	ft	ft	ft
20	115	116	120	126
25	155	158	165	173
30	200	205	215	227
35	250	257	271	287
40	305	315	333	354
45	360	378	400	427
50	425	446	474	507
55	495	520	553	593
60	570	598	638	686
65	645	682	728	785
70	730	771	825	891

* - Speed is posted speed limit, off-peak 85th-percentile speed prior to work starting, or the anticipated operating speed in mph

** - Longitudinal buffer space or flagger station spacing

*** - Use on sustained downgrade steeper than -3 percent and longer than 1 mile.

TABLE 3

ADVANCE WARNING SIGN SPACING

ROAD TYPE	DISTANCE BETWEEN SIGNS *		
	A	B	C
	ft	ft	ft
URBAN - 25 mph OR LESS	100	100	100
URBAN - MORE THAN 25 mph TO 40 mph	250	250	250
URBAN - MORE THAN 40 mph	350	350	350
RURAL	500	500	500
EXPRESSWAY / FREEWAY	1000	1500	2640

* - The distances are approximate, are intended for guidance purposes only, and should be applied with engineering judgment. These distances should be adjusted by the Engineer for field conditions, if necessary, by increasing or decreasing the recommmended distances.

STATE OF CALIFORNIA
DEPARTMENT OF TRANSPORTATION

TRAFFIC CONTROL SYSTEM TABLES FOR LANE AND RAMP CLOSURES

NO SCALE

RSP T9 DATED JULY 19, 2013 SUPERSEDES RSP T9 DATED APRIL 19, 2013 THAT SUPPLEMENTS THE STANDARD PLANS BOOK DATED 2010.

REVISED STANDARD PLAN RSP T9

2010 REVISED STANDARD PLAN RSP T9

DATE PLOTTED => 25-JUL-2014
TIME PLOTTED => 12:23

TO ACCOMPANY PLANS DATED 06-24-14

Dist	COUNTY	ROUTE	POST MILES TOTAL PROJECT	SHEET No.	TOTAL SHEETS
02	Sha	44	R4.2/R14.5	61	70

REGISTERED CIVIL ENGINEER

April 19, 2013
PLANS APPROVAL DATE

REGISTERED PROFESSIONAL ENGINEER Gurinderpal Bhullar No. C48815 Exp. 9-30-14 CIVIL STATE OF CALIFORNIA

THE STATE OF CALIFORNIA OR ITS OFFICERS OR AGENTS SHALL NOT BE RESPONSIBLE FOR THE ACCURACY OR COMPLETENESS OF SCANNED COPIES OF THIS PLAN SHEET.

NOTES:

See Revised Standard Plan RSP T9 for tables.

Use cone spacing X for taper segment, Y for tangent segment or Z for conflict situations, as approriate, per Table 1, unless X, Y, or Z cone spacing is shown on this sheet.

Unless otherwise specified in the special provisions, all temporary warning signs shall have black legend on fluorescent orange background.

California codes are designated by (CA). Otherwise, Federal (MUTCD) codes are shown.

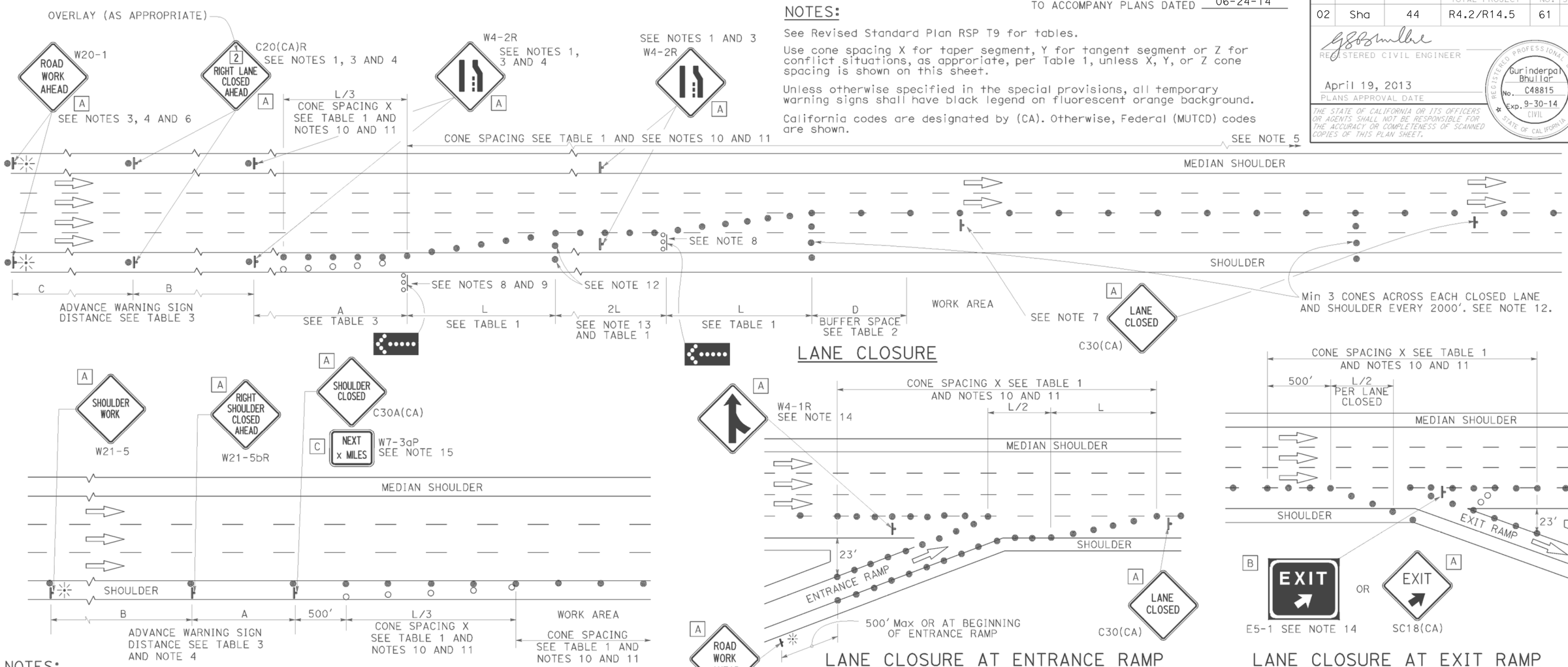

LANE CLOSURE

SHOULDER CLOSURE

LANE CLOSURE AT ENTRANCE RAMP

LANE CLOSURE AT EXIT RAMP

NOTES:

1. Median lane closures shall conform to the details as shown except that C20(CA)L and W4-2L signs shall be used.
2. At least one person shall be assigned to provide full time maintenance of traffic control devices for lane closures.
3. Duplicate sign installations are not required:
   a) On opposite shoulder if at least one-half of the available lanes remain open to traffic.
   b) In the median if the width of the median shoulder is less than 8' and the outside lanes are to be closed.
4. Each advance warning sign on each side of the roadway shall be equipped with at least two flags for daytime closure. Each flag shall be at least 16" x 16" in size and shall be orange or fluorescent red-orange in color. Flashing beacons shall be placed at the locations indicated for lane closure during hours of darkness.
5. A G20-2 "END ROAD WORK" sign, with minimum size of 48" x 24" as appropriate, shall be placed at the end of the lane closure unless the end of work area is obvious or ends within a larger project's limits.
6. If the W20-1 sign would follow within 2000' of a stationary W20-1 or G20-1 "ROAD WORK NEXT _____ MILES", use a C20(CA) sign for the first advance warning sign.
7. Place a C30(CA) sign every 2000' throughout length of lane closure.
8. One flashing arrow sign for each lane closed. The flashing arrow signs shall be Type I.
9. A minimum 1500' of sight distance shall be provided where possible for vehicles approaching the first flashing arrow sign. Lane closures shall not begin at top of crest vertical curve or on a horizontal curve.
10. All cones used for lane closures during the hours of darkness shall be fitted with retroreflective bands (or sleeves) as specified in the specifications.
11. Portable delineators, placed at one-half the spacing indicated for traffic cones may be used instead of cones for daytime closures only.
12. Unless otherwise specified in the special provisions, a minimum of 3 cones shall be placed transversely across each closed lane and shoulder at each location where a taper across a traffic lane ends and every 2000' as shown on the "Lane Closure" detail. Two Type II barricades may be used instead of the 3 cones. The transverse alignment of the cones or barricades on the closed shoulder may be shifted from the transverse alignment to provide access to the work.
13. Unless otherwise specified in the special provisions, the 2L tangent shown along lane lines shall be used between the L tapers required for each closed traffic lane.
14. Unless otherwise specified in the special provisions, the E5-1 or SC18(CA) and W4-1 signs shall be used as shown.
15. A W7-3aP "NEXT____MILES" plaque must be used if theshoulder closure extends beyond the distance that can be perceived by road users.

LEGEND

- TRAFFIC CONE
- TRAFFIC CONE (OPTIONAL TAPER)
- TEMPORARY TRAFFIC CONTROL SIGN
- FLASHING ARROW SIGN (FAS)
- FAS SUPPORT OR TRAILER
- PORTABLE FLASHING BEACON

SIGN PANEL SIZE (Min)

A	48" x 48"
B	72" x 60"
C	36" x 30"

STATE OF CALIFORNIA
DEPARTMENT OF TRANSPORTATION

TRAFFIC CONTROL SYSTEM FOR LANE CLOSURE ON FREEWAYS AND EXPRESSWAYS

NO SCALE

RSP T10 DATED APRIL 19, 2013 SUPERSEDES STANDARD PLAN T10 DATED MAY 20, 2011 - PAGE 237 OF THE STANDARD PLANS BOOK DATED 2010.

REVISED STANDARD PLAN RSP T10

2010 REVISED STANDARD PLAN RSP T10

DATE PLOTTED => 25-JUL-2014
TIME PLOTTED => 12:23

Dist	COUNTY	ROUTE	POST MILES TOTAL PROJECT	SHEET No.	TOTAL SHEETS
02	Sha	44	R4.2/R14.5	62	70

REGISTERED CIVIL ENGINEER

July 18, 2014
PLANS APPROVAL DATE

REGISTERED PROFESSIONAL ENGINEER Gurinderpal Bhullar No. C48815 Exp. 9-30-14 CIVIL STATE OF CALIFORNIA

THE STATE OF CALIFORNIA OR ITS OFFICERS OR AGENTS SHALL NOT BE RESPONSIBLE FOR THE ACCURACY OR COMPLETENESS OF SCANNED COPIES OF THIS PLAN SHEET.

TO ACCOMPANY PLANS DATED 06-24-14

NOTES:

See Revised Standard Plan RSP T9 for tables.

Use cone spacing X for taper segment, Y for tangent segment or Z for conflict situations, as approriate, per Table 1, unless X, Y, or Z cone spacing is shown on this sheet.

Unless otherwise specified in the special provisions, all temporary warning signs shall have black legend on fluorescent orange background.

California codes are designated by (CA). Otherwise, Federal (MUTCD) codes are shown.

TYPICAL LANE CLOSURE WITH REVERSIBLE CONTROL

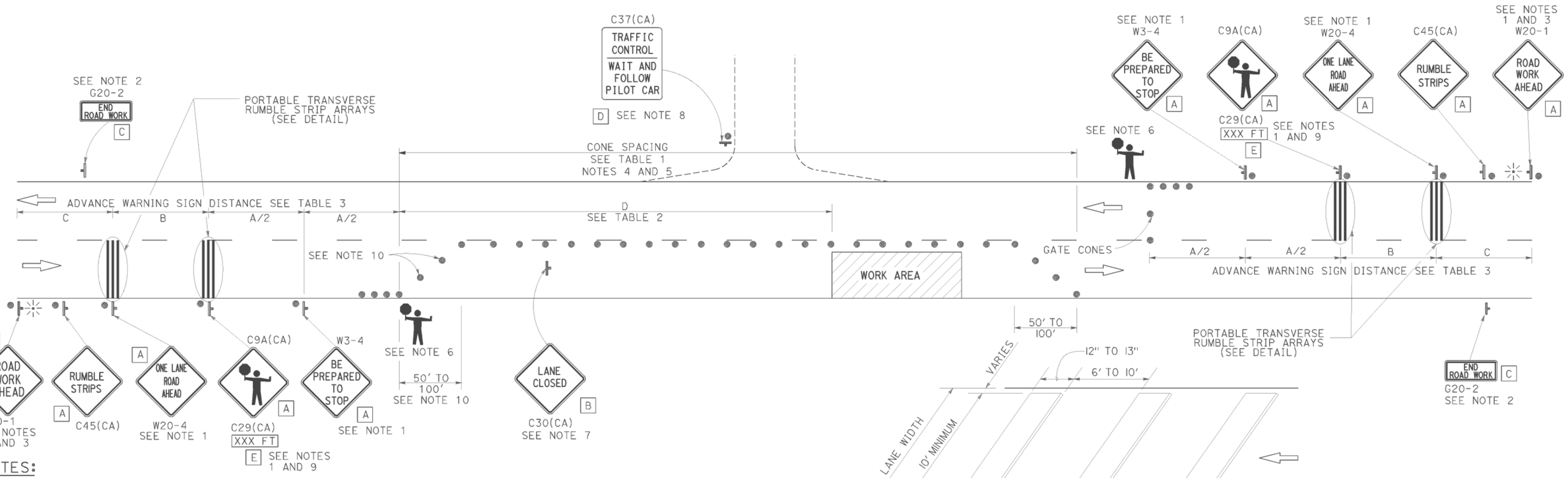

PORTABLE TRANSVERSE RUMBLE STRIP ARRAY DETAIL

NOTES:

1. Each advance warning sign in each direction of travel shall be equipped with at least two flags for daytime closure. Each flag shall be at least 16" x 16" in size and shall be orange or fluorescent red-orange in color. Flashing beacons shall be placed at the locations indicated for lane closure during hours of darkness.
2. A G20-2 "END ROAD WORK" sign, as appropriate, shall be placed at the end of the lane control unless the end of work area is obvious, or ends within a larger project's limits.
3. If the W20-1 sign would follow within 2000' of a stationary W20-1 or G20-1 "ROAD WORK NEXT _____ MILES", use a W20-4 sign for the first advance warning sign.
4. All cones used for lane closures during the hours of darkness shall be fitted with retroreflective bands (or sleeves) as specified in the specifications.
5. Portable delineators, placed at one-half the spacing indicated for traffic cones, may be used instead of cones for daytime closures only.
6. Additional advance flaggers may be required. Flagger should stand in a conspicuous place, be visible to approaching traffic as well as approaching vehicles after the first vehicle has stopped. During the hours of darkness, the flagging-station and flagger shall be illuminated and clearly visible to approaching traffic. The illumination footprint of the lighting on the ground shall be at least 20' in diameter. Place a minimum of four cones at 50' intervals in advance of flagger station as shown.
7. Place C30(CA) "LANE CLOSED" sign at 500' to 1000' intervals throughout extended work areas. They are optional if the work area is visible from the flagger station.
8. When a pilot car is used, place a C37(CA) "TRAFFIC CONTROL-WAIT AND FOLLOW PILOT CAR" sign with black legend on white background at all intersections, driveways and alleys without a flagger within traffic control area. Signs shall be clean and visible at all times. Where traffic can not be effectively self-regulated, at least one flagger shall be used at each intersection within traffic control area.
9. An optional C29(CA) sign may be placed below the C9A(CA) sign.
10. Either traffic cones or barricades shall be placed on the taper. Barricades shall be Type I, II, or III.
11. The color of the portable transverse rumble strips shall be black or orange. Use 2 arrays, each array shall consist of 3 rumble strips.
12. Portable transverse rumble strips shall not be placed on sharp horizontal or vertical curves nor shall they be placed through pedestrian crossings.
13. If the portable transverse rumble strips become out of alignment (skewed) by more than 6 inches, measured from one end to the other, they shall be readjusted to bring the placement back to the original location.

LEGEND

- TRAFFIC CONE
- TEMPORARY TRAFFIC CONTROL SIGN
- PORTABLE FLASHING BEACON
- FLAGGER

SIGN PANEL SIZE (Min)

A	48" x 48"
B	30" x 30"
C	36" x 18"
D	36" x 42"
E	20" x 7"

STATE OF CALIFORNIA
DEPARTMENT OF TRANSPORTATION

TRAFFIC CONTROL SYSTEM FOR LANE CLOSURE ON TWO LANE CONVENTIONAL HIGHWAYS

NO SCALE

RSP T13 DATED JULY 18, 2014 SUPERSEDES RSP T13 DATED APRIL 19, 2013 AND STANDARD PLAN T13 DATED MAY 20, 2011 - PAGE 241 OF THE STANDARD PLANS BOOK DATED 2010.

REVISED STANDARD PLAN RSP T13

2010 REVISED STANDARD PLAN RSP T13

DATE PLOTTED => 21-AUG-2014
TIME PLOTTED => 08:38

Dist	COUNTY	ROUTE	POST MILES TOTAL PROJECT	SHEET No.	TOTAL SHEETS
02	Sha	44	R4.2/R14.5	63	70

REGISTERED CIVIL ENGINEER

April 19, 2013
PLANS APPROVAL DATE

REGISTERED PROFESSIONAL ENGINEER Gurinderpal Bhullar No. C48815 Exp. 9-30-14 CIVIL STATE OF CALIFORNIA

THE STATE OF CALIFORNIA OR ITS OFFICERS OR AGENTS SHALL NOT BE RESPONSIBLE FOR THE ACCURACY OR COMPLETENESS OF SCANNED COPIES OF THIS PLAN SHEET.

TO ACCOMPANY PLANS DATED 06-24-14

TYPICAL RAMP CLOSURES

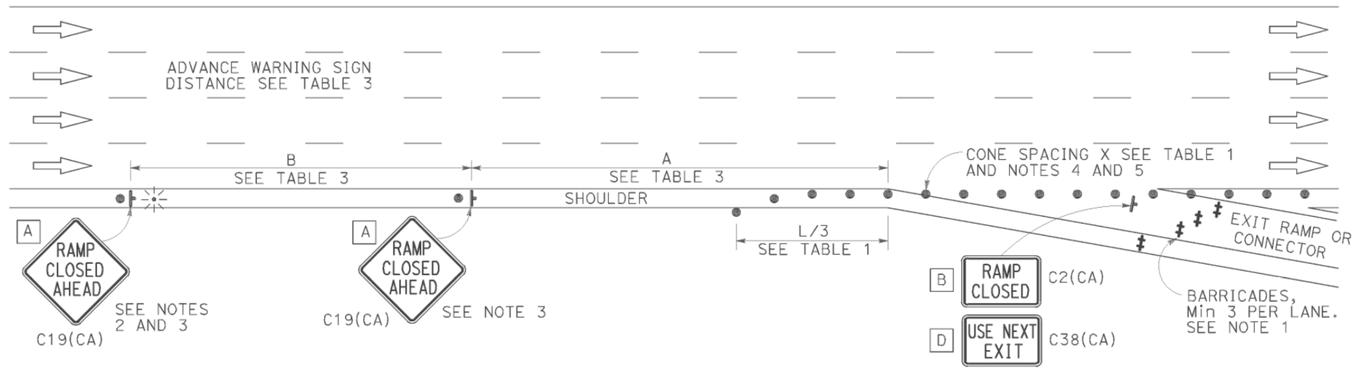

EXIT RAMP OR CONNECTOR

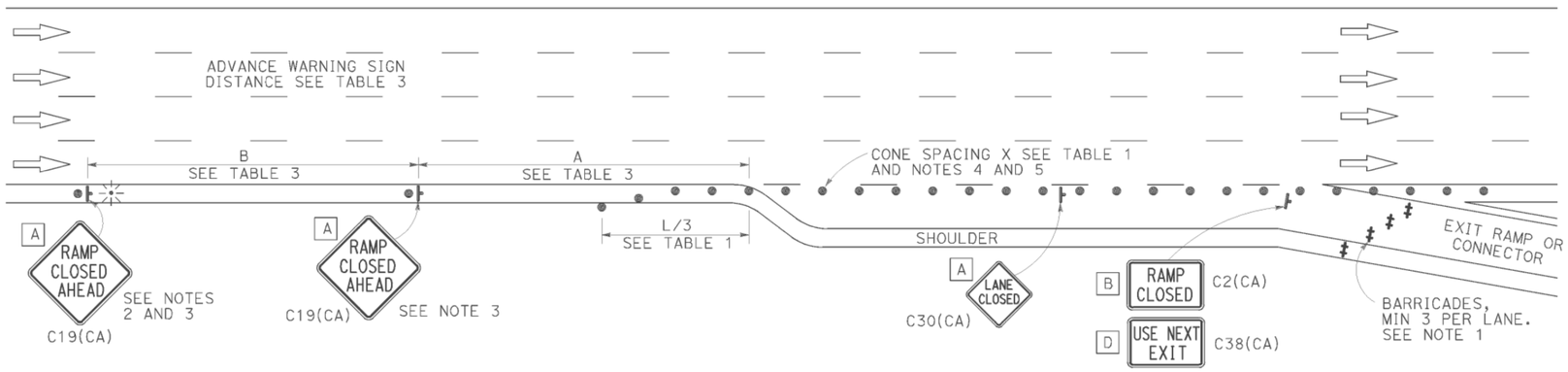

EXIT RAMP OR CONNECTOR WITH ADDITIONAL LANE

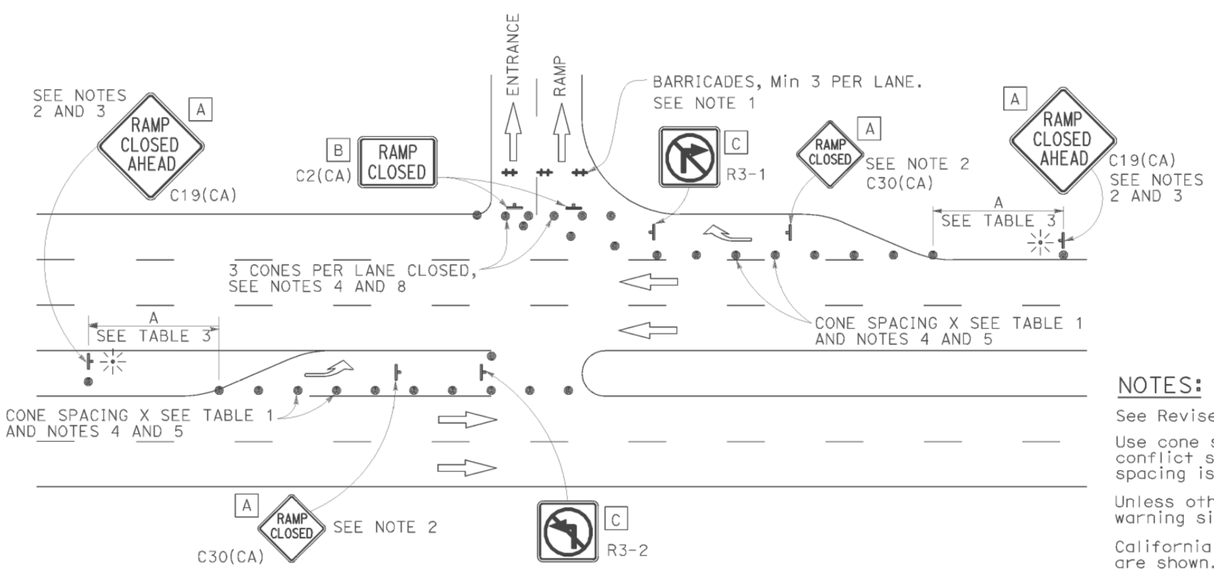

ENTRANCE RAMP WITH TURNING POCKETS

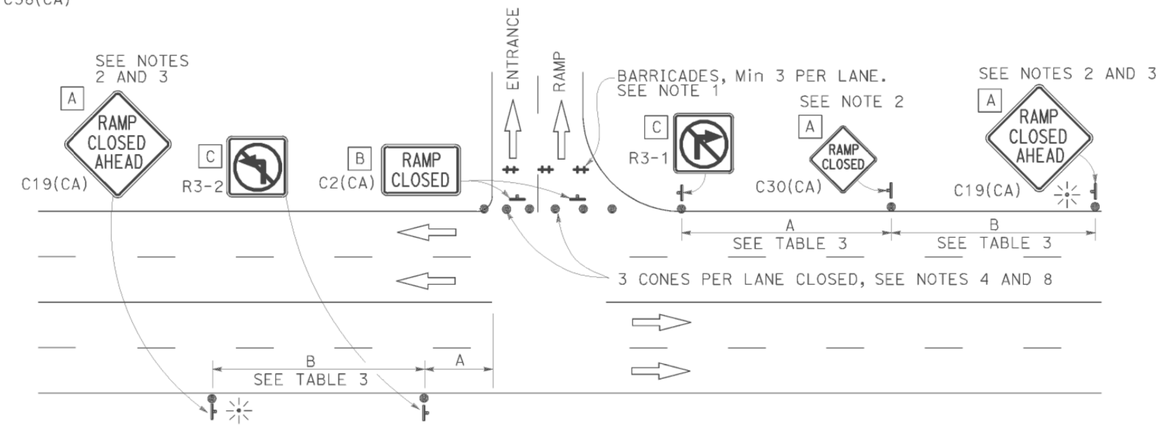

ENTRANCE RAMP WITHOUT TURNING POCKETS

SIGN PANEL SIZE (Min)

- A 48" x 48"
- B 48" x 30"
- C 36" x 36"
- D 48" x 36"

LEGEND

- TRAFFIC CONE
- TEMPORARY TRAFFIC CONTROL SIGN
- BARRICADES
- PORTABLE FLASHING BEACON

NOTES:

1. Barricades shall be Type I, II, or III for closures lasting one week or less and Type III for closures lasting longer than one week.
2. In addition to placing the C19(CA) "RAMP CLOSED AHEAD" and C30(CA) "RAMP CLOSED" signs, black on orange overlay plates with the word "CLOSED" may be mounted, as directed by the Engineer, on all guide signs that refer to the closed ramp. The letter size on the overlay shall be the same as the guide sign.
3. Each advance C19(CA) "RAMP CLOSED AHEAD" sign shall be equipped with at least two flags for daytime closure. Each flag shall be at least 16" x 16" in size and shall be orange or fluorescent red-orange in color. A flashing beacon shall be placed on top of the first C19(CA) sign during hours of darkness.
4. All cones used for ramp closures during the hours of darkness shall be fitted with retroreflective bands (or sleeves) as specified in the specifications.
5. Portable delineators, placed at one-half the spacing indicated for traffic cones, may be used instead of cones for daytime ramp closures only.
6. At least one person shall be assigned to provide full time maintenance of traffic control devices, unless otherwise directed by the Engineer.
7. The existing "EXIT" signs shall be covered during ramp closures.
8. A minimum of 3 cones shall be placed transversely across each closed lane and shoulder.

NOTES:

See Revised Standard Plan RSP T9 for tables.

Use cone spacing X for taper segment, Y for tangent segment or Z for conflict situations, as approriate, per Table 1, unless X, Y, or Z cone spacing is shown on this sheet.

Unless otherwise specified in the special provisions, all temporary warning signs shall have black legend on fluorescent orange background.

California codes are designated by (CA). Otherwise, Federal (MUTCD) codes are shown.

STATE OF CALIFORNIA
DEPARTMENT OF TRANSPORTATION

TRAFFIC CONTROL SYSTEM FOR RAMP CLOSURE

NO SCALE

RSP T14 DATED APRIL 19, 2013 SUPERSEDES STANDARD PLAN T14
DATED MAY 20, 2011 - PAGE 242 OF THE STANDARD PLANS BOOK DATED 2010.

REVISED STANDARD PLAN RSP T14

2010 REVISED STANDARD PLAN RSP T14

DATE PLOTTED => 25-JUL-2014
TIME PLOTTED => 12:23

Dist	COUNTY	ROUTE	POST MILES TOTAL PROJECT	SHEET No.	TOTAL SHEETS
02	Sha	44	R4.2/R14.5	64	70

REGISTERED CIVIL ENGINEER

April 19, 2013
PLANS APPROVAL DATE

REGISTERED PROFESSIONAL ENGINEER Gurinderpal Bhullar No. C48815 Exp. 9-30-14 CIVIL STATE OF CALIFORNIA

THE STATE OF CALIFORNIA OR ITS OFFICERS OR AGENTS SHALL NOT BE RESPONSIBLE FOR THE ACCURACY OR COMPLETENESS OF SCANNED COPIES OF THIS PLAN SHEET.

TO ACCOMPANY PLANS DATED 06-24-14

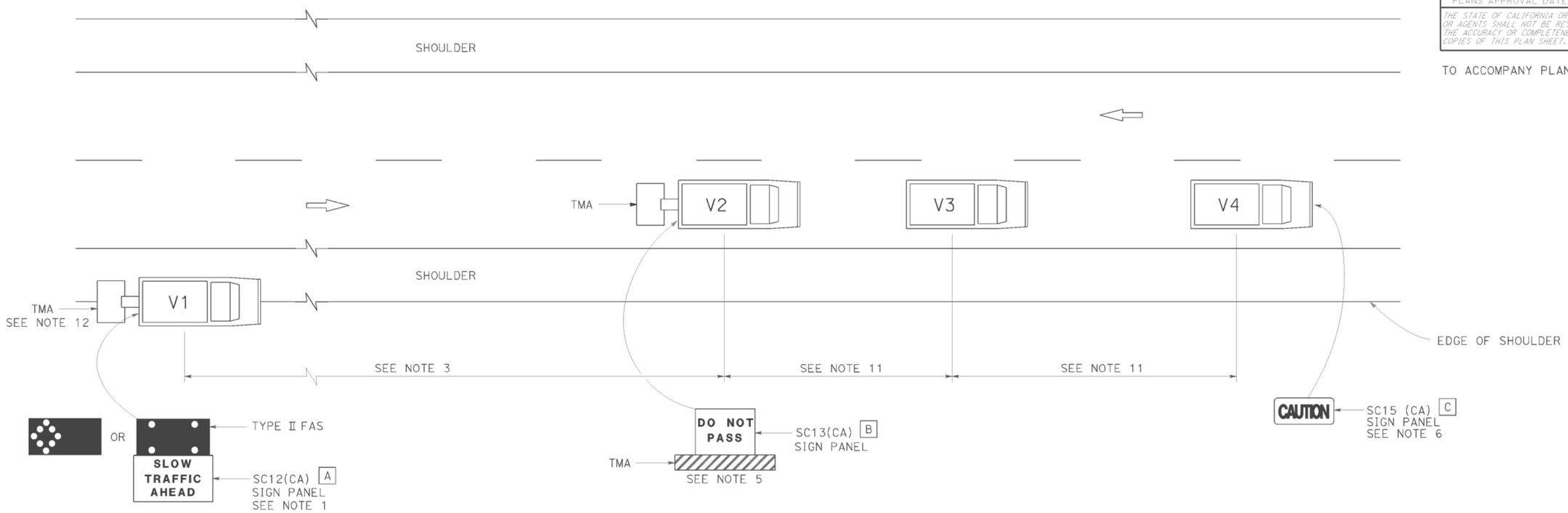

LEGEND

V1	SIGN VEHICLE
V2	SHADOW VEHICLE
V3	WORK/APPLICATION VEHICLE
V4	SIGN VEHICLE
TMA	TRUCK-MOUNTED ATTENUATOR
	FLASHING ARROW SIGN (FAS) IN FLASHING CAUTION MODE
	FLASHING ARROW SIGN (FAS) IN ALTERNATING DIAMOND CAUTION

SIGN PANEL SIZE (Min)

A	72" x 42"
B	54" x 42"
C	54" x 24"

NOTES:

1. Either a changeable message sign or a SC12(CA) "SLOW TRAFFIC AHEAD" sign shall be mounted on the rear of sign vehicle V1. The changeable message sign shall be sequenced to show the "CAUTION" message first, follow by the "SLOW TRAFFIC AHEAD" message. A Type II flashing arrow sign may be used with the SC12(CA) sign panel.
2. Sign vehicle V1 should be positioned where highly visible when shoulders are not available.
3. If traffic queues develop, sign vehicle V1 should be positioned upstream from the end of queue.
4. Vehicle-mounted sign panels shall have Type III or above retroreflective sheeting, black on white, or black on fluorescent orange, with 6" minimum series D letters per Caltrans sign specifications.
5. Shadow vehicle shall be equipped with a truck-mounted attenuator. The sign panel shown shall be mounted on the rear of shadow vehicle V2. The message "LANE CLOSED" may be used in place of the "DO NOT PASS" message.
6. The sign panel shown shall be mounted on the front of sign vehicle V4, facing opposing traffic.
7. All vehicles shall be equipped with flashing or rotating amber lights.
8. Sign vehicle V4 will not be required when the work and vehicles V2 and V3 are 2' or more from the centerline of the highway during the work or application operations.
9. All vehicles used for lane closures shall be equipped with two-way radios and the vehicle operators shall maintain communication during the work or application operation.
10. This plan shall not be used where workers would be on foot in the work area. Use a stationary type lane closure (Revised Standard Plan T13) for this condition.
11. Minimize spacing between vehicles V2 and V3 and vehicles V3 and V4 to deter road users from driving in between them.
12. If sign vehicle V1 encroaches into the traffic lane due to insufficient shoulder width, sign vehicle V1 shall be equipped with a truck-mounted attenuator. Sign vehicle V1 shall stay as close to the edge of shoulder as practicable.

STATE OF CALIFORNIA
DEPARTMENT OF TRANSPORTATION

TRAFFIC CONTROL SYSTEM FOR MOVING LANE CLOSURE ON TWO LANE HIGHWAYS

NO SCALE

RSP T17 DATED APRIL 19, 2013 SUPERSEDES STANDARD PLAN T17
DATED MAY 20, 2011 - PAGE 245 OF THE STANDARD PLANS BOOK DATED 2010.

REVISED STANDARD PLAN RSP T17

2010 REVISED STANDARD PLAN RSP T17

DATE PLOTTED => 25-JUL-2014
TIME PLOTTED => 12:23

Dist	COUNTY	ROUTE	POST MILES TOTAL PROJECT	SHEET No.	TOTAL SHEETS
02	Sha	44	R4.2/R14.5	65	70

Theresa Gabriel
REGISTERED ELECTRICAL ENGINEER

July 19, 2013
PLANS APPROVAL DATE

REGISTERED PROFESSIONAL ENGINEER Theresa Aziz Gabriel No. E15129 Exp. 6-30-14 ELECTRICAL STATE OF CALIFORNIA

THE STATE OF CALIFORNIA OR ITS OFFICERS OR AGENTS SHALL NOT BE RESPONSIBLE FOR THE ACCURACY OR COMPLETENESS OF SCANNED COPIES OF THIS PLAN SHEET.

TO ACCOMPANY PLANS DATED 06-24-14

LEGEND:

AB	ABANDON. IF APPLIED TO CONDUIT, REMOVE CONDUCTORS
BC	INSTALL PULL BOX IN EXISTING CONDUIT RUN
BP	PEDESTRIAN BARRICADE, TYPE AS INDICATED ON PLAN
CB	INSTALL CONDUIT INTO EXISTING PULL BOX
CC	CONNECT NEW AND EXISTING CONDUIT. REMOVE EXISTING CONDUCTORS AND INSTALL CONDUCTORS AS INDICATED
CF	CONDUIT TO REMAIN FOR FUTURE USE. REMOVE CONDUCTORS. INSTALL PULL TAPE
DH	DETECTOR HANDHOLE
FA	FOUNDATION TO BE ABANDONED
IS	INSTALL SIGN ON SIGNAL MAST ARM
NS	NO SLIP BASE ON STANDARD
PEC	PHOTOELECTRIC CONTROL
PEU	PHOTOELECTRIC UNIT
RC	EQUIPMENT OR MATERIAL TO BE REMOVED AND BECOME THE PROPERTY OF THE CONTRACTOR
RE	REMOVE ELECTROLIER, FUSES AND BALLAST. TAPE ENDS OF CONDUCTORS
RL	RELOCATE EQUIPMENT
RR	REMOVE AND REUSE EQUIPMENT
RS	REMOVE AND SALVAGE EQUIPMENT
SC	SPLICE NEW TO EXISTING CONDUCTORS
SD	SERVICE DISCONNECT
TSP	TELEPHONE SERVICE POINT

ABBREVIATIONS

APS	ACCESSIBLE PEDESTRIAN SIGNAL
BBS	BATTERY BACKUP SYSTEM
BC	BOLT CIRCLE
BPB	BICYCLE PUSH BUTTON
C	CONDUIT
CB	CIRCUIT BREAKER
CCTV	CLOSED CIRCUIT TELEVISION
Ckt	CIRCUIT
CMS	CHANGEABLE MESSAGE SIGN
Ctid	CALTRANS IDENTIFICATION
Comm	COMMUNICATION
DLC	LOOP DETECTOR LEAD-IN CABLE
EMS	EXTINGUISHABLE MESSAGE SIGN
EVUC	EMERGENCY VEHICLE UNIT CABLE
EVUD	EMERGENCY VEHICLE UNIT DETECTOR
FB	FLASHING BEACON
FBCA	FLASHING BEACON CONTROL ASSEMBLY
FBS	FLASHING BEACON WITH SLIP BASE
FO	FIBER OPTIC
G	EQUIPMENT GROUNDING CONDUCTOR
GB	GROUND BUS
GFCI	GROUND FAULT CIRCUIT INTERRUPTER
HAR	HIGHWAY ADVISORY RADIO
Hex	HEXAGONAL
HPS	HIGH PRESSURE SODIUM
IISNS	INTERNALLY ILLUMINATED STREET NAME SIGN
ISL	INDUCTION SIGN LIGHTING
LED	LIGHT EMITTING DIODE
LMA	LUMINAIRE MAST ARM
LPS	LOW PRESSURE SODIUM
Ltg	LIGHTING
Lum	LUMINAIRE
M	METERED
MAT	MAST ARM MOUNTING TOP ATTACHMENT
MAS	MAST ARM MOUNTING SIDE ATTACHMENT
M/M	MULTIPLE TO MULTIPLE TRANSFORMER
Mtg	MOUNTING
MV	MERCURY VAPOR LIGHTING FIXTURE
MVDS	MICROWAVE VEHICLE DETECTION SYSTEM
N	NEUTRAL (GROUNDED CONDUCTOR)
NB	NEUTRAL BUS
NC	NORMALLY CLOSE
NO	NORMALLY OPEN
P	CIRCUIT BREAKER'S POLE
PB	PULL BOX
PBA	PUSH BUTTON ASSEMBLY
PEC	PHOTOELECTRIC CONTROL
Ped	PEDESTRIAN
PEU	PHOTOELECTRIC UNIT
PT	CONDUIT WITH PULL TAPE
RE	RELOCATED EQUIPMENT
RM	RAMP METERING
RWIS	ROADSIDE WEATHER INFORMATION SYSTEM
SB	SLIP BASE
SIC	SIGNAL INTERCONNECT CABLE
Sig	SIGNAL
SMA	SIGNAL MAST ARM
SNS	STREET NAME SIGN
SP	SERVICE POINT
TDC	TELEPHONE DEMARCATION CABINET
TMS	TRAFFIC MONITORING STATION
TOS	TRAFFIC OPERATIONS SYSTEM
Veh	VEHICLE
VIVDS	VIDEO IMAGE VEHICLE DETECTION SYSTEM
WIM	WEIGH-IN-MOTION
Xfmr	TRANSFORMER

SOFFIT AND WALL MOUNTED LUMINAIRES

PENDANT, 70 W HPS UNLESS OTHERWISE SPECIFIED

FLUSH, 70 W HPS UNLESS OTHERWISE SPECIFIED

WALL SURFACE, 70 W HPS UNLESS OTHERWISE SPECIFIED

EXISTING SOFFIT OR WALL LUMINAIRE TO REMAIN UNMODIFIED

EXISTING SOFFIT OR WALL LUMINAIRE TO BE MODIFIED AS SPECIFIED

NOTE:
Arrow indicates "street side" of luminaire.

COMMONLY USED SYMBOLS FOR UNITED STATES CUSTOMARY UNITS OF MEASUREMENT:

SYMBOL USED	DEFINITIONS
Ω	OHMS
min	MINUTE
s	SECOND
bps	BITS PER SECOND
Bps	BYTES PER SECOND
A	AMPERE
V	VOLT
V(dc)	VOLT (DIRECT CURRENT)
V(ac)	VOLT (ALTERNATING CURRENT)
FC	FOOT - CANDLE
W	WATTS
VA	VOLT-AMPERE
M	MEGA
k	KILO
m	MILLI
μ	MICRO
P	PICO
Hz	HERTZ

MISCELLANEOUS ELECTROLIERS

NEW	EXISTING	
		LUMINAIRE ON WOOD POLE
		NON-STANDARD ELECTROLIER (SEE PROJECT NOTES OR PROJECT PLANS)
		CITY ELECTROLIER
		ELECTROLIER FOUNDATION (FUTURE INSTALLATION)

NOTES:

1. HPS luminaires shall be 310 W HPS when installed on Type 21, 21D, 30, 31 and 32 Standards, unless otherwise specified. HPS luminaires shall be 200 W when installed on other type standards or poles, unless otherwise specified.
2. LED luminaires shall be 235 W when installed on Type 21, 21D, 30, 31 and 32 Standards, unless otherwise specified. LED luminaires shall be 165 W when installed on other type standards or poles, unless otherwise specified.
3. Luminaires shall be the cutoff type, ANSI Type III medium cutoff lighting distribution, unless otherwise specified.

STANDARD ELECTROLIER

NEW	EXISTING	STANDARD TYPE
		15
		15D
		15 STRUCTURE
		15D STRUCTURE
		21
		21D
		21 STRUCTURE
		21D STRUCTURE
		30
		31
		32

STATE OF CALIFORNIA
DEPARTMENT OF TRANSPORTATION

ELECTRICAL SYSTEMS (LEGEND AND ABBREVIATIONS)

NO SCALE

RSP ES-1A DATED JULY 19, 2013 SUPERSEDES STANDARD PLAN ES-1A DATED MAY 20, 2011 - PAGE 425 OF THE STANDARD PLANS BOOK DATED 2010.

REVISED STANDARD PLAN RSP ES-1A

2010 REVISED STANDARD PLAN RSP ES-1A

DATE PLOTTED => 25-JUL-2014
TIME PLOTTED => 12:24

Dist	COUNTY	ROUTE	POST MILES TOTAL PROJECT	SHEET No.	TOTAL SHEETS
02	Sha	44	R4.2/R14.5	66	70

Theresa Gabriel
REGISTERED ELECTRICAL ENGINEER

July 19, 2013
PLANS APPROVAL DATE

REGISTERED PROFESSIONAL ENGINEER Theresa Aziz Gabriel No. E15129 Exp. 6-30-14 ELECTRICAL STATE OF CALIFORNIA

THE STATE OF CALIFORNIA OR ITS OFFICERS OR AGENTS SHALL NOT BE RESPONSIBLE FOR THE ACCURACY OR COMPLETENESS OF SCANNED COPIES OF THIS PLAN SHEET.

TO ACCOMPANY PLANS DATED 06-24-14

CONDUIT

NEW	EXISTING	
		LIGHTING CONDUIT, UNLESS OTHERWISE INDICATED OR NOTED
		TRAFFIC SIGNAL CONDUIT
C	c	COMMUNICATION CONDUIT
T	t	TELEPHONE CONDUIT
F	f	FIRE ALARM CONDUIT
FO	fo	FIBER OPTIC CONDUIT
		CONDUIT TERMINATION
R	r	CONDUIT RISER ATTACHED TO THE STRUCTURE OR SERVICE POLE

SERVICE EQUIPMENT

NEW	EXISTING	
OH	oh	OVERHEAD LINES
U	U	WOOD POLE, "U" INDICATES UTILITY OWNED
		POLE GUY WITH ANCHOR
		UTILITY TRANSFORMER - GROUND MOUNTED
III	III	SERVICE EQUIPMENT ENCLOSURE TYPE. DOOR INDICATES FRONT OF ENCLOSURE
T	t	TELEPHONE DEMARCATION CABINET

POLE-MOUNTED SERVICE DESIGNATION

TYPE H SERVICE, 28'-10" — TYPE OF INSTALLATION AND POLE HEIGHT ABOVE GRADE

FLASHING BEACON

NEW	EXISTING	
R	R	FLASHING BEACON (ONE VEHICLE SIGNAL HEAD WITH BACKPLATE AND VISOR) "R" INDICATES RED INDICATION, "Y" INDICATES YELLOW INDICATION
Y Y	Y Y	FLASHING BEACON WITH TYPE 15-FBS STANDARD AND A SIGN.
R R	R R	FLASHING BEACON WITH TYPES 9, 9A OR 9B SIGN UNLESS OTHERWISE SPECIFIED OR INDICATED

SIGNAL EQUIPMENT

NEW	EXISTING	
C	C	PEDESTRIAN SIGNAL HEAD "C" INDICATES COUNTDOWN PEDESTRIAN HEAD
		PUSH BUTTON ASSEMBLY POST
		PEDESTRIAN BARRICADE
		VEHICLE SIGNAL HEAD (WITH BACKPLATE AND 3-SECTIONS: RED, YELLOW AND GREEN)
		VEHICLE SIGNAL HEAD WITH ANGLE VISOR
PV	PV	MODIFICATIONS OF BASIC SYMBOL: "L" INDICATES ALL NON-ARROW SECTIONS LOUVERED "LG" INDICATES LOUVERED GREEN SECTION ONLY "PV" INDICATES ALL 12" SECTIONS PROGRAMMED VISIBILITY "8" INDICATES ALL 8" SECTIONS (ONLY WHEN SPECIFIED)
		VEHICLE SIGNAL HEAD CONSISTING OF RED, YELLOW AND GREEN LEFT ARROW SECTIONS
		VEHICLE SIGNAL HEAD CONSISTING OF RED AND YELLOW SECTIONS WITH AN UP GREEN ARROW SECTION
		VEHICLE SIGNAL HEAD (5 SECTION) CONSISTING OF RED, YELLOW AND GREEN SECTIONS WITH YELLOW AND GREEN RIGHT ARROW SECTIONS
		TYPE 15TS STANDARD WITH VEHICLE SIGNAL HEAD AND LUMINAIRE
		TYPE 21TS STANDARD WITH VEHICLE SIGNAL HEAD AND LUMINAIRE
		STANDARD WITH LUMINAIRE AND SIGNAL MAST ARMS AND ATTACHED VEHICLE SIGNAL HEADS
		TYPE 1 STANDARD WITH ATTACHED VEHICLE SIGNAL HEADS
		STANDARD WITH A SIGNAL MAST ARM, ATTACHED VEHICLE SIGNAL HEADS AND INTERNALLY ILLUMINATED STREET NAME SIGN
		CONTROLLER ASSEMBLY. DOOR INDICATES FRONT OF CABINET

SIGNAL EQUIPMENT Cont

NEW	EXISTING	
		GUARD POST
		TYPE 1 STANDARD WITH RAMP METERING SIGN
		OPTICAL DETECTOR FOR THE EMERGENCY VEHICLE DETECTION SYSTEM

NOTES:

1. All signal sections shall be 12" unless shown otherwise.
2. Signal heads shall be provided with backplates unless shown otherwise.

ILLUMINATED OVERHEAD SIGN

NEW	EXISTING	
		SINGLE POST, SINGLE ILLUMINATED SIGN, BALANCED BUTTERFLY
		SINGLE POST, DOUBLE ILLUMINATED SIGN, BALANCED BUTTERFLY
		SINGLE POST, SINGLE ILLUMINATED SIGN, FULL CANTILEVER
		DOUBLE POST, SINGLE ILLUMINATED SIGN
		SINGLE ILLUMINATED SIGN MOUNTED ON STRUCTURE
		DOUBLE POST, SINGLE ILLUMINATED SIGN WITH ELECTROLIER

STATE OF CALIFORNIA
DEPARTMENT OF TRANSPORTATION

ELECTRICAL SYSTEMS (LEGEND AND ABBREVIATIONS)

NO SCALE

RSP ES-1B DATED JULY 19, 2013 SUPERSEDES STANDARD PLAN ES-1B DATED MAY 20, 2011 - PAGE 426 OF THE STANDARD PLANS BOOK DATED 2010.

REVISED STANDARD PLAN RSP ES-1B

2010 REVISED STANDARD PLAN RSP ES-1B

DATE PLOTTED => 25-JUL-2014
TIME PLOTTED => 12:24

Dist	COUNTY	ROUTE	POST MILES TOTAL PROJECT	SHEET No.	TOTAL SHEETS
02	Sha	44	R4.2/R14.5	67	70

Theresa Gabriel
REGISTERED ELECTRICAL ENGINEER

July 19, 2013
PLANS APPROVAL DATE

REGISTERED PROFESSIONAL ENGINEER
Theresa Aziz Gabriel
No. E15129
Exp. 6-30-14
ELECTRICAL
STATE OF CALIFORNIA

THE STATE OF CALIFORNIA OR ITS OFFICERS OR AGENTS SHALL NOT BE RESPONSIBLE FOR THE ACCURACY OR COMPLETENESS OF SCANNED COPIES OF THIS PLAN SHEET.

TO ACCOMPANY PLANS DATED 06-24-14

EQUIPMENT IDENTIFICATION

ILLUMINATED SIGN IDENTIFICATION NUMBER:

SIGN No. 12345
10 ISL SCI 1.0

- SIGN NUMBER - PLACE ON POST OR STRUCTURE
- TRANSFORMER RATING (kVA)
- LIGHTING CONTROL TYPE
- NUMBER AND TYPE OF FIXTURES

DO NOT PLACE ON STANDARD OR STRUCTURE

ELECTROLIER OR EQUIPMENT IDENTIFICATION NUMBER:

12345 - 15'-0"

- MAST ARM LENGTH, IF SHOWN. DO NOT PLACE ON STANDARD OR STRUCTURE
- EQUIPMENT NUMBER - PLACE ON STANDARD OR STRUCTURE. EXISTING EQUIPMENT NUMBERS ARE SHOWN IN PARENTHESIS

CONDUIT AND CONDUCTOR IDENTIFICATION:

1½"C, 2#10, 15#14, 2 DLC, 12P#18

- PAIR
- NUMBER AND SIZE OF CONDUCTORS AND CABLES
- SIZE OF CONDUIT IN INCHES

ø1, ø2, ø2P, etc.	TRAFFIC PHASE IDENTIFICATION FOR SIGNAL FACES, DETECTORS AND PHASE DIAGRAMS
1 2 3	LEGEND NUMBERS
A B C	EQUIPMENT, SIGNAL POLES, INSTALLATION OR ITEMS
1 2 3	CONDUIT RUN NUMBERS

SIGNAL AND LIGHTING STANDARD (TYPICAL DESIGNATION):

19A - 3 - 100

- WIND VELOCITY = 100 mph
- CASE 3 ARM LOADING
- STANDARD TYPE
- STANDARD PLAN SHEET NUMBER
- DETAIL, NUMBER, SECTION, TYPE OR ELEVATION

MISCELLANEOUS EQUIPMENT

NEW	EXISTING	
CMS	cms	CHANGEABLE MESSAGE SIGN
		CLOSED CIRCUIT TELEVISION CAMERA
		HIGHWAY ADVISORY RADIO POLE AND ANTENNA
EMS	ems	EXTINGUISHABLE MESSAGE SIGN
M V	m v	DETECTION DEVICE M = MICROWAVE SENSOR V = VIDEO IMAGE SENSOR

WIRING DIAGRAM LEGEND

- EXTERNAL CONDUCTOR
- CONDUCTOR OR BUS
- TIE POINT
- CONTACTOR COIL
- CONTACTOR, NO CONTACT
- TERMINAL BLOCKS
- CONTACTOR, NC CONTACT
- ENCLOSURE BOND
- GROUNDING ELECTRODE
- CIRCUIT BREAKER
- RECEPTACLE

PULL BOXES

NEW	EXISTING	
		PULL BOX, No. 5 UNLESS OTHERWISE INDICATED OR NOTED
3	9A(21)	PULL BOX, ADDITIONAL DESIGNATIONS OR DESCRIPTIONS

3 No. 3½ PULL BOX
5 No. 5 PULL BOX
6 No. 6 PULL BOX
7 No. 7 (CEILING PULL BOX)
8 No. 8 (PENDANT SOFFIT PULL BOX)
9 No. 9 PULL BOX
9A No. 9A PULL BOX

(C) COMMUNICATIONS PULL BOX
(E) PULL BOX WITH EXTENSION
(S) SPRINKLER CONTROL PULL BOX
(21) ANCHOR BOLTS AND CONDUIT FOR FUTURE INSTALLATION OF TYPE 21 STANDARD
(T) TRAFFIC PULL BOX

VEHICLE DETECTORS

5 J 9 U

- VEHICLE DETECTOR DESIGNATION
- U = UPPER
  L = LOWER
- SLOT NUMBER IN INPUT FILE
- INPUT FILE (I OR J)
- PHASE

NEW	EXISTING	
		TYPE A DETECTOR LOOP. OUTLINE OF SAWCUT SHOWN
		TYPE B DETECTOR LOOP. OUTLINE OF SAWCUT SHOWN
		TYPE C DETECTOR LOOP. OUTLINE OF SAWCUT SHOWN
		TYPE D DETECTOR LOOP. OUTLINE OF SAWCUT SHOWN
		TYPE E DETECTOR LOOP. OUTLINE OF SAWCUT SHOWN
		TYPE Q DETECTOR LOOP. OUTLINE OF SAWCUT SHOWN
		MAGNETIC DETECTOR
DH	dh	DETECTOR HANDHOLE
		MICROWAVE OR VIDEO DETECTION ZONE

STATE OF CALIFORNIA
DEPARTMENT OF TRANSPORTATION

ELECTRICAL SYSTEMS (LEGEND AND ABBREVIATIONS)

NO SCALE

RSP ES-1C DATED JULY 19, 2013 SUPERSEDES STANDARD PLAN ES-1C DATED MAY 20, 2011 - PAGE 427 OF THE STANDARD PLANS BOOK DATED 2010.

REVISED STANDARD PLAN RSP ES-1C

2010 REVISED STANDARD PLAN RSP ES-1C

DATE PLOTTED => 25-JUL-2014
TIME PLOTTED => 12:24

Dist	COUNTY	ROUTE	POST MILES TOTAL PROJECT	SHEET No.	TOTAL SHEETS
02	Sha	44	R4.2/R14.5	68	70

Theresa Gabriel
REGISTERED ELECTRICAL ENGINEER

July 19, 2013
PLANS APPROVAL DATE

REGISTERED PROFESSIONAL ENGINEER
Theresa Aziz Gabriel
No. E15129
Exp. 6-30-14
ELECTRICAL
STATE OF CALIFORNIA

THE STATE OF CALIFORNIA OR ITS OFFICERS OR AGENTS SHALL NOT BE RESPONSIBLE FOR THE ACCURACY OR COMPLETENESS OF SCANNED COPIES OF THIS PLAN SHEET.

TO ACCOMPANY PLANS DATED 06-24-14

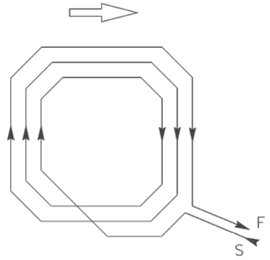

WINDING DETAIL

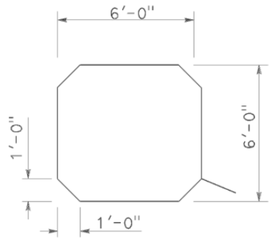

SAWCUT DETAIL

TYPE A LOOP DETECTOR CONFIGURATION

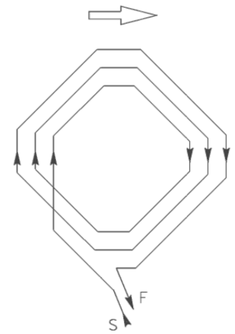

WINDING DETAIL

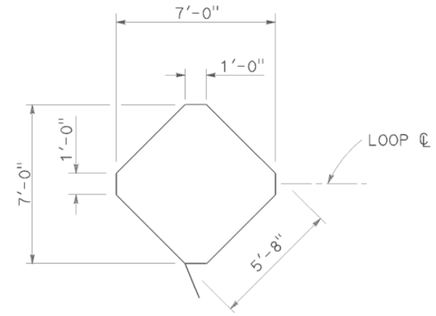

SAWCUT DETAIL

TYPE B LOOP DETECTOR CONFIGURATION

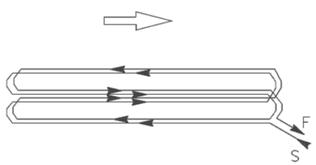

WINDING DETAIL

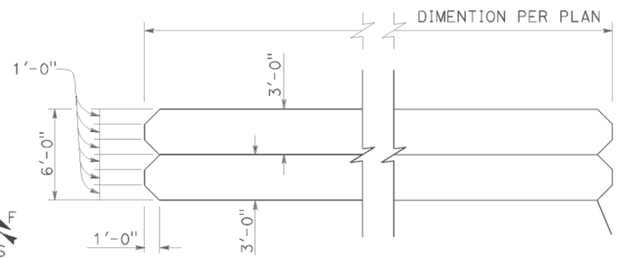

SAWCUT DETAIL

TYPE C LOOP DETECTOR CONFIGURATION

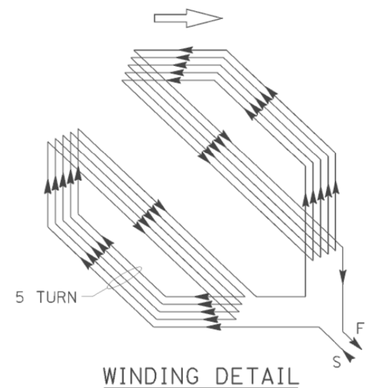

WINDING DETAIL

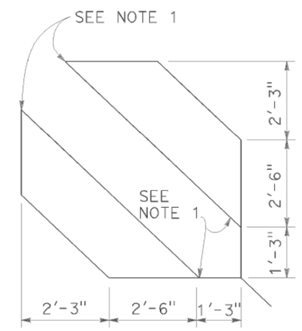

SAWCUT DETAIL

TYPE D LOOP DETECTOR CONFIGURATION

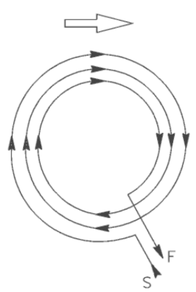

WINDING DETAIL

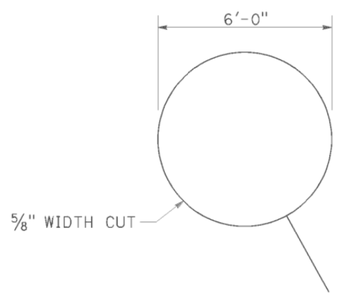

SAWCUT DETAIL

TYPE E LOOP DETECTOR CONFIGURATION

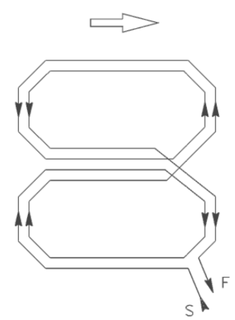

WINDING DETAIL

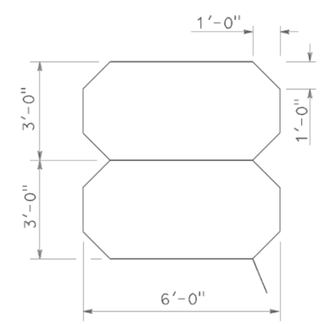

SAWCUT DETAIL

TYPE Q LOOP DETECTOR CONFIGURATION

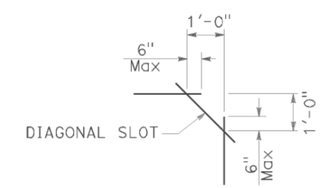

PLAN VIEW OF DIAGONAL SLOT AT CORNERS

NOTES:

1. Round corners of acute angle sawcuts to prevent damage to conductors.
2. Typical distance separating loops from edge to edge is 10' for Type A, B, D and E installation in single lane.

STATE OF CALIFORNIA
DEPARTMENT OF TRANSPORTATION

ELECTRICAL SYSTEMS (DETECTORS)

NO SCALE

RSP ES-5B DATED JULY 19, 2013 SUPERSEDES STANDARD PLAN ES-5B DATED MAY 20, 2011 - PAGE 449 OF THE STANDARD PLANS BOOK DATED 2010.

REVISED STANDARD PLAN RSP ES-5B

2010 REVISED STANDARD PLAN RSP ES-5B

DATE PLOTTED => 25-JUL-2014
TIME PLOTTED => 12:24

Dist	COUNTY	ROUTE	POST MILES TOTAL PROJECT	SHEET No.	TOTAL SHEETS
02	Sha	44	R4.2/R14.5	69	70

Theresa Gabriel
REGISTERED ELECTRICAL ENGINEER

July 19, 2013
PLANS APPROVAL DATE

REGISTERED PROFESSIONAL ENGINEER Theresa Aziz Gabriel No. E15129 Exp. 6-30-14 ELECTRICAL STATE OF CALIFORNIA

THE STATE OF CALIFORNIA OR ITS OFFICERS OR AGENTS SHALL NOT BE RESPONSIBLE FOR THE ACCURACY OR COMPLETENESS OF SCANNED COPIES OF THIS PLAN SHEET.

TO ACCOMPANY PLANS DATED 06-24-14

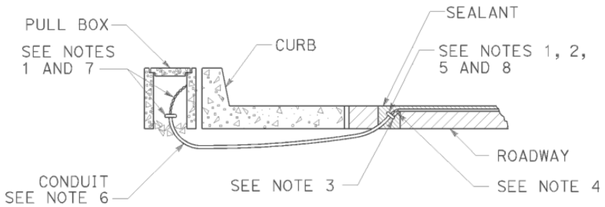

TYPE A
CURB TERMINATION DETAIL

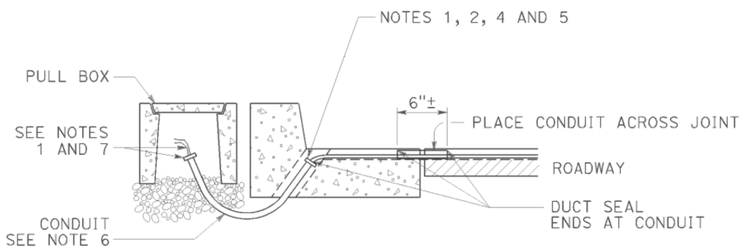

CROSS SECTION

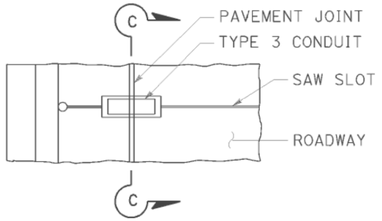

PLAN VIEW

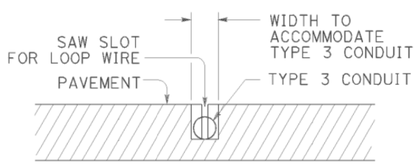

SECTION C-C

TYPE B
CURB TERMINATION DETAIL

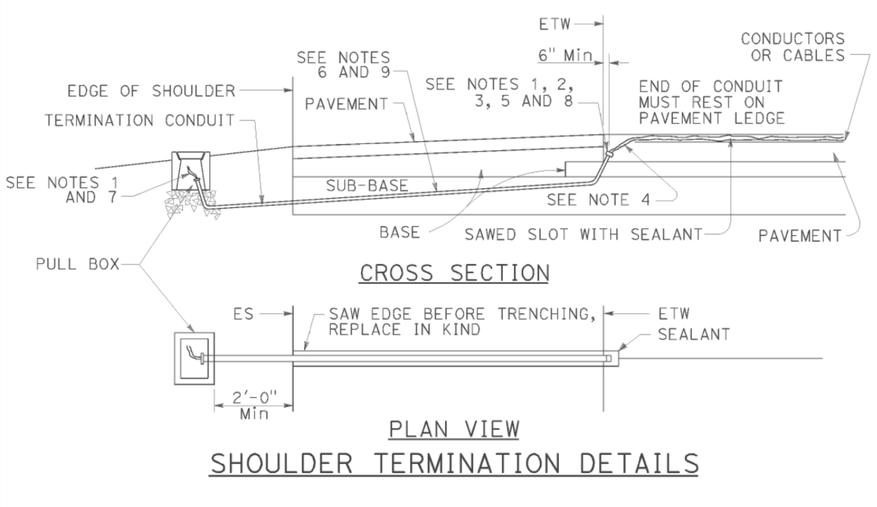

CROSS SECTION

PLAN VIEW

SHOULDER TERMINATION DETAILS

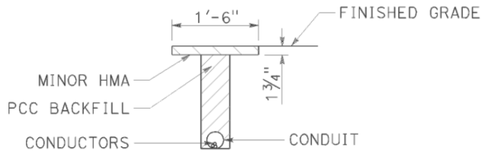

"T" TRENCH
DETAIL T

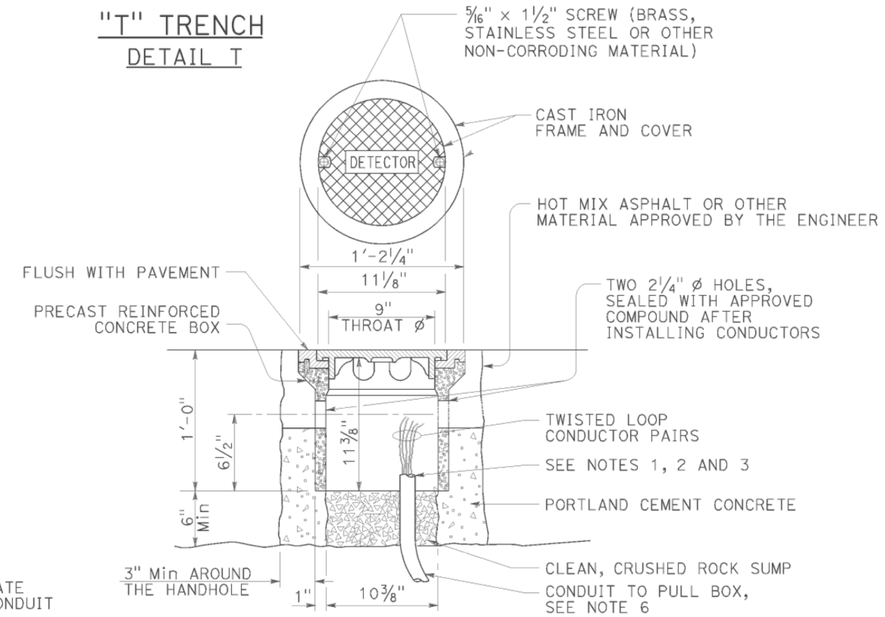

DETECTOR HANDHOLE DETAIL

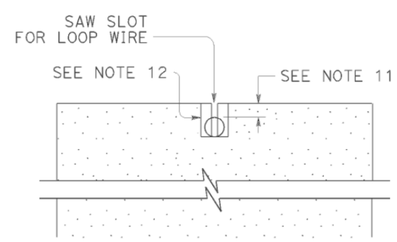

SECTION A-A

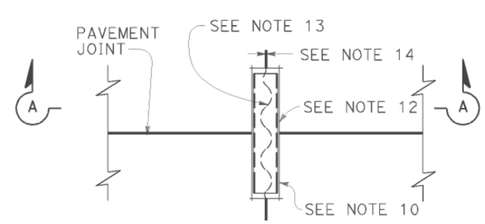

PLAN VIEW

TYPICAL LOOP LEAD-IN DETAIL
AT PAVEMENT JOINT

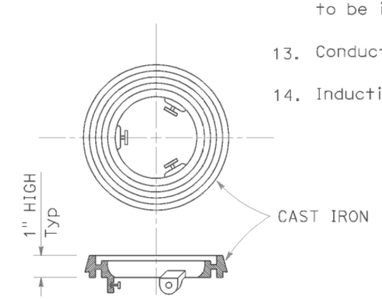

LOCKING GRADE RING

NOTES:

1. Bushing shall be used at end of conduit.
2. Tape detector conductors or cables 3" each side of bushings.
3. Install duct seal compound to each end of termination conduit before installing sealant.
4. Round all sharp edges where detector conductors or cables have to pass.
5. End of conduit shall be 3⅛" below roadway surface.
6.

Conduit size	Loop conductors
1"C minimum	1 to 2 pairs
1½"C minimum	3 to 4 pairs
2"C minimum	5 or more pairs

7. Splice detector conductors or cables to detector lead-in-cable.
8. Location of detector handhole when shown on plans.
9. When the shoulder and traveled way are paved with the same material and there is no joint between them, the conduit shall extend only 2'-0" into the shoulder pavement.
10. ¾"C, Type 3 conduit 6" long minimum, plug both ends with duct compound to keep out sealant.
11. ½" Minimum between top of conduit and pavement surface.
12. Sawcut shall not exceed 1" in width and ⅛" longer than conduit to be installed.
13. Conductors with ½" minimum slack inside conduit.
14. Inductive loop detector saw slot.

STATE OF CALIFORNIA
DEPARTMENT OF TRANSPORTATION

ELECTRICAL SYSTEMS (CURB TERMINATION AND HANDHOLE)

NO SCALE

RSP ES-5D DATED JULY 19, 2013 SUPERSEDES STANDARD PLAN ES-5D DATED MAY 20, 2011 - PAGE 451 OF THE STANDARD PLANS BOOK DATED 2010.

REVISED STANDARD PLAN RSP ES-5D

2010 REVISED STANDARD PLAN RSP ES-5D

DATE PLOTTED => 25-JUL-2014
TIME PLOTTED => 12:24

DIST	COUNTY	ROUTE	POST MILES TOTAL PROJECT	SHEET NO.	TOTAL SHEETS
02	Sha	44	R4.2/R14.5	70	70

Theresa Gabriel
REGISTERED ELECTRICAL ENGINEER

July 19, 2013
PLANS APPROVAL DATE

REGISTERED PROFESSIONAL ENGINEER Theresa Aziz Gabriel No. E15129 Exp. 6-30-14 ELECTRICAL STATE OF CALIFORNIA

THE STATE OF CALIFORNIA OR ITS OFFICERS OR AGENTS SHALL NOT BE RESPONSIBLE FOR THE ACCURACY OR COMPLETENESS OF SCANNED COPIES OF THIS PLAN SHEET.

TO ACCOMPANY PLANS DATED 06-24-14

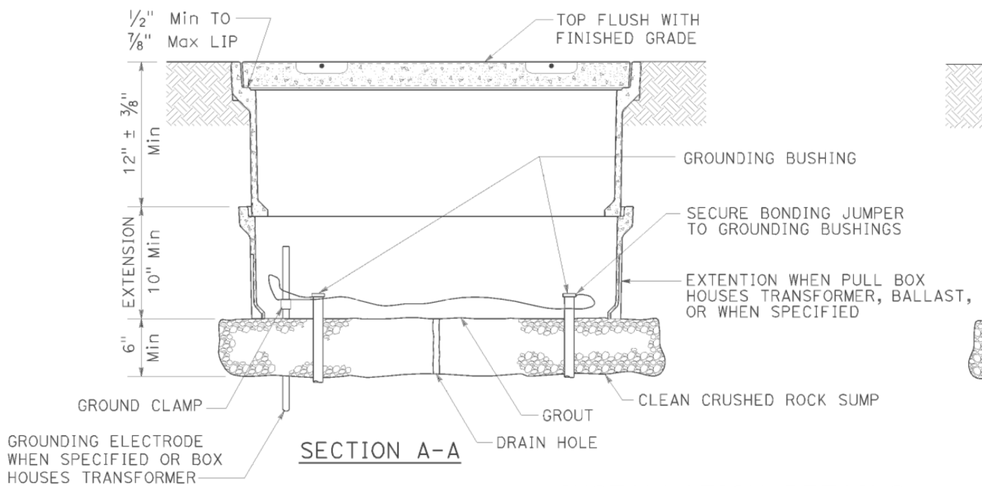

SECTION A-A

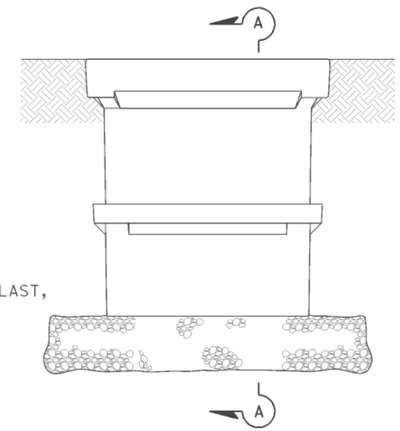

SIDE VIEW

INSTALLATION DETAILS

DETAIL A

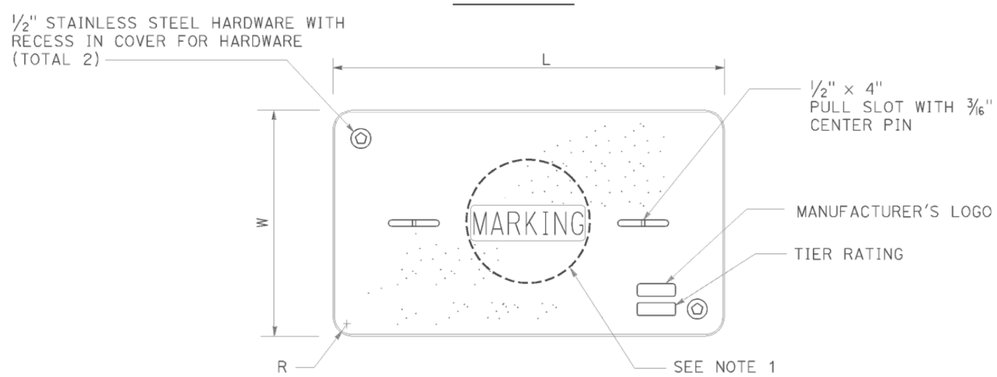

COVER TOP VIEW

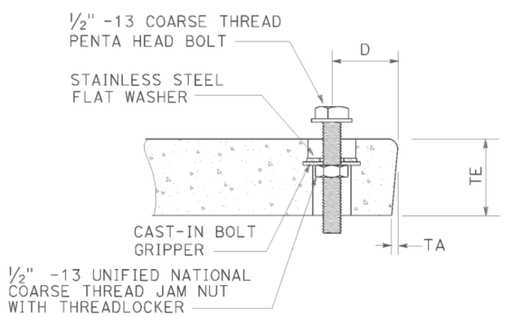

TYPICAL COVER CAPTIVE BOLT

OR SIMILAR

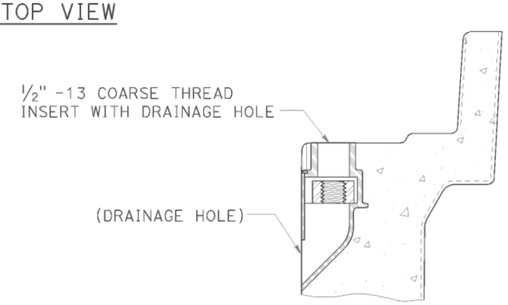

TYPICAL THREADED INSERT

OR SIMILAR

DIMENSION TABLE

PULL BOX	PULL BOX			COVER						
	MINIMUM DEPTH BOX	MINIMUM DEPTH EXTENSION	MAXIMUM WEIGHT	L	W	R	TE	TA	D	MAXIMUM WEIGHT
No. 3½	12"	N/A	40 lb	1' - 3⅜"	10⅛"	1⅜"	2"	⅛"	1¾"	30 lb
No. 5	12"	10"	55 lb	1' - 11¼"	1' - 1¾"	1⅜"	2"	⅛"	1¾"	60 lb
No. 6	12"	10"	70 lb	2' - 6½"	1' - 5½"	1⅜"	2"	⅛"	2"	85 lb

NOTES:

1. Pull box covers shall be marked as follows: "SERVICE" Service circuits between service point and service disconnect; "SPRINKLER-CONTROL" sprinkler control circuits, 50 V or less; "CALTRANS" on all pull boxes, except pull boxes marked "SPRINKLER-CONTROL"; and "TELEPHONE" Telephone service;
   - A) No. 3½ pull box.
     - 1) "SIGNAL" - Traffic signal circuits with or without lighting or sign lighting circuits.
     - 2) "LIGHTING" - Lighting or sign lighting circuits where voltage is under 600 V.
   - B) No. 5, 6, 9 or 9A pull box.
     - 1) "TRAFFIC SIGNAL" - Traffic signal circuits with or without lighting or sign lighting circuits.
     - 2) "LIGHTING" - Lighting or sign lighting circuits where voltage is under 600 V.
     - 3) "LIGHTING-HIGH VOLTAGE" - Lighting or sign lighting circuits where voltage is above 600 V.
     - 4) "IRRIGATION" - Circuits to irrigation controller 120 V or more.
     - 5) "RAMP METER" - Ramp meter circuits.
     - 6) "COUNT STATION" - Count or speed monitor circuits.
     - 7) "COMMUNICATIONS" - Communication circuits.
     - 8) "TOS COMMUNICATIONS" - TOS communication line.
     - 9) "TOS POWER" - TOS power.
     - 10) "TDC POWER" - Telephone demarcation cabinet power.
     - 11) "CCTV" - Closed circuit television circuits.
     - 12) "TMS" - Traffic monitoring station circuits.
     - 13) "CMS" - Changeable message sign circuits.
     - 14) "HAR" - Highway advisory radio circuits.
     - 15) "BOOSTER PUMP" - Booster pump circuit.
2. The nominal dimensions of the opening in which the cover sets shall be the same as the cover dimensions except the length and width dimensions shall be ⅛" greater.
3. Covers and boxes shall be interchangeable with California standard male and female gages. When interchanged with a standard male or female gage, the top surfaces shall be flush within ⅛". Top outside radius of covers and pull boxes shall have a ⅛" radius.
4. Pull box extension may be another pull box as long as the bottom edge of the pull box can fit into the cover opening.
5. All dimensions for the cover for non-traffic pull box are nominal values.

STATE OF CALIFORNIA
DEPARTMENT OF TRANSPORTATION

ELECTRICAL SYSTEMS (NON-TRAFFIC PULL BOX)

NO SCALE

RSP ES-8A DATED JULY 19, 2013 SUPERSEDES RSP ES-8A DATED JANUARY 20, 2012 THAT SUPPLEMENTS THE STANDARD PLANS BOOK DATED 2010.

REVISED STANDARD PLAN RSP ES-8A

2010 REVISED STANDARD PLAN RSP ES-8A

DATE PLOTTED => 25-JUL-2014
TIME PLOTTED => 12:24