Dist	COUNTY	ROUTE	POST MILES TOTAL PROJECT	SHEET No.	TOTAL SHEETS
02	Las	147	0.5/1.2	1	38

INDEX OF PLANS

SHEET No.	DESCRIPTION
1	TITLE SHEET AND LOCATION MAP
2	TYPICAL CROSS SECTIONS
3-5	LAYOUTS
6-9	PROFILE AND SUPERELEVATION DIAGRAM
10	CONSTRUCTION DETAILS
11-13	EROSION CONTROL PLAN
14	EROSION CONTROL QUANTITIES
15	DRAINAGE PROFILES
16	DRAINAGE DETAILS
17-19	UTILITY PLAN
20	UTILITY DETAILS AND QUANTITIES
21	CONSTRUCTION AREA SIGNS
22-24	PAVEMENT DELINEATION AND SIGN PLANS
25	PAVEMENT DELINEATION QUANTITIES
26-27	SIGN DETAILS
28	SIGN QUANTITIES
29	SUMMARY OF QUANTITIES
30-32	ELECTRICAL
33	STRUCTURAL/ELECTRICAL
34	TRAFFIC CONTROL SYSTEM
35-38	REVISED STANDARD PLANS

THE STANDARD PLANS LIST APPLICABLE TO THIS CONTRACT IS INCLUDED IN THE NOTICE TO BIDDERS AND SPECIAL PROVISIONS BOOK.

STATE OF CALIFORNIA

DEPARTMENT OF TRANSPORTATION

PROJECT PLANS FOR CONSTRUCTION ON

STATE HIGHWAY

IN LASSEN COUNTY NEAR WESTWOOD FROM 0.3 MILE NORTH TO 0.5 MILE SOUTH OF SPRING CREEK DRIVE

TO BE SUPPLEMENTED BY STANDARD PLANS DATED 2010

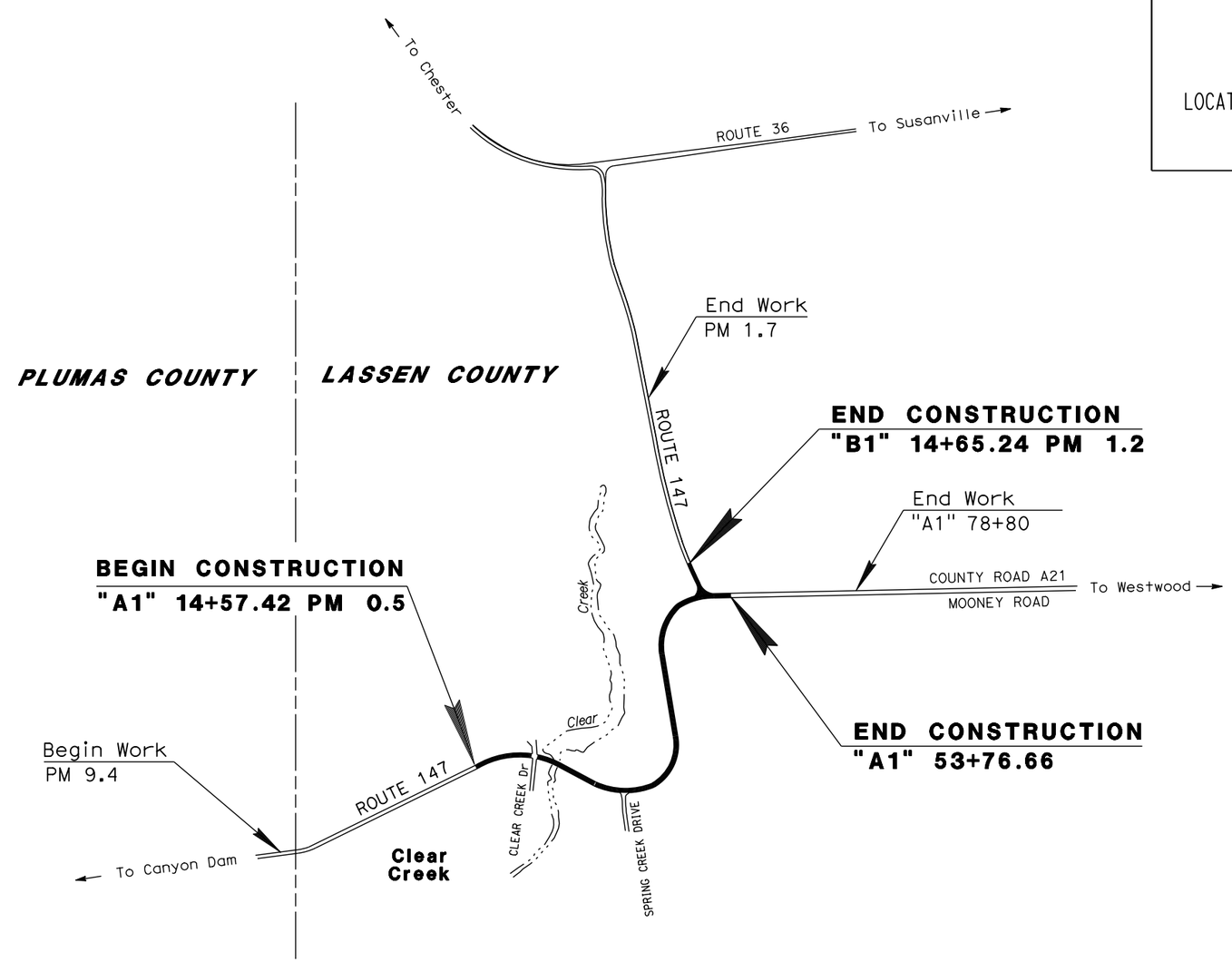

NO SCALE

Michael R. Webb 01-24-13
PROJECT ENGINEER DATE
REGISTERED CIVIL ENGINEER

January 24, 2013
PLANS APPROVAL DATE

REGISTERED PROFESSIONAL ENGINEER MICHAEL R. WEBB No. C73986 Exp. 6-30-13 CIVIL STATE OF CALIFORNIA

THE STATE OF CALIFORNIA OR ITS OFFICERS OR AGENTS SHALL NOT BE RESPONSIBLE FOR THE ACCURACY OR COMPLETENESS OF SCANNED COPIES OF THIS PLAN SHEET.

THE CONTRACTOR SHALL POSSESS THE CLASS (OR CLASSES) OF LICENSE AS SPECIFIED IN THE "NOTICE TO BIDDERS."

CONTRACT No.	02-4E3404
PROJECT ID	0200020273

LAST REVISION 01-24-13 DATE PLOTTED => 25-JAN-2013 TIME PLOTTED => 08:15

PROJECT MANAGER ERIC ORR
DESIGN ENGINEER JULIE CASEY

P:\proj1\02\4E340_plans\pse\24e340ab001.dgn

Dist	COUNTY	ROUTE	POST MILES TOTAL PROJECT	SHEET No.	TOTAL SHEETS
02	Las	147	0.5/1.2	2	38

REGISTERED CIVIL ENGINEER 01-24-13 DATE

01-24-13
PLANS APPROVAL DATE

REGISTERED PROFESSIONAL ENGINEER MICHAEL R. WEBB No. C73986 Exp. 6-30-13 CIVIL STATE OF CALIFORNIA

THE STATE OF CALIFORNIA OR ITS OFFICERS OR AGENTS SHALL NOT BE RESPONSIBLE FOR THE ACCURACY OR COMPLETENESS OF SCANNED COPIES OF THIS PLAN SHEET.

NOTES:

1. DIMENSIONS OF THE PAVEMENT STRUCTURES (STRUCTURAL SECTIONS) ARE SUBJECT TO TOLERANCES SPECIFIED IN THE STANDARD SPECIFICATIONS.
2. SUPERELEVATIONS ARE SHOWN ON THE SUPERELEVATION DIAGRAM.

ROUTE 147
DESIGN DESIGNATION

ADT (2013)	1158	D (2009)	70%
ADT (2033)	1198	T (2009)	14%
DHV (2033)	156	V	40 MPH
ESAL (2033)	798,000	20-Yr TI	9

TYPICAL PAVEMENT STRUCTURAL SECTIONS

1 — 0.40′ HMA (TYPE A)
0.60′ CLASS 2 AB

2 — Exist
Var 0.45′ TO 0.65′ AC

3 — 0.40′ SHOULDER BACKING

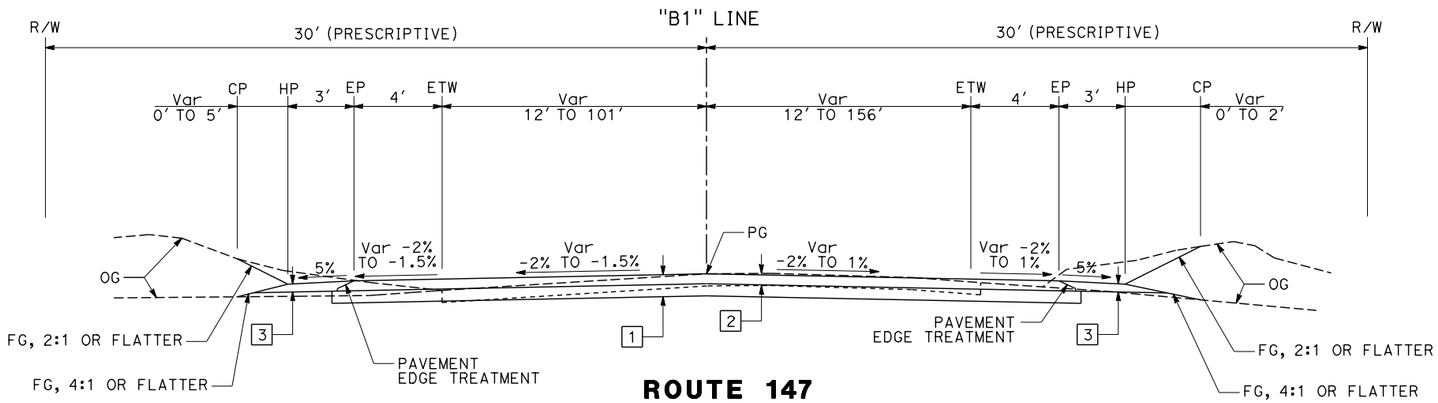

ROUTE 147

"B1" 10+00.00 TO "B1" 14+65.24

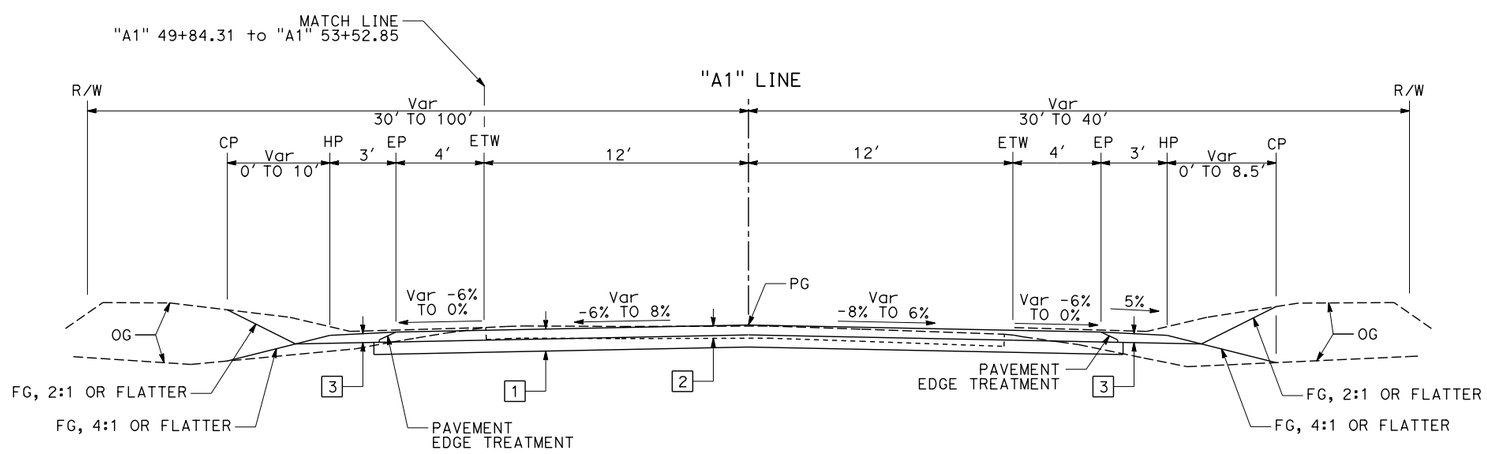

ROUTE 147

"A1" 14+57.42 TO "A1" 53+76.66

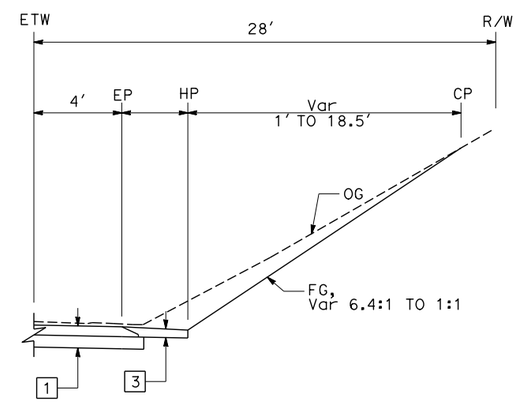

"A1" 43+50.00, R† TO "A1" 46+00.00, R†
"A1" 47+50.00, R† TO "A1" 51+26.44, R†

TYPICAL CROSS SECTIONS

NO SCALE

X-1

REVISED BY	DATE REVISED

CALCULATED-DESIGNED BY: MICHAEL WEBB
CHECKED BY: JEANNIE STEFFAN
FUNCTIONAL SUPERVISOR: JULIE CASEY

STATE OF CALIFORNIA - DEPARTMENT OF TRANSPORTATION
Caltrans® DESIGN

P:\proj1\02\4E340_plans\pse\24e340ca001.dgn

LAST REVISION 01-24-13 | DATE PLOTTED => 25-JAN-2013 | TIME PLOTTED => 08:15

Dist	COUNTY	ROUTE	POST MILES TOTAL PROJECT	SHEET No.	TOTAL SHEETS
02	Las	147	0.5/1.2	3	38

Michael R. Webb 12-21-12
REGISTERED CIVIL ENGINEER DATE

01-24-13
PLANS APPROVAL DATE

REGISTERED PROFESSIONAL ENGINEER
MICHAEL R. WEBB
No. C73986
Exp. 6-30-13
CIVIL
STATE OF CALIFORNIA

THE STATE OF CALIFORNIA OR ITS OFFICERS OR AGENTS SHALL NOT BE RESPONSIBLE FOR THE ACCURACY OR COMPLETENESS OF SCANNED COPIES OF THIS PLAN SHEET.

NOTE:

1. FOR ACCURATE RIGHT OF WAY DATA, CONTACT RIGHT OF WAY ENGINEERING AT THE DISTRICT OFFICE.

LEGEND:

CPACP

CM

ENCROACHMENT PERMIT

ABBREVIATIONS:

CM HORIZONTAL AND VERTICAL CONTROL MONUMENT

CPACP COLD PLANE ASPHALT CONCRETE PAVEMENT

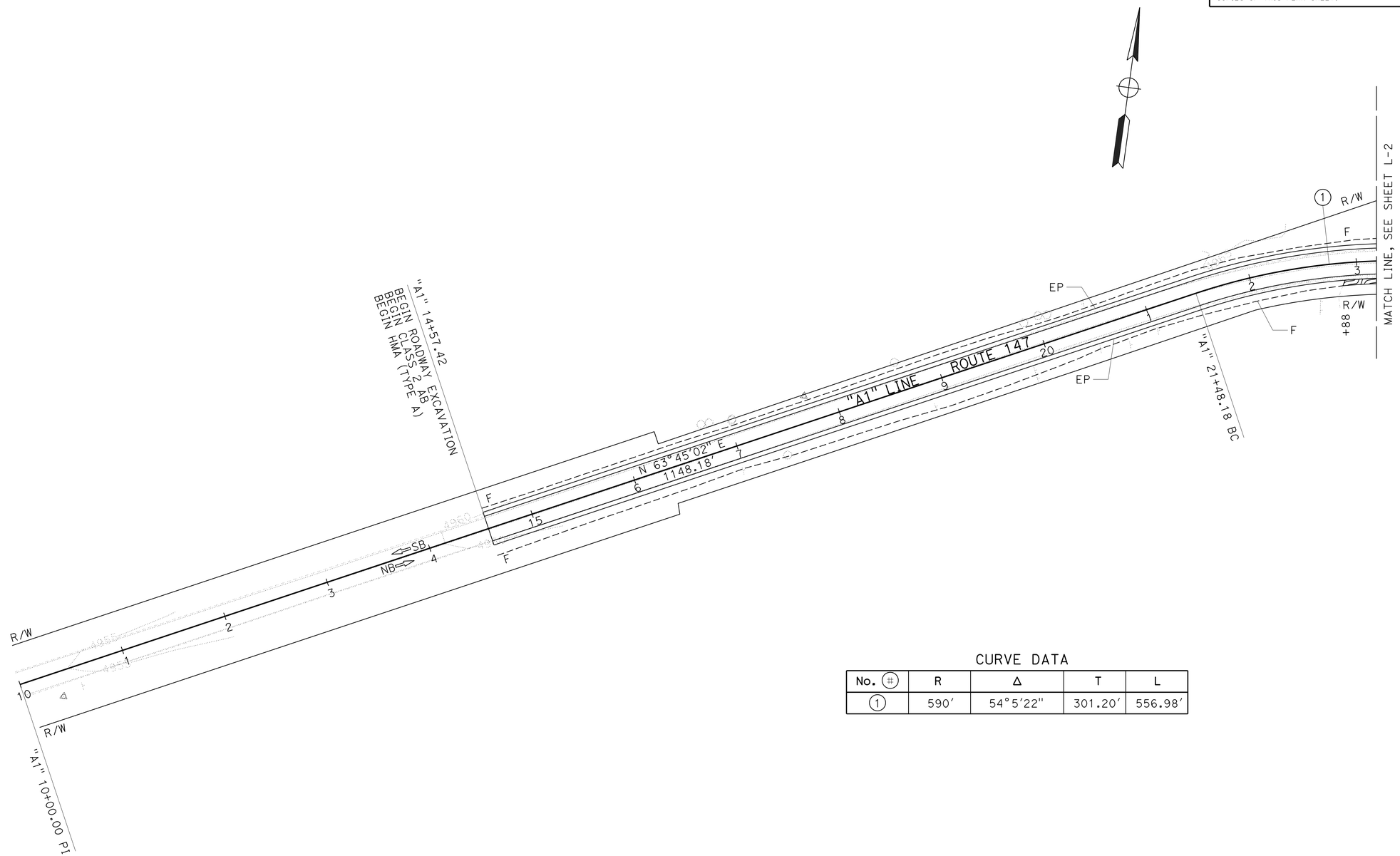

CURVE DATA

No. (#)	R	Δ	T	L
1	590′	54°5′22"	301.20′	556.98′

LAYOUT

SCALE: 1" = 50′

L-1

REVISED BY	DATE REVISED
MICHAEL WEBB	JEANNIE STEFFAN
CALCULATED-DESIGNED BY	CHECKED BY
FUNCTIONAL SUPERVISOR	JULIE CASEY

STATE OF CALIFORNIA - DEPARTMENT OF TRANSPORTATION
Caltrans
DESIGN

P:\proj\02\4E340_plans\pse\24e340ea001.dgn

LAST REVISION 12-21-12 | DATE PLOTTED => 30-JAN-2013 | TIME PLOTTED => 07:36

Dist	COUNTY	ROUTE	POST MILES TOTAL PROJECT	SHEET No.	TOTAL SHEETS
02	Las	147	0.5/1.2	4	38

Michael R. Webb 12-21-12
REGISTERED CIVIL ENGINEER DATE

01-24-13
PLANS APPROVAL DATE

REGISTERED PROFESSIONAL ENGINEER MICHAEL R. WEBB No. C73986 Exp. 6-30-13 CIVIL STATE OF CALIFORNIA

THE STATE OF CALIFORNIA OR ITS OFFICERS OR AGENTS SHALL NOT BE RESPONSIBLE FOR THE ACCURACY OR COMPLETENESS OF SCANNED COPIES OF THIS PLAN SHEET.

NOTE:

1. FOR ACCURATE RIGHT OF WAY DATA, CONTACT RIGHT OF WAY ENGINEERING AT THE DISTRICT OFFICE.

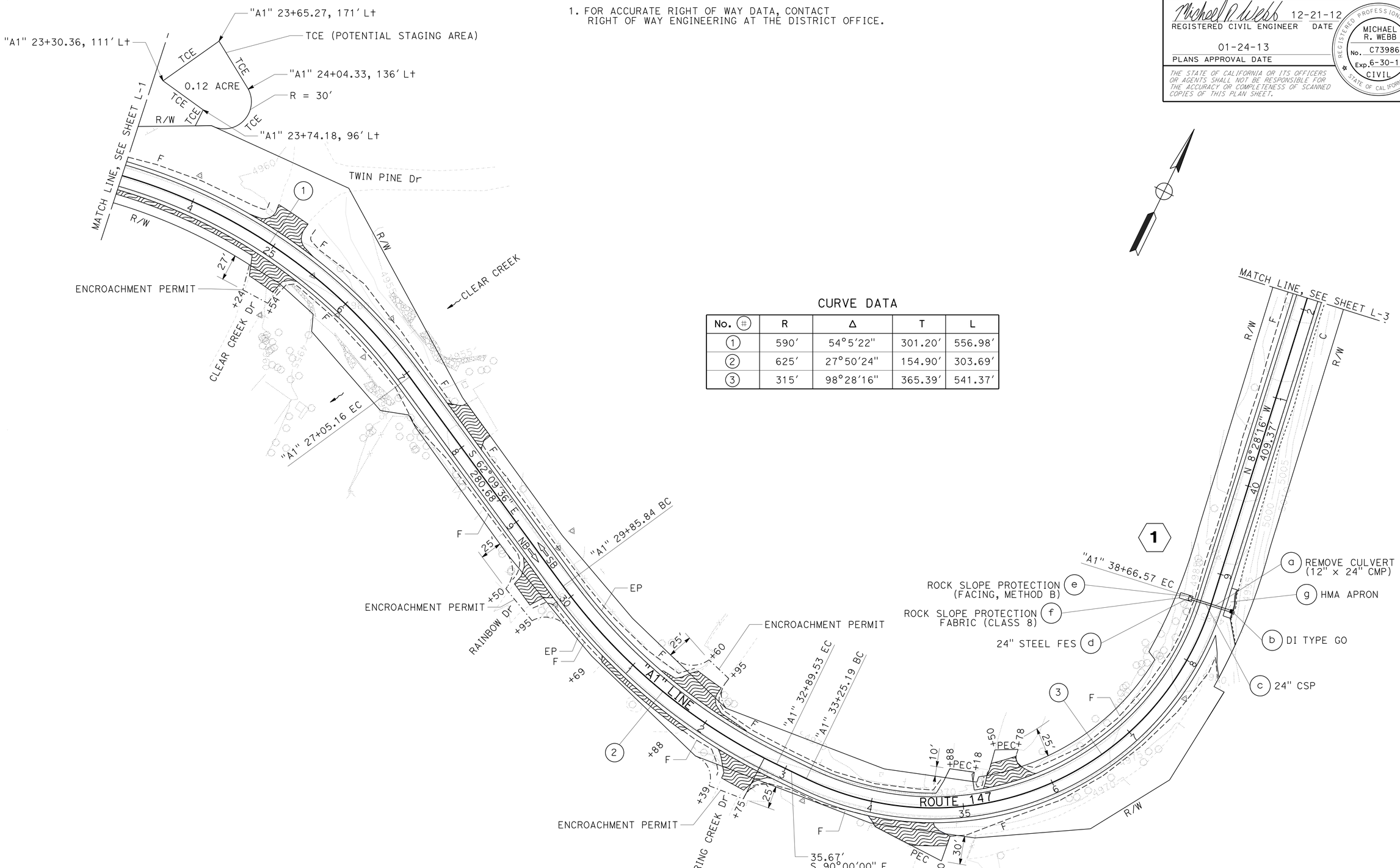

CURVE DATA

No. #	R	Δ	T	L
1	590'	54°5'22"	301.20'	556.98'
2	625'	27°50'24"	154.90'	303.69'
3	315'	98°28'16"	365.39'	541.37'

LAYOUT

SCALE: 1" = 50'

L-2

REVISED BY	DATE REVISED
MICHAEL WEBB	JEANNIE STEFFAN
CALCULATED-DESIGNED BY	CHECKED BY
FUNCTIONAL SUPERVISOR	JULIE CASEY

STATE OF CALIFORNIA - DEPARTMENT OF TRANSPORTATION
Caltrans DESIGN

P:\proj1\02\4E340_plans\pse\24e340ea002.dgn

LAST REVISION DATE PLOTTED => 30-JAN-2013
TIME PLOTTED => 07:36

Dist	COUNTY	ROUTE	POST MILES TOTAL PROJECT	SHEET No.	TOTAL SHEETS
02	Las	147	0.5/1.2	5	38

Michael R. Webb 12-21-12
REGISTERED CIVIL ENGINEER DATE

01-24-13
PLANS APPROVAL DATE

REGISTERED PROFESSIONAL ENGINEER
MICHAEL R. WEBB
No. C73986
Exp. 6-30-13
CIVIL
STATE OF CALIFORNIA

THE STATE OF CALIFORNIA OR ITS OFFICERS OR AGENTS SHALL NOT BE RESPONSIBLE FOR THE ACCURACY OR COMPLETENESS OF SCANNED COPIES OF THIS PLAN SHEET.

NOTE:

1. FOR ACCURATE RIGHT OF WAY DATA, CONTACT RIGHT OF WAY ENGINEERING AT THE DISTRICT OFFICE.

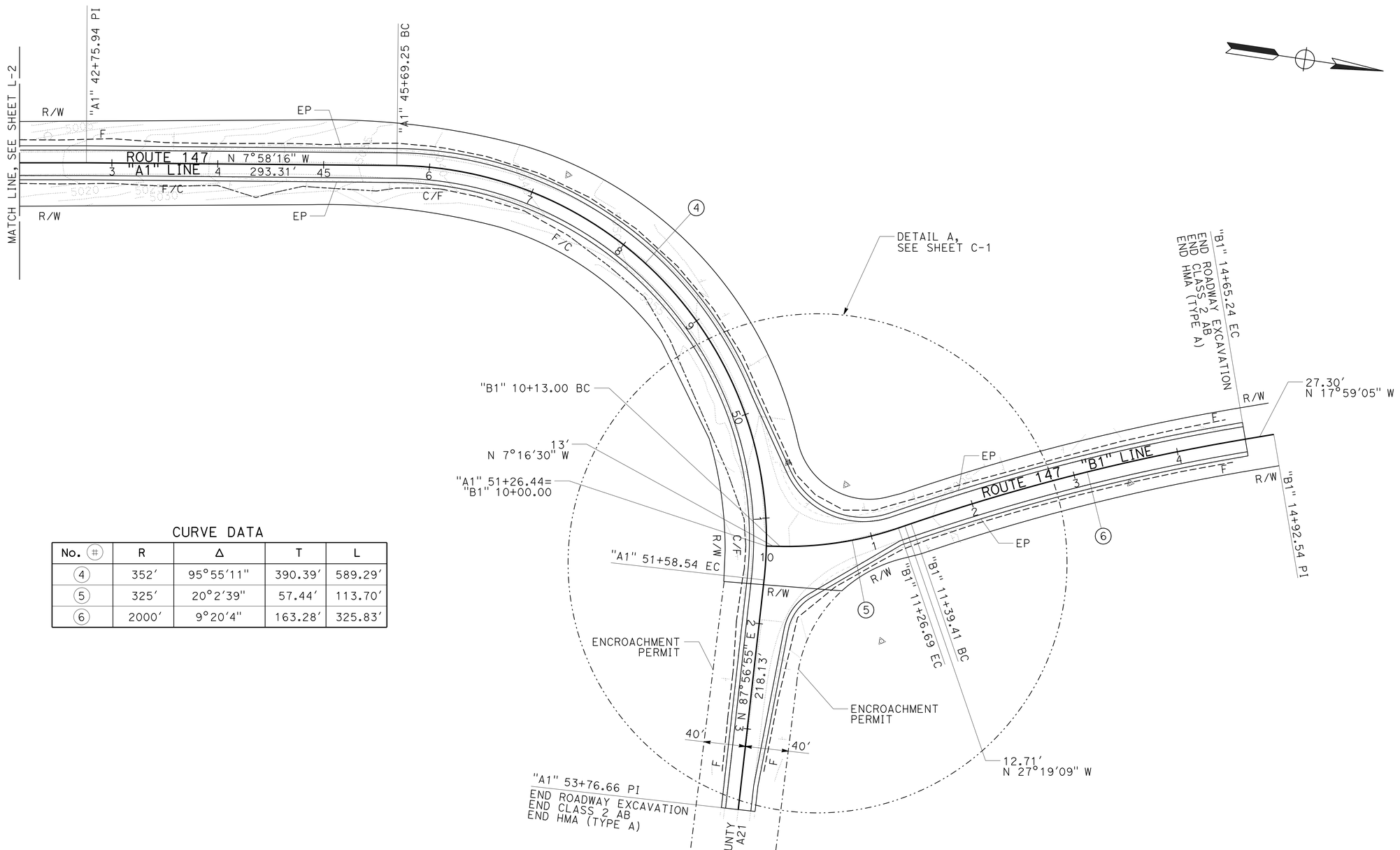

CURVE DATA

No. (#)	R	Δ	T	L
4	352′	95°55′11"	390.39′	589.29′
5	325′	20°2′39"	57.44′	113.70′
6	2000′	9°20′4"	163.28′	325.83′

LAYOUT
SCALE: 1" = 50′

L-3

REVISED BY	DATE REVISED
MICHAEL WEBB	JEANNIE STEFFAN
CALCULATED-DESIGNED BY	CHECKED BY
FUNCTIONAL SUPERVISOR	JULIE CASEY

STATE OF CALIFORNIA - DEPARTMENT OF TRANSPORTATION
Caltrans
DESIGN

P:\proj1\02\4E340_plans\pse\24e340ea003.dgn

LAST REVISION 12-21-12 | DATE PLOTTED => 30-JAN-2013 | TIME PLOTTED => 07:36

Dist	COUNTY	ROUTE	POST MILES TOTAL PROJECT	SHEET No.	TOTAL SHEETS
02	Las	147	0.5/1.2	6	38

REGISTERED CIVIL ENGINEER 12-21-12 DATE

01-24-13
PLANS APPROVAL DATE

REGISTERED PROFESSIONAL ENGINEER MICHAEL R. WEBB No. C73986 Exp. 6-30-13 CIVIL STATE OF CALIFORNIA

THE STATE OF CALIFORNIA OR ITS OFFICERS OR AGENTS SHALL NOT BE RESPONSIBLE FOR THE ACCURACY OR COMPLETENESS OF SCANNED COPIES OF THIS PLAN SHEET.

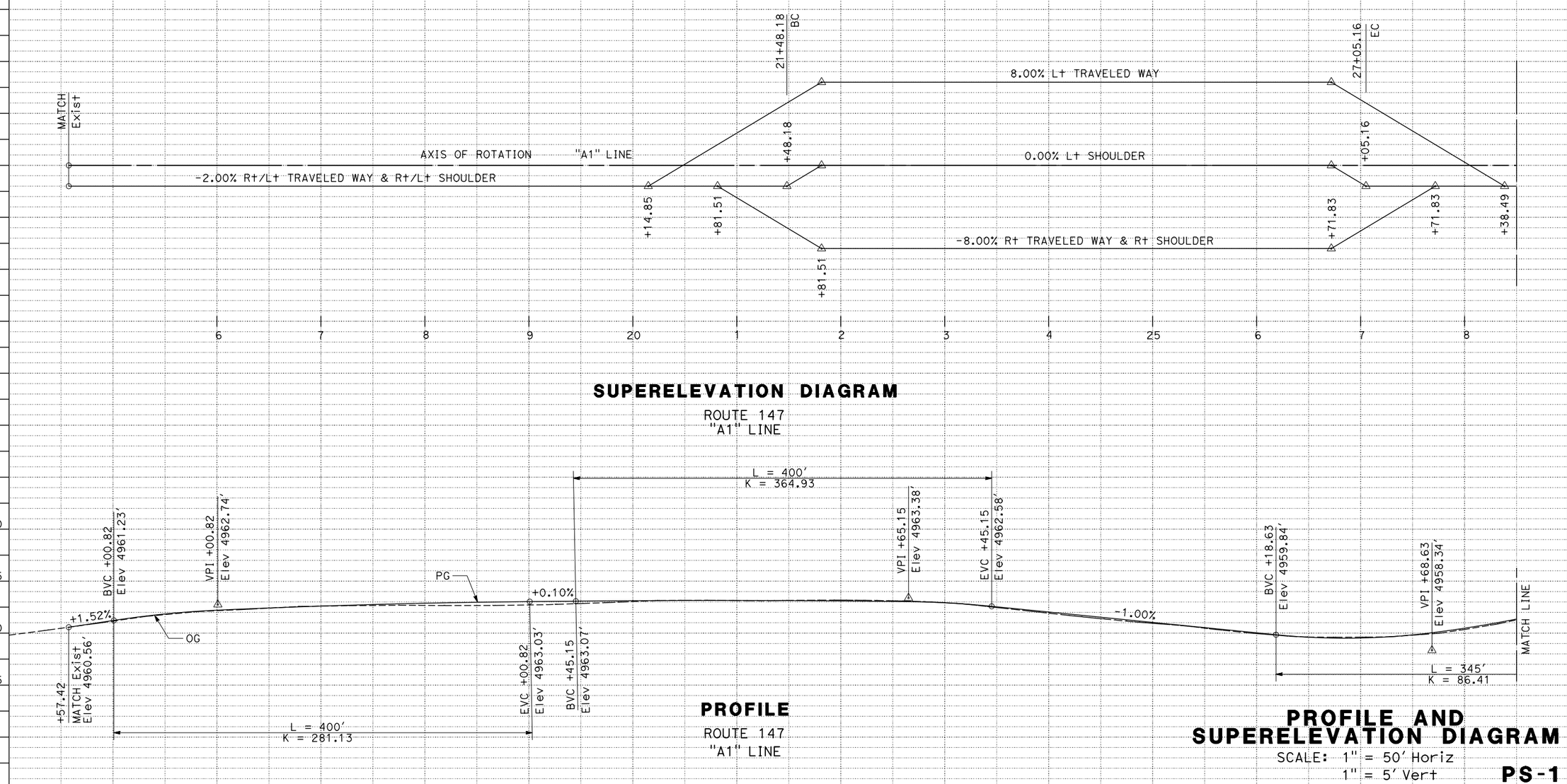

PROFILE AND SUPERELEVATION DIAGRAM

SCALE: 1" = 50' Horiz
1" = 5' Vert

PS-1

STATION		15	6	7	8	9	20	1	2	3	4	25	6	7	8	TOTAL
CY	Exc	544.3					565.4					386.2				1495.9
	Emb	177					45.5					35.5				258

REVISED BY | DATE REVISED
MICHAEL WEBB | JEANNIE STEFFAN
CALCULATED-DESIGNED BY | CHECKED BY
FUNCTIONAL SUPERVISOR: JULIE CASEY
STATE OF CALIFORNIA - DEPARTMENT OF TRANSPORTATION
Caltrans DESIGN

P:\proj1\02\4E340_plans\pse\24e340fb001.dgn

LAST REVISION 12-21-12 | DATE PLOTTED => 25-JAN-2013 | TIME PLOTTED => 08:15

Dist	COUNTY	ROUTE	POST MILES TOTAL PROJECT	SHEET No.	TOTAL SHEETS
02	Las	147	0.5/1.2	7	38

Michael R. Webb 12-21-12
REGISTERED CIVIL ENGINEER DATE

01-24-13
PLANS APPROVAL DATE

REGISTERED PROFESSIONAL ENGINEER MICHAEL R. WEBB No. C73986 Exp. 6-30-13 CIVIL STATE OF CALIFORNIA

THE STATE OF CALIFORNIA OR ITS OFFICERS OR AGENTS SHALL NOT BE RESPONSIBLE FOR THE ACCURACY OR COMPLETENESS OF SCANNED COPIES OF THIS PLAN SHEET.

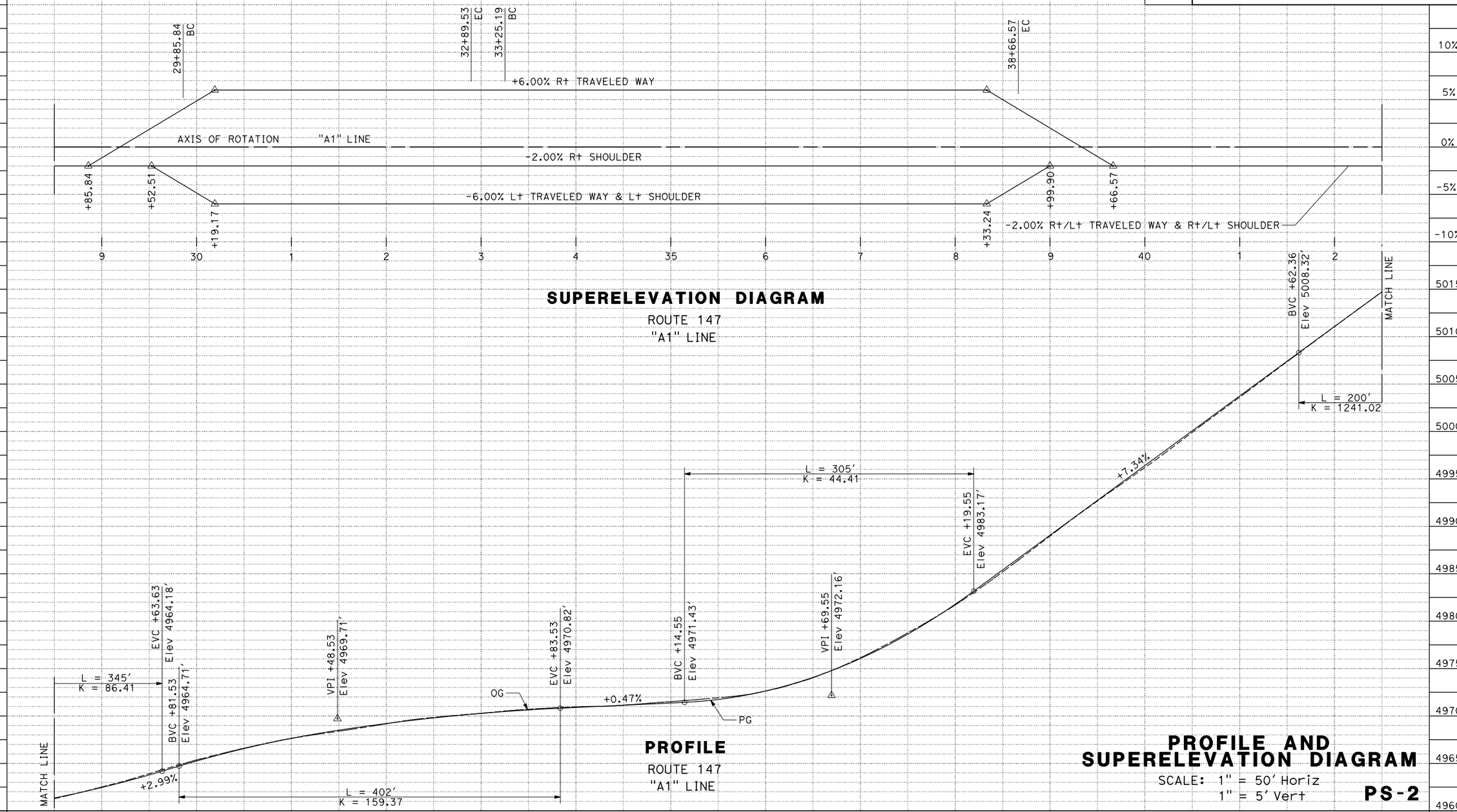

SUPERELEVATION DIAGRAM

ROUTE 147
"A1" LINE

PROFILE

ROUTE 147
"A1" LINE

PROFILE AND SUPERELEVATION DIAGRAM

SCALE: 1" = 50' Horiz
1" = 5' Vert

PS-2

STATION	9	30	1	2	3	4	35	6	7	8	9	40	1	2	TOTAL
CY Exc	198.8		384.1				710.4				284.3				1577.6
CY Emb	1.8		15.1				92.6				25.6				135.1

REVISED BY	DATE REVISED
MICHAEL WEBB	JEANNIE STEFFAN
CALCULATED-DESIGNED BY	CHECKED BY
FUNCTIONAL SUPERVISOR	JULIE CASEY

STATE OF CALIFORNIA - DEPARTMENT OF TRANSPORTATION
Caltrans® DESIGN

P:\proj1\02\4E340_plans\pse\24e340fb002.dgn

LAST REVISION 12-21-12
DATE PLOTTED => 25-JAN-2013
TIME PLOTTED => 08:15

Dist	COUNTY	ROUTE	POST MILES TOTAL PROJECT	SHEET No.	TOTAL SHEETS
02	Las	147	0.5/1.2	8	38

REGISTERED CIVIL ENGINEER 12-21-12 DATE

01-24-13
PLANS APPROVAL DATE

REGISTERED PROFESSIONAL ENGINEER MICHAEL R. WEBB No. C73986 Exp. 6-30-13 CIVIL STATE OF CALIFORNIA

THE STATE OF CALIFORNIA OR ITS OFFICERS OR AGENTS SHALL NOT BE RESPONSIBLE FOR THE ACCURACY OR COMPLETENESS OF SCANNED COPIES OF THIS PLAN SHEET.

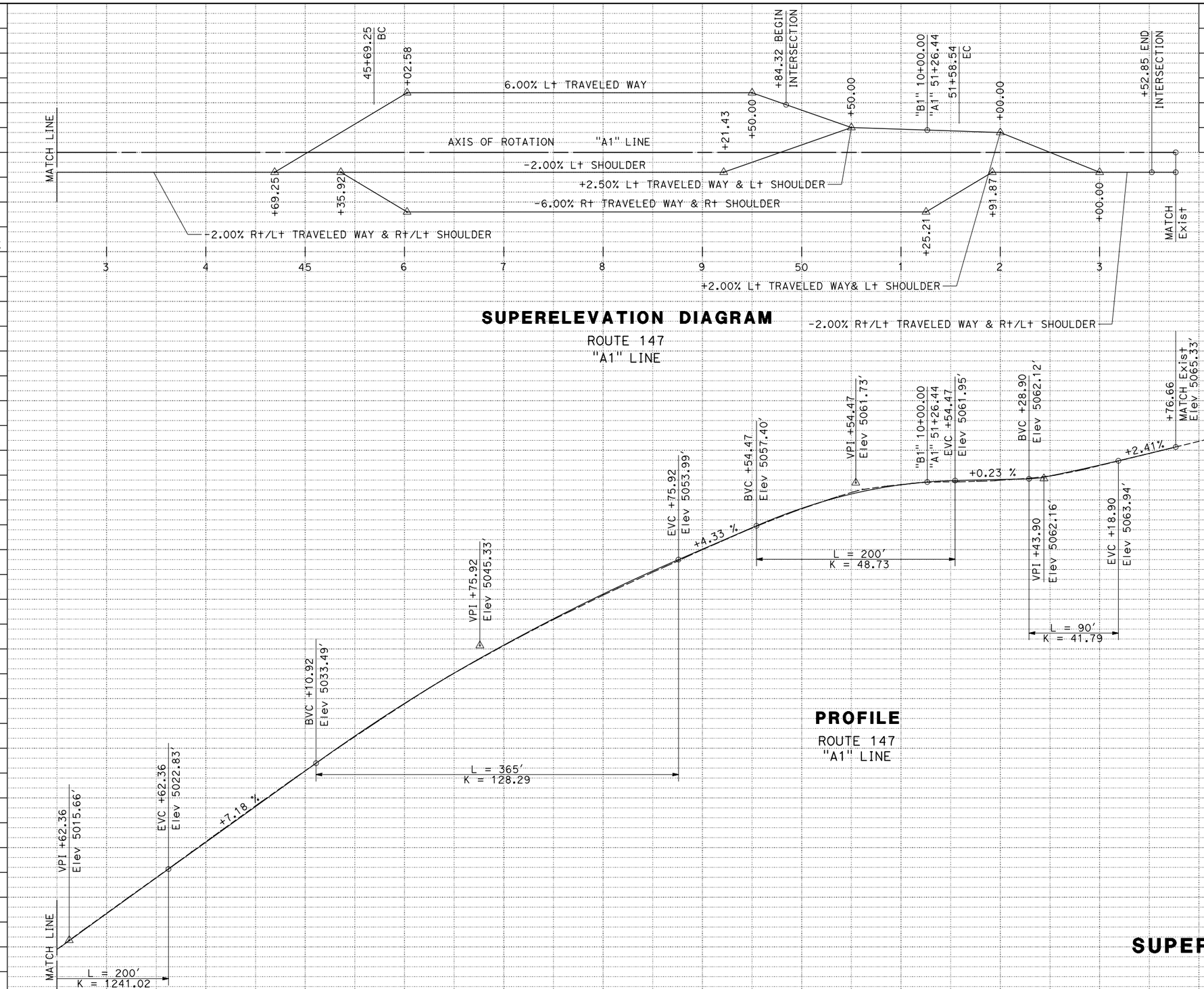

SUPERELEVATION DIAGRAM
ROUTE 147
"A1" LINE

PROFILE
ROUTE 147
"A1" LINE

STATION		3	4	45	6	7	8	9	50	1	2	3	TOTAL
CY	Exc	358.8			766.2				255.5				1380.5
	Emb	13.5			11.1				5.3				29.9

PROFILE AND SUPERELEVATION DIAGRAM

SCALE: 1" = 50' Horiz
1" = 5' Vert

PS-3

REVISED BY | DATE REVISED
MICHAEL WEBB | JEANNIE STEFFAN
CALCULATED-DESIGNED BY | CHECKED BY
FUNCTIONAL SUPERVISOR: JULIE CASEY

STATE OF CALIFORNIA - DEPARTMENT OF TRANSPORTATION
Caltrans® DESIGN

P:\proj1\02\4E340_plans\pse\24e340fb003.dgn

LAST REVISION 12-21-12 | DATE PLOTTED => 25-JAN-2013 | TIME PLOTTED => 08:15

BORDER LAST REVISED 7/2/2010 | USERNAME => s115152 | DGN FILE => 24e340fb003.dgn | RELATIVE BORDER SCALE IS IN INCHES 0 1 2 3 | UNIT 0318 | PROJECT NUMBER & PHASE 02000202731

Dist	COUNTY	ROUTE	POST MILES TOTAL PROJECT	SHEET No.	TOTAL SHEETS
02	Las	147	0.5/1.2	9	38

Michael R. Webb 12-21-12
REGISTERED CIVIL ENGINEER DATE

01-24-13
PLANS APPROVAL DATE

REGISTERED PROFESSIONAL ENGINEER MICHAEL R. WEBB No. C73986 Exp. 6-30-13 CIVIL STATE OF CALIFORNIA

THE STATE OF CALIFORNIA OR ITS OFFICERS OR AGENTS SHALL NOT BE RESPONSIBLE FOR THE ACCURACY OR COMPLETENESS OF SCANNED COPIES OF THIS PLAN SHEET.

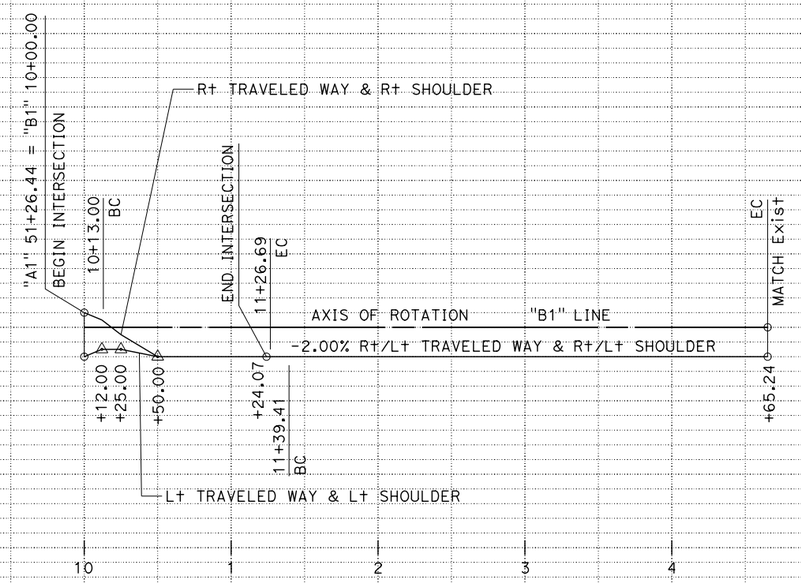

SUPERELEVATION DIAGRAM

ROUTE 147
"B1" LINE

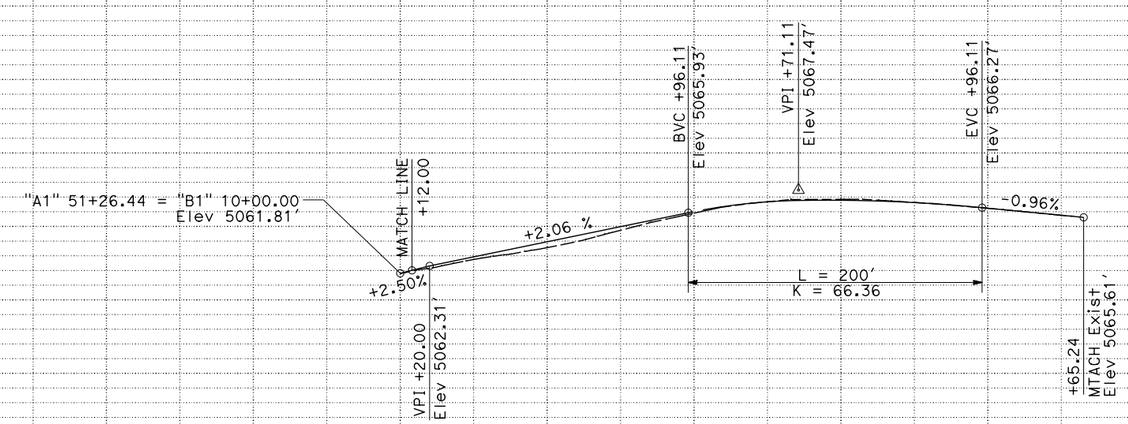

PROFILE

ROUTE 147
"B1" LINE

PROFILE AND SUPERELEVATION DIAGRAM

SCALE: 1" = 50' Horiz
1" = 5' Vert

PS-4

STATION		10	1	2	3	4	TOTAL
CY	Exc	739					739
	Emb	20					20

REVISED BY | DATE REVISED
MICHAEL WEBB | JEANNIE STEFFAN
CALCULATED-DESIGNED BY | CHECKED BY
FUNCTIONAL SUPERVISOR | JULIE CASEY

STATE OF CALIFORNIA - DEPARTMENT OF TRANSPORTATION
Caltrans DESIGN

P:\proj1\02\4E340_plans\pse\24e340fb004.dgn

LAST REVISION 12-21-12 | DATE PLOTTED => 25-JAN-2013 | TIME PLOTTED => 08:15

BORDER LAST REVISED 7/2/2010 | USERNAME => s115152 | DGN FILE => 24e340fb004.dgn | RELATIVE BORDER SCALE IS IN INCHES 0 1 2 3 | UNIT 0318 | PROJECT NUMBER & PHASE 02000202731

Dist	COUNTY	ROUTE	POST MILES TOTAL PROJECT	SHEET No.	TOTAL SHEETS
02	Las	147	0.5/1.2	10	38

Michael R. Webb 12-21-12
REGISTERED CIVIL ENGINEER DATE

01-24-13
PLANS APPROVAL DATE

REGISTERED PROFESSIONAL ENGINEER MICHAEL R. WEBB No. C73986 Exp. 6-30-13 CIVIL STATE OF CALIFORNIA

THE STATE OF CALIFORNIA OR ITS OFFICERS OR AGENTS SHALL NOT BE RESPONSIBLE FOR THE ACCURACY OR COMPLETENESS OF SCANNED COPIES OF THIS PLAN SHEET.

LEGEND:

CPACP (0.2' Max)

ABBREVIATIONS:

CPACP COLD PLANE ASPHALT CONCRETE PAVEMENT

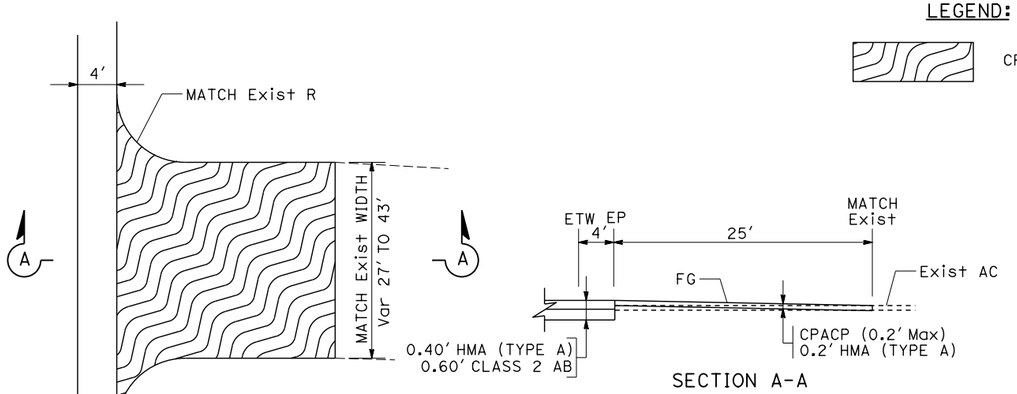

PLAN

PRIVATE DRIVEWAY/LOCAL ROAD CONFORM

CLEAR CREEK Dr "A1" 25+00+/-, Lt/Rt
VOLUNTEER FIRE DEPARTMENT "A1" 27+82+/-, Lt
RAINBOW Dr "A1" 29+70+/-, Rt
CLEAR CREEK PARK, "A1" 31+80+/-, Lt
SPRING CREEK Dr "A1" 32+60+/-, Rt
PRIVATE DRIVEWAY "A1" 34+50+/-, Rt
PRIVATE DRIVEWAY "A1" 35+60+/-, Lt

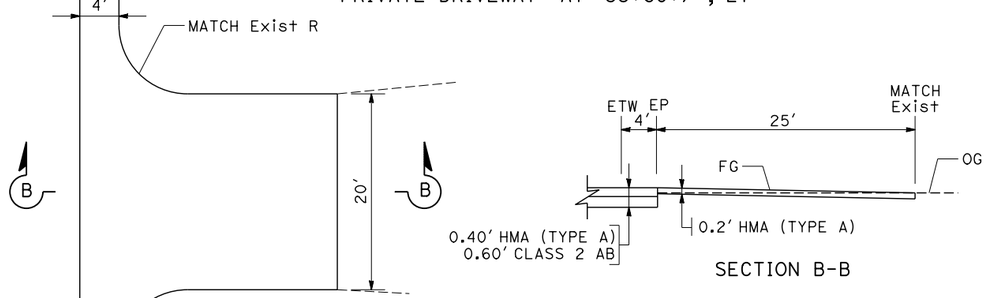

PLAN

UNPAVED PRIVATE DRIVEWAY CONFORM

"A1" 35+00+/-, Lt
"A1" 38+50+/-, Rt

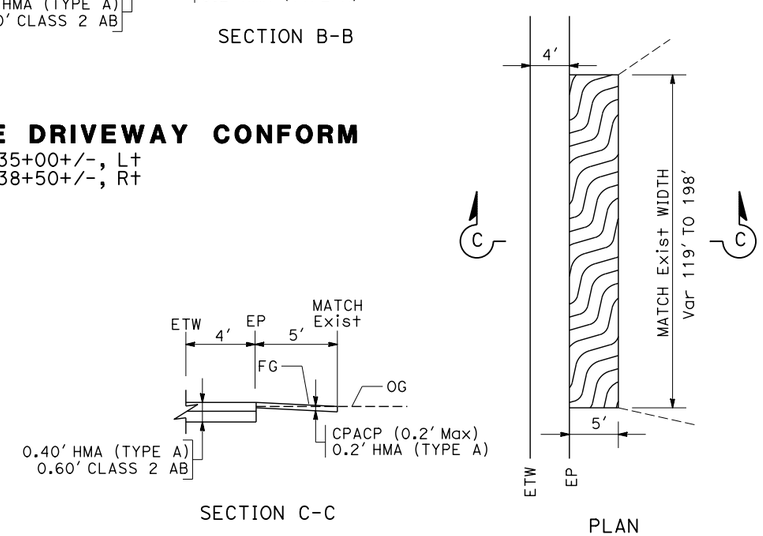

PLAN

LONGITUDINAL PAVEMENT CONFORM

"A1" 22+88, Rt TO 24+86, Rt
"A1" 30+69, Rt TO 31+88, Rt

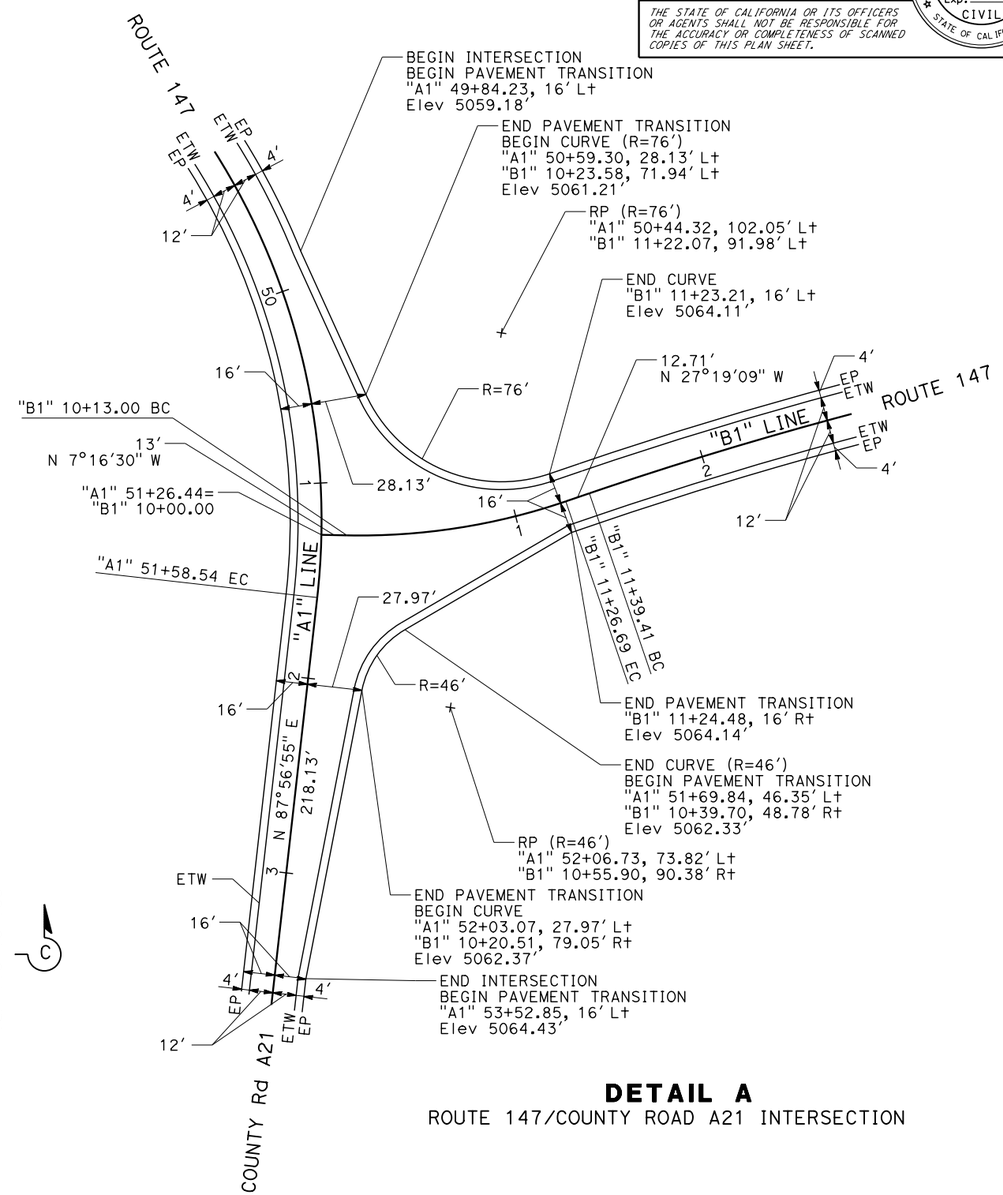

DETAIL A

ROUTE 147/COUNTY ROAD A21 INTERSECTION

CONSTRUCTION DETAILS

NO SCALE

C-1

REVISED BY	DATE REVISED
MICHAEL WEBB	JEANNIE STEFFAN

CALCULATED-DESIGNED BY / CHECKED BY

FUNCTIONAL SUPERVISOR: JULIE CASEY

STATE OF CALIFORNIA - DEPARTMENT OF TRANSPORTATION
Caltrans® DESIGN

P:\proj1\02\4E340_plans\pse\24e340ga001.dgn

LAST REVISION 12-21-12 | DATE PLOTTED => 25-JAN-2013 | TIME PLOTTED => 08:15

DIST	COUNTY	ROUTE	POST MILES TOTAL PROJECT	SHEET No	TOTAL SHEETS
02	Las	147	0.5/1.2	11	38

LICENSED LANDSCAPE ARCHITECT

01-24-13

PLANS APPROVAL DATE

LICENSED LANDSCAPE ARCHITECT J. PATRICK SULLIVAN #3125 Signature 07-31-14 Renewal Date 12-12-12 Date STATE OF CALIFORNIA

The State of California or its officers or agents shall not be responsible for the accuracy or completeness of electronic copies of this plan sheet.

To get to the Caltrans web site, go to: http://www.dot.ca.gov

NOTE:

1. FOR ACCURATE RIGHT OF WAY DATA, CONTACT RIGHT OF WAY ENGINEERING AT THE DISTRICT OFFICE.

LEGEND:

EROSION CONTROL (HYDROSEED)

TEMPORARY CONSTRUCTION EASEMENT

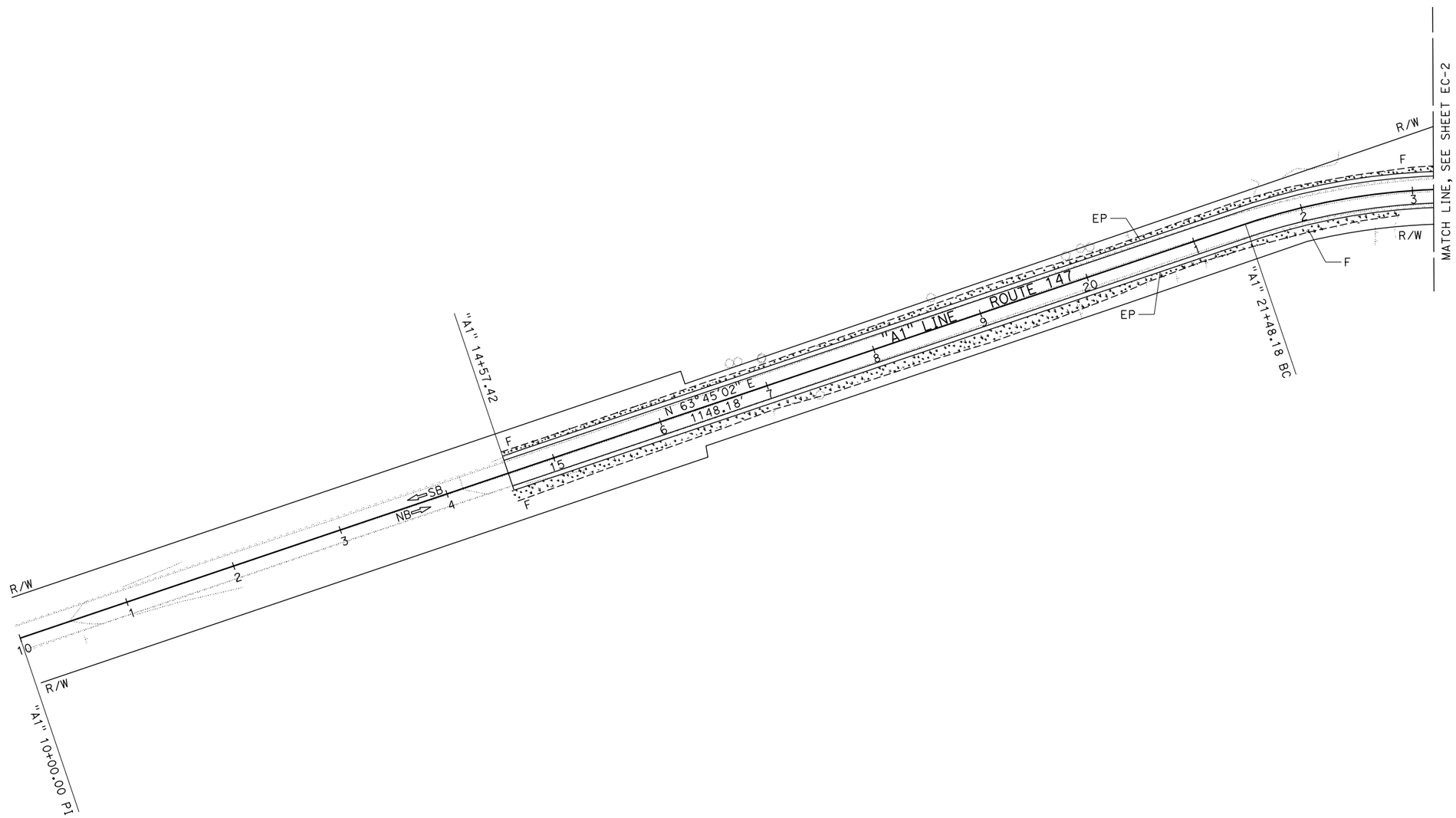

EROSION CONTROL PLAN

SCALE: 1" = 50'

EC-1

APPROVED FOR LANDSCAPE WORK ONLY

STATE OF CALIFORNIA - DEPARTMENT OF TRANSPORTATION

Caltrans LANDSCAPE ARCHITECTURE

PROJECT LANDSCAPE ARCHITECT: RON FLORY

CALCULATED/DESIGNED BY: J. PATRICK SULLIVAN

CHECKED BY: RON FLORY

DATE

REVISED BY

DATE REVISED

P:\proj1\02\4E340_plans\pse\24e340ge001.dgn

LAST REVISION 12-21-12

DATE PLOTTED => 25-JAN-2013
TIME PLOTTED => 08:15

BORDER LAST REVISED 7/2/2010

USERNAME => s115152
DGN FILE => 24e340ge001.dgn

RELATIVE BORDER SCALE IS IN INCHES 0 1 2 3

UNIT 0383

PROJECT NUMBER & PHASE 02000202731

DIST	COUNTY	ROUTE	POST MILES TOTAL PROJECT	SHEET No	TOTAL SHEETS
02	Las	147	0.5/1.2	12	38

LICENSED LANDSCAPE ARCHITECT

01-24-13
PLANS APPROVAL DATE

LICENSED LANDSCAPE ARCHITECT J. PATRICK SULLIVAN #3125 Signature 07-31-14 Renewal Date 12-12-12 Date STATE OF CALIFORNIA

The State of California or its officers or agents shall not be responsible for the accuracy or completeness of electronic copies of this plan sheet.

To get to the Caltrans web site, go to: http://www.dot.ca.gov

NOTE:

1. FOR ACCURATE RIGHT OF WAY DATA, CONTACT RIGHT OF WAY ENGINEERING AT THE DISTRICT OFFICE.

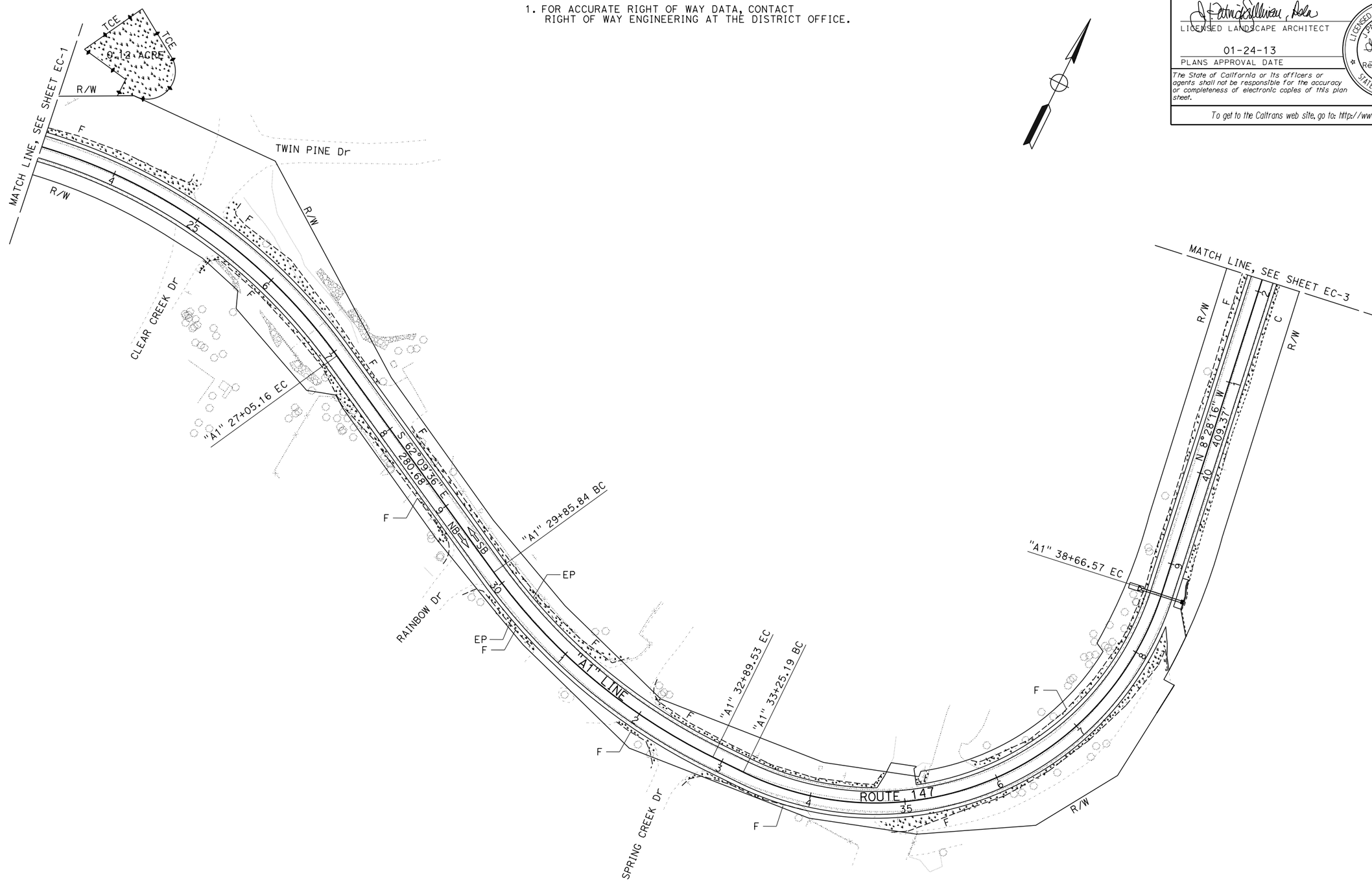

EROSION CONTROL PLAN

SCALE: 1" = 50'

EC-2

APPROVED FOR LANDSCAPE WORK ONLY

REVISED BY	
DATE REVISED	
DATE	
CALCULATED/DESIGNED BY	J. PATRICK SULLIVAN
CHECKED BY	RON FLORY
PROJECT LANDSCAPE ARCHITECT	RON FLORY

STATE OF CALIFORNIA - DEPARTMENT OF TRANSPORTATION
Caltrans®
LANDSCAPE ARCHITECTURE

P:\proj\02\4E340_plans\pse\24e340ge002.dgn

LAST REVISION 12-21-12
DATE PLOTTED => 25-JAN-2013
TIME PLOTTED => 08:15

DIST	COUNTY	ROUTE	POST MILES TOTAL PROJECT	SHEET No	TOTAL SHEETS
02	Las	147	0.5/1.2	13	38

LICENSED LANDSCAPE ARCHITECT

01-24-13

PLANS APPROVAL DATE

LICENSED LANDSCAPE ARCHITECT J. PATRICK SULLIVAN #3125 Signature 07-31-14 Renewal Date 12-12-12 Date STATE OF CALIFORNIA

The State of California or its officers or agents shall not be responsible for the accuracy or completeness of electronic copies of this plan sheet.

To get to the Caltrans web site, go to: http://www.dot.ca.gov

NOTE:

1. FOR ACCURATE RIGHT OF WAY DATA, CONTACT RIGHT OF WAY ENGINEERING AT THE DISTRICT OFFICE.

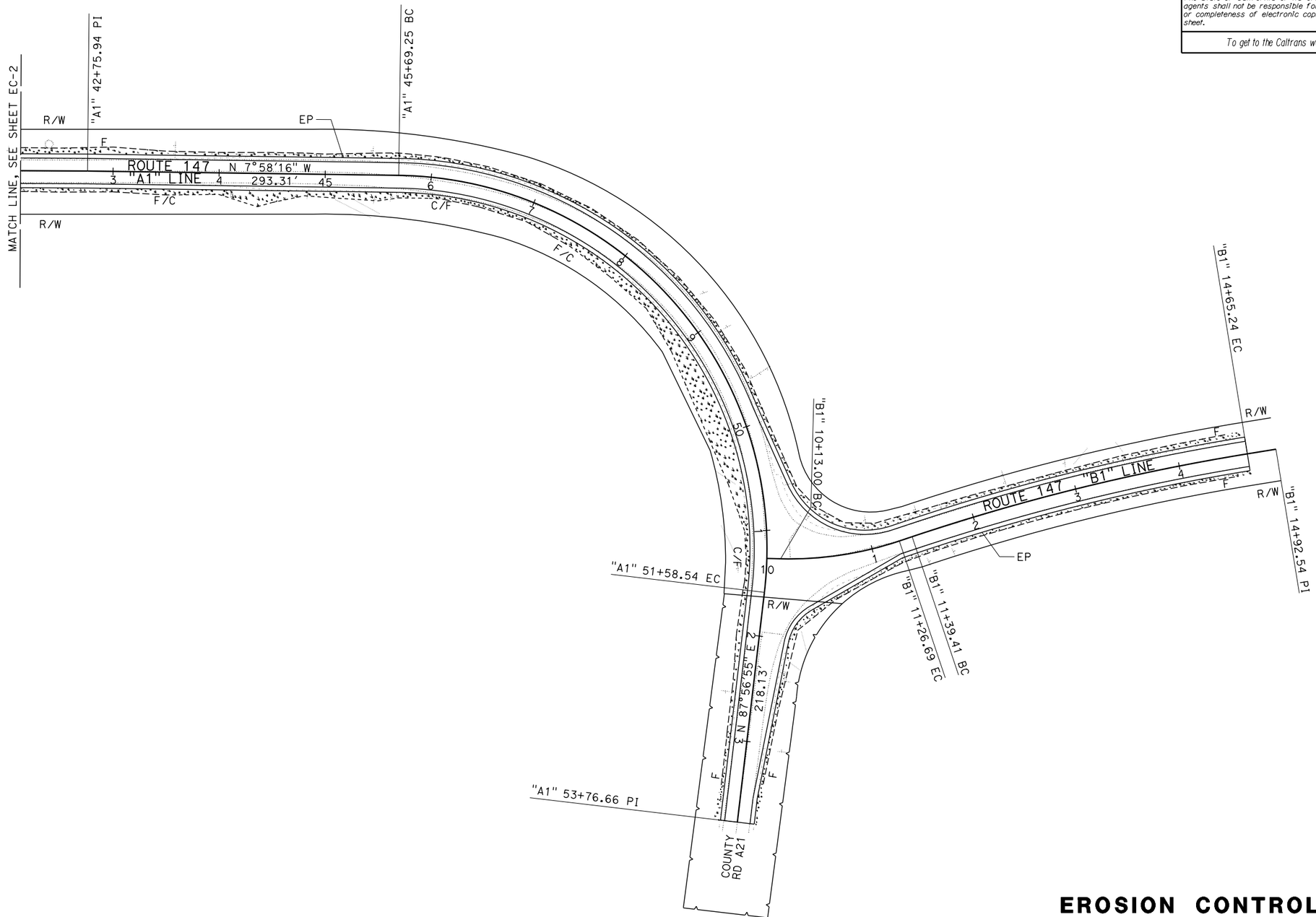

EROSION CONTROL PLAN

SCALE: 1" = 50'

EC-3

APPROVED FOR LANDSCAPE WORK ONLY

REVISED BY	DATE	DATE REVISED
J. PATRICK SULLIVAN		
RON FLORY		

CALCULATED/DESIGNED BY: RON FLORY

CHECKED BY:

PROJECT LANDSCAPE ARCHITECT

STATE OF CALIFORNIA - DEPARTMENT OF TRANSPORTATION

Caltrans LANDSCAPE ARCHITECTURE

P:\proj1\02\4E340_plans\pse\24e340ge003.dgn

LAST REVISION 12-21-12 | DATE PLOTTED => 25-JAN-2013 | TIME PLOTTED => 08:15

BORDER LAST REVISED 7/2/2010 | USERNAME => s115152 | DGN FILE => 24e340ge003.dgn | RELATIVE BORDER SCALE IS IN INCHES 0 1 2 3 | UNIT 0383 | PROJECT NUMBER & PHASE 02000202731

DIST	COUNTY	ROUTE	POST MILES TOTAL PROJECT	SHEET No	TOTAL SHEETS
02	Las	147	0.5/1.2	14	38

LICENSED LANDSCAPE ARCHITECT

01-24-13

PLANS APPROVAL DATE

LICENSED LANDSCAPE ARCHITECT J. PATRICK SULLIVAN #3125 Signature 07-31-14 Renewal Date 12-12-12 Date STATE OF CALIFORNIA

The State of California or its officers or agents shall not be responsible for the accuracy or completeness of electronic copies of this plan sheet.

To get to the Caltrans web site, go to: http://www.dot.ca.gov

NOTE:

1. (N) - NOT A SEPARATE PAY ITEM, FOR INFORMATION ONLY

HYDROSEED SEQUENCE/ APPLICATION RATES (N)

SEQUENCE	ITEM	MATERIAL DESCRIPTION	MATERIAL TYPE	APPLICATION RATE (N)
STEP 1	HYDROSEED	PURE LIVE SEED	MIX	107 LB/ACRE
		FIBER	ALTERNATE	1500 LB/ACRE
		SLOW-RELEASE FERTILIZER	GRANULAR 15-15-15	100 LB/ACRE
STEP 2	HYDROSEED	COMPOST	3 CF BAGS	1.2 CY/ ACRE
		FIBER	ALTERNATE	1800 LB/ACRE
		TACKIFIER	PSYLLIUM	100 LB/ACRE

SEED MIX (N)

BOTANICAL NAME (COMMON NAME)	PERCENT GERMINATION (MINIMUM)	POUNDS PURE LIVE SEED PER ACRE (N) (SLOPE MEASUREMENT)
ESCHSCHOLZIA CALIFORNICA (CALIFORNIA POPPIES)	50	1
BROMUS CARINATUS (CALIFORNIA BROME)	70	20
FESTUCA IDAHOENSIS (WESTERN FESCUE)	65	20
LASTHENIA GALBRATA (GOLDFIELDS)	55	8
LUPINUS BICOLOR (SKY LUPINES)	80	8
POA SECUNDA (BLUEPINE GRASS)	70	15
TRIFOLIUM HIRTIUM (ROSE CLOVER)	80	15
VULPIA MICROSTACHYS (SMALL FESCUE)	80	20
	TOTAL	107

HYDROSEED

MATERIAL DESCRIPTION	MATERIAL TYPE	TOTALS	
PURE LIVE SEED	MIX	128.4 LB (N)	HYDROSEED
FIBER	ALTERNATE	3960 LB (N)	
SLOW-RELEASE FERTILIZER	GRANULAR 15-15-15	120 LB (N)	
COMPOST	3 CF BAGS	1.44 CY (N)	
TACKIFIER	PSYLLIUM	120 LB (N)	
FROM Sta "A1" 14+57 TO 53+77 "B1" 10+00 TO 14+65		TOTAL SQFT	52,272

EROSION CONTROL QUANTITIES

ECQ-1

APPROVED FOR LANDSCAPE WORK ONLY

REVISED BY | DATE REVISED

DATE

J. PATRICK SULLIVAN | RON FLORY

CALCULATED/ DESIGNED BY | CHECKED BY

PROJECT LANDSCAPE ARCHITECT | RON FLORY

STATE OF CALIFORNIA - DEPARTMENT OF TRANSPORTATION

Caltrans® LANDSCAPE ARCHITECTURE

P:\proj1\02\4E340_plans\pse\24e340gh001.dgn

LAST REVISION 12-21-12 | DATE PLOTTED => 25-JAN-2013 TIME PLOTTED => 08:15

Dist	COUNTY	ROUTE	POST MILES TOTAL PROJECT	SHEET No.	TOTAL SHEETS
02	Las	147	0.5/1.2	15	38

REGISTERED CIVIL ENGINEER 12-21-12 DATE

01-24-13
PLANS APPROVAL DATE

REGISTERED PROFESSIONAL ENGINEER MICHAEL R. WEBB No. C73986 Exp. 6-30-13 CIVIL STATE OF CALIFORNIA

THE STATE OF CALIFORNIA OR ITS OFFICERS OR AGENTS SHALL NOT BE RESPONSIBLE FOR THE ACCURACY OR COMPLETENESS OF SCANNED COPIES OF THIS PLAN SHEET.

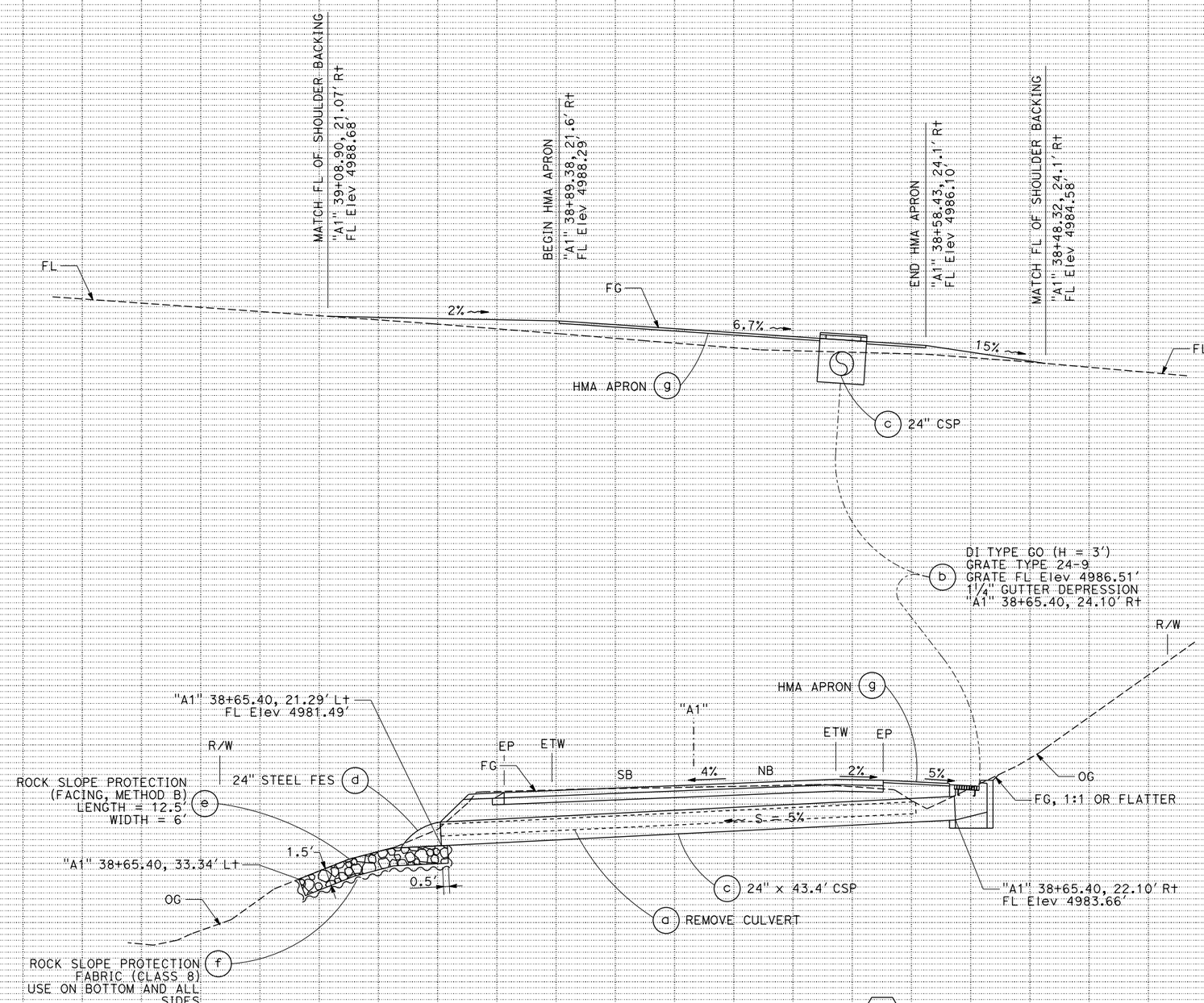

DRAINAGE SYSTEM No. 1

"A1" 38+65.40

DRAINAGE PROFILES

SCALE: 1" = 5' Horiz
1" = 5' Vert

DP-1

MICHAEL WEBB — REVISED BY
JEANNIE STEFFAN — DATE REVISED
CALCULATED-DESIGNED BY
CHECKED BY
FUNCTIONAL SUPERVISOR
JULIE CASEY

STATE OF CALIFORNIA - DEPARTMENT OF TRANSPORTATION
Caltrans
DESIGN

P:\proj1\02\4E340_plans\pse\24e340ib001.dgn

LAST REVISION 12-21-12
DATE PLOTTED => 25-JAN-2013
TIME PLOTTED => 08:15

Dist	COUNTY	ROUTE	POST MILES TOTAL PROJECT	SHEET No.	TOTAL SHEETS
02	Las	147	0.5/1.2	16	38

REGISTERED CIVIL ENGINEER 12-21-12 DATE

01-24-13
PLANS APPROVAL DATE

REGISTERED PROFESSIONAL ENGINEER MICHAEL R. WEBB No. C73986 Exp. 6-30-13 CIVIL STATE OF CALIFORNIA

THE STATE OF CALIFORNIA OR ITS OFFICERS OR AGENTS SHALL NOT BE RESPONSIBLE FOR THE ACCURACY OR COMPLETENESS OF SCANNED COPIES OF THIS PLAN SHEET.

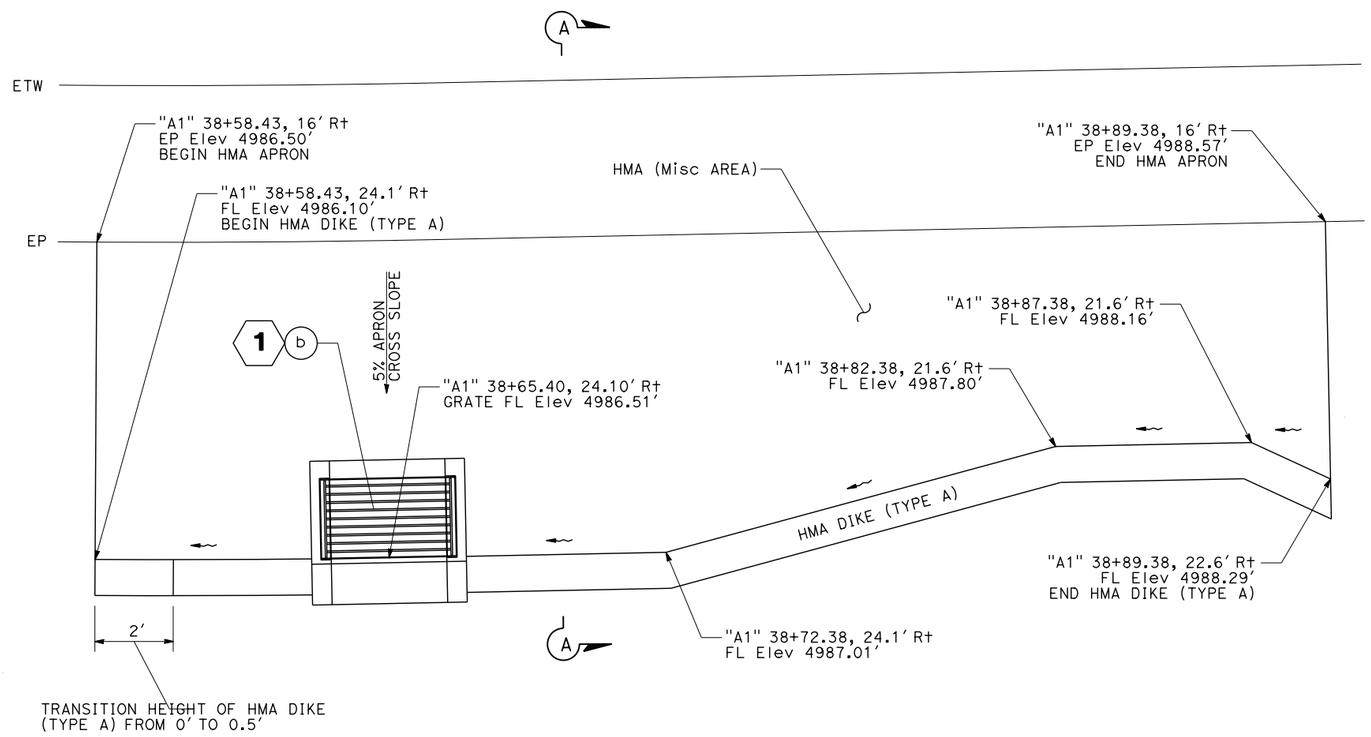

PLAN
HMA APRON 1 g

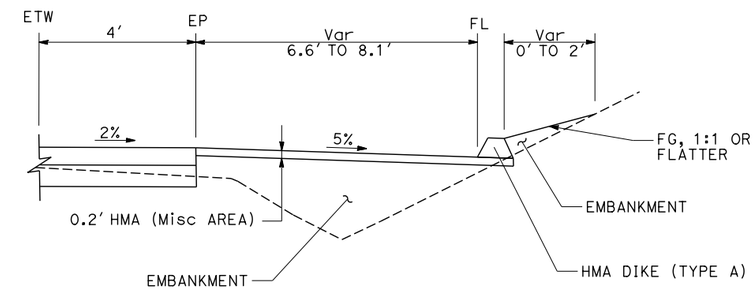

SECTION A-A

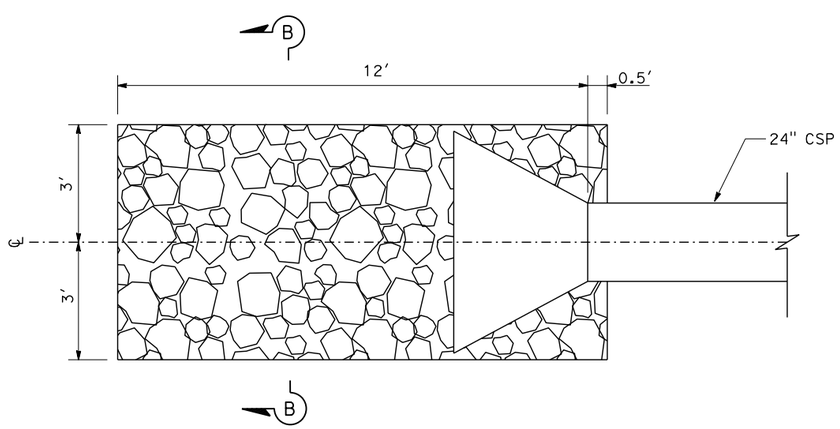

RSP (FACING, METHOD B)

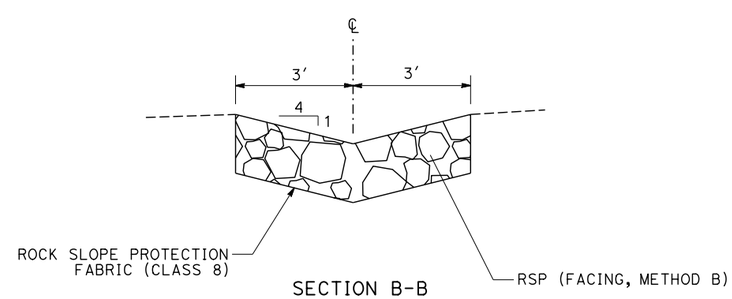

SECTION B-B

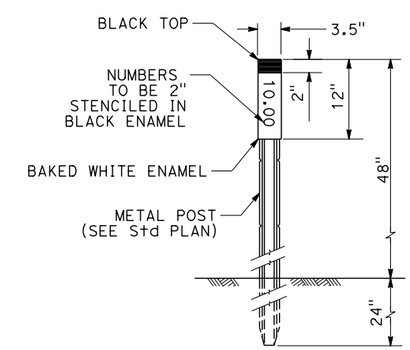

MARKER (CULVERT)

DRAINAGE DETAILS

NO SCALE

DD-1

REVISED BY	DATE REVISED
MICHAEL WEBB	JEANNIE STEFFAN
CALCULATED-DESIGNED BY	CHECKED BY
FUNCTIONAL SUPERVISOR	JULIE CASEY

STATE OF CALIFORNIA - DEPARTMENT OF TRANSPORTATION
Caltrans® **DESIGN**

P:\proj1\02\4E340_plans\pse\24e340ic001.dgn

LAST REVISION 12-21-12 | DATE PLOTTED => 25-JAN-2013 | TIME PLOTTED => 08:15

Dist	COUNTY	ROUTE	POST MILES TOTAL PROJECT	SHEET No.	TOTAL SHEETS
02	Las	147	0.5/1.2	17	38

Michael R. Webb 12-21-12
REGISTERED CIVIL ENGINEER DATE

01-24-13
PLANS APPROVAL DATE

REGISTERED PROFESSIONAL ENGINEER MICHAEL R. WEBB No. C73986 Exp. 6-30-13 CIVIL STATE OF CALIFORNIA

THE STATE OF CALIFORNIA OR ITS OFFICERS OR AGENTS SHALL NOT BE RESPONSIBLE FOR THE ACCURACY OR COMPLETENESS OF SCANNED COPIES OF THIS PLAN SHEET.

LEGEND:

—— fo —— —— ——(oh)—	Exist FRONTIER OH FIBER OPTIC
——-- t ——— ———--(oh)	Exist FRONTIER OH TELEPHONE
——--- tv —— —— ——---(oh	Exist CALNEVA OH CABLE
——-e ——— ———-(oh	Exist PG&E OH POWER
——--t——— ———--t-	Exist FRONTIER UG TELEPHONE
——---tv—— —— ——---tv-	Exist CALNEVA UG CABLE
——-e——— ———-e-	Exist PG&E UG POWER
-——w —— —— ——w-	Exist CCCSD UG WATER

ABBREVIATIONS;

CCCSD CLEAR CREEK COMMUNITY SERVICE DISTRICT

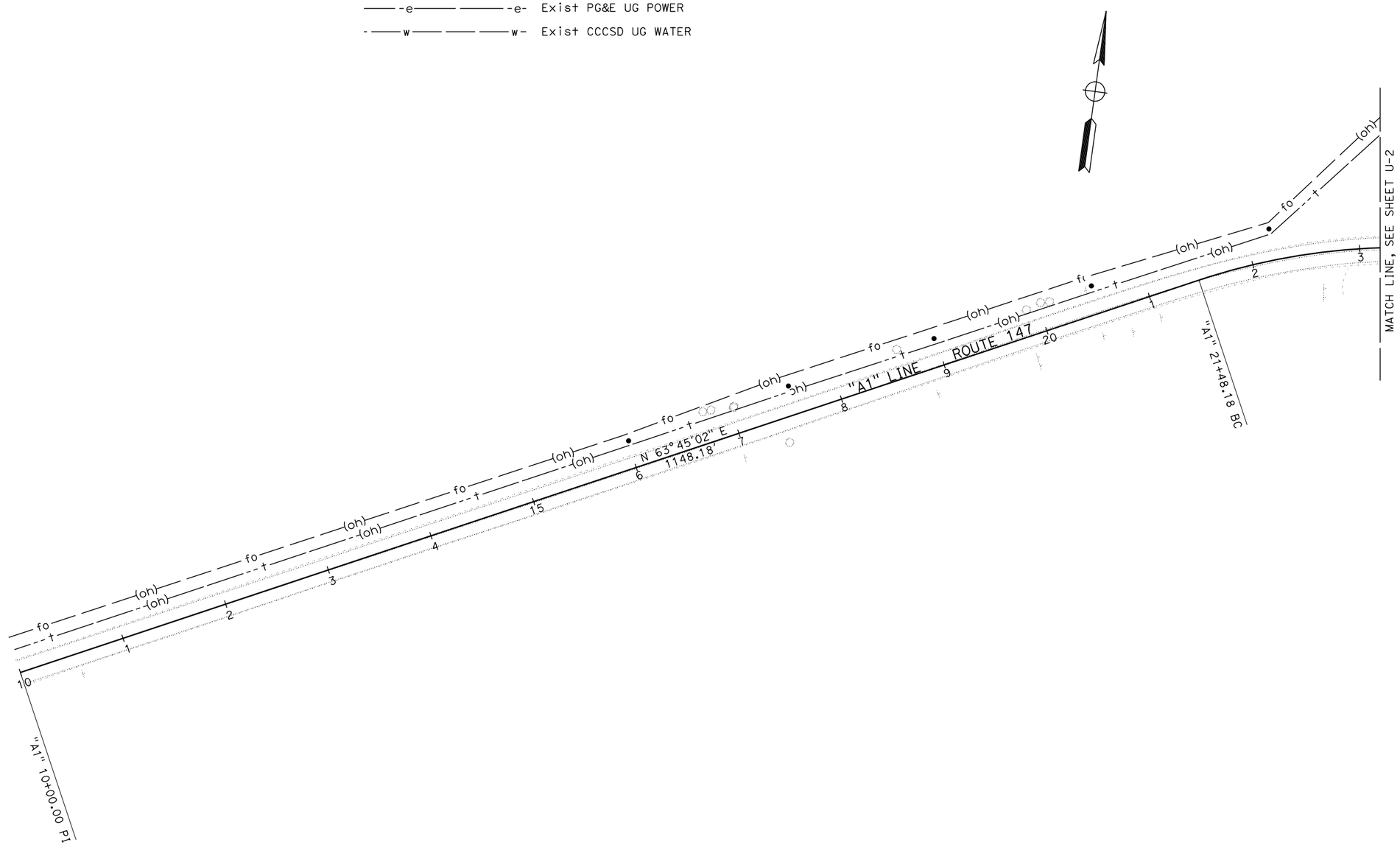

UTILITY PLAN

SCALE: 1" = 50'

U-1

APPROVED FOR UTILITY WORK ONLY

REVISED BY	
DATE REVISED	
MICHAEL WEBB	CALCULATED-DESIGNED BY
JEANNIE STEFFAN	CHECKED BY
FUNCTIONAL SUPERVISOR	
JULIE CASEY	

STATE OF CALIFORNIA - DEPARTMENT OF TRANSPORTATION
Caltrans® **DESIGN**

P:\proj1\02\4E340_plans\pse\24e340ka001.dgn

LAST REVISION 12-21-12 | DATE PLOTTED => 25-JAN-2013 | TIME PLOTTED => 08:16

Dist	COUNTY	ROUTE	POST MILES TOTAL PROJECT	SHEET No.	TOTAL SHEETS
02	Las	147	0.5/1.2	18	38

Michael R. Webb 12-21-12
REGISTERED CIVIL ENGINEER DATE

01-24-13
PLANS APPROVAL DATE

REGISTERED PROFESSIONAL ENGINEER MICHAEL R. WEBB No. C73986 Exp. 6-30-13 CIVIL STATE OF CALIFORNIA

THE STATE OF CALIFORNIA OR ITS OFFICERS OR AGENTS SHALL NOT BE RESPONSIBLE FOR THE ACCURACY OR COMPLETENESS OF SCANNED COPIES OF THIS PLAN SHEET.

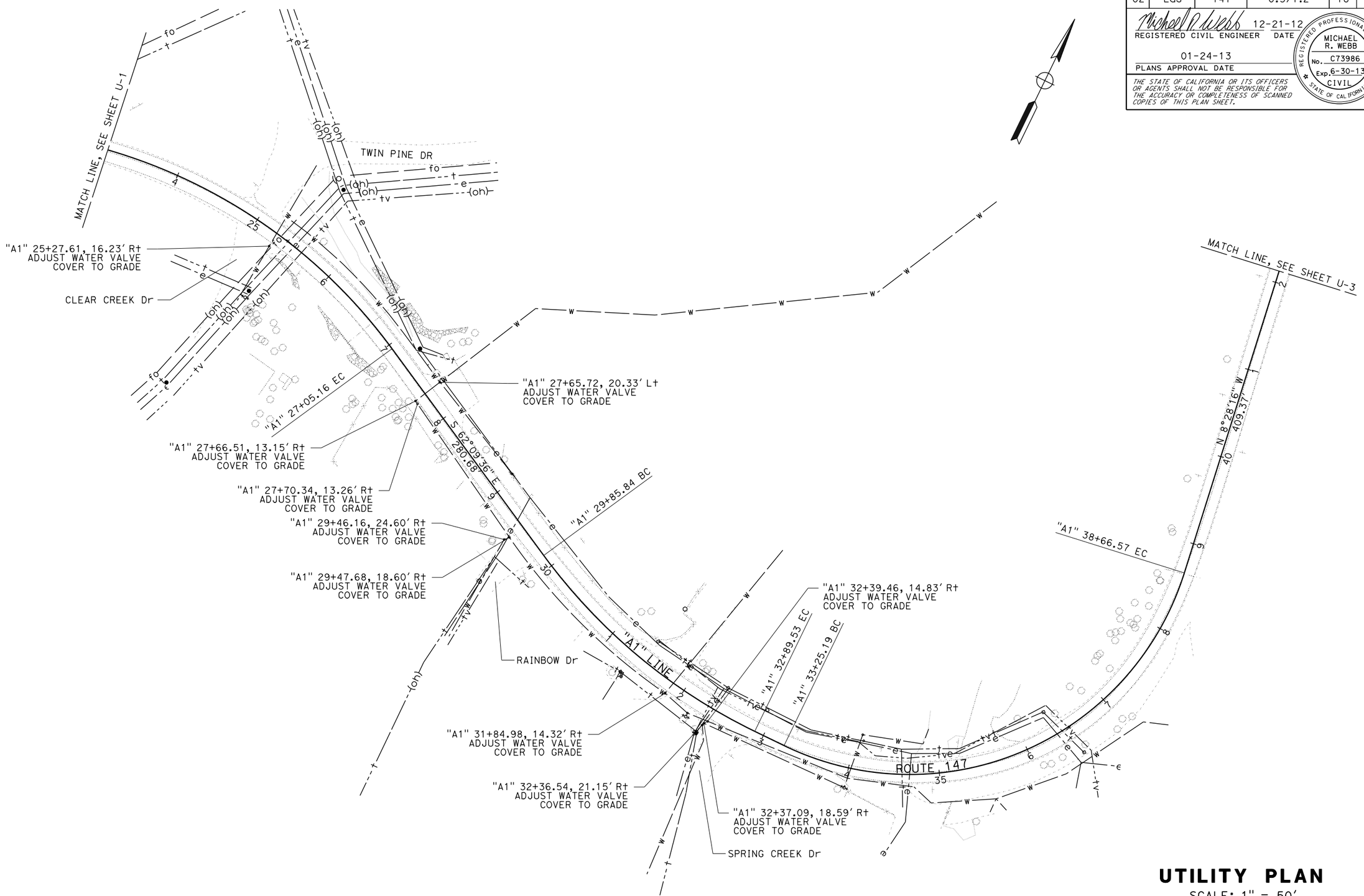

UTILITY PLAN

SCALE: 1" = 50'

U-2

APPROVED FOR UTILITY WORK ONLY

REVISED BY	DATE REVISED
MICHAEL WEBB	
JEANNIE STEFFAN	
CALCULATED-DESIGNED BY	
CHECKED BY	
FUNCTIONAL SUPERVISOR	
JULIE CASEY	

STATE OF CALIFORNIA - DEPARTMENT OF TRANSPORTATION
Caltrans® **DESIGN**

P:\proj1\02\4E340_plans\pse\24e340ka002.dgn

LAST REVISION 12-21-12 | DATE PLOTTED => 25-JAN-2013 | TIME PLOTTED => 08:16

Dist	COUNTY	ROUTE	POST MILES TOTAL PROJECT	SHEET No.	TOTAL SHEETS
02	Las	147	0.5/1.2	19	38

Michael R. Webb 12-21-12
REGISTERED CIVIL ENGINEER DATE

01-24-13
PLANS APPROVAL DATE

REGISTERED PROFESSIONAL ENGINEER
MICHAEL R. WEBB
No. C73986
Exp. 6-30-13
CIVIL
STATE OF CALIFORNIA

THE STATE OF CALIFORNIA OR ITS OFFICERS OR AGENTS SHALL NOT BE RESPONSIBLE FOR THE ACCURACY OR COMPLETENESS OF SCANNED COPIES OF THIS PLAN SHEET.

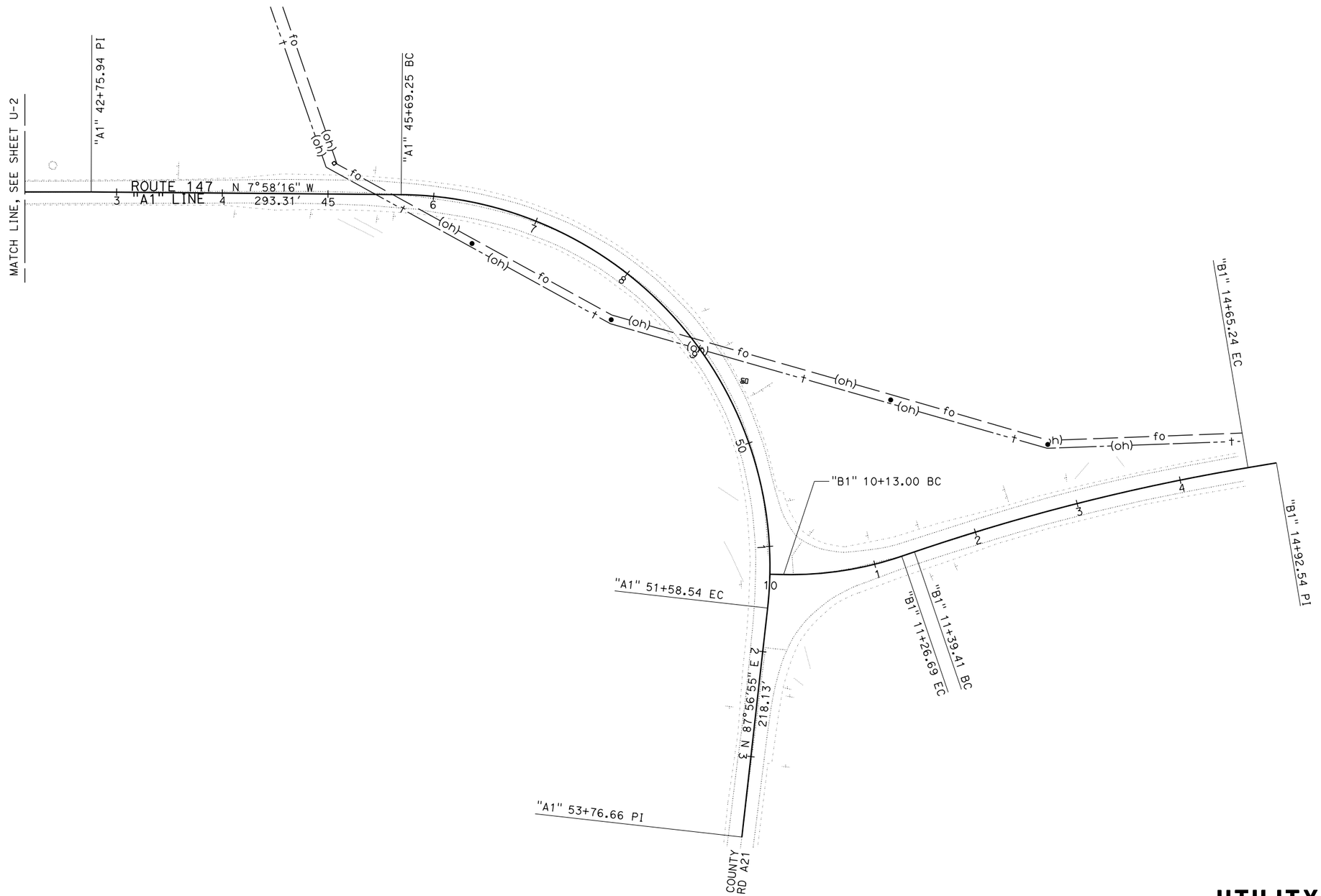

APPROVED FOR UTILITY WORK ONLY

UTILITY PLAN

SCALE: 1" = 50'

U-3

STATE OF CALIFORNIA - DEPARTMENT OF TRANSPORTATION
Caltrans® **DESIGN**

FUNCTIONAL SUPERVISOR: JULIE CASEY
CALCULATED-DESIGNED BY: MICHAEL WEBB
CHECKED BY: JEANNIE STEFFAN
REVISED BY
DATE REVISED

P:\proj1\02\4E340_plans\pse\24e340ka003.dgn

LAST REVISION 12-21-12
DATE PLOTTED => 25-JAN-2013
TIME PLOTTED => 08:16

BORDER LAST REVISED 7/2/2010
USERNAME => s115152
DGN FILE => 24e340ka003.dgn
RELATIVE BORDER SCALE IS IN INCHES 0 1 2 3
UNIT 0318
PROJECT NUMBER & PHASE 02000202731

Dist	COUNTY	ROUTE	POST MILES TOTAL PROJECT	SHEET No.	TOTAL SHEETS
02	Las	147	0.5/1.2	20	38

REGISTERED CIVIL ENGINEER 12-21-12 DATE

01-24-13
PLANS APPROVAL DATE

REGISTERED PROFESSIONAL ENGINEER MICHAEL R. WEBB No. C73986 Exp. 6-30-13 CIVIL STATE OF CALIFORNIA

THE STATE OF CALIFORNIA OR ITS OFFICERS OR AGENTS SHALL NOT BE RESPONSIBLE FOR THE ACCURACY OR COMPLETENESS OF SCANNED COPIES OF THIS PLAN SHEET.

LEGEND:

MINOR CONCRETE

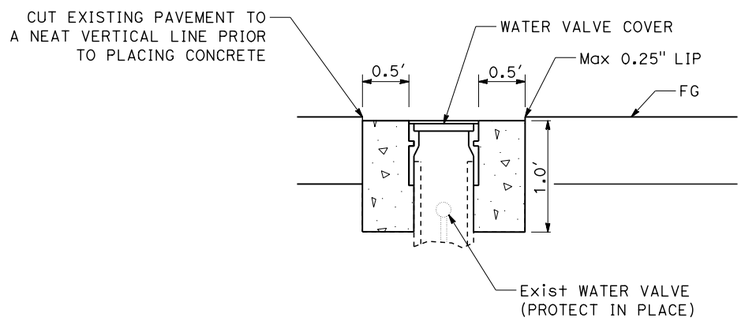

ADJUST WATER VALVE COVER TO GRADE

ADJUST WATER VALVE COVER TO GRADE

LOCATION			ADJUST WATER VALVE COVER TO GRADE
STATION	SIDE	OFFSET	EA
"A1" 25+27.61	R+	16.23'	1
"A1" 27+65.72	L+	20.33'	1
"A1" 27+66.51	R+	13.15'	1
"A1" 27+70.34	R+	13.26'	1
"A1" 29+46.16	R+	24.60'	1
"A1" 29+47.68	R+	18.60'	1
"A1" 31+84.98	R+	14.32'	1
"A1" 32+36.54	R+	21.15'	1
"A1" 32+37.09	R+	18.59'	1
"A1" 32+39.46	R+	14.83'	1
		TOTAL	10

UTILITY DETAILS AND QUANTITIES

NO SCALE

UD-1

REVISED BY	DATE REVISED

CALCULATED-DESIGNED BY	MICHAEL WEBB
CHECKED BY	JEANNIE STEFFAN
FUNCTIONAL SUPERVISOR	JULIE CASEY

STATE OF CALIFORNIA - DEPARTMENT OF TRANSPORTATION
Caltrans® DESIGN

P:\proj1\02\4E340_plans\pse\24e340kb001.dgn

LAST REVISION 12-21-12 | DATE PLOTTED => 25-JAN-2013 | TIME PLOTTED => 08:16

Dist	COUNTY	ROUTE	POST MILES TOTAL PROJECT	SHEET No.	TOTAL SHEETS
02	Las	147	0.5/1.2	21	38

REGISTERED CIVIL ENGINEER 12-21-12 DATE

01-24-13
PLANS APPROVAL DATE

REGISTERED PROFESSIONAL ENGINEER MICHAEL R. WEBB No. C73986 Exp. 6-30-13 CIVIL STATE OF CALIFORNIA

THE STATE OF CALIFORNIA OR ITS OFFICERS OR AGENTS SHALL NOT BE RESPONSIBLE FOR THE ACCURACY OR COMPLETENESS OF SCANNED COPIES OF THIS PLAN SHEET.

NOTES:

1. EXACT LOCATIONS TO BE DETERMINED BY THE ENGINEER.
2. CALIFORNIA SIGN CODES ARE DESIGNATED BY (CA), OTHERWISE FEDERAL SIGN CODES ARE SHOWN.
3. ALL CONSTRUCTION AREA SIGNS HAVE BLACK TEXT WITH AN ORANGE BACKGROUND (EXCEPT SIGNS D, E, F, AND G WHICH ARE BLACK ON WHITE).
4. COVER NB, R2-4(CA), AND R2-1 SIGNS THAT ARE IN CONFLICT WITH THE SPEED ZONE REDUCTION PACKAGE.

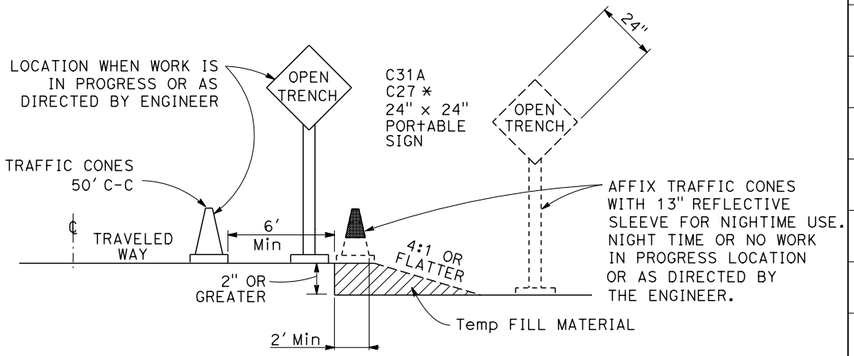

OPEN TRENCH SIGNING AND MARKING

* PLACE AT 250' INTERVALS THROUGH THE OPEN TRENCH AREA, ALTERNATE C27 (OPEN TRENCH) AND C31A (NO SHOULDER) SIGNS

CONSTRUCTION AREA SIGNS (STATIONARY MOUNTED)

TYPE	CODE	PANEL SIZE	SIGN MESSAGE	No. AND SIZE OF POSTS	No. OF SIGNS
A	W20-1	48" x 48"	ROAD WORK AHEAD	1 - 6" x 6"	7
B	C23B (CA)	42" x 18"	PAVEMENT REHABILITATION	N/A MOUNTED WITH SIGN A	3
C	C20-2	36" x 18"	END ROAD WORK	1 - 4" x 6"	3
D	R2-4 (CA)	24" x 30"	35 ZONE AHEAD	N/A MOUNTED WITH SIGN A	2
E	R2-4 (CA)	24" x 30"	45 ZONE AHEAD		1
F	R2-1	24" x 30"	SPEED LIMIT 35		3
G	R2-1	24" x 30"	SPEED LIMIT 45		1
H	W8-3	36" x 36"	PAVEMENT ENDS	1 - 6" x 6"	6
I	W16-7p	24" x 12"	ARROW (Lt)	N/A MOUNTED WITH SIGN H	3
J	R4-1	18" x 24"	DO NOT PASS		3
K	W16-2aP	24" x 12"	500 FT		3
L	R3 (CA)	24" x 30"	END 35 SPEED LIMIT	1 - 4" x 4"	3

LEGEND:

PORTABLE CHANGEABLE MESSAGE SIGN

Temp FLASHING BEACON (SEE SHEET E-2)

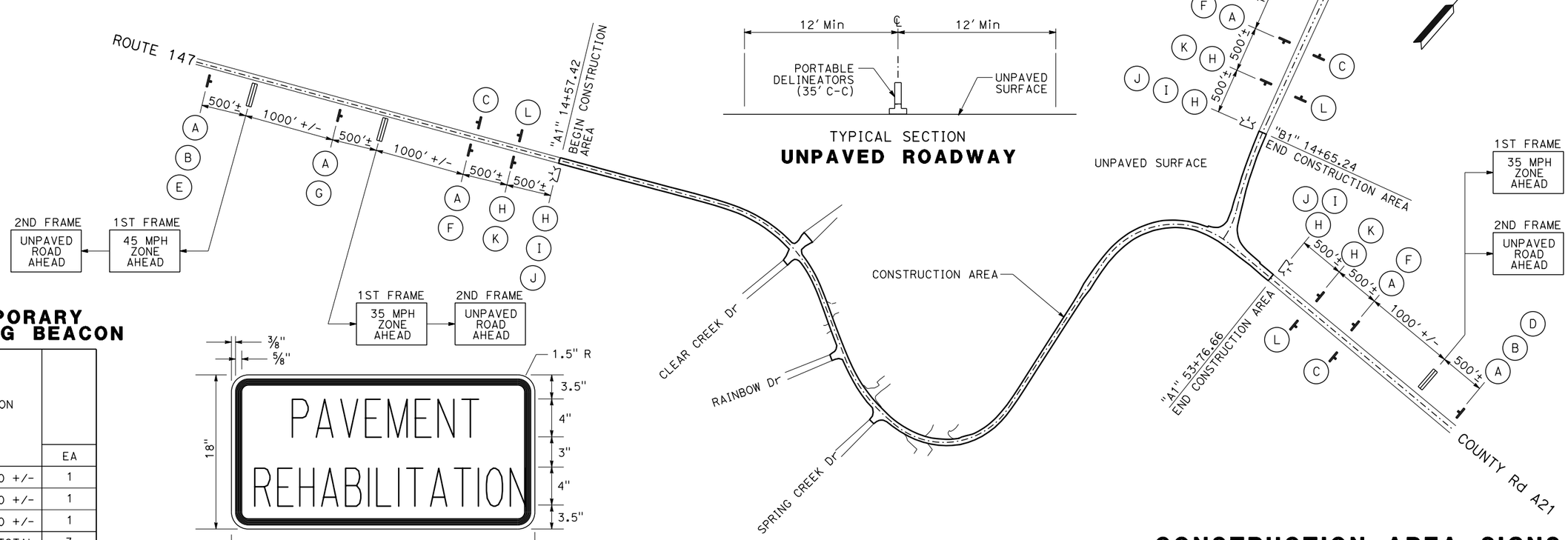

TEMPORARY FLASHING BEACON

LOCATION	EA
"A1" 14+50 +/-	1
"A1" 53+80 +/-	1
"B1" 14+70 +/-	1
TOTAL	3

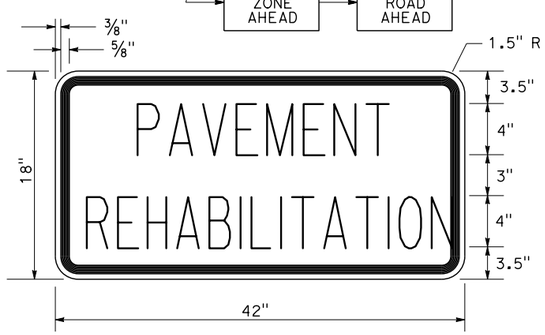

C23B SIGN PANEL DETAIL

CONSTRUCTION AREA SIGN PLAN

CONSTRUCTION AREA SIGNS

NO SCALE

CS-1

REVISED BY	DATE REVISED

MICHAEL WEBB — JEANNIE STEFFAN — CALCULATED-DESIGNED BY — CHECKED BY

JULIE CASEY — FUNCTIONAL SUPERVISOR

STATE OF CALIFORNIA - DEPARTMENT OF TRANSPORTATION — DESIGN

P:\proj1\02\4E340_plans\pse\24e3401a001.dgn

LAST REVISION 12-21-12 — DATE PLOTTED => 25-JAN-2013 — TIME PLOTTED => 08:16

Dist	COUNTY	ROUTE	POST MILES TOTAL PROJECT	SHEET No.	TOTAL SHEETS
02	Las	147	0.5/1.2	22	38

REGISTERED CIVIL ENGINEER 12-21-12 DATE

01-24-13
PLANS APPROVAL DATE

REGISTERED PROFESSIONAL ENGINEER MICHAEL R. WEBB No. C73986 Exp. 6-30-13 CIVIL STATE OF CALIFORNIA

THE STATE OF CALIFORNIA OR ITS OFFICERS OR AGENTS SHALL NOT BE RESPONSIBLE FOR THE ACCURACY OR COMPLETENESS OF SCANNED COPIES OF THIS PLAN SHEET.

NOTE:

1. FOR DETAILS NOT SHOWN REFER TO THE STANDARD PLANS.

LEGEND:

- No. — PAVEMENT DELINEATION STRIPE DETAIL No.
- LL — LIMIT LINE
- X-X — ROADSIDE SIGN
- ROADSIDE SIGN - ONE POST
- ROADSIDE SIGN - TWO POST
- C — MARKER (CULVERT)
- N — OBJECT MARKER (TYPE N)
- Exist ROADSIDE SIGN - ONE POST
- Exist ROADSIDE SIGN - TWO POST
- EXISTING SIGN TO REMAIN
- RESET ROADSIDE SIGN
- REMOVE ROADSIDE SIGN
- PAVEMENT DELINEATION CHANGE LOCATION
- DELINEATOR (CLASS II)

ABBREVIATIONS:

S DELINEATOR SPACING

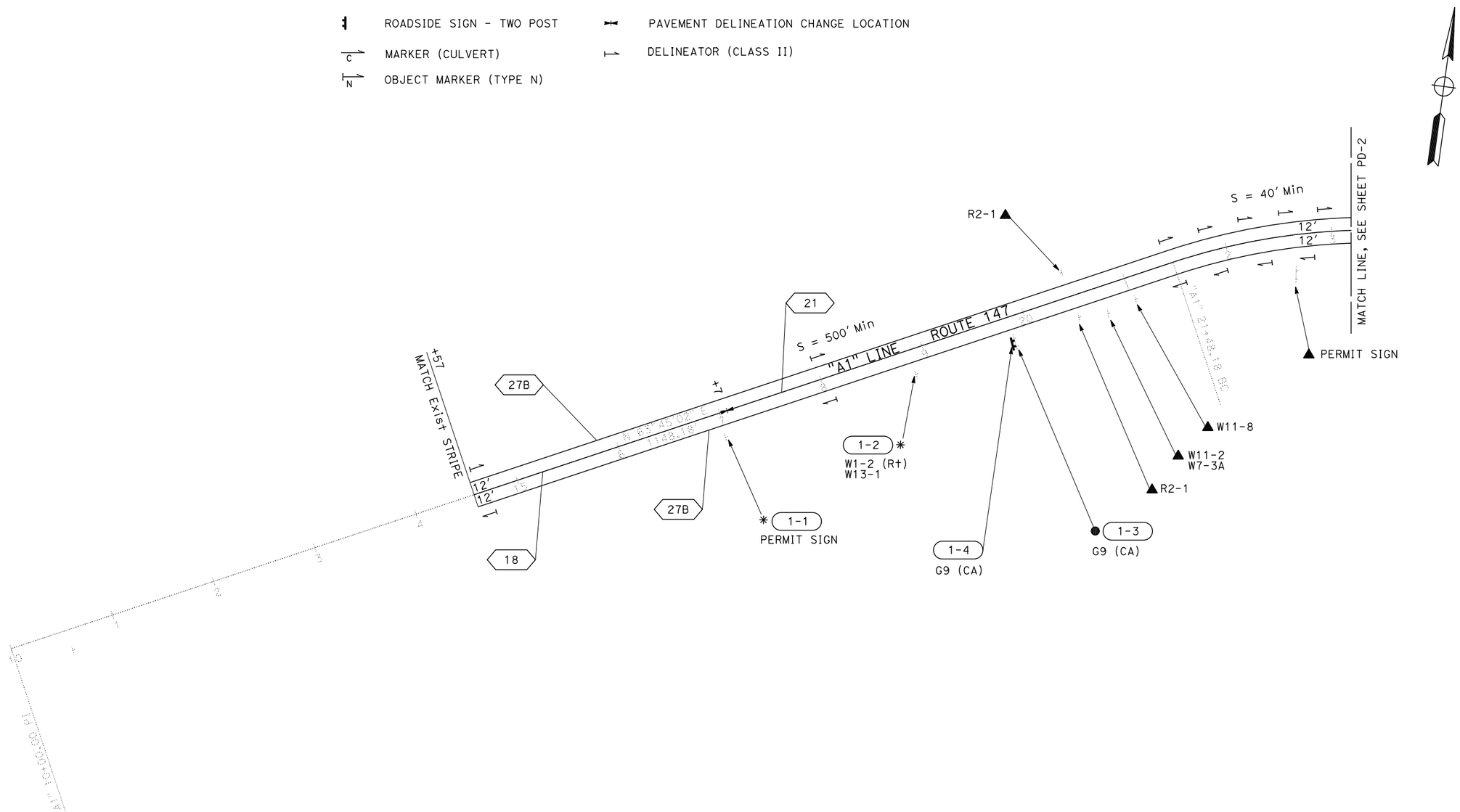

APPROVED FOR PAVEMENT DELINEATION AND SIGN WORK ONLY

PAVEMENT DELINEATION AND SIGN PLAN

SCALE: 1" = 50'

PD-1

REVISED BY	DATE REVISED

CALCULATED-DESIGNED BY	MICHAEL WEBB
CHECKED BY	JEANNIE STEFFAN
FUNCTIONAL SUPERVISOR	JULIE CASEY

STATE OF CALIFORNIA - DEPARTMENT OF TRANSPORTATION
Caltrans® DESIGN

P:\proj1\02\4E340_plans\pse\24e340na001.dgn

LAST REVISION 12-21-12 | DATE PLOTTED => 25-JAN-2013 | TIME PLOTTED => 08:16

Dist	COUNTY	ROUTE	POST MILES TOTAL PROJECT	SHEET No.	TOTAL SHEETS
02	Las	147	0.5/1.2	23	38

Michael R. Webb 12-21-12
REGISTERED CIVIL ENGINEER DATE

01-24-13
PLANS APPROVAL DATE

REGISTERED PROFESSIONAL ENGINEER MICHAEL R. WEBB No. C73986 Exp. 6-30-13 CIVIL STATE OF CALIFORNIA

THE STATE OF CALIFORNIA OR ITS OFFICERS OR AGENTS SHALL NOT BE RESPONSIBLE FOR THE ACCURACY OR COMPLETENESS OF SCANNED COPIES OF THIS PLAN SHEET.

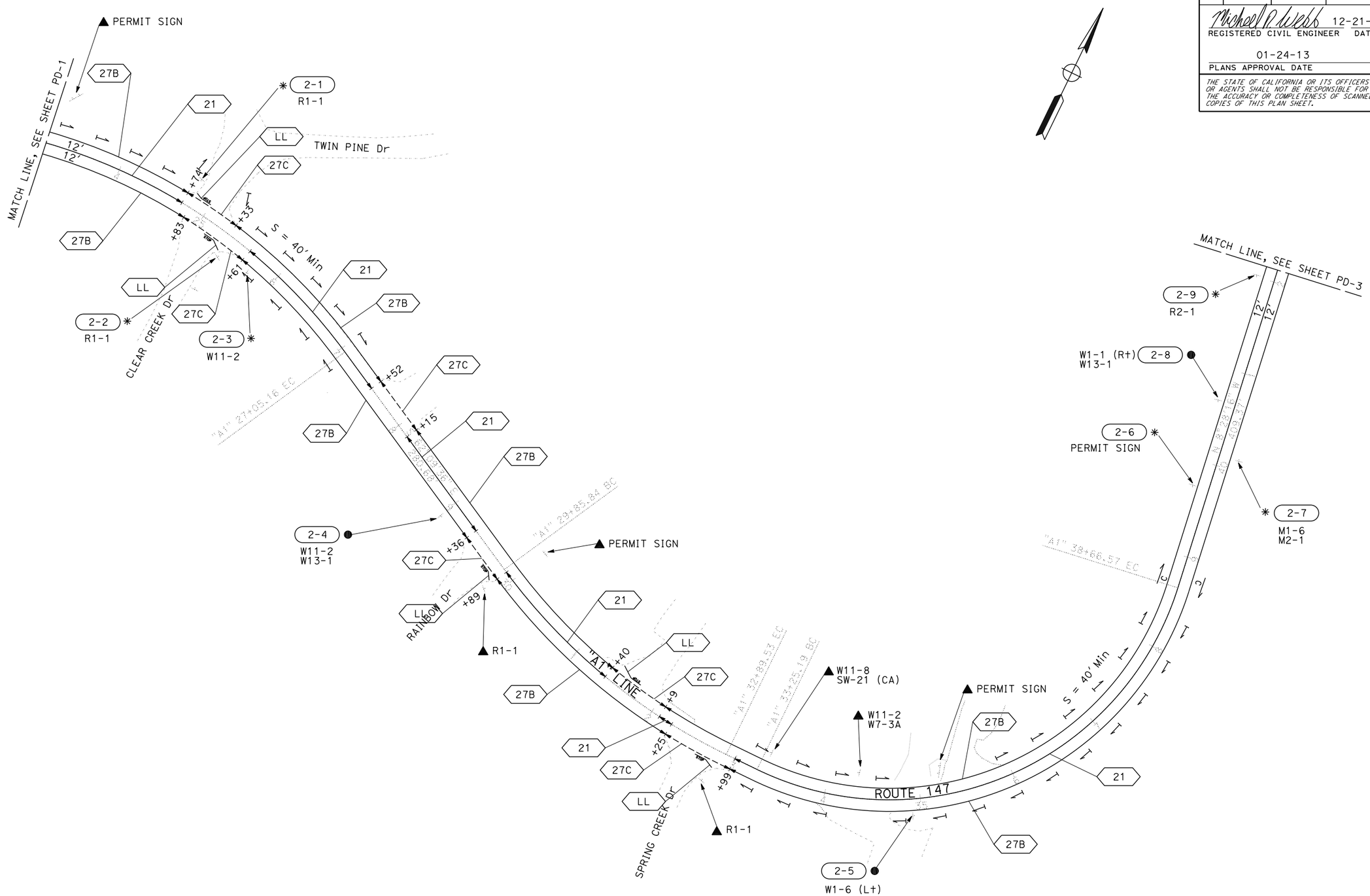

APPROVED FOR PAVEMENT DELINEATION AND SIGN WORK ONLY

PAVEMENT DELINEATION AND SIGN PLAN

SCALE: 1" = 50'

PD-2

LAST REVISION	DATE PLOTTED => 25-JAN-2013
12-21-12	TIME PLOTTED => 08:16

REVISED BY	DATE REVISED

CALCULATED-DESIGNED BY	MICHAEL WEBB
CHECKED BY	JEANNIE STEFFAN
FUNCTIONAL SUPERVISOR	JULIE CASEY

STATE OF CALIFORNIA - DEPARTMENT OF TRANSPORTATION
Caltrans® **DESIGN**

P:\proj1\02\4E340_plans\pse\24e340na002.dgn

BORDER LAST REVISED 7/2/2010 | USERNAME => s115152 DGN FILE => 24e340na002.dgn | RELATIVE BORDER SCALE IS IN INCHES 0 1 2 3 | UNIT 0318 | PROJECT NUMBER & PHASE 02000202731

Dist	COUNTY	ROUTE	POST MILES TOTAL PROJECT	SHEET No.	TOTAL SHEETS
02	Las	147	0.5/1.2	24	38

REGISTERED CIVIL ENGINEER 12-21-12 DATE

01-24-13
PLANS APPROVAL DATE

REGISTERED PROFESSIONAL ENGINEER MICHAEL R. WEBB No. C73986 Exp. 6-30-13 CIVIL STATE OF CALIFORNIA

THE STATE OF CALIFORNIA OR ITS OFFICERS OR AGENTS SHALL NOT BE RESPONSIBLE FOR THE ACCURACY OR COMPLETENESS OF SCANNED COPIES OF THIS PLAN SHEET.

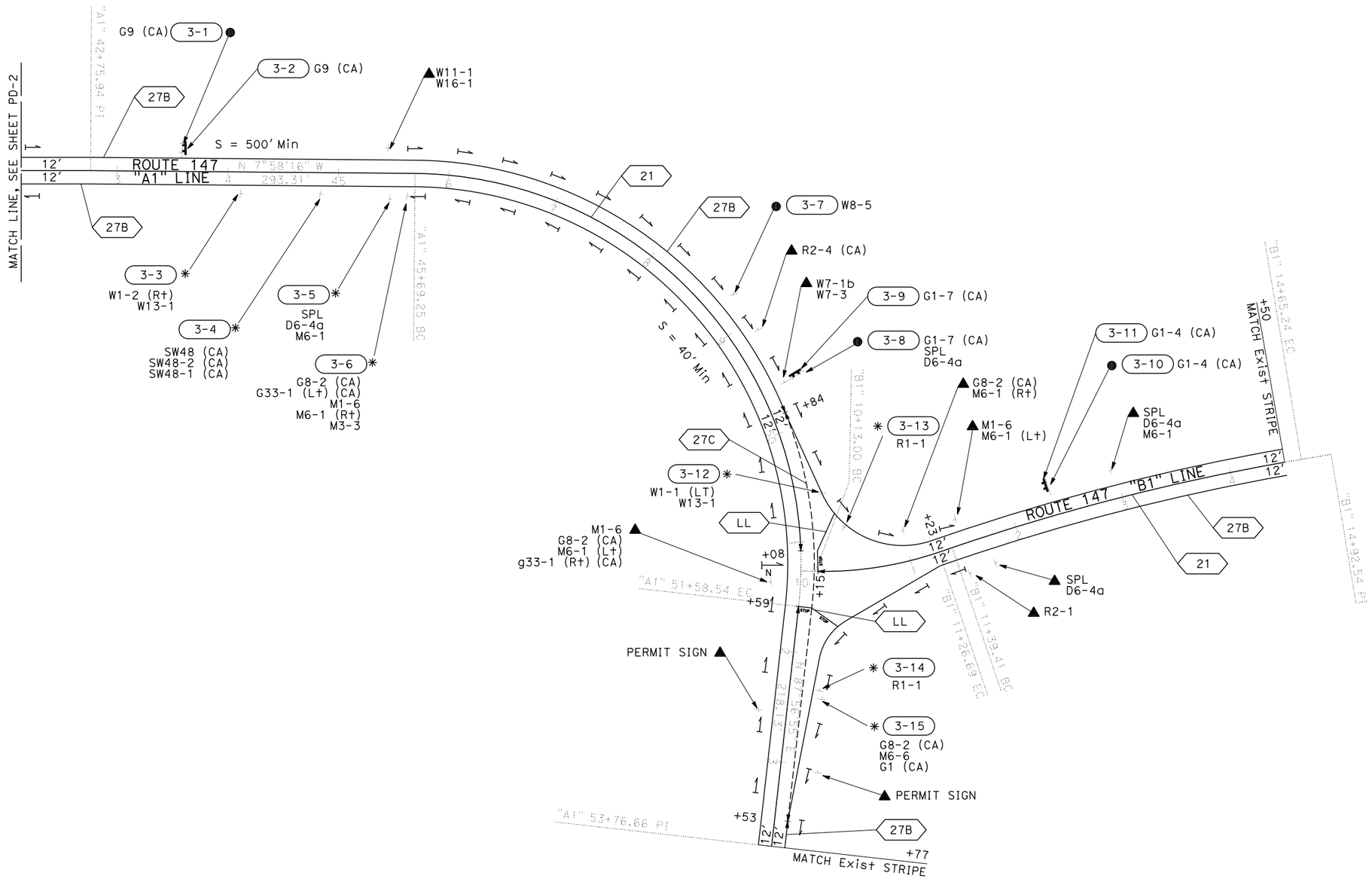

PAVEMENT DELINEATION AND SIGN PLAN

SCALE: 1" = 50'

PD-3

APPROVED FOR PAVEMENT DELINEATION AND SIGN WORK ONLY

REVISED BY	DATE REVISED

MICHAEL WEBB — JEANNIE STEFFAN — CALCULATED-DESIGNED BY — CHECKED BY — FUNCTIONAL SUPERVISOR — JULIE CASEY

STATE OF CALIFORNIA - DEPARTMENT OF TRANSPORTATION

Caltrans® **DESIGN**

P:\proj1\02\4E340_plans\pse\24e340na003.dgn

LAST REVISION 12-21-12 — DATE PLOTTED => 25-JAN-2013 — TIME PLOTTED => 08:16

Dist	COUNTY	ROUTE	POST MILES TOTAL PROJECT	SHEET No.	TOTAL SHEETS
02	Las	147	0.5/1.2	25	38

REGISTERED CIVIL ENGINEER 12-21-12 DATE

01-24-13
PLANS APPROVAL DATE

REGISTERED PROFESSIONAL ENGINEER MICHAEL R. WEBB No. C73986 Exp. 6-30-13 CIVIL STATE OF CALIFORNIA

THE STATE OF CALIFORNIA OR ITS OFFICERS OR AGENTS SHALL NOT BE RESPONSIBLE FOR THE ACCURACY OR COMPLETENESS OF SCANNED COPIES OF THIS PLAN SHEET.

THERMOPLASTIC PAVEMENT MARKING

LOCATION	LIMIT LINE	STOP (1 = 22 SQFT)
	SQFT	SQFT
CLEAR CREEK Dr, L†	23	22
CLEAR CREEK Dr, R†	19	22
RAINBOW Dr, R†	19	22
CLEAR CREEK PARK, L†	28	22
SPRING CREEK Dr, R†	23	22
SR 147/Co Rd A21	100	66
TOTAL	388	

THERMOPLASTIC TRAFFIC STRIPE (SPRAYABLE)

LOCATION	DETAIL 18	DETAIL 21	DETAIL 27B	DETAIL 27C
	LF	LF	LF	LF
"A1" 14+57 TO "A1" 53+77	250	3717	8211	765
"B1" 10+00 TO "B1" 14+65				
TOTAL	12,943			

MARKERS AND DELIINEATORS

LOCATION	DELINEATOR (CLASS 2)	MARKER (CULVERT)	OBJECT MARKER (TYPE N)	NOTES
	EA	EA	EA	
"A1" 14+57 TO "A1" 24+48	4			Min SPACING = 500′
"A1" 21+48 TO "A1" 27+05	24			Min SPACING = 40′
"A1" 33+25 TO "A1" 38+66	23			
"A1" 38+66 TO "A1" 45+69	2			Min SPACING = 500′
"A1" 45+69 TO "A1" 53+77	39			Min SPACING = 40′
"A1" 38+66		2		PM = 0.91
"A1" 51+26			1	
TOTAL	92	2	1	

PAVEMENT DELINEATION QUANTITIES

PDQ-1

REVISED BY | DATE REVISED
MICHAEL WEBB | JEANNIE STEFFAN
CALCULATED-DESIGNED BY | CHECKED BY
FUNCTIONAL SUPERVISOR
JULIE CASEY

STATE OF CALIFORNIA - DEPARTMENT OF TRANSPORTATION
Caltrans® DESIGN

P:\proj1\02\4E340_plans\pse\24e340nc001.dgn

LAST REVISION 12-21-12 | DATE PLOTTED => 25-JAN-2013 | TIME PLOTTED => 08:16

Dist	COUNTY	ROUTE	POST MILES TOTAL PROJECT	SHEET No.	TOTAL SHEETS
02	Las	147	0.5/1.2	26	38

Michael R. Webb 12-21-12
REGISTERED CIVIL ENGINEER DATE

01-24-13
PLANS APPROVAL DATE

REGISTERED PROFESSIONAL ENGINEER MICHAEL R. WEBB No. C73986 Exp. 6-30-13 CIVIL STATE OF CALIFORNIA

THE STATE OF CALIFORNIA OR ITS OFFICERS OR AGENTS SHALL NOT BE RESPONSIBLE FOR THE ACCURACY OR COMPLETENESS OF SCANNED COPIES OF THIS PLAN SHEET.

NOTES:

1. USE A 2¼" Sq TUBE x 30" LONG, 3/16" THICK ANCHOR FOR 2" POSTS.
   USE A 3" Sq TUBE x 3' LONG, 3/16" THICK ANCHOR FOR 2-1/2 " POSTS.
2. USE A 5/16" CORNER BOLT OR TWO DRIVE RIVETS TO FASTEN ASSEMBLED SIGN AND POST INTO ANCHOR. INSTALL CORNER BOLT OR DRIVE RIVETS INTO THE SIDES FACING TRAFFIC.
3. REMOVE EXISTING AC OR PCC, DRIVE ANCHOR SLEEVE INTO SOIL AND RECAP WITH LIKE MATERIAL, MATCHING EXISTING THICKNESS.
4. 2" POSTS ARE TO BE ⅛" THICK, PERFORATIONS OF 7/16" IN DIAMETER ARE 1" ON CENTER ON ALL SIDES, LENGTHS ARE 10' AND 12'.
5. 2-1/2" POSTS ARE TO BE ⅛" THICK, PERFORATIONS OF 7/16" IN DIAMETER ARE 1" ON CENTER ON ALL SIDES, 2-1/2" POSTS ARE 12' AND 14' IN LENGTH.
6. FOR DETAILS NOT SHOWN, REFER TO THE STANDARD PLANS.
7. 2-1/2" POSTS SHALL BE USED IN SIDEWALK AND HIGH PEDESTRIAN USE PLACEMENTS.
8. ALL ANCHOR SLEEVES SHALL BE EMBEDDED IN PCC, EXCEPT FOR INSTALLATIONS IN PAVEMENTS OR SIDEWALKS.

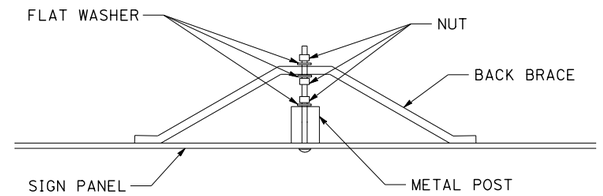

BACK BRACE MOUNTING DETAIL

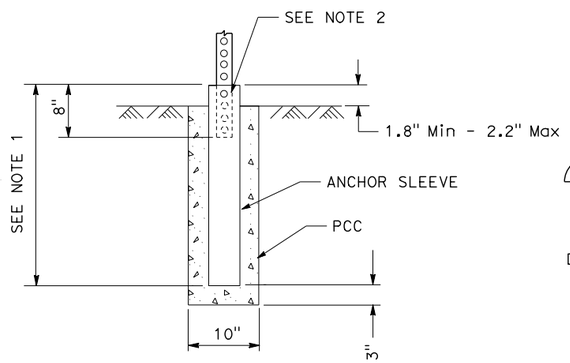

INSTALLATION IN SOIL (PCC)
(SEE NOTE 8)

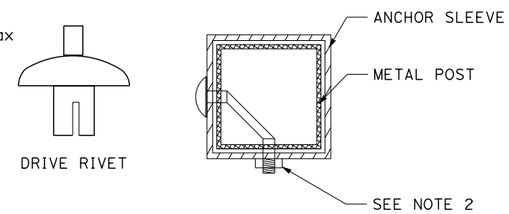

FASTENER DETAILS

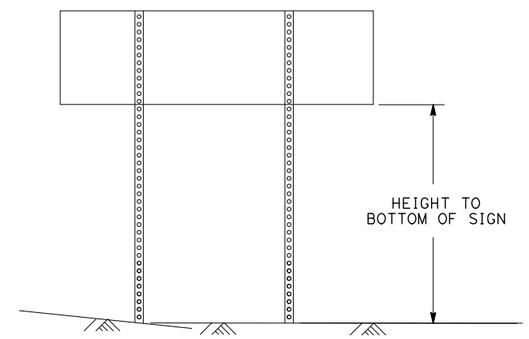

TWO POSTS INSTALLATION
(POST SIZE, SEE CHART BELOW)

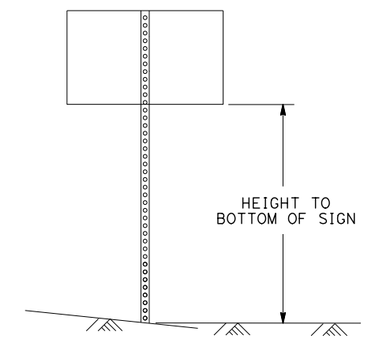

SINGLE POST INSTALLATION
(POST SIZE, SEE CHART BELOW)

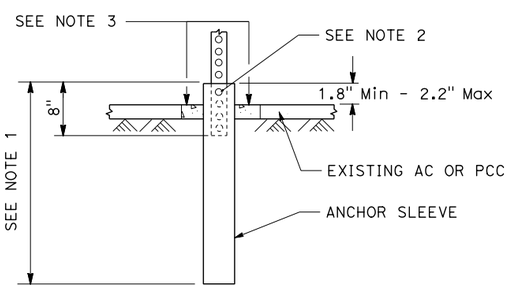

INSTALLATION IN EXISTING AC OR PCC

METAL SIGN POST INSTALLATION DETAILS

Max Sq Ft OF SIGN

POST SIZE	60"	72"	84"	96"	108"	120"
2"	18	16	14	12	10	8
2.5"	35	32	28	24	21	21

HEIGHT TO BOTTOM OF SIGN
DOUBLE POST GROUND SIGNS
70 MPH WIND SPEED

Max Sq Ft OF SIGN

POST SIZE	60"	72"	84"	96"	108"	120"
2"	10.5	10	8.7	7.4	6.2	5
2.5"	16	16	16	16	12	12

HEIGHT TO BOTTOM OF SIGN
SINGLE POST GROUND SIGNS
70 MPH WIND SPEED

METAL SIGN POST DETAIL

SIGN DETAILS
NO SCALE

SD-1

MICHAEL WEBB — JEANNIE STEFFAN — JULIE CASEY
REVISED BY — DATE REVISED
CALCULATED-DESIGNED BY — CHECKED BY — FUNCTIONAL SUPERVISOR
STATE OF CALIFORNIA - DEPARTMENT OF TRANSPORTATION
Caltrans® DESIGN
P:\proj1\02\4E340_plans\pse\24e340ob001.dgn

LAST REVISION 12-21-12 — DATE PLOTTED => 25-JAN-2013 — TIME PLOTTED => 08:16

Dist	COUNTY	ROUTE	POST MILES TOTAL PROJECT	SHEET No.	TOTAL SHEETS
02	Las	147	0.5/1.2	27	38

Michael R. Webb 12-21-12
REGISTERED CIVIL ENGINEER DATE

01-24-13
PLANS APPROVAL DATE

REGISTERED PROFESSIONAL ENGINEER MICHAEL R. WEBB No. C73986 Exp. 6-30-13 CIVIL STATE OF CALIFORNIA

THE STATE OF CALIFORNIA OR ITS OFFICERS OR AGENTS SHALL NOT BE RESPONSIBLE FOR THE ACCURACY OR COMPLETENESS OF SCANNED COPIES OF THIS PLAN SHEET.

NOTE:

1. ALL DIMENSIONS ARE IN INCHES.

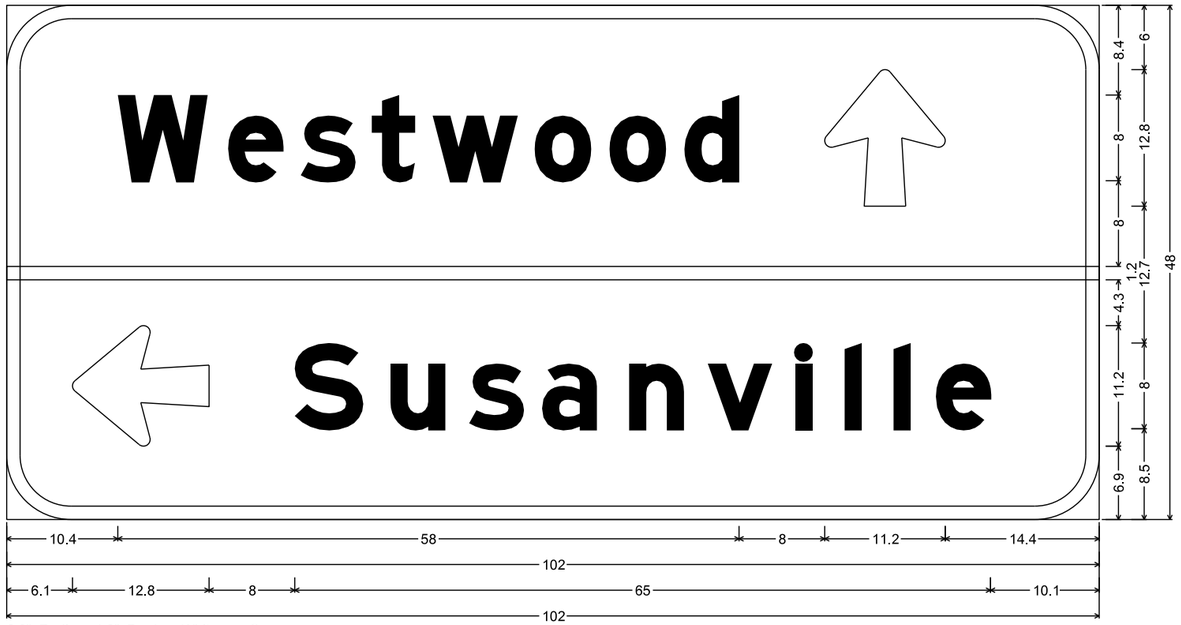

6.0" Radius, 1.3" Border, White on Green;
[Westwood] E Mod; Arrow 8UC-1L - 12.8" 90°; Arrow 8UC-1L - 12.8" 180°; [Susanville] E Mod;

3-9
G1-7(Ca)

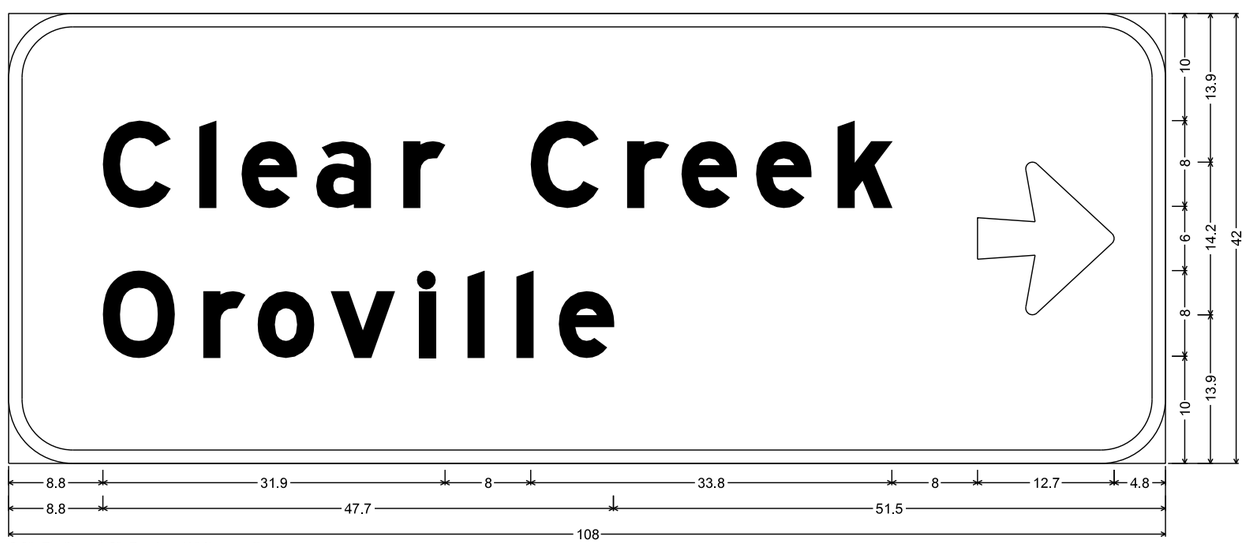

6.0" Radius, 1.3" Border, White on Green;
[Clear Creek] E Mod; [Oroville] E Mod; Arrow 8UC-2LH - 12.8" 0°;

3-11
G1-4(Ca)

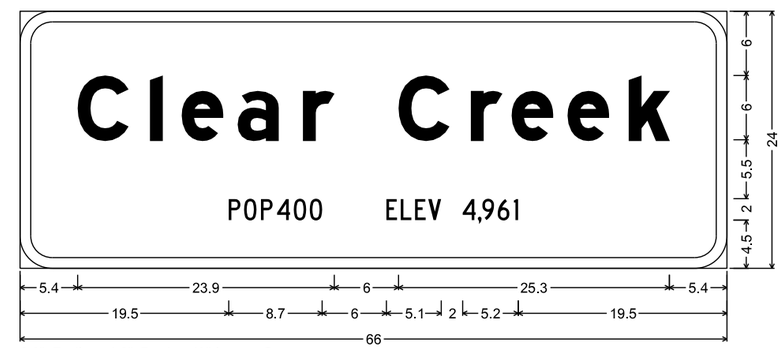

3.0" Radius, 1.0" Border, White on Green;
[Clear Creek] E Mod; [POP400] C; [ELEV 4,961] C;

1-4 3-2
G9(Ca)

SIGN DETAILS
NO SCALE

SD-2

REVISED BY	DATE REVISED
MICHAEL WEBB	JEANNIE STEFFAN
CALCULATED-DESIGNED BY	CHECKED BY
FUNCTIONAL SUPERVISOR	JULIE CASEY

STATE OF CALIFORNIA - DEPARTMENT OF TRANSPORTATION
Caltrans® DESIGN

P:\proj1\02\4E340_plans\pse\24e340ob002.dgn

LAST REVISION 12-21-12 | DATE PLOTTED => 25-JAN-2013 | TIME PLOTTED => 08:16

Dist	COUNTY	ROUTE	POST MILES TOTAL PROJECT	SHEET No.	TOTAL SHEETS
02	Las	147	0.5/1.2	28	38

Michael R. Webb 12-21-12
REGISTERED CIVIL ENGINEER DATE

01-24-13
PLANS APPROVAL DATE

REGISTERED PROFESSIONAL ENGINEER MICHAEL R. WEBB No. C73986 Exp. 6-30-13 CIVIL STATE OF CALIFORNIA

THE STATE OF CALIFORNIA OR ITS OFFICERS OR AGENTS SHALL NOT BE RESPONSIBLE FOR THE ACCURACY OR COMPLETENESS OF SCANNED COPIES OF THIS PLAN SHEET.

ROADSIDE SIGNS (TABLE 1)

SIGN No.	SIGN CODE	REMOVE ROADSIDE SIGN	RESET ROADSIDE SIGN	ROADSIDE SIGN - TWO POST	(N) METAL POST LENGTH	(N) No. AND SIZE OF POSTS
		EA	EA	EA	LF	
1-1	PERMIT SIGN		1			
1-2	W1-2 (R†)		1			
	W13-1					
1-3	G9 (CA)	1				
1-4	G9 (CA)			1	9	2 - 2.5" X 2.5"
2-1	R1-1		1			
2-2	R1-1		1			
2-3	W11-2		1			
2-4	W11-2	1				
	W13-1					
2-5	W1-6 (L†)	1				
2-6	PERMIT SIGN		1			
2-7	M1-6		1			
	M2-1					
2-8	W1-1 (RT)	1				
	W13-1					
2-9	R2-1		1			
3-1	G9 (CA)	1				
3-2	G9 (CA)			1	9	2 - 2.5" X 2.5"
3-3	W1-2 (R†)		1			
	W13-1					
3-4	SW48 (CA)		1			
	SW48-2 (CA)					
	SW48-1 (CA)					
3-5	SPL		1			
	D6-4a					
	M6-1					
3-6	G8-2 (CA)		1			
	G33-1 (L†) (CA)					
	M1-6					
	M6-1 (R†)					
	M3-3					
SUBTOTAL TABLE 1		5	12	2		

ROADSIDE SIGNS (TABLE 2)

SIGN No.	SIGN CODE	REMOVE ROADSIDE SIGN	RESET ROADSIDE SIGN	ROADSIDE SIGN - TWO POST	(N) METAL POST LENGTH	(N) No. AND SIZE OF POSTS
		EA	EA	EA	LF	
3-7	W8-5	1				
3-8	G1-7 (CA)	1				
	SPL					
	D6-4a					
3-9	G1-7 (CA)			1	11	2 - 2.5" X 2.5"
3-10	G1-4 (CA)	1				
3-11	G1-4 (CA)			1	11	2 - 2.5" X 2.5"
3-12	W1-1 (L†)		1			
	W13-1					
3-13	R1-1		1			
3-14	R1-1		1			
3-15	G8-2 (CA)		1			
	M6-6					
	G1 (CA)					
SUBTOTAL		3	4	2		
SUBTOTAL TABLE 1		5	12	2		
TOTAL		8	16	4		

TREATED WOOD WASTE

	TREATED WOOD WASTE	DESCRIPTION
	LB	
	700	FROM ROADSIDE SIGN POSTS REMOVED
TOTAL	700	

CONTRACTOR FURNISHED SIGNS

SIGN No.	SIGN CODE	SIGN SIZE L x D (In x In)	SINGLE FACED	DOUBLE FACED	SIGN FACING MATERIAL: BACKGROUND SHEETING COLOR	BACKGROUND RETROREFLECTIVE ASTM TYPE	LEGEND SHEETING COLOR	LEGEND RETROREFLECTIVE ASTM TYPE	FURNISH SINGLE SHEET ALUMINUM SIGN (0.080" - FRAMED) SQFT 0.080"	DESCRIPTION (REMARKS)
1-4	G9 (CA)	66 X 24	X		GREEN	III	WHITE	III	11	CLEAR CREEK, POP 400 ELEV 4,961
3-2	G9 (CA)	66 X 24	X		GREEN	III	WHITE	III	11	CLEAR CREEK, POP 400 ELEV 4,961
3-9	G1-7 (CA)	102 X 48	X		GREEN	III	WHITE	III	34	
3-11	G1-4 (CA)	108 X 42	X		GREEN	III	WHITE	III	31.5	
								TOTAL	87.5	

SIGN QUANTITIES
SQ-1

REVISED BY	DATE REVISED

CALCULATED-DESIGNED BY	CHECKED BY
MICHAEL WEBB	JEANNIE STEFFAN

FUNCTIONAL SUPERVISOR
JULIE CASEY

STATE OF CALIFORNIA - DEPARTMENT OF TRANSPORTATION
Caltrans® DESIGN

P:\proj1\02\4E340_plans\pse\24e340oc001.dgn

LAST REVISION 12-21-12 | DATE PLOTTED => 25-JAN-2013 | TIME PLOTTED => 08:16

Dist	COUNTY	ROUTE	POST MILES TOTAL PROJECT	SHEET No.	TOTAL SHEETS
02	Las	147	0.5/1.2	29	38

Michael R. Webb 12-21-12
REGISTERED CIVIL ENGINEER DATE

01-24-13
PLANS APPROVAL DATE

REGISTERED PROFESSIONAL ENGINEER MICHAEL R. WEBB No. C73986 Exp. 6-30-13 CIVIL STATE OF CALIFORNIA

THE STATE OF CALIFORNIA OR ITS OFFICERS OR AGENTS SHALL NOT BE RESPONSIBLE FOR THE ACCURACY OR COMPLETENESS OF SCANNED COPIES OF THIS PLAN SHEET.

NOTE:

1. (N) - NOT A SEPARATE PAY ITEM, FOR INFORMATION ONLY

DRAINAGE QUANTITIES

SHEET No.	DRAINAGE SYSTEM No. ⬡	DRAINAGE UNIT ○	REMOVE CULVERT (LF)	MINOR CONCRETE (MINOR STRUCTURE)	24" CORRUGATED STEEL PIPE (.064" THICK)	24" STEEL FLARED END SECTION	ROCK SLOPE PROTECTION (FACING, METHOD B) (TON)	ROCK SLOPE PROTECTION FABRIC (CLASS 8)	Misc IRON AND STEEL	PLACE HMA (Misc AREA)	PLACE HOT MIX ASPHALT DIKE (TYPE A)	DESCRIPTION
			LF	CY	LF	EA	TON	SQYD	LB	SQYD	LF	
L-2/DP-1	1	a	40.2									Exist 12" X 24" CULVERT
		b		1.24								DI TYPE GO (H = 3')
									263			GRATE TYPE 24-9
		c			44							
		d				1						
		e					10					
		f						16				
		g								27	28	
		TOTALS	40.2	1.24	44	1	10	16	263	27	28	

ROADWAY QUANTITIES

LOCATION	COLD PLANE ASPHALT CONCRETE PAVEMENT	ROADWAY EXCAVATION	(N) EMBANKMENT	SHOULDER BACKING (TON)	CLASS 2 AGGREGATE BASE	HOT MIX ASPHALT (TYPE A)	TACK COAT	NOTES
	SQYD	CY	CY	TON	CY	TON	TON	
"A1" 14+57.42 TO "A1" 53+76.66		4454	423	659	2962	3960	1.7	
						4		FROM HMA APRON
						1		FROM HMA DIKE
"A1" 22+88, R+ TO "A1" 24+86, R+	110					15		PAVEMENT CONFORM (LONGITUDINAL)
"A1" 25+00, R+	103					14		PAVEMENT CONFORM (CLEAR CREEK Dr)
"A1" 25+00, L+	118					16		PAVEMENT CONFORM (CLEAR CREEK Dr)
"A1" 27+82, L+	91					12		PAVEMENT CONFORM (VOLUNTEER FIRE DEPARTMENT)
"A1" 29+70, R+	101					14		PAVEMENT CONFORM (RAINBOW Dr)
"A1" 30+69, R+ TO "A1" 31+88, R+	66					9		PAVEMENT CONFORM (LONGITUDINAL)
"A1" 31+80, L+	133					18		PAVEMENT CONFORM (CLEAR CREEK PARK)
"A1" 32+60, R+	112					15		PAVEMENT CONFORM (SPRING CREEK Dr)
"A1" 34+50, R+	175					24		PAVEMENT CONFORM (PRIVATE DRIVEWAY)
"A1" 35+00, L+		2				11		PAVEMENT CONFORM (PRIVATE DRIVEWAY)
"A1" 35+60, L+	111					15		PAVEMENT CONFORM (PRIVATE DRIVEWAY)
"A1" 38+50, R+		2				13		PAVEMENT CONFORM (PRIVATE DRIVEWAY)
"B1" 10+00.00 TO "B1" 14+65.24		739	20	78	351	470	0.3	
TOTALS	1120	5197	443	737	3313	4611	2	

SUMMARY OF QUANTITIES
Q-1

REVISED BY	DATE REVISED

MICHAEL WEBB — CALCULATED-DESIGNED BY
JEANNIE STEFFAN — CHECKED BY
JULIE CASEY — FUNCTIONAL SUPERVISOR

STATE OF CALIFORNIA - DEPARTMENT OF TRANSPORTATION
Caltrans® DESIGN

P:\proj1\02\4E340_plans\pse\24e340pa001.dgn

LAST REVISION 12-21-12 | DATE PLOTTED => 25-JAN-2013 | TIME PLOTTED => 08:16

Dist	COUNTY	ROUTE	POST MILES TOTAL PROJECT	SHEET No.	TOTAL SHEETS
02	Las	147	0.5/1.2	30	38

REGISTERED ELECTRICAL ENGINEER 12-21-12 DATE

01-24-13
PLANS APPROVAL DATE

REGISTERED PROFESSIONAL ENGINEER J.M. HANNIGAN No. E13665 Exp. 6-30-13 ELECTRICAL STATE OF CALIFORNIA

THE STATE OF CALIFORNIA OR ITS OFFICERS OR AGENTS SHALL NOT BE RESPONSIBLE FOR THE ACCURACY OR COMPLETENESS OF SCANNED COPIES OF THIS PLAN SHEET.

NOTE:

1. FOR ACCURATE RIGHT OF WAY DATA, CONTACT RIGHT OF WAY ENGINEERING AT THE DISTRICT OFFICE.

LEGEND

(pb) EXISTING OBJECT MARKER (TYPE PB)
— PIEZO-ELECTRIC AXLE SENSOR

ABBREVIATIONS

STC SCREENED TRANSMISSION CABLE

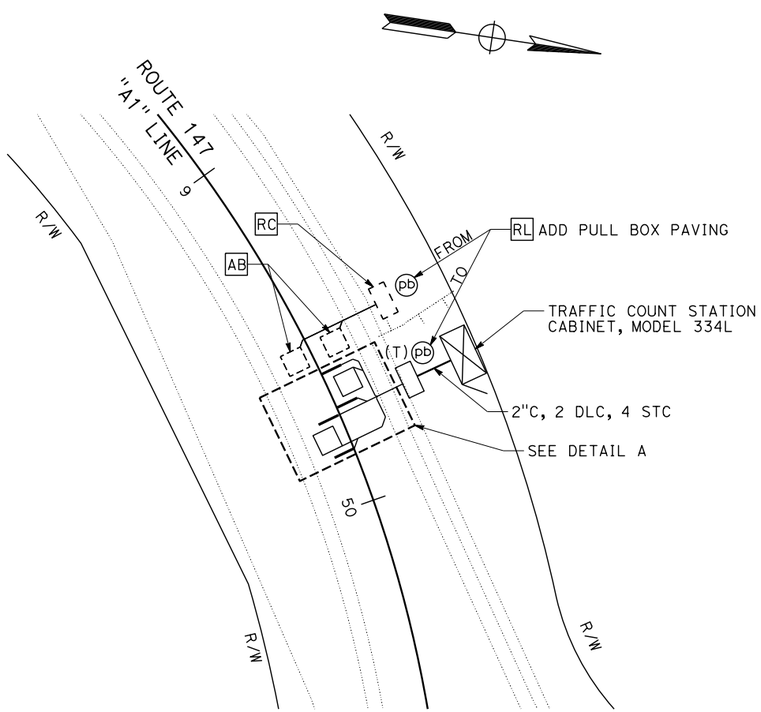

TMS No. 267
SCALE: 1" = 20'

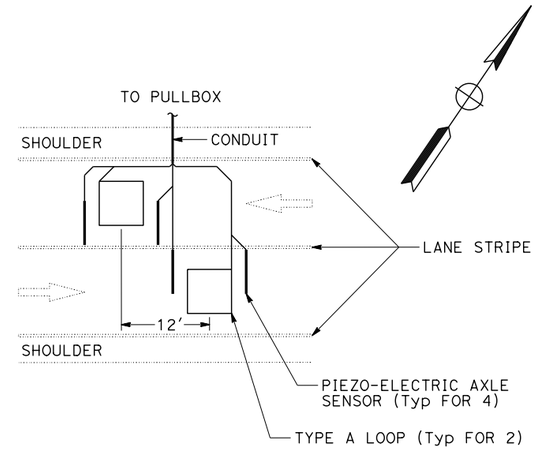

DETAIL A
NO SCALE

NOTES (FOR DETAIL A):

1. CENTER LOOPS IN LANES.
2. INSTALL AXLE SENSOR 2' FROM LOOP AND 2" FROM THE EDGE OF THE LEFT HAND LANE STRIPE. THE LEFT HAND LANE STRIPE IS DETERMINED BY THE DIRECTION OF TRAVEL.
3. SEE STANDARD PLAN ES-5D FOR DETAILS NOT SHOWN.

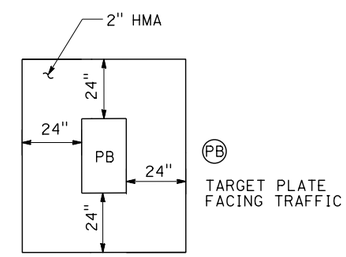

PULL BOX PAVING
NO SCALE

TRAFFIC COUNT STATION
SCALE AS SHOWN

E-1

APPROVED FOR ELECTRICAL WORK ONLY

REVISED BY	DATE REVISED

CALCULATED-DESIGNED BY: J. M. HANNIGAN
CHECKED BY: ARTURO ROBLES
FUNCTIONAL SUPERVISOR: ROB STINGER

STATE OF CALIFORNIA - DEPARTMENT OF TRANSPORTATION
Caltrans® **ELECTRICAL DESIGN**

P:\proj1\02\4E340_plans\pse\24e340ua001.dgn

LAST REVISION 01-09-13 | DATE PLOTTED => 25-JAN-2013 TIME PLOTTED => 08:16

Dist	COUNTY	ROUTE	POST MILES TOTAL PROJECT	SHEET No.	TOTAL SHEETS
02	Las	147	0.5/1.2	31	38

REGISTERED ELECTRICAL ENGINEER 12-21-12 DATE

01-24-13
PLANS APPROVAL DATE

REGISTERED PROFESSIONAL ENGINEER J.M. HANNIGAN No. E13665 Exp. 6-30-13 ELECTRICAL STATE OF CALIFORNIA

THE STATE OF CALIFORNIA OR ITS OFFICERS OR AGENTS SHALL NOT BE RESPONSIBLE FOR THE ACCURACY OR COMPLETENESS OF SCANNED COPIES OF THIS PLAN SHEET.

NOTES (THIS SHEET):

1. SEE SES-1 FOR ADDITIONAL INFORMATION.

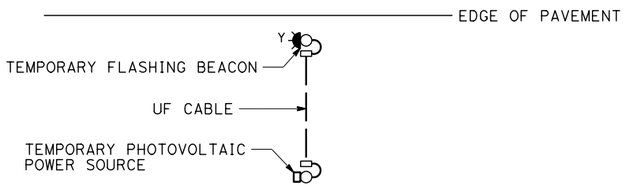

TYPICAL PHOTOVOLTAIC INSTALLATION

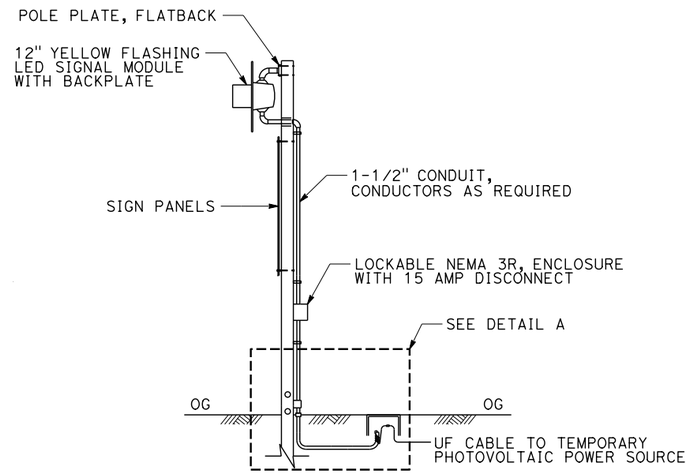

TEMPORARY FLASHING BEACON

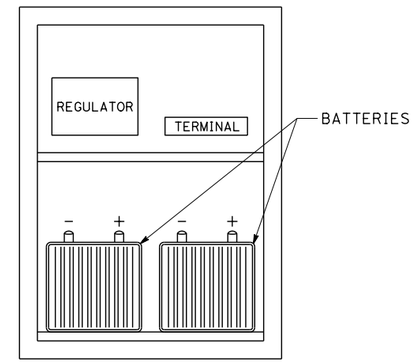

NEMA 4 BATTERY AND CONTROL ENCLOSURE

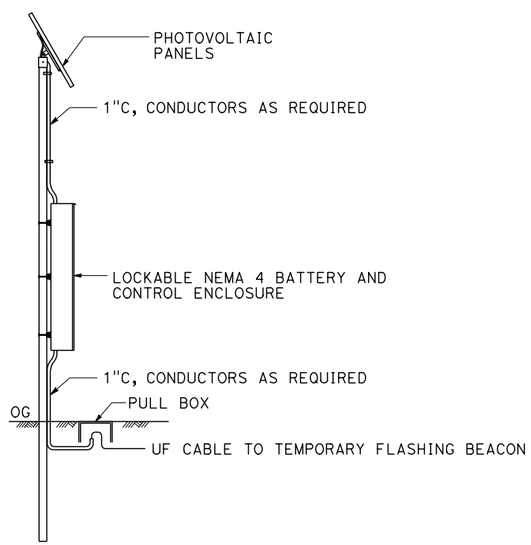

NOTE: POLE SHALL BE LOCATED 15' FROM ETW OR PROVIDE ATTENUATION.

TEMPORARY PHOTOVOLTAIC POWER SOURCE

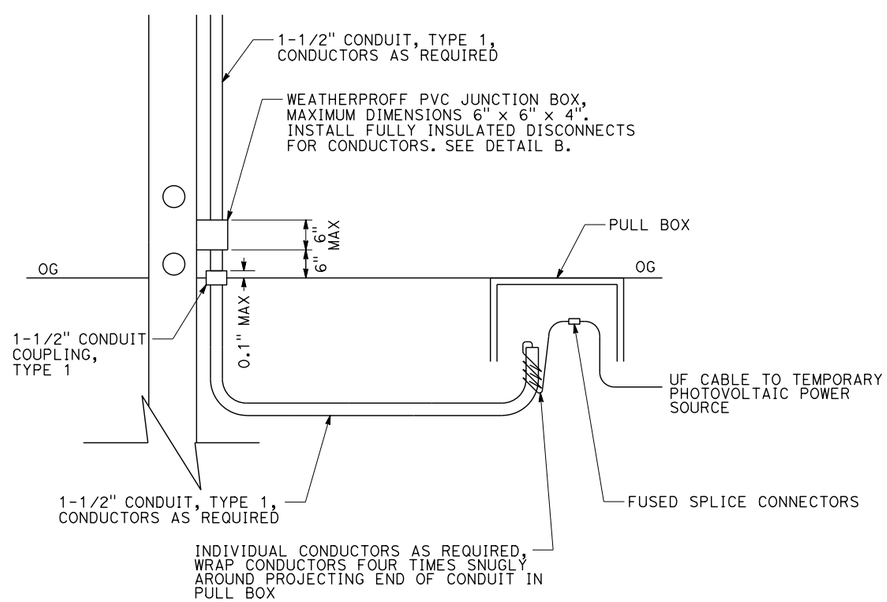

DETAIL A

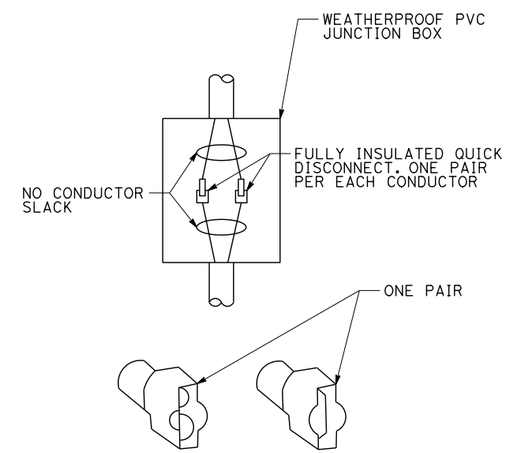

DETAIL B

TEMPORARY FLASHING BEACON SYSTEM

NO SCALE

E-2

APPROVED FOR ELECTRICAL WORK ONLY

REVISED BY	DATE REVISED
J. M. HANNIGAN	ARTURO ROBLES
CALCULATED-DESIGNED BY	CHECKED BY
FUNCTIONAL SUPERVISOR	ROB STINGER

STATE OF CALIFORNIA - DEPARTMENT OF TRANSPORTATION
Caltrans® ELECTRICAL DESIGN

P:\proj1\02\4E340_plans\pse\24e340ua002.dgn

LAST REVISION 01-16-13 | DATE PLOTTED => 25-JAN-2013 | TIME PLOTTED => 08:16

Dist	COUNTY	ROUTE	POST MILES TOTAL PROJECT	SHEET No.	TOTAL SHEETS
02	Las	147	0.5/1.2	32	38

J. Hannigan 12-21-12
REGISTERED ELECTRICAL ENGINEER DATE

01-24-13
PLANS APPROVAL DATE

REGISTERED PROFESSIONAL ENGINEER J.M. HANNIGAN No. E13665 Exp. 6-30-13 ELECTRICAL STATE OF CALIFORNIA

THE STATE OF CALIFORNIA OR ITS OFFICERS OR AGENTS SHALL NOT BE RESPONSIBLE FOR THE ACCURACY OR COMPLETENESS OF SCANNED COPIES OF THIS PLAN SHEET.

TRAFFIC COUNT STATION

SHEET No.	(N) TRENCH	(N) 2" CONDUIT (TYPE 1)	(N) No.5 PULL BOX TRAFFIC RATED	(N) PULL BOX PAVING	(N) MODEL 334L CABINET	(N) MODEL 334L CABINET FOUNDATION WITH ANCHOR BOLTS	(N) TYPE A LOOP	(N) DETECTOR-STUB SHOULDER	(N) DETECTOR LEAD-IN CABLE (DLC)	(N) PIEZO-ELECTRIC AXLE SENSORS	(N) SCREENED TRANSMISSION CABLE
	LF	LF	EA	EA	EA	EA	EA	EA	LF	EA	LF
E-1	50	50	1	1	1	1	2	1	100	4	200

(N) = NOT A SEPARATE PAY ITEM, FOR INFORMATION ONLY.

TEMPORARY FLASHING BEACON

SHEET No.	(N) TRENCH	(N) 1" CONDUIT (TYPE 1)	(N) 1½" CONDUIT (TYPE 1)	(N) UF CABLE	(N) No. 5 PULL BOX	(N) PHOTOVOLTAIC PANEL	(N) LOCKABLE NEMA 3R ENCLOSURE WITH DISCONNECT	(N) LOCKABLE BATTERY AND CONTROL ENCLOSURE, COMPLETE	(N) 12" YELLOW FLASHING LED SIGNAL MODULE WITH BACKPLATE
	LF	LF	LF	LF	EA	EA	EA	EA	EA
E-2	75	75	45	150	6	6	3	3	3

(N) = NOT A SEPARATE PAY ITEM, FOR INFORMATION ONLY.

ELECTRICAL QUANTITIES

E-3

STATE OF CALIFORNIA - DEPARTMENT OF TRANSPORTATION
Caltrans® ELECTRICAL DESIGN

FUNCTIONAL SUPERVISOR: ROB STINGER
CALCULATED-DESIGNED BY: J. M. HANNIGAN
CHECKED BY: ARTURO ROBLES
REVISED BY
DATE REVISED

P:\proj1\02\4E340_plans\pse\24e340ua003.dgn

LAST REVISION 01-08-13
DATE PLOTTED => 25-JAN-2013
TIME PLOTTED => 08:16

DIST	COUNTY	ROUTE	POST MILES TOTAL PROJECT	SHEET No	TOTAL SHEETS
02	LAS	147	0.5/1.2	33	38

REGISTERED CIVIL ENGINEER 1-17-13 DATE

01-24-2013
PLANS APPROVAL DATE

REGISTERED PROFESSIONAL ENGINEER TAMARA S. MARCHENKO No. C76837 Exp. 12/31/13 CIVIL STATE OF CALIFORNIA

The State of California or its officers or agents shall not be responsible for the accuracy or completeness of scanned copies of this plan sheet.

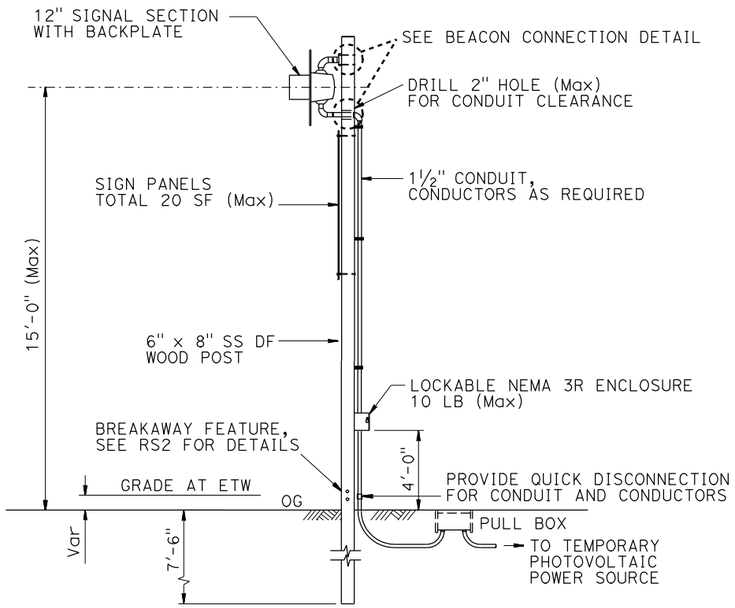

TEMPORARY FLASHING BEACON INSTALLATION

Abbreviation: SS DF - Douglas Fir-Larch Select Structural Grade

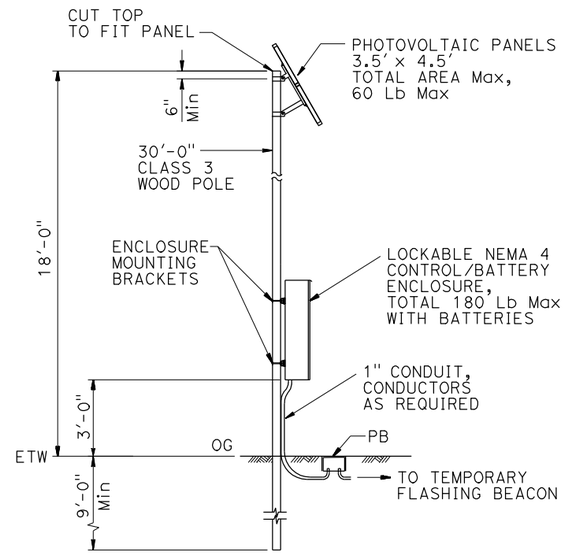

TEMPORARY PHOTOVOLTAIC POWER SOURCE

POLE SHALL BE LOCATED OUTSIDE OF CLEAR RECOVERY ZONE OR SEE NOTE 5

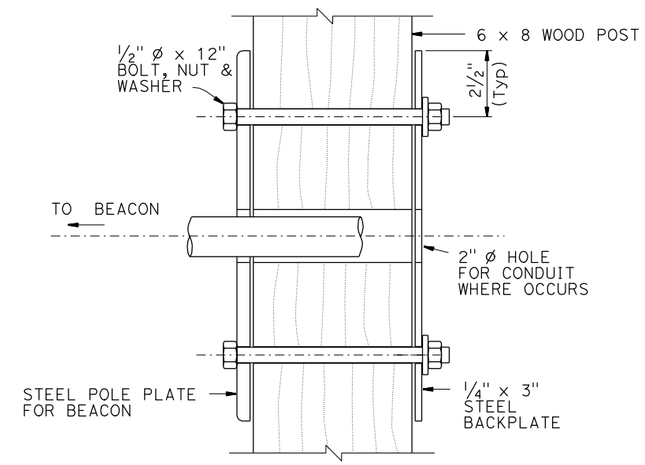

BEACON CONNECTION DETAIL

NOTES:

1. All attachments shall be mounted with stainless steel straps or other manufacturers methods without drilling holes through pole, except as shown. Drilling through pole will require Engineer's approval.
2. Foundation design is based on AASHTO 2009 and 2010 Interim Revisions article 13.6 Broms' approximate procedure assuming a cohessionless material. The angle of Internal friction used is 30° and unit weight of soil used is 120 lb/ft^3. Contractor to verify actual soil condition.
3. If pole is located on a steep slope from 4H:1V up to 2H:1V add 2 feet extra for embedment.
4. For details not shown, see "2010 STANDARD PLANS".
5. Wood pole or post shall be shielded from traffic by means according to California Department of Transportation Highway Design Manual Requirements. See Roadway Plans.
6. All hardware must be galvanized.

GENERAL NOTES:

SPECIFICATIONS

Design: AASHTO Standard Specifications for Structural Supports for Highway Signs, Luminaires and Traffic Signals dated 2009 and 2010 interim Revisions.

LOADING

Wind Loadings: 85 MPH

UNIT STRESSES

Timber Poles: Fb = 1850 Tapered treated round pole
Fv = 110 psi ASTM D2899 Standard
E = 1500 x 10^3 psi

TREATMENT

To conform with Section 86 Standard Specifications

SPECIFICATIONS

Caltrans Standard Specifications 2010
ANSI 05 Wood Poles

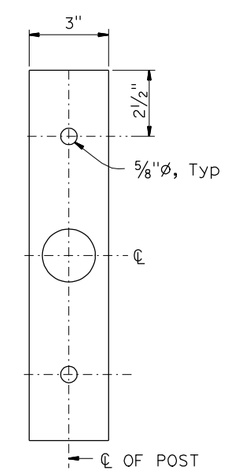

BACKPLATE

NO SCALE

NOTE:
THE CONTRACTOR SHALL VERIFY ALL CONTROLLING FIELD DIMENSIONS BEFORE ORDERING OR FABRICATING ANY MATERIAL.

BRANCH CHIEF	JOEL MAGANA		
DESIGN	BY T MARCHENKO	CHECKED L WARREN	
DETAILS	BY H NGUYEN	CHECKED L WARREN	
QUANTITIES	BY	CHECKED	

STATE OF CALIFORNIA
DEPARTMENT OF TRANSPORTATION

DIVISION OF ENGINEERING SERVICES
DESIGN AND TECHNICAL SERVICES
SPECIAL DESIGNS BRANCH
B

BRIDGE NO. N/A
POST MILE 0.5/1.2

TEMPORARY FLASHING BEACON
TEMPORARY WOOD POLE

SES-1

(ENGLISH) SPECIAL DESIGNS BRANCH BORDER SHEET (REV. 7-1-09)

ORIGINAL SCALE IN INCHES FOR REDUCED PLANS 0 1 2 3

UNIT: 3619
PROJECT NUMBER & PHASE: 0200020273
CONTRACT NO.: 02-4E3401

DISREGARD PRINTS BEARING EARLIER REVISION DATES 12-10-12

REVISION DATES

SHEET 1 OF 1

FILE => spec_des_br_prj/2012sd/02-4e3401_ses1.dgn

USERNAME => s128478 DATE PLOTTED => 28-JAN-2013 TIME PLOTTED => 09:24

Dist	COUNTY	ROUTE	POST MILES TOTAL PROJECT	SHEET No.	TOTAL SHEETS
02	Las	147	0.5/1.2	34	38

REGISTERED CIVIL ENGINEER 12-7-12 DATE

01-24-13
PLANS APPROVAL DATE

REGISTERED PROFESSIONAL ENGINEER Gurinderpal Bhullar No. C48815 Exp. 9-30-14 CIVIL STATE OF CALIFORNIA

THE STATE OF CALIFORNIA OR ITS OFFICERS OR AGENTS SHALL NOT BE RESPONSIBLE FOR THE ACCURACY OR COMPLETENESS OF SCANNED COPIES OF THIS PLAN SHEET.

NOTES:

Unless otherwise specified in the special provisions, all temporary warning signs shall have black legend on orange background.

California code are designated by (CA). Otherwise, Federal (MUTCD) codes are shown.

TYPICAL LANE CLOSURE WITH REVERSIBLE CONTROL

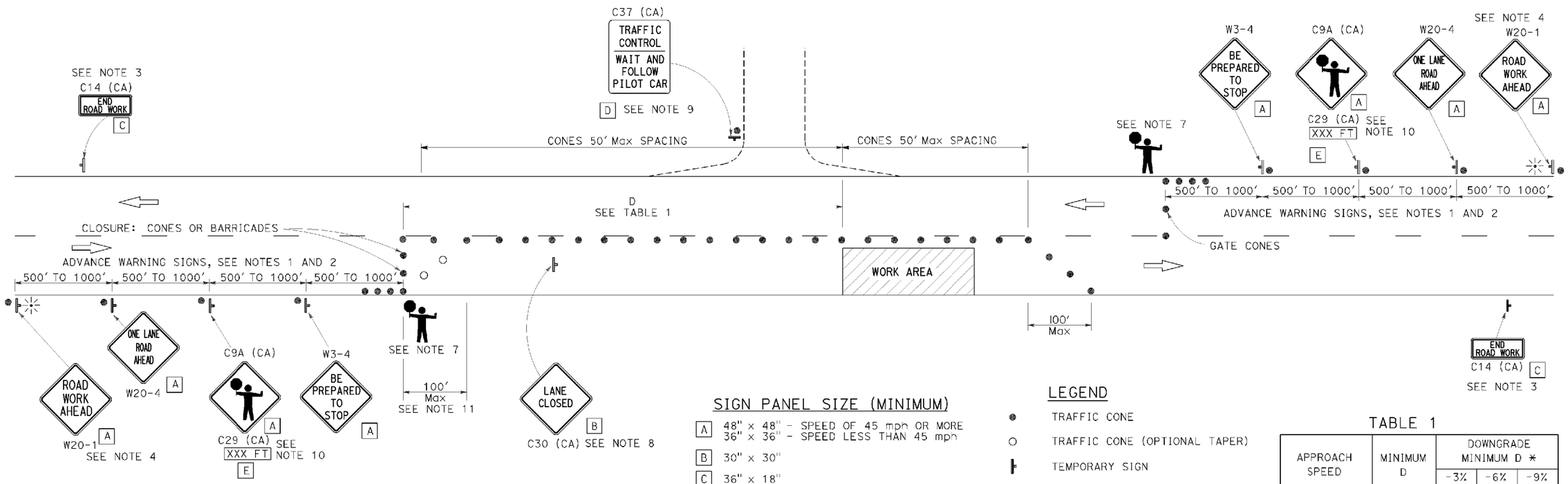

SIGN PANEL SIZE (MINIMUM)

- A 48" x 48" - SPEED OF 45 mph OR MORE
  36" x 36" - SPEED LESS THAN 45 mph
- B 30" x 30"
- C 36" x 18"
- D 36" x 42"
- E 36" x 9"

LEGEND

- TRAFFIC CONE
- TRAFFIC CONE (OPTIONAL TAPER)
- TEMPORARY SIGN
- PORTABLE FLASHING BEACON
- FLAGGER

TABLE 1

APPROACH SPEED	MINIMUM D	DOWNGRADE MINIMUM D *		
		-3%	-6%	-9%
mph	ft	ft	ft	ft
25 AND BELOW	155	158	165	173
30	200	205	215	227
35	250	257	271	287
40	305	315	333	354
45	360	378	400	427
50	425	446	474	507
55	495	520	553	593
60	570	598	638	686
65	645	682	728	785

* USE ON SUSTAINED DOWNGRADE STEEPER THAN -3 PERCENT AND LONGER THAN 1 MILE.

NOTES:

1. Where approach speeds are low, advance warning signs may be placed at 300' spacing, and closer in urban areas.
2. Each advance warning sign in each direction of travel shall be equipped with at least two flags for daytime closure. Each flag shall be at least 16" x 16" in size and shall be orange or fluorescent red-orange in color. Flashing beacons shall be placed at the locations indicated for lane closure during hours of darkness.
3. A C14 (CA) "END ROAD WORK" sign, as appropriate, shall be placed at the end of the lane control unless the end of work area is obvious, or ends within a larger project's limits.
4. If the W20-1 sign would follow within 2000' of a stationary W20-1 or C11 (CA) "ROAD WORK NEXT _____MILES", use a W20-4 sign for the first advance warning sign.
5. All cones used for lane closures during the hours of darkness shall be fitted with retroreflective bands (or sleeves) as specified in the specifications.
6. Portable delineators, placed at one-half the spacing indicated for traffic cones, may be used instead of cones for daytime closures only.
7. Additional advance flaggers may be required. Flagger should stand in a conspicuous place, be visible to approaching traffic as well as approaching vehicles after the first vehicle has stopped. During the hours of darkness, the flagging-station and flagger shall be illuminated and clearly visible to approaching traffic. The illumination footprint of the lighting on the ground shall be at least 20' in diameter. Place a minimum of four cones at 50' intervals in advance of flagger station as shown.
8. Place C30 (CA) "LANE CLOSED" sign at 500' to 1000' intervals throughout extended work areas. They are optional if the work area is visible from the flagger station.
9. When a pilot car is used, place a C37 (CA) "TRAFFIC CONTROL-WAIT AND FOLLOW PILOT CAR" sign at all intersections within traffic control area. Signs shall be clean and visible at all times.
10. An optional C29 (CA) sign may be placed below the C9A (CA) sign.
11. Traffic cones or barricades may be placed on the optional taper as shown, barricades shall be Type I, II, or III.

STATE OF CALIFORNIA
DEPARTMENT OF TRANSPORTATION

TRAFFIC CONTROL SYSTEM FOR LANE CLOSURE ON TWO LANE CONVENTIONAL HIGHWAYS

NO SCALE

TCS-1

GURINDERPAL BHULLAR | MICHAEL WEBB | JULIE CASEY

STATE OF CALIFORNIA - DEPARTMENT OF TRANSPORTATION
Caltrans DESIGN

P:\proj\02\4E340_plans\pse\24e340uj001.dgn

DATE PLOTTED => 25-JAN-2013
TIME PLOTTED => 08:16

DIST	COUNTY	ROUTE	POST MILES TOTAL PROJECT	SHEET NO	TOTAL SHEETS
02	Las	147	0.5/1.2	35	38

REGISTERED CIVIL ENGINEER

July 20, 2012
PLANS APPROVAL DATE

REGISTERED PROFESSIONAL ENGINEER
Roberta L. McLaughlin
No. C40375
Exp. 3-31-13
CIVIL
STATE OF CALIFORNIA

THE STATE OF CALIFORNIA OR ITS OFFICERS OR AGENTS SHALL NOT BE RESPONSIBLE FOR THE ACCURACY OR COMPLETENESS OF SCANNED COPIES OF THIS PLAN SHEET.

TO ACCOMPANY PLANS DATED 01-24-13

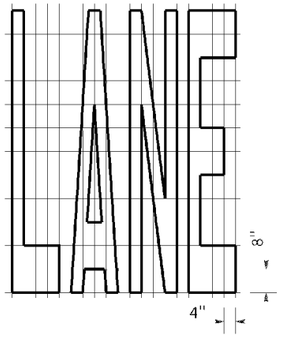

A=24 ft²

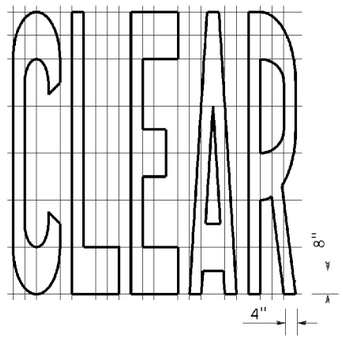

A=27 ft²

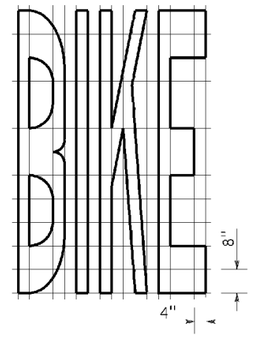

A=21 ft²

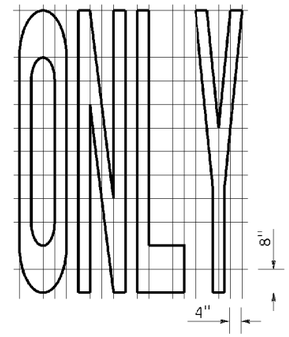

A=22 ft²

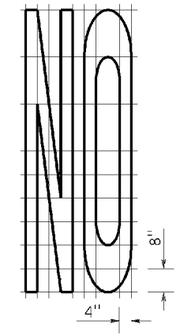

A=14 ft²

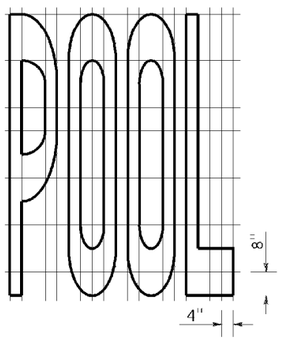

A=23 ft²

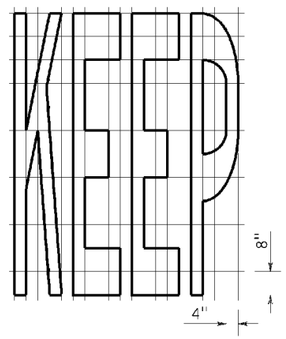

A=24 ft²

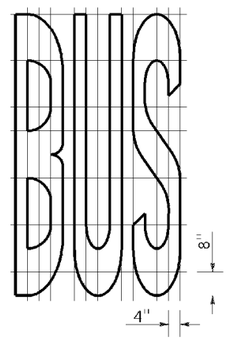

A=20 ft²

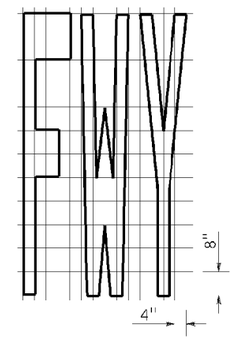

A=16 ft²

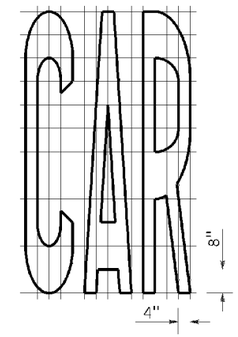

A=17 ft²

WORD MARKINGS			
ITEM	ft²	ITEM	ft²
LANE	24	NO	14
POOL	23	BIKE	21
CAR	17	BUS	20
CLEAR	27	ONLY	22
KEEP	24	FWY	16

A=2 ft²
See Notes 6 and 7

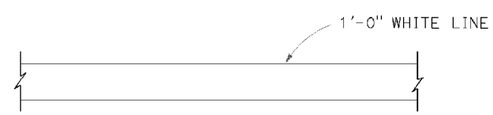

LIMIT LINE (STOP LINE)

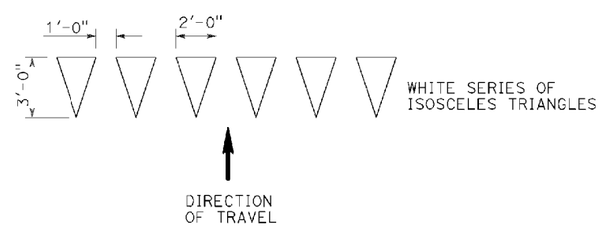

YIELD LINE

NOTES:

1. If a message consists of more than one word, it should read "UP", i.e., the first word should be nearest the driver.
2. The space between words should be at least four times the height of the characters for low speed roads, but not more than ten times the height of the characters. The space may be reduced appropriately where there is limited space because of local conditions.
3. Minor variations in dimensions may be accepted by the Engineer.
4. Portions of a letter, number or symbol may be separated by connecting segments not to exceed 2" in width.
5. The words "NO PARKING" pavement marking is to be used for parking facilities. For typical locations of markings, see Standard Plans A90A and A90B.
6. The words "NO PARKING", shall be painted in white letters no less than 1'-0" high on a contrasting background and located so that it is visible to traffic enforcement officials.

STATE OF CALIFORNIA
DEPARTMENT OF TRANSPORTATION

PAVEMENT MARKINGS
WORDS, LIMIT AND YIELD LINES

NO SCALE

RSP A24E DATED JULY 20, 2012 SUPERSEDES STANDARD PLAN A24E
DATED MAY 20, 2011 - PAGE 17 OF THE STANDARD PLANS BOOK DATED 2010.

REVISED STANDARD PLAN RSP A24E

2010 REVISED STANDARD PLAN RSP A24E

P:\proj1\02\4E340_plans\pse\24e340va001.dgn

USERNAME => s115152
DGN FILE => 24e340va001.dgn

DATE PLOTTED => 25-JAN-2013
TIME PLOTTED => 08:16

Dist	County	Route	Post Miles Total Project	Sheet No.	Total Sheets
02	Las	147	0.5/1.2	36	38

Raymond Don Tsztoo
REGISTERED CIVIL ENGINEER

July 20, 2012
PLANS APPROVAL DATE

REGISTERED PROFESSIONAL ENGINEER
Raymond Don Tsztoo
No. C37332
Exp. 6-30-14
CIVIL
STATE OF CALIFORNIA

THE STATE OF CALIFORNIA OR ITS OFFICERS OR AGENTS SHALL NOT BE RESPONSIBLE FOR THE ACCURACY OR COMPLETENESS OF SCANNED COPIES OF THIS PLAN SHEET.

TO ACCOMPANY PLANS DATED 01-24-13

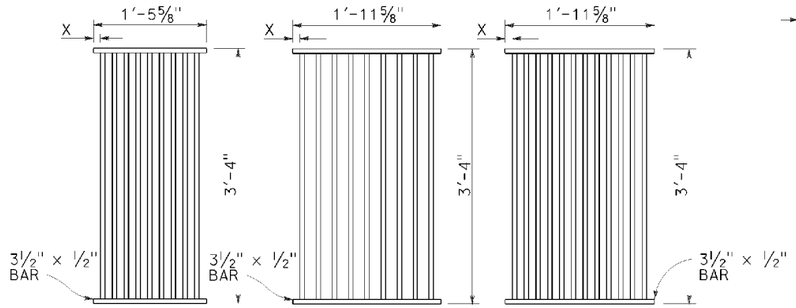

TYPE 18-9

1⅜" Clear spacing. Use within the roadbed on highways where bicycles and pedestrians are excluded.

TYPE 24-9

2" Clear spacing. Use in loca-ions off the roadbed on all types of highways.

TYPE 24-12

1⅜" Clear spacing. Use within the roadbed on highways where bicycles and pedestrians are excluded.

RECTANGULAR GRATE DETAILS

(See table below)

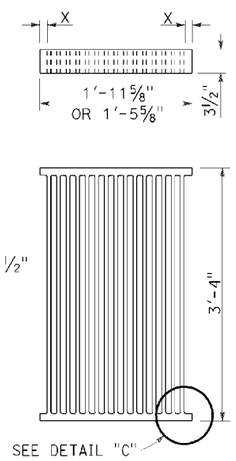

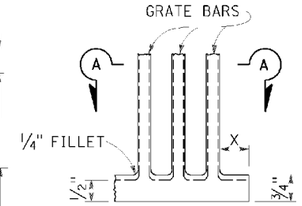

DETAIL "C"

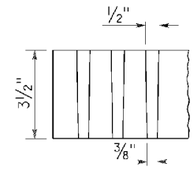

SECTION A-A

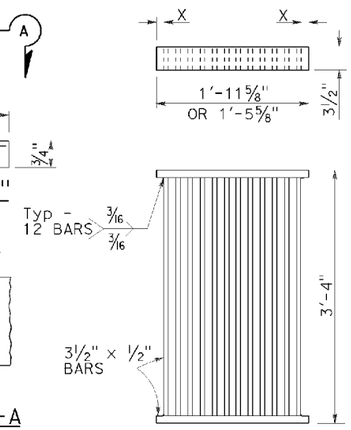

ALTERNATIVE CAST DUCTILE IRON GRATE OR CAST CARBON STEEL GRATE

ALTERNATIVE WELDED GRATE

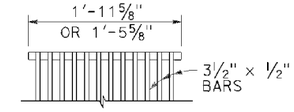

CAST END BLOCK

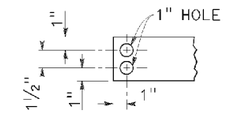

END OF BAR

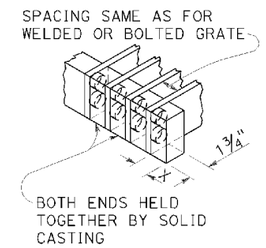

ALTERNATIVE CAST DUCTILE IRON OR CAST CARBON STEEL END BLOCK GRATE

NOTES:

1. Grate type numbers refer to approximate width of grate in inches and number of bars, respectively.
2. Contractor has the option of using cast ductile iron, cast carbon steel, welded, bolted, or cast end block grate.
3. Rounded top of bars optional on all grates.
4. Pipe inlets with a grate shall be placed so that bars parallel direction of principle surface flow.
5. Complete joint penetration butt welds may be substituted for the fillet welds on all anchors.
6. Standard square, hexagon, round or equivalent headed anchors may be substituted for the right angle hooks on the anchors shown on this plan.
7. Grate and frame weights are based on welded grates (weights of face angles, steps, protection bars, etc. are not included).
8. Connect chain to grate and frame only at locations shown on the plans. When chain is required, do not use cast ductile iron grates.

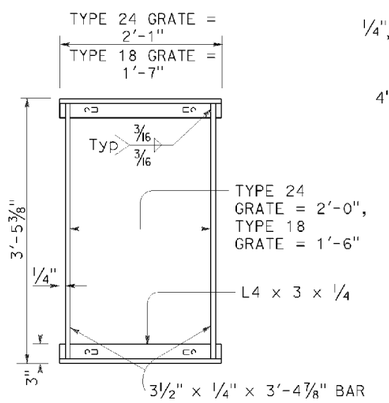

TYPICAL FRAME

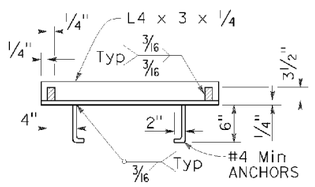

CROSS SECTION

(Thru frame)

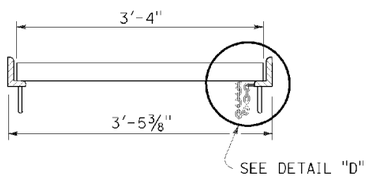

LONGITUDINAL SECTION

(Thru frame and grate)

RECTANGULAR FRAME DETAILS

(For all rectangular grates)

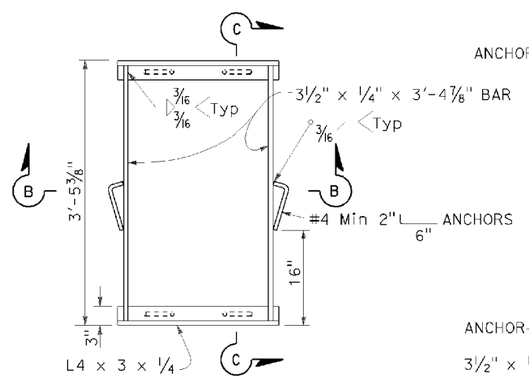

TYPICAL FRAME

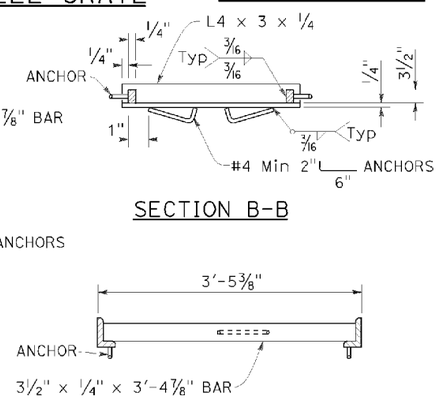

SECTION B-B

SECTION C-C

ALTERNATIVE ANCHOR FOR RECTANGULAR FRAME

(For details not shown, See Rectangular Frame Details)

INLET TYPE	GRATE TYPE	No. OF GRATES	WEIGHT LB
GDO	24-12	2	634
GOL-7	24-12	1	326
GOL-10	24-12	1	326
GO,G1,G2,G3,G4 (TYPE 24)	24-9	1	263
	24-12	1	326
G4 (TYPE 18),G5,G6	18-9	1	249
GT1	18-9	2	498
GT2	18-9	2	498
GT3	24-12	2	652
GT4	24-12	2	652
TRASH RACK			22
GRATE CHAIN			3

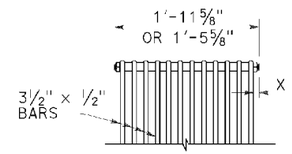

BOLTED END BLOCK

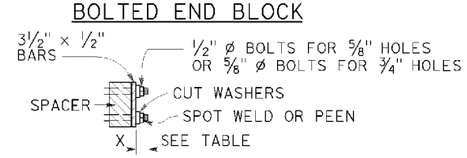

BOLTING DETAIL

ALTERNATIVE BOLTED GRATE

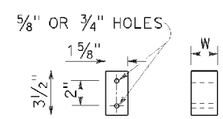

BAR SPACER

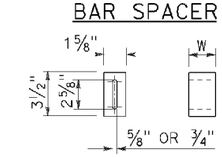

ALTERNATIVE SPACER

W = 1⅜" or 2"

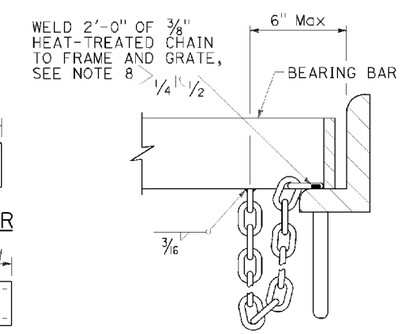

DETAIL "D"

(Steel grates only)

GRATE BAR SPACING TABLE

TYPE	No. OF BARS	CLEAR BAR SPACING	X
18-9	9	1⅜"	1 1/16"
24-9	9	2"	1 9/16"
24-12	12	1⅜"	1¼"

INLET TYPE	COVER TYPE	WEIGHT LB
OS	PLATE	174
OL-7	PLATE	170
OL-10	PLATE	170
OL-14	PLATE	170
OL-21	PLATE	170
OCP	PLATE	112
OCPI	PLATE	112
OCPI	REDWOOD	42
OMP	PLATE	177
OMPI	PLATE	177

BASIS FOR Misc IRON & STEEL FINAL PAY WEIGHTS FOR DRAINAGE INLETS

(See Note 7)

STATE OF CALIFORNIA
DEPARTMENT OF TRANSPORTATION

GRATE DETAILS

NO SCALE

RSP D77A DATED JULY 20, 2012 SUPERSEDES STANDARD PLAN D77A
DATED MAY 20, 2011 - PAGE 164 OF THE STANDARD PLANS BOOK DATED 2010.

REVISED STANDARD PLAN RSP D77A

2010 REVISED STANDARD PLAN RSP D77A

P:\proj1\02\4E340_plans\pse\24e340va002.dgn

USERNAME => s115152
DGN FILE => 24e340va002.dgn

DATE PLOTTED => 25-JAN-2013
TIME PLOTTED => 08:16

6-3-12

D 5	COUNTY	ROUTE	POST MILES TOTAL PROJECT	SHEET NO.	TOTAL SHEETS
02	Las	147	0.5/1.2	37	38

REGISTERED ELECTRICAL ENGINEER

January 20, 2012
PLANS APPROVAL DATE

REGISTERED PROFESSIONAL ENGINEER
Jeffery G. McRae
No. E14512
Exp. 6-30-12
ELECTRICAL
STATE OF CALIFORNIA

THE STATE OF CALIFORNIA OR ITS OFFICERS OR AGENTS SHALL NOT BE RESPONSIBLE FOR THE ACCURACY OR COMPLETENESS OF SCANNED COPIES OF THIS PLAN SHEET.

TO ACCOMPANY PLANS DATED 01-24-13

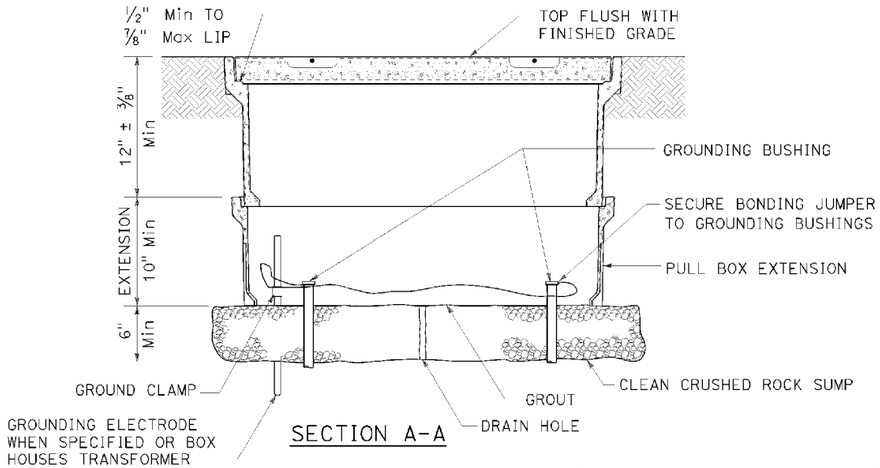

SECTION A-A

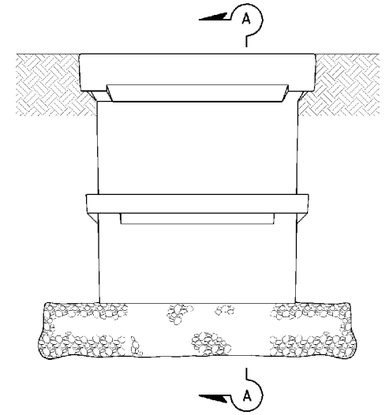

SIDE VIEW

INSTALLATION DETAILS

DETAIL A

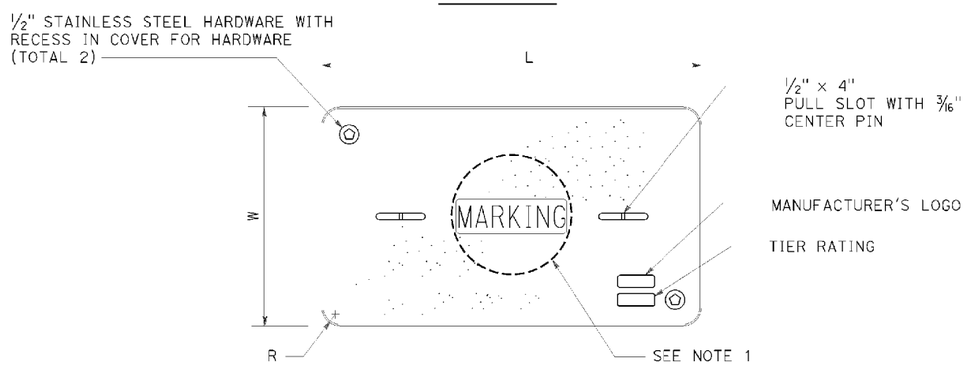

COVER TOP VIEW

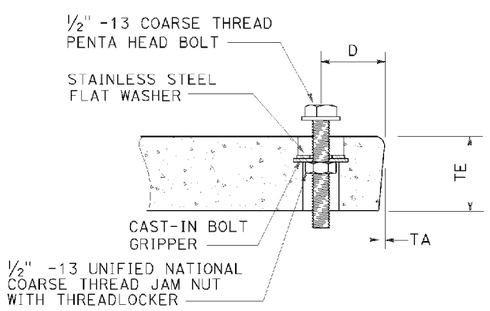

TYPICAL COVER CAPTIVE BOLT

OR SIMILAR

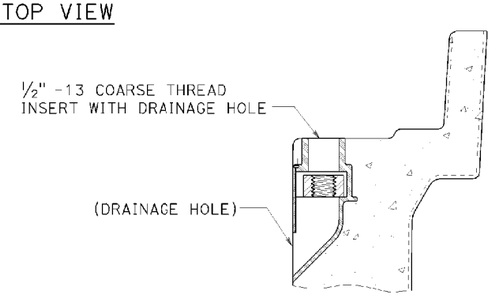

TYPICAL THREADED INSERT

OR SIMILAR

DIMENSION TABLE										
PULL BOX	PULL BOX			COVER						
	MINIMUM DEPTH BOX	MINIMUM DEPTH EXTENSION	MAXIMUM WEIGHT	L	W	R	TE	TA	D	MAXIMUM WEIGHT
No. 3½	12"	N/A	40 lb	1' - 3⅜"	10⅛"	1⅜"	2"	⅛"	1¾"	30 lb
No. 5	12"	10"	55 lb	1' - 11¼"	1' - 1¾"	1⅜"	2"	⅛"	1¾"	60 lb
No. 6	12"	10"	70 lb	2' - 6½"	1' - 5½"	1⅜"	2"	⅛"	2"	85 lb

NOTES ON PULL BOXES:

1. Pull box covers must be marked as follows: "SERVICE" Service circuits between service point and service disconnect; "SPRINKLER-CONTROL" sprinkler control circuits, 50 V or less; "CALTRANS" on all pull boxes, except pull boxes marked "SPRINKLER-CONTROL"; and "TELEPHONE" Telephone service;

   A) No. 3½ pull box.
      1) "SIGNAL" - Traffic signal circuits with or without street or sign lighting circuits.
      2) "ST LIGHTING" - Street or sign lighting circuits where voltage is under 600 V.

   B) No. 5, 6, 9 or 9A pull box.
      1) "TRAFFIC SIGNAL" - Traffic signal circuits with or without street or sign lighting circuits.
      2) "STREET LIGHTING" - Street or sign lighting circuits where voltage is under 600 V.
      3) "STREET LIGHTING-HIGH VOLTAGE" - Street or sign lighting circuits where voltage is above 600 V.
      4) "IRRIGATION" - Circuits to irrigation controller 120 V or more.
      5) "RAMP METER" - Ramp meter circuits.
      6) "COUNT STATION" - Count or speed monitor circuits.
      7) "COMMUNICATIONS" - Communication circuits.
      8) "TOS COMMUNICATIONS" - TOS communication line.
      9) "TOS POWER" - TOS power.
      10) "TDC POWER" - Telephone demarcation cabinet power.
      11) "CCTV" - Closed circuit television circuits.
      12) "TMS" - Traffic monitoring station circuits.
      13) "CMS" - Changeable message sign circuits.
      14) "HAR" - Highway advisory radio circuits.

2. The nominal dimensions of the opening in which the cover sets must be the same as the cover dimensions (L and W) plus ⅛" or greater.
3. Covers and boxes must be interchangeable with California Standard. When interchanged with a standard, the top surfaces must be flush within ⅛". Top outside radius of covers and pull boxes must have a ⅛" radius.
4. Pull box extension may be another pull box as long as the bottom edge of the pull box can fit into the cover opening.

STATE OF CALIFORNIA
DEPARTMENT OF TRANSPORTATION

ELECTRICAL SYSTEMS (PULL BOX)

NO SCALE

RSP ES-8A DATED JANUARY 20, 2012 SUPPLEMENTS THE STANDARD PLANS BOOK DATED 2010.

REVISED STANDARD PLAN RSP ES-8A

2010 REVISED STANDARD PLAN RSP ES-8A

P:\proj1\02\4E340_plans\pse\24e340va003.dgn

USERNAME => s115152
DGN FILE => 24e340va003.dgn

DATE PLOTTED => 25-JAN-2013
TIME PLOTTED => 08:16

01 03 2

DIST	COUNTY	ROUTE	POST MILES TOTAL PROJECT	SHEET NO.	TOTAL SHEETS
02	Las	147	0.5/1.2	38	38

REGISTERED ELECTRICAL ENGINEER

January 20, 2012
PLANS APPROVAL DATE

REGISTERED PROFESSIONAL ENGINEER
Jeffery G. McRae
No. E14512
Exp. 6-30-12
ELECTRICAL
STATE OF CALIFORNIA

THE STATE OF CALIFORNIA OR ITS OFFICERS OR AGENTS SHALL NOT BE RESPONSIBLE FOR THE ACCURACY OR COMPLETENESS OF SCANNED COPIES OF THIS PLAN SHEET.

TO ACCOMPANY PLANS DATED 01-24-13

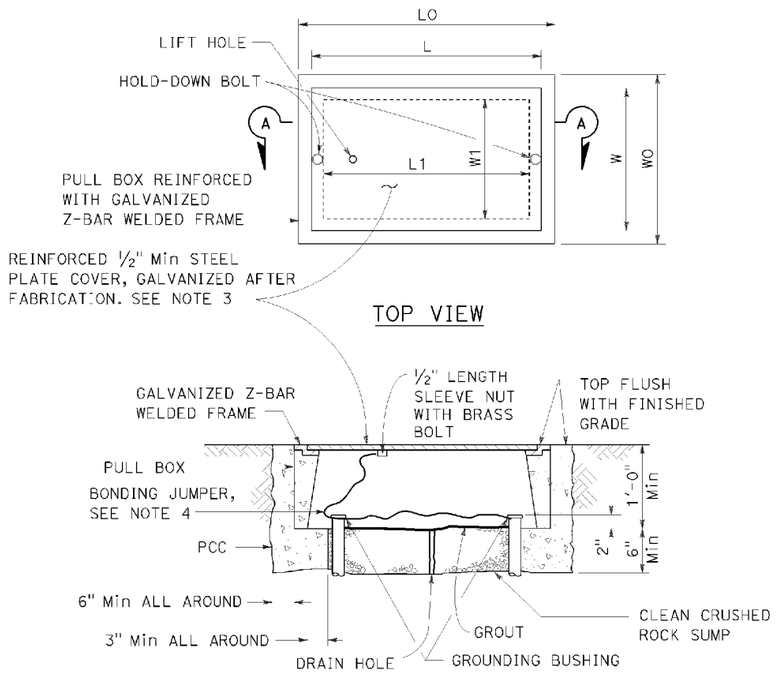

No. 3½(T), No. 5(T) AND No. 6(T) TRAFFIC PULL BOX

NOTES ON PULL BOXES:

1. Traffic pull box shall be provided with steel cover and special concrete footing. Steel cover shall have embossed non-skid pattern.
2. Steel reinforcing shall be as regularly used in the standard products of the respective manufacturer.
3. Pull box covers must be marked as follows: "SERVICE" Service circuits between service point and service disconnect; "SPRINKLER-CONTROL" Sprinkler control circuits, 50 V or less; "CALTRANS" On all pull boxes, except pull boxes marked "SPRINKLER-CONTROL"; and "TELEPHONE" Telephone service.
   - A) No. 3½(T) pull box.
     - 1) "SIGNAL" - Traffic signal circuits with or without street or sign lighting circuits.
     - 2) "ST LIGHTING" - Street or sign lighting circuits where voltage is under 600 V.
   - B) No. 5(T) or 6(T) pull box.
     - 1) "TRAFFIC SIGNAL" - Traffic signal circuits with or without street or sign lighting circuits.
     - 2) "STREET LIGHTING" - Street or sign lighting circuits where voltage is under 600 V.
     - 3) "STREET LIGHTING-HIGH VOLTAGE" - Street or sign lighting circuits where voltage is above 600 V.
     - 4) "IRRIGATION" - Circuits to irrigation controller 120 V or more.
     - 5) "RAMP METER' - Ramp meter circuits.
     - 6) "COUNT STATION" - Count or speed monitor circuits.
     - 7) "COMMUNICATION" - Communication circuits.
     - 8) "TOS COMMUNICATIONS" - TOS communications line.
     - 9) "TOS POWER" - TOS power.
     - 10) "TDC POWER" - Telephone demarcation cabinet power.
     - 11) "CCTV" - Closed circuit television circuits.
     - 12) "TMS" - Traffic monitoring station circuits.
     - 13) "CMS" - Changeable message sign circuits.
     - 14) "HAR" - Highway advisory radio circuits.
4. Bonding jumper for metal covers shall be 3' long, minimum.
5. The nominal dimensions of the opening in which the cover sets must be the same as the cover dimensions except the length and width dimensions shall be ⅛" greater.
6. Covers and boxes must be interchangeable with California standard male and female gages. When interchanged with a standard male or female gage, the top surfaces must be flush within ⅛".

DIMENSION TABLE

PULL BOX	BOX: MINIMUM * THICKNESS	BOX: MINIMUM DEPTH BOX AND EXTENSION	BOX: WO	BOX: LO	BOX: L1	BOX: W1	COVER: L **	COVER: W **	COVER: R	COVER: EDGE THICKNESS	COVER: EDGE TAPER
No. 3½(T)	1½"	1'-0"	1'-5"± 1"	1'-8⅞"±	1'-2½"±	10⅝"± 1"	1'-8"±	1'-1¾"±	0"	½"	NONE
No. 5(T)	1¾"	1'-0"	1'-11½"± 1"	2'-5½"±	1'-7"±	1'-1"± 1"	2'-3"±	1'-4"±	0"	½"	NONE
No. 6(T)	2"	1'-0"	2'-6"± 1"	2'-11½"±	1'-11½"±	1'-5"± 1"	2'-9"±	1'-8"±	0"	½"	NONE

* EXCLUDING CONDUIT WEB ** TOP DIMENSION

STATE OF CALIFORNIA
DEPARTMENT OF TRANSPORTATION

ELECTRICAL SYSTEMS (TRAFFIC RATED PULL BOX)

NO SCALE

RSP ES-8B DATED JANUARY 20, 2012 SUPPLEMENTS THE STANDARD PLANS BOOK DATED 2010.

REVISED STANDARD PLAN RSP ES-8B

2010 REVISED STANDARD PLAN RSP ES-8B

DATE PLOTTED => 25-JAN-2013
TIME PLOTTED => 08:16

P:\proj1\02\4E340_plans\pse\24e340va004.dgn

USERNAME => s115152
DGN FILE => 24e340va004.dgn

01 05 2