NH-P097(040)E

Dist	COUNTY	ROUTE	POST MILES TOTAL PROJECT	SHEET No.	TOTAL SHEETS
02	Sis	97	40.1/54.1	1	114

STATE OF CALIFORNIA
DEPARTMENT OF TRANSPORTATION

PROJECT PLANS FOR CONSTRUCTION ON
STATE HIGHWAY

IN SISKIYOU COUNTY
AT AND NEAR MACDOEL
FROM JUNIPER KNOLL ROAD
TO OREGON STATE LINE

TO BE SUPPLEMENTED BY STANDARD PLANS DATED MAY 2006

INDEX OF PLANS

SHEET No.	DESCRIPTION
1	TITLE AND LOCATION MAP
2-5	TYPICAL CROSS SECTIONS
6-12	LAYOUTS
13	SUPERELEVATION DIAGRAMS
14-26	CONSTRUCTION DETAILS
27-47	DRAINAGE PLANS, PROFILES, DETAILS AND QUANTITIES
48-49	CONSTRUCTION AREA SIGNS
50	TRAFFIC HANDLING PLAN
51-59	PAVEMENT DELINEATION PLANS, DETAILS AND QUANTITIES
60-74	SIGN DETAILS AND QUANTITIES
75-79	SUMMARY OF QUANTITIES
80	TRAFFIC MONITORING STATION
81-114	REVISED AND NEW STANDARD PLANS

THE STANDARD PLANS LIST APPLICABLE TO THIS CONTRACT IS INCLUDED IN THE NOTICE TO BIDDERS AND SPECIAL PROVISIONS BOOK.

LOCATION MAP

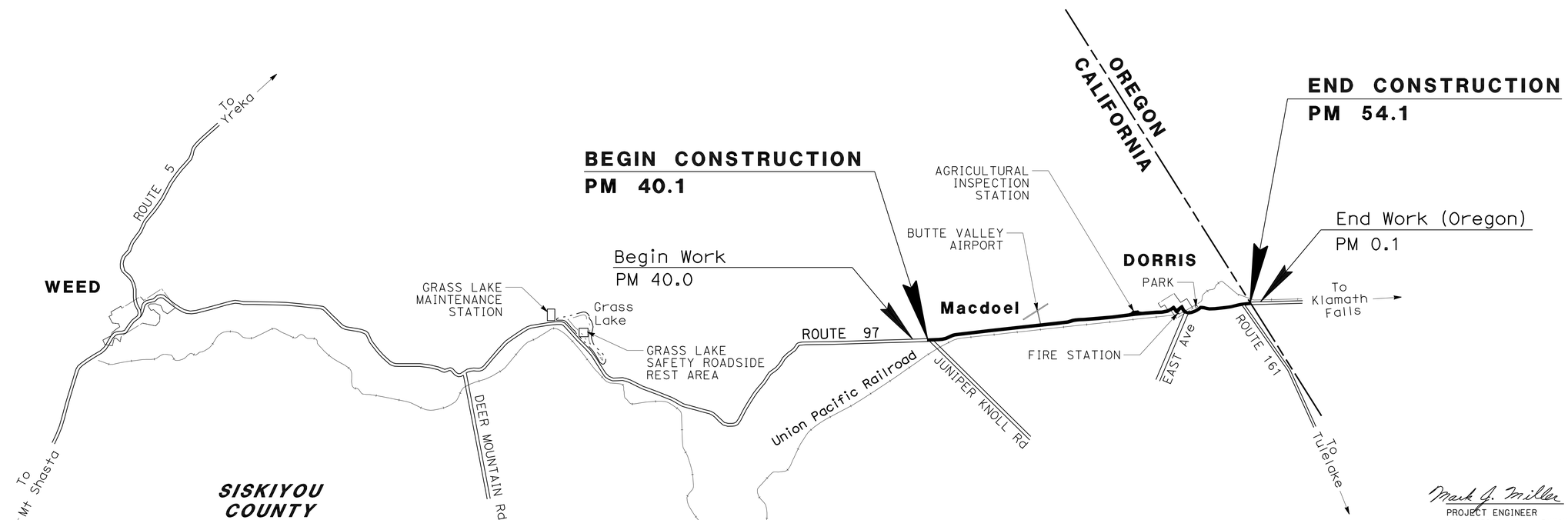

Mark J. Miller 07-06-10
PROJECT ENGINEER DATE
REGISTERED CIVIL ENGINEER

July 12, 2010
PLANS APPROVAL DATE

REGISTERED PROFESSIONAL ENGINEER
MARK MILLER
No. C48454
Exp. 6-30-12
CIVIL
STATE OF CALIFORNIA

THE STATE OF CALIFORNIA OR ITS OFFICERS OR AGENTS SHALL NOT BE RESPONSIBLE FOR THE ACCURACY OR COMPLETENESS OF SCANNED COPIES OF THIS PLAN SHEET.

PROJECT MANAGER: TOM BALKOW
DESIGN ENGINEER: MARK MILLER

THE CONTRACTOR SHALL POSSESS THE CLASS (OR CLASSES) OF LICENSE AS SPECIFIED IN THE "NOTICE TO BIDDERS."

NO SCALE

CONTRACT No.	02-4C0104
PROJECT ID	0200020027

LAST REVISION 07-01-10
DATE PLOTTED => 24-AUG-2010
TIME PLOTTED => 13:33

Dist	COUNTY	ROUTE	POST MILES TOTAL PROJECT	SHEET No.	TOTAL SHEETS
02	Sis	97	40.1/54.1	2	114

Mark J. Miller 07-06-10
REGISTERED CIVIL ENGINEER DATE

7-12-10
PLANS APPROVAL DATE

REGISTERED PROFESSIONAL ENGINEER
MARK MILLER
No. C48454
Exp. 6-30-12
CIVIL
STATE OF CALIFORNIA

THE STATE OF CALIFORNIA OR ITS OFFICERS OR AGENTS SHALL NOT BE RESPONSIBLE FOR THE ACCURACY OR COMPLETENESS OF SCANNED COPIES OF THIS PLAN SHEET.

NOTES:

1. DIMENSIONS OF THE PAVEMENT SECTION (STRUCTURAL SECTIONS) ARE SUBJECT TO TOLERANCES SPECIFIED IN THE STANDARD SPECIFICATIONS.
2. SUPERELEVATIONS AS SHOWN OR AS DIRECTED BY THE ENGINEER.

ABBREVIATIONS

AR	ASPHALT RUBBER
CPACP	COLD PLANE AC Pvmt

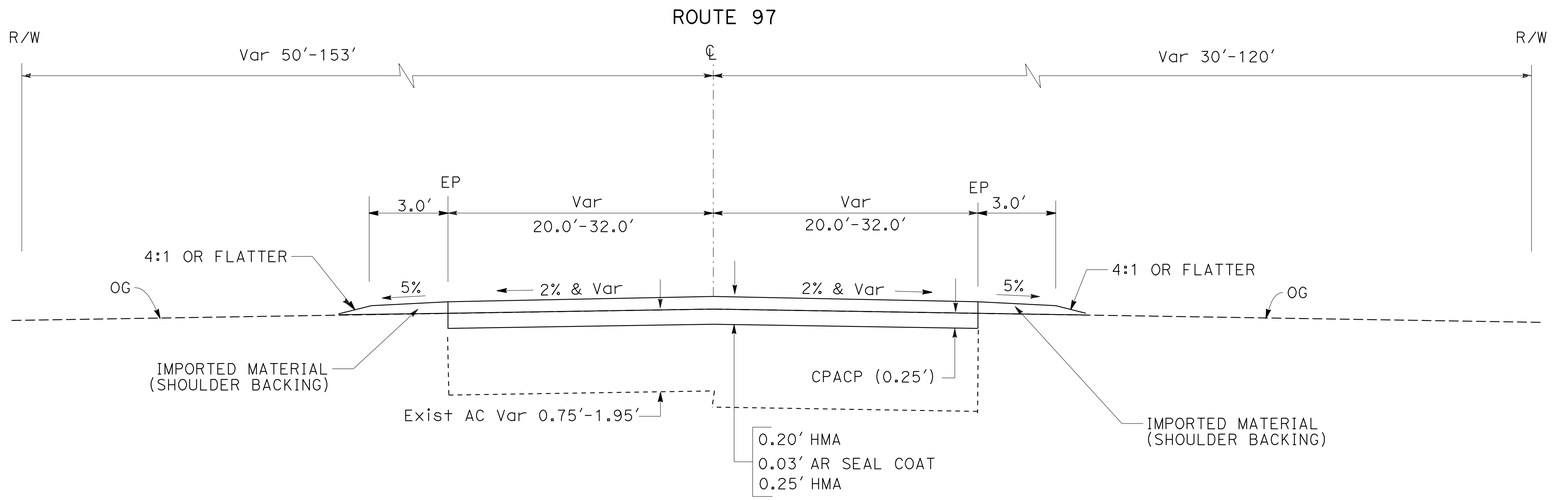

TYPICAL CROSS SECTION

Sis-97-PM 40.2/49.6
Sis-97-PM 52.3/52.71
Sis-97-PM 52.9/54.1

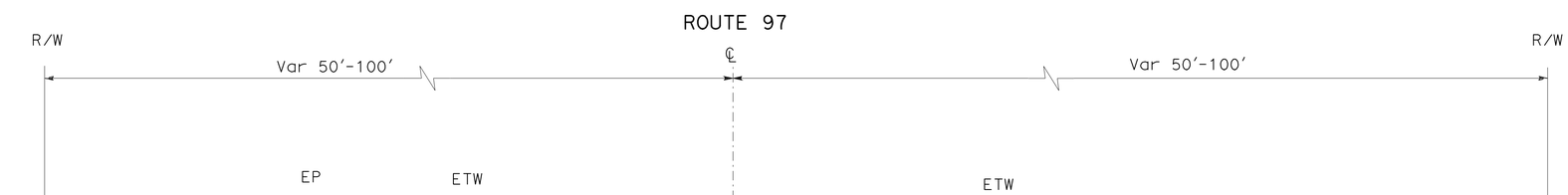

TYPICAL CROSS SECTION

Sis-97 PM 40.1/40.2

TYPICAL CROSS SECTIONS

NO SCALE

X-1

REVISED BY | DATE REVISED
SAL PRIETO | MARK MILLER
CALCULATED-DESIGNED BY | CHECKED BY
FUNCTIONAL SUPERVISOR
MARK MILLER

STATE OF CALIFORNIA - DEPARTMENT OF TRANSPORTATION
Caltrans® ADVANCE PLANNING

p:\proj1\02\4c010_plans\pse\SUBMIT_TO_HQ\24c010ca001.dgn

LAST REVISION 07-06-10 | DATE PLOTTED => 13-JUL-2010 | TIME PLOTTED => 13:28

BORDER LAST REVISED 7/2/2010 | USERNAME => trstrk | DGN FILE => 24c010ca001.dgn | RELATIVE BORDER SCALE IS IN INCHES 0 1 2 3 | UNIT 0145 | PROJECT NUMBER & PHASE 020002002711

Dist	COUNTY	ROUTE	POST MILES TOTAL PROJECT	SHEET No.	TOTAL SHEETS
02	Sis	97	40.1/54.1	3	114

Mark J. Miller 07-06-10
REGISTERED CIVIL ENGINEER DATE

7-12-10
PLANS APPROVAL DATE

REGISTERED PROFESSIONAL ENGINEER MARK MILLER No. C48454 Exp. 6-30-12 CIVIL STATE OF CALIFORNIA

THE STATE OF CALIFORNIA OR ITS OFFICERS OR AGENTS SHALL NOT BE RESPONSIBLE FOR THE ACCURACY OR COMPLETENESS OF SCANNED COPIES OF THIS PLAN SHEET.

NOTE:

1. WIDEN SHOULDER 3' ON LEFT SIDE OF ROADWAY ONLY. DO NOT WIDEN RIGHT SHOULDER.

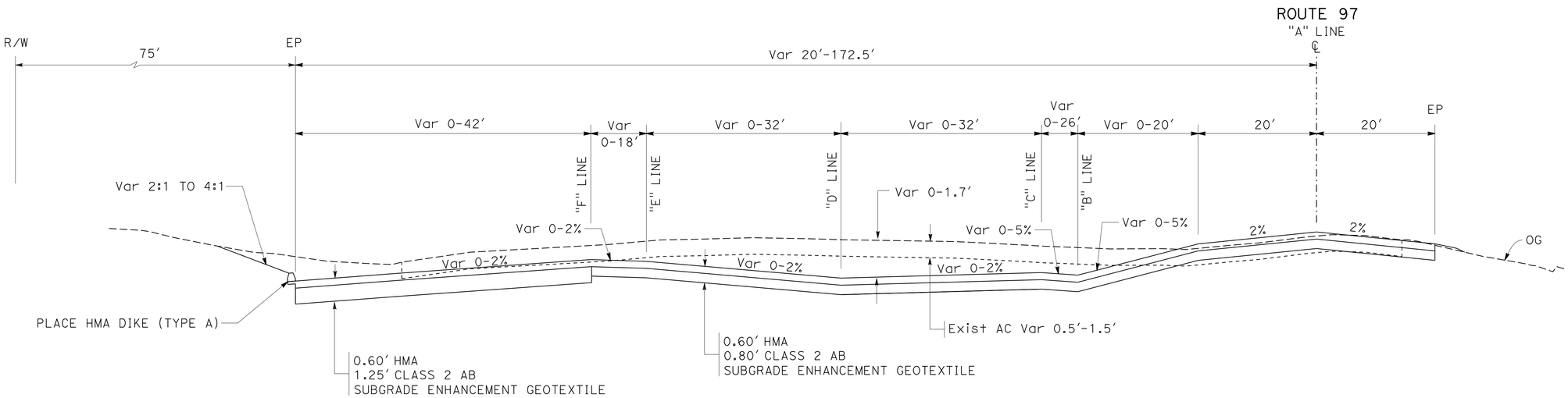

TYPICAL CROSS SECTION

"A" 40+28.29 TO "A" 43+60 (Sis-97PM 49.77-49.83)

Sis 97 (Approx PM)	"A" LINE
49.7	37+50
49.8	42+50
49.9	48+00
50.0	53+00
50.1	58+50
50.2	64+00
50.3	69+00
50.4	74+50
50.5	79+50
50.6	85+00
50.7	90+00
50.8	95+50
50.9	101+00
51.0	106+00
51.1	111+50
51.2	116+50
51.3	122+00

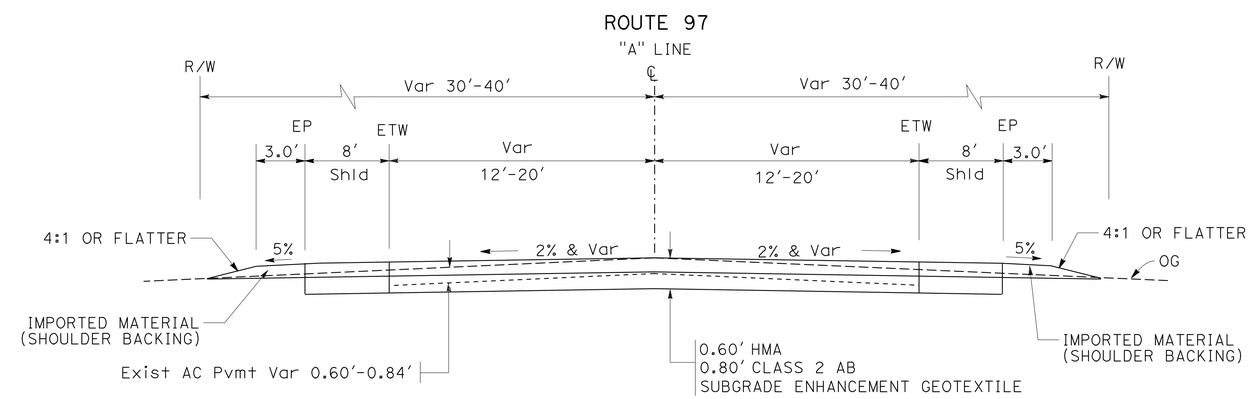

TYPICAL CROSS SECTION

"A" 32+14.46/40+28.29 (Sis-97 PM 49.6/49.77)
"A" 47+48/78+50 (Sis-97 PM 49.90/50.48)
"A" 103+80.0/111+34.4 (Sis-97 PM 50.96/51.1)

TYPICAL CROSS SECTIONS

NO SCALE

X-2

REVISED BY | DATE REVISED
SAL PRIETO | MARK MILLER
CALCULATED-DESIGNED BY | CHECKED BY
FUNCTIONAL SUPERVISOR | MARK MILLER

STATE OF CALIFORNIA - DEPARTMENT OF TRANSPORTATION
Caltrans® ADVANCE PLANNING

p:\proj\02\4c010_plans\pse\SUBMIT_TO_HQ\24c010ca002.dgn

LAST REVISION 07-06-10 | DATE PLOTTED => 14-JUL-2010 | TIME PLOTTED => 10:35

BORDER LAST REVISED 7/2/2010 | USERNAME => trmikesl | DGN FILE => 24c010ca002.dgn | RELATIVE BORDER SCALE IS IN INCHES 0 1 2 3 | UNIT 0145 | PROJECT NUMBER & PHASE 020002002711

Dist	COUNTY	ROUTE	POST MILES TOTAL PROJECT	SHEET No.	TOTAL SHEETS
02	Sis	97	40.1/54.1	4	114

Mark J. Miller 07-06-10
REGISTERED CIVIL ENGINEER DATE

7-12-10
PLANS APPROVAL DATE

REGISTERED PROFESSIONAL ENGINEER MARK MILLER No. C48454 Exp. 6-30-12 CIVIL STATE OF CALIFORNIA

THE STATE OF CALIFORNIA OR ITS OFFICERS OR AGENTS SHALL NOT BE RESPONSIBLE FOR THE ACCURACY OR COMPLETENESS OF SCANNED COPIES OF THIS PLAN SHEET.

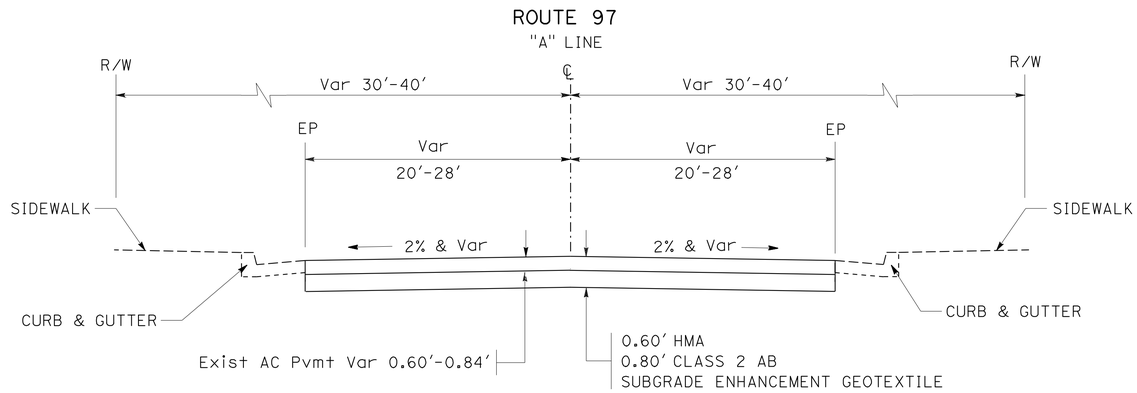

TYPICAL CITY STREET CROSS SECTIONS

"A" 78+50/103+80 (Sis-97 PM 50.48/50.96)

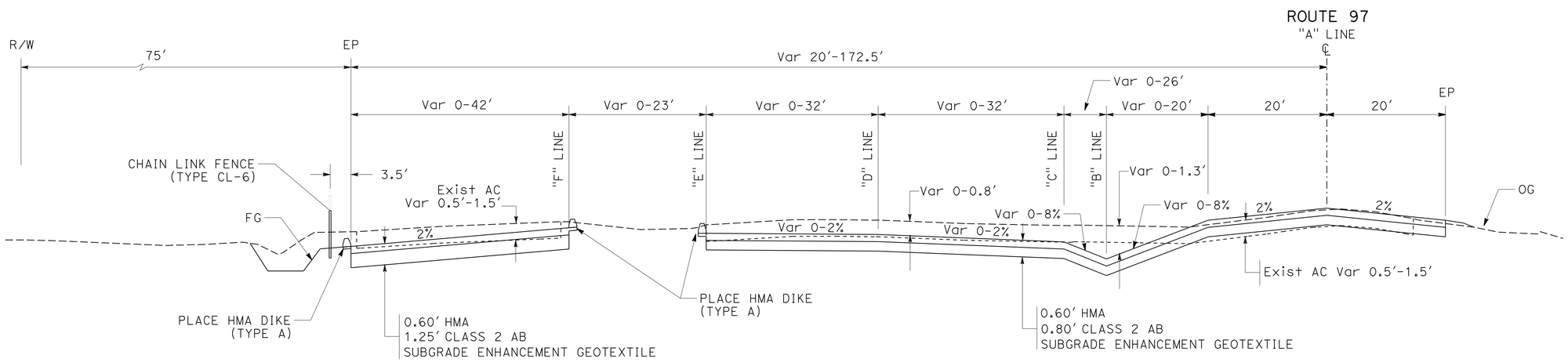

TYPICAL CROSS SECTION

"A" 43+60 TO "A" 47+48 (Sis-97 PM 49.83-49.90)

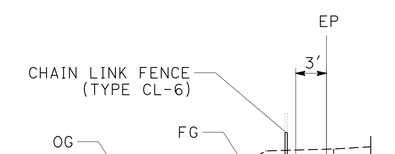

"I" 45+80 TO 47+31

TYPICAL CROSS SECTIONS

NO SCALE

X-3

REVISED BY	DATE REVISED

CALCULATED-DESIGNED BY	SAL PRIETO
CHECKED BY	MARK MILLER
FUNCTIONAL SUPERVISOR	MARK MILLER

STATE OF CALIFORNIA - DEPARTMENT OF TRANSPORTATION
Caltrans® ADVANCE PLANNING

p:\proj\02\4c010_plans\pse\SUBMIT_TO_HQ\24c010ca003.dgn

LAST REVISION 07-06-10 | DATE PLOTTED => 13-JUL-2010 | TIME PLOTTED => 13:28

Dist	COUNTY	ROUTE	POST MILES TOTAL PROJECT	SHEET No.	TOTAL SHEETS
02	Sis	97	40.1/54.1	5	114

Mark J. Miller 07-06-10
REGISTERED CIVIL ENGINEER DATE

7-12-10
PLANS APPROVAL DATE

REGISTERED PROFESSIONAL ENGINEER MARK MILLER No. C48454 Exp. 6-30-12 CIVIL STATE OF CALIFORNIA

THE STATE OF CALIFORNIA OR ITS OFFICERS OR AGENTS SHALL NOT BE RESPONSIBLE FOR THE ACCURACY OR COMPLETENESS OF SCANNED COPIES OF THIS PLAN SHEET.

NOTE:

1. WIDEN SHOULDER 3′ ON LEFT SIDE OF ROADWAY.
   DO NOT WIDEN RIGHT SHOULDER.

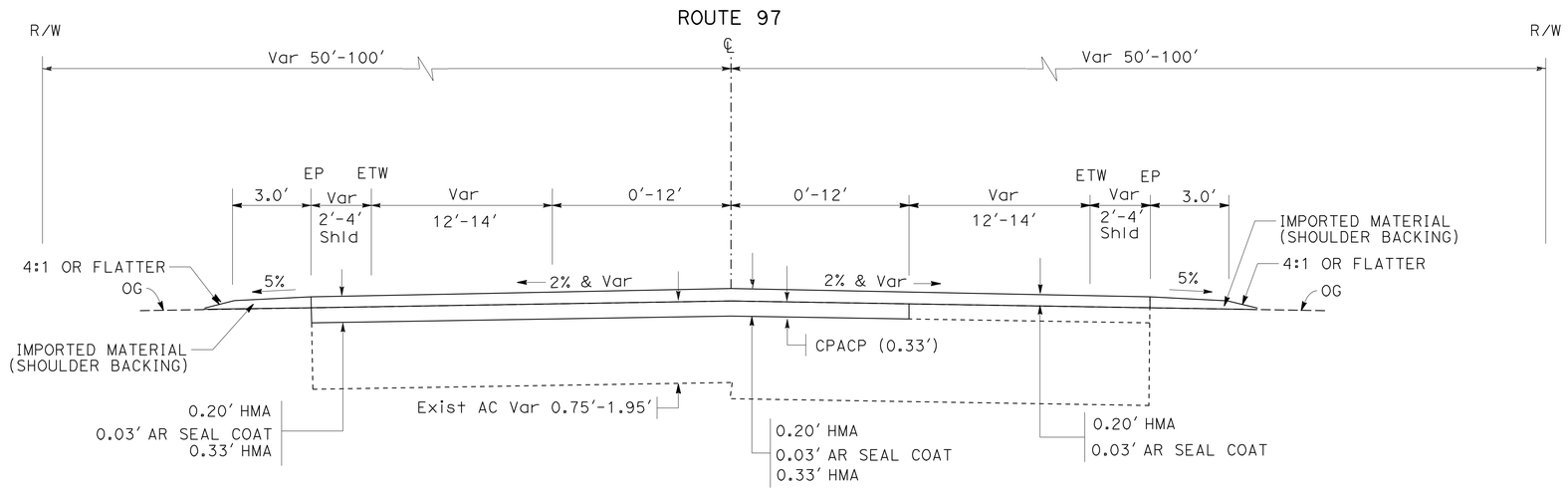

TYPICAL CROSS SECTION

"A" 118+20.8/174+70.4 (Sis-97-PM 51.23/52.3)

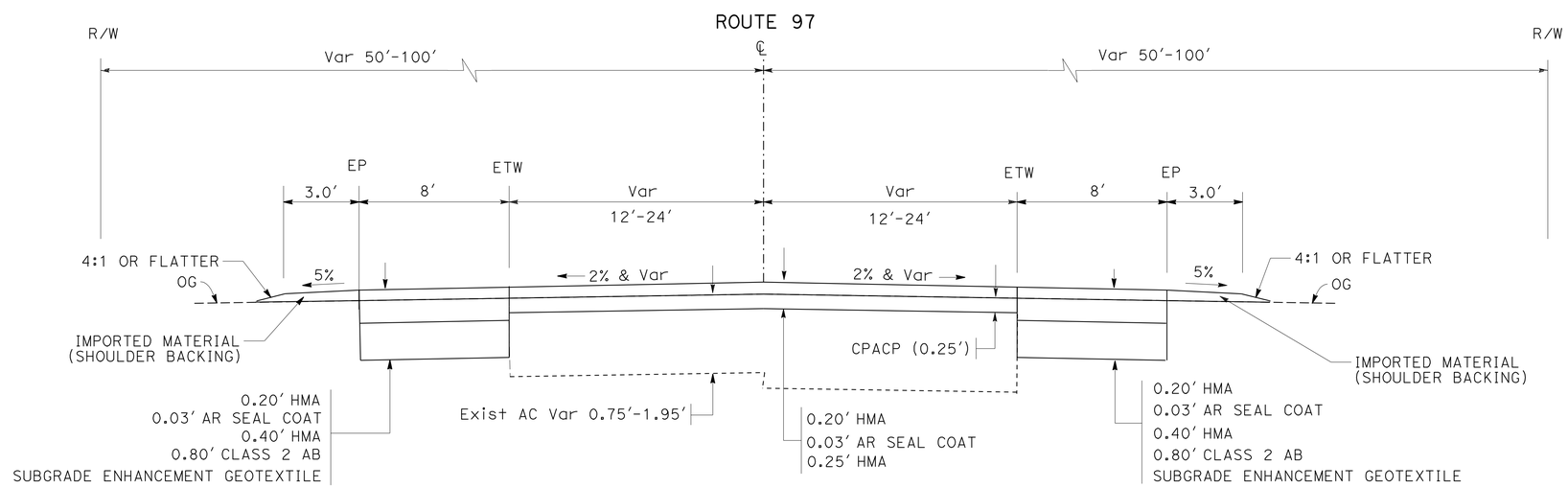

TYPICAL CROSS SECTION

"A" 111+34.4/118+20.8 (Sis-97-PM 51.1/51.23)
Sis-97 PM 52.71/52.9

TYPICAL CROSS SECTIONS

NO SCALE

X-4

REVISED BY | DATE REVISED
SAL PRIETO | MARK MILLER
CALCULATED-DESIGNED BY | CHECKED BY
FUNCTIONAL SUPERVISOR
MARK MILLER

STATE OF CALIFORNIA - DEPARTMENT OF TRANSPORTATION
Caltrans® ADVANCE PLANNING

p:\proj1\02\4c010_plans\pse\SUBMIT_TO_HQ\24c010ca004.dgn

LAST REVISION 07-06-10 | DATE PLOTTED => 13-JUL-2010 TIME PLOTTED => 13:28

Dist	COUNTY	ROUTE	POST MILES TOTAL PROJECT	SHEET No.	TOTAL SHEETS
02	Sis	97	40.1/54.1	6	114

Mark J. Miller 07-06-10
REGISTERED CIVIL ENGINEER DATE

7-12-10
PLANS APPROVAL DATE

REGISTERED PROFESSIONAL ENGINEER MARK MILLER No. C48454 Exp. 6-30-12 CIVIL STATE OF CALIFORNIA

THE STATE OF CALIFORNIA OR ITS OFFICERS OR AGENTS SHALL NOT BE RESPONSIBLE FOR THE ACCURACY OR COMPLETENESS OF SCANNED COPIES OF THIS PLAN SHEET.

NOTE:

1. FOR ACCURATE RIGHT OF WAY DATA, CONTACT RIGHT OF WAY ENGINEERING AT THE DISTRICT OFFICE.

LEGEND

TCE — TEMPORARY CONSTRUCTION EASEMENT (TCE)

ABBREVIATION:

UPRR UNION PACIFIC RAILROAD

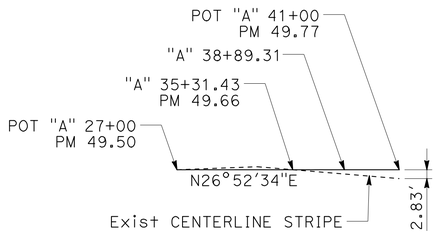

PLAN

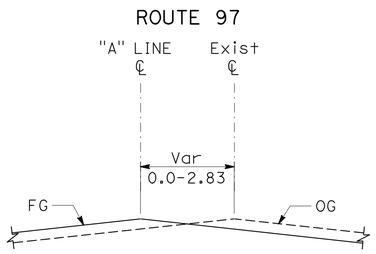

TYPICAL

ALIGNMENT SHIFT DETAIL

Sis-97-PM 49.50/49.77

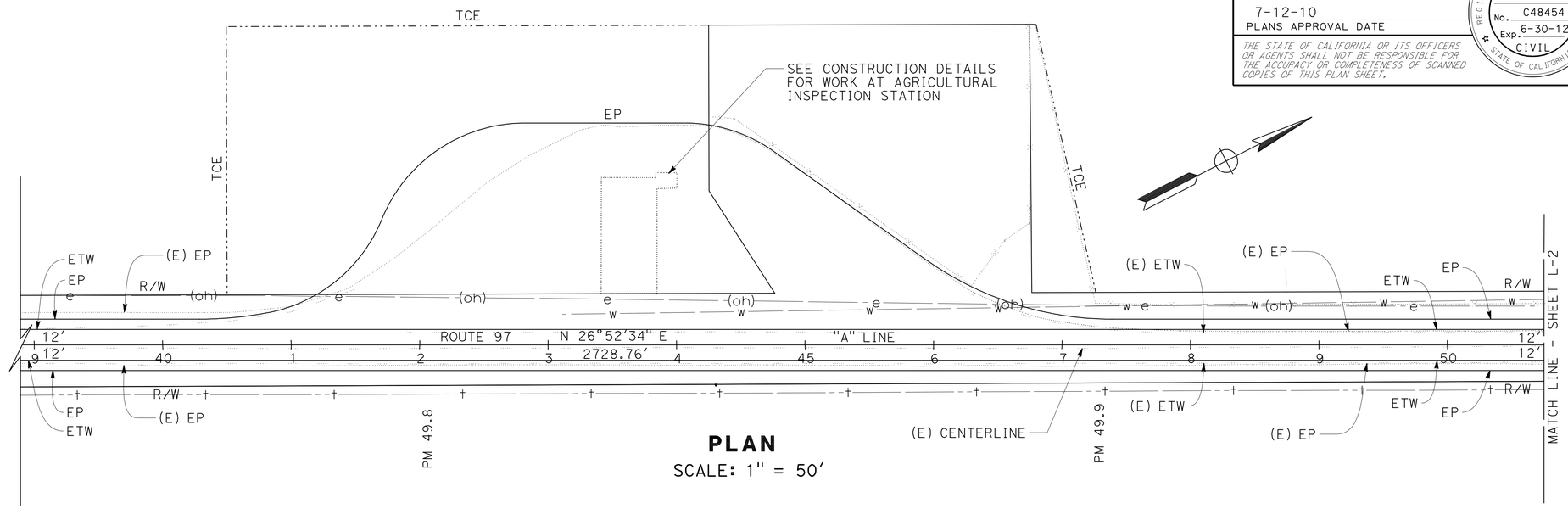

PLAN

SCALE: 1" = 50'

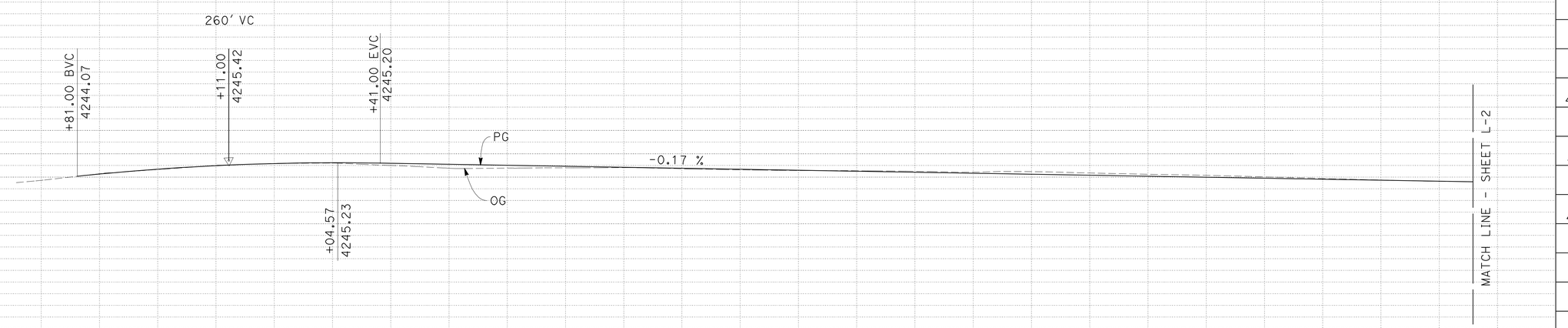

"A" LINE PROFILE

SCALE: 1" = 50' Horiz
1" = 5' Vert

STATION	39	40	41	42	43	44	45	46	47	48	49	50	TOTAL
CY Exc													
CY Emb													

LAYOUT

SCALE AS SHOWN

L-1

REVISED BY | DATE REVISED
SAL PRIETO | MARK MILLER
CALCULATED-DESIGNED BY | CHECKED BY
FUNCTIONAL SUPERVISOR: MARK MILLER

STATE OF CALIFORNIA - DEPARTMENT OF TRANSPORTATION
Caltrans ADVANCE PLANNING

p:\proj1\02-4c010_plans\pse\SUBMIT_TO_HQ\24c010ea001.dgn

LAST REVISION 07-06-10 | DATE PLOTTED => 14-JUL-2010 | TIME PLOTTED => 10:35

Dist	COUNTY	ROUTE	POST MILES TOTAL PROJECT	SHEET No.	TOTAL SHEETS
02	Sis	97	40.1/54.1	7	114

Mark J. Miller 07-06-10
REGISTERED CIVIL ENGINEER DATE

7-12-10
PLANS APPROVAL DATE

REGISTERED PROFESSIONAL ENGINEER MARK MILLER No. C48454 Exp. 6-30-12 CIVIL STATE OF CALIFORNIA

THE STATE OF CALIFORNIA OR ITS OFFICERS OR AGENTS SHALL NOT BE RESPONSIBLE FOR THE ACCURACY OR COMPLETENESS OF SCANNED COPIES OF THIS PLAN SHEET.

NOTE:

1. FOR ACCURATE RIGHT OF WAY DATA, CONTACT RIGHT OF WAY ENGINEERING AT THE DISTRICT OFFICE.

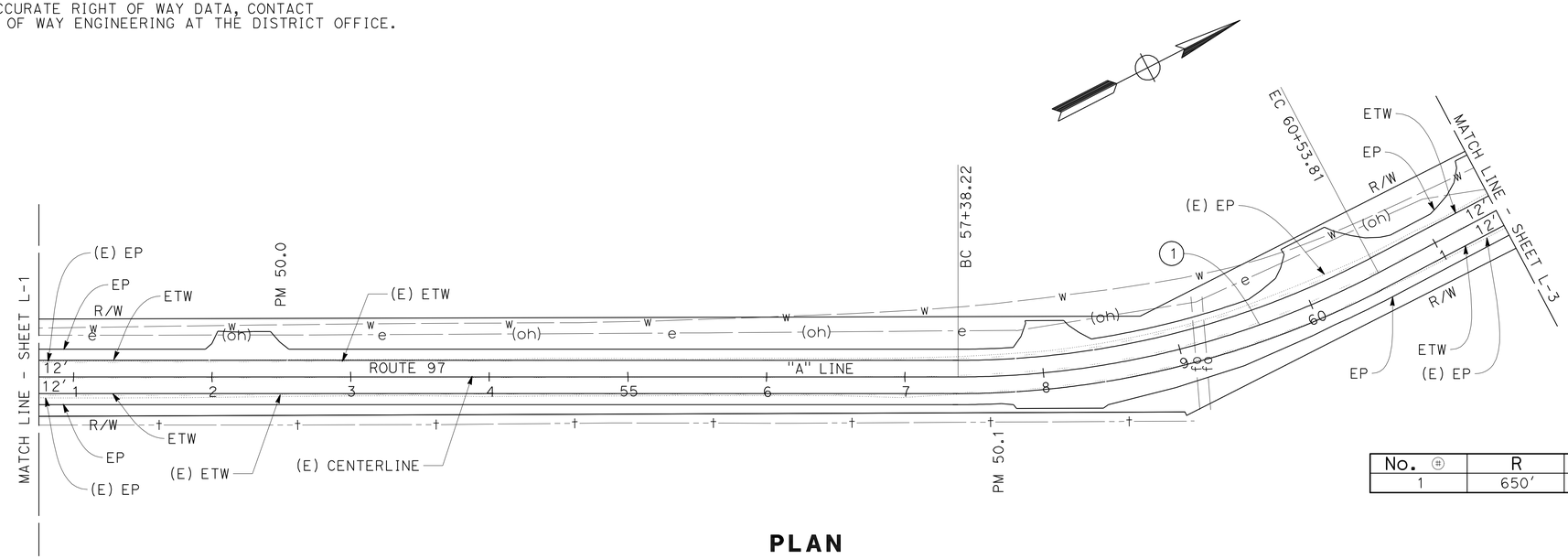

PLAN

SCALE: 1" = 50'

CURVE DATA

No. ⊕	R	Δ	T	L
1	650'	27°49'08"	160.97'	315.60'

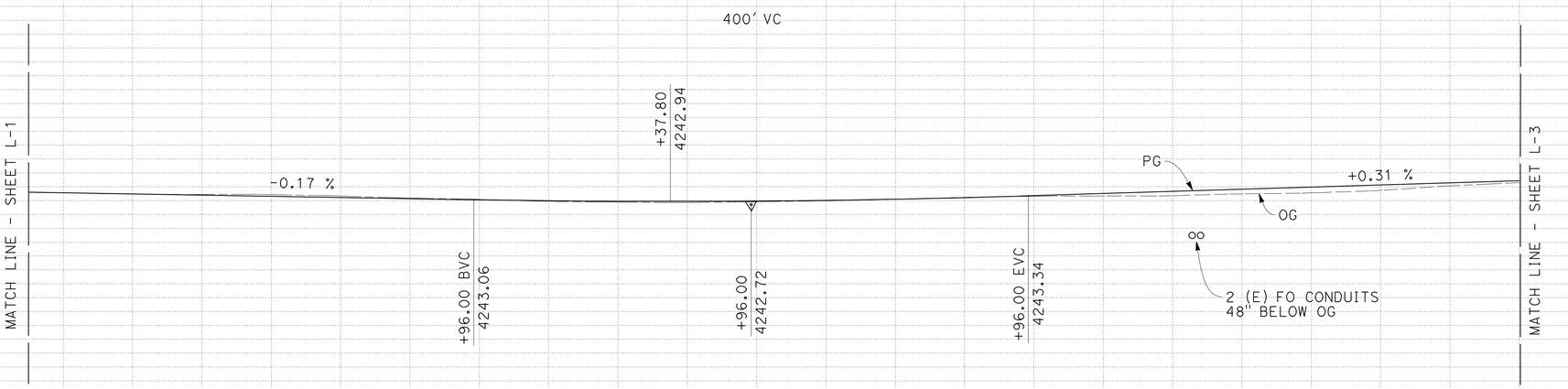

"A" LINE PROFILE

SCALE: 1" = 50' Horiz
1" = 5' Vert

LAYOUT

SCALE AS SHOWN

L-2

STATION	51	52	53	54	55	56	57	58	59	60	61	TOTAL
CY Exc												
CY Emb												

REVISED BY | DATE REVISED
SAL PRIETO | MARK MILLER
CALCULATED-DESIGNED BY | CHECKED BY
FUNCTIONAL SUPERVISOR: MARK MILLER

STATE OF CALIFORNIA - DEPARTMENT OF TRANSPORTATION
Caltrans® ADVANCE PLANNING

p:\proj1\02\4c010_plans\pse\SUBMIT_TO_HQ\24c010ea002.dgn

LAST REVISION 07-06-10 | DATE PLOTTED => 14-JUL-2010 | TIME PLOTTED => 07:15

Dist	COUNTY	ROUTE	POST MILES TOTAL PROJECT	SHEET No.	TOTAL SHEETS
02	Sis	97	40.1/54.1	8	114

Mark J. Miller 07-06-10
REGISTERED CIVIL ENGINEER DATE

7-12-10
PLANS APPROVAL DATE

REGISTERED PROFESSIONAL ENGINEER MARK MILLER No. C48454 Exp. 6-30-12 CIVIL STATE OF CALIFORNIA

THE STATE OF CALIFORNIA OR ITS OFFICERS OR AGENTS SHALL NOT BE RESPONSIBLE FOR THE ACCURACY OR COMPLETENESS OF SCANNED COPIES OF THIS PLAN SHEET.

NOTE:

1. FOR ACCURATE RIGHT OF WAY DATA, CONTACT RIGHT OF WAY ENGINEERING AT THE DISTRICT OFFICE.

CURVE DATA

No. ⊕	R	Δ	T	L
1	5000′	0°41′38"	30.28′	60.55′

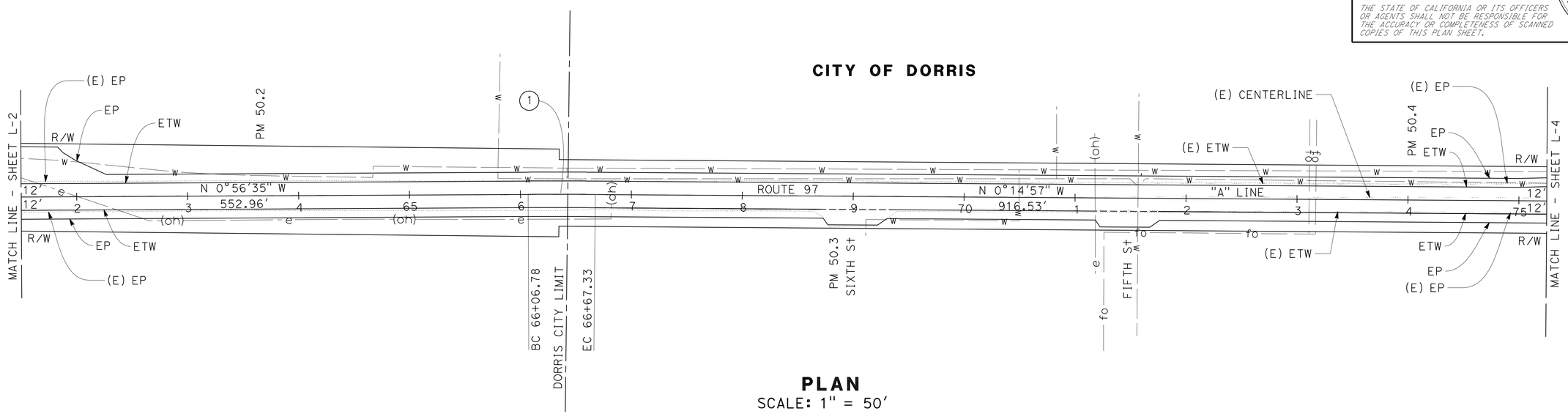

PLAN
SCALE: 1" = 50′

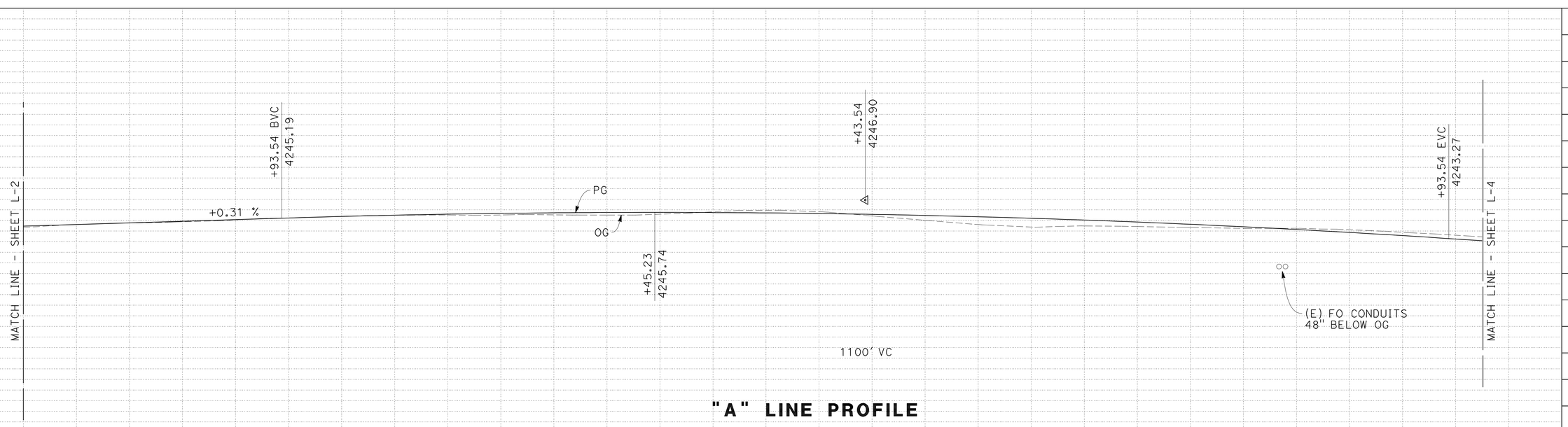

"A" LINE PROFILE
SCALE: 1" = 50′ Horiz
1" = 5′ Vert

LAYOUT
SCALE AS SHOWN

L-3

STATION	62	63	64	65	66	67	68	69	70	71	72	73	74	75	TOTAL
CY Exc															
CY Emb															

REVISED BY | DATE REVISED
SAL PRIETO | MARK MILLER
CALCULATED-DESIGNED BY | CHECKED BY
FUNCTIONAL SUPERVISOR: MARK MILLER

Caltrans® ADVANCE PLANNING
STATE OF CALIFORNIA - DEPARTMENT OF TRANSPORTATION

p:\proj1\02\4c010_plans\pse\SUBMIT_TO_HQ\24c010ea003.dgn

LAST REVISION 07-06-10 | DATE PLOTTED => 13-JUL-2010 | TIME PLOTTED => 13:28

Dist	COUNTY	ROUTE	POST MILES TOTAL PROJECT	SHEET No.	TOTAL SHEETS
02	Sis	97	40.1/54.1	9	114

Mark J. Miller 07-06-10
REGISTERED CIVIL ENGINEER DATE

7-12-10
PLANS APPROVAL DATE

REGISTERED PROFESSIONAL ENGINEER MARK MILLER No. C48454 Exp. 6-30-12 CIVIL STATE OF CALIFORNIA

THE STATE OF CALIFORNIA OR ITS OFFICERS OR AGENTS SHALL NOT BE RESPONSIBLE FOR THE ACCURACY OR COMPLETENESS OF SCANNED COPIES OF THIS PLAN SHEET.

NOTE:

1. FOR ACCURATE RIGHT OF WAY DATA, CONTACT RIGHT OF WAY ENGINEERING AT THE DISTRICT OFFICE.

CITY OF DORRIS

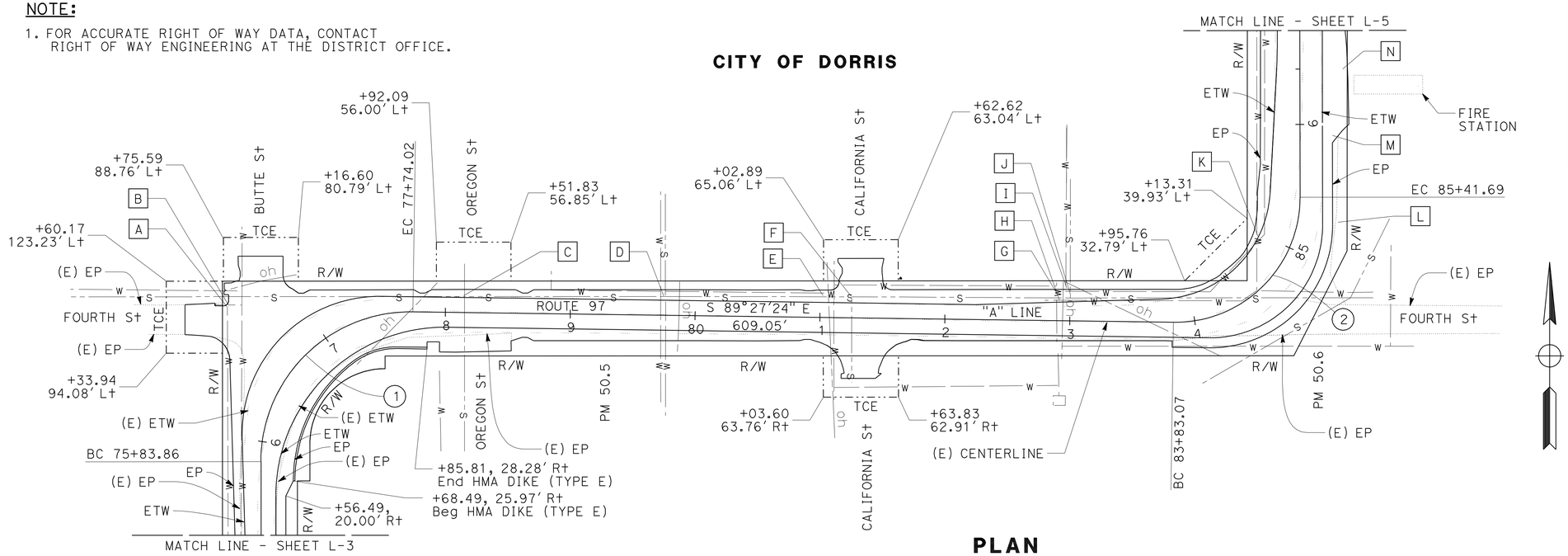

PLAN

SCALE: 1" = 50'

ADJUST UTILITY COVER TO GRADE

A	"A" 76+67, 71' Lt
B	"A" 76+69, 71' Lt
C	"A" 78+15, 11' Lt
D	"A" 79+75, 13' Lt
E	"A" 81+18, 22' Lt
F	"A" 81+25, 15' Lt
G	"A" 82+89, 22' Lt
H	"A" 82+92, 15' Lt
I	"A" 82+98, 24' Lt
J	"A" 83+00, 18' Lt
K	"A" 84+97, 25' Lt
L	"A" 85+27, 30' Rt
M	"A" 85+92, 26' Rt
N	"A" 86+44, 34' Rt

CURVE DATA

No. ⊛	R	Δ	T	L
1	120'	90°47'33"	121.67'	190.16'
2	100'	90°53'01"	101.55'	158.62'

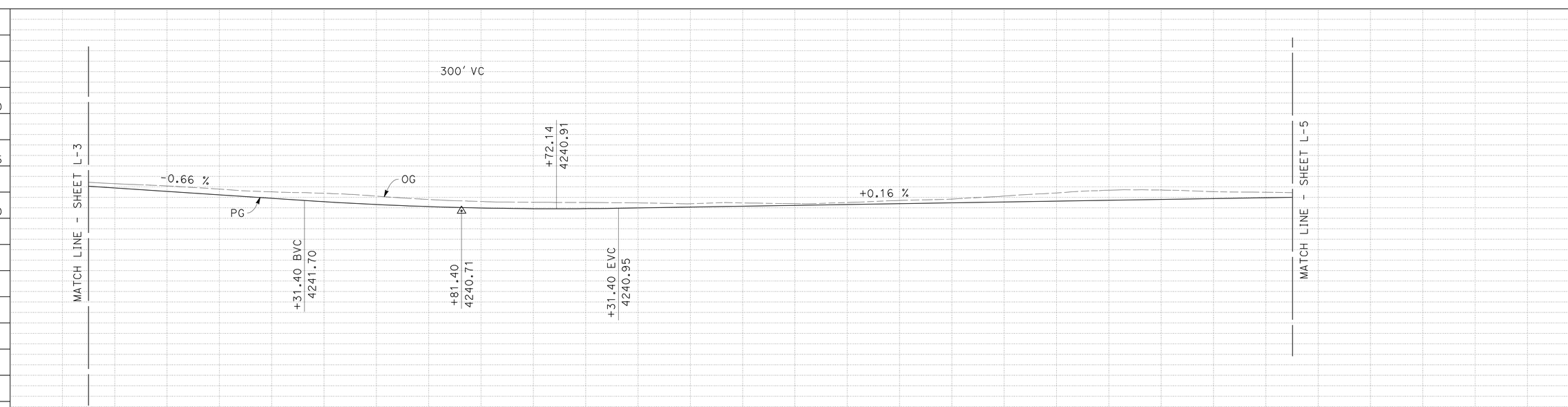

"A" LINE PROFILE

SCALE: 1" = 50' Horiz
1" = 5' Vert

LAYOUT

SCALE AS SHOWN

L-4

STATION	76	77	78	79	80	81	82	83	84	85	86	TOTAL
CY Exc												
CY Emb												

REVISED BY | DATE REVISED
SAL PRIETO | MARK MILLER
CALCULATED-DESIGNED BY | CHECKED BY
FUNCTIONAL SUPERVISOR | MARK MILLER

STATE OF CALIFORNIA - DEPARTMENT OF TRANSPORTATION
Caltrans ADVANCE PLANNING

p:\proj1\02\4c010_plans\pse\SUBMIT_TO_HQ\24c010ea004.dgn

LAST REVISION 07-06-10
DATE PLOTTED => 14-JUL-2010
TIME PLOTTED => 10:35

Dist	COUNTY	ROUTE	POST MILES TOTAL PROJECT	SHEET No.	TOTAL SHEETS
02	Sis	97	40.1/54.1	10	114

Mark J. Miller 07-06-10
REGISTERED CIVIL ENGINEER DATE

7-12-10
PLANS APPROVAL DATE

REGISTERED PROFESSIONAL ENGINEER MARK MILLER No. C48454 Exp. 6-30-12 CIVIL STATE OF CALIFORNIA

THE STATE OF CALIFORNIA OR ITS OFFICERS OR AGENTS SHALL NOT BE RESPONSIBLE FOR THE ACCURACY OR COMPLETENESS OF SCANNED COPIES OF THIS PLAN SHEET.

NOTE:

1. FOR ACCURATE RIGHT OF WAY DATA, CONTACT RIGHT OF WAY ENGINEERING AT THE DISTRICT OFFICE.

ADJUST UTILITY COVER TO GRADE

- O "A" 89+86, 28′ Lt
- P "A" 89+86, 42′ Lt
- Q "A" 95+45, 24′ Lt
- R "A" 95+45, 29′ Lt
- S "A" 95+47, 26′ Lt
- T "A" 95+85, 24′ Lt
- U "A" 95+85, 26′ Lt

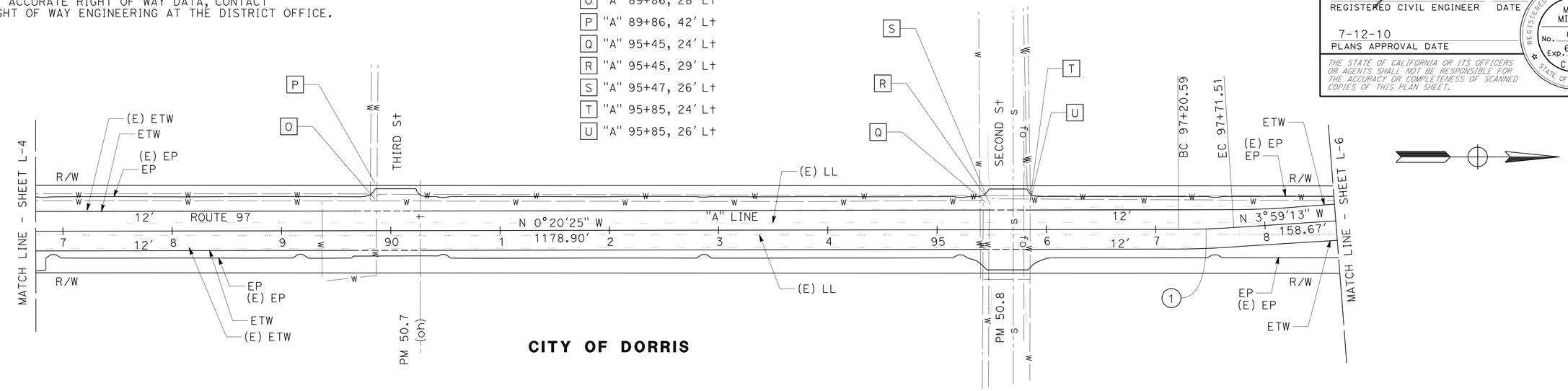

PLAN

SCALE: 1" = 50′

CURVE DATA

No. ⊕	R	Δ	T	L
1	800′	3°38′48″	25.47′	50.92′

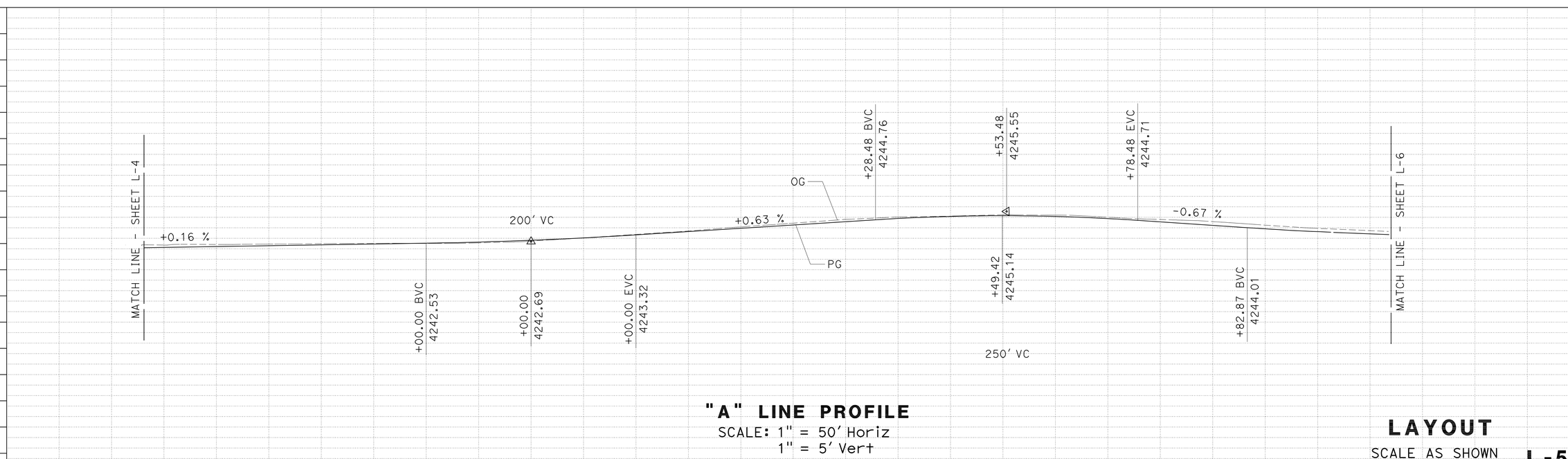

"A" LINE PROFILE

SCALE: 1" = 50′ Horiz
1" = 5′ Vert

LAYOUT

SCALE AS SHOWN

L-5

REVISED BY | DATE REVISED
SAL PRIETO | MARK MILLER
CALCULATED-DESIGNED BY | CHECKED BY
FUNCTIONAL SUPERVISOR
MARK MILLER

STATE OF CALIFORNIA - DEPARTMENT OF TRANSPORTATION
Caltrans® ADVANCE PLANNING

p:\proj1\02\4c010_plans\pse\SUBMIT_TO_HQ\24c010ea005.dgn

LAST REVISION 07-06-10
DATE PLOTTED => 13-JUL-2010
TIME PLOTTED => 13:29

Dist	COUNTY	ROUTE	POST MILES TOTAL PROJECT	SHEET No.	TOTAL SHEETS
02	Sis	97	40.1/54.1	11	114

Mark J. Miller 07-06-10
REGISTERED CIVIL ENGINEER DATE

7-12-10
PLANS APPROVAL DATE

REGISTERED PROFESSIONAL ENGINEER MARK MILLER No. C48454 Exp. 6-30-12 CIVIL STATE OF CALIFORNIA

THE STATE OF CALIFORNIA OR ITS OFFICERS OR AGENTS SHALL NOT BE RESPONSIBLE FOR THE ACCURACY OR COMPLETENESS OF SCANNED COPIES OF THIS PLAN SHEET.

NOTE:

1. FOR ACCURATE RIGHT OF WAY DATA, CONTACT RIGHT OF WAY ENGINEERING AT THE DISTRICT OFFICE.

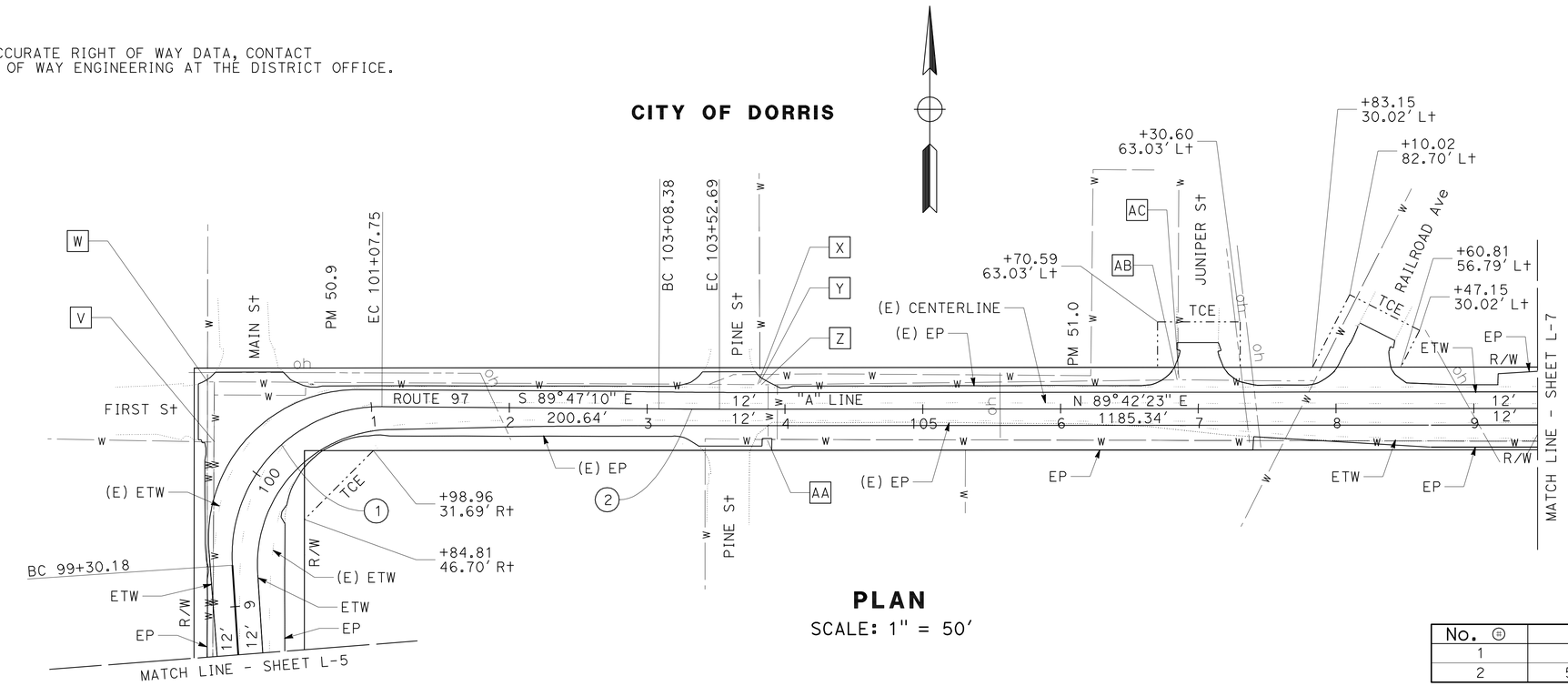

PLAN

SCALE: 1" = 50'

ADJUST UTILITY COVER TO GRADE

V	"A" 100+03, 35' Lt
W	"A" 110+24, 66' Lt
X	"A" 103+84, 17' Lt
Y	"A" 103+85, 18' Lt
Z	"A" 103+87, 17' Lt
AA	"A" 103+87, 23' Rt
AB	"A" 106+89, 20' Lt
AC	"A" 106+90, 21' Lt

CURVE DATA

No. ⊛	R	Δ	T	L
1	108'	94°12'03"	116.22'	177.56'
2	5000'	0°30'28"	22.15'	44.30'

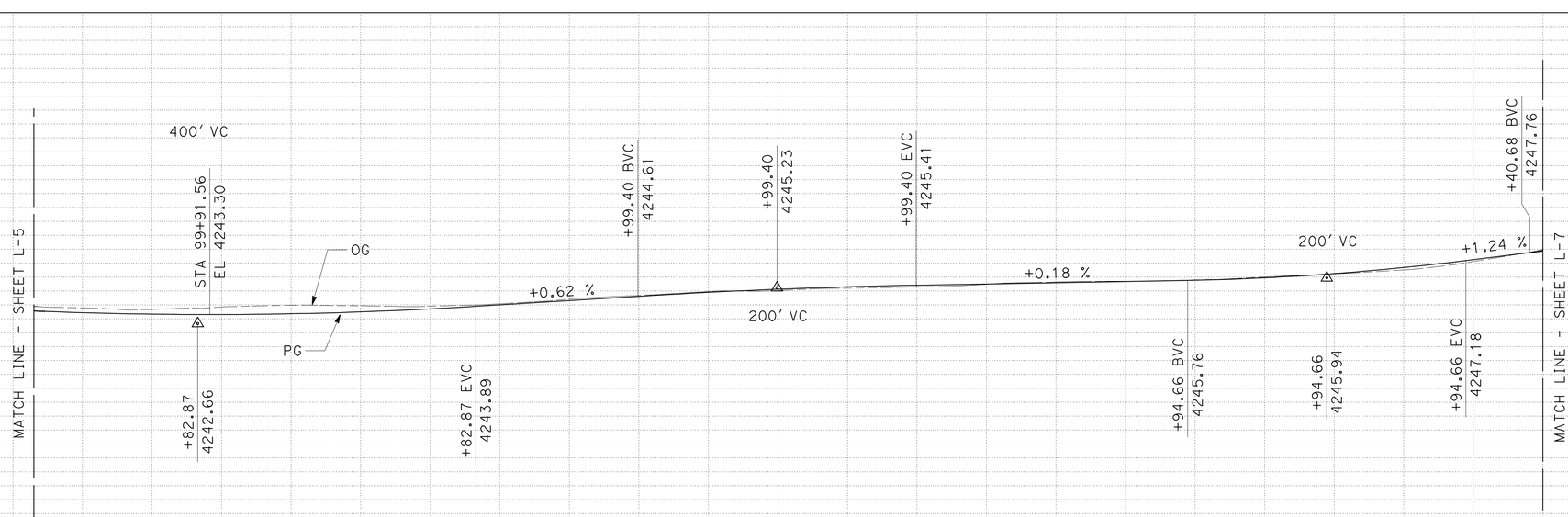

"A" LINE PROFILE

SCALE: 1" = 50' Horiz
1" = 5' Vert

LAYOUT

SCALE AS SHOWN

L-6

STATION	99	100	101	102	103	104	105	106	107	108	109	TOTAL
CY Exc												
CY Emb												

REVISED BY | DATE REVISED
SAL PRIETO | MARK MILLER
CALCULATED-DESIGNED BY | CHECKED BY
FUNCTIONAL SUPERVISOR: MARK MILLER

STATE OF CALIFORNIA - DEPARTMENT OF TRANSPORTATION
Caltrans® ADVANCE PLANNING

p:\proj1\02\4c010_plans\pse\SUBMIT_TO_HQ\24c010ea006.dgn

LAST REVISION 07-06-10 | DATE PLOTTED => 13-JUL-2010 | TIME PLOTTED => 13:29

Dist	COUNTY	ROUTE	POST MILES TOTAL PROJECT	SHEET No.	TOTAL SHEETS
02	Sis	97	40.1/54.1	12	114

Mark J. Miller 07-06-10
REGISTERED CIVIL ENGINEER DATE

7-12-10
PLANS APPROVAL DATE

REGISTERED PROFESSIONAL ENGINEER MARK MILLER No. C48454 Exp. 6-30-12 CIVIL STATE OF CALIFORNIA

THE STATE OF CALIFORNIA OR ITS OFFICERS OR AGENTS SHALL NOT BE RESPONSIBLE FOR THE ACCURACY OR COMPLETENESS OF SCANNED COPIES OF THIS PLAN SHEET.

NOTE:

1. FOR ACCURATE RIGHT OF WAY DATA, CONTACT RIGHT OF WAY ENGINEERING AT THE DISTRICT OFFICE.

CURVE DATA

No. ⊕	R	Δ	T	L
1	608′	35°53′00"	196.87′	380.78′
2	635′	23°2′46"	129.46′	255.42′

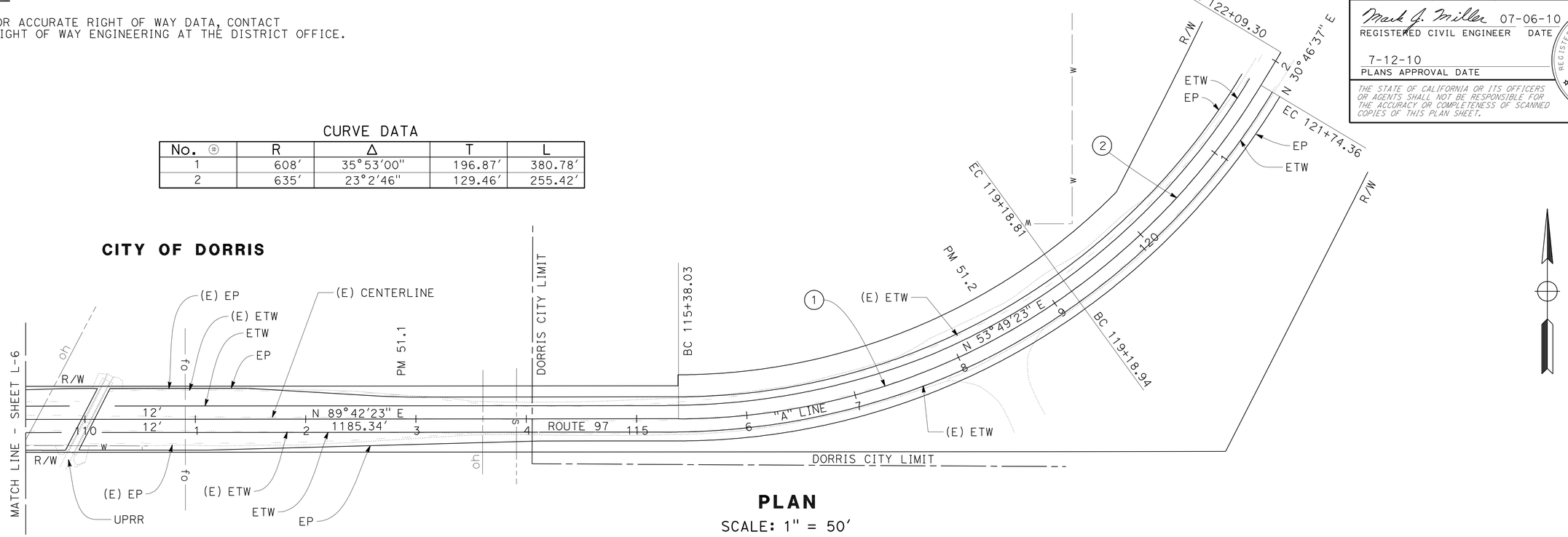

PLAN

SCALE: 1" = 50′

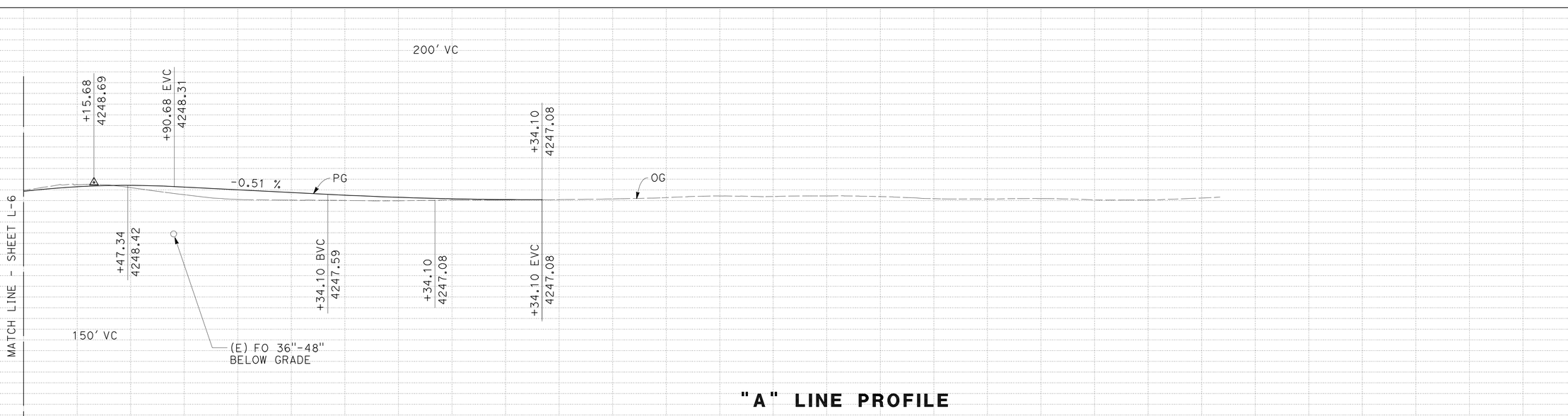

"A" LINE PROFILE

SCALE: 1" = 50′ Horiz
1" = 5′ Vert

LAYOUT

SCALE AS SHOWN

L-7

STATION	110	111	112	113	114	115	TOTAL
CY Exc							
CY Emb							

REVISED BY | DATE REVISED
SAL PRIETO | MARK MILLER
CALCULATED-DESIGNED BY | CHECKED BY
FUNCTIONAL SUPERVISOR | MARK MILLER

STATE OF CALIFORNIA - DEPARTMENT OF TRANSPORTATION
Caltrans® ADVANCE PLANNING

p:\proj1\02\4c010_plans\pse\SUBMIT_TO_HQ\24c010ea007.dgn

LAST REVISION 07-06-10
DATE PLOTTED => 14-JUL-2010
TIME PLOTTED => 07:19

Dist	COUNTY	ROUTE	POST MILES TOTAL PROJECT	SHEET No.	TOTAL SHEETS
02	Sis	97	40.1/54.1	13	114

Mark J. Miller 07-06-10
REGISTERED CIVIL ENGINEER DATE

7-12-10
PLANS APPROVAL DATE

REGISTERED PROFESSIONAL ENGINEER
MARK MILLER
No. C48454
Exp. 6-30-12
CIVIL
STATE OF CALIFORNIA

THE STATE OF CALIFORNIA OR ITS OFFICERS OR AGENTS SHALL NOT BE RESPONSIBLE FOR THE ACCURACY OR COMPLETENESS OF SCANNED COPIES OF THIS PLAN SHEET.

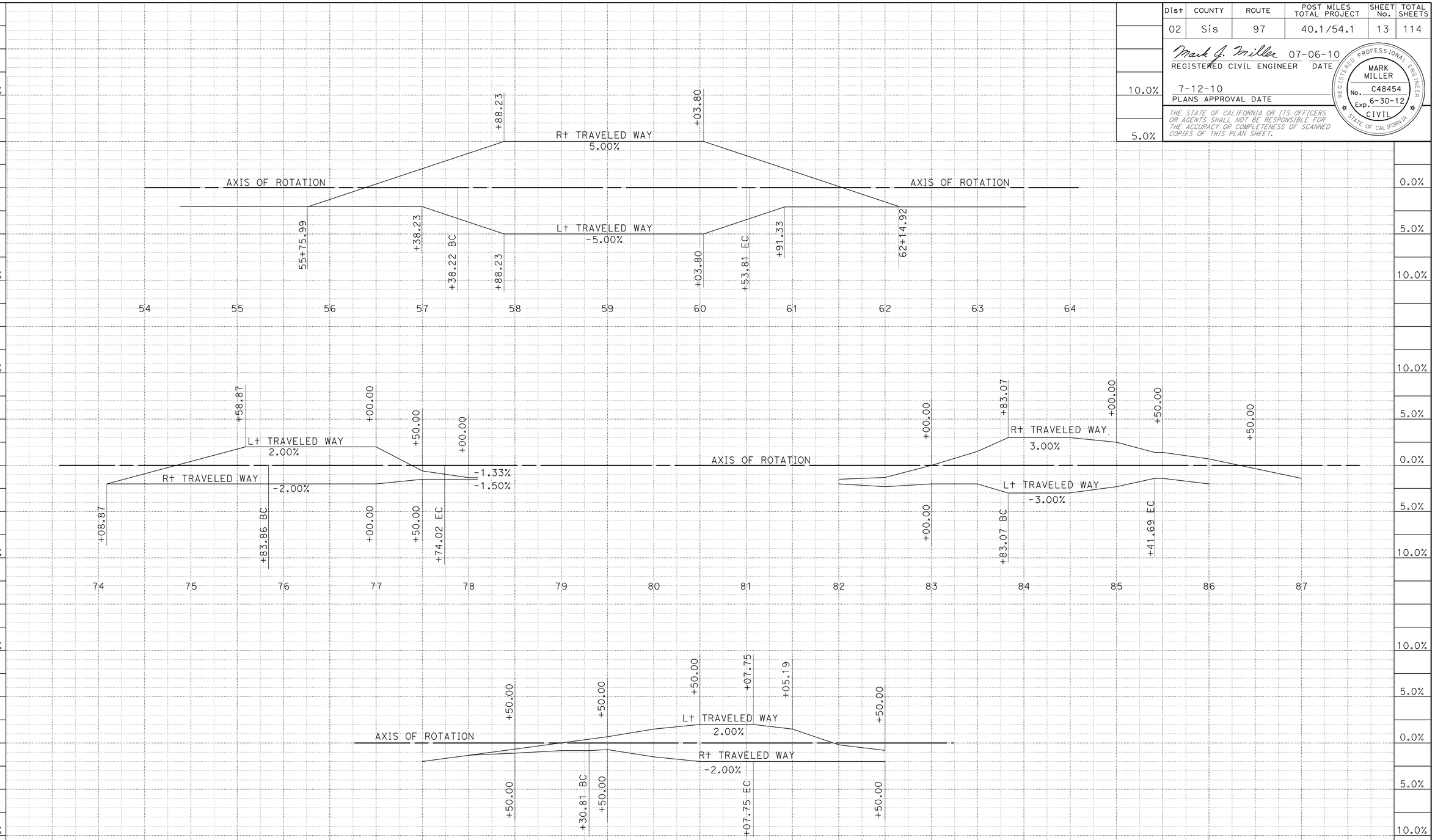

"A" LINE
ROUTE 97

SUPERELEVATION DIAGRAM
SCALE: 1" = 50' Horiz

SE-1

STATION		TOTAL
CY	Exc	
	Emb	

STATE OF CALIFORNIA - DEPARTMENT OF TRANSPORTATION
Caltrans® ADVANCE PLANNING

REVISED BY	
DATE REVISED	
SAL PRIETO	
MARK MILLER	
CALCULATED-DESIGNED BY	
CHECKED BY	
FUNCTIONAL SUPERVISOR	
MARK MILLER	

p:\proj1\02\4c010_plans\pse\SUBMIT_TO_HQ\24c010fc001.dgn

LAST REVISION 07-06-10 | DATE PLOTTED => 14-JUL-2010 | TIME PLOTTED => 07:21

Dist	COUNTY	ROUTE	POST MILES TOTAL PROJECT	SHEET No.	TOTAL SHEETS
02	Sis	97	40.1/54.1	14	114

Mark J. Miller 07-06-10
REGISTERED CIVIL ENGINEER DATE

7-12-10
PLANS APPROVAL DATE

REGISTERED PROFESSIONAL ENGINEER MARK MILLER No. C48454 Exp. 6-30-12 CIVIL STATE OF CALIFORNIA

THE STATE OF CALIFORNIA OR ITS OFFICERS OR AGENTS SHALL NOT BE RESPONSIBLE FOR THE ACCURACY OR COMPLETENESS OF SCANNED COPIES OF THIS PLAN SHEET.

NOTES:

1. DIMENSIONS OF THE PAVEMENT STRUCTURES (STRUCTURAL SECTIONS) ARE SUBJECT TO TOLERANCES SPECIFIED IN THE STANDARD SPECIFICATIONS.
2. SUPERELEVATIONS AS SHOWN OR AS DETERMINED BY THE ENGINEER.

LEGEND

COLD PLANE AC PAVEMENT
EXISTING FIRE HYDRANT

ABBREVIATIONS

CPACP	COLD PLANE AC PAVEMENT
CL	CHAIN LINK

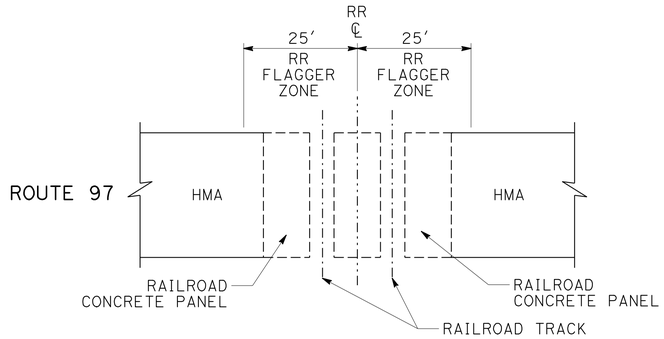

PLAN

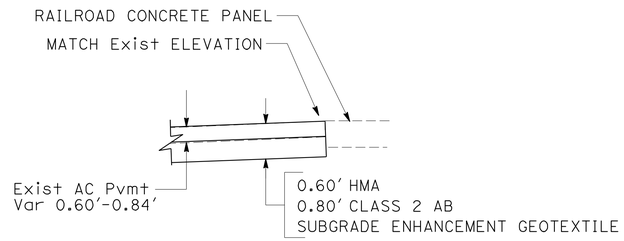

PROFILE

RAILROAD CONFORM TAPER (Typ)

Sis-97-PM 51.07

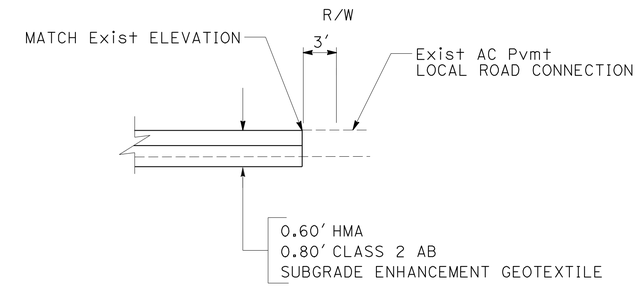

CONFORM A FOR PAVED ROAD CONNECTION

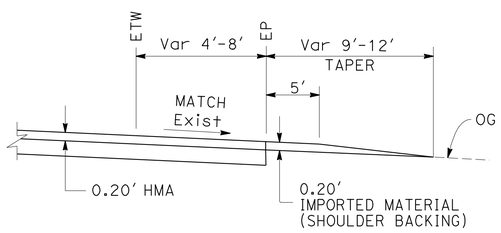

CONFORM TAPER FOR UNPAVED ROAD CONNECTIONS (Typ)

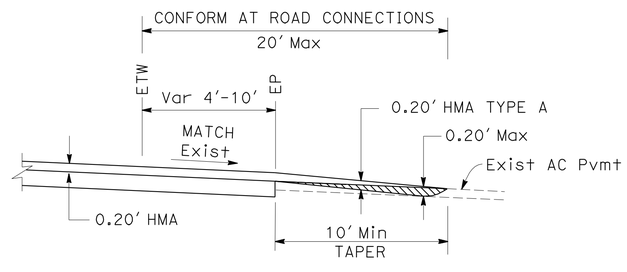

CONFORM B TAPER FOR PAVED ROAD CONNECTIONS (Typ)

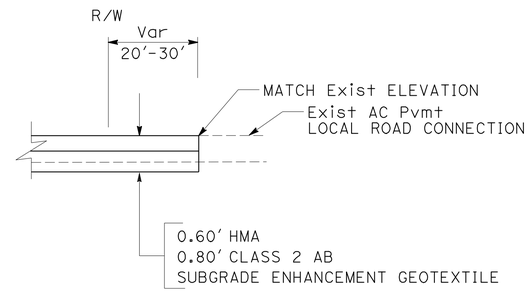

CONFORM C FOR PAVED ROAD CONNECTION

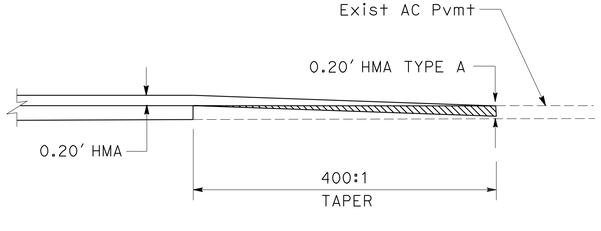

MAINLINE CONFORM TAPER ON COLD PLANE AND OVERLAY SECTIONS

CONSTRUCTION DETAILS

NO SCALE

C-1

STATE OF CALIFORNIA - DEPARTMENT OF TRANSPORTATION
Caltrans® ADVANCE PLANNING

FUNCTIONAL SUPERVISOR: MARK MILLER
CALCULATED-DESIGNED BY / CHECKED BY
REVISED BY / DATE REVISED
SAL PRIETO / MARK MILLER

p:\proj1\02\4c010_plans\pse\SUBMIT_TO_HQ\24c010ga001.dgn

LAST REVISION 07-06-10
DATE PLOTTED => 13-JUL-2010
TIME PLOTTED => 13:29

Dist	COUNTY	ROUTE	POST MILES TOTAL PROJECT	SHEET No.	TOTAL SHEETS
02	Sis	97	40.1/54.1	15	114

Mark J. Miller 07-06-10
REGISTERED CIVIL ENGINEER DATE

7-12-10
PLANS APPROVAL DATE

REGISTERED PROFESSIONAL ENGINEER
MARK MILLER
No. C48454
Exp. 6-30-12
CIVIL
STATE OF CALIFORNIA

THE STATE OF CALIFORNIA OR ITS OFFICERS OR AGENTS SHALL NOT BE RESPONSIBLE FOR THE ACCURACY OR COMPLETENESS OF SCANNED COPIES OF THIS PLAN SHEET.

NOTES:

1. INSTALL DELINEATORS PERPENDICULAR TO ONCOMING TRAFFIC.
2. UNLESS SHOWN OTHERWISE, DELINEATOR SPACING ON TANGENT IS 525'.
3. FRAME, COVER AND CONCRETE COLLAR TO BE 1/8" TO 1/4" BELOW GRADE OF ASPHALT.

LEGEND:

S DELINEATOR SPACING
R CENTERLINE CURVE RADIUS
⊠ DELINEATOR

DELINEATOR SPACING ON CURVES

PM	CURVE RADIUS	LENGTH	S (ft)	2S (ft)	3S (ft)	6S (ft)
45.75	1500	273	91	182	273	300
50.45	120	192	24	N/A	N/A	N/A
51.25	600	670	67	134	201	300
51.60	2000	903	129	258	300	300
52.00	1000	1335	89	178	267	300
52.25	2400	1480	148	296	300	300

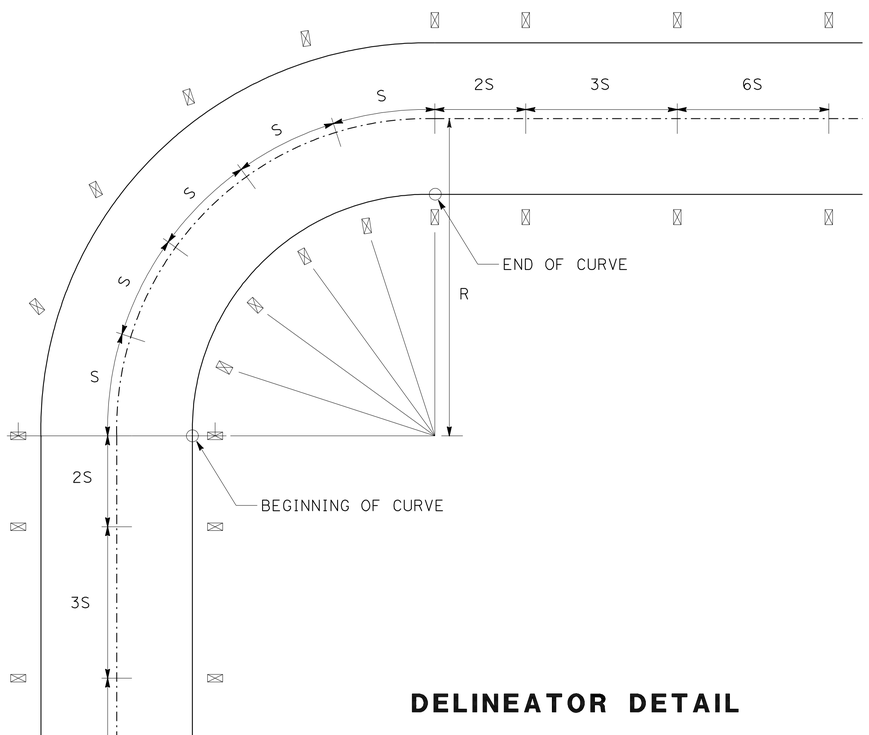

DELINEATOR DETAIL

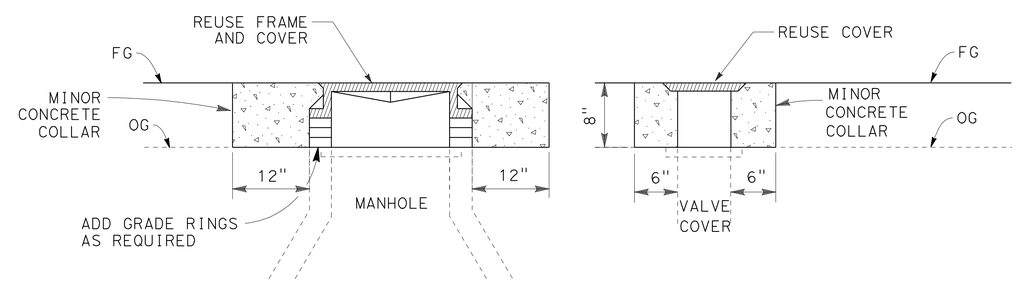

ADJUST UTILITY COVER TO GRADE

SEE NOTE 3

CONSTRUCTION DETAILS

NO SCALE

C-2

STATE OF CALIFORNIA - DEPARTMENT OF TRANSPORTATION
Caltrans® ADVANCE PLANNING

FUNCTIONAL SUPERVISOR: MARK MILLER
CALCULATED-DESIGNED BY
CHECKED BY
REVISED BY: SAL PRIETO
DATE REVISED: MARK MILLER

p:\proj1\02\4c010_plans\pse\SUBMIT_TO_HQ\24c010ga002.dgn

LAST REVISION 07-06-10
DATE PLOTTED => 13-JUL-2010
TIME PLOTTED => 13:29

Dist	COUNTY	ROUTE	POST MILES TOTAL PROJECT	SHEET No.	TOTAL SHEETS
02	Sis	97	40.1/54.1	16	114

Mark J. Miller 07-06-10
REGISTERED CIVIL ENGINEER DATE

7-12-10
PLANS APPROVAL DATE

REGISTERED PROFESSIONAL ENGINEER
MARK MILLER
No. C48454
Exp. 6-30-12
CIVIL
STATE OF CALIFORNIA

THE STATE OF CALIFORNIA OR ITS OFFICERS OR AGENTS SHALL NOT BE RESPONSIBLE FOR THE ACCURACY OR COMPLETENESS OF SCANNED COPIES OF THIS PLAN SHEET.

NOTE:

1. SEE SHEET DD-5 FOR DRAINAGE INFO (SYSTEM 8, UNIT b).

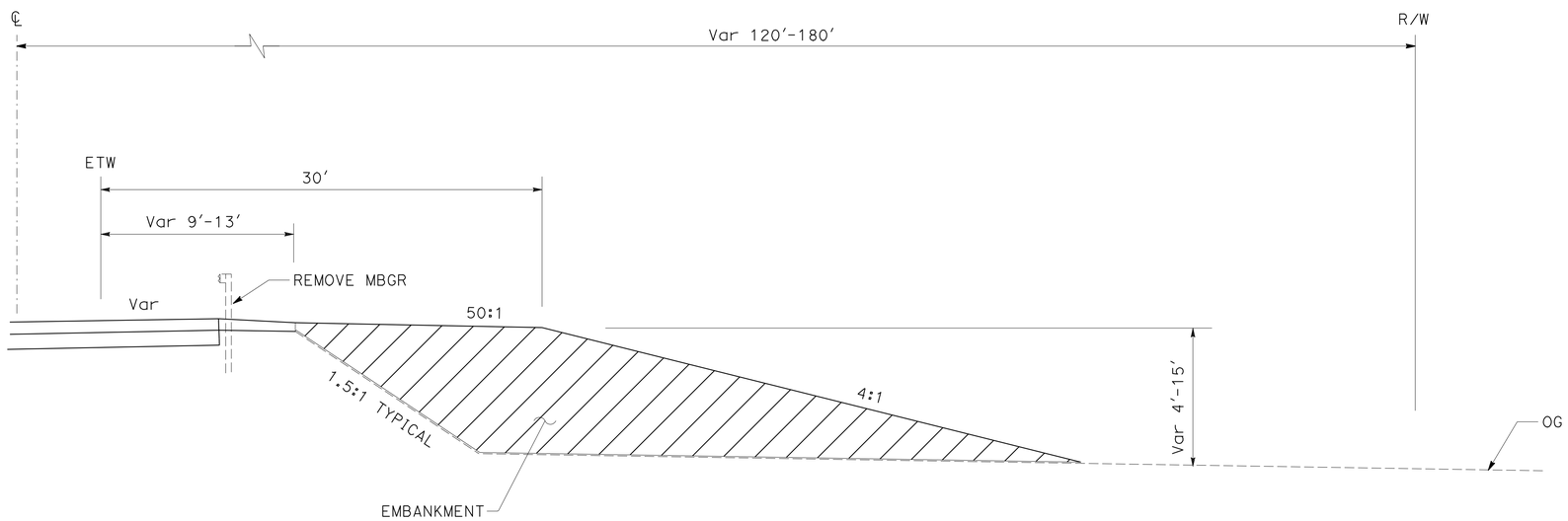

EMBANKMENT

Sis-97-PM 51.25 TO 51.50 RT

CONSTRUCTION DETAILS

NO SCALE

C-3

REVISED BY | DATE REVISED

CALCULATED-DESIGNED BY: SAL PRIETO
CHECKED BY: MARK MILLER

FUNCTIONAL SUPERVISOR: MARK MILLER

STATE OF CALIFORNIA - DEPARTMENT OF TRANSPORTATION
Caltrans® ADVANCE PLANNING

p:\proj\02\4c010_plans\pse\SUBMIT_TO_HQ\24c010ga003.dgn

LAST REVISION 07-06-10 | DATE PLOTTED => 14-JUL-2010 | TIME PLOTTED => 10:35

BORDER LAST REVISED 7/2/2010 | USERNAME => trmikesl | DGN FILE => 24c010ga003.dgn | RELATIVE BORDER SCALE IS IN INCHES 0 1 2 3 | UNIT 0145 | PROJECT NUMBER & PHASE 020002002711

Dist	COUNTY	ROUTE	POST MILES TOTAL PROJECT	SHEET No.	TOTAL SHEETS
02	Sis	97	40.1/54.1	17	114

REGISTERED CIVIL ENGINEER 07-06-02 DATE

7-12-10
PLANS APPROVAL DATE

REGISTERED PROFESSIONAL ENGINEER GREG KINGSFIELD No. C76297 Exp 6-30-12 CIVIL STATE OF CALIFORNIA

THE STATE OF CALIFORNIA OR ITS OFFICERS OR AGENTS SHALL NOT BE RESPONSIBLE FOR THE ACCURACY OR COMPLETENESS OF SCANNED COPIES OF THIS PLAN SHEET.

NOTES:

1. FOR COMPLETE RIGHT OF WAY DATA, SEE RIGHT OF WAY RECORD MAPS AT DISTRICT OFFICE.
2. ALL ALIGNMENTS ARE GRADE BREAKS.

CURVE DATA

No.	R	Δ	T	L
1	295.00′	9°43′49"	25.11	50.10′
2	120.00′	58°37′35"	67.38′	122.79′
3	120.00′	66°52′12"	79.23′	140.05′
4	120.00′	35°26′19"	38.34′	74.22′
5	272.00′	19°28′36"	46.68′	92.46′
6	188.00′	25°6′44"	41.87′	82.40′
7	295.00′	37°20′06"	99.67′	192.22′
7a	165.00′	45°42′36"	69.55′	131.64′
8	320.00′	45°34′42"	134.44′	254.56′
9	140.00′	45°34′42"	58.82′	111.37′
10	174.00′	35°18′25"	55.37′	107.22′
11	120.00′	43°18′00"	47.63′	90.69′
12	170.00′	29°27′26"	44.69′	87.40′
13	400.00′	16°20′35"	57.44′	114.10′
14	340.00′	28°17′50"	85.71′	167.92′
15	105.00′	35°57′48"	34.08′	65.91′
16	180.00′	26°46′25"	42.84′	84.11′
17	600.00′	17°30′05"	92.36′	183.27′
18	360.00′	28°49′53"	92.54′	181.15′
19	90.00′	28°49′53"	23.13′	45.29′
20	190.00′	19°19′31"	32.35′	64.08′
21	800.00′	19°19′30"	136.21′	269.83′

LEGEND

- A N 26°52′34" E 124.64′
- B N 62°18′52" E 144.84′
- C N 26°52′34" E 38.84′
- D N 62°18′52" E 86.45′
- E N 26°52′34" E 47.07
- F N 26°52′34" E 46.03′
- G N 26°52′34" E 44.99′
- H N 37°45′33" E 21.55′
- I N 26°52′34" E 64.19′
- J N 20°01′37" E 45.14′
- K N 56°19′59" E 69.33′
- Q "E" 44+68.46, 2′ Lt
- R "E" 44+68.18, 62′ Lt
- S "E" 45+72.25, 9′ Lt, R=7′
- → c MARKER (CULVERT)

ADJUST UTILITY COVER TO GRADE

- L "A" 44+13, 35.2′ Lt
- M "A" 44+15, 37.0′ Lt
- N "A" 44+15, 25.7′ Lt
- O "A" 43+09, 24.4′ Lt
- P "A" 43+22, 25.7′ Lt

ABBREVIATIONS

TCE TEMPORARY CONSTRUCTION EASEMENT

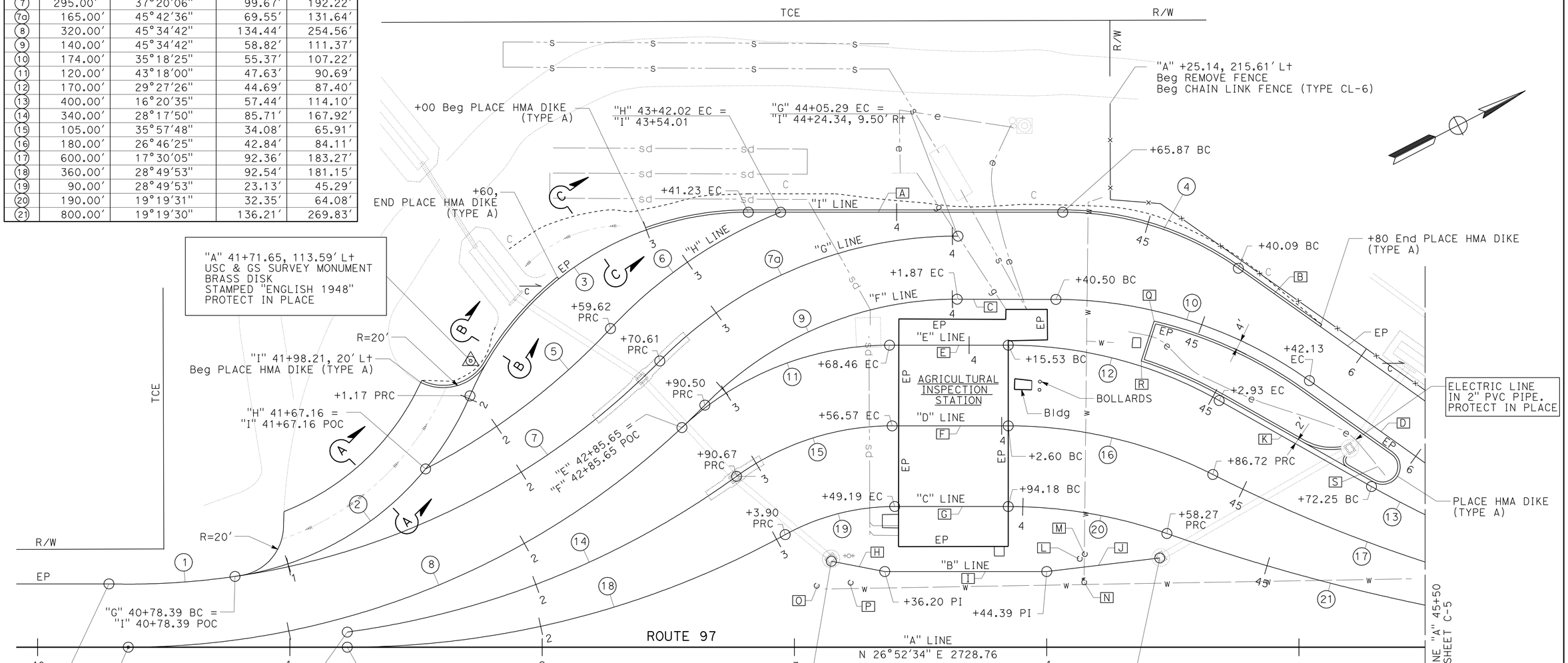

AGRICULTURAL INSPECTION STATION

"A" 40+28.29 TO "A" 47+59.38

CONSTRUCTION DETAILS

SCALE: 1" = 20′

C-4

REVISED BY | DATE REVISED

GREG KINGSFIELD | STEVE THORNE

CALCULATED-DESIGNED BY | CHECKED BY

FUNCTIONAL SUPERVISOR: STEVE THORNE

STATE OF CALIFORNIA - DEPARTMENT OF TRANSPORTATION

Caltrans® HYDRAULICS DESIGN

p:\proj1\02\4c010_plans\pse\SUBMIT_TO_HQ\24c010ga004.dgn

LAST REVISION 07-06-10 | DATE PLOTTED => 13-JUL-2010 | TIME PLOTTED => 14:04

Dist	COUNTY	ROUTE	POST MILES TOTAL PROJECT	SHEET No.	TOTAL SHEETS
02	Sis	97	40.1/54.1	18	114

REGISTERED CIVIL ENGINEER 07-06-02 DATE

7-12-10
PLANS APPROVAL DATE

REGISTERED PROFESSIONAL ENGINEER GREG KINGSFIELD No. C76297 Exp 6-30-12 CIVIL STATE OF CALIFORNIA

THE STATE OF CALIFORNIA OR ITS OFFICERS OR AGENTS SHALL NOT BE RESPONSIBLE FOR THE ACCURACY OR COMPLETENESS OF SCANNED COPIES OF THIS PLAN SHEET.

NOTE:

1. FOR COMPLETE RIGHT OF WAY AND ACCURATE ACCESS DATA, SEE RIGHT OF WAY RECORD MAPS AT DISTRICT OFFICE.

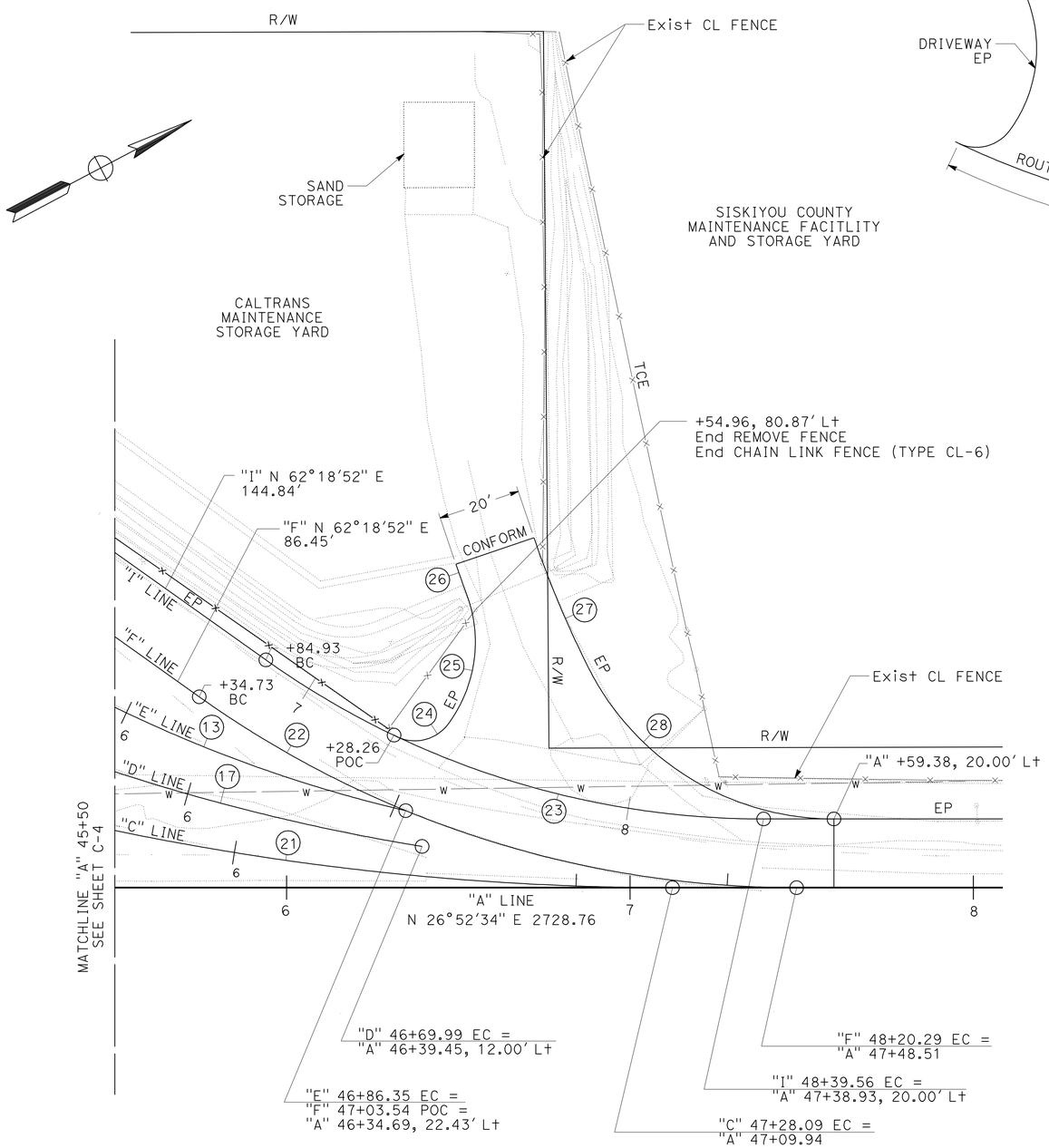

AGRICULTURAL INSPECTION STATION

"A" 40+28.29 TO "A" 47+59.38

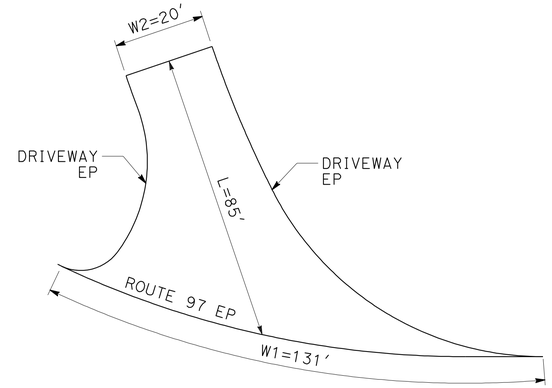

PLAN

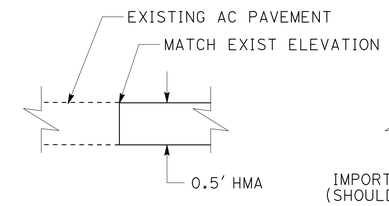

SECTION AT CONFORM

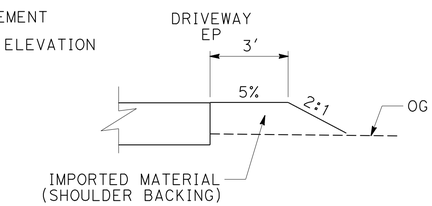

SECTION AT EP

DRIVEWAY DETAILS

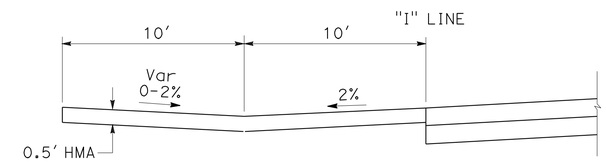

SECTION A-A

SEE SHEET C-4 FOR LOCATION.

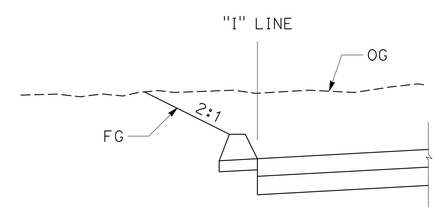

SECTION B-B

SEE SHEET C-4

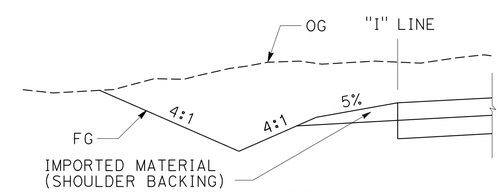

SECTION C-C

SEE SHEET C-4

CURVE DATA

No.	R	Δ	T	L
21	800.00'	19°19'30"	136.21'	269.83'
17	600.00'	17°30'05"	92.36'	183.27'
13	400.00'	16°20'35"	57.44'	114.10'
22	300.00'	35°26'18"	95.85'	185.56'
23	250.00'	35°26'19"	79.88'	154.63'
24	12.00'	83°49'59"	10.77'	17.56'
25	40.00'	57°10'45"	21.80'	39.92'
26	324.00'	1°38'00"	4.62'	9.24'
27	300.00'	7°50'12"	20.55'	41.03'
28	80.00'	63°20'15"	49.35'	88.44'

CONSTRUCTION DETAILS

SCALE: 1" = 20'

C-5

REVISED BY | DATE REVISED
GREG KINGSFIELD | STEVE THORNE
CALCULATED-DESIGNED BY | CHECKED BY
FUNCTIONAL SUPERVISOR | STEVE THORNE
STATE OF CALIFORNIA - DEPARTMENT OF TRANSPORTATION
Caltrans HYDRAULICS DESIGN

p:\proj\02\4c010_plans\pse\SUBMIT_TO_HQ\24c010ga005.dgn

LAST REVISION 07-06-10 | DATE PLOTTED => 13-JUL-2010 | TIME PLOTTED => 14:05

Dist	COUNTY	ROUTE	POST MILES TOTAL PROJECT	SHEET No.	TOTAL SHEETS
02	Sis	97	40.1/54.1	19	114

REGISTERED CIVIL ENGINEER 07-06-02 DATE

7-12-10
PLANS APPROVAL DATE

REGISTERED PROFESSIONAL ENGINEER GREG KINGSFIELD No. C76297 Exp 6-30-12 CIVIL STATE OF CALIFORNIA

THE STATE OF CALIFORNIA OR ITS OFFICERS OR AGENTS SHALL NOT BE RESPONSIBLE FOR THE ACCURACY OR COMPLETENESS OF SCANNED COPIES OF THIS PLAN SHEET.

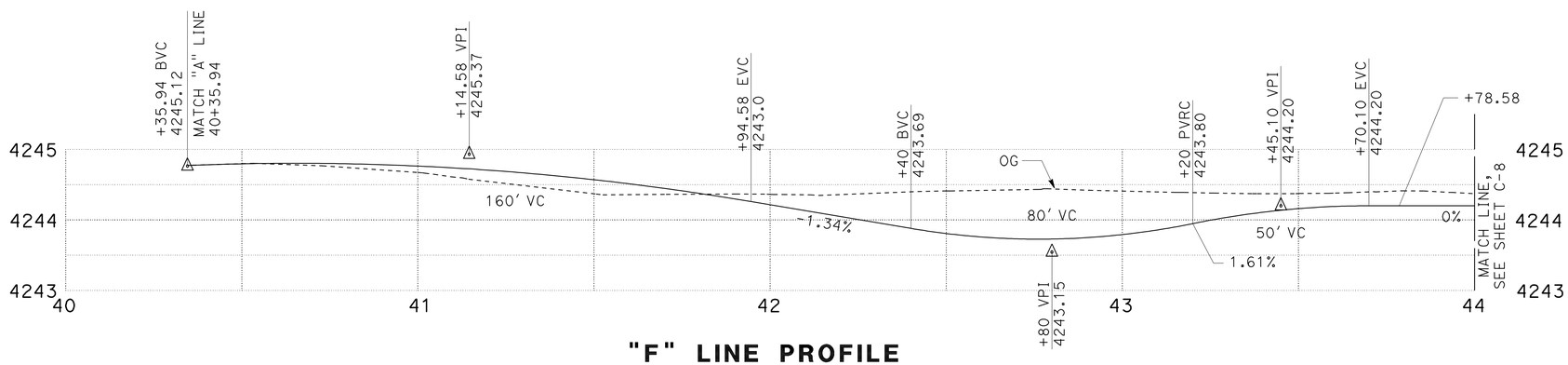

"F" LINE PROFILE

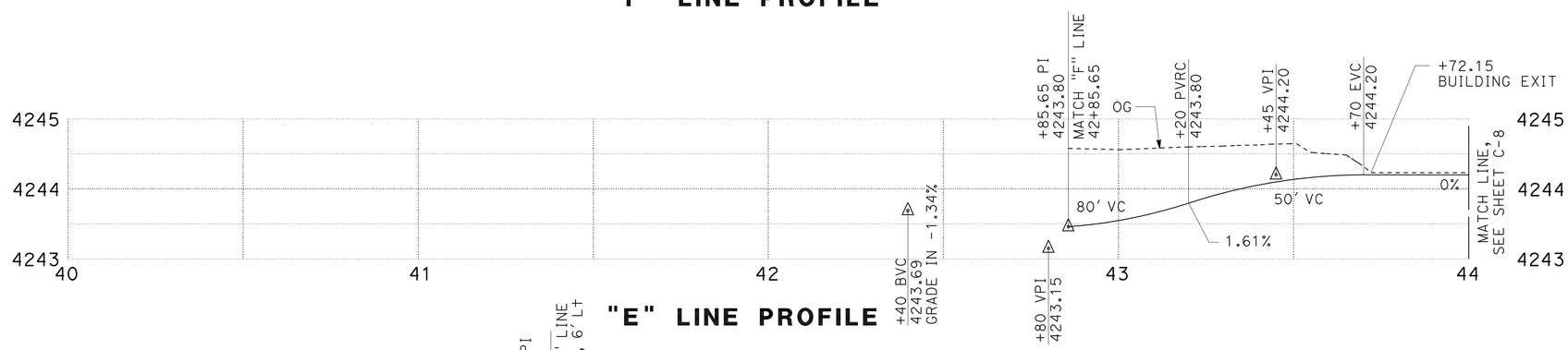

"E" LINE PROFILE

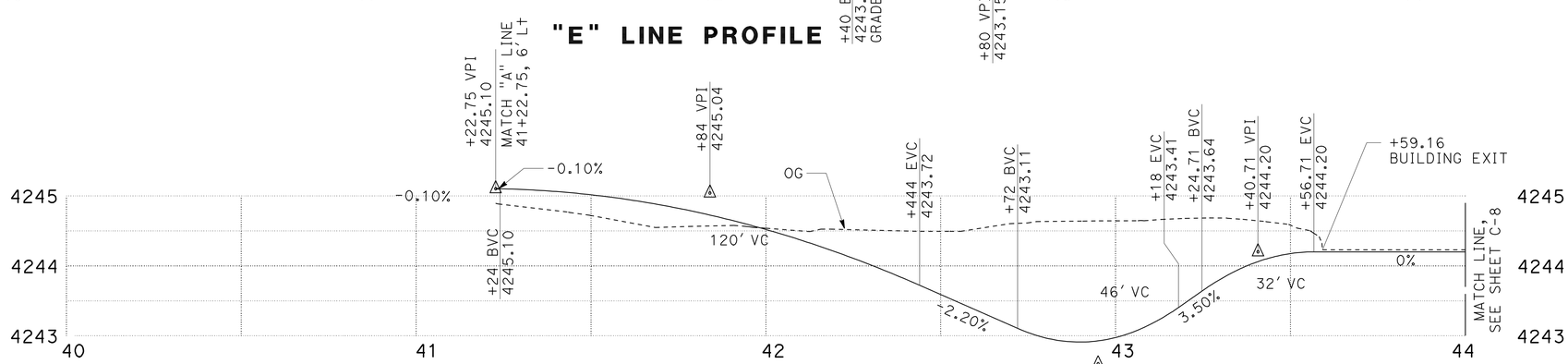

"D" LINE PROFILE

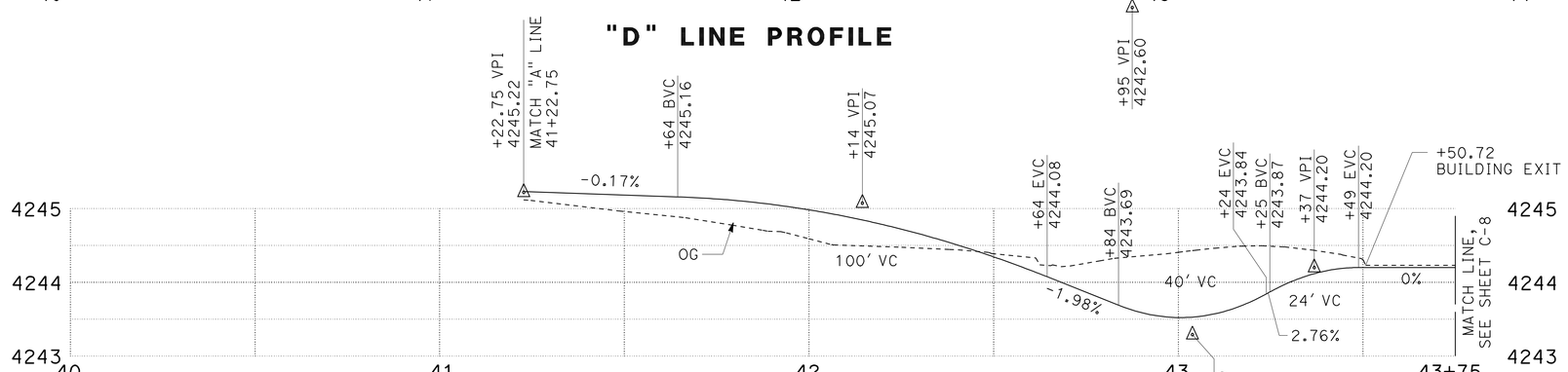

"C" LINE PROFILE

CONSTRUCTION DETAILS

SCALE: 1" = 20' HORIZ
1" = 2' VERT

C-6

REVISED BY	DATE REVISED

GREG KINGSFIELD — STEVE THORNE — CALCULATED-DESIGNED BY
STEVE THORNE — CHECKED BY — FUNCTIONAL SUPERVISOR

STATE OF CALIFORNIA - DEPARTMENT OF TRANSPORTATION
Caltrans® HYDRAULICS DESIGN

p:\proj1\02\4c010_plans\pse\SUBMIT_TO_HQ\24c010ga006.dgn

LAST REVISION 07-06-10 | DATE PLOTTED => 13-JUL-2010 | TIME PLOTTED => 14:05

Dist	COUNTY	ROUTE	POST MILES TOTAL PROJECT	SHEET No.	TOTAL SHEETS
02	Sis	97	40.1/54.1	20	114

REGISTERED CIVIL ENGINEER 07-06-02 DATE

7-12-10
PLANS APPROVAL DATE

REGISTERED PROFESSIONAL ENGINEER GREG KINGSFIELD No. C76297 Exp 6-30-12 CIVIL STATE OF CALIFORNIA

THE STATE OF CALIFORNIA OR ITS OFFICERS OR AGENTS SHALL NOT BE RESPONSIBLE FOR THE ACCURACY OR COMPLETENESS OF SCANNED COPIES OF THIS PLAN SHEET.

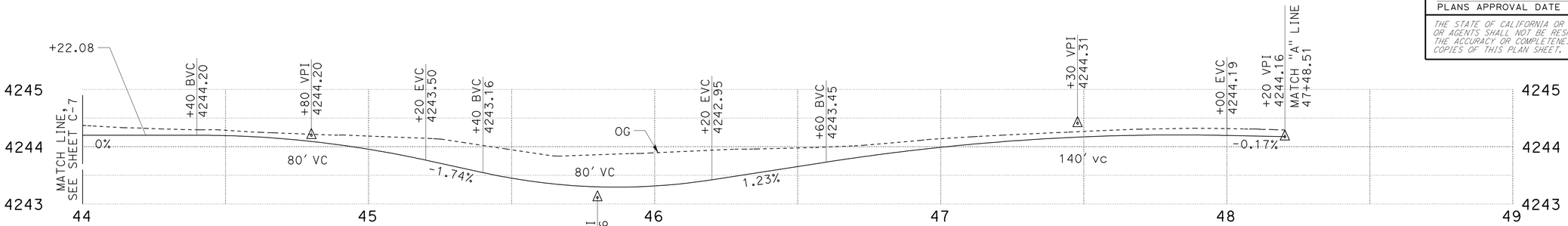

"F" LINE PROFILE

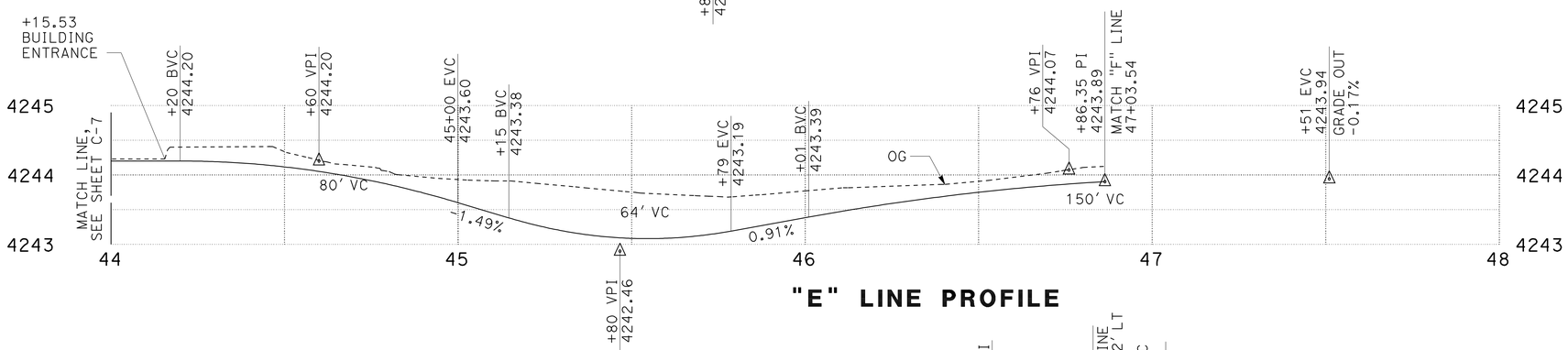

"E" LINE PROFILE

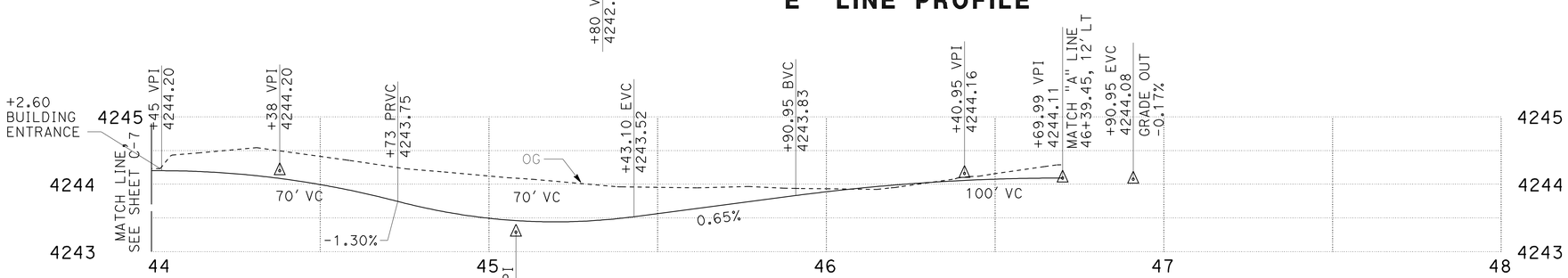

"D" LINE PROFILE

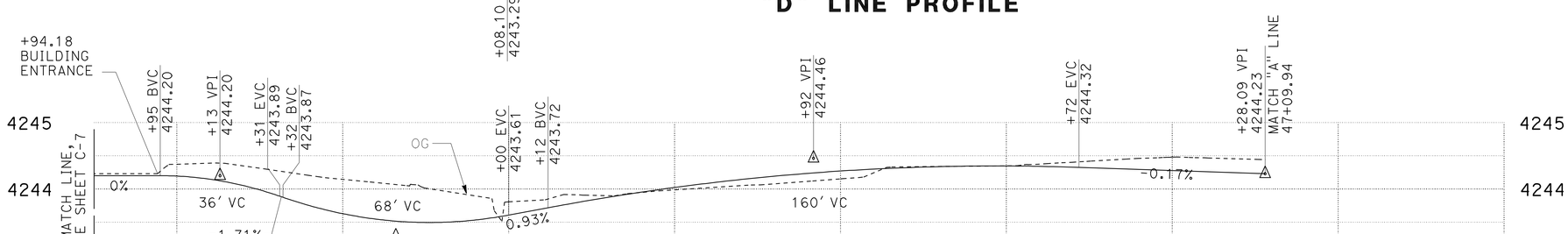

"C" LINE PROFILE

CONSTRUCTION DETAILS

SCALE: 1" = 20' HORIZ
1" = 2' VERT

C-7

GREG KINGSFIELD — STEVE THORNE — FUNCTIONAL SUPERVISOR — STEVE THORNE — CALCULATED-DESIGNED BY — CHECKED BY — REVISED BY — DATE REVISED

STATE OF CALIFORNIA - DEPARTMENT OF TRANSPORTATION
Caltrans HYDRAULICS DESIGN

p:\proj1\02\4c010_plans\pse\SUBMIT_TO_HQ\24c010ga007.dgn

LAST REVISION 07-06-10 | DATE PLOTTED => 13-JUL-2010 | TIME PLOTTED => 14:05

Dist	COUNTY	ROUTE	POST MILES TOTAL PROJECT	SHEET No.	TOTAL SHEETS
02	Sis	97	40.1/54.1	21	114

REGISTERED CIVIL ENGINEER 07-06-02 DATE

7-12-10
PLANS APPROVAL DATE

REGISTERED PROFESSIONAL ENGINEER GREG KINGSFIELD No. C76297 Exp 6-30-12 CIVIL STATE OF CALIFORNIA

THE STATE OF CALIFORNIA OR ITS OFFICERS OR AGENTS SHALL NOT BE RESPONSIBLE FOR THE ACCURACY OR COMPLETENESS OF SCANNED COPIES OF THIS PLAN SHEET.

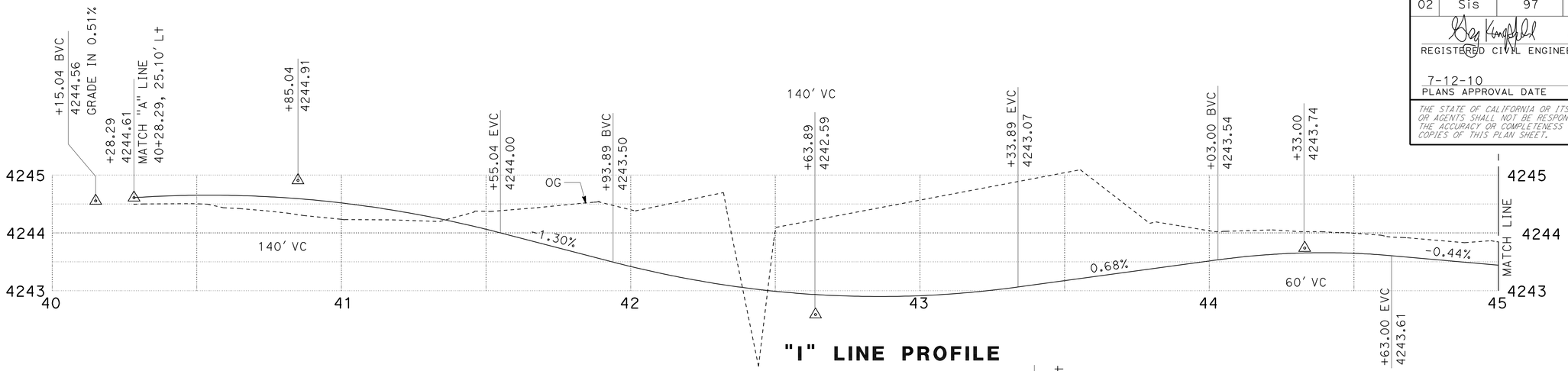

"I" LINE PROFILE

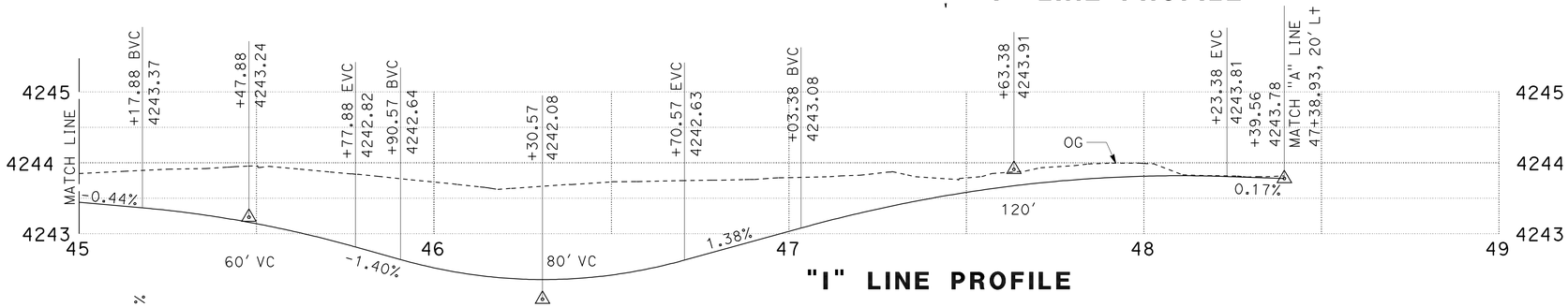

"I" LINE PROFILE

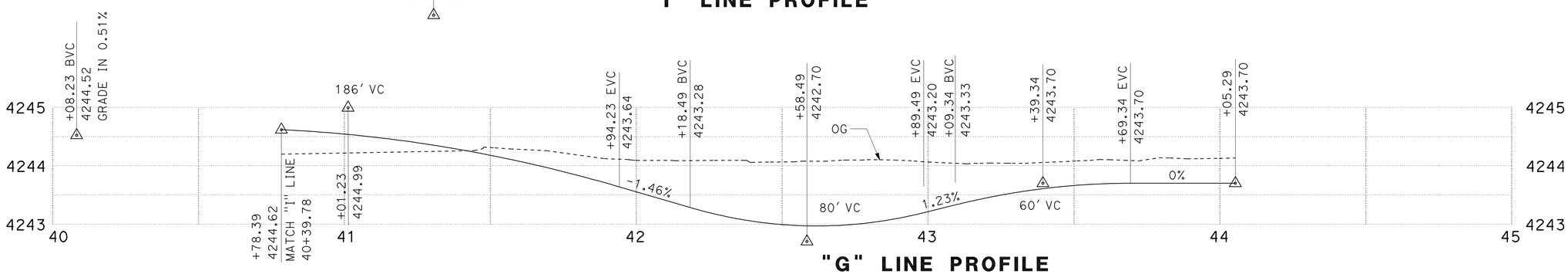

"G" LINE PROFILE

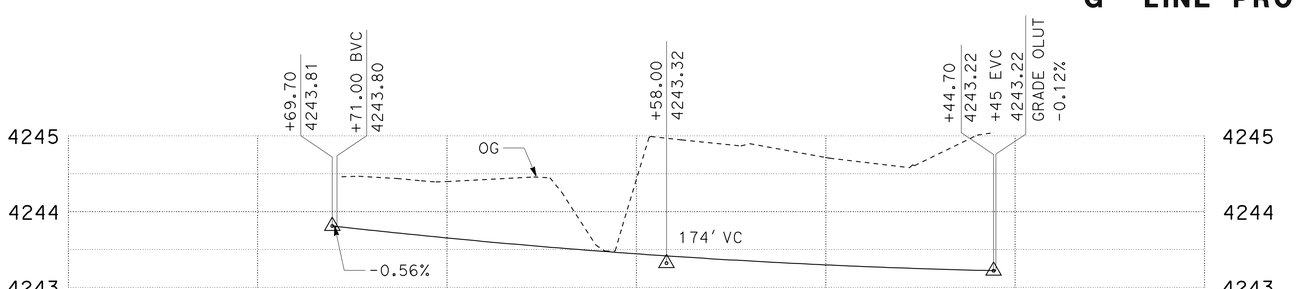

"H" LINE PROFILE

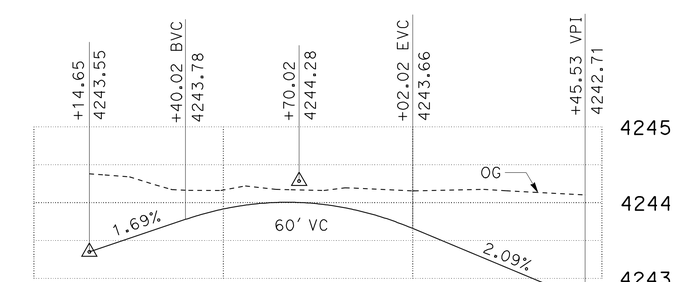

"B" LINE PROFILE

CONSTRUCTION DETAILS

SCALE: 1" = 20' HORIZ
1" = 2' VERT

C-8

REVISED BY | DATE REVISED

GREG KINGSFIELD | STEVE THORNE

CALCULATED-DESIGNED BY | CHECKED BY

FUNCTIONAL SUPERVISOR: STEVE THORNE

STATE OF CALIFORNIA - DEPARTMENT OF TRANSPORTATION
Caltrans® HYDRAULICS DESIGN

p:\proj1\02\4c010_plans\pse\SUBMIT_TO_HQ\24c010ga008.dgn

LAST REVISION 07-06-10 | DATE PLOTTED => 13-JUL-2010 TIME PLOTTED => 14:05

Dist	COUNTY	ROUTE	POST MILES TOTAL PROJECT	SHEET No.	TOTAL SHEETS
02	Sis	97	40.1/54.1	22	114

REGISTERED CIVIL ENGINEER 07-06-02 DATE

07-12-10
PLANS APPROVAL DATE

REGISTERED PROFESSIONAL ENGINEER GREG KINGSFIELD No. C76297 Exp 6-30-12 CIVIL STATE OF CALIFORNIA

THE STATE OF CALIFORNIA OR ITS OFFICERS OR AGENTS SHALL NOT BE RESPONSIBLE FOR THE ACCURACY OR COMPLETENESS OF SCANNED COPIES OF THIS PLAN SHEET.

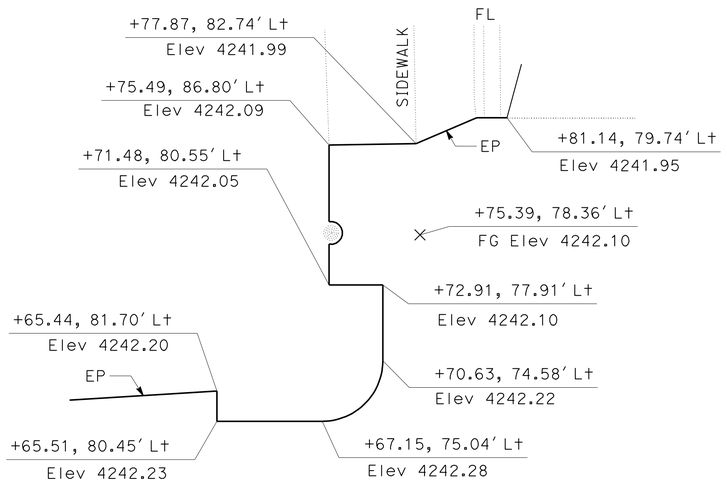

DETAIL A
NO SCALE

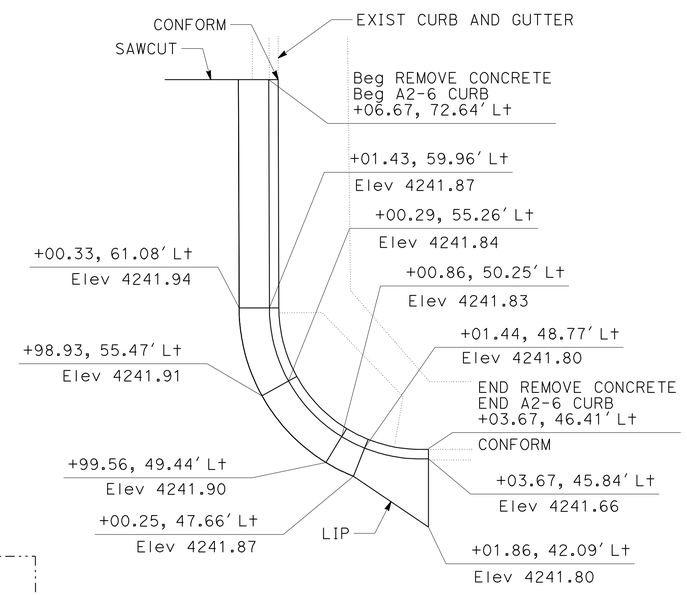

DETAIL B
NO SCALE

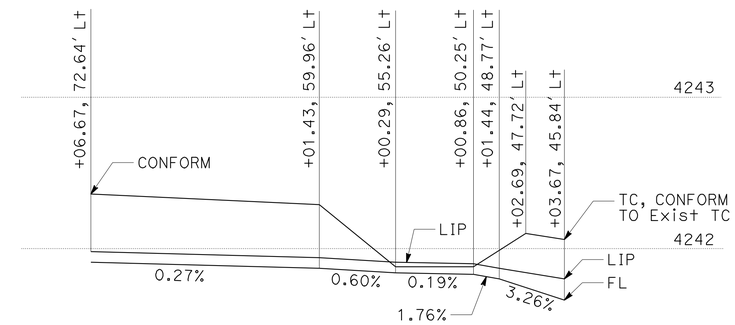

FLOWLINE PROFILE
DETAIL B
NO SCALE

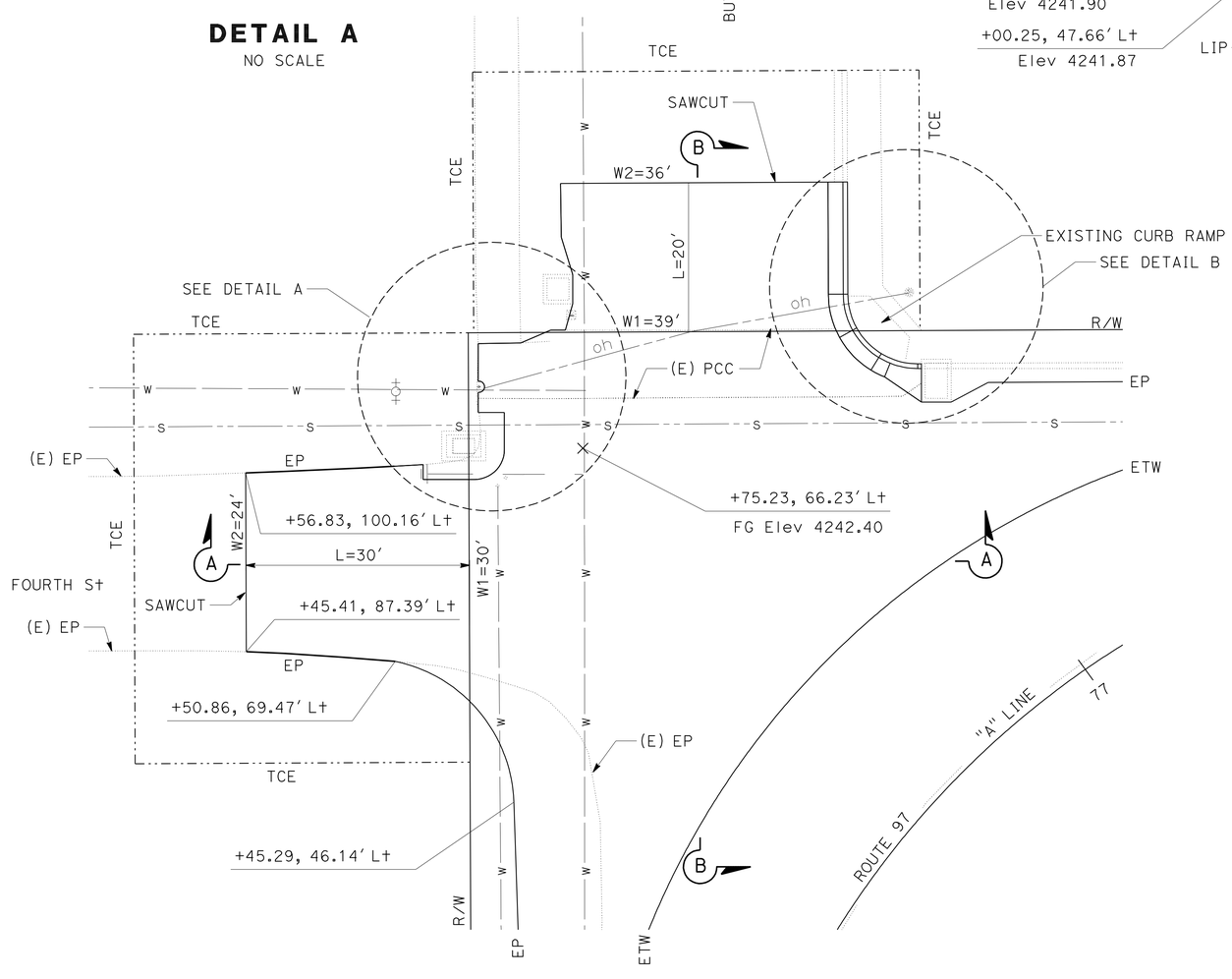

FOURTH AND BUTTE STREET CURB DETAIL
SCALE: 1" = 10'

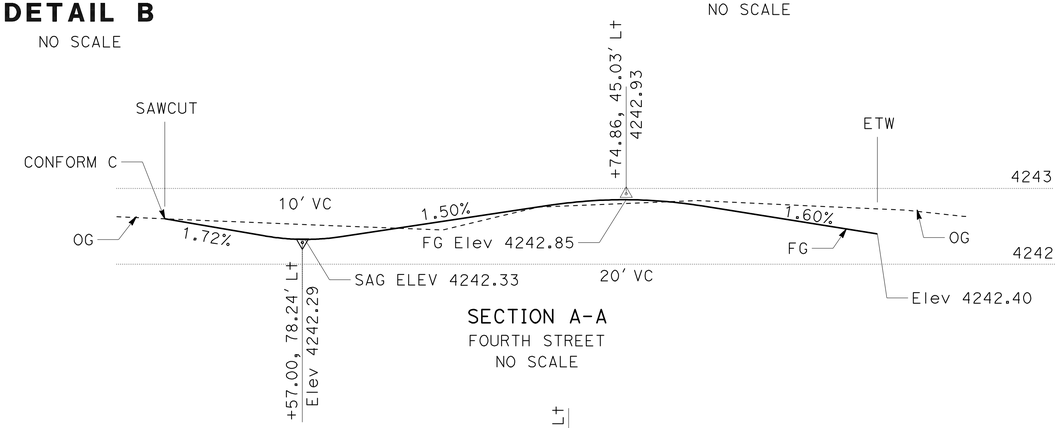

SECTION A-A
FOURTH STREET
NO SCALE

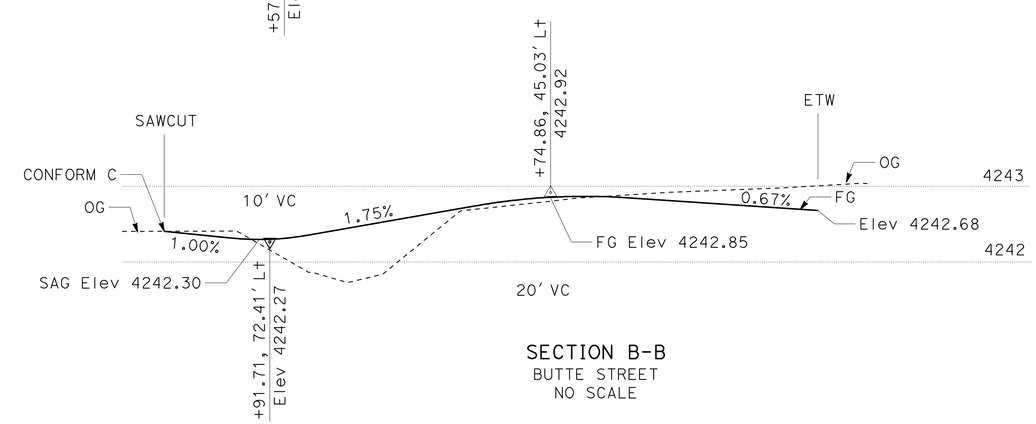

SECTION B-B
BUTTE STREET
NO SCALE

CONSTRUCTION DETAILS
SCALE AS SHOWN **C-9**

REVISED BY | DATE REVISED
CALCULATED-DESIGNED BY | CHECKED BY
FUNCTIONAL SUPERVISOR: STEVE THORNE

STATE OF CALIFORNIA - DEPARTMENT OF TRANSPORTATION
Caltrans® HYDRAULICS DESIGN

LAST REVISION 07-06-10 | DATE PLOTTED => 14-JUL-2010 | TIME PLOTTED => 07:27

p:\proj1\02\4c010_plans\pse\SUBMIT_TO_HQ\24c010ga009.dgn

Dist	COUNTY	ROUTE	POST MILES TOTAL PROJECT	SHEET No.	TOTAL SHEETS
02	Sis	97	40.1/54.1	23	114

REGISTERED CIVIL ENGINEER 07-06-02 DATE

7-12-10
PLANS APPROVAL DATE

REGISTERED PROFESSIONAL ENGINEER GREG KINGSFIELD No. C76297 Exp 6-30-12 CIVIL STATE OF CALIFORNIA

THE STATE OF CALIFORNIA OR ITS OFFICERS OR AGENTS SHALL NOT BE RESPONSIBLE FOR THE ACCURACY OR COMPLETENESS OF SCANNED COPIES OF THIS PLAN SHEET.

NOTE:

1. SEE SHEET C-11 FOR SEDTIONS AND PROFILES

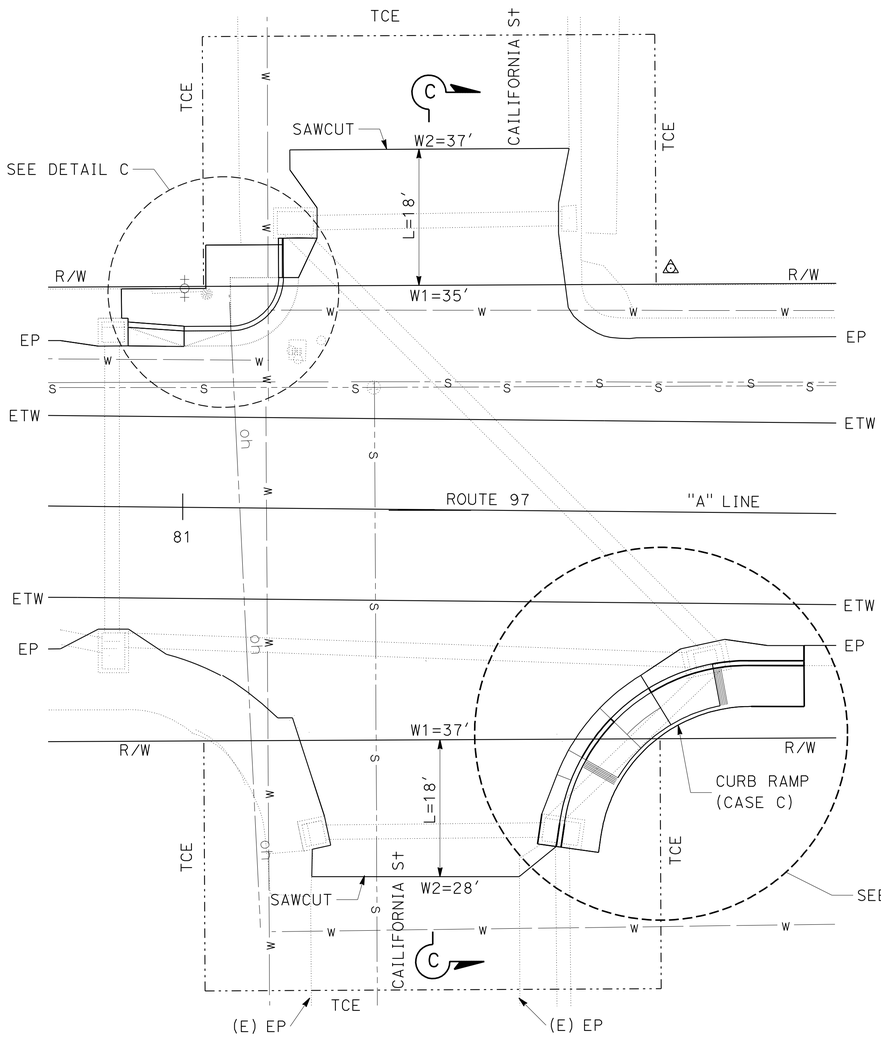

CALIFORNIA STREET CURB DETAIL

SCALE: 1"=10'

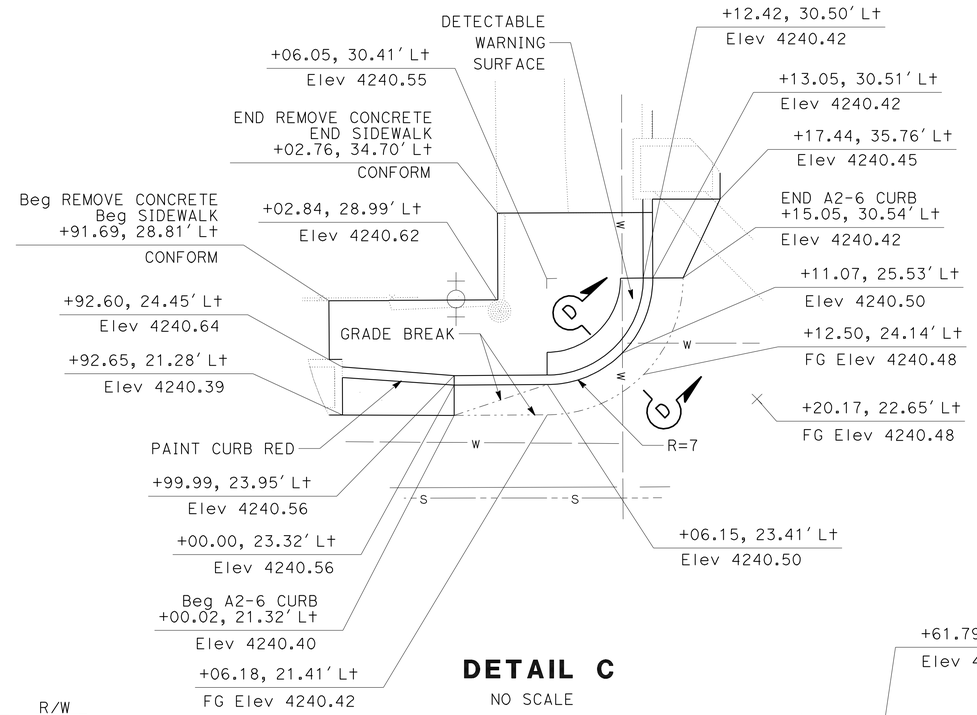

DETAIL C

NO SCALE

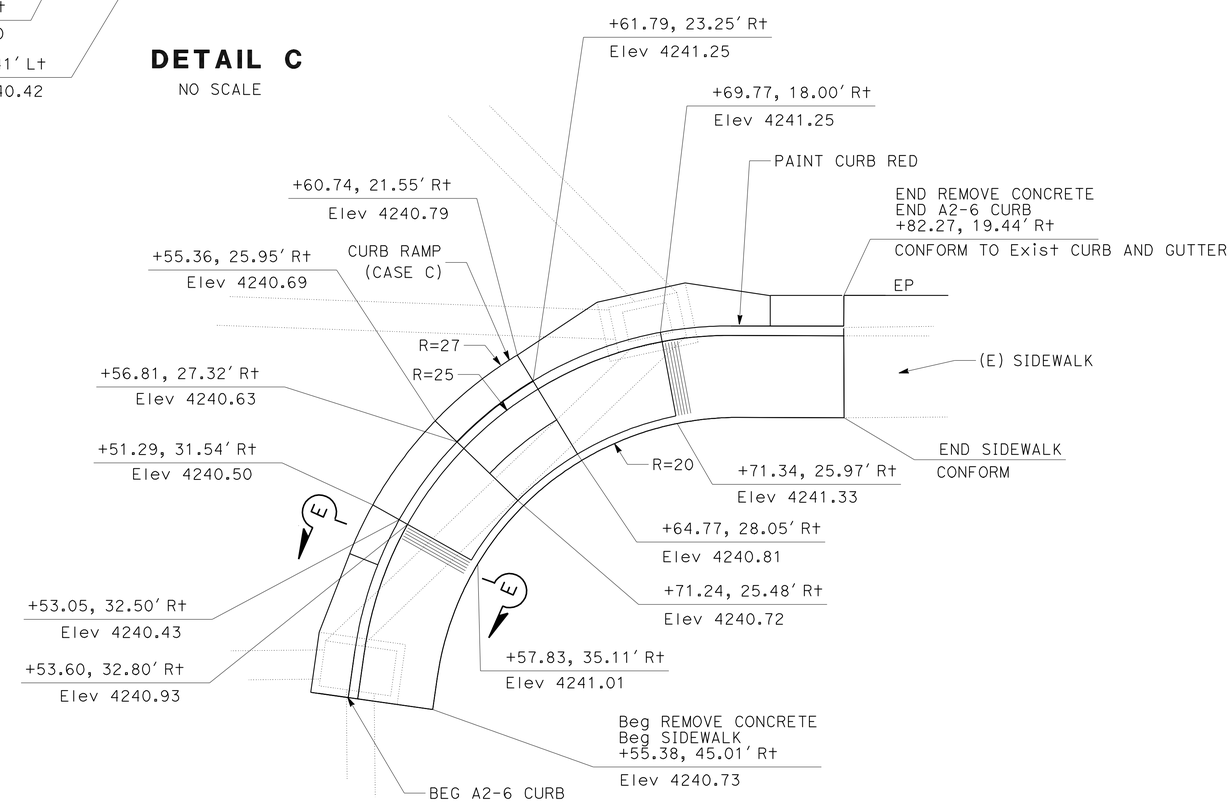

DETAIL D

NO SCALE

CONSTRUCTION DETAILS

SCALE AS SHOWN

C-10

REVISED BY | DATE REVISED

CALCULATED-DESIGNED BY | CHECKED BY

FUNCTIONAL SUPERVISOR: STEVE THORNE

STATE OF CALIFORNIA - DEPARTMENT OF TRANSPORTATION

Caltrans® HYDRAULICS DESIGN

p:\proj1\02\4c010_plans\pse\SUBMIT_TO_HQ\24c010ga010.dgn

LAST REVISION | DATE PLOTTED => 14-JUL-2010 | TIME PLOTTED => 07:30 | 07-06-10

Dist	COUNTY	ROUTE	POST MILES TOTAL PROJECT	SHEET No.	TOTAL SHEETS
02	Sis	97	40.1/54.1	24	114

REGISTERED CIVIL ENGINEER 07-06-02 DATE

7-12-10
PLANS APPROVAL DATE

REGISTERED PROFESSIONAL ENGINEER GREG KINGSFIELD No. C76297 Exp 6-30-12 CIVIL STATE OF CALIFORNIA

THE STATE OF CALIFORNIA OR ITS OFFICERS OR AGENTS SHALL NOT BE RESPONSIBLE FOR THE ACCURACY OR COMPLETENESS OF SCANNED COPIES OF THIS PLAN SHEET.

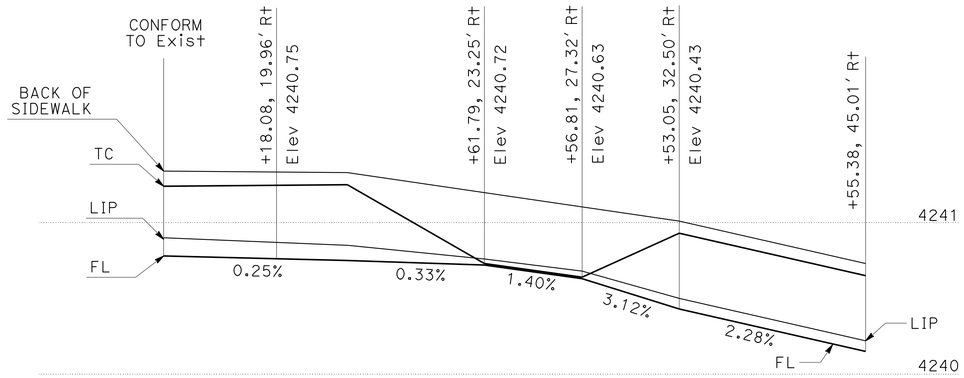

FLOWLINE PROFILE
DETAIL D
NO SCALE

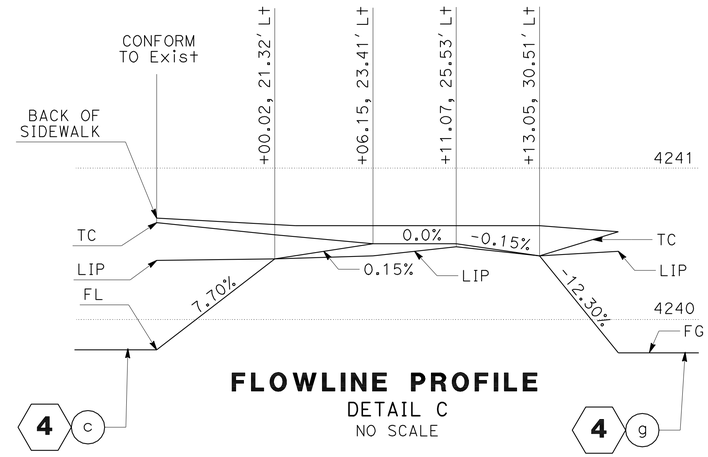

FLOWLINE PROFILE
DETAIL C
NO SCALE

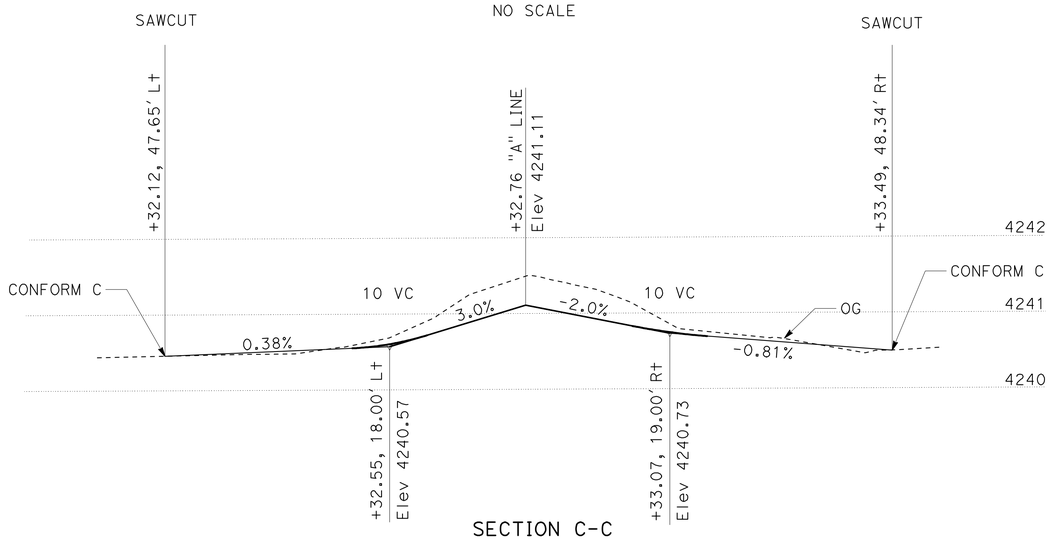

SECTION C-C
SEE SHEET C-10
NO SCALE

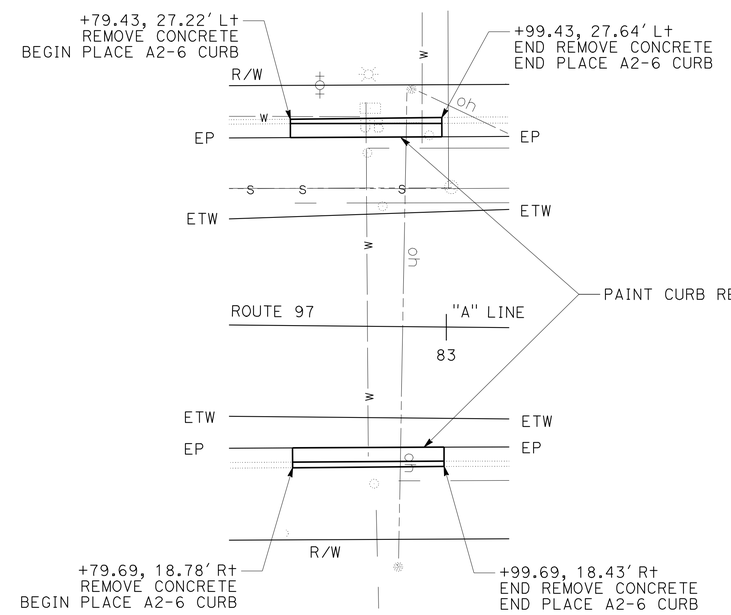

PLACE A2-6 CURB
SCALE: 1"=10'

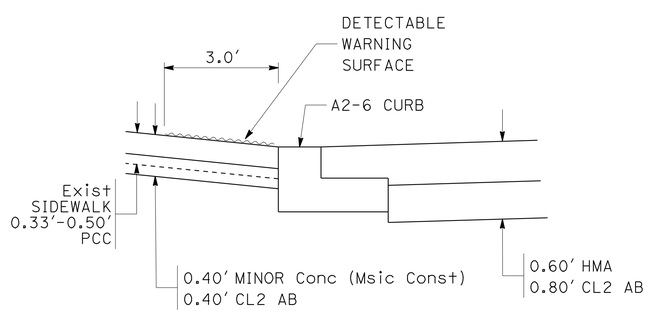

SECTION D-D
SEE SHEET C-10
NO SCALE

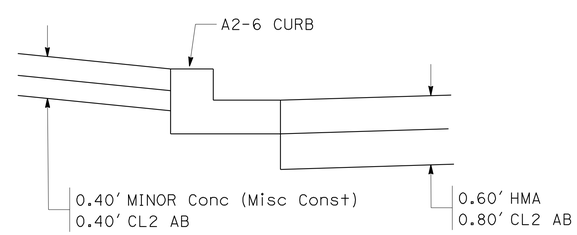

SECTION E-E
SEE SHEET C-10
NO SCALE

CONSTRUCTION DETAILS
SCALE AS SHOWN

C-11

STATE OF CALIFORNIA - DEPARTMENT OF TRANSPORTATION
HYDRAULICS DESIGN
FUNCTIONAL SUPERVISOR: STEVE THORNE
CALCULATED-DESIGNED BY
CHECKED BY
REVISED BY
DATE REVISED

p:\proj1\02\4c010_plans\pse\SUBMIT_TO_HQ\24c010ga011.dgn

LAST REVISION 07-06-10
DATE PLOTTED => 14-JUL-2010
TIME PLOTTED => 10:35

Dist	COUNTY	ROUTE	POST MILES TOTAL PROJECT	SHEET No.	TOTAL SHEETS
02	Sis	97	40.1/54.1	25	114

REGISTERED CIVIL ENGINEER 07-06-02 DATE

7-12-10
PLANS APPROVAL DATE

REGISTERED PROFESSIONAL ENGINEER GREG KINGSFIELD No. C76297 Exp 6-30-12 CIVIL STATE OF CALIFORNIA

THE STATE OF CALIFORNIA OR ITS OFFICERS OR AGENTS SHALL NOT BE RESPONSIBLE FOR THE ACCURACY OR COMPLETENESS OF SCANNED COPIES OF THIS PLAN SHEET.

NOTE:

1. FOR COMPLETE RIGHT OF WAY DATA, SEE RIGHT OF WAY RECORD MAPS AT DISTRICT OFFICE.

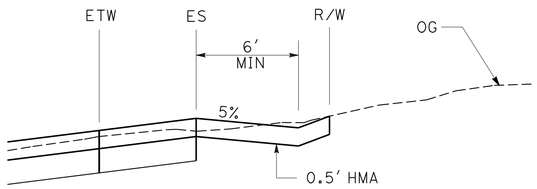

SECTION C-C

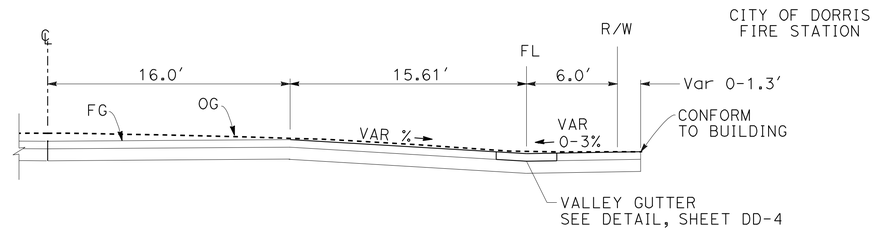

TYP SECTION A-A

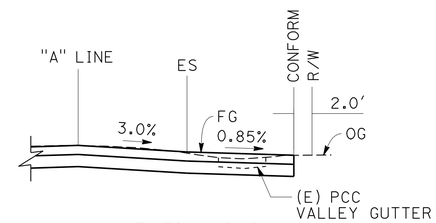

SECTION B-B

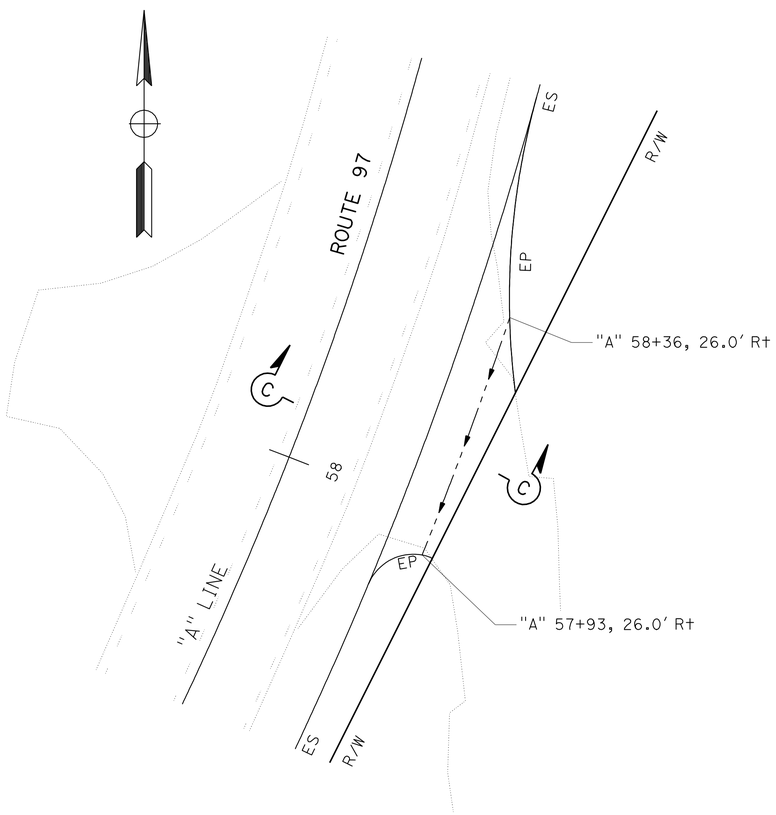

PLAN

FLOWLINE AT ROAD CONNECTION

"A" 57+93, 26.0' Rt TO "A" 58+36, 26.0' Rt

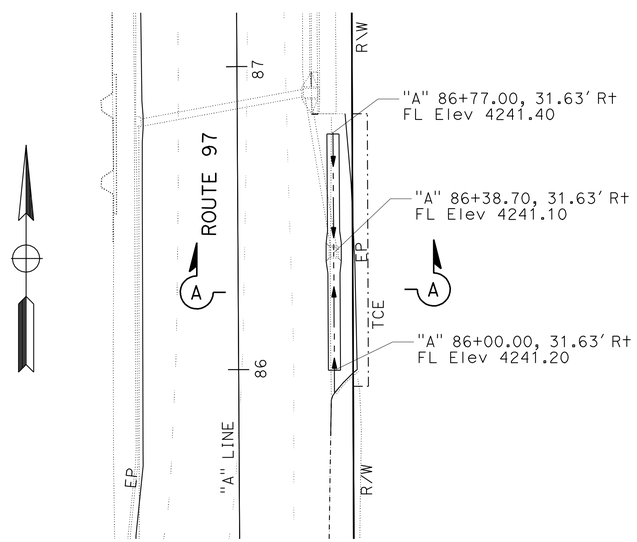

PLAN

FLOWLINE DETAIL

"A" 85+99.63, 31.63' Rt TO "A" 86+78.27,31.63' Rt

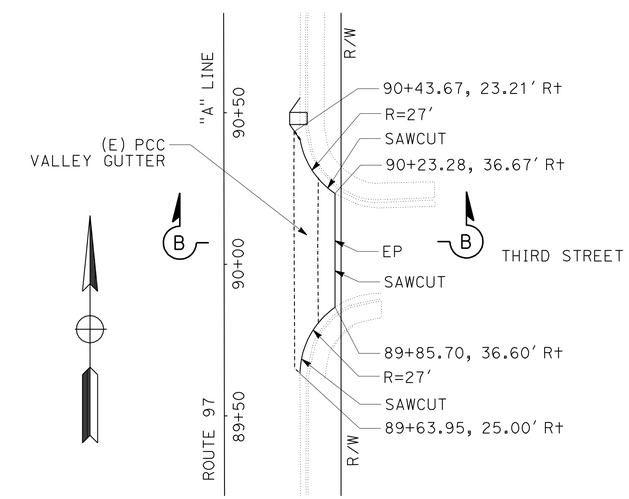

PLAN

REMOVE CONCRETE DETAIL

"A" 89+63.95, 25.00' Rt TO "A" 90+43.67, 23.21' Rt

CONSTRUCTION DETAILS

NO SCALE

C-12

STATE OF CALIFORNIA - DEPARTMENT OF TRANSPORTATION
Caltrans HYDRAULICS DESIGN

FUNCTIONAL SUPERVISOR: STEVE THORNE
CALCULATED-DESIGNED BY: GREG KINGSFIELD
CHECKED BY: STEVE ALAWAR
REVISED BY
DATE REVISED

p:\proj\02\4c010_plans\pse\SUBMIT_TO_HQ\24c010ga012.dgn

LAST REVISION DATE PLOTTED => 13-JUL-2010
TIME PLOTTED => 14:05
07-06-10

Dist	COUNTY	ROUTE	POST MILES TOTAL PROJECT	SHEET No.	TOTAL SHEETS
02	Sis	97	40.1/54.1	26	114

Mark J. Miller 07-06-10
REGISTERED CIVIL ENGINEER DATE

7-12-10
PLANS APPROVAL DATE

REGISTERED PROFESSIONAL ENGINEER MARK MILLER No. C48454 Exp. 6-30-12 CIVIL STATE OF CALIFORNIA

THE STATE OF CALIFORNIA OR ITS OFFICERS OR AGENTS SHALL NOT BE RESPONSIBLE FOR THE ACCURACY OR COMPLETENESS OF SCANNED COPIES OF THIS PLAN SHEET.

NOTE:

1. EXACT LOCATION TO BE DETERMINED BY THE ENGINEER.

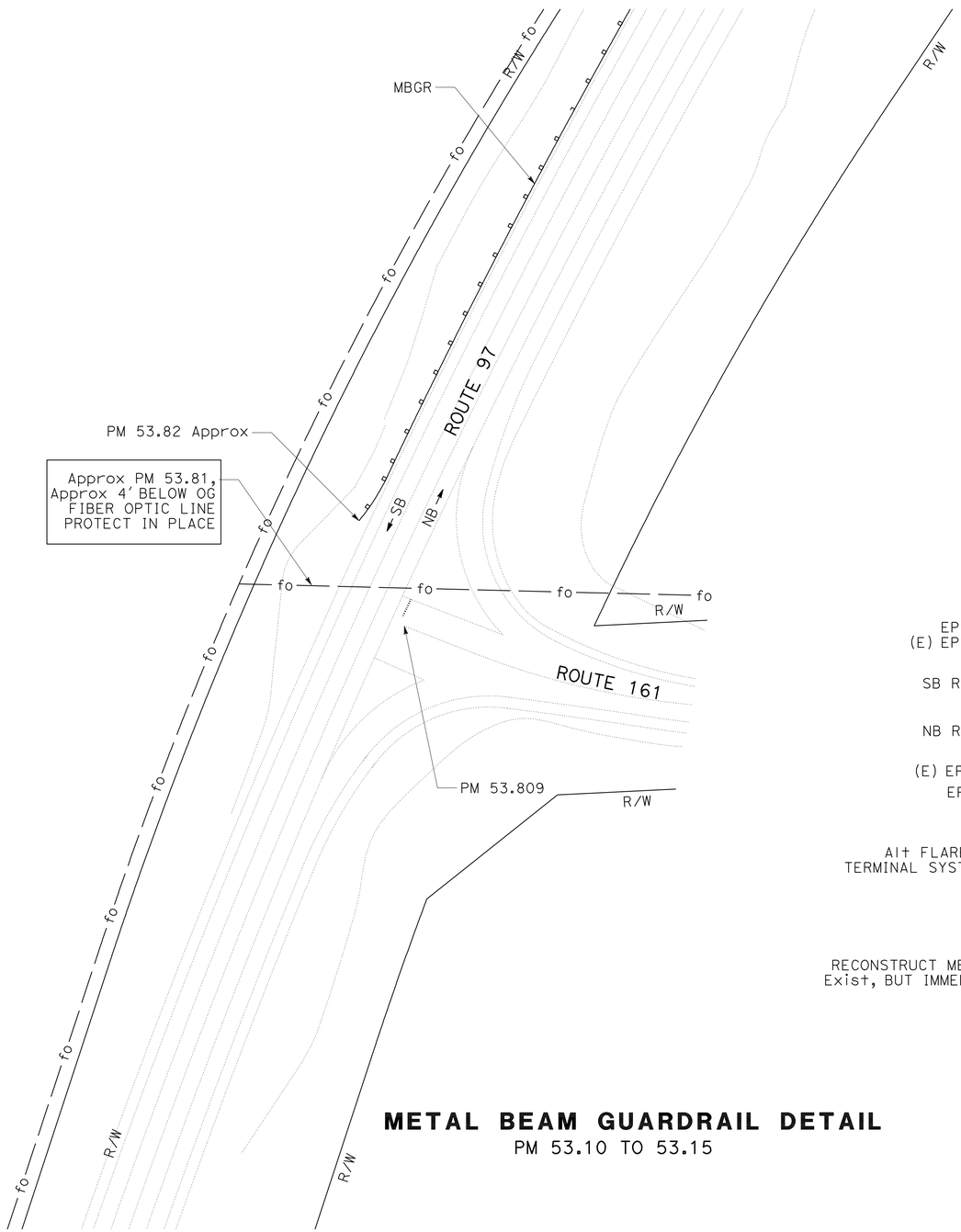

METAL BEAM GUARDRAIL DETAIL

PM 53.10 TO 53.15

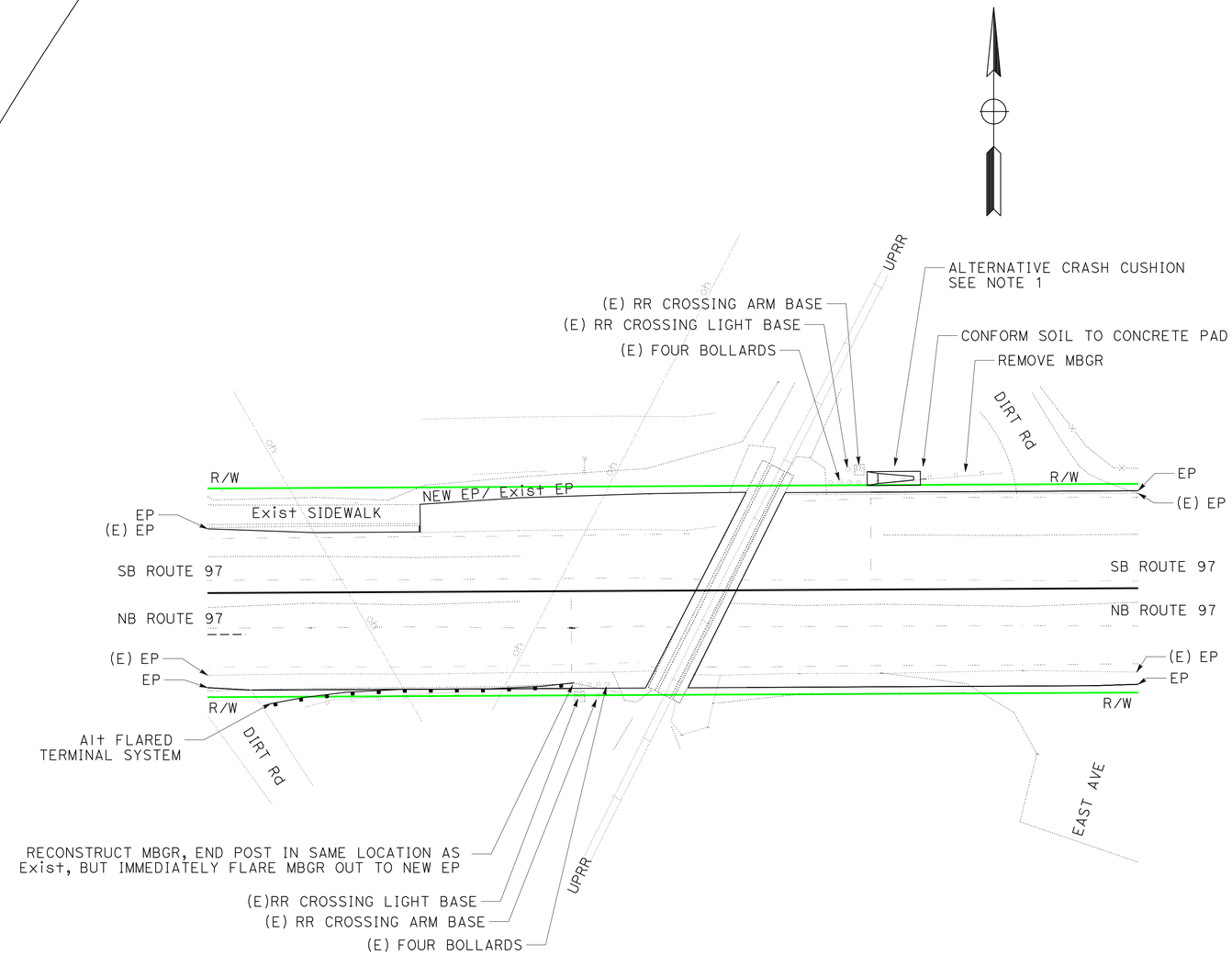

GUARDRAIL AND CRASH CUSHION DETAIL

Sis-97-51.07

CONSTRUCTION DETAILS

NO SCALE

C-13

REVISED BY | DATE REVISED
SSAL PRRETTO | GRRDARKINGSEERLD
CALCULATED-DESIGNED BY | CHECKED BY
FUNCTIONAL SUPERVISOR | MARK MILLER

STATE OF CALIFORNIA - DEPARTMENT OF TRANSPORTATION
Caltrans® ADVANCE PLANNING

p:\proj1\02\4c010_plans\pse\SUBMIT_TO_HQ\24c010ga013.dgn

LAST REVISION 07-06-10 | DATE PLOTTED => 13-JUL-2010 | TIME PLOTTED => 14:05

Dist	COUNTY	ROUTE	POST MILES TOTAL PROJECT	SHEET No.	TOTAL SHEETS
02	Sis	97	40.1/54.1	27	114

REGISTERED CIVIL ENGINEER 07-06-02 DATE

7-12-10
PLANS APPROVAL DATE

REGISTERED PROFESSIONAL ENGINEER GREG KINGSFIELD No. C76297 Exp 6-30-12 CIVIL STATE OF CALIFORNIA

THE STATE OF CALIFORNIA OR ITS OFFICERS OR AGENTS SHALL NOT BE RESPONSIBLE FOR THE ACCURACY OR COMPLETENESS OF SCANNED COPIES OF THIS PLAN SHEET.

NOTES:

1. FOR COMPLETE RIGHT OF WAY AND ACCURATE ACCESS DATA, SEE RIGHT OF WAY RECORD MAPS AT DISTRICT OFFICE.
2. DITCH Exc IS TO TCE ONLY, EXCAVATION BEYOND TCE BY OTHERS.

LEGEND

- DRAINAGE SYSTEM No.
- DRAINAGE UNIT
- FLOW DIRECTION
- MARKER (CULVERT)
- TCE — TEMPORARY CONSTRUCTION EASEMENT

ABBREVIATIONS

DD DRAINAGE DETAIL SHEET
TCE TEMPORARY CONSTRUCTION EASEMENT

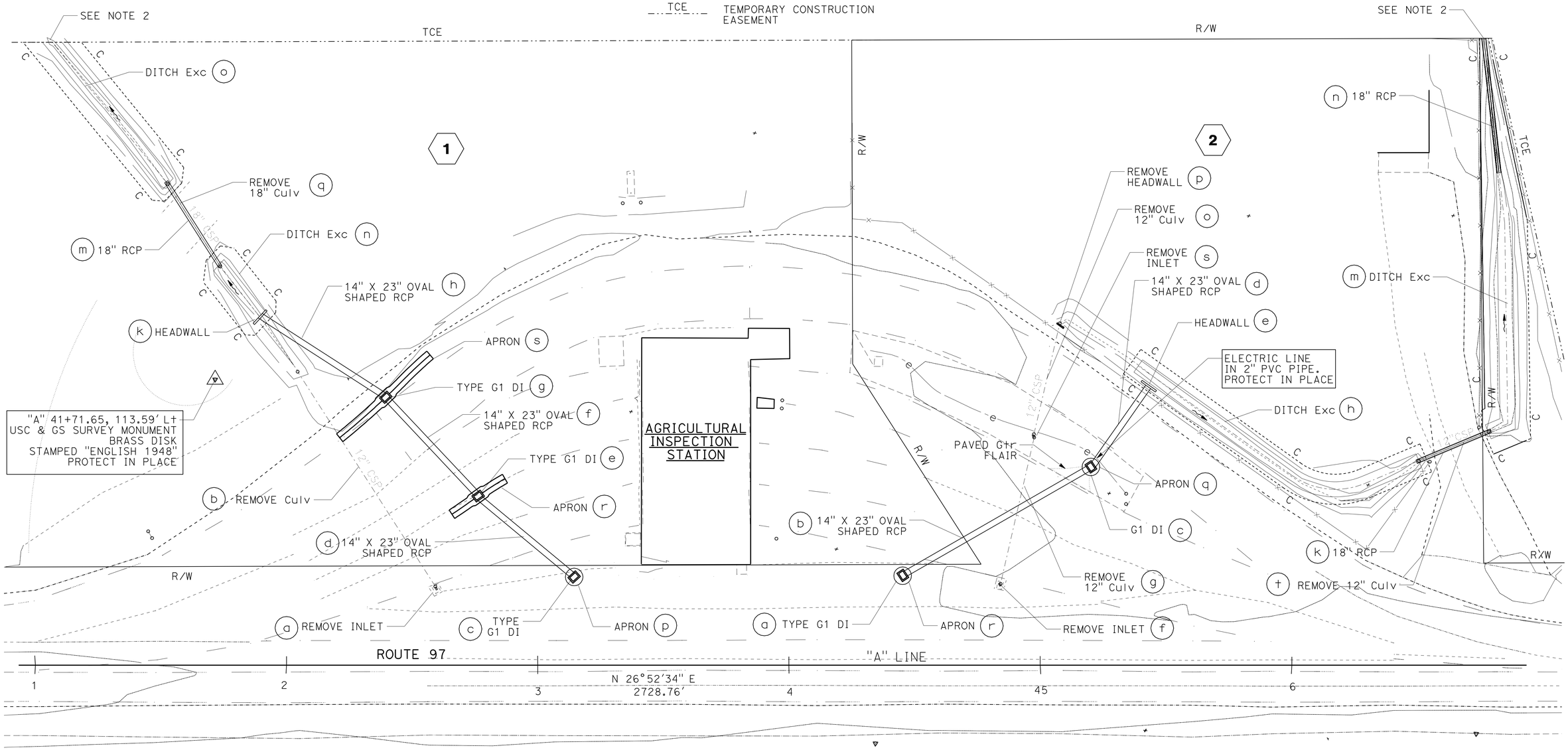

PLAN

DRAINAGE PLAN

SCALE: 1" = 20'

D-1

THIS PLAN ACCURATE FOR DRAINAGE WORK ONLY

REVISED BY | DATE REVISED
GREG KINGSFIELD | STEVE ALAWAR
CALCULATED-DESIGNED BY | CHECKED BY
FUNCTIONAL SUPERVISOR | STEVE THORNE

STATE OF CALIFORNIA - DEPARTMENT OF TRANSPORTATION
Caltrans® HYDRAULICS DESIGN

p:\proj\02\4c010_plans\pse\SUBMIT_TO_HQ\24c010ia001.dgn

LAST REVISION | DATE PLOTTED => 13-JUL-2010 | TIME PLOTTED => 14:06
07-06-10

Dist	COUNTY	ROUTE	POST MILES TOTAL PROJECT	SHEET No.	TOTAL SHEETS
02	Sis	97	40.1/54.1	28	114

REGISTERED CIVIL ENGINEER 07-06-02 DATE

7-12-10
PLANS APPROVAL DATE

REGISTERED PROFESSIONAL ENGINEER GREG KINGSFIELD No. C76297 Exp 6-30-12 CIVIL STATE OF CALIFORNIA

THE STATE OF CALIFORNIA OR ITS OFFICERS OR AGENTS SHALL NOT BE RESPONSIBLE FOR THE ACCURACY OR COMPLETENESS OF SCANNED COPIES OF THIS PLAN SHEET.

NOTE:

1. FOR COMPLETE RIGHT OF WAY DATA, SEE RIGHT OF WAY RECORD MAPS AT DISTRICT OFFICE.

CITY OF DORRIS

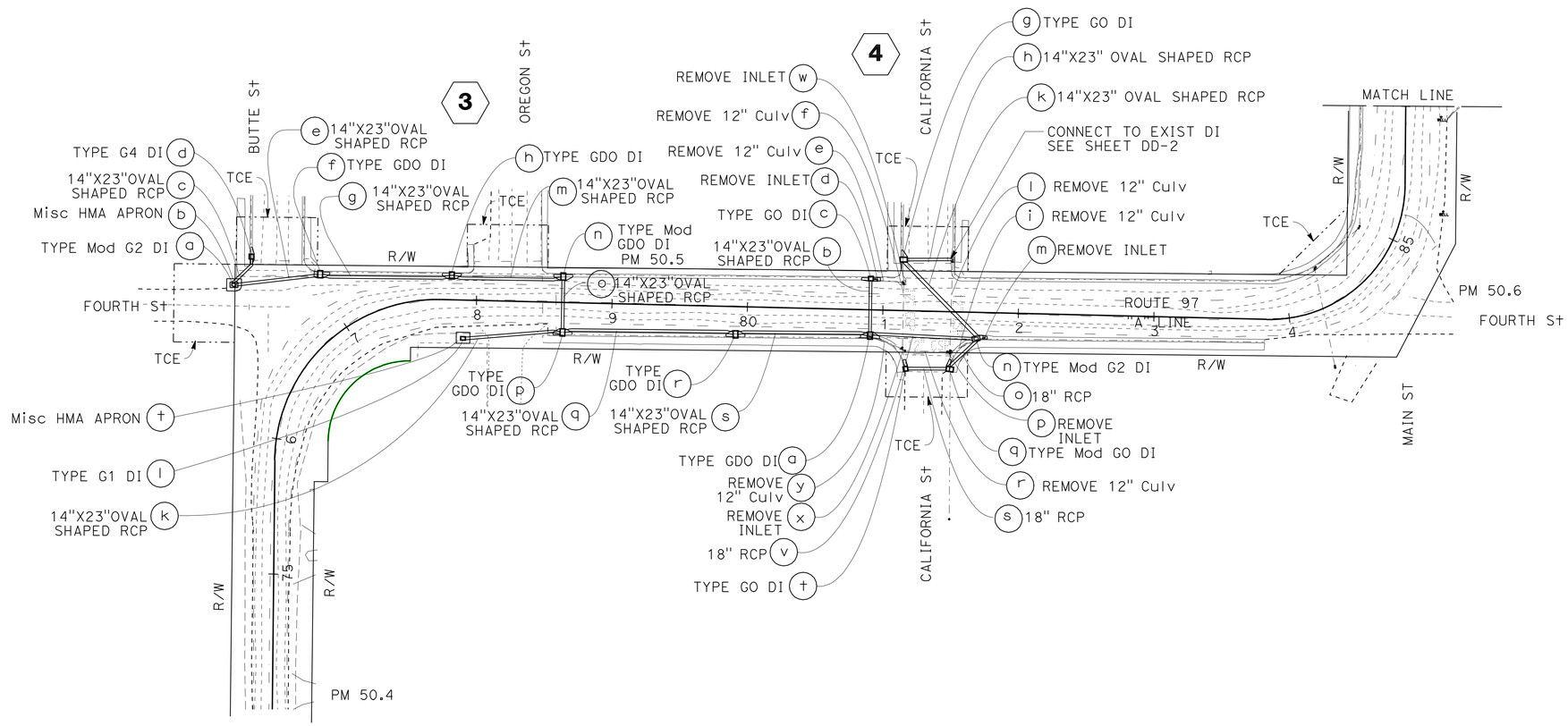

THIS PLAN ACCURATE FOR DRAINAGE WORK ONLY

DRAINAGE PLAN

SCALE: 1" = 50′ **D-2**

REVISED BY	DATE REVISED

CALCULATED-DESIGNED BY: GREG KINGSFIELD
CHECKED BY: STEVE ALAWAR
FUNCTIONAL SUPERVISOR: STEVE THORNE

STATE OF CALIFORNIA - DEPARTMENT OF TRANSPORTATION
Caltrans HYDRAULICS DESIGN

p:\proj1\02\4c010_plans\pse\SUBMIT_TO_HQ\24c010ia002.dgn

LAST REVISION 07-06-10 | DATE PLOTTED => 13-JUL-2010 | TIME PLOTTED => 14:06

BORDER LAST REVISED 7/2/2010 | USERNAME => trcarol | DGN FILE => 24c010ia002.dgn | RELATIVE BORDER SCALE IS IN INCHES 0 1 2 3 | UNIT 0361 | PROJECT NUMBER & PHASE 020002002711

Dist	COUNTY	ROUTE	POST MILES TOTAL PROJECT	SHEET No.	TOTAL SHEETS
02	Sis	97	40.1/54.1	29	114

REGISTERED CIVIL ENGINEER 07-06-02 DATE

7-12-10
PLANS APPROVAL DATE

REGISTERED PROFESSIONAL ENGINEER GREG KINGSFIELD No. C76297 Exp 6-30-12 CIVIL STATE OF CALIFORNIA

THE STATE OF CALIFORNIA OR ITS OFFICERS OR AGENTS SHALL NOT BE RESPONSIBLE FOR THE ACCURACY OR COMPLETENESS OF SCANNED COPIES OF THIS PLAN SHEET.

NOTE:

1. FOR COMPLETE RIGHT OF WAY DATA, SEE RIGHT OF WAY RECORD MAPS AT DISTRICT OFFICE.

CITY OF DORRIS

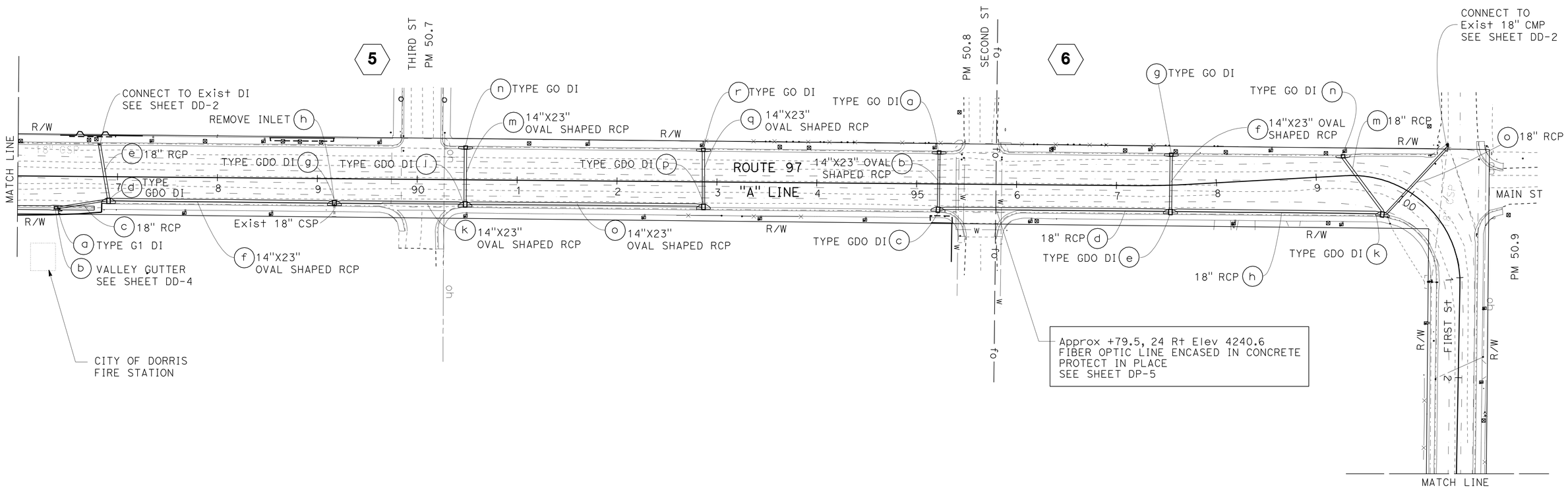

DRAINAGE PLAN

SCALE: 1" = 50'

D-3

THIS PLAN ACCURATE FOR DRAINAGE WORK ONLY

GREG KINGSFIELD — REVISED BY
STEVE ALAWAR — DATE REVISED
CALCULATED-DESIGNED BY
CHECKED BY
FUNCTIONAL SUPERVISOR
STEVE THORNE

STATE OF CALIFORNIA - DEPARTMENT OF TRANSPORTATION
Caltrans® HYDRAULICS DESIGN

p:\proj1\02\4c010_plans\pse\SUBMIT_TO_HQ\24c010ia003.dgn

LAST REVISION DATE PLOTTED => 13-JUL-2010
07-06-10 TIME PLOTTED => 14:06

Dist	COUNTY	ROUTE	POST MILES TOTAL PROJECT	SHEET No.	TOTAL SHEETS
02	Sis	97	40.1/54.1	30	114

REGISTERED CIVIL ENGINEER 07-06-02 DATE

7-12-10
PLANS APPROVAL DATE

REGISTERED PROFESSIONAL ENGINEER GREG KINGSFIELD No. C76297 Exp 6-30-12 CIVIL STATE OF CALIFORNIA

THE STATE OF CALIFORNIA OR ITS OFFICERS OR AGENTS SHALL NOT BE RESPONSIBLE FOR THE ACCURACY OR COMPLETENESS OF SCANNED COPIES OF THIS PLAN SHEET.

NOTE:

1. FOR COMPLETE RIGHT OF WAY AND ACCURATE ACCESS DATA, SEE RIGHT OF WAY RECORD MAPS AT DISTRICT OFFICE.

CITY OF DORRIS

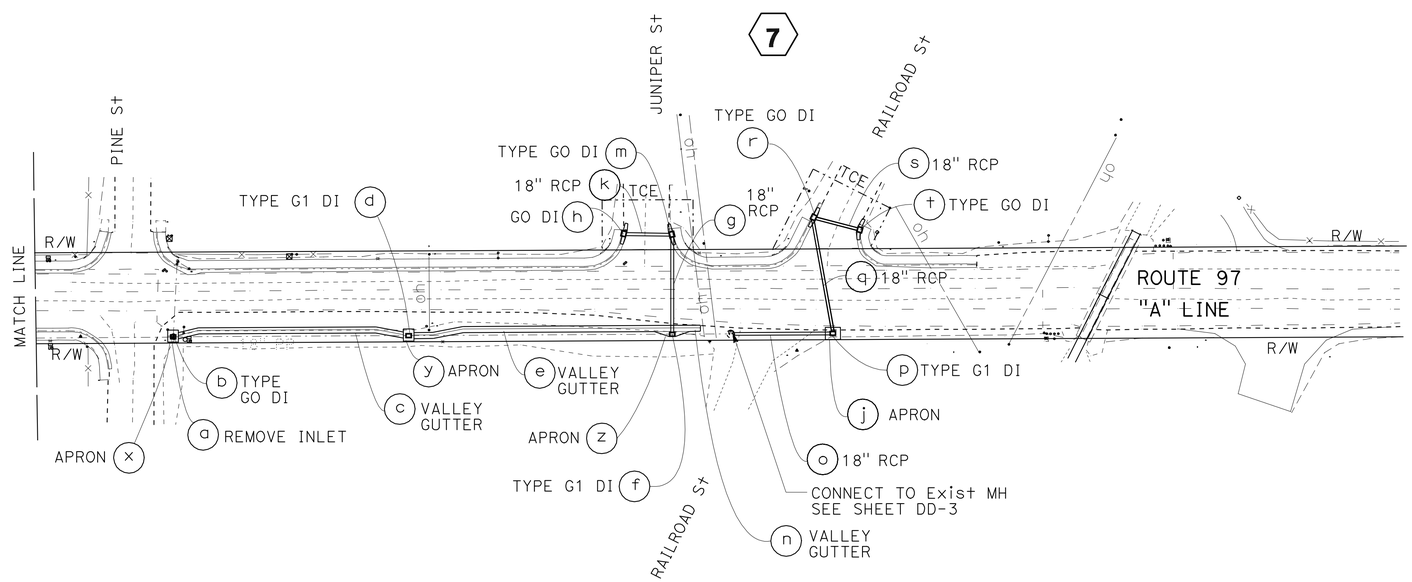

THIS PLAN ACCURATE FOR DRAINAGE WORK ONLY

DRAINAGE PLAN

SCALE: 1" = 50'

D-4

REVISED BY | DATE REVISED

GREG KINGSFIELD | STEVE ALAWAR

CALCULATED-DESIGNED BY | CHECKED BY

FUNCTIONAL SUPERVISOR: STEVE THORNE

STATE OF CALIFORNIA - DEPARTMENT OF TRANSPORTATION

Caltrans® HYDRAULICS DESIGN

p:\proj\02\4c010_plans\pse\SUBMIT_TO_HQ\24c010ia004.dgn

LAST REVISION | DATE PLOTTED => 13-JUL-2010 | 07-06-10 | TIME PLOTTED => 14:06

BORDER LAST REVISED 7/2/2010 | USERNAME => trcarol | DGN FILE => 24c010ia004.dgn | RELATIVE BORDER SCALE IS IN INCHES 0 1 2 3 | UNIT 0361 | PROJECT NUMBER & PHASE 020002002711

Dist	COUNTY	ROUTE	POST MILES TOTAL PROJECT	SHEET No.	TOTAL SHEETS
02	Sis	97	40.1/54.1	31	114

REGISTERED CIVIL ENGINEER 07-06-02 DATE

7-12-10
PLANS APPROVAL DATE

REGISTERED PROFESSIONAL ENGINEER GREG KINGSFIELD No. C76297 Exp 6-30-12 CIVIL STATE OF CALIFORNIA

THE STATE OF CALIFORNIA OR ITS OFFICERS OR AGENTS SHALL NOT BE RESPONSIBLE FOR THE ACCURACY OR COMPLETENESS OF SCANNED COPIES OF THIS PLAN SHEET.

LEGEND

11.25° HORIZ ELBOW

VIEW LOOKING INTO PIPE

ABBREVIATIONS

DD DRAINAGE DETAIL SHEET
GFL UNDEPRESSED FLOW LINE

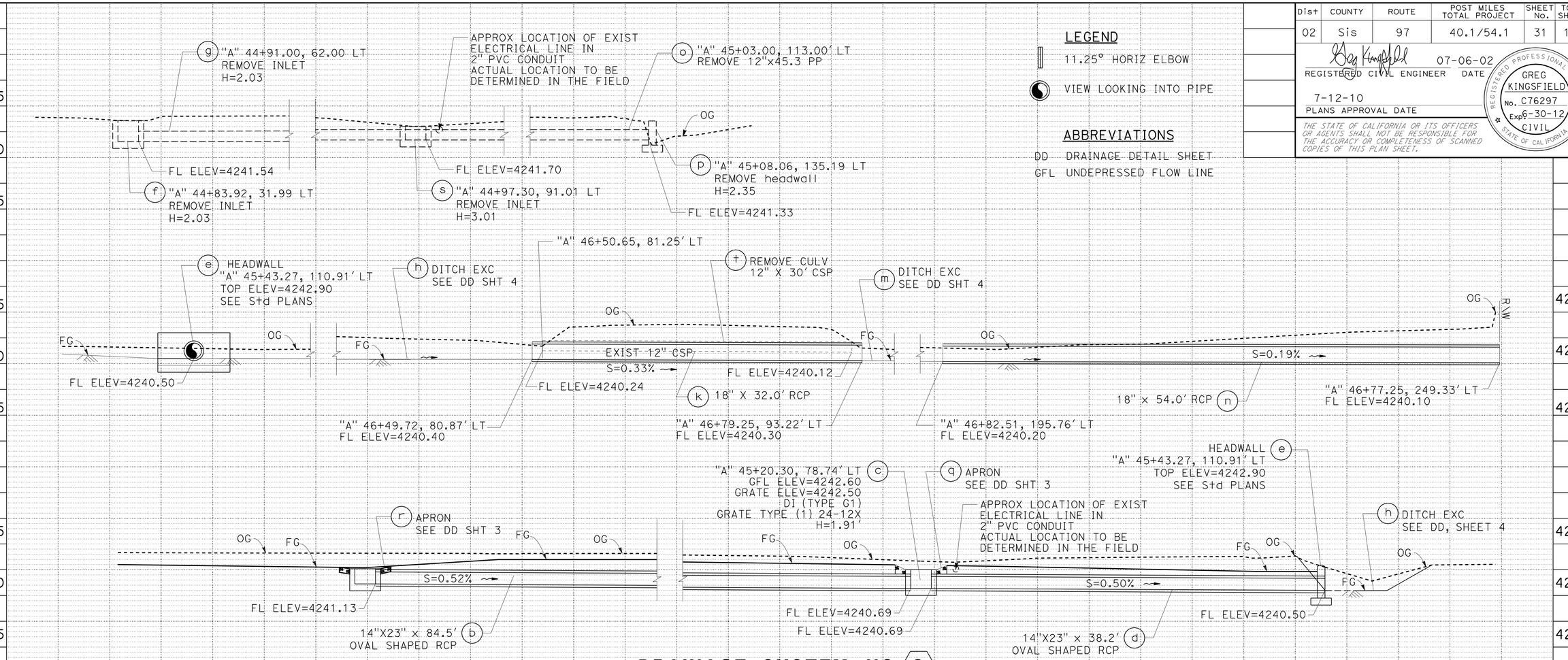

DRAINAGE SYSTEM NO. 2

"A" 44+45.00', 35.50' LT TO "A" 46+77.25, 249.33' LT

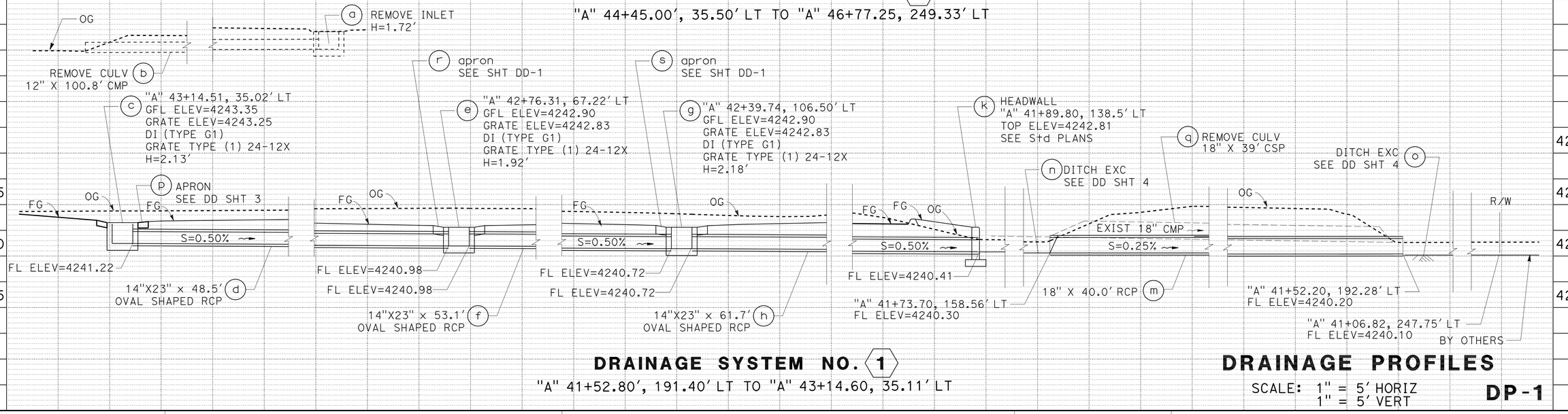

DRAINAGE SYSTEM NO. 1

"A" 41+52.80', 191.40' LT TO "A" 43+14.60, 35.11' LT

DRAINAGE PROFILES

SCALE: 1" = 5' HORIZ
1" = 5' VERT

DP-1

REVISED BY | DATE REVISED
STEVE ALAWAR | GREG KINGSFIELD
CALCULATED-DESIGNED BY | CHECKED BY
FUNCTIONAL SUPERVISOR: STEVE THORNE

STATE OF CALIFORNIA - DEPARTMENT OF TRANSPORTATION
Caltrans® HYDRAULICS DESIGN

p:\proj\02\4c010_plans\pse\SUBMIT_TO_HQ\24c010ib001.dgn

DATE PLOTTED => 17-AUG-2010
TIME PLOTTED => 13:46
LAST REVISION 07-06-10

Dist	COUNTY	ROUTE	POST MILES TOTAL PROJECT	SHEET No.	TOTAL SHEETS
02	Sis	97	40.1/54.1	32	114

REGISTERED CIVIL ENGINEER 07-06-02 DATE

7-12-10
PLANS APPROVAL DATE

REGISTERED PROFESSIONAL ENGINEER GREG KINGSFIELD No. C76297 Exp 6-30-12 CIVIL STATE OF CALIFORNIA

THE STATE OF CALIFORNIA OR ITS OFFICERS OR AGENTS SHALL NOT BE RESPONSIBLE FOR THE ACCURACY OR COMPLETENESS OF SCANNED COPIES OF THIS PLAN SHEET.

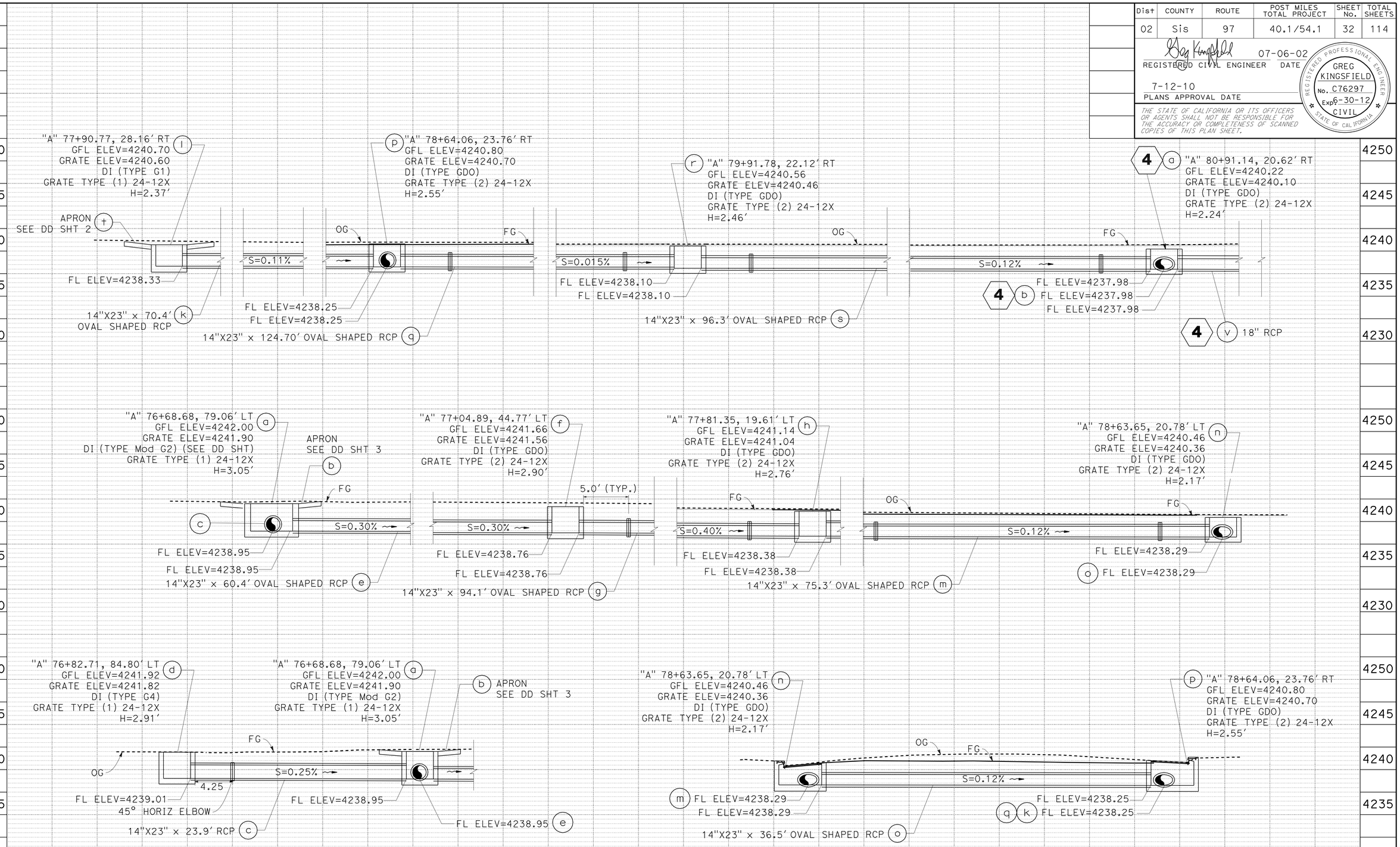

DRAINAGE SYSTEM NO. 3

"A" 77+04.89, 44.75' LT TO "A" 79+91.78, 22.12' RT

DRAINAGE PROFILES

SCALE: 1" = 5' HORIZ
1" = 5' VERT

DP-2

STATE OF CALIFORNIA - DEPARTMENT OF TRANSPORTATION
Caltrans® HYDRAULICS DESIGN

FUNCTIONAL SUPERVISOR: STEVE THORNE
CALCULATED-DESIGNED BY: STEVE ALAWAR
CHECKED BY: GREG KINGSFIELD
REVISED BY / DATE REVISED

p:\proj1\02\4c010_plans\pse\SUBMIT_TO_HQ\24c010ib002.dgn

LAST REVISION | DATE PLOTTED => 17-AUG-2010
07-06-10 | TIME PLOTTED => 13:47

Dist	COUNTY	ROUTE	POST MILES TOTAL PROJECT	SHEET No.	TOTAL SHEETS
02	Sis	97	40.1/54.1	33	114

REGISTERED CIVIL ENGINEER 07-06-02 DATE

7-12-10
PLANS APPROVAL DATE

REGISTERED PROFESSIONAL ENGINEER GREG KINGSFIELD No. C76297 Exp 6-30-12 CIVIL STATE OF CALIFORNIA

THE STATE OF CALIFORNIA OR ITS OFFICERS OR AGENTS SHALL NOT BE RESPONSIBLE FOR THE ACCURACY OR COMPLETENESS OF SCANNED COPIES OF THIS PLAN SHEET.

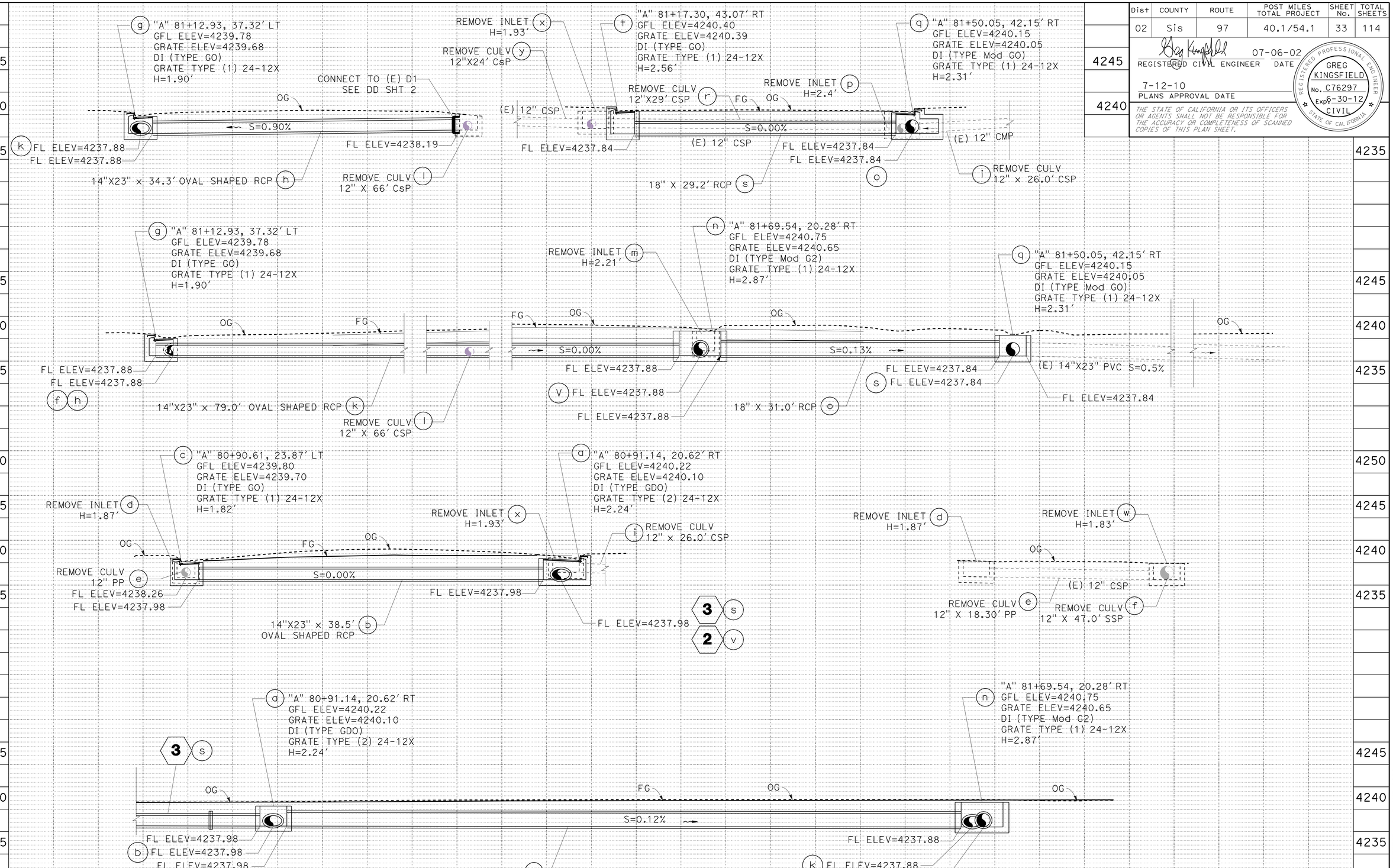

DRAINAGE SYSTEM NO. 4

"A" 79+91.78, 44.75'RT TO "A" 81+76.29, 19.50' RT

DRAINAGE PROFILES

SCALE: 1" = 5' HORIZ
1" = 5' VERT

DP-3

REVISED BY | DATE REVISED
STEVE ALAWAR | GREG KINGSFIELD
CALCULATED-DESIGNED BY | CHECKED BY
FUNCTIONAL SUPERVISOR
STEVE THORNE

STATE OF CALIFORNIA - DEPARTMENT OF TRANSPORTATION
Caltrans HYDRAULICS DESIGN

p:\proj\02\4c010_plans\pse\SUBMIT_TO_HQ\24c010ib003.dgn

LAST REVISION DATE PLOTTED => 17-AUG-2010
TIME PLOTTED => 13:47
07-06-10

Dist	COUNTY	ROUTE	POST MILES TOTAL PROJECT	SHEET No.	TOTAL SHEETS
02	Sis	97	40.1/54.1	34	114

REGISTERED CIVIL ENGINEER 07-06-02 DATE

7-12-10
PLANS APPROVAL DATE

REGISTERED PROFESSIONAL ENGINEER GREG KINGSFIELD No. C76297 Exp 6-30-12 CIVIL STATE OF CALIFORNIA

THE STATE OF CALIFORNIA OR ITS OFFICERS OR AGENTS SHALL NOT BE RESPONSIBLE FOR THE ACCURACY OR COMPLETENESS OF SCANNED COPIES OF THIS PLAN SHEET.

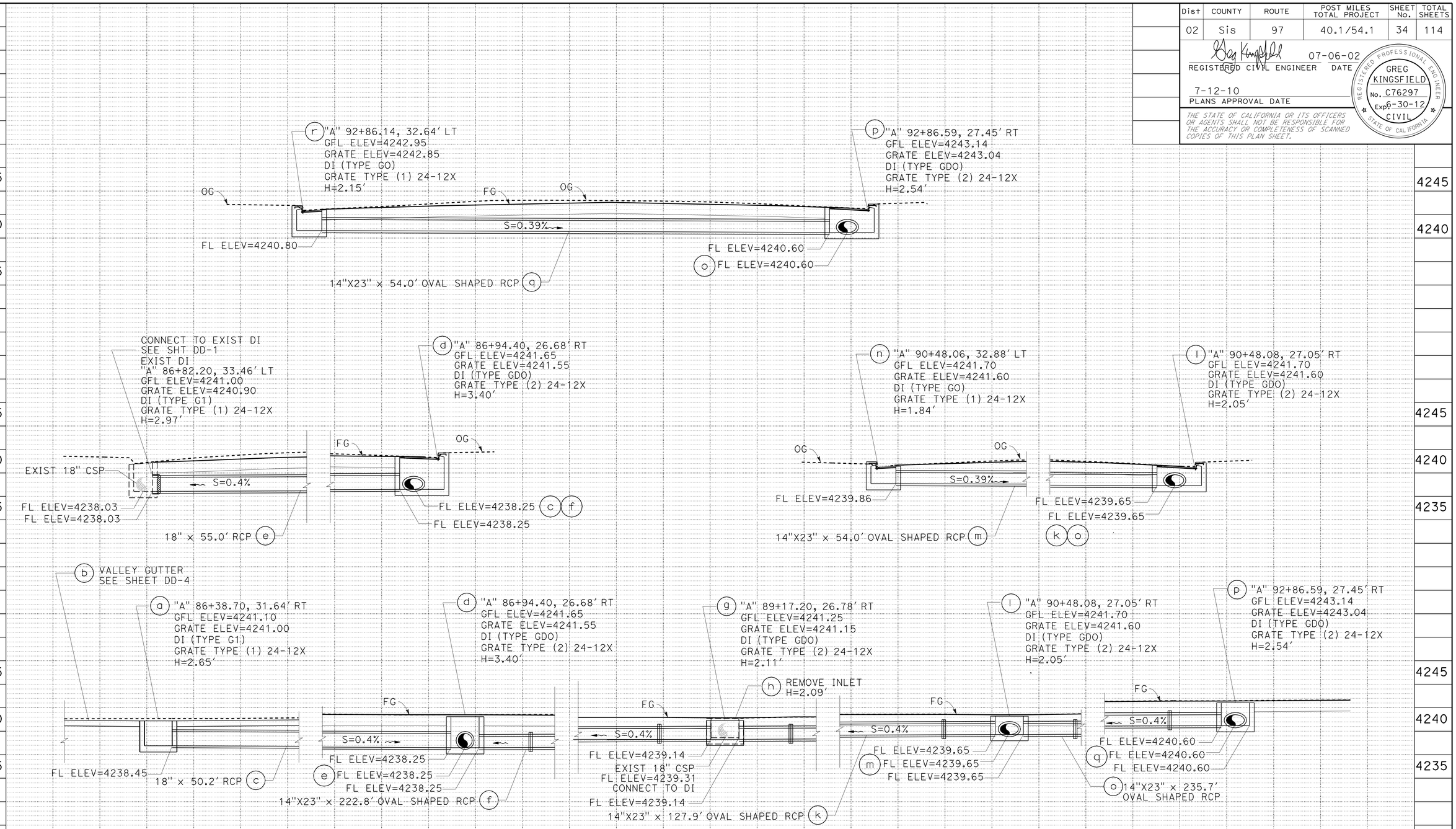

DRAINAGE SYSTEM NO. 5

"A" 86+38.70, 31.64' RT TO "A" 92+86.73, 27.45' RT

DRAINAGE PROFILES

SCALE: 1" = 5' HORIZ
1" = 5' VERT

DP-4

STATE OF CALIFORNIA - DEPARTMENT OF TRANSPORTATION
Caltrans HYDRAULICS DESIGN

FUNCTIONAL SUPERVISOR: STEVE THORNE
CALCULATED-DESIGNED BY: GREG KINGSFIELD
CHECKED BY: STEVE ALAWAR
REVISED BY / DATE REVISED

p:\proj1\02\4c010_plans\pse\SUBMIT_TO_HQ\24c010ib004.dgn

LAST REVISION 07-06-10 | DATE PLOTTED => 17-AUG-2010 | TIME PLOTTED => 13:47

Dist	COUNTY	ROUTE	POST MILES TOTAL PROJECT	SHEET No.	TOTAL SHEETS
02	Sis	97	40.1/54.1	35	114

REGISTERED CIVIL ENGINEER 07-06-02 DATE

7-12-10
PLANS APPROVAL DATE

REGISTERED PROFESSIONAL ENGINEER GREG KINGSFIELD No. C76297 Exp 6-30-12 CIVIL STATE OF CALIFORNIA

THE STATE OF CALIFORNIA OR ITS OFFICERS OR AGENTS SHALL NOT BE RESPONSIBLE FOR THE ACCURACY OR COMPLETENESS OF SCANNED COPIES OF THIS PLAN SHEET.

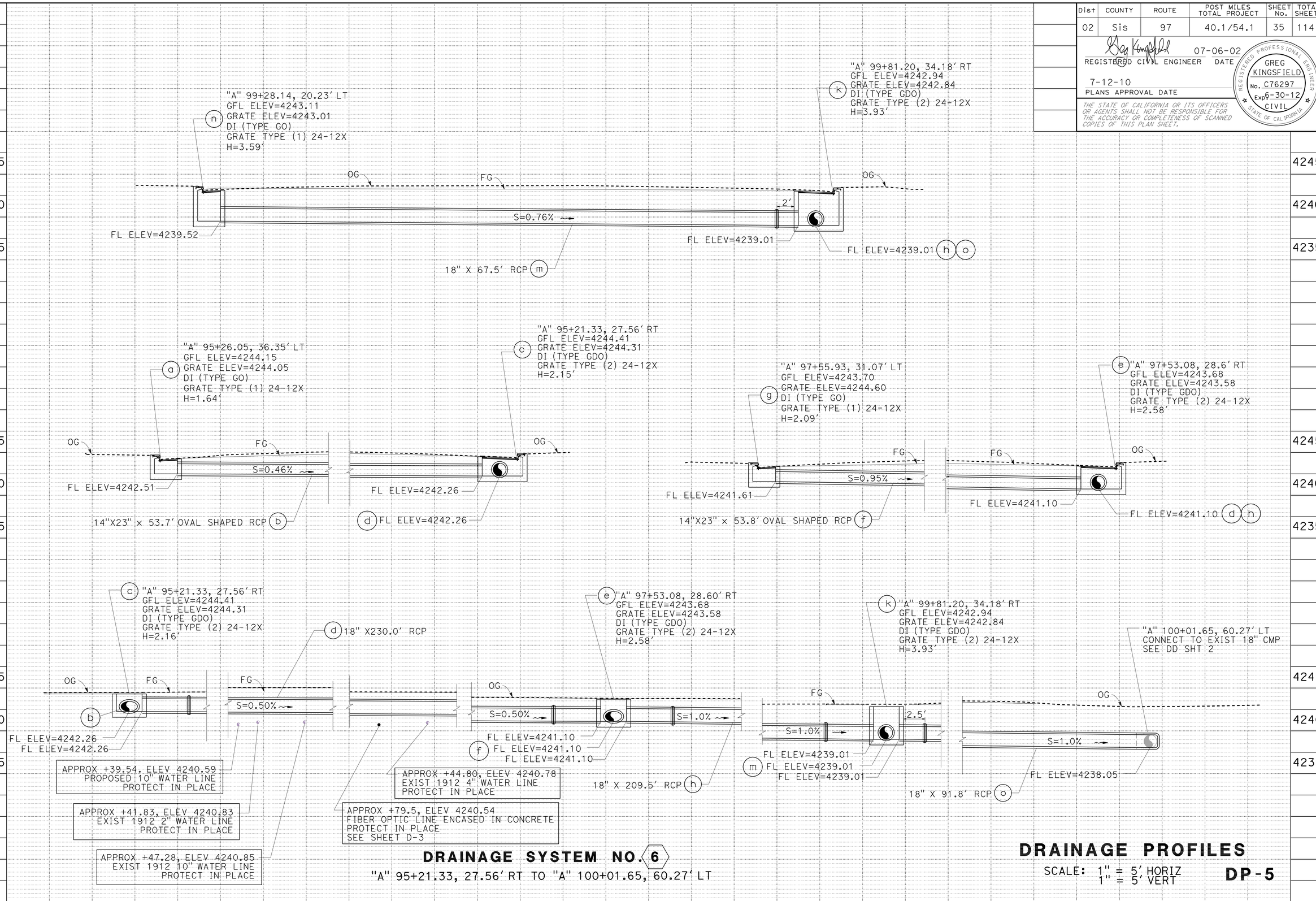

DRAINAGE SYSTEM NO. 6

"A" 95+21.33, 27.56' RT TO "A" 100+01.65, 60.27' LT

DRAINAGE PROFILES

SCALE: 1" = 5' HORIZ
1" = 5' VERT

DP-5

REVISED BY | DATE REVISED
STEVE ALAWAR | GREG KINGSFIELD
CALCULATED-DESIGNED BY | CHECKED BY
FUNCTIONAL SUPERVISOR: STEVE THORNE

STATE OF CALIFORNIA - DEPARTMENT OF TRANSPORTATION
Caltrans® HYDRAULICS DESIGN

p:\proj1\024c010_plans\pse\SUBMIT_TO_HQ\24c010ib005.dgn

DATE PLOTTED => 17-AUG-2010
TIME PLOTTED => 13:47
LAST REVISION 07-06-10

Dist	COUNTY	ROUTE	POST MILES TOTAL PROJECT	SHEET No.	TOTAL SHEETS
02	Sis	97	40.1/54.1	36	114

REGISTERED CIVIL ENGINEER 07-06-02 DATE

7-12-10
PLANS APPROVAL DATE

REGISTERED PROFESSIONAL ENGINEER GREG KINGSFIELD No. C76297 Exp 6-30-12 CIVIL STATE OF CALIFORNIA

THE STATE OF CALIFORNIA OR ITS OFFICERS OR AGENTS SHALL NOT BE RESPONSIBLE FOR THE ACCURACY OR COMPLETENESS OF SCANNED COPIES OF THIS PLAN SHEET.

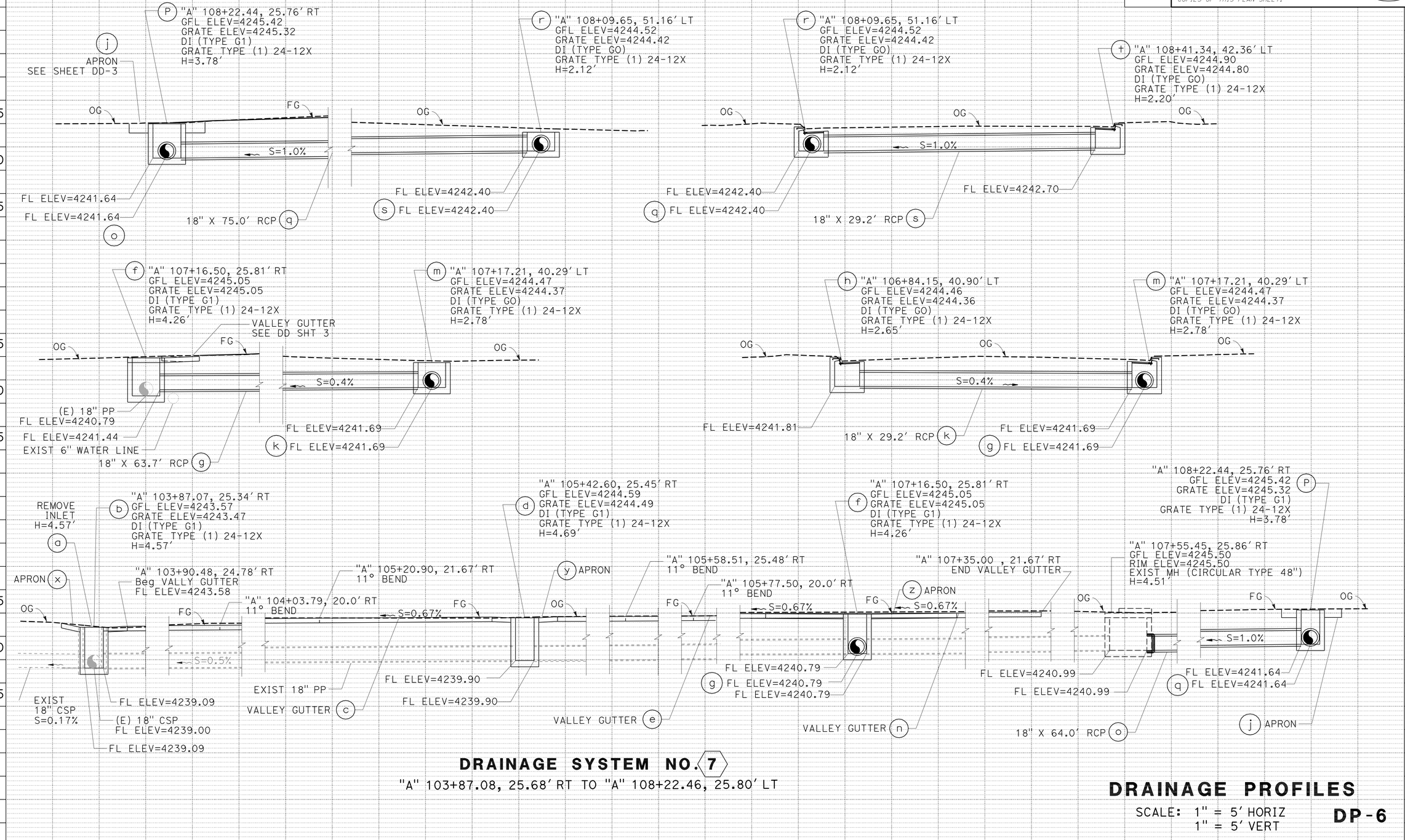

DRAINAGE SYSTEM NO. 7

"A" 103+87.08, 25.68' RT TO "A" 108+22.46, 25.80' LT

DRAINAGE PROFILES

SCALE: 1" = 5' HORIZ
1" = 5' VERT

DP-6

STATE OF CALIFORNIA - DEPARTMENT OF TRANSPORTATION
Caltrans HYDRAULICS DESIGN

FUNCTIONAL SUPERVISOR: STEVE THORNE
CALCULATED-DESIGNED BY: STEVE ALAWAR
CHECKED BY: GREG KINGSFIELD
REVISED BY / DATE REVISED

p:\proj1\02\4c010_plans\pse\SUBMIT_TO_HQ\24c010ib006.dgn

LAST REVISION DATE PLOTTED => 17-AUG-2010
07-06-10 TIME PLOTTED => 13:47

Dist	COUNTY	ROUTE	POST MILES TOTAL PROJECT	SHEET No.	TOTAL SHEETS
02	Sis	97	40.1/54.1	37	114

REGISTERED CIVIL ENGINEER 07-06-02 DATE

7-12-10
PLANS APPROVAL DATE

REGISTERED PROFESSIONAL ENGINEER GREG KINGSFIELD No. C76297 Exp 6-30-12 CIVIL STATE OF CALIFORNIA

THE STATE OF CALIFORNIA OR ITS OFFICERS OR AGENTS SHALL NOT BE RESPONSIBLE FOR THE ACCURACY OR COMPLETENESS OF SCANNED COPIES OF THIS PLAN SHEET.

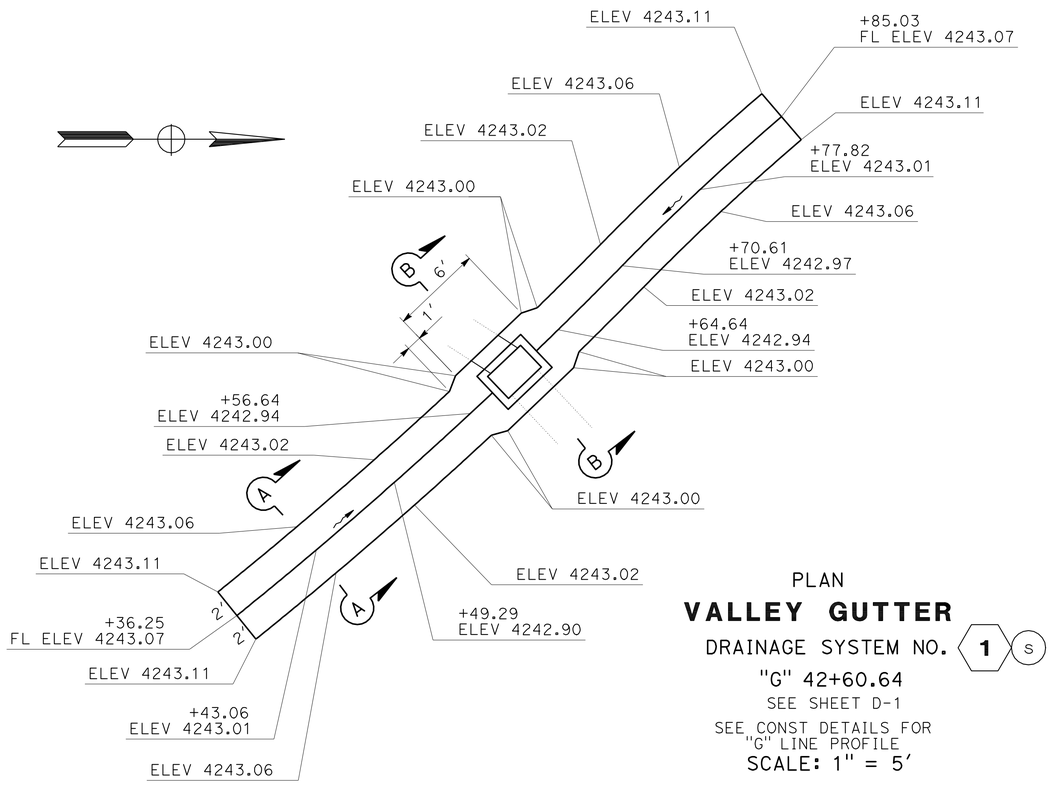

PLAN

VALLEY GUTTER

DRAINAGE SYSTEM NO. 1 S

"G" 42+60.64

SEE SHEET D-1

SEE CONST DETAILS FOR "G" LINE PROFILE

SCALE: 1" = 5'

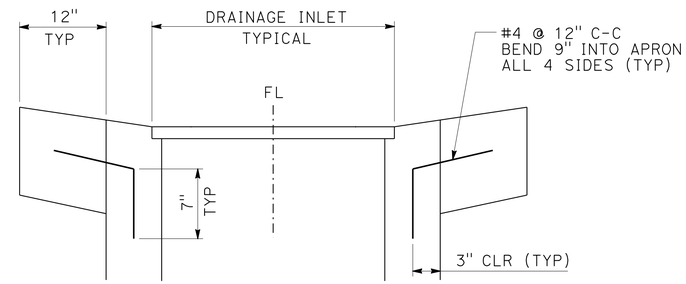

SECTION B-B
NO SCALE

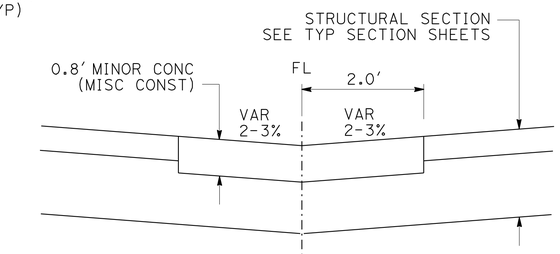

SECTION A-A
NO SCALE

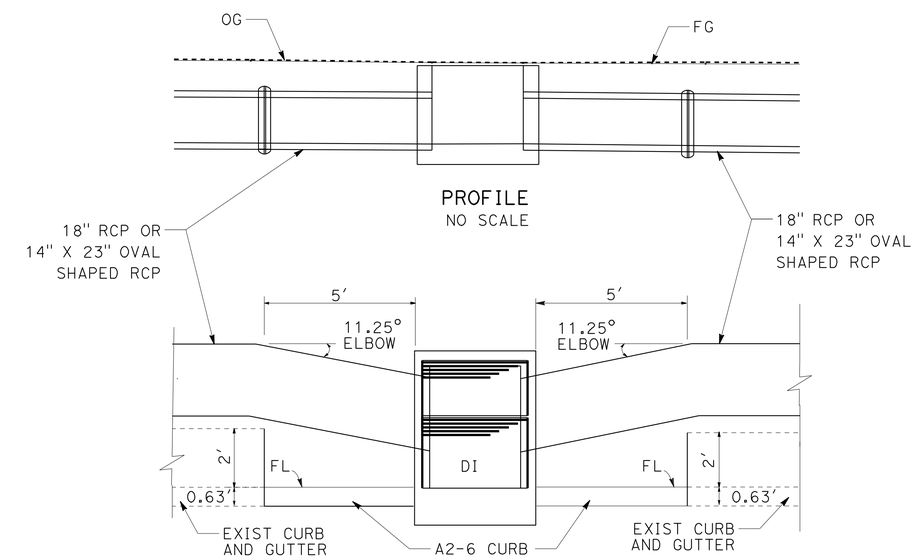

PLAN

11.25° HORIZONTAL ELBOW DETAIL

NO SCALE

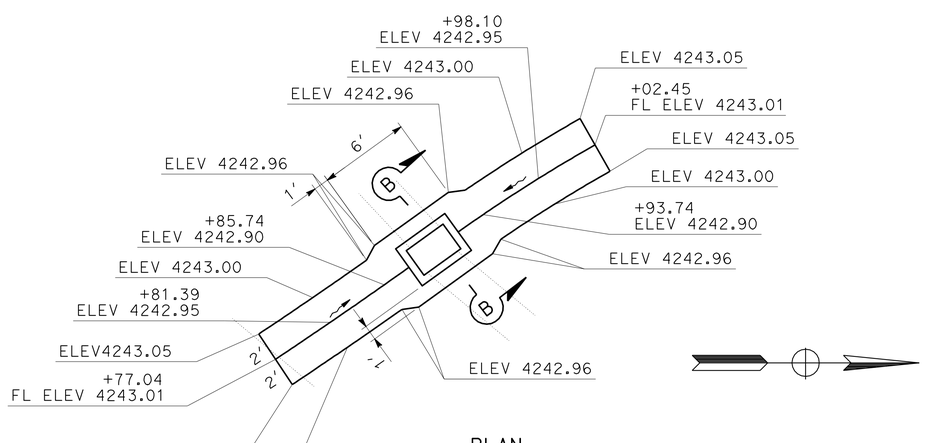

PLAN

VALLEY GUTTER

DRAINAGE SYSTEM NO. 1 r

"G" 42+76.31

SEE SHEET D-1

SEE CONST DETAILS FOR "D" LINE PROFILE

SCALE: 1" = 5'

DRAINAGE DETAILS

SCALE: AS SHOWN **DD-1**

REVISED BY | DATE REVISED
GREG KINGSFIELEVD | STEVE ALAWAR
CALCULATED-DESIGNED BY | CHECKED BY
FUNCTIONAL SUPERVISOR | STEVE THORNE
STATE OF CALIFORNIA - DEPARTMENT OF TRANSPORTATION
Caltrans® HYDRAULICS DESIGN

p:\proj1\02\4c010_plans\pse\SUBMIT_TO_HQ\24c010ic001.dgn

LAST REVISION 07-06-10 | DATE PLOTTED => 17-AUG-2010 | TIME PLOTTED => 13:47

Dist	COUNTY	ROUTE	POST MILES TOTAL PROJECT	SHEET No.	TOTAL SHEETS
02	Sis	97	40.1/54.1	38	114

REGISTERED CIVIL ENGINEER 07-06-02 DATE

7-12-10
PLANS APPROVAL DATE

REGISTERED PROFESSIONAL ENGINEER GREG KINGSFIELD No. C76297 Exp 6-30-12 CIVIL STATE OF CALIFORNIA

THE STATE OF CALIFORNIA OR ITS OFFICERS OR AGENTS SHALL NOT BE RESPONSIBLE FOR THE ACCURACY OR COMPLETENESS OF SCANNED COPIES OF THIS PLAN SHEET.

NOTES:

1. (N) - NOT A SEPARATE PAY ITEM, FOR INFORMATION ONLY.
2. FOR DETAILS NOT SHOWN, SEE STD PLANS D73 AND D74B.

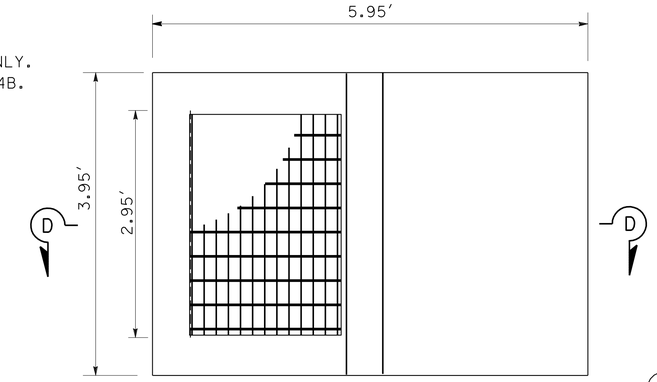

PLAN

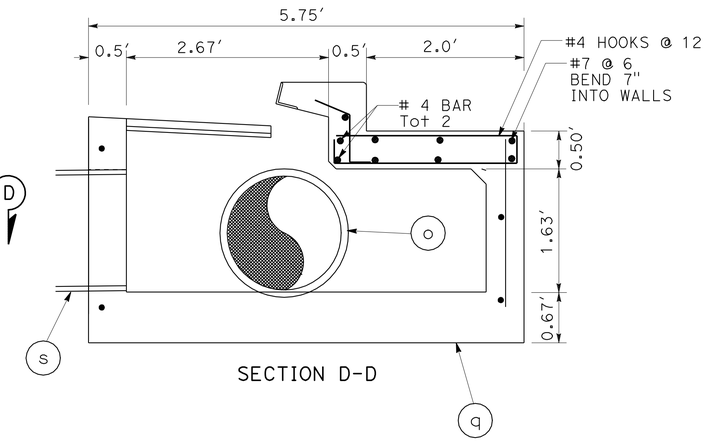

SECTION D-D

MODIFY TYPE GO DI

DRAINAGE SYSTEM No. 4 (q)
"A" 81+50.05 RT

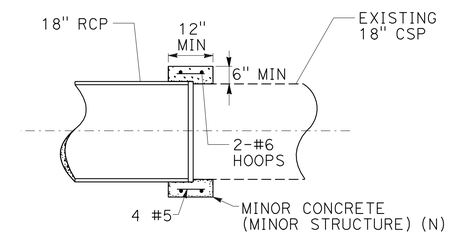

FIELD CAST CONCRETE COLLAR DETAIL

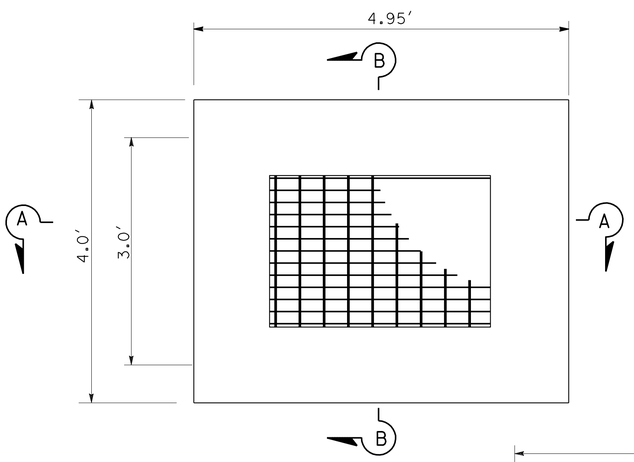

PLAN

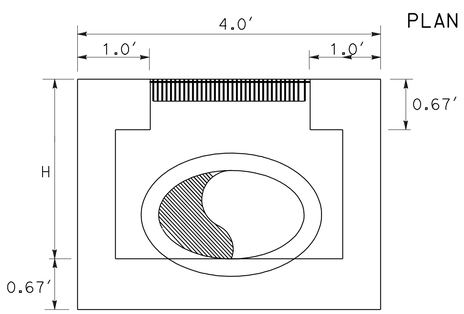

SECTION B-B

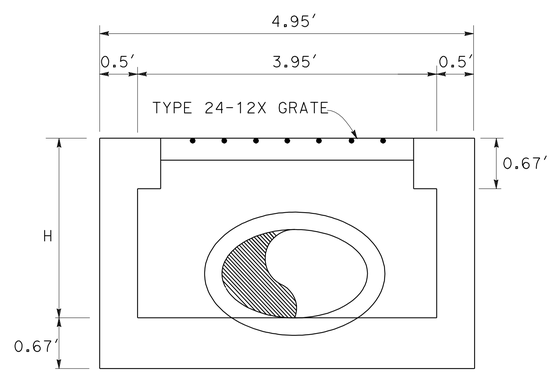

SECTION A-A

MODIFY TYPE G2 DI

DRAINAGE SYSTEM NO.	STATION	STRUCTURE	H
3 (a)	"A" 76+68.79	TYPE Mod G2 DI	3.05'
4 (n)	"A" 81+76.29	TYPE Mod G2 DI	2.87'

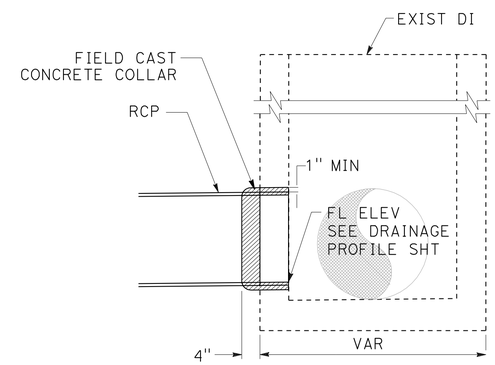

SECTION

CONNECT TO EXIST INLET

DRAINAGE SYSTEM NO.	STATION	STRUCTURE
4 (h)	"A" 81+12.93	TYPE G1 DI
5 (e)	"A" 86+82.20	TYPE G1 DI
7 (o)	"A" 107+55.45	48" CIRCULAR MH

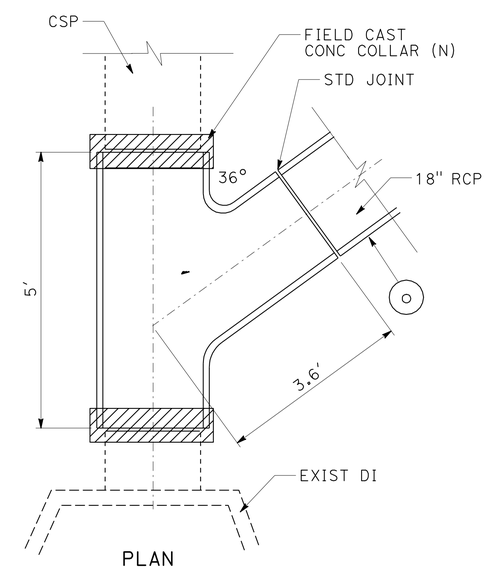

PLAN

18" RCP WYE

DRAINAGE SYSTEM No. 6 (o)
"A" 100+01.65, 60.27' RT

DRAINAGE DETAILS

NO SCALE

DD-2

REVISED BY	DATE REVISED

STEVE ALAWAR — GREG KINGSFIELD
CALCULATED-DESIGNED BY — CHECKED BY
FUNCTIONAL SUPERVISOR — STEVE THORNE

STATE OF CALIFORNIA - DEPARTMENT OF TRANSPORTATION
Caltrans® HYDRAULICS DESIGN

p:\proj1\02\4c010_plans\pse\SUBMIT_TO_HQ\24c010ic002.dgn

LAST REVISION 07-06-10 | DATE PLOTTED => 17-AUG-2010 | TIME PLOTTED => 13:47

Dist	COUNTY	ROUTE	POST MILES TOTAL PROJECT	SHEET No.	TOTAL SHEETS
02	Sis	97	40.1/54.1	39	114

REGISTERED CIVIL ENGINEER 07-06-02 DATE

7-12-10
PLANS APPROVAL DATE

REGISTERED PROFESSIONAL ENGINEER GREG KINGSFIELD No. C76297 Exp 6-30-12 CIVIL STATE OF CALIFORNIA

THE STATE OF CALIFORNIA OR ITS OFFICERS OR AGENTS SHALL NOT BE RESPONSIBLE FOR THE ACCURACY OR COMPLETENESS OF SCANNED COPIES OF THIS PLAN SHEET.

NOTE:

1. SEE STD PLANS FOR CURB AND GUTTER DETAILS.

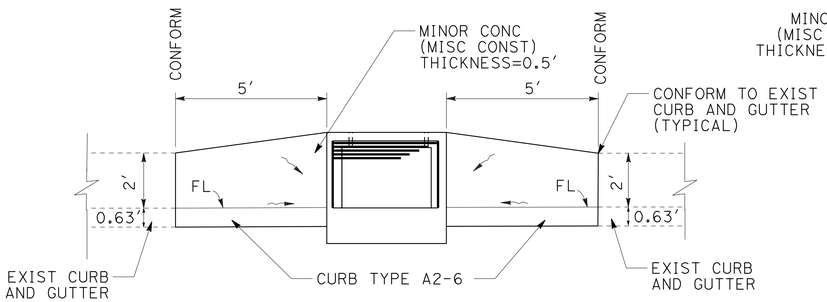

TYPE GO INLET- GUTTER DEPRESSION

DRAINAGE SYSTEM NO.	STATION	STRUCTURE	(N) AREA/SQFT
4(c)	"A" 80+90.61	TYPE GO DI	21.66
4(g)	"A" 81+12.93	TYPE GO DI	21.66
4(t)	"A" 81+17.30	TYPE GO DI	21.66
4(q)	"A" 81+50.05	TYPE GO DI	21.66
5(n)	"A" 90+48.06	TYPE GO DI	21.66
5(r)	"A" 92+86.14	TYPE GO DI	21.66
6(a)	"A" 95+26.05	TYPE GO DI	21.66
6(g)	"A" 97+55.93	TYPE GO DI	21.66
6(n)	"A" 99+28.14	TYPE GO DI	21.66
7(h)	"A" 106+86.99	TYPE GO DI	21.66
7(m)	"A" 107+20.69	TYPE GO DI	21.66
7(r)	"A" 108+13.23	TYPE GO DI	21.66
7(t)	"A" 108.45.93	TYPE GO DI	21.66

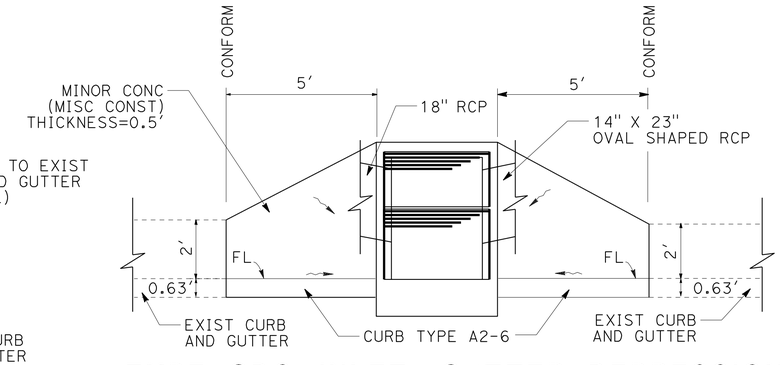

TYPE GDO INLET- GUTTER DEPRESSION AND PIPE CONNECTIONS

DRAINAGE SYSTEM NO.	STATION	STRUCTURE	(N) AREA/SQFT
3(f)	"A" 77+04.89	TYPE GDO DI	31.84
3(h)	"A" 77+81.35	TYPE GDO DI	31.84
3(n)	"A" 78+63.65	TYPE GDO DI	31.84
3(p)	"A" 78+64.06	TYPE GDO DI	31.84
3(r)	"A" 979+91.78	TYPE GDO DI	31.84
4(a)	"A" 80+91.14	TYPE GDO DI	31.84
4(n)	"A" 81+76.29	TYPE MOD G2 DI	25.03
5(d)	"A" 86+94.40	TYPE GDO DI	31.84
5(g)	"A" 89+17.20	TYPE GDO DI	31.84
5(l)	"A" 90+48.08	TYPE GDO DI	31.84
5(p)	"A" 92+86.59	TYPE GDO DI	31.84
6(c)	"A" 95+21.33	TYPE GDO DI	31.84
6(e)	"A" 97+53.08	TYPE GDO DI	31.84
6(k)	"A" 99+81.20	TYPE GDO DI	31.84

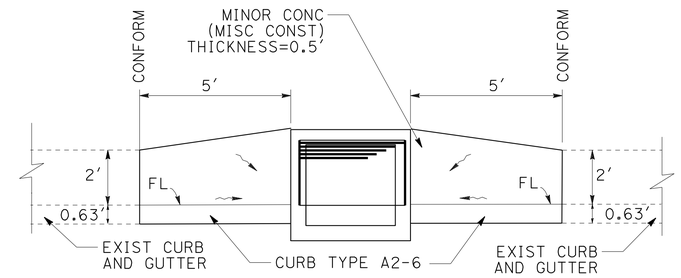

TYPE G4 INLET- GUTTER DEPRESSION

DRAINAGE SYSTEM NO.	STATION	STRUCTURE	(N) AREA/SQFT
3(d)	"A" 76+82.71	TYPE G4 DI	21.40

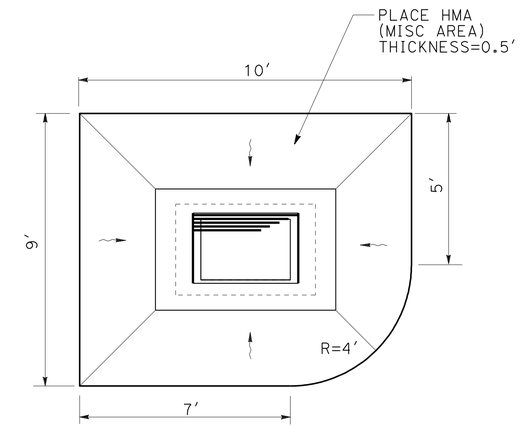

TYPE MOD G2 INLET - APRON

DRAINAGE SYSTEM NO.	STATION	STRUCTURE	PLACE HMA (MISC AREA) SQYD
3(b)	"A" 76+68.68	TYPE Mod G2 DI	7.9

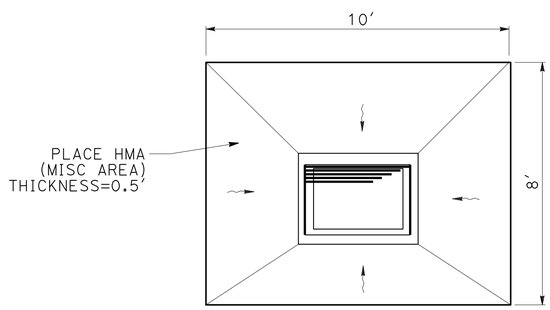

TYPE G2 INLET - APRON

DRAINAGE SYSTEM NO.	STATION	STRUCTURE	PLACE HMA (MISC AREA) SQYD
3(t)	"A" 77+90.28	TYPE G2 DI	6.3
7(j)	"A" 108+26.02	TYPE G1 DI	7.6

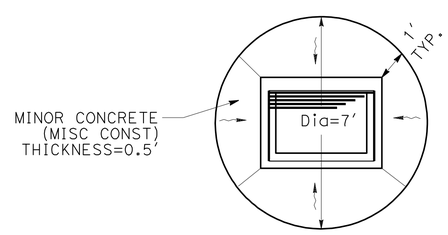

TYPE G1 INLET - APRON

DRAINAGE SYSTEM NO.	STATION	STRUCTURE	(N) AREA/SQFT
1(p)	"A" 43+14.60	TYPE G1 DI	26.48
2(r)	"A" 44+45.00	TYPE G1 DI	26.48
2(q)	"A" 45+20.30	TYPE G1 DI	26.48

DRAINAGE DETAILS

NO SCALE

DD-3

REVISED BY | DATE REVISED
STEVE ALAWAR | GREG KINGSFIELD
CALCULATED-DESIGNED BY | CHECKED BY
FUNCTIONAL SUPERVISOR
STEVE THORNE

STATE OF CALIFORNIA - DEPARTMENT OF TRANSPORTATION
Caltrans® HYDRAULICS DESIGN

p:\proj1\02\4c010_plans\pse\SUBMIT_TO_HQ\24c010ic003.dgn

LAST REVISION | DATE PLOTTED => 17-AUG-2010 | TIME PLOTTED => 13:48
07-06-10

Dist	COUNTY	ROUTE	POST MILES TOTAL PROJECT	SHEET No.	TOTAL SHEETS
02	Sis	97	40.1/54.1	40	114

REGISTERED CIVIL ENGINEER 07-06-02 DATE

7-12-10
PLANS APPROVAL DATE

REGISTERED PROFESSIONAL ENGINEER GREG KINGSFIELD No. C76297 Exp 6-30-12 CIVIL STATE OF CALIFORNIA

THE STATE OF CALIFORNIA OR ITS OFFICERS OR AGENTS SHALL NOT BE RESPONSIBLE FOR THE ACCURACY OR COMPLETENESS OF SCANNED COPIES OF THIS PLAN SHEET.

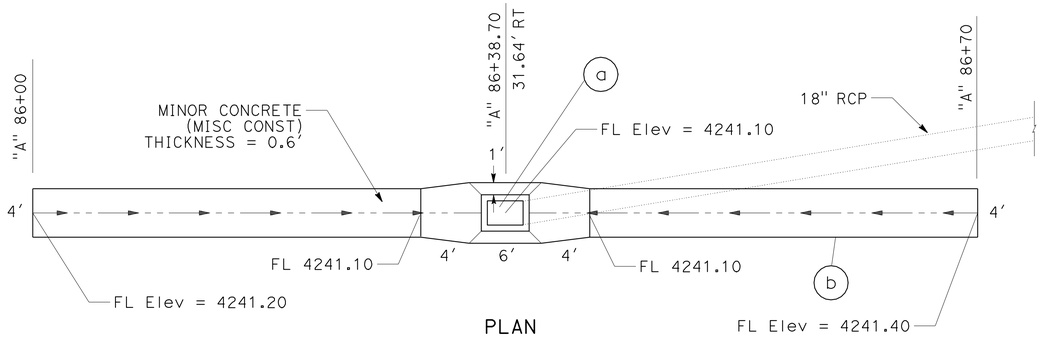

PLAN

VALLEY GUTTER

DRAINAGE SYSTEM No. 5 (b)

"A" 86+38.70, 31.64 RT

SEE SHEET C-12

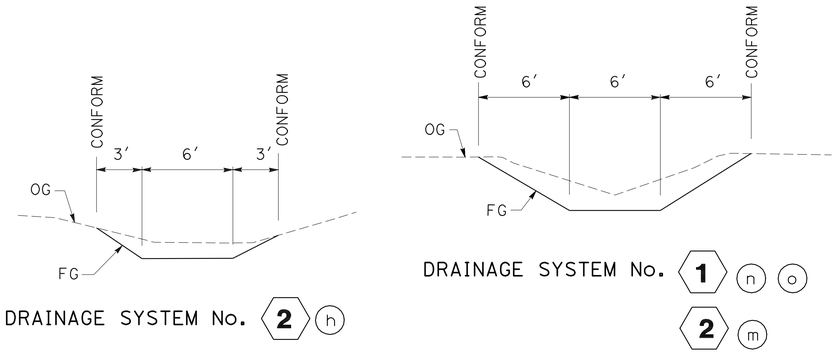

DRAINAGE SYSTEM No. 2 (h)

DRAINAGE SYSTEM No. 1 (n) (o)

2 (m)

DITCH EXCAVATION DETAIL

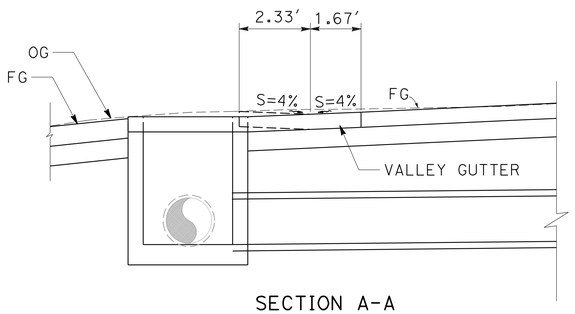

SECTION A-A

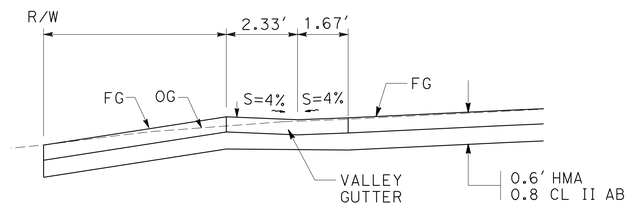

SECTION B-B

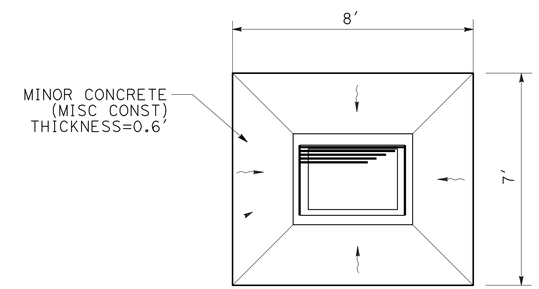

PLAN

TYPE G1 INLET- APRON

DRAINAGE SYSTEM NO.	STATION	STRUCTURE	(N) AREA/SQFT
7 (x)	"A" 103+87.07	TYPE G1 DI	43.80
7 (y)	"A" 105+42.60	TYPE G1 DI	43.80
7 (z) *	"A" 106+87.60	TYPE G1 DI	37.54

* VALLEY GUTTER AND APRON DETAIL

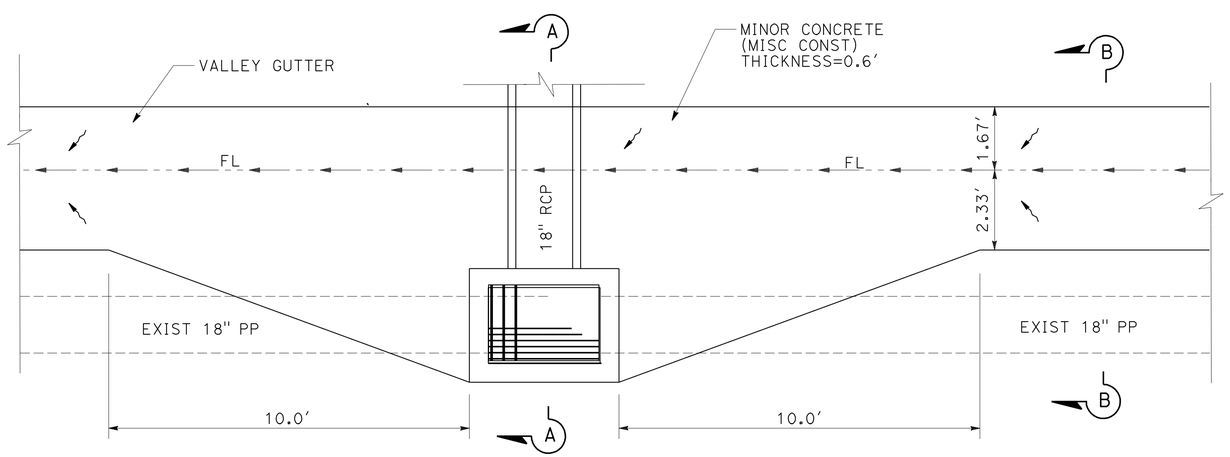

VALLEY GUTTER AND APRON DETAIL

DRAINAGE SYSTEM No. 7 (c) (e) (z) (n)

"A" 103+90.48, 24.78' RT TO "A" 107+35.00, 21.67' RT

DRAINAGE DETAILS

NO SCALE

DD-4

REVISED BY | DATE REVISED
GREG KINGSFIELD | STEVE ALAWAR
CALCULATED-DESIGNED BY | CHECKED BY
FUNCTIONAL SUPERVISOR | STEVE THORNE

STATE OF CALIFORNIA - DEPARTMENT OF TRANSPORTATION
Caltrans HYDRAULICS DESIGN

p:\proj1\02\4c010_plans\pse\SUBMIT_TO_HQ\24c010ic004.dgn

LAST REVISION 07-06-10 | DATE PLOTTED => 17-AUG-2010 | TIME PLOTTED => 13:48

Dist	COUNTY	ROUTE	POST MILES TOTAL PROJECT	SHEET No.	TOTAL SHEETS
02	Sis	97	40.1/54.1	41	114

REGISTERED CIVIL ENGINEER 07-06-02 DATE

7-12-10
PLANS APPROVAL DATE

REGISTERED PROFESSIONAL ENGINEER GREG KINGSFIELD No. C76297 Exp 6-30-12 CIVIL STATE OF CALIFORNIA

THE STATE OF CALIFORNIA OR ITS OFFICERS OR AGENTS SHALL NOT BE RESPONSIBLE FOR THE ACCURACY OR COMPLETENESS OF SCANNED COPIES OF THIS PLAN SHEET.

NOTE:

1. (N) - NOT A SEPARATE PAY ITEM, FOR INFORMATION ONLY.

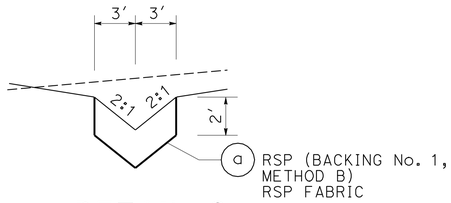

DETAIL C

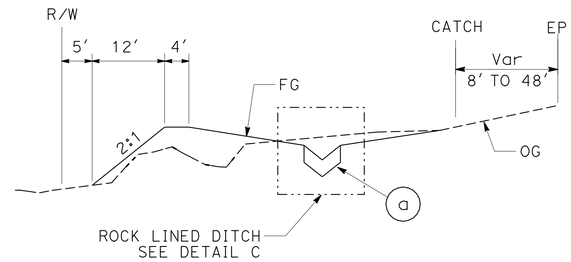

SECTION D-D

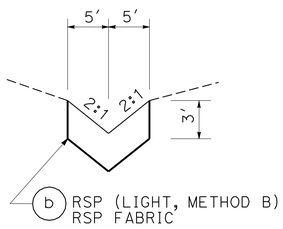

SECTION E-E

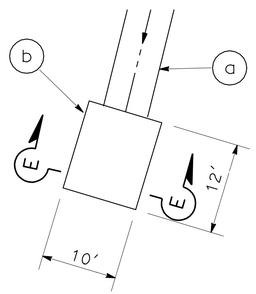

DETAIL B

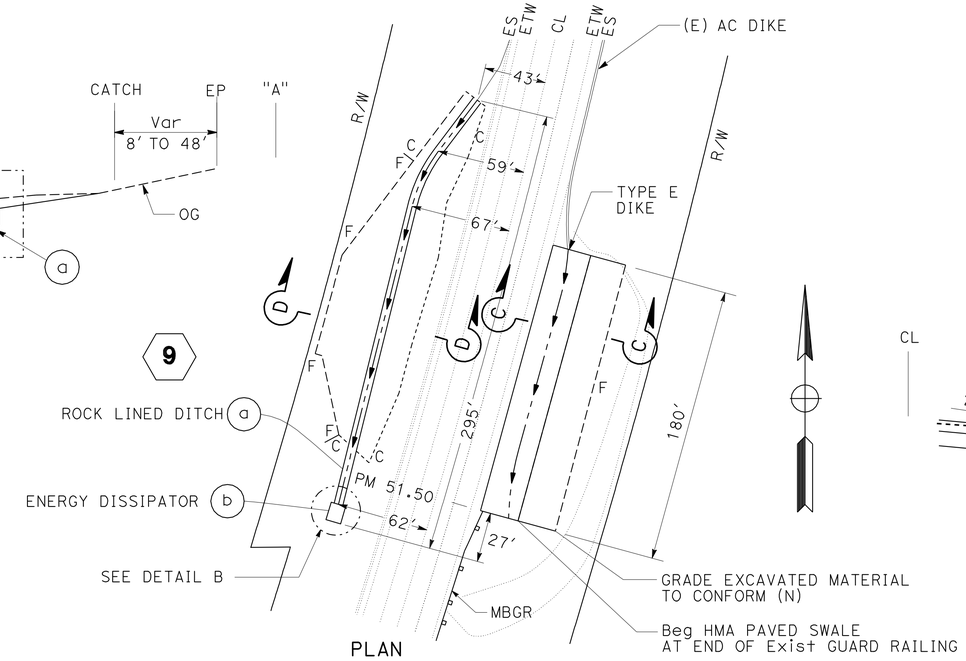

PLAN

ROCK LINED DITCH AND PAVED SWALE

ROUTE 97 PM 51.50

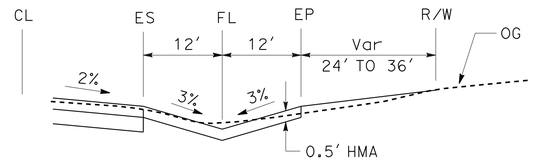

SECTION C-C

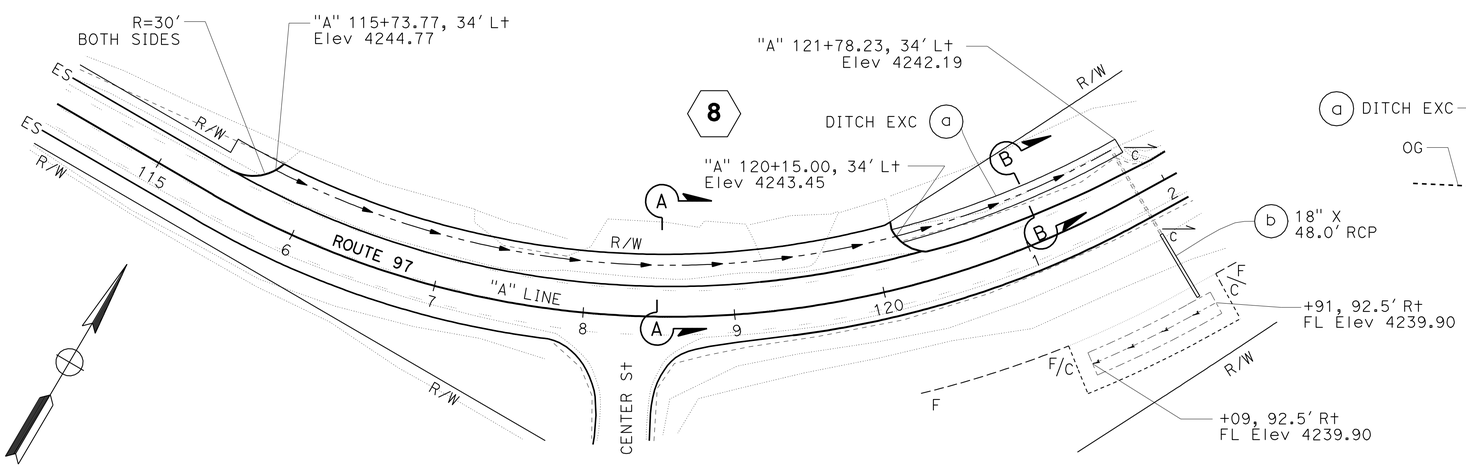

PLAN

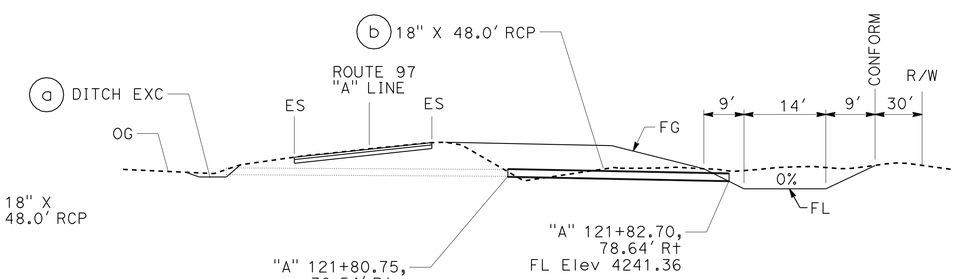

PROFILE
DRAINAGE SYSTEM No. 8
"A" 121+81.73

DETAIL D

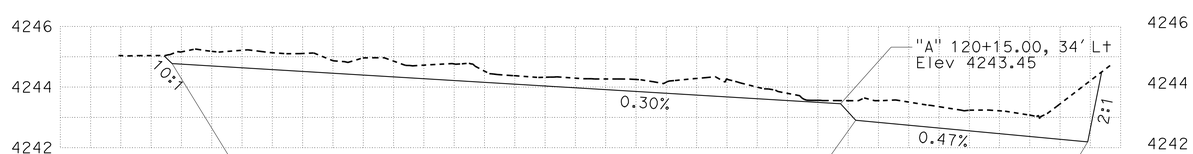

PROFILE

PAVED SWALE AND DITCH EXCAVATION

"A" 115+73.77, 34 Lt TO "A" 121+78.23 34 Lt

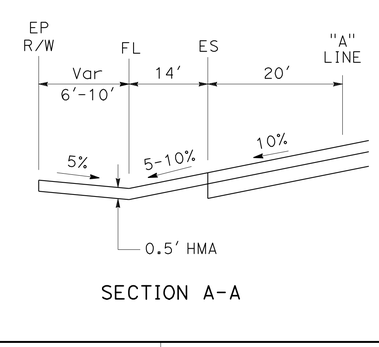

SECTION A-A

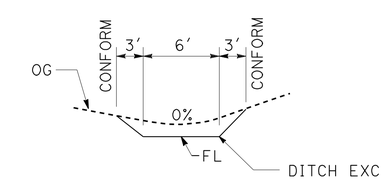

SECTION B-B

DRAINAGE DETAILS

NO SCALE

DD-5

REVISED BY | DATE REVISED
GREG KINGSFIELD | ALEX PETERSON
CALCULATED-DESIGNED BY | CHECKED BY
FUNCTIONAL SUPERVISOR | STEVE THORNE

STATE OF CALIFORNIA - DEPARTMENT OF TRANSPORTATION
Caltrans® HYDRAULICS DESIGN

p:\proj1\02\4c010_plans\pse\SUBMIT_TO_HQ\24c010ic005.dgn

LAST REVISION 07-06-10 | DATE PLOTTED => 13-JUL-2010 | TIME PLOTTED => 14:07

Dist	COUNTY	ROUTE	POST MILES TOTAL PROJECT	SHEET No.	TOTAL SHEETS
02	Sis	97	40.1/54.1	42	114

REGISTERED CIVIL ENGINEER 07-06-02 DATE

7-12-10
PLANS APPROVAL DATE

REGISTERED PROFESSIONAL ENGINEER GREG KINGSFIELD No. C76297 Exp 6-30-12 CIVIL STATE OF CALIFORNIA

THE STATE OF CALIFORNIA OR ITS OFFICERS OR AGENTS SHALL NOT BE RESPONSIBLE FOR THE ACCURACY OR COMPLETENESS OF SCANNED COPIES OF THIS PLAN SHEET.

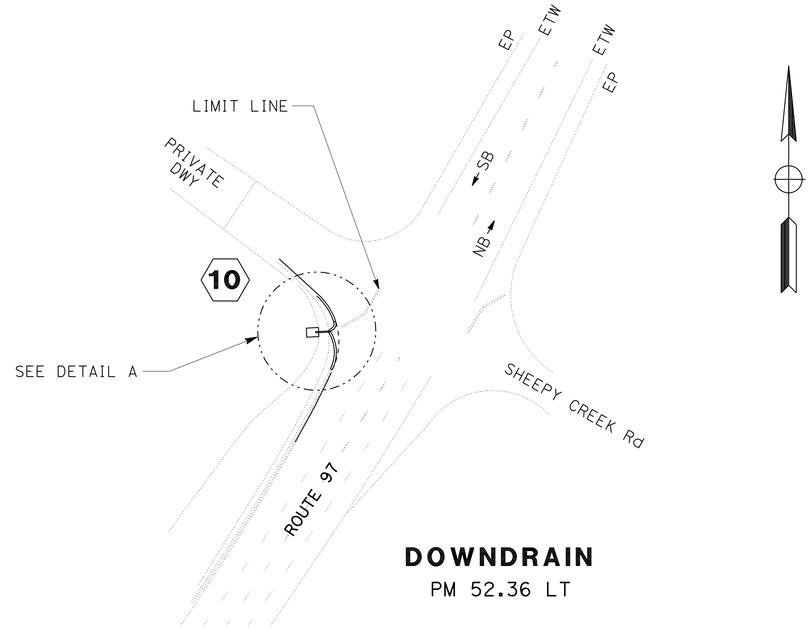

DOWNDRAIN
PM 52.36 LT

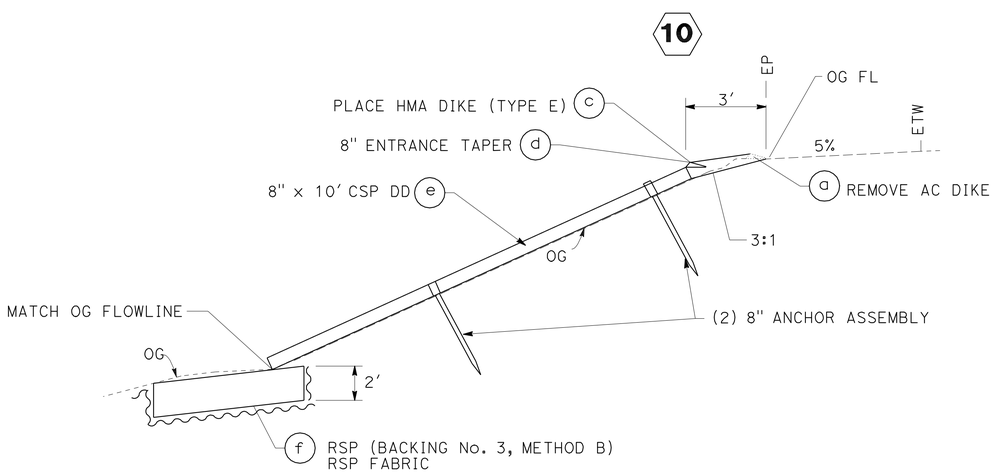

SECTION A-A

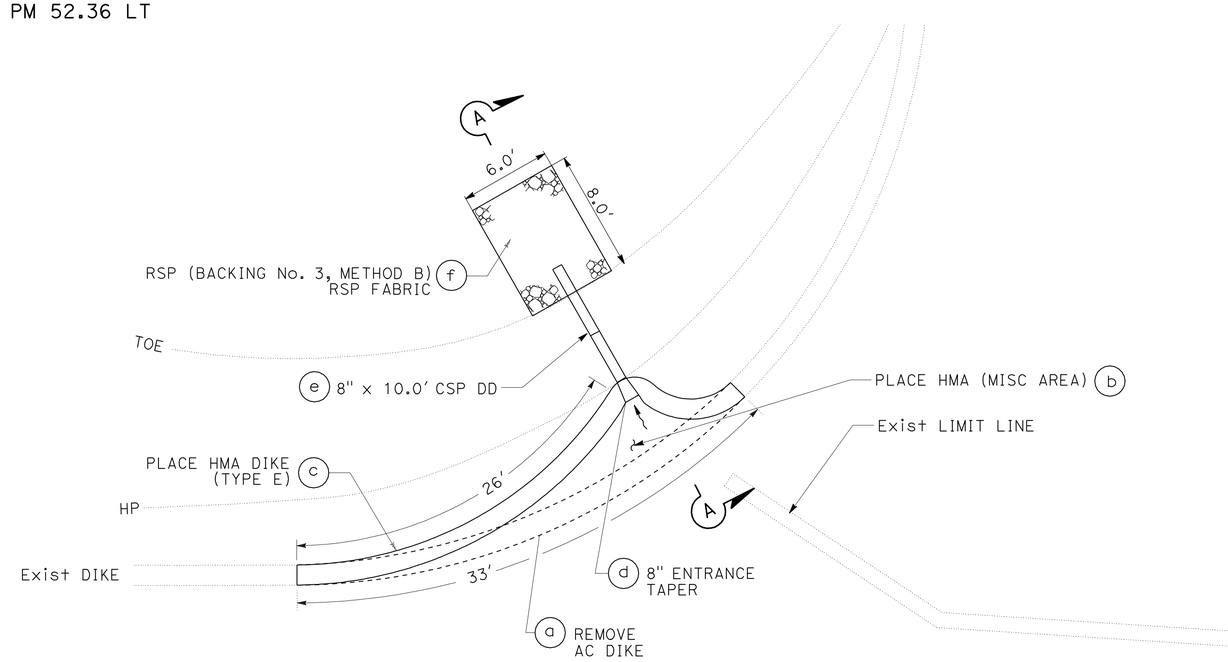

PLAN
DETAIL A

DRAINAGE DETAILS

NO SCALE **DD-6**

REVISED BY	DATE REVISED
GREG KINGSFIELD	
STEVE ALAWAR	

CALCULATED-DESIGNED BY
CHECKED BY

FUNCTIONAL SUPERVISOR
STEVE THORNE

STATE OF CALIFORNIA - DEPARTMENT OF TRANSPORTATION
Caltrans® HYDRAULICS DESIGN

p:\proj\02\4c010_plans\pse\SUBMIT_TO_HQ\24c010ic006.dgn

LAST REVISION 07-06-10 | DATE PLOTTED => 13-JUL-2010 | TIME PLOTTED => 14:07

Dist	COUNTY	ROUTE	POST MILES TOTAL PROJECT	SHEET No.	TOTAL SHEETS
02	Sis	97	40.1/54.1	43	114

REGISTERED CIVIL ENGINEER 07-06-02 DATE

7-12-10
PLANS APPROVAL DATE

REGISTERED PROFESSIONAL ENGINEER GREG KINGSFIELD No. C76297 Exp 6-30-12 CIVIL STATE OF CALIFORNIA

THE STATE OF CALIFORNIA OR ITS OFFICERS OR AGENTS SHALL NOT BE RESPONSIBLE FOR THE ACCURACY OR COMPLETENESS OF SCANNED COPIES OF THIS PLAN SHEET.

NOTE:

1. (N) - NOT A SEPARATE PAY ITEM, FOR INFORMATION ONLY.

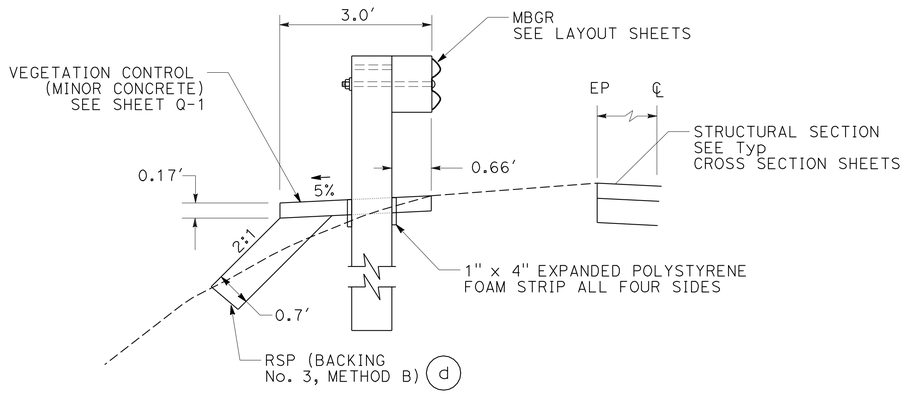

SECTION A-A

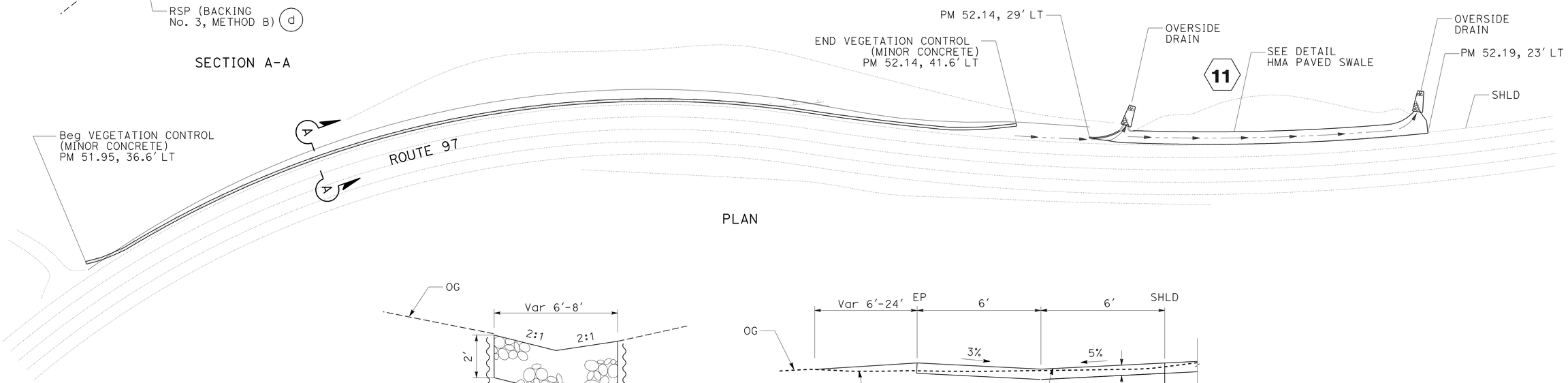

PLAN

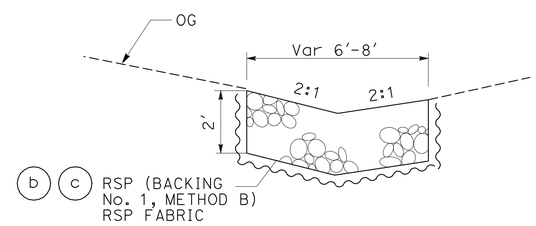

SECTION B-B

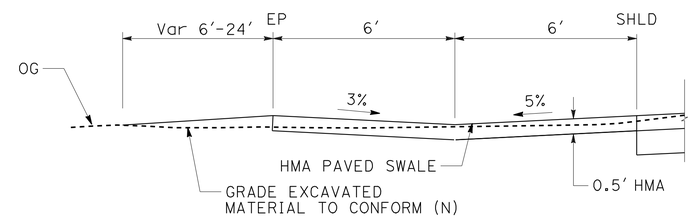

SECTION C-C

DRAINAGE SYSTEM No. 11

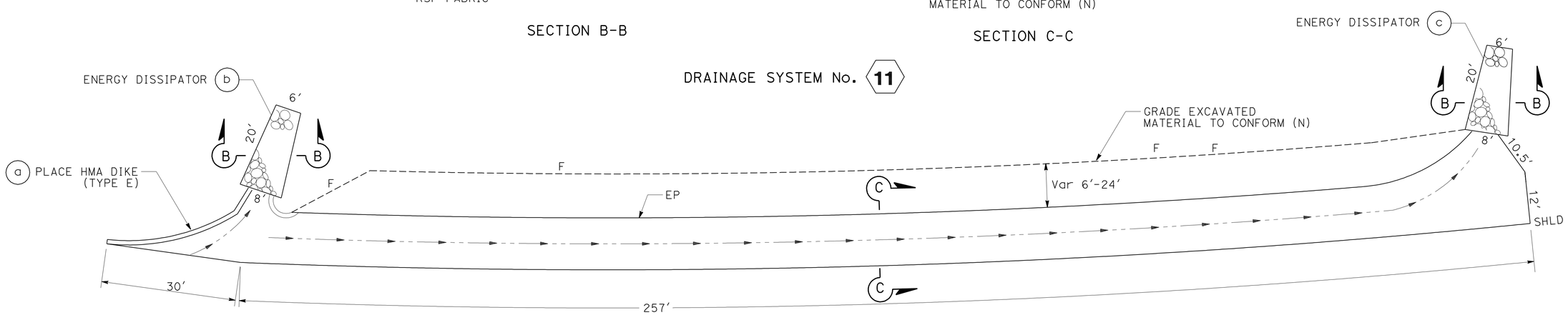

PLAN

HMA PAVED SWALE

DRAINAGE DETAILS

NO SCALE

DD-7

REVISED BY	DATE REVISED
GREG KINGSFIELD	STEVE ALAWAR
CALCULATED-DESIGNED BY	CHECKED BY
FUNCTIONAL SUPERVISOR	STEVE THORNE

STATE OF CALIFORNIA - DEPARTMENT OF TRANSPORTATION
Caltrans® HYDRAULICS DESIGN

p:\proj1\02\4c010_plans\pse\SUBMIT_TO_HQ\24c010ic007.dgn

LAST REVISION | DATE PLOTTED => 13-JUL-2010 | TIME PLOTTED => 14:07
07-06-10

Dist	COUNTY	ROUTE	POST MILES TOTAL PROJECT	SHEET No.	TOTAL SHEETS
02	Sis	97	40.1/54.1	44	114

REGISTERED CIVIL ENGINEER 07-06-02 DATE

7-12-10
PLANS APPROVAL DATE

REGISTERED PROFESSIONAL ENGINEER GREG KINGSFIELD No. C76297 Exp 6-30-12 CIVIL STATE OF CALIFORNIA

THE STATE OF CALIFORNIA OR ITS OFFICERS OR AGENTS SHALL NOT BE RESPONSIBLE FOR THE ACCURACY OR COMPLETENESS OF SCANNED COPIES OF THIS PLAN SHEET.

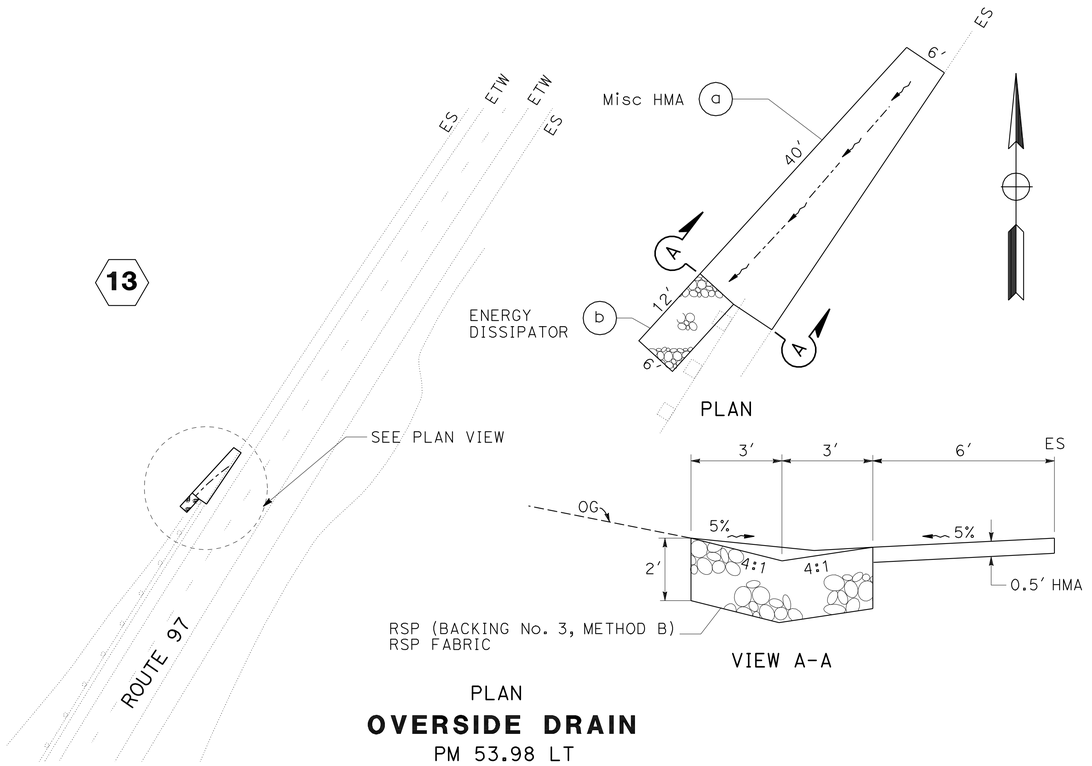

PLAN
OVERSIDE DRAIN
PM 53.98 LT

NOTE:
1. QUANTITIES ON SHEET Q-1.

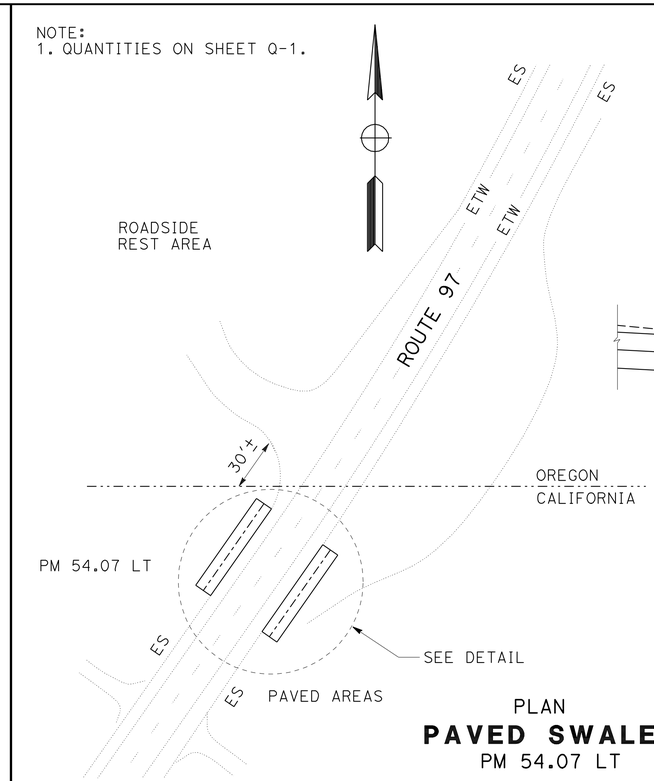

PLAN
PAVED SWALE
PM 54.07 LT

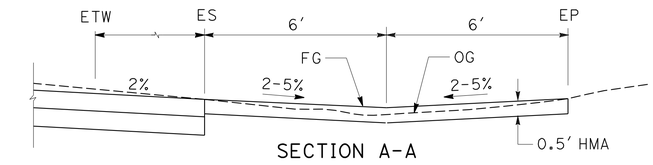

SECTION A-A

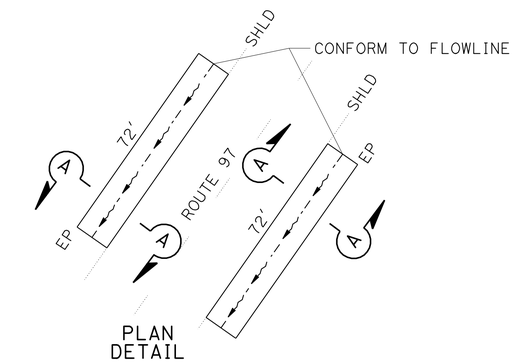

PLAN DETAIL

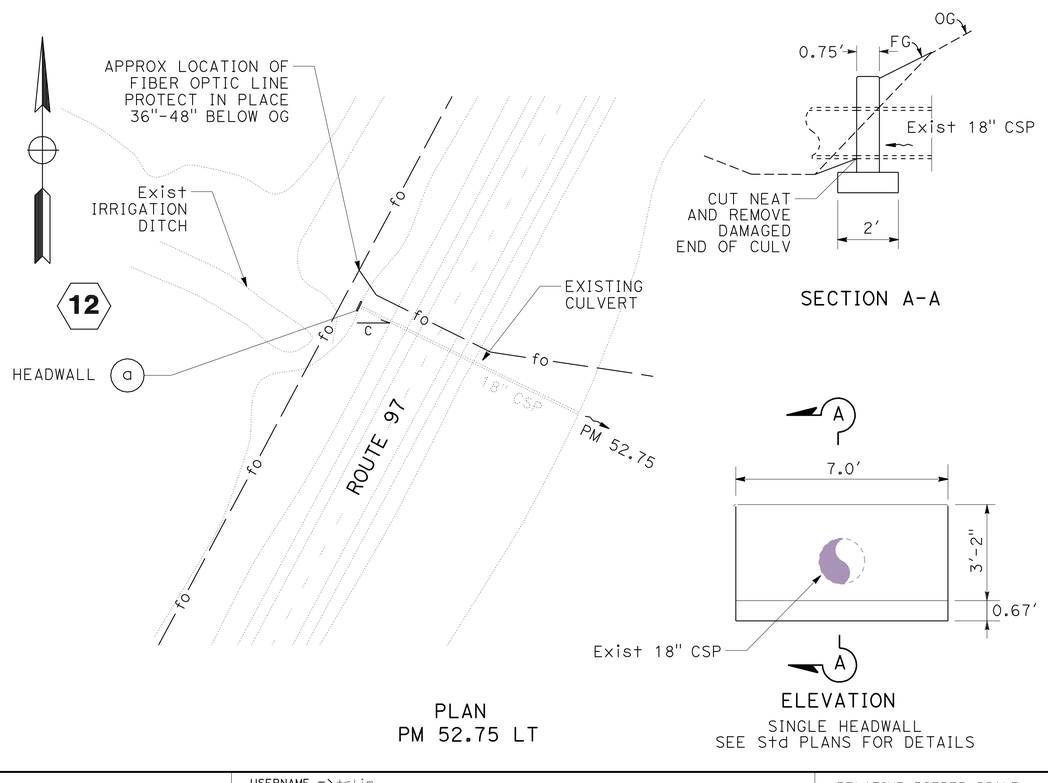

PLAN
PM 52.75 LT

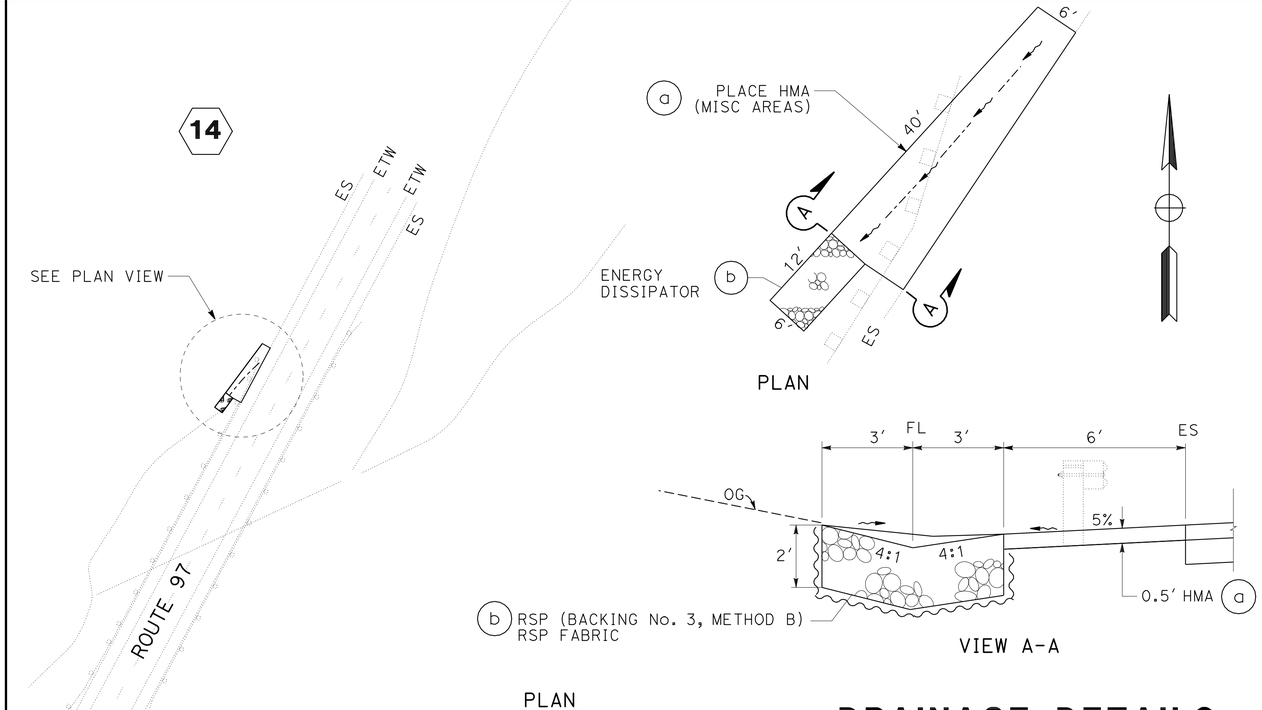

PLAN
OVERSIDE DRAIN
PM 53.15 LT

DRAINAGE DETAILS
NO SCALE

DD-8

REVISED BY | DATE REVISED
GREG KINGSFIELD | STEVE ALAWAR
CALCULATED-DESIGNED BY | CHECKED BY
FUNCTIONAL SUPERVISOR | STEVE THORNE

STATE OF CALIFORNIA - DEPARTMENT OF TRANSPORTATION
Caltrans® HYDRAULICS DESIGN

p:\proj1\02\4c010_plans\pse\SUBMIT_TO_HQ\24c010ic008.dgn

LAST REVISION 07-06-10 | DATE PLOTTED => 13-JUL-2010 | TIME PLOTTED => 14:07

Dist	COUNTY	ROUTE	POST MILES TOTAL PROJECT	SHEET No.	TOTAL SHEETS
02	Sis	97	40.1/54.1	45	114

REGISTERED CIVIL ENGINEER 07-06-02 DATE

7-12-10
PLANS APPROVAL DATE

REGISTERED PROFESSIONAL ENGINEER GREG KINGSFIELD No. C76297 Exp. 6-30-12 CIVIL STATE OF CALIFORNIA

THE STATE OF CALIFORNIA OR ITS OFFICERS OR AGENTS SHALL NOT BE RESPONSIBLE FOR THE ACCURACY OR COMPLETENESS OF SCANNED COPIES OF THIS PLAN SHEET.

DRAINAGE QUANTITIES

PLAN SHEET No.	DRAINAGE SYSTEM No. ⬡	DRAINAGE UNIT No. ○	REMOVE ASPHALT CONCRETE DIKE	REMOVE CULVERT	REMOVE INLET	REMOVE HEADWALL	REMOVE CONCRETE	DITCH EXCAVATION	PLACE HOT MIX ASPHALT DIKE (TYPE E)	PLACE HOT MIX ASPHALT (MISCELLANEOUS AREA)	HOT MIX ASPHALT	MINOR CONCRETE (MINOR STRUCTURE)	18" REINFORCED CONCRETE PIPE (CLASS II)	14" X 23" OVAL SHAPED REINFORCED CONCRETE PIPE (CLASS II)	8" CORRUGATED STEEL PIPE DOWNDRAIN (.064" THICK)	8" ENTRANCE TAPER	8" ANCHOR ASSEMBLY	ROCK SLOPE PROTECTION (LIGHT, METHOD B)	ROCK SLOPE PROTECTION (BACKING No. 1, METHOD B)	ROCK SLOPE PROTECTION (BACKING No. 3, METHOD B)	ROCK SLOPE PROTECTION FABRIC	MINOR CONCRETE (MISCELLANEOUS CONSTRUCTION)	MISCELLANEOUS IRON AND STEEL	SALVAGE GRATE (N)	HEIGHT OF INLET "H" (N)	INLET DEPRESION (N)	DESCRIPTION / COMMENT	STATION	DRAINAGE SYSTEM	DRAINAGE UNIT	PLAN SHEET No.
			LF	EA	EA	EA	CY	CY	LF	SQYD	TON	CY	LF	LF	LF	EA	EA	CY	CY	CY	SQYD	CY	LBS	EA	FT	FT					
D-1	1	a			1																			1	1.72			"A"42+59	1	a	D-1
	1	b		1																							12" x 101' CSP	"A"42+59	1	b	
	1	c										0.95											239		2.13	0.1	DI TYPE G1, GRATE TYPE 24-12X	"A"43+14	1	c	
	1	d												48.5													14" x 23" OVAL SHAPED RCP	"A"43+15	1	d	
	1	e										0.95											239		1.92	0.07	DI TYPE G1, GRATE, TYPE 24-12X	"A"42+80	1	e	
	1	f												53.1													14" x 23" OVAL SHAPED RCP	"A"42+79	1	f	
	1	g										0.95											239		2.18	0.07	DI TYPE G1, GRATE, TYPE 24-12X	"A"42+46	1	g	
	1	h												61.7													14" x 23" OVAL SHAPED RCP	"A"42+45	1	h	
	1	k										0.91															HEADWALL	"A"41+90	1	k	
	1	m											40.0														18" RCP	"A"41+73	1	m	
	1	n						53																			DITCH	"A"41+88	1	n	
	1	o						127																			DITCH	"A"41+06	1	o	
	1	p																				0.5					APRON	"A"43+15	1	p	
	1	q		1																							18" x 39' CSP	"A"41+63	1	q	
	1	r																				3.10					APRON	"A"42+76	1	r	
	1	s																				5.80					APRON	"A"43+00	1	s	
	2	a										0.95											239		1.58	0.1	DI TYPE G1, GRATE, TYPE 24-12X	"A"44+45	2	a	
	2	b												84.5													14" x 23" OVAL SHAPED RCP	"A"44+46	2	b	
	2	c								3.9	1.6	0.95											239		1.91	0.1	DI TYPE G1, GRATE, TYPE 24-12X	"A"45+20	2	c	
	2	d												38.2													14" x 23" OVAL SHAPED RCP	"A"45+21	2	d	
	2	e										0.91															HEADWALL	"A"45+43	2	e	
	2	f			1																			1	2.50			"A"44+84	2	f	
	2	g		1																							12" x 59' CSP	"A"44+85	2	g	
	2	h						150																			DITCH	"A"45+36	2	h	
	2	k											32.0														18" RCP	"A"46+50	2	k	
	2	m						200																			DITCH	"A"46+80	2	m	
	2	n											54.0														18" RCP	"A"46+82	2	n	
	2	o		1																							12" x 46' PLASTIC	"A"45+02	2	o	
	2	p				1																					REMOVE HEADWALL	"A"45+08	2	p	
	2	q																				0.5					APRON	"A"45+20	2	q	
	2	r																				0.5					APRON	"A"44+46	2	r	
	2	s			1																							"A"44+98	2	s	
	2	t		1																							12" x 30' CSP	"A"46+64	2	t	
D-2	3	a					0.9					1.32											239		3.05	0.1	DI TYPE Mod G2, GRATE, TYPE 24-12X	"A"76+68	3	a	D-2
	3	b								7.9	2.8																APRON	"A"76+68	3	b	
	3	c												23.9													14" x 23" OVAL SHAPED RCP	"A"76+82	3	c	
	3	d										1.27										0.7	239		2.91	0.1	DI TYPE G4, GRATE, TYPE 24-12X	"A"76+82	3	d	
	3	e												60.4													14" x 23" OVAL SHAPED RCP	"A"76+83	3	e	
	3	f					0.9					1.62										0.7	473		2.90	0.1	DI TYPE GDO, 2 GRATES, TYPE 24-12X	"A"77+04	3	f	
	3	g												94.1													14" x 23" OVAL SHAPED RCP	"A"77+06	3	g	
	3	h					0.9					1.62										0.7	473		2.76	0.1	DI TYPE GDO, 2 GRATES, TYPE 24-12X	"A"77+81	3	h	
	3	k												70.4													14" x 23" OVAL SHAPED RCP	"A"77+90	3	k	
	3	l										0.95											239		2.37	0.1	DI TYPE G1, GRATE, TYPE 24-12X	"A"77+91	3	l	
	3	m												75.3													14" x 23" OVAL SHAPED RCP	"A"77+81	3	m	
	3	n					0.9					1.62										0.7	473		2.17	0.1	DI TYPE GDO, 2 GRATES, TYPE 24-12X	"A"78+63	3	n	
	3	o												36.5													14" x 23" OVAL SHAPED RCP	"A"78+64	3	o	
	3	p					0.9					1.62										0.7	473		2.55	0.1	DI TYPE GDO, 2 GRATES, TYPE 24-12X	"A"78+64	3	p	
	3	q												124.7													14" x 23" OVAL SHAPED RCP	"A"78+65	3	q	
	3	r					0.9					1.62										0.7	473		2.46	0.1	DI TYPE GDO, 2 GRATES, TYPE 24-12X	"A"79+91	3	r	
	3	s												96.3													14" x 23" OVAL SHAPED RCP	"A"79+92	3	s	
	3	t								6.3	2.2																APRON	"A"77+90	3	t	
D-3	4	a					0.9					1.62										0.7	473		2.24	0.1	DI TYPE GDO, 2 GRATES, TYPE 24-12X	"A"80+91	4	a	D-3
	4	b												38.5													14" x 23" OVAL SHAPED RCP	"A"80+92	4	b	
SHEET TOTAL				5	3	1	6.3	530		18.1	6.6	19.83	126.0	906.1								15.30	4750	2							

NOTES:

1. (N) - NOT A SEPARATE PAY ITEM, FOR INFORMATION ONLY
2. * TOTAL SHOWN IN ROADWAY QUANTITIES
3. ALL JOINTS ARE STANDARD.
4. ALL RCP IS STRAIGHT WALL TYPE.

DRAINAGE QUANTITIES

DQ-1

REVISED BY | DATE REVISED

GREG KINGSFIELD | STEVE ALAWAR

CALCULATED-DESIGNED BY | CHECKED BY

FUNCTIONAL SUPERVISOR: STEVE THORNE

STATE OF CALIFORNIA - DEPARTMENT OF TRANSPORTATION

Caltrans® HYDRAULICS DESIGN

p:\proj1\02\4c010_plans\pse\SUBMIT_TO_HQ\24c010id001.dgn

LAST REVISION 07-06-10 | DATE PLOTTED => 13-JUL-2010 | TIME PLOTTED => 14:07

Dist	COUNTY	ROUTE	POST MILES TOTAL PROJECT	SHEET No.	TOTAL SHEETS
02	Sis	97	40.1/54.1	46	114

REGISTERED CIVIL ENGINEER 07-06-02 DATE

7-12-10
PLANS APPROVAL DATE

REGISTERED PROFESSIONAL ENGINEER GREG KINGSFIELD No. C76297 Exp 6-30-12 CIVIL STATE OF CALIFORNIA

THE STATE OF CALIFORNIA OR ITS OFFICERS OR AGENTS SHALL NOT BE RESPONSIBLE FOR THE ACCURACY OR COMPLETENESS OF SCANNED COPIES OF THIS PLAN SHEET.

DRAINAGE QUANTITIES

PLAN SHEET No.	DRAINAGE SYSTEM No. ⬡	DRAINAGE UNIT No. ○	REMOVE ASPHALT CONCRETE DIKE	REMOVE CULVERT	REMOVE INLET	REMOVE HEADWALL	REMOVE CONCRETE	DITCH EXCAVATION	PLACE HOT MIX ASPHALT DIKE (TYPE E)	PLACE HOT MIX ASPHALT (MISCELLANEOUS AREA)	HOT MIX ASPHALT	MINOR CONCRETE (MINOR STRUCTURE)	18" REINFORCED CONCRETE PIPE (CLASS II)	14" X 23" OVAL SHAPED REINFORCED CONCRETE PIPE (CLASS II)	8" CORRUGATED STEEL PIPE DOWNDRAIN (.064" THICK)	8" ENTRANCE TAPER	8" ANCHOR ASSEMBLY	ROCK SLOPE PROTECTION (LIGHT, METHOD B)	ROCK SLOPE PROTECTION (BACKING No. 1, METHOD B)	ROCK SLOPE PROTECTION (BACKING No. 3, METHOD B)	ROCK SLOPE PROTECTION FABRIC	MINOR CONCRETE (MISCELLANEOUS CONSTRUCTION)	MISCELLANEOUS IRON AND STEEL	SALVAGE GRATE (N)	HEIGHT OF INLET "H" (N)	INLET DEPRESION (N)	DESCRIPTION / COMMENT	STATION	DRAINAGE SYSTEM	DRAINAGE UNIT	PLAN SHEET No.
			LF	EA	EA	EA	CY	CY	LF	SQYD	TON	CY	LF	LF	LF	EA	EA	CY	CY	CY	SQYD	CY	LBS	EA	FT	FT					
D-3	4	c					0.9					1.24										0.7	239		1.82	0.1	DI TYPE GO, GRATE, TYPE 24-12X	"A"80+90	4	c	D-3
	4	d			1																			1	1.87						
	4	e		1																							12" x 18' PLASTIC	"A"80+90	4	e	
	4	f		1																							12" x 47' CSP	"A"80+91	4	f	
	4	g					0.9					1.24										0.7	239		1.90	0.1	DI TYPE GO, GRATE, TYPE 24-12X	"A"81+12	4	g	
	4	h												34.3													14" x 23" OVAL SHAPED RCP	"A"81+13	4	h	
	4	k												79.0													14" x 23" OVAL SHAPED RCP	"A"81+13	4	k	
	4	l		1																							12" x 66' CSP	"A"81+14	4	l	
	4	i		1																							12" x 26' CSP	"A"81+50	4	i	
	4	m			1																			1	2.21			"A"81+76	4	m	
	4	n					0.9					1.48										0.7	239		2.87	0.1	DI TYPE Mod G2, GRATE, TYPE 24-12X	"A"81+69	4	n	
	4	o											31.0														18" RCP	"A"81+77	4	o	
	4	p			1																			1	2.40			"A"81+50	4	p	
	4	q					0.9					1.48										0.7	239		2.31	0.1	DI TYPE Mod GO, GRATE, TYPE 24-12X	"A"81+50	4	q	
	4	r		1																							12" x 29' CSP	"A"81+17	4	r	
	4	s											29.2														18" RCP	"A"81+18	4	s	
	4	t					0.9					1.24										0.7	239		2.56	0.1	DI TYPE GO, GRATE, TYPE 24-12X	"A"81+17	4	t	
	4	v											74.7														18" RCP	"A"80+90	4	v	
	4	x			1																			1	1.93			"A"81+17	4	x	
	4	y		1																							12" x 24' CSP	"A"81+18	4	y	
	4	w			1																			1	1.83			"A"81+13	4	w	
D-3	5	a										0.95											239		2.65	0.1	DI TYPE G1, GRATE, TYPE 24-12X	"A"86+38	5	a	D-3
	5	b																				6.8					VALLEY GUTTER	"A"86+38	5	b	
	5	c											50.2														18" RCP	"A"86+39	5	c	
	5	d					0.9					1.75										0.7	473		3.40	0.1	DI TYPE GDO, 2 GRATES, TYPE 24-12X	"A"86+94	5	d	
	5	e											55.0														18" RCP	"A"86+95	5	e	
	5	f												222.8													14" x 23" OVAL SHAPED RCP	"A"86+38	5	f	
	5	g					0.9					1.62										0.7	473		2.11	0.1	DI TYPE GDO, 2 GRATES, TYPE 24-12X	"A"89+17	5	g	
	5	h			1																			1	2.09			"A"89+17	5	h	
	5	k												127.9													14" x 23" OVAL SHAPED RCP	"A"89+18	5	k	
	5	l					0.9					1.62										0.7	473		2.05	0.1	DI TYPE GDO, 2 GRATES, TYPE 24-12X	"A"90+48	5	l	
	5	m												54.0													14" x 23" OVAL SHAPED RCP	"A"90+49	5	m	
	5	n					0.9					1.24										0.7	239		1.84	0.1	DI TYPE GO, GRATE, TYPE 24-12X	"A"90+48	5	n	
	5	o												235.7													14" x 23" OVAL SHAPED RCP	"A"90+49	5	o	
	5	p					0.9					1.62										0.7	473		2.54	0.1	DI TYPE GDO, 2 GRATES, TYPE 24-12X	"A"92+86	5	p	
	5	q												54.0													14" x 23" OVAL SHAPED RCP	"A"92+87	5	q	
	5	r					0.9					1.24										0.7	239		2.15	0.1	DI TYPE GO, GRATE, TYPE 24-12X	"A"92+86	5	r	
	6	a					0.9					1.24										0.7	239		1.64	0.1	DI TYPE GO, GRATE, TYPE 24-12X	"A"95+26	6	a	
	6	b												53.7													14" x 23" OVAL SHAPED RCP	"A"95+27	6	b	
	6	c					0.9					1.62										0.7	473		2.15	0.1	DI TYPE GDO, 2 GRATES, TYPE 24-12X	"A"95+21	6	c	
	6	d											230.0														18" RCP	"A"95+22	6	d	
	6	e					0.9					1.62										0.7	473		2.58	0.1	DI TYPE GDO, 2 GRATES, TYPE 24-12X	"A"97+53	6	e	
	6	f												53.8													14" x 23" OVAL SHAPED RCP	"A"97+55	6	f	
	6	g					0.9					1.24										0.7	239		2.09	0.1	DI TYPE GO, GRATE, TYPE 24-12X	"A"97+55	6	g	
	6	h											209.5														18" RCP	"A"97+53	6	h	
	6	k					0.9					1.92										0.7	473		3.93	0.1	DI TYPE GDO, 2 GRATES, TYPE 24-12X	"A"99+81	6	k	
	6	m											67.5														18" RCP	"A"99+82	6	m	
	6	n					0.9					1.38										0.7	239		3.59	0.1	DI TYPE GO, GRATE, TYPE 24-12X	"A"99+28	6	n	
	6	o											91.8														INCLUDES 18" RCP WYE, SEE SHT DD-2	"A"99+82	6	o	
SHEET TOTAL				6	6		15.3					25.74	838.9	915.2								18.7	5940	6							

(N) - NOT A SEPARATE PAY ITEM, FOR INFORMATION ONLY
ALL JOINTS ARE STANDARD.

DRAINAGE QUANTITIES
DQ-2

REVISED BY | DATE REVISED
GREG KINGSFIELD | STEVE ALAWAR
CALCULATED-DESIGNED BY | CHECKED BY
FUNCTIONAL SUPERVISOR | STEVE THORNE
STATE OF CALIFORNIA - DEPARTMENT OF TRANSPORTATION
Caltrans® HYDRAULICS DESIGN

p:\proj\02\4c010_plans\pse\SUBMIT_TO_HQ\24c010id002.dgn

LAST REVISION 07-06-10 | DATE PLOTTED => 14-JUL-2010 | TIME PLOTTED => 10:35

Dist	COUNTY	ROUTE	POST MILES TOTAL PROJECT	SHEET No.	TOTAL SHEETS
02	Sis	97	40.1/54.1	47	114

REGISTERED CIVIL ENGINEER 07-06-02 DATE

7-12-10
PLANS APPROVAL DATE

REGISTERED PROFESSIONAL ENGINEER GREG KINGSFIELD No. C76297 Exp 6-30-12 CIVIL STATE OF CALIFORNIA

THE STATE OF CALIFORNIA OR ITS OFFICERS OR AGENTS SHALL NOT BE RESPONSIBLE FOR THE ACCURACY OR COMPLETENESS OF SCANNED COPIES OF THIS PLAN SHEET.

DRAINAGE QUANTITIES

PLAN SHEET No.	DRAINAGE SYSTEM No. ⬡	DRAINAGE UNIT No. ◯	REMOVE ASPHALT CONCRETE DIKE	REMOVE CULVERT	REMOVE INLET	REMOVE HEADWALL	REMOVE CONCRETE	DITCH EXCAVATION	PLACE HOT MIX ASPHALT DIKE (TYPE E)	PLACE HOT MIX ASPHALT (MISCELLANEOUS AREA)	HOT MIX ASPHALT	MINOR CONCRETE (MINOR STRUCTURE)	18" REINFORCED CONCRETE PIPE (CLASS II)	14" X 23" OVAL SHAPED REINFORCED CONCRETE PIPE (CLASS II)	8" CORRUGATED STEEL PIPE DOWNDRAIN (.064" THICK)	8" ENTRANCE TAPER	8" ANCHOR ASSEMBLY	ROCK SLOPE PROTECTION (LIGHT, METHOD B)	ROCK SLOPE PROTECTION (BACKING No. 1, METHOD B)	ROCK SLOPE PROTECTION (BACKING No. 3, METHOD B)	ROCK SLOPE PROTECTION FABRIC	MINOR CONCRETE (MISCELLANEOUS CONSTRUCTION)	MISCELLANEOUS IRON AND STEEL	SALVAGE GRATE (N)	HEIGHT OF INLET "H" (N)	INLET DEPRESION (N)	DESCRIPTION / COMMENT	STATION	DRAINAGE SYSTEM	DRAINAGE UNIT	PLAN SHEET No.
			LF	EA	EA	EA	CY	CY	LF	SQYD	TON	CY	LF	LF	LF	EA	EA	CY	CY	CY	SQYD	CY	LBS	EA	FT	FT					
D-4	7	a			1																			1	4.57			"A"103+87	7	a	D-4
	7	b										1.30											239		4.57	0.1	DI TYPE G1, GRATE, TYPE 24-12X	"A"103+87	7	b	
	7	c																				13.4					VALLEY GUTTER	"A"103+90	7	c	
	7	d										1.32											239		4.69	0.1	DI TYPE G1, GRATE, TYPE 24-12X	"A"105+42	7	d	
	7	e																				15.3					VALLEY GUTTER	"A"105+45	7	e	
	7	f										1.23											239		4.26	0.0	DI TYPE G1, GRATE, TYPE 24-12X	"A"107+16	7	f	
	7	g											63.7														18" RCP	"A"106+87	7	g	
	7	h					0.9					1.24										0.7	239		2.65	0.1	DI TYPE GO , GRATE, TYPE 24-12X	"A"106+84	7	h	
	7	k											29.2														18" RCP	"A"106+85	7	k	
	7	m					0.9					1.24										0.7	239		2.78	0.1	DI TYPE GO, GRATE, TYPE 24-12X	"A"107+17	7	m	
	7	n																				1.7					VALLEY GUTTER	"A"106+91	7	n	
	7	o											64.0														18" RCP	"A"108+22	7	o	
	7	p										1.12											239		3.78	0.1	DI TYPE G1, GRATE, TYPE 24-12X	"A"108+22	7	p	
	7	q											75.0														18" RCP	"A"108+23	7	q	
	7	r					0.9					1.24										0.7	239		2.12	0.1	DI TYPE GO, GRATE, TYPE 24-12X	"A"108+09	7	r	
	7	s											29.2														18" RCP	"A"108+10	7	s	
	7	t					0.9					1.24										0.7	239		2.20	0.1	DI TYPE GO, GRATE, TYPE 24-12X	"A"108+41	7	t	
	7	x																				1.0					APRON	"A"103+87		x	
	7	y																				1.0					APRON	"A"105+43		y	
	7	z																				0.8					APRON	"A"106+88		z	
	7	j								7.6	2.6																APRON	"A"108+23		j	
DD-5	8	a						55																				"A"121+78	8	a	DD-5
	8	b											48.0														18" RCP	"A"121+82	8	b	
	9	a																	131		330						RSP LINED DITCH	PM 51.50	9	a	
	9	b																14			32						ENERGY DISSIPATOR	PM 51.50	9	b	
DD-6	10	a	33																									PM 52.36	10	a	DD-6
	10	b								5.4	1.8																	PM 52.36	10	b	
	10	c							36		1.0																	PM 52.36	10	c	
	10	d														1												PM 52.36	10	d	
	10	e													10		2											PM 52.36	10	e	
	10	f																		4	14							PM 52.36	10	f	
DD-7	11	a							40		1.1																	PM 52.14	11	a	DD-7
	11	b																		9	27						ENERGY DISSIPATOR	PM 52.14	11	b	
	11	c																		9	27						ENERGY DISSIPATOR	PM 52.19	11	c	
	11	d																		61								PM 51.95	11	d	
DD-8	12	a										0.91															SINGLE HEADWALL	PM 52.75	12	a	DD-8
	13	a								40.0	13.5																OVERSIDE DRAIN	PM 53.96	13	a	
	13	b																		6	18						ENERGY DISSIPATOR	PM 53.96	13	b	
	14	a								40.0	13.5																OVERSIDE DRAIN	PM 53.15	14	a	
	14	b																		6	18						ENERGY DISSIPATOR	PM 53.15	14	b	
SHEET TOTAL			33		1		3.6	55	76	93.0	33.5	10.84	309.1		10	1	2	14	131	95	466	36.0	1912	1							
FROM DQ-1				5	3	1	6.3	530		18.1	6	19.83	126.0	906.1								15.3	4750	2							
FROM DQ-2				6	6		15.3					25.74	838.9	915.2								18.7	5940	6							
TOTAL			33	11	10	1	25.2*	585	76*	111.1	39.5*	56.41	1274.0	1821.3	10	1	2	14	131	95	466	70.0**	12363	9							

1. (N) - NOT A SEPARATE PAY ITEM, FOR INFORMATION ONLY.
2. * TOTAL SHOWN IN ROADWAY QUANTITIES.
3. ** TOTAL SHOWN ON SHEET Q-5.
4. ALL JOINTS ARE STANDARD.

DRAINAGE QUANTITIES
DQ-3

REVISED BY | DATE REVISED
GREG KINGSFIELD | STEVE ALAWAR
CALCULATED-DESIGNED BY | CHECKED BY
FUNCTIONAL SUPERVISOR: STEVE THORNE
STATE OF CALIFORNIA - DEPARTMENT OF TRANSPORTATION
Caltrans® HYDRAULICS DESIGN
p:\proj1\02\4c010_plans\pse\SUBMIT_TO_HQ\24c010id003.dgn

LAST REVISION 07-06-10 | DATE PLOTTED => 13-JUL-2010 | TIME PLOTTED => 14:07

Dist	COUNTY	ROUTE	POST MILES TOTAL PROJECT	SHEET No.	TOTAL SHEETS
02	Sis	97	40.1/54.1	48	114

Mark J. Miller 07-06-10
REGISTERED CIVIL ENGINEER DATE

7-12-10
PLANS APPROVAL DATE

REGISTERED PROFESSIONAL ENGINEER MARK MILLER No. C48454 Exp. 6-30-12 CIVIL STATE OF CALIFORNIA

THE STATE OF CALIFORNIA OR ITS OFFICERS OR AGENTS SHALL NOT BE RESPONSIBLE FOR THE ACCURACY OR COMPLETENESS OF SCANNED COPIES OF THIS PLAN SHEET.

NOTE:

1. EXACT SIGN LOCATION TO BE DETERMINED BY THE ENGINEER.

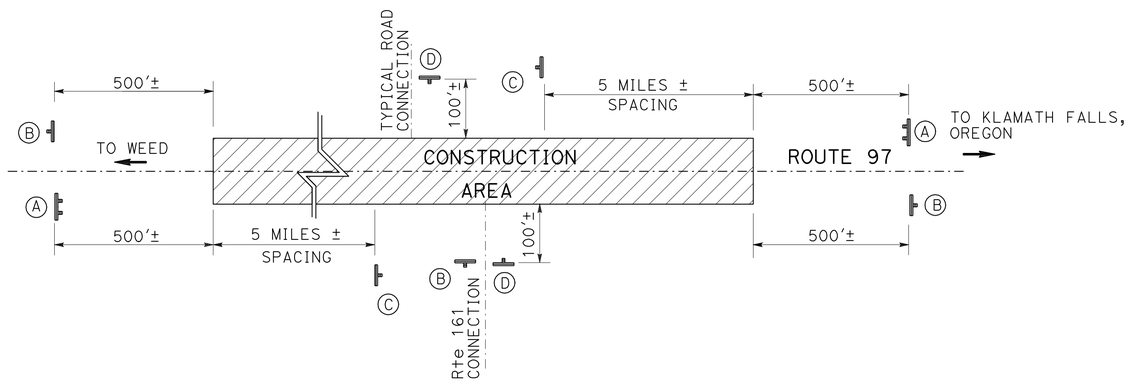

CONSTRUCTION AREA SIGNS (TYPICAL)

CONSTRUCTION AREA SIGNS (STATIONARY MOUNTED)

TYPE	CODE	PANEL SIZE	SIGN MESSAGE	NUMBER AND SIZE OF POST	No. OF SIGNS
(A)	G20-1 C23B(CA)	60" x 24" 36" x 18"	ROAD WORK NEXT 14 MILES PAVEMENT OVERLAY	2-4" x 6"	2
(B)	G20-2	36" x 18"	END ROAD WORK	1-4" x 6"	3
(C)	G20-1	36" x 18"	ROAD WORK NEXT XX MILES *	1-4" x 4"	4
(D)	W20-1	48" x 48"	ROAD WORK AHEAD	1-4" x 6"	44

* PLACE AT 5 MILE INTERVALS

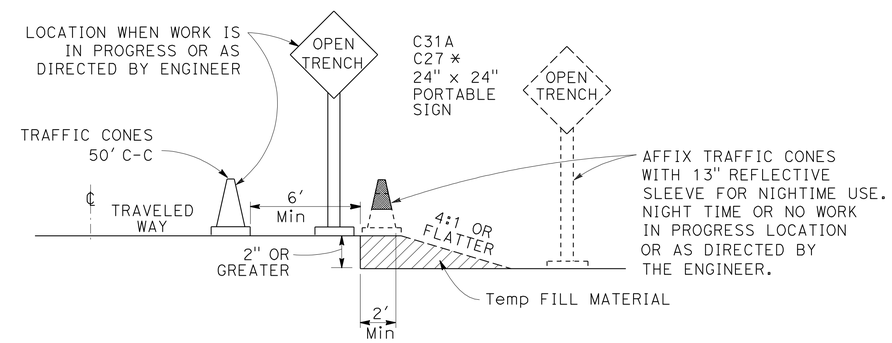

OPEN TRENCH SIGNING AND MARKING

* PLACE AT 250' INTERVALS THROUGH THE OPEN TRENCH AREA, ALTERNATE C27 (OPEN TRENCH) AND C31A (NO SHOULDER) SIGNS

CONSTRUCTION AREA SIGNS

NO SCALE

CS-1

REVISED BY | DATE REVISED
SAL PRIETO | MARK MILLER
CALCULATED-DESIGNED BY | CHECKED BY
FUNCTIONAL SUPERVISOR | MARK MILLER
STATE OF CALIFORNIA - DEPARTMENT OF TRANSPORTATION
Caltrans® ADVANCE PLANNING
p:\proj\02\4c010_plans\pse\SUBMIT_TO_HQ\24c0101a001.dgn

LAST REVISION | DATE PLOTTED => 13-JUL-2010 | TIME PLOTTED => 14:07
07-06-10

Dist	COUNTY	ROUTE	POST MILES TOTAL PROJECT	SHEET No.	TOTAL SHEETS
02	Sis	97	40.1/54.1	49	114

Mark J. Miller 07-06-10
REGISTERED CIVIL ENGINEER DATE

7-12-10
PLANS APPROVAL DATE

REGISTERED PROFESSIONAL ENGINEER
MARK MILLER
No. C48454
Exp. 6-30-12
CIVIL
STATE OF CALIFORNIA

THE STATE OF CALIFORNIA OR ITS OFFICERS OR AGENTS SHALL NOT BE RESPONSIBLE FOR THE ACCURACY OR COMPLETENESS OF SCANNED COPIES OF THIS PLAN SHEET.

NOTE:
1. EXACT SIGN LOCATION TO BE DETERMINED BY THE ENGINEER.

CONSTRUCTION AREA SIGNS AT ROAD CONNECTIONS (STATIONARY MOUNTED)

Co-Rte	PM	Lt	Rt	LOCATION
Sis-97				
	40.09		X	JUNIPER KNOLL Rd
	40.10	X		JUNIPER KNOLL Rd
	40.15	X		CORTEZ St
	40.17		X	CORTEZ St
	40.28	X		W VERA CRUZ St
	40.28		X	E VERA CRUZ St
	40.28		X	OLD STATE Hwy
	40.32	X		COLIMA St
	40.33		X	RAILROAD Ave
	41.37		X	SHEEP MOUNTAIN Rd
	43.03		X	SHADY DELL Rd
	44.63	X		BUTTE VALLEY Rd
	45.25	X		SAMS NECK Rd
	46.17		X	MERIDIAN Rd
	49.70	X		RICHARDSON Rd
	50.10		X	MT DIABLO Rd
	50.34		X	FIFTH St
	50.44	X		W 4TH St
	50.44	X		BUTTE St
	50.48	X		SOUTH OREGON St
	50.48		X	SOUTH OREGON St
	50.54	X		SOUTH CALIFORNIA St
	50.54		X	SOUTH CALIFORNIA St
	50.60		X	E 4TH St
	50.70	X		3RD St
	50.70		X	3RD St
	50.81	X		2ND St
	50.81		X	2ND St
	50.90	X		W 1ST St
	50.90	X		N MAIN St
	50.95	X		N PINE St
	50.95		X	S PINE St
	50.99		X	ALLEY
	51.02	X		JUNIPER St
	51.03		X	RAILROAD Ave
	51.04	X		RAILROAD Ave
	51.10		X	EAST Ave
	51.23		X	CENTER St
	52.37	X		INDIAN TOM LAKE Rd
	52.37		X	INDIAN TOM LAKE Rd
	53.06	X		OWENS Rd
	53.85		X	STATE ROUTE 161

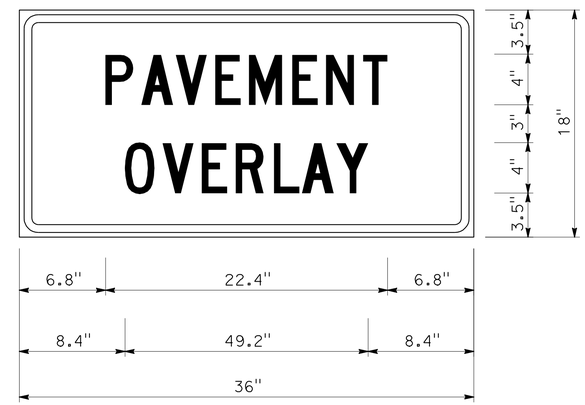

1.5" RADIUS, 0.6" BORDER, 0.4" INDENT, BLACK ON ORANGE;
[PAVEMENT] C;
[OVERLAY] C;

CONSTRUCTION AREA SIGNS

NO SCALE

CS-2

REVISED BY | DATE REVISED
SAL PRIETO | MARK MILLER
CALCULATED-DESIGNED BY | CHECKED BY
FUNCTIONAL SUPERVISOR: MARK MILLER
STATE OF CALIFORNIA - DEPARTMENT OF TRANSPORTATION
Caltrans® ADVANCE PLANNING

p:\proj\02\4c010_plans\pse\SUBMIT_TO_HQ\24c0101a002.dgn

LAST REVISION 07-06-10 | DATE PLOTTED => 13-JUL-2010 | TIME PLOTTED => 14:08

Dist	COUNTY	ROUTE	POST MILES TOTAL PROJECT	SHEET No.	TOTAL SHEETS
02	Sis	97	40.1/54.1	50	114

Mark J. Miller 07-06-10
REGISTERED CIVIL ENGINEER DATE

7-12-10
PLANS APPROVAL DATE

REGISTERED PROFESSIONAL ENGINEER
MARK MILLER
No. C48454
Exp. 6-30-12
CIVIL
STATE OF CALIFORNIA

THE STATE OF CALIFORNIA OR ITS OFFICERS OR AGENTS SHALL NOT BE RESPONSIBLE FOR THE ACCURACY OR COMPLETENESS OF SCANNED COPIES OF THIS PLAN SHEET.

NOTES:

1. EXACT SIGN & PCMS LOCATIONS TO BE DETERMINED BY ENGINEER.
2. SEE STANDARD PLANS FOR LANE CLOSURE REQUIREMENTS.
3. USE THE "ROAD WORK AHEAD" SIGN FRAMES WHEN COZEEP OFFICERS ARE NOT REQUIRED TO BE PRESENT DURING THE ENTIRE DURATION OF THE SPEED REDUCTION.
4. COVER EXISTING SPEED LIMIT SIGNS WITHIN THE REDUCED SPEED ZONE.

LEGEND

PORTABLE SIGN
DIRECTION OF TRAVEL
PORTABLE CHANGEABLE MESSAGE SIGN (PCMS)

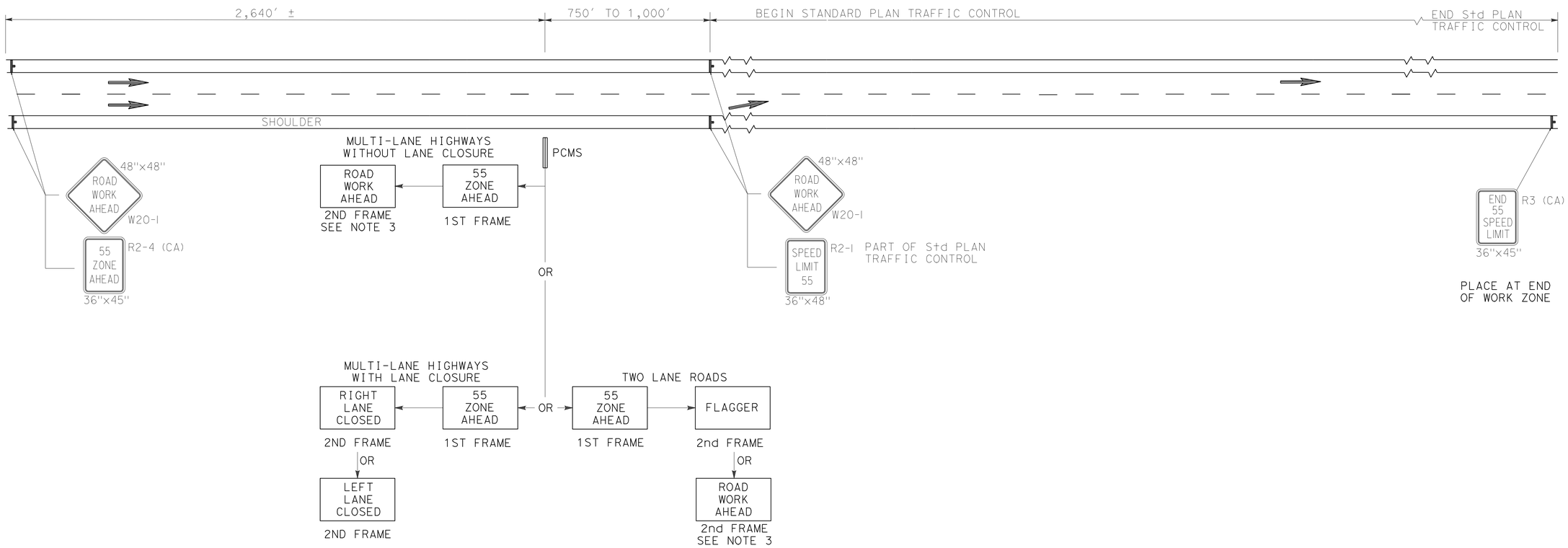

TYPICAL SIGNING FOR REDUCED SPEED ZONE
PM 51.31 TO PM 54.07

TRAFFIC HANDLING PLAN
NO SCALE

TH-1

REVISED BY | DATE REVISED
SAL PRIETO | MARK MILLER
CALCULATED-DESIGNED BY | CHECKED BY
FUNCTIONAL SUPERVISOR | MARK MILLER
STATE OF CALIFORNIA - DEPARTMENT OF TRANSPORTATION
Caltrans® ADVANCE PLANNING

p:\proj1\02\4c010_plans\pse\SUBMIT_TO_HQ\24c010md001.dgn

LAST REVISION 07-06-10 | DATE PLOTTED => 13-JUL-2010 | TIME PLOTTED => 14:08

Dist	COUNTY	ROUTE	POST MILES TOTAL PROJECT	SHEET No.	TOTAL SHEETS
02	Sis	97	40.1/54.1	51	114

REGISTERED CIVIL ENGINEER 07-06-02 DATE

7-12-10
PLANS APPROVAL DATE

REGISTERED PROFESSIONAL ENGINEER GREG KINGSFIELD No. C76297 Exp 6-30-12 CIVIL STATE OF CALIFORNIA

THE STATE OF CALIFORNIA OR ITS OFFICERS OR AGENTS SHALL NOT BE RESPONSIBLE FOR THE ACCURACY OR COMPLETENESS OF SCANNED COPIES OF THIS PLAN SHEET.

NOTE:
1. EXACT LOCATION TO BE DETERMINED BY ENGINEER.

LEGEND

- XX — PAVEMENT DELINEATION STRIPE DETAIL No.
- YIELD — TWO COMPONENT PAINT PAVEMENT MARKINGS (Typ)
- SINGLE STRIPE MARKER
- STRIPE CHANGE LOCATION
- ARROW (TYPE 5)
- ARROW (TYPE 3)
- RR — RAILROAD CROSSING
- LIMIT LINE
- DOUBLE LIMIT LINE
- CROSSWALK

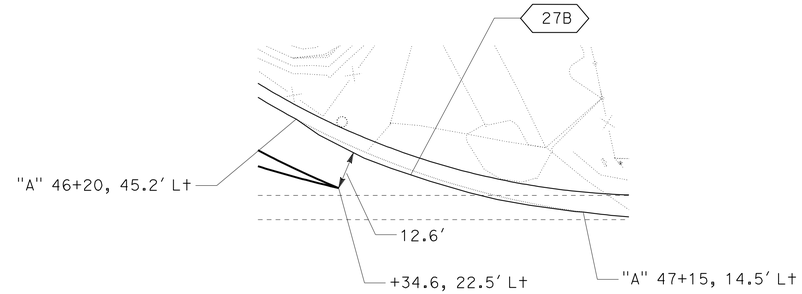

MAINTAIN EXISTING ETW STRIPE LOCATION DETAIL

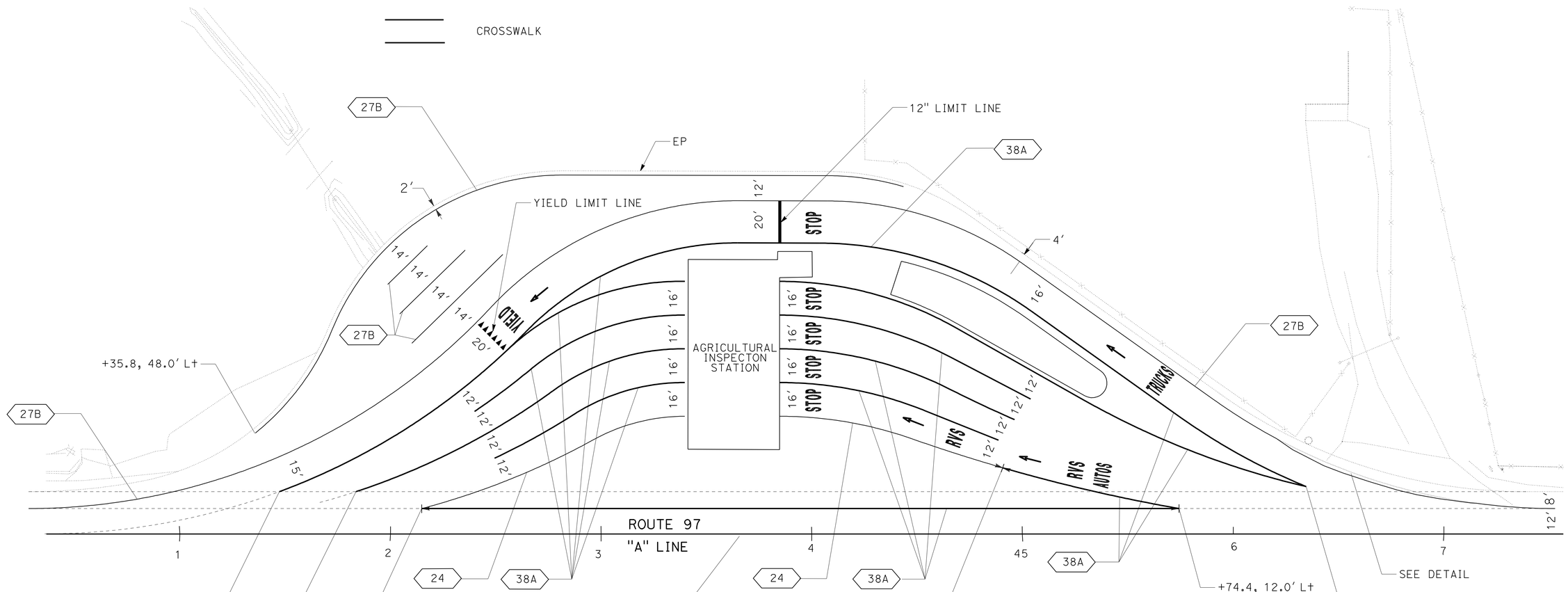

PLAN

PAVEMENT DELINEATION PLAN

NO SCALE

PD-1

THIS PLAN IS ACCURATE FOR PAVEMENT DELINEATION WORK ONLY.

REVISED BY	DATE REVISED

CALCULATED-DESIGNED BY: GREG KINGSFIELD
CHECKED BY: ALEX PETERSON
FUNCTIONAL SUPERVISOR: STEVE THORNE

STATE OF CALIFORNIA - DEPARTMENT OF TRANSPORTATION
Caltrans® HYDRAULICS DESIGN

p:\proj1\02\4c010_plans\pse\SUBMIT_TO_HQ\24c010na001.dgn

LAST REVISION DATE PLOTTED => 13-JUL-2010
TIME PLOTTED => 14:08
07-06-10

Dist	COUNTY	ROUTE	POST MILES TOTAL PROJECT	SHEET No.	TOTAL SHEETS
02	Sis	97	40.1/54.1	52	114

Mark J. Miller 07-06-10
REGISTERED CIVIL ENGINEER DATE

7-12-10
PLANS APPROVAL DATE

REGISTERED PROFESSIONAL ENGINEER
MARK MILLER
No. C48454
Exp. 6-30-12
CIVIL
STATE OF CALIFORNIA

THE STATE OF CALIFORNIA OR ITS OFFICERS OR AGENTS SHALL NOT BE RESPONSIBLE FOR THE ACCURACY OR COMPLETENESS OF SCANNED COPIES OF THIS PLAN SHEET.

NOTE:

1. EXACT LOCATION TO BE DETERMINED BY ENGINEER.

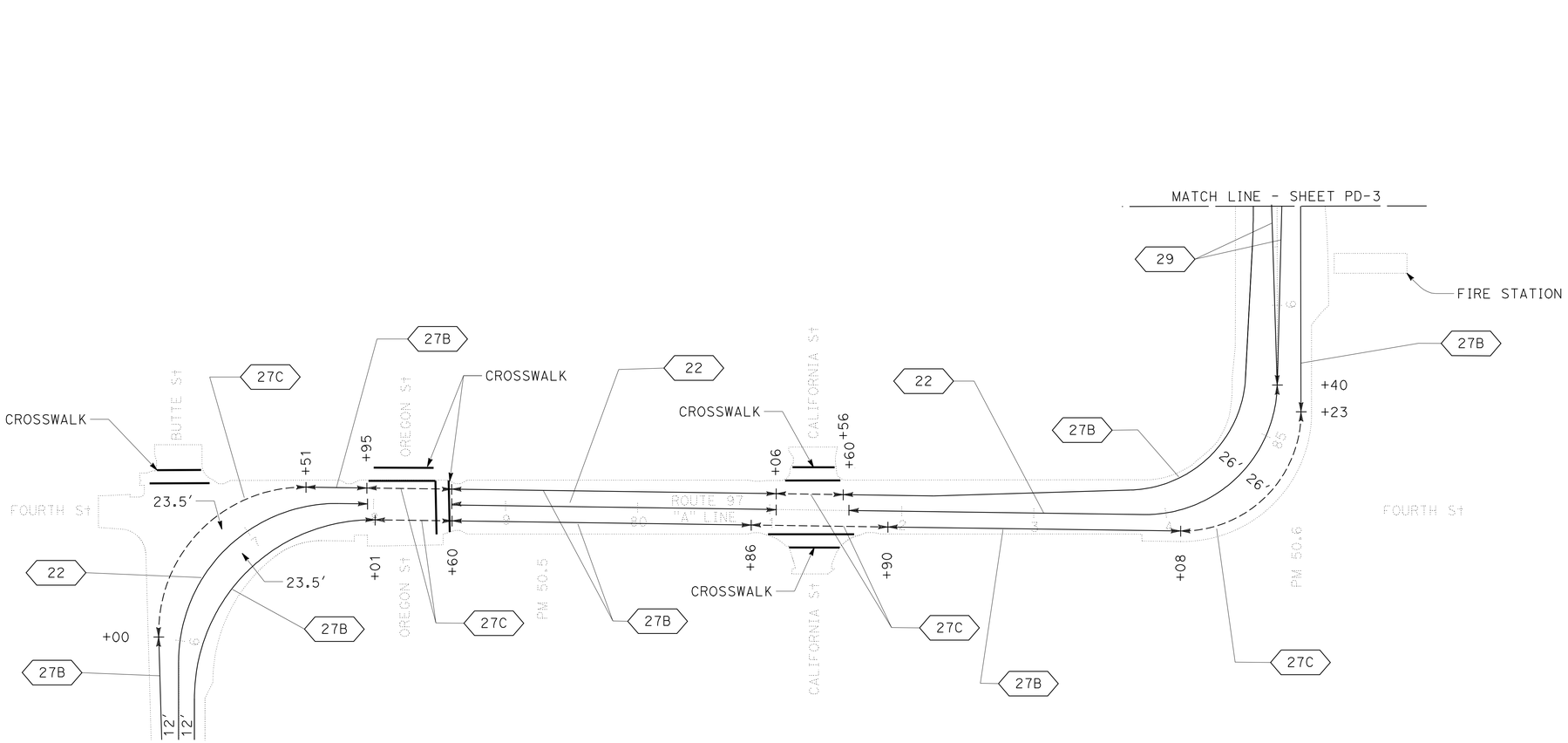

THIS PLAN ACCURATE FOR PAVEMENT DELINEATION WORK ONLY.

PAVEMENT DELINEATION PLAN

SCALE: 1" = 50'

PD-2

REVISED BY	
DATE REVISED	
CALCULATED-DESIGNED BY	SAL PRIETO
CHECKED BY	MARK MILLER
FUNCTIONAL SUPERVISOR	MARK MILLER

STATE OF CALIFORNIA - DEPARTMENT OF TRANSPORTATION
Caltrans® ADVANCE PLANNING

p:\proj1\02\4c010_plans\pse\SUBMIT_TO_HQ\24c010na002.dgn

LAST REVISION 07-06-10
DATE PLOTTED => 13-JUL-2010
TIME PLOTTED => 14:08

Dist	COUNTY	ROUTE	POST MILES TOTAL PROJECT	SHEET No.	TOTAL SHEETS
02	Sis	97	40.1/54.1	53	114

Mark J. Miller 07-06-10
REGISTERED CIVIL ENGINEER DATE

7-12-10
PLANS APPROVAL DATE

REGISTERED PROFESSIONAL ENGINEER
MARK MILLER
No. C48454
Exp. 6-30-12
CIVIL
STATE OF CALIFORNIA

THE STATE OF CALIFORNIA OR ITS OFFICERS OR AGENTS SHALL NOT BE RESPONSIBLE FOR THE ACCURACY OR COMPLETENESS OF SCANNED COPIES OF THIS PLAN SHEET.

NOTE:

1. EXACT LOCATION TO BE DETERMINED BY ENGINEER.

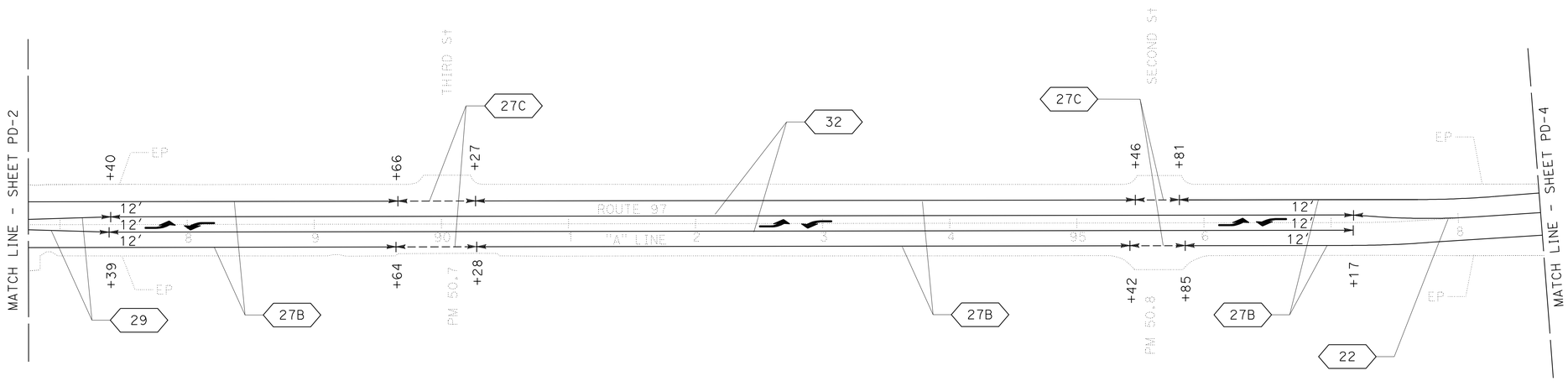

THIS PLAN IS ACCURATE FOR PAVEMENT DELINEATION WORK ONLY.

PAVEMENT DELINEATION PLAN

SCALE: 1" = 50'

PD-3

REVISED BY	DATE REVISED

CALCULATED-DESIGNED BY: SAL PRIETO
CHECKED BY: MARK MILLER
FUNCTIONAL SUPERVISOR: MARK MILLER

STATE OF CALIFORNIA - DEPARTMENT OF TRANSPORTATION
Caltrans® ADVANCE PLANNING

p:\proj\02\4c010_plans\pse\SUBMIT_TO_HQ\24c010na003.dgn

LAST REVISION 07-06-10 | DATE PLOTTED => 13-JUL-2010 | TIME PLOTTED => 14:08

Dist	COUNTY	ROUTE	POST MILES TOTAL PROJECT	SHEET No.	TOTAL SHEETS
02	Sis	97	40.1/54.1	54	114

Mark J. Miller 07-06-10
REGISTERED CIVIL ENGINEER DATE

7-12-10
PLANS APPROVAL DATE

REGISTERED PROFESSIONAL ENGINEER
MARK MILLER
No. C48454
Exp. 6-30-12
CIVIL
STATE OF CALIFORNIA

THE STATE OF CALIFORNIA OR ITS OFFICERS OR AGENTS SHALL NOT BE RESPONSIBLE FOR THE ACCURACY OR COMPLETENESS OF SCANNED COPIES OF THIS PLAN SHEET.

NOTE:

1. EXACT LOCATION TO BE DETERMINED BY ENGINEER.

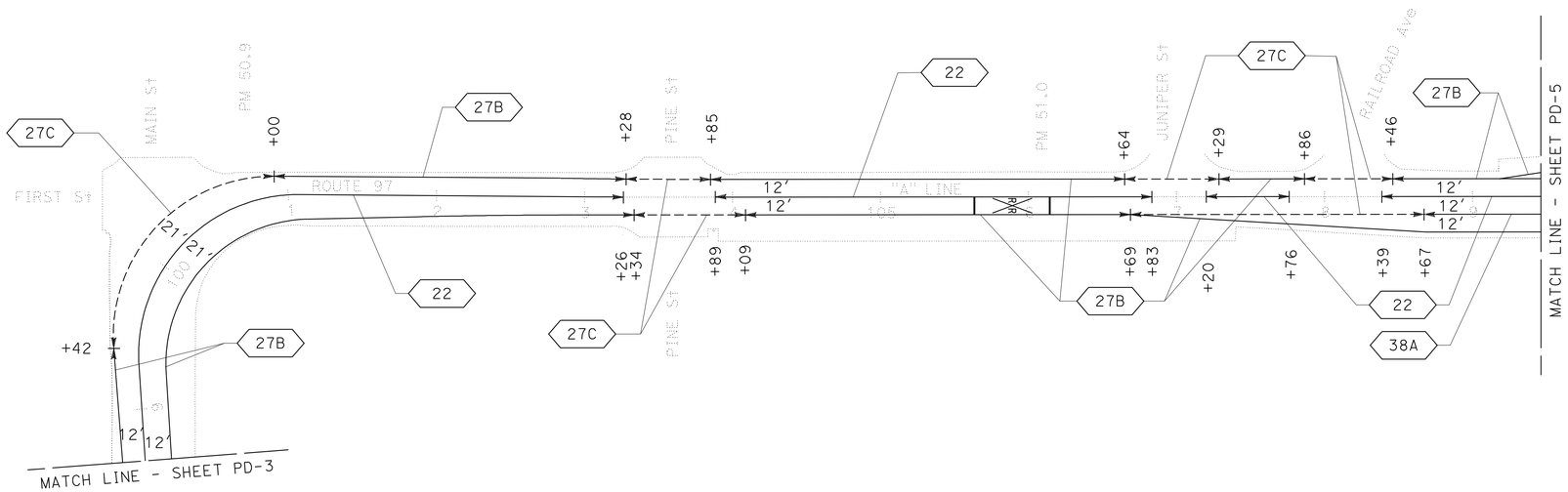

PAVEMENT DELINEATION PLAN

SCALE: 1" = 50'

PD-4

THIS PLAN IS ACCURATE FOR PAVEMENT DELINEATION WORK ONLY.

STATE OF CALIFORNIA - DEPARTMENT OF TRANSPORTATION
Caltrans® ADVANCE PLANNING

FUNCTIONAL SUPERVISOR: MARK MILLER
CALCULATED-DESIGNED BY: SAL PRIETO
CHECKED BY: MARK MILLER
REVISED BY
DATE REVISED

p:\proj1\02\4c010_plans\pse\SUBMIT_TO_HQ\24c010na004.dgn

LAST REVISION 07-06-10
DATE PLOTTED => 13-JUL-2010
TIME PLOTTED => 14:08

Dist	COUNTY	ROUTE	POST MILES TOTAL PROJECT	SHEET No.	TOTAL SHEETS
02	Sis	97	40.1/54.1	55	114

Mark J. Miller 07-06-10
REGISTERED CIVIL ENGINEER DATE

7-12-10
PLANS APPROVAL DATE

REGISTERED PROFESSIONAL ENGINEER
MARK MILLER
No. C48454
Exp. 6-30-12
CIVIL
STATE OF CALIFORNIA

THE STATE OF CALIFORNIA OR ITS OFFICERS OR AGENTS SHALL NOT BE RESPONSIBLE FOR THE ACCURACY OR COMPLETENESS OF SCANNED COPIES OF THIS PLAN SHEET.

NOTE:

1. EXACT LOCATION TO BE DETERMINED BY ENGINEER.

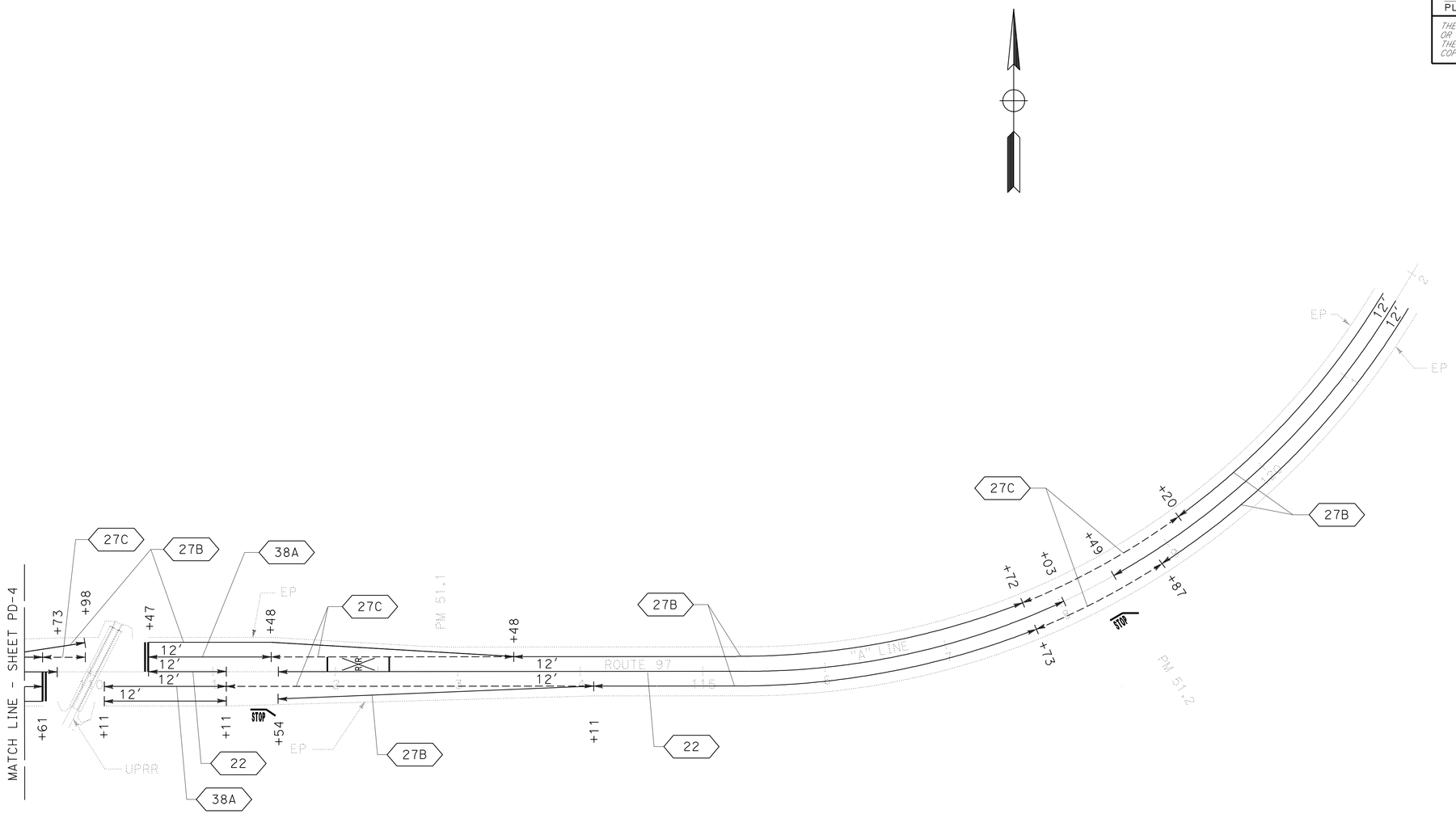

PAVEMENT DELINEATION PLAN

SCALE: 1" = 50'

PD-5

CALCULATED-DESIGNED BY	FUNCTIONAL SUPERVISOR	REVISED BY
SAL PRIETO	MARK MILLER	
CHECKED BY		DATE REVISED
MARK MILLER	MARK MILLER	

STATE OF CALIFORNIA - DEPARTMENT OF TRANSPORTATION
Caltrans® ADVANCE PLANNING

p:\proj\02\24c010_plans\pse\SUBMIT_TO_HQ\24c010na005.dgn

LAST REVISION 07-06-10 | DATE PLOTTED => 13-JUL-2010 | TIME PLOTTED => 14:08

Dist	COUNTY	ROUTE	POST MILES TOTAL PROJECT	SHEET No.	TOTAL SHEETS
02	Sis	97	40.1/54.1	56	114

Mark J. Miller 07-06-10
REGISTERED CIVIL ENGINEER DATE

7-12-10
PLANS APPROVAL DATE

REGISTERED PROFESSIONAL ENGINEER MARK MILLER No. C48454 Exp. 6-30-12 CIVIL STATE OF CALIFORNIA

THE STATE OF CALIFORNIA OR ITS OFFICERS OR AGENTS SHALL NOT BE RESPONSIBLE FOR THE ACCURACY OR COMPLETENESS OF SCANNED COPIES OF THIS PLAN SHEET.

TEMPORARY TRAFFIC STRIPE (PAINT)

LOCATION		4" TEMPORARY TRAFFIC STRIPE									8" TEMPORARY TRAFFIC STRIPE	
PM - PM		LF									LF	
		DETAIL 6	DETAIL 12	DETAIL 19		DETAIL 22	DETAIL 27B	DETAIL 27C	DETAIL 29	DETAIL 32	DETAIL 38	DETAIL 38A
40.10	40.59					2587	5174	1200				
40.59	40.87			1478			2957					
40.87	41.26	2059					4058					20
41.26	41.39					686	1373					
41.39	41.50			581			1161	150				
41.50	42.97	7762					15,463					20
42.97	43.11			739			1417	150				20
43.11	44.55	7603					15,146					20
44.55	44.78			1214			2428	150				
44.78	45.19	2165					4270					20
45.19	45.27			422			844	150				
45.27	45.37					528	1056					
45.37	45.56			1003			2006					
45.56	45.80					1267	2534					
45.80	46.11			1637			3214					20
46.11	46.15	211					422					
46.15	46.32			898			1794	150				
46.32	46.56					1267	2534					
46.56	46.74			950			1901					
46.74	49.63	15,259					30,338					60
49.63	49.70			370			739					
49.70	50.20					2635	5207	300				20
50.20	50.67					2482	4956	1200				
50.67	50.89						2319	600		2323		
50.89	51.04					792	1519	750				20
51.04	51.07					158	317					
51.07	51.10					158	317					
51.10	51.15					264	527	150			264	
51.15	51.18					158	317					
51.18	51.36					950	1900	150				
51.36	51.54		950			950	1899	300				
51.54	52.39		8976			4488	8916					20
52.39	52.46					370	739					
52.46	52.59			686			1373					
52.59	53.04	2376					4692					20
53.04	53.10			317			633	150				
53.10	53.21					581	1162					
53.21	53.48			1426			2851					
53.48	53.57	475					950					
53.57	53.71			739			1478					
53.71	53.75					211	421	150			211	
53.75	53.82					370	739				370	
53.82	53.90					422	845				845	
53.90	53.93						316	150	317		158	
53.93	53.97						421	150	422			
53.97	54.02					264	467	150				20
54.02	54.10					422	845					
DETAIL SUBTOTAL		37,910	9926	12,460		22,010	146,955	6150	739	2323	1848	280
SUBTOTAL		238,473									2128	
TOTAL		240,601										

PAVEMENT DELINEATION DETAILS AND QUANTITIES

PDD-1

STATE OF CALIFORNIA - DEPARTMENT OF TRANSPORTATION
Caltrans® ADVANCE PLANNING

FUNCTIONAL SUPERVISOR: MARK MILLER
CALCULATED-DESIGNED BY: SAL PRIETO
CHECKED BY: MARK MILLER
REVISED BY
DATE REVISED

p:\proj1\02\4c010_plans\pse\SUBMIT_TO_HQ\24c010nc001.dgn

LAST REVISION DATE PLOTTED => 14-JUL-2010
TIME PLOTTED => 07:49

Dist	COUNTY	ROUTE	POST MILES TOTAL PROJECT	SHEET No.	TOTAL SHEETS
02	Sis	97	40.1/54.1	57	114

Mark J. Miller 07-06-10
REGISTERED CIVIL ENGINEER DATE

7-12-10
PLANS APPROVAL DATE

REGISTERED PROFESSIONAL ENGINEER
MARK MILLER
No. C48454
Exp. 6-30-12
CIVIL
STATE OF CALIFORNIA

THE STATE OF CALIFORNIA OR ITS OFFICERS OR AGENTS SHALL NOT BE RESPONSIBLE FOR THE ACCURACY OR COMPLETENESS OF SCANNED COPIES OF THIS PLAN SHEET.

TEMPORARY PAVEMENT MARKING (PAINT)

LOCATION PM	MESSAGE	SQFT	TOTAL NUMBER	TOTAL SQFT	REMARKS
51.50 (3), 52.30 (3), 53.88 (3)	TYPE VI ARROW	42	9	378	LANE DROP ARROWS
40.10, 40.14, 40.16, 40.23, 40.25, 40.31 (2) 41.34, 43.02, 49.67, 50.13, 50.59, 50.95, 51.23 52.36 (2), 53.05, 53.83,	"STOP"	22	18	396	ROAD CONNECTIONS
50.66 (2), 50.75 (2), 50.83 (2), 53.88,	TYPE IV ARROW	15	7	105	DORRIS BUSINESS AREA
51.00, 51.10	RAILROAD CROSSING SYMBOL	70	2	140	AT UPRR
51.00 (2), 51.10 (2)	RAILROAD CROSSING TRANSVERSE STRIPES	48	4	192	AT UPRR
50.46 (4), 50.52 (4), 50.69 (4), 50.95 (2),	"CROSSWALK STRIPE"	48	14	672	DORRIS BUSINESS AREA
40.10, 40.14, 40.16, 40.23, 40.25, 40.31 (2) 41.34, 43.02, 44.61, 45.20 49.67, 50.13, 51.06, 51.08, 50.59, 50.95, 51.23 52.36 (2), 53.05, 53.83,	"LIMIT LINE"	40	22	880	ROAD CONNECTIONS
40.50, 41.50, 42.50, 43.50, 44.50, 45.50, 46.50, 47.50, 48.50, 49.50, 50.50, 51.50, 52.50, 53.50	HALFMILE MARKING	3	14	42	SEE DETAIL A
TOTAL				2805	

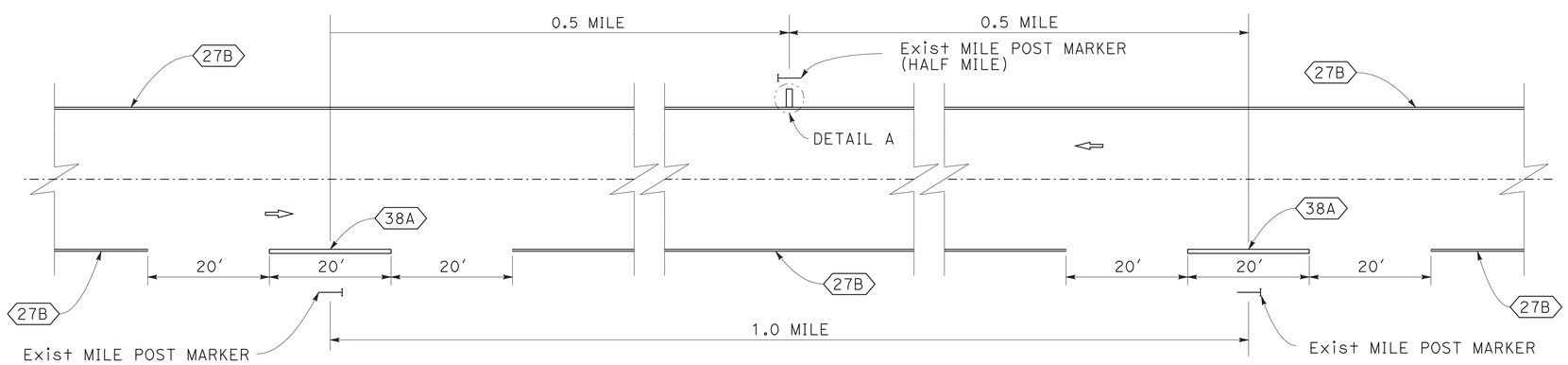

TYPICAL HALF MILE AND MILE POST STRIPE

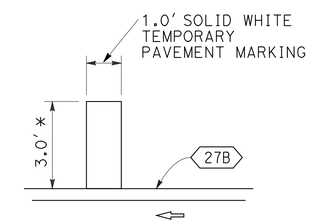

DETAIL A

* ACTUAL LENGTH MAY VARY DUE TO PAVEMENT WIDTH

PAVEMENT DELINEATION DETAILS AND QUANTITIES

PDD-2

REVISED BY | DATE REVISED
SAL PRIETO | MARK MILLER
CALCULATED-DESIGNED BY | CHECKED BY
FUNCTIONAL SUPERVISOR: MARK MILLER

STATE OF CALIFORNIA - DEPARTMENT OF TRANSPORTATION
Caltrans® ADVANCE PLANNING

p:\proj1\02\4c010_plans\pse\SUBMIT_TO_HQ\24c010nc002.dgn

LAST REVISION 07-06-10 | DATE PLOTTED => 14-JUL-2010 | TIME PLOTTED => 07:49

Dist	COUNTY	ROUTE	POST MILES TOTAL PROJECT	SHEET No.	TOTAL SHEETS
02	Sis	97	40.1/54.1	58	114

Mark J. Miller 07-06-10
REGISTERED CIVIL ENGINEER DATE

7-12-10
PLANS APPROVAL DATE

REGISTERED PROFESSIONAL ENGINEER MARK MILLER No. C48454 Exp. 6-30-12 CIVIL STATE OF CALIFORNIA

THE STATE OF CALIFORNIA OR ITS OFFICERS OR AGENTS SHALL NOT BE RESPONSIBLE FOR THE ACCURACY OR COMPLETENESS OF SCANNED COPIES OF THIS PLAN SHEET.

TWO-COMPONENT PAINT TRAFFIC STRIPE

LOCATION		4" TWO-COMPONENT PAINT TRAFFIC STRIPE									8" TWO-COMPONENT PAINT TRAFFIC STRIPE	
PM - PM		LF									LF	
		DETAIL 6	DETAIL 12	DETAIL 19	DETAIL 22	DETAIL 24	DETAIL 27B	DETAIL 27C	DETAIL 29	DETAIL 32	DETAIL 38	DETAIL 38A
40.10	40.59				2587		5174	1200				
40.59	40.87			1478			2957					
40.87	41.26	2059					4058					20
41.26	41.39				686		1373					
41.39	41.50			581			1161	150				
41.50	42.97	7762					15,463					20
42.97	43.11			739			1417	150				20
43.11	44.55	7603					15,146					20
44.55	44.78			1214			2428	150				
44.78	45.19	2165					4270					20
45.19	45.27			422			844	150				
45.27	45.37				528		1056					
45.37	45.56			1003			2006					
45.56	45.80				1267		2534					
45.80	46.11			1637			3214					20
46.11	46.15	211					422					
46.15	46.32			898			1794	150				
46.32	46.56				1267		2534					
46.56	46.74			950			1901					
46.74	49.63	15,259					30,338					60
49.63	49.70			370			739					
AG INSPECTION "A" 40+28 TO 47+53					725	242	1234					2101
49.70	50.20				2635		5207	300				20
50.20	50.67				2482		4956	1200				
50.67	50.89						2319	600		2323		
50.89	51.04				792		1519	750				20
51.04	51.07				158		317					
51.07	51.10				158		317					
51.10	51.15				264		527	150			264	
51.15	51.18				158		317					
51.18	51.36				950		1900	150				
51.36	51.54		950		950		1899	300				
51.54	52.39		8976		4488		8916					20
52.39	52.46				370		739					
52.46	52.59			686			1373					
52.59	53.04	2376					4692					20
53.04	53.10			317			633	150				
53.10	53.21				581		1162					
53.21	53.48			1426			2851					
53.48	53.57	475					950					
53.57	53.71			739			1478					
53.71	53.75				211		421	150			211	
53.75	53.82				370		739				370	
53.82	53.90				422		845				845	
53.90	53.93						316	150	317		158	
53.93	53.97						421	150	422			
53.97	54.02				264		467	150				20
54.02	54.10				422		845					
SUBTOTAL		37,910	9926	12,460	22,735	242	148,189	6150	739	2323	1848	2381
TOTAL		240,674									4229	

PAVEMENT MARKER

PAVEMENT MARKER (RETROREFLECTIVE-RECESSED)
EA
3850

PAVEMENT DELINEATION DETAILS AND QUANTITIES

PDD-3

STATE OF CALIFORNIA - DEPARTMENT OF TRANSPORTATION
Caltrans® ADVANCE PLANNING

FUNCTIONAL SUPERVISOR: MARK MILLER
CALCULATED-DESIGNED BY: SAL PRIETO
CHECKED BY: MARK MILLER
REVISED BY
DATE REVISED

p:\proj\02\4c010_plans\pse\SUBMIT_TO_HQ\24c010nc003.dgn

LAST REVISION 07-06-10 | DATE PLOTTED => 14-JUL-2010 | TIME PLOTTED => 10:36

Dist	COUNTY	ROUTE	POST MILES TOTAL PROJECT	SHEET No.	TOTAL SHEETS
02	Sis	97	40.1/54.1	59	114

Mark J. Miller 07-06-10
REGISTERED CIVIL ENGINEER DATE

7-12-10
PLANS APPROVAL DATE

REGISTERED PROFESSIONAL ENGINEER MARK MILLER No. C48454 Exp. 6-30-12 CIVIL STATE OF CALIFORNIA

THE STATE OF CALIFORNIA OR ITS OFFICERS OR AGENTS SHALL NOT BE RESPONSIBLE FOR THE ACCURACY OR COMPLETENESS OF SCANNED COPIES OF THIS PLAN SHEET.

TWO-COMPONENT PAINT PAVEMENT MARKING

LOCATION PM	MESSAGE	SQFT	TOTAL NUMBER	TOTAL SQFT	REMARKS
49.86	"CARS"	17	1	17	AT AG INSPECTION STATION
49.86	"TRUCKS"	35	1	35	AT AG INSPECTION STATION
49.86	"YIELD"	24	1	24	AT AG INSPECTION STATION
49.86 (3)	TYPE V ARROW	33	3	99	AT AG INSPECTION STATION
51.50 (3), 52.30 (3), 53.88 (3)	TYPE VI ARROW	42	9	378	LANE DROP ARROWS
40.10, 40.14, 40.16, 40.23, 40.25, 40.31 (2) 41.34, 43.02, 49.67, 50.13, 50.59, 50.95, 51.23 52.36 (2), 53.05, 53.83,	"STOP"	22	18	396	ROAD CONNECTIONS
50.66 (2), 50.75 (2), 50.83 (2), 53.88,	TYPE IV ARROW	15	7	105	DORRIS BUSINESS AREA
51.00, 51.10	RAILROAD CROSSING SYMBOL	70	2	140	AT UPRR
51.00 (2), 51.10 (2)	RAILROAD CROSSING TRANSVERSE STRIPES	48	4	192	AT UPRR
50.46 (4), 50.52 (4), 50.69 (4), 50.95 (2),	"CROSSWALK STRIPE"	48	14	672	DORRIS BUSINESS AREA
40.10, 40.14, 40.16, 40.23, 40.25, 40.31 (2) 41.34, 43.02, 44.61, 45.20 49.67, 50.13, 51.06, 51.08, 50.59, 50.95, 51.23 52.36 (2), 53.05, 53.83,	"LIMIT LINE"	40	22	880	ROAD CONNECTIONS
"A" 42+55.40	YIELD LINE	15	1	15	AT AG INSPECTION STATION
"A" 42+55.40	YIELD	24	1	24	AT AG INSPECTION STATION
"A" 42+55.40, 44+53.66, 46+12.50 (2)	TYPE I 18'-0" ARROW	25	4	100	AT AG INSPECTION STATION
"A" 43+84.75 (5)	STOP	22	5	110	AT AG INSPECTION STATION
"A" 43+84.75	LIMIT LINE (1'-0" WHITE LINE)	15	1	15	AT AG INSPECTION STATION
"A" 44+53.66, 46+12.50	RVS	18	2	36	AT AG INSPECTION STATION
"A" 46+12.50	AUTOS	31	1	31	AT AG INSPECTION STATION
"A" 46+12.50	TRUCKS	35	1	35	AT AG INSPECTION STATION
40.50, 41.50, 42.50, 43.50, 44.50, 45.50, 46.50, 47.50, 48.50, 49.50, 50.50, 51.50, 52.50, 53.50	HALFMILE MARKING	3	14	42	SEE DETAIL B
TOTAL				3346	

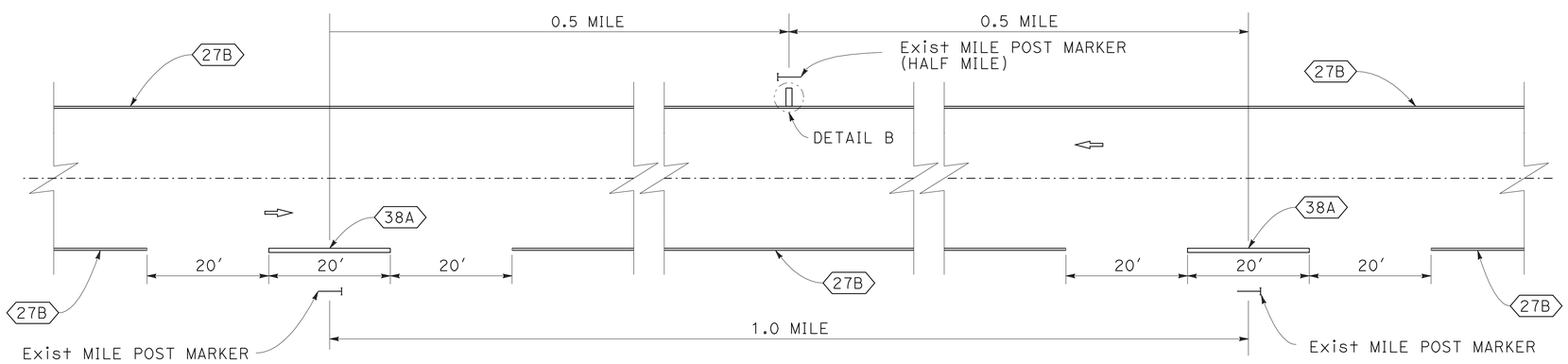

TYPICAL HALF MILE AND MILE POST STRIPE

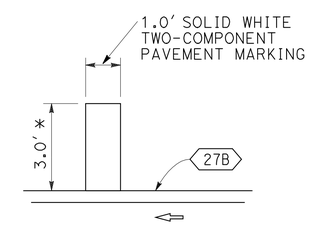

DETAIL B

* ACTUAL LENGTH MAY VARY DUE TO PAVEMENT WIDTH

PAVEMENT DELINEATION DETAILS AND QUANTITIES

PDD-4

STATE OF CALIFORNIA - DEPARTMENT OF TRANSPORTATION
Caltrans® ADVANCE PLANNING

FUNCTIONAL SUPERVISOR: MARK MILLER
CALCULATED-DESIGNED BY: SAL PRIETO
CHECKED BY: MARK MILLER
REVISED BY
DATE REVISED

p:\proj\02\4c010_plans\pse\SUBMIT_TO_HQ\24c010nc004.dgn

LAST REVISION 07-06-10 | DATE PLOTTED => 14-JUL-2010 | TIME PLOTTED => 07:49

Dist	COUNTY	ROUTE	POST MILES TOTAL PROJECT	SHEET No.	TOTAL SHEETS
02	Sis	97	40.1/54.1	60	114

REGISTERED CIVIL ENGINEER 07-06-10 DATE

7-12-10
PLANS APPROVAL DATE

REGISTERED PROFESSIONAL ENGINEER FRANK RIVAS No. 53592 Exp. 6/30/11 CIVIL STATE OF CALIFORNIA

THE STATE OF CALIFORNIA OR ITS OFFICERS OR AGENTS SHALL NOT BE RESPONSIBLE FOR THE ACCURACY OR COMPLETENESS OF SCANNED COPIES OF THIS PLAN SHEET.

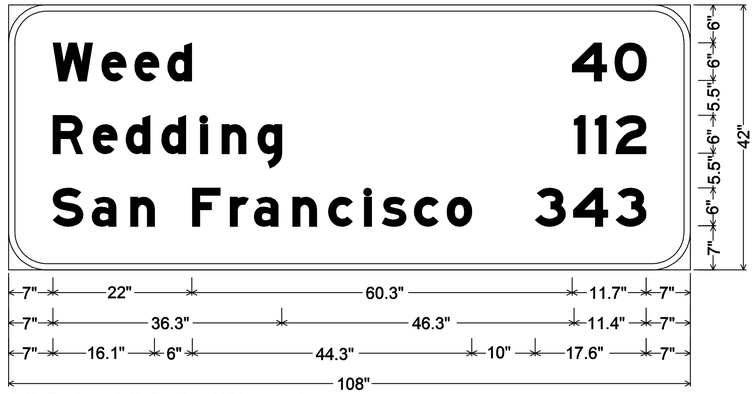

6.0" Radius, 1.0" Border, White on Green;
[Weed] E Mod; [Redding] E Mod; [San Francisco] E Mod; [40] E Mod;
[112] E Mod; [343] E Mod;

G5(Ca)
FSBT PM 40.03

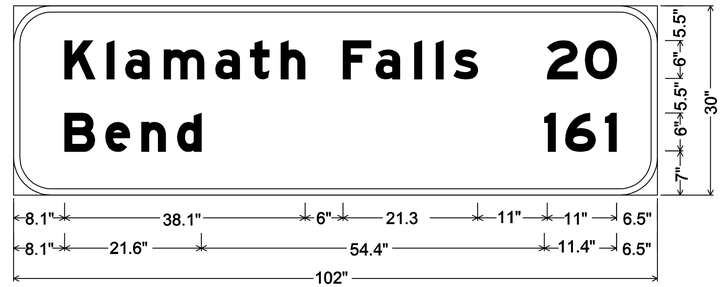

6.0" Radius, 1.0" Border, White on Green;
[Klamath Falls] E Mod; [Bend] E Mod; [20] E Mod; [161] E Mod;

G5(Ca)
FNBT PM 51.33

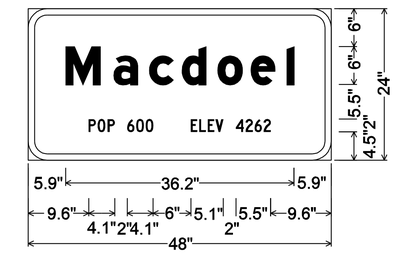

3.0" Radius, 1.0" Border, White on Green;
[Macdoel] E Mod;
[POP 600 ELEV 4262] C;

G9-5(Ca)
FNBT PM 40.00
FSBT PM 40.23

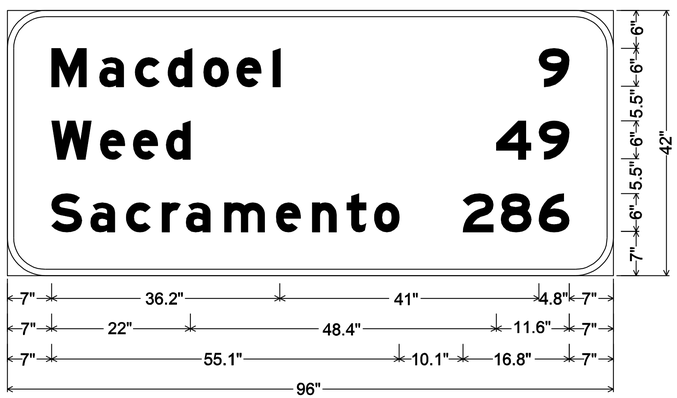

6.0" Radius, 1.0" Border, White on Green;
[Macdoel] E Mod; [Weed] E Mod; [Sacramento] E Mod; [9] E Mod;
[49] E Mod; [286] E Mod;

G5 (Ca)
FSBT PM 49.44

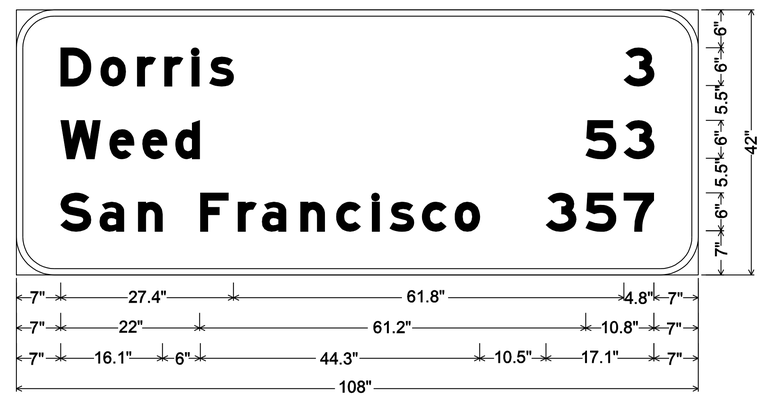

6.0" Radius, 1.0" Border, White on Green;
[Dorris] E Mod; [Weed] E Mod; [San Francisco] E Mod; [3] E Mod; [53] E Mod;
[357] E Mod;

G5(Ca)
FSBT PM 53.58

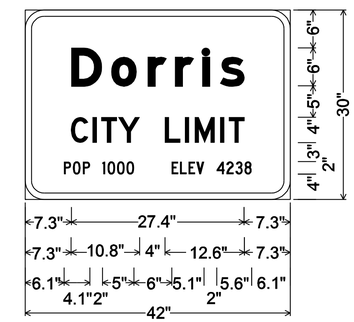

3.0" Radius, 1.0" Border, White on Green;
[Dorris] E Mod;
[CITY LIMIT] D;
[POP 1000 ELEV 4238] C;

G9-5(Ca)
FSBT PM 51.25
FNBT PM 50.26

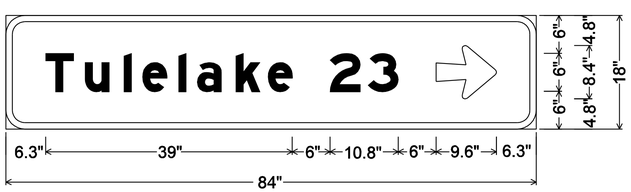

3.0" Radius, 1.0" Border, White on Green;
[Tulelake 23] E Mod; Arrow 6UC-1L - 9.6" 0°;

G1-1(Ca)
FNBT PM 53.78

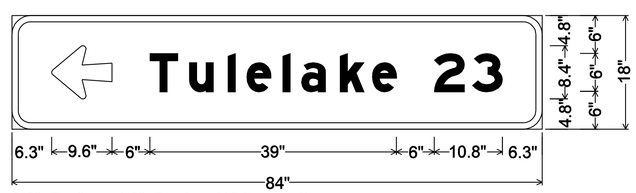

3.0" Radius, 1.0" Border, White on Green;
Arrow 6UC-1L - 9.6" 180°; [Tulelake 23] E Mod;

G1-1(Ca)
FSBT PM 53.89

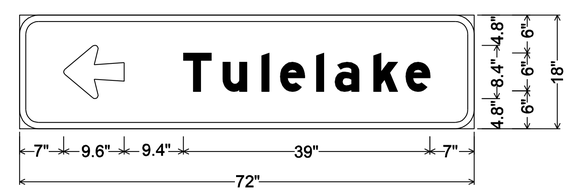

3.0" Radius, 1.0" Border, White on Green;
Arrow 6UC-1L - 9.6" 180°; [Tulelake] E Mod;

G8(Ca)
PM 53.98

SIGN DETAILS
SD-1

REVISED BY | DATE REVISED
FRANK RIVAS | TOM ROBERTS
CALCULATED-DESIGNED BY | CHECKED BY
FUNCTIONAL SUPERVISOR
ROB STINGER

STATE OF CALIFORNIA - DEPARTMENT OF TRANSPORTATION
Caltrans® TRAFFIC OPS

p:\proj1\02\4c010_plans\pse\SUBMIT_TO_HQ\24c010ob001.dgn

LAST REVISION DATE PLOTTED => 14-JUL-2010
07-02-10 TIME PLOTTED => 07:49

Dist	COUNTY	ROUTE	POST MILES TOTAL PROJECT	SHEET No.	TOTAL SHEETS
02	Sis	97	40.1/54.1	61	114

REGISTERED CIVIL ENGINEER 07-06-10 DATE

7-12-10
PLANS APPROVAL DATE

REGISTERED PROFESSIONAL ENGINEER
FRANK RIVAS
No. 53592
Exp. 6/30/11
CIVIL
STATE OF CALIFORNIA

THE STATE OF CALIFORNIA OR ITS OFFICERS OR AGENTS SHALL NOT BE RESPONSIBLE FOR THE ACCURACY OR COMPLETENESS OF SCANNED COPIES OF THIS PLAN SHEET.

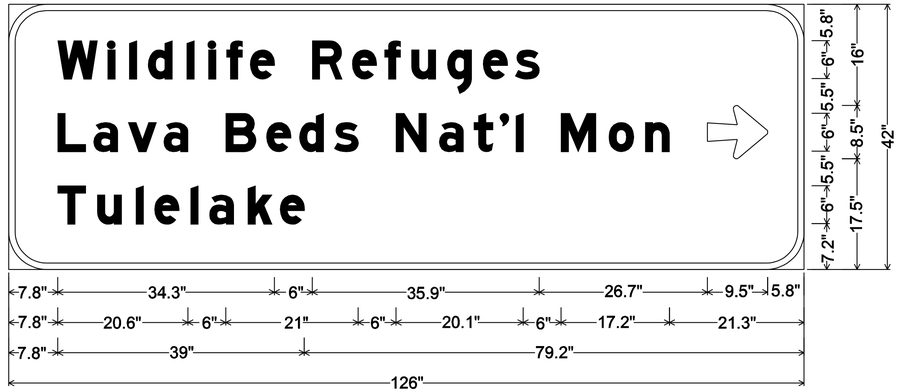

6.0" Radius, 1.0" Border, White on Green;
[Wildlife Refuges] E Mod; [Lava Beds Nat'l Mon] E Mod; [Tulelake] E Mod;
Arrow 6UC-1L - 9.6" 0°;

G8(Ca)
FNBT PM 53.69

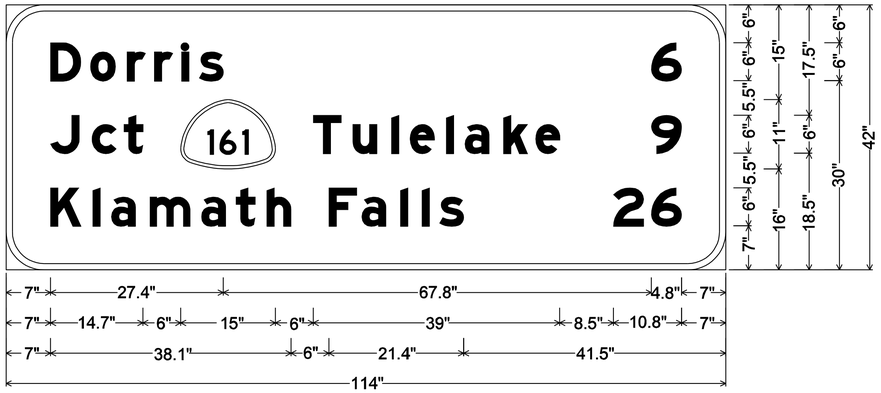

6.0" Radius, 1.0" Border, White on Green;
[Dorris] E Mod; [Jct] E Mod; [Tulelake] E Mod; [Klamath Falls] E Mod; [6] E Mod;
[9] E Mod; [26] E Mod;

G5 (Ca)
FNBT PM 44.88

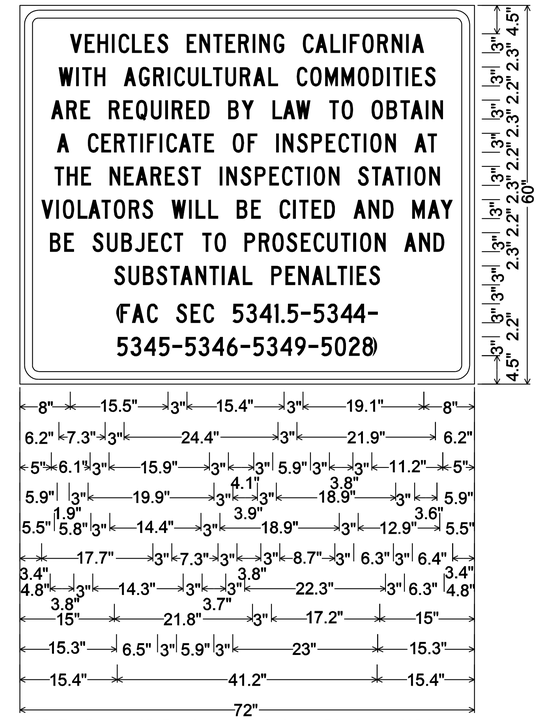

3.0" Radius, 1.3" Border, 0.8" Indent, Black on White;
[VEHICLES ENTERING CALIFORNIA] C;
[WITH AGRICULTURAL COMMODITIES] C;
[ARE REQUIRED BY LAW TO OBTAIN] C;
[A CERTIFICATE OF INSPECTION AT] C;
[THE NEAREST INSPECTION STATION] C;
[VIOLATORS WILL BE CITED AND MAY] C;
[BE SUBJECT TO PROSECUTION AND] C;
[SUBSTANTIAL PENALTIES] C;
[(FAC SEC 5341.5-5344-] C;
[5345-5346-5349-5028)] C;

SPL - AG STATION #1
FSBT PM 53.68

SIGN DETAILS
SD-2

REVISED BY | DATE REVISED
FRANK RIVAS | TOM ROBERTS
CALCULATED-DESIGNED BY | CHECKED BY
FUNCTIONAL SUPERVISOR
ROB STINGER

STATE OF CALIFORNIA - DEPARTMENT OF TRANSPORTATION
Caltrans® TRAFFIC OPS

p:\proj1\02\4c010_plans\pse\SUBMIT_TO_HQ\24c010ob002.dgn

LAST REVISION 07-02-10 | DATE PLOTTED => 14-JUL-2010 | TIME PLOTTED => 07:50

Dist	COUNTY	ROUTE	POST MILES TOTAL PROJECT	SHEET No.	TOTAL SHEETS
02	Sis	97	40.1/54.1	62	114

Frank J. Rivas 07-06-10
REGISTERED CIVIL ENGINEER DATE

7-12-10
PLANS APPROVAL DATE

REGISTERED PROFESSIONAL ENGINEER
FRANK RIVAS
No. 53592
Exp. 6/30/11
CIVIL
STATE OF CALIFORNIA

THE STATE OF CALIFORNIA OR ITS OFFICERS OR AGENTS SHALL NOT BE RESPONSIBLE FOR THE ACCURACY OR COMPLETENESS OF SCANNED COPIES OF THIS PLAN SHEET.

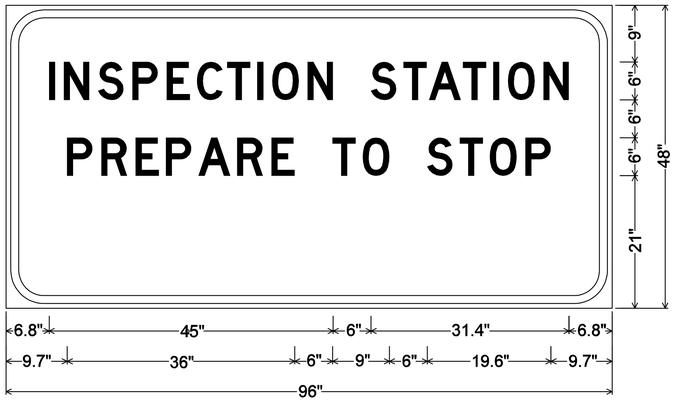

6.0" Radius, 1.3" Border, 0.8" Indent, Black on White;
[INSPECTION STATION] D; [PREPARE TO STOP] D;

SPL - AG STATION #2
FSBT PM 50.24

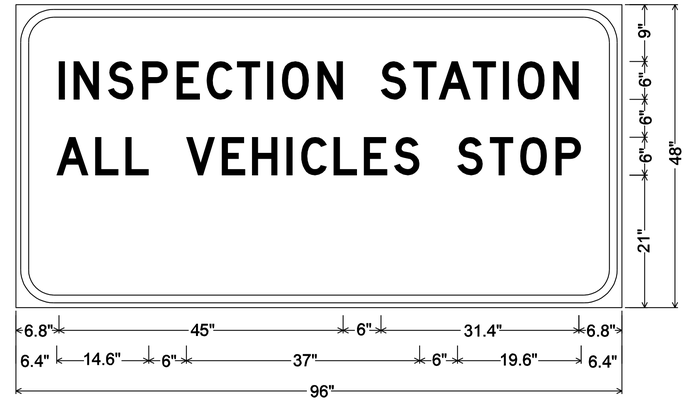

6.0" Radius, 1.3" Border, 0.8" Indent, Black on White;
[INSPECTION STATION] D; [ALL VEHICLES STOP] D;

SPL - AG STATION #3
FSBT PM 50.08

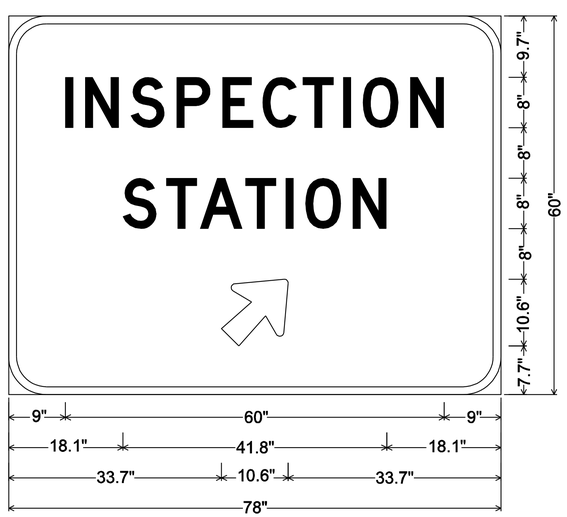

6.0" Radius, 1.3" Border, White on Green;
[INSPECTION] D; [STATION] D;
Arrow 8UC-1L - 12.8" 45°;

SPL - AG STATION #4
FSBT PM 49.91

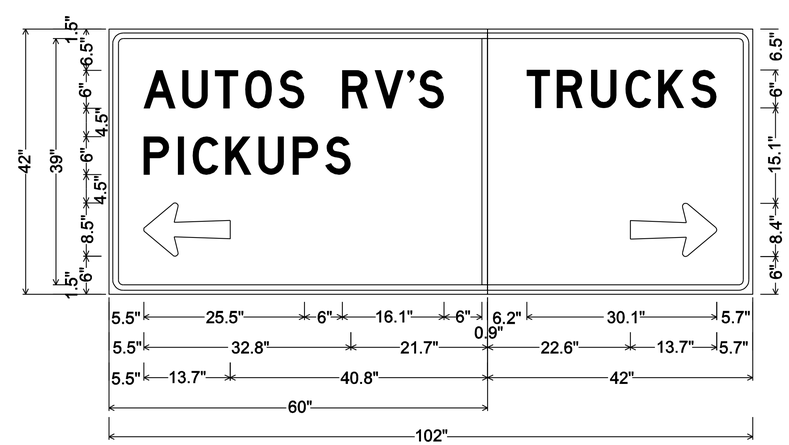

2.3" Radius, 0.9" Border, 0.6" Indent, Black on White;
[AUTOS RV'S] D; [PICKUPS] D; Arrow 6UC-2LV - 13.7" 180°;
2.3" Radius, 0.9" Border, 0.6" Indent, Black on White;
[TRUCKS] D; Arrow 6UC-2LV - 13.7" 0°;

SPL - AG STATION #5
FSBT PM 49.85

SIGN DETAILS
SD-3

REVISED BY	DATE REVISED

FRANK RIVAS — TOM ROBERTS — CALCULATED-DESIGNED BY — CHECKED BY

FUNCTIONAL SUPERVISOR: ROB STINGER

STATE OF CALIFORNIA - DEPARTMENT OF TRANSPORTATION
Caltrans® TRAFFIC OPS

p:\proj1\02\4c010_plans\pse\SUBMIT_TO_HQ\24c010ob003.dgn

LAST REVISION 07-02-10 | DATE PLOTTED => 14-JUL-2010 | TIME PLOTTED => 07:50

Dist	COUNTY	ROUTE	POST MILES TOTAL PROJECT	SHEET No.	TOTAL SHEETS
02	Sis	97	40.1/54.1	63	114

Thomas E. Roberts 07-06-10
REGISTERED CIVIL ENGINEER DATE

7-12-10
PLANS APPROVAL DATE

REGISTERED PROFESSIONAL ENGINEER
THOMAS E. ROBERTS
No. 63005
Exp. 6-30-12
CIVIL
STATE OF CALIFORNIA

THE STATE OF CALIFORNIA OR ITS OFFICERS OR AGENTS SHALL NOT BE RESPONSIBLE FOR THE ACCURACY OR COMPLETENESS OF SCANNED COPIES OF THIS PLAN SHEET.

NOTES:

1. USE A 2¼" Sq TUBE x 30" LONG, 3/16" THICK ANCHOR FOR 2" POSTS.
   USE A 3" Sq TUBE x 3' LONG, 3/16" THICK ANCHOR FOR 2-1/2 " POSTS.
2. USE A 5/16" CORNER BOLT OR TWO DRIVE RIVETS TO FASTEN ASSEMBLED SIGN AND POST INTO ANCHOR. INSTALL CORNER BOLT OR DRIVE RIVETS INTO THE SIDES FACING TRAFFIC.
3. REMOVE EXISTING AC OR PCC, DRIVE ANCHOR SLEEVE INTO SOIL AND RECAP WITH LIKE MATERIAL, MATCHING EXISTING THICKNESS.
4. 2" POSTS ARE TO BE 1/8" THICK, PERFORATIONS OF 7/16" IN DIAMETER ARE 1" ON CENTER ON ALL SIDES, LENGTHS ARE 10' AND 12'.
5. 2-1/2" POSTS ARE TO BE 1/8" THICK, PERFORATIONS OF 7/16" IN DIAMETER ARE 1" ON CENTER ON ALL SIDES, 2-1/2" POSTS ARE 12' AND 14' IN LENGTH.
6. FOR DETAILS NOT SHOWN, REFER TO THE STANDARD PLANS.
7. 2-1/2" POSTS SHALL BE USED IN SIDEWALK AND HIGH PEDESTRIAN USE PLACEMENTS.
8. ALL ANCHOR SLEEVES SHALL BE EMBEDDED IN PCC, EXCEPT FOR INSTALLATIONS IN PAVEMENTS OR SIDEWALKS, OR IN ROCKY SOIL CONDITIONS WHERE APPROVED BY THE ENGINEER.

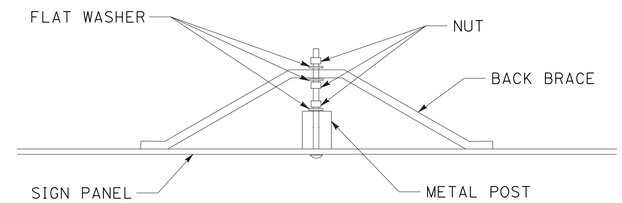

BACK BRACE MOUNTING DETAIL

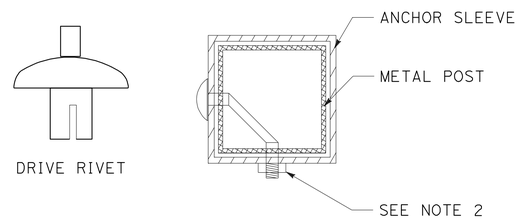

FASTENER DETAILS

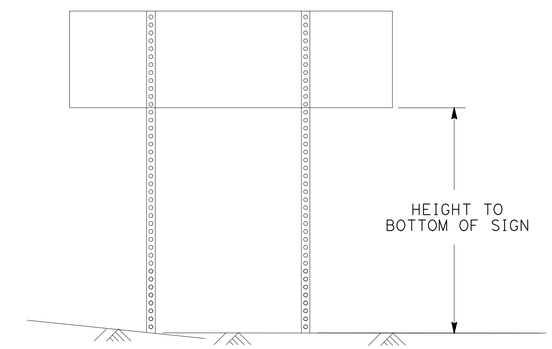

TWO POSTS INSTALLATION
(POST SIZE, SEE CHART BELOW)

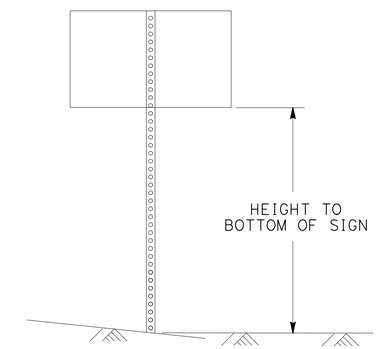

SINGLE POST INSTALLATION
(POST SIZE, SEE CHART BELOW)

Max Sq Ft OF SIGN

POST SIZE	60"	72"	84"	96"	108"	120"
2"	18	16	14	12	10	8
2.5"	35	32	28	24	21	21

HEIGHT TO BOTTOM OF SIGN
DOUBLE POST GROUND SIGNS
70 MPH WIND SPEED

Max Sq Ft OF SIGN

POST SIZE	60"	72"	84"	96"	108"	120"
2"	10.5	10	8.7	7.4	6.2	5
2.5"	16	16	16	16	12	12

HEIGHT TO BOTTOM OF SIGN
SINGLE POST GROUND SIGNS
70 MPH WIND SPEED

METAL SIGN POST DETAIL

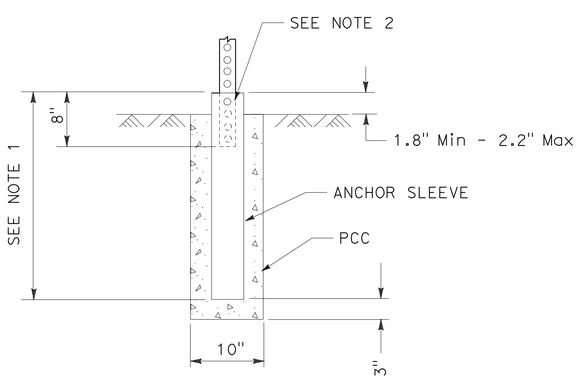

INSTALLATION IN SOIL (PCC)
(SEE NOTE 8)

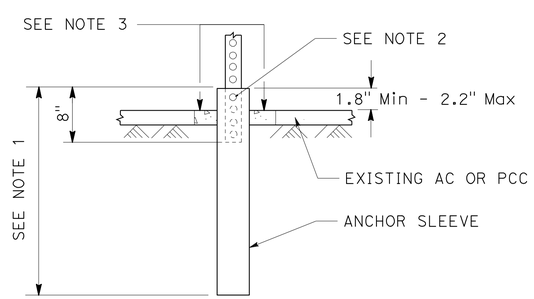

INSTALLATION IN EXISTING AC OR PCC

METAL SIGN POST INSTALLATION DETAILS

SIGN DETAILS

NO SCALE

SD-4

REVISED BY	DATE REVISED

CALCULATED-DESIGNED BY: TOM ROBERTS
CHECKED BY: ROB STINGER
FUNCTIONAL SUPERVISOR: ROB STINGER

STATE OF CALIFORNIA - DEPARTMENT OF TRANSPORTATION
Caltrans
TRAFFIC OPPS

p:\proj1\02\4c010_plans\pse\SUBMIT_TO_HQ\24c010ob004.dgn

LAST REVISION 07-02-10 | DATE PLOTTED => 13-JUL-2010 | TIME PLOTTED => 14:47

Dist	COUNTY	ROUTE	POST MILES TOTAL PROJECT	SHEET No.	TOTAL SHEETS
02	Sis	97	40.1/54.1	64	114

Thomas E. Roberts 07-06-10
REGISTERED CIVIL ENGINEER DATE

7-12-10
PLANS APPROVAL DATE

REGISTERED PROFESSIONAL ENGINEER THOMAS E. ROBERTS No. 63005 Exp. 6-30-12 CIVIL STATE OF CALIFORNIA

THE STATE OF CALIFORNIA OR ITS OFFICERS OR AGENTS SHALL NOT BE RESPONSIBLE FOR THE ACCURACY OR COMPLETENESS OF SCANNED COPIES OF THIS PLAN SHEET.

ROADSIDE SIGNS QUANTITIES

POSTMILE (LT/RT)	CALIFORNIA MUTCD SIGN CODE	PANEL SIZE (IN X IN)	(N) POST SIZE & LENGTH (FT)		REMOVE ROADSIDE SIGN	ROADSIDE SIGN (ONE POST)	ROADSIDE SIGN (TWO POST)	REMARKS/NOTES
FNBT Sis 97			METAL POST	WOOD POST				
			2.5" x 2.5"	VARIES	EA	EA	EA	
40.00 RT	G9-5 (CA)	48 x 24	(12,12)		1		1	MACDOEL CITY LIMITS, SEE SIGN DETAILS SD-1
	G81-62(CA)	48 x 24						EMERGENCY CALL 9-1-1
40.08 RT	W43 (CA)	48 x 48						TURNABLE ICY SIGN: TO BE INSTALLED BY OTHERS
40.10 RT	R1-1	30 x 30	10.2		1	1		JUNIPER KNOLL ROAD
40.15 RT	R1-1	30 x 30	10.2		1	1		RE-ATTACH CORTEZ STREET SIGN
40.28 RT	R1-1	30 x 30	10.2		1	1		OLD STATE HWY
40.29 RT	G66-56 (CA)	24 x 24			1			REMOVE EXISTING STAA TRUCK SIGN AND POST
40.32 RT	R1-1	30 x 30	10.2		1	1		COLMA STREET
40.38 RT	G66-56 (CA)	24 x 24						TO BE INSTALLED BY OTHERS
40.60 RT	R2-1(65)	36 x 45	12		1	1		
40.61 RT	M3-1	21 x 9			1	1		
	G26-2(97) (CA)	24 x 24	11		1			REUSE VOLCANIC LEGACY SIGNS BELOW G26-2
41.30 RT	W10-2	36 x 36	11		1	1		
41.36 RT	R1-1	30 x 30	10.2		1	1		SHEEP MT ROAD
42.96 RT	W10-2	36 x 36	11		1	1		
43.01 RT	W10-1	30 Dia	10.2		1	1		INSTALL AHEAD OF RR TRACKS
43.04 RT	R1-1	30 x 30	10.2		1	1		
44.88 RT	G5 (CA)	114 x 42		(16,17) 6" x 6"	1		1	SEE STD DETAILS SD-2
45.11 RT	G200-81 (CA)	24 x 24			1			INSTALL ON LEFT POST OF EXISTING G8
45.24 RT	W1-7	48 x 24	10		1	1		PARALLEL TO FOGLINE; FACING SAMS NECK Rd
	OM1-3	24 x 24			1			PLACE 2 EACH BELOW THE W1-7 FEBT
45.36 RT	R2-1(65)	36 x 45	12		1	1		
45.93 RT	M3-1	21 x 9			1	1		
	G26-2(97) (CA)	24 x 24	10.5		1			
49.69 RT	W43 (CA)	48 x 48						TURNABLE ICY SIGN: TO BE INSTALLED BY OTHERS
49.88 RT	R2-4(40)	36 x 45	12		1	1		
49.98 RT	R2-1(40)	36 x 45	12		1	1		
	R48-1 (CA)	36 x 18			1			
50.13 RT-50.17 RT	W1-8	24 x 30	25		5	5		INVERT OF W1-8 SIGNS 18" ABOVE RDWY GRADE (5 EACH)
50.14 RT	R1-1	30 x 30	10.2		1	1		
50.17 RT	W1-2A(LT)40	96 x 96		(20,20) 6" x 8"	1		1	
50.22 RT	G69 (CA)	48 x 36	11			1		PASSING LANE 1 MILE; NEW SIGN
50.26 RT	G9-5 (CA)	48 x 30	(12,12)		1		1	DORRIS CITY LIMIT SIGN, SEE SIGN DETAILS SD-1
	G81-62 (CA)	48 x 24			1			EMERGENCY CALL 9-1-1
50.31 RT	R2-1(30)	36 x 45	12		1	1		
50.33 RT	W1-13(15)	72 x 72		(22,22) 6" x 8"	1		1	
	W7-3A	78 x 42			1			NEXT ½ MILE
50.35 RT	R1-1	30 x 30	10.2		1	1		FWBT ON 5th STREET
50.39 RT	W1-1A(RT)	60 x 60						TO BE INSTALLED BY OTHERS
	M3-1	21 x 9						TO BE INSTALLED BY OTHERS
	G26-2(97) (CA)	24 x 24						TO BE INSTALLED BY OTHERS
	M6-1	21 x 15						TO BE INSTALLED BY OTHERS
50.47 RT	W11-2	30 x 30	10.2		1	1		
50.48 RT	R1-1	30 x 30	10.2		1	1		FNBT ON OREGON STREET
50.49 RT	R28 (CA)	18 x 12	9.2		1	1		BACK OF Beg OF SIDEWALK
50.54 RT	R1-1	30 x 30	10.2		1	1		FNBT ON CALIFORNIA STREET
50.54 RT	R49 (RT)	42 x 18						INSTALL ON TYPE 1 PED BARRACADE @ END OF SIDEWALK
50.54 RT	R28	18 X 12	9.2		1	1		INSTALL R28 FEBT BACK OF SIDEWALK
50.55 RT	G26-2(97) (CA)	24 x 24	11		1	1		UTL - MISSING
	M6-1	21 x 15			1			
50.56 RT	W1-1A(LT)15	48 x 48	12		1	1		
50.59 RT	G26-2(97) (CA)	24 x 24	11		1	1		MOVE 3' LT OF EXISTING LOCATION
	M6-1(LT)	21 x 9			1			
50.59 RT	SPL-FIRE STATION	54 X 12	9.2		1	1		<-- FIRE STATION
50.62 RT	R2-1(30)	36 x 45	12		1	1		
50.70 RT	R1-1	30 x 30	10.2			1		FWBT - INSTALL BK OF X-WALK @ GAS STATION
50.81 RT	R1-1	30 x 30	10.2		1	1		FWBT @ EAST 2ND STREET
50.81 RT	W1-1A(RT)15	48 x 48	12.3		1	1		
50.86 RT	R28 (CA)	18 x 12	9.2		1	1		INSTALL // TO CURB
50.87 RT	R28 (CA)	18 x 12	9.2		1	1		SIGN W/ RT ARROW. INSTALL // TO CURB
SUBTOTAL			448	117	53	40	5	

(N) - NOT A SEPARATE PAY ITEM, FOR INFORMATION ONLY

SIGN QUANTITIES

SQ-1

REVISED BY | DATE REVISED
TOM ROBERTS | ROB STINGER
CALCULATED-DESIGNED BY | CHECKED BY
FUNCTIONAL SUPERVISOR | ROB STINGER
STATE OF CALIFORNIA - DEPARTMENT OF TRANSPORTATION
Caltrans® TRAFFIC OPPS

p:\proj1\02\4c010_plans\pse\SUBMIT_TO_HQ\24c010oc001.dgn

LAST REVISION 07-02-10 | DATE PLOTTED => 14-JUL-2010 | TIME PLOTTED => 07:55

Dist	COUNTY	ROUTE	POST MILES TOTAL PROJECT	SHEET No.	TOTAL SHEETS
02	Sis	97	40.1/54.1	65	114

Thomas E. Roberts 07-06-10
REGISTERED CIVIL ENGINEER DATE

7-12-10
PLANS APPROVAL DATE

REGISTERED PROFESSIONAL ENGINEER THOMAS E. ROBERTS No. 63005 Exp. 6-30-12 CIVIL STATE OF CALIFORNIA

THE STATE OF CALIFORNIA OR ITS OFFICERS OR AGENTS SHALL NOT BE RESPONSIBLE FOR THE ACCURACY OR COMPLETENESS OF SCANNED COPIES OF THIS PLAN SHEET.

ROADSIDE SIGNS QUANTITIES

POSTMILE (LT/RT)	CALIFORNIA MUTCD SIGN CODE	PANEL SIZE (IN X IN)	(N) POST SIZE & LENGTH (FT)		REMOVE ROADSIDE SIGN	ROADSIDE SIGN (ONE POST)	ROADSIDE SIGN (TWO POST)	REMARKS/NOTES
			METAL POST	WOOD POST				
FNBT Sis 97			2.5" x 2.5"	VARIES	EA	EA	EA	
50.88 RT	R26 (CA)	18 x 12	9.2		1	1		
50.91 RT	R26 (CA)	18 x 12	9.2		1	1		
50.92 RT	R1-1	30 x 30	10.2		1	1		FNBT @ THE ALLEY
	R12-1(5)	30 x 36			1			BACKSIDE OF NEW R1-1. 5 TON RESTRICTION.
	G66-61 (CA)	30 x 30	10.7		1	1		NEW SHERIFF DEPT SIGN
	G33-1(LT)	30 x 8			1			
50.95 RT	R1-1	30 x 30	10.2		1	1		FNBT ON PINE STREET
	W11-2	30 x 30	11.7		1			INSTALL ON EXIST LT POST, BK OF W1-1A
	W16-7P	36 x 18			1			INSTALL BELOW THE FYG W11-2 PED SIGN
51.00 RT	SW46 (CA)	48 x 48						TURNABLE SIGN: TO BE INSTALLED BY OTHERS
	W10-1	30 DIA	10.2		1	1		INSTALL 2 FT TO THE RIGHT OF PM 51.0 MARKER
51.04 RT	R1-1	30 x 30	10.2		1	1		JUNIPER STREET
51.10 RT	R2-1(40)	36 x 45	12		1	1		
51.11 RT	R1-1	30 x 30	10.2		1	1		NORTH RR AVENUE
51.16 RT	W1-2(LT)	36 x 36	14		1	1		
	W13-1(35)	30 x 30			1			
51.18 RT	D9-3A	24 x 24	11		1	1		
	M6-1	24 x 15			1			
51.21 RT	G69-1 (CA)	48 x 36	12		1	1		REMOVE R68 PASSING LANE AHEAD SIGN
51.25 RT	R1-1	30 x 30	10.2		1	1		CENTER STREET
51.31 RT	R2-1(65)	36 x 45	12		1	1		
51.33 RT	G5 (CA)	102 x 30		(15,16) 4" x 6"	1		1	SEE SIGN DETAILS SD-1
	G26-2(97) (CA)	24 x 24			1			PLACE ON THE LEFT POST - JUST BELOW NEW G-5
51.35 RT	R4-3	48 x 60	(12,12)		1	1		
51.67 RT	W7-1	36 x 36	14		1	1		
	W7-3	30 x 24			1			REPLACE THE MISSING 7% GRADE SIGN.
51.75 RT	W1-2(RT)	48 x 48	(14,14)		1	1		
	W13-1(50)	30 x 30			1			
52.13 RT	W11-3	36 x 36	14		1	1		
	W7-3A(2)	42 X 30			1			NEXT 2 MILES
52.17 RT	W9-1	48 X 48	14		1	1		NEW SIGN: RIGHT LANE ENDS
52.28 RT	W4-2(RT)	36 X 36	14		1	1		
52.35 RT	R1-1	30 X 30	10.2		1	1		FWBT @ INDIAN TOM CK ROAD
52.36 RT	R4-1	36 X 48	12		2	2		2 EACH: DO NOT PASS (LT & RT)
52.96 RT	W11-3	36 X 36	14		1	1		
	W7-3A(1)	42 X 30			1			NEXT 1 MILE
53.42 RT	W2-1	36 X 36	12		1	1		
53.69 RT	G8 (CA)	126 X 42		(15,16) 4" x 6"	1		1	SEE SIGN DETAILS SD-2
	M2-1	21 X15			1			
	G28-2(161) (CA)	28 X 25			1			INSTALL ON THE LEFT POST OF G-8
	G66-56 (CA)	24 X 24			1			
	M6-6	21 x 15			1			
53.75 RT	G1-1 (CA)	84 x 18	(12,13)		1		1	SEE SIGN DETAILS SD-1
	G28-2 (161) (CA)	28 X 25			1			
	M6-1	21 X 15			1			
	G200-81 (CA)	24 X 24			1			BINOCULARS: RIGHT POST OF G1-1
53.81 RT	R1-1	36 X 36	10.7		1	1		FWBT ON SR 161
53.83 RT	R5-1	36 X 36	10.7		1	1		
53.88 RT	W4-1	36 X 36	12		1	1		
53.93 RT	R2-4(55)	36 X 45	12		1	1		
53.95 RT	M3-1	21 X 9	10.4		1	1		
	G26-2(97) (CA)	24 X 24			1			
54.05 RT	R2-1(55)	36 x 45	12		1	1		
SUBTOTAL (THIS SHEET)			412	62	53	31	3	

(N) - NOT A SEPARATE PAY ITEM, FOR INFORMATION ONLY

SIGN QUANTITIES
SQ-2

REVISED BY | DATE REVISED
TOM ROBERTS | ROB STINGER
CALCULATED-DESIGNED BY | CHECKED BY
FUNCTIONAL SUPERVISOR: ROB STINGER
STATE OF CALIFORNIA - DEPARTMENT OF TRANSPORTATION
Caltrans
TRAFFIC OPPS

p:\proj1\02\4c010_plans\pse\SUBMIT_TO_HQ\24c010oc002.dgn

LAST REVISION 07-02-10 | DATE PLOTTED => 14-JUL-2010 | TIME PLOTTED => 07:56

Dist	COUNTY	ROUTE	POST MILES TOTAL PROJECT	SHEET No.	TOTAL SHEETS
02	Sis	97	40.1/54.1	66	114

Thomas E. Roberts 07-06-10
REGISTERED CIVIL ENGINEER DATE

7-12-10
PLANS APPROVAL DATE

REGISTERED PROFESSIONAL ENGINEER THOMAS E. ROBERTS No. 63005 Exp. 6-30-12 CIVIL STATE OF CALIFORNIA

THE STATE OF CALIFORNIA OR ITS OFFICERS OR AGENTS SHALL NOT BE RESPONSIBLE FOR THE ACCURACY OR COMPLETENESS OF SCANNED COPIES OF THIS PLAN SHEET.

ROADSIDE SIGNS QUANTITIES

POSTMILE (LT/RT)	CALIFORNIA MUTCD SIGN CODE	PANEL SIZE (IN X IN)	(N) POST SIZE & LENGTH (FT)		REMOVE ROADSIDE SIGN	ROADSIDE SIGN (ONE POST)	ROADSIDE SIGN (TWO POST)	REMARKS/NOTES
			METAL POST	WOOD POST				
FSBT Sis 97			2.5" x 2.5"	VARIES	EA	EA	EA	
54.08 LT	G10 (CA)	72 x 36			1			PLACE Sis COUNTY G10 BELOW CA WELCOME G10
54.06 LT	W43 (CA)	48 X 48						TO BE INSTALLED BY OTHERS - TURNABLE SIGN
54.04 LT	W11-3	36 x 36	14		1	1		
	W7-3A (2)	42 x 36			1			2 MILES
54.02 LT	G81-62 (CA)	48 x 24	10		1	1		
53.97 LT	G8-1 (CA)	90 x 24	(11,12)		1		1	<--TULELAKE
	M2-1	21 x 15			1			PLACE ON LEFT POST
	G28-2(161) (CA)	28 x 25			1			PLACE ON LEFT POST
	G66-56 (CA)	24 x 24			1			STAA SIGN ON RIGHT POST
	M6-6	21 x 15			1			STAA SIGN ON RIGHT POST
53.88 LT	G1-1 (CA)	84 x 18	(9,10)		1		1	SEE SIGN DETAILS PLAN SHEET
53.81 LT	W1-7	48 x 24	10		1	1		FWBT SR 161
	OM1-3	24 x 24			2			2 EA TYPE N (CA)-MARKERS
53.75 LT	M3-3	21 x 9			1	1		
	G26-2(97) (CA)	24 x24	10.4		1			
53.68 LT	SPL - AG STA #1	72 X 60			1		1	SEE SIGN DETAILS (SHEET SD-2)
53.62 LT	W2-1	36 x 36	12		1	1		
53.58 LT	G5 (CA)	102 x 42	(14,15)		1		1	
53.55 LT	G69(1) (CA)	48 x 36	10.7			1		PASSING LANE 1 MILE (WHITE/GREEN)
53.52 LT	SR15 (CA)	36 x 36	(14,14)		1	1		
	SR15A (CA)	36 x 36			1			
53.49 LT	R2-1(65)	36 x 45	12		1	1		
	R48-1(CA)	30 x 18			1			
53.42 LT	R47 (CA)	52 x 36	10.7		1	1		
53.01 LT	W11-3	36 x 36	12		1	1		
	W7-3A(2)	42 x 30			1			NEXT 2 MILES
52.98 LT	W11-4	36 x 36	12		1	1		NEW CATTLE SIGN-REUSE OPEN RANGE SIGN
52.93 LT	SW46 (CA)	48 x 48						TO BE INSTALLED BY OTHERS - TURNABLE SIGN
52.90 LT	R76 (CA)	36 x 36						TO BE INSTALLED BY OTHERS - TURNABLE SIGN
	R2(35)	36 x 36						TO BE INSTALLED BY OTHERS - TURNABLE SIGN
	R77 (CA)	36 x 36						TO BE INSTALLED BY OTHERS - TURNABLE SIGN
	R79 (CA)	36 x 36						TO BE INSTALLED BY OTHERS - TURNABLE SIGN
	R80 (CA)	36 x 36						TO BE INSTALLED BY OTHERS - TURNABLE SIGN
52.86 LT	W8-5	36 x 36	12		1	1		
52.80 LT	G69-1	48 x 36	12		1	1		PASSING LANE AHEAD (WHITE/GREEN)
52.75 LT	R47A (CA)	52 x 36	12		1	1		ANIMAL ABANDOMENT SIGN
52.71 LT	G79 (CA) SPL - CLOSED	60 x 30 48 X 12			1			REST AREA / 31 MILES (WHITE/BLUE) + SPL (CLOSED) TO BE INSTALLED BY OTHERS
52.61 LT	W43 (CA)	48 x 48						TO BE INSTALLED BY OTHERS - TURNABLE SIGN
52.50 LT	R4-3	48 x 60	(12,12)		1	1		
52.35 LT	R1-1	30 x 30	10.2		1	1		
52.34 LT	R4-1	30 x 24	10.2		1	1		
52.16 LT	W1-2(LT)	36 x 36	14		1	1		
	W13-1(50)	30 x 30			1			
51.65 LT	W9-1	48 x 48	14		1	1		RIGHT LANE ENDS
51.51 LT	R2-4(40)	36 x 45	12		1	1		
51.45 LT	W4-2(RT)	36 x 36	12		2	2		RT LANE DROP SIGN; FSBT (LT & RT)
51.43 LT	R4-1	36 X 48	12		2	2		2 EACH: DO NOT PASS; FSBT (LT & RT)
51.41 LT	W1-2(RT)	36 x 36	14		1	1		
	W13-1(35)	30 x 30			1			
51.36 LT	D9-3A	24 x 24	11		1	1		
	M6-1(LT)	21 x 15			1			
51.31 LT	R2-1(40)	36 x 45	12		1	1		
	R48-1 (CA)	36 X 18			1			
51.28 LT	G9-5 (CA)	48 x 30	(12,12)		1	1		DORRIS CITY LIMIT SIGN
SUBTOTAL (THIS SHEET)			418		48	28	4	

(N) - NOT A SEPARATE PAY ITEM, FOR INFORMATION ONLY

SIGN QUANTITIES

SQ-3

REVISED BY | DATE REVISED
TOM ROBERTS | ROB STINGER
CALCULATED-DESIGNED BY | CHECKED BY
FUNCTIONAL SUPERVISOR: ROB STINGER
STATE OF CALIFORNIA - DEPARTMENT OF TRANSPORTATION
Caltrans® TRAFFIC OPPS

p:\proj1\02\4c010_plans\pse\SUBMIT_TO_HQ\24c010oc003.dgn

LAST REVISION 07-02-10 | DATE PLOTTED => 14-JUL-2010 | TIME PLOTTED => 07:56

Dist	COUNTY	ROUTE	POST MILES TOTAL PROJECT	SHEET No.	TOTAL SHEETS
02	Sis	97	40.1/54.1	67	114

Thomas E. Roberts 07-06-10
REGISTERED CIVIL ENGINEER DATE

7-12-10
PLANS APPROVAL DATE

REGISTERED PROFESSIONAL ENGINEER THOMAS E. ROBERTS No. 63005 Exp. 6-30-12 CIVIL STATE OF CALIFORNIA

THE STATE OF CALIFORNIA OR ITS OFFICERS OR AGENTS SHALL NOT BE RESPONSIBLE FOR THE ACCURACY OR COMPLETENESS OF SCANNED COPIES OF THIS PLAN SHEET.

ROADSIDE SIGNS QUANTITIES

POSTMILE (LT/RT)	CALIFORNIA MUTCD SIGN CODE	PANEL SIZE (IN X IN)	(N) POST SIZE & LENGTH (FT)		REMOVE ROADSIDE SIGN	ROADSIDE SIGN (ONE POST)	ROADSIDE SIGN (TWO POST)	REMARKS/NOTES
			METAL POST	WOOD POST				
FSBT Sis 97			2.5" x 2.5"	VARIES	EA	EA	EA	
51.28 LT	G81-62 (CA)	48 x 24			1			EMERGENCY CALL 9-1-1
51.27 LT	R1-1	30 x 30	10.2		1	1		
51.14 LT	W10-1	30" DIA	10.2		1	1		
51.12 LT	R2-1(30)	24 x 30	10.2		1	1		
51.09 LT	W1-1A	72 x 72		(18,18) 6" x 8"	1		1	
	W7-3A	78 x 42			1			NEXT 1/2 MILE
51.08 LT	W11-2	30 x 30	12		1	1		FYG PED SIGN
	W7-3A(1)	24 X 18						FYG NEXT 1 MILE BELOW W11-2
	R28 (CA)	18 x 12	9.2		1	1		
51.04 LT	R1-1	30 x 30	10.2		1	1		N RAILROAD AVE, REATTACH STREET SIGN
51.02 LT	R1-1	30 x 30	10.2		1	1		JUNIPER STREET, REATTACH STREET SIGN
50.98 LT	G66-61 (CA)	24 x 24	11.7		1	1		REMOVE THE OLD SHERIFF SIGN
	G33-1(RT) (CA)	24 x 24			1			
50.96 LT	W1-1A	60 x 60						LEFT SIDE FSBT - INSTALLED BY OTHERS
	W11-2	30 x 30	12			1		FYG PED SIGN (NEW). AHD OF PINE ST
	W16-7P	36 x 18						INSTALL BELOW NEW PED SIGN
50.95 LT	R1-1	30 x 30	10.2		1	1		RE-ATTACH PINE ST SIGN, FSBT
50.94 LT	R28 (CA)	18 x 12	9.2		1	1		
50.93 LT	G5 (CA)	54 x 30			1			EXISTING G5 TO BE REMOVED & NOT REPLACED
	M3-1	21 x 15			1			SOUTH
	G26-2(97) (CA)	24 x 24			1			US 97 SIGN + DIR ON NEW POST - STAND ALONE
	M6-1	21 x 15			1			
50.89 LT	R1-1	30 x 30	10.2		1	1		FSBT ON NORTH MAIN STREET
50.88 LT	R1-1	30 x 30	10.2		1	1		FEBT ON WEST FIRST STREET
	G26-2(97) (CA)	24 x 24	11		1	1		
	M5-1	21 x 15			1			
50.82 LT	R28D (CA)	18 x 12	9.2		1	1		
50.81 LT	R1-1	30 x 30	10.2		1	1		WEST 2ND STREET
50.70 LT	R1-1	30 x 30	10.2		1	1		WEST 3RD STREET
50.69 LT	R1-1	30 x 30	10.2		1	1		
50.66 LT	SPL - FIRE STA	54 x 12	8.7		1	1		<--FIRE STATION
50.58 LT	R1-1	30 x 30	10.2		1	1		ALLEY WAY
50.54 LT	R1-1	30 x 30	10.2		1	1		CALIFORNIA STREET
50.49 LT	R28D (CA)	18 x 12	9.2		1	1		
50.48 LT	W1-1A(LT)	36 x 36	14		1	1		
	W13-1(15)	30 x 30			1			
50.47 LT	R1-1	30 x 30	10.2		1	1		OREGON STREET
50.46 LT	G26-2(97) (CA)	24 x 24	12		1	1		
	M3-3	24 x 24			1	1		
	R1-1	30 x 30	10.2		1	1		BUTTE STREET
50.45 LT	R1-1	30 x 30	10.2		1	1		WEST 4TH STREET
50.31 LT	R2-1(40)	36 x 45	12		1	1		
50.24 LT	SPL - AG STA #2	96 x 48						SIGN DETAIL SD-3 TO BE INSTALLED BY OTHERS
50.22 LT	W1-2(RT)	36 x 36	14		1	1		
50.22 LT	W13-1(35)	30 x 30			1	1		
50.08 LT	SPL - AG STA #3	96 x 48						SIGN DETAIL SD-3. TO BE INSTALLED BY OTHERS
49.91 LT	SPL - AG STA #4	78 x 60			1		1	INSPECTION STATION (WHITE/GREEN)
49.86 LT	SPL - AG STA #5	102 x 42						SIGN DETAIL SD-3. TO BE INSTALLED BY OTHERS
49.83 LT	R1-1	36 x 36						3 EACH; TO BE INSTALLED BY OTHERS @ AG STA
	R1-1	30 x 30						2 EACH; TO BE INSTALLED BY OTHERS @ AG STA
49.81 LT	R5-1A	36 x 36						TO BE INSTALLED BY OTHERS @ AG STA
	R5-1	36 x 36						2 EA; TO BE INSTALLED BY OTHERS @ AG STA
	R1-2	36 x 36	11		1	1		
49.80 LT	SR44 (CA)	72 x 42	(11,11)		1		1	
49.77 LT	R1-1	30 x 30	10.2		1	1		
49.73 LT	R2-1(65)	36 x 45	12		1	1		
SUBTOTAL (THIS SHEET)			363	36	45	34	3	

(N) - NOT A SEPARATE PAY ITEM, FOR INFORMATION ONLY

SIGN QUANTITIES

SQ-4

REVISED BY | DATE REVISED
TOM ROBERTS | ROB STINGER
CALCULATED-DESIGNED BY | CHECKED BY
FUNCTIONAL SUPERVISOR
ROB STINGER

STATE OF CALIFORNIA - DEPARTMENT OF TRANSPORTATION
Caltrans®
TRAFFIC OPPS

p:\proj\02\4c010_plans\pse\SUBMIT_TO_HQ\24c010oc004.dgn

LAST REVISION 07-02-10 | DATE PLOTTED => 14-JUL-2010 | TIME PLOTTED => 07:56

Dist	COUNTY	ROUTE	POST MILES TOTAL PROJECT	SHEET No.	TOTAL SHEETS
02	Sis	97	40.1/54.1	68	114

Thomas E. Roberts 07-06-10
REGISTERED CIVIL ENGINEER DATE

7-12-10
PLANS APPROVAL DATE

REGISTERED PROFESSIONAL ENGINEER
THOMAS E. ROBERTS
No. 63005
Exp. 6-30-12
CIVIL
STATE OF CALIFORNIA

THE STATE OF CALIFORNIA OR ITS OFFICERS OR AGENTS SHALL NOT BE RESPONSIBLE FOR THE ACCURACY OR COMPLETENESS OF SCANNED COPIES OF THIS PLAN SHEET.

ROADSIDE SIGNS QUANTITIES

POSTMILE (LT/RT)	CALIFORNIA MUTCD SIGN CODE	PANEL SIZE (IN X IN)	(N) POST SIZE & LENGTH (FT)		REMOVE ROADSIDE SIGN	ROADSIDE SIGN (ONE POST)	ROADSIDE SIGN (TWO POST)	REMARKS/NOTES
			METAL POST	WOOD POST				
FSBT Sis 97			2.5" x 2.5"	VARIES	EA	EA	EA	
49.70 LT	R1-1	30 x 30	10.2		1	1		
49.68 LT	W43 (CA)	48 x 48						TURNABLE SIGN - TO BE INSTALLED BY OTHERS
49.67 LT	G26-2(97) (CA)	24 x 24	11		1	1		
	M3-1	21 x 9			1	1		
49.44 LT	G5 (CA)	96 x 42		(15,15) 6" x 6"	1		1	
45.93 LT	M3-1	21 x 9			1	1		
	G26-2(97) (CA)	24 x 24	11		1			
45.36 LT	G200-81 (CA)	24 x 24			1	1		
45.23 LT	R1-1	30 x 30	10.2		1	1		
45.15 LT	R2-1(65)	36 x 45	12		1	1		
44.63 LT	R1-1	30 x 30	10.2		1	1		
43.09 LT	W10-2	36 x 36	12		1	1		
41.42 LT	W10-2	36 x 36	12		1	1		
41.04 LT	W11-3	36 x 36	12		1	1		
40.75 LT	R2-4(55)	36 x 45	12		1	1		
40.60 LT	R2-1(55)	36 x 45	12		1	1		
40.47 LT	W2-1	36 x 36	14		1	1		
	W7-3A	54 x 28			1			NEXT 1/2 MILE
40.32 LT	R1-1	30 x 30	10.2		1	1		COLMA ST. REATTACH STREET SIGN.
40.28 LT	R1-1	30 x 30	10.2		1	1		VERA CRUZ ST. REATTACH STREET SIGN.
40.22 LT	G9-5(CA)	48 x 24	(12,12)		1		1	MACDOEL CITY LIMITS. SEE SIGN DETAIL SHT SD-1
	G81-62(CA)	48 x 24						EMERGENCY CALL 9-1-1
40.12 LT	R1-1	30 x 30	10.2		1	1		MT. PITT STREET. REATTACH STREET SIGN
40.09 LT	R1-1	30 x 30	10.2		1	1		JUNIPER KNOLL RD. REATTACH STREET SIGN
40.07 LT	W43 (CA)	48 x 48						TURNABLE SIGN - TO BE INSTALLED BY OTHERS
40.02 LT	G5 (CA)	108 x 42		(16,16) 6" x 8"	1		1	RE-ATTACH VOLCANIC LEGACY SIGNS, RIGHT POST
	M3-3	21 x 9						PLACE ON LEFT POST.
	G26-2(97) (CA)	24 x 24						PLACE ON LEFT POST.
SUBTOTAL (THIS SHEET)			204	62	23	18	3	
SUBTOTAL (SHEET SQ-1)			448	117	53	40	5	
SUBTOTAL (SHEET SQ-2)			412	62	53	31	3	
SUBTOTAL (SHEET SQ-3)			418		48	28	4	
SUBTOTAL (SHEET SQ-4)			363	36	45	34	3	
GRAND TOTAL			1845	277	222	151	18	

(N) - NOT A SEPARATE PAY ITEM, FOR INFORMATION ONLY.

REVISED BY | DATE REVISED
TOM ROBERTS | ROB STINGER
CALCULATED-DESIGNED BY | CHECKED BY
FUNCTIONAL SUPERVISOR
ROB STINGER

STATE OF CALIFORNIA - DEPARTMENT OF TRANSPORTATION
Caltrans®
TRAFFIC OPPS

p:\proj\02\4c010_plans\pse\SUBMIT_TO_HQ\24c010oc005.dgn

SIGN QUANTITIES
SQ-5

LAST REVISION 07-02-10 | DATE PLOTTED => 13-JUL-2010 | TIME PLOTTED => 12:59

Dist	COUNTY	ROUTE	POST MILES TOTAL PROJECT	SHEET No.	TOTAL SHEETS
02	Sis	97	40.1/54.1	69	114

Thomas E. Roberts 07-06-10
REGISTERED CIVIL ENGINEER DATE

7-12-10
PLANS APPROVAL DATE

REGISTERED PROFESSIONAL ENGINEER THOMAS E. ROBERTS No. 63005 Exp. 6-30-12 CIVIL STATE OF CALIFORNIA

THE STATE OF CALIFORNIA OR ITS OFFICERS OR AGENTS SHALL NOT BE RESPONSIBLE FOR THE ACCURACY OR COMPLETENESS OF SCANNED COPIES OF THIS PLAN SHEET.

CONTRACTOR FURNISHED SIGNS

LOCATION (LT/RT) FNBT Sis 97	CALIFORNIA MUTCD SIGN CODE	SIGN SIZE L x D (in x in)	SINGLE FACED	DOUBLE FACED	SIGN FACING MATERIAL: BACKGROUND: SHEETING COLOR	BACKGROUND: RETROREFLECTIVE ASTM TYPE	LEGEND: SHEETING COLOR	LEGEND: RETROREFLECTIVE ASTM TYPE	PROTECTIVE FILM: STANDARD	PROTECTIVE FILM: PREMIUM	SIGN PANEL SUBSTRATE MATERIAL (SQFT) ROADSIDE SINGLE-SHEET: FRP 0.135"	FRAMED ALUMINUM 0.063"	FRAMED ALUMINUM 0.080"	UNFRAMED ALUMINUM 0.063"	UNFRAMED ALUMINUM 0.080"	UNFRAMED ALUMINUM 0.125"	DESCRIPTION (REMARKS)
40.00 RT	G9-5 (CA)	48 x 24	X		GREEN	III	WHITE	III							8.0		MACDOEL CITY LIMITS. SEE SIGN DETAILS SD-1.
40.08 RT	G81-62(CA)	48 x 24	X		BLUE	III	WHITE	III							8.0		TURNABLE ICY SIGN. TO BE INSTALLED BY OTHERS.
	W43 (CA)	48 x 48	X		YELLOW	III	BLACK								16.0		EMERGENCY CALL 9-1-1
40.10 RT	R1-1	30 x 30	X		RED	III	WHITE	III						6.3			JUNIPER KNOLL ROAD
40.15 RT	R1-1	30 x 30	X		RED	III	WHITE	III						6.3			RE-ATTACH CORTEZ STREET SIGN.
40.28 RT	R1-1	30 x 30	X		RED	III	WHITE	III						6.3			OLD STATE HWY
40.32 RT	R1-1	30 x 30	X		RED	III	WHITE	III						6.3			COLMA STREET
40.38 RT	G66-56 (CA)	24 x 24	X		GREEN	III	WHITE	III						4.0			INSTALL ON LEFT POST OF THE EXISTING G5.
40.60 RT	R2-1(65)	36 x 45	X		WHITE	III	BLACK								11.3		
40.61 RT	M3-1	21 x 9	X		WHITE	III	BLACK							1.3			
	G26-2(97) (CA)	24 x 24	X		WHITE	III	BLACK							4.0			REUSE VOLCANIC LEGACY SIGNS BELOW G26-2
41.30 RT	W10-2	36 x 36	X		YELLOW	III	BLACK								9.0		
41.36 RT	R1-1	30 x 30	X		RED	III	WHITE	III						6.3			SHEEP MOUNTAIN RD
42.96 RT	W10-2	36 x 36	X		YELLOW	III	BLACK								9.0		
43.01 RT	W10-1	30 DIA	X		YELLOW	III	BLACK							4.9			INSTALL AHEAD OF RR TRACKS
43.04 RT	R1-1	30 x 30	X		RED	III	WHITE	III						6.3			
44.88 RT	G5 (CA)	114 x 42	X		GREEN	III	WHITE	III					33.3				SEE STD DETAILS SD-1
45.11 RT	G200-81 (CA)	24 x 24	X		GREEN	III	WHITE	III						4.0			INSTALL G200-81 ON LEFT POST OF EXISTING G8.
45.24 RT	W1-7	48 x 24	X		YELLOW	III	BLACK								8.0		PARALLEL TO FOGLINE; FACING SAMS NECK RD
	OM1-3	24 x 24	X		YELLOW	III	BLACK							8.0			PLACE 2 EACH BELOW THE W1-7 FEBT
45.36 RT	R2-1(65)	36 x 45	X		WHITE	III	BLACK								11.3		
45.93 RT	M3-1	21 x 9	X		WHITE	III	BLACK							1.3			
	G26-2(97) (CA)	24 x24	X		WHITE	III	BLACK							4.0			
49.69 RT	W43 (CA)	48 x 48	X		YELLOW	III	BLACK								16.0		TURNABLE ICY SIGN. TO BE INSTALLED BY OTHERS.
49.88 RT	R2-4(40)	36 x 45	X		WHITE	III	BLACK								11.3		
49.98 RT	R2-1(40)	36 x 45	X		WHITE	III	BLACK								11.3		
	R48-1 (CA)	36 x 18	X		WHITE	III	BLACK							4.5			
50.13 RT-50.17 RT	W1-8	18 x 24	X		YELLOW	III	BLACK							15.0			INVERT OF W1-8 SIGNS 18" ABOVE RDWY GRADE. (5 EA)
50.14 RT	R1-1	30 x 30	X		RED	III	WHITE	III						6.3			
50.17 RT	W1-2A(LT)40	96 x 96	X		YELLOW	III	BLACK						64.0				
50.22 RT	G69 (CA)	48 x 36	X		GREEN	III	WHITE	III							12.0		PASSING LANE 1 MILE
50.26 RT	G9-5 (CA)	48 x 30	X		GREEN	III	WHITE	III							10.0		DORRIS CITY LIMIT SIGN
	G81-62 (CA)	48 x 24	X		BLUE	III	WHITE	III							8.0		EMERGENCY CALL 9-1-1
50.31 RT	R2-1(30)	36 x 45	X		WHITE	III	BLACK								11.3		
50.33 RT	W1-13(15)	72 x 72	X		YELLOW	III	BLACK						36.0				
	W7-3A	78 X 42	X		YELLOW	III	BLACK						22.8				NEXT 1/2 MILE
50.35 RT	R1-1	30 x 30	X		RED	III	WHITE	III						6.3			FWBT ON 5TH STREET
50.39 RT	W1-1A(RT)	60 x 60	X		YELLOW	III	BLACK						25.0				TO BE INSTALLED BY OTHERS
	M3-1	21 x 9	X		WHITE	III	BLACK							1.3			TO BE INSTALLED BY OTHERS
	G26-2(97) (CA)	24 x 24	X		WHITE	III	BLACK							4.0			TO BE INSTALLED BY OTHERS
	M6-1	21 x 15	X		WHITE	III	BLACK							2.2			TO BE INSTALLED BY OTHERS
50.47 RT	W11-2	30 x 30	X		FYG	III	BLACK							6.3			
50.48 RT	R1-1	30 x 30	X		RED	III	WHITE	III						6.3			FNBT ON OREGON STREET
50.49 RT	R28 (CA)	18 x 12	X		WHITE	III	RED	III						1.5			BACK OF BEG. OF SIDEWALK
50.54 RT	R1-1	30 x 30	X		RED	III	WHITE	III						6.3			FNBT ON CALIFORNIA STREET
50.54 RT	R49 (RT)	42 x 18	X		RED	III	WHITE	III						5.3			INSTALL ON TYPE PED BARRACADE 2 END OF SIDEWALK
50.54 RT	R28	18 x 12	X		RED	III	WHITE	III						1.5			INSTALL FEBT BACK OF SIDEWALK
50.55 RT	G26-2(97) (CA)	24 x 24	X		WHITE	III	BLACK							4.0			UTL - MISSING US 97 SHIELD
	M6-1(LT)	21 x 15	X		WHITE	III	BLACK							2.2			
50.56 RT	W1-1A(LT)15	48 x 48	X		YELLOW	III	BLACK								16.0		
50.59 RT	G26-2(97) (CA)	24 x 24	X		WHITE	III	BLACK							4.0			MOVE 3' LT OF EXISTING LOCATION FNBT
	SPL-FIRE STA	54 X 12	X		GREEN	III	WHITE	III							4.5		<-- FIRE STATION
50.62 RT	R2-1(30)	36 x 48	X		WHITE	III	BLACK								12.0		
SUBTOTAL (THIS SHEET)													181.1	146.3	193.0		

SIGN QUANTITIES

SQ-6

REVISED BY | DATE REVISED
TOM ROBERTS | ROB STINGER
CALCULATED-DESIGNED BY | CHECKED BY
FUNCTIONAL SUPERVISOR: ROB STINGER
STATE OF CALIFORNIA - DEPARTMENT OF TRANSPORTATION
Caltrans® TRAFFIC OPPS

p:\proj1\02\4c010_plans\pse\SUBMIT_TO_HQ\24c010oc006.dgn

LAST REVISION 07-02-10 | DATE PLOTTED => 13-JUL-2010 | TIME PLOTTED => 12:59

Dist	COUNTY	ROUTE	POST MILES TOTAL PROJECT	SHEET No.	TOTAL SHEETS
02	Sis	97	40.1/54.1	70	114

Thomas E. Roberts 07-06-10
REGISTERED CIVIL ENGINEER DATE

7-12-10
PLANS APPROVAL DATE

REGISTERED PROFESSIONAL ENGINEER THOMAS E. ROBERTS No. 63005 Exp. 6-30-12 CIVIL STATE OF CALIFORNIA

THE STATE OF CALIFORNIA OR ITS OFFICERS OR AGENTS SHALL NOT BE RESPONSIBLE FOR THE ACCURACY OR COMPLETENESS OF SCANNED COPIES OF THIS PLAN SHEET.

CONTRACTOR FURNISHED SIGNS

LOCATION (LT/RT) FNBT Sis 97	CALIFORNIA MUTCD SIGN CODE	SIGN SIZE L x D (in x in)	SINGLE FACED	DOUBLE FACED	SIGN FACING MATERIAL: BACKGROUND: SHEETING COLOR	SIGN FACING MATERIAL: BACKGROUND: RETROREFLECTIVE ASTM TYPE	SIGN FACING MATERIAL: LEGEND: SHEETING COLOR	SIGN FACING MATERIAL: LEGEND: RETROREFLECTIVE ASTM TYPE	SIGN FACING MATERIAL: PROTECTIVE FILM: STANDARD	SIGN FACING MATERIAL: PROTECTIVE FILM: PREMIUM	SIGN PANEL SUBSTRATE MATERIAL (SQFT) ROADSIDE SINGLE-SHEET: FRP 0.135"	FRAMED ALUMINUM 0.063"	FRAMED ALUMINUM 0.080"	UNFRAMED ALUMINUM 0.063"	UNFRAMED ALUMINUM 0.080"	UNFRAMED ALUMINUM 0.125"	DESCRIPTION (REMARKS)
50.70 RT	R1-1	30 x 30	X		RED	III	WHITE	III						6.3			STOP FWBT. INSTALL BK OF X-WALK @ GAS STA
50.81 RT	R1-1	30 x 30	X		RED	III	WHITE	III						6.3			FWBT @ EAST 2ND STREET
	W1-1A(RT)15	48 X48	X		YELLOW	III	BLACK								16.0		
50.86 RT	R28 (CA)	18 X 12	X		WHITE	III	RED	III						1.5			INSTALL // TO CURB
50.87 RT	R28 (CA)	18 x 12	X		WHITE	III	RED	III						1.5			SIGN W/ RT ARROW. INSTALL // TO CURB
50.88 RT	R26 (CA)	18 x 12	X		WHITE	III	RED	III						1.5			
50.91 RT	R26 (CA)	18 x 12	X		WHITE	III	RED	III						1.5			
50.92 RT	R1-1	30 X 30	X		RED	III	WHITE	III						6.3			FNBT @ THE ALLEY
	R12-1(5)	30 x 36	X		WHITE	III	BLACK							7.5			BACKSIDE OF NEW R1-1. 5 TON RESTRICTION.
	G66-61 (CA)	30 X 30	X		BLUE	III	WHITE	III						6.3			NEW SHERIFF DEPT SIGN
	G33-1(LT)	30 x 8	X		BLUE	III	WHITE	III						1.7			
50.97 RT	R1-1	30 x 30	X		RED	III	WHITE	III						6.3			FNBT ON PINE STREET
	W11-2	30 x 30	X		FYG	III	BLACK							6.3			INSTALL ON EXIST LT POST, BK OF W1-1A
	W16-7P	36 x 18	X		FYG	III	BLACK							4.5			INSTALL BELOW THE FYG W11-2 PED SIGN
51.00 RT	SW46 (CA)	48 x 48	X		YELLOW	III	BLACK								16.0		TURNABLE SIGN: TO BE INSTALLED BY OTHERS
	W10-1	30 DIA	X		YELLOW	III	BLACK							4.9			INSTALL 2 FT TO THE RIGHT OF PM 51.0 MARKER
51.04 RT	R1-1	30 x 30	X		RED	III	WHITE	III						6.3			JUNIPER STREET
51.10 RT	R2-1(40)	36 x 45	X		WHITE	III	BLACK								11.3		
51.11 RT	R1-1	30 x 30	X		RED	III	WHITE	III						6.3			NORTH RR AVENUE
	W1-2(LT)	36 x 36	X		YELLOW	III	BLACK								9.0		
51.16 RT	W13-1(35)	36 x 36	X		YELLOW	III	BLACK								9.0		
51.18 RT	D9-3A	24 x 24	X		BLUE	III	WHITE	III						4.0			
51.18 RT	M6-1(LT)	24 x 15	X		BLUE	III	WHITE	III						2.5			
51.21 RT	G69-1 (CA)	48 x 36	X		GREEN	III	WHITE	III							12.0		REMOVE R68 PASSING LANE AHEAD SIGN
51.25 RT	R1-1	30 x 30	X		RED	III	WHITE	III						6.3			CENTER STREET
51.31 RT	R2-1(65)	36 x 45	X		WHITE	III	BLACK								11.3		
51.34 RT	G5 (CA)	102 x 30	X		GREEN	III	WHITE	III					21.3				SEE SIGN DETAILS SD-1
	G26-2(97) (CA)	24 x 24	X		WHITE	III	BLACK							4.0			PLACE ON THE LEFT POST JUST BELOW NEW G-5
51.36 RT	R4-3	48 x 60	X		WHITE	III	BLACK						20.0				SLOWER TRAFFIC KEEP RIGHT
51.67 RT	W7-1	36 x 36	X		YELLOW	III	BLACK								9.0		
	W7-3	30 x 24	X		YELLOW	III	BLACK							5.0			REPLACE THE MISSING 7% GRADE SIGN.
	W1-2(RT)	48 x 48	X		YELLOW	III	BLACK								16.0		
51.75 RT	W13-1(50)	30 x 30	X		YELLOW	III	BLACK							6.3			
52.13 RT	W11-3	36 x 36	X		YELLOW	III	BLACK								9.0		
	W7-3A(2)	42 X 30	X		YELLOW	III	BLACK								8.8		
52.17 RT	W9-1	48 X 48	X		YELLOW	III	BLACK								16.0		NEW SIGN: RIGHT LANE ENDS
52.28 RT/LT	W4-2(RT)	36 X 36	X		YELLOW	III	BLACK								18.0		FNBT (LT & RT) - 2 EA
52.36 RT	R4-1	36 X 48	X		WHITE	III	BLACK								12.0		2 EACH: DO NOT PASS (LT & RT)
52.37 RT	R1-1	30 X 30	X		RED	III	WHITE	III						6.3			FWBT @ INDIAN TOM CK ROAD
52.96 RT	W11-3	36 X 36	X		YELLOW	III	BLACK								9.0		
52.96 RT	W7-3A(1)	42 X 30	X		YELLOW	III	BLACK								8.8		
53.42 RT	W2-1	36 X 36	X		YELLOW	III	BLACK								9.0		
53.69 RT	G8 (CA)	126 X 42	X		GREEN	III	WHITE	III					36.8				SEE SIGN DETAILS SD-1
	M2-1	21 X15	X		GREEN	III	WHITE	III						2.2			
	G28-2(161) (CA)	28 X 25	X		GREEN	III	WHITE	III						4.9			INSTALL ON THE LEFT POST
	G66-56 (CA)	24 X 24	X		GREEN	III	WHITE	III						4.0			
	M6-6	21 x 15	X		GREEN	III	WHITE	III						2.2			
53.75 RT	G1 (CA)	84 x 18	X		GREEN	III	WHITE	III					10.5				SEE SIGN DETAILS SD-1
	G28-2(161) (CA)	28 X 25	X		GREEN	III	WHITE	III						4.9			
	M6-1	21 X 15	X		GREEN	III	WHITE	III						2.2			
	G200-81 (CA)	24 X 24	X		BROWN	III	WHITE	III						4.0			PLACE ON RIGHT POST
SUBTOTAL (THIS SHEET)													88.6	133.8	200.2		

SIGN QUANTITIES

SQ-7

REVISED BY | DATE REVISED
TOM ROBERTS | ROB STINGER
CALCULATED-DESIGNED BY | CHECKED BY
FUNCTIONAL SUPERVISOR: ROB STINGER

STATE OF CALIFORNIA - DEPARTMENT OF TRANSPORTATION
Caltrans
TRAFFIC OPPS

p:\proj1\02\4c010_plans\pse\SUBMIT_TO_HQ\24c010oc007.dgn

LAST REVISION 07-02-10 | DATE PLOTTED => 13-JUL-2010 | TIME PLOTTED => 13:00

Dist	COUNTY	ROUTE	POST MILES TOTAL PROJECT	SHEET No.	TOTAL SHEETS
02	Sis	97	40.1/54.1	71	114

Thomas E Roberts 07-06-10
REGISTERED CIVIL ENGINEER DATE

7-12-10
PLANS APPROVAL DATE

REGISTERED PROFESSIONAL ENGINEER
THOMAS E. ROBERTS
No. 63005
Exp. 6-30-12
CIVIL
STATE OF CALIFORNIA

THE STATE OF CALIFORNIA OR ITS OFFICERS OR AGENTS SHALL NOT BE RESPONSIBLE FOR THE ACCURACY OR COMPLETENESS OF SCANNED COPIES OF THIS PLAN SHEET.

CONTRACTOR FURNISHED SIGNS

LOCATION (LT/RT)	CALIFORNIA MUTCD SIGN CODE	SIGN SIZE L x D (in x in)	SINGLE FACED	DOUBLE FACED	SIGN FACING MATERIAL						SIGN PANEL SUBSTRATE MATERIAL (SQFT)						DESCRIPTION (REMARKS)
											ROADSIDE						
											SINGLE-SHEET						
					BACKGROUND		LEGEND		PROTECTIVE FILM		FRP	FRAMED ALUMINUM		UNFRAMED ALUMINUM			
					SHEETING COLOR	RETROREFLECTIVE ASTM TYPE	SHEETING COLOR	RETROREFLECTIVE ASTM TYPE	STANDARD	PREMIUM	0.135"	0.063"	0.080"	0.063"	0.080"	0.125"	
FNTB Sis 97																	
53.81 RT	R1-1	36 X 36	X		RED	III	WHITE	III							9.0		FWBT ON SR 161
53.83 RT	R5-1	36 X 36	X		WHITE	III	BLACK								9.0		DO NOT ENTER
53.88 RT	W4-1	36 X 36	X		YELLOW	III	BLACK								9.0		
53.93 RT	R2-4(55)	36 X 45	X		WHITE	III	BLACK								11.3		
53.95 RT	M3-1	21 X 9	X		WHITE	III	BLACK							1.3			
53.95 RT	G26-2(97) (CA)	24 X 24	X		WHITE	III	BLACK							4.0			
54.05 RT	R2-1(55)	36 x 45	X		WHITE	III	BLACK								11.3		
SUBTOTAL (THIS SHEET)														5.3	49.6		

SIGN QUANTITIES
SQ-8

REVISED BY | DATE REVISED
TOM ROBERTS | ROB STINGER
CALCULATED-DESIGNED BY | CHECKED BY
FUNCTIONAL SUPERVISOR
ROB STINGER

STATE OF CALIFORNIA - DEPARTMENT OF TRANSPORTATION
Caltrans
TRAFFIC OPPS

p:\proj\02\4c010_plans\pse\SUBMIT_TO_HQ\24c010oc008.dgn

LAST REVISION 07-02-10 | DATE PLOTTED => 13-JUL-2010 | TIME PLOTTED => 13:00

Dist	COUNTY	ROUTE	POST MILES TOTAL PROJECT	SHEET No.	TOTAL SHEETS
02	Sis	97	40.1/54.1	72	114

Thomas E. Roberts 07-06-10
REGISTERED CIVIL ENGINEER DATE

7-12-10
PLANS APPROVAL DATE

REGISTERED PROFESSIONAL ENGINEER THOMAS E. ROBERTS No. 63005 Exp. 6-30-12 CIVIL STATE OF CALIFORNIA

THE STATE OF CALIFORNIA OR ITS OFFICERS OR AGENTS SHALL NOT BE RESPONSIBLE FOR THE ACCURACY OR COMPLETENESS OF SCANNED COPIES OF THIS PLAN SHEET.

CONTRACTOR FURNISHED SIGNS

LOCATION (LT/RT) FSBT Sis 97	CALIFORNIA MUTCD SIGN CODE	SIGN SIZE L x D (in x in)	SINGLE FACED	DOUBLE FACED	SIGN FACING MATERIAL: BACKGROUND SHEETING COLOR	BACKGROUND RETROREFLECTIVE ASTM TYPE	LEGEND SHEETING COLOR	LEGEND RETROREFLECTIVE ASTM TYPE	PROTECTIVE FILM STANDARD	PROTECTIVE FILM PREMIUM	SIGN PANEL SUBSTRATE MATERIAL (SQFT) ROADSIDE SINGLE-SHEET: FRP 0.135"	FRAMED ALUMINUM 0.063"	FRAMED ALUMINUM 0.080"	UNFRAMED ALUMINUM 0.063"	UNFRAMED ALUMINUM 0.080"	UNFRAMED ALUMINUM 0.125"	DESCRIPTION (REMARKS)
54.08 LT	G10 (CA)	72 x 36	X		GREEN	III	WHITE	III					18				PLACE SIS CO. G10 BELOW CA WELCOME G10
54.06 LT	W43 (CA)	48 X 48	X		YELLOW	III	BLACK								16		TO BE INSTALLED BY OTHERS - TURNABLE SIGN
54.04 LT	W11-3	36 x 36	X		YELLOW	III	BLACK								9		
	W7-3A	42 x 36	X		YELLOW	III	BLACK								10.5		2 MILES
54.02 LT	G81-62 (CA)	48 x 24	X		BLUE	III	WHITE	III							8.0		
53.97 LT	G8-1 (CA)	90 x 24	X		GREEN	III	WHITE	III					15				<--TULELAKE
	M2-1	21 x 15	X		GREEN	III	WHITE	III						2.2			PLACE ON LEFT POST
	G28-2(161) (CA)	28 x 25	X		GREEN	III	WHITE	III						4.9			PLACE ON LEFT POST
	G66-56 (CA)	24 x 24	X		GREEN	III	WHITE	III						4.0			PLACE ON RIGHT POST
	M6-6	21 x 15	X		GREEN	III	WHITE	III						2.2			PLACE ON RIGHT POST
53.88 LT	G1-1 (CA)	84 x 18	X		GREEN	III	WHITE	III							10.5		SEE SIGN DETAILS PLAN SHEET
53.81 LT	W1-7	48 x 24	X		YELLOW	III	BLACK								8		FWBT SR161
53.81 LT	OM1-3	24 x 24	X		YELLOW	III	BLACK							8.0			2 EA - TYPE N (CA)-MARKERS
53.75 LT	M3-3	21 x 9	X		WHITE	III	BLACK							1.3			
53.75 LT	G26-2(97) (CA)	24 x24	X		WHITE	III	BLACK							4.0			
53.68 LT	SPL - AG STA #1	72 X 60	X		WHITE	III	BLACK						30				SEE SIGN DETAILS SHEET SD-2
53.62 LT	W2-1	36 x 36	X		YELLOW	III	BLACK								9		
53.58 LT	G5 (CA)	102 x 42	X		GREEN	III	WHITE	III					29.8				
53.55 LT	G69(1) (CA)	48 x 36	X		GREEN	III	WHITE	III							12		PASSING LANE 1 MILE
53.52 LT	SR15 (CA)	36 x 36	X		WHITE	III	BLACK								9		SEAT BELT SYMBOL
53.52 LT	SR15A (CA)	36 x 36	X		WHITE	III	BLACK								9		SAFETY BELT LAW ENFORCED
53.49 LT	R2-1(65)	36 x 45	X		WHITE	III	BLACK								11.3		
	R48-1(CA)	30 x 18	X		WHITE	III	BLACK							3.8			
53.42 LT	R47 (CA)	52 x 36	X		WHITE	III	BLACK								13		
53.01 LT	W11-3	36 x 36	X		YELLOW	III	BLACK								9		
	W7-3A(2)	42 x 30	X		YELLOW	III	BLACK								8.8		NEXT 2 MILES
52.98 LT	W11-4	36 x 36	X		YELLOW	III	BLACK								9		NEW CATTLE SIGN-REUSE OPEN RANGE SIGN
52.93 LT	SW46 (CA)	48 x 48	X		YELLOW	III	BLACK								16		TO BE INSTALLED BY OTHERS - TURNABLE SIGN
52.90 LT	R76 (CA)	36 x 36	X		BLACK	III	WHITE	III							9		TO BE INSTALLED BY OTHERS - TURNABLE SIGN
	R2(35)	36 x 36	X		BLACK	III	WHITE	III							9		TO BE INSTALLED BY OTHERS - TURNABLE SIGN
	R77 (CA)	36 x 36	X		BLACK	III	WHITE	III							9		TO BE INSTALLED BY OTHERS - TURNABLE SIGN
	R79 (CA)	36 x 36	X		BLACK	III	WHITE	III							9		TO BE INSTALLED BY OTHERS - TURNABLE SIGN
	R80-1 (CA)	36 x 36	X		BLACK	III	WHITE	III							9		TO BE INSTALLED BY OTHERS - TURNABLE SIGN
52.86 LT	W8-5	36 x 36	X		YELLOW	III	BLACK								9		
52.80 LT	G69-1	48 x 36	X		GREEN	III	WHITE	III							12		NEW AND REVISED SIGN, PASSING LANE AHEAD
52.75 LT	R47A (CA)	52 x 36	X		WHITE	III	BLACK								13		ANIMAL ABANDOMENT SIGN
52.71 LT	G79 (CA)	60 x 30	X		BLUE	III	WHITE	III					12.5				REST AREA / 31 MILES - TO BE INSTALLED BY OTHERS
	SPL - CLOSED	48 X 12	X		BLUE	III	WHITE	III					4				TO BE INSTALLED BY OTHERS
52.61 LT	W43 (CA)	48 x 48	X		YELLOW	III	BLACK								16		TO BE INSTALLED BY OTHERS - TURNABLE SIGN
52.50 LT	R4-3	48 x 60	X		WHITE	III	BLACK						20				SLOWER TRAFFIC KEEP RIGHT
52.37 LT	R1-1	30 x 30	X		RED	III	WHITE	III						6.3			FEBT @ INDIAN TOM LAKE ROAD
52.16 LT	W1-2(LT)	36 x 36	X		YELLOW	III	BLACK								9		
	W13-1(50)	30 x 30	X		YELLOW	III	BLACK							6.3			
51.65 LT	W9-1	48 x 48	X		YELLOW	III	BLACK								16		NEW AND REVISED SIGN: RIGHT LANE ENDS
51.51 LT	R2-4(40)	36 x 45	X		WHITE	III	BLACK								11.3		
51.45 LT	W4-2(RT)	36 x 36	X		YELLOW	III	BLACK								18		2 EACH: RT LANE DROP SIGN; FSBT (LT & RT)
51.43 LT	R4-1	36 X 48	X		WHITE	III	BLACK								24		2 EACH: DO NOT PASS SIGN; FSBT (LT & RT)
51.41 LT	W1-2(RT)	36 x 36	X		YELLOW	III	BLACK								9		
	W13(35)	30 x 30	X		YELLOW	III	BLACK							6.3			
SUBTOTAL (THIS SHEET)													129.3	49.3	350.4		

SIGN QUANTITIES

SQ-9

REVISED BY | DATE REVISED
TOM ROBERTS | ROB STINGER
CALCULATED-DESIGNED BY | CHECKED BY
FUNCTIONAL SUPERVISOR: ROB STINGER
STATE OF CALIFORNIA - DEPARTMENT OF TRANSPORTATION
Caltrans® TRAFFIC OPPS

p:\proj1\02\4c010_plans\pse\SUBMIT_TO_HQ\24c010oc009.dgn

LAST REVISION 07-02-10 | DATE PLOTTED => 13-JUL-2010 TIME PLOTTED => 13:29

Dist	COUNTY	ROUTE	POST MILES TOTAL PROJECT	SHEET No.	TOTAL SHEETS
02	Sis	97	40.1/54.1	73	114

Thomas E. Roberts 07-06-10
REGISTERED CIVIL ENGINEER DATE

7-12-10
PLANS APPROVAL DATE

REGISTERED PROFESSIONAL ENGINEER THOMAS E. ROBERTS No. 63005 Exp. 6-30-12 CIVIL STATE OF CALIFORNIA

THE STATE OF CALIFORNIA OR ITS OFFICERS OR AGENTS SHALL NOT BE RESPONSIBLE FOR THE ACCURACY OR COMPLETENESS OF SCANNED COPIES OF THIS PLAN SHEET.

CONTRACTOR FURNISHED SIGNS

LOCATION (LT/RT) FSBT Sis 97	CALIFORNIA MUTCD SIGN CODE	SIGN SIZE L x D (in x in)	SINGLE FACED	DOUBLE FACED	SIGN FACING MATERIAL: BACKGROUND SHEETING COLOR	BACKGROUND RETROREFLECTIVE ASTM TYPE	LEGEND SHEETING COLOR	LEGEND RETROREFLECTIVE ASTM TYPE	PROTECTIVE FILM STANDARD	PROTECTIVE FILM PREMIUM	SIGN PANEL SUBSTRATE MATERIAL (SQFT) ROADSIDE SINGLE-SHEET: FRP 0.135"	FRAMED ALUMINUM 0.063"	FRAMED ALUMINUM 0.080"	UNFRAMED ALUMINUM 0.063"	UNFRAMED ALUMINUM 0.080"	UNFRAMED ALUMINUM 0.125"	DESCRIPTION (REMARKS)
51.36 LT	D9-3A	24 x 24	X		BLUE	III	WHITE	III						4			
	M6-1(LT)	21 x 15	X		BLUE	III	WHITE	III						2.2			
51.31 LT	R2-1(40)	36 x 45	X		WHITE	III	BLACK								11.3		
	R48-1 (CA)	36 X 18	X		WHITE	III	BLACK							4.5			
51.28 LT	G9-5 (CA)	48 x 30	X		GREEN	III	WHITE	III							10		DORRIS CITY LIMIT SIGN. SEE STD DETAIL SD-1
	G81-62 (CA)	48 x 24	X		BLUE	III	WHITE	III							8		EMERGENCY CALL 9-1-1
51.27 LT	R1-1	30 x 30	X		RED	III	WHITE	III						6.3			
51.14 LT	W10-1	30" DIA	X		YELLOW	III	BLACK							4.9			RR X-ING SIGN
51.12 LT	R2-1(30)	24 x 30	X		WHITE	III	BLACK							5			
51.09 LT	W1-1A	72 x 72	X		YELLOW	III	BLACK						36				
	W7-3A	78 x 42	X		YELLOW	III	BLACK						22.8				NEXT 1/2 MILE
51.08 LT	W11-2	30 x 30	X		FYG	III	BLACK							6.3			FYG PED SIGN
	W7-3A(1)	24 X 18	X		FYG	III	BLACK							3			FYG NEXT 1 MILE BELOW W11-2
51.07 LT	R28 (CA)	18 x 12	X		WHITE	III	RED	III						1.5			
51.04 LT	R1-1	30 x 30	X		RED	III	WHITE	III						6.3			N RAILROAD AVE., RE-ATTACH STREET SIGN
51.02 LT	R1-1	30 x 30	X		RED	III	WHITE	III						6.3			JUNIPER STREET, RE-ATTACH STREET SIGN
50.98 LT	G66-61 (CA)	24 x 24	X		BLUE	III	WHITE	III						4.0			REMOVE THE OLD SHERIFF SIGN
	G33-1 (CA)	24 x 24	X		BLUE	III	WHITE	III						4.0			
50.96 LT	W1-1A	60 x 60	X		YELLOW	III	BLACK						25				LEFT SIDE FSBT - INSTALLED BY OTHERS
	W11-2	30 x 30	X		FYG	III	BLACK							6.3			FYG PED SIGN (NEW). PLACE AHEAD OF PINE ST.
	W16-7P	36 x 18	X		FYG	III	BLACK							4.5			INSTALL BELOW NEW PED SIGN
50.95 LT	R1-1	30 x 30	X		RED	III	WHITE	III						6.3			RE-ATTACH PINE ST SIGN, FSBT
50.94 LT	R28 (CA)	18 x 12	X		WHITE	III	RED	III						1.5			
50.93 LT	M3-1	21 x 15	X		GREEN	III	WHITE	III						2.2			
	G26-2(97) (CA)	24 x 24	X		WHITE	III	BLACK							4			
	M6-1 (CA)	24 x 24	X		WHITE	III	BLACK							4			
50.89 LT	R1-1	30 x 30	X		RED	III	WHITE	III						6.3			FSBT ON NORTH MAIN STREET
50.88 LT	R1-1	30 x 30	X		RED	III	WHITE	III						6.3			FEBT ON WEST FIRST STREET
	G26-2(97) (CA)	24 x 24	X		WHITE	III	BLACK							4			
	M5-1	21 x 15	X		WHITE	III	BLACK							2.2			
50.82 LT	R28D (CA)	18 x 12	X		WHITE	III	BLACK							1.5			
50.81 LT	R1-1	30 x 30	X		RED	III	WHITE	III						6.3			WEST 2ND STREET
50.70 LT	R1-1	30 x 30	X		RED	III	WHITE	III						6.3			WEST 3RD STREET
50.69 LT	R1-1	30 x 30	X		RED	III	WHITE	III						6.3			
50.66 LT	SPL - FIRE STA	54 x 12	X		GREEN	III	WHITE	III						4.5			<--FIRE STATION
50.58 LT	R1-1	30 x 30	X		RED	III	WHITE	III						6.3			ALLEY WAY
50.54 LT	R1-1	30 x 30	X		RED	III	WHITE	III						6.3			CALIFORNIA STREET
50.49 LT	R28D (CA)	18 x 12	X		WHITE	III	BLACK							1.5			
50.48 LT	W1-1A(LT)	36 x 36	X		YELLOW	III	BLACK								9		
	W13-1(15)	30 x 30	X		YELLOW	III	BLACK							6.3			
50.47 LT	R1-1	30 x 30	X		RED	III	WHITE	III						6.3			OREGON STREET
50.46 LT	G26-2(97) (CA)	24 x 24	X		WHITE	III	BLACK							4			
	M3-3	24 x 24	X		WHITE	III	BLACK							4			
	R1-1	30 x 30	X		RED	III	WHITE	III						6.3			BUTTE STREET
50.45 LT	R1-1	30 x 30	X		RED	III	WHITE	III						6.3			WEST 4TH STREET
50.31 LT	R2-1(40)	36 x 45	X		WHITE	III	BLACK								11.3		
50.24 LT	SPL - AG STA #2	96 x 48	X		WHITE	III	BLACK						32				SIGN DETAIL SD-3. TO BE INSTALLED BY OTHERS
50.22 LT	W1-2(RT)	36 x 36	X		YELLOW	III	BLACK								9		
	W13-1(35)	30 x 30	X		YELLOW	III	BLACK							6.3			
50.08 LT	SPL - AG STA #3	96 x 48	X		WHITE	III	BLACK						32				SIGN DETAIL SD-3. TO BE INSTALLED BY OTHERS
SUBTOTAL (THIS SHEET)													147.8	184.4	58.6		

SIGN QUANTITIES
SQ-10

REVISED BY | DATE REVISED
TOM ROBERTS | ROB STINGER
CALCULATED-DESIGNED BY | CHECKED BY
FUNCTIONAL SUPERVISOR: ROB STINGER

STATE OF CALIFORNIA - DEPARTMENT OF TRANSPORTATION
Caltrans® TRAFFIC OPPS

p:\proj1\02\4c010_plans\pse\SUBMIT_TO_HQ\24c010oc010.dgn

LAST REVISION 07-02-10 | DATE PLOTTED => 13-JUL-2010 | TIME PLOTTED => 13:29

Dist	COUNTY	ROUTE	POST MILES TOTAL PROJECT	SHEET No.	TOTAL SHEETS
02	Sis	97	40.1/54.1	74	114

Thomas E. Roberts 07-06-10
REGISTERED CIVIL ENGINEER DATE

7-12-10
PLANS APPROVAL DATE

REGISTERED PROFESSIONAL ENGINEER THOMAS E. ROBERTS No. 63005 Exp. 6-30-12 CIVIL STATE OF CALIFORNIA

THE STATE OF CALIFORNIA OR ITS OFFICERS OR AGENTS SHALL NOT BE RESPONSIBLE FOR THE ACCURACY OR COMPLETENESS OF SCANNED COPIES OF THIS PLAN SHEET.

CONTRACTOR FURNISHED SIGNS

LOCATION (LT/RT) FSBT Sis 97	CALIFORNIA MUTCD SIGN CODE	SIGN SIZE L x D (in x in)	SINGLE FACED	DOUBLE FACED	SIGN FACING MATERIAL: BACKGROUND: SHEETING COLOR	SIGN FACING MATERIAL: BACKGROUND: RETROREFLECTIVE ASTM TYPE	SIGN FACING MATERIAL: LEGEND: SHEETING COLOR	SIGN FACING MATERIAL: LEGEND: RETROREFLECTIVE ASTM TYPE	SIGN FACING MATERIAL: PROTECTIVE FILM: STANDARD	SIGN FACING MATERIAL: PROTECTIVE FILM: PREMIUM	SIGN PANEL SUBSTRATE MATERIAL (SQFT) ROADSIDE SINGLE-SHEET: FRP 0.135"	FRAMED ALUMINUM 0.063"	FRAMED ALUMINUM 0.080"	UNFRAMED ALUMINUM 0.063"	UNFRAMED ALUMINUM 0.080"	UNFRAMED ALUMINUM 0.125"	DESCRIPTION (REMARKS)
49.91 LT	SPL - AG STA #4	78 x 60	X		GREEN	III	WHITE	III					32.5				SIGN DETAIL SD-3; TO BE INSTALLED BY OTHERS
49.86 LT	SPL - AG STA #5	102 x 42	X		WHITE	III	BLACK						29.8				SIGN DETAIL SD-3; TO BE INSTALLED BY OTHERS
49.83 LT	R1-1	36 x 36	X		RED	III	WHITE	III							9.0		3 EACH; TO BE INSTALLED BY OTHERS @ AG STA
	R1-1	30 x 30	X		RED	III	WHITE	III						6.3			2 EACH; TO BE INSTALLED BY OTHERS @ AG STA
49.81 LT	R5-1A	36 x 36	X		WHITE	III	BLACK								9.0		TO BE INSTALLED BY OTHERS @ AG STA
	R5-1	36 x 36	X		WHITE	III	BLACK								9.0		2 EA; TO BE INSTALLED BY OTHERS @ AG STA
	R1-2	36 x 36	X		RED	III	WHITE	III							9.0		
49.80 LT	SR44 (CA)	72 x 42	X		WHITE	III	BLACK						21				
49.77 LT	R1-1	30 x 30	X		RED	III	WHITE	III						6.3			
49.73 LT	R2-1(65)	36 x 45	X		WHITE	III	BLACK								11.3		
49.70 LT	R1-1	30 x 30	X		RED	III	WHITE	III						6.3			
49.68 LT	W43 (CA)	48 x 48	X		YELLOW	III	BLACK								16		TO BE INSTALLED BY OTHERS - TURNABLE SIGN
49.67 LT	G26-2(97) (CA)	24 x 24	X		WHITE	III	BLACK							4.0			
	M3-1	21 x 9	X		WHITE	III	BLACK							1.3			
49.44 LT	G5 (CA)	96 x 42	X		GREEN	III	WHITE	III					28				
45.93 LT	M3-1	21 x 9	X		GREEN	III	WHITE	III						1.3			
	G26-2(97) (CA)	24 x 24	X		WHITE	III	BLACK							4.0			
45.36 LT	G200-81 (CA)	24 x 24	X		BROWN	III	WHITE	III						4.0			
45.23 LT	R1-1	30 x 30	X		RED	III	WHITE	III						6.3			
45.15 LT	R2-1(65)	36 x 45	X		WHITE	III	BLACK								11.3		
44.63 LT	R1-1	30 x 30	X		RED	III	WHITE	III						6.3			
43.09 LT	W10-2	36 x 36	X		YELLOW	III	BLACK								9.0		
41.42 LT	W10-2	36 x 36	X		YELLOW	III	BLACK								9.0		
41.04 LT	W11-3	36 x 36	X		YELLOW	III	BLACK								9.0		
40.75 LT	R2-4(55)	36 x 45	X		WHITE	III	BLACK								11.3		
40.60 LT	R2-1(55)	36 x 45	X		WHITE	III	BLACK								11.3		
40.47 LT	W2-1	36 x 36	X		YELLOW	III	BLACK								9.0		
	W7-3A	54 x 28	X		YELLOW	III	BLACK								10.5		
40.32 LT	R1-1	30 x 30	X		RED	III	WHITE	III						6.3			COLMA ST. REATTACH STREET SIGN.
40.28 LT	R1-1	30 x 30	X		RED	III	WHITE	III									VERA CRUZ ST. REATTACH STREET SIGN.
40.22 LT	G9-5 (CA)	48 x 24	X		GREEN	III	WHITE	III						6.3			MACDOEL CITY LIMIT SIGN. SEE SIGN DETAIL SHEET SD-2
	G81-62 (CA)	48 x 24	X		BLUE	III	WHITE	III							8.0		EMERGENCY CALL 9-1-1
40.12 LT	R1-1	30 x 30	X		RED	III	WHITE	III							8.0		MT. PITT STREET. RE-ATTACH STREET SIGN
40.09 LT	R1-1	30 x 30	X		RED	III	WHITE	III						6.3			JUNIPER KNOLL RD. RE-ATTACH STREET SIGN
40.07 LT	W43 (CA)	48 x 48	X		YELLOW	III	BLACK							6.3			TO BE INSTALLED BY OTHERS - TURNABLE SIGN
40.02 LT	G5 (CA)	108 x 42	X		GREEN	III	WHITE	III					31.5		16		RE-ATTACH VOLCANIC LEGACY SIGNS, RIGHT POST
	M3-3	21 x 9	X		GREEN	III	WHITE	III						1.3			PLACE ON LEFT POST
	G26-2(97) (CA)	24 x 24	X		WHITE	III	BLACK							4.0			
										SUBTOTAL (THIS SHEET)			142.8	76.6	175.7		
										SUBTOTAL (SHEET SQ-6)			181.1	146.3	193.0		
										SUBTOTAL (SHEET SQ-7)			88.6	133.8	200.2		
										SUBTOTAL (SHEET SQ-8)				5.3	49.6		
										SUBTOTAL (SHEET SQ-9)			129.3	49.3	350.4		
										SUBTOTAL (SHEET SQ-10)			147.8	184.4	58.6		
										GRAND TOTAL			689.6	595.7	1027.5		

SIGN QUANTITIES
SQ-11

REVISED BY | DATE REVISED
TOM ROBERTS | ROB STINGER
CALCULATED-DESIGNED BY | CHECKED BY
FUNCTIONAL SUPERVISOR: ROB STINGER
STATE OF CALIFORNIA - DEPARTMENT OF TRANSPORTATION
Caltrans
TRAFFIC OPPS

p:\proj1\02\4c010_plans\pse\SUBMIT_TO_HQ\24c010oc011.dgn

LAST REVISION 07-02-10 | DATE PLOTTED => 13-JUL-2010 | TIME PLOTTED => 13:30

Dist	COUNTY	ROUTE	POST MILES TOTAL PROJECT	SHEET No.	TOTAL SHEETS
02	Sis	97	40.1/54.1	75	114

Mark J. Miller 07-06-10
REGISTERED CIVIL ENGINEER DATE

7-12-10
PLANS APPROVAL DATE

REGISTERED PROFESSIONAL ENGINEER MARK MILLER No. C48454 Exp. 6-30-12 CIVIL STATE OF CALIFORNIA

THE STATE OF CALIFORNIA OR ITS OFFICERS OR AGENTS SHALL NOT BE RESPONSIBLE FOR THE ACCURACY OR COMPLETENESS OF SCANNED COPIES OF THIS PLAN SHEET.

NOTE:

1. (N) - NOT A SEPARATE PAY ITEM, FOR INFORMATION ONLY

ROADWAY QUANTITIES

LOCATION			(N) LENGTH	(N) WIDTH			ROADWAY EXCAVATION	(N) EMBANKMENT	EROSION CONTROL (HYDROSEED)	COLD PLANE ASPHALT CONCRETE PAVEMENT	CLASS 2 AGGREGATE BASE	SUBGRADE ENHANCEMENT GEOTEXTILE	HOT MIX ASPHALT HOT MIX ASPHALT PG 64-28	HOT MIX ASPHALT HOT MIX ASPHALT PG 64-28 PM	TACK COAT	ASPHALT-RUBBER BINDER	SCREENINGS (HOT-APPLIED)	ASPHALTIC EMULSION (FOG SEAL COAT)	SAND COVER	IMPORTED MATERIAL (SHOULDER BACKING)
PM - PM			LF	LF			CY	CY	ACRE	SQ YD	CY	SQ YD	TON	TON	TON	TON	TON	TON	TON	TON
40.10	TO	40.20	528.0	41	TO	40														
40.20	TO	40.30	528.0	40	TO	41														
40.30	TO	41.00	3696.0	41	TO	41														
41.00	TO	42.00	5280.0	41	TO	40														
42.00	TO	43.00	5280.0	40	TO	40				225557			39331	31465	19	589	2819	38	226	5142
43.00	TO	45.00	10560.0	40	TO	40														
45.00	TO	47.00	10560.0	40	TO	41														
47.00	TO	48.00	5280.0	41	TO	41														
48.00	TO	49.00	5280.0	41	TO	41														
49.00	TO	49.60	3153.6	40	TO	41														
49.60	TO	49.87	1435.6	40	TO	42	3359				1919	7197		3012	1					433
49.87	TO	50.20	1750.0	25	TO	42	3632				2076	7783		3257	1					540
50.20	TO	50.44	1250.0	26	TO	42	2590				1480	5550		2323	1					376
50.44	TO	50.48	200.0	35	TO	44	433				247	927		388						60
50.48	TO	50.96	2550.0	32	TO	68	6746				3855	14455		6050	2					
50.96	TO	51.04	400.0	24	TO	52	813				465	1743		729						56
51.04	TO	51.10	350.0	41	TO	52	813				465	1742		729						99
51.10	TO	51.23	670.8	30	TO	51	169			2728	96	3089	577	431	0.3	8.1	39	0.5	3.1	62
51.23	TO	51.30	360.4	30	TO	41				592			136	150	0.1	2.8	13	0.2	1.1	15
51.30	TO	51.40	537.2	31	TO	31		24,730	5											
51.40	TO	51.50	528.0	31	TO	56														
51.50	TO	52.10	3168.0	56	TO	52														
52.10	TO	52.30	1056.0	52	TO	54				34,742			7379	5830	3.5	109	522	7.0	42	760
52.30	TO	52.41	580.8	54	TO	54														
52.41	TO	52.51	528.0	54	TO	40														
52.51	TO	52.71	1059.2	40	TO	42														
52.71	TO	52.90	1000.0	40	TO	42	156			4556	89	333	887	682	0.4	13	61	0.8	4.9	105
52.90	TO	53.75	4488.0	42	TO	64														
53.75	TO	53.83	422.4	64	TO	64				36,895			6434	5147	3	96	461	6	37	617
53.83	TO	53.99	844.8	64	TO	40														
53.99	TO	54.10	580.8	40	TO	40														
INSPECTION STATION SUBTOTAL							4334				1983	5844		2663						19
"A" 115+73	TO	"A" 115+73												364						
"A" 121+90	TO	"A" 122+90					310													
51.50	TO	51.53					96													
51.50	TO	51.56					28							162						
52.14	TO	52.19					57							148						
"I" 42+10	TO	"I" 43+00																		13
54.07							32							66						
FROM ROAD CONNECTIONS SUBTOTAL							1162			4276	11567	2370		1706						107
FROM DIKE & MISC PAVING SUBTOTAL														150						
SUBTOTAL							24,730			309,346	24,242	51,033	54,744	65,452	31.3	817.9	3915	52.5	314.1	8404
TOTAL							24,730			309,346	24,242	51,033	120,196		31.3	817.9	3915	52.5	314.1	8404

SHOULDER RUMBLE STRIP

LOCATION		RUMBLE STRIP
PM - PM	L+/R+	STA
40.10 TO 50.24	L+/R+	1042
52.41 TO 54.10	L+/R+	172
TOTAL		1214

DIKE AND MISC PAVING

LOCATION		PLACE HOT MIX ASPHALT DIKE (TYPE A)	PLACE HOT MIX ASPHALT DIKE (TYPE E)	PLACE HOT MIX ASPHALT DIKE (TYPE F)	HMA
PM - PM	L+/R+	LF	LF	LF	TON
51.30 TO 51.54	L+		1300		
51.53 TO 52.0	R+			2650	86
51.83 TO 51.94	L+			600	
52.10 TO 52.18	R+			400	
INSPECTION STATION	L+	604			17
"A" 75+68 TO 77+86	R+		174		5
FROM DQ-3			76		40.1
TOTAL		604	1550	3650	*148.1

* TOTAL SHOWN IN ROADWAY QUANTITIES TABLE

SUMMARY OF QUANTITIES

Q-1

REVISED BY | DATE REVISED
SAL PRIETO | MARK MILLER
CALCULATED-DESIGNED BY | CHECKED BY
FUNCTIONAL SUPERVISOR | MARK MILLER

STATE OF CALIFORNIA - DEPARTMENT OF TRANSPORTATION
Caltrans® ADVANCE PLANNING

p:\proj1\02\4c010_plans\pse\SUBMIT_TO_HQ\24c010pa001.dgn

LAST REVISION | DATE PLOTTED => 13-JUL-2010
07-06-10 | TIME PLOTTED => 13:41

Dist	COUNTY	ROUTE	POST MILES TOTAL PROJECT	SHEET No.	TOTAL SHEETS
02	Sis	97	40.1/54.1	76	114

Mark J. Miller 07-06-10
REGISTERED CIVIL ENGINEER DATE

7-12-10
PLANS APPROVAL DATE

REGISTERED PROFESSIONAL ENGINEER MARK MILLER No. C48454 Exp. 6-30-12 CIVIL STATE OF CALIFORNIA

THE STATE OF CALIFORNIA OR ITS OFFICERS OR AGENTS SHALL NOT BE RESPONSIBLE FOR THE ACCURACY OR COMPLETENESS OF SCANNED COPIES OF THIS PLAN SHEET.

NOTES:

1. * SEE C-5, C-9, C-10
2. ** FOR TOTAL PAY QUANTITY, SEE SHEET Q-1

ROAD CONNECTION QUANTITIES

LOCATION	PM	LT	RT	CONFORM TYPE	PAVED	W1	W2	L	ROADWAY EXCAVATION	SUBGRADE ENHANCEMENT GEOTEXTILE	CLASS 2 AB	HMA	IMPORTED MATERIAL (SHOULDER BACKING)	COLD PLANE ASPHALT PAVEMENT
				A,B,C	Y / N	FT	FT	FT	CY	SQYD	CY	TONS	TONS	SQYD
JUNIPER KNOLL RD	40.10	X		B	Y	110	110	12				20	1	147
CORTEZ ST	40.15	X		B	Y	258	240	12				46	1	332
CORTEZ ST	40.17		X	B	Y	85	74	12				15	1	106
VERA CRUZ ST	40.28	X		B	Y	100	70	12				16	1	113
OLD STATE HWY	40.28		X	B	Y	205	124	12				31	1	219
DRIVEWAY	40.29	X		B	Y	46	26	12				7	1	48
COLIMA ST	40.32	X		B	Y	135	94	12				21	1	153
RAILROAD AVE	40.33		X	B	Y	220	196	12				39	1	277
SAN BLAS ST	40.39	X		B	Y	48	29	12				7	1	52
DRIVEWAY	41.33	X		B	Y	50	27	12				7	1	51
SHEEP MOUNTAIN RD	41.37		X	B	Y	178	101	12				26	1	186
DRIVEWAY	41.60	X		B	Y	60	36	12				9	1	64
DRIVEWAY	42.43		X	B	Y	51	34	12				8	1	56
SHADY DELL RD	43.03		X	B	Y	145	84	12				21	1	153
DRIVEWAY	43.03	X		B	Y	55	31	12				8	1	57
BUTTE VALLEY RD	44.63	X		B	Y	55	33	12				8	1	59
SAMS NECK RD	45.25	X		B	Y	150	108	12				24	1	172
DRIVEWAY	45.70		X	B	Y	65	41	12				10	1	71
DRIVEWAY	46.15		X	B	Y	60	39	12				9	1	66
DRIVEWAY	46.97	X		B	Y	50	29	12				7	1	53
DRIVEWAY	47.46	X		B	Y	55	31	12				8	1	57
DRIVEWAY	48.56	X		B	Y	50	28	12				7	1	52
DRIVEWAY	48.58	X		B	Y	56	33	12				8	1	59
DRIVEWAY	49.14	X		B	Y	58	33	12				9	1	61
RICHARDSON RD	49.70	X		A	Y	125	80	12	64	137	415	57		
DRIVEWAY	49.73	X			N	30	21	12						
DRIVEWAY	49.75	X			N	20	14	12						
SANDHOUSE DRIVEWAY	49.89	X		*	Y	131	20	85	57			119	24	
DRIVEWAY	49.98	X			N	60	48	12						
MT DIABLO RD	50.10		X	A	Y	73	64	9	32	69	139	29		
DRIVEWAY	50.10	X			N	53	39	9						
DRIVEWAY	50.15	X			N	88	58	9						
DRIVEWAY	50.16	X			N	130	103	9						
SIXTH ST	50.24		X	A	Y	70	59	9	30	65	124	27		
DRIVEWAY	50.24	X			N	115	111	9						
DRIVEWAY	50.35	X			N	28	34	9						
FIFTH ST	50.35		X	A	Y	42	35	9	18	38	44	16		
DRIVEWAY	50.37		X		N	20	16	9						
DRIVEWAY	50.38		X		N	35	31	9						
DRIVEWAY	50.39		X		N	20	16	9						
DRIVEWAY	50.40		X		N	100	82	9						
FOURTH ST	50.44	X		*C	Y	30	24	30	42	90	72	38		
BUTTE ST	50.44	X		*C	Y	39	36	20	39	83	93	35		
OREGON ST	50.48		X		N	45	41	9						
CALIFORNIA ST	50.54	X		*C	Y	35	37	18	34	72	77	30		
CALIFORNIA ST	50.54		X	*C	Y	37	28	18	30	65	63	27		
FOURTH ST	50.60		X	A	Y	110	97	9	48	103	317	43		
THIRD ST	50.70	X		A	Y	45	43	9	20	44	57	18		
THIRD ST	50.70		X	A	Y	60	47	9	25	53	84	22		
SECOND ST	50.81	X		A	Y	50	41	9	21	46	61	19		
SECOND ST	50.81		X	A	Y	60	47	9	25	53	84	22		
FIRST ST	50.90	X		A	Y	44	38	9	19	41	49	17		
MAIN ST	50.90	X		A	Y	67	54	9	28	60	108	25		
PINE ST	50.95	X		A	Y	82	60	9	33	71	148	30		
PINE ST	50.95		X	A	Y	60	48	9	25	54	86	23		
ALLEY	50.99		X	A	Y	370	370	9	173	370	4056	155		
JUNIPER ST	51.02	X		*C	Y	35	30	18	30	65	63	27		
RAILROAD AVE	51.03		X		N	62	52	9						
RAILROAD AVE	51.04	X		*C	Y	39	29	26	46	98	99	41	7	
EAST AVE	51.10		X	A	Y	110	83	9	45	97	276	40	2	
DRIVEWAY	51.10	X			N	20	20	9						
DRIVEWAY	51.21	X		A	Y	45	27	12	22	48	51	20	3	
DRIVEWAY	51.23	X		A	Y	370	331	12	218	467	4853	196	3	
CENTER ST	51.23		X	A	Y	71	51	12	38	81	147	34	3	
DRIVEWAY	51.96	X			N	56	34	12					8	
INDIAN TOM LAKE RD	52.37	X		B	Y	210	180	12				36	1	260
INDIAN TOM LAKE RD	52.37		X	B	Y	235	157	12				36	1	261
DRIVEWAY	52.90	X			N	46	28	12					6	
DRIVEWAY	52.90		X	B	Y	74	52	12				12	1	84
OWENS RD	53.06	X		B	Y	90	53	12				13	1	95
PORTABLE SCALE SITE	53.30		X	B	Y	220	196	12				39	1	277
PORTABLE SCALE SITE	53.48		X	B	Y	300	234	12				50	1	356
DRIVEWAY	53.54	X			N	52	36	12					7	
DRIVEWAY	53.54		X		N	54	37	12					8	
HWY 161	53.85		X	B	Y	240	176	12				39	1	278
DRIVEWAY	54.06		X		N	40	25	12					5	
SUBTOTAL THIS SHEET **									1162	2370	11567	1706	107	4276

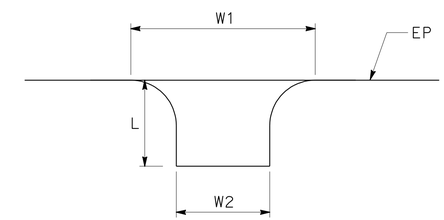

TYPICAL ROAD CONNECTION

SUMMARY OF QUANTITIES

Q-2

REVISED BY | DATE REVISED
SAL PRIETO | MARK MILLER
CALCULATED-DESIGNED BY | CHECKED BY
FUNCTIONAL SUPERVISOR
MARK MILLER

STATE OF CALIFORNIA - DEPARTMENT OF TRANSPORTATION
Caltrans® ADVANCE PLANNING

p:\proj\02\4c010_plans\pse\SUBMIT_TO_HQ\24c010pa002.dgn

LAST REVISION 07-06-10 | DATE PLOTTED => 13-JUL-2010 | TIME PLOTTED => 13:30

Dist	COUNTY	ROUTE	POST MILES TOTAL PROJECT	SHEET No.	TOTAL SHEETS
02	Sis	97	40.1/54.1	77	114

Mark J. Miller 07-06-10
REGISTERED CIVIL ENGINEER DATE

7-12-10
PLANS APPROVAL DATE

REGISTERED PROFESSIONAL ENGINEER
MARK MILLER
No. C48454
Exp. 6-30-12
CIVIL
STATE OF CALIFORNIA

THE STATE OF CALIFORNIA OR ITS OFFICERS OR AGENTS SHALL NOT BE RESPONSIBLE FOR THE ACCURACY OR COMPLETENESS OF SCANNED COPIES OF THIS PLAN SHEET.

ADJUST UTILITY COVER TO GRADE

LOCATION	STATION	OFFSET (FT)	R+/L+	EA	COMMENTS
Sis-97	"A" 44+13	35	L+	1	WATER VALVE
	"A" 44+15	37	L+	1	WATER VALVE
	"A" 44+15	26	L+	1	WATER VALVE
	"A" 43+09	24	L+	1	WATER VALVE
	"A" 43+22	26	L+	1	WATER VALVE
	"A" 76+67	71	L+	1	WATER VALVE
	"A" 76+69	71	L+	1	WATER VALVE
	"A" 78+15	11	L+	1	MANHOLE
	"A" 79+75	13	L+	1	MANHOLE
	"A" 81+18	22	L+	1	WATER VALVE
	"A" 81+25	15	L+	1	MANHOLE
	"A" 82+89	22	L+	1	WATER VALVE
	"A" 82+92	15	L+	1	WATER VALVE
	"A" 82+98	24	L+	1	WATER VALVE
	"A" 83+00	18	L+	1	MANHOLE
	"A" 84+97	25	L+	1	MANHOLE
	"A" 85+27	30	R+	1	MONITORING WELL
	"A" 85+92	26	R+	1	MONITORING WELL
	"A" 86+44	34	R+	1	MONITORING WELL
	"A" 89+86	28	L+	1	WATER VALVE
	"A" 89+86	42	L+	1	WATER VALVE
	"A" 95+45	24	L+	1	WATER VALVE
	"A" 95+45	29	L+	1	WATER VALVE
	"A" 95+47	26	L+	1	WATER VALVE
	"A" 95+85	24	L+	1	WATER VALVE
	"A" 95+85	26	L+	1	WATER VALVE
	"A" 100+03	35	L+	1	WATER VALVE
	"A" 100+24	66	L+	1	WATER VALVE
	"A" 103+84	17	L+	1	WATER VALVE
	"A" 103+85	18	L+	1	WATER VALVE
	"A" 103+87	17	L+	1	WATER VALVE
	"A" 103+87	23	R+	1	WATER VALVE
	"A" 106+89	20	L+	1	WATER VALVE
	"A" 106+90	21	L+	1	WATER VALVE
TOTAL				34	

SUMMARY OF QUANTITIES

Q-3

REVISED BY | DATE REVISED
SAL PRIETO | MARK MILLER
CALCULATED-DESIGNED BY | CHECKED BY
FUNCTIONAL SUPERVISOR: MARK MILLER

STATE OF CALIFORNIA - DEPARTMENT OF TRANSPORTATION
Caltrans ADVANCE PLANNING

p:\proj1\02\4c010_plans\pse\SUBMIT_TO_HQ\24c010pa003.dgn

LAST REVISION 07-06-10 | DATE PLOTTED => 13-JUL-2010 | TIME PLOTTED => 13:05

Dist	COUNTY	ROUTE	POST MILES TOTAL PROJECT	SHEET No.	TOTAL SHEETS
02	Sis	97	40.1/54.1	78	114

Mark J. Miller 07-06-10
REGISTERED CIVIL ENGINEER DATE

7-12-10
PLANS APPROVAL DATE

REGISTERED PROFESSIONAL ENGINEER
MARK MILLER
No. C48454
Exp. 6-30-12
CIVIL
STATE OF CALIFORNIA

THE STATE OF CALIFORNIA OR ITS OFFICERS OR AGENTS SHALL NOT BE RESPONSIBLE FOR THE ACCURACY OR COMPLETENESS OF SCANNED COPIES OF THIS PLAN SHEET.

MARKERS

LOCATION	REMOVE MARKER	MILEPOST MARKER	OBJECT MARKER (TYPE L-2)	REMARKS
PM - PM	EA	EA	EA	
40.1 TO 54.1		28	20	
40.1 TO 54.1	48			OBJECT MARKERS, MILEPOST MARKERS

DELINEATORS

POST MILES	L†	R†	REMOVE DELINEATOR (EA)	DELINEATOR CLASS 2 (EA)			DELINEATOR CLASS 1 (EA)
				On Tangent	In Curves	Road Connections	
40.1 TO 54.1	X	X	384	247	100	135	
50.45		X					10
TOTAL			384	482			10

METAL BEAM GUARD RAILING

Co-Rte	LOCATION		RECONSTRUCT MBGR		MBGR (7' POST)	REMOVE MBGR	ALTERNATIVE FLARED TERMINAL SYSTEM	ALTERNATIVE CRASH CUSHION	TERMINAL ANCHOR ASSEMBLY (TYPE SFT)	REMARKS
		DIRECTION	LF	LF	LF	LF	EA	EA	EA	
			7' POST	6' POST						
SIS-97	51.05 TO 51.06	NB		50		25.0	1		1	PERPETUATE END POINT, THEN FLARE OUT TO NEW EP
	51.08 TO 51.09	SB				37.5		1		REPLACE MBGR WITH CRASH CUSHION SYSTEM
	51.24 TO 51.49	NB				1350				REMOVE AFTER EMBANKMENT PLACED BEHIND MBGR
	51.95 TO 52.14	SB	350.0	400	250		1		1	EXTEND MBGR 250' NORTH OF EXISTING MBGR - PLUS TERMINAL SECTION
	52.18 TO 52.36	NB	350.0	600					1	PERPETUATE EXIST BURIED POST END ANCHOR
	53.10 TO 53.15	SB		275					1	PERPETUATE EXIST BURIED POST END ANCHOR
	53.11 TO 53.18	NB		325					1	PERPETUATE EXIST BURIED POST END ANCHOR
	53.84 TO 53.98	SB	712.5			37.5	1		1	
		SUBTOTAL	1412.5	1650						
		TOTAL	3062.5		250	1450.0	3	1	6	

SUMMARY OF QUANTITIES
Q-4

REVISED BY | DATE REVISED
SAL PRIETO | MARK MILLER
CALCULATED-DESIGNED BY | CHECKED BY
FUNCTIONAL SUPERVISOR: MARK MILLER
STATE OF CALIFORNIA - DEPARTMENT OF TRANSPORTATION
Caltrans® ADVANCE PLANNING
p:\proj1\02\4c010_plans\pse\SUBMIT_TO_HQ\24c010pa004.dgn

LAST REVISION 07-06-10 | DATE PLOTTED => 16-JUL-2010 | TIME PLOTTED => 06:11

Dist	COUNTY	ROUTE	POST MILES TOTAL PROJECT	SHEET No.	TOTAL SHEETS
02	Sis	97	40.1/54.1	79	114

REGISTERED CIVIL ENGINEER 07-06-02 DATE

7-12-10
PLANS APPROVAL DATE

REGISTERED PROFESSIONAL ENGINEER GREG KINGSFIELD No. C76297 Exp 6-30-12 CIVIL STATE OF CALIFORNIA

THE STATE OF CALIFORNIA OR ITS OFFICERS OR AGENTS SHALL NOT BE RESPONSIBLE FOR THE ACCURACY OR COMPLETENESS OF SCANNED COPIES OF THIS PLAN SHEET.

NOTE:

1. (N) - NOT A SEPARATE PAY ITEM, FOR INFORMATION ONLY

VEGETATION CONTROL (MINOR CONCRETE)

LOCATION	
	SQYD
PM 51.95 TO 52.08	336
TOTAL	336

MARKER (CULVERT)

LOCATION	EA
"A" 41+92, 138 Lt	1
"A" 45+44, 111 Lt	1
"A" 121+91, 55 Rt	1
"A" 121+91, 22 Lt	1
PM 52.75, 40 Lt	1
TOTAL	5

TEMPORARY EROSION CONTROL

LOCATION	TEMP FIBER ROLL	TEMP GRAVEL BAG BERM	TEMP COVER	TEMP DRAINAGE INLET PROTECTION	TEMP HYDRAULIC MULCH (POLYMER STABILIZED FIBER MATRIX)
	LF	LF	SQYD	EA	SQYD
SIS 97+40.1 TO 97+54.1	2610	110	1730	36	3462
TOTAL					

FENCE

LOCATION	REMOVE CHAIN LINK FENCE	CHAIN LINK FENCE (TYPE CL-6)
	LF	LF
"A" 44+25, 216 Lt TO 46+55, 82 Lt	359	359
TOTAL	359	359

CURB AND GUTTER

LOCATION	REMOVE CONCRETE	MINOR CONCRETE (Misc Const)	COMMENTS
	CY	CY	
"A" 77+00 Lt	1.6	1.6	CURB AND GUTTER
"A" 81+10 Lt	3.2	3.2	SIDEWALK, CURB AND GUTTER
"A" 81+50 Rt	4.7	4.7	SIDEWALK, CURB AND GUTTER
"A" 82+80 Lt	1.2	1.2	CURB AND GUTTER
"A" 82+80 Rt	1.2	1.2	CURB AND GUTTER
FROM DRAINAGE QUANTITIES	25.2	70.0	
TOTAL	37.1	81.9	

SUMMARY OF QUANTITIES

Q-5

REVISED BY	DATE REVISED

GREG KINGSFIELD — ALEX PETERSON — CALCULATED-DESIGNED BY — CHECKED BY

FUNCTIONAL SUPERVISOR: STEVE THORNE

STATE OF CALIFORNIA - DEPARTMENT OF TRANSPORTATION
Caltrans® HYDRAULICS DESIGN

p:\proj\02\4c010_plans\pse\SUBMIT_TO_HQ\24c010pa005.dgn

Dist	COUNTY	ROUTE	POST MILES TOTAL PROJECT	SHEET No.	TOTAL SHEETS
02	Sis	97	40.1/54.1	80	114

ART 07-06-10
REGISTERED CIVIL ENGINEER DATE

7-12-10
PLANS APPROVAL DATE

REGISTERED PROFESSIONAL ENGINEER A. P. ROBLES No. E15293 Exp 3/31/11 ELECTRICAL STATE OF CALIFORNIA

THE STATE OF CALIFORNIA OR ITS OFFICERS OR AGENTS SHALL NOT BE RESPONSIBLE FOR THE ACCURACY OR COMPLETENESS OF SCANNED COPIES OF THIS PLAN SHEET.

NOTES (THIS SHEET):

1. ABANDON EXISTING LOOP DETECTORS.
2. EXACT LOCATION OF LOOP DETECTORS WILL BE DETERMINED BY THE ENGINEER.
3. REPLACE 4 LOOP CONDUCTORS AND LEAVE 10' OF SLACK IN PB.
4. EXISTING UTILITY FACILITIES HAVE NOT BEEN PLOTTED ON THESE PLANS.

LEGEND

(PB) OBJECT MARKER (TYPE PB) AND PULL BOX PAVING

DIRECTION OF TRAVEL

ABBREVEATIONS

RAWS REMOTE AUTOMATED WEATHER STATION

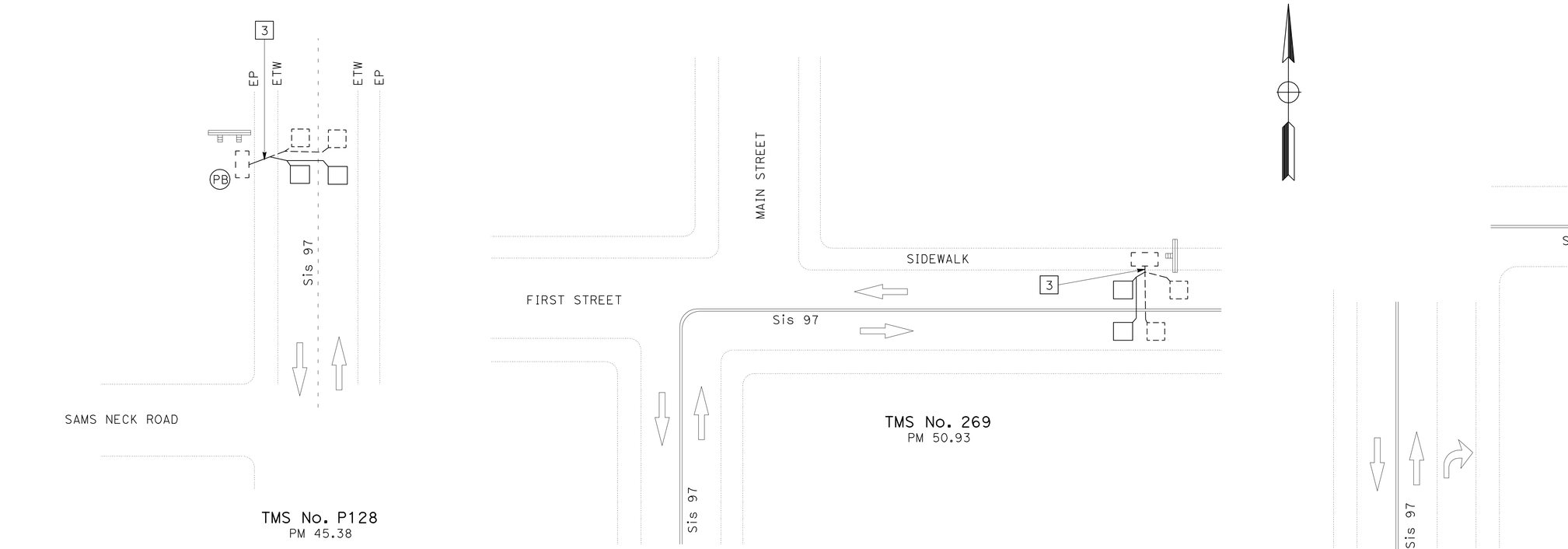

EXISTING TRAFFIC MANAGEMENT SYSTEM ELEMENTS TO BE MAINTAINED

TYPE	LOCATION (PM)	DESCRIPTION
RAWS	Sis-97-51.64	CO-LOCATED ON TOP OF DORRIS HILL, OFF SOUTHBOUND SHOULDER
CCTV		

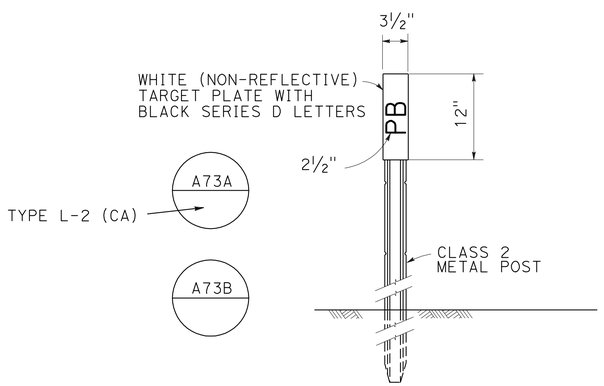

NOTE: MARKERS SHALL COMPLY WITH TYPE L-2 MODIFIED WITH A SNOW POLE BRACKET. PLACE MARKER 2" OUTSIDE PULL BOX PAVING ON SIDE AWAY FROM TRAFFIC. SEE PULL BOX PAVING DETAIL.

OBJECT MARKER (TYPE PB)

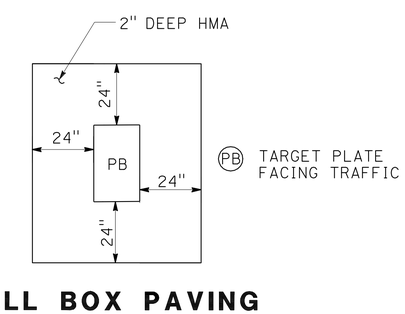

PULL BOX PAVING

TRAFFIC MONITORING STATION

NO SCALE

E-1

THIS PLAN IS ACCURATE FOR ELECTRICAL WORK ONLY.

REVISED BY | DATE REVISED
ARTURO ROBLES | KAREN CARMO
CALCULATED-DESIGNED BY | CHECKED BY
FUNCTIONAL SUPERVISOR: ROB STINGER

STATE OF CALIFORNIA - DEPARTMENT OF TRANSPORTATION
Caltrans® ELECTRICAL DESIGN

p:\proj\02\4c010_plans\pse\SUBMIT_TO_HQ\24c010ua001.dgn

LAST REVISION | DATE PLOTTED => 13-JUL-2010 | TIME PLOTTED => 13:06
07-02-10

DIST	COUNTY	ROUTE	POST MILES TOTAL PROJECT	SHEET NO.	TOTAL SHEETS
02	Sis	97	40.1/54.1	81	114

REGISTERED CIVIL ENGINEER

June 6, 2008
PLANS APPROVAL DATE

REGISTERED PROFESSIONAL ENGINEER
Donald E. Howe
No. C46402
Exp. 3-31-09
CIVIL
STATE OF CALIFORNIA

The State of California or its officers or agents shall not be responsible for the accuracy or completeness of electronic copies of this plan sheet.

To accompany plans dated 7-12-10

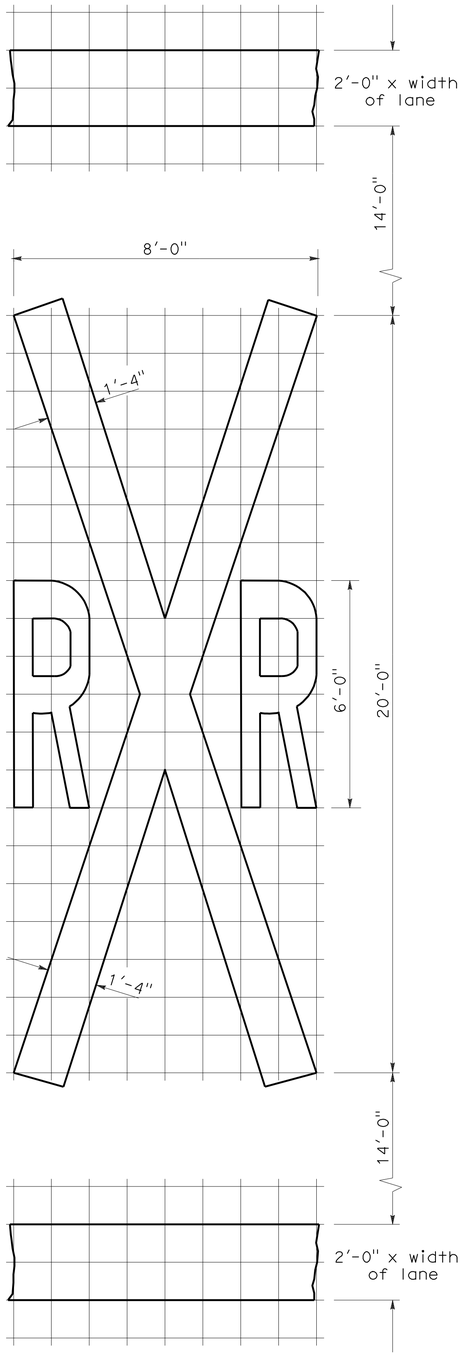

1'-0" GRID
A=70 sq ft ✳

RAILROAD CROSSING SYMBOL

✳70 sq ft DOES NOT INCLUDE THE 2'-0" x VARIABLE WIDTH TRANSVERSE LINES.

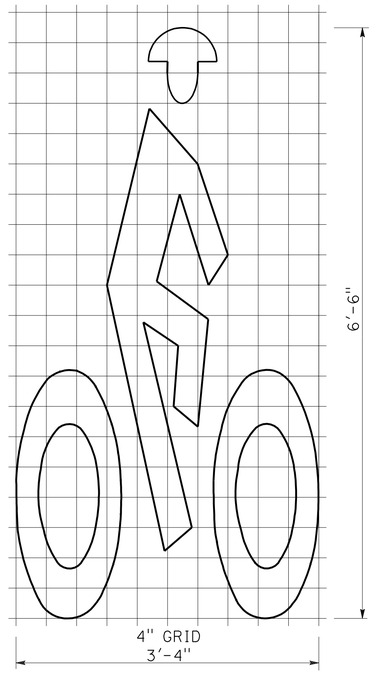

A=7 sq ft

BIKE LANE SYMBOL

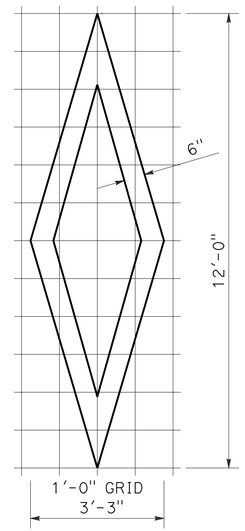

A=11 sq ft

DIAMOND SYMBOL

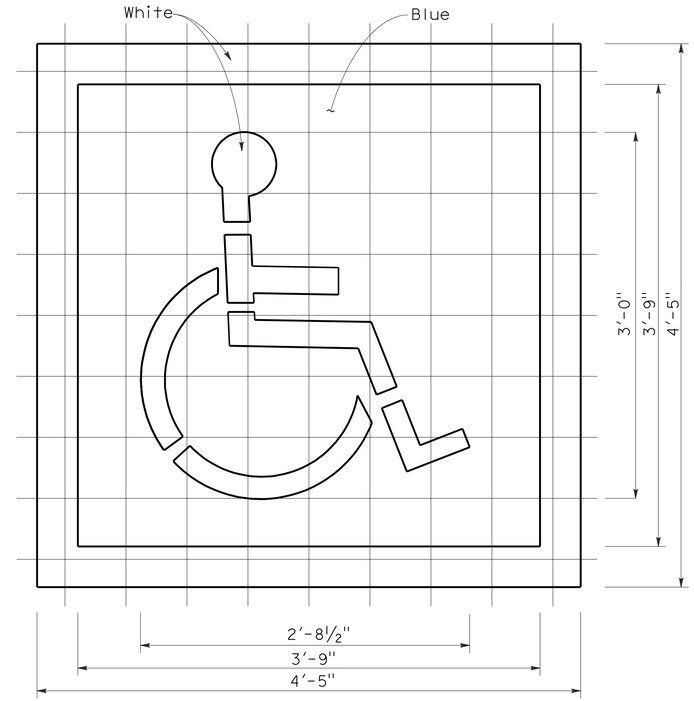

6" GRID
A (White) =9 sq ft
A (Blue) =14 sq ft

INTERNATIONAL SYMBOL OF ACCESSIBILITY MARKING

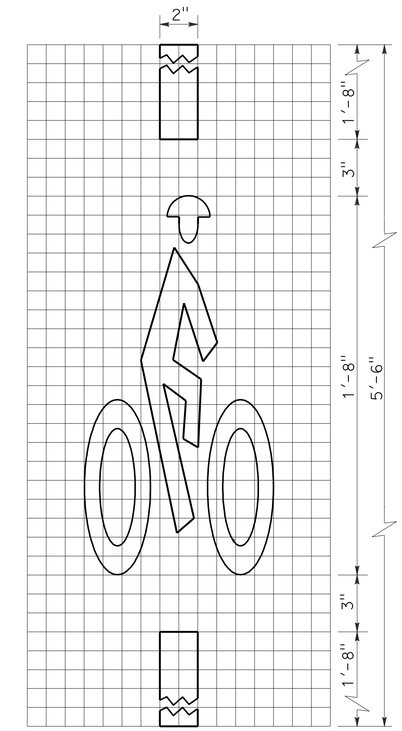

A=2 sq ft

BICYCLE LOOP DETECTOR SYMBOL

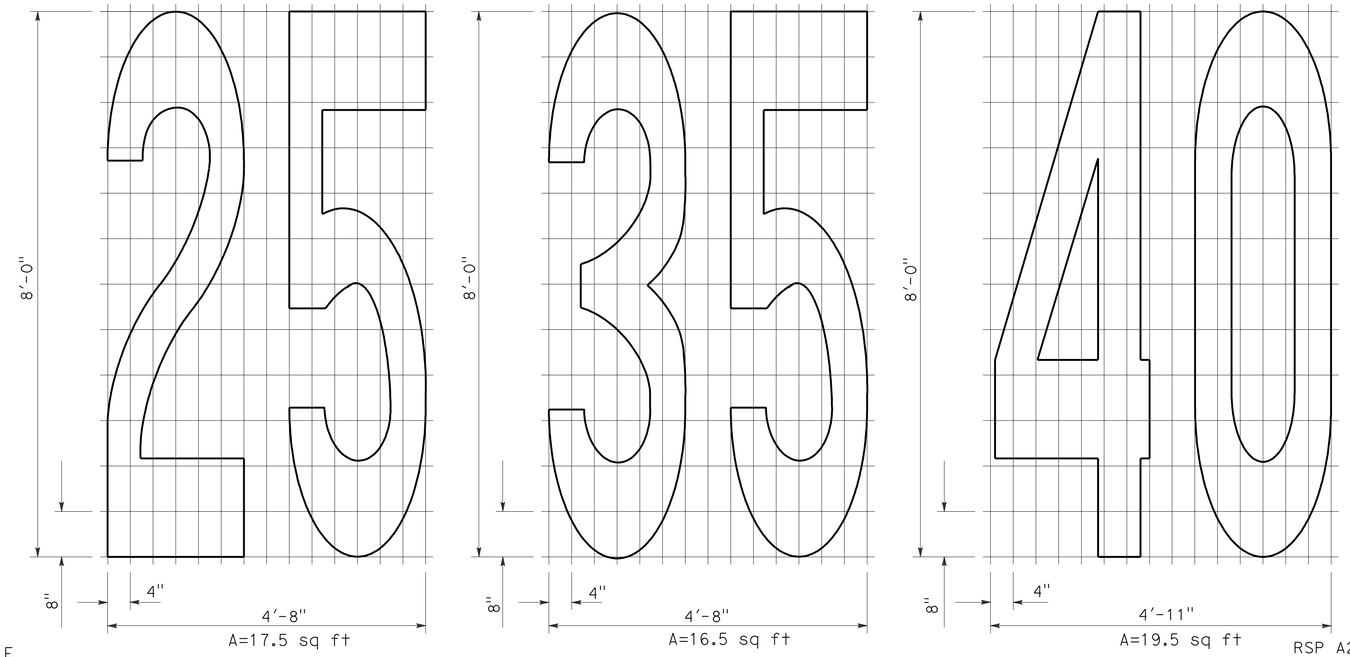

A=17.5 sq ft
A=16.5 sq ft
A=19.5 sq ft

NUMERALS

NOTE:

1. Minor variations in dimensions may be accepted by the Engineer.

STATE OF CALIFORNIA
DEPARTMENT OF TRANSPORTATION

PAVEMENT MARKINGS SYMBOLS AND NUMERALS

NO SCALE

RSP A24C DATED JUNE 6, 2008 SUPERSEDES STANDARD PLAN A24C DATED MAY 1, 2006 - PAGE 11 OF THE STANDARD PLANS BOOK DATED MAY 2006.

REVISED STANDARD PLAN RSP A24C

2006 REVISED STANDARD PLAN RSP A24C

5-27-08

DIST	COUNTY	ROUTE	POST MILES TOTAL PROJECT	SHEET NO.	TOTAL SHEETS
02	Sis	97	40.1/54.1	82	114

REGISTERED CIVIL ENGINEER

November 17, 2006
PLANS APPROVAL DATE

REGISTERED PROFESSIONAL ENGINEER Dallas Forester No. C37765 Exp. 12-31-06 CIVIL STATE OF CALIFORNIA

The State of California or its officers or agents shall not be responsible for the accuracy or completeness of electronic copies of this plan sheet.

To accompany plans dated 7-12-10

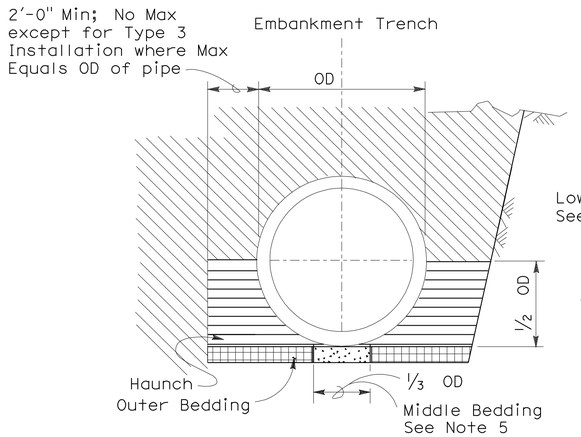

BACKFILL

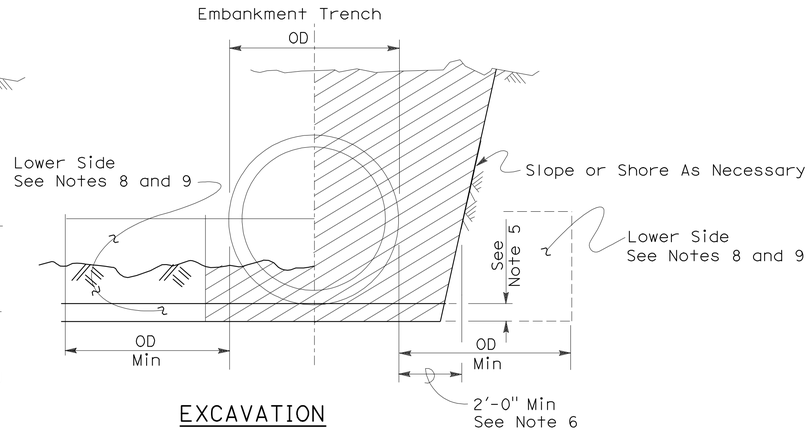

EXCAVATION

Roadway Embankment

Structure Backfill (Culvert) See Note 6

Structure Backfill (Culvert) See Note 6

Loose Backfill

Excavation Structure (Culvert)

TYPE 1 INSTALLATION:

The haunch and outer bedding shall be compacted to a minimum 90 percent relative compaction. In addition, the minimum sand equivalent in these areas shall be 30 and the maximum percentage passing the 75 μm sieve size shall be 12.

TYPE 2 INSTALLATION:

The haunch and outer bedding shall be compacted to a minimum 90 percent relative compaction. In addition, the minimum sand equivalent in these areas shall be 25.

TYPE 3 INSTALLATION:

The haunch and outer bedding shall be compacted to a minimum 85 percent relative compaction. 90 percent relative compaction will be required where the fill over the pipe is less than 4'-0" or 1/2 OD.

NOTES:

1. Unless otherwise shown on the plans or specified in the special provision, the Contractor shall have the option of selecting the class of RCP and the type of installation to be used, provided the height of cover does not exceed the value shown for the RCP selected.
   Example: 24" RCP culvert with maximum cover of 19'-0" the options are:
   a) Class III or stronger with Installation Type 1.
   b) Class III Special or stronger with Installation Type 2.
   c) Class IV Special or stronger with Installation Type 3.
   Cover is defined as the maximum vertical distance from top of the pipe to finished grade within the length of any given culvert.
2. The class of RCP and Installation Type selected shall be the same throughout the length of any given culvert.
3. The "length of any culvert" is defined as the culvert between:
   a) Successive drainage structure (inlets, junction boxes, headwalls, etc.).
   b) A drainage structure and the inlet or outlet end of the culvert.
   c) The inlet and outlet end of the culvert when there are no intervening drainage structures.
4. Oval and arch shaped RCP shall not be used.
5. 1/25 OD Min, not less than 3".
6. Slurry cement backfill may be substituted for backfill in the outer bedding and haunch areas. If slurry is used the outer and middle beddings shall be omitted. Prior to installation the soil under the middle 1/3 of the outside diameter of the pipe shall be softened by scarifying or other means to a minimum depth of 1/25 OD, but not less than 3". Where slurry cement backfill is used clear distance to trench wall may be reduced as set forth in Section 19-3.062 of the Standard Specifications.
7. Backfill shall be placed full width of excavation except where dimensions are shown for backfill width or thickness. Dimensions shown are minimums.
8. Lower side shall be suitable material as determined by the Engineer. Otherwise it shall be considered unsuitable as set forth in Section 19-2.02 of the Standard Specifications. See Note 9.
9. Where the pipe is placed in a trench, if the trench walls are sloped at 5 vertical to 1 horizontal or steeper for at least 90 percent of the trench height or up to not less than 12" from the grading plane, the firmness of the soil in the lower side need not be considered.
10. Non-reinforced precast concrete pipe sizes 3'-0" or smaller may be placed under installation Types 1, 2 or 3.

INSTALLATION TYPE 1

MINIMUM CLASS AND D-LOAD	COVER	
	108" Dia AND SMALLER	OVER 108" Dia
Class II 1000D	14.9'	12.9'
Class III 1350D	15.0' - 20.9'	13.0' - 18.9'
Class III Special 1700D	21.0' - 26.9'	19.0' - 24.9'
Class IV 2000D	27.0' - 31.9'	25.0' - 29.9'
Class IV Special 2500D	32.0' - 40.9'	30.0' - 38.9'
Class V 3000D	41.0' - 49.9'	39.0' - 46.9'
Class V Special 3600D	50.0' - 59.0'	47.0' - 58.0'

INSTALLATION TYPE 2

MINIMUM CLASS AND D-LOAD	COVER
Class II 1000D	9.9'
Class III 1350D	10.0'- 14.9'
Class III Special 1700D	15.0' - 19.9'
Class IV 2000D	20.0' - 24.9'
Class IV Special 2500D	25.0' - 31.9'
Class V 3000D	32.0' - 38.9'
Class V Special 3600D	39.0' - 47.0'

INSTALLATION TYPE 3

MINIMUM CLASS AND D-LOAD	COVER	
	48" Dia AND SMALLER	OVER 48" Dia
Class II 1000D	7.9'	5.9'
Class III 1350D	8.0' - 10.9'	6.0' - 8.9'
Class III Special 1700D	11.0' - 14.9'	9.0' - 12.9'
Class IV 2000D	15.0' - 17.9'	13.0' - 15.9'
Class IV Special 2500D	18.0' - 21.9'	16.0' - 19.9'
Class V 3000D	22.0' - 26.9'	20.0' - 24.9'
Class V Special 3600D	30.0' - 33.0'	25.0' - 31.0'

STATE OF CALIFORNIA
DEPARTMENT OF TRANSPORTATION

EXCAVATION AND BACKFILL CONCRETE PIPE CULVERTS

NO SCALE

RSP A62DA DATED NOVEMBER 17, 2006 SUPERSEDES STANDARD PLAN A62DA DATED MAY 1, 2006 - PAGE 20 OF THE STANDARD PLANS BOOK DATED MAY 2006.

REVISED STANDARD PLAN RSP A62DA

2006 REVISED STANDARD PLAN RSP A62DA

10-26-06

DIST	COUNTY	ROUTE	POST MILES TOTAL PROJECT	SHEET NO.	TOTAL SHEETS
02	Sis	97	40.1/54.1	83	114

Mark S. Turner
PROFESSIONAL LAND SURVEYOR

June 30, 2006
PLANS APPROVAL DATE

LICENSED LAND SURVEYOR
Mark S. Turner
No. 6228
Exp. 3-31-08
STATE OF CALIFORNIA

The State of California or its officers or agents shall not be responsible for the accuracy or completeness of electronic copies of this plan sheet.

To accompany plans dated 7-12-10

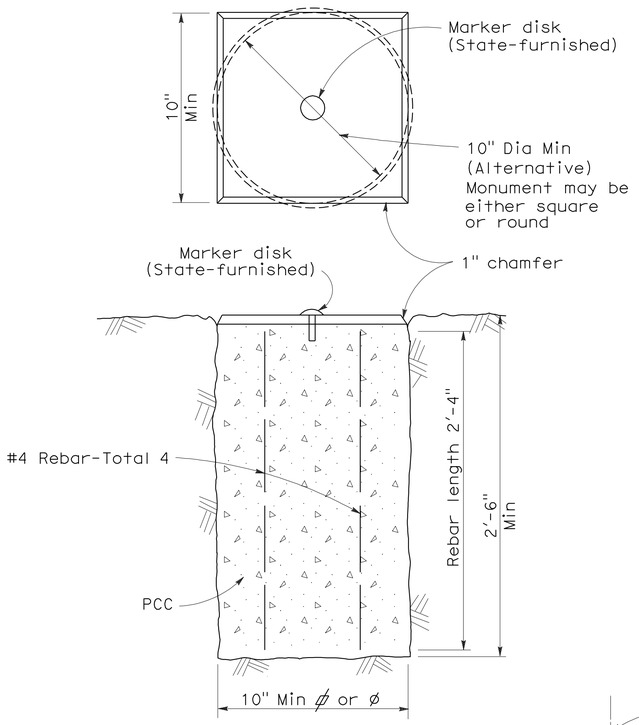

TYPE A

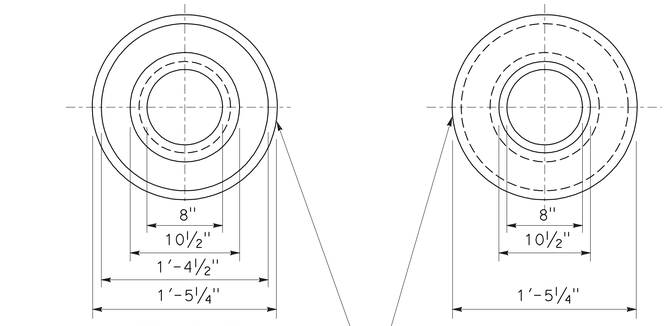

TOP VIEW OF
MONUMENT OF WELL RING

BOTTOM VIEW OF
MONUMENT OF WELL RING

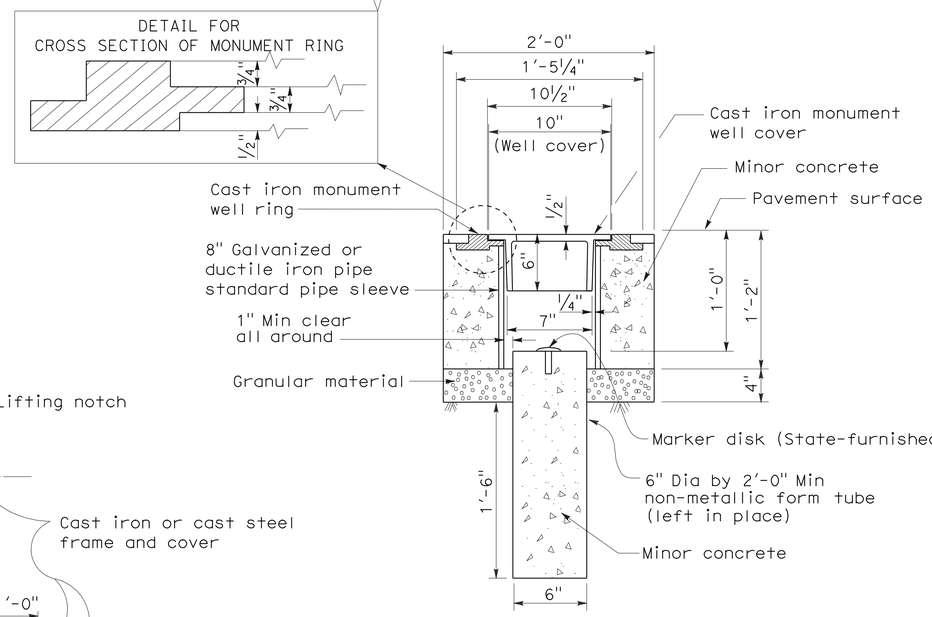

TYPE B

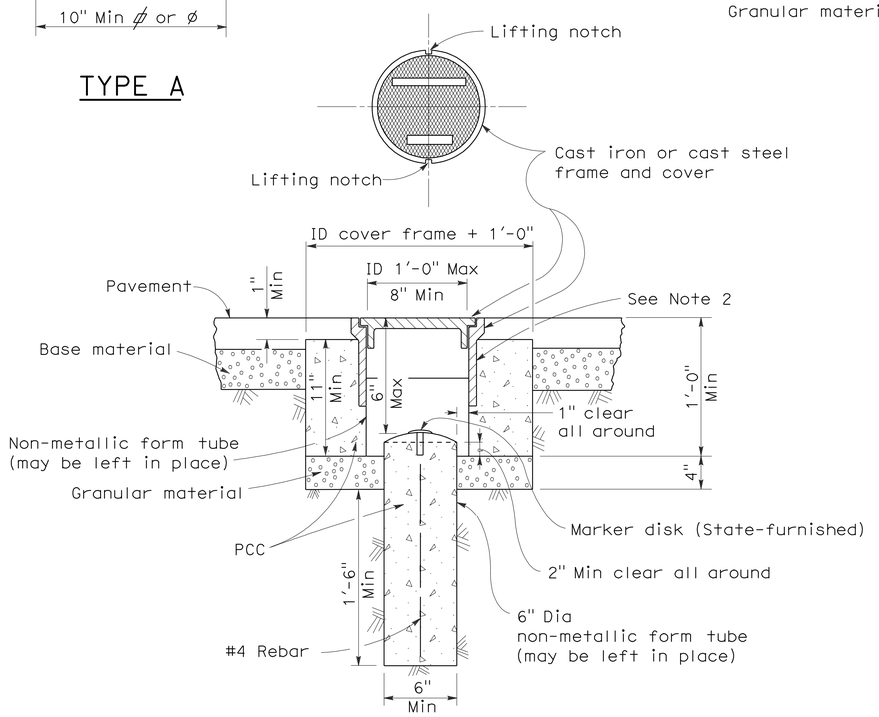

TYPE D
Alternative No. 1

NOTES:

1. The configuration of the cast iron or cast steel frame and cover may vary from that shown.
2. Frame shall be embedded in the concrete a minimum of 3".
3. Type D monument shall be either Alternative No. 1 or Alternative No. 2 at the contractor's option.
4. All portland cement concrete shall be Class 2 or minor concrete with 1" maximum aggregate.

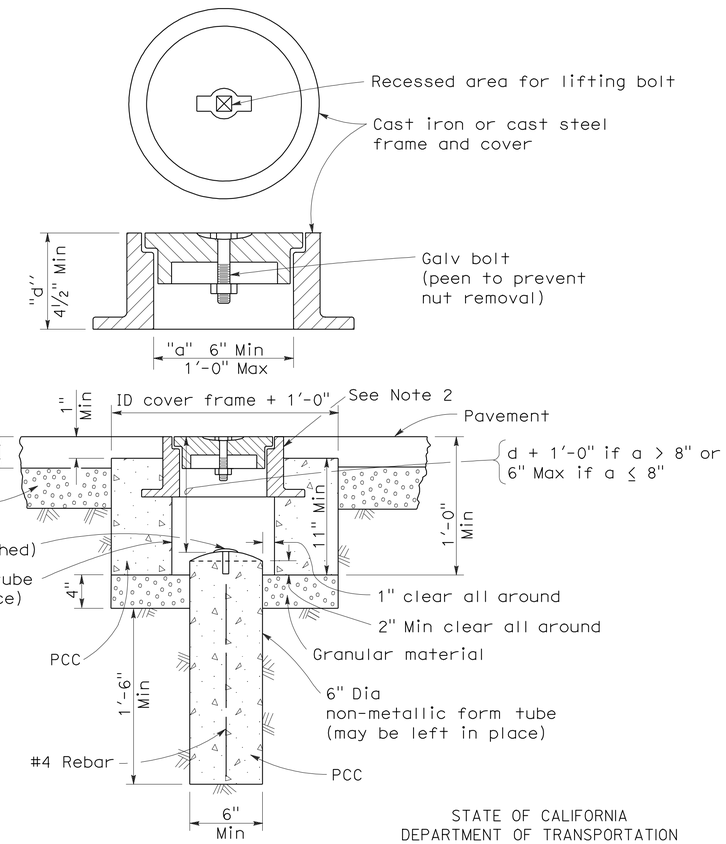

TYPE D
Alternative No. 2

STATE OF CALIFORNIA
DEPARTMENT OF TRANSPORTATION

SURVEY MONUMENTS

NO SCALE

RSP A74 DATED JUNE 30, 2006 SUPERSEDES STANDARD PLAN DATED MAY 1, 2006 - PAGE 28 OF THE STANDARD PLANS BOOK DATED MAY 2006.

REVISED STANDARD PLAN RSP A74

2006 REVISED STANDARD PLAN RSP A74

5-24-06

DIST	COUNTY	ROUTE	POST MILES TOTAL PROJECT	SHEET NO.	TOTAL SHEETS
02	Sis	97	40.1/54.1	84	114

Randell D. Hiatt
REGISTERED CIVIL ENGINEER

June 6, 2008
PLANS APPROVAL DATE

REGISTERED PROFESSIONAL ENGINEER
Randell D. Hiatt
No. C50200
Exp. 6-30-09
CIVIL
STATE OF CALIFORNIA

The State of California or its officers or agents shall not be responsible for the accuracy or completeness of electronic copies of this plan sheet.

To accompany plans dated 7-12-10

NOTES:

1. When necessary to place dike in front of face of guard railing, only Type C dike may be used. For dike details, see Standard Plan A87B.
2. For standard railing post embedment, see Standard Plans A77C3.
3. Guard railing delineation to be used where shown on the Project Plans.
4. When dike or curb is placed under guard railing, the maximum height of the dike or curb shall be 4". Mountable dike should not be used. For dike and curb details, see Revised Standard Plans RSP A87A and Standard Plan A87B.
5. For details of typical distance between the face of rail and hinge point, see Standard Plan A77C3.

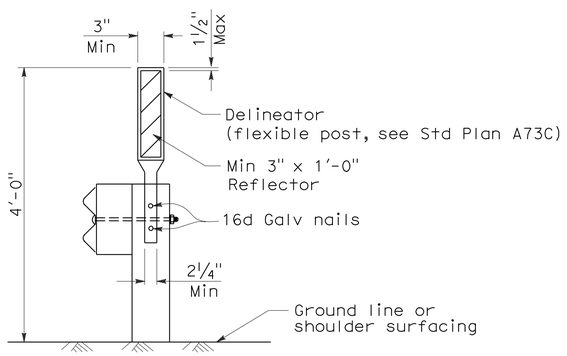

GUARD RAILING DELINEATION

See Note 3

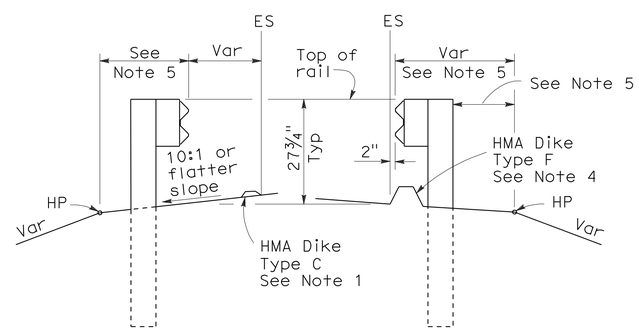

DIKE POSITIONING

See Note 1

STATE OF CALIFORNIA
DEPARTMENT OF TRANSPORTATION

METAL BEAM GUARD RAILING TYPICAL RAILING DELINEATION AND DIKE POSITIONING DETAILS

NO SCALE

RSP A77C4 DATED JUNE 6, 2008 SUPERSEDES STANDARD PLAN A77C4
DATED MAY 1, 2006 - PAGE 47 OF THE STANDARD PLANS BOOK DATED MAY 2006.

REVISED STANDARD PLAN RSP A77C4

2006 REVISED STANDARD PLAN RSP A77C4

12-10-07

DIST	COUNTY	ROUTE	POST MILES TOTAL PROJECT	SHEET NO.	TOTAL SHEETS
02	Sis	97	40.1/54.1	85	114

Randell D. Hiatt
REGISTERED CIVIL ENGINEER

October 20, 2006
PLANS APPROVAL DATE

REGISTERED PROFESSIONAL ENGINEER
Randell D. Hiatt
No. C50200
Exp. 6-30-07
CIVIL
STATE OF CALIFORNIA

The State of California or its officers or agents shall not be responsible for the accuracy or completeness of electronic copies of this plan sheet.

To accompany plans dated 7-12-10

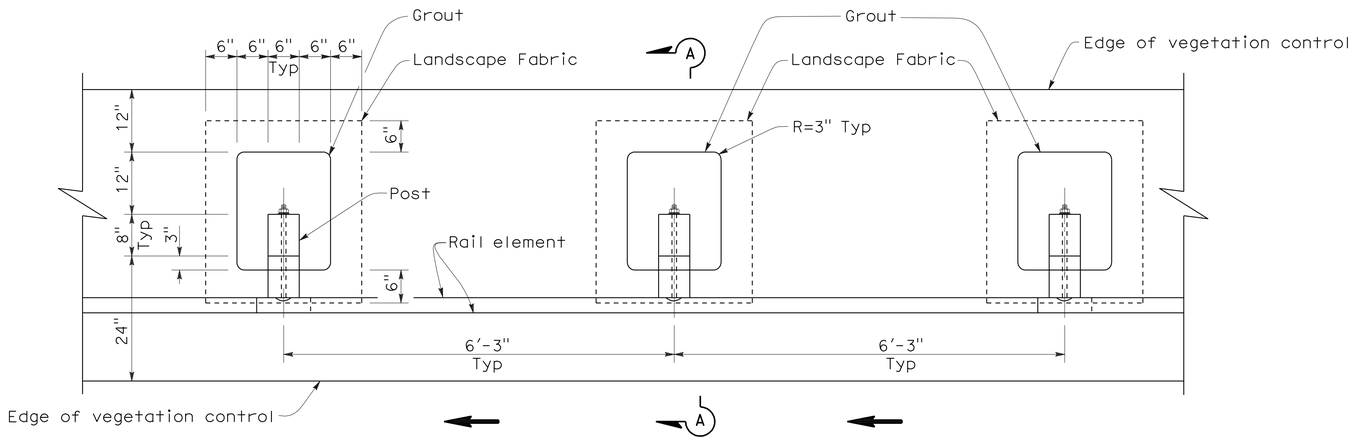

PLAN

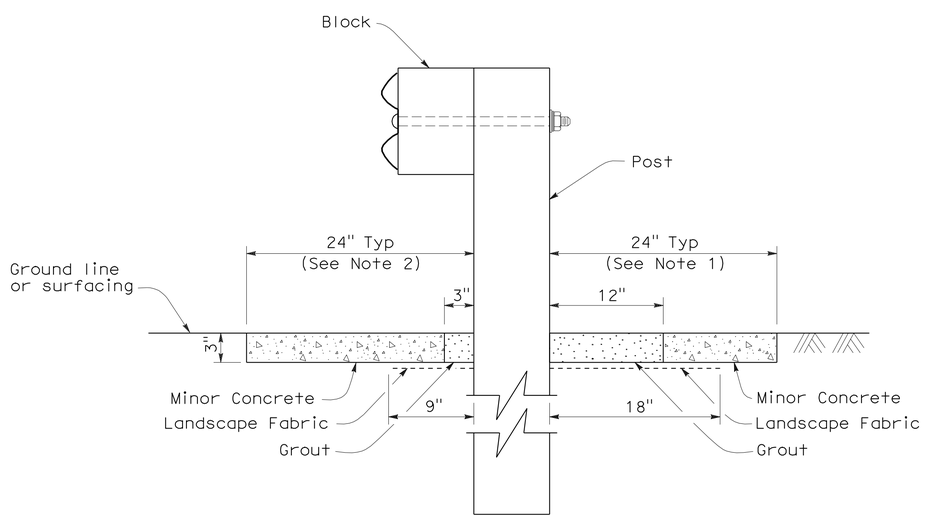

SECTION A-A

NOTES:

1. Where the distance between back of post and hinge point is less than 24", vegetation control to be constructed flush with the back edge of the post.
2. Where dike is constructed under railing, construct vegetation control to back edge of dike. Where paved shoulder is constructed within 24" in front of the post, construct vegetation control to the edge of paved shoulder.
3. Direction of adjacent traffic indicated by ← .

STATE OF CALIFORNIA
DEPARTMENT OF TRANSPORTATION

METAL BEAM GUARD RAILING TYPICAL VEGETATION CONTROL STANDARD RAILING SECTION

NO SCALE

NSP A77C5 DATED OCTOBER 20, 2006 SUPPLEMENTS THE STANDARD PLANS BOOK DATED MAY 2006.

NEW STANDARD PLAN NSP A77C5

2006 NEW STANDARD PLAN NSP A77C5

7-17-06

DIST	COUNTY	ROUTE	POST MILES TOTAL PROJECT	SHEET NO.	TOTAL SHEETS
02	Sis	97	40.1/54.1	86	114

Randell D. Hiatt
REGISTERED CIVIL ENGINEER

October 20, 2006
PLANS APPROVAL DATE

REGISTERED PROFESSIONAL ENGINEER
Randell D. Hiatt
No. C50200
Exp. 6-30-07
CIVIL
STATE OF CALIFORNIA

The State of California or its officers or agents shall not be responsible for the accuracy or completeness of electronic copies of this plan sheet.

To accompany plans dated 7-12-10

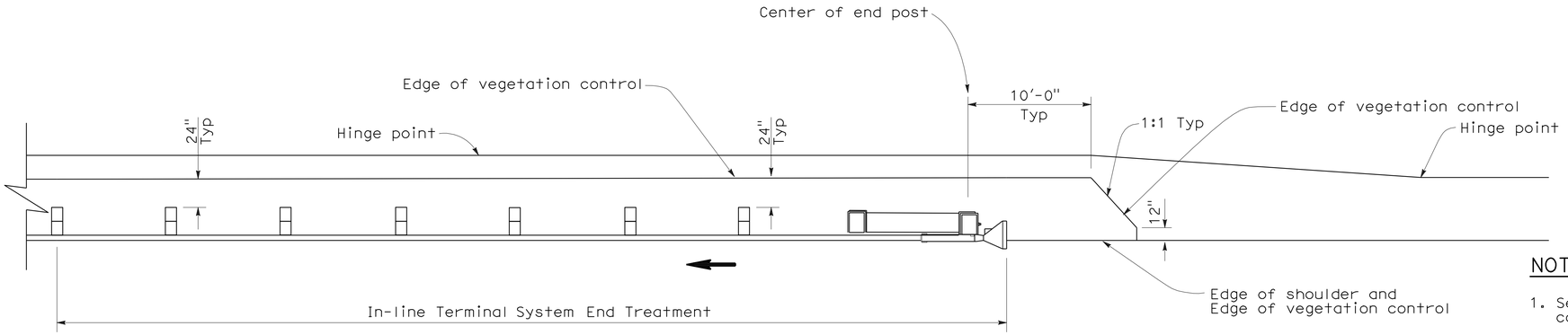

PLAN

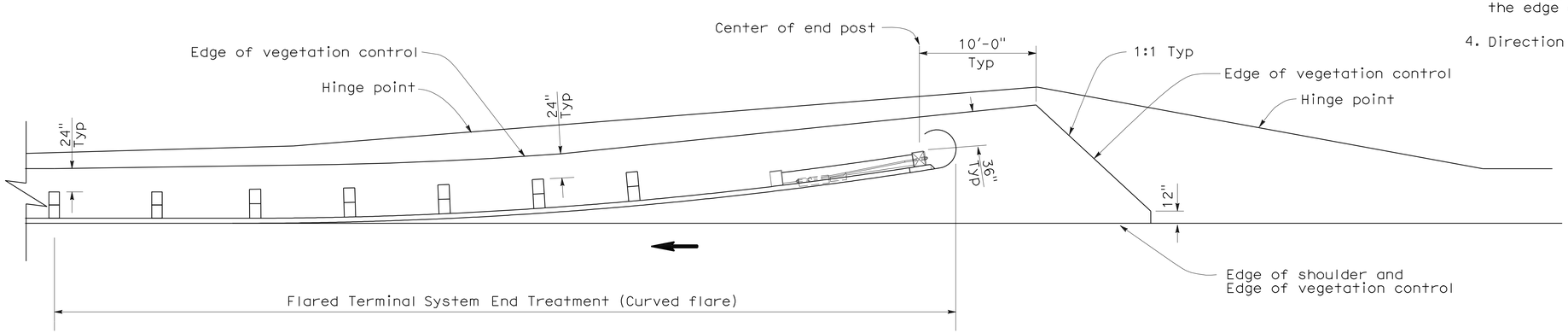

PLAN

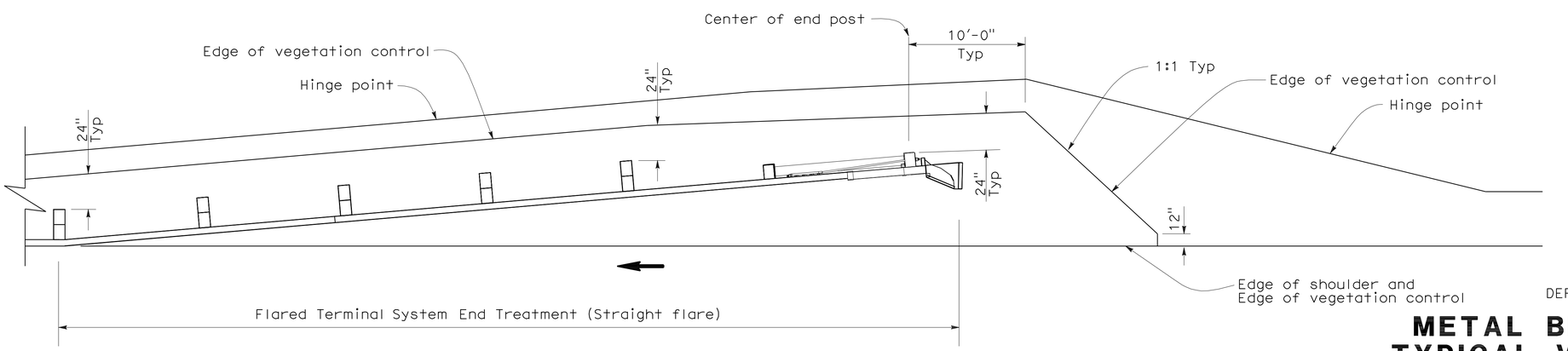

PLAN

NOTES:

1. See New Standard Plan NSP A77C5 for additional vegetation control details.
2. Where the distance between back of post and hinge point is less than 24", vegetation control to be constructed flush with the back edge of the post.
3. Where dike is constructed under railing, construct vegetation control to back edge of dike. Where paved shoulder is constructed within 24" in front of the post, construct vegetation control to the edge of paved shoulder.
4. Direction of adjacent traffic indicated by ←.

STATE OF CALIFORNIA
DEPARTMENT OF TRANSPORTATION

METAL BEAM GUARD RAILING TYPICAL VEGETATION CONTROL FOR TERMINAL SYSTEM END TREATMENTS

NO SCALE

NSP A77C6 DATED OCTOBER 20, 2006 SUPPLEMENTS THE STANDARD PLANS BOOK DATED MAY 2006.

NEW STANDARD PLAN NSP A77C6

2006 NEW STANDARD PLAN NSP A77C6

7-17-06

DIST	COUNTY	ROUTE	POST MILES TOTAL PROJECT	SHEET NO.	TOTAL SHEETS
02	Sis	97	40.1/54.1	87	114

Randell D. Hiatt
REGISTERED CIVIL ENGINEER

June 6, 2008
PLANS APPROVAL DATE

REGISTERED PROFESSIONAL ENGINEER Randell D. Hiatt No. C50200 Exp. 6-30-09 CIVIL STATE OF CALIFORNIA

The State of California or its officers or agents shall not be responsible for the accuracy or completeness of electronic copies of this plan sheet.

To accompany plans dated 7-12-10

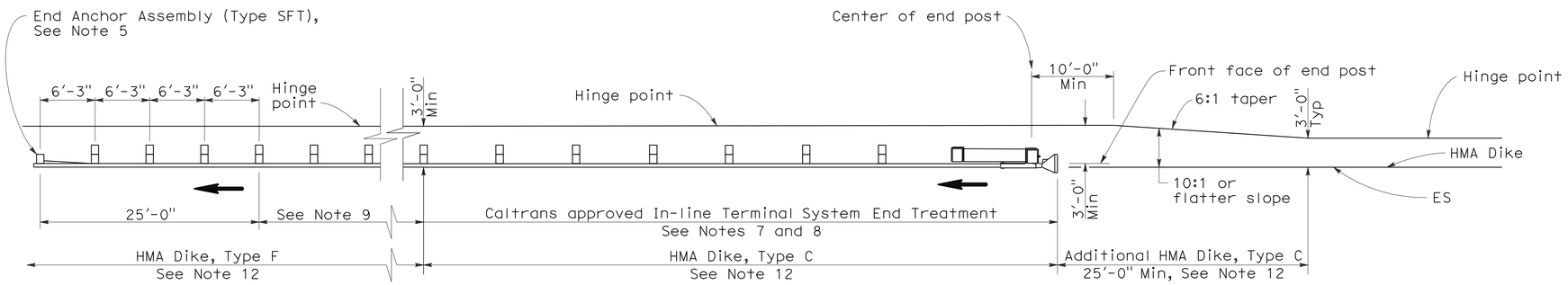

TYPE 11A LAYOUT

(EMBANKMENT GUARD INSTALLATION WITH IN-LINE END TREATMENT AT TRAFFIC APPROACH END OF RAILING)
See Note 6

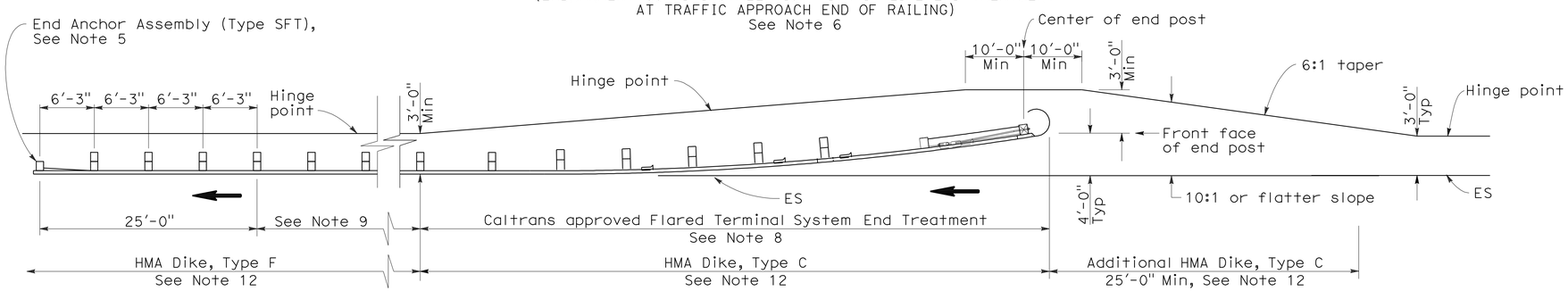

TYPE 11B LAYOUT

(EMBANKMENT GUARD RAILING INSTALLATION WITH FLARED END TREATMENT AT TRAFFIC APPROACH END OF RAILING)
See Note 6

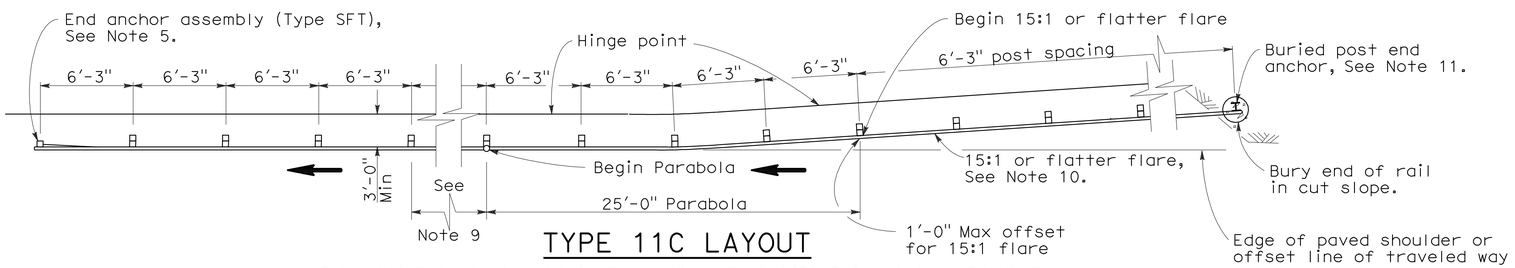

TYPE 11C LAYOUT

(EMBANKMENT GUARD RAILING INSTALLATION WITH BURIED END ANCHOR TREATMENT AT TRAFFIC APPROACH END OF RAILING)
See Notes 6 and 12

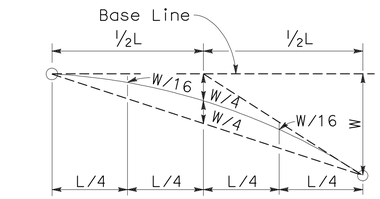

TYPICAL PARABOLIC LAYOUT

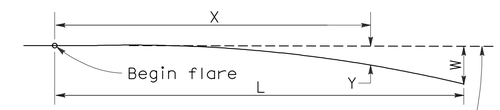

Base Line (Edge of paved shoulder or offset line of edge of traveled way)

$$Y = \frac{WX^2}{L^2}$$

Y = Offset from base line
W = Maximum offset
X = Distance along base line
L = Length of flare

PARABOLIC FLARE OFFSETS

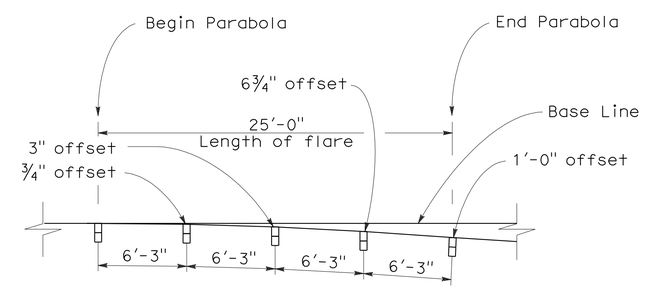

TYPICAL FLARE OFFSETS FOR 1 FOOT MAX END OFFSET

NOTES:

1. Line post, blocks and hardware to be used are shown on Standard Plans A77A1, A77A2, A77B1, A77C1, and A77C2.
2. Guard rail post spacing to be 6'-3" center to center, except as otherwise noted.
3. Except as noted, line posts are 6" x 8" x 6'-0" wood with 6" x 8" x 1'-2" wood blocks. W6 x 9 steel posts, 6'-0" in length, with 6" x 8" x 1'-2" notched wood blocks or recycled plastic blocks may be used for 6" x 8" x 6'-0" wood post with 6" x 8" x 1'-2" wood blocks where applicable and when specified.
4. Direction of adjacent traffic indicated by ⟶.
5. For End Anchor Assembly (Type SFT) details, see Standard Plan A77H1.
6. Layout Types 11A, 11B or 11C are typically used where guard railing is recommended to shield embankment slopes and a crashworthy end treatment is required for only one direction of traffic.
7. In-line Terminal System End Treatments are used where site conditions will not accommodate a flared end treatment.
8. The type of terminal system end treatment to be used will be shown on the Project Plans.
9. Dependent on site conditions (embankment height and side slope), construction of additional guard railing (length equal to multiples of 12'-6" with 6'-3" post spacing) may be advisable.
10. The 15:1 or flatter flare used with buried end anchors is based on the edge of the paved shoulder or offset line of edge of the traveled way. The length of guard railing within the 15:1 or flatter flare is based on site conditions and should be a length equal to multiples of 12'-6".
11. For details of the buried post end anchor used with Type 11C Layout, see Standard Plan A77I2.
12. Where placement of dike is required with guard railing installations, see Revised Standard Plan RSP A77C4 for dike positioning details.

STATE OF CALIFORNIA
DEPARTMENT OF TRANSPORTATION

METAL BEAM GUARD RAILING TYPICAL LAYOUTS FOR EMBANKMENTS

NO SCALE

RSP A77E1 DATED JUNE 6, 2008 SUPERSEDES STANDARD PLAN A77E1 DATED MAY 1, 2006 - PAGE 48 OF THE STANDARD PLANS BOOK DATED MAY 2006.

REVISED STANDARD PLAN RSP A77E1

2006 REVISED STANDARD PLAN RSP A77E1

12-10-07

DIST	COUNTY	ROUTE	POST MILES TOTAL PROJECT	SHEET NO.	TOTAL SHEETS
02	Sis	97	40.1/54.1	88	114

Randell D. Hiatt
REGISTERED CIVIL ENGINEER

June 6, 2008
PLANS APPROVAL DATE

REGISTERED PROFESSIONAL ENGINEER
Randell D. Hiatt
No. C50200
Exp. 6-30-09
CIVIL
STATE OF CALIFORNIA

The State of California or its officers or agents shall not be responsible for the accuracy or completeness of electronic copies of this plan sheet.

To accompany plans dated 7-12-10

2006 REVISED STANDARD PLAN RSP A77E2

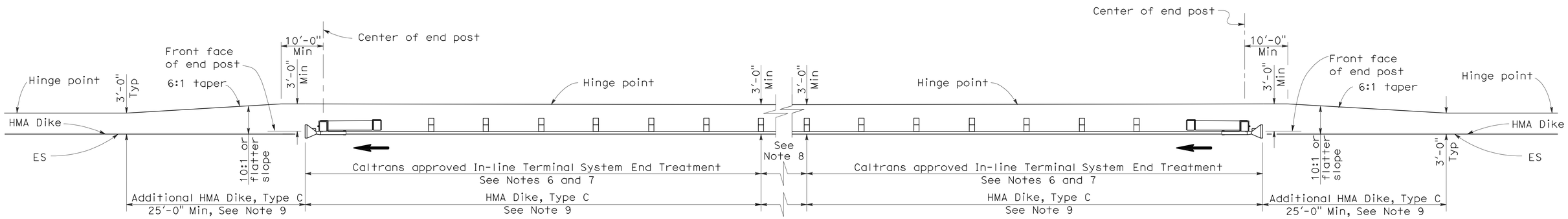

TYPE 11D LAYOUT

(EMBANKMENT GUARD RAILING INSTALLATION WITH IN-LINE END TREATMENT AT EACH END OF RAILING)
See Note 5

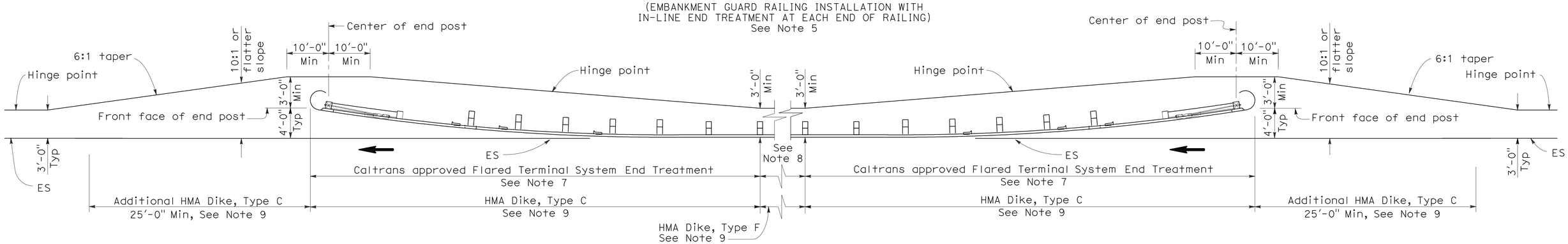

TYPE 11E LAYOUT

(EMBANKMENT GUARD RAILING INSTALLATION WITH FLARED END TREATMENT AT EACH END OF RAILING)
See Note 5

NOTES:

1. Line post, blocks and hardware to be used are shown on Standard Plans A77A1, A77A2, A77B1, A77C1 and A77C2.
2. Guard rail post spacing to be 6'-3" center to center, except as otherwise noted.
3. Except as noted, line posts are 6" x 8" x 6'-0" wood with 6" x 8" x 1'-2" wood blocks. W6 x 9 steel posts, 6'-0" in length, with 6" x 8" x 1'-2" notched wood blocks or plastic blocks may be used for 6" x 8" x 6'-0" wood post with 6" x 8" x 1'-2" wood blocks where applicable and when specified.
4. Direction of adjacent traffic indicated by ⟶.
5. Layout Types 11D through 11L, shown on the A77E Series of Revised Standard Plans, are typically used where guard railing is recommended to shield embankment slopes and a crashworthy end treatment is required for both directions of traffic.
6. In-line Terminal System End Treatments are used where site conditions will not accommodate a flared end treatment.
7. The type of terminal system end treatment to be used will be shown on the Project Plans.
8. Dependent on site conditions (embankment height and side slope), construction of additional guard railing (length equal to multiples of 12'-6" with 6'-3" post spacing) may be advisable.
9. Where placement of dike is required with guard railing installations, see Revised Standard Plan RSP A77C4 for dike positioning details.

STATE OF CALIFORNIA
DEPARTMENT OF TRANSPORTATION

METAL BEAM GUARD RAILING TYPICAL LAYOUTS FOR EMBANKMENTS

NO SCALE

RSP A77E2 DATED JUNE 6, 2008 SUPERSEDES STANDARD PLAN A77E2
DATED MAY 1, 2006 - PAGE 49 OF THE STANDARD PLANS BOOK DATED MAY 2006.

REVISED STANDARD PLAN RSP A77E2

12-10-07

DIST	COUNTY	ROUTE	POST MILES TOTAL PROJECT	SHEET NO.	TOTAL SHEETS
02	Sis	97	40.1/54.1	89	114

Randell D. Hiatt
REGISTERED CIVIL ENGINEER

June 6, 2008
PLANS APPROVAL DATE

REGISTERED PROFESSIONAL ENGINEER
Randell D. Hiatt
No. C50200
Exp. 6-30-09
CIVIL
STATE OF CALIFORNIA

The State of California or its officers or agents shall not be responsible for the accuracy or completeness of electronic copies of this plan sheet.

To accompany plans dated 7-12-10

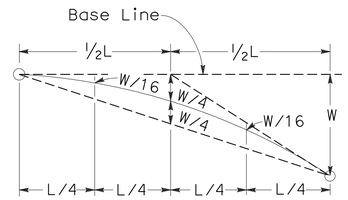

TYPICAL PARABOLIC LAYOUT

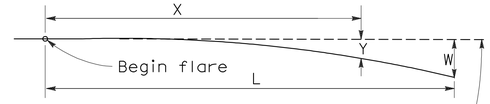

Base Line (Edge of paved shoulder or offset line of edge of traveled way)

$$Y = \frac{WX^2}{L^2}$$

Y = Offset from base line
W = Maximum offset
X = Distance along base line
L = Length of flare

PARABOLIC FLARE OFFSETS

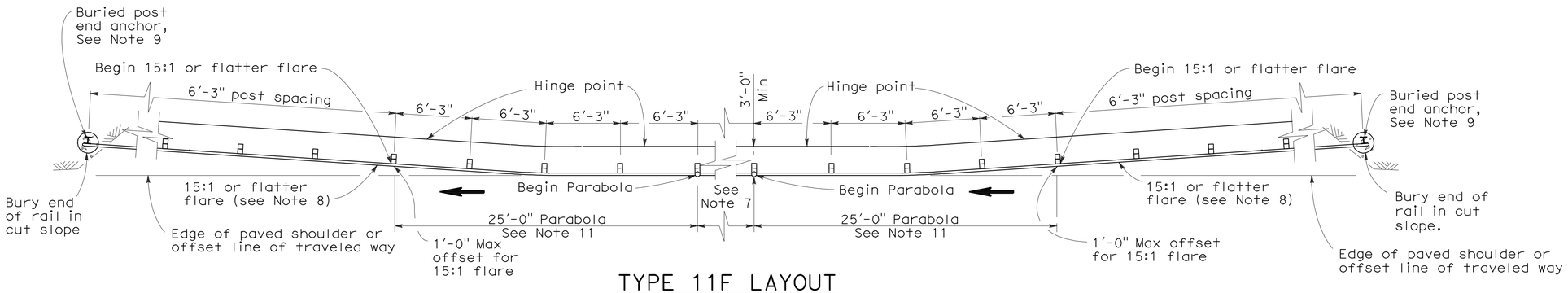

TYPE 11F LAYOUT

(EMBANKMENT GUARD RAILING INSTALLATION WITH A BURIED END ANCHOR TREATMENT AT EACH END OF RAILING)
See Notes 5 and 10

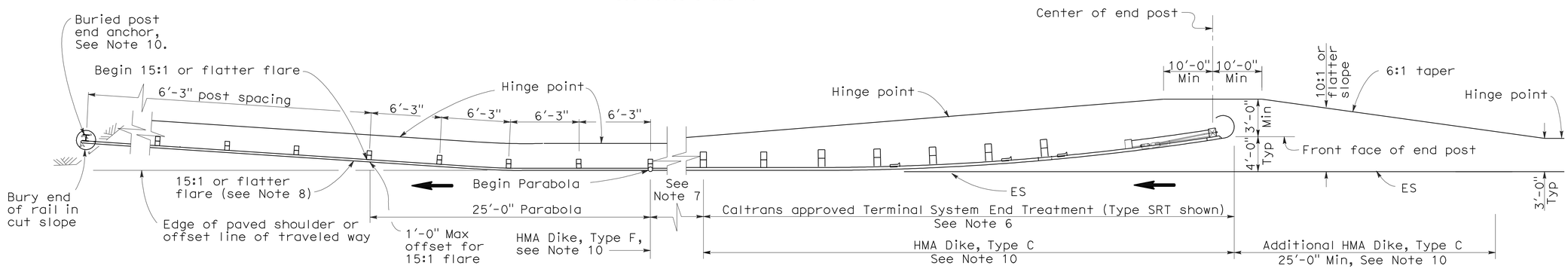

TYPE 11G LAYOUT

(EMBANKMENT GUARD RAILING INSTALLATION WITH FLARED END TREATMENT AND A BURIED END ANCHOR TREATMENT AT THE ENDS OF RAILING)
See Notes 5 and 10

NOTES:

1. Line post, blocks and hardware to be used are shown on Standard Plans A77A1, A77A2, A77B1, A77C1 and A77C2.
2. Guard rail post spacing to be 6'-3" center to center, except as otherwise noted.
3. Except as noted, line posts are 6" x 8" x 6'-0" wood with 6" x 8" x 1'-2" wood blocks. W6 x 9 steel posts, 6'-0" in length, with 6" x 8" x 1'-2" notched wood blocks or plastic blocks may be used for 6" x 8" x 6'-0" wood post with 6" x 8" x 1'-2" wood blocks where applicable and when specified.
4. Direction of adjacent traffic indicated by ⟶.
5. Layout Types 11D through 11L, shown on the A77E Series of Revised Standard Plans, are typically used where guard railing is recommended to shield embankment slopes and a crashworthy end treatment is required for both directions of traffic.
6. The type of terminal system end treatment to be used will be shown on the Project Plans.
7. Dependent on site conditions (embankment height and side slope), construction of additional guard railing (length equal to multiples of 12'-6" with 6'-3" post spacing) may be advisable.
8. The 15:1 or flatter flare used with buried end anchors is based on the edge of the paved shoulder or offset line of edge of the traveled way. The length of guard railing within the 15:1 or flatter flare is based on site conditions and should be a length equal to multiples of 12'-6".
9. For details of the buried post end anchor used with Type 11F and 11G Layouts, see Standard Plan A77I2.
10. Where placement of dike is required with guard railing installations, see Revised Standard Plan RSP A77C4 for dike positioning details.
11. For typical flare offsets for 25'-0" length parabola with maximum offset of 1'-0", see Revised Standard Plan RSP A77E1.

STATE OF CALIFORNIA
DEPARTMENT OF TRANSPORTATION

METAL BEAM GUARD RAILING TYPICAL LAYOUTS FOR EMBANKMENTS

NO SCALE

RSP A77E3 DATED JUNE 6, 2008 SUPERSEDES STANDARD PLAN A77E3 DATED MAY 1, 2006 - PAGE 50 OF THE STANDARD PLANS BOOK DATED MAY 2006.

REVISED STANDARD PLAN RSP A77E3

2006 REVISED STANDARD PLAN RSP A77E3

12-10-07

DIST	COUNTY	ROUTE	POST MILES TOTAL PROJECT	SHEET NO.	TOTAL SHEETS
02	Sis	97	40.1/54.1	90	114

Randell D. Hiatt
REGISTERED CIVIL ENGINEER

June 6, 2008
PLANS APPROVAL DATE

REGISTERED PROFESSIONAL ENGINEER
Randell D. Hiatt
No. C50200
Exp. 6-30-09
CIVIL
STATE OF CALIFORNIA

The State of California or its officers or agents shall not be responsible for the accuracy or completeness of electronic copies of this plan sheet.

To accompany plans dated 7-12-10

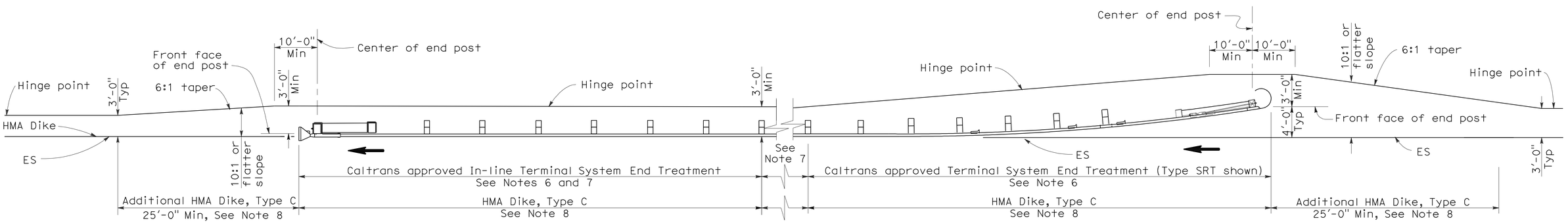

TYPE 11H LAYOUT

(EMBANKMENT GUARD RAILING INSTALLATION WITH FLARED END TREATMENT
AND AN IN-LINE TREATMENT AT THE ENDS OF RAILING)
See Notes 5 and 8

NOTES:

1. Line post, blocks and hardware to be used are shown on Standard Plans A77A1, A77A2, A77B1, A77C1 and A77C2.
2. Guard rail post spacing to be 6'-3" center to center, except as otherwise noted.
3. Except as noted, line posts are 6" x 8" x 6'-0" wood with 6" x 8" x 1'-2" wood blocks. W6 x 9 steel posts, 6'-0" in length, with 6" x 8" x 1'-2" notched wood blocks or plastic blocks may be used for 6" x 8" x 6'-0" wood post with 6" x 8" x 1'-2" wood blocks where applicable and when specified.
4. Direction of adjacent traffic indicated by ➡.
5. Layout Types 11D through 11L, shown on the A77E Series of Revised Standard Plans, are typically used where guard railing is recommended to shield embankment slopes and a crashworthy end treatment is required for both directions of traffic.
6. The type of terminal system end treatment to be used will be shown on the Project Plans.
7. Dependent on site conditions (embankment height and side slope), construction of additional guard railing (length equal to multiples of 12'-6" with 6'-3" post spacing) may be advisable.
8. Where placement of dike is required with guard railing installations, see Revised Standard Plan RSP A77C4 for dike positioning details.

STATE OF CALIFORNIA
DEPARTMENT OF TRANSPORTATION

METAL BEAM GUARD RAILING TYPICAL LAYOUTS FOR EMBANKMENTS

NO SCALE

RSP A77E4 DATED JUNE 6, 2008 SUPERSEDES STANDARD PLAN A77E4
DATED MAY 1, 2006 - PAGE 51 OF THE STANDARD PLANS BOOK DATED MAY 2006.

REVISED STANDARD PLAN RSP A77E4

2006 REVISED STANDARD PLAN RSP A77E4

12-10-07

DIST	COUNTY	ROUTE	POST MILES TOTAL PROJECT	SHEET NO.	TOTAL SHEETS
02	Sis	97	40.1/54.1	91	114

Randell D. Hiatt
REGISTERED CIVIL ENGINEER

June 6, 2008
PLANS APPROVAL DATE

REGISTERED PROFESSIONAL ENGINEER
Randell D. Hiatt
No. C50200
Exp. 6-30-09
CIVIL
STATE OF CALIFORNIA

The State of California or its officers or agents shall not be responsible for the accuracy or completeness of electronic copies of this plan sheet.

To accompany plans dated 7-12-10

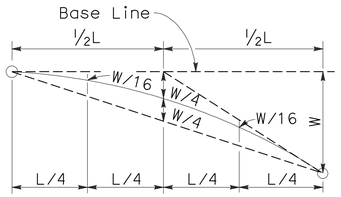

TYPICAL PARABOLIC LAYOUT

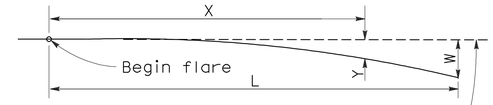

Base Line (Edge of paved shoulder or offset line of edge of traveled way)

$$Y = \frac{WX^2}{L^2}$$

Y = Offset from base line
W = Maximum offset
X = Distance along base line
L = Length of flare

PARABOLIC FLARE OFFSETS

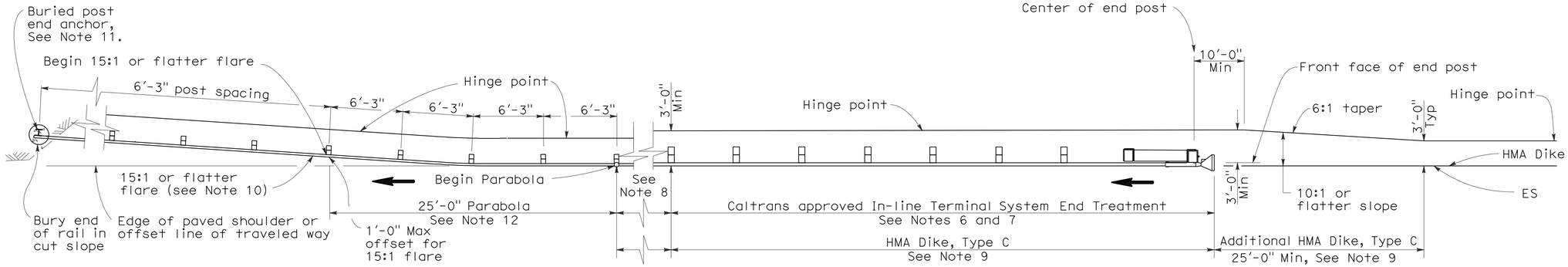

TYPE 11I LAYOUT

(EMBANKMENT GUARD RAILING INSTALLATION WITH IN-LINE END TREATMENT AND A BURIED END ANCHOR TREATMENT AT THE ENDS OF RAILING)
See Note 5

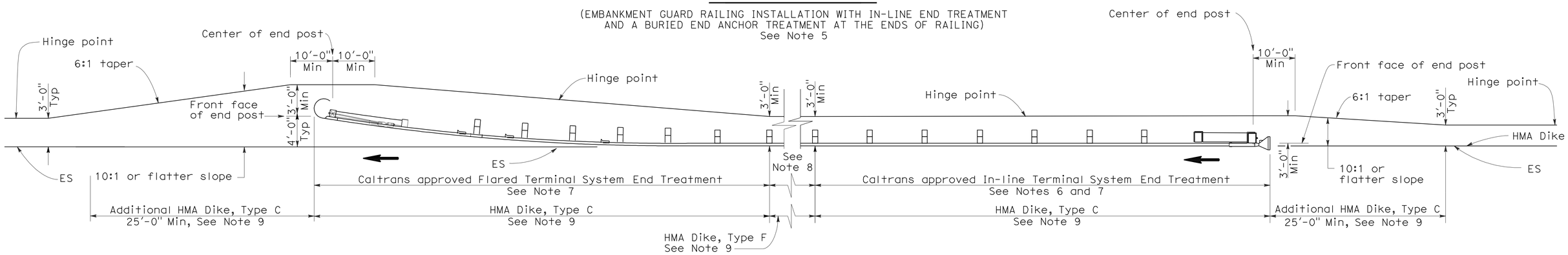

TYPE 11J LAYOUT

(EMBANKMENT GUARD RAILING INSTALLATION WITH IN-LINE END TREATMENT AND FLARED END TREATMENT AT THE ENDS OF RAILING)
See Note 5

NOTES:

1. Line post, blocks and hardware to be used are shown on Standard Plans A77A1, A77A2, A77B1, A77C1 and A77C2.
2. Guard rail post spacing to be 6'-3" center to center, except as otherwise noted.
3. Except as noted, line posts are 6" x 8" x 6'-0" wood with 6" x 8" x 1'-2" wood blocks. W6 x 9 steel posts, 6'-0" in length, with 6" x 8" x 1'-2" notched wood blocks or plastic blocks may be used for 6" x 8" x 6'-0" wood post with 6" x 8" x 1'-2" wood blocks where applicable and when specified.
4. Direction of adjacent traffic indicated by ⟶.
5. Layout Types 11D through 11L, shown on the A77E Series of Revised Standard Plans, are typically used where guard railing is recommended to shield embamkment slopes and a crashworthy end treatment is required for both directions of traffic.
6. In-line Terminal System End Treatments are used where site conditions will not accommodate a flared end treatment.
7. The type of terminal system end treatment to be used will be shown on the Project Plans.
8. Dependent on site conditions (embankment height and side slope), construction of additional guard railing (length equal to multiples of 12'-6" with 6'-3" post spacing) may be advisable.
9. Where placement of dike is required with guard railing installations, see Revised Standard Plan RSP A77C4 for dike positioning details.
10. The 15:1 or flatter flare used with buried end anchors is based on the edge of the paved shoulder or offset line of edge of the traveled way. The length of guard railing within the 15:1 or flatter flare is based on site conditions and should be a length equal to multiples of 12'-6".
11. For details of the buried post end anchor used with Type 11I Layout, see Standard Plan A77I2.
12. For typical flare offsets for 25'-0" length parabola with maximum offset of 1'-0", see Revised Standard Plan RSP A77E1.

STATE OF CALIFORNIA
DEPARTMENT OF TRANSPORTATION

METAL BEAM GUARD RAILING TYPICAL LAYOUTS FOR EMBANKMENTS

NO SCALE

RSP A77E5 DATED JUNE 6, 2008 SUPERSEDES STANDARD PLAN A77E5 DATED MAY 1, 2006 - PAGE 52 OF THE STANDARD PLANS BOOK DATED MAY 2006.

REVISED STANDARD PLAN RSP A77E5

2006 REVISED STANDARD PLAN RSP A77E5

12-10-07

DIST	COUNTY	ROUTE	POST MILES TOTAL PROJECT	SHEET NO.	TOTAL SHEETS
02	Sis	97	40.1/54.1	92	114

Randell D. Hiatt
REGISTERED CIVIL ENGINEER

June 6, 2008
PLANS APPROVAL DATE

REGISTERED PROFESSIONAL ENGINEER
Randell D. Hiatt
No. C50200
Exp. 6-30-09
CIVIL
STATE OF CALIFORNIA

The State of California or its officers or agents shall not be responsible for the accuracy or completeness of electronic copies of this plan sheet.

To accompany plans dated 7-12-10

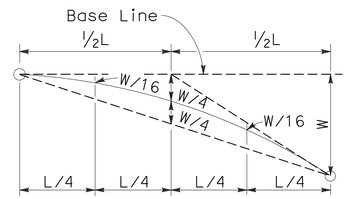

TYPICAL PARABOLIC LAYOUT

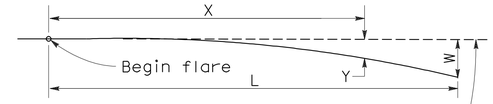

Base Line (Edge of paved shoulder or offset line of edge of traveled way)

$$Y = \frac{WX^2}{L^2}$$

Y = Offset from base line
W = Maximum offset
X = Distance along base line
L = Length of flare

PARABOLIC FLARE OFFSETS

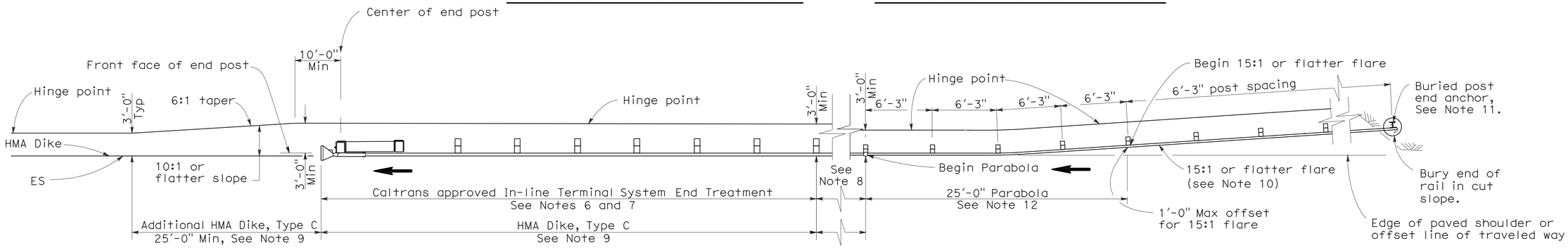

TYPE 11K LAYOUT

(EMBANKMENT GUARD RAILING INSTALLATION WITH A BURIED END ANCHOR TREATMENT
AND AN IN-LINE END TREATMENT AT THE ENDS OF RAILING)
See Note 5

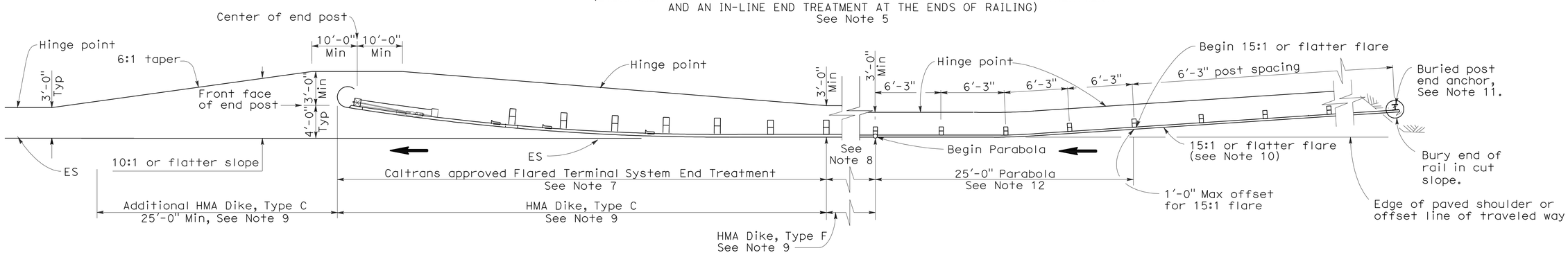

TYPE 11L LAYOUT

(EMBANKMENT GUARD RAILING INSTALLATION WITH A BURIED END ANCHOR TREATMENT
AND A FLARED END TREATMENT AT THE ENDS OF RAILING)
See Note 5

NOTES:

1. Line post, blocks and hardware to be used are shown on Standard Plans A77A1, A77A2, A77B1, A77C1 and A77C2.
2. Guard rail post spacing to be 6'-3" center to center, except as otherwise noted.
3. Except as noted, line posts are 6" x 8" x 6'-0" wood with 6" x 8" x 1'-2" wood blocks. W6 x 9 steel posts, 6'-0" in length, with 6" x 8" x 1'-2" notched wood blocks or plastic blocks may be used for 6" x 8" x 6'-0" wood post with 6" x 8" x 1'-2" wood blocks where applicable and when specified.
4. Direction of adjacent traffic indicated by ⟶.
5. Layout Types 11D through 11L, shown on the A77E Series of Revised Standard Plans, are typically used where guard railing is recommended to shield embamkment slopes and a crashworthy end treatment is required for both directions of traffic.
6. In-line Terminal System End Treatments are used where site conditions will not accommodate a flared end treatment.
7. The type of terminal system end treatment to be used will be shown on the Project Plans.
8. Dependent on site conditions (embankment height and side slope), construction of additional guard railing (length equal to multiples of 12'-6" with 6'-3" post spacing) may be advisable.
9. Where placement of dike is required with guard railing installations, see Revised Standard Plan RSP A77C4 for dike positioning details.
10. The 15:1 or flatter flare used with buried end anchors is based on the edge of the paved shoulder or offset line of edge of the traveled way. The length of guard railing within the 15:1 or flatter flare is based on site conditions and should be a length equal to multiples of 12'-6".
11. For details of the buried post end anchor used with Type 11K and 11L Layouts, see Standard Plan A77I2.
12. For typical flare offsets for 25'-0" length parabola with maximum offset of 1'-0", see Revised Standard Plan RSP A77E1.

STATE OF CALIFORNIA
DEPARTMENT OF TRANSPORTATION

METAL BEAM GUARD RAILING TYPICAL LAYOUTS FOR EMBANKMENTS

NO SCALE

RSP A77E6 DATED JUNE 6, 2008 SUPERSEDES STANDARD PLAN A77E6
DATED MAY 1, 2006 - PAGE 53 OF THE STANDARD PLANS BOOK DATED MAY 2006.

REVISED STANDARD PLAN RSP A77E6

2006 REVISED STANDARD PLAN RSP A77E6

12-10-07

DIST	COUNTY	ROUTE	POST MILES TOTAL PROJECT	SHEET NO.	TOTAL SHEETS
02	Sis	97	40.1/54.1	93	114

Randell D. Hiatt
REGISTERED CIVIL ENGINEER

June 6, 2008
PLANS APPROVAL DATE

REGISTERED PROFESSIONAL ENGINEER
Randell D. Hiatt
No. C50200
Exp. 6-30-09
CIVIL
STATE OF CALIFORNIA

The State of California or its officers or agents shall not be responsible for the accuracy or completeness of electronic copies of this plan sheet.

To accompany plans dated 7-12-10

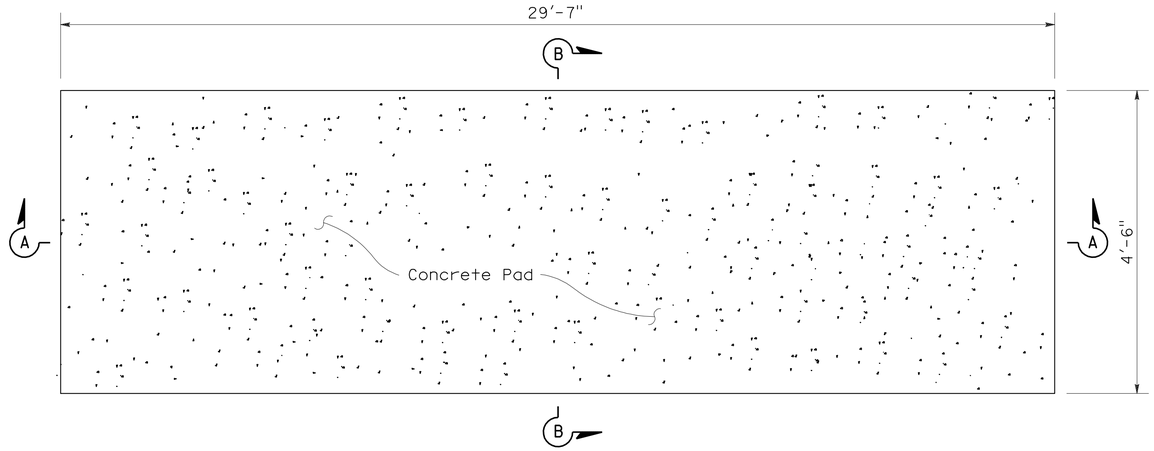

PLAN VIEW

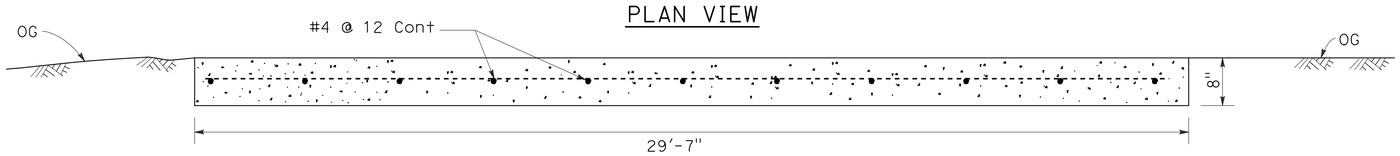

SECTION A-A

CONCRETE ANCHOR SLAB

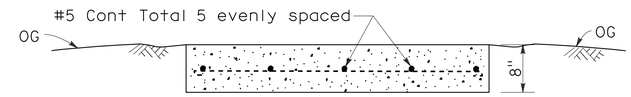

SECTION B-B

NOTES:

1. For additional details of this crash cushion, refer to manufacturer's installation instructions.
2. For details of the REACT Crash Cushion with self contained backup support (no concrete backup block), see Standard Plan A82D1.
3. The base track frame with cylinders attached comes from the manufacturer as a completely pre-assembled unit.
4. Place the crash cushion unit on the cured concrete anchor slab and use the base track frame of the crash cushion as a template for drilling anchor bolt holes. Drill holes in slab and attach crash cushion with wedge anchor bolts supplied by the manufacturer.
5. Attach last cylinder to concrete backup block with manufacturer supplied fastener in such manner as recommended by the manufacturer.
6. Attach the manufacturer supplied side cable anchor plates to the cured concrete backup block with the manufacturer supplied bolts in such manner as recommended by the manufacturer.
7. Place manufacturer supplied cover over cylinders and attach cover to cylinders with manufacturer supplied fasteners.

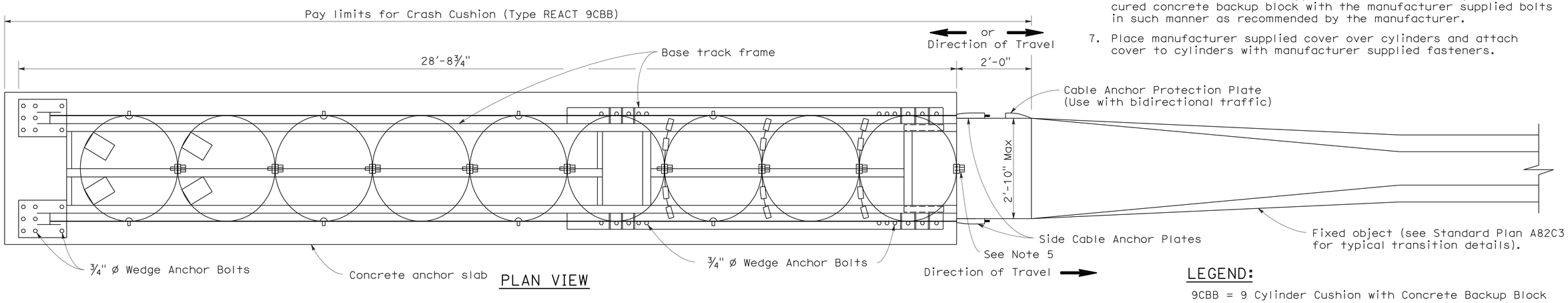

PLAN VIEW

LEGEND:

9CBB = 9 Cylinder Cushion with Concrete Backup Block

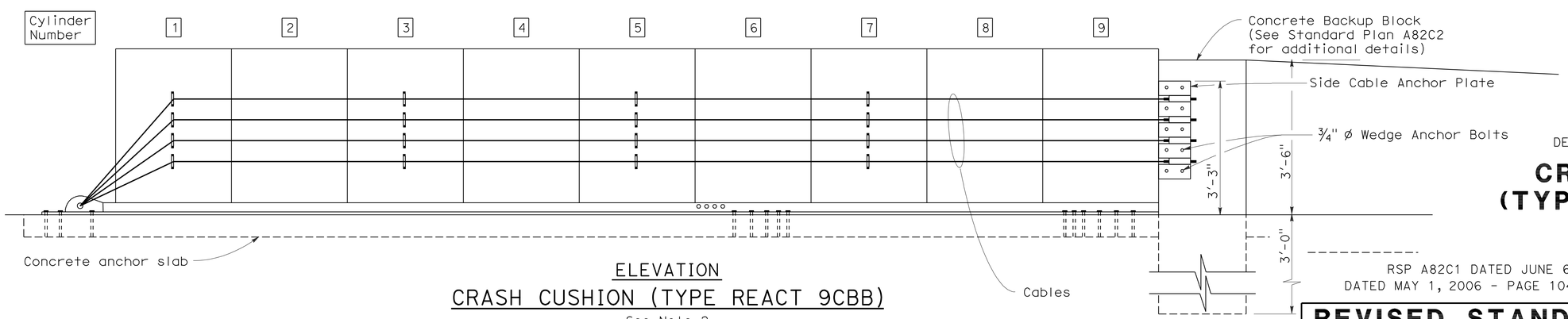

ELEVATION

CRASH CUSHION (TYPE REACT 9CBB)

See Note 2

STATE OF CALIFORNIA
DEPARTMENT OF TRANSPORTATION

CRASH CUSHION (TYPE REACT 9CBB)

NO SCALE

RSP A82C1 DATED JUNE 6, 2008 SUPERSEDES STANDARD PLAN A82C1 DATED MAY 1, 2006 - PAGE 104 OF THE STANDARD PLANS BOOK DATED MAY 2006.

REVISED STANDARD PLAN RSP A82C1

2006 REVISED STANDARD PLAN RSP A82C1

4-21-08

DIST	COUNTY	ROUTE	POST MILES TOTAL PROJECT	SHEET NO.	TOTAL SHEETS
02	Sis	97	40.1/54.1	94	114

REGISTERED CIVIL ENGINEER

June 5, 2009
PLANS APPROVAL DATE

REGISTERED PROFESSIONAL ENGINEER Glenn DeCou No. C34547 Exp. 9-30-09 CIVIL STATE OF CALIFORNIA

The State of California or its officers or agents shall not be responsible for the accuracy or completeness of electronic copies of this plan sheet.

To accompany plans dated 7-12-10

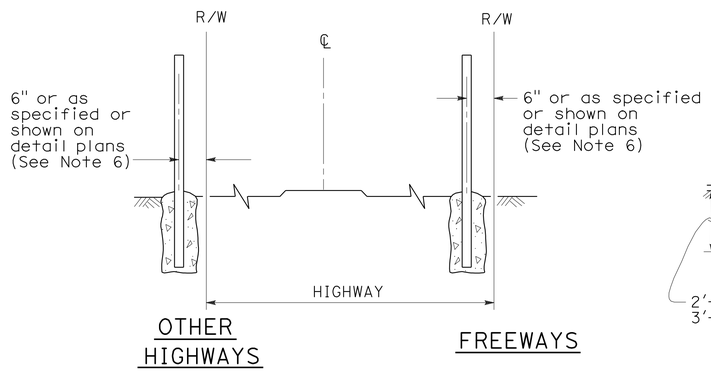

FENCE LOCATION

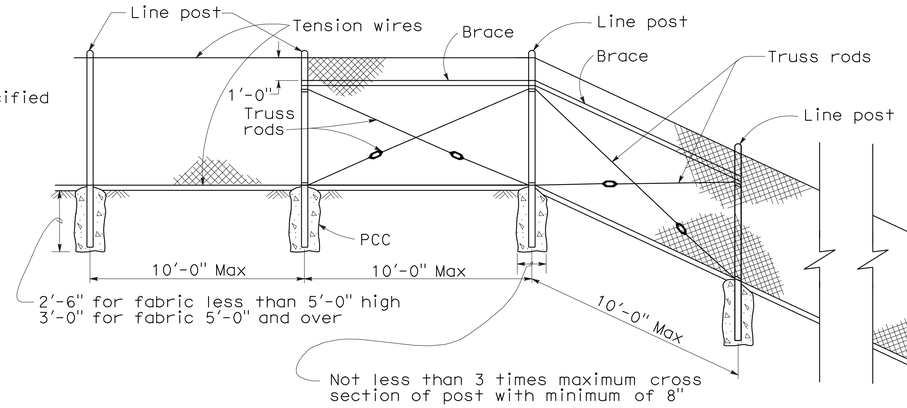

CHAIN LINK FENCE ON SHARP BREAK IN GRADE

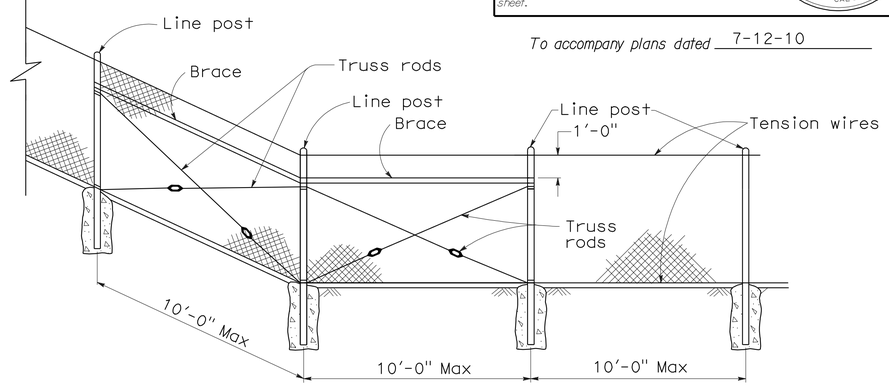

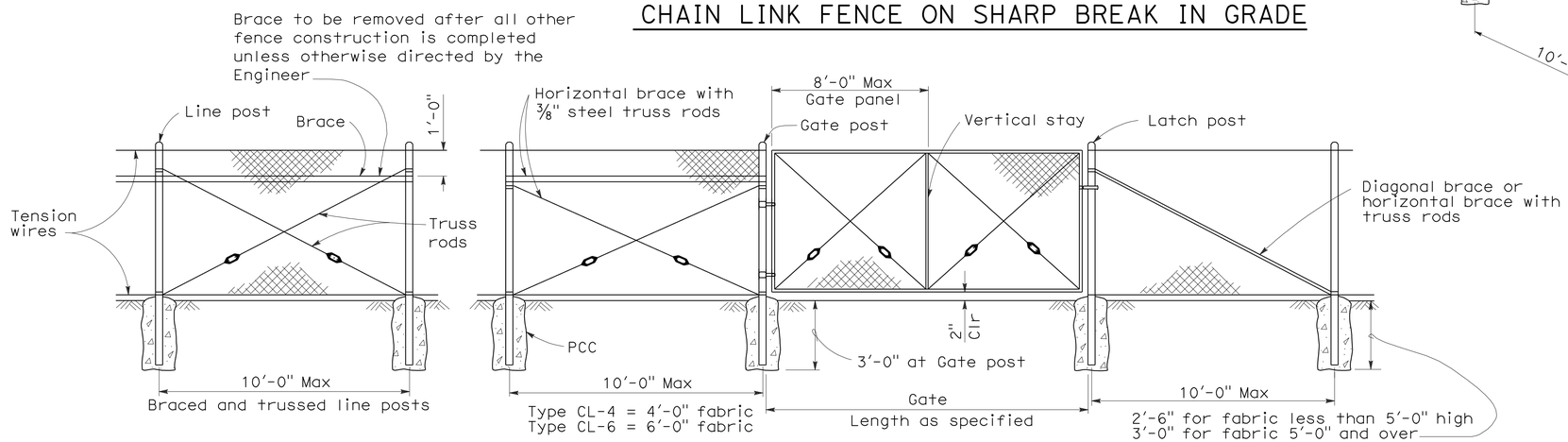

CHAIN LINK GATE INSTALLATION

GATE POST			
FENCE HEIGHT	GATE WIDTHS	NOMINAL ID	WEIGHT PER FOOT
6'-0" and Less	Up thru 6'-0"	2½"	4.95 LB
	Over 6'-0" thru 12'-0"	4"	10.79 LB
	Over 12'-0" thru 18'-0"	5"	14.62 LB
	Over 18'-0" to 24'-0" Max	6"	18.97 LB
Over 6'-0"	Up thru 6'-0"	3"	7.58 LB
	Over 6'-0" thru 12'-0"	5"	14.62 LB
	Over 12'-0" thru 18'-0"	6"	18.97 LB
	Over 18'-0" to 24'-0" Max	8"	28.55 LB

Above post dimensions and weights are minimums. Larger sizes may be used on approval of the Engineer.

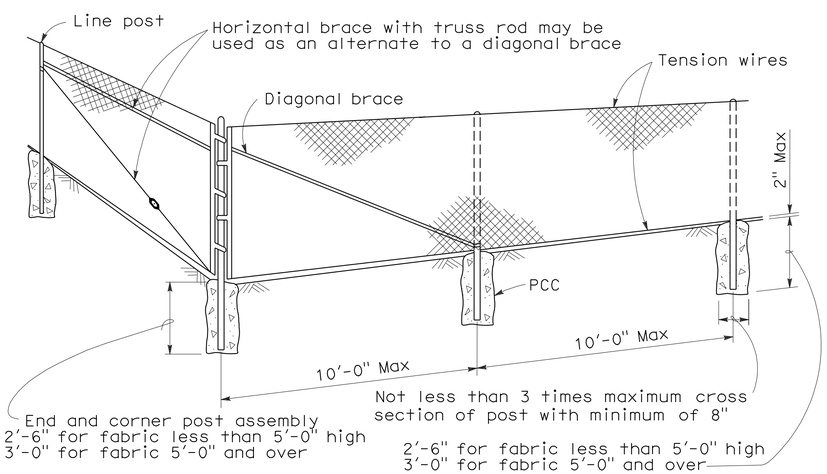

CORNER POST

NOTES:

1. The below table shows examples of post and brace sections which may comply with the Specifications.
2. Sections shown in the tables must also comply with the strength requirements and other provisions of the Specifications.
3. Other sections which comply with the strength requirements and other provisions of the Specifications may be used on approval of the Engineer.
4. Options exercised shall be uniform on any one project.
5. Dimensions shown are nominal.
6. Offset to be 2'-0" at monument locations, measured at right angles to R/W lines. Taper to achieve offset to be at least 20'-0" long.

TYPICAL MEMBER DIMENSIONS (See Notes)											
FENCE HEIGHT	LINE POSTS			END, LATCH & CORNER POSTS				BRACES			
	ROUND ID	H	ROLL FORMED	ROUND ID	ROLL FORMED			ROUND ID	H	ROLL FORMED	
6' & less	1½"	1⅞" × 1⅝"	1⅞" × 1⅝"	2"	3½" × 3½"	2" × 1¾"		1¼"	1½" × 1 5/16"	1⅝" × 1¼"	1¾" × 1¼"
Over 6'	2"	2¼" × 2"	2" × 1¾"	2½"	3½" × 3½"	2½" × 2½"		1¼"	1½" × 1 5/16"	1⅝" × 1¼"	1¾" × 1¼"

STATE OF CALIFORNIA
DEPARTMENT OF TRANSPORTATION

CHAIN LINK FENCE

NO SCALE

RSP A85 DATED JUNE 5, 2009 SUPERSEDES STANDARD PLAN A85
DATED MAY 1, 2006 - PAGE 111 OF THE STANDARD PLANS BOOK DATED MAY 2006.

REVISED STANDARD PLAN RSP A85

2006 REVISED STANDARD PLAN RSP A85

5-7-09

DIST	COUNTY	ROUTE	POST MILES TOTAL PROJECT	SHEET NO.	TOTAL SHEETS
02	Sis	97	40.1/54.1	95	114

REGISTERED CIVIL ENGINEER

June 5, 2009
PLANS APPROVAL DATE

REGISTERED PROFESSIONAL ENGINEER Glenn DeCou No. C34547 Exp. 9-30-09 CIVIL STATE OF CALIFORNIA

The State of California or its officers or agents shall not be responsible for the accuracy or completeness of electronic copies of this plan sheet.

To accompany plans dated 7-12-10

NOTES:

1. H is 2'-6" for fabric less than 5'-0" high. H is 3'-0" for fabric 5'-0" and over.
2. T is not less than 3 times maximum cross section of post with minimum of 8".
3. Arms with barbed wire to be used where shown on plans.
4. See Revised Standard Plan RSP A85 for Chain Link Fencing dimensions.
5. Reinforcing must comply with ASTM A 706.
6. See Detail A on New Standard Plan NSP A86B for connection at headwall.

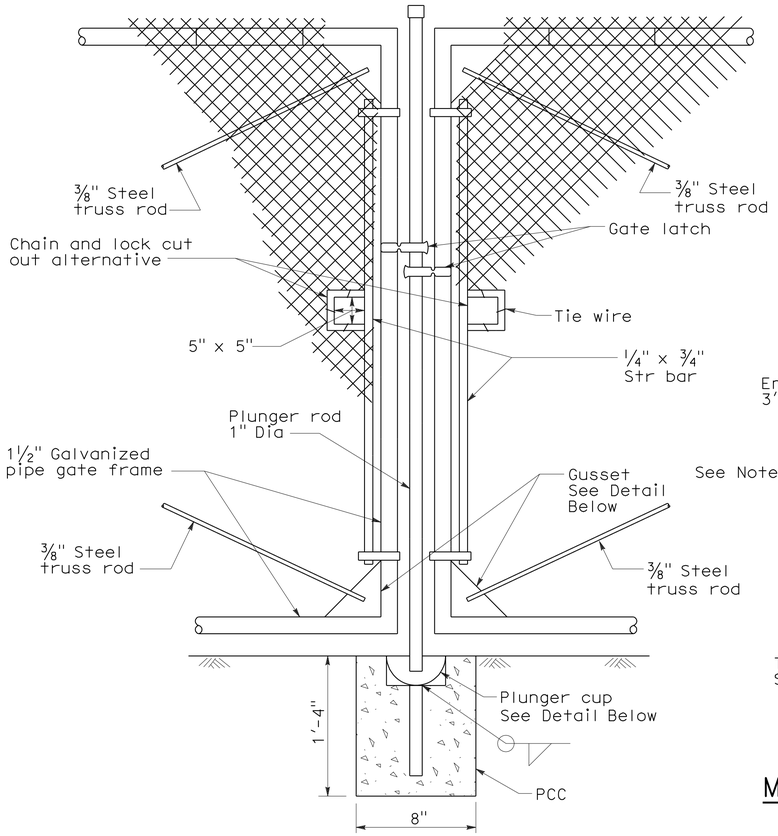

TYPICAL DOUBLE GATE
REMOVABLE CENTER POST

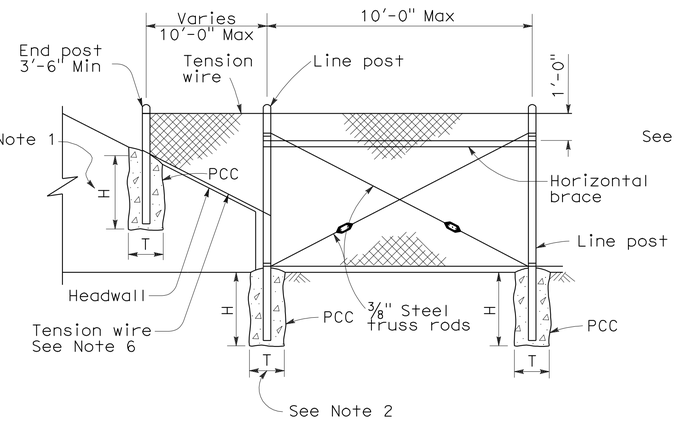

METHOD OF TYING FENCE TO HEADWALL

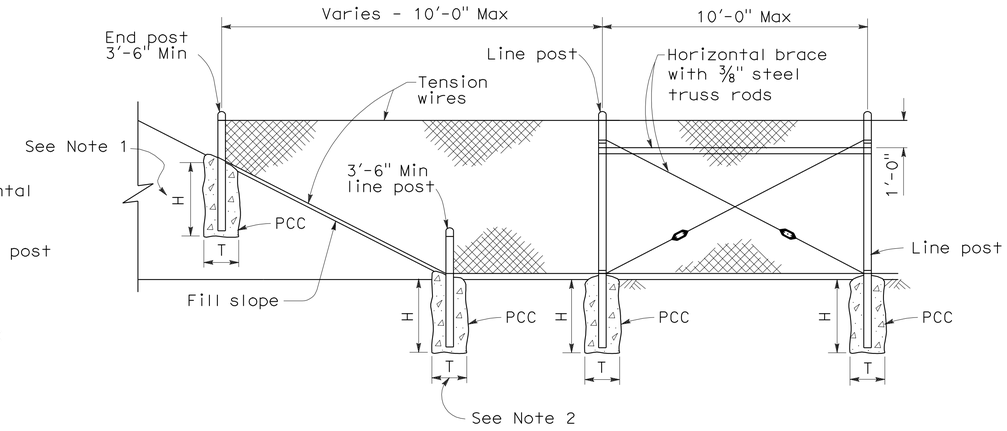

METHOD OF ERECTING FENCE FOR FILL SLOPE

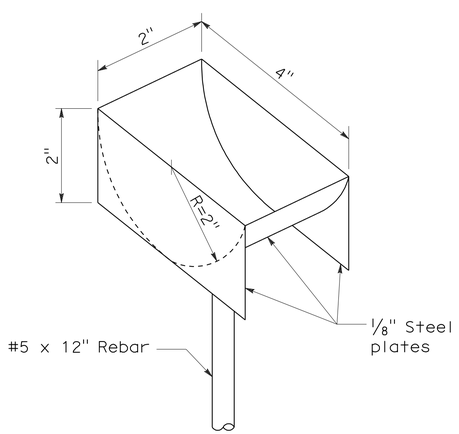

PLUNGER CUP DETAIL

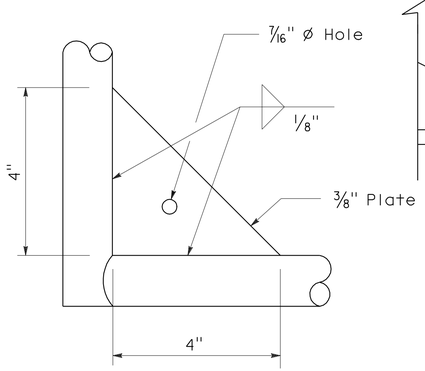

GUSSET DETAIL

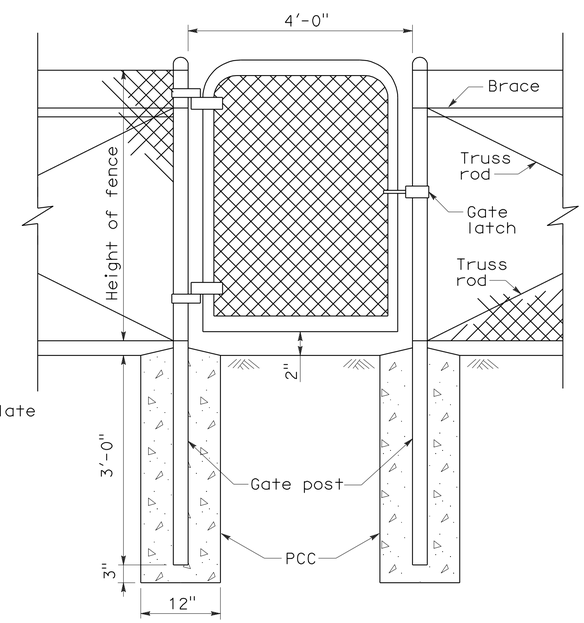

WALK GATE

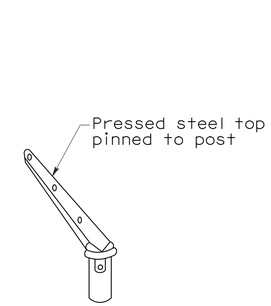

POST TOP END

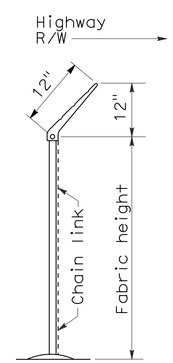

END ELEVATION

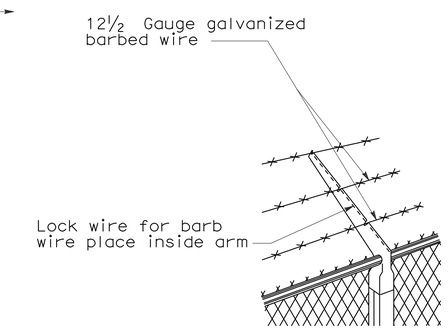

LINE POST TOP
Vertical arms when desired

BARBED WIRE POST TOP
See Note 3

STATE OF CALIFORNIA
DEPARTMENT OF TRANSPORTATION

CHAIN LINK FENCE DETAILS

NO SCALE

NSP A85A DATED JUNE 5, 2009 SUPPLEMENTS THE STANDARD PLANS BOOK DATED MAY 2006.

NEW STANDARD PLAN NSP A85A

2006 NEW STANDARD PLAN NSP A85A

5-7-09

DIST	COUNTY	ROUTE	POST MILES TOTAL PROJECT	SHEET NO.	TOTAL SHEETS
02	Sis	97	40.1/54.1	96	114

REGISTERED CIVIL ENGINEER

June 5, 2009
PLANS APPROVAL DATE

REGISTERED PROFESSIONAL ENGINEER Glenn DeCou No. C34547 Exp. 9-30-09 CIVIL STATE OF CALIFORNIA

The State of California or its officers or agents shall not be responsible for the accuracy or completeness of electronic copies of this plan sheet.

To accompany plans dated 7-12-10

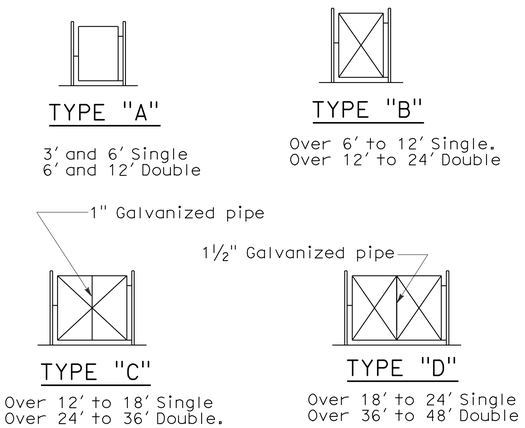

TYPICAL FRAMEWORK SHOWING NUMBER OF BAYS IN GATE

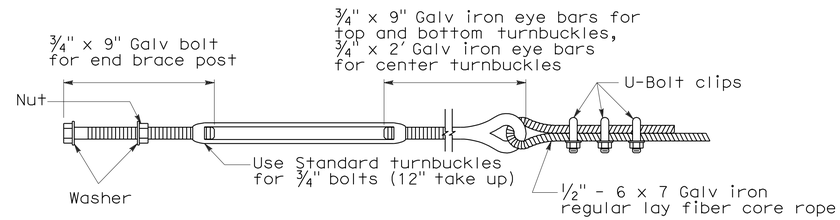

TURNBUCKLE A

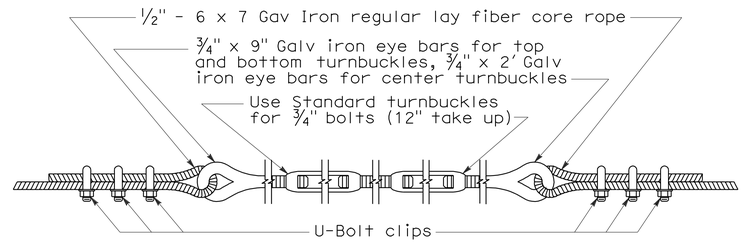

TURNBUCKLE B

NOTES:

1. All material for abutment connection to be galvanized.
2. The chain link fabric shall be replaced by barbed wire strands at 12" maximum centers between the double posts.
3. When the width of the culvert makes it necessary to anchor a post to the top of the culvert, a cast iron shoe or other device approved by the Engineer shall be used.
4. Fencing over stream and around headwall may also use Barbed Wire or Wire Mesh fencing with either wood post or steel post installation.
5. See Revised Standard Plan RSP A85 for Chain Link fence dimensions. See Standard Plan A86 for Barbed Wire and Wire Mesh fence dimensions and for wood post and steel post installation.

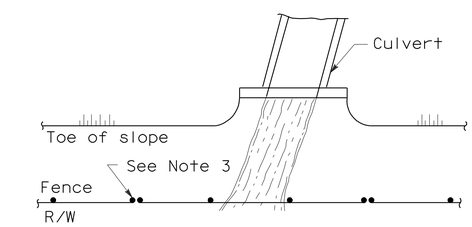

PLAN

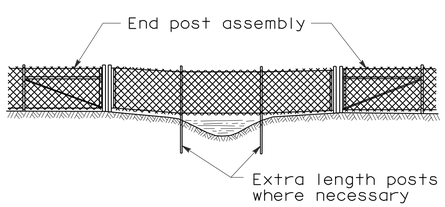

ELEVATION

INSTALLATION OVER STREAM

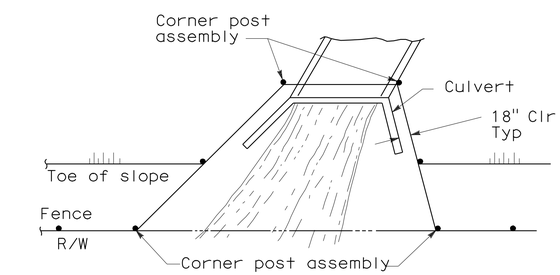

PLAN

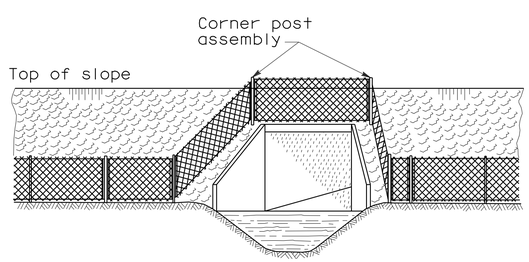

ELEVATION

INSTALLATION AROUND HEADWALL

See Note 4

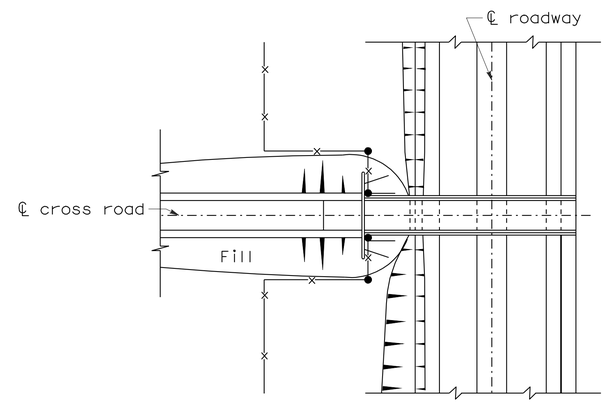

PLAN OF ROADWAY - UNDERPASS

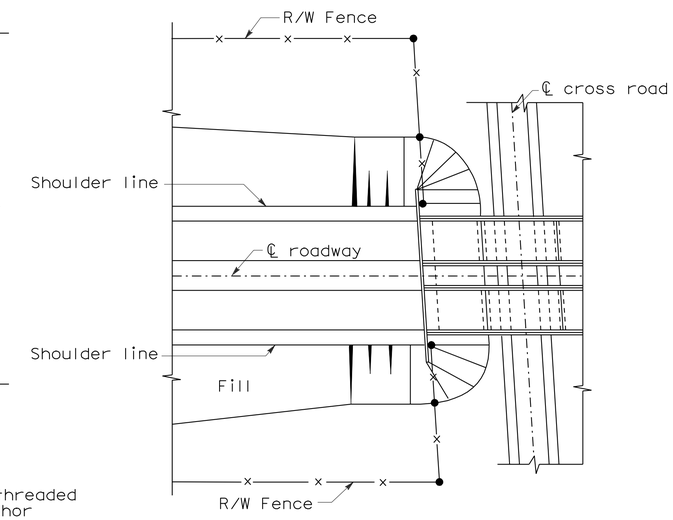

PLAN OF ROADWAY - OVERPASS

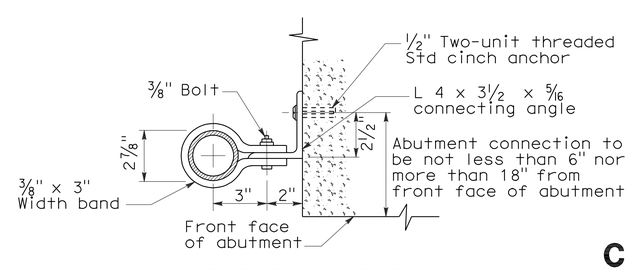

ABUTMENT CONNECTION

TYPICAL INSTALLATION AT BRIDGES

STATE OF CALIFORNIA
DEPARTMENT OF TRANSPORTATION

CHAIN LINK FENCE DETAILS

NO SCALE

NSP A85B DATED JUNE 5, 2009 SUPPLEMENTS THE STANDARD PLANS BOOK DATED MAY 2006.

NEW STANDARD PLAN NSP A85B

2006 NEW STANDARD PLAN NSP A85B

5-12-09

DIST	COUNTY	ROUTE	POST MILES TOTAL PROJECT	SHEET NO.	TOTAL SHEETS
02	Sis	97	40.1/54.1	97	114

REGISTERED CIVIL ENGINEER

November 17, 2006
PLANS APPROVAL DATE

REGISTERED PROFESSIONAL ENGINEER Michael Janzen No. 44788 Exp. 03-31-08 CIVIL STATE OF CALIFORNIA

The State of California or its officers or agents shall not be responsible for the accuracy or completeness of electronic copies of this plan sheet.

To accompany plans dated 7-12-10

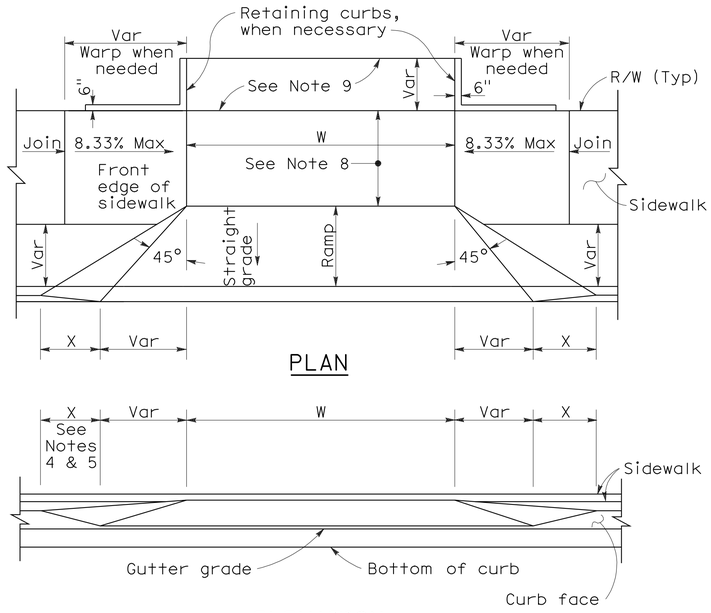

PLAN

ELEVATION

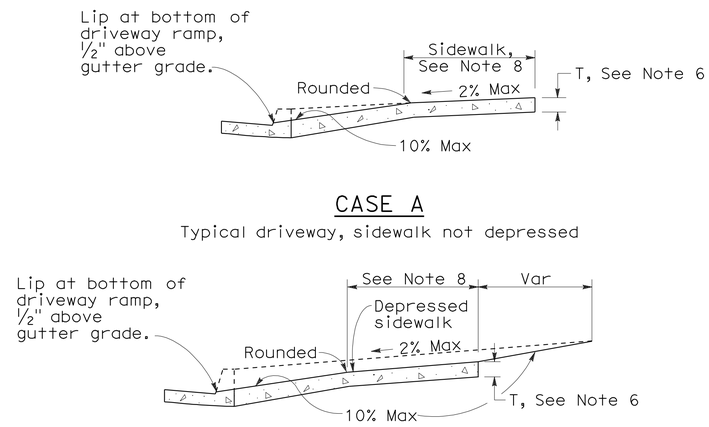

CASE A

Typical driveway, sidewalk not depressed

CASE B

Driveway with depressed sidewalk

SECTIONS

CURB QUANTITIES

TYPE	CUBIC YARDS PER LINEAR FOOT
A1-6	0.02585
A1-8	0.03084
A2-6	0.05903
A2-8	0.06379
A3-6	0.01036
A3-8	0.01435
B1-4	0.02185
B1-6	0.02930
B2-4	0.05515
B2-6	0.06171
B3-4	0.00641
B3-6	0.01074
B4	0.05709
D-4	0.04083
D-6	0.06804
E	0.06661

TABLE A

CURB TYPE	DIMENSIONS "H1"	"H2"	"W1"	"W2"
A1-6	1'-2"	6"	7½"	1½"
A1-8	1'-4"	8"	8"	2"
A2-6	1'-0"	6"	2'-7½"	1½"
A2-8	1'-2"	8"	2'-8"	2"
A3-6	6"	5"	7¼"	1¼"
A3-8	8"	7"	7¾"	1¾"
B1-4	1'-0"	4"	7½"	2½"
B1-6	1'-2"	6"	9"	4"
B2-4	10"	4"	2'-7½"	2½"
B2-6	1'-0"	6"	2'-9"	4"
B3-4	4"	3"	7"	2"
B3-6	6"	5"	8½"	3½"
D-4	10"	4"	1'-6"	1'-1"
D-6	1'-0"	6"	2'-2"	1'-8"

DRIVEWAYS

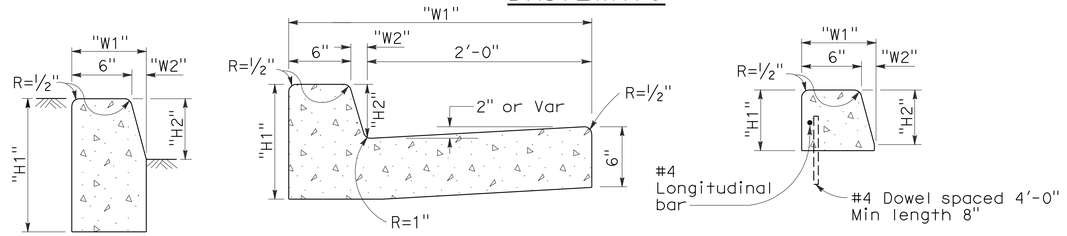

TYPE A1 CURBS
See Table A

TYPE A2 CURBS
See Table A

TYPE A3 CURBS
Superimposed on existing pavement
See Table A

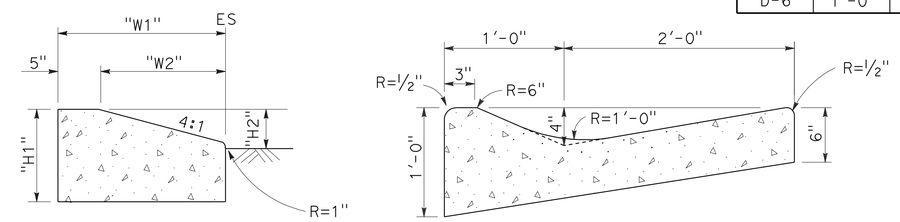

TYPE D CURBS
See Table A

TYPE E CURB

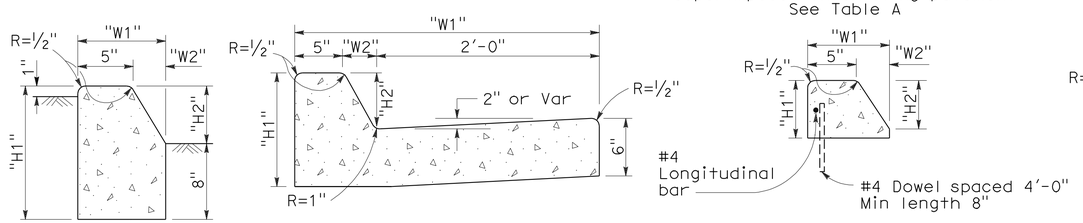

TYPE B1 CURBS
See Table A

TYPE B2 CURBS
See Table A

TYPE B3 CURBS
Superimposed on existing pavement
See Table A

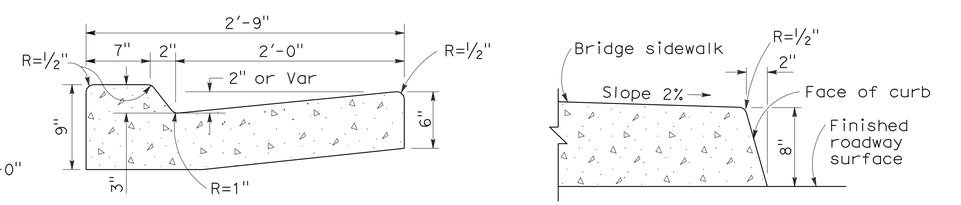

TYPE B4 CURBS

TYPE H CURB
On Bridges

CURBS

NOTES:

1. Case A driveway section typically applies.
2. Use Case B driveway section when ramp slopes would exceed 10% in Case A.
3. Use Case B driveway section when sidewalk cross slope would exceed 2% in Case A.
4. X=3'-0" except for curb heights over 10" where 4:1 slopes shall be used on curb slope.
5. X is a variable when sidewalk is located where wheelchairs may traverse the surface. Slopes shall not exceed 8.33%.
6. Sidewalk and ramp thickness "T" at driveway shall be 4" for residental and 6" for commercial.
7. Difference in slope of the driveway ramp and the slope of a line between the gutter and a point on the roadway 5'-0" from gutter line shall not exceed 15%. Reduce driveway ramp slope, not gutter slope, where required.
8. Minimum width of clear passageway for sidewalk shall be 4'-0".
9. Retaining curbs and acquisition of construction easement may be necessary for narrow sidewalks or curb heights in excess of 6".
10. Across the pedestrian route at curb ramp locations, the gutter pan slope shall not exceed 1" of depth for each 2'-0" of width.

STATE OF CALIFORNIA
DEPARTMENT OF TRANSPORTATION

CURBS AND DRIVEWAYS

NO SCALE

RSP A87A DATED NOVEMBER 17, 2006 SUPERSEDES STANDARD PLAN A87A DATED MAY 1, 2006 - PAGE 113 OF THE STANDARD PLANS BOOK DATED MAY 2006.

REVISED STANDARD PLAN RSP A87A

2006 REVISED STANDARD PLAN RSP A87A

10-25-06

DIST	COUNTY	ROUTE	POST MILES TOTAL PROJECT	SHEET NO.	TOTAL SHEETS
02	Sis	97	40.1/54.1	98	114

REGISTERED CIVIL ENGINEER

September 1, 2006
PLANS APPROVAL DATE

REGISTERED PROFESSIONAL ENGINEER
Hector David Cordova
No. C41957
Exp. 3-31-08
CIVIL
STATE OF CALIFORNIA

The State of California or its officers or agents shall not be responsible for the accuracy or completeness of electronic copies of this plan sheet.

To accompany plans dated 7-12-10

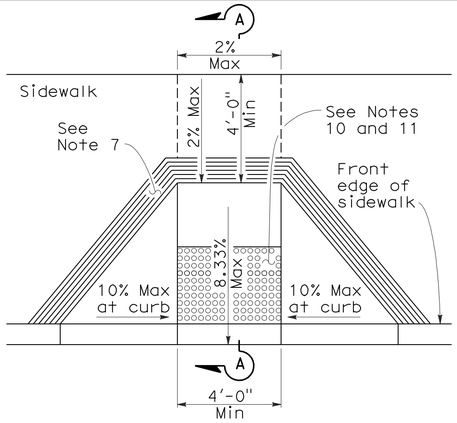

CASE A

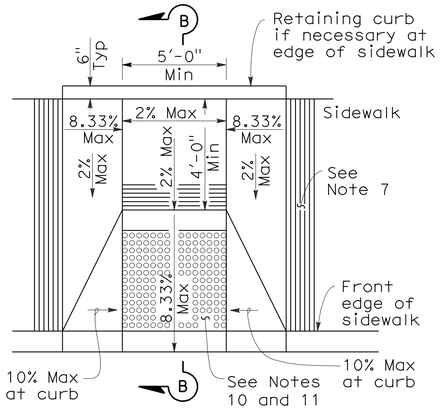

CASE B

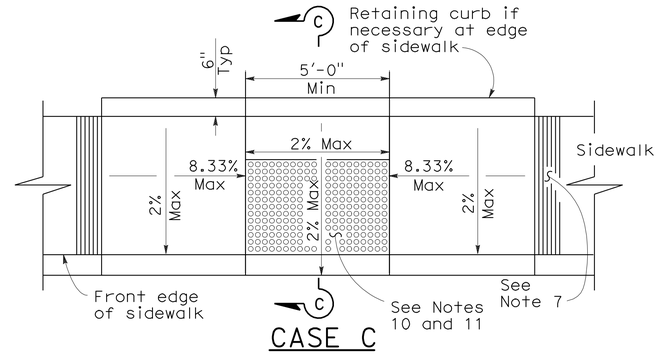

CASE C

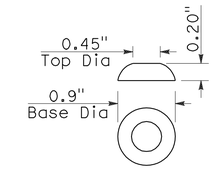

RAISED TRUNCATED DOME

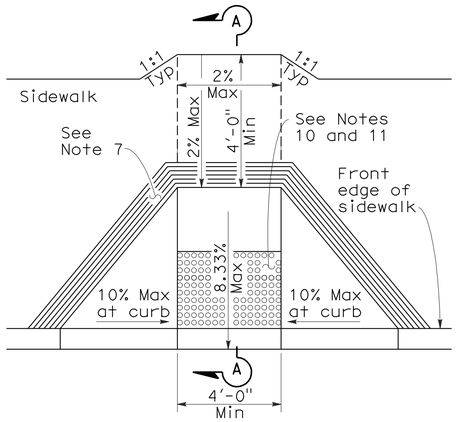

CASE D

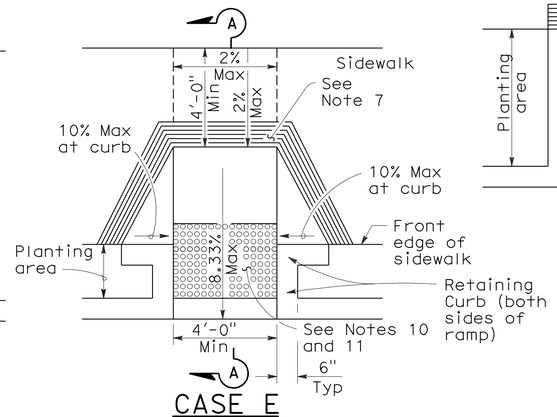

CASE E

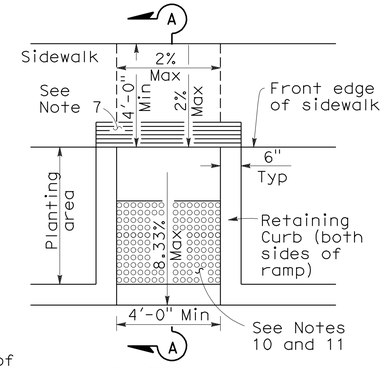

CASE F

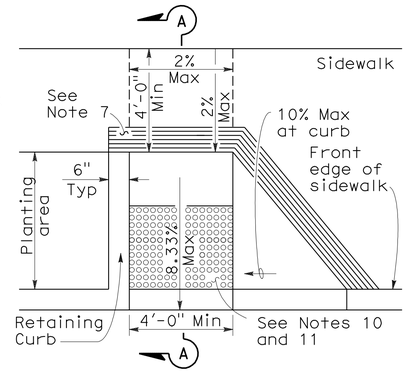

CASE G
See Note 4

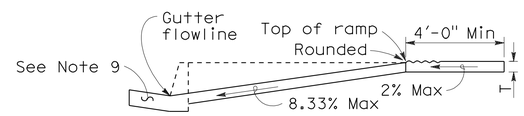

SECTION A-A

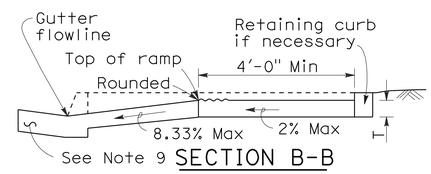

SECTION B-B
Depress entire sidewalk as required

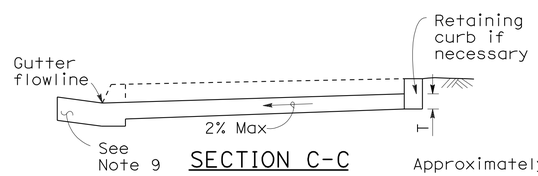

SECTION C-C

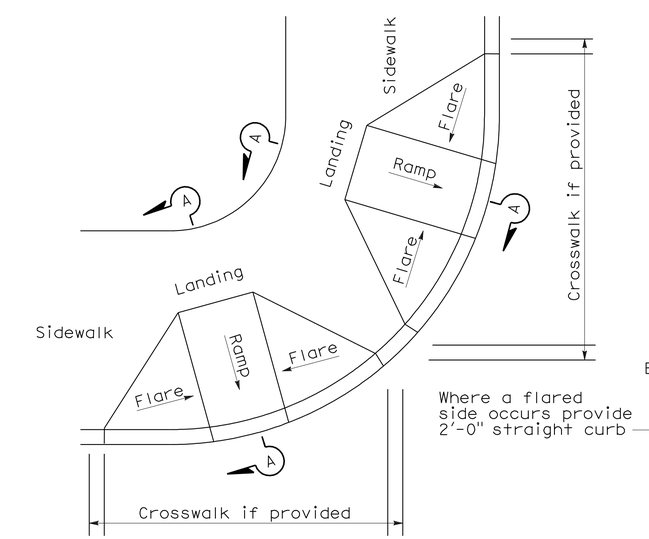

DETAIL A

TYPICAL TWO-RAMP CORNER INSTALLATION

See Note 1

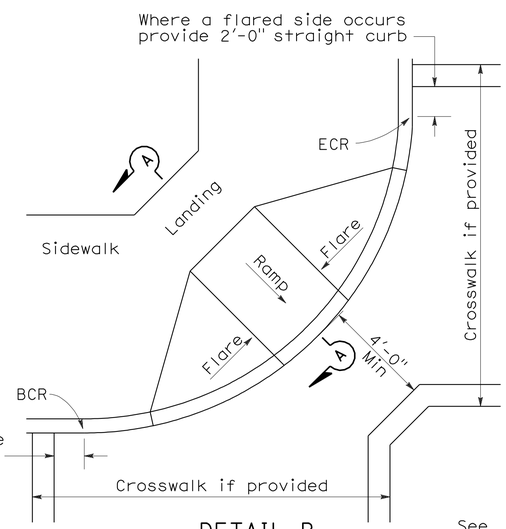

DETAIL B

TYPICAL ONE-RAMP CORNER INSTALLATION

See Notes 1 and 3

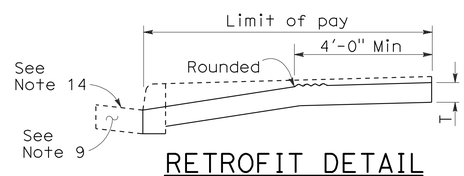

RETROFIT DETAIL

Existing curb and sidewalk

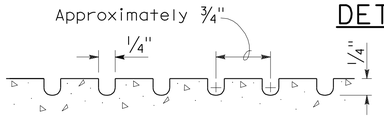

GROOVING DETAIL

NOTES:

1. As site conditions dictate, Case A through Case G curb ramps may be used for corner installations similar to those shown in Detail A and Detail B. The case of curb ramps used in Detail A do not have to be the same. Case A through Case G curb ramps also may be used at mid block locations, as site conditions dictate.
2. If distance from curb to back of sidewalk is too short to accommodate ramp and 4'-0" platform (landing) as shown in Case A, the sidewalk may be depressed longitudinally as in Case B, or C or may be widened as in Case D.
3. When ramp is located in center of curb return, crosswalk configuration must be similar to that shown for Detail B.
4. As site conditions dictate, the retaining curb side and the flared side of the Case G ramp shall be constructed in reversed position.
5. If located on a curve, the sides of the ramp need not be parallel, but the minimum width of the ramp shall be 4'-0".
6. Side slope of ramp flares vary uniformly from a maximum of 10% at curb to conform with longitudinal sidewalk slope adjacent to top of the ramp, except in Case C and Case F.
7. The curb ramp shall be outlined, as shown, with a 1'-0" wide border with 1/4" grooves approximately 3/4" on center. See grooving detail.
8. Transitions from ramps and landing to walks, gutters or streets shall be flush and free of abrupt changes.
9. Maximum slopes of adjoining gutters, the road surface immediately adjacent to the curb ramp or accessible route shall not exceed 5 percent within 4'-0" of the top and bottom of the curb ramp.
10. Curb ramps shall have a detectable warning surface that extends the full width and 3'-0" depth of the ramp. Detectable Warning Surfaces shall conform to the details on this plan and the requirements in the Special Provisions.
11. The edge of the detectable warning surface nearest the street shall be between 6" and 8" from the gutter flowline.
12. Sidewalk and ramp thickness, "T", shall be 3 1/2" minimum.
13. Utility pull boxes, manholes, vaults and all other utility facilities within the boundaries of the curb ramp will be relocated or adjusted to grade by the owner prior to, or in conjunction with, curb ramp construction.
14. For retrofit conditions, removal and replacement of curb apron will be at the Contractor's option, unless otherwise shown on project plans.

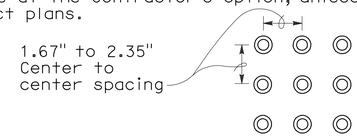

RAISED TRUNCATED DOME PATTERN (IN-LINE)

DETECTABLE WARNING SURFACE

See Note 10

STATE OF CALIFORNIA
DEPARTMENT OF TRANSPORTATION

CURB RAMP DETAILS

NO SCALE

RSP A88A DATED SEPTEMBER 1, 2006 SUPERSEDES STANDARD PLAN A88A DATED MAY 1, 2006 - PAGE 115 OF THE STANDARD PLANS BOOK DATED MAY 2006.

REVISED STANDARD PLAN RSP A88A

2006 REVISED STANDARD PLAN RSP A88A

8-3-06

DIST	COUNTY	ROUTE	POST MILES TOTAL PROJECT	SHEET NO.	TOTAL SHEETS
02	Sis	97	40.1/54.1	99	114

REGISTERED CIVIL ENGINEER

June 15, 2007
PLANS APPROVAL DATE

REGISTERED PROFESSIONAL ENGINEER Glenn DeCou No. C34547 Exp. 9-30-07 CIVIL STATE OF CALIFORNIA

The State of California or its officers or agents shall not be responsible for the accuracy or completeness of electronic copies of this plan sheet.

To accompany plans dated 7-12-10

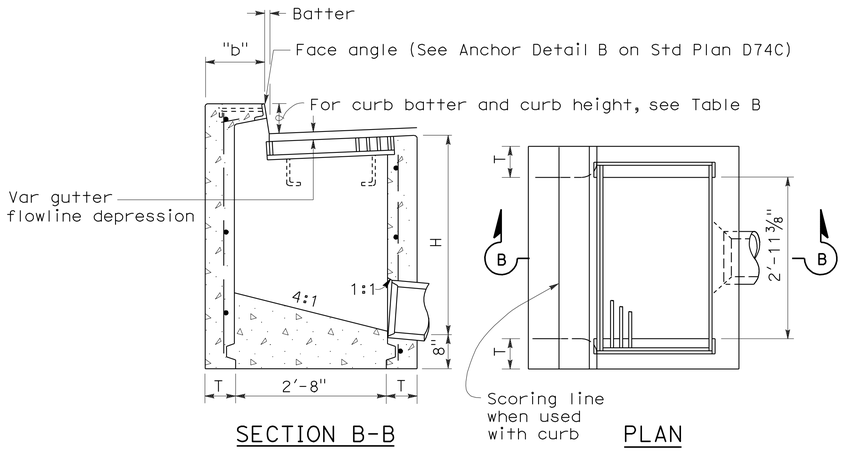

SECTION B-B PLAN

TYPE GO

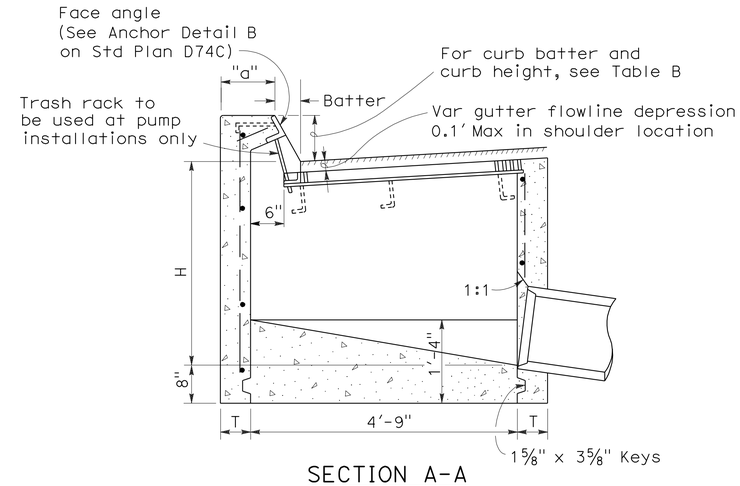

SECTION A-A

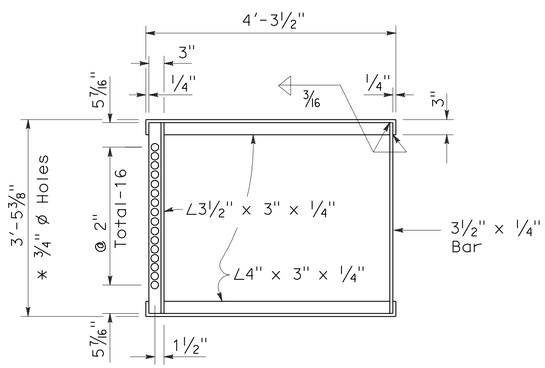

* 3/4" ø Holes required only with trash rack

GRATE FRAME FOR TYPE GDO INLET

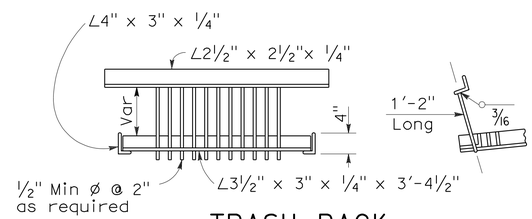

TRASH RACK

(For use with pump installation)

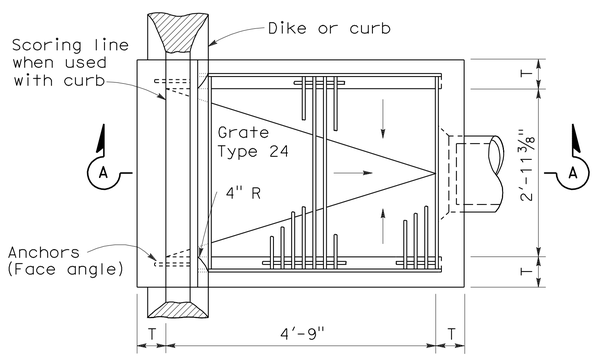

PLAN

TYPE GDO

TABLE A

CONCRETE QUANTITIES				
TYPE	H=3'-0" TO 8'-0" (T=6")		H=8'-1" TO 20'-0" (T=8")	
	H=3'-0" (CY)	ADDITIONAL PCC PER FOOT (CY)	H=8'-1" (CY)	ADDITIONAL PCC PER FOOT (CY)
GO	1.24	0.245	3.39	0.346
GDO	1.62	0.322	4.36	0.446

Table based on 8" floor slab, no deduction for pipe openings, and curb type giving highest quantity of concrete. No deductions or adjustments are to be made to these quantities because of pipe openings, different floor alternatives or different curb type.

TABLE B

CURB TYPE	NORMAL CURB HEIGHT	CURB BATTER	"a" DIMENSION	"b" DIMENSION
A1-6	6"	1 1/2"	T+7 1/2"	T+6 1/2"
A1-8	8"	2"	T+7"	T+6"
B1-6	6"	4"	T+5"	T+4"
Type A Dike	6"	3"	T+6"	T+5"

NOTES:

1. "H" is the difference in elevation between the outlet pipe flow line and the normal gutter grade line undepressed.
2. For "T" wall thickness, see Table A below.
3. Wall reinforcing not required when "H" is 8'-0" or less and the unsupported width or length is 7'-0" or less. Walls exceeding these limits shall be reinforced with #4 @ 18"± centers placed 1 1/2" clear to inside of box unless otherwise shown.
4. Inlet bottom reinforcing not required. See Standard Plan D74C for alternative reinforced bottom.
5. Steps - None required where "H" is less than 2'-6" Where "H" is 2'-6" or more, install steps with lowest rung 1'-0" above the floor and highest rung not more than 6" below top of inlet. The distance between steps shall not exceed 1'-0" and shall be uniform throughout the length of the wall. Place steps in the wall without an opening. Step inserts may be substituted for the bar steps. Step Inserts shall comply with State Industrial Safety requirements. See Standard Plan D74C for step details.
6. When shown on the project plans, place a 3/4" plain round protection bar horizontally across the length of the opening and bend back 4" into the inlet wall on each side.
7. Pipe(s) can be placed in any wall.
8. Curb section shall match adjacent curb.
9. Basin floors shall have wood trowel finish and shall slope toward the outlet pipe as shown.
10. Galvanizing - See Standard Specifications or Special Provisions.
11. See Standard Plan D77A and D77B for grate and frame details and weights of miscellaneous iron and Steel.
12. See Standard Plan D78A for gutter depression details.
13. Full penetration butt welds may be substituted for the fillet welds on all anchors.
14. Standard square, hexagon, round or equivalent headed anchors may be substituted for the right angle hooks on the anchors shown on this plan.
15. Cast-in-place or precast alternative is optional with contractor. See Standard Specifications.
16. Cast-in-place inlets to be formed around all pipes/stubs intersecing the inlet and concrete poured in one continuous operation. Precast inlets shall have mortared pipe connections conforming to details for Type GCP inlets on Standard Plan D75B. See Standard Specifications for mortar composition.

STATE OF CALIFORNIA
DEPARTMENT OF TRANSPORTATION

DRAINAGE INLETS

NO SCALE

RSP D74B DATED JUNE 15, 2007 SUPERSEDES STANDARD PLAN D74B DATED MAY 1, 2006 - PAGE 150 OF THE STANDARD PLANS BOOK DATED MAY 2006.

REVISED STANDARD PLAN RSP D74B

2006 REVISED STANDARD PLAN RSP D74B

4-16-07

DIST	COUNTY	ROUTE	POST MILES TOTAL PROJECT	SHEET NO.	TOTAL SHEETS
02	Sis	97	40.1/54.1	100	114

Raymond Don Tsztoo
REGISTERED CIVIL ENGINEER

June 6, 2008
PLANS APPROVAL DATE

REGISTERED PROFESSIONAL ENGINEER
Raymond Don Tsztoo
No. C37332
Exp. 6-30-08
CIVIL
STATE OF CALIFORNIA

The State of California or its officers or agents shall not be responsible for the accuracy or completeness of electronic copies of this plan sheet.

To accompany plans dated 7-12-10

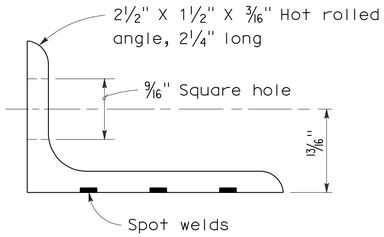

ANGLE

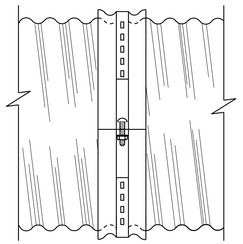

SIDE VIEW
ANGLE

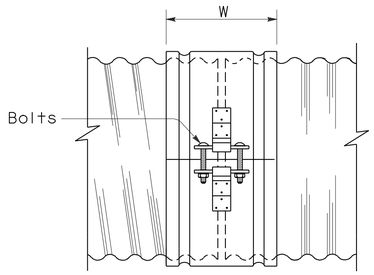

SIDE VIEW
SINGLE BAR AND STRAP

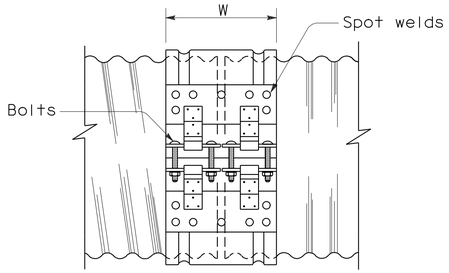

SIDE VIEW
DOUBLE BAR AND STRAP

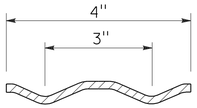

SECTION

H-4 HUGGER BAND

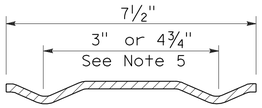

SECTION

H-7 HUGGER BAND

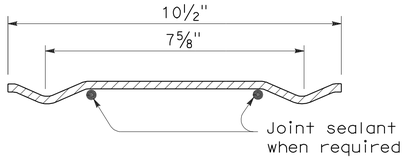

SECTION

H-10 HUGGER BAND

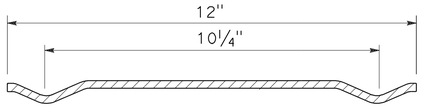

SECTION

H-12 HUGGER BAND

HUGGER COUPLING BANDS

NOTES:

1. All ferrous metal coupling band connection hardware shall be galvanized or electroplated in accordance with the Standard Specifications.
2. Dimensions and thicknesses shown are minimum.
3. Spot welds shall develop minimum required strength of strap.
4. Fillet welds of equivalent strength may be substituted for spot welds or rivets.
5. Dimension depends upon whether end condition is lips up or lips down.

STATE OF CALIFORNIA
DEPARTMENT OF TRANSPORTATION

CORRUGATED METAL PIPE COUPLING DETAILS No. 4 HUGGER COUPLING BANDS

NO SCALE

RSP D97D DATED JUNE 6, 2008 SUPERSEDES STANDARD PLAN D97D
DATED MAY 1, 2006 - PAGE 186 OF THE STANDARD PLANS BOOK DATED MAY 2006.

REVISED STANDARD PLAN RSP D97D

2006 REVISED STANDARD PLAN RSP D97D

3-24-08

DIST	COUNTY	ROUTE	POST MILES TOTAL PROJECT	SHEET NO.	TOTAL SHEETS
02	Sis	97	40.1/54.1	101	114

Raymond Don Tsztoo
REGISTERED CIVIL ENGINEER

June 6, 2008
PLANS APPROVAL DATE

REGISTERED PROFESSIONAL ENGINEER
Raymond Don Tsztoo
No. C37332
Exp. 6-30-08
CIVIL
STATE OF CALIFORNIA

The State of California or its officers or agents shall not be responsible for the accuracy or completeness of electronic copies of this plan sheet.

To accompany plans dated 7-12-10

ANNULAR AND HELICAL PROFILE

COUPLING TYPE	PIPE CORRUGATION	PIPE SIZE	W OR A	PIPE WALL THICKNESS		BAND THICKNESS		BAR AND STRAP (CSP ONLY)			ANGLE						
											DIMENSIONS		BOLTS (No.- Dia)		RIVETS ANGLE TO BAND		SPOT WELDS ANGLE TO BAND
				CSP	CAP	CSP	CAP	STRAP THICKNESS	BOLTS Dia	BAR Dia	CSP	CAP	CSP	CAP	CSP	CAP	CSP
TWO PIECE INTEGRAL FLANGE	1½′ × ¼"	6"	7"	0.064"-0.168"		0.052"							3-⅜"				
	1½′ × ¼"	8"-10"	7"	0.064"-0.168"	0.060"-0.164"	0.064"	0.060"						3-⅜"	3-⅜"			
ANNULAR	2⅔" × ½"	THROUGH 24"	12"	0.064"-0.168"	0.060"-0.164"	0.064"	0.060"				2" × 2" × 3/16"	2" × 2" × 3/16"	3-½"	3-½"	3-⅜"	3-⅜"	3-½"
HUGGER	2⅔" × ½" REROLLED END	THROUGH 24"	10½"	0.064"-0.168"		0.064"		0.079"	½"	⅞"							

SPIRAL RIB PROFILE

COUPLING TYPE	PIPE CORRUGATION	PIPE SIZE	W	PIPE WALL THICKNESS		BAND THICKNESS		BAR AND STRAP (SSRP ONLY)			ANGLE						
											DIMENSIONS		BOLTS (No.- Dia)		RIVETS ANGLE TO BAND		SPOT WELDS ANGLE TO BAND
				SSRP	ASRP	SSRP	ASRP	STRAP THICKNESS	BOLTS Dia	BAR Dia	SSRP	ASRP	SSRP	ASRP	SSRP	ASRP	SSRP
ANNULAR	2⅔" × ½" * REROLLED END	24"	12"	0.064"-0.168"	0.060"-0.164"	0.064"	0.060"				2" × 2" × 3/16"	2" × 2" × 3/16"	3-½"	3-½"	3-⅜"	3-⅜"	3-½"
HUGGER	2⅔" × ½" * REROLLED END	24"	10½"	0.064"-0.168"		0.064"		0.079"	½"	⅞"							

* See Note 12.

12. All profiles of Spiral Rib Pipe (¾" × ¾" ribs at 7½" pitch and ¾" × 1" ribs at 11½" pitch in both steel and aluminum and ¾" × 1" ribs at 8½" pitch in steel only) shall be manufactured with rerolled ends. Corrugation profile of the rerolled ends shall be 2⅔" × ½" annual corrugations with a minimum of two full corrugations at each end.

NOTES:

1. All ferrous metal coupling band connection hardware shall be galvanized or electro-plated in accordance with the Standard Specifications.
2. For helically corrugated coupling bands, the connection angles may be oriented parallel to the pipe axis, provided connecting holes are slotted lengthwise sufficiently to allow adjustment for the helix angle.
3. Tension strap may be connected to band with either spot welds or fillet welds that develop minimum required strength of strap.
4. Use 1¼" gage line dimension on attached angle leg for rivets and spot welds.
5. Band thickness shall not be less than:
   a. 3 standard thicknesses lighter than the thickness of the pipe for Corrugated Steel Pipe.
   b. 2 standard thicknesses lighter than the thickness of the pipe and in no case lighter than 0.060" for Corrugated Aluminum Pipe.
6. Dimensions, thicknesses and strengths shown are minimum.
7. For pipe arches use same width band as for round pipe of equal periphery.
8. Fillet welds of equivalent strenght may be substituted for spot welds or rivets.
9. Spot welds shall develop minimum required strength of strap.
10. Pipe with rerolled ends having at least two 2⅔" × ½" annular corrugations at each end with or without an upturned flange may be connected with any of the annular coupling bands shown for pipe of the same diameter and wall thickness and having 2⅔" × ½" corrugations.
11. For downdrain applications, two piece integral flange couplers shall have factory applied sleeve type rubber gaskets with a minimum length of 7" measured along the length of the pipe.

STATE OF CALIFORNIA
DEPARTMENT OF TRANSPORTATION

CORRUGATED METAL PIPE COUPLING DETAILS No. 7 DOWNDRAIN

NO SCALE

RSP D97G DATED JUNE 6, 2008 SUPERSEDES STANDARD PLAN D97G
DATED MAY 1, 2006 - PAGE 189 OF THE STANDARD PLANS BOOK DATED MAY 2006.

REVISED STANDARD PLAN RSP D97G

2006 REVISED STANDARD PLAN RSP D97G

4-4-08

DIST	COUNTY	ROUTE	POST MILES TOTAL PROJECT	SHEET NO.	TOTAL SHEETS
02	Sis	97	40.1/54.1	102	114

REGISTERED ELECTRICAL ENGINEER

October 5, 2007
PLANS APPROVAL DATE

REGISTERED PROFESSIONAL ENGINEER Jeffery G. McRae No. E14512 Exp. 6-30-08 ELECTRICAL STATE OF CALIFORNIA

The State of California or its officers or agents shall not be responsible for the accuracy or completeness of electronic copies of this plan sheet.

To accompany plans dated 7-12-10

ELECTROLIERS

STANDARD TYPES
15, 15D
15 STRUCTURE
21, 21D STRUCTURE
30
31
32
35
36-20A

High mast light pole

Double Arm lighting standard

Existing electrolier

Electrolier foundation (Future installation)

NOTES:

1. Luminaires shall be 310 W HPS when installed on Type 21, 21D, 30, 31, 32, 35 and 36-20A Standards, unless otherwise specified. Luminaires shall be 200 W HPS when installed on other type standards or poles, unless otherwise specified.
2. Luminaires shall be the cutoff type, ANSI Type Ⅲ medium cutoff lighting distribution, unless otherwise specified.
3. Variations noted adjacent to symbol on project plans.

Electrolier (see project notes or project plans)

Luminaire on wood pole

STANDARD NOTES:

- AB — Abandon. If applied to conduit, remove conductors.
- BC — Install pull box in existing conduit run.
- BP — Pedestrian barricade, type as indicated on plan.
- CB — Install conduit into existing pull box.
- CC — Connect new and existing conduit. Remove existing conductors and install conductors as indicated.
- CF — Conduit to remain for future use. Remove conductors. Install pull wire or rope.
- DH — Detector handhole.
- FA — Foundation to be abandoned.
- IS — Install sign on signal mast arm.
- NS — No slip base on standard.
- PEC — Photoelectric control.
- PEU — Photoelectric unit.
- RC — Equipment or material to be removed and become the property of the Contractor.
- RE — Remove electrolier, fuses and ballast. Tape ends of conductors.
- RL — Relocate equipment.
- RR — Remove and reuse equipment.
- RS — Remove and salvage equipment.
- SC — Splice new to existing conductors.
- SD — Service disconnect.
- SF — Standard to remain for future use. Remove luminaire, pole conductors, fuses and ballast.
- TSP — Telephone service point.

ABBREVIATIONS AND EQUIPMENT DESIGNATIONS

PROPOSED	EXISTING	
BBS	bbs	Battery backup system
BC	bc	Bolt circle
C	C	Conduit
CCTV	cctv	Closed circuit television
CKT	ckt	Circuit
CMS	cms	Changeable message sign
DLC	dlc	Loop detector lead-in cable
EMS	ems	Extinguishable message sign
EVC	evc	Emergency vehicle cable
EVD	evd	Emergency vehicle detector
FB	fb	Flashing beacon
FBCA	fbca	Flashing beacon control assembly
FBS	fbs	Flashing beacon with slip base
FO	fo	Fiber optic
G	G	Ground (Equipment Grounding Conductor)
GFCI	GFCI	Ground fault circuit interrupt
HAR	har	Highway advisory radio
HEX	hex	Hexagonal
HPS	hps	High pressure sodium
IISNS	iisns	Internally illuminated street name sign
ISL	isl	Induction sign lighting
LED	led	Light emitting diode
LMA	lma	Luminaire mast arm
LPS	lps	Low pressure sodium
LTG	ltg	Lighting
LUM	lum	Luminaire
MAT	mat	Mast arm mounting vehicle signal faces, top attachment
MAS	mas	Mast arm mounting vehicle signal faces, side attachment
MAS-4A	mas-4A	Mast arm mounting vehicle signal faces, side attachment - 4 signal section
MAS-4B	mas-4B	
MAS-4C	mas-4C	
MAS-5A	mas-5A	Mast arm mounting vehicle signal faces, side attachment - 5 signal section
MAS-5B	mas-5B	
MC	mc	Mercury contactor
M/M	m/m	Multiple to multiple transformer
MT	mt	Conduit with pull wire or rope only
MTG	mtg	Mounting
	mv	Mercury vapor lighting fixture
N	N	Neutral (Grounded Conductor)
NC	NC	Normally closed
NO	NO	Normally open
PB	pb	Pull box
PEC	pec	Photoelectric control (Type Ⅰ, Ⅱ, Ⅲ, Ⅳ or Ⅴ as shown)
PED	ped	Pedestrian
PEU	peu	Photoelectric unit
PPB	ppb	Pedestrian push button
RL		Relocated equipment
RM	rm	Ramp metering
SB	sb	Slip base
SIC	sic	Signal interconnect cable
SIG	sig	Signal
SMA	sma	Signal mast arm
SNS	sns	Street name sign
SP	sp	Service point
TDC	tdc	Telephone demarcation cabinet
TMS	tms	Traffic monitoring station
TOS	tos	Traffic Operations System
VEH	veh	Vehicle
XFMR	xfmr	Transformer
COMM	comm	Communication
RWIS	rwis	Roadway weather information system

SOFFIT AND WALL MOUNTED LUMINAIRES

Pendant, 70 W HPS unless otherwise specified.

Flush, 70 W HPS unless otherwise specified.

Wall surface, 70 W HPS unless otherwise specified.

Existing soffit or wall luminaire to remain unmodified.

Existing soffit or wall luminaire to be modified as specified.

NOTE:

Arrow indicates "street side" of luminaire.

STATE OF CALIFORNIA
DEPARTMENT OF TRANSPORTATION

ELECTRICAL SYSTEMS (SYMBOLS AND ABBREVIATIONS)

NO SCALE

RSP ES-1A DATED OCTOBER 5, 2007 SUPERSEDES STANDARD PLAN ES-1A DATED MAY 1, 2006 - PAGE 400 OF THE STANDARD PLANS BOOK DATED MAY 2006.

REVISED STANDARD PLAN RSP ES-1A

2006 REVISED STANDARD PLAN RSP ES-1A

DIST	COUNTY	ROUTE	POST MILES TOTAL PROJECT	SHEET NO.	TOTAL SHEETS
02	Sis	97	40.1/54.1	103	114

REGISTERED ELECTRICAL ENGINEER

October 5, 2007
PLANS APPROVAL DATE

REGISTERED PROFESSIONAL ENGINEER Jeffery G. McRae No. E14512 Exp. 6-30-08 ELECTRICAL STATE OF CALIFORNIA

The State of California or its officers or agents shall not be responsible for the accuracy or completeness of electronic copies of this plan sheet.

To accompany plans dated 7-12-10

CONDUIT

PROPOSED	EXISTING	
		Lighting Conduit, unless otherwise indicated or noted
		Traffic signal conduit
C	c	Communication conduit
T	t	Telephone conduit
F	f	Fire alarm conduit
FO	fo	Fiber optic conduit
		Conduit termination (RSP ES-9A C)
R	r	Conduit riser in/on structure or service pole

SERVICE EQUIPMENT

PROPOSED	EXISTING	
OH	oh	Overhead lines
U	U	Wood pole "U" indicates utility owned
		Pole guy with anchor
		Utility transformer - ground mounted
III		Service equipment enclosure type
		Service equipment enclosure door indicates front of enclosure
T	t	Telephone demarcation cabinet

POLE-MOUNTED SERVICE DESIGNATION

Type of installation

TYPE H SERVICE - 28'-10" ← Pole height above grade

ILLUMINATED OVERHEAD SIGN

PROPOSED	EXISTING	
		Overhead sign - Single post
		Overhead sign - Two post
		Overhead sign - Mounted on structure
		Overhead sign with electrolier

SIGNAL EQUIPMENT

PROPOSED	EXISTING	
		Pedestrian signal face
		Pedestrian push button post
		Pedestrian barricade
		Vehicle signal face (with backplate, 3-Section: red, yellow and green)
		Vehicle signal face with angle visors
PV	PV	Modifications of basic symbols: "L" indicates all non-arrow sections louvered "LG" indicates louvered green section only "PV" indicates 12" programmed visibility sections "8" indicates all 8" sections (only when specified)
		Type 15TS and Vehicle signal face
		Vehicle signal face with red, yellow and green left arrow sections
		Vehicle signal face with red and yellow sections and up green arrow
		Vehicle signal face (5 Section) with red, yellow and green sections and yellow and green right arrows
		Type 1 Standard and attached vehicle signal faces
		Standard with signal mast arm only and attached vehicle signal faces and internally illuminated street name sign
		Type 33 Standard, Left-turn vehicle signal face and sign
		Standard with luminaire and signal mast arms and attached vehicle signal faces
		Cantilever flashing beacon Type 9 Frame, with a sign unless otherwise specified or indicated
		Type 15-FBS Standard with two vehicle signal face sections with lens, backplate and visor with a sign
R	Y	Flashing beacon. One vehicle signal face section with lens, backplate and visor. "R" indicates red indication, "Y" indicates yellow indication
		Controller assembly. Door indicates front of cabinet

SIGNAL EQUIPMENT Cont

PROPOSED	EXISTING	
		Guard post
		Type 1 Standard with "Meter On" sign
		Emergency Vehicle detector

NOTES:

1. All signal sections shall be 12" unless shown otherwise.
2. Signal heads shall be provided with backplates unless shown otherwise.
3. Signal indication shall be LED.

STATE OF CALIFORNIA
DEPARTMENT OF TRANSPORTATION

ELECTRICAL SYSTEMS (SYMBOLS AND ABBREVIATIONS)

NO SCALE

RSP ES-1B DATED OCTOBER 5, 2007 SUPERCEDES STANDARD PLAN ES-1B DATED MAY 1, 2006 - PAGE 401 OF THE STANDARD PLANS BOOK DATED MAY 2006.

REVISED STANDARD PLAN RSP ES-1B

2006 REVISED STANDARD PLAN RSP ES-1B

7-10-07

DIST	COUNTY	ROUTE	POST MILES TOTAL PROJECT	SHEET NO.	TOTAL SHEETS
02	Sis	97	40.1/54.1	104	114

REGISTERED ELECTRICAL ENGINEER

October 5, 2007
PLANS APPROVAL DATE

REGISTERED PROFESSIONAL ENGINEER
Jeffery G. McRae
No. E14512
Exp. 6-30-08
ELECTRICAL
STATE OF CALIFORNIA

The State of California or its officers or agents shall not be responsible for the accuracy or completeness of electronic copies of this plan sheet.

To accompany plans dated 7-12-10

EQUIPMENT IDENTIFICATION

ILLUMINATED SIGN IDENTIFICATION NUMBER:

Sign No. 12345 — Sign number - Place on post or structure

10 ISL SCI 1.0

- 1.0 — Transformer rating (kVA)
- SCI — Lighting control type
- ISL — Number and type of fixtures

Do NOT place on standard or structure

ELECTROLIER OR EQUIPMENT IDENTIFICATION NUMBER:

12345 - 15'-0"

- 15'-0" — Mast arm length, if shown. Do not place on standard or structure.
- 12345 — Equipment number - Place on standard or structure. Existing equipment numbers are shown in parenthesis

CONDUIT AND CONDUCTOR IDENTIFICATION:

1½"C, 2#10, 15#14, 2 DLC

- 2#10, 15#14, 2 DLC — Number and size of conductors and cables
- 1½"C — Size of conduit in inches

Ø1, Ø2, Ø2P, etc.	Traffic phase identification for signal faces, detectors and phase diagrams
1 2 3	Project note numbers
A B C	Equipment description, installation or item numbers
1 2 3	Conduit run numbers

SIGNAL AND LIGHTING STANDARD (TYPICAL DESIGNATION):

19A - 3 - 100

- 100 — Wind velocity = 100 mph
- 3 — Case 3 arm loading
- 19A — Standard type
- Standard Plan sheet number
- Detail number or letter

MISCELLANEOUS EQUIPMENT

PROPOSED	EXISTING	
CMS	cms	Changeable message sign
		Closed circuit television camera
		Highway advisory radio pole and antenna
EMS	ems	Extinguishable message sign
M V	m v	Detection device M = Microwave sensor V = Video image sensor

WIRING DIAGRAM LEGEND

P	Pole
CB	Circuit breaker
A	Ampere
V	Volt
M	Metered
UM	Unmetered
NB	Neutral bus
GB	Ground bus
G	Equipment grounding conductor
N	Grounded conductor (Neutral)

- External conductor
- Conductor or bus
- Tie point
- Contactor coil
- Contactor, Contact NO
- Terminal blocks
- Contactor, Contact NC
- Enclosure bond
- Grounding electrode
- Circuit breaker
- Receptacle

PULL BOXES

PROPOSED	EXISTING	
		Pull box-No. 5 unless otherwise indicated or noted.
3	9A(21)	Pull box-Additional designations or descriptions

3 = No. 3½ pull box
5 = No. 5 pull box
6 = No. 6 pull box
7 = No. 7 (Ceiling pull box)
8 = No. 8 (Pendant soffit pull box)
9 = No. 9 pull box
9A = No. 9A pull box

(C) = Communications pull box
(E) = Pull box with extension
(S) = Sprinkler control pull box
(21) = Anchor bolts and conduit for future installation of Type 21 Standard
(T) = Traffic pull box

VEHICLE DETECTORS

5 J 9 U

- U = Upper
- L = Lower
- Slot number in input file
- Input file (I or J)
- Phase

PROPOSED	EXISTING	
		Type A detector loop. Outline of sawcut shown.
		Type B detector loop. Outline of sawcut shown.
		Type C detector loop. Outline of sawcut shown.
		Type D detector loop. Outline of sawcut shown.
		Type E detector loop. Outline of sawcut shown.
		Type Q detector loop. Outline of sawcut shown.
		Magnetic detector
DH	dh	Detector handhole
		Microwave or video detection zone

STATE OF CALIFORNIA
DEPARTMENT OF TRANSPORTATION

ELECTRICAL SYSTEMS (SYMBOLS AND ABBREVIATIONS)

NO SCALE

RSP ES-1C DATED OCTOBER 5, 2007 SUPERCEDES STANDARD PLAN ES-1C DATED MAY 1, 2006 - PAGE 402 OF THE STANDARD PLANS BOOK DATED MAY 2006.

REVISED STANDARD PLAN RSP ES-1C

2006 REVISED STANDARD PLAN RSP ES-1C

DIST	COUNTY	ROUTE	POST MILES TOTAL PROJECT	SHEET NO.	TOTAL SHEETS
02	Sis	97	40.1/54.1	105	114

REGISTERED ELECTRICAL ENGINEER

October 5, 2007
PLANS APPROVAL DATE

REGISTERED PROFESSIONAL ENGINEER Jeffery G. McRae No. E14512 Exp. 6-30-08 ELECTRICAL STATE OF CALIFORNIA

The State of California or its officers or agents shall not be responsible for the accuracy or completeness of electronic copies of this plan sheet.

To accompany plans dated 7-12-10

LOOP INSTALLATION PROCEDURE

1. Loops shall be centered in lanes.
2. Saw slots in pavement for loop conductors as shown in details.
3. Distance between side of loop and a lead-in saw cut from adjacent detectors shall be 2'-0" minimum. Distance between lead-in saw cuts shall be 6" minimum.
4. Bottom of saw slot shall be smooth with no sharp edges.
5. Slots shall be washed until clean, blown out and thoroughly dried before installing loop conductors.
6. Adjacent loops on the same sensor unit channel shall be wound in opposite directions.
7. Identify and tag loop circuit pairs in the pull box with loop number, start (S) and finish (F) of conductor. Identify and tag lead-in-cable with sensor number and phase.
8. Install loop conductor in slot using a 3/16" to 1/4" thick wood paddle. Hold loop conductors with wood paddles (at the bottom of the sawed slot) during sealant placement.
9. No more than 2 twisted pairs shall be installed in one sawed slot.
10. Allow additional 5'-0" of slack length of conductor for the lead-in run to pull box.
11. The additional length of each conductor for each loop shall be twisted together into a pair (6 turns per 3'-4" minimum) before being placed in the slot and conduit leading to pull box.
12. Test each loop circuit for continuity, circuit resistance and insulation resistance at the pull box before filling slots.
13. Fill slots as shown in details.
14. Splice loop conductors to lead-in-cable. Splices shall be soldered.
15. End of lead-in-cable and Type 2 loop conductor shall be waterproofed prior to installing in conduit to prevent moisture from entering the cable.
16. Lead-in-cable shall not be spliced between the pull box and the controller cabinet terminals.
17. Test each loop circuit for continuity, circuit resistance and insulation resistance at the controller cabinet location.
18. Where loop conductors are not to be spliced to a lead-in-cable, the ends of the conductors shall be taped and waterproofed with electrical insulating coating.

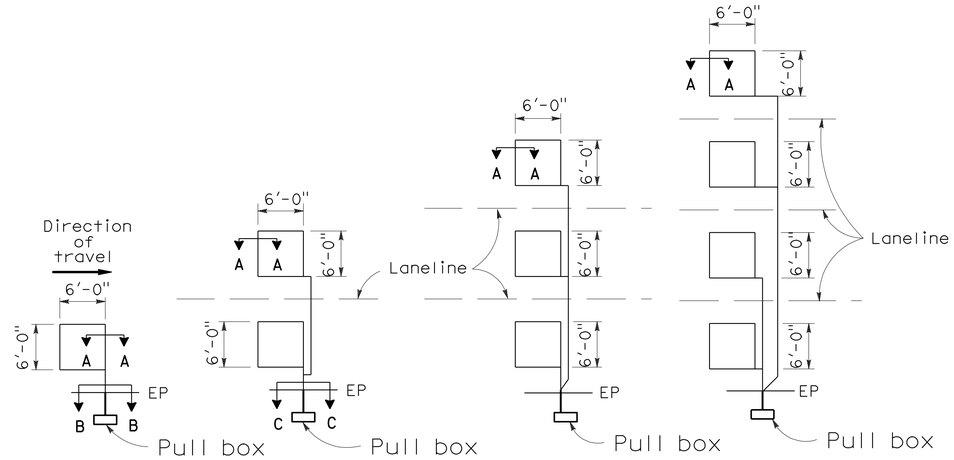

TYPE 1A INSTALLATION | TYPE 2A INSTALLATION | TYPE 3A INSTALLATION | TYPE 4A INSTALLATION

SAWCUT DETAILS

(Type A loop detector configurations illustrated)

1. 1A thru 4A = 1 Type A loop configuration in each lane.
2. 1B thru 4B = 1 Type B loop configuration in each lane.
3. 1C = 1 Type C loop configuration entering lanes as required.
4. 1D thru 4D = 1 Type D loop configuration in each lane.
5. 1E thru 4E = 1 Type E loop configuration in each lane.
6. 1Q thru 4Q = 1 Type Q loop configuration in each lane. (Use Type A, B, C, D, E or Q loop detector configurations only when specified or shown on plans)

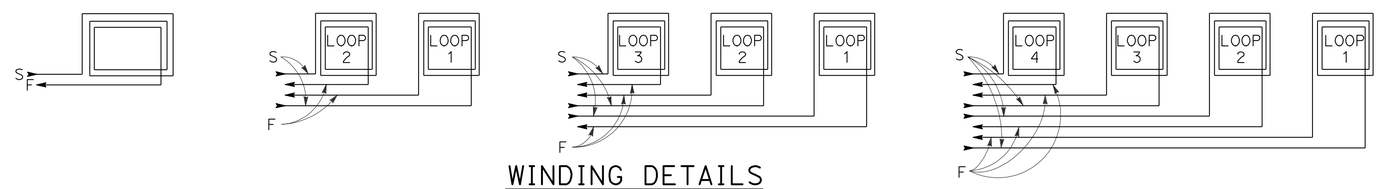

WINDING DETAILS

See Notes 6 and 7

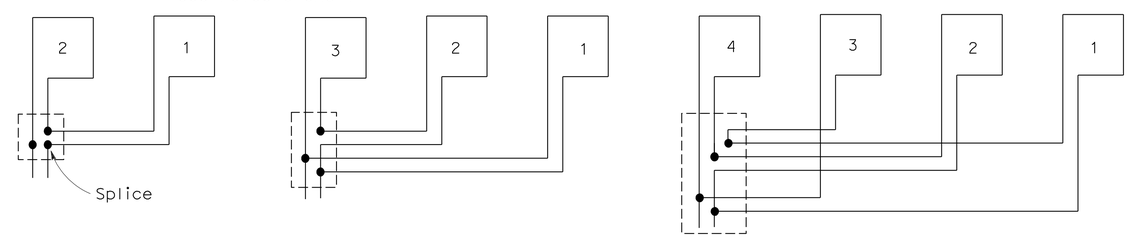

TYPICAL LOOP CONNECTIONS

(Dashed lines represent the pull box)

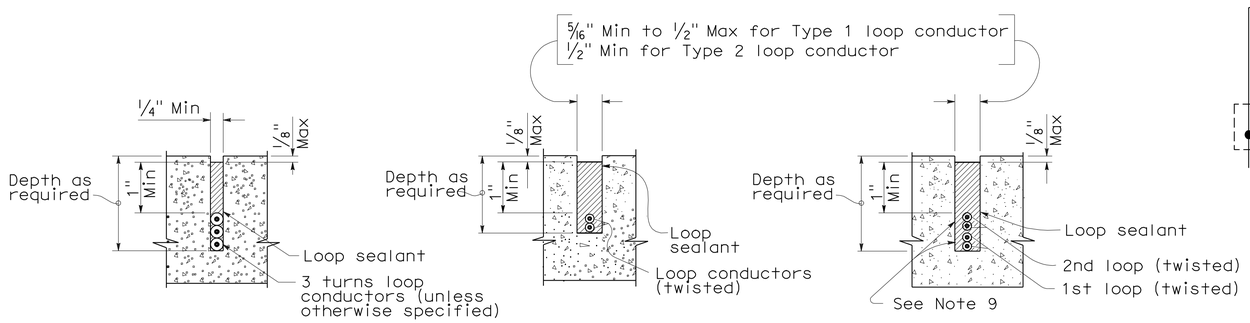

SECTION A-A | SECTION B-B | SECTION C-C

SLOT DETAILS - TYPE 1 AND TYPE 2 LOOP CONDUCTOR

STATE OF CALIFORNIA
DEPARTMENT OF TRANSPORTATION

ELECTRICAL SYSTEMS (DETECTORS)

NO SCALE

RSP ES-5A DATED OCTOBER 5, 2007 SUPERCEDES STANDARD PLAN ES-5A DATED MAY 1, 2006 - PAGE 423 OF THE STANDARD PLANS BOOK DATED MAY 2006.

REVISED STANDARD PLAN RSP ES-5A

2006 REVISED STANDARD PLAN RSP ES-5A

8-17-07

DIST	COUNTY	ROUTE	POST MILES TOTAL PROJECT	SHEET NO.	TOTAL SHEETS
02	Sis	97	40.1/54.1	106	114

Randell D. Hiatt
REGISTERED CIVIL ENGINEER

June 6, 2008
PLANS APPROVAL DATE

REGISTERED PROFESSIONAL ENGINEER
Randell D. Hiatt
No. C50200
Exp. 6-30-09
CIVIL
STATE OF CALIFORNIA

The State of California or its officers or agents shall not be responsible for the accuracy or completeness of electronic copies of this plan sheet.

To accompany plans dated 7-12-10

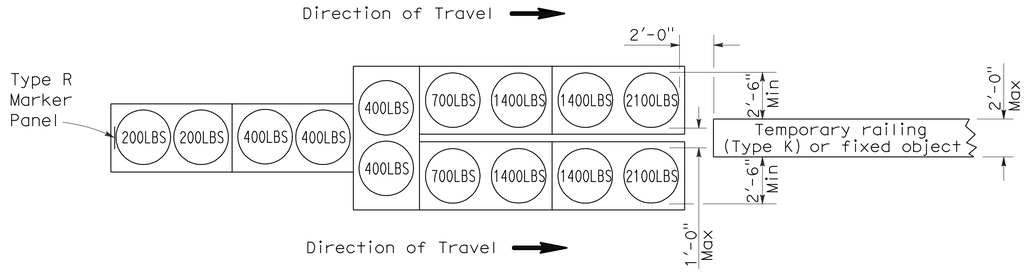

ARRAY 'TU14'

Approach speed 45 mph or more

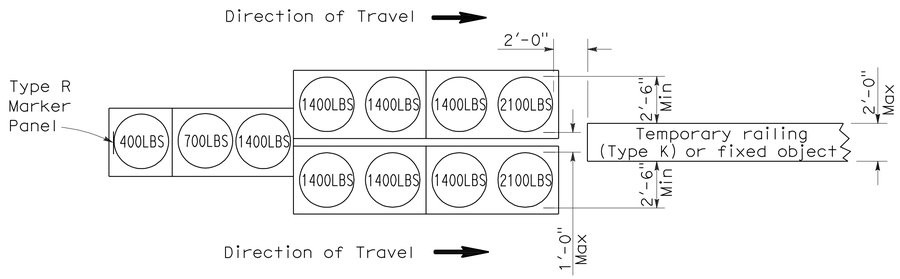

ARRAY 'TU11'

Approach speed less than 45 mph

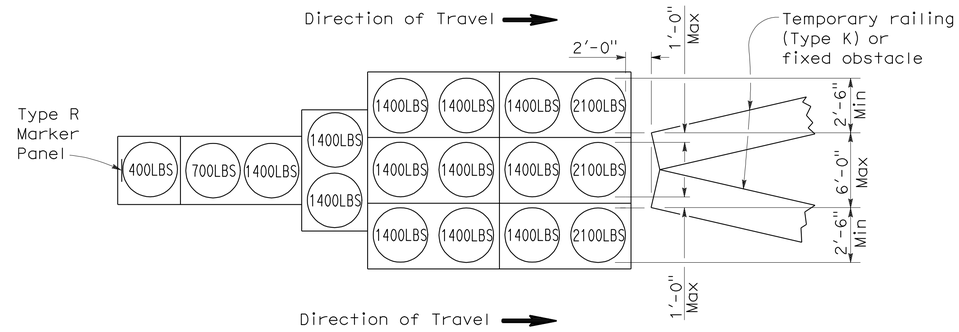

ARRAY 'TU17'

Approach speed less than 45 mph

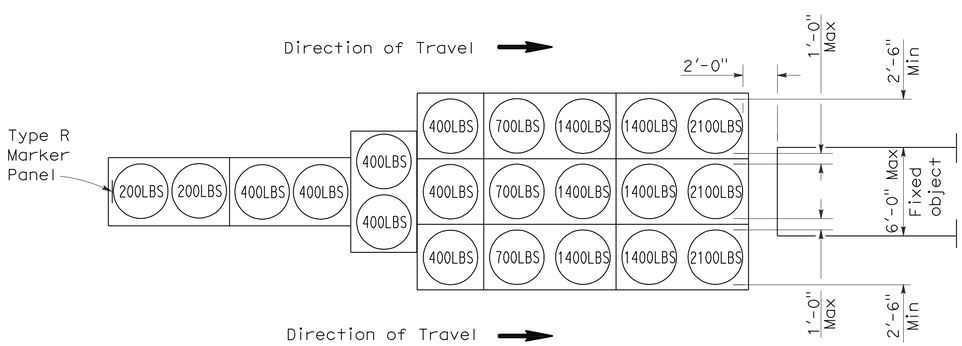

ARRAY 'TU21'

Approach speed 45 mph or more

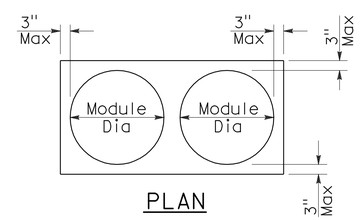

PLAN

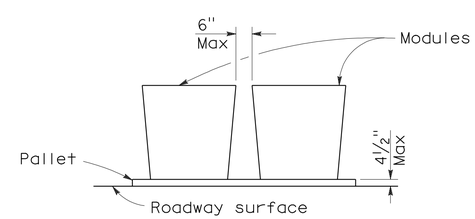

ELEVATION

CRASH CUSHION PALLET DETAIL

See Note 7

NOTES:

1. (XXX) Indicates sand filled module location and weight of sand in pounds for each module. Module spacing is based on the greater diameter of the module.
2. All sand weights are nominal.
3. Temporary crash cushion arrays shall not encroach on the traveled way.
4. Place the top of Type R marker panel 1" below the module lid.
5. Refer to Standard Plan A73B for marker details.
6. Approach speeds indicated conform to NCHRP 350 Report criteria.
7. Use of pallets is optional.

STATE OF CALIFORNIA
DEPARTMENT OF TRANSPORTATION

TEMPORARY CRASH CUSHION, SAND FILLED (UNIDIRECTIONAL)

NO SCALE

RSP T1A DATED JUNE 6, 2008 SUPERSEDES STANDARD PLAN T1A
DATED MAY 1, 2006 - PAGE 211 OF THE STANDARD PLANS BOOK DATED MAY 2006.

REVISED STANDARD PLAN RSP T1A

2006 REVISED STANDARD PLAN RSP T1A

DIST	COUNTY	ROUTE	POST MILES TOTAL PROJECT	SHEET NO.	TOTAL SHEETS
02	Sis	97	40.1/54.1	107	114

Randell D. Hiatt
REGISTERED CIVIL ENGINEER

June 6, 2008
PLANS APPROVAL DATE

REGISTERED PROFESSIONAL ENGINEER
Randell D. Hiatt
No. C50200
Exp. 6-30-09
CIVIL
STATE OF CALIFORNIA

The State of California or its officers or agents shall not be responsible for the accuracy or completeness of electronic copies of this plan sheet.

To accompany plans dated 7-12-10

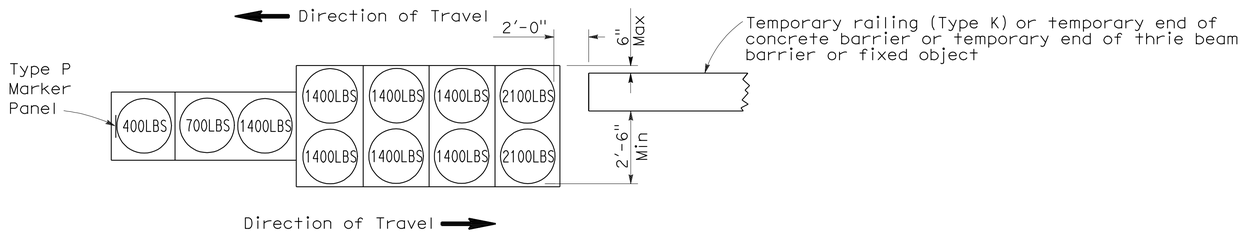

ARRAY 'TB11'

Approach speed less than 45 mph

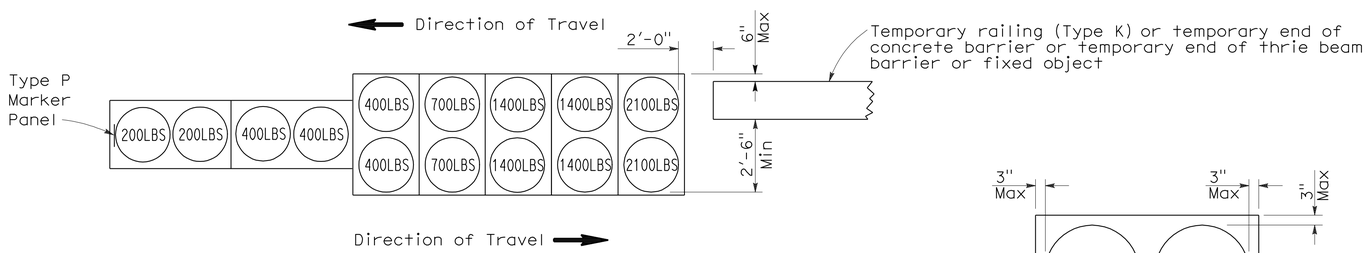

ARRAY 'TB14'

Approach speed 45 mph or more

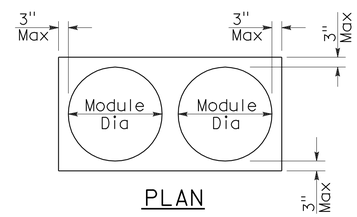

PLAN

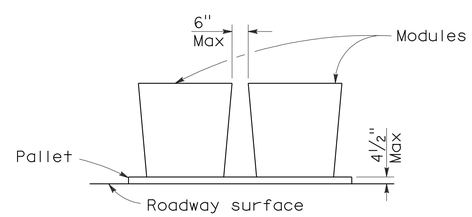

ELEVATION

CRASH CUSHION PALLET DETAIL

See Note 7

NOTES:

1. (XXX) Indicates sand filled module location and weight of sand in pounds for each module. Module spacing is based on the greater diameter of the module.
2. All sand weights are nominal.
3. Temporary crash cushion arrays shall not encroach on the traveled way.
4. Place the Type P marker panel so that the bottom of the panel rests upon the pallet.
5. Refer to Standard Plan A73B for marker details.
6. Approach speeds indicated conform to NCHRP 350 Report criteria.
7. Use of pallets is optional.

STATE OF CALIFORNIA
DEPARTMENT OF TRANSPORTATION

TEMPORARY CRASH CUSHION, SAND FILLED (BIDIRECTIONAL)

NO SCALE

RSP T1B DATED JUNE 6, 2008 SUPERSEDES STANDARD PLAN T1B
DATED MAY 1, 2006 - PAGE 212 OF THE STANDARD PLANS BOOK DATED MAY 2006.

REVISED STANDARD PLAN RSP T1B

2006 REVISED STANDARD PLAN RSP T1B

DIST	COUNTY	ROUTE	POST MILES TOTAL PROJECT	SHEET NO.	TOTAL SHEETS
02	Sis	97	40.1/54.1	108	114

Randell D. Hiatt
REGISTERED CIVIL ENGINEER

June 6, 2008
PLANS APPROVAL DATE

REGISTERED PROFESSIONAL ENGINEER
Randell D. Hiatt
No. C50200
Exp. 6-30-09
CIVIL
STATE OF CALIFORNIA

The State of California or its officers or agents shall not be responsible for the accuracy or completeness of electronic copies of this plan sheet.

To accompany plans dated 7-12-10

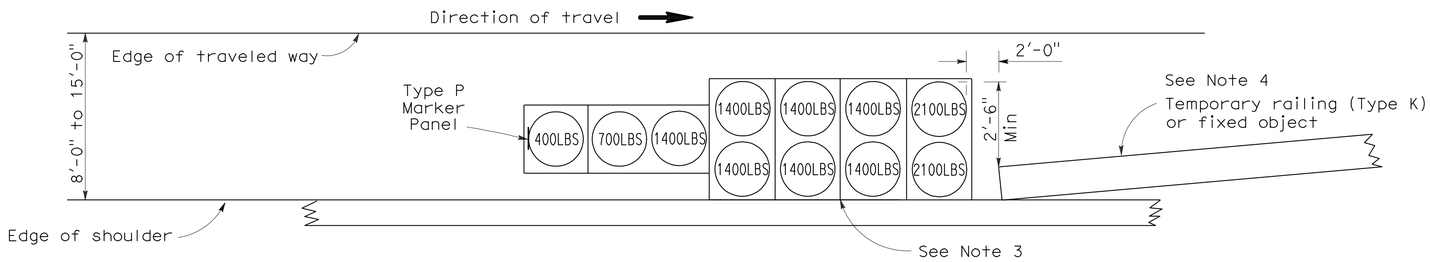

ARRAY 'TS11'

Approach speed less than 45 mph
See Note 9

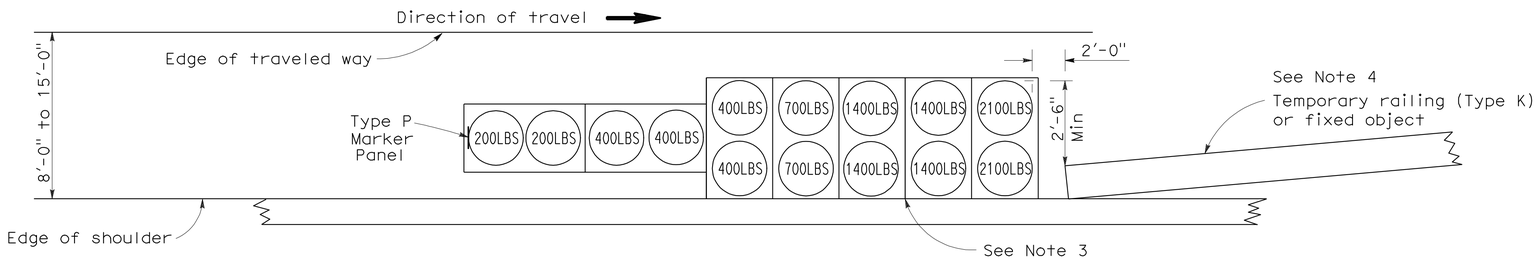

ARRAY 'TS14'

Approach speed 45 mph or more
See Note 9

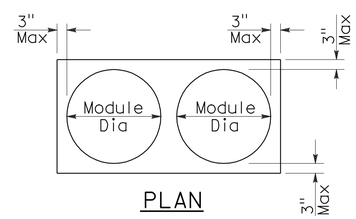

PLAN

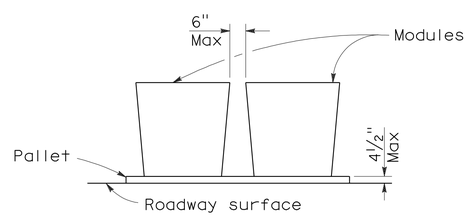

ELEVATION

CRASH CUSHION PALLET DETAIL

See Note 11

NOTES:

1. (XXX) Indicates sand filled module location and weight of sand in pounds for each module. Module spacing is based on the greater diameter of the module.
2. All sand weights are nominal.
3. The temporary crash cushion arrays shown on this plan shall be used only in locations where there will be traffic on one side of the temporary crash cushion array.
4. If the fixed object or approach end of the temporary railing is less than 15'-0" from the edge of traveled way, a temporary crash cushion is required in a construction or work zone.
5. Temporary crash cushion arrays shall not encroach on the traveled way.
6. Arrays for median shoulders shall conform to details shown on this plan for outside shoulders.
7. Place the Type P marker panel so that the bottom of the panel rests upon the pallet and faces traffic.
8. Refer to Standard Plan A73B for marker details.
9. For shoulder widths less than 8'-0", appropriate approved crash cushion protection, other than sand filled modules, shall be provided at fixed objects and at approach ends of temporary railing. The specific type of crash cushion shall be as shown on the project plans or as specified in the Special Provisions, or if not shown on the project plans or specified in the Special Provisions, shall be as approved by the Engineer.
10. Approach speeds indicated conform to NCHRP 350 Report criteria.
11. Use of pallets is optional.

STATE OF CALIFORNIA
DEPARTMENT OF TRANSPORTATION

TEMPORARY CRASH CUSHION, SAND FILLED (SHOULDER INSTALLATIONS)

NO SCALE

RSP T2 DATED JUNE 6, 2008 SUPERSEDES STANDARD PLAN T2
DATED MAY 1, 2006 - PAGE 213 OF THE STANDARD PLANS BOOK DATED MAY 2006.

REVISED STANDARD PLAN RSP T2

2006 REVISED STANDARD PLAN RSP T2

5-15-08

DIST	COUNTY	ROUTE	POST MILES TOTAL PROJECT	SHEET NO.	TOTAL SHEETS
02	Sis	97	40.1/54.1	109	114

REGISTERED CIVIL ENGINEER

November 17, 2006
PLANS APPROVAL DATE

REGISTERED PROFESSIONAL ENGINEER — Greg W. Edwards — No. C36386 — Exp. 6-30-08 — CIVIL — STATE OF CALIFORNIA

The State of California or its officers or agents shall not be responsible for the accuracy or completeness of electronic copies of this plan sheet.

To accompany plans dated 7-12-10

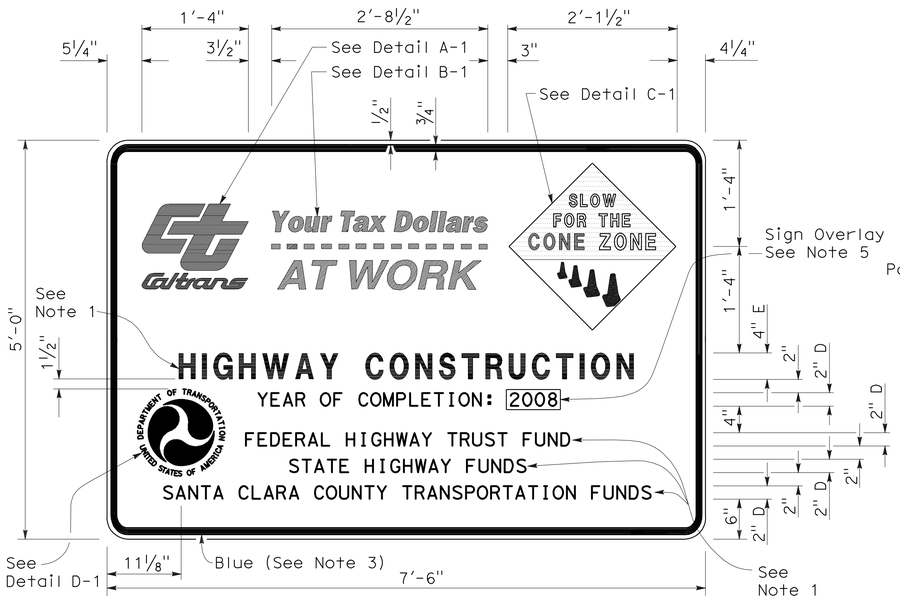

TYPE 1

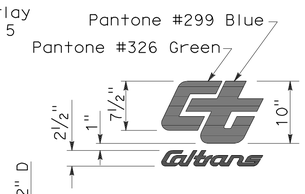

DETAIL A-1

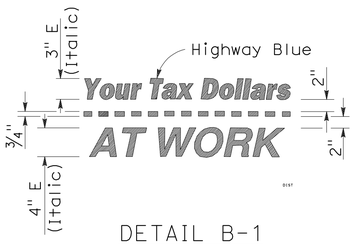

DETAIL B-1
(See Note 3)

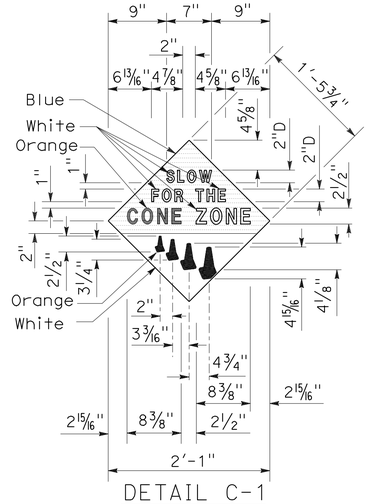

DETAIL C-1
(See Note 4)

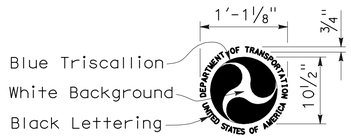

DETAIL D-1
(See Note 6)

NOTES:

1. The sign messages shown for type of project and fund types are examples only. See the Special Provisions for the applicable type of project and fund type messages to be used.
2. Except as otherwise shown, the legend of sign shall be black on a white background (non-reflective).
3. The border of the signs and details "B-1" and "B-2" shall be blue (non-reflective).
4. The diamond in details "C-1" and "C-2" shall be blue for the background of message, " SLOW FOR THE CONE ZONE", and white background for the orange cones. The color and type of font for the "SLOW FOR THE CONE ZONE" message shall be: "SLOW" white D; "FOR THE" white D; "CONE" orange Arial font; "ZONE" white Arial font.
5. Year of completion of project construction shown on the overlay is an example only. See the Special Provisions.
6. Use when the Project involves Federal Highway Trust Fund.

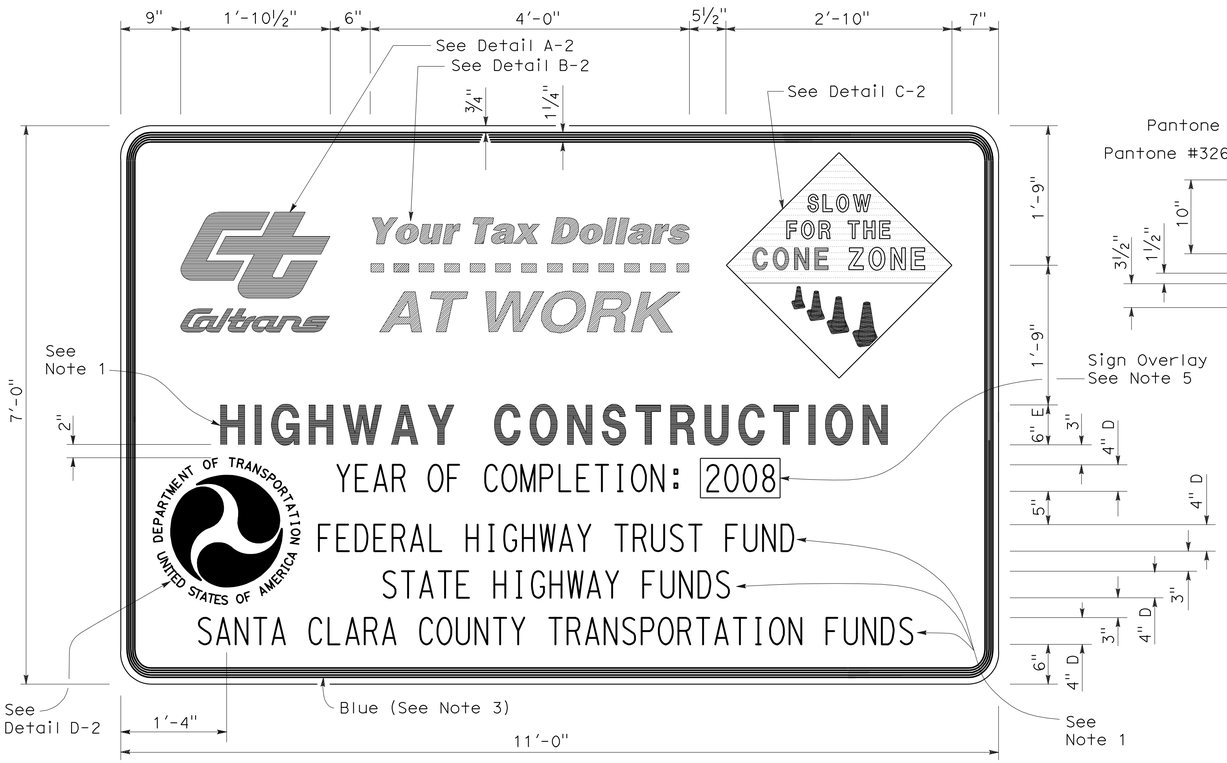

TYPE 2

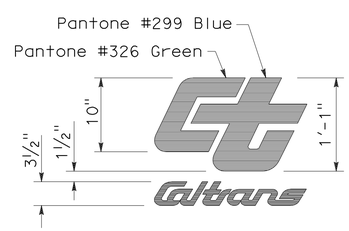

DETAIL A-2

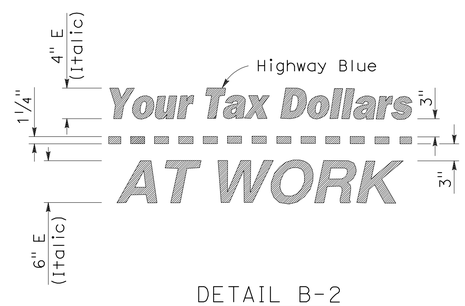

DETAIL B-2
(See Note 3)

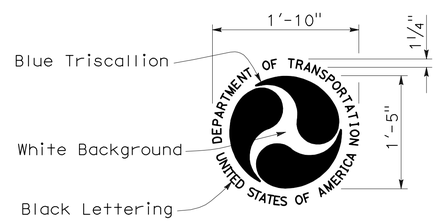

DETAIL D-2
(See Note 6)

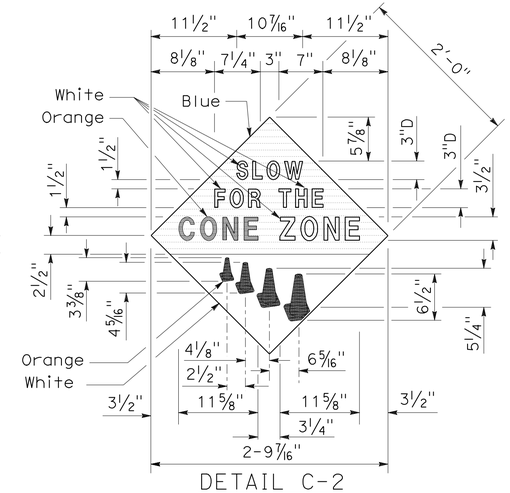

DETAIL C-2
(See Note 4)

STATE OF CALIFORNIA
DEPARTMENT OF TRANSPORTATION

CONSTRUCTION PROJECT FUNDING IDENTIFICATION SIGNS

NO SCALE

RSP T7 DATED NOVEMBER 17, 2006 SUPERSEDES STANDARD PLAN T7
DATED MAY 1, 2006 - PAGE 217 OF THE STANDARD PLANS BOOK DATED MAY 2006.

REVISED STANDARD PLAN RSP T7

2006 REVISED STANDARD PLAN RSP T7

9-7-06

DIST	COUNTY	ROUTE	POST MILES TOTAL PROJECT	SHEET NO.	TOTAL SHEETS
02	Sis	97	40.1/54.1	110	114

LICENSED LANDSCAPE ARCHITECT

April 3, 2009
PLANS APPROVAL DATE

The State of California or its officers or agents shall not be responsible for the accuracy or completeness of electronic copies of this plan sheet.

LICENSED LANDSCAPE ARCHITECT — Robert B. Schott — Signature — 11-30-10 Renewal Date — 2-25-09 Date — STATE OF CALIFORNIA

To accompany plans dated 7-12-10

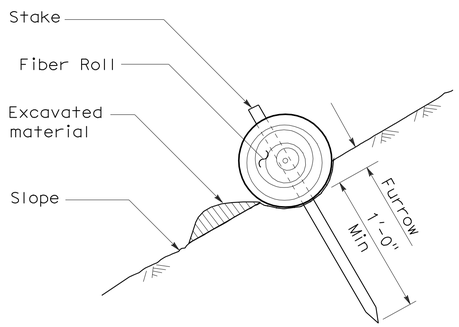

SECTION

TEMPORARY FIBER ROLL (TYPE 1)

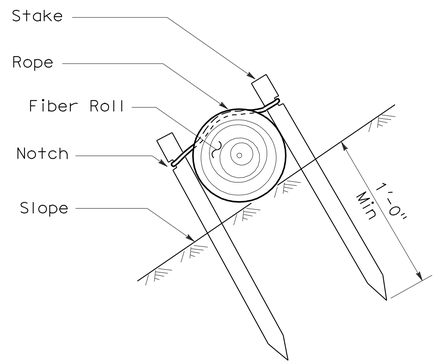

SECTION

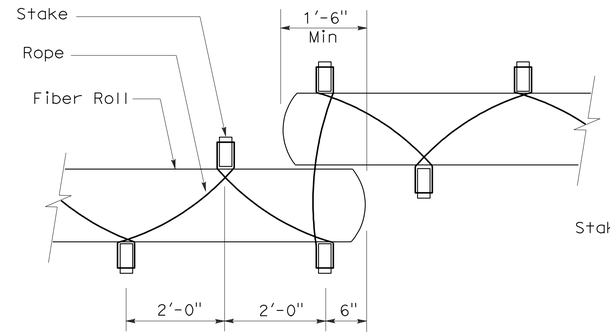

PLAN

TEMPORARY FIBER ROLL (TYPE 2)

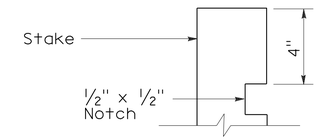

ELEVATION

STAKE NOTCH DETAIL

NOTES:

1. Temporary fiber roll spacing varies depending upon slope inclination.
2. Installations shown in the perspectives are for slope inclination of 10:1 and steeper.

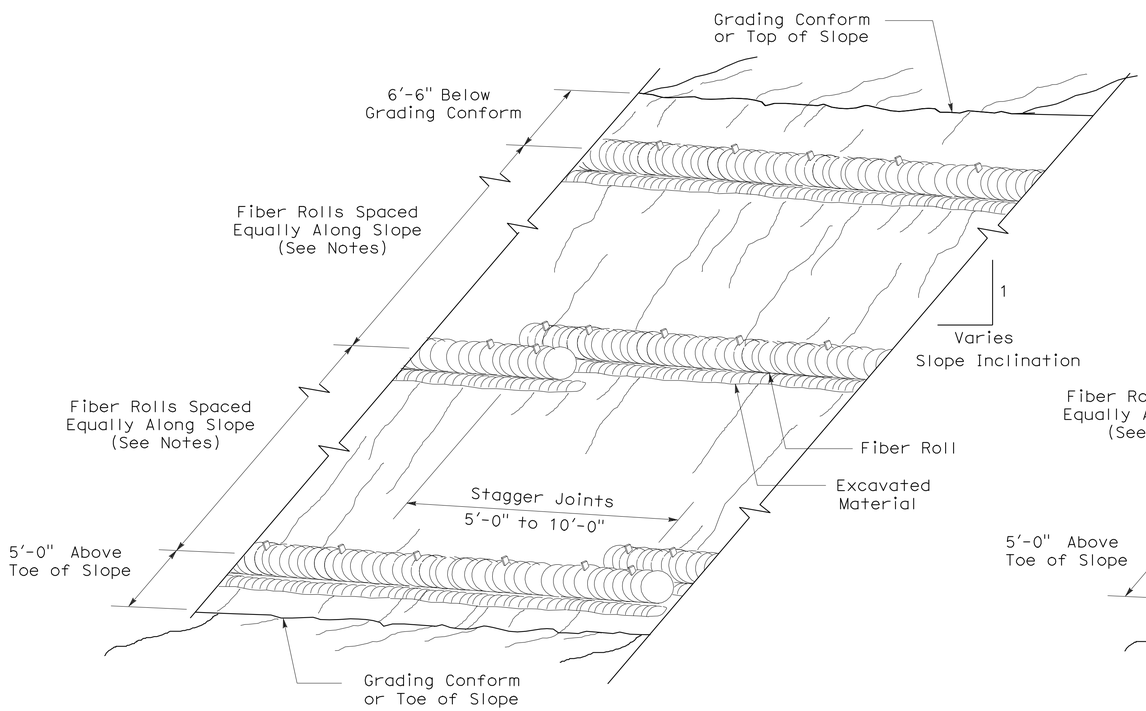

PERSPECTIVE

TEMPORARY FIBER ROLL (TYPE 1)

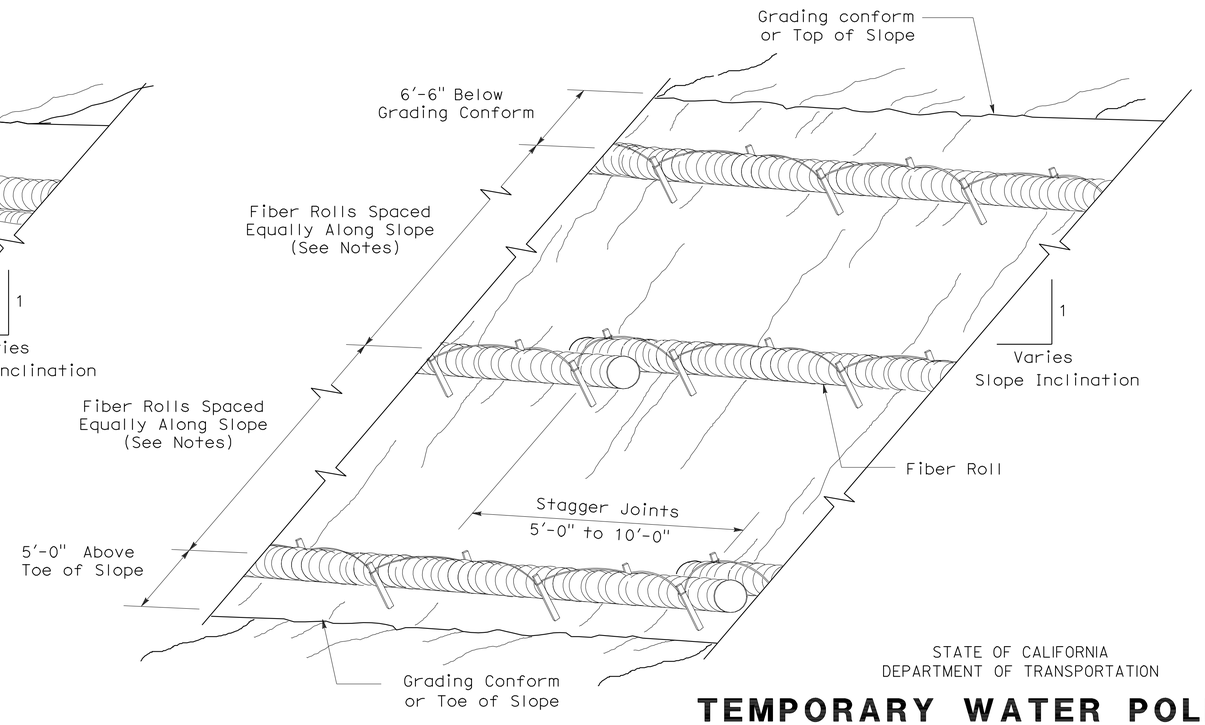

PERSPECTIVE

TEMPORARY FIBER ROLL (TYPE 2)

STATE OF CALIFORNIA
DEPARTMENT OF TRANSPORTATION

TEMPORARY WATER POLLUTION CONTROL DETAILS (TEMPORARY FIBER ROLL)

NO SCALE

RSP T56 DATED APRIL 3, 2009 SUPERSEDES STANDARD PLAN T56
DATED MAY 1, 2006 - PAGE 232 OF THE STANDARD PLANS BOOK DATED MAY 2006.

REVISED STANDARD PLAN RSP T56

2006 REVISED STANDARD PLAN RSP T56

2-23-09

DIST	COUNTY	ROUTE	POST MILES TOTAL PROJECT	SHEET NO.	TOTAL SHEETS
02	Sis	97	40.1/54.1	111	114

LICENSED LANDSCAPE ARCHITECT

August 15, 2008
PLANS Approval DATE

The State of California or its officers or agents shall not be responsible for the accuracy or completeness of electronic copies of this plan sheet.

LICENSED LANDSCAPE ARCHITECT Robert B. Schott 3895 Signature 11-04-08 Renewal Date 08-11-08 Date STATE OF CALIFORNIA

To accompany plans dated 7-12-10

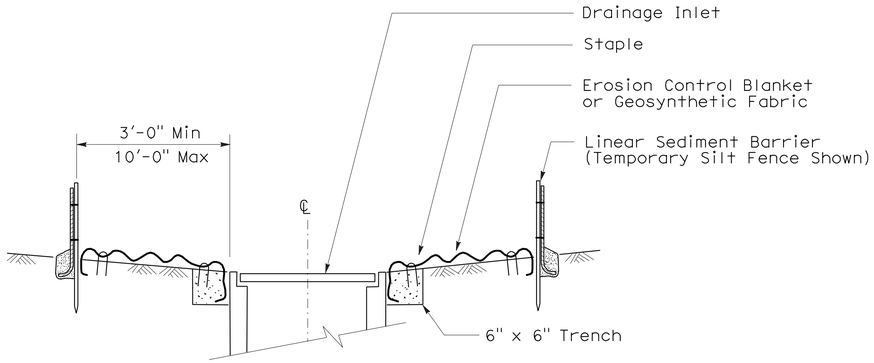

SECTION A-A

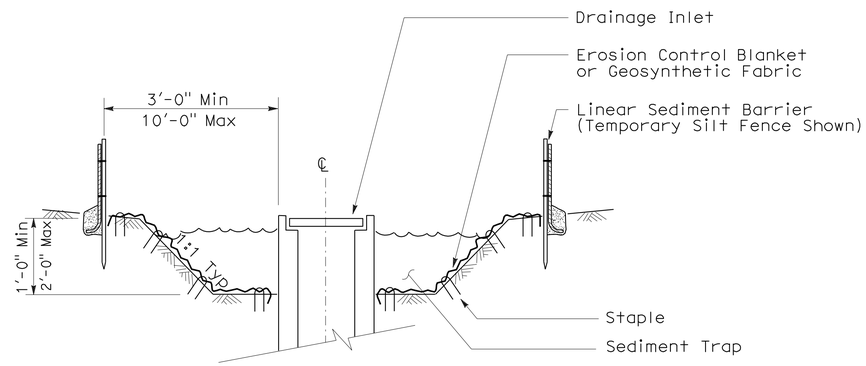

SECTION B-B

NOTES:

1. See Standard Plan T51 for Temporary Silt Fence.
2. Dimensions may vary to fit field conditions.

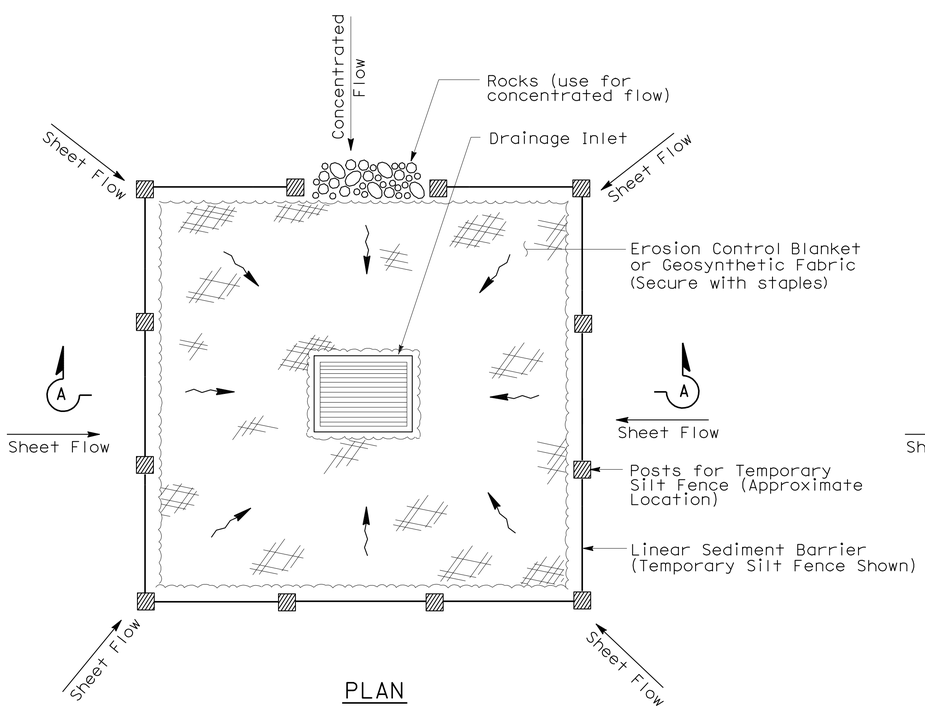

PLAN

TEMPORARY DRAINAGE INLET PROTECTION (TYPE 1)

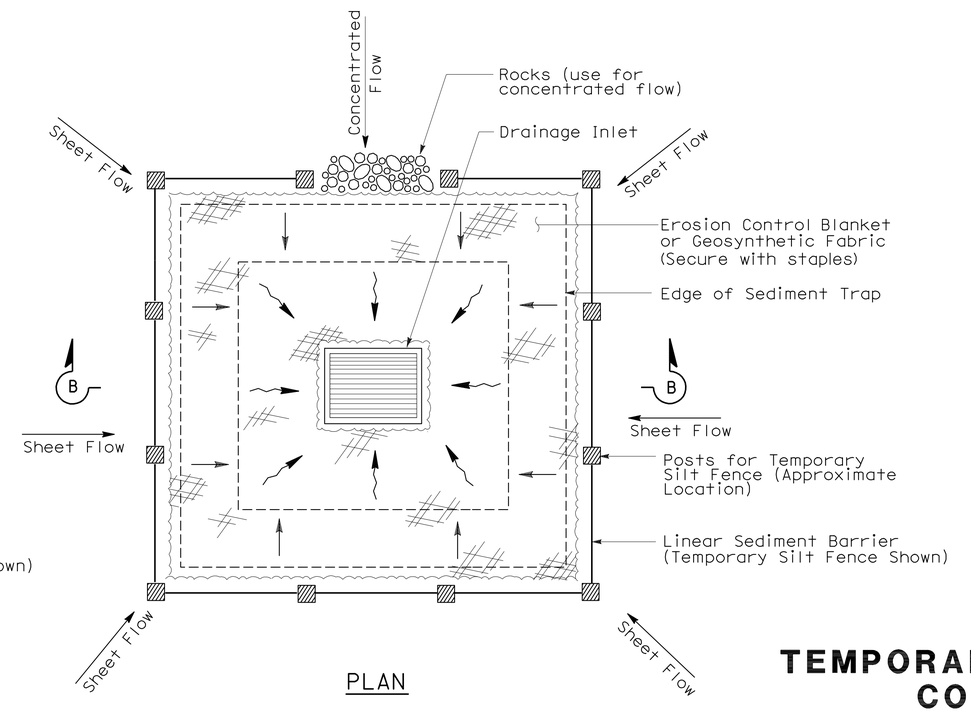

PLAN

TEMPORARY DRAINAGE INLET PROTECTION (TYPE 2) (EXCAVATED SEDIMENT TRAP)

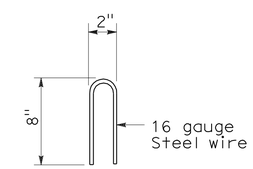

STAPLE DETAIL

STATE OF CALIFORNIA
DEPARTMENT OF TRANSPORTATION

TEMPORARY WATER POLLUTION CONTROL DETAILS (TEMPORARY DRAINAGE INLET PROTECTION)

NO SCALE

NSP T61 DATED AUGUST 15, 2008 SUPPLEMENTS THE STANDARD PLANS BOOK DATED MAY 2006.

NEW STANDARD PLAN NSP T61

2006 NEW STANDARD PLAN NSP T61

7-11-08

DIST	COUNTY	ROUTE	POST MILES TOTAL PROJECT	SHEET NO.	TOTAL SHEETS
02	Sis	97	40.1/54.1	112	114

LICENSED LANDSCAPE ARCHITECT

August 15, 2008
PLANS APPROVAL DATE

LICENSED LANDSCAPE ARCHITECT Robert B. Schott 3625 Signature 11-04-08 Renewal Date 08-11-08 Date STATE OF CALIFORNIA

The State of California or its officers or agents shall not be responsible for the accuracy or completeness of electronic copies of this plan sheet.

To accompany plans dated 7-12-10

2006 NEW STANDARD PLAN NSP T62

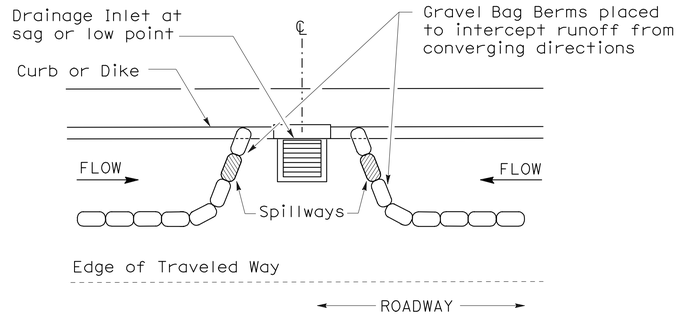

PLAN

CONFIGURATION FOR SAG POINT INLET (GRAVEL BAG BERM)

GRAVEL BAG BERM (TYPE 3A) SPACING TABLE

SLOPE OF ROADWAY (PERCENT)	1 to 3.9	4 to 5.9	6 to 7.9	8 to 10	10+
INTERVAL BETWEEN BERM	100′	75′	50′	25′	12′

For slope of less than 1%, install barriers only if erosion/sediment is prevalent

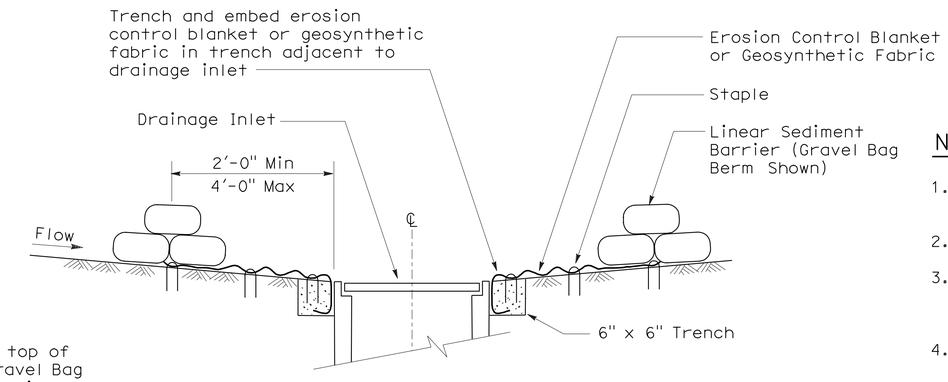

SECTION A-A

NOTES:

1. Place safety cones adjacent to drainage inlet protection.
2. Dimensions may vary to fit field conditions.
3. Install a minimum of 3 gravel bag berms upstream of each drainage inlet to be protected.
4. Position erosion control blanket or geosynthetic fabric at edge of concrete apron and secure in trench.
5. Erosion control blanket or geosynthetic fabric is not required if the area adjacent to the drainage inlet is vegetated or paved.

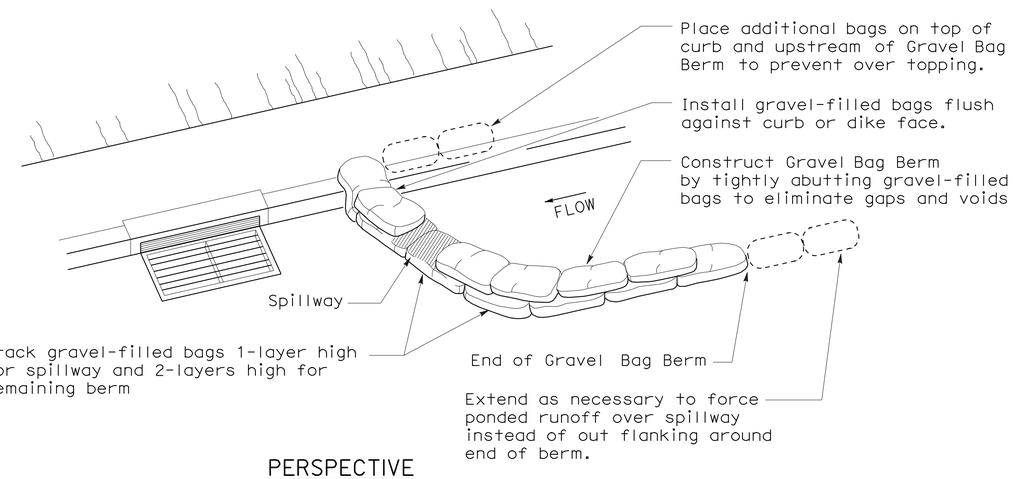

PERSPECTIVE

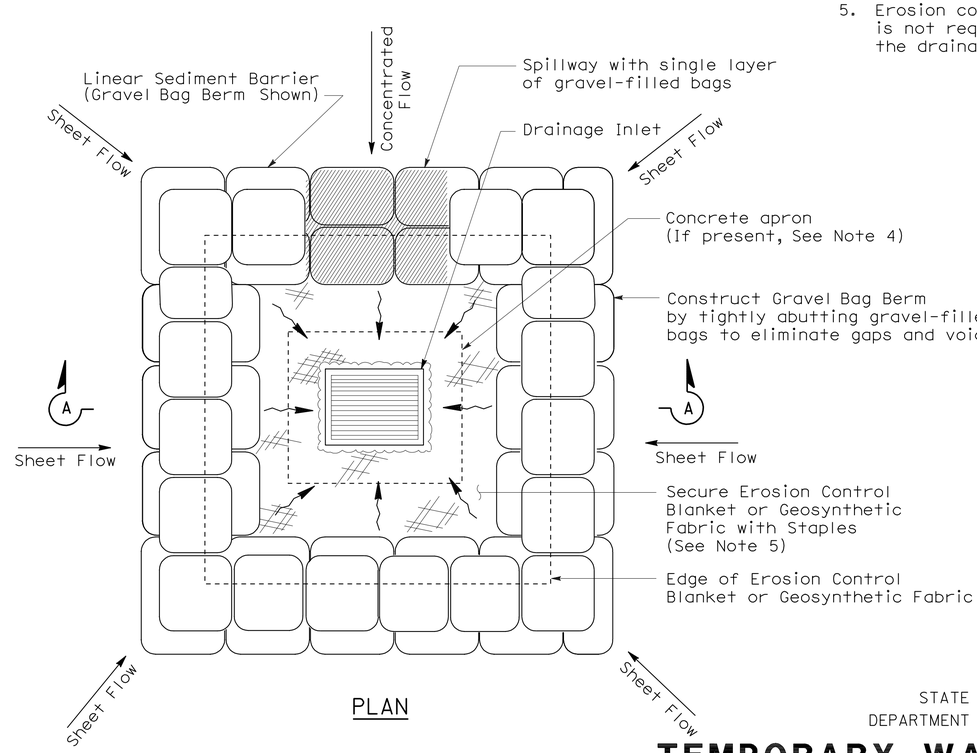

PLAN

TEMPORARY DRAINAGE INLET PROTECTION (TYPE 3B)

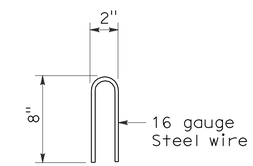

STAPLE DETAIL

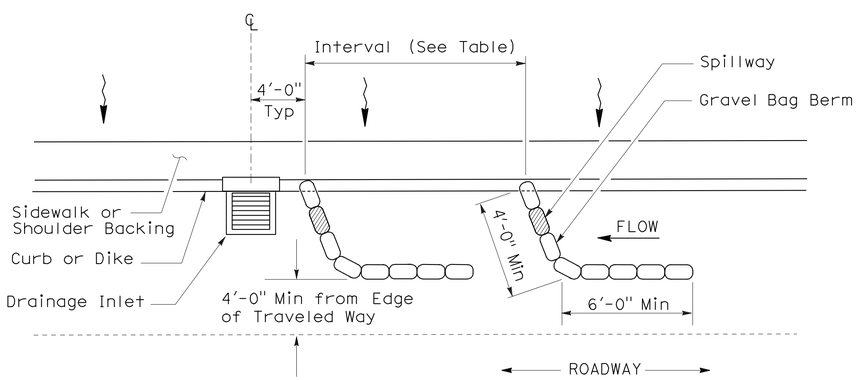

PLAN

TEMPORARY DRAINAGE INLET PROTECTION (TYPE 3A) (GRAVEL BAG BERM)

STATE OF CALIFORNIA
DEPARTMENT OF TRANSPORTATION

TEMPORARY WATER POLLUTION CONTROL DETAILS (TEMPORARY DRAINAGE INLET PROTECTION)

NO SCALE

NSP T62 DATED AUGUST 15, 2008 SUPPLEMENTS THE STANDARD PLANS BOOK DATED MAY 2006.

NEW STANDARD PLAN NSP T62

7-11-08

DIST	COUNTY	ROUTE	POST MILES TOTAL PROJECT	SHEET NO.	TOTAL SHEETS
02	Sis	97	40.1/54.1	113	114

Robert B Schott
LICENSED LANDSCAPE ARCHITECT

August 15, 2008
PLANS APPROVAL DATE

The State of California or its officers or agents shall not be responsible for the accuracy or completeness of electronic copies of this plan sheet.

LICENSED LANDSCAPE ARCHITECT — Robert B. Schott — Signature — 11-04-08 Renewal Date — 08-11-08 Date — STATE OF CALIFORNIA

To accompany plans dated 7-12-10

FLEXIBLE SEDIMENT BARRIER SPACING TABLE

SLOPE OF ROADWAY (PERCENT)	0 to 0.9	1 to 1.9	2 to 2.9	3 to 4	5+
INTERVAL BETWEEN BARRIERS	50′	35′	30′	25′	20′
ANGLE FROM FACE OF CURB	70°	70°	70°	45°	45°
SUGGESTED BARRIER LENGTH	6′	6′	6′	6′	6′

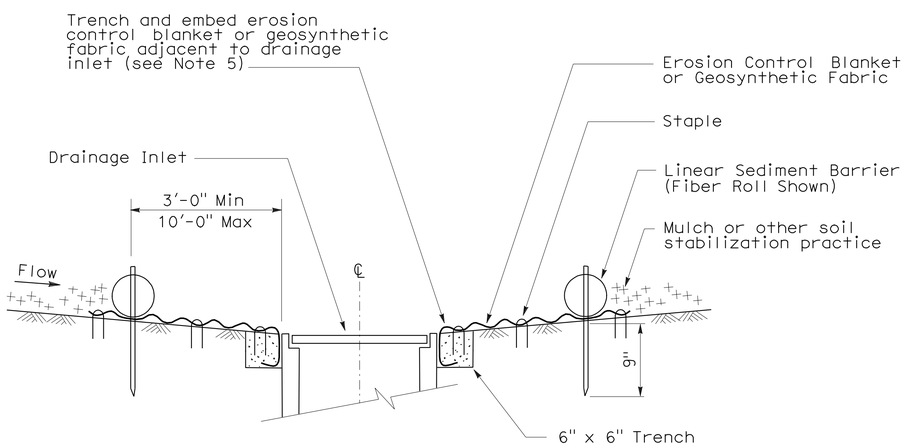

SECTION A-A

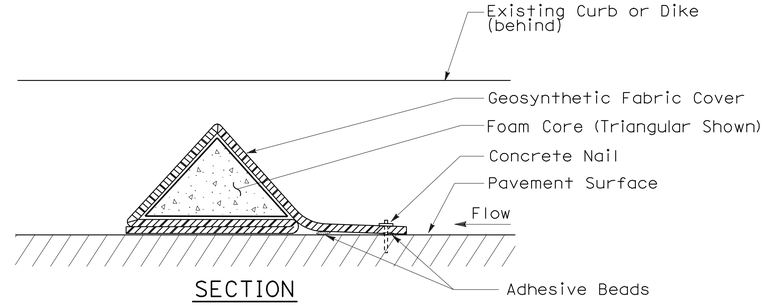

SECTION

FLEXIBLE SEDIMENT BARRIER DETAIL (FOAM BARRIER SHOWN)

NOTES:

1. See Standard Plan T51 for Temporary Silt Fence.
2. Dimensions may vary to fit field conditions.
3. Install a minimum of 3 flexible sediment barriers upstream of each drainage inlet to be protected.
4. Position erosion control blanket or geosynthetic fabric at edge of concrete apron and secure in trench.
5. Erosion control blanket or geosynthetic fabric is not required if the area adjacent to the drainage inlet is vegetated.

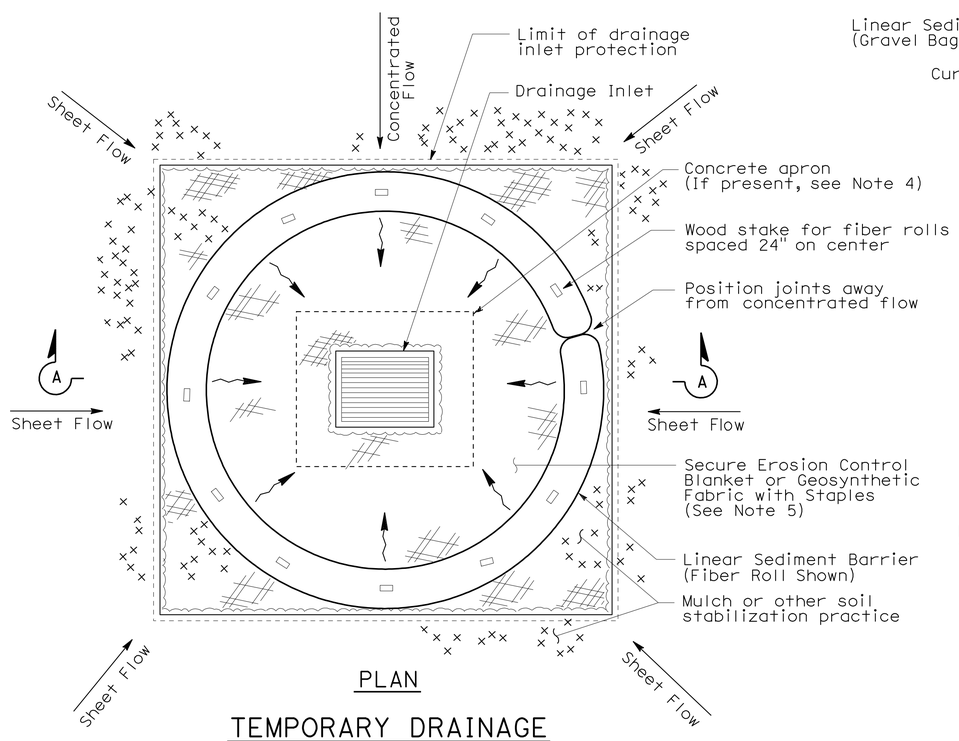

PLAN

TEMPORARY DRAINAGE INLET PROTECTION (TYPE 4A)

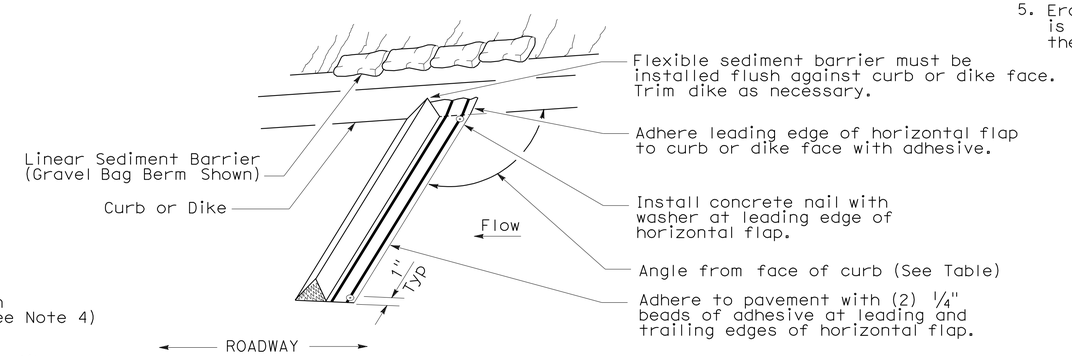

PERSPECTIVE

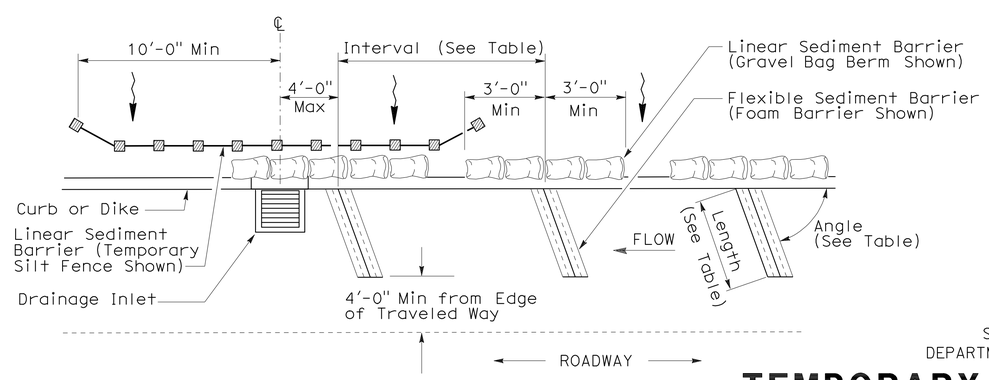

PLAN

TEMPORARY DRAINAGE INLET PROTECTION (TYPE 4B) FLEXIBLE SEDIMENT BARRIER

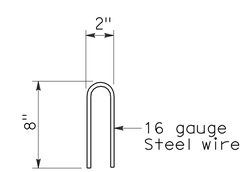

STAPLE DETAIL

STATE OF CALIFORNIA
DEPARTMENT OF TRANSPORTATION

TEMPORARY WATER POLLUTION CONTROL DETAILS (TEMPORARY DRAINAGE INLET PROTECTION)

NO SCALE

NSP T63 DATED AUGUST 15, 2008 SUPPLEMENTS THE STANDARD PLANS BOOK DATED MAY 2006.

NEW STANDARD PLAN NSP T63

2006 NEW STANDARD PLAN NSP T63

DIST	COUNTY	ROUTE	POST MILES TOTAL PROJECT	SHEET NO.	TOTAL SHEETS
02	Sis	97	40.1/54.1	114	114

Robert B Schott
LICENSED LANDSCAPE ARCHITECT

August 15, 2008
PLANS APPROVAL DATE

LICENSED LANDSCAPE ARCHITECT
Robert B. Schott 3625
Signature
11-04-08
Renewal Date
08-11-08
Date
STATE OF CALIFORNIA

The State of California or its officers or agents shall not be responsible for the accuracy or completeness of electronic copies of this plan sheet.

To accompany plans dated 7-12-10

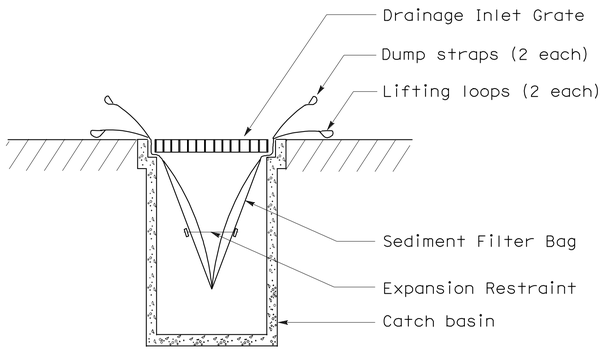

SECTION B-B

SEDIMENT FILTER BAG DETAIL

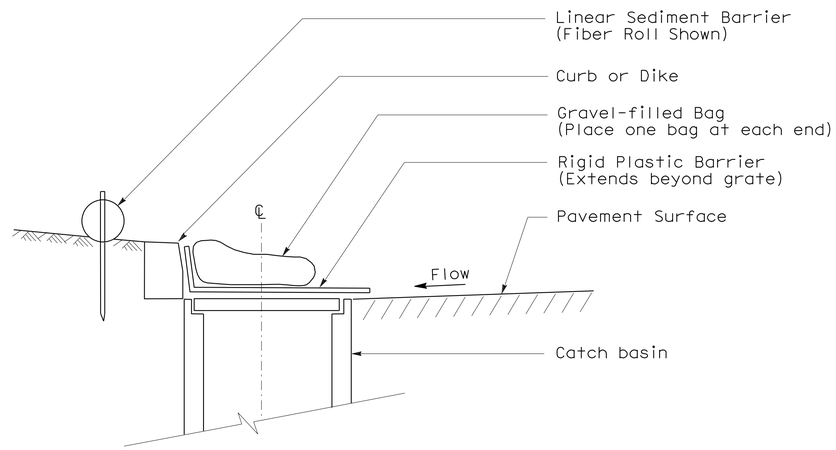

SECTION

TEMPORARY DRAINAGE INLET PROTECTION (TYPE 6A) (CATCH BASIN WITH GRATE)

NOTES:

1. See Standard Plan T51 for Temporary Silt Fence.
2. Dimensions may vary to fit field conditions.

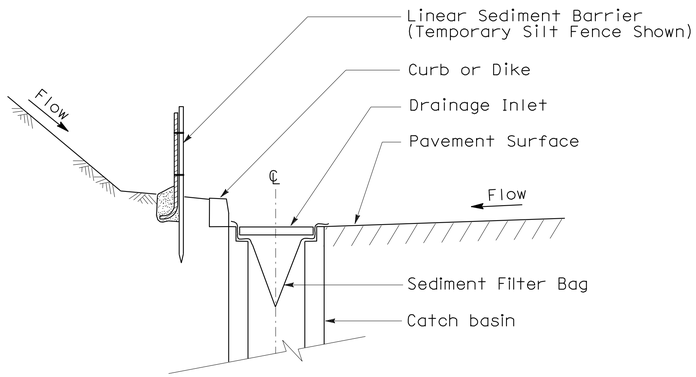

SECTION A-A

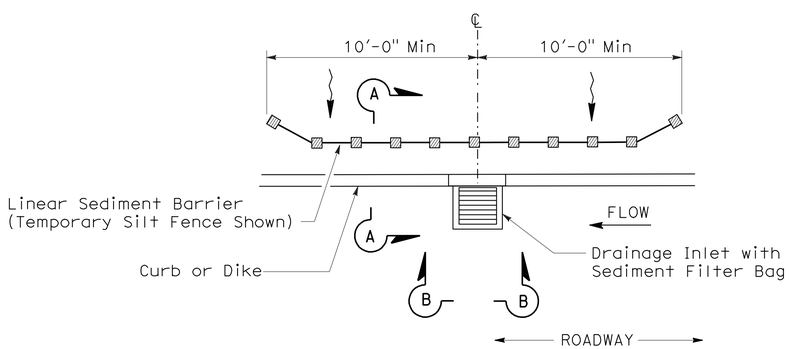

PLAN

TEMPORARY DRAINAGE INLET PROTECTION (TYPE 5) (SEDIMENT FILTER BAG)

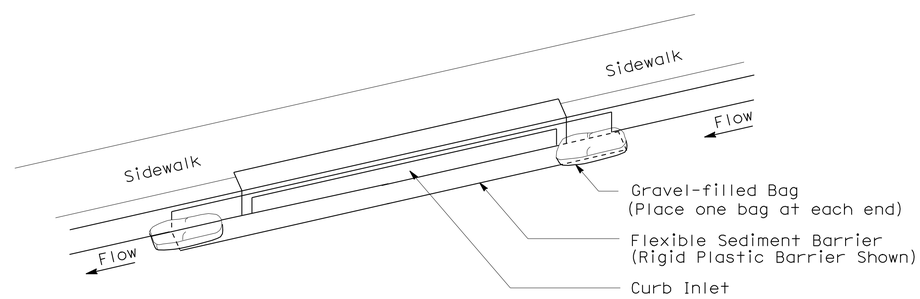

PERSPECTIVE

TEMPORARY DRAINAGE INLET PROTECTION (TYPE 6B) (CURB INLET WITHOUT GRATE)

STATE OF CALIFORNIA
DEPARTMENT OF TRANSPORTATION

TEMPORARY WATER POLLUTION CONTROL DETAILS (TEMPORARY DRAINAGE INLET PROTECTION)

NO SCALE

NSP T64 DATED AUGUST 15, 2008 SUPPLEMENTS THE STANDARD PLANS BOOK DATED MAY 2006.

NEW STANDARD PLAN NSP T64

2006 NEW STANDARD PLAN NSP T64

7-11-08