ACHSNH-P299(182)E

Dist	COUNTY	ROUTE	POST MILES TOTAL PROJECT	SHEET No.	TOTAL SHEETS
02	Tri	299	12.3/12.9	1	149

STATE OF CALIFORNIA
DEPARTMENT OF TRANSPORTATION

PROJECT PLANS FOR CONSTRUCTION ON
STATE HIGHWAY
IN TRINITY COUNTY NEAR BURNT RANCH FROM 1.4 MILES TO 0.9 MILE WEST OF MILL CREEK ROAD

TO BE SUPPLEMENTED BY STANDARD PLANS DATED 2010

INDEX OF PLANS

SHEET No.	DESCRIPTION
1	TITLE MAP AND LOCATION
2-3	TYPICAL CROSS SECTIONS
4-5	LAYOUTS
6-8	PROFILE AND SUPERELEVATION DIAGRAM
9-24	CONSTRUCTION DETAILS
25-37	DRAINAGE PLANS, PROFILES, AND QUANTITIES
38	CONSTRUCTION AREA SIGNS
39-48	STAGE CONSTRUCTION
49	STAGE CONSTRUCTION QUANTITIES
50	TRAFFIC HANDLING DETAILS
51-52	PAVEMENT DELINEATION AND SIGN PLAN
53	PAVEMENT DELINEATION AND SIGN QUANTITIES
54	SIGN DETAILS
55	SUMMARY OF QUANTITIES
56-57	EROSION CONTROL LEGEND
58-59	EROSION CONTROL PLANS
60-62	EROSION CONTROL DETAILS
63	EROSION CONTROL QUANTITIES
64-68	ELECTRICAL
69-94	REVISED STANDARD PLANS
95-149	STRUCTURE PLANS

THE STANDARD PLANS LIST APPLICABLE TO THIS CONTRACT IS INCLUDED IN THE NOTICE TO BIDDERS AND SPECIAL PROVISIONS BOOK.

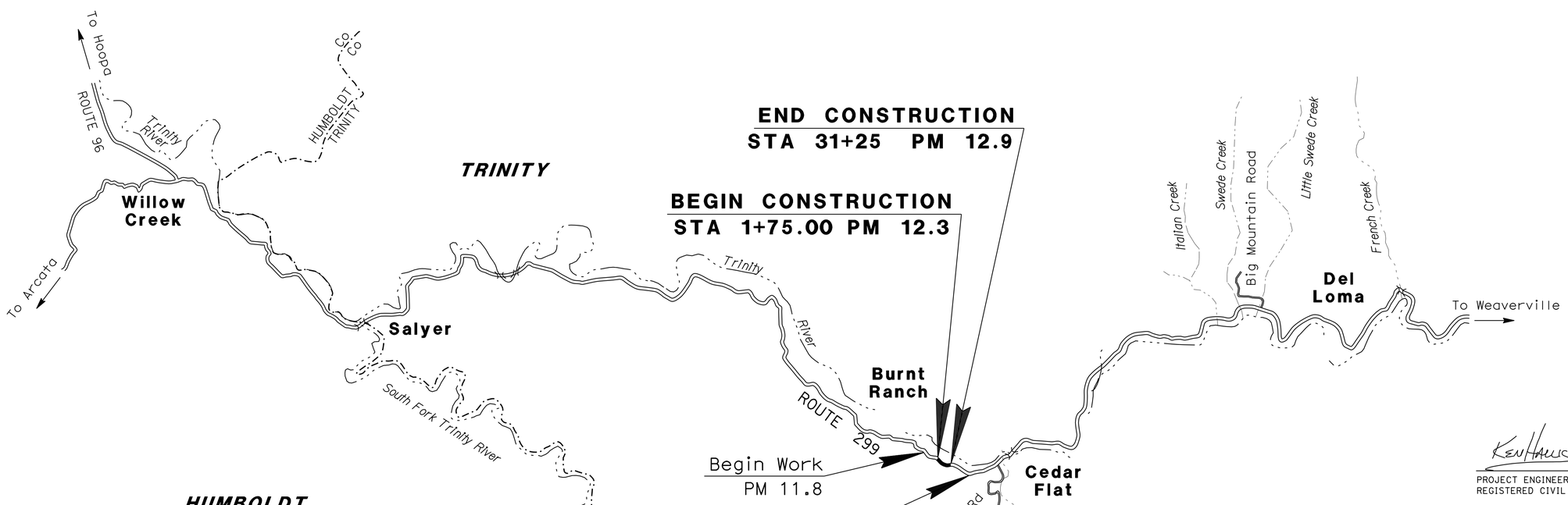

NO SCALE

THE CONTRACTOR SHALL POSSESS THE CLASS (OR CLASSES) OF LICENSE AS SPECIFIED IN THE "NOTICE TO BIDDERS."

PROJECT MANAGER: STEVE ROGERS
DESIGN ENGINEER: AL TRUJILLO

Ken Hallis 03-26-14
PROJECT ENGINEER DATE
REGISTERED CIVIL ENGINEER

March 26, 2014
PLANS APPROVAL DATE

REGISTERED PROFESSIONAL ENGINEER KEN HALLIS No. C38203 Exp. 3-31-15 CIVIL STATE OF CALIFORNIA

THE STATE OF CALIFORNIA OR ITS OFFICERS OR AGENTS SHALL NOT BE RESPONSIBLE FOR THE ACCURACY OR COMPLETENESS OF SCANNED COPIES OF THIS PLAN SHEET.

CONTRACT No.	02-3E7904
PROJECT ID	0200020151

LAST REVISION 02-06-14 DATE PLOTTED => 28-MAY-2014 TIME PLOTTED => 14:56

P:\proj1\02\3E790_plans\pse\23e790ab001.dgn

Dist	COUNTY	ROUTE	POST MILES TOTAL PROJECT	SHEET No.	TOTAL SHEETS
02	Tri	299	12.3/12.9	2	149

REGISTERED CIVIL ENGINEER 03-26-14 DATE

03-26-14
PLANS APPROVAL DATE

REGISTERED PROFESSIONAL ENGINEER KEN HALLIS No. C38203 Exp. 3-31-15 CIVIL STATE OF CALIFORNIA

THE STATE OF CALIFORNIA OR ITS OFFICERS OR AGENTS SHALL NOT BE RESPONSIBLE FOR THE ACCURACY OR COMPLETENESS OF SCANNED COPIES OF THIS PLAN SHEET.

NOTES:

1. DIMENSIONS OF THE PAVEMENT STRUCTURES (STRUCTURAL SECTIONS) ARE SUBJECT TO TOLERANCES SPECIFIED IN THE STANDARD SPECIFICATIONS.
2. SUPERELEVATIONS AS SHOWN OR AS DETERMINED BY THE ENGINEER.

LEGEND:

EBS EDGE BARRIER SLAB
EV EDGE VIADUCT BRIDGE
VC(MC) VEGETATION CONTROL (MINOR CONCRTETE)

DESIGN DESIGNATION:

2009 DIR. SPLIT 55% TRUCKS 15%
2013 ADT 2750
2023 ADT 3100 DHV 400
2033 ADT 3500 DHV 450
CLIMATE REGION- LOW MOUNTAIN

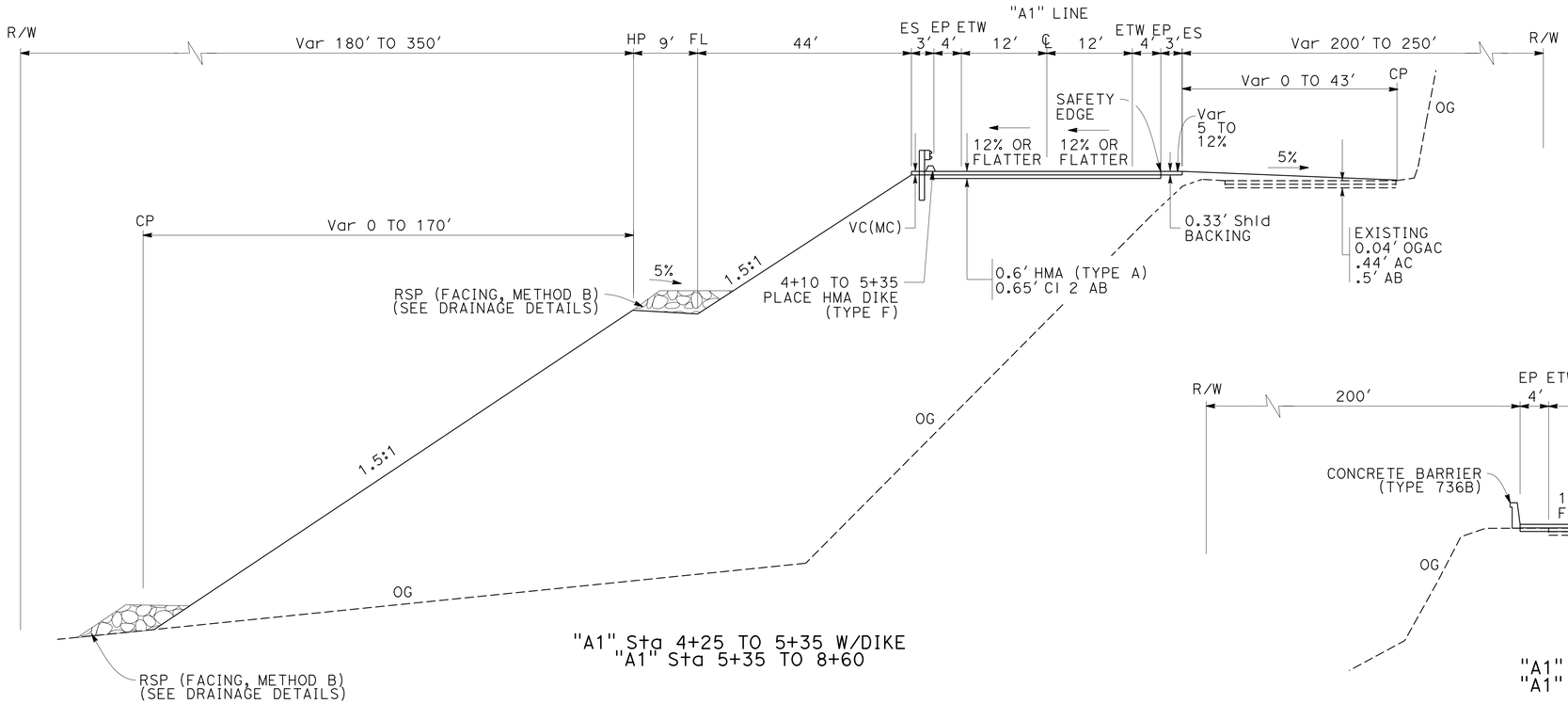

"A1" Sta 4+25 TO 5+35 W/DIKE
"A1" Sta 5+35 TO 8+60

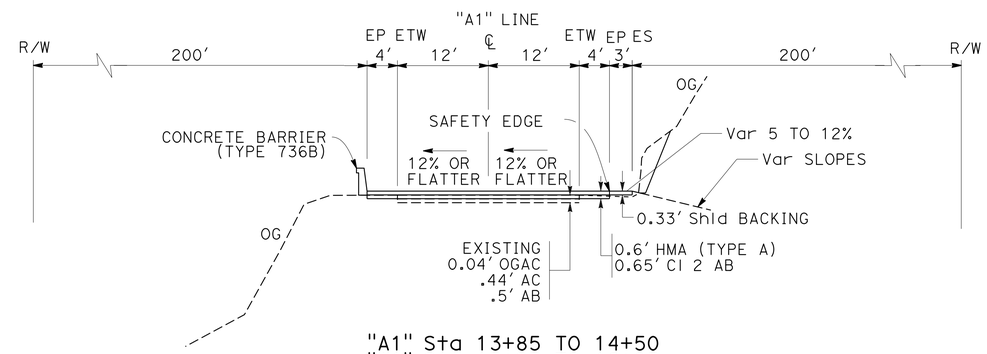

"A1" Sta 13+85 TO 14+50
"A1" Sta 15+25 TO 16+05

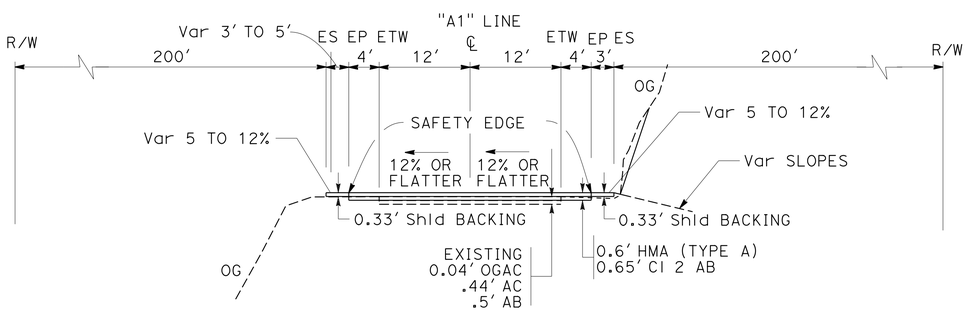

"A1" Sta 2+00 TO 4+25
"A1" Sta 17+83 TO 19+53.9

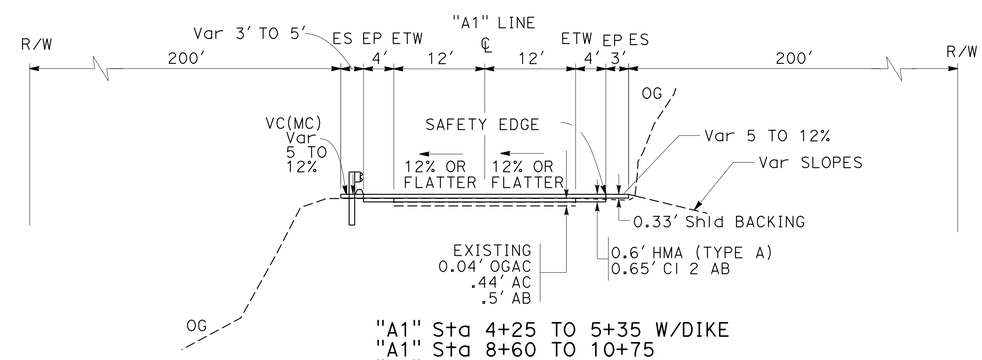

"A1" Sta 4+25 TO 5+35 W/DIKE
"A1" Sta 8+60 TO 10+75
"A1" Sta 17+00 TO 17+83.2
"A1" Sta 19+53.9 TO 20+70
"A1" Sta 21+95 TO 25+00
"A1" Sta 25+00 TO 29+27 W/DIKE
"A1" Sta 29+27 TO 31+00

TYPICAL CROSS SECTIONS

NO SCALE

X-1

ROUTE 299

REVISED BY | DATE REVISED
RYAN PRINS | KEN HALLIS
CALCULATED-DESIGNED BY | CHECKED BY
FUNCTIONAL SUPERVISOR: AL TRUJILLO

STATE OF CALIFORNIA - DEPARTMENT OF TRANSPORTATION
Caltrans® DESIGN

P:\proj1\02\3E790_plans\pse\23e790ca001.dgn

LAST REVISION 03-26-14 | DATE PLOTTED => 28-MAY-2014 | TIME PLOTTED => 14:56

Dist	COUNTY	ROUTE	POST MILES TOTAL PROJECT	SHEET No.	TOTAL SHEETS
02	Tri	299	12.3/12.9	3	149

REGISTERED CIVIL ENGINEER 03-26-14 DATE

03-26-14
PLANS APPROVAL DATE

REGISTERED PROFESSIONAL ENGINEER KEN HALLIS No. C38203 Exp. 3-31-15 CIVIL STATE OF CALIFORNIA

THE STATE OF CALIFORNIA OR ITS OFFICERS OR AGENTS SHALL NOT BE RESPONSIBLE FOR THE ACCURACY OR COMPLETENESS OF SCANNED COPIES OF THIS PLAN SHEET.

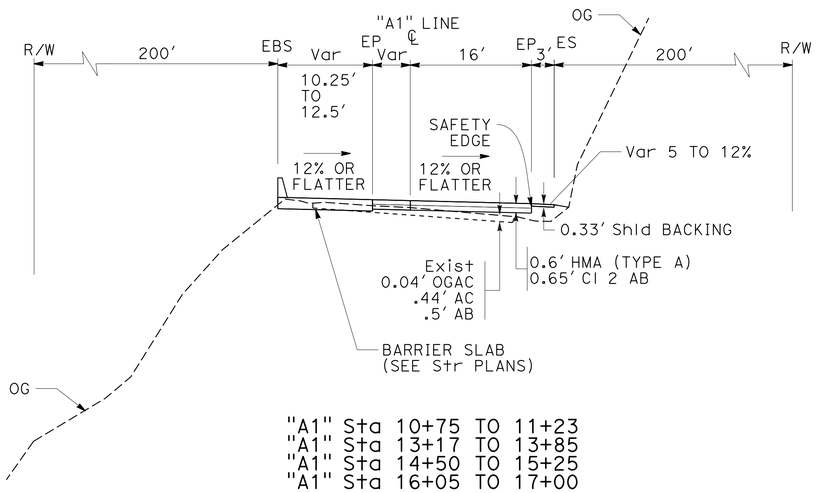

"A1" Sta 10+75 TO 11+23
"A1" Sta 13+17 TO 13+85
"A1" Sta 14+50 TO 15+25
"A1" Sta 16+05 TO 17+00

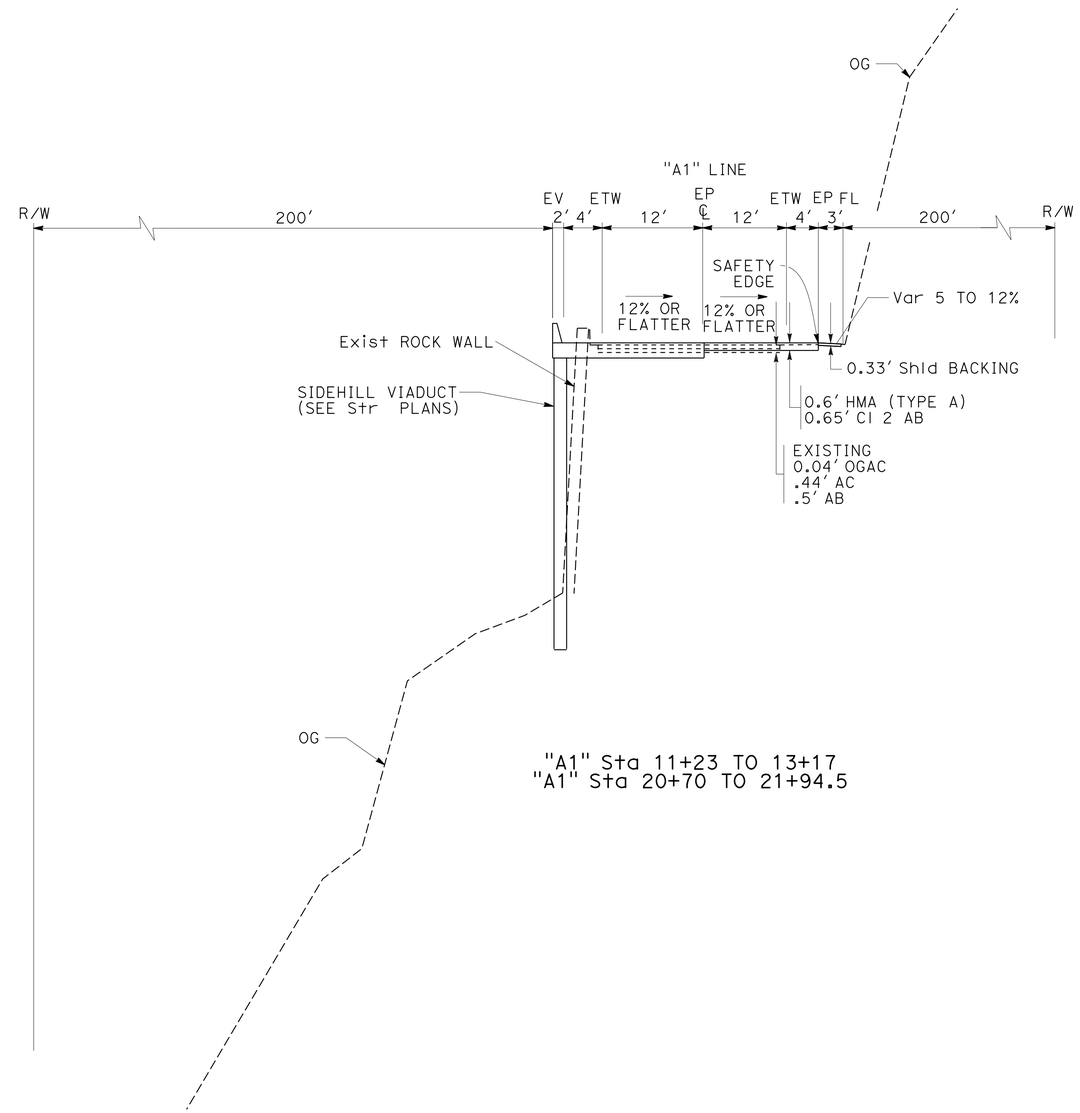

"A1" Sta 11+23 TO 13+17
"A1" Sta 20+70 TO 21+94.5

TYPICAL CROSS SECTIONS

NO SCALE

ROUTE 299

X-2

REVISED BY | DATE REVISED
RYAN PRINS | KEN HALLIS
CALCULATED-DESIGNED BY | CHECKED BY
FUNCTIONAL SUPERVISOR
AL TRUJILLO

STATE OF CALIFORNIA - DEPARTMENT OF TRANSPORTATION
Caltrans
DESIGN

P:\proj1\02\3E790_plans\pse\23e790ca002.dgn

LAST REVISION 03-26-14 | DATE PLOTTED => 28-MAY-2014 TIME PLOTTED => 14:56

BORDER LAST REVISED 7/2/2010 | USERNAME => s123119 DGN FILE => 23e790ca002.dgn | RELATIVE BORDER SCALE IS IN INCHES 0 1 2 3 | UNIT 0316 | PROJECT NUMBER & PHASE 02-0002-0151-1 | EA: 02-3E7901

Dist	COUNTY	ROUTE	POST MILES TOTAL PROJECT	SHEET No.	TOTAL SHEETS
02	Tri	299	12.3/12.9	4	149

REGISTERED CIVIL ENGINEER 03-26-14 DATE

03-26-14
PLANS APPROVAL DATE

REGISTERED PROFESSIONAL ENGINEER KEN HALLIS No. C38203 Exp. 3-31-15 CIVIL STATE OF CALIFORNIA

THE STATE OF CALIFORNIA OR ITS OFFICERS OR AGENTS SHALL NOT BE RESPONSIBLE FOR THE ACCURACY OR COMPLETENESS OF SCANNED COPIES OF THIS PLAN SHEET.

NOTES:

1. FOR ACCURATE RIGHT OF WAY DATA, CONTACT RIGHT OF WAY ENGINEERING AT THE DISTRICT OFFICE.
2. STAIN ALL GALVANIZED SURFACES.

ABBREVIATIONS;

CPACP	COLD PLANE ASPHALT CONCRETE PAVMENT
AITS	ALTERNATIVE IN-LINE TERMINAL SYSTEM
ERS(RC)	EARTH RETAINING SYSTEM (RAILING COMPONENTS)
EAA	END ANCHOR ASSEMBLY
IAA	INTERMEDIATE ANCHOR ASSEMBLY
VC(MC)	VEGETATION CONTROL (MINOR CONCRETE)

LEGEND:

- SIDEHILL VIADUCT BRIDGE
- BARRIER SLAB
- CPACP

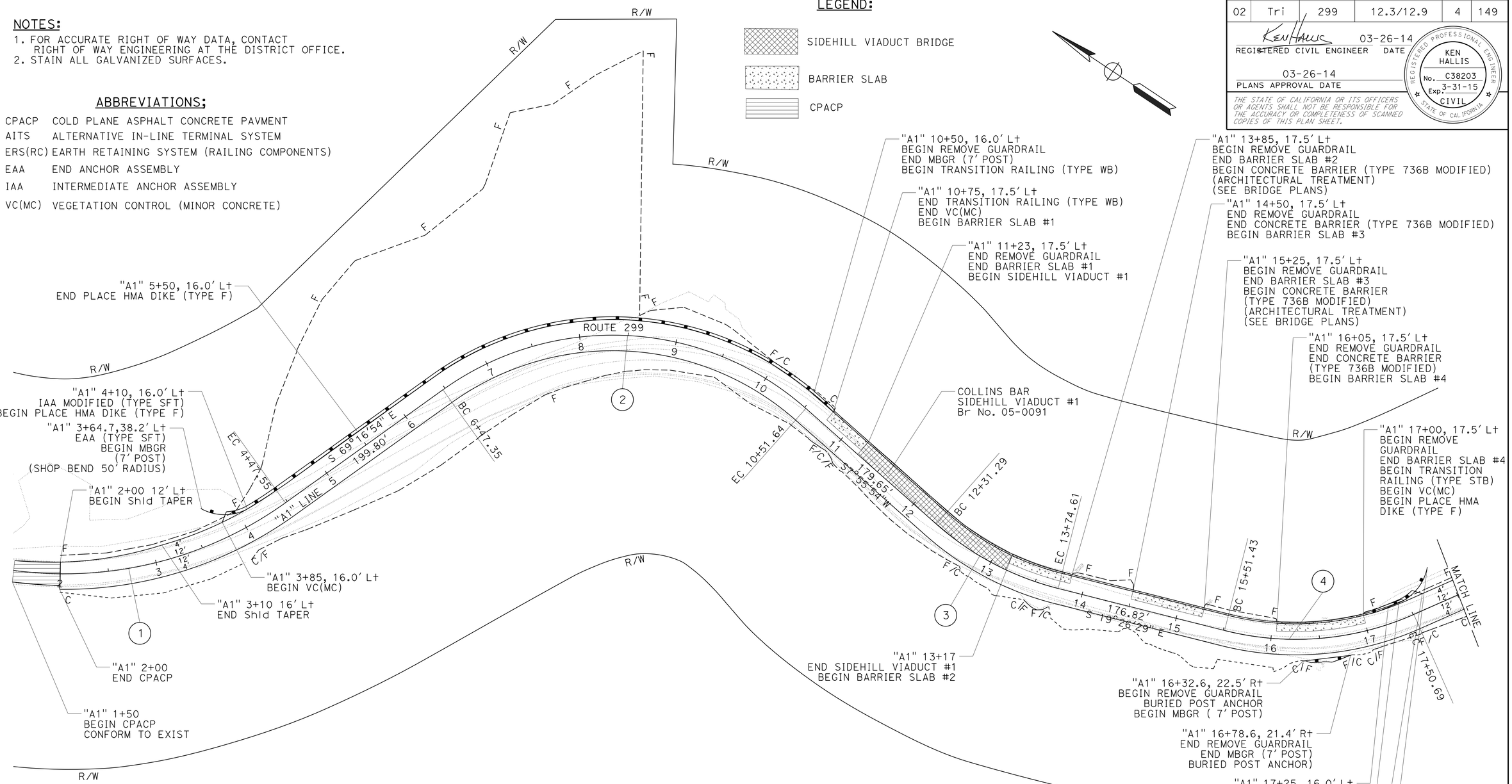

CURVE DATA

No. ⊕	R	Δ	T	L
1	390'	59°55'27"	224.82'	407.89'
2	300'	77°12'48"	239.54'	404.29'
3	300'	27°22'23"	73.06'	143.32'
4	300'	38°3'18"	103.46'	199.26'

LAYOUT

SCALE: 1" = 50'

L-1

REVISED BY	DATE REVISED
RYAN PRINS	KEN HALLIS

CALCULATED-DESIGNED BY / CHECKED BY

FUNCTIONAL SUPERVISOR: AL TRUJILLO

STATE OF CALIFORNIA - DEPARTMENT OF TRANSPORTATION

Caltrans® DESIGN

P:\proj\02\3E790_plans\pse\23e790ea001.dgn

LAST REVISION 03-26-14 | DATE PLOTTED => 28-MAY-2014 | TIME PLOTTED => 14:56

Dist	COUNTY	ROUTE	POST MILES TOTAL PROJECT	SHEET No.	TOTAL SHEETS
02	Tri	299	12.3/12.9	5	149

REGISTERED CIVIL ENGINEER 03-26-14 DATE

03-26-14
PLANS APPROVAL DATE

REGISTERED PROFESSIONAL ENGINEER KEN HALLIS No. C38203 Exp. 3-31-15 CIVIL STATE OF CALIFORNIA

THE STATE OF CALIFORNIA OR ITS OFFICERS OR AGENTS SHALL NOT BE RESPONSIBLE FOR THE ACCURACY OR COMPLETENESS OF SCANNED COPIES OF THIS PLAN SHEET.

NOTE:

1. FOR ACCURATE RIGHT OF WAY DATA, CONTACT RIGHT OF WAY ENGINEERING AT THE DISTRICT OFFICE.

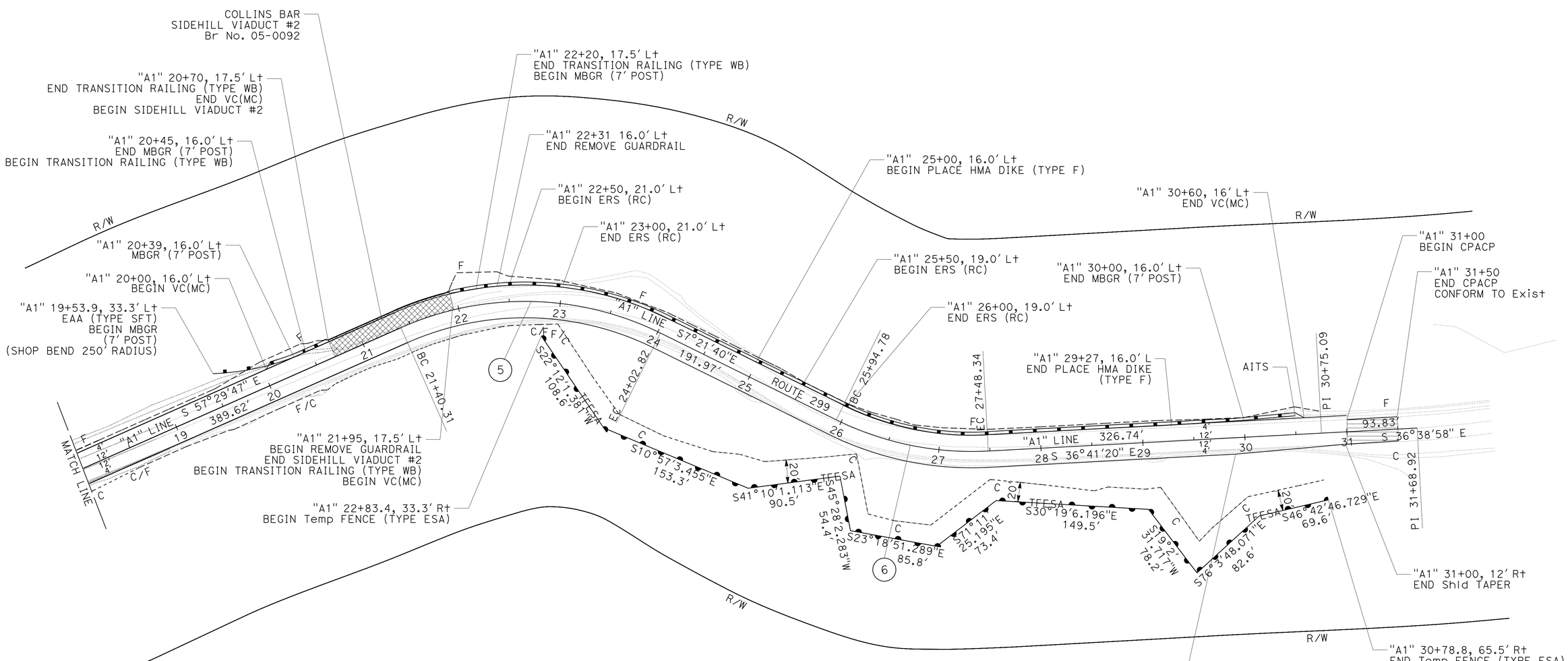

CURVE DATA

5	300′	50°8′07″	140.32′	262.51′
6	300′	29°19′41″	78.50′	153.56′

LAYOUT

SCALE: 1″ = 50′

L-2

STATE OF CALIFORNIA - DEPARTMENT OF TRANSPORTATION

Caltrans® **DESIGN**

FUNCTIONAL SUPERVISOR: AL TRUJILLO

CALCULATED-DESIGNED BY: RYAN PRINS

CHECKED BY: KEN HALLIS

REVISED BY

DATE REVISED

P:\proj1\02\3E790_plans\pse\23e790ea002.dgn

LAST REVISION 03-26-14 | DATE PLOTTED => 28-MAY-2014 | TIME PLOTTED => 14:56

BORDER LAST REVISED 7/2/2010 | USERNAME => s123119 | DGN FILE => 23e790ea002.dgn | RELATIVE BORDER SCALE IS IN INCHES 0 1 2 3 | UNIT 0316 | PROJECT NUMBER & PHASE 02-0002-0151-1 | EA: 02-3E7901

Dist	COUNTY	ROUTE	POST MILES TOTAL PROJECT	SHEET No.	TOTAL SHEETS
02	Tri	299	12.3/12.9	6	149

REGISTERED CIVIL ENGINEER 03-26-14 DATE

03-26-14
PLANS APPROVAL DATE

REGISTERED PROFESSIONAL ENGINEER KEN HALLIS No. C38203 Exp. 3-31-15 CIVIL STATE OF CALIFORNIA

THE STATE OF CALIFORNIA OR ITS OFFICERS OR AGENTS SHALL NOT BE RESPONSIBLE FOR THE ACCURACY OR COMPLETENESS OF SCANNED COPIES OF THIS PLAN SHEET.

ABBREVIATIONS:

CPACP COLD PLANE ASPHALT CONCRETE PAVMENT

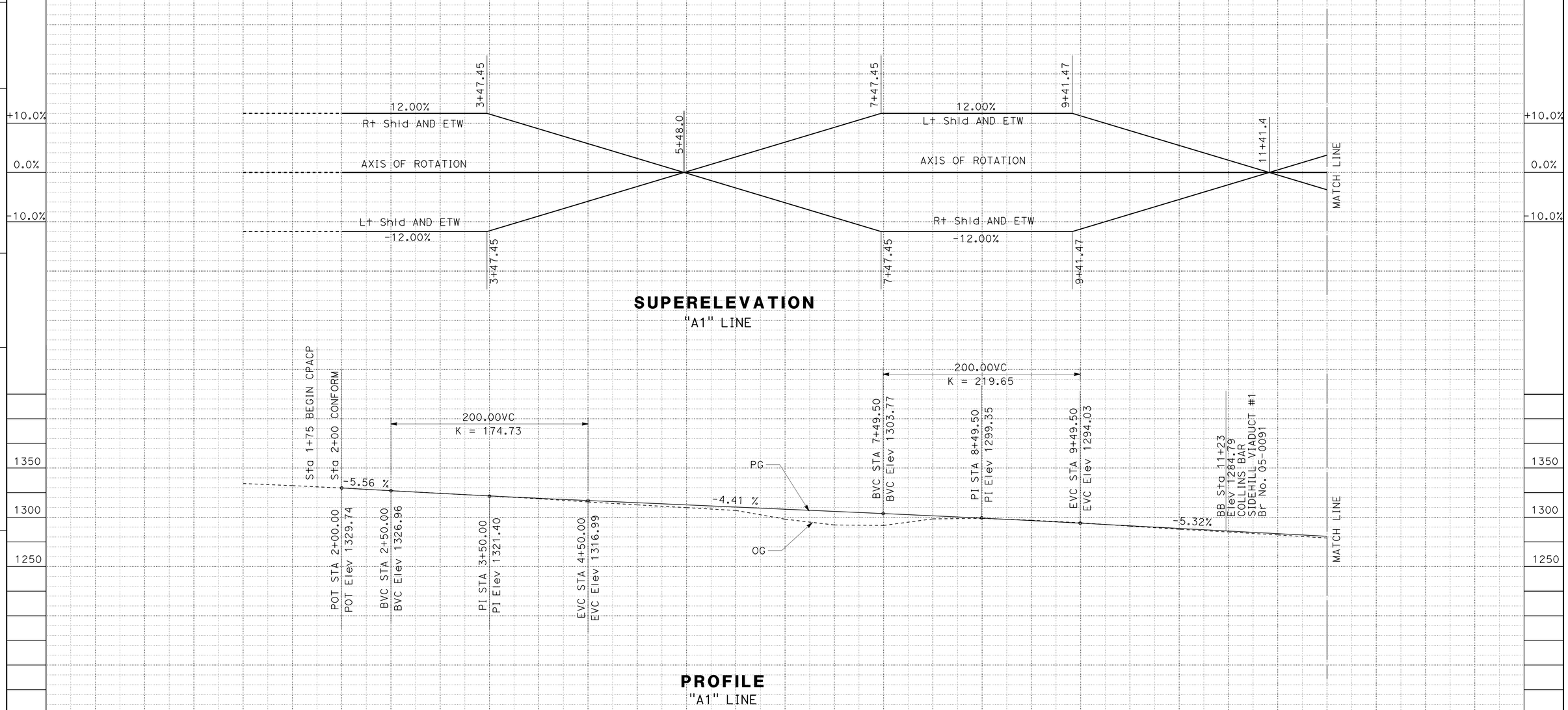

PROFILE AND SUPERELEVATION DIAGRAM

SCALE: 1" = 50' Horiz
1" = 50' Vert

PS-1

STATION	2	3	4	5	6	7	8	9	10	11	TOTAL
CY Exc	1180										
CY Emb	43443										

REVISED BY | DATE REVISED
RYAN PRINS | KEN HALLIS
CALCULATED-DESIGNED BY | CHECKED BY
FUNCTIONAL SUPERVISOR: AL TRUJILLO

STATE OF CALIFORNIA - DEPARTMENT OF TRANSPORTATION
Caltrans DESIGN

P:\proj1\02\3E790_plans\pse\23e790fb001.dgn

LAST REVISION 03-26-14 | DATE PLOTTED => 28-MAY-2014 | TIME PLOTTED => 14:56

Dist	COUNTY	ROUTE	POST MILES TOTAL PROJECT	SHEET No.	TOTAL SHEETS
02	Tri	299	12.3/12.9	7	149

REGISTERED CIVIL ENGINEER 03-26-14 DATE

03-26-14
PLANS APPROVAL DATE

REGISTERED PROFESSIONAL ENGINEER KEN HALLIS No. C38203 Exp. 3-31-15 CIVIL STATE OF CALIFORNIA

THE STATE OF CALIFORNIA OR ITS OFFICERS OR AGENTS SHALL NOT BE RESPONSIBLE FOR THE ACCURACY OR COMPLETENESS OF SCANNED COPIES OF THIS PLAN SHEET.

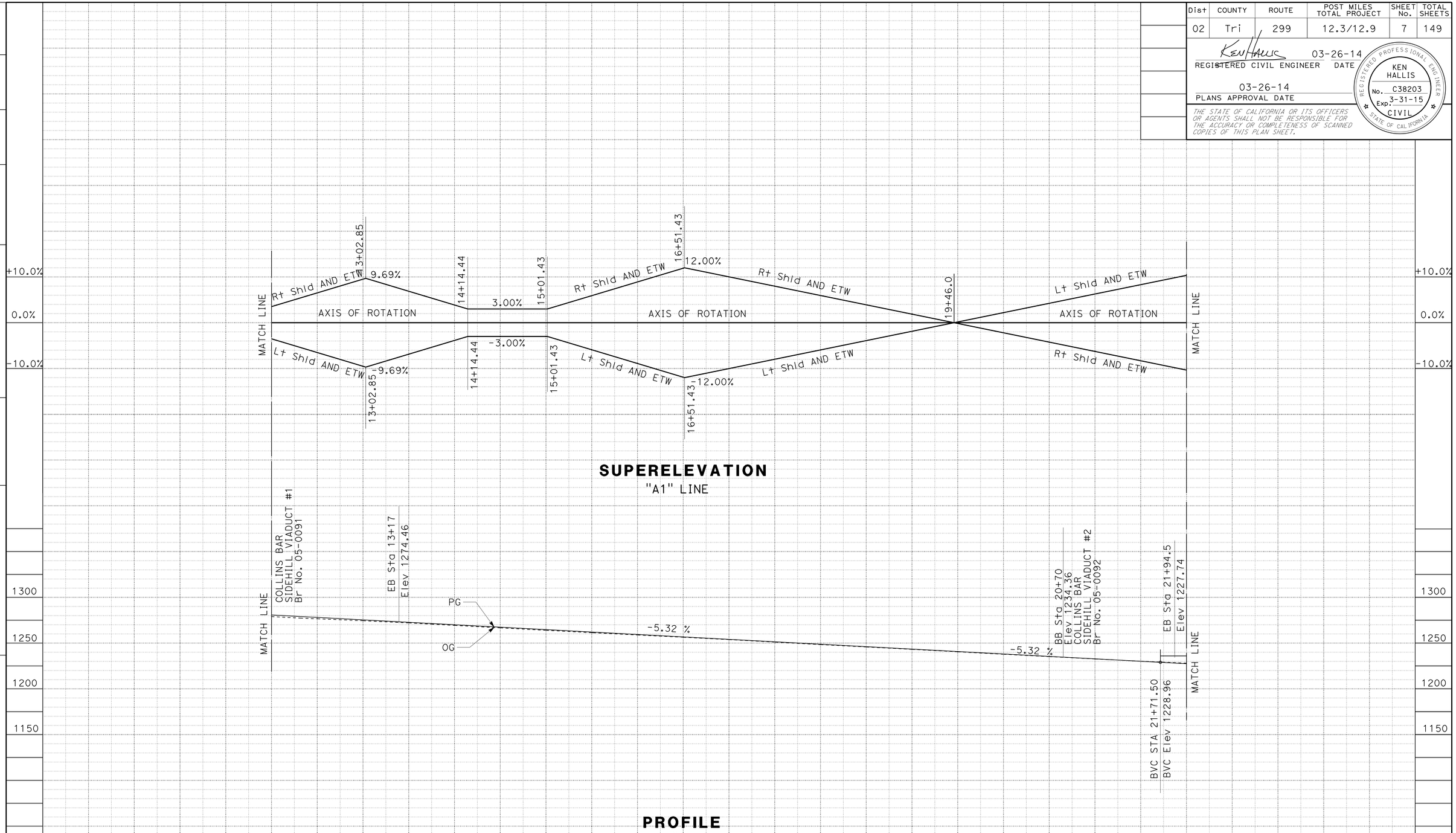

PROFILE AND SUPERELEVATION DIAGRAM

SCALE: 1" = 50' Horiz
1" = 50' Vert

PS-2

STATION	12	13	14	15	16	17	18	19	20	21	22	TOTAL
CY Exc	1090											
CY Emb	42											

STATE OF CALIFORNIA - DEPARTMENT OF TRANSPORTATION
Caltrans® DESIGN

FUNCTIONAL SUPERVISOR: AL TRUJILLO
CALCULATED-DESIGNED BY: RYAN PRINS
CHECKED BY: KEN HALLIS
REVISED BY
DATE REVISED

P:\proj1\02\3E790_plans\pse\23e790fb002.dgn

LAST REVISION DATE PLOTTED => 28-MAY-2014
03-26-14 TIME PLOTTED => 14:56

BORDER LAST REVISED 7/2/2010
USERNAME => s123119
DGN FILE => 23e790fb002.dgn
RELATIVE BORDER SCALE IS IN INCHES 0 1 2 3
UNIT 0316
PROJECT NUMBER & PHASE 02-0002-0151-1
EA: 02-3E7901

Dist	COUNTY	ROUTE	POST MILES TOTAL PROJECT	SHEET No.	TOTAL SHEETS
02	Tri	299	12.3/12.9	8	149

REGISTERED CIVIL ENGINEER 03-26-14 DATE

03-26-14
PLANS APPROVAL DATE

REGISTERED PROFESSIONAL ENGINEER KEN HALLIS No. C38203 Exp. 3-31-15 CIVIL STATE OF CALIFORNIA

THE STATE OF CALIFORNIA OR ITS OFFICERS OR AGENTS SHALL NOT BE RESPONSIBLE FOR THE ACCURACY OR COMPLETENESS OF SCANNED COPIES OF THIS PLAN SHEET.

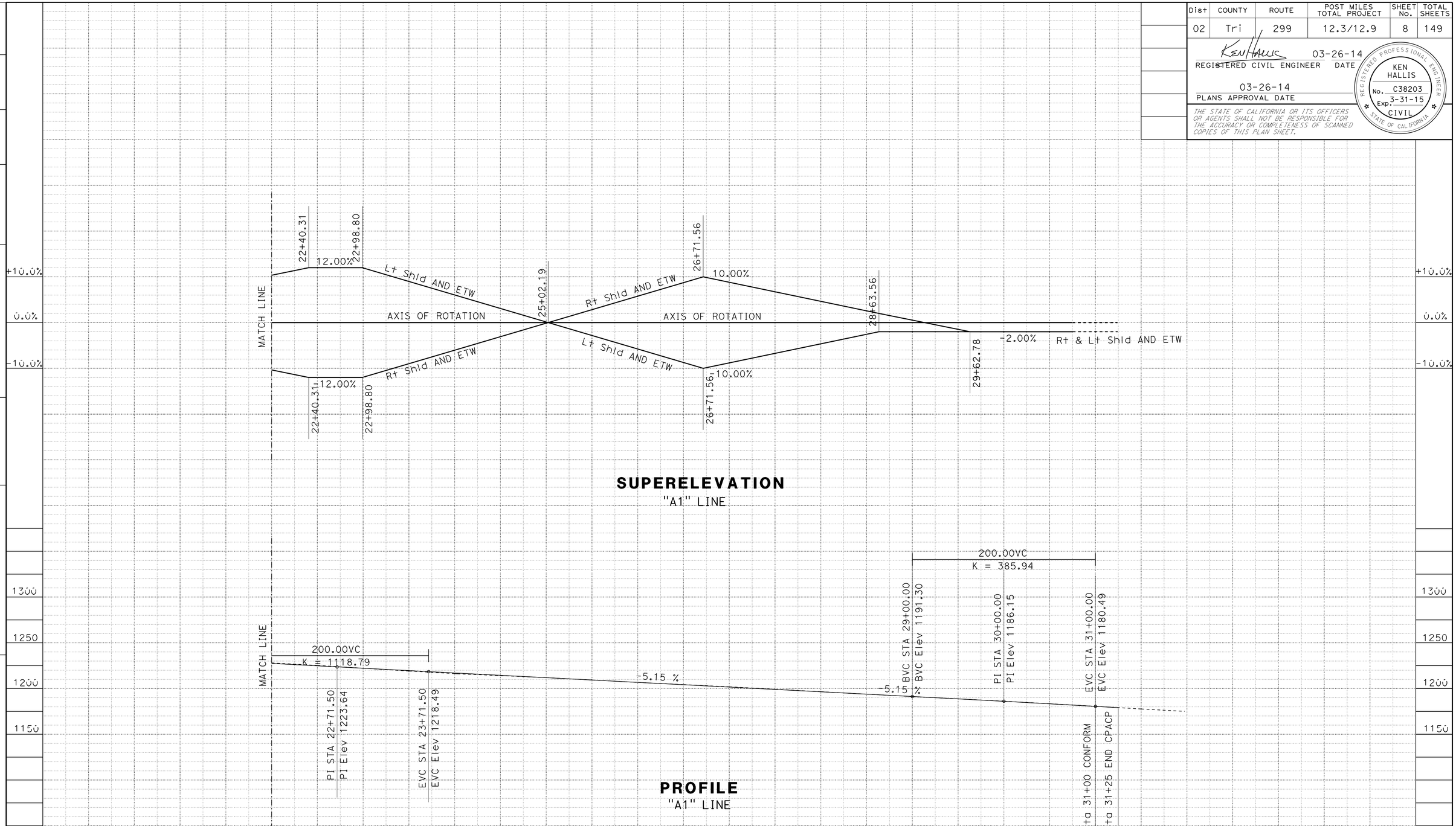

PROFILE AND SUPERELEVATION DIAGRAM

SCALE: 1" = 50' Horiz
1" = 50' Vert

PS-3

STATION	22	23	24	25	26	27	28	29	30	31	32	TOTAL
CY Exc	← 12618 →											
CY Emb	← 117 →											

REVISED BY | DATE REVISED
RYAN PRINS | KEN HALLIS
CALCULATED-DESIGNED BY | CHECKED BY
FUNCTIONAL SUPERVISOR: AL TRUJILLO

STATE OF CALIFORNIA - DEPARTMENT OF TRANSPORTATION
Caltrans
DESIGN

P:\proj1\02\3E790_plans\pse\23e790fb003.dgn

LAST REVISION 03-26-14 | DATE PLOTTED => 28-MAY-2014 | TIME PLOTTED => 14:56

Dist	COUNTY	ROUTE	POST MILES TOTAL PROJECT	SHEET No.	TOTAL SHEETS
02	Tri	299	12.3/12.9	9	149

REGISTERED CIVIL ENGINEER 03-26-14 DATE

03-26-14
PLANS APPROVAL DATE

REGISTERED PROFESSIONAL ENGINEER KEN HALLIS No. C38203 Exp. 3-31-15 CIVIL STATE OF CALIFORNIA

THE STATE OF CALIFORNIA OR ITS OFFICERS OR AGENTS SHALL NOT BE RESPONSIBLE FOR THE ACCURACY OR COMPLETENESS OF SCANNED COPIES OF THIS PLAN SHEET.

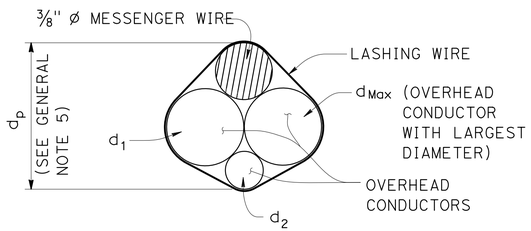

$d_p = 3/8'' + d_{Max} + 0.30 * (d_1 + d_2 + \ldots d_n)$

PROJECTED DEPTH OF OVERHEAD BUNDLE, (dp)

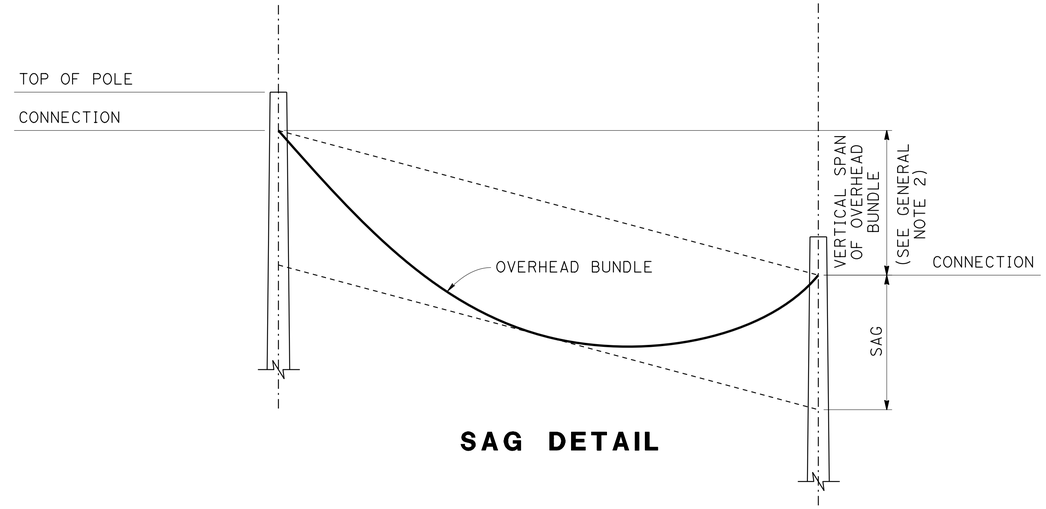

SAG DETAIL

DESIGN: AASHTO STANDARD SPECIFICATIONS FOR STRUCTURAL SUPPORTS FOR HIGHWAY SIGNS, LUMINAIRES AND TRAFFIC SIGNALS, FIFTH EDITION (LTS-5).

GROUP LOAD COMBINATIONS:

I DEAD LOAD
II DEAD LOAD + WIND LOAD
III DEAD LOAD + 0.5 (WIND LOAD) + ICE LOAD
IV FATIGUE: NOT USED

LOADING:

WIND LOADING: 100 MPH (3-SECOND GUST)
WIND RECURRENCE INTERVAL: 10 YEARS
COMBINED HEIGHT, EXPOSURE, AND ELEVATED TERRAIN FACTOR = 1.05 (EXPOSURE C, STRUCTURE IS NOT LOCATED ON OR OVER THE TOP HALF OF A RIDGE, HILL, OR ESCARPMENT)

ICE LOADING: 3.0 PSF ON SURFACES, 0.60 IN RADIAL THICKNESS OF ICE AT A UNIT WEIGHT OF 60 PCF ON OVERHEAD BUNDLES

BASIC DESIGN VALUES:

TIMBER POLES: FB = 1850 PSI
FV = 110 PSI
FCP = 230 PSI
FC = 950 PSI
E = 1500 X 10^3 PSI

DESIGN WIRE BREAKING STRENGTHS:

ASTM A475, UTILITIES GRADE, 7 STRAND MODIFIED BY TERMINATION EFFICIENCY FACTOR OF 0.8

FOUNDATION DESIGN NOTES:

1. POLE EMBEDMENT DEPTH DESIGN IS BASED ON BROMS' APPROXIMATE PROCEDURE AS DESCRIBED IN ARTICLE 13.6 OF AASHTO LTS-5.

2. EMBEDMENT DEPTH IS CALCULATED BASED ON FOLLOWING SOIL PARAMETERS,
COHESIVE SOIL:
SHEAR STRENGTH OF SOIL C = 1500 PSF.
COHESIONLESS SOIL:
Ø = 30 DEG, γ = 120 PCF.
SOIL ASSUMED TO BE UNSATURATED.

3. AN OVERLOAD FACTOR OF 2.0 AND AN UNDERCAPACITY FACTOR OF 0.7 WERE USED FOR SAFETY FACTOR OF 2.86.

4. ALLOWABLE VERTICAL BEARING PRESSURE AT THE END BEARING OF POLES IS 3000 PSF AT 6 FEET OR MORE EMBEDMENT.

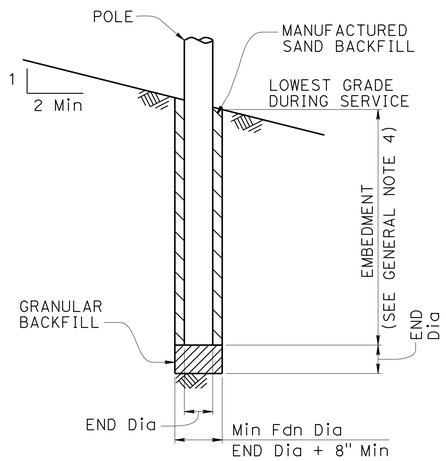

POLE FOUNDATION

GENERAL NOTES:

1. THE MESSENGER WIRE AND ANY COMBINATION OF OVERHEAD CONDUCTORS MUST NOT EXCEED EITHER A SELF WEIGHT OF 3.0 LB/FT OR THE MAXIMUN D_p.

2. THE MAXIMUM VERTICAL SPAN IS 10% OF THE HORIZONTAL SPAN.

3. FOR POLES WITH ADJACENT UNBALANCED HORIZONTAL SPANS, THE SHORTEST HORIZONTAL SPAN MUST BE AT LEAST 50% OF THE LARGEST HORIZONTAL SPAN.

4. ADD 2'-0" FOR SLOPES ABOVE 1V:4H.

5. FOR A POLE SUPPORTING MULTIPLE SPANS, CALCULATE dp FOR EACH SPAN AND USE THE LARGEST VALUE.

6. DO NOT EXCEED THE ATTACHMENTS SHOWN.

DIAMETERS AND SELF WEIGHT OF OVERHEAD CONDUCTORS

CONDUCTOR OR CABLE TYPE	DIAMETER d (in)	WEIGHT w (plf)
3 CONDUCTOR SIGNAL CABLE (3CSC)	0.400	0.0980
5 CONDUCTOR SIGNAL CABLE (5CSC)	0.500	0.1560
9 CONDUCTOR SIGNAL CABLE (9CSC)	0.650	0.2760
12 CONDUCTOR SIGNAL CABLE (12CSC)	0.800	0.3970
28 CONDUCTOR SIGNAL CABLE (28CSC)	0.900	0.6490
1-#14	0.166	0.0235
1-#12	0.185	0.0330
1-#10	0.210	0.0476
1-#8	0.271	0.0774
1-#6	0.310	0.1130
1-#4	0.359	0.1690
1-#3	0.388	0.2080
1-#2	0.420	0.2560
1-#1	0.498	0.3340
6-CONDUCTOR SIGNAL INTERCONNECT CABLE (SIC)	0.350	0.0860
12-CONDUCTOR SIGNAL INTERCONNECT CABLE (SIC)	0.500	0.1440
DETECTOR LEAD-IN CABLE (DLC)	0.310	0.0440
12 to 48-STRAND FIBER OPTIC CABLE (48FOC)	0.424	0.0600
72-STRAND FIBER OPTIC CABLE (72FOC)	0.484	0.0770
96-STRAND FIBER OPTIC CABLE (96FOC)	0.535	0.1050
144-STRAND FIBER OPTIC CABLE (144FOC)	0.670	0.1890
3/8" Ø MESSENGER WIRE	0.375	0.2730

CONSTRUCTION DETAILS

NO SCALE

C-1

REVISED BY | DATE REVISED
RYAN PRINS | KEN HALLIS
CALCULATED-DESIGNED BY | CHECKED BY
FUNCTIONAL SUPERVISOR
AL TRUJILLO

STATE OF CALIFORNIA - DEPARTMENT OF TRANSPORTATION
Caltrans
DESIGN

P:\proj\02\3E790_plans\pse\23e790ga001.dgn

LAST REVISION 03-26-14 | DATE PLOTTED => 28-MAY-2014 | TIME PLOTTED => 14:56

Dist	COUNTY	ROUTE	POST MILES TOTAL PROJECT	SHEET No.	TOTAL SHEETS
02	Tri	299	12.3/12.9	10	149

REGISTERED CIVIL ENGINEER 03-26-14 DATE

03-26-14
PLANS APPROVAL DATE

REGISTERED PROFESSIONAL ENGINEER KEN HALLIS No. C38203 Exp. 3-31-15 CIVIL STATE OF CALIFORNIA

THE STATE OF CALIFORNIA OR ITS OFFICERS OR AGENTS SHALL NOT BE RESPONSIBLE FOR THE ACCURACY OR COMPLETENESS OF SCANNED COPIES OF THIS PLAN SHEET.

POLE SELECTION TABLE

LEGEND:

- Wood Pole No Attachments
- A — Wood Pole with Attachments
- —OH— Overhead Bundle

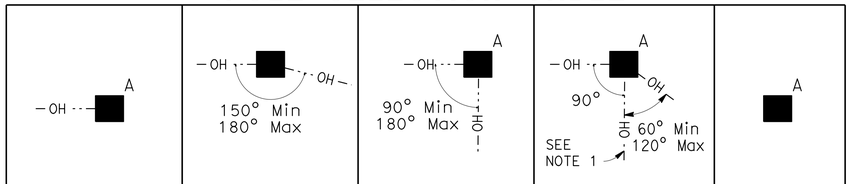

OVERHEAD BUNDLE HORIZONTAL SPAN (Max)		CASE 1N				CASE 2N				CASE 3N				CASE 4N				CASE 5N
	MAXIMUM d_p	1"	1.5"	2.0"	2.5"	1"	1.5"	2.0"	2.5"	1.0"	1.5"	2.0"	2.5"	1"	1.5"	2.0"	2.5"	N/A
50′	MINIMUM POLE CLASS	H-1	H-2	H-2	H-2	4	3	2	1	H-2	H-2	H-3	H-3	H-4	H-4	H-4	H-5	CLASS 1 E = 10′
	POLE EMBEDMENT (E)	11′				10′				11′				12′				
100′	MINIMUM POLE CLASS	H-2	H-3	H-4	H-5	1	H-1	H-2	H-3	H-4	H-5	H-5	H-6	H-5	H-5	H-6		
	POLE EMBEDMENT (E)	12′				11′				12′				12′				
150′	MINIMUM POLE CLASS	H-4	H-5	H-6		H-1	H-2	H-3	H-5	H-6				H-6				
	POLE EMBEDMENT (E)	12′				12′				12′				12′				
200′	MINIMUM POLE CLASS	H-5	H-6			H-2	H-3	H-5										
	POLE EMBEDMENT (E)	12′				12′												

KEY NOTES:

1. CCTV CAMERA ASSEMBLY OR VEHICLE DETECTION SYSTEM
2. OVERHEAD BUNDLE CONSISTING OF A 3/8" Ø MESSENGER WIRE AND OVERHEAD CONDUCTORS AND LASHING WIRE.
3. LUMINAIRE WITH MAST ARM
4. PEDESTRIAN PUSHBUTTON
5. SIGNAL FACE WITH 3 INDICATIONS OR SINGLE SHEET SIGN PANEL (10 SQFT MAX)
6. RISER WITH WEATHER HEAD AS REQUIRED
7. PULL BOX AS REQUIRED
8. GROUNDING AS REQUIRED
9. SINGLE SECTION FLASHING BEACON OR SINGLE SHEET SIGN PANEL (4 SQFT MAX)
10. SINGLE SHEET SIGN PANEL (4′ X 4′ MAX) OR SIGNAL FACE WITH 3 INDICATIONS
11. FLASHING BEACON CONTROL ASSEMBLY
12. NEMA 3R ENCLOSURE, 26"(W) X 56"(H) X 12"(D) MAX DIMENSIONS. MAX WEIGHT INCLUDING BATTERIES, 450 LBS
13. 25′ SQFT MAX TOTAL PHOTOVOLTAIC PANELS MOUNTED AS SHOWN AS REQUIRED
14. 2-SECTION 12" FLASHING BEACON

NOTES:

1. IN ADDITION TO OTHER RESTRICTIONS ON MAXIMUM HORIZONTAL SPAN, THIS HORIZONTAL SPAN MUST NOT EXCEED 100′.
2. CASES 1N, 3N AND 4N MAY SUBSTITUTE THE ATTACHMENTS SHOWN IN CASE 5N IF THE PHOTOVOLTAIC PANEL IS NOT INCLUDED.
3. FOR ADDITIONAL INFORMATION REGARDING SIGNAL EQUIPMENT SEE ELECTRICAL LAYOUT SHEETS.

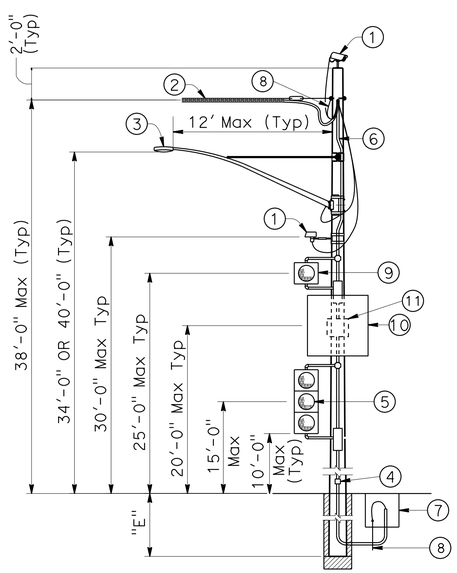

CASE 1N
POLE AT DEAD END WITH ATTACHMENTS
SEE NOTE 2

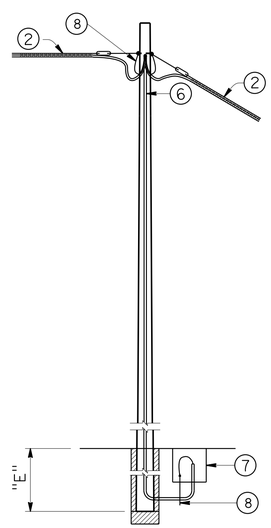

CASE 2N
POLE AT TANGENT WITHOUT ATTACHMENTS

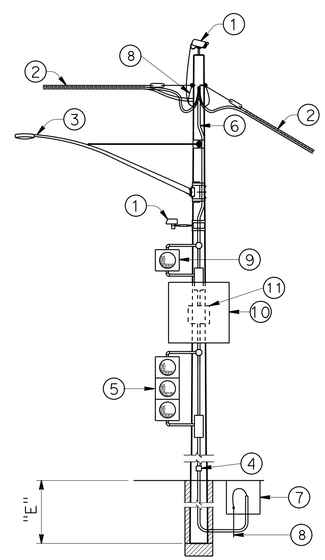

CASE 3N
POLE AT TANGENT OR CORNER WITH ATTACHMENTS
SEE NOTE 2

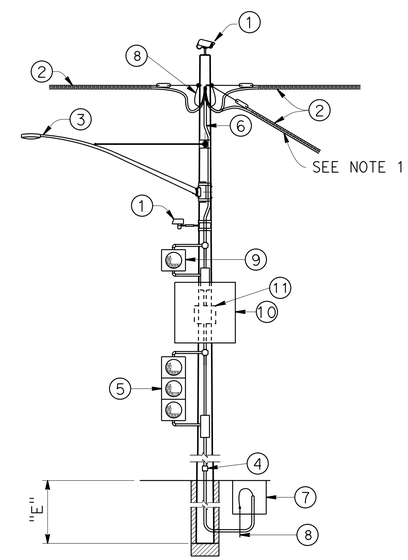

CASE 4N
POLE AT JUNCTION WITH ATTACHMENTS
SEE NOTE 2

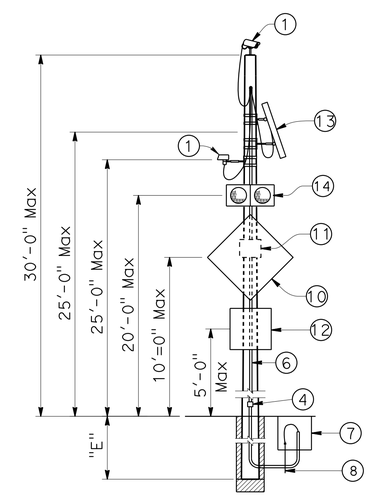

CASE 5N
POLE WITHOUT OVERHEAD BUNDLE WITH ATTACHMENTS

CONSTRUCTION DETAILS

NO SCALE

C-2

REVISED BY | DATE REVISED
RYAN PRINS | KEN HALLIS
CALCULATED-DESIGNED BY | CHECKED BY
FUNCTIONAL SUPERVISOR
AL TRUJILLO

STATE OF CALIFORNIA - DEPARTMENT OF TRANSPORTATION
Caltrans®
DESIGN

P:\proj1\02\3E790_plans\pse\23e790ga002.dgn

LAST REVISION 03-26-14 | DATE PLOTTED => 28-MAY-2014 | TIME PLOTTED => 14:56

Dist	COUNTY	ROUTE	POST MILES TOTAL PROJECT	SHEET No.	TOTAL SHEETS
02	Tri	299	12.3/12.9	11	149

REGISTERED CIVIL ENGINEER DATE 03-26-14

PLANS APPROVAL DATE 03-26-14

REGISTERED PROFESSIONAL ENGINEER KEN HALLIS No. C38203 Exp. 3-31-15 CIVIL STATE OF CALIFORNIA

THE STATE OF CALIFORNIA OR ITS OFFICERS OR AGENTS SHALL NOT BE RESPONSIBLE FOR THE ACCURACY OR COMPLETENESS OF SCANNED COPIES OF THIS PLAN SHEET.

POLE SELECTION TABLE

LEGEND:

A — Wood Pole with Attachments

—··TS—··— Overhead Bundle with Signal Faces (See Note 1)

OVERHEAD BUNDLE HORIZONTAL SPAN (Max)		CASE 1NT		
		MAXIMUM d_p	1"	1.5"	2.0"
	75'	MINIMUM POLE CLASS	H-5	H-6	H-6
		POLE EMBEDMENT (E)	13'		

KEY NOTES:

1. OVERHEAD BUNDLE CONSISTING OF A 3/8" ø MESSENGER WIRE AND OVERHEAD CONDUCTORS AND LASHING WIRE
2. LUMINAIRE WITH MAST ARM
3. SIGNAL FACE WITH 3 INDICATIONS
4. RISER WITH WEATHER HEAD AS REQUIRED
5. PULL BOX AS REQUIRED
6. GROUNDING AS REQUIRED
7. 3/8" ø TETHER WIRE
8. SINGLE SECTION FLASHING BEACON
9. FOR SIGN DETAILS SEE SHEET CS-1

NOTES:

1. MAXIMUM OF 2 SIGNAL FACES PER SPAN WITHIN THE HATCHED REGIONS INDICATED BY "LOCATION OF SIGNAL FACES".
2. FOR ADDITIONAL INFORMATION REGARDING SIGNAL EQUIPMENT SEE ELECTRICAL LAYOUT SHEETS.

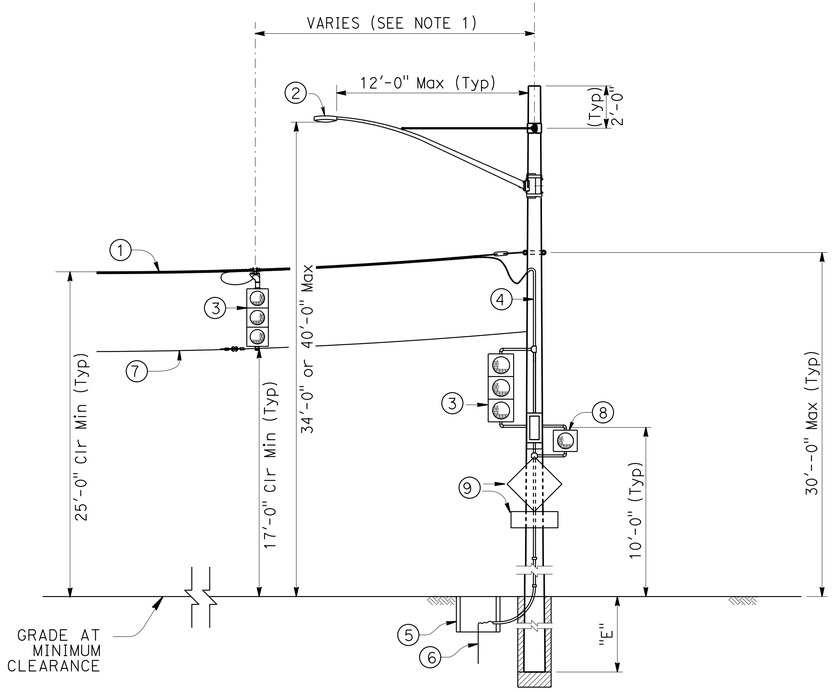

CASE 1NT

POLE AT DEAD END WITH ATTACHMENTS (Typ)

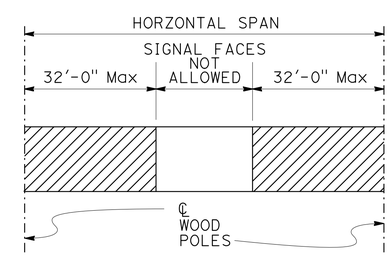

LOCATION OF SIGNAL FACES

CONSTRUCTION DETAILS

NO SCALE

C-3

REVISED BY | DATE REVISED | RYAN PRINS | KEN HALLIS | CALCULATED-DESIGNED BY | CHECKED BY | FUNCTIONAL SUPERVISOR | AL TRUJILLO

STATE OF CALIFORNIA - DEPARTMENT OF TRANSPORTATION

Caltrans DESIGN

P:\proj1\02\3E790_plans\pse\23e790ga003.dgn

LAST REVISION 03-26-14 | DATE PLOTTED => 28-MAY-2014 | TIME PLOTTED => 14:56

Dist	COUNTY	ROUTE	POST MILES TOTAL PROJECT	SHEET No.	TOTAL SHEETS
02	Tri	299	12.3/12.9	12	149

REGISTERED CIVIL ENGINEER 03-26-14 DATE

03-26-14
PLANS APPROVAL DATE

REGISTERED PROFESSIONAL ENGINEER KEN HALLIS No. C38203 Exp. 3-31-15 CIVIL STATE OF CALIFORNIA

THE STATE OF CALIFORNIA OR ITS OFFICERS OR AGENTS SHALL NOT BE RESPONSIBLE FOR THE ACCURACY OR COMPLETENESS OF SCANNED COPIES OF THIS PLAN SHEET.

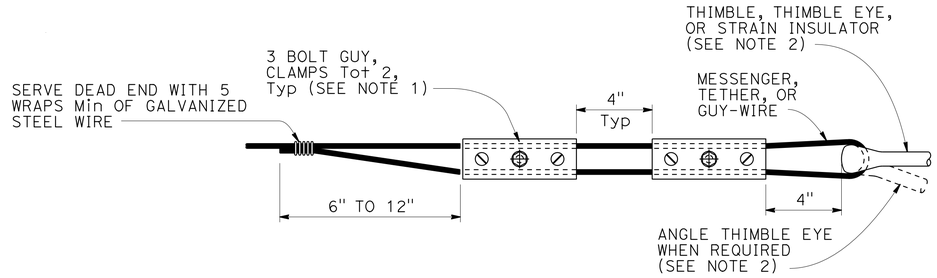

ALTERNATIVE TERMINATION OF MESSENGER WIRES USING GUY CLAMPS

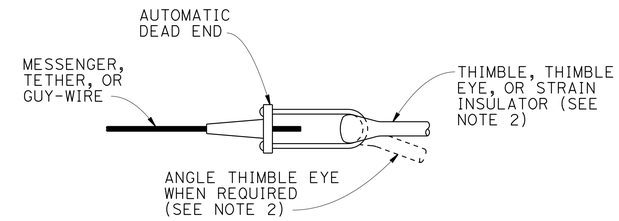

TERMINATION OF WIRES USING AUTOMATIC DEAD END

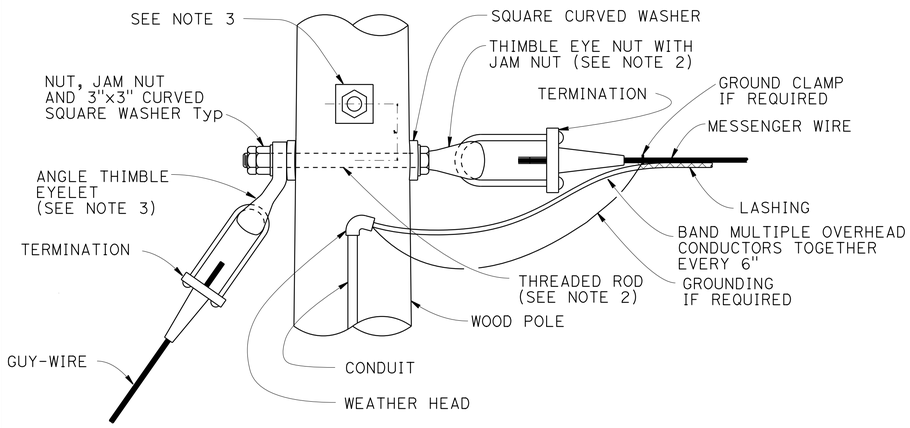

POLE AT DEAD END WITH GUY-WIRE CONNECTION

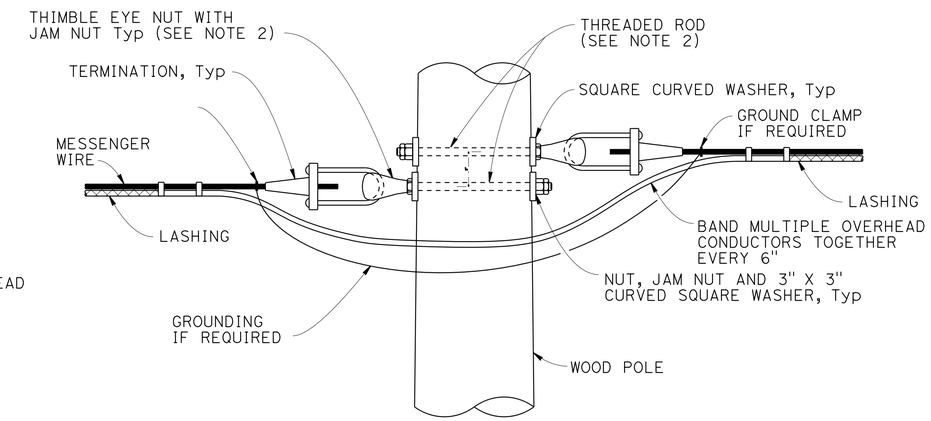

POLE AT TANGENT OR CORNER CONNECTION

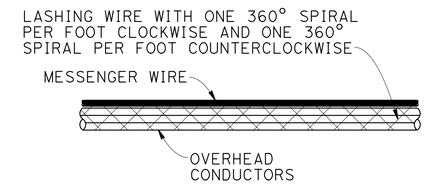

DOUBLE LASHING DETAIL

USE IF d_p IS GREATER THAN 1½"

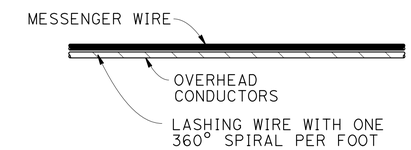

TYPICAL LASHING DETAIL

USE IF d_p IS 1½" OR LESS

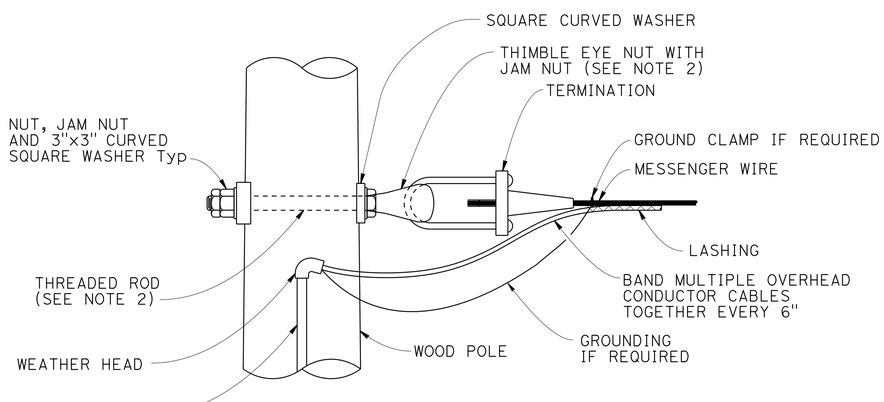

POLE AT DEAD END CONNECTION

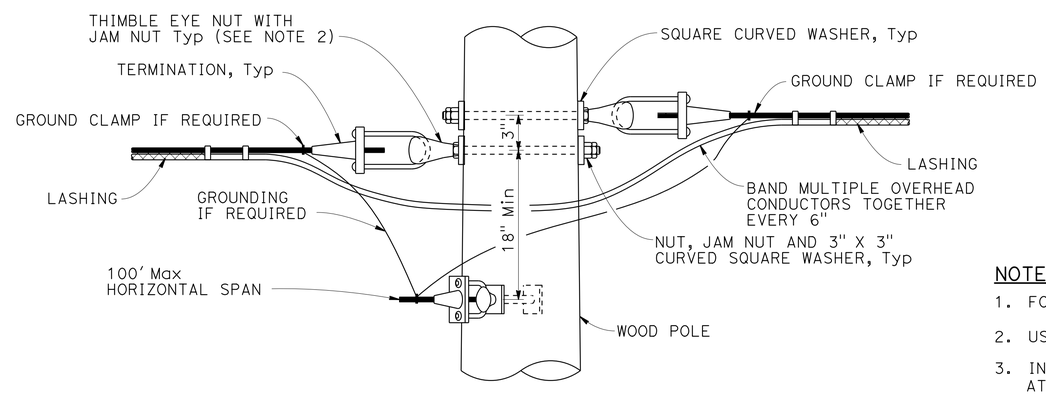

POLE AT JUNCTION CONNECTION

NOTES:

1. FOR GUY WIRES USE 3 CLAMPS.
2. USE ⅝" Dia EXCEPT ¾" Dia AT GUYED WIRES
3. INSTALL ADDITIONAL ANGLE THIMBLE EYELET AT POLES WITH TWO GUY WIRES.

CONSTRUCTION DETAILS

NO SCALE

C-4

REVISED BY | DATE REVISED
RYAN PRINS | KEN HALLIS
CALCULATED-DESIGNED BY | CHECKED BY
FUNCTIONAL SUPERVISOR: AL TRUJILLO

STATE OF CALIFORNIA - DEPARTMENT OF TRANSPORTATION
DESIGN
Caltrans

P:\proj1\02\3E790_plans\pse\23e790ga004.dgn

LAST REVISION 03-26-14 | DATE PLOTTED => 28-MAY-2014 | TIME PLOTTED => 14:56

BORDER LAST REVISED 7/2/2010 | USERNAME => s123119 | DGN FILE => 23e790ga004.dgn | RELATIVE BORDER SCALE IS IN INCHES 0 1 2 3 | UNIT 0316 | PROJECT NUMBER & PHASE 02-0002-0151-1 | EA: 02-3E7901

Dist	COUNTY	ROUTE	POST MILES TOTAL PROJECT	SHEET No.	TOTAL SHEETS
02	Tri	299	12.3/12.9	13	149

REGISTERED CIVIL ENGINEER 03-26-14 DATE

03-26-14
PLANS APPROVAL DATE

REGISTERED PROFESSIONAL ENGINEER KEN HALLIS No. C38203 Exp. 3-31-15 CIVIL STATE OF CALIFORNIA

THE STATE OF CALIFORNIA OR ITS OFFICERS OR AGENTS SHALL NOT BE RESPONSIBLE FOR THE ACCURACY OR COMPLETENESS OF SCANNED COPIES OF THIS PLAN SHEET.

NOTES:

1. LUMINAIRE MAST ARMS MUST BE IN COMPLIANCE WITH STANDARD PLAN ES-6D WITH NOTED MODIFICATIONS.
2. VERIFY POLE DIMENSIONS AT TIE-ROD ATTACHMENT HEIGHT. FABRICATE 8" FLAT BAR WITH "L" DIMENSION TO MAINTAIN AN OPEN GAP BETWEEN FLANGES IN FINISHED INSTALLATION.
3. NOT ALL SCREW HEADS AND BOLT HEADS ARE SHOWN FOR CLARITY.
4. MAST ARM NOT SHOWN FOR CLARITY.

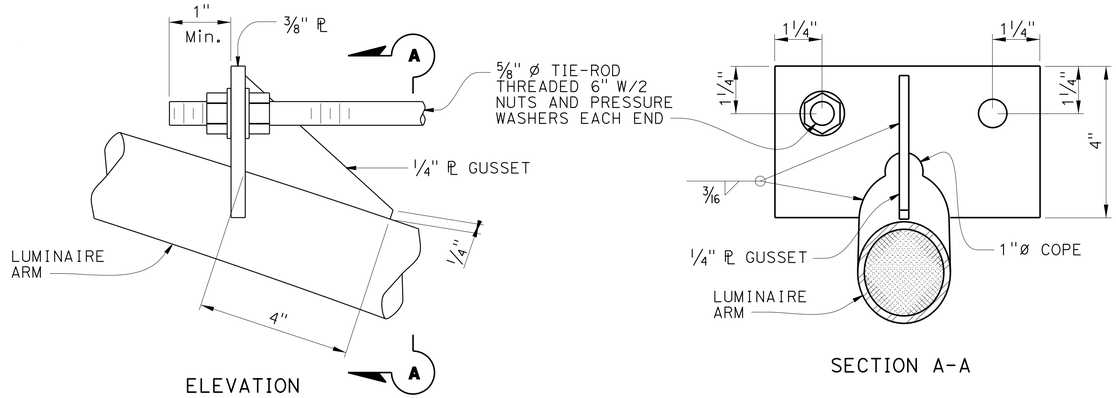

ELEVATION

SECTION A-A

DETAIL A
TIE-ROD AT LUMINAIRE ARM

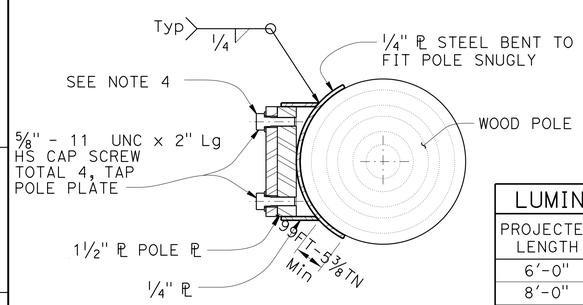

SECTION E-E

LUMINAIRE MAST ARM DATA			
PROJECTED LENGTH	N RISE	Min OD AT POLE	NOMINAL THICKNESS
6'-0"	2'-0"±	3 1/4"	0.1196"
8'-0"	2'-6"±	3 1/2"	
10'-0"	3'-3"±	3 7/8"	
12'-0"	4'-3"±		

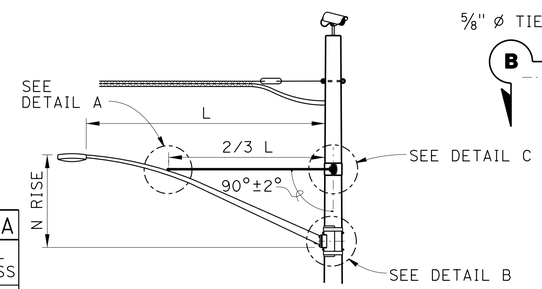

LUMINAIRE MAST ARM

NOTE:
NOT ALL SCREW AND BOLT HEADS SHOWN FOR CLARITY.

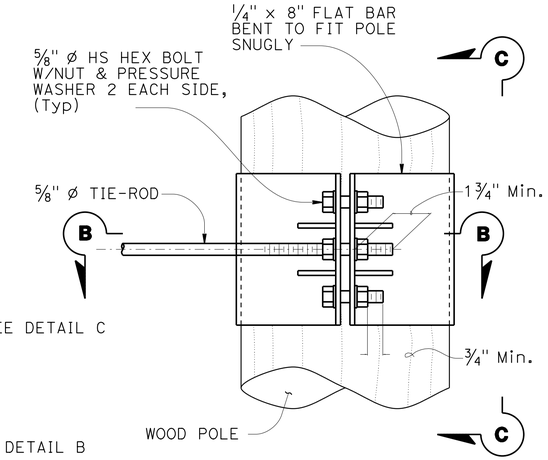

ELEVATION

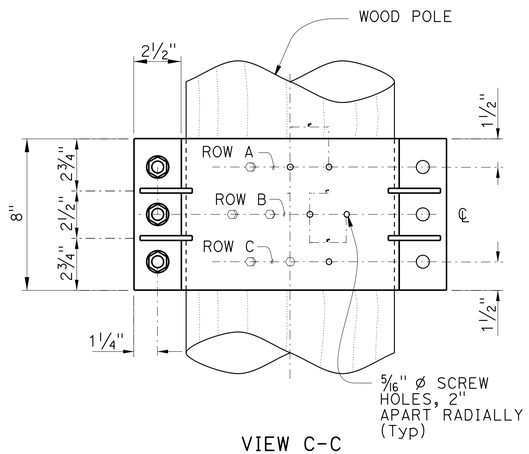

VIEW C-C

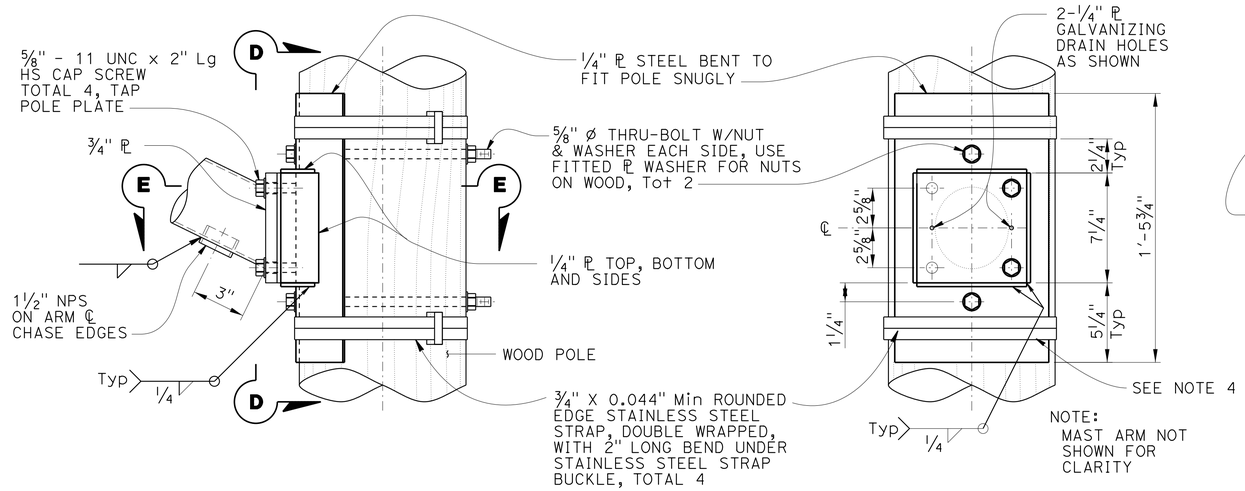

ELEVATION

VIEW D-D

DETAIL B
ARM CONNECTION DETAILS

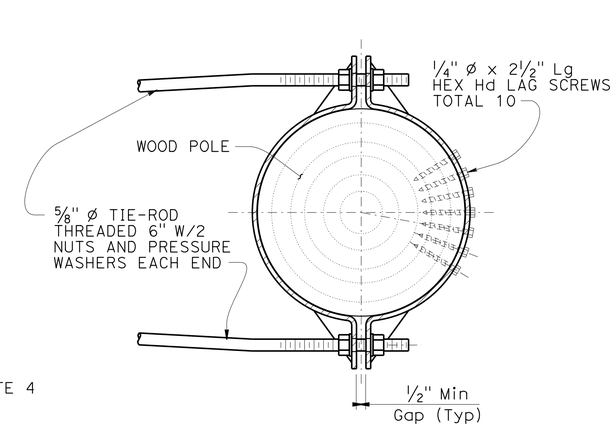

SECTION B-B

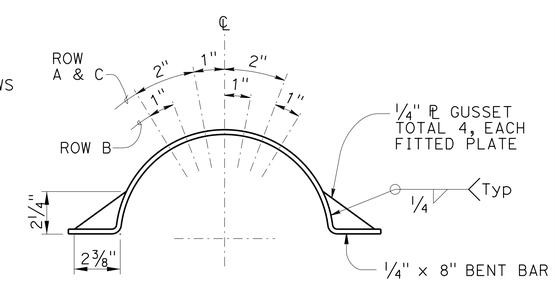

LAG SCREW AND GUSSET PLATE LAYOUT

DETAIL C
TIE-ROD AT POLE

CONSTRUCTION DETAILS

NO SCALE

C-5

REVISED BY | DATE REVISED | RYAN PRINS | KEN HALLIS | CALCULATED-DESIGNED BY | CHECKED BY | FUNCTIONAL SUPERVISOR | AL TRUJILLO

STATE OF CALIFORNIA - DEPARTMENT OF TRANSPORTATION
Caltrans DESIGN

P:\proj1\02\3E790_plans\pse\23e790ga005.dgn

LAST REVISION 03-26-14 | DATE PLOTTED => 28-MAY-2014 | TIME PLOTTED => 14:56

Dist	COUNTY	ROUTE	POST MILES TOTAL PROJECT	SHEET No.	TOTAL SHEETS
02	Tri	299	12.3/12.9	14	149

REGISTERED CIVIL ENGINEER 03-26-14 DATE

03-26-14
PLANS APPROVAL DATE

REGISTERED PROFESSIONAL ENGINEER KEN HALLIS No. C38203 Exp. 3-31-15 CIVIL STATE OF CALIFORNIA

THE STATE OF CALIFORNIA OR ITS OFFICERS OR AGENTS SHALL NOT BE RESPONSIBLE FOR THE ACCURACY OR COMPLETENESS OF SCANNED COPIES OF THIS PLAN SHEET.

NOTES:

1. VERIFY POLE DIMENSIONS AT TERMINAL COMPARTMENT FOR FABRICATION OF BACKING PLATE AND CURVED WASHER.
2. BACKING PLATE TO BE GALVANIZED AFTER FABRICATION.
3. ¾" X 0.044" MINIMUM, ROUNDED EDGE STAINLESS STEEL STRAPS, DOUBLE WRAPPED WITH 2" LONG BEND UNDER STAINLESS STEEL STRAP BUCKLE.
4. FOR DETAILS NOT SHOWN SEE STANDARD PLAN ES-4D.

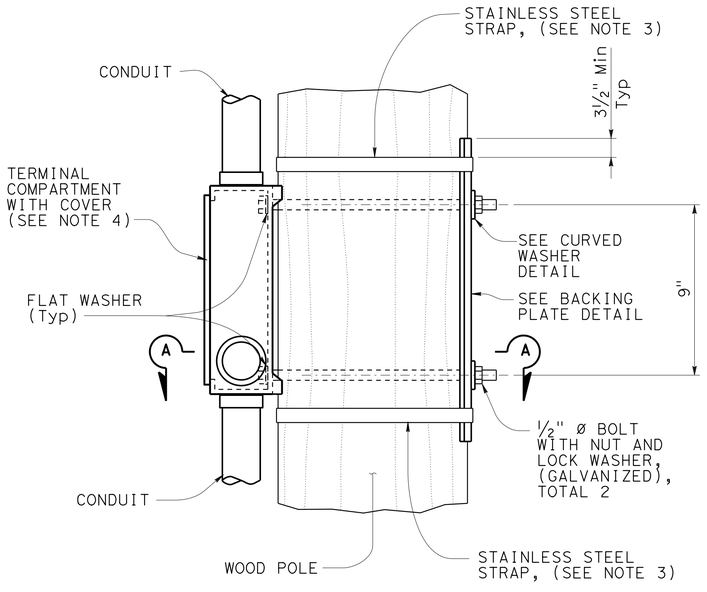

ELEVATION

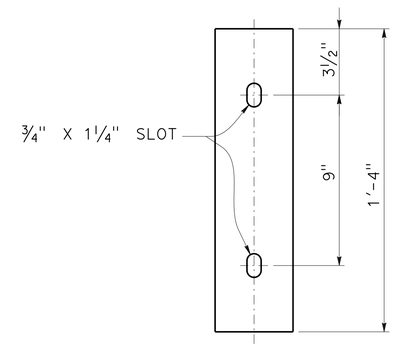

ELEVATION

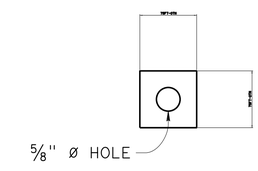

ELEVATION

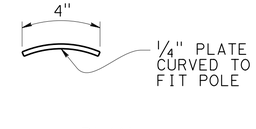

PLAN

BACKING PLATE DETAIL

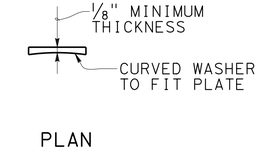

PLAN

CURVED WASHER DETAIL

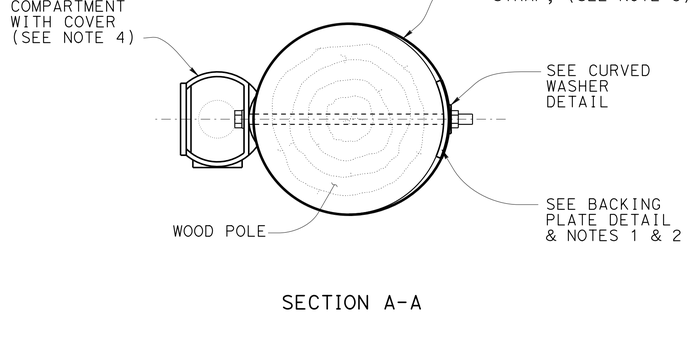

SECTION A-A

SIDE MOUNTING TERMINAL COMPARTMENT

CONSTRUCTION DETAILS

NO SCALE

C-6

REVISED BY	DATE REVISED

CALCULATED-DESIGNED BY	CHECKED BY
RYAN PRINS	KEN HALLIS

FUNCTIONAL SUPERVISOR: AL TRUJILLO

STATE OF CALIFORNIA - DEPARTMENT OF TRANSPORTATION

Caltrans® **DESIGN**

P:\proj\02\3E790_plans\pse\23e790ga006.dgn

LAST REVISION 03-26-14 | DATE PLOTTED => 28-MAY-2014 | TIME PLOTTED => 14:56

Dist	COUNTY	ROUTE	POST MILES TOTAL PROJECT	SHEET No.	TOTAL SHEETS
02	Tri	299	12.3/12.9	15	149

REGISTERED CIVIL ENGINEER DATE 03-26-14

03-26-14
PLANS APPROVAL DATE

REGISTERED PROFESSIONAL ENGINEER KEN HALLIS No. C38203 Exp. 3-31-15 CIVIL STATE OF CALIFORNIA

THE STATE OF CALIFORNIA OR ITS OFFICERS OR AGENTS SHALL NOT BE RESPONSIBLE FOR THE ACCURACY OR COMPLETENESS OF SCANNED COPIES OF THIS PLAN SHEET.

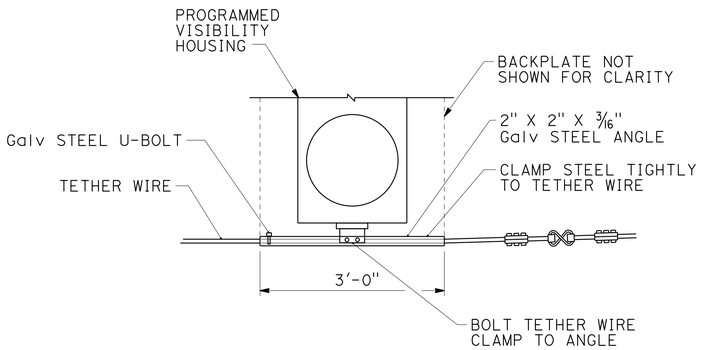

TETHER WIRE ATTACHMENT FOR PROGRAMMED VISIBILITY SIGNAL FACE

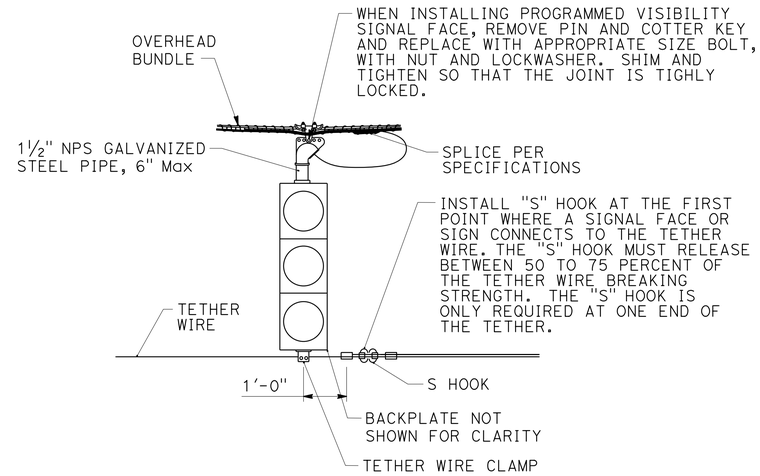

SIGNAL FACE SUPPORT

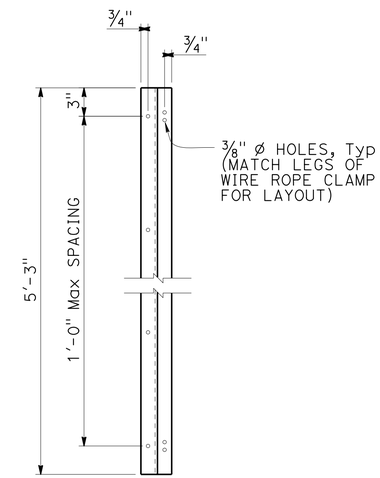

Z-BAR ELEVATION

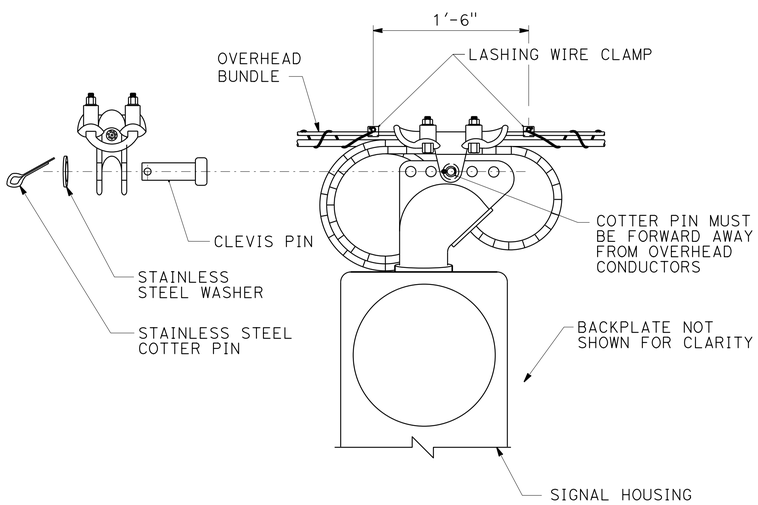

MESSENGER WIRE CLAMP COTTER PIN DETAIL

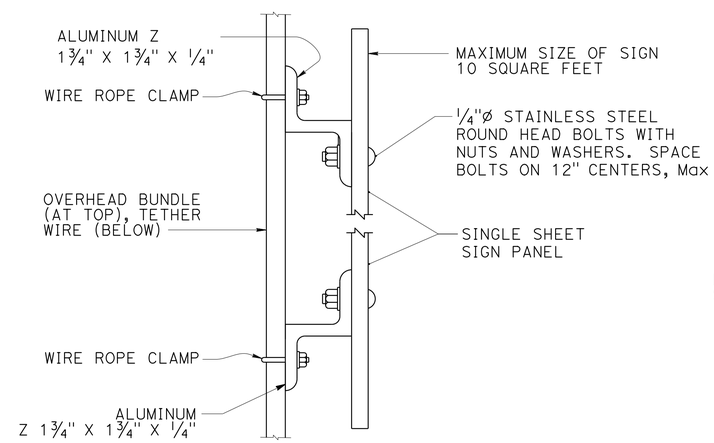

THE OVERLAPPED CONNECTION OF ADJUSTABLE HANGERS MUST USE A MINIMUM OF 2 BOLTS WITH A MINIMUM SPACING BETWEEN BOLTS OF 2"

SIGN MOUNTING DETAIL

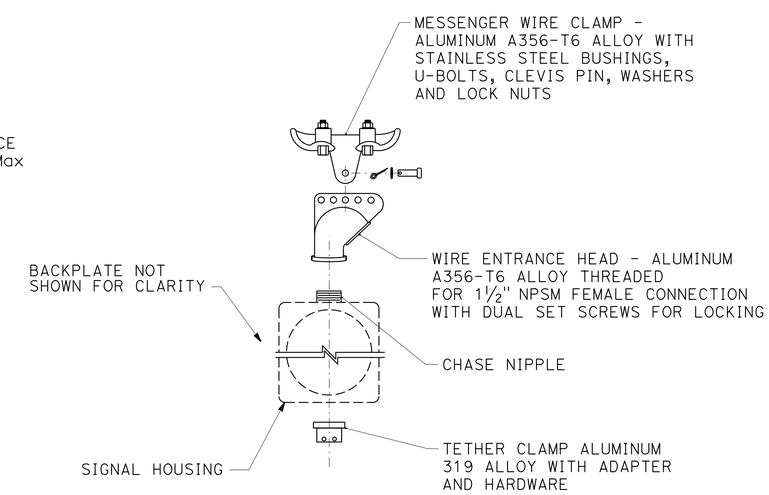

SIGNAL FACE SUPPORT EXPLODED VIEW

CONSTRUCTION DETAILS

NO SCALE

C-7

REVISED BY | DATE REVISED
RYAN PRINS | KEN HALLIS
CALCULATED-DESIGNED BY | CHECKED BY
FUNCTIONAL SUPERVISOR
AL TRUJILLO

STATE OF CALIFORNIA - DEPARTMENT OF TRANSPORTATION
Caltrans DESIGN

P:\proj1\02\3E790_plans\pse\23e790ga007.dgn

LAST REVISION 03-26-14 | DATE PLOTTED => 28-MAY-2014 | TIME PLOTTED => 14:56

Dist	COUNTY	ROUTE	POST MILES TOTAL PROJECT	SHEET No.	TOTAL SHEETS
02	Tri	299	12.3/12.9	16	149

REGISTERED CIVIL ENGINEER 03-26-14 DATE

03-26-14
PLANS APPROVAL DATE

REGISTERED PROFESSIONAL ENGINEER KEN HALLIS No. C38203 Exp. 3-31-15 CIVIL STATE OF CALIFORNIA

THE STATE OF CALIFORNIA OR ITS OFFICERS OR AGENTS SHALL NOT BE RESPONSIBLE FOR THE ACCURACY OR COMPLETENESS OF SCANNED COPIES OF THIS PLAN SHEET.

NOTE:

1. FOR HARDWARE DETAILS NOT SHOWN, SEE RSP A77M1.

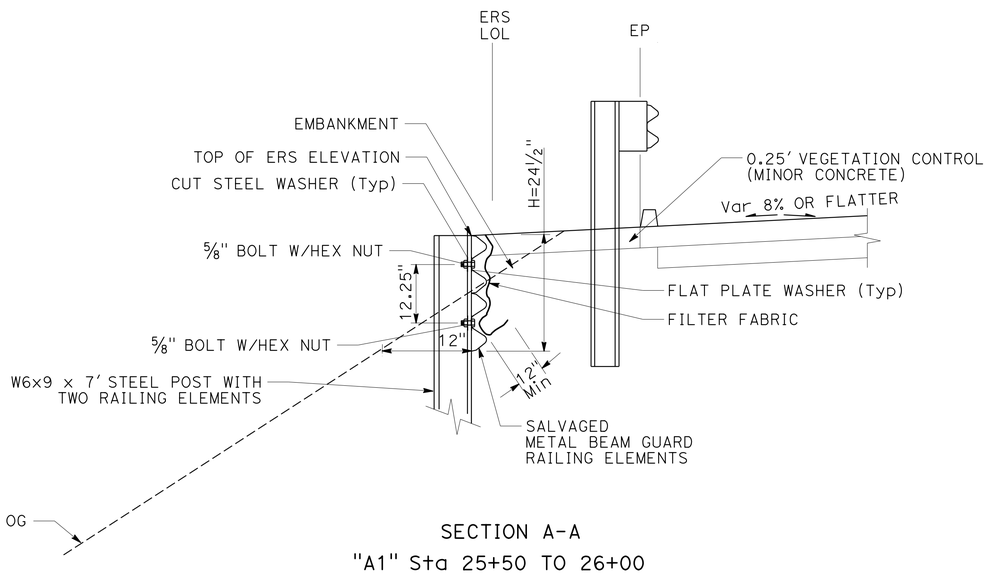

SECTION A-A
"A1" Sta 25+50 TO 26+00

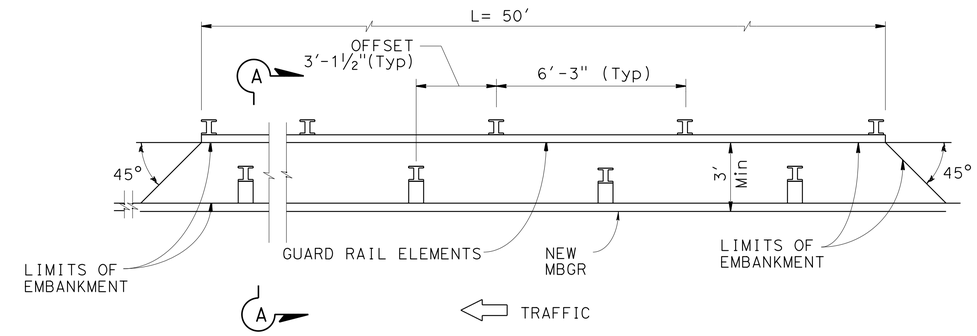

PLAN

EARTH RETAINING SYSTEM (RAILING COMPONENTS)

"A1" Sta 25+50 TO 26+00

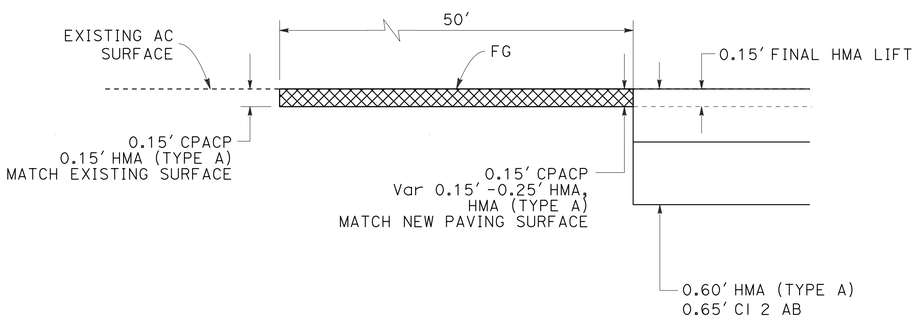

ROUTE 299 HMA PAVING CONFORM

"A1" 1+50 TO 2+00

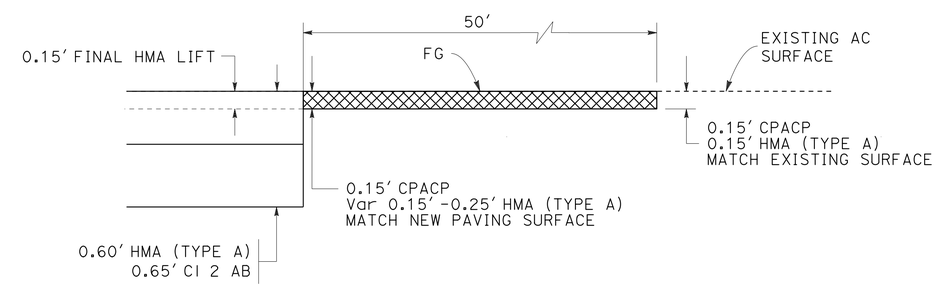

ROUTE 299 HMA PAVING CONFORM

"A1" 31+00 TO 31+50

CONSTRUCTION DETAILS

NO SCALE

C-8

REVISED BY | DATE REVISED
RYAN PRINS | KEN HALLIS
CALCULATED-DESIGNED BY | CHECKED BY
FUNCTIONAL SUPERVISOR
AL TRUJILLO

STATE OF CALIFORNIA - DEPARTMENT OF TRANSPORTATION
Caltrans
DESIGN

P:\proj1\02\3E790_plans\pse\23e790ga008.dgn

LAST REVISION 03-26-14 | DATE PLOTTED => 28-MAY-2014 | TIME PLOTTED => 14:56

Dist	COUNTY	ROUTE	POST MILES TOTAL PROJECT	SHEET No.	TOTAL SHEETS
02	Tri	299	12.3/12.9	17	149

REGISTERED CIVIL ENGINEER 03-26-14 DATE

03-26-14
PLANS APPROVAL DATE

REGISTERED PROFESSIONAL ENGINEER KEN HALLIS No. C38203 Exp. 3-31-15 CIVIL STATE OF CALIFORNIA

THE STATE OF CALIFORNIA OR ITS OFFICERS OR AGENTS SHALL NOT BE RESPONSIBLE FOR THE ACCURACY OR COMPLETENESS OF SCANNED COPIES OF THIS PLAN SHEET.

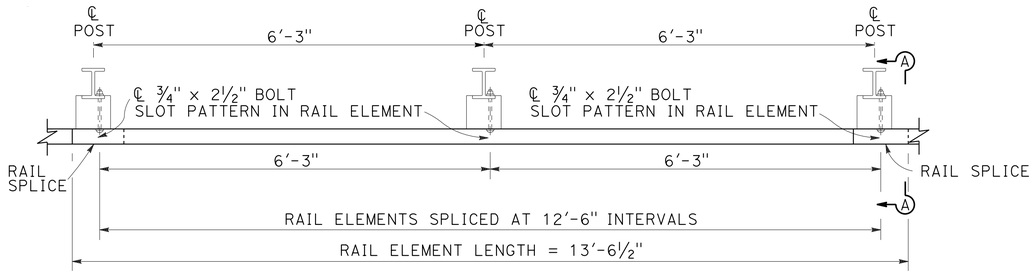

PLAN

PLAN

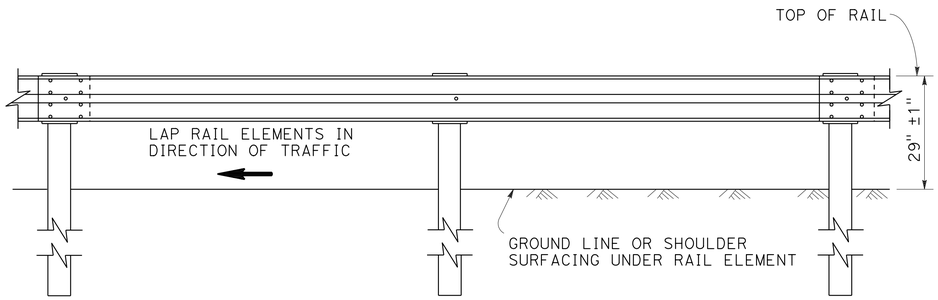

ELEVATION

METAL BEAM GUARD RAILING WITH STEEL POSTS AND NOTCHED WOOD OR NOTCHED RECYCLED PLASTIC BLOCKS

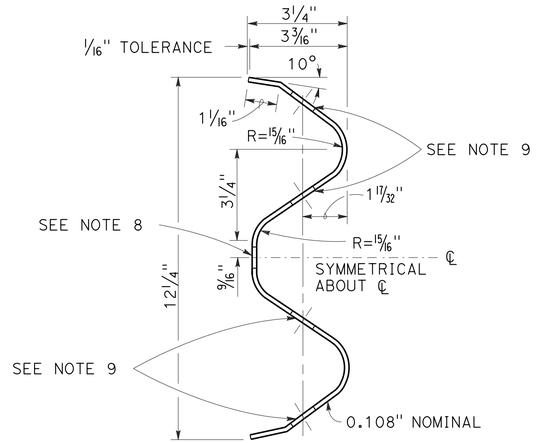

SECTION THRU RAIL ELEMENT

NOTES:

1. GUARD RAILING POST SPACING TO BE 6'-3" CENTER TO CENTER, EXCEPT AS OTHERWISE NOTED.
2. TO CONNECT RAILING TO TERMINAL SYSTEM END TREATMENT, TRANSITION THE TOP OF RAILING HEIGHT AT A RATIO OF 120:1 TO TERMINAL SYSTEM END TREATMENT HEIGHT PLUS ONE 12'-6" STANDARD RAILING SECTION AT THE TRANSITIONED HEIGHT FOR A HORIZONTAL CONNECTION TO THE END TREATMENT.
3. FOR DETAILS OF GUARD RAILING TRANSITION TO BRIDGE RAILING, SEE SHEET C-14.
4. FOR ADDITIONAL DETAILS OF GUARD RAILING CONNECTION TO BRIDGE RAILINGS, SEE SHEET C-15.
5. FOR DIKE POSITIONING AND GUARD RAILING DELINEATION DETAILS, SEE SHEET C-10.
6. DIRECTION OF ADJACENT TRAFFIC INDICATED BY ⟶ .
7. NOTCHED FACE OF BLOCK FACES STEEL POST.
8. SLOTTED HOLE FOR BOLTED CONNECTION OF RAIL ELEMENT TO BLOCK AND POST. SEE "RAIL ELEMENT SPLICE DETAIL".
9. SLOTTED HOLES FOR SPLICE BOLTS TO OVERLAP ENDS OF RAIL ELEMENT. SEE "SECTION THRU RAIL ELEMENT".
10. INSTALL POSTS IN SOIL.
11. FOR HARDWARE DETAILS NOT SHOWN, SEE RSP A77M1.

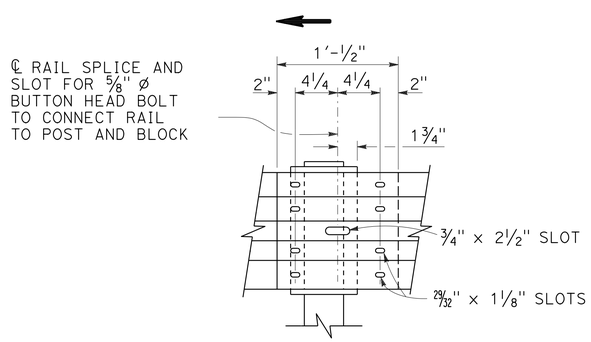

ELEVATION

RAIL ELEMENT SPLICE DETAIL

A) CONNECT THE OVER LAPPED END OF THE RAIL ELEMENTS WITH ⅝" ø X 1 ⅜" BUTTON HEAD OVAL SHOULDER SPLICE BOLTS INSERTED INTO THE 13⁄16" X 1 ⅛" SLOTS AND BOLTED TOGETHER WITH ⅝" ø RECESSED HEX NUTS. RECESS OF HEX NUT POINTS TOWARD RAIL ELEMENT. A TOTAL OF 8 BOLTS AND NUTS ARE TO BE USED AT EACH RAIL SPLICE CONNECTION.

B) THE ENDS OF THE RAIL ELEMENTS ARE TO BE OVERLAPPED IN THE DIRECTION OF TRAFFIC (SEE DETAILS).

C) WHERE END CAP IS TO BE ATTACHED TO THE END OF A RAIL ELEMENT, A TOTAL OF 4 OF THE ABOVE DESCRIBED SPLICE BOLTS AND NUTS ARE TO BE USED.

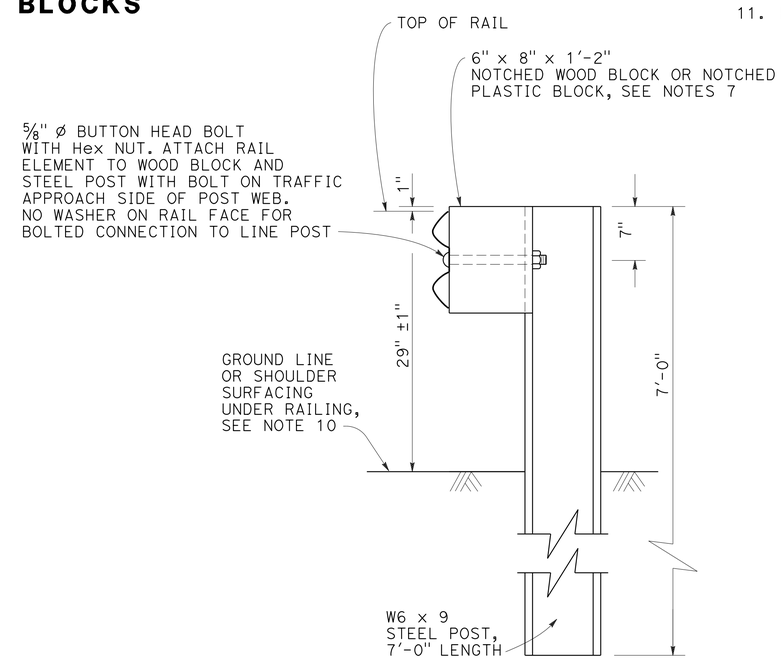

SECTION A-A

TYPICAL STEEL LINE POST INSTALLATION

CONSTRUCTION DETAILS

NO SCALE

C-9

STATE OF CALIFORNIA - DEPARTMENT OF TRANSPORTATION
Caltrans DESIGN

FUNCTIONAL SUPERVISOR: AL TRUJILLO
CALCULATED-DESIGNED BY: RYAN PRINS
CHECKED BY: KEN HALLIS
REVISED BY / DATE REVISED

P:\proj1\02\3E790_plans\pse\23e790ga009.dgn

LAST REVISION 03-26-14
DATE PLOTTED => 28-MAY-2014
TIME PLOTTED => 14:56

Dist	COUNTY	ROUTE	POST MILES TOTAL PROJECT	SHEET No.	TOTAL SHEETS
02	Tri	299	12.3/12.9	18	149

REGISTERED CIVIL ENGINEER DATE 03-26-14

PLANS APPROVAL DATE 03-26-14

REGISTERED PROFESSIONAL ENGINEER KEN HALLIS No. C38203 Exp. 3-31-15 CIVIL STATE OF CALIFORNIA

THE STATE OF CALIFORNIA OR ITS OFFICERS OR AGENTS SHALL NOT BE RESPONSIBLE FOR THE ACCURACY OR COMPLETENESS OF SCANNED COPIES OF THIS PLAN SHEET.

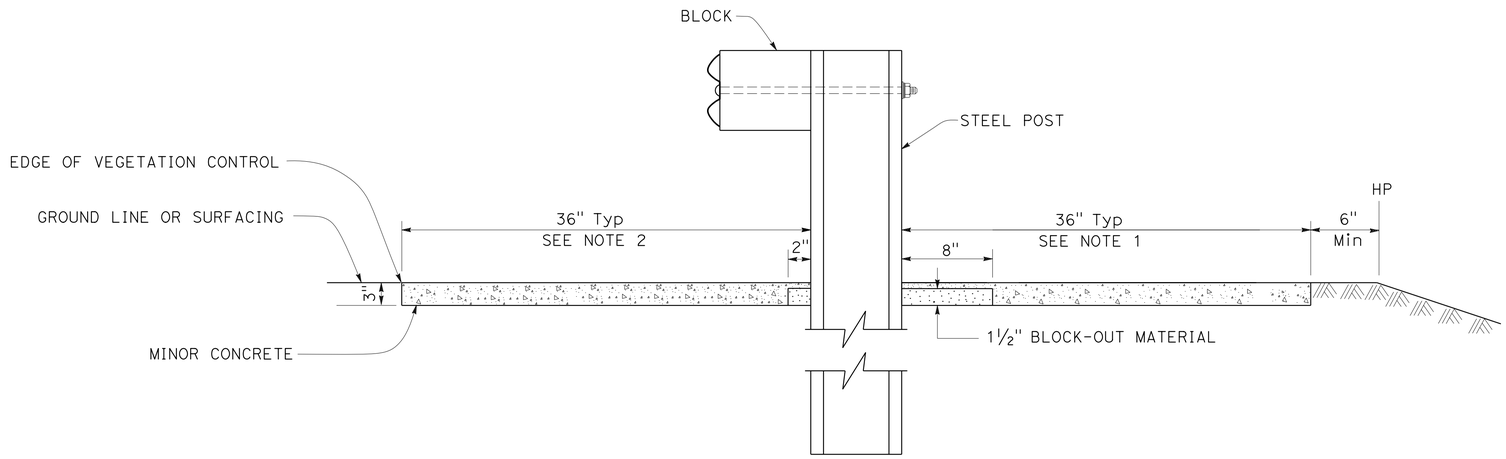

SECTION A-A

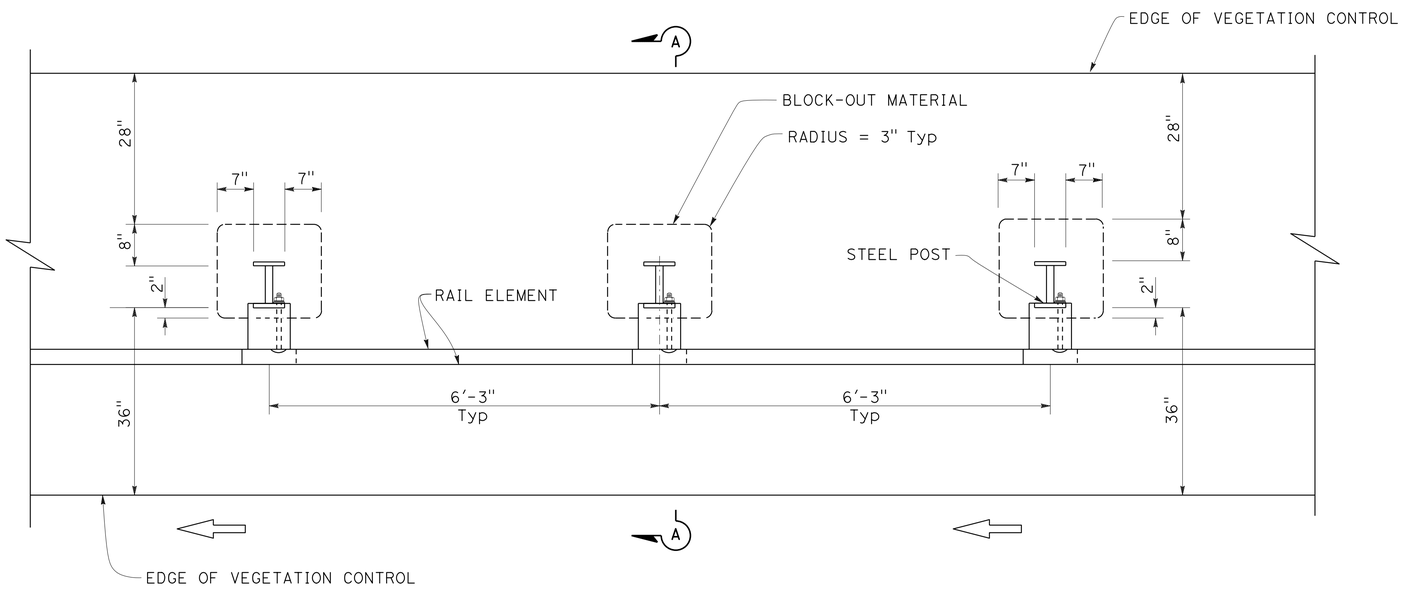

PLAN

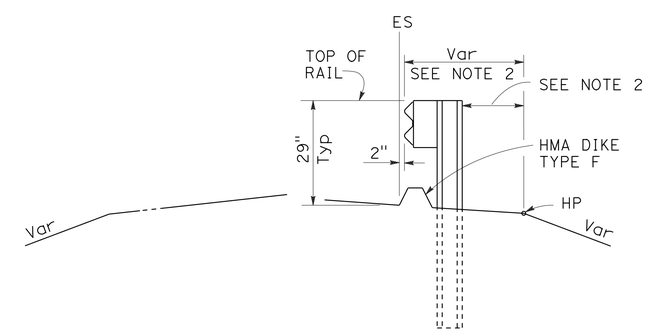

DIKE POSITIONING

See Note 1

NOTES:

1. WHERE THE DISTANCE BETWEEN BACK OF POST AND HINGE POINT IS LESS THAN 42", CONSTRUCT VEGETATION CONTROL TO 6" FROM HINGE POINT WHILE MAINTAINING THE 8" BLOCK-OUT AT BACK OF POST. IF THE 8" BLOCK-OUT AT BACK OF POST CAN NOT BE MAINTAINED, CONSTRUCT VEGETATION CONTROL FLUSH WITH THE HINGE POINT.
2. WHERE DIKE IS CONSTRUCTED UNDER RAILING, CONSTRUCT VEGETATION CONTROL TO BACK EDGE OF DIKE. WHERE PAVED SHOULDER IS CONSTRUCTED WITHIN 36" IN FRONT OF THE POST, CONSTRUCT VEGETATION CONTROL TO THE EDGE OF PAVED SHOULDER.
3. FOR HARDWARE DETAILS NOT SHOWN, SEE RSP A77M1.

CONSTRUCTION DETAILS

NO SCALE

C-10

REVISED BY | DATE REVISED

RYAN PRINS | KEN HALLIS

CALCULATED-DESIGNED BY | CHECKED BY

FUNCTIONAL SUPERVISOR: AL TRUJILLO

STATE OF CALIFORNIA - DEPARTMENT OF TRANSPORTATION

Caltrans DESIGN

P:\proj1\02\3E790_plans\pse\23e790ga010.dgn

LAST REVISION 03-26-14 | DATE PLOTTED => 28-MAY-2014 | TIME PLOTTED => 14:56

Dist	COUNTY	ROUTE	POST MILES TOTAL PROJECT	SHEET No.	TOTAL SHEETS
02	Tri	299	12.3/12.9	19	149

REGISTERED CIVIL ENGINEER DATE 03-26-14

PLANS APPROVAL DATE 03-26-14

REGISTERED PROFESSIONAL ENGINEER KEN HALLIS No. C38203 Exp. 3-31-15 CIVIL STATE OF CALIFORNIA

THE STATE OF CALIFORNIA OR ITS OFFICERS OR AGENTS SHALL NOT BE RESPONSIBLE FOR THE ACCURACY OR COMPLETENESS OF SCANNED COPIES OF THIS PLAN SHEET.

NOTES:

1. SEE SHEET C-10 FOR ADDITIONAL VEGETATION CONTROL DETAILS.
2. WHERE THE DISTANCE BETWEEN BACK OF POST AND HINGE POINT IS LESS THAN 24", VEGETATION CONTROL TO BE CONSTRUCTED FLUSH WITH THE HINGE POINT.
3. WHERE DIKE IS CONSTRUCTED UNDER RAILING, CONSTRUCT VEGETATION CONTROL TO BACK EDGE OF DIKE. WHERE PAVED SHOULDER IS CONSTRUCTED WITHIN 36" IN FRONT OF THE POST, CONSTRUCT VEGETATION CONTROL TO THE EDGE OF PAVED SHOULDER.
4. DIRECTION OF ADJACENT TRAFFIC INDICATED BY ←.
5. FOR HARDWARE DETAILS NOT SHOWN, SEE RSP A77M1.

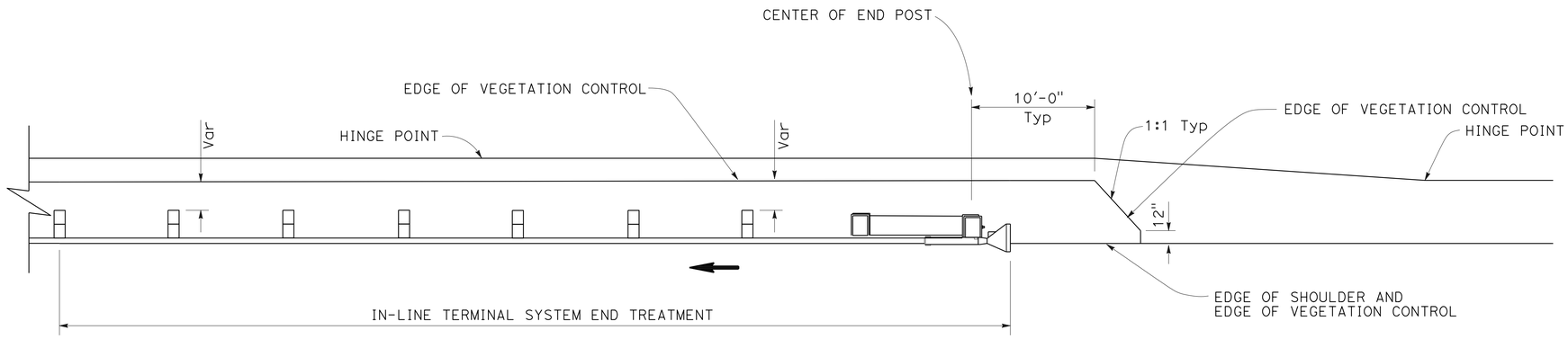

PLAN

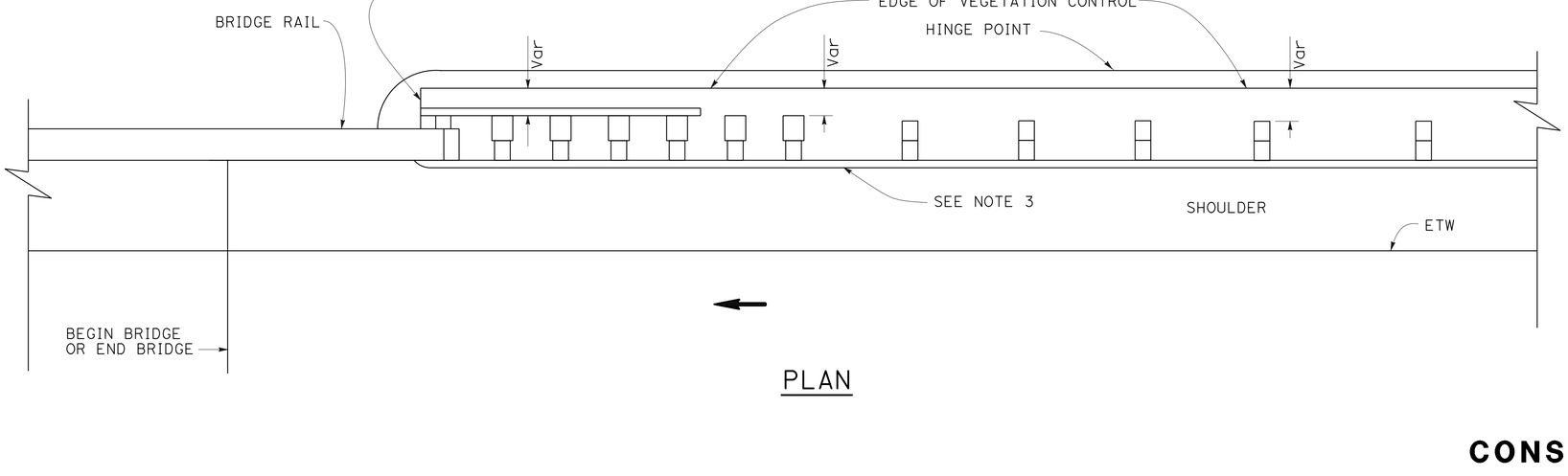

PLAN

CONSTRUCTION DETAILS

NO SCALE

C-11

REVISED BY | DATE REVISED

RYAN PRINS | KEN HALLIS

CALCULATED-DESIGNED BY | CHECKED BY

FUNCTIONAL SUPERVISOR: AL TRUJILLO

STATE OF CALIFORNIA - DEPARTMENT OF TRANSPORTATION

Caltrans® DESIGN

P:\proj\02\3E790_plans\pse\23e790ga011.dgn

LAST REVISION 03-26-14 | DATE PLOTTED => 28-MAY-2014 | TIME PLOTTED => 14:56

BORDER LAST REVISED 7/2/2010 | USERNAME => s123119 | DGN FILE => 23e790ga011.dgn | RELATIVE BORDER SCALE IS IN INCHES 0 1 2 3 | UNIT 0316 | PROJECT NUMBER & PHASE 02-0002-0151-1 | EA: 02-3E7901

Dist	COUNTY	ROUTE	POST MILES TOTAL PROJECT	SHEET No.	TOTAL SHEETS
02	Tri	299	12.3/12.9	20	149

REGISTERED CIVIL ENGINEER 03-26-14 DATE

03-26-14
PLANS APPROVAL DATE

REGISTERED PROFESSIONAL ENGINEER KEN HALLIS No. C38203 Exp. 3-31-15 CIVIL STATE OF CALIFORNIA

THE STATE OF CALIFORNIA OR ITS OFFICERS OR AGENTS SHALL NOT BE RESPONSIBLE FOR THE ACCURACY OR COMPLETENESS OF SCANNED COPIES OF THIS PLAN SHEET.

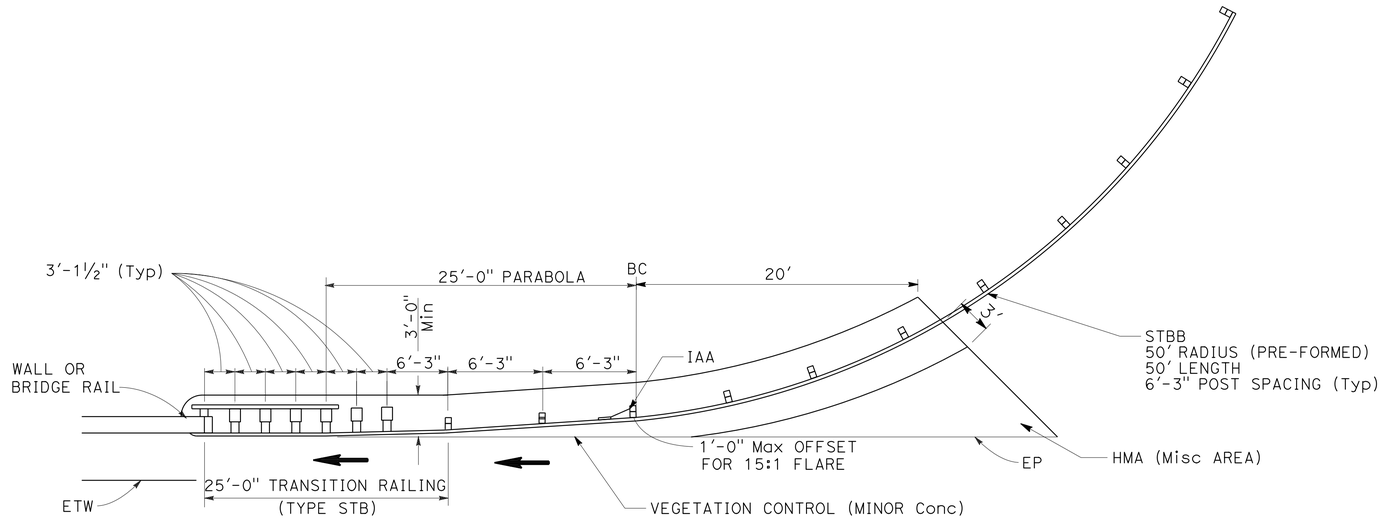

TRANSITION RAILING (TYPE STB) TO STBB CONNECTION DETAIL

"A1" 17+00 TO 17+83.2

NOTES:

1. FOR TYPICAL USE OF THIS TYPE OF END ANCHOR WITH GUARD RAILING, SEE A77F1 OF THE STANDARD PLANS.
2. HOLES EXCAVATION IN THE SLOPE TO CONSTRUCT THE BURIED POST END ANCHOR SHALL BE BACKFILLED WITH SELECTED EARTH, PLACED IN LAYERS APPROXIMATELY 1'-0" THICK. EACH LAYER SHALL BE MOISTENED AND THOROUGHLY COMPACTED.
3. THE BURIED POST END ANCHOR SHALL ONLY BE CONSTRUCTED AT THOSE LOCATIONS WHERE THE SLOPE PERPENDICULAR TO THE ROADWAY IS NON-TRAVERSABLE.
4. FOR HARDWARE DETAILS NOT SHOWN, SEE RSP A77M1.

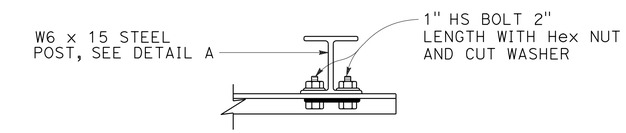

SECTION A-A

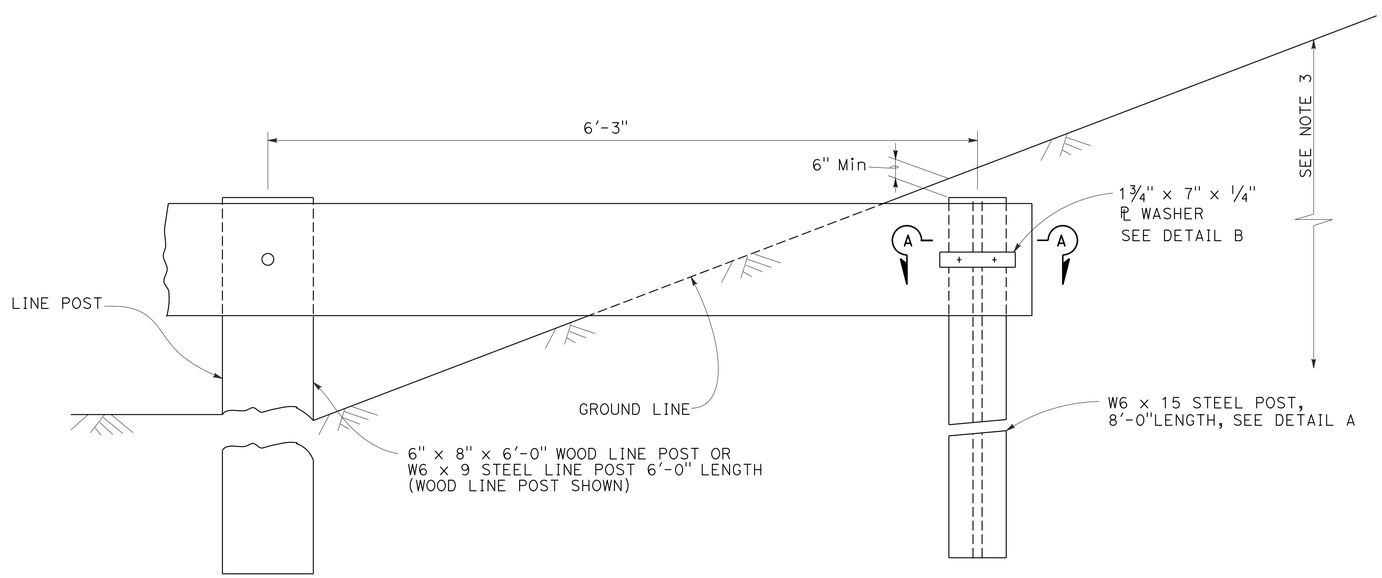

BURIED POST END ANCHOR

See Note 3

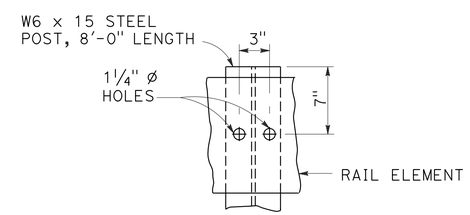

DETAIL A

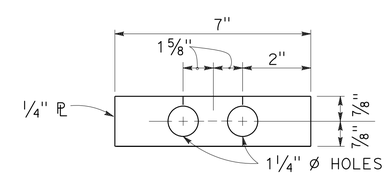

DETAIL B

CONSTRUCTION DETAILS

NO SCALE

C-12

REVISED BY | DATE REVISED
RYAN PRINS | KEN HALLIS
CALCULATED-DESIGNED BY | CHECKED BY
FUNCTIONAL SUPERVISOR
AL TRUJILLO

STATE OF CALIFORNIA - DEPARTMENT OF TRANSPORTATION
Caltrans
DESIGN

P:\proj1\02\3E790_plans\pse\23e790ga012.dgn

LAST REVISION 03-26-14 | DATE PLOTTED => 28-MAY-2014 | TIME PLOTTED => 14:56

Dist	COUNTY	ROUTE	POST MILES TOTAL PROJECT	SHEET No.	TOTAL SHEETS
02	Tri	299	12.3/12.9	21	149

REGISTERED CIVIL ENGINEER 03-26-14 DATE

03-26-14
PLANS APPROVAL DATE

REGISTERED PROFESSIONAL ENGINEER KEN HALLIS No. C38203 Exp. 3-31-15 CIVIL STATE OF CALIFORNIA

THE STATE OF CALIFORNIA OR ITS OFFICERS OR AGENTS SHALL NOT BE RESPONSIBLE FOR THE ACCURACY OR COMPLETENESS OF SCANNED COPIES OF THIS PLAN SHEET.

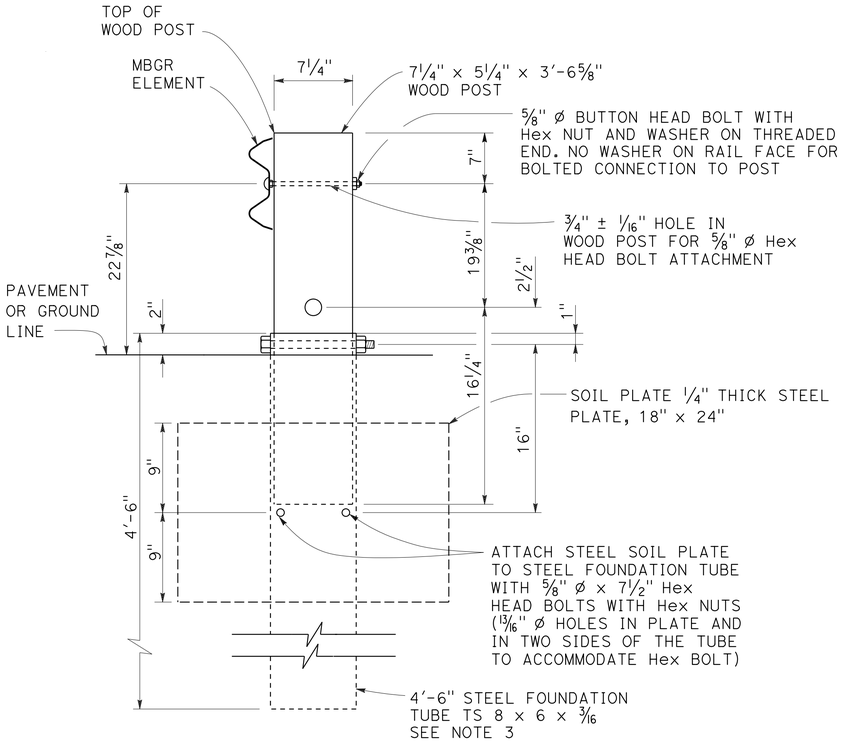

SECTION A-A (TYPE SFT)

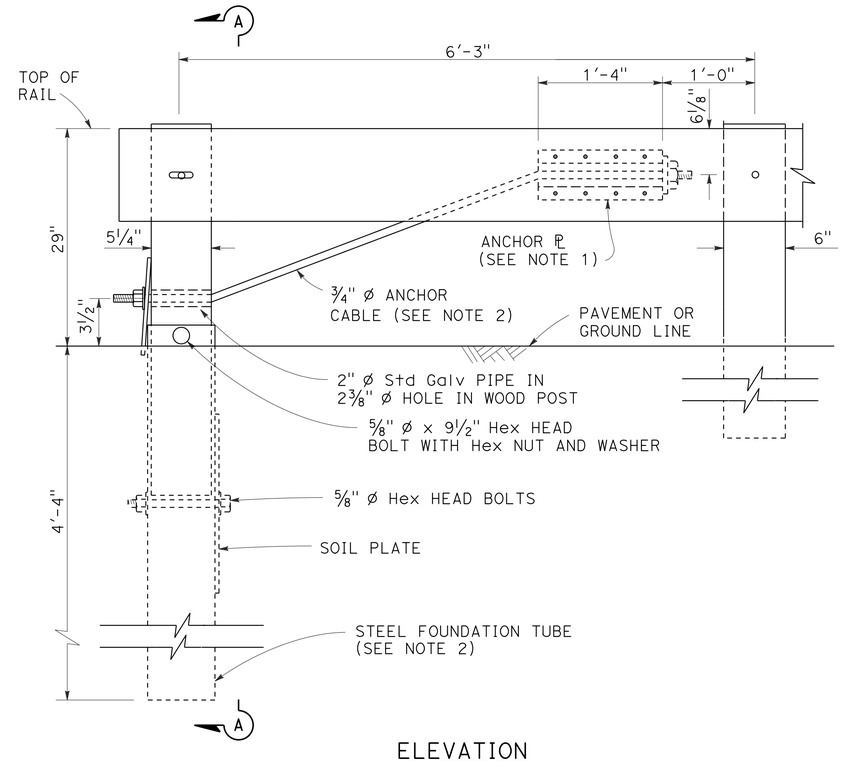

ELEVATION
END ANCHOR
ASSEMBLY (TYPE SFT & IAA)

NOTES:

1. FOR DETAILS OF THE ANCHOR PLATE AND ¾" CABLE, SEE STANDARD PLAN RSP A77S3
2. A 6'-0" LENGTH STEEL FOUNDATION TUBE, TS 8 X 6 X 3/16, WITHOUT A SOIL PLATE, MAY BE FURNISHED AND INSTALLED IN PLACE OF THE 4'-6" LENGTH STEEL FOUNDATION TUBE AND SOIL PLATE SHOWN. MINIMUM EMBEDMENT OF THE 6'-0" LENGTH TUBE SHALL BE 5'-9". A ⅝" * HEX HEAD BOLT AND NUT SHALL BE INSTALLED IN THE HOLE IN THE 6'-0" LENGTH TUBE TO KEEP THE WOOD POST FROM DROPPING INTO THE TUBE.
3. DIRECTION OF TRAFFIC INDICATED BY →.
4. INSTALL LINE POST, STEEL FOUNDATION TUBE AND SOIL PLATE IN SOIL.
5. FOR HARDWARE DETAILS NOT SHOWN, SEE RSP A77M1.

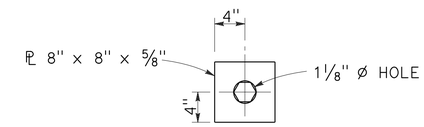

DETAIL "A"
CABLE CONNECTION
END PLATE

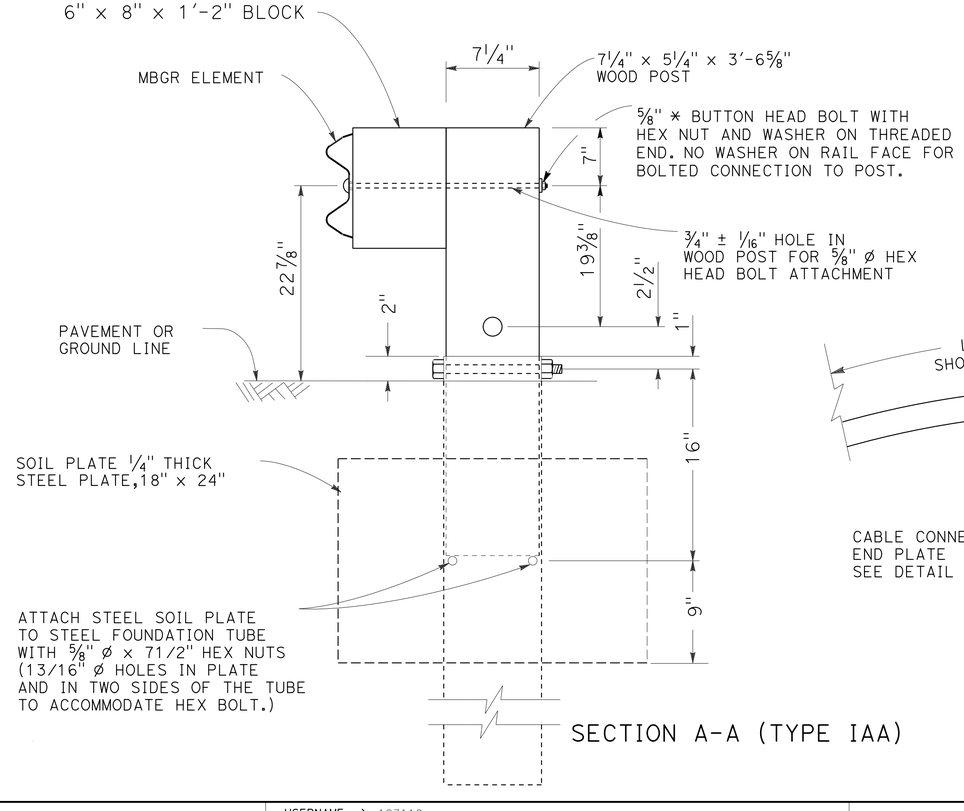

SECTION A-A (TYPE IAA)

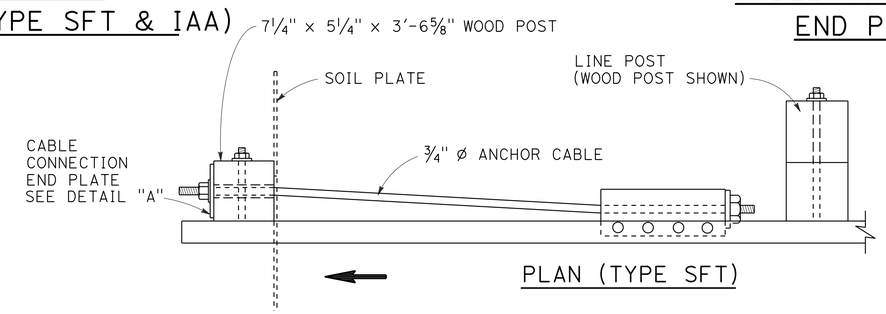

PLAN (TYPE SFT)

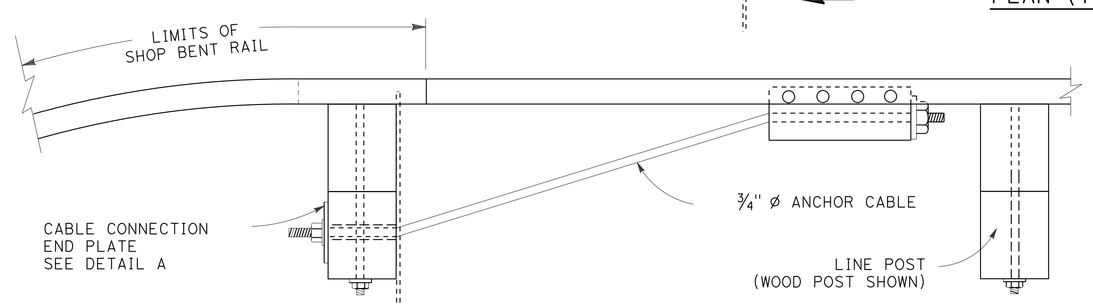

PLAN (TYPE IAA)

INTERMEDIATE ANCHOR ASSEMBLY (MODIFIED TYPE SFT)

CONSTRUCTION DETAILS

NO SCALE

C-13

REVISED BY | DATE REVISED
RYAN PRINS | KEN HALLIS
CALCULATED-DESIGNED BY | CHECKED BY
FUNCTIONAL SUPERVISOR | AL TRUJILLO

STATE OF CALIFORNIA - DEPARTMENT OF TRANSPORTATION
Caltrans DESIGN

P:\proj1\02\3E790_plans\pse\23e790ga013.dgn

LAST REVISION 03-26-14 | DATE PLOTTED => 28-MAY-2014 | TIME PLOTTED => 14:56

Dist	COUNTY	ROUTE	POST MILES TOTAL PROJECT	SHEET No.	TOTAL SHEETS
02	Tri	299	12.3/12.9	22	149

REGISTERED CIVIL ENGINEER — DATE: 03-26-14

PLANS APPROVAL DATE: 03-26-14

REGISTERED PROFESSIONAL ENGINEER — KEN HALLIS — No. C38203 — Exp. 3-31-15 — CIVIL — STATE OF CALIFORNIA

THE STATE OF CALIFORNIA OR ITS OFFICERS OR AGENTS SHALL NOT BE RESPONSIBLE FOR THE ACCURACY OR COMPLETENESS OF SCANNED COPIES OF THIS PLAN SHEET.

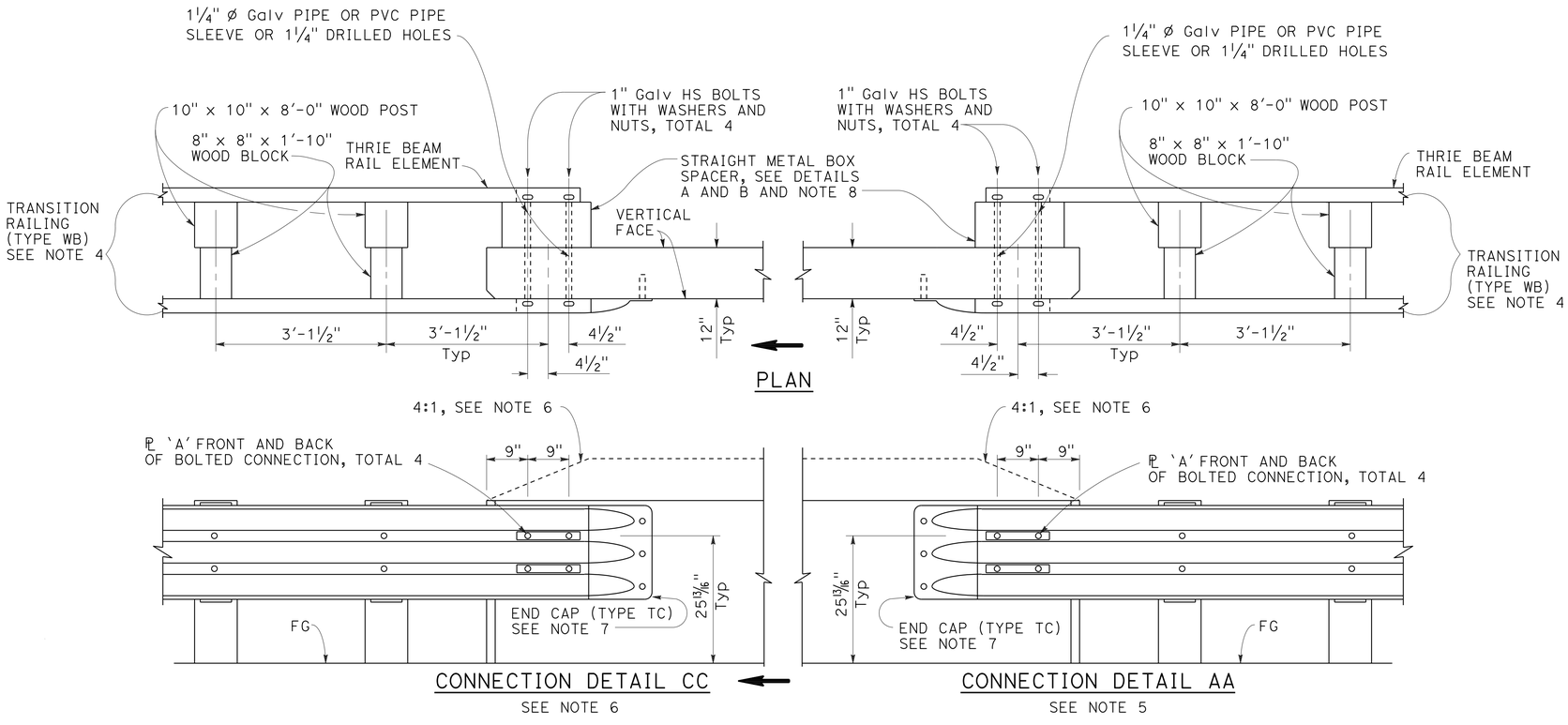

GUARD RAILING CONNECTION TO BRIDGE RAILING WITHOUT SIDEWALK

NOTES:

1. ADDITIONAL DETAILS OF POSTS, BLOCKS AND HARDWARE ARE SHOWN ON SHEET C-9.

2. DIRECTION OF ADJACENT TRAFFIC INDICATED BY ➡.

3. FOR ADDITIONAL DETAILS OF TRANSITION RAILING (TYPE WB AND STB), SEE SHEET C-15. TRANSITIONS THE 12 GAUGE W-BEAM STANDARD RAILING SECTION OF GUARD RAILING TO A HEAVIER GAGE NESTED THRIE BEAM RAILING SECTION WHICH IS CONNECTED TO THE CONCRETE BRIDGE RAILING.

4. FOR TYPICAL USE OF CONNECTION DETAIL AA &CC, SEE LAYOUT ON SHEET C-11.

5. WHERE THE HEIGHT OF THE BRIDGE RAILING EXCEEDS THE HEIGHT OF THE THRIE BEAM RAILING BY MORE THAN 1" AT CONNECTION DETAIL AA AND CONNECTION DETAIL CC, TAPER THE TOP OF THE END OF THE BRIDGE RAILING AT 4:1 TO MATCH THE TOP ELEVATION OF THE THRIE BEAM RAILING.

6. FOR DETAILS OF END CAP (TYPE TC), SEE STANDARD PLAN A78C1.

7. THE DEPTH OF THE METAL BOX SPACER VARIES ON RAILING . THE COMBINED DIMENSION FOR THE DEPTH OF THE METAL BOX SPACER PLUS THE WIDTH OF RAILING OR WALL IS TYPICALLY 17 ⅛". WHERE THE SPACE BETWEEN THE BACKSIDE OF THE CONCRETE RAILING OR WALL AND THE REAR THRIE BEAM ELEMENT IS LESS THAN 1 ½", METAL PLATES SIMILAR TO PLATE 'A' ARE TO BE USED AS SPACERS

8. FOR HARDWARE DETAILS NOT SHOWN, SEE RSP A77M1.

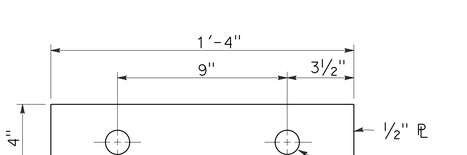

PLATE 'B'
(For backside of connection BB)

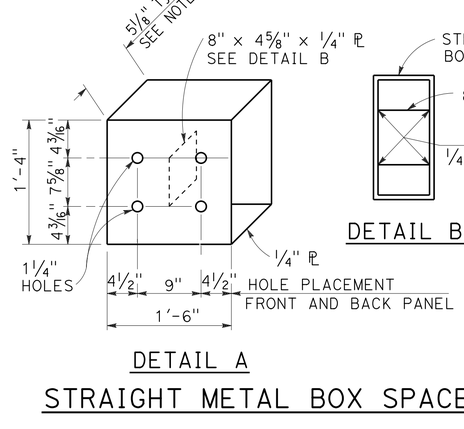

DETAIL A

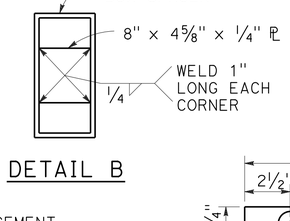

DETAIL B

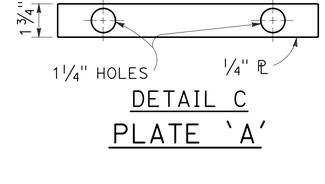

DETAIL C

STRAINGHT METAL BOX SPACER

PLATE 'A'

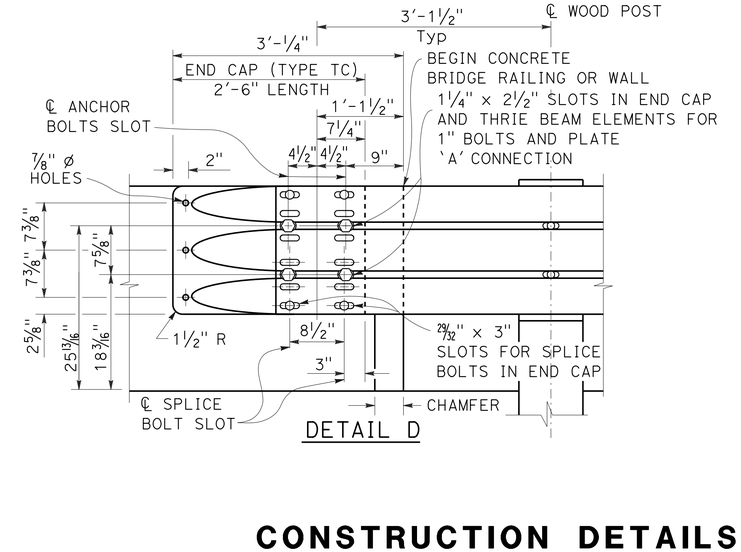

DETAIL D

CONSTRUCTION DETAILS

NO SCALE

C-14

REVISED BY	DATE REVISED

RYAN PRINS — KEN HALLIS — CALCULATED-DESIGNED BY — CHECKED BY

FUNCTIONAL SUPERVISOR: AL TRUJILLO

STATE OF CALIFORNIA - DEPARTMENT OF TRANSPORTATION — DESIGN

Caltrans

P:\proj1\02\3E790_plans\pse\23e790ga014.dgn

LAST REVISION 03-26-14 — DATE PLOTTED => 28-MAY-2014 — TIME PLOTTED => 14:56

Dist	COUNTY	ROUTE	POST MILES TOTAL PROJECT	SHEET No.	TOTAL SHEETS
02	Tri	299	12.3/12.9	23	149

REGISTERED CIVIL ENGINEER 03-26-14 DATE

03-26-14
PLANS APPROVAL DATE

REGISTERED PROFESSIONAL ENGINEER KEN HALLIS No. C38203 Exp. 3-31-15 CIVIL STATE OF CALIFORNIA

THE STATE OF CALIFORNIA OR ITS OFFICERS OR AGENTS SHALL NOT BE RESPONSIBLE FOR THE ACCURACY OR COMPLETENESS OF SCANNED COPIES OF THIS PLAN SHEET.

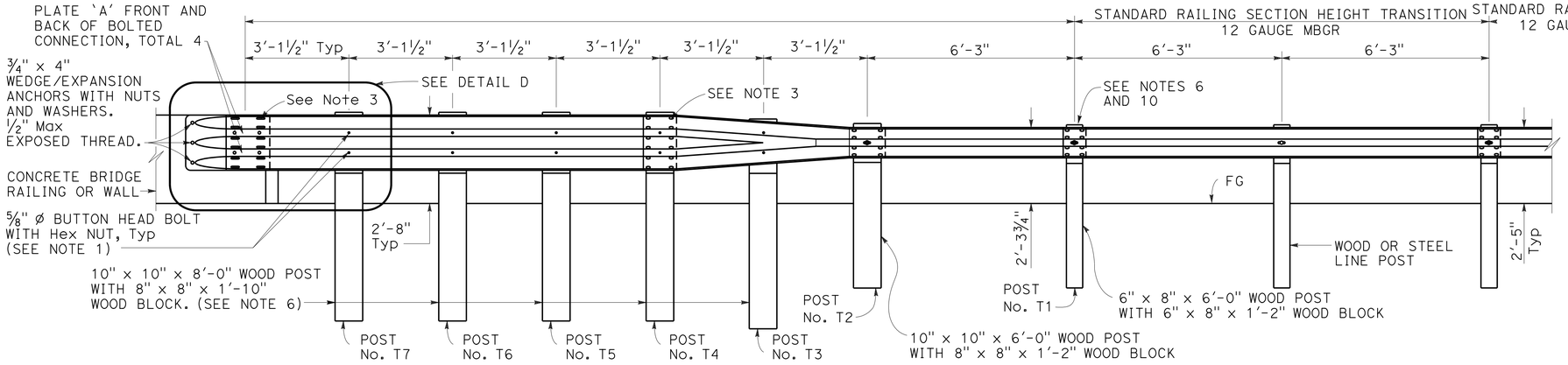

ELEVATION

TRANSITION RAILING (TYPE WB)

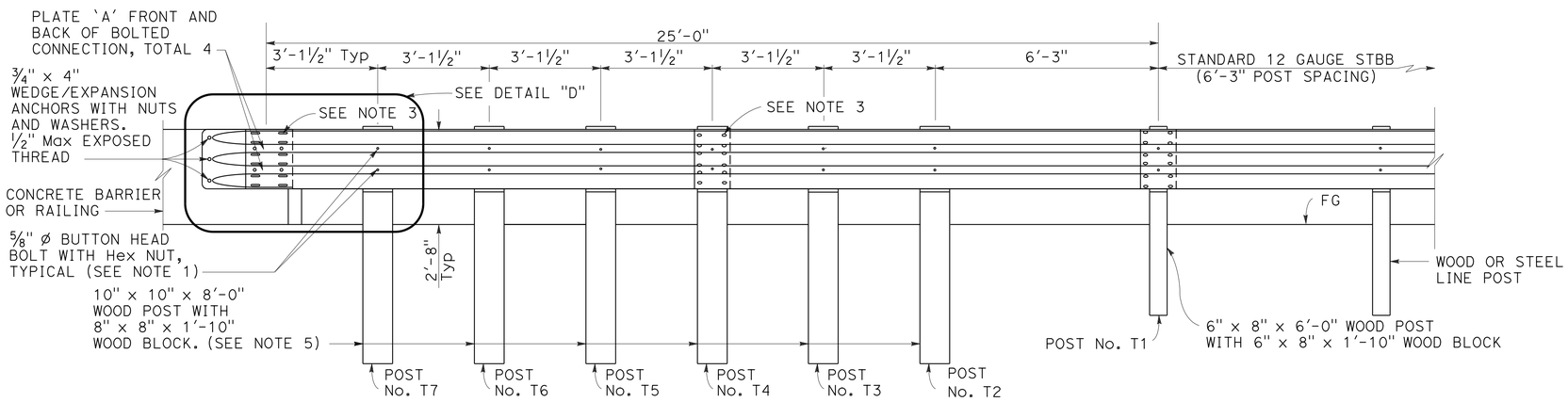

ELEVATION

TRANSITION RAILING (TYPE STB)

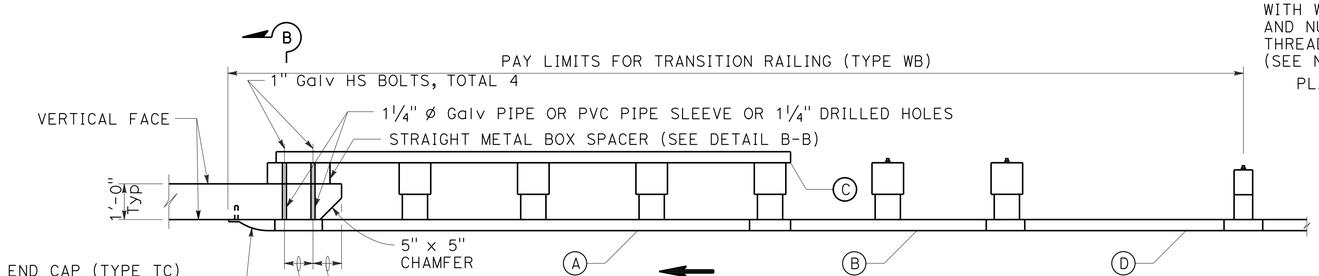

PLAN

TRANSITION RAILING (TYPE WB)

(BLOCKOUT ATTACHMENT)

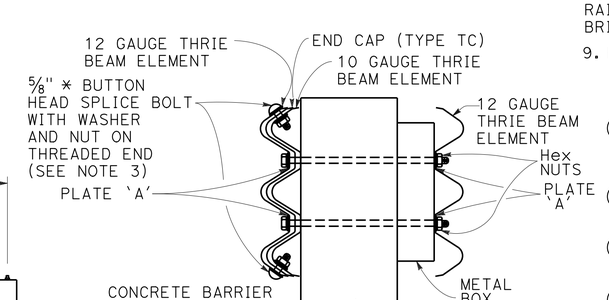

SECTION B-B

NOTES:

1. USE 5/8" * BUTTON HEAD BOLTS AND HEX NUTS FOR CONNECTIONS TO POSTS. USE WASHER ON RAIL FACE FOR BOLTED CONNECTIONS TO 10" x 10" POSTS.

2. THE NESTED RAIL ELEMENTS, END CAP, AND `W' BEAM TO THRIE BEAM ELEMENT MAY BE SPLICED TOGETHER PRIOR TO BOLTING THE ELEMENTS TO THE WOOD POST AND CONCRETE BARRIER OR RAILING.

3. EXTERIOR SPLICE BOLT HOLES FOR RAIL ELEMENT SPLICESAT POST NO. T4 AND THE CONNECTION TO THE CONCRETE BARRIER OR RAILING SHALL BE THE STANDARD 13/16" X 1 1/8" SLOT SIZE. INTERIOR SPLICE BOLT HOLES AT THESE LOCATIONS MAY BE INCREASED UP TO 1 1/4" *. ONLY THE TOP 2 AND THE BOTTOM 2 SPLICE BOLTS WITH WASHERS AND NUTS ARE REQUIRED FOR RAIL SPLICES AT POST NO. T4 AND THE CONNECTION TO THE CONCRETE BARRIER OR RAILING.

4. DIRECTION OF ADJACENT TRAFFIC INDICATED BY →.

5. THE TOP ELEVATION OF POSTS NO. T2 THROUGH NO. T7 SHALL NOT PROJECT MORE THAN 1" ABOVE THE TOP ELEVATION OF THE RAIL ELEMENT.

6. TYPICALLY, THE RAILING CONNECTED TO TRANSITION RAILING (TYPE WB) WILL BE EITHER STANDARD RAILING SECTION OF METAL BEAM GUARD RAILING WITH HEIGHT TRANSITION RATIO OF 120:1 OR AN APPROVED CALTRANS END TREATMENT ATTACHED TO POST NO. T1.

7. THE DEPTH OF THE METAL BOX SPACER VARIES FROM THE 5 1/8" TO 1 1/2" AND IS DEPENDENT ON THE WIDTH OF THE CONCRETE RAILING OR WALL. THE COMBINED DIMENSION FOR THE DEPTH OF THE METAL BOX SPACER PLUS THE WIDTH OF RAILING OR WALL IS TYPICALLY 17 1/8". WHERE THE SPACE BETWEEN THE BACKSIDE OF THE CONCRETE RAILING OR WALL AND THE REAR THRIE BEAM ELEMENT IS LESS THAN 1 1/2", METAL PLATES SIMILAR TO PLATE `A' ARE TO BE USED AS SPACERS.

8. END CAP MAY BE INSTALLED OVER 12 GAUGE AND 10 GAUGE THRIE BEAM ELEMENTS WHERE TRANSITION RAILING IS INSTALLED ON THE DEPARTURE END OF BRIDGE RAILING.

9. FOR HARDWARE DETAILS NOT SHOWN, SEE RSP A77M1.

LEGEND

(A) NESTED THRIE BEAM ELEMENTS (ONE 12 GAUGE ELEMENT NESTED OVER ONE 10 GAUGE ELEMENT).

(B) ONE 10 GAUGE "W" BEAM TO THRIE BEAM ELEMENT.

(C) ONE 12 GAUGE THRIE BEAM ELEMENT.

(D) ONE 10 GAUGE "W" BEAM RAIL ELEMENT (7'-3 1/2" LENGTH)

10 GAUGE = 0.135" THICK

12 GAUGE = 0.108" THICK

CONSTRUCTION DETAILS

NO SCALE

C-15

REVISED BY | DATE REVISED
RYAN PRINS | KEN HALLIS
CALCULATED-DESIGNED BY | CHECKED BY
FUNCTIONAL SUPERVISOR
AL TRUJILLO

STATE OF CALIFORNIA - DEPARTMENT OF TRANSPORTATION
Caltrans
DESIGN

P:\proj1\02\3E790_plans\pse\23e790ga015.dgn

LAST REVISION 03-26-14 | DATE PLOTTED => 28-MAY-2014 | TIME PLOTTED => 14:56

Dist	COUNTY	ROUTE	POST MILES TOTAL PROJECT	SHEET No.	TOTAL SHEETS
02	Tri	299	12.3/12.9	24	149

REGISTERED CIVIL ENGINEER 03-26-14 DATE

03-26-14
PLANS APPROVAL DATE

REGISTERED PROFESSIONAL ENGINEER KEN HALLIS No. C38203 Exp. 3-31-15 CIVIL STATE OF CALIFORNIA

THE STATE OF CALIFORNIA OR ITS OFFICERS OR AGENTS SHALL NOT BE RESPONSIBLE FOR THE ACCURACY OR COMPLETENESS OF SCANNED COPIES OF THIS PLAN SHEET.

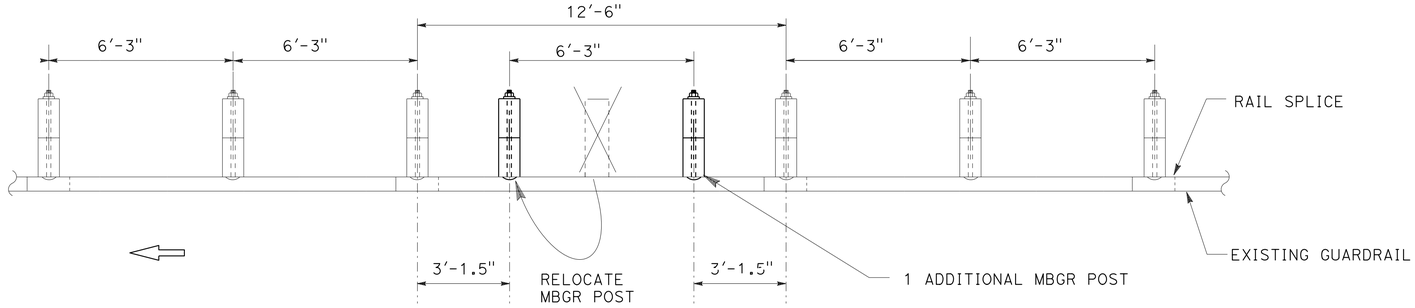

CASE 1 (ONE POST CONFLICT, MOVE THE POST and ADD ONE POST)
(NO NESTED RAIL REQUIRED)

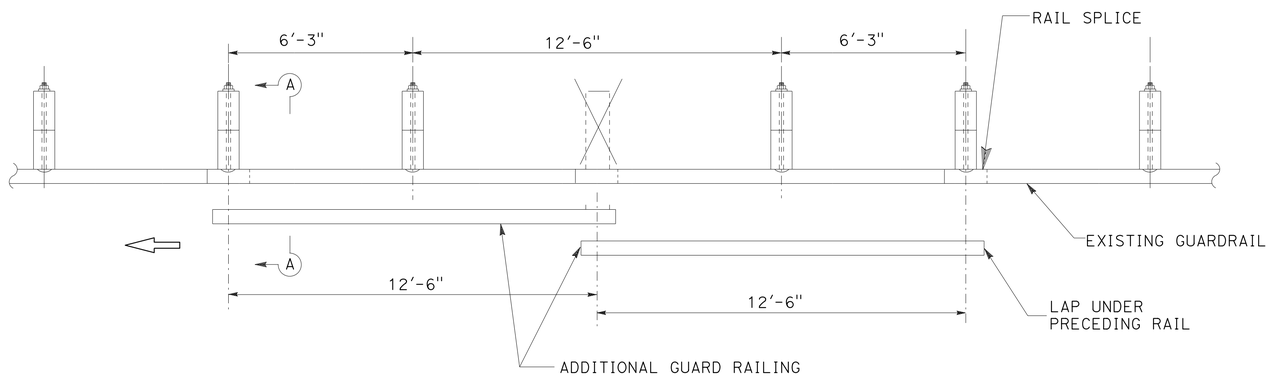

CASE 2 (ONE POST OMITTED AT JUNCTION OF TWO ELEMENTS)
(NEST TWO LENGTHS OF RAIL REQUIRED)

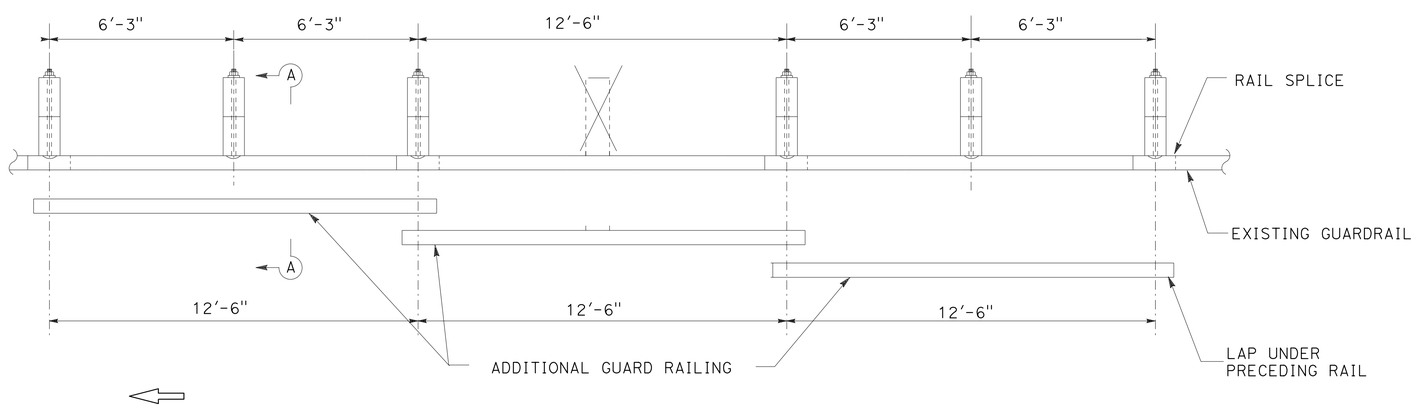

CASE 3 (ONE POST OMITTED AT CENTER OF OF ELEMENT)
(NEST THREE LENGTHS OF RAIL REQUIRED)
(ONE ADDITIONAL POST MAY BE OMITTED SEE NOTE 3)

LONG SPAN NESTED GUARD RAILING

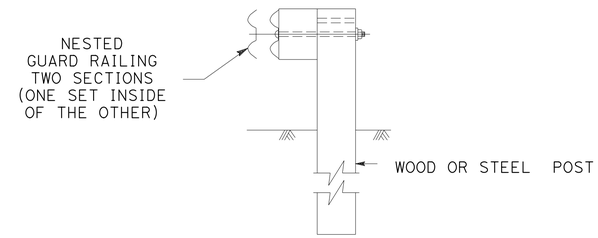

SECTION A-A

TYPICAL RAILING OVERLAP INSTALLATION AT POST

NOTE:

1. NEST ALL RAILS AT EXISTING RAIL LAPS
2. WHEN A POST IS REMOVED AND THE RAIL ELEMENTS ARE NESTED, THEN THE NESTED ELEMENTS MUST BE SUPPORTED BY A MIN OF 2 POST EACH SIDE OF THE MISSING POST OR ADD ADDITIONAL LENGTH OF NESTED ELEMENTS.
3. WHEN TWO POST NEED TO BE REMOVED, THE NESTED ELEMENTS MUST BE SUPPORTED BY A MIN OF 2 POST EACH SIDE OF THE MISSING POST OR ADD ADDITIONAL LENGTH OF NESTED ELEMENTS MUST BE PROVIDED. THE 2-POST OPTION USES CASE 3 BUT NOT SHOWN.
4. FOR HARDWARE DETAILS NOT SHOWN, SEE RSP A77M1.

CONSTRUCTION DETAILS

NO SCALE

C-16

REVISED BY | DATE REVISED
RYAN PRINS | KEN HALLIS
CALCULATED-DESIGNED BY | CHECKED BY
FUNCTIONAL SUPERVISOR
AL TRUJILLO

STATE OF CALIFORNIA - DEPARTMENT OF TRANSPORTATION
Caltrans
DESIGN

P:\proj\02\3E790_plans\pse\23e790ga016.dgn

LAST REVISION 03-26-14 | DATE PLOTTED => 28-MAY-2014 | TIME PLOTTED => 14:56

Dist	COUNTY	ROUTE	POST MILES TOTAL PROJECT	SHEET No.	TOTAL SHEETS
02	Tri	299	12.3/12.9	25	149

REGISTERED CIVIL ENGINEER — DATE: 03-26-14

PLANS APPROVAL DATE: 03-26-14

REGISTERED PROFESSIONAL ENGINEER — KEN HALLIS — No. C38203 — Exp. 3-31-15 — CIVIL — STATE OF CALIFORNIA

THE STATE OF CALIFORNIA OR ITS OFFICERS OR AGENTS SHALL NOT BE RESPONSIBLE FOR THE ACCURACY OR COMPLETENESS OF SCANNED COPIES OF THIS PLAN SHEET.

NOTE:

1. FOR ACCURATE RIGHT OF WAY DATA, CONTACT RIGHT OF WAY ENGINEERING AT THE DISTRICT OFFICE.

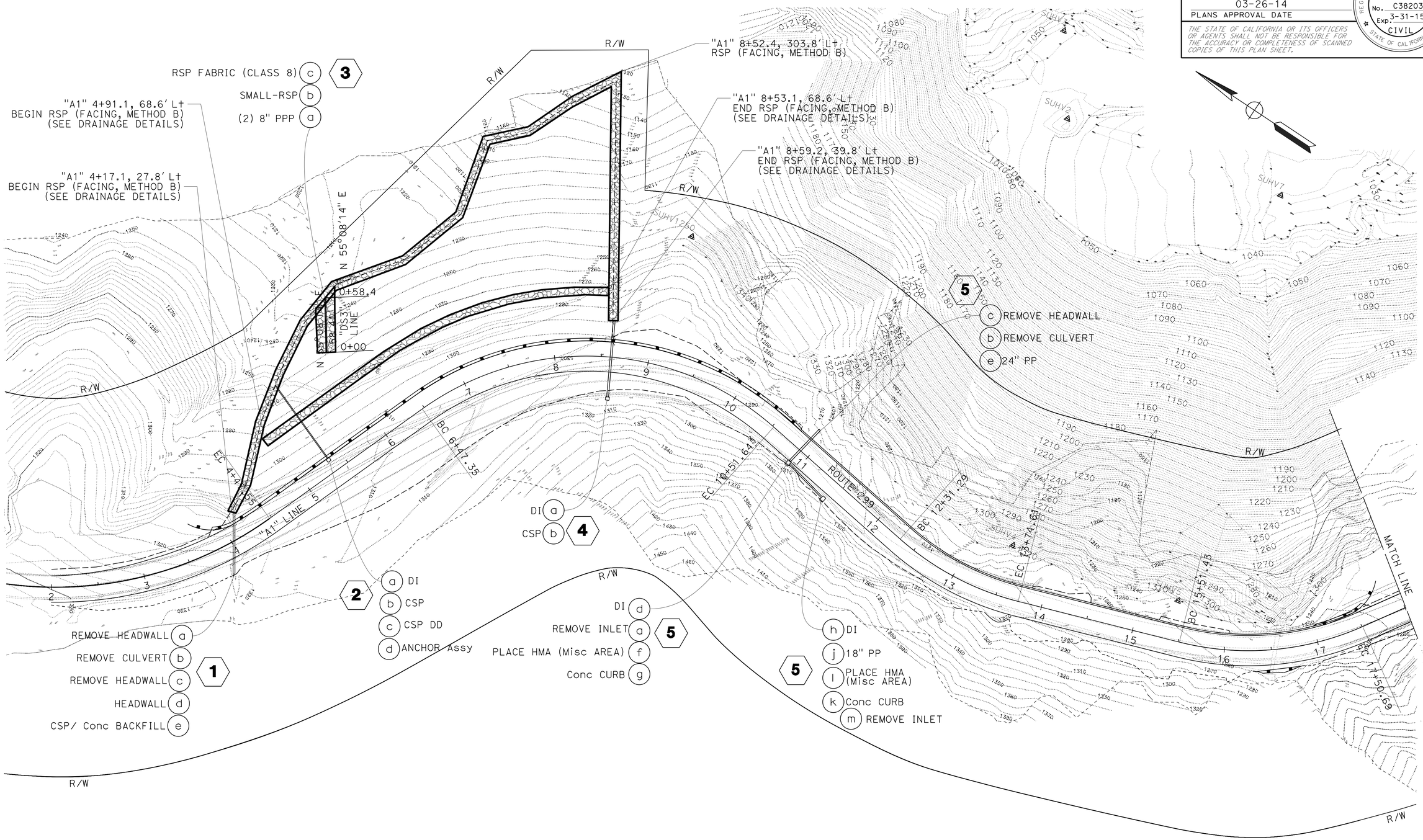

DRAINAGE PLAN

SCALE: 1" = 50'

D-1

APPROVED FOR DRAIAGE WORK ONLY

STATE OF CALIFORNIA - DEPARTMENT OF TRANSPORTATION

Caltrans

DESIGN

FUNCTIONAL SUPERVISOR: AL TRUJILLO

CALCULATED-DESIGNED BY: RYAN PRINS

CHECKED BY: KEN HALLIS

REVISED BY / DATE REVISED

P:\proj1\02\3E790_plans\pse\23e790ia001.dgn

LAST REVISION 03-26-14 | DATE PLOTTED => 28-MAY-2014 | TIME PLOTTED => 14:56

BORDER LAST REVISED 7/2/2010 | USERNAME => s123119 | DGN FILE => 23e790ia001.dgn | RELATIVE BORDER SCALE IS IN INCHES 0 1 2 3 | UNIT 0316 | PROJECT NUMBER & PHASE 02-0002-0151-1 | EA: 02-3E7901

Dist	COUNTY	ROUTE	POST MILES TOTAL PROJECT	SHEET No.	TOTAL SHEETS
02	Tri	299	12.3/12.9	26	149

REGISTERED CIVIL ENGINEER 03-26-14 DATE

03-26-14
PLANS APPROVAL DATE

REGISTERED PROFESSIONAL ENGINEER KEN HALLIS No. C38203 Exp. 3-31-15 CIVIL STATE OF CALIFORNIA

THE STATE OF CALIFORNIA OR ITS OFFICERS OR AGENTS SHALL NOT BE RESPONSIBLE FOR THE ACCURACY OR COMPLETENESS OF SCANNED COPIES OF THIS PLAN SHEET.

NOTE:

1. FOR ACCURATE RIGHT OF WAY DATA, CONTACT RIGHT OF WAY ENGINEERING AT THE DISTRICT OFFICE.

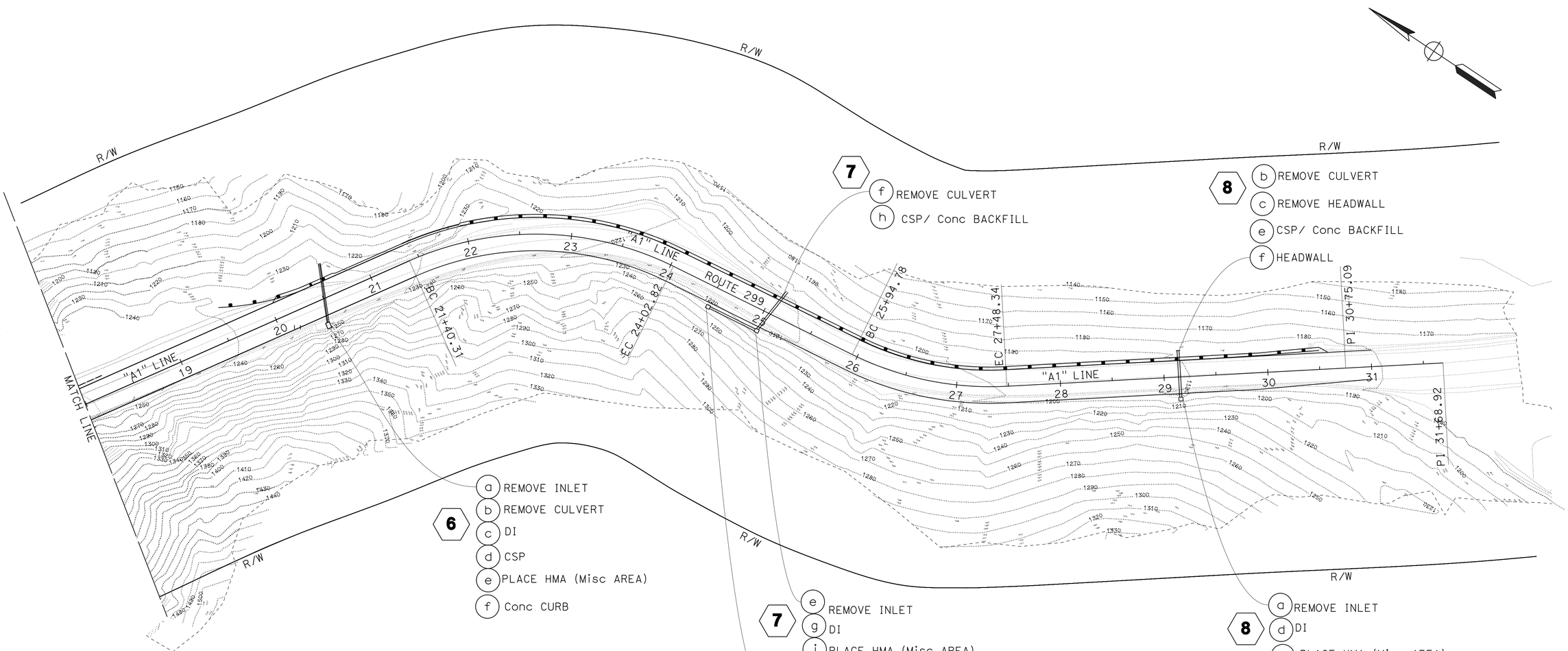

DRAINAGE PLAN

SCALE: 1" = 50'

D-2

APPROVED FOR DRAINAGE WORK ONLY

REVISED BY	DATE REVISED

CALCULATED-DESIGNED BY	RYAN PRINS
CHECKED BY	KEN HALLIS
FUNCTIONAL SUPERVISOR	AL TRUJILLO

STATE OF CALIFORNIA - DEPARTMENT OF TRANSPORTATION

Caltrans® DESIGN

P:\proj1\02\3E790_plans\pse\23e790ia002.dgn

LAST REVISION 03-26-14 DATE PLOTTED => 28-MAY-2014 TIME PLOTTED => 14:56

Dist	COUNTY	ROUTE	POST MILES TOTAL PROJECT	SHEET No.	TOTAL SHEETS
02	Tri	299	12.3/12.9	27	149

REGISTERED CIVIL ENGINEER 03-26-14 DATE

03-26-14
PLANS APPROVAL DATE

REGISTERED PROFESSIONAL ENGINEER KEN HALLIS No. C38203 Exp. 3-31-15 CIVIL STATE OF CALIFORNIA

THE STATE OF CALIFORNIA OR ITS OFFICERS OR AGENTS SHALL NOT BE RESPONSIBLE FOR THE ACCURACY OR COMPLETENESS OF SCANNED COPIES OF THIS PLAN SHEET.

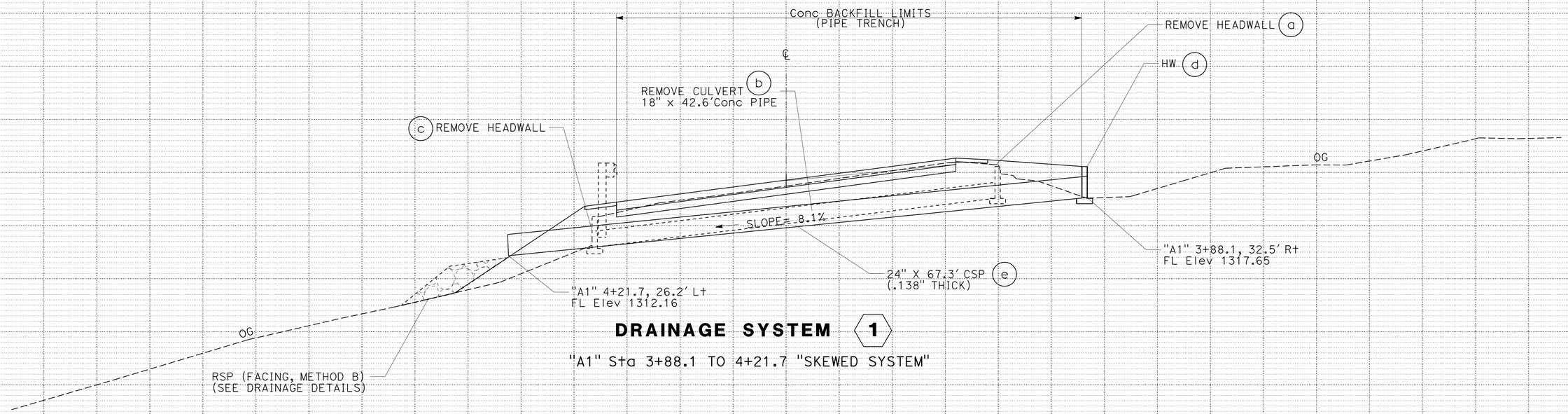

DRAINAGE SYSTEM 1

"A1" Sta 3+88.1 TO 4+21.7 "SKEWED SYSTEM"

DRAINAGE PROFILES

SCALE: 1" = 5' Horiz
1" = 5' Vert

DP-1

REVISED BY | DATE REVISED

RYAN PRINS | KEN HALLIS

CALCULATED-DESIGNED BY | CHECKED BY

FUNCTIONAL SUPERVISOR: AL TRUJILLO

STATE OF CALIFORNIA - DEPARTMENT OF TRANSPORTATION

Caltrans® DESIGN

P:\proj1\02\3E790_plans\pse\23e790ib001.dgn

LAST REVISION 03-26-14 | DATE PLOTTED => 28-MAY-2014 | TIME PLOTTED => 14:56

Dist	COUNTY	ROUTE	POST MILES TOTAL PROJECT	SHEET No.	TOTAL SHEETS
02	Tri	299	12.3/12.9	28	149

REGISTERED CIVIL ENGINEER 03-26-14 DATE

03-26-14
PLANS APPROVAL DATE

REGISTERED PROFESSIONAL ENGINEER KEN HALLIS No. C38203 Exp. 3-31-15 CIVIL STATE OF CALIFORNIA

THE STATE OF CALIFORNIA OR ITS OFFICERS OR AGENTS SHALL NOT BE RESPONSIBLE FOR THE ACCURACY OR COMPLETENESS OF SCANNED COPIES OF THIS PLAN SHEET.

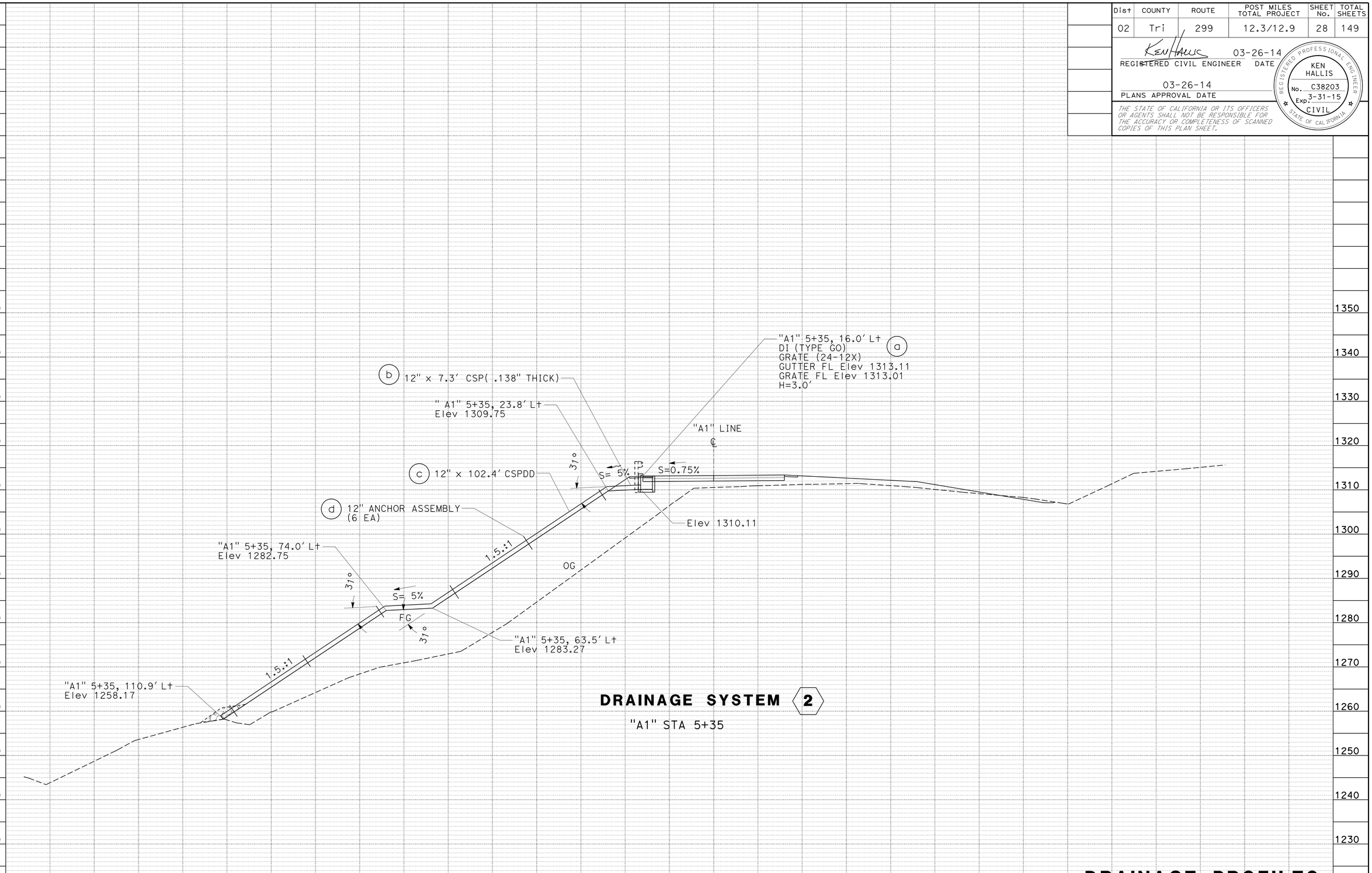

DRAINAGE PROFILES

SCALE: 1" = 10' Horiz
1" = 10' Vert

DP-2

REVISED BY | DATE REVISED

RYAN PRINS | KEN HALLIS

CALCULATED-DESIGNED BY | CHECKED BY

FUNCTIONAL SUPERVISOR: AL TRUJILLO

STATE OF CALIFORNIA - DEPARTMENT OF TRANSPORTATION

Caltrans

DESIGN

P:\proj1\02\3E790_plans\pse\23e790ib002.dgn

LAST REVISION | DATE PLOTTED => 28-MAY-2014 | TIME PLOTTED => 14:56

03-26-14

BORDER LAST REVISED 7/2/2010 | USERNAME => s123119 | DGN FILE => 23e790ib002.dgn | RELATIVE BORDER SCALE IS IN INCHES 0 1 2 3 | UNIT 0316 | PROJECT NUMBER & PHASE 02-0002-0151-1 | EA: 02-3E7901

Dist	COUNTY	ROUTE	POST MILES TOTAL PROJECT	SHEET No.	TOTAL SHEETS
02	Tri	299	12.3/12.9	29	149

REGISTERED CIVIL ENGINEER 03-26-14 DATE

03-26-14
PLANS APPROVAL DATE

REGISTERED PROFESSIONAL ENGINEER KEN HALLIS No. C38203 Exp. 3-31-15 CIVIL STATE OF CALIFORNIA

THE STATE OF CALIFORNIA OR ITS OFFICERS OR AGENTS SHALL NOT BE RESPONSIBLE FOR THE ACCURACY OR COMPLETENESS OF SCANNED COPIES OF THIS PLAN SHEET.

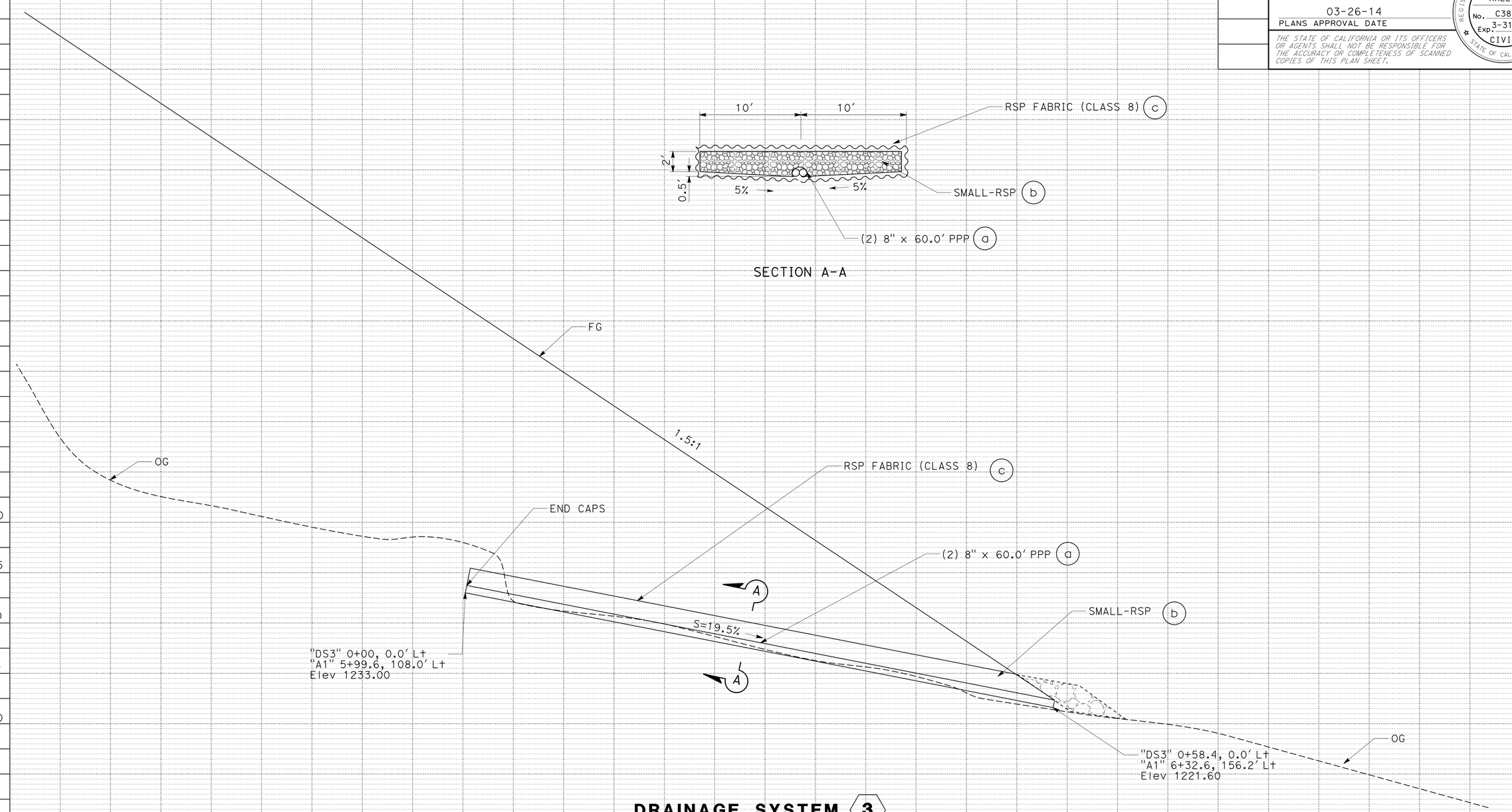

DRAINAGE SYSTEM 3

"DS3" 0+00 TO 0+58.4

DRAINAGE PROFILES

SCALE: 1" = 5' Horiz
1" = 5' Vert

DP-3

REVISED BY | DATE REVISED

RYAN PRINS | KEN HALLIS

CALCULATED-DESIGNED BY | CHECKED BY

FUNCTIONAL SUPERVISOR: AL TRUJILLO

STATE OF CALIFORNIA - DEPARTMENT OF TRANSPORTATION

Caltrans® **DESIGN**

P:\proj1\02\3E790_plans\pse\23e790ib003.dgn

LAST REVISION 03-26-14 | DATE PLOTTED => 28-MAY-2014 | TIME PLOTTED => 14:56

Dist	COUNTY	ROUTE	POST MILES TOTAL PROJECT	SHEET No.	TOTAL SHEETS
02	Tri	299	12.3/12.9	30	149

REGISTERED CIVIL ENGINEER 03-26-14 DATE

03-26-14
PLANS APPROVAL DATE

REGISTERED PROFESSIONAL ENGINEER KEN HALLIS No. C38203 Exp. 3-31-15 CIVIL STATE OF CALIFORNIA

THE STATE OF CALIFORNIA OR ITS OFFICERS OR AGENTS SHALL NOT BE RESPONSIBLE FOR THE ACCURACY OR COMPLETENESS OF SCANNED COPIES OF THIS PLAN SHEET.

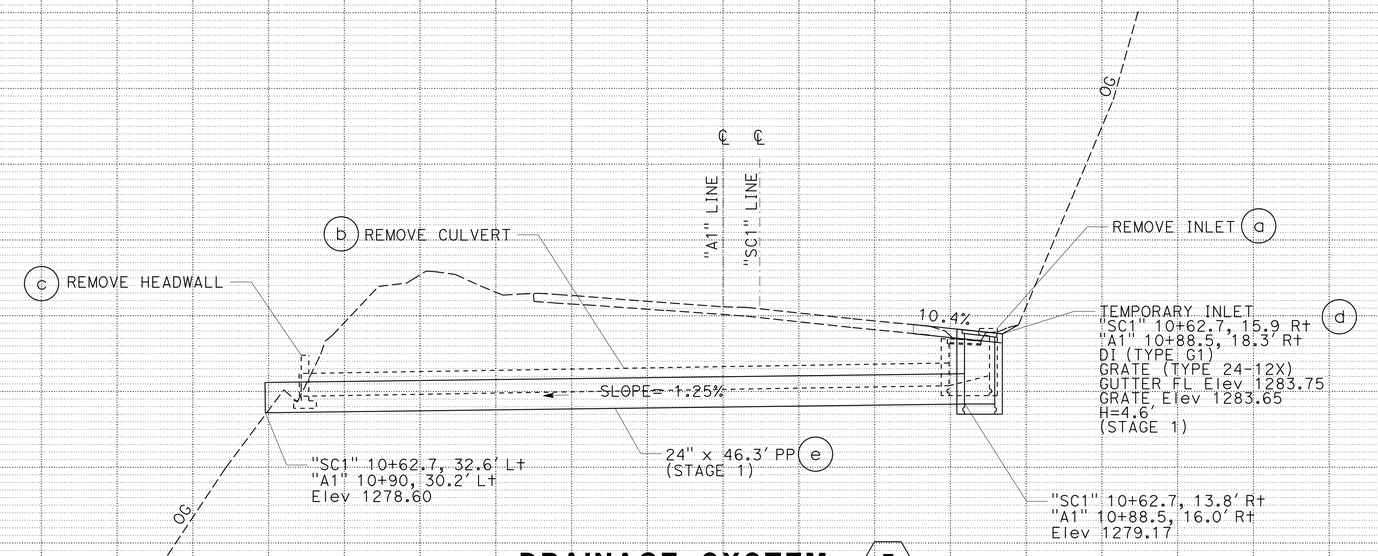

DRAINAGE SYSTEM (STAGE 1) 5

"SC1" Sta 10+62.7
"A1" Sta 10+88.5 TO 10+90 "SKEWED SYSTEM"

SCALE: 1" = 5' Horiz
1" = 5' Vert

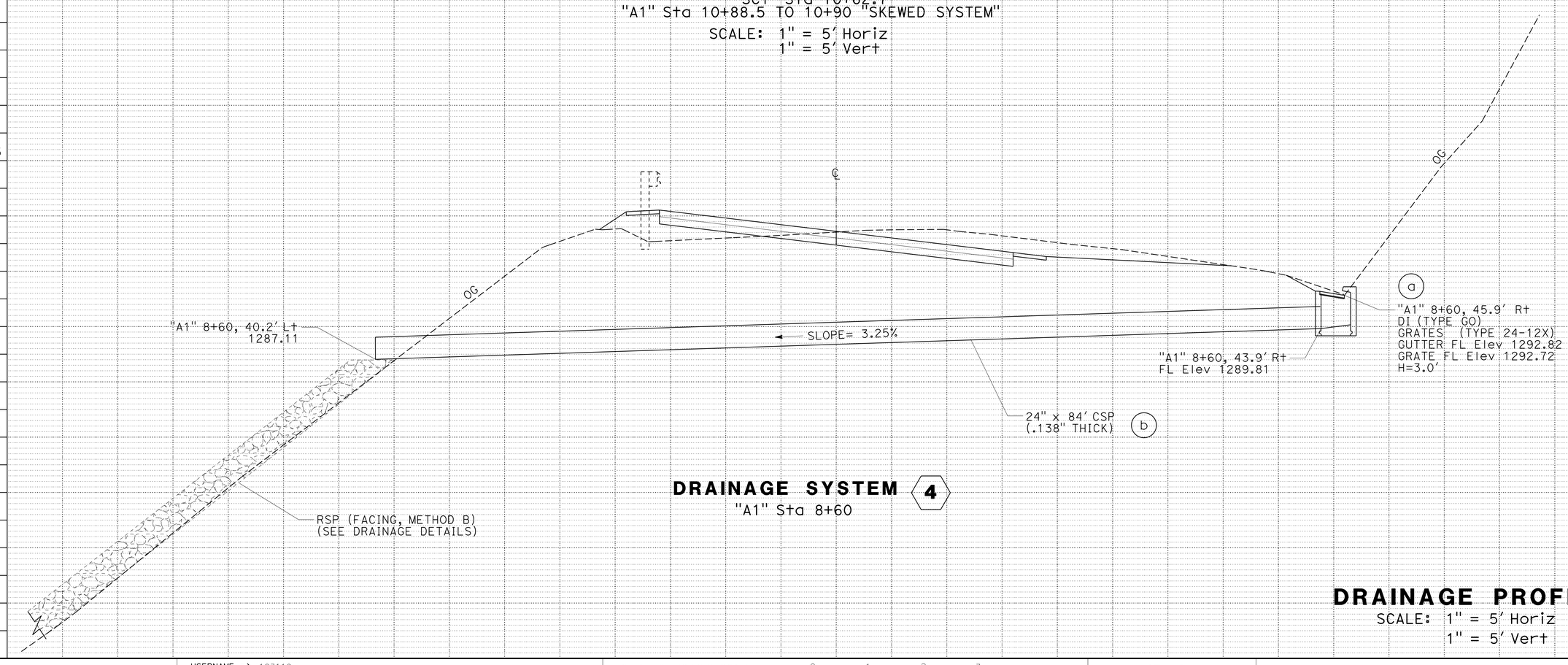

DRAINAGE SYSTEM 4

"A1" Sta 8+60

DRAINAGE PROFILES

SCALE: 1" = 5' Horiz
1" = 5' Vert

DP-4

REVISED BY | DATE REVISED
RYAN PRINS | KEN HALLIS
CALCULATED-DESIGNED BY | CHECKED BY
FUNCTIONAL SUPERVISOR
AL TRUJILLO

STATE OF CALIFORNIA - DEPARTMENT OF TRANSPORTATION
Caltrans
DESIGN

P:\proj1\02\3E790_plans\pse\23e790ib004.dgn

LAST REVISION 03-26-14 | DATE PLOTTED => 28-MAY-2014 TIME PLOTTED => 14:56

Dist	COUNTY	ROUTE	POST MILES TOTAL PROJECT	SHEET No.	TOTAL SHEETS
02	Tri	299	12.3/12.9	31	149

REGISTERED CIVIL ENGINEER 03-26-14 DATE

03-26-14
PLANS APPROVAL DATE

REGISTERED PROFESSIONAL ENGINEER KEN HALLIS No. C38203 Exp. 3-31-15 CIVIL STATE OF CALIFORNIA

THE STATE OF CALIFORNIA OR ITS OFFICERS OR AGENTS SHALL NOT BE RESPONSIBLE FOR THE ACCURACY OR COMPLETENESS OF SCANNED COPIES OF THIS PLAN SHEET.

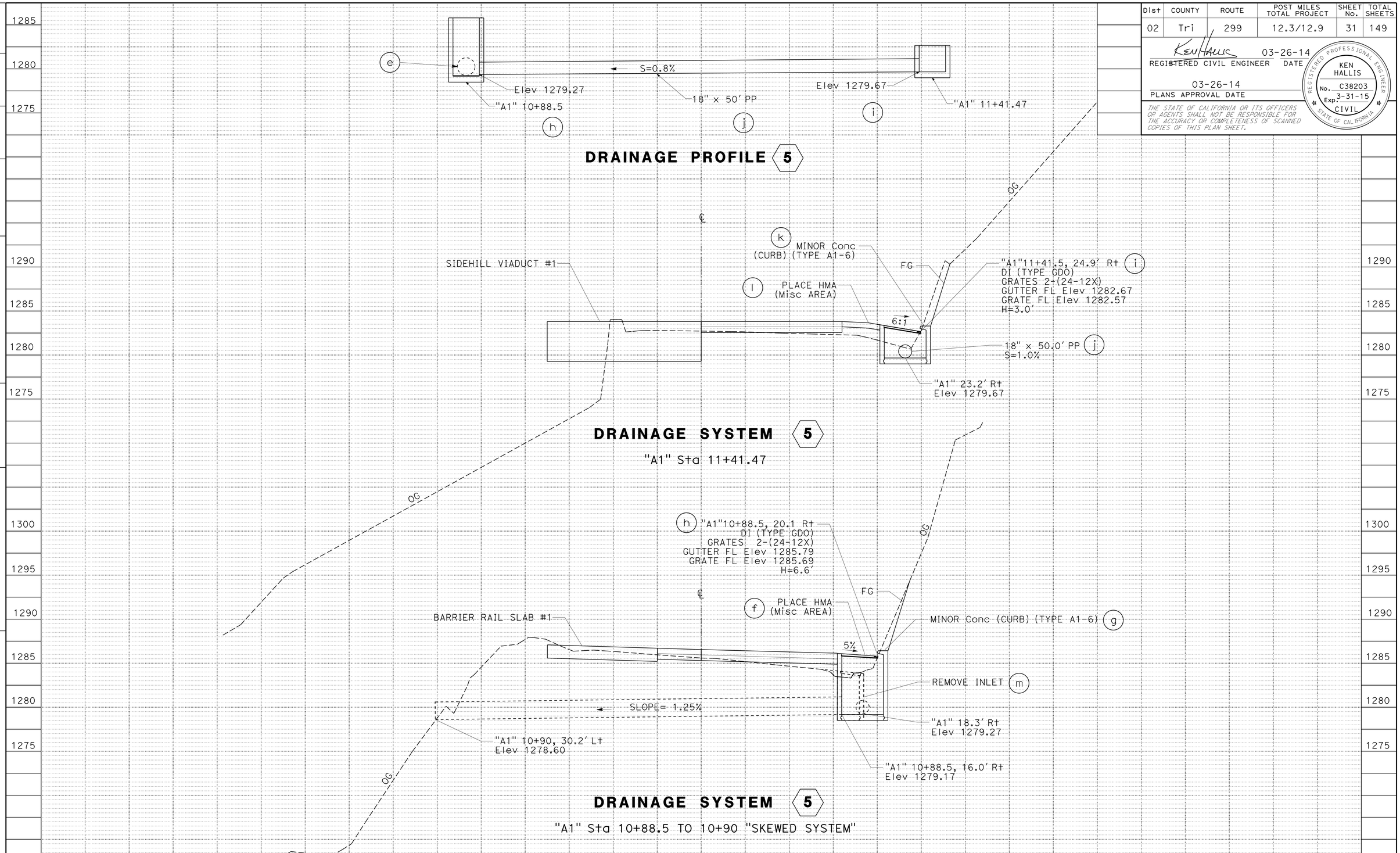

DRAINAGE PROFILES

SCALE: 1" = 5' Horiz
1" = 5' Vert

DP-5

REVISED BY | DATE REVISED
RYAN PRINS | KEN HALLIS
CALCULATED-DESIGNED BY | CHECKED BY
FUNCTIONAL SUPERVISOR
AL TRUJILLO

STATE OF CALIFORNIA - DEPARTMENT OF TRANSPORTATION
Caltrans
DESIGN

P:\proj\02\3E790_plans\pse\23e790ib005.dgn

LAST REVISION | DATE PLOTTED => 28-MAY-2014
03-26-14 | TIME PLOTTED => 14:56

Dist	COUNTY	ROUTE	POST MILES TOTAL PROJECT	SHEET No.	TOTAL SHEETS
02	Tri	299	12.3/12.9	32	149

REGISTERED CIVIL ENGINEER 03-26-14 DATE

03-26-14
PLANS APPROVAL DATE

REGISTERED PROFESSIONAL ENGINEER KEN HALLIS No. C38203 Exp. 3-31-15 CIVIL STATE OF CALIFORNIA

THE STATE OF CALIFORNIA OR ITS OFFICERS OR AGENTS SHALL NOT BE RESPONSIBLE FOR THE ACCURACY OR COMPLETENESS OF SCANNED COPIES OF THIS PLAN SHEET.

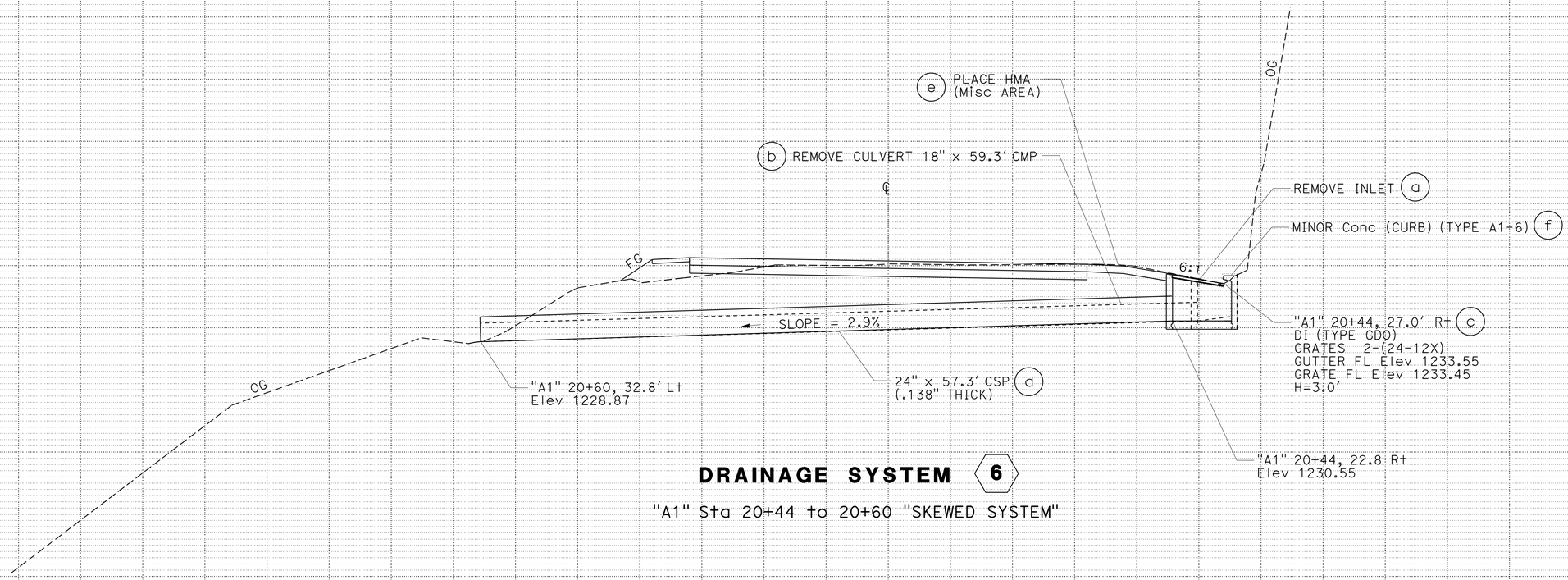

DRAINAGE SYSTEM 6

"A1" Sta 20+44 to 20+60 "SKEWED SYSTEM"

DRAINAGE PROFILES

SCALE: 1" = 5' Horiz
1" = 5' Vert

DP-6

REVISED BY | DATE REVISED

RYAN PRINS | KEN HALLIS

CALCULATED-DESIGNED BY | CHECKED BY

FUNCTIONAL SUPERVISOR: AL TRUJILLO

STATE OF CALIFORNIA - DEPARTMENT OF TRANSPORTATION

Caltrans DESIGN

P:\proj1\02\3E790_plans\pse\23e790ib006.dgn

LAST REVISION | DATE PLOTTED => 28-MAY-2014 | TIME PLOTTED => 14:56 | 03-26-14

BORDER LAST REVISED 7/2/2010 | USERNAME => s123119 | DGN FILE => 23e790ib006.dgn | RELATIVE BORDER SCALE IS IN INCHES 0 1 2 3 | UNIT 0316 | PROJECT NUMBER & PHASE 02-0002-0151-1 | EA: 02-3E7901

Dist	COUNTY	ROUTE	POST MILES TOTAL PROJECT	SHEET No.	TOTAL SHEETS
02	Tri	299	12.3/12.9	33	149

REGISTERED CIVIL ENGINEER 03-26-14 DATE

03-26-14
PLANS APPROVAL DATE

REGISTERED PROFESSIONAL ENGINEER KEN HALLIS No. C38203 Exp. 3-31-15 CIVIL STATE OF CALIFORNIA

THE STATE OF CALIFORNIA OR ITS OFFICERS OR AGENTS SHALL NOT BE RESPONSIBLE FOR THE ACCURACY OR COMPLETENESS OF SCANNED COPIES OF THIS PLAN SHEET.

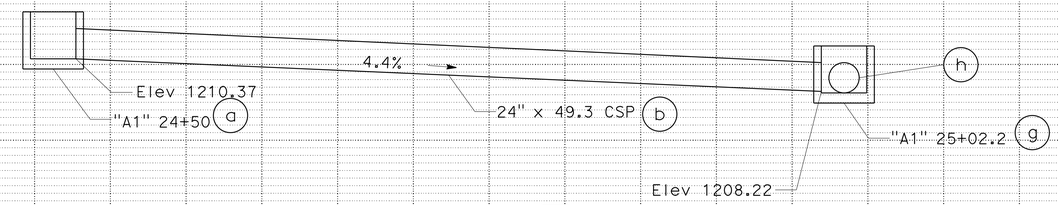

DRAINAGE PROFILE 7 b

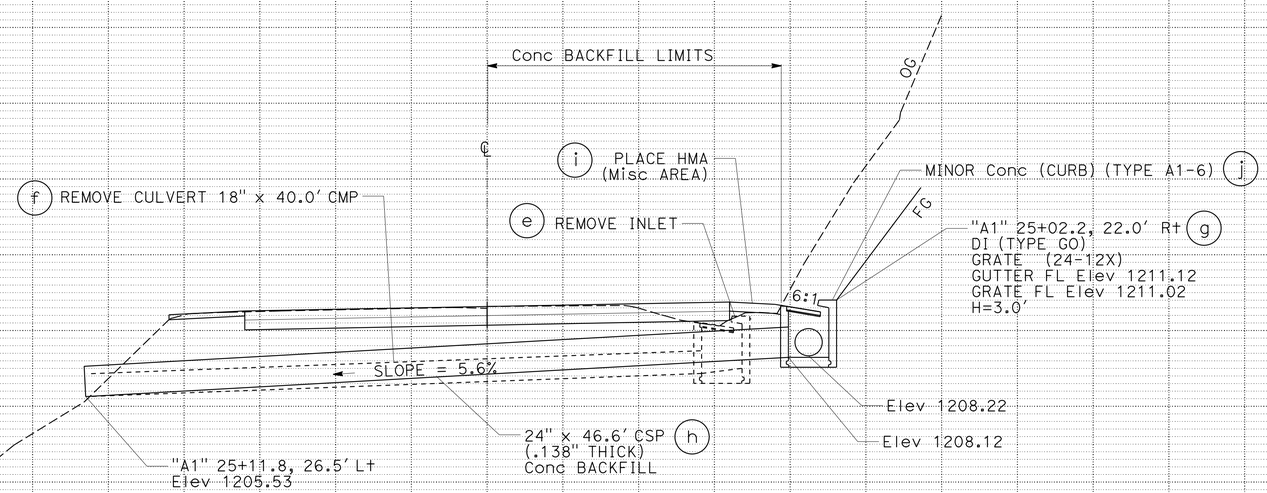

DRAINAGE SYSTEM 7

"A1" Sta 25+02.2 TO 25+11.8 "SKEWED SYSTEM"

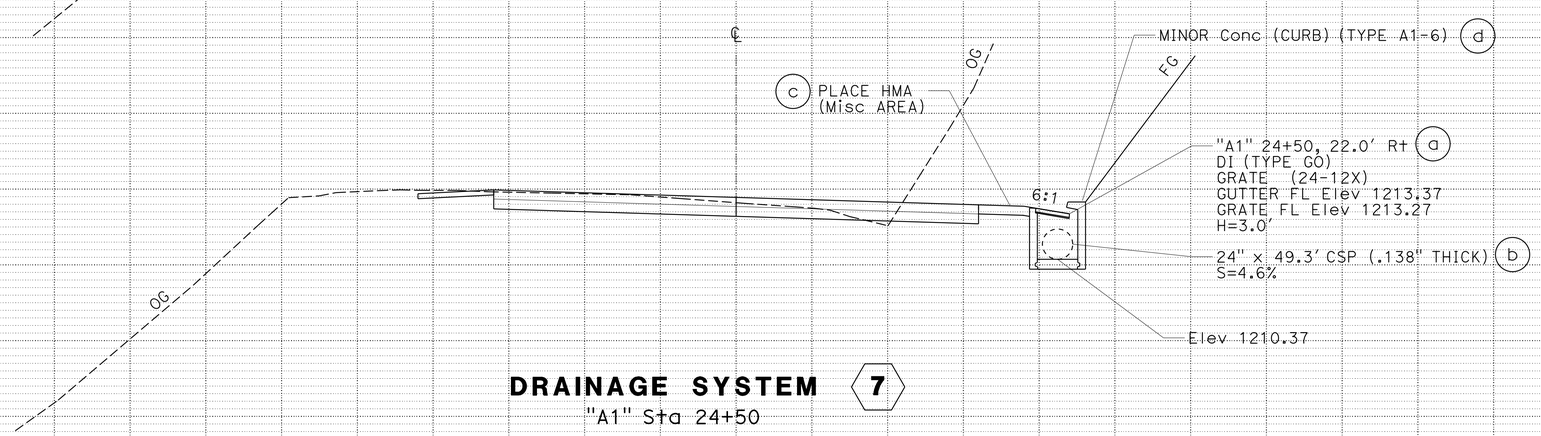

DRAINAGE SYSTEM 7

"A1" Sta 24+50

DRAINAGE PROFILES

SCALE: 1" = 5' Horiz
1" = 5' Vert

DP-7

REVISED BY | DATE REVISED
RYAN PRINS | KEN HALLIS
CALCULATED-DESIGNED BY | CHECKED BY
FUNCTIONAL SUPERVISOR: AL TRUJILLO

STATE OF CALIFORNIA - DEPARTMENT OF TRANSPORTATION
Caltrans
DESIGN

P:\proj1\02\3E790_plans\pse\23e790ib007.dgn

LAST REVISION 03-26-14 | DATE PLOTTED => 28-MAY-2014 | TIME PLOTTED => 14:56

BORDER LAST REVISED 7/2/2010 | USERNAME => s123119 | DGN FILE => 23e790ib007.dgn | RELATIVE BORDER SCALE IS IN INCHES 0 1 2 3 | UNIT 0316 | PROJECT NUMBER & PHASE 02-0002-0151-1 | EA: 02-3E7901

Dist	COUNTY	ROUTE	POST MILES TOTAL PROJECT	SHEET No.	TOTAL SHEETS
02	Tri	299	12.3/12.9	34	149

REGISTERED CIVIL ENGINEER 03-26-14 DATE

03-26-14
PLANS APPROVAL DATE

REGISTERED PROFESSIONAL ENGINEER KEN HALLIS No. C38203 Exp. 3-31-15 CIVIL STATE OF CALIFORNIA

THE STATE OF CALIFORNIA OR ITS OFFICERS OR AGENTS SHALL NOT BE RESPONSIBLE FOR THE ACCURACY OR COMPLETENESS OF SCANNED COPIES OF THIS PLAN SHEET.

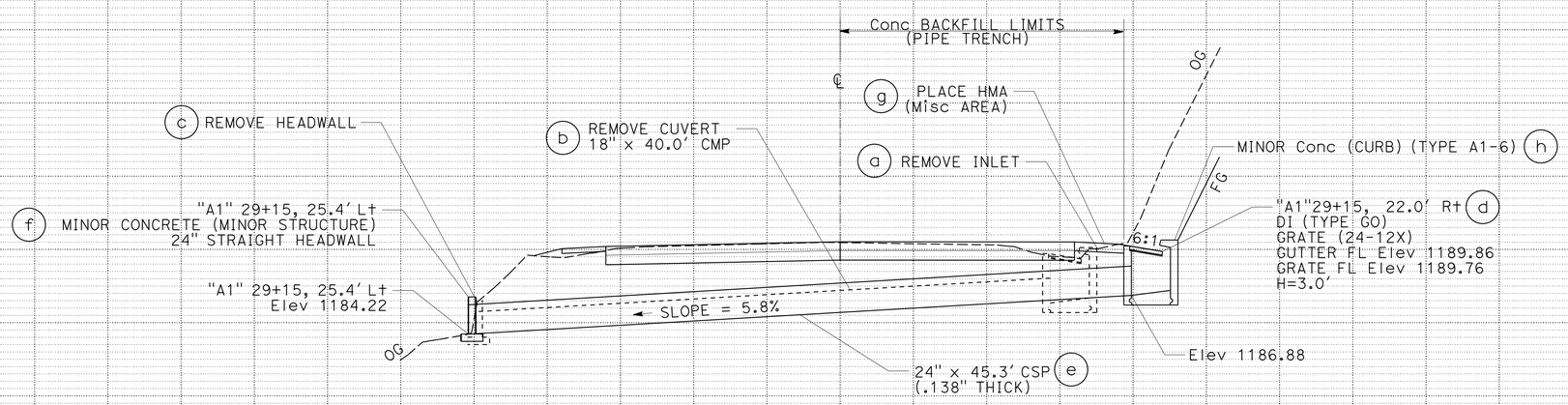

DRAINAGE SYSTEM 8

"A1" Sta 29+15

DRAINAGE PROFILES

SCALE: 1" = 5' Horiz
1" = 5' Vert

DP-8

REVISED BY | DATE REVISED

RYAN PRINS | KEN HALLIS

CALCULATED-DESIGNED BY | CHECKED BY

FUNCTIONAL SUPERVISOR: AL TRUJILLO

STATE OF CALIFORNIA - DEPARTMENT OF TRANSPORTATION

Caltrans® DESIGN

P:\proj1\02\3E790_plans\pse\23e790ib008.dgn

LAST REVISION 03-26-14 | DATE PLOTTED => 28-MAY-2014 | TIME PLOTTED => 14:56

Dist	COUNTY	ROUTE	POST MILES TOTAL PROJECT	SHEET No.	TOTAL SHEETS
02	Tri	299	12.3/12.9	35	149

REGISTERED CIVIL ENGINEER 03-26-14 DATE

03-26-14
PLANS APPROVAL DATE

REGISTERED PROFESSIONAL ENGINEER KEN HALLIS No. C38203 Exp. 3-31-15 CIVIL STATE OF CALIFORNIA

THE STATE OF CALIFORNIA OR ITS OFFICERS OR AGENTS SHALL NOT BE RESPONSIBLE FOR THE ACCURACY OR COMPLETENESS OF SCANNED COPIES OF THIS PLAN SHEET.

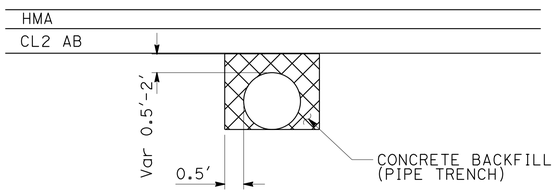

CONCRETE BACKFILL

1 7 8

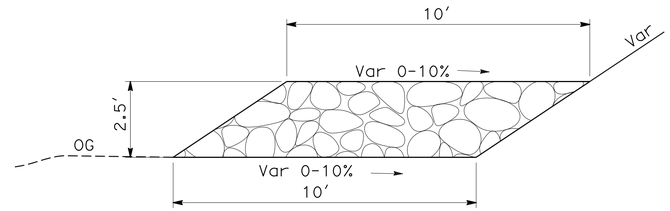

RSP (FACING, METHOD B) DETAIL
"A1" 4+17.1,27.8' Lt TO
"A1" 8+59.2, 39.8' Lt
(TOE OF SLOPE)

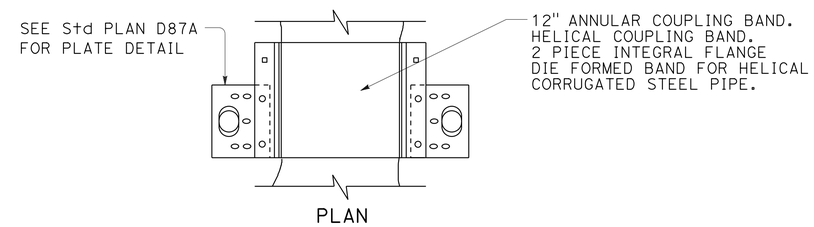

PLAN

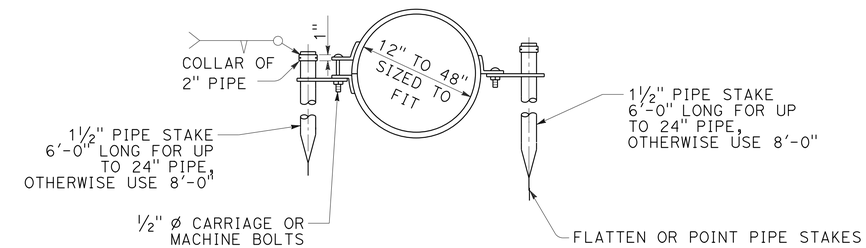

SECTION

CORRUGATED STEEL PIPE ANCHOR ASSEMBLY

2

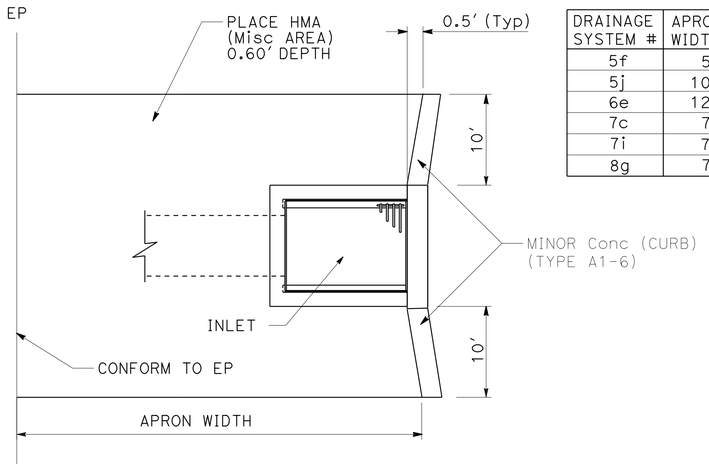

DRAINAGE SYSTEM #	APRON WIDTH
5f	5.7'
5j	10.0'
6e	12.0'
7c	7.0'
7i	7.1'
8g	7.1'

PLAN

HMA APRON

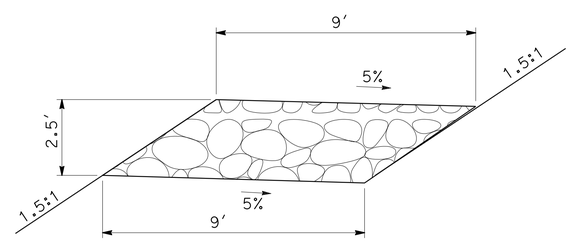

RSP (FACING, METHOD B) DETAIL
"A1" 4+91.1, 68.6' Lt TO
"A1" 8+53.1, 68.6' Lt
(BENCH)

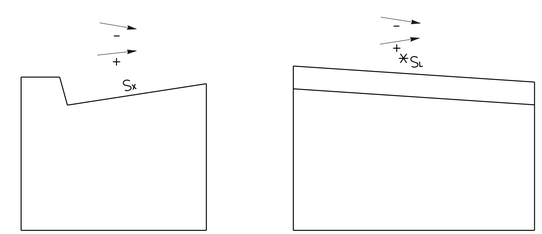

SIDE VIEW FRONT VIEW

INLET SLOPE FIGURE

*THE SLOPE SL REFERENCES UP-STATION

DRAINAGE DETAILS

NO SCALE

DD-1

REVISED BY | DATE REVISED
RYAN PRINS | KEN HALLIS
CALCULATED-DESIGNED BY | CHECKED BY
FUNCTIONAL SUPERVISOR | AL TRUJILLO
STATE OF CALIFORNIA - DEPARTMENT OF TRANSPORTATION
Caltrans
DESIGN

P:\proj1\02\3E790_plans\pse\23e790ic001.dgn

LAST REVISION 03-26-14 | DATE PLOTTED => 28-MAY-2014 | TIME PLOTTED => 14:56

Dist	COUNTY	ROUTE	POST MILES TOTAL PROJECT	SHEET No.	TOTAL SHEETS
02	Tri	299	12.3/12.9	36	149

REGISTERED CIVIL ENGINEER DATE 03-26-14

PLANS APPROVAL DATE 03-26-14

REGISTERED PROFESSIONAL ENGINEER KEN HALLIS No. C38203 Exp. 3-31-15 CIVIL STATE OF CALIFORNIA

THE STATE OF CALIFORNIA OR ITS OFFICERS OR AGENTS SHALL NOT BE RESPONSIBLE FOR THE ACCURACY OR COMPLETENESS OF SCANNED COPIES OF THIS PLAN SHEET.

NOTES:

1. PLASTIC PIPES SHALL BE SMOOTH-INTERIOR WALL TYPE.
2. FIELD VERIFY PIPE LENGTHS AND ELBOW ANGLES.

LINED CHANNEL QUANTITIES

STATION "A1"	RSP (FACING, METHOD B)
	CY
4+17.1 TO 8+59.2 (TOE)	847
4+91.1 TO 8+53.1 (BENCH)	342
TOTAL	1189

DRAINAGE QUANTITIES

DRAINAGE PLAN SHEET No.	SYSTEM No.	UNIT No.	REMOVE INLET	REMOVE CULVERT	REMOVE HEADWALL	MINOR CONCRETE (MINOR Str)	HEIGHT (N)	SL (N)	SX (N)	Misc IRON AND STEEL	24" CSP (.138" THICK)	18" PLASTIC PIPE	24" PLASTIC PIPE	PLACE HMA (Misc AREA) *	HMA (TYPE A) *	MINOR Conc (CURB)	8" PPP	SMALL-RSP	RSP FABRIC (CLASS 8)	CONCRETE BACKFILL (PIPE TRENCH)	12" CSP (.079" THICK)	12" CSP DD	12" ANCHOR ASSEMBLY	COMMENTS	"A1" STATION	DRAINAGE PLAN SHEET No.	SYSTEM No.	UNIT No.
			EA	LF	EA	CY	FT			LB	LF	LF	LF	SQYD	TON	CY	LF	CY	SQYD	CY	LF	LF	EA					
1	1	a			1																				"A1" 3+81 TO 4+21	1	1	a
		b		42.6																				18" x 42.6' Conc PIPE				b
		c			1																							c
		d				1.2																		STRAIGHT HEADWALL				d
		e									67.3									10.5								e
1	2	a				1.24	3.0	-4.4%	0.75%	239														DI (TYPE GO), GRATE (24-12X)	"A1" 5+47.5	1	2	a
		b																			7.3							b
		c																				112.3						c
		d																					6					d
1	3	a															120								"A1" 5+99 TO 6+32	1	3	a
		b																100							"DS" 0+00 TO 0+58.4			b
		c																	330									c
1	4	a				1.24	3.0	0%	6:1	239														DI (TYPE GO), GRATE (24-12X)	"A1" 8+60	1	4	a
		b									84																	b
1	5	a	1																						"A1"10+81 TO 10+90	1	5	a
		b		43.6																				24" x 43.6' CMP				b
		c			1																							c
		d				1.32	4.7	0%	5%	239														DI (TYPE G1), GRATE (24-12X)	"A1"10+90			d
		e											46.3															e
		f												7.0	2.9									HMA APRON				f
		g														.52												g
		h				2.74	6.5	-4.4%	5%	473														DI (TYPE GDO), GRATES 2-(24-12X)				h
		i				1.62	3.0	-4.4%	6:1	473														DI (TYPE GDO), GRATES 2-(24-12X)	"A1"11+41			i
		j										50																j
		k														.52												k
		l												24.1	9.8									HMA APRON				l
		m	1																									m
DQ-1 TOTALS			2	86.2	3	9.36				1663	151.3	50	46.3	31.1	12.7	1.04	120	100	330	10.5	7.3	112.3	6					

(N) - NOT A SEPARATE PAY ITEM, FOR INFORMATION ONLY
* - SEE SUMMARY OF QUANTITY SHEETS FOR PROJECT TOTALS

DRAINAGE QUANTITIES
DQ-1

REVISED BY | DATE REVISED
RYAN PRINS | KEN HALLIS
CALCULATED-DESIGNED BY | CHECKED BY
FUNCTIONAL SUPERVISOR: AL TRUJILLO

STATE OF CALIFORNIA - DEPARTMENT OF TRANSPORTATION
Caltrans® DESIGN

P:\proj1\02\3E790_plans\pse\23e790id001.dgn

LAST REVISION | DATE PLOTTED => 28-MAY-2014 | TIME PLOTTED => 14:56
03-26-14

Dist	COUNTY	ROUTE	POST MILES TOTAL PROJECT	SHEET No.	TOTAL SHEETS
02	Tri	299	12.3/12.9	37	149

REGISTERED CIVIL ENGINEER 03-26-14 DATE

03-26-14
PLANS APPROVAL DATE

REGISTERED PROFESSIONAL ENGINEER KEN HALLIS No. C38203 Exp. 3-31-15 CIVIL STATE OF CALIFORNIA

THE STATE OF CALIFORNIA OR ITS OFFICERS OR AGENTS SHALL NOT BE RESPONSIBLE FOR THE ACCURACY OR COMPLETENESS OF SCANNED COPIES OF THIS PLAN SHEET.

DRAINAGE QUANTITIES

DRAINAGE PLAN SHEET No.	SYSTEM No. ⬡	UNIT No. ◯	REMOVE INLET	REMOVE CULVERT	REMOVE HEADWALL	MINOR CONCRETE (MINOR Str)	HEIGHT (N)	SL (N)	SX (N)	Misc IRON AND STEEL	24" CSP (.138" THICK)	18" PLASTIC PIPE	24" PLASTIC PIPE	PLACE HMA (Misc AREA) *	HMA (TYPE A) *	MINOR Conc (CURB)	8" PPP	SMALL-RSP	RSP FABRIC (CLASS 8)	CONCRETE BACKFILL (PIPE TRENCH)	12" CSP (.079" THICK)	12" CSP DD	12" ANCHOR ASSY	COMMENTS	"A1" STATION	DRAINAGE PLAN SHEET No.	SYSTEM No. ⬡	UNIT No. ◯
			EA	LF	EA	CY	FT			LB	LF	LF	LF	SQYD	TON	CY	LF	CY	SQYD	CY	LF	LF	EA					
2	6	a	1																						"A1" 20+44 TO 20+60	2	6	a
		b		59.3																				18" x 59.3 CMP				b
		c				1.62	3.0	-5.3%	6:1															DI (TYPE GDO), GRATES 2-(24-12X)				c
		d								473	57.3																	d
		e												29.4	11.9									HMA APRON				e
		f														.52												f
2	7	a				1.24	3.0	-5.2%	6:1															DI (TYPE GO), GRATE (24-12X)	"A1"24+50	2	7	a
		b								239	49.3													24" x 49.2' CSP, (.138" THICK)				b
		c												17.1	6.9									HMA APRON				c
		d														.52												d
		e	1																						"A1" 25+08 TO 25.11			e
		f		40.0																				18" x 40.0' CMP				f
		g				1.24	3.0	-5.2%	6:1															DI (TYPE GO), GRATE (24-12X)				g
		h								239	46.6									3.9				24" x 46.6' CSP, (.138" THICK)				h
		i												17.3	7.0									HMA APRON				i
		j														.52												j
2	8	a	1																						"A1"29+15	2	8	a
		b		45.3																				18" x 45.3' CMP				b
		c			1																							c
		d				1.24	3.0	-5.2%	6:1															DI (TYPE GO), GRATE (24-12X)				d
		e								239	45.3									3.9				24" x 45.3 CSP (.138" THICK)				e
		f				1.2																						f
		g												17.3	7.0									HMA APRON				g
		h														.52												h
SHEET TOTAL			3	144.6	1	7.49				1190	198	0	0	29.4	32.8	2.08	0	0	0	7.8	0	0	0					
TOTAL DQ-1			2	86.2	3	9.36				1663	151.3	50	46.3	31.1	12.7	1.04	120	100	330	10.5	7.3	112.3	6					
TOTAL			5	230.8	4	16.85				2853	349.3	50	46.3	112.2	45.5	3.12	120	100	330	18.3	7.3	112.3	6					

(N) - NOT A SEPARATE PAY ITEM, FOR INFORMATION ONLY

* - SEE SUMMARY OF QUANTITIES SHEETS FOR PROJECT TOTALS

REVISED BY | DATE REVISED

RYAN PRINS | KEN HALLIS

CALCULATED-DESIGNED BY | CHECKED BY

FUNCTIONAL SUPERVISOR: AL TRUJILLO

STATE OF CALIFORNIA - DEPARTMENT OF TRANSPORTATION

Caltrans® DESIGN

P:\proj\02\3E790_plans\pse\23e790id002.dgn

DRAINAGE QUANTITIES

DQ-2

LAST REVISION 03-26-14 | DATE PLOTTED => 28-MAY-2014 | TIME PLOTTED => 14:56

Dist	COUNTY	ROUTE	POST MILES TOTAL PROJECT	SHEET No.	TOTAL SHEETS
02	Tri	299	12.3/12.9	38	149

REGISTERED CIVIL ENGINEER 03-26-14 DATE

03-26-14
PLANS APPROVAL DATE

REGISTERED PROFESSIONAL ENGINEER KEN HALLIS No. C38203 Exp. 3-31-15 CIVIL STATE OF CALIFORNIA

THE STATE OF CALIFORNIA OR ITS OFFICERS OR AGENTS SHALL NOT BE RESPONSIBLE FOR THE ACCURACY OR COMPLETENESS OF SCANNED COPIES OF THIS PLAN SHEET.

NOTE:

ALL CONSTRUCTION AREA SIGNS SHALL BE BLACK ON ORANGE.

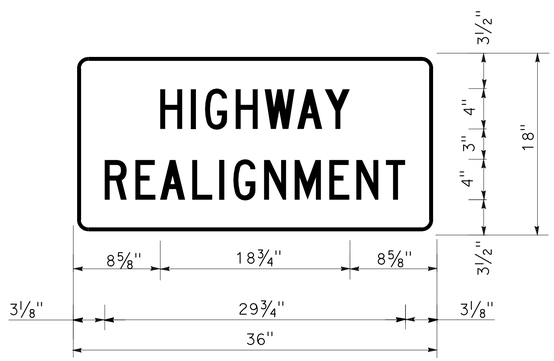

SIGN DETAIL

1.5" RADIUS, 0.4" BORDER, 0.4" INDENT, BLACK ON ORANGE;
[HIGHWAY] C; [REALIGNMENT] C;

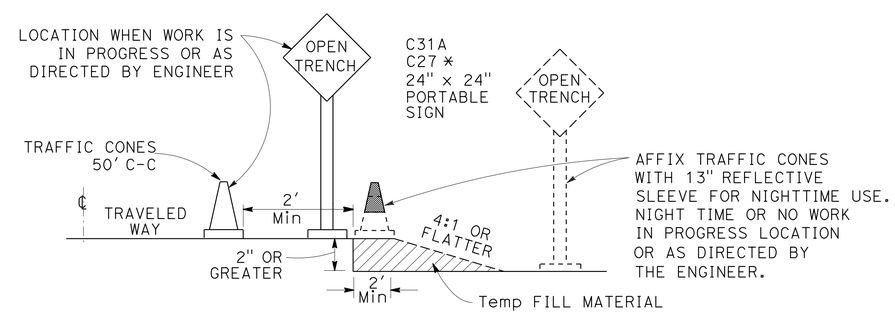

OPEN TRENCH SIGNING AND MARKING

* PLACE AT 250' INTERVALS THROUGH THE OPEN TRENCH AREA ALTERNATE C27 (OPEN TRENCH) AND C31A (NO SHOULDER) SIGNS

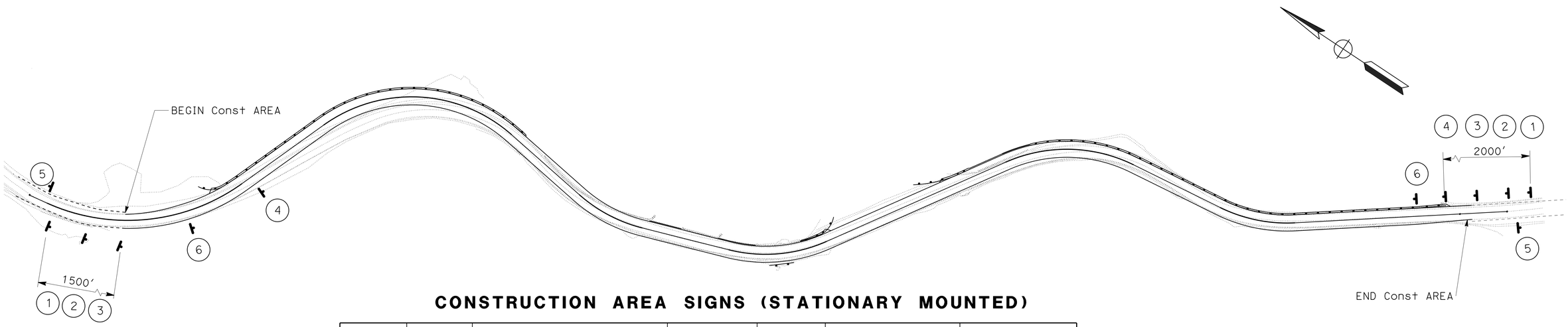

CONSTRUCTION AREA SIGNS (STATIONARY MOUNTED)

No.	TYPE	MESSAGE	POST EACH	No. OF SIGNS	PANEL SIZE	COMMENTS
1	W20-1 C23B(CA)	ROAD WORK AHEAD HIGHWAY REALIGNMENT	1- 4" x 6"	2	48" x 48" 36" X 18"	STAGE 1,2,3,4,5
2	W20-4	ONE LANE ROAD AHEAD	1- 4" x 6"	2	48" x 48"	STAGE 3,4
3	W3-3	SIGNAL AHEAD SYMBOL SIGN	*	2	48" x 48"	STAGE 3,4
4	R10-6	STOP HERE ON RED	1- 4" x 6"	2	24" x 36"	STAGE 3,4
5	G20-2	END ROAD WORK	1- 4" x 6"	2	48" x 18"	STAGE 1,2,3,4,5
6	W11-I W16-13	BICYCLE WHEN FLASHING	**	4	30" x 30" 24" x 18"	

SIGNS SHALL BE COVERED WHEN NOT IN USE.
* SEE CASE 5N, SHEET C-2
** SEE CASE 1NT, SHEET C-3

CONSTRUCTION AREA SIGNS

NO SCALE

CS-1

REVISED BY | DATE REVISED
RYAN PRINS | KEN HALLIS
CALCULATED-DESIGNED BY | CHECKED BY | CHECKED BY
FUNCTIONAL SUPERVISOR
AL TRUJILLO

STATE OF CALIFORNIA - DEPARTMENT OF TRANSPORTATION
Caltrans
DESIGN

P:\proj1\02\3E790_plans\pse\23e7901a001.dgn

LAST REVISION 03-26-14 | DATE PLOTTED => 28-MAY-2014 | TIME PLOTTED => 14:56

Dist	COUNTY	ROUTE	POST MILES TOTAL PROJECT	SHEET No.	TOTAL SHEETS
02	Tri	299	12.3/12.9	39	149

REGISTERED CIVIL ENGINEER 03-26-14 DATE

03-26-14
PLANS APPROVAL DATE

REGISTERED PROFESSIONAL ENGINEER KEN HALLIS No. C38203 Exp. 3-31-15 CIVIL STATE OF CALIFORNIA

THE STATE OF CALIFORNIA OR ITS OFFICERS OR AGENTS SHALL NOT BE RESPONSIBLE FOR THE ACCURACY OR COMPLETENESS OF SCANNED COPIES OF THIS PLAN SHEET.

STAGE 1 CONSTRUCTION:

1. EARTHWORK
2. CONSTRUCT TEMPORARY SHOULDER
3. INSTALL TEMPORARY SIGNAL SYSTEM
4. REMOVE AND REPLACE DS#5 CROSSDRAIN AND TEMPORARY INLET "SC1" 10+63, SEE DRAINAGE PROFILES (SHEET DP-4)
5. CONSTRUCT DRAINAGE SYSTEM #3.

STAGE 1 TRAFFIC HANDLING:

T-13 REVERSABLE ONE WAY TRAFFIC CONTROL

LEGEND

- SIDEHILL VIADUCT BRIDGE
- BARRIER SLAB
- LIMITS OF WORK FOR THIS STAGE
- Temp PAVED SHOULDER
- CIDH PILE & COLUMN
- REVERSABLE ONE-WAY TRAFFIC
- CHANNELIZER (SURFACE MOUNTED)
- S= CHANNELIZER SPACING

ABBREVIATIONS

SHV	SIDEHILL VIADUCT
CIDH	CAST IN DRILLED HOLE
DS#	DRAINAGE SYSTEM NUMBER
#	NUMBER

"SC1" CURVE DATA

No. (#)	R	Δ	T	L
1	485.00′	29°13′33"	126.45′	247.39′
2	285.00′	76°51′22"	226.12′	382.30′
3	350.00′	32°58′15"	103.58′	201.41′
4	350.00′	37°33′25"	119.00′	229.42′
2a	285.00′	76°04′06"	203.59′	347.20′
3a	350.00′	32°58′17"	103.58′	201.41′
4a	350.00′	37°33′23"	119.00′	229.42′

SHORT LINE "SC1" DATA

No. (#)	BEARING	D
1	S 14°43′02" W	39.45′

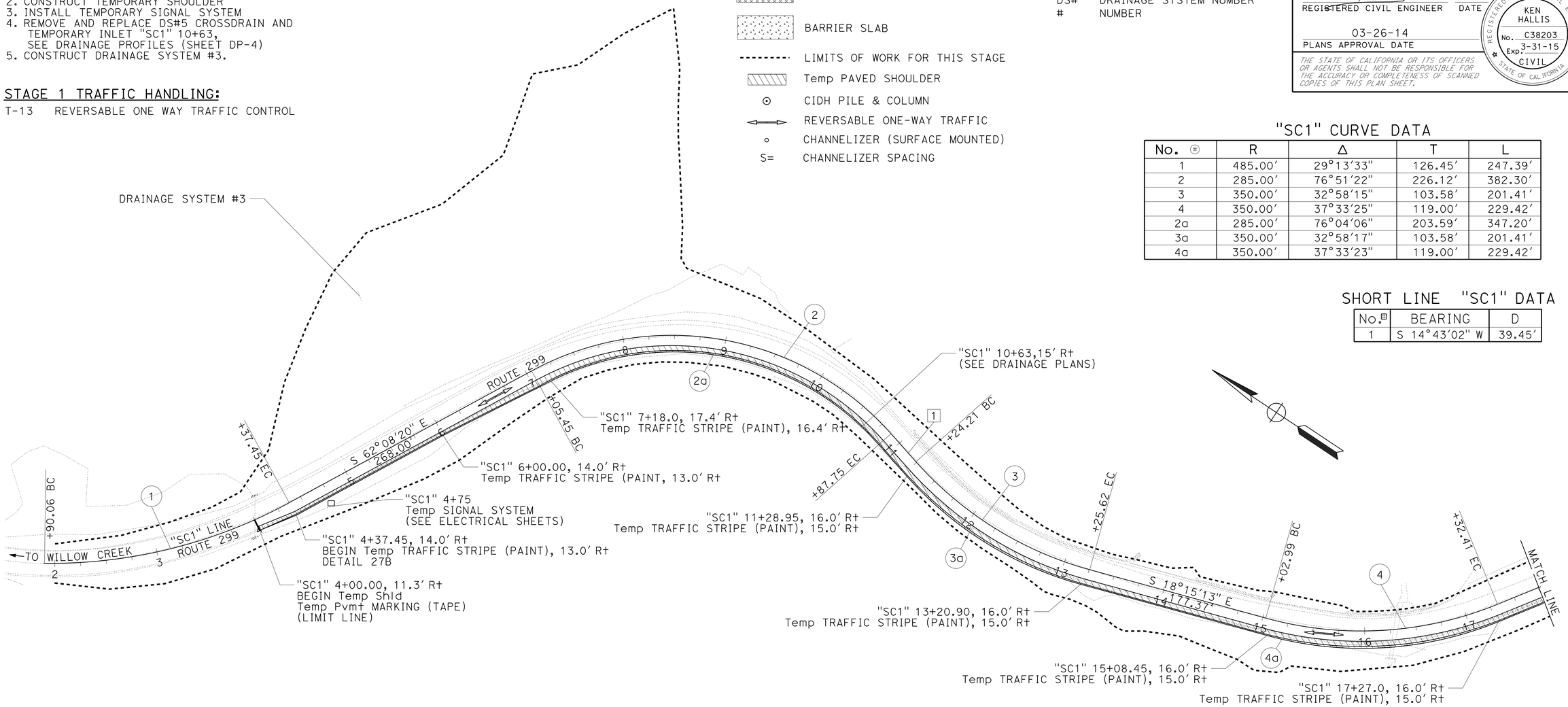

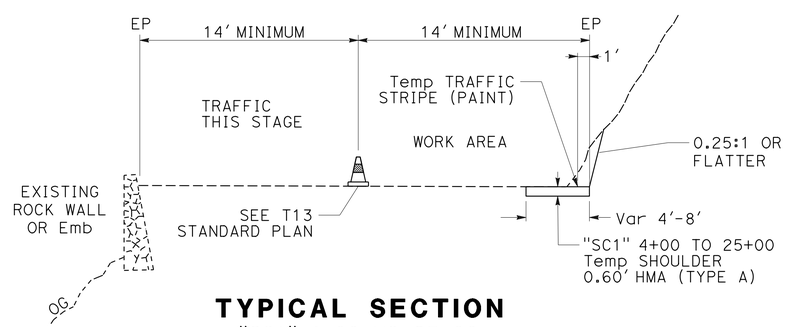

TYPICAL SECTION
"SC1" 4+00 TO 25+00
NO SCALE

APPROVED FOR STAGE CONSTRUCTION WORK ONLY

STAGE CONSTRUCTION
STAGE 1
SCALE: 1" = 50′ **SC-1**

REVISED BY | DATE REVISED
RYAN PRINS | KEN HALLIS
CALCULATED-DESIGNED BY | CHECKED BY
FUNCTIONAL SUPERVISOR: AL TRUJILLO

STATE OF CALIFORNIA - DEPARTMENT OF TRANSPORTATION
Caltrans
DESIGN

P:\proj1\02\3E790_plans\pse\23e790ma001.dgn

LAST REVISION 03-26-14 | DATE PLOTTED => 28-MAY-2014 | TIME PLOTTED => 14:56

Dist	COUNTY	ROUTE	POST MILES TOTAL PROJECT	SHEET No.	TOTAL SHEETS
02	Tri	299	12.3/12.9	40	149

REGISTERED CIVIL ENGINEER 03-26-14 DATE

03-26-14
PLANS APPROVAL DATE

REGISTERED PROFESSIONAL ENGINEER KEN HALLIS No. C38203 Exp. 3-31-15 CIVIL STATE OF CALIFORNIA

THE STATE OF CALIFORNIA OR ITS OFFICERS OR AGENTS SHALL NOT BE RESPONSIBLE FOR THE ACCURACY OR COMPLETENESS OF SCANNED COPIES OF THIS PLAN SHEET.

SHORT LINE "SC1" DATA

No.	BEARING	D
2	S 0°53'16" E	54.37'

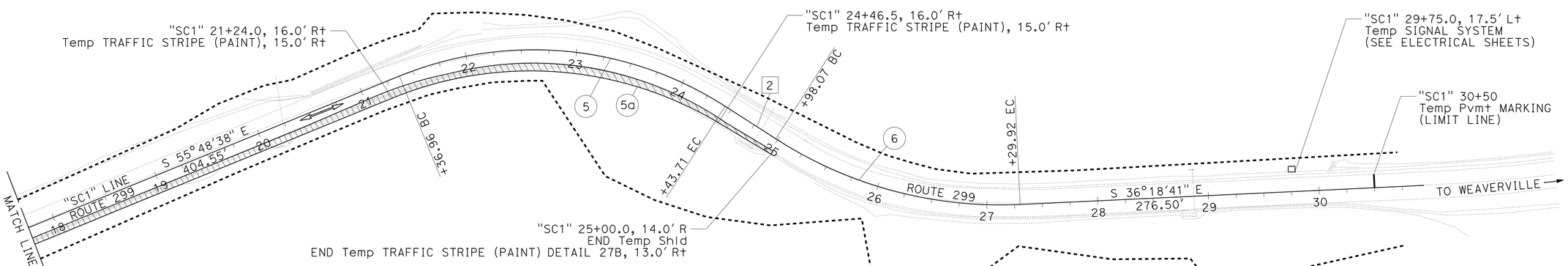

"SC1" CURVE DATA

No.	R	Δ	T	L
5	320.00'	54°55'22"	166.31'	306.75'
6	375.00'	35°25'25"	119.76'	231.85'
5a	330.00'	53°00'24"	164.56'	305.30'

APPROVED FOR STAGE CONSTRUCTION WORK ONLY

STAGE CONSTRUCTION
STAGE 1
SCALE: 1" = 50' **SC-2**

REVISED BY | DATE REVISED
RYAN PRINS | KEN HALLIS
CALCULATED-DESIGNED BY | CHECKED BY
FUNCTIONAL SUPERVISOR: AL TRUJILLO
STATE OF CALIFORNIA - DEPARTMENT OF TRANSPORTATION
Caltrans DESIGN
P:\proj1\02\3E790_plans\pse\23e790ma002.dgn

LAST REVISION 03-26-14 | DATE PLOTTED => 28-MAY-2014 | TIME PLOTTED => 14:57

Dist	COUNTY	ROUTE	POST MILES TOTAL PROJECT	SHEET No.	TOTAL SHEETS
02	Tri	299	12.3/12.9	41	149

REGISTERED CIVIL ENGINEER 03-26-14 DATE

03-26-14
PLANS APPROVAL DATE

REGISTERED PROFESSIONAL ENGINEER KEN HALLIS No. C38203 Exp. 3-31-15 CIVIL STATE OF CALIFORNIA

THE STATE OF CALIFORNIA OR ITS OFFICERS OR AGENTS SHALL NOT BE RESPONSIBLE FOR THE ACCURACY OR COMPLETENESS OF SCANNED COPIES OF THIS PLAN SHEET.

STAGE 2 CONSTRUCTION:
DRILL AND PLACE OUTSIDE CIDH PILE & COLUMNS BOTH SHV 1 & 2

STAGE 2 TRAFFIC HANDLING:

T-13 REVERSABLE ONE WAY TRAFFIC CONTROL

SHV #1
OUTSIDE PILE/COLUMN LOCATIONS

BRIDGE ELEMENT	"A1" LINE		"SC1" LINE		EP TO CIDH
	STA	OFFSET	STA	OFFSET	
A-1	11+25	15.48 Lt	10+96.5	20.94 Lt	4.74 Lt
B-2	11+51	13.98 Lt	11+22.5	22.53 Lt	6.30 Lt
B-3	11+85.5	13.98 Lt	11+59.4	24.96 Lt	8.84 Lt
B-4	12+20	13.98 Lt	11+96.4	23.76 Lt	8.73 Lt
B-5	12+54.4	13.98 Lt	12+31.9	19.94 Lt	4.64 Lt
B-6	12+89	19.86 Lt	12+67.0	22.44 Lt	6.26 Lt
A-7	13+15	20.72 Lt	12+92.8	21.01 Lt	4.61 Lt

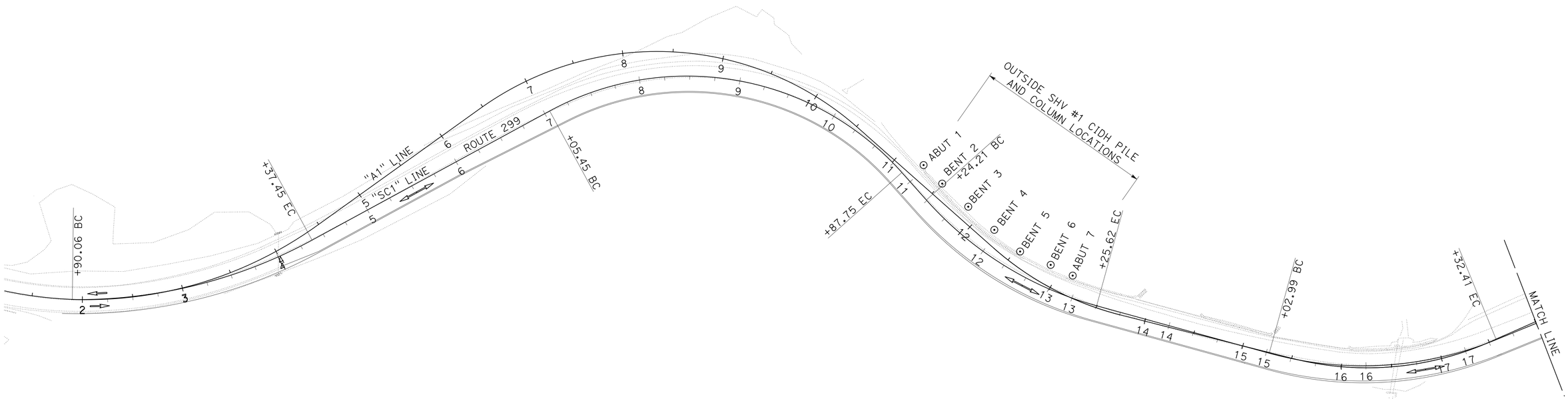

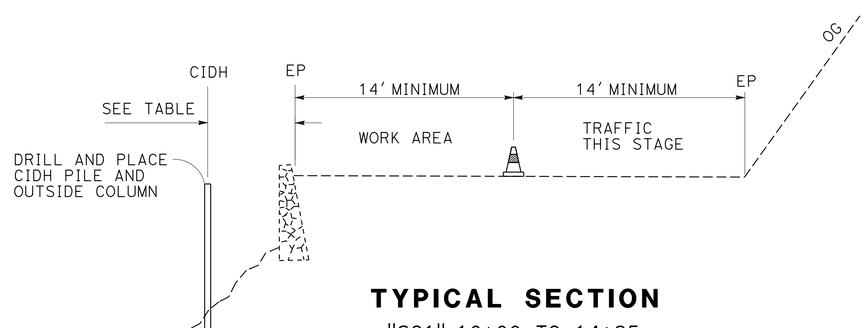

TYPICAL SECTION
"SC1" 10+00 TO 14+25

NO SCALE

APPROVED FOR STAGE CONSTRUCTION WORK ONLY

STAGE CONSTRUCTION
STAGE 2
SCALE: 1" = 50'

SC-3

REVISED BY | DATE REVISED
RYAN PRINS | KEN HALLIS
CALCULATED-DESIGNED BY | CHECKED BY
FUNCTIONAL SUPERVISOR: AL TRUJILLO

STATE OF CALIFORNIA - DEPARTMENT OF TRANSPORTATION
Caltrans
DESIGN

P:\proj1\02\3E790_plans\pse\23e790ma003.dgn

LAST REVISION 03-26-14 | DATE PLOTTED => 28-MAY-2014 | TIME PLOTTED => 14:57

Dist	COUNTY	ROUTE	POST MILES TOTAL PROJECT	SHEET No.	TOTAL SHEETS
02	Tri	299	12.3/12.9	42	149

REGISTERED CIVIL ENGINEER 03-26-14 DATE

03-26-14
PLANS APPROVAL DATE

REGISTERED PROFESSIONAL ENGINEER KEN HALLIS No. C38203 Exp. 3-31-15 CIVIL STATE OF CALIFORNIA

THE STATE OF CALIFORNIA OR ITS OFFICERS OR AGENTS SHALL NOT BE RESPONSIBLE FOR THE ACCURACY OR COMPLETENESS OF SCANNED COPIES OF THIS PLAN SHEET.

SHV #2
OUTSIDE PILE/COLUMN LOCATIONS

BRIDGE ELEMENT	"A1" L+INE		"SC1" LINE		EP TO CIDH
	STA	OFFSET	STA	OFFSET	
A-1	20+71.25	13.48 Lt	20+45.8	23.24 Lt	6.67 Lt
B-2	20+97.25	13.48 Lt	20+72.8	24.00 Lt	9.08 Lt
B-3	21+32.75	13.48 Lt	21+06.7	25.03 Lt	9.45 Lt
B-4	21+67.25	13.48 Lt	21+42.5	24.88 Lt	9.03 Lt
A-5	21+93.25	13.48 Lt	21+67.7	23.61 Lt	6.12 Lt

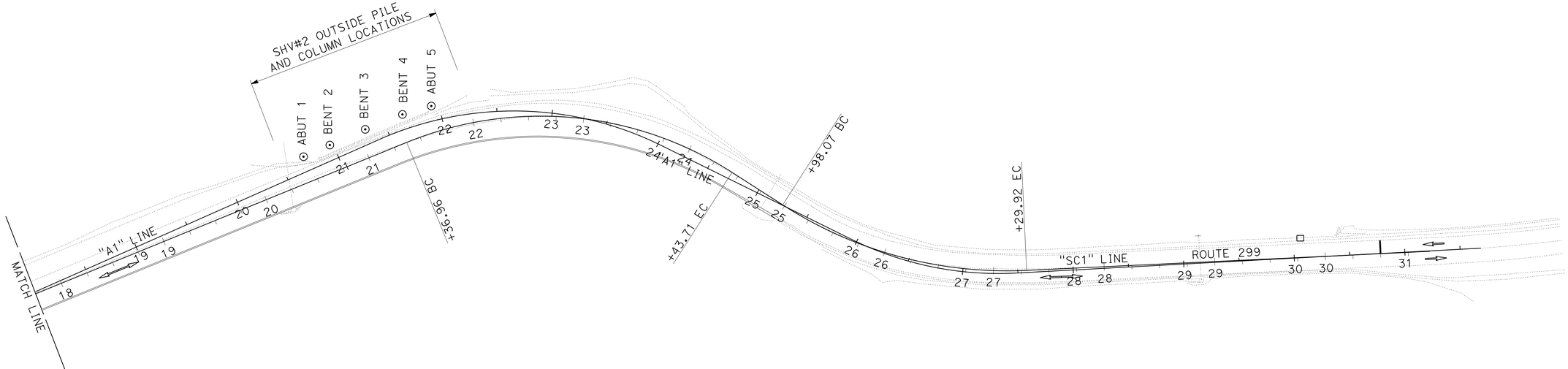

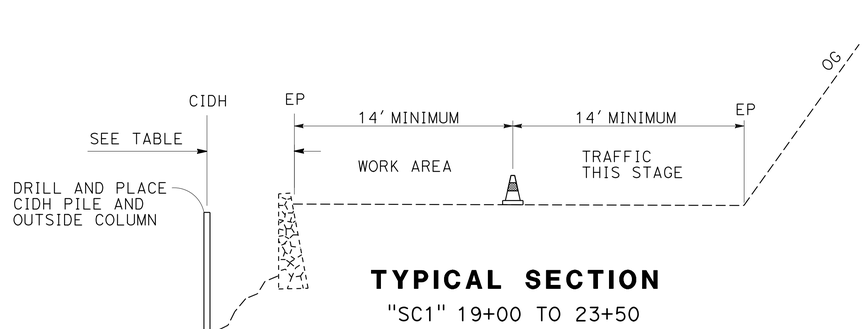

TYPICAL SECTION
"SC1" 19+00 TO 23+50
NO SCALE

APPROVED FOR STAGE CONSTRUCTION WORK ONLY

STAGE CONSTRUCTION
STAGE 2
SCALE: 1" = 50' **SC-4**

RYAN PRINS — REVISED BY
KEN HALLIS — DATE REVISED
CALCULATED-DESIGNED BY
CHECKED BY
FUNCTIONAL SUPERVISOR
AL TRUJILLO

STATE OF CALIFORNIA - DEPARTMENT OF TRANSPORTATION
Caltrans
DESIGN

P:\proj1\02\3E790_plans\pse\23e790ma004.dgn

LAST REVISION 03-26-14 | DATE PLOTTED => 28-MAY-2014 | TIME PLOTTED => 14:57

BORDER LAST REVISED 7/2/2010 | USERNAME => s123119 | DGN FILE => 23e790ma004.dgn | RELATIVE BORDER SCALE IS IN INCHES 0 1 2 3 | UNIT 0316 | PROJECT NUMBER & PHASE 02-0002-0151-1 | EA: 02-3E7901

Dist	COUNTY	ROUTE	POST MILES TOTAL PROJECT	SHEET No.	TOTAL SHEETS
02	Tri	299	12.3/12.9	43	149

REGISTERED CIVIL ENGINEER — DATE 03-26-14

PLANS APPROVAL DATE 03-26-14

REGISTERED PROFESSIONAL ENGINEER — KEN HALLIS — No. C38203 — Exp. 3-31-15 — CIVIL — STATE OF CALIFORNIA

THE STATE OF CALIFORNIA OR ITS OFFICERS OR AGENTS SHALL NOT BE RESPONSIBLE FOR THE ACCURACY OR COMPLETENESS OF SCANNED COPIES OF THIS PLAN SHEET.

STAGE 3 CONSTRUCTION:

1. DRILL AND PLACE INSIDE CIDH PILE SHV # 1 & 2.
2. FILL HOLES OR PROTECT BY STEEL PLATE COVER AT NIGHT.

STAGE 3 TRAFFIC HANDLING:

T-13 REVERSABLE ONE WAY TRAFFIC CONTROL DURING WORK SHIFT.
SIGNALIZED TRAFFIC CONTROL AFTER WORK SHIFT.

SHV #1
INSIDE PILE/COLUMN LOCATIONS

BRIDGE ELEMENT	"A1" LINE			"SC1" LINE	
	STA	OFFSET	EDGE OF BENT	STA	TO CIDH
A-1	11+25	2.0′ L+	0.0′	10+96.5	7.56′ L+
B-2	11+51	0.75′ L+	2.75′ R+	11+22.5	7.90′ L+
B-3	11+85.5	5.0′ R+	7.0′ R+	11+59.4	5.99′ L+
B-4	12+20	1.0′ R+	3.0′ R+	11+96.4	8.23′ L+
B-5	12+54.4	2.0′ L+	0.0′	12+31.9	8.08′ L+
B-6	12+89	0.0′	2.0′ R+	12+67.0	2.66′ L+
A-7	13+15	2.0′ L+	0.0′	12+92.8	2.44′ L+

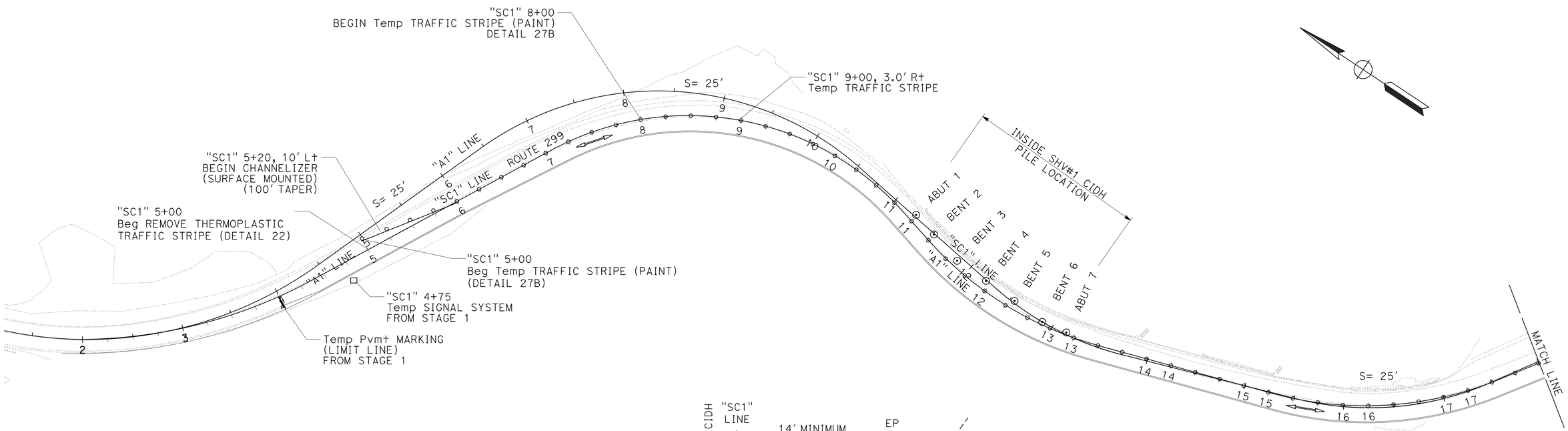

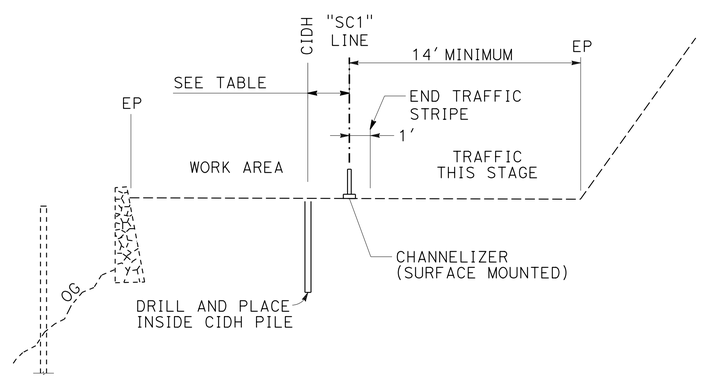

TYPICAL SECTION
"SC1" 10+00 TO 14+25
NO SCALE

STAGE CONSTRUCTION
STAGE 3
SCALE: 1" = 50′ **SC-5**

APPROVED FOR STAGE CONSTRUCTION WORK ONLY

STATE OF CALIFORNIA - DEPARTMENT OF TRANSPORTATION — Caltrans — DESIGN

FUNCTIONAL SUPERVISOR: AL TRUJILLO

CALCULATED-DESIGNED BY: RYAN PRINS — CHECKED BY: KEN HALLIS — REVISED BY — DATE REVISED

P:\proj1\02\3E790_plans\pse\23e790ma005.dgn

LAST REVISION 03-26-14 — DATE PLOTTED => 28-MAY-2014 — TIME PLOTTED => 14:57

BORDER LAST REVISED 7/2/2010 — USERNAME => s123119 — DGN FILE => 23e790ma005.dgn — RELATIVE BORDER SCALE IS IN INCHES 0 1 2 3 — UNIT 0316 — PROJECT NUMBER & PHASE 02-0002-0151-1 — EA: 02-3E7901

Dist	COUNTY	ROUTE	POST MILES TOTAL PROJECT	SHEET No.	TOTAL SHEETS
02	Tri	299	12.3/12.9	44	149

REGISTERED CIVIL ENGINEER 03-26-14 DATE

03-26-14
PLANS APPROVAL DATE

REGISTERED PROFESSIONAL ENGINEER KEN HALLIS No. C38203 Exp. 3-31-15 CIVIL STATE OF CALIFORNIA

THE STATE OF CALIFORNIA OR ITS OFFICERS OR AGENTS SHALL NOT BE RESPONSIBLE FOR THE ACCURACY OR COMPLETENESS OF SCANNED COPIES OF THIS PLAN SHEET.

SHV #2
INSIDE PILE/COLUMN LOCATIONS

BRIDGE ELEMENT	"A1" LINE STA	"A1" LINE OFFSET	"A1" LINE EDGE OF BENT	"SC1" LINE STA	"SC1" LINE TO CIDH
A-1	20+71.25	4.0′ Lt	0.0′	20+46.0	13.76′ Lt
B-2	20+97.25	2.0′ Lt	0.0′	20+72.1	12.53′ Lt
B-3	21+32.75	1.5′ Lt	0.0′	21+07.1	13.10′ Lt
B-4	21+67.25	1.5′ Lt	0.0′	21+42.0	12.92′ Lt
A-5	21+93.25	4.0′ Lt	0.0′	21+67.3	14.14′ Lt

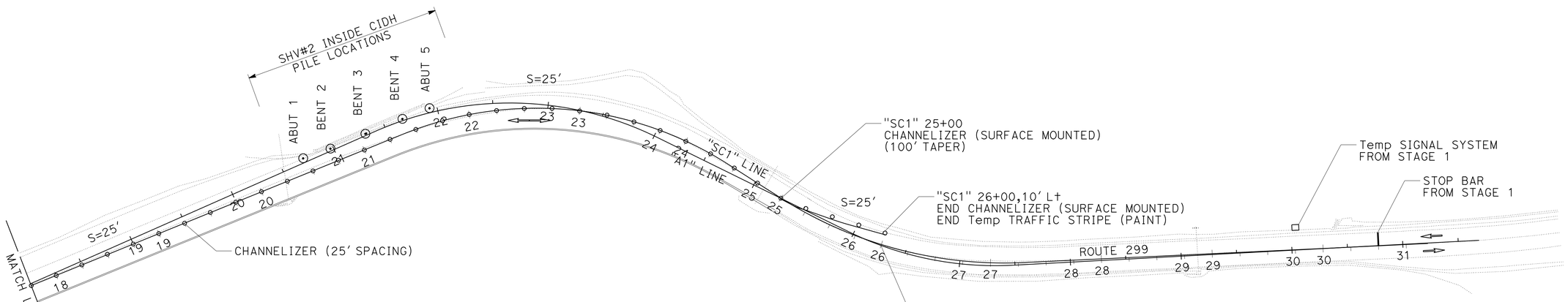

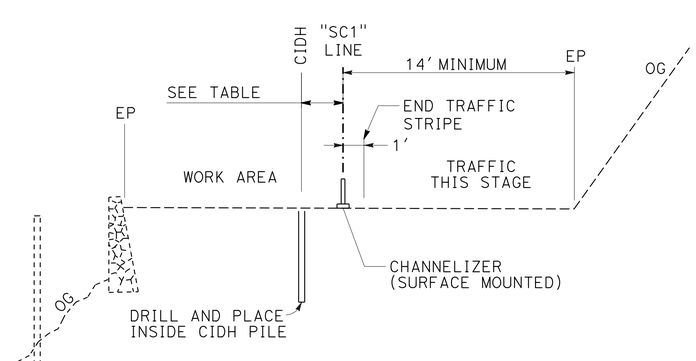

TYPICAL SECTION
"SC1" 19+00 TO 23+50
NO SCALE

APPROVED FOR STAGE CONSTRUCTION WORK ONLY

STAGE CONSTRUCTION
STAGE 3
SCALE: 1" = 50′ **SC-6**

REVISED BY | DATE REVISED
RYAN PRINS | KEN HALLIS
CALCULATED-DESIGNED BY | CHECKED BY
FUNCTIONAL SUPERVISOR: AL TRUJILLO

STATE OF CALIFORNIA - DEPARTMENT OF TRANSPORTATION
Caltrans® DESIGN

P:\proj1\02\3E790_plans\pse\23e790ma006.dgn

LAST REVISION 03-26-14 | DATE PLOTTED => 28-MAY-2014 | TIME PLOTTED => 14:57

Dist	COUNTY	ROUTE	POST MILES TOTAL PROJECT	SHEET No.	TOTAL SHEETS
02	Tri	299	12.3/12.9	45	149

REGISTERED CIVIL ENGINEER 03-26-14 DATE

03-26-14
PLANS APPROVAL DATE

REGISTERED PROFESSIONAL ENGINEER KEN HALLIS No. C38203 Exp. 3-31-15 CIVIL STATE OF CALIFORNIA

THE STATE OF CALIFORNIA OR ITS OFFICERS OR AGENTS SHALL NOT BE RESPONSIBLE FOR THE ACCURACY OR COMPLETENESS OF SCANNED COPIES OF THIS PLAN SHEET.

STAGE 4 CONSTRUCTION:

1. REMOVE CHANNELIZERS STA "SC1"9+00 TO 23+00. REMOVE EXISTING CENTERLINE STRIPE, PLACE Temp TRAFFIC STRIPE (PAINT) DETAIL 27B, PLACE K-RAIL.
2. CONSTRUCT BENT CAPS, BRIDGE AND BARRIER SLABS WITH Conc BRIDGE RAIL AND MBGR.
3. CONSTRUCT WB LANE STRUCTURAL SECTION, DO NOT PLACE FINAL LIFT. USE Temp PAVED HMA TAPER 160:1 TO BRIDGE SLABS.

STAGE 4 TRAFFIC HANDLING:

SIGNALIZED REVERSABLE ONE WAY TRAFFIC CONTROL
FOR PERMIT LOAD RESTRICTION, SEE TRAFFIC HANDLING DETAILS

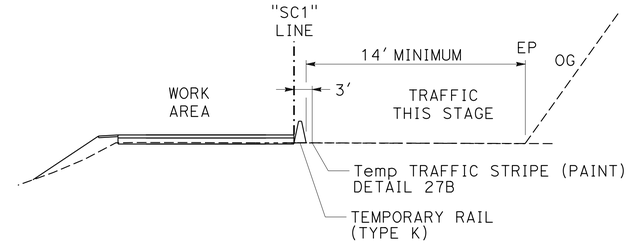

TYPICAL SECTION

STRUCTURAL SECTION

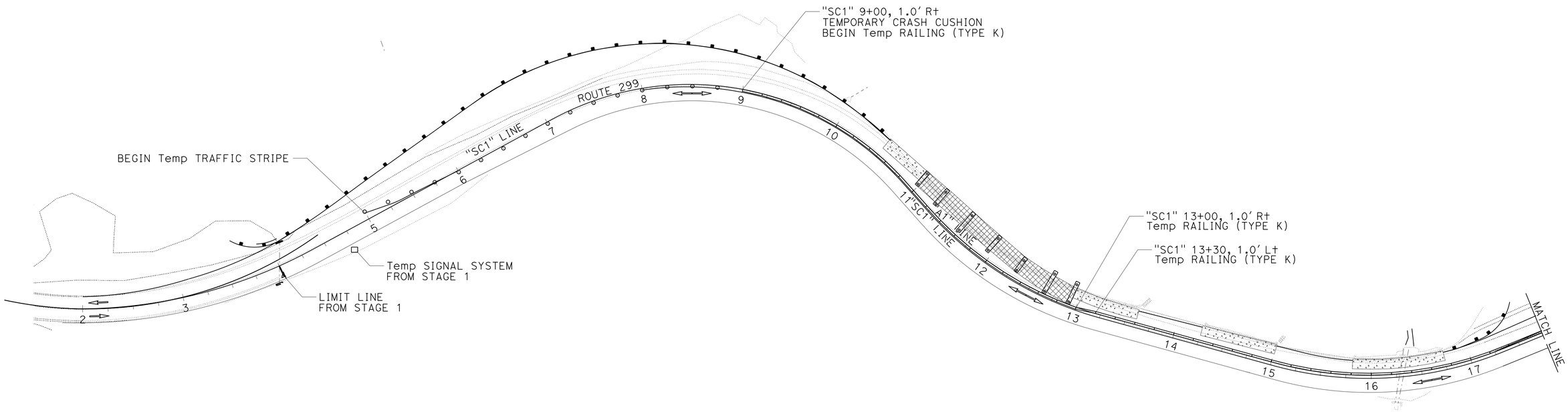

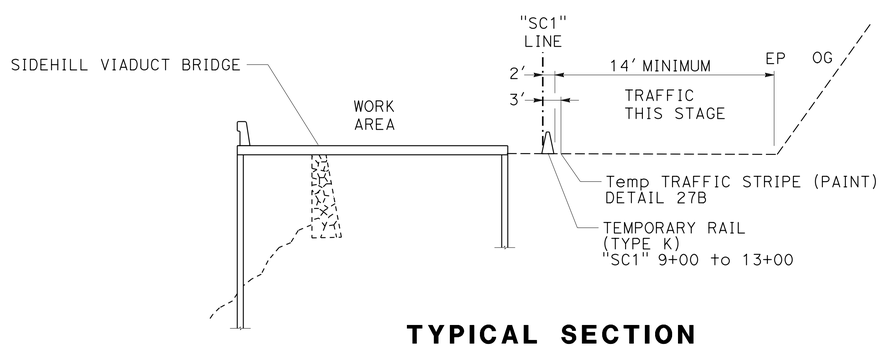

TYPICAL SECTION

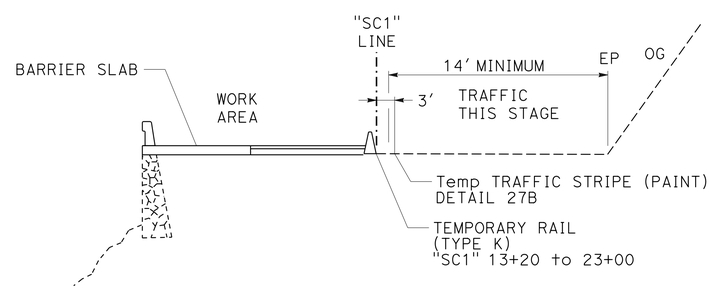

TYPICAL SECTION

Temp RAILING (TYPE K) LOL

DETAIL B

STAGE CONSTRUCTION
STAGE 4
SCALE: 1" = 50'

SC-7

APPROVED FOR STAGE CONSTRUCTION WORK ONLY

REVISED BY	DATE REVISED
RYAN PRINS	KEN HALLIS

CALCULATED-DESIGNED BY
CHECKED BY

FUNCTIONAL SUPERVISOR: AL TRUJILLO

STATE OF CALIFORNIA - DEPARTMENT OF TRANSPORTATION
Caltrans
DESIGN

P:\proj1\02\3E790_plans\pse\23e790ma007.dgn

LAST REVISION 03-26-14
DATE PLOTTED => 28-MAY-2014
TIME PLOTTED => 14:57

Dist	COUNTY	ROUTE	POST MILES TOTAL PROJECT	SHEET No.	TOTAL SHEETS
02	Tri	299	12.3/12.9	46	149

REGISTERED CIVIL ENGINEER 03-26-14 DATE

03-26-14
PLANS APPROVAL DATE

REGISTERED PROFESSIONAL ENGINEER
KEN HALLIS
No. C38203
Exp. 3-31-15
CIVIL
STATE OF CALIFORNIA

THE STATE OF CALIFORNIA OR ITS OFFICERS OR AGENTS SHALL NOT BE RESPONSIBLE FOR THE ACCURACY OR COMPLETENESS OF SCANNED COPIES OF THIS PLAN SHEET.

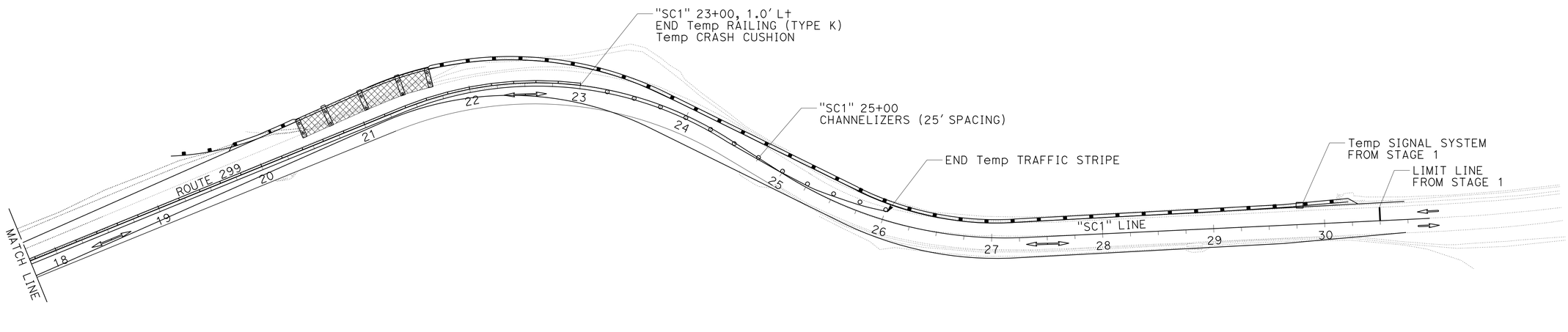

APPROVED FOR STAGE CONSTRUCTION WORK ONLY

STAGE CONSTRUCTION
STAGE 4
SCALE: 1" = 50'

SC-8

REVISED BY	RYAN PRINS
DATE REVISED	KEN HALLIS
CALCULATED-DESIGNED BY	
CHECKED BY	
FUNCTIONAL SUPERVISOR	AL TRUJILLO

STATE OF CALIFORNIA - DEPARTMENT OF TRANSPORTATION
Caltrans
DESIGN

P:\proj1\02\3E790_plans\pse\23e790ma008.dgn

LAST REVISION 03-26-14 | DATE PLOTTED => 28-MAY-2014 | TIME PLOTTED => 14:57

Dist	COUNTY	ROUTE	POST MILES TOTAL PROJECT	SHEET No.	TOTAL SHEETS
02	Tri	299	12.3/12.9	47	149

REGISTERED CIVIL ENGINEER 03-26-14 DATE

03-26-14
PLANS APPROVAL DATE

REGISTERED PROFESSIONAL ENGINEER KEN HALLIS No. C38203 Exp. 3-31-15 CIVIL STATE OF CALIFORNIA

THE STATE OF CALIFORNIA OR ITS OFFICERS OR AGENTS SHALL NOT BE RESPONSIBLE FOR THE ACCURACY OR COMPLETENESS OF SCANNED COPIES OF THIS PLAN SHEET.

STAGE 5 CONSTRUCTION:

1. REMOVE K-RAIL.
2. COMPLETE EARTHWORK
3. PLACE STRUCTURAL SECTION
4. REMOVE Temp SIGNAL SYSTEM (END OF STAGE)
5. PLACE FINAL LIFT HMA, STRIPE AND MARKERS

STAGE 5 TRAFFIC HANDLING:

MOVE TRAFFIC TO WB LANE
24-HR T-13 REVERSABLE ONE WAY TRAFFIC CONTROL

LEGEND

EARTHWORK THIS STAGE

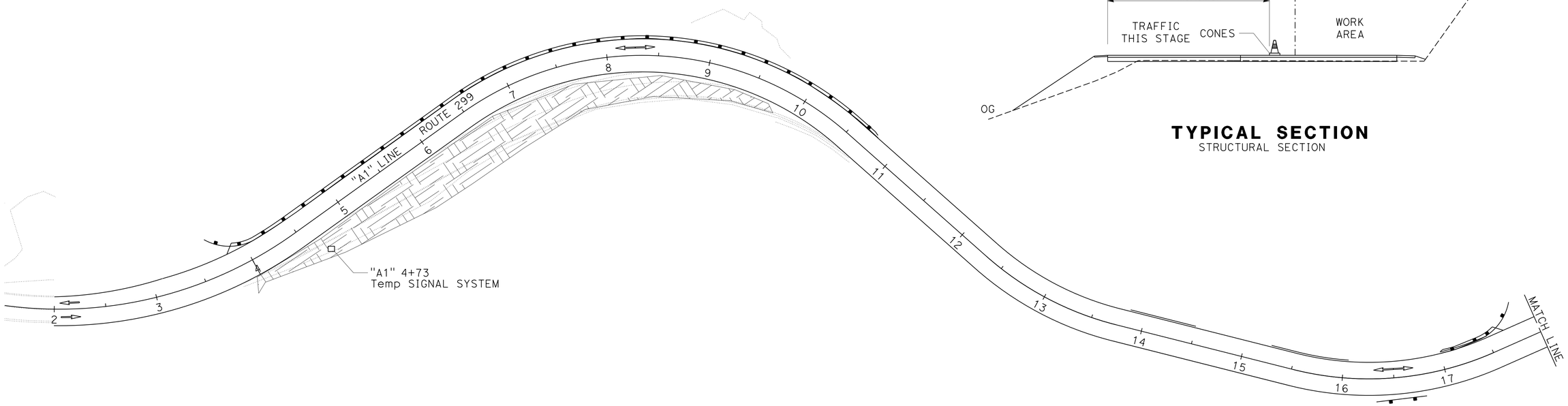

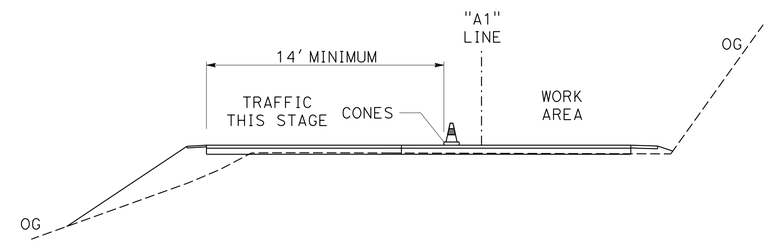

TYPICAL SECTION
STRUCTURAL SECTION

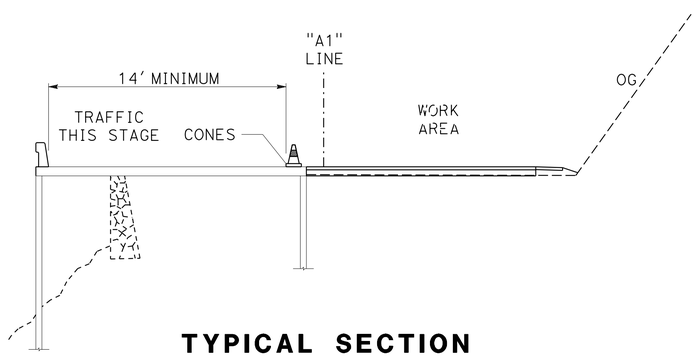

TYPICAL SECTION
SIDEHILL VIADUCT BRIDGE

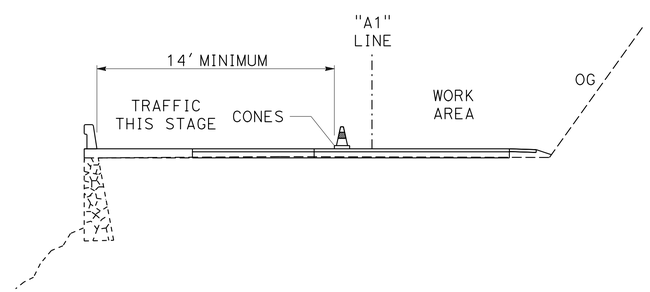

TYPICAL SECTION
BARRIER SLAB

APPROVED FOR STAGE CONSTRUCTION WORK ONLY

STAGE CONSTRUCTION
STAGE 5
SCALE: 1" = 50' **SC-9**

REVISED BY | DATE REVISED
RYAN PRINS | KEN HALLIS
CALCULATED-DESIGNED BY | CHECKED BY
FUNCTIONAL SUPERVISOR: AL TRUJILLO
STATE OF CALIFORNIA - DEPARTMENT OF TRANSPORTATION
Caltrans® DESIGN

P:\proj1\02\3E790_plans\pse\23e790ma009.dgn

LAST REVISION 03-26-14 | DATE PLOTTED => 28-MAY-2014 | TIME PLOTTED => 14:57

Dist	COUNTY	ROUTE	POST MILES TOTAL PROJECT	SHEET No.	TOTAL SHEETS
02	Tri	299	12.3/12.9	48	149

REGISTERED CIVIL ENGINEER 03-26-14 DATE

03-26-14
PLANS APPROVAL DATE

REGISTERED PROFESSIONAL ENGINEER
KEN HALLIS
No. C38203
Exp. 3-31-15
CIVIL
STATE OF CALIFORNIA

THE STATE OF CALIFORNIA OR ITS OFFICERS OR AGENTS SHALL NOT BE RESPONSIBLE FOR THE ACCURACY OR COMPLETENESS OF SCANNED COPIES OF THIS PLAN SHEET.

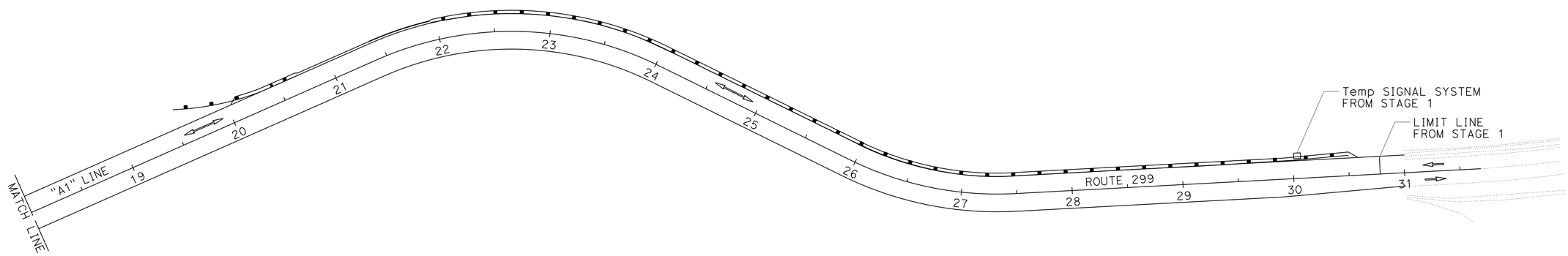

APPROVED FOR STAGE CONSTRUCTION WORK ONLY

STAGE CONSTRUCTION
STAGE 5
SCALE: 1" = 50'

SC-10

REVISED BY	DATE REVISED

CALCULATED-DESIGNED BY: RYAN PRINS
CHECKED BY: KEN HALLIS
FUNCTIONAL SUPERVISOR: AL TRUJILLO

STATE OF CALIFORNIA - DEPARTMENT OF TRANSPORTATION
Caltrans®
DESIGN

P:\proj1\02\3E790_plans\pse\23e790ma010.dgn

LAST REVISION 03-26-14 | DATE PLOTTED => 28-MAY-2014 | TIME PLOTTED => 14:57

BORDER LAST REVISED 7/2/2010 | USERNAME => s123119 | DGN FILE => 23e790ma010.dgn | RELATIVE BORDER SCALE IS IN INCHES 0 1 2 3 | UNIT 0316 | PROJECT NUMBER & PHASE 02-0002-0151-1 | EA: 02-3E7901

Dist	COUNTY	ROUTE	POST MILES TOTAL PROJECT	SHEET No.	TOTAL SHEETS
02	Tri	299	12.3/12.9	49	149

REGISTERED CIVIL ENGINEER 03-26-14 DATE

03-26-14
PLANS APPROVAL DATE

REGISTERED PROFESSIONAL ENGINEER KEN HALLIS No. C38203 Exp. 3-31-15 CIVIL STATE OF CALIFORNIA

THE STATE OF CALIFORNIA OR ITS OFFICERS OR AGENTS SHALL NOT BE RESPONSIBLE FOR THE ACCURACY OR COMPLETENESS OF SCANNED COPIES OF THIS PLAN SHEET.

STAGE CONSTRUCTION QUANTITIES

STAGE	STATION RANGE/LOCATION "SC1" LINE	REMOVE THERMOPLASTIC TRAFFIC STRIPE	Temp TRAFFIC STRIPE (PAINT)	CHANNELIZER (SURFACE MOUNTED)	Temp RAILING (TYPE K)	Temp Pvmt MARKING (TAPE)	HMA (TYPE A) *	TEMPORARY CRASH CUSHION	COMMENTS
		LF	LF	EA	LF	SQFT	TON	EA	
1	4+00					12			EB 1.0′ x 12′
1	30+50					12			WB 1.0′ x 12′
3	5+00 TO 26+00			85					LEFT SIDE
4	9+00 TO 23+00				1400			2	WHITE BOTH SIDES
1	4+00 TO 25+00						567		Temp Shld
3	5+00 TO 26+00	4200	4200						
	TOTAL	4200	4200	85	1400	24	567	2	

* SEE SUMMARY OF QUANTITIES SHEETS FOR PROJECT TOTALS.
() QUANTITY SHOWN ON DRAINAGE QUANTITIES (SHEET DQ-1)

STAGE CONSTRUCTION QUANTITIES

SCQ-1

REVISED BY	DATE REVISED

CALCULATED-DESIGNED BY	RYAN PRINS
CHECKED BY	KEN HALLIS

FUNCTIONAL SUPERVISOR: AL TRUJILLO

STATE OF CALIFORNIA - DEPARTMENT OF TRANSPORTATION
Caltrans® DESIGN

P:\proj1\02\3E790_plans\pse\23e790mc001.dgn

LAST REVISION 03-26-14 | DATE PLOTTED => 28-MAY-2014 | TIME PLOTTED => 14:57

Dist	COUNTY	ROUTE	POST MILES TOTAL PROJECT	SHEET No.	TOTAL SHEETS
02	Tri	299	12.3/12.9	50	149

REGISTERED CIVIL ENGINEER 03-26-14 DATE

03-26-14
PLANS APPROVAL DATE

REGISTERED PROFESSIONAL ENGINEER KEN HALLIS No. C38203 Exp. 3-31-15 CIVIL STATE OF CALIFORNIA

THE STATE OF CALIFORNIA OR ITS OFFICERS OR AGENTS SHALL NOT BE RESPONSIBLE FOR THE ACCURACY OR COMPLETENESS OF SCANNED COPIES OF THIS PLAN SHEET.

NOTES:

1. FOR DETAILS NOT SHOWN, SEE RSP PLAN T-13.
2. REMOVE PERMIT LOAD SIGNS WHEN NOT NEEDED FOR TRAFFIC CONTROL ACTIVITIES.
3. DO NOT USE SIGNAL WHEN PILOT CAR IS IN OPERATION.

CSP-1

(a) PERMIT VEHICLES MUST PULL OVER 1/4 MILE AHEAD

48" x 24"

CSP-2

(b) PERMIT VEHICLES MUST PULL OVER 1000 FEET AHEAD

48" x 24"

CSP-3

(c) PERMIT VEHICLE TURNOUT 500 FT AHEAD

48" x 24"

CSP-4

(d) PERMIT VEHICLE TURNOUT →

48" x 24"

CSP-5

(e) PERMIT VEHICLE TRAVEL WINDOW Fri 2 PM - 8 PM

48" x 24"

PERMIT LOAD SIGN DETAILS

NOTE:
1. SIGN COLORS ARE BLACK LETTERS ON ORANGE BACKGROUND (PORTABLE TYPE III BARRICADE MOUNTED)

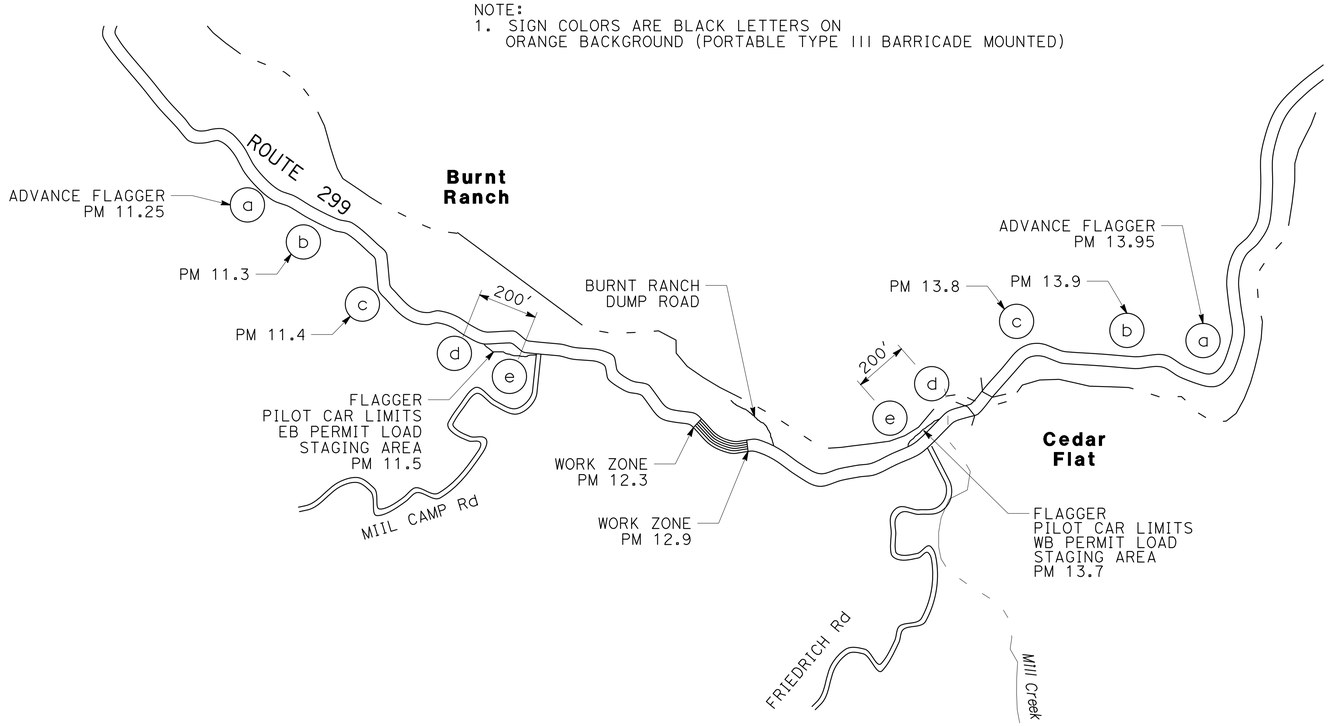

CONSTRUCTION AREA PERMIT LOAD SIGN PLAN

CONSTRUCTION AREA SIGNS (PORTABLE) (PERMIT LOAD ONLY)

SYMBOL	TYPE	No. OF SIGNS	PANEL SIZE (IN INCHES)
(a)	CSP-1	2	48 x 24
(b)	CSP-2	2	48 x 24
(c)	CSP-3	2	48 x 24
(d)	CSP-4	2	48 x 24
(e)	CSP-5	2	48 x 24

PORTABLE TYPE III BARRICADE

TRAFFIC HANDLING DETAILS PERMIT LOAD RESTRICTION

NO SCALE

THD-1

REVISED BY | DATE REVISED
RYAN PRINS | KEN HALLIS
CALCULATED-DESIGNED BY | CHECKED BY
FUNCTIONAL SUPERVISOR: AL TRUJILLO

STATE OF CALIFORNIA - DEPARTMENT OF TRANSPORTATION
Caltrans
DESIGN

P:\proj1\02\3E790_plans\pse\23e790me001.dgn

LAST REVISION 03-26-14 | DATE PLOTTED => 28-MAY-2014 TIME PLOTTED => 14:57

BORDER LAST REVISED 7/2/2010 | USERNAME => s123119 DGN FILE => 23e790me001.dgn | RELATIVE BORDER SCALE IS IN INCHES 0 1 2 3 | UNIT 0316 | PROJECT NUMBER & PHASE 02-0002-0151-1 | EA: 02-3E7901

Dist	COUNTY	ROUTE	POST MILES TOTAL PROJECT	SHEET No.	TOTAL SHEETS
02	Tri	299	12.3/12.9	51	149

REGISTERED CIVIL ENGINEER 03-26-14 DATE

03-26-14
PLANS APPROVAL DATE

REGISTERED PROFESSIONAL ENGINEER KEN HALLIS No. C38203 Exp. 3-31-15 CIVIL STATE OF CALIFORNIA

THE STATE OF CALIFORNIA OR ITS OFFICERS OR AGENTS SHALL NOT BE RESPONSIBLE FOR THE ACCURACY OR COMPLETENESS OF SCANNED COPIES OF THIS PLAN SHEET.

NOTE:

1. FOR ACCURATE RIGHT OF WAY DATA, CONTACT RIGHT OF WAY ENGINEERING AT THE DISTRICT OFFICE.

LEGEND:

- DELINEATOR (CLASS 2, TYPE E)
- REMOVE ROADSIDE SIGN
- MILEPOST MARKER
- CULVERT MARKER
- OBJECT MARKER (TYPE P)

ABBREVIATIONS:

S= SPACING

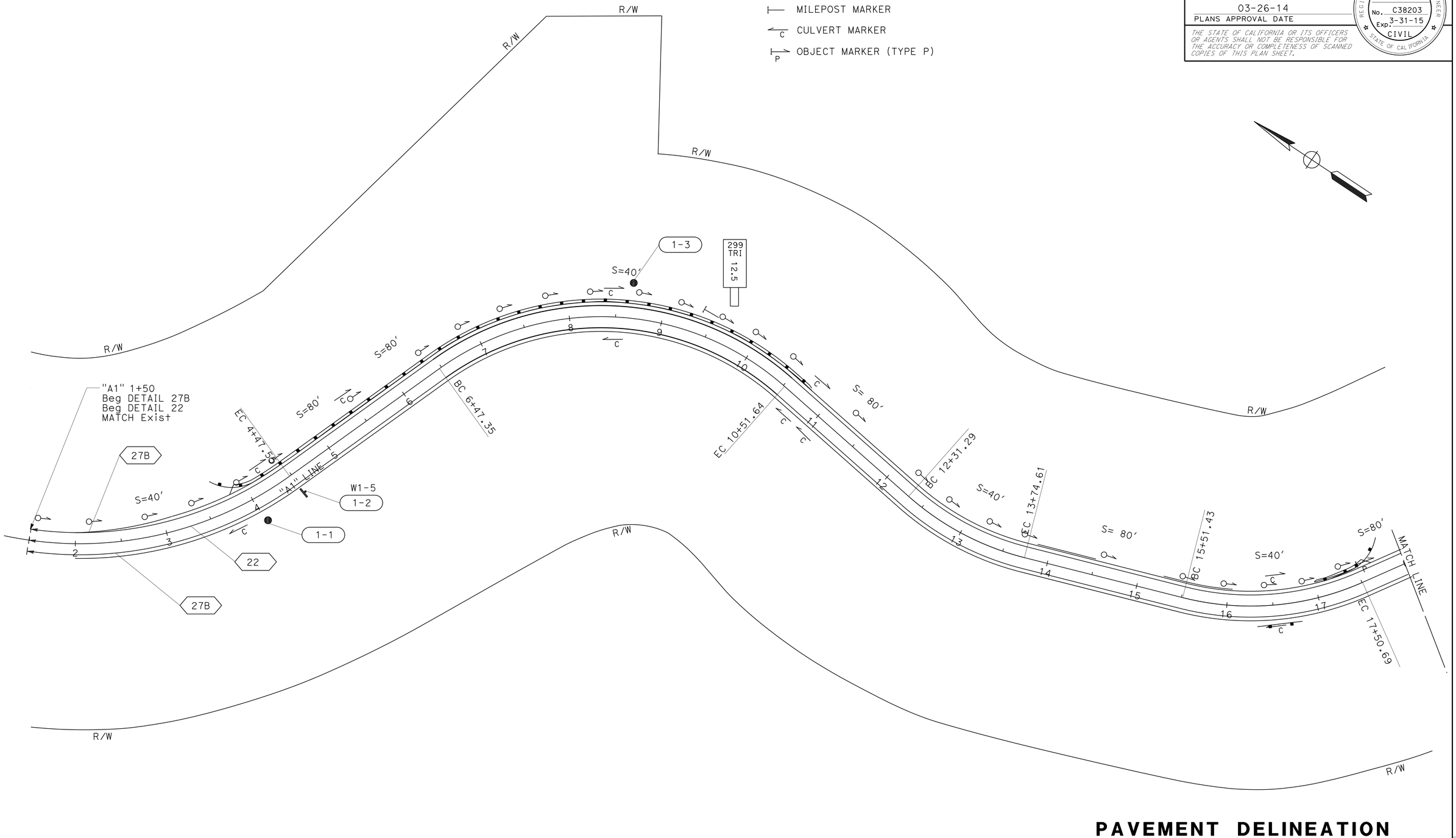

PAVEMENT DELINEATION AND SIGN PLAN

SCALE: 1" = 50'

PD-1

APPROVED FOR PAVEMENT DELINEATION AND SIGN WORK ONLY

REVISED BY	DATE REVISED
RYAN PRINS	KEN HALLIS
CALCULATED-DESIGNED BY	CHECKED BY
FUNCTIONAL SUPERVISOR	AL TRUJILLO

STATE OF CALIFORNIA - DEPARTMENT OF TRANSPORTATION
Caltrans
DESIGN

P:\proj1\02\3E790_plans\pse\23e790na001.dgn

LAST REVISION 03-26-14
DATE PLOTTED => 28-MAY-2014
TIME PLOTTED => 14:57

Dist	COUNTY	ROUTE	POST MILES TOTAL PROJECT	SHEET No.	TOTAL SHEETS
02	Tri	299	12.3/12.9	52	149

REGISTERED CIVIL ENGINEER 03-26-14 DATE

03-26-14
PLANS APPROVAL DATE

REGISTERED PROFESSIONAL ENGINEER KEN HALLIS No. C38203 Exp. 3-31-15 CIVIL STATE OF CALIFORNIA

THE STATE OF CALIFORNIA OR ITS OFFICERS OR AGENTS SHALL NOT BE RESPONSIBLE FOR THE ACCURACY OR COMPLETENESS OF SCANNED COPIES OF THIS PLAN SHEET.

NOTE:

1. FOR ACCURATE RIGHT OF WAY DATA, CONTACT RIGHT OF WAY ENGINEERING AT THE DISTRICT OFFICE.

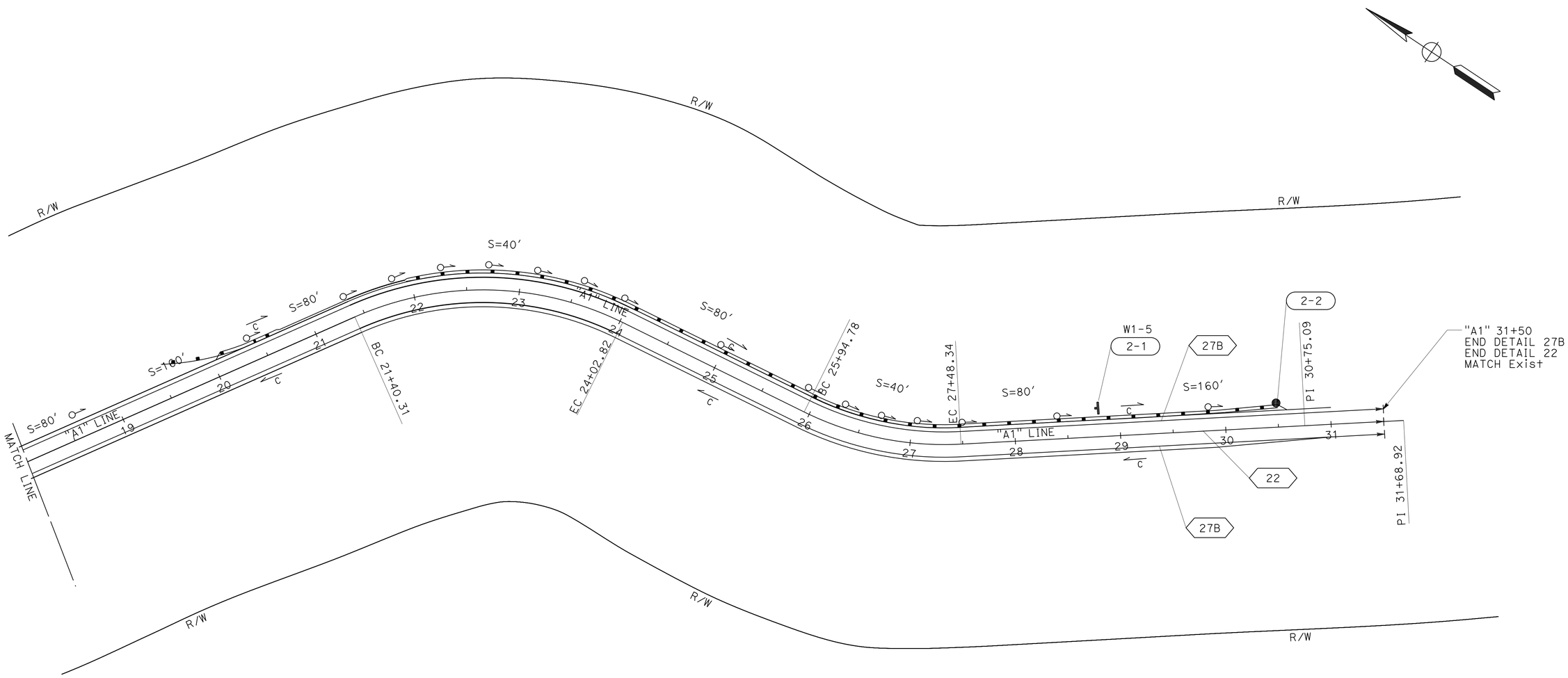

APPROVED FOR PAVEMENT DELINEATION AND SIGN WORK ONLY

PAVEMENT DELINEATION AND SIGN PLAN

SCALE: 1" = 50'

PD-2

REVISED BY	DATE REVISED
RYAN PRINS	KEN HALLIS

CALCULATED-DESIGNED BY / CHECKED BY

FUNCTIONAL SUPERVISOR: AL TRUJILLO

STATE OF CALIFORNIA - DEPARTMENT OF TRANSPORTATION

Caltrans DESIGN

P:\proj1\02\3E790_plans\pse\23e790na002.dgn

LAST REVISION 03-26-14 | DATE PLOTTED => 28-MAY-2014 | TIME PLOTTED => 14:57

Dist	COUNTY	ROUTE	POST MILES TOTAL PROJECT	SHEET No.	TOTAL SHEETS
02	Tri	299	12.3/12.9	53	149

REGISTERED CIVIL ENGINEER 03-26-14 DATE

03-26-14
PLANS APPROVAL DATE

REGISTERED PROFESSIONAL ENGINEER KEN HALLIS No. C38203 Exp. 3-31-15 CIVIL STATE OF CALIFORNIA

THE STATE OF CALIFORNIA OR ITS OFFICERS OR AGENTS SHALL NOT BE RESPONSIBLE FOR THE ACCURACY OR COMPLETENESS OF SCANNED COPIES OF THIS PLAN SHEET.

NOTE:

1. (N) - NOT A SEPARATE PAY ITEM, FOR INFORMATION ONLY

MARKERS AND DELINEATORS

STATION "A1" LINE	DELINEATOR (CLASS 2) TYPE E	MARKER (CULVERT)	MILEPOST MARKER	OBJECT MARKER (TYPE P)	Pvmnt MARKER (RETROREFLECTIVE RECESSED)
	EA	EA	EA	EA	EA
"A1" 1+50 TO 31+50	45	17	1	1	252
TOTAL	45	17	1	1	252

PAVEMENT DELINEATION QUANTITIES

STATION "A1" LINE	THERMOPLASTIC TRAFFIC STRIPE (SPRAYABLE)	
	DETAIL 22	DETAIL 27B
	LF	LF
"A1" 1+50 TO 31+50	3000	6000
TOTAL	9000	

MATERIAL SUMMARY CONTRACTOR FURNISHED SIGNS

SHEET No.	No.	(N) SIGN CODE	(N) SIGN SIZE (L x D)	(N) SINGLE FACED	(N) DOUBLE FACED	BACKGROUND (N) SHEETING COLOR	BACKGROUND (N) RETROREFLECTIVE ASTM TYPE	LEGEND (N) SHEETING COLOR	LEGEND (N) RETROREFLECTIVE ASTM TYPE	ROADSIDE SIGN SINGLE-SHEET UNFRAMED ALUMINUM (N) 0.063"	(N) 0.080"		DESCRIPTION (REMARKS)
PD-1	1-2	W1-5	36" x 36"	X		YELLOW	X	BLACK		1			CURVE WARNING
PD-2	2-1	W1-5	36" x 36"	X		YELLOW	X	BLACK		1			CURVE WARNING
									TOTAL	2			

XX - SPEED TO BE DETERMINED BY ENGINEER

ROADSIDE SIGNS

SHEET No.	SIGN No.	SIGN CODE	(N) PANEL SIZE	FURNISH SINGLE SHEET ALUMINUM SIGN (0.063"-UNFRAMED)	(N) POST LENGTH	(N) POST EMBED	ROADSIDE SIGN ONE POST 4" x 6"	REMOVE ROADSIDE SIGN	REMARKS
				SQFT	LF	LF	EA	EA	
PD-1	1-1	W1-3						1	CURVE WARNING
	1-2	W1-5	36" x 36"	9	14'		1		CURVE WARNING
	1-3	W1-1A						1	CURVE WARNING
PD-2	2-1	W1-5	36" x 36"	9	14'		1		CURVE WARNING
	2-2	W50-1(CA)						1	ROCK FALL WARNING
TOTAL				18			2	3	

PAVEMENT DELINEATION AND SIGN QUANTITIES

PDQ-1

REVISED BY | DATE REVISED
RYAN PRINS | KEN HALLIS
CALCULATED-DESIGNED BY | CHECKED BY
FUNCTIONAL SUPERVISOR: AL TRUJILLO

STATE OF CALIFORNIA - DEPARTMENT OF TRANSPORTATION
Caltrans DESIGN

P:\proj1\02\3E790_plans\pse\23e790nc001.dgn

LAST REVISION 03-26-14 | DATE PLOTTED => 28-MAY-2014 TIME PLOTTED => 14:57

Dist	COUNTY	ROUTE	POST MILES TOTAL PROJECT	SHEET No.	TOTAL SHEETS
02	Tri	299	12.3/12.9	54	149

REGISTERED CIVIL ENGINEER 03-26-14 DATE

03-26-14
PLANS APPROVAL DATE

REGISTERED PROFESSIONAL ENGINEER KEN HALLIS No. C38203 Exp. 3-31-15 CIVIL STATE OF CALIFORNIA

THE STATE OF CALIFORNIA OR ITS OFFICERS OR AGENTS SHALL NOT BE RESPONSIBLE FOR THE ACCURACY OR COMPLETENESS OF SCANNED COPIES OF THIS PLAN SHEET.

NOTE:

1. CALIFORNIA SIGN CODES ARE DESIGNATED BY (CA), OTHERWISE FEDERAL SIGN CODES ARE SHOWN.

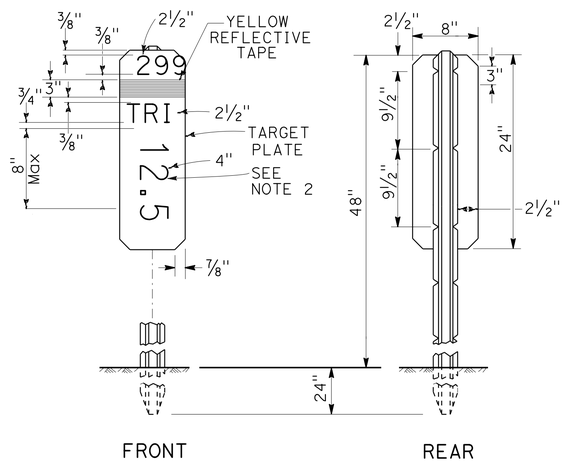

NOTES:

1. THE MARKER SHALL BE WHITE (NON-REFLECTIVE) TARGET PLATE WITH BLACK SERIES D NUMERALS AND LETTERS.
2. A POST MILE PREFIX, SUCH AS "R", SHALL APPLY ONLY WHEN DIRECTED BY THE ENGINEER.
3. ALL INFORMATION SHALL BE IN ENGLISH UNITS (MILES).

POST MILE MARKER DETAIL

"A1" 9+65

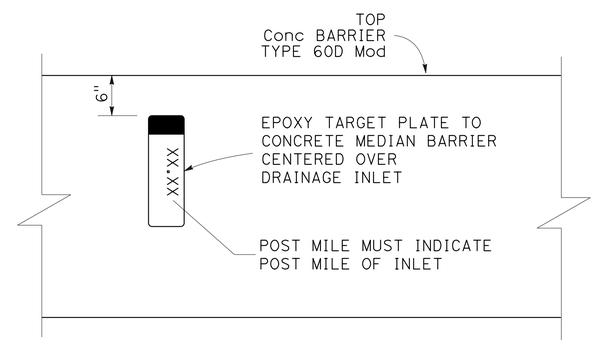

CULVERT MARKER (BARRIER MOUNTED)

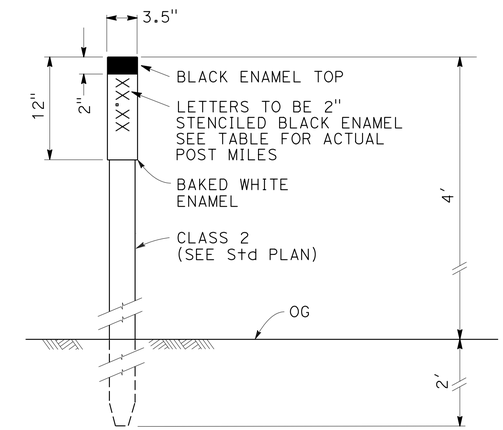

MARKER (CULVERT)

NOTE:
1. PLACE MARKER 2' FROM EP AT EACH CULVERT LOCATION.

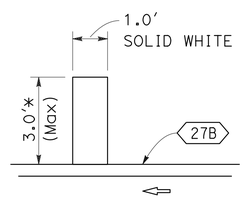

HALF MILE STRIPE DETAIL

* ACTUAL LENGTH MAY VARY DUE TO PAVEMENT WIDTH

CULVERT MARKER POSTMILE TABLE

"A1" LINE Sta	PM	Qty
4+00	12.39	2
5+35	12.42	1
8+60	12.48	2
10+90	12.52	2
11+41	12.53	1
16+50	12.63	2
20+50	12.70	2
24+50	12.77	1
25+10	12.79	2
29+15	12.87	2

SIGN DETAILS

NO SCALE

SD-1

REVISED BY | DATE REVISED
RYAN PRINS | KEN HALLIS
CALCULATED-DESIGNED BY | CHECKED BY
FUNCTIONAL SUPERVISOR
AL TRUJILLO

STATE OF CALIFORNIA - DEPARTMENT OF TRANSPORTATION
Caltrans
DESIGN

P:\proj1\02\3E790_plans\pse\23e790ob001.dgn

LAST REVISION 03-26-14
DATE PLOTTED => 28-MAY-2014
TIME PLOTTED => 14:57

Dist	COUNTY	ROUTE	POST MILES TOTAL PROJECT	SHEET No.	TOTAL SHEETS
02	Tri	299	12.3/12.9	55	149

REGISTERED CIVIL ENGINEER 03-26-14 DATE

03-26-14
PLANS APPROVAL DATE

REGISTERED PROFESSIONAL ENGINEER KEN HALLIS No. C38203 Exp. 3-31-15 CIVIL STATE OF CALIFORNIA

THE STATE OF CALIFORNIA OR ITS OFFICERS OR AGENTS SHALL NOT BE RESPONSIBLE FOR THE ACCURACY OR COMPLETENESS OF SCANNED COPIES OF THIS PLAN SHEET.

NOTE:

1. (N) - NOT A SEPARATE PAY ITEM, FOR INFORMATION ONLY

TEMPORARY WATER POLLUTION CONTROL

DESCRIPTION	Temp DRAINAGE INLET PROTECTION	Temp CHECK DAM	Temp COVER
	EA	LF	SQYD
DRAINAGE SYSTEM No. 5	9	435	10,000
TOTAL	9	435	10,000

TREATED WOOD WASTE

STATION	LB
"A1" 1+50 TO 31+50	1610

ROADWAY QUANTITIES

LOCATION "A1" LINE	ALTERNATIVE IN-LINE TERMINAL SYSTEM	END ANCHOR ASSEMBLY (TYPE SFT)	INTERMEDIATE ANCHOR ASSEMBLY (MODIFIED TYPE SFT)	MBGR (7' POST)	TRANSITION RAILING (TYPE WB)	SINGLE THRIE BEAM BARRIER (STEEL POST)	TRANSITION RAILING (TYPE STB)	HMA (TYPE A)	CI 2 AB	CONCRETE BARRIER (TYPE 736B MODIFIED)	TUBULAR BICYCLE RAILING	COLD PLANE ASPHALT CONCRETE PAVEMENT	PLACE HMA DIKE (TYPE F)	VEGETATION CONTROL (MINOR CONCRETE)	ROADWAY Exc	(N) EMBANKMENT	IMPORTED BORROW	SHOULDER BACKING	TACK COAT	EARTH RETAINING SYSTEM (RAILING COMPONENTS)	REMOVE GUARDRAIL	Temp FENCE (TYPE ESA)	PLACE HMA (Misc AREA)	COMMENTS
	EA	EA	EA	LF	EA	LF	EA	TON	CY	LF	LF	SQYD	LF	SQYD	CY	CY	CY	TON	TON	SQFT	LF	LF	SQYD	
1+50 TO 2+00								18				178												
2+00 TO 31+00								3946	2040						14,187	14,512	29,060	248.8	5.4					
3+64 TO 10+50				712																				
3+85 TO 10+75														237										
3+64 TO 5+50		1	1					1.9					140											
10+50 TO 10+75					1																			
10+50 TO 11+23																					73			
13+85 TO 14+50										65	65										65			
15+25 TO 16+05										80	80										80			
16+05 TO 16+80																					75			
16+32 TO 16+78				49.3																				
17+00 TO 17+70								2.9						23.3							65		8.6	
17+37.5 TO 17+83.2		1	1			62.5																		
17+00 TO 17+25							1	.3					25											
19+53.9 TO 20+45		1		93.5																				
20+00 TO 20+70														27.4										
20+45 TO 20+70					1																			
21+95 TO 22+20					1																			
21+95 TO 22+31																					36			
21+95 TO 30+60														299.3										
22+50 TO 23+00																				100				
22+20 TO 30+00				780				7.9					427											
22+83.4 TO 30+78.8																						950		
30+50	1																							
25+50 TO 26+00																				100				
31+00 TO 31+50								18				178												
DS# 5,6,7,8								45.5															112.2	SUBTOTAL-DRAINAGE Qtys
2+00 TO 31+00								45	82															SAFETY EDGE
"SC1" 4+00 TO 25+00								660							325									SUBTOTAL-STAGE Const Qtys
TOTAL	1	3	2	1634.8	3	62.5	1	4745.5	2122	145	145	356	592	587.0	14,512	14,512	29,060	248.8	5.4	200	394	950	120.8	

NOTE: EMBANKMENT QUANTITY INCLUDES STRUCTURE EXCAVATION QUANTITY.

SUMMARY OF QUANTITIES

Q-1

REVISED BY | DATE REVISED
RYAN PRINS | KEN HALLIS
CALCULATED-DESIGNED BY | CHECKED BY
FUNCTIONAL SUPERVISOR: AL TRUJILLO

STATE OF CALIFORNIA - DEPARTMENT OF TRANSPORTATION
Caltrans
DESIGN

P:\proj1\02\3E790_plans\pse\23e790pa001.dgn

LAST REVISION 03-26-14 | DATE PLOTTED => 28-MAY-2014 | TIME PLOTTED => 14:57

Dist	COUNTY	ROUTE	POST MILES TOTAL PROJECT	SHEET No.	TOTAL SHEETS
02	Tri	299	12.3/12.9	56	149

LICENSED LANDSCAPE ARCHITECT

03-26-14

PLANS APPROVAL DATE

LICENSED LANDSCAPE ARCHITECT RONALD MARTIN FLORY #4981 09-30-14 Renewal Date 03-26-14 Date STATE OF CALIFORNIA

THE STATE OF CALIFORNIA OR ITS OFFICERS OR AGENTS SHALL NOT BE RESPONSIBLE FOR THE ACCURACY OR COMPLETENESS OF SCANNED COPIES OF THIS PLAN SHEET.

NOTE:

1. (N) - NOT A SEPARATE PAY ITEM, FOR INFORMATION ONLY

ABBREVIATIONS:

RECP ROLLED EROSION CONTROL PRODUCT

EROSION CONTROL TYPE 1

SEQUENCE	ITEM	MATERIAL DESCRIPTION	MATERIAL TYPE	APPLICATION RATE	DEPTH
STEP 1	COMPOST	--	MEDIUM	135 CY/ACRE	1"
STEP 2	RECP (NETTING) (FLAP)	COCONUT COIR	TYPE A	--	--
STEP 3	HYDROSEED (SEED MIX 1)	PURE LIVE SEED	MIX 1	90 LB/ACRE	--
		COMPOST	MEDIUM	68.5 LB/ACRE	.5"
		ORGANIC FERTILIZER	--	1500 LB/ACRE	--
STEP 4	HYDROMULCH	FIBER	WOOD	1500 LB/ACRE	--
		TACKIFIER	PSYLLIUM	150 LB/ACRE	--

EROSION CONTROL TYPE 2

SEQUENCE	ITEM	MATERIAL DESCRIPTION	MATERIAL TYPE	APPLICATION RATE	REMARKS
STEP 1	BONDED FIBER MATRIX	FIBER	BFM	4500 LB/ACRE	APPLICATION RATE IS FOR FIBER AND TACKIFIER COMBINED
		TACKIFIER	BFM		
STEP 2	BONDED FIBER MATRIX	FIBER	BFM	500 LB/ACRE	APPLICATION RATE IS FOR FIBER AND TACKIFIER COMBINED
		TACKIFIER	BFM		
		PURE LIVE SEED	MIX 1	90 LB/ACRE	--
		ORGANIC FERTILIZER	--	1500 LB/ACRE	--

EROSION CONTROL TYPE 3

SEQUENCE	ITEM	MATERIAL DESCRIPTION	MATERIAL TYPE	APPLICATION RATE
STEP 1	HYDROSEED (SEED MIX 1)	PURE LIVE SEED	MIX 1	90 LB/ACRE
		FIBER	WOOD	2000 LB/ACRE
		ORGANIC FERTILIZER	--	1200 LB/ACRE
STEP 2	HYDROMULCH	FIBER	WOOD	1500 LB/ACRE
		TACKIFIER	PSYLLIUM	150 LB/ACRE

PURE LIVE SEED MIX (N) SEED MIX 1

BOTANICAL NAME (COMMON NAME)	PERCENT GERMINATION (MINIMUM)	POUNDS PURE LIVE SEED PER ACRE (N) (SLOPE MEASUREMENT)
BROMUS CARINITUS* (CALIFORNIA BROME)	80	25
ELYMUS ELYMOIDES* (SQUIRREL TAIL)	80	12
ELYMUS GLAUCUS* (BLUE WILDRYE)	80	20
FESTUCA CALIFORNICA (CALIFORNIA FESCUE)	80	20
LUPINUS BICOLOR* (MINIATURE LUPINE)	80	8
LOTUS PURSHIANUS* (SPANISH CLOVER)	80	5
		TOTAL PLS PER ACRE: 90

*SEED PRODUCED IN CALIFORNIA/OREGON-NORTH OF SAN FRANCISCO-SOUTH OF MEDFORD ONLY

EROSION CONTROL LEGEND ECL-1

REVISED BY | DATE REVISED

ROBIN SOLARI | RON FLORY

CALCULATED-DESIGNED BY | CHECKED BY

SENIOR LANDSCAPE ARCHITECT RON FLORY

STATE OF CALIFORNIA - DEPARTMENT OF TRANSPORTATION

Caltrans® LANDSCAPE ARCHITECTURE

P:\proj1\02\3E790_plans\pse\23e790tc001.dgn

LAST REVISION 01-02-14 | DATE PLOTTED => 28-MAY-2014 | TIME PLOTTED => 14:57

Dist	COUNTY	ROUTE	POST MILES TOTAL PROJECT	SHEET No.	TOTAL SHEETS
02	Tri	299	12.3/12.9	57	149

LICENSED LANDSCAPE ARCHITECT

03-26-14

PLANS APPROVAL DATE

LICENSED LANDSCAPE ARCHITECT RONALD MARTIN FLORY #4981 Expires 09-30-14 Renewal Date 03-26-14 Date STATE OF CALIFORNIA

THE STATE OF CALIFORNIA OR ITS OFFICERS OR AGENTS SHALL NOT BE RESPONSIBLE FOR THE ACCURACY OR COMPLETENESS OF SCANNED COPIES OF THIS PLAN SHEET.

NOTE:

1. (N) - NOT A SEPARATE PAY ITEM, FOR INFORMATION ONLY

BIOFILTRATION SWALE (TYPE 1)

SEQUENCE	ITEM	MATERIAL		SLOPE	DEPTH	APPLICATION RATE
		DESCRIPTION	TYPE			
STEP 1	COMPOST	COMPOST	MEDIUM	6:1	3"	405 CY/ACRE
STEP 2	INCORPORATE MATERIALS	COMPOST	MEDIUM	6:1	9"	--
STEP 3	RECP (NETTING)	COCONUT COIR	TYPE A	6:1	--	--
STEP 4	HYDROSEED (SEED MIX 2)	PURE LIVE SEED	MIX 2	6:1	--	113.5 LB/ACRE
		FIBER	WOOD	6:1	--	2000 LB/ACRE
		ORGANIC FERTILIZER	--	6:1	--	1500 LB/ACRE
STEP 5	HYDROMULCH	FIBER	WOOD	6:1	--	1500 LB/ACRE
		TACKIFIER	PSYLLIUM	6:1	--	200 LB/ACRE

BIOFILTRATION SWALE (TYPE 2)

SEQUENCE	ITEM	MATERIAL		SLOPE	DEPTH	APPLICATION RATE
		DESCRIPTION	TYPE			
STEP 1	COMPOST	COMPOST	MEDIUM	6:1	3"	405 CY/ACRE
				2:1	1"	135 CY/ACRE
STEP 2	INCORPORATE MATERIALS	COMPOST	MEDIUM	6:1	9"	--
				2:1	3"	--
STEP 3	HYDROSEED (SEED MIX 2)	PURE LIVE SEED	MIX 2	ALL	--	113.5 LB/ACRE
		FIBER	WOOD	ALL	--	2000 LB/ACRE
		ORGANIC FERTILIZER	--	ALL	--	1500 LB/ACRE
STEP 4	HYDROMULCH	FIBER	WOOD	ALL	--	1500 LB/ACRE
		TACKIFIER	PSYLLIUM	ALL	--	200 LB/ACRE
STEP 5	RECP(NETTING)	COCONUT COIR	TYPE A	ALL	--	--
STEP 6	COMPOST SOCK	MESH TUBE	TYPE 2	2:1	--	8" BURLAP

BIOFILTRATION SWALE (TYPE 3)

SEQUENCE	ITEM	MATERIAL		SLOPE	DEPTH	APPLICATION RATE
		DESCRIPTION	TYPE			
STEP 1	COMPOST	COMPOST	MEDIUM	2:1	1"	135 CY/ACRE
STEP 2	INCORPORATE MATERIALS	COMPOST	MEDIUM	2:1	3"	--
STEP 3	HYDROSEED (SEED MIX 2)	PURE LIVE SEED	MIX 2	ALL	--	113.5 LB/ACRE
		FIBER	WOOD	ALL	--	2000 LB/ACRE
		ORGANIC FERTILIZER	--	ALL	--	1500 LB/ACRE
STEP 4	HYDROMULCH	FIBER	WOOD	ALL	--	1500 LB/ACRE
		TACKIFIER	PSYLLIUM	ALL	--	200 LB/ACRE
STEP 5	RECP(NETTING)	COCONUT COIR	TYPE A	ALL	--	--

PURE LIVE SEED MIX (N) SEED MIX 2

BOTANICAL NAME (COMMON NAME)	PERCENT GERMINATION (MINIMUM)	POUNDS PURE LIVE SEED PER ACRE (N) (SLOPE MEASUREMENT)
AGROSTIS EXARATA* (SPIKE BENTGRASS)	80	2
BROMUS CARINITUS* (CALIFORNIA BROME)	80	30
DESCHAMPSIA DANTHANOIDES* (ANNUAL HAIRGRASS)	80	3
ELYMUS GLAUCUS* (BLUE WILDRYE)	80	20
FESTUCA RUBRA "MOLATE"* (RED FESCUE)	80	40
LEYMUS TRITICOIDES* (CREEPING WILDRYE)	80	20
MIMULUS GUTTATUS* (SEEP MONKEYFLOWER)	80	.50
		TOTAL PLS PER ACRE: 115.5

*SEED PRODUCED IN CALIFORNIA/OREGON-
NORTH OF SAN FRANCISCO-SOUTH OF MEDFORD ONLY

EROSION CONTROL LEGEND
ECL-2

REVISED BY | DATE REVISED

ROBIN SOLARI | RON FLORY

CALCULATED-DESIGNED BY | CHECKED BY

SENIOR LANDSCAPE ARCHITECT | RON FLORY

STATE OF CALIFORNIA - DEPARTMENT OF TRANSPORTATION

Caltrans® LANDSCAPE ARCHITECTURE

P:\proj\02\3E790_plans\pse\23e790tc002.dgn

LAST REVISION 01-02-14 | DATE PLOTTED => 28-MAY-2014 | TIME PLOTTED => 14:57

Dist	COUNTY	ROUTE	POST MILES TOTAL PROJECT	SHEET No.	TOTAL SHEETS
02	Tri	299	12.3/12.9	58	149

LICENSED LANDSCAPE ARCHITECT

03-26-14

PLANS APPROVAL DATE

LICENSED LANDSCAPE ARCHITECT RONALD MARTIN FLORY #4981 STATE OF CALIFORNIA 09-30-14 Renewal Date 03-26-14 Date

THE STATE OF CALIFORNIA OR ITS OFFICERS OR AGENTS SHALL NOT BE RESPONSIBLE FOR THE ACCURACY OR COMPLETENESS OF SCANNED COPIES OF THIS PLAN SHEET.

NOTES:

1. FOR ACCURATE RIGHT OF WAY DATA, CONTACT RIGHT OF WAY ENGINEERING AT THE DISTRICT OFFICE.
2. SURFACE AREAS HAVE BEEN CALCULATED ACCORDING TO SLOPE.

ABBREVIATIONS:

BIO-SWALE	BIOFILTRATION SWALE
RECP	ROLLED EROSION CONTROL PRODUCT

LEGEND:

- EROSION CONTROL (TYPE 1)
- EROSION CONTROL (TYPE 2)
- EROSION CONTROL (TYPE 3)
- BIOFILTRATION SWALE (TYPE 1)
- BIOFILTRATION SWALE (TYPE 2)
- BIOFILTRATION SWALE (TYPE 3)

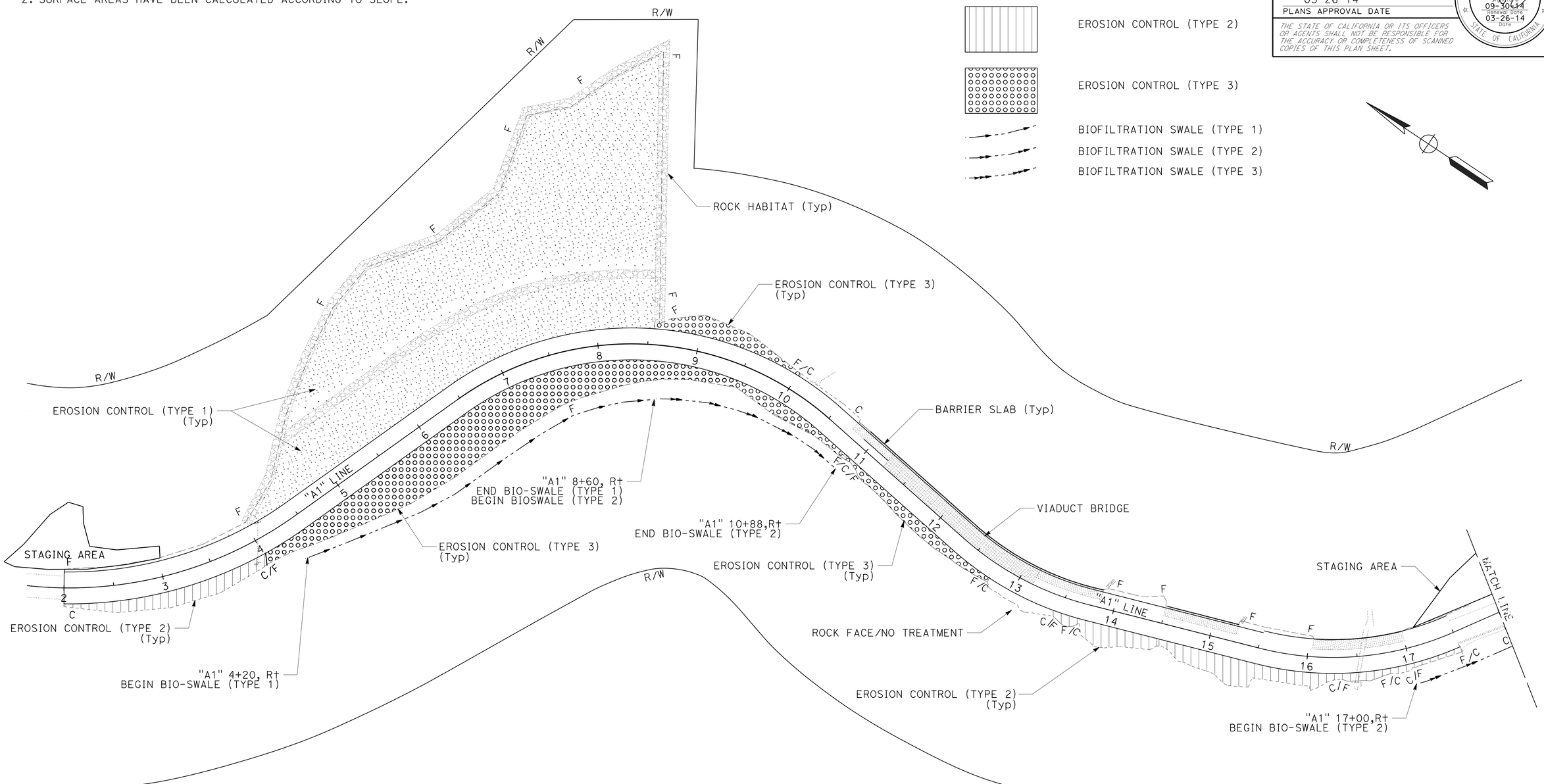

EROSION CONTROL PLAN

SCALE: 1" = 50'

EC-1

APPROVED FOR LANDSCAPE WORK ONLY

REVISED BY | DATE REVISED

ROBIN SOLARI | RON FLORY

CALCULATED-DESIGNED BY | CHECKED BY

SENIOR LANDSCAPE ARCHITECT | RON FLORY

STATE OF CALIFORNIA - DEPARTMENT OF TRANSPORTATION

Caltrans® LANDSCAPE ARCHITECTURE

P:\proj\02\3E790_plans\pse\23e790te001.dgn

LAST REVISION 01-02-14 | DATE PLOTTED => 28-MAY-2014 TIME PLOTTED => 14:57

Dist	COUNTY	ROUTE	POST MILES TOTAL PROJECT	SHEET No.	TOTAL SHEETS
02	Tri	299	12.3/12.9	59	149

LICENSED LANDSCAPE ARCHITECT

03-26-14
PLANS APPROVAL DATE

LICENSED LANDSCAPE ARCHITECT
RONALD MARTIN FLORY
#4981
09-30-14
Renewal Date
03-26-14
Date
STATE OF CALIFORNIA

THE STATE OF CALIFORNIA OR ITS OFFICERS OR AGENTS SHALL NOT BE RESPONSIBLE FOR THE ACCURACY OR COMPLETENESS OF SCANNED COPIES OF THIS PLAN SHEET.

NOTE:

1. FOR ACCURATE RIGHT OF WAY DATA, CONTACT RIGHT OF WAY ENGINEERING AT THE DISTRICT OFFICE.

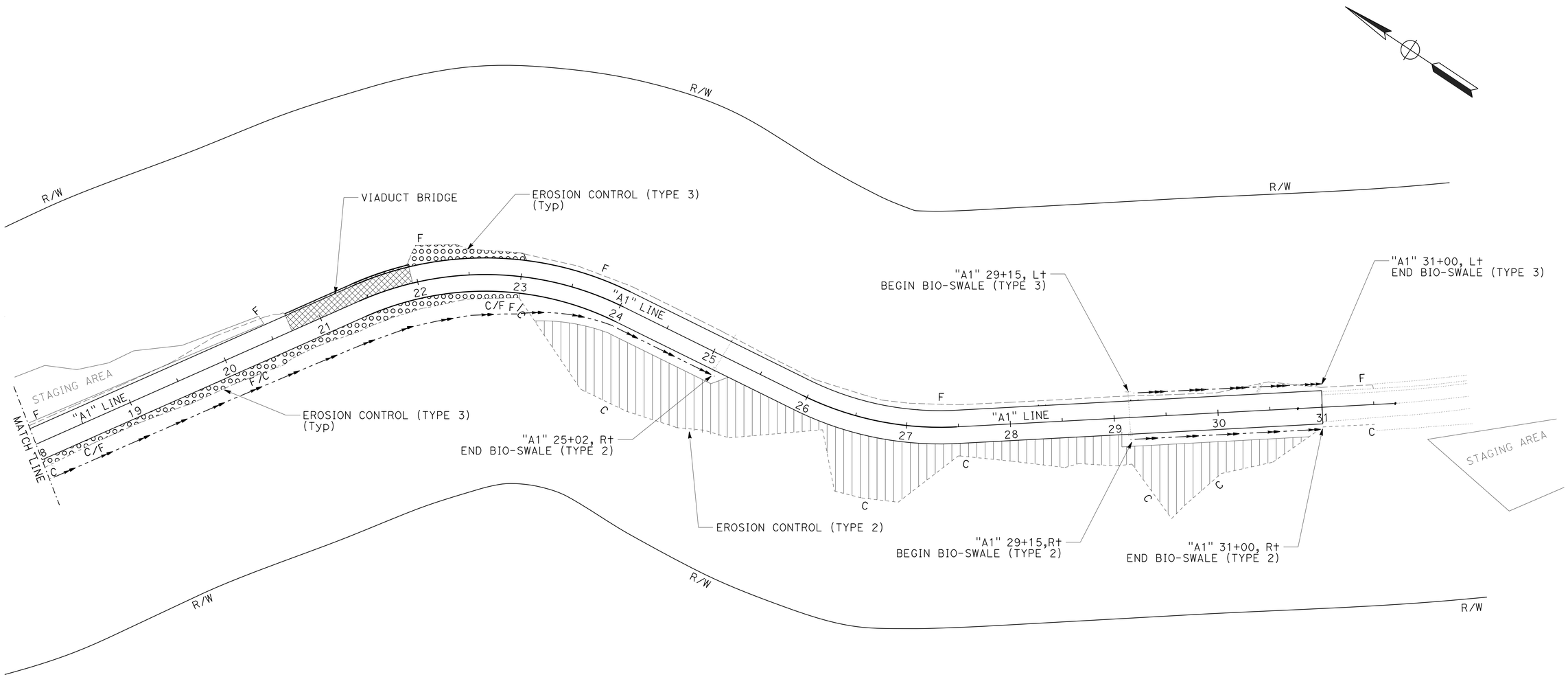

EROSION CONTROL PLAN

SCALE: 1" = 50'

EC-2

APPROVED FOR LANDSCAPE WORK ONLY

STATE OF CALIFORNIA - DEPARTMENT OF TRANSPORTATION
Caltrans® LANDSCAPE ARCHITECTURE

SENIOR LANDSCAPE ARCHITECT: RON FLORY
CALCULATED-DESIGNED BY: ROBIN SOLARI
CHECKED BY: RON FLORY
REVISED BY
DATE REVISED

P:\proj\02\3E790_plans\pse\23e790te002.dgn

LAST REVISION 01-02-14
DATE PLOTTED => 28-MAY-2014
TIME PLOTTED => 14:57

Dist	COUNTY	ROUTE	POST MILES TOTAL PROJECT	SHEET No.	TOTAL SHEETS
02	Tri	299	12.3/12.9	60	149

LICENSED LANDSCAPE ARCHITECT

03-26-14
PLANS APPROVAL DATE

LICENSED LANDSCAPE ARCHITECT
RONALD MARTIN FLORY
#4981
09-30-14
Renewal Date
03-26-14
Date
STATE OF CALIFORNIA

THE STATE OF CALIFORNIA OR ITS OFFICERS OR AGENTS SHALL NOT BE RESPONSIBLE FOR THE ACCURACY OR COMPLETENESS OF SCANNED COPIES OF THIS PLAN SHEET.

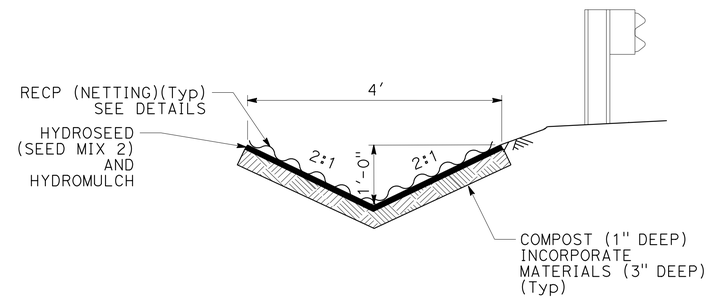

SECTION (Typ)

BIOFILTRATION SWALE (TYPE 3)

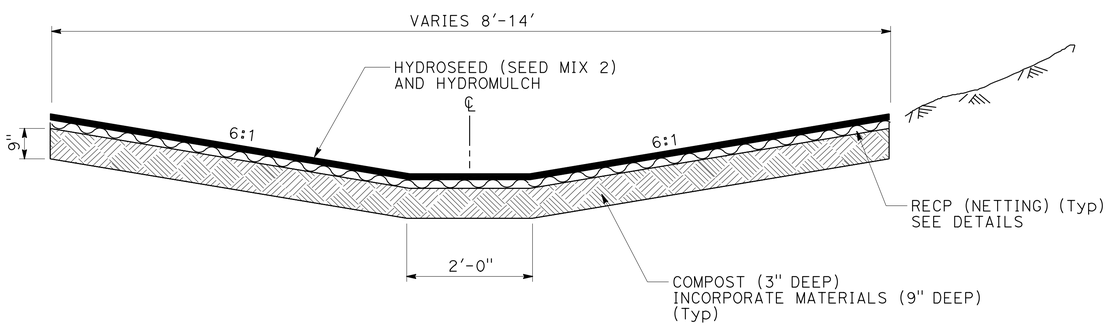

SECTION (Typ)

BIOFILTRATION SWALE (TYPE 1)

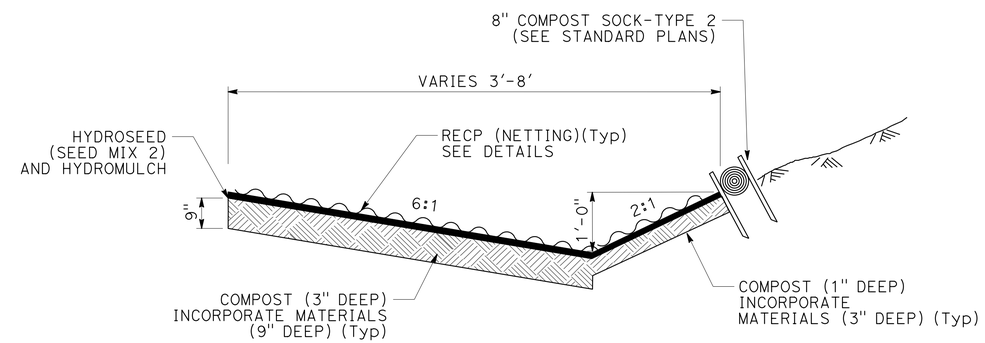

SECTION (Typ)

BIOFILTRATION SWALE (TYPE 2)

EROSION CONTROL DETAILS

NO SCALE

ECD-1

APPROVED FOR LANDSCAPE WORK ONLY

REVISED BY | DATE REVISED
ROBIN SOLARI | RON FLORY
CALCULATED-DESIGNED BY | CHECKED BY
SENIOR LANDSCAPE ARCHITECT | RON FLORY

STATE OF CALIFORNIA - DEPARTMENT OF TRANSPORTATION
Caltrans® LANDSCAPE ARCHITECTURE

P:\proj\02\3E790_plans\pse\23e790tf001.dgn

LAST REVISION 01-02-14 | DATE PLOTTED => 28-MAY-2014 | TIME PLOTTED => 14:57

Dist	COUNTY	ROUTE	POST MILES TOTAL PROJECT	SHEET No.	TOTAL SHEETS
02	Tri	299	12.3/12.9	61	149

LICENSED LANDSCAPE ARCHITECT

03-26-14
PLANS APPROVAL DATE

LICENSED LANDSCAPE ARCHITECT
RONALD MARTIN FLORY
#4981
Signature
09-30-14
Renewal Date
03-26-14
Date
STATE OF CALIFORNIA

THE STATE OF CALIFORNIA OR ITS OFFICERS OR AGENTS SHALL NOT BE RESPONSIBLE FOR THE ACCURACY OR COMPLETENESS OF SCANNED COPIES OF THIS PLAN SHEET.

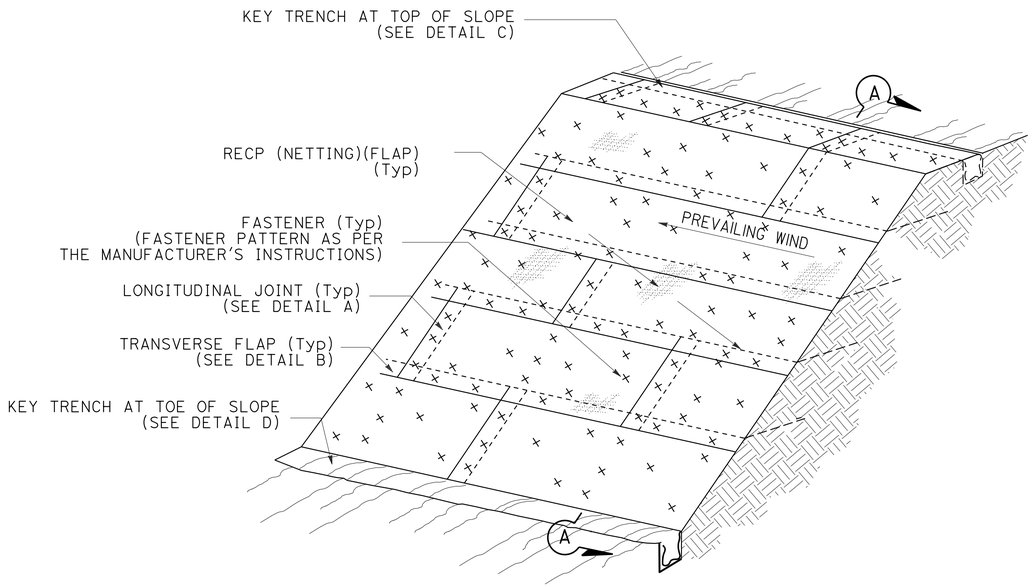

ISOMETRIC

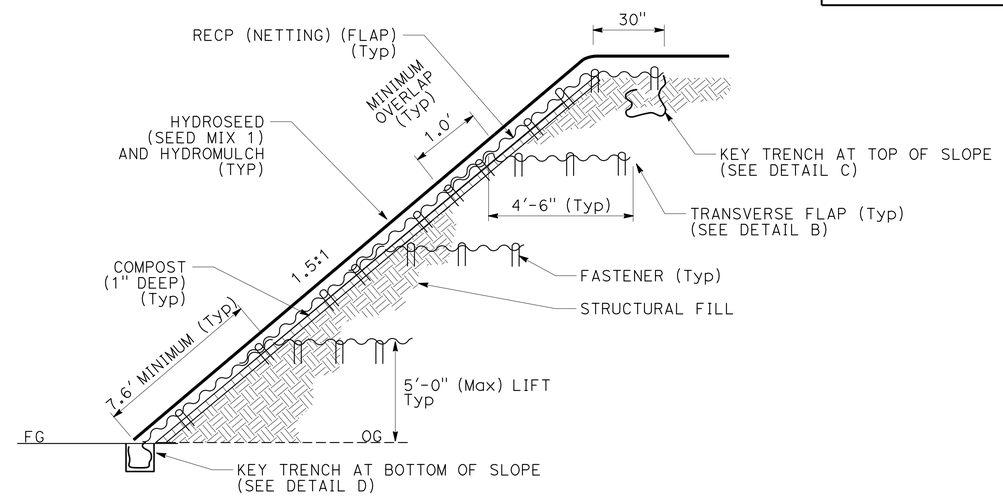

SECTION A-A

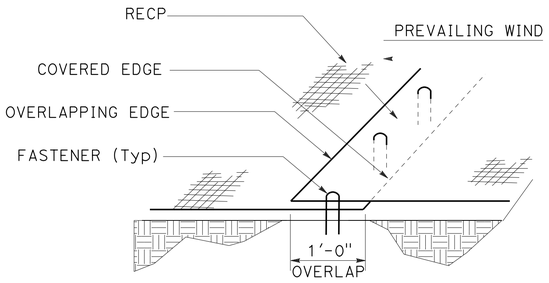

PERSPECTIVE

DETAIL A
LONGITUDINAL JOINT

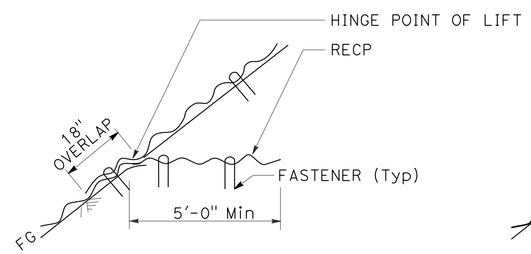

SECTION

DETAIL B
TRANSVERSE FLAP

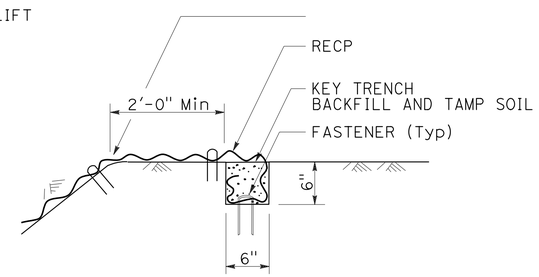

SECTION

DETAIL C
KEY TRENCH AT TOP OF SLOPE

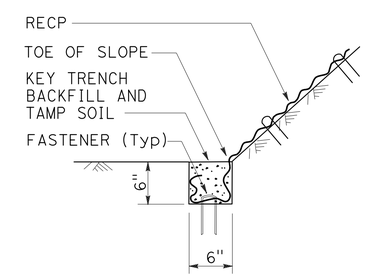

SECTION

DETAIL D
KEY TRENCH AT TOE OF SLOPE

RECP (NETTING) (FLAP)

EROSION CONTROL DETAILS

NO SCALE

ECD-2

REVISED BY	DATE REVISED
ROBIN SOLARI	RON FLORY
CALCULATED-DESIGNED BY	CHECKED BY
SENIOR LANDSCAPE ARCHITECT	RON FLORY

STATE OF CALIFORNIA - DEPARTMENT OF TRANSPORTATION
Caltrans® LANDSCAPE ARCHITECTURE

P:\proj1\02\3E790_plans\pse\23e790tf002.dgn

LAST REVISION 01-02-14 | DATE PLOTTED => 28-MAY-2014 | TIME PLOTTED => 14:57

Dist	COUNTY	ROUTE	POST MILES TOTAL PROJECT	SHEET No.	TOTAL SHEETS
02	Tri	299	12.3/12.9	62	149

LICENSED LANDSCAPE ARCHITECT

03-26-14
PLANS APPROVAL DATE

LICENSED LANDSCAPE ARCHITECT
RONALD MARTIN FLORY
#4981
09-30-14
Renewal Date
03-26-14
Date
STATE OF CALIFORNIA

THE STATE OF CALIFORNIA OR ITS OFFICERS OR AGENTS SHALL NOT BE RESPONSIBLE FOR THE ACCURACY OR COMPLETENESS OF SCANNED COPIES OF THIS PLAN SHEET.

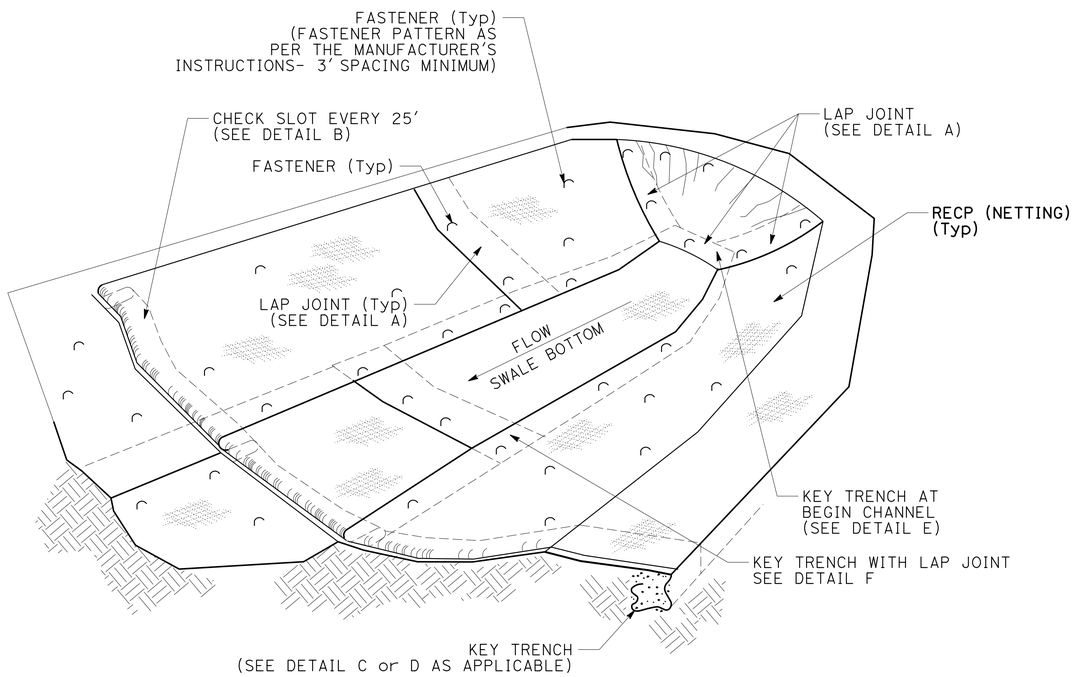

ISOMETRIC

BIOFILTRATION SWALE

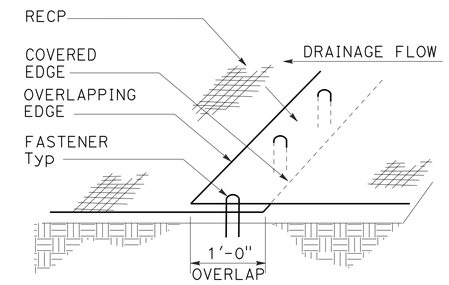

PERSPECTIVE

DETAIL A
LAP JOINT

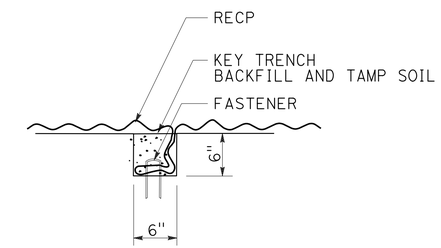

SECTION

DETAIL B
CHECK SLOT

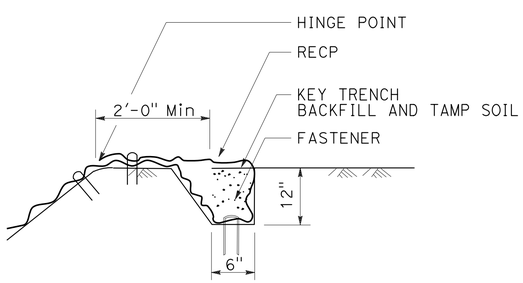

SECTION

DETAIL C
KEY TRENCH AT TOP OF SLOPE

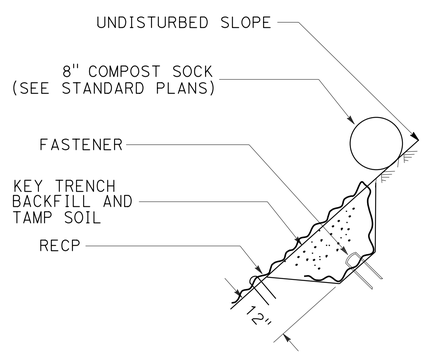

SECTION

DETAIL D
KEY TRENCH AT UPPER CONFORM

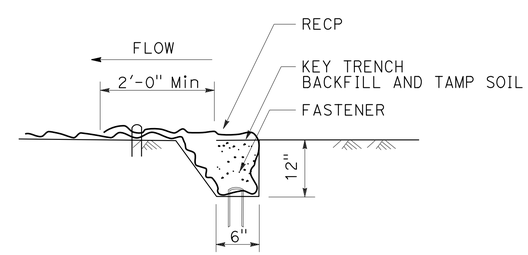

SECTION

DETAIL E
KEY TRENCH AT BEGIN/END SWALE

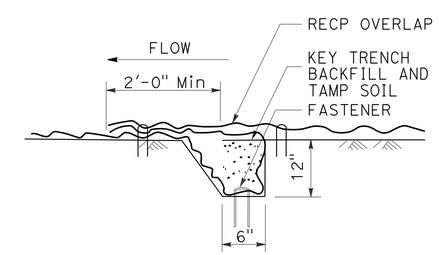

SECTION

DETAIL F
KEY TRENCH WITH LAP JOINT

RECP (NETTING)

EROSION CONTROL DETAILS

NO SCALE

ECD-3

REVISED BY | DATE REVISED
ROBIN SOLARI | RON FLORY
CALCULATED-DESIGNED BY | CHECKED BY
SENIOR LANDSCAPE ARCHITECT | RON FLORY

STATE OF CALIFORNIA - DEPARTMENT OF TRANSPORTATION
Caltrans® LANDSCAPE ARCHITECTURE

P:\proj1\02\3E790_plans\pse\23e790tf003.dgn

LAST REVISION 01-02-14 | DATE PLOTTED => 28-MAY-2014 | TIME PLOTTED => 14:57

Dist	COUNTY	ROUTE	POST MILES TOTAL PROJECT	SHEET No.	TOTAL SHEETS
02	Tri	299	12.3/12.9	63	149

LICENSED LANDSCAPE ARCHITECT

03-26-14
PLANS APPROVAL DATE

LICENSED LANDSCAPE ARCHITECT
RONALD MARTIN FLORY
#4981
09-30-14
Renewal Date
03-26-14
Date
STATE OF CALIFORNIA

THE STATE OF CALIFORNIA OR ITS OFFICERS OR AGENTS SHALL NOT BE RESPONSIBLE FOR THE ACCURACY OR COMPLETENESS OF SCANNED COPIES OF THIS PLAN SHEET.

ABBREVIATIONS:

EC EROSION CONTROL

EROSION CONTROL QUANTITIES

SHEET	LOCATION			SLOPE	AREA (SQFT)	DESCRIPTION	EC (BONDED FIBER MATRIX)	COMPOST	INCORPORATE MATERIALS	HYDROSEED (SEED MIX 1)	HYDROSEED (SEED MIX 2)	HYDROMULCH	RECP (NETTING)	RECP (NETTING) (FLAP)	COMPOST SOCK	REMARKS
	STATION	L†	R†				SQFT	SQFT	SQFT	SQFT	SQFT	SQFT	SQFT	SQFT	LF	
EC-1	2+00 TO 4+00		X	1:1	3,683	EROSION CONTROL (TYPE 2)	3,694									CUT SLOPE
	4+00 TO 8+60	X		1.5:1	74,452	EROSION CONTROL (TYPE 1)		74,452		74,452		74,452		74,452		230 CY COMPOST
	4+00 TO 9+50		X	20:1	15,893	EROSION CONTROL (TYPE 3)				15,893		15,893				FILL SLOPE
	8+60 TO 10+00	X		0	1,982	EROSION CONTROL (TYPE 3)				1,982		1,982				CUT/FILL SLOPE
	9+50 TO 12+75		X	6:1	2,939	EROSION CONTROL (TYPE 3)				2,939		2,939				FILL SLOPE
	13+40 TO 23+00		X	≤.75:1	8,537	EROSION CONTROL (TYPE 2)	8,568									CUT/FILL SLOPE
EC-2	18+00 TO 23+00		X	6:1	3,970	EROSION CONTROL (TYPE 3)				3,970		3,970				CUT/FILL SLOPE
	22+00 TO 31+00	X		20:1	4,804	EROSION CONTROL (TYPE 3)				4,804		4,804				FILL SLOPE
	23+00 TO 31+00		X	≤ 1:1	28,480	EROSION CONTROL (TYPE 2)	47,654									CUT SLOPE
						TOTAL	59,916	74,452		104,040		104,040		74,452		

BIOFILTRATION SWALES

SHEET	LOCATION			LF	AREA* (SQFT)	DESCRIPTION	EC (BONDED FIBER MATRIX)	COMPOST	INCORPORATE MATERIALS	HYDROSEED (SEED MIX 1)	HYDROSEED (SEED MIX 2)	HYDROMULCH	RECP (NETTING)	RECP (NETTING) (FLAP)	COMPOST SOCK	REMARKS*
	STATION	L†	R†				SQFT	SQFT	SQFT	SQFT	SQFT	SQFT	SQFT	SQFT	LF	
EC-1	4+20 TO 8+60		X	389	5,446	BIOSWALE (TYPE 1)		5,446	5,446		5,446	5,446	5,446			50.5 CY COMPOST
	8+60 to 10+88		X	199	1,592	BIOSWALE (TYPE 2)		1,592	1,592		1,592	1,592	1,592		199	12.4 CY COMPOST
	17+00 to 18+00		X	105	840	BIOSWALE (TYPE 2)		840	840		840	840	840		105	6.6 CY COMPOST
EC-2	18+00 TO 25+02		X	702	5,616	BIOSWALE (TYPE 2)		5,616	5,616		5,616	5,616	5,616		702	43.4 CY COMPOST
	29+15 TO 31+00	X		185	740	BIOSWALE (TYPE 3)		740	740		740	740	740			2.3 CY COMPOST
	29+15 TO 31+00		X	185	1,480	BIOSWALE (TYPE 2)		1,480	1,480		1,480	1,480	1,480		185	11.5 CY COMPOST
						TOTAL		15,714	15,714		15,714	15,714	15,714		1,191	127 CY COMPOST

	EC (BONDED FIBER MATRIX)	COMPOST	INCORPORATE MATERIALS	HYDROSEED (SEED MIX 1)	HYDROSEED (SEED MIX 2)	HYDROMULCH	RECP (NETTING)	RECP (NETTING) (FLAP)	COMPOST SOCK
	SQFT	SQFT	SQFT	SQFT	SQFT	SQFT	SQFT	SQFT	LF
GRAND TOTAL	59,916	90,166	15,714	104,040	15,714	119,754	15,714	74,452	1,191

* QUANTITIES CALCULATED AT MAXIMUM WIDTH OF BIOFILTRATION SWALES. ACTUAL WIDTHS VARY.

EROSION CONTROL QUANTITIES

ECQ-1

REVISED BY | DATE REVISED
ROBIN SOLARI | RON FLORY
CALCULATED-DESIGNED BY | CHECKED BY
SENIOR LANDSCAPE ARCHITECT | RON FLORY

STATE OF CALIFORNIA - DEPARTMENT OF TRANSPORTATION
Caltrans® LANDSCAPE ARCHITECTURE

P:\proj1\02\3E790_plans\pse\23e790tg001.dgn

LAST REVISION 01-02-14 | DATE PLOTTED => 28-MAY-2014 | TIME PLOTTED => 14:57

Dist	COUNTY	ROUTE	POST MILES TOTAL PROJECT	SHEET No.	TOTAL SHEETS
02	Tri	299	12.3/12.9	64	149

REGISTERED CIVIL ENGINEER 03-26-14 DATE

03-26-14
PLANS APPROVAL DATE

REGISTERED PROFESSIONAL ENGINEER THERESA ANDERSON No. C77957 Exp. 6-30-15 CIVIL STATE OF CALIFORNIA

THE STATE OF CALIFORNIA OR ITS OFFICERS OR AGENTS SHALL NOT BE RESPONSIBLE FOR THE ACCURACY OR COMPLETENESS OF SCANNED COPIES OF THIS PLAN SHEET.

NOTE:

1. FOR ACCURATE RIGHT OF WAY DATA, CONTACT RIGHT OF WAY ENGINEERING AT THE DISTRICT OFFICE.

LEGEND (THIS SHEET):

1. WOOD POLE WITH FLASHING BEACON. SEE CASE 5N, SHEET C-2.
2. WOOD POLE WITH SIGNAL AND LIGHTING. SEE DETAIL A, SHEET E-3. FOR ADDITIONAL DETAILS SEE CASE 1NT, SHEET C-3.
3. WOOD POLE. SEE CASE 2N, SHEET C-2.
4. 2-3"C, 2#6 (Cab1), 2#8 (Cab2), 2#12 (BFB), 1#6 G, 6#12, 2#10 N, (SIGNALS), 3CSC (PPB), 9 DLC.
5. 2"C, 2#8 (Cab2), 2#12 (FB), 2#12 (BFB), 6#12, 2#10 N, (SIGNALS), 2#8 (LTG), 1#12 G, 3CSC (PPB), 9 DLC.
6. MESSENGER CABLE, 2#8 (Cab2), 2#12 (BFB), 2#12 (FB), 6#12, 2#10 N, (SIGNALS), 2#8 (LTG), 1#12 G, 3CSC (PPB), 9 DLC.
7. MESSENGER CABLE, 2#12 (FB), 1#12 G, 2 DLC.
8. SPAN MOUNTED SIGNAL FACE, SEE SHEET C-3.
9. MESSENGER CABLE, 2#12 (FB), 1#12 G, 1 DLC.
10. 1½"C, 2#12 (FB), 1#12 G.
11. 2"C, 2#8 (Cab2), 2#12 (BFB), 2#12 (FB), 3#12, 1#10 N, (SIGNAL), 2#8 (LTG), 1#12 G, 3CSC (PPB), 5 DLC.
12. Ped PUSH BUTTON TO BE INSTALLED ON SIGN POST. SEE SHEET E-3 FOR ADDITIONAL DETAILS.
13. 1½"C, 2 DLC, 3CSC (PPB).
14. FOR WOOD POLE DETAILS, SEE CONSTRUCTION DETAILS SHEETS.

LEGEND:

- ROADWAY 1 LED WITH 12' LMA
- GENERATORS
- Ped PUSH BUTTON

ABBREVIATIONS:

ATS	AUTOMATIC TRANSFER SWITCH
Cab	CABINET
BFB	BIKE FLASHING BEACON

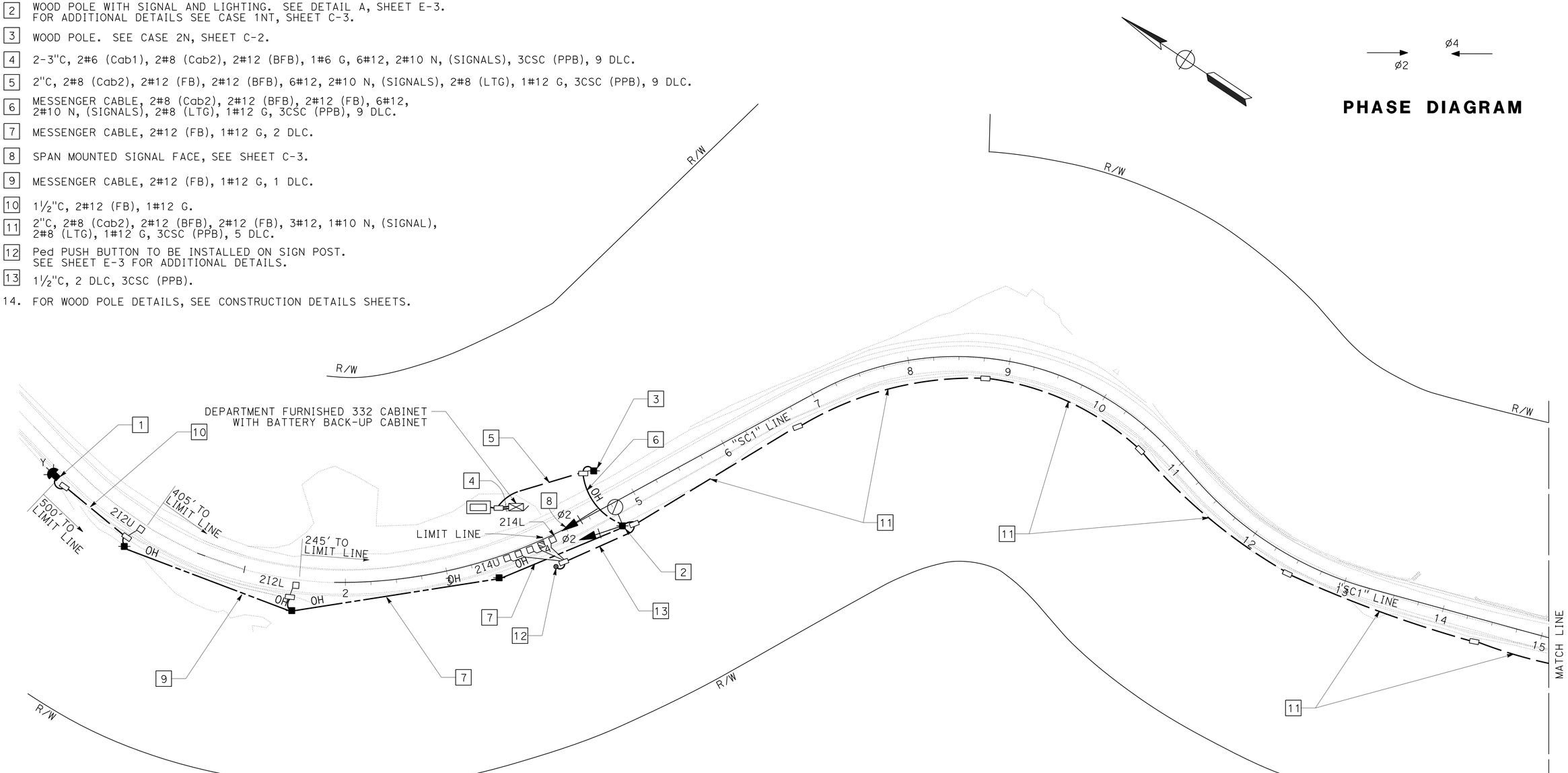

TEMPORARY SIGNAL SYSTEM

SCALE: 1" = 50'

E-1

APPROVED FOR ELECTRICAL WORK ONLY

STATE OF CALIFORNIA - DEPARTMENT OF TRANSPORTATION

Caltrans® **ELECTRICAL DESIGN**

FUNCTIONAL SUPERVISOR: ROB STINGER

CALCULATED-DESIGNED BY: TERI ANDERSON

CHECKED BY: ROB STINGER

REVISED BY / DATE REVISED

P:\proj1\02\3E790_plans\pse\23e790ua001.dgn

LAST REVISION 03-26-14 | DATE PLOTTED => 28-MAY-2014 | TIME PLOTTED => 14:57

BORDER LAST REVISED 7/2/2010 | USERNAME => s123119 | DGN FILE => 23e790ua001.dgn | RELATIVE BORDER SCALE IS IN INCHES 0 1 2 3 | UNIT 0147 | PROJECT NUMBER & PHASE 02-0002-0151-1 | EA 02-3E790

Dist	COUNTY	ROUTE	POST MILES TOTAL PROJECT	SHEET No.	TOTAL SHEETS
02	Tri	299	12.3/12.9	65	149

REGISTERED CIVIL ENGINEER 03-26-14 DATE

03-26-14
PLANS APPROVAL DATE

REGISTERED PROFESSIONAL ENGINEER THERESA ANDERSON No. C77957 Exp. 6-30-15 CIVIL STATE OF CALIFORNIA

THE STATE OF CALIFORNIA OR ITS OFFICERS OR AGENTS SHALL NOT BE RESPONSIBLE FOR THE ACCURACY OR COMPLETENESS OF SCANNED COPIES OF THIS PLAN SHEET.

NOTE:

1. FOR ACCURATE RIGHT OF WAY DATA, CONTACT RIGHT OF WAY ENGINEERING AT THE DISTRICT OFFICE.

LEGEND (THIS SHEET):

1. WOOD POLE WITH FLASHING BEACON. SEE CASE 5N, SHEET C-2.
2. WOOD POLE WITH SIGNAL AND LIGHTING. SEE DETAIL A, SHEET E-3. FOR ADDITIONAL DETAILS, SEE CASE 1NT, SHEET C-3.
3. WOOD POLE. SEE CASE 1NT, SHEET C-3.
4. 2"C, 2#8 (Cab2), 2#12 (BFB) 2#12 (FB), 3#12, 1#10 N, (SIGNAL), 2#8 (LTG), 1#12 G, 3CSC (PPB), 5 DLC (Cab1).
5. MESSENGER CABLE, 2#8 (Cab2), 2#12 (BFB), 2#12 (FB), 3#12, 1#10 N, (SIGNAL), 2#8 (LTG), 1#12 G, 3CSC (PPB), 5 DLC (Cab1).
6. MESSENGER CABLE, 2#8(Cab2), 2#12 (FB), 3#12, 1#10 N, (SIGNAL), 1#12 G, 5 DLC (Cab1), 2 DLC (Cab2).
7. 1½"C, 3CSC (PPB).
8. INSTALL Ped PUSH BUTTON ON SIGN POST. SEE SHEET E-3 FOR ADDITIONAL INFORMATION.
9. MESSENGER CABLE, 2#12 (FB), 1#12 G, 2 DLC (Cab2).
10. 1½"C, 2#12 (FB), 1#12 G, 1 DLC (Cab2).
11. 1½"C, 2#12 (FB), 1#12 G.
12. 2"C, 2#8, 1#10 N, (Cab2), 5 DLC (Cab1), 2DLC (Cab2).
13. SPAN MOUNTED SIGNAL FACE, SEE SHEET C-3.
14. 2"C, 2#8, 1#10 N, (Cab2), 5 DLC (Cab1), 5 DLC (Cab2).
15. 2-3"C, 2#8, 1#10 N, (Cab2), 5 DLC (Cab1), 5 DLC (Cab2).
16. FOR WOOD POLE DETAILS, SEE CONSTRUCTION DETAILS SHEETS.

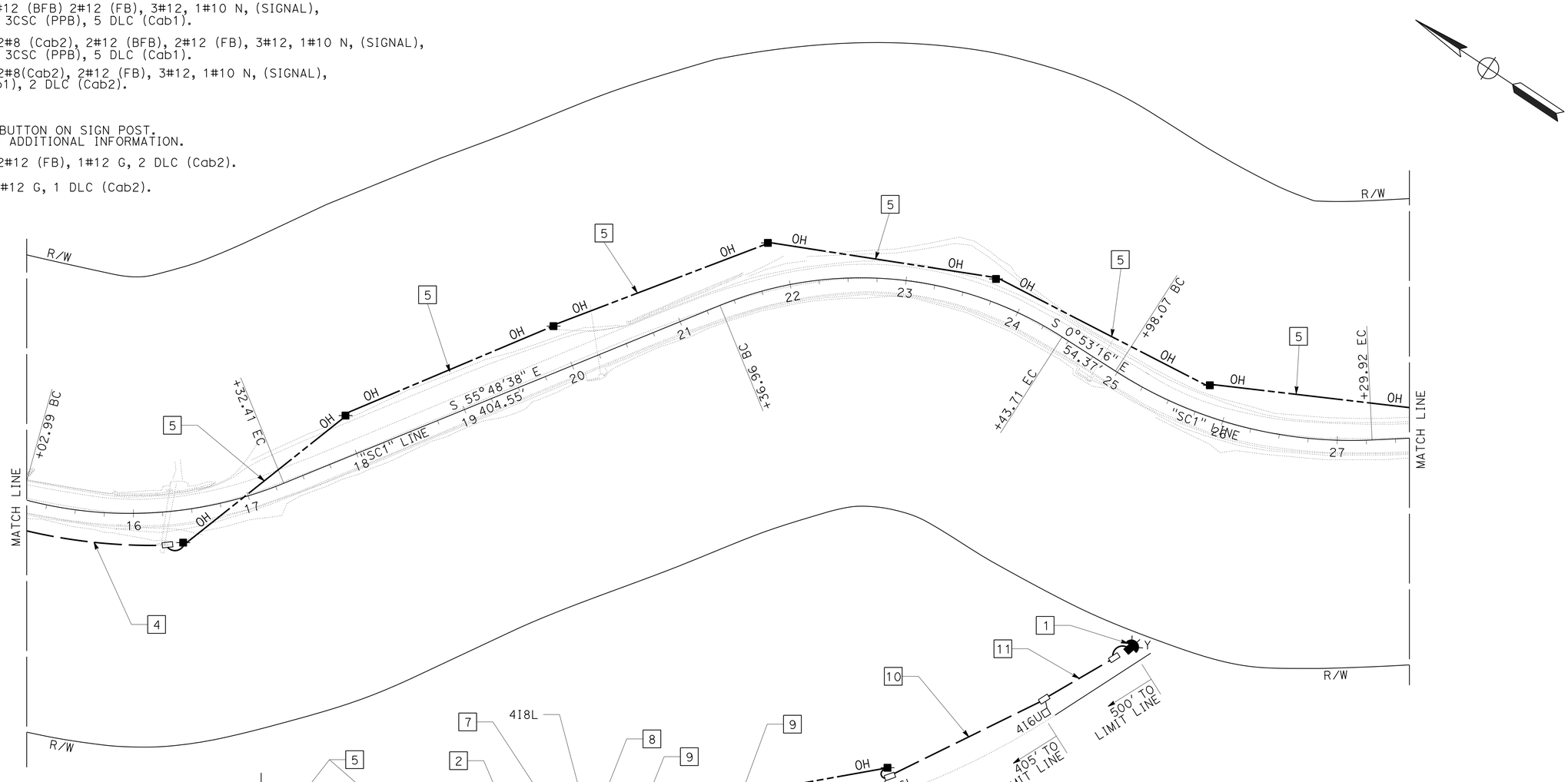

APPROVED FOR ELECTRICAL WORK ONLY

TEMPORARY SIGNAL SYSTEM

SCALE: 1" = 50'

E-2

REVISED BY	DATE REVISED
TERI ANDERSON	
ROB STINGER	

CALCULATED-DESIGNED BY / CHECKED BY

FUNCTIONAL SUPERVISOR: ROB STINGER

STATE OF CALIFORNIA - DEPARTMENT OF TRANSPORTATION
Caltrans® ELECTRICAL DESIGN

P:\proj1\02\3E790_plans\pse\23e790ua002.dgn

LAST REVISION 03-26-14 | DATE PLOTTED => 28-MAY-2014 | TIME PLOTTED => 14:57

Dist	COUNTY	ROUTE	POST MILES TOTAL PROJECT	SHEET No.	TOTAL SHEETS
02	Tri	299	12.3/12.9	66	149

REGISTERED CIVIL ENGINEER 03-26-14 DATE

03-26-14
PLANS APPROVAL DATE

REGISTERED PROFESSIONAL ENGINEER THERESA ANDERSON No. C77957 Exp. 6-30-15 CIVIL STATE OF CALIFORNIA

THE STATE OF CALIFORNIA OR ITS OFFICERS OR AGENTS SHALL NOT BE RESPONSIBLE FOR THE ACCURACY OR COMPLETENESS OF SCANNED COPIES OF THIS PLAN SHEET.

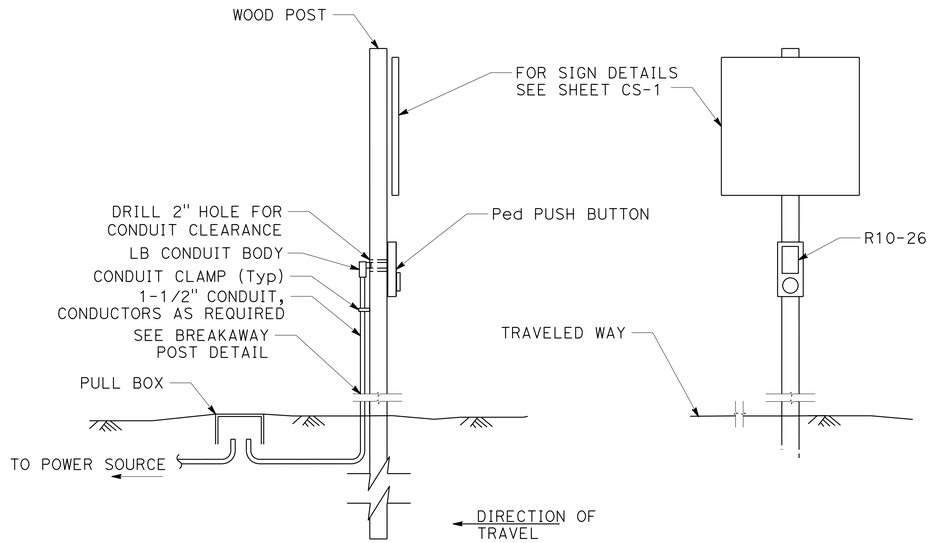

Ped PUSH BUTTON INSTALLATION

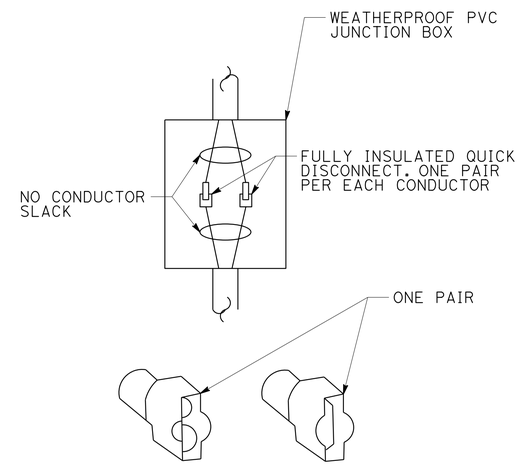

DETAIL B

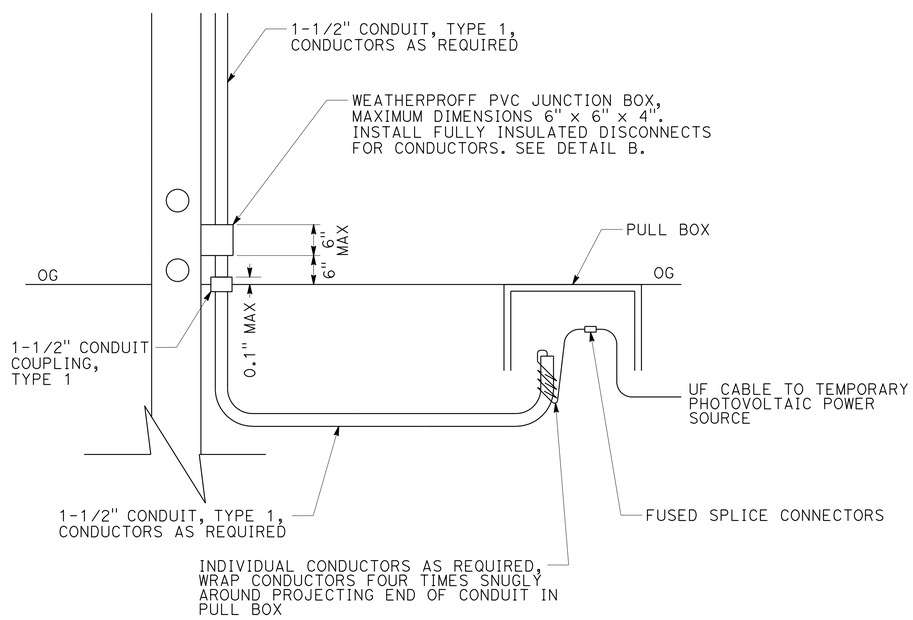

DETAIL A
BREAKAWAY POST
(CONDUIT CONNECTION)

ELECTRICAL DETAILS

NO SCALE

E-3

REVISED BY	DATE REVISED

CALCULATED-DESIGNED BY	TERI ANDERSON
CHECKED BY	ROB STINGER
FUNCTIONAL SUPERVISOR	ROB STINGER

STATE OF CALIFORNIA - DEPARTMENT OF TRANSPORTATION
Caltrans® ELECTRICAL DESIGN

P:\proj1\02\3E790_plans\pse\23e790ua003.dgn

LAST REVISION 03-26-14 | DATE PLOTTED => 28-MAY-2014 | TIME PLOTTED => 14:57

Dist	COUNTY	ROUTE	POST MILES TOTAL PROJECT	SHEET No.	TOTAL SHEETS
02	Tri	299	12.3/12.9	67	149

REGISTERED CIVIL ENGINEER 03-26-14 DATE

03-26-14
PLANS APPROVAL DATE

REGISTERED PROFESSIONAL ENGINEER THERESA ANDERSON No. C77957 Exp. 6-30-15 CIVIL STATE OF CALIFORNIA

THE STATE OF CALIFORNIA OR ITS OFFICERS OR AGENTS SHALL NOT BE RESPONSIBLE FOR THE ACCURACY OR COMPLETENESS OF SCANNED COPIES OF THIS PLAN SHEET.

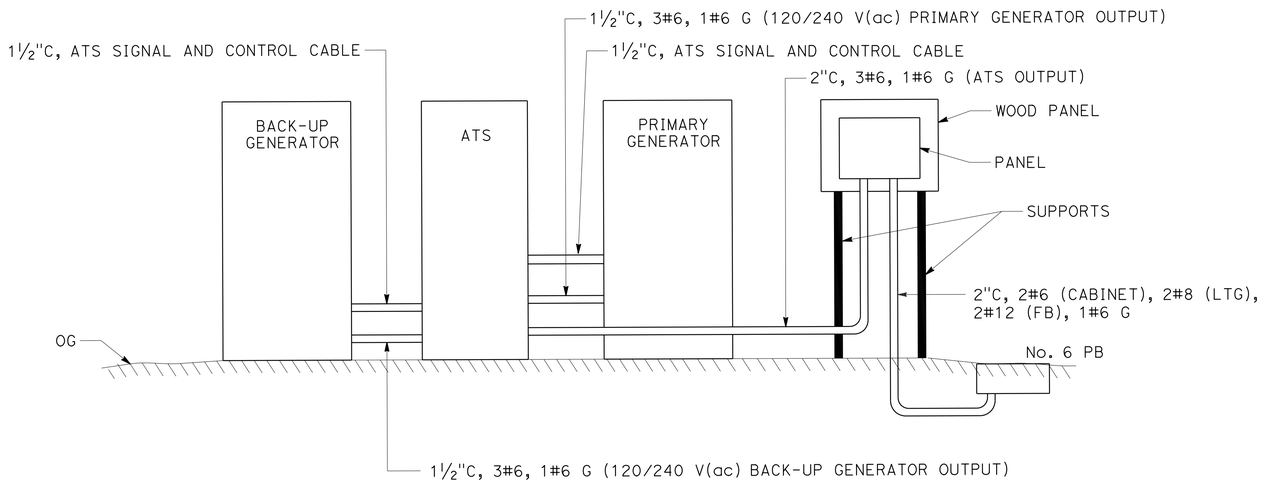

ATS AND GENERATORS

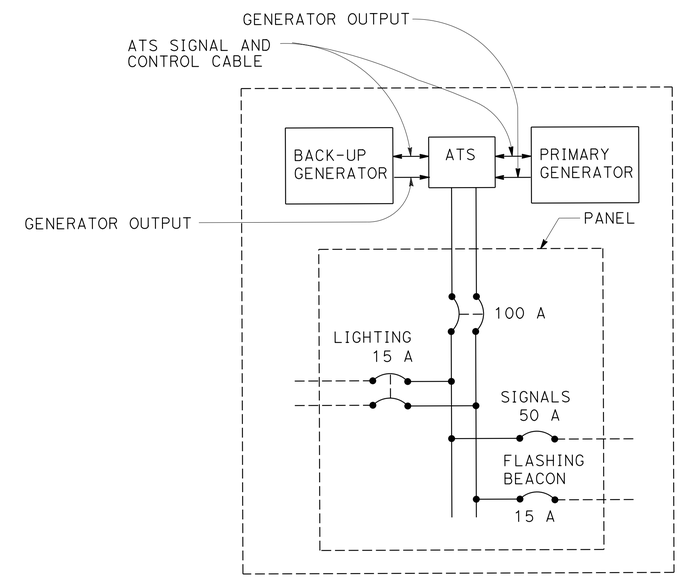

WIRING DIAGRAM

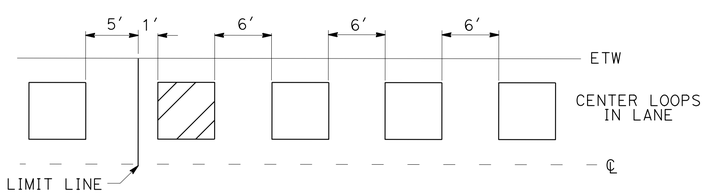

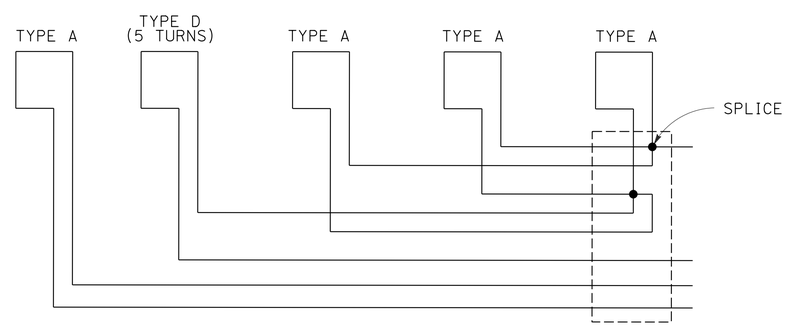

TYPE D/TYPE A LOOP ARRAY

ELECTRICAL DETAILS

NO SCALE

E-4

REVISED BY | DATE REVISED
TERI ANDERSON | ROB STINGER
CALCULATED-DESIGNED BY | CHECKED BY
FUNCTIONAL SUPERVISOR: ROB STINGER

STATE OF CALIFORNIA - DEPARTMENT OF TRANSPORTATION
Caltrans® ELECTRICAL DESIGN

P:\proj1\02\3E790_plans\pse\23e790ua004.dgn

LAST REVISION 03-26-14 | DATE PLOTTED => 28-MAY-2014 | TIME PLOTTED => 14:57

BORDER LAST REVISED 7/2/2010 | USERNAME => s123119 | DGN FILE => 23e790ua004.dgn | RELATIVE BORDER SCALE IS IN INCHES 0 1 2 3 | UNIT 0147 | PROJECT NUMBER & PHASE 02-0002-0151-1 | EA 02-3E790

Dist	COUNTY	ROUTE	POST MILES TOTAL PROJECT	SHEET No.	TOTAL SHEETS
02	Tri	299	12.3/12.9	68	149

REGISTERED CIVIL ENGINEER 03-26-14 DATE

03-26-14
PLANS APPROVAL DATE

REGISTERED PROFESSIONAL ENGINEER THERESA ANDERSON No. C77957 Exp. 6-30-15 CIVIL STATE OF CALIFORNIA

THE STATE OF CALIFORNIA OR ITS OFFICERS OR AGENTS SHALL NOT BE RESPONSIBLE FOR THE ACCURACY OR COMPLETENESS OF SCANNED COPIES OF THIS PLAN SHEET.

TEMPORARY SIGNAL SYSTEM

SHEET No.	1½" TYPE 3 CONDUIT	2" TYPE 3 CONDUIT	2½" TYPE 3 CONDUIT	3" TYPE 3 CONDUIT	MESSENGER CABLE	WOOD POLE	SIGNAL FACE WITH 3 INDICATIONS	No. 5 PULL BOX	No. 12 CONDUCTOR	No. 10 CONDUCTOR	No. 8 CONDUCTOR	No. 6 CONDUCTOR	DLC	3CSC	TYPE A LOOP	TYPE D LOOP	FLASHING BEACON	GENERATOR	BATTERIES
	LF	LF	LF	LF	LF	EA	EA	EA	LF	LF	LF	LF	LF	LF	EA	EA	EA	EA	EA
E-1	100	1,100	100	50	700	6	2	12	12,000	1,400	5,000	100	8,000	1,200	6	1	2	2	4
E-2	350	300	0	50	1,750	12	2	9	14,000	1,750	6,500	0	10,100	1,550	7	1	2	0	0

ITEMS SHOWN IN THIS TABLE ARE NOT A SEPARATE PAY ITEM, FOR INFORMATION ONLY.

ELECTRICAL QUANTITIES

E-5

CALCULATED-DESIGNED BY TERI ANDERSON
CHECKED BY ROB STINGER
REVISED BY
DATE REVISED
FUNCTIONAL SUPERVISOR ROB STINGER

STATE OF CALIFORNIA - DEPARTMENT OF TRANSPORTATION
Caltrans® ELECTRICAL DESIGN

P:\proj1\02\3E790_plans\pse\23e790ua005.dgn

LAST REVISION 03-26-14
DATE PLOTTED => 28-MAY-2014
TIME PLOTTED => 14:57

M

Maint	MAINTENANCE
Max	MAXIMUM
MB	METAL BEAM
MBB	METAL BEAM BARRIER
MBGR	METAL BEAM GUARD RAILING
Med	MEDIAN
MGS	MIDWEST GUARDRAIL SYSTEM
MH	MANHOLE
Min	MINIMUM
Misc	MISCELLANEOUS
Misc I & S	MISCELLANEOUS IRON AND STEEL
Mkr	MARKER
Mod	MODIFIED,
	MODIFY
Mon	MONUMENT
MP	METAL PLATE
MPGR	METAL PLATE GUARD RAILING
MR	MOVEMENT RATING
MSE	MECHANICALLY STABILIZED EMBANKMENT
Mt	MOUNTAIN, MOUNT
Mtl	MATERIAL
MVP	MAINTENANCE VEHICLE PULLOUT

N

N	NORTH
NB	NORTHBOUND
No.	NUMBER (MUST HAVE PERIOD)
Nos.	NUMBERS (MUST HAVE PERIOD)
NPS	NOMINAL PIPE SIZE
NS	NEAR SIDE
NSP	NEW STANDARD PLAN
NTS	NOT TO SCALE

O

Oblr	OBLITERATE
OC	OVERCROSSING
OD	OUTSIDE DIAMETER
OF	OUTSIDE FACE
OG	ORIGINAL GROUND
OGAC	OPEN GRADED ASPHALT CONCRETE
OGFC	OPEN GRADED FRICTION COURSE
OH	OVERHEAD
OHWM	ORDINARY HIGH WATER MARK
O-O	OUT TO OUT
Opp	OPPOSITE
OSD	OVERSIDE DRAIN

P

P	PAGE
PAP	PERFORATED ALUMINUM PIPE
PB	PULL BOX
PC	POINT OF CURVATURE,
	PRECAST
PCC	POINT OF COMPOUND CURVE,
	PORTLAND CEMENT CONCRETE
PCMS	PORTABLE CHANGEABLE MESSAGE SIGN
PCP	PERFORATED CONCRETE PIPE,
	PRESTRESSED CONCRETE PIPE
PCVC	POINT OF COMPOUND VERTICAL CURVE
PEC	PERMIT TO ENTER AND CONSTRUCT
Ped	PEDESTRIAN
Ped OC	PEDESTRIAN OVERCROSSING
Ped UC	PEDESTRIAN UNDERCROSSING
Perm Mtl	PERMEABLE MATERIAL

P continued

PG	PROFILE GRADE
PI	POINT OF INTERSECTION
PJP	PARTIAL JOINT PENETRATION
Pkwy	PARKWAY
ℙ,PL	PLATE
P/L	PROPERTY LINE
PM	POST MILE,
	TIME FROM NOON TO MIDNIGHT
PN	PAVING NOTCH
POC	POINT OF HORIZONTAL CURVE
POT	POINT OF TANGENT
POVC	POINT OF VERTICAL CURVE
PP	PIPE PILE,
	PLASTIC PIPE,
	POWER POLE
PPL	PREFORMED PERMEABLE LINER
PPP	PERFORATED PLASTIC PIPE
PRC	POINT OF REVERSE CURVE
PRF	PAVEMENT REINFORCING FABRIC
PRVC	POINT OF REVERSE VERTICAL CURVE
PS&E	PLANS, SPECIFICATIONS AND ESTIMATES
PS, P/S	PRESTRESSED
PSP	PERFORATED STEEL PIPE
PT	POINT OF TANGENCY
PVC	POLYVINYL CHLORIDE
Pvmt	PAVEMENT

Q

Qty	QUANTITY

R

R	RADIUS
R & D	REMOVE AND DISPOSE
R & S	REMOVE AND SALVAGE
R/C	RATE OF CHANGE
RCA	REINFORCED CONCRETE ARCH
RCB	REINFORCED CONCRETE BOX
RCP	REINFORCED CONCRETE PIPE
RCPA	REINFORCED CONCRETE PIPE ARCH
Rd	ROAD
Reinf	REINFORCED,
	REINFORCEMENT,
	REINFORCING
Rel	RELOCATE
Repl	REPLACEMENT
Ret	RETAINING
Rev	REVISED, REVISION
Rdwy	ROADWAY
RHMA	RUBBERIZED HOT MIX ASPHALT
Riv	RIVER
RM	ROAD-MIXED
RP	RADIUS POINT,
	REFERENCE POINT
RR	RAILROAD
RSP	ROCK SLOPE PROTECTION,
	REVISED STANDARD PLAN
Rt	RIGHT
Rte	ROUTE
RW	REDWOOD,
	RETAINING WALL
R/W	RIGHT OF WAY
Rwy	RAILWAY

S

S	SOUTH,
	SUPPLEMENT
SAE	STRUCTURE APPROACH EMBANKMENT
Salv	SALVAGE
SAPP	STRUCTURAL ALUMINUM PLATE PIPE
SB	SOUTHBOUND
SC	SAND CUSHION
SCSP	SLOTTED CORRUGATED STEEL PIPE
SD	STORM DRAIN
Sec	SECOND,
	SECTION
Sep	SEPARATION
SG	SUBGRADE
Shld	SHOULDER
Sht	SHEET
Sim	SIMILAR
℄	STATION LINE
SM	SELECTED MATERIAL
Spec	SPECIAL,
	SPECIFICATIONS
SPP	SLOTTED PLASTIC PIPE
SS	SLOPE STAKE
SSBM	STRAP AND SADDLE BRACKET METHOD
SSD	STRUCTURAL SECTION DRAIN
SSPA	STRUCTURAL STEEL PLATE ARCH
SSPP	STRUCTURAL STEEL PLATE PIPE
SSPPA	STRUCTURAL STEEL PLATE PIPE ARCH
SSRP	STEEL SPIRAL RIB PIPE
St	STREET
Sta	STATION
STBB	SINGLE THRIE BEAM BARRIER
Std	STANDARD
Str	STRUCTURE
Surf	SURFACING
SW	SIDEWALK,
	SOUND WALL
Swr	SEWER
Sym	SYMMETRICAL
S4S	SURFACE 4 SIDES

T

T	SEMI-TANGENT
Tan	TANGENT
TBB	THRIE BEAM BARRIER
Tbr	TIMBER
TC	TOP OF CURB
TCB	TRAFFIC CONTROL BOX
TCE	TEMPORARY CONSTRUCTION EASEMENT
Tel	TELEPHONE
Temp	TEMPORARY
TG	TOP OF GRADE
Tot	TOTAL
TP	TELEPHONE POLE
TPB	TREATED PERMEABLE BASE
TPM	TREATED PERMEABLE MATERIAL
Trans	TRANSITION

T continued

TS	TRANSVERSE,
	TRAFFIC SIGNAL,
	TUBULAR STEEL
Typ	TYPICAL

U

UC	UNDERCROSSING
UD	UNDERDRAIN
UG	UNDERGROUND
UON	UNLESS OTHERWISE NOTED
UP	UNDERPASS

V

V	VALVE,
	DESIGN SPEED
Var	VARIABLE,
	VARIES
VC	VERTICAL CURVE
VCP	VITRIFIED CLAY PIPE
Vert	VERTICAL
Via	VIADUCT
Vol	VOLUME

W

W	WEST,
	WIDTH
WB	WESTBOUND
WH	WEEP HOLE
WM	WIRE MESH
WS	WATER SURFACE
WSP	WELDED STEEL PIPE
Wt	WEIGHT
WV	WATER VALVE
WW	WINGWALL
WWLOL	WINGWALL LAYOUT LINE

X

X Sec	CROSS SECTION
Xing	CROSSING

Y

Yr	YEAR
Yrs	YEARS

Dist	COUNTY	ROUTE	POST MILES TOTAL PROJECT	SHEET No.	TOTAL SHEETS
02	Tri	299	12.3/12.9	69	149

Grace M. Tsushima
REGISTERED CIVIL ENGINEER

July 19, 2013
PLANS APPROVAL DATE

REGISTERED PROFESSIONAL ENGINEER Grace M. Tsushima No. C49814 Exp. 9-30-14 CIVIL STATE OF CALIFORNIA

THE STATE OF CALIFORNIA OR ITS OFFICERS OR AGENTS SHALL NOT BE RESPONSIBLE FOR THE ACCURACY OR COMPLETENESS OF SCANNED COPIES OF THIS PLAN SHEET.

TO ACCOMPANY PLANS DATED 03-26-14

UNIT OF MEASUREMENT SYMBOLS:

Some of the symbols used in the project plan quantity tables and in the Bid Item List are:

TABLE A

SYMBOL USED	DEFINITIONS
ACRE	ACRE
CF	CUBIC FOOT
CY	CUBIC YARD
EA	EACH
GAL	GALLON
LB	POUND
LF	LINEAR FOOT
SQFT	SQUARE FOOT
SQYD	SQUARE YARD
STA	100 FEET
TAB	TABLET
TON	2,000 POUNDS

Some of the symbols used in the plans other than in the project plan quantity tables are:

TABLE B

SYMBOL USED	DEFINITIONS
ksi	KIPS PER SQUARE INCH
ksf	KIPS PER SQUARE FOOT
psi	POUNDS PER SQUARE INCH
psf	POUNDS PER SQUARE FOOT
lb/ft^3, pcf	POUNDS PER CUBIC FOOT
tsf	TONS PER SQUARE FOOT
mph, MPH *	MILES PER HOUR
ø	NOMINAL DIAMETER
oz	OUNCE
lb	POUND
kip	1,000 POUNDS
cal	CALORIE
ft	FOOT OR FEET
gal	GALLON

* For use on a sign panel only

STATE OF CALIFORNIA
DEPARTMENT OF TRANSPORTATION

ABBREVIATIONS (SHEET 2 OF 2)

NO SCALE

RSP A10B DATED JULY 19, 2013 SUPERSEDES STANDARD PLAN A10B DATED MAY 20, 2011 - PAGE 2 OF THE STANDARD PLANS BOOK DATED 2010.

REVISED STANDARD PLAN RSP A10B

2010 REVISED STANDARD PLAN RSP A10B

DATE PLOTTED => 28-MAY-2014
TIME PLOTTED => 14:57

Dist	COUNTY	ROUTE	POST MILES TOTAL PROJECT	SHEET No.	TOTAL SHEETS
02	Tri	299	12.3/12.9	70	149

REGISTERED CIVIL ENGINEER

July 20, 2012
PLANS APPROVAL DATE

REGISTERED PROFESSIONAL ENGINEER
Roberta L. McLaughlin
No. C40375
Exp. 3-31-13
CIVIL
STATE OF CALIFORNIA

THE STATE OF CALIFORNIA OR ITS OFFICERS OR AGENTS SHALL NOT BE RESPONSIBLE FOR THE ACCURACY OR COMPLETENESS OF SCANNED COPIES OF THIS PLAN SHEET.

TO ACCOMPANY PLANS DATED 03-26-14

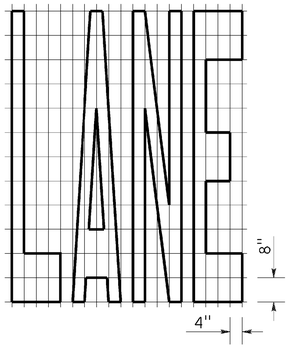

A=24 ft^2

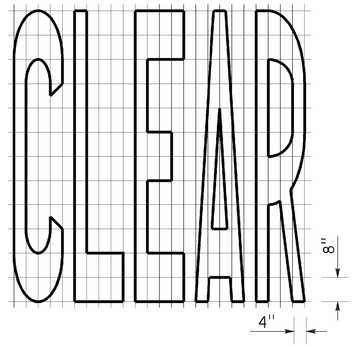

A=27 ft^2

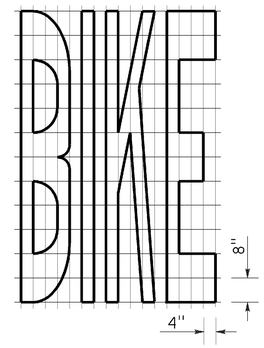

A=21 ft^2

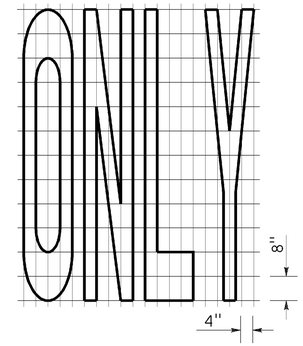

A=22 ft^2

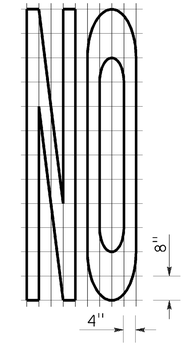

A=14 ft^2

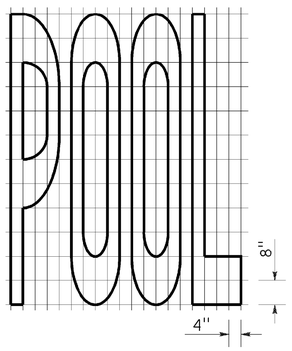

A=23 ft^2

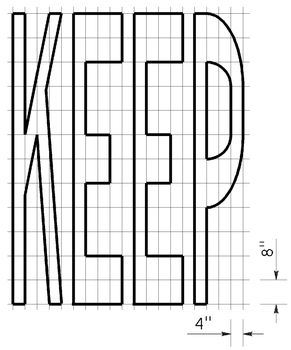

A=24 ft^2

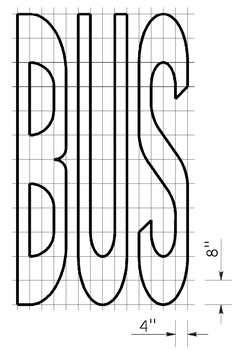

A=20 ft^2

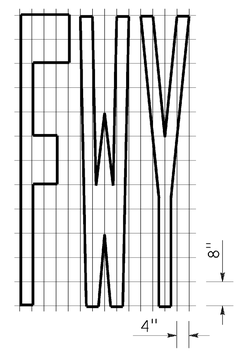

A=16 ft^2

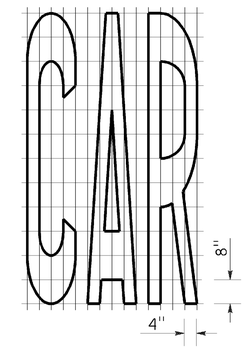

A=17 ft^2

WORD MARKINGS			
ITEM	ft^2	ITEM	ft^2
LANE	24	NO	14
POOL	23	BIKE	21
CAR	17	BUS	20
CLEAR	27	ONLY	22
KEEP	24	FWY	16

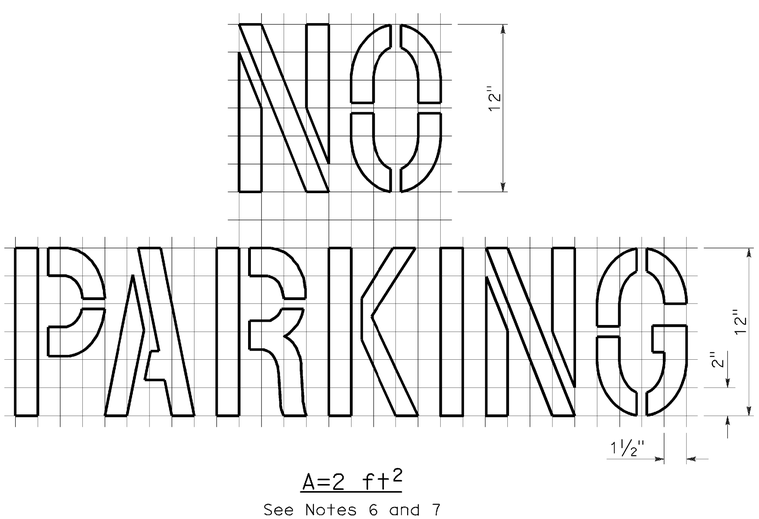

A=2 ft^2
See Notes 6 and 7

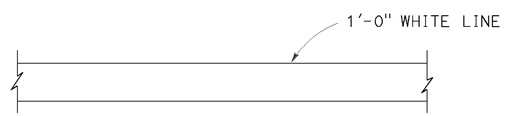

LIMIT LINE (STOP LINE)

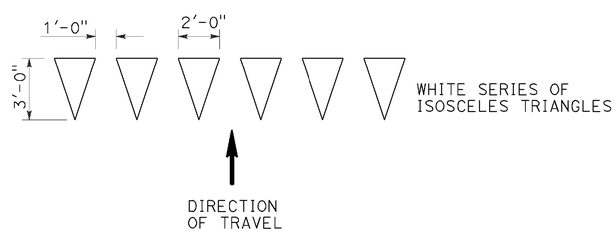

YIELD LINE

NOTES:

1. If a message consists of more than one word, it should read "UP", i.e., the first word should be nearest the driver.
2. The space between words should be at least four times the height of the characters for low speed roads, but not more than ten times the height of the characters. The space may be reduced appropriately where there is limited space because of local conditions.
3. Minor variations in dimensions may be accepted by the Engineer.
4. Portions of a letter, number or symbol may be separated by connecting segments not to exceed 2" in width.
5. The words "NO PARKING" pavement marking is to be used for parking facilities. For typical locations of markings, see Standard Plans A90A and A90B.
6. The words "NO PARKING", shall be painted in white letters no less than 1'-0" high on a contrasting background and located so that it is visible to traffic enforcement officials.

STATE OF CALIFORNIA
DEPARTMENT OF TRANSPORTATION

PAVEMENT MARKINGS
WORDS, LIMIT AND YIELD LINES

NO SCALE

RSP A24E DATED JULY 20, 2012 SUPERSEDES STANDARD PLAN A24E
DATED MAY 20, 2011 - PAGE 17 OF THE STANDARD PLANS BOOK DATED 2010.

REVISED STANDARD PLAN RSP A24E

2010 REVISED STANDARD PLAN RSP A24E

DATE PLOTTED => 28-MAY-2014
TIME PLOTTED => 14:57

Dist	COUNTY	ROUTE	POST MILES TOTAL PROJECT	SHEET No.	TOTAL SHEETS
02	Tri	299	12.3/12.9	71	149

Randell D. Hiatt
REGISTERED CIVIL ENGINEER

July 19, 2013
PLANS APPROVAL DATE

REGISTERED PROFESSIONAL ENGINEER
Randell D. Hiatt
No. C50200
Exp. 6-30-15
CIVIL
STATE OF CALIFORNIA

THE STATE OF CALIFORNIA OR ITS OFFICERS OR AGENTS SHALL NOT BE RESPONSIBLE FOR THE ACCURACY OR COMPLETENESS OF SCANNED COPIES OF THIS PLAN SHEET.

TO ACCOMPANY PLANS DATED 03-26-14

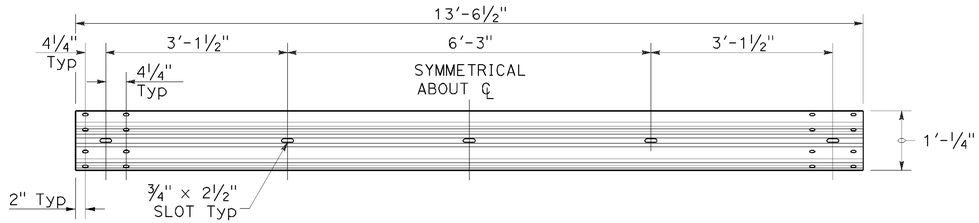

TYPICAL RAIL ELEMENT

NOTE:

1. Slotted holes for splice bolts to overlap ends of rail element.

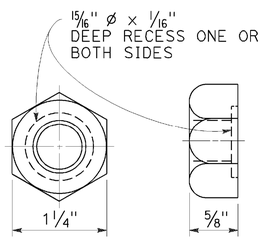

⅝" Ø RECESS NUT

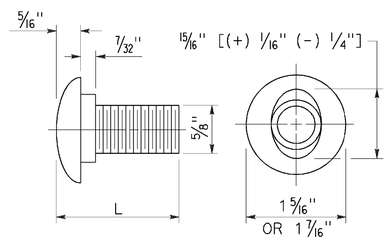

⅝" Ø BUTTON HEAD BOLT

BUTTON HEAD BOLT

L	THREAD LENGTH
1⅜"	FULL THREAD LENGTH
2"	FULL THREAD LENGTH
10"	4" Min THREAD LENGTH
18"	4" Min THREAD LENGTH
20"	4" Min THREAD LENGTH
22"	4" Min THREAD LENGTH
26"	4" Min THREAD LENGTH
36"	4" Min THREAD LENGTH
** 2¾"	2" Min THREAD LENGTH
** 19"	4" Min THREAD LENGTH

** For nested rail applications.

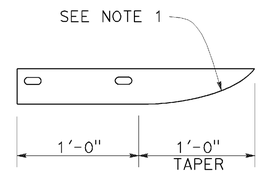

PLAN

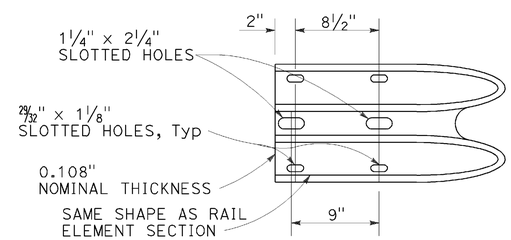

ELEVATION

END CAP
(TYPE A)

STATE OF CALIFORNIA
DEPARTMENT OF TRANSPORTATION

MIDWEST GUARDRAIL SYSTEM STANDARD HARDWARE

NO SCALE

RSP A77M1 DATED JULY 19, 2013 SUPPLEMENTS THE STANDARD PLANS BOOK DATED 2010.

REVISED STANDARD PLAN RSP A77M1

2010 REVISED STANDARD PLAN RSP A77M1

DATE PLOTTED => 28-MAY-2014
TIME PLOTTED => 14:58

Dist	COUNTY	ROUTE	POST MILES TOTAL PROJECT	SHEET No.	TOTAL SHEETS
02	Tri	299	12.3/12.9	72	149

Randell D. Hiatt
REGISTERED CIVIL ENGINEER

November 15, 2013
PLANS APPROVAL DATE

REGISTERED PROFESSIONAL ENGINEER
Randell D. Hiatt
No. C50200
Exp. 6-30-15
CIVIL
STATE OF CALIFORNIA

THE STATE OF CALIFORNIA OR ITS OFFICERS OR AGENTS SHALL NOT BE RESPONSIBLE FOR THE ACCURACY OR COMPLETENESS OF SCANNED COPIES OF THIS PLAN SHEET.

TO ACCOMPANY PLANS DATED 03-26-14

NOTE:

See Revised Standard Plans RSP A77S1, RSP A77S2 and RSP A77T1 for typical use of anchor cable and anchor plate.

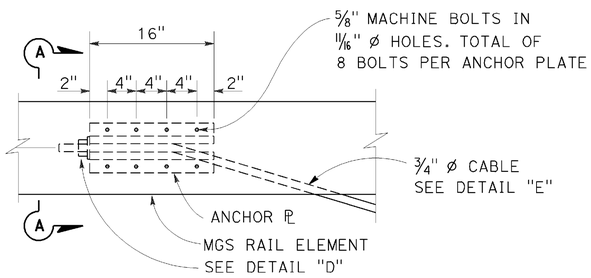

ANCHOR PLATE DETAIL

(MGS shown, TBB similar)

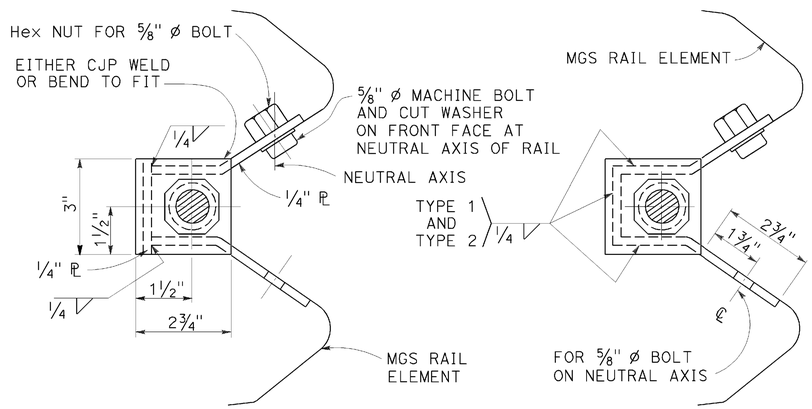

NOTE:

Dimensioning applies to both types.

SECTION A-A
(ALTERNATIVE TYPE 1)

SECTION A-A
(ALTERNATIVE TYPE 2)

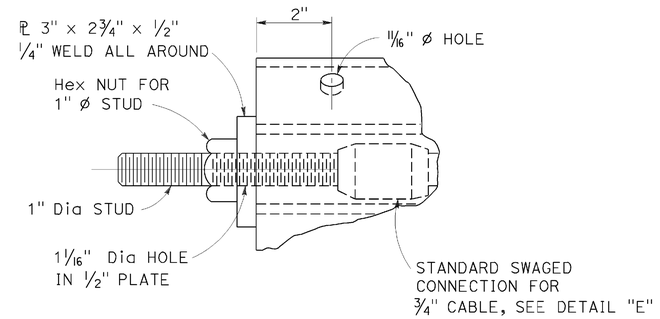

DETAIL "D"

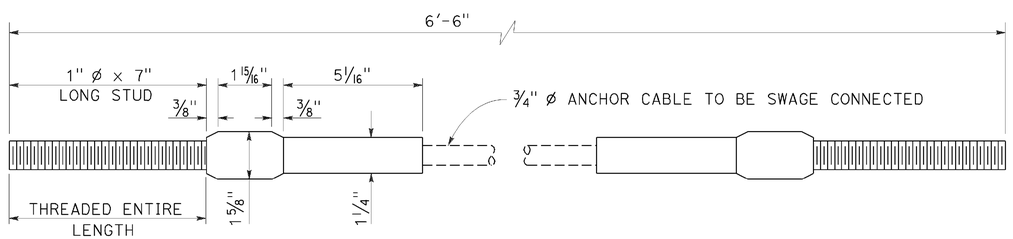

ANCHOR CABLE WITH SWAGED FITTING AND STUD

DETAIL "E"

STATE OF CALIFORNIA
DEPARTMENT OF TRANSPORTATION

METAL RAILING ANCHOR CABLE AND ANCHOR PLATE DETAILS

NO SCALE

RSP A77S3 DATED NOVEMBER 15, 2013 SUPERSEDES RSP A77S3 DATED JULY 19, 2013 THAT SUPPLEMENTS THE STANDARD PLANS BOOK DATED 2010.

REVISED STANDARD PLAN RSP A77S3

2010 REVISED STANDARD PLAN RSP A77S3

DATE PLOTTED => 28-MAY-2014
TIME PLOTTED => 14:58

Dist	COUNTY	ROUTE	POST MILES TOTAL PROJECT	SHEET No.	TOTAL SHEETS
02	Tri	299	12.3/12.9	73	149

Randell D. Hiatt
REGISTERED CIVIL ENGINEER

July 19, 2013
PLANS APPROVAL DATE

REGISTERED PROFESSIONAL ENGINEER
Randell D. Hiatt
No. C50200
Exp. 6-30-15
CIVIL
STATE OF CALIFORNIA

THE STATE OF CALIFORNIA OR ITS OFFICERS OR AGENTS SHALL NOT BE RESPONSIBLE FOR THE ACCURACY OR COMPLETENESS OF SCANNED COPIES OF THIS PLAN SHEET.

TO ACCOMPANY PLANS DATED 03-26-14

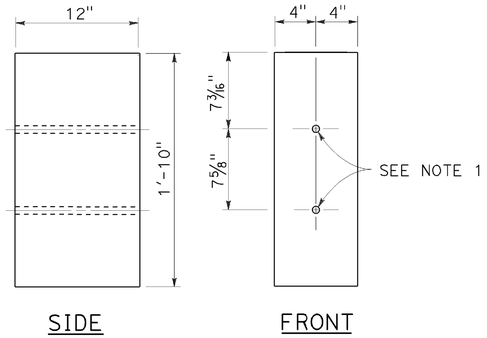

8" x 12"
WOOD BLOCK

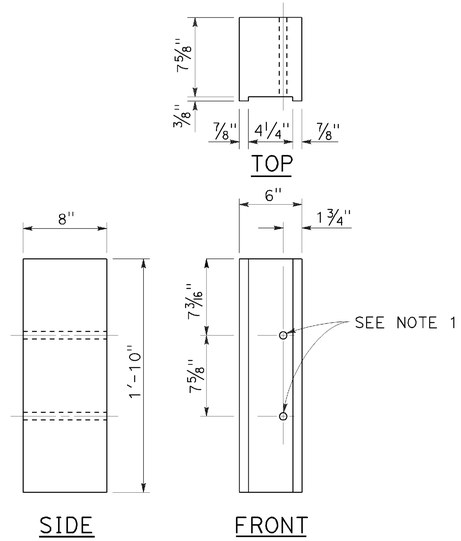

6" x 8"
NOTCHED WOOD BLOCK
See Notes 3 and 5

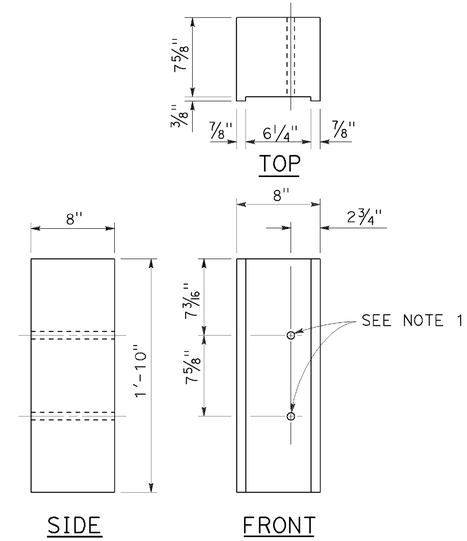

8" x 8"
NOTCHED WOOD BLOCK
See Notes 4 and 5

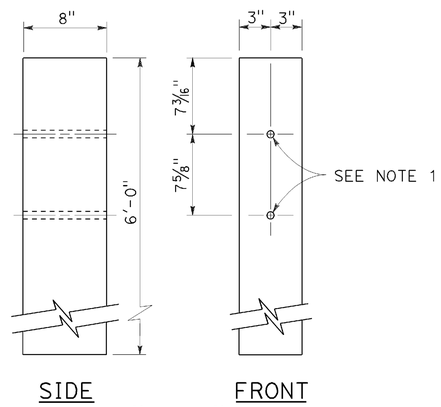

6" x 8"
WOOD POST

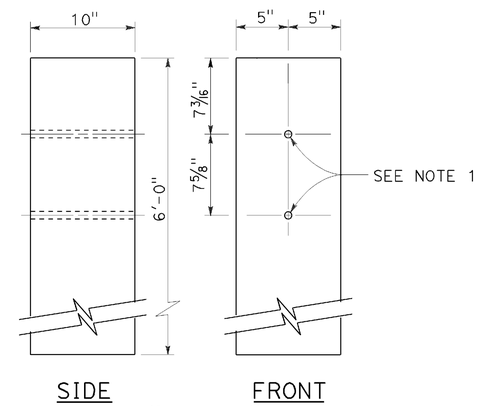

10" x 10"
WOOD POST

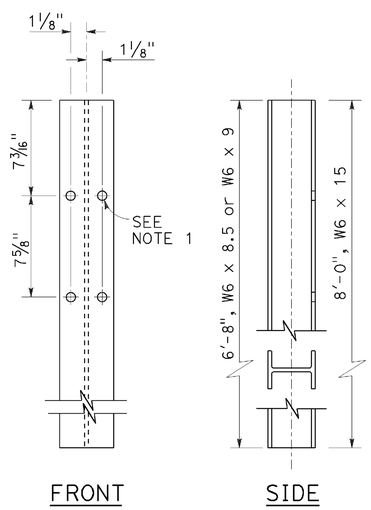

STEEL POST
W6 x 9 or W6 x 8.5 and W6 x 15

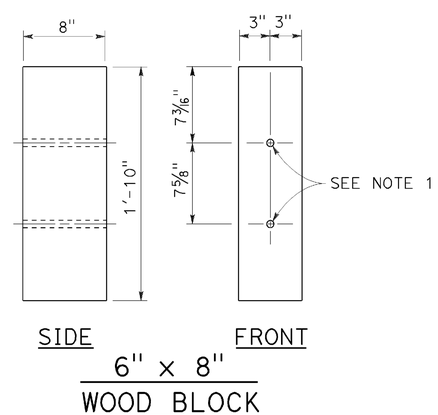

6" x 8"
WOOD BLOCK

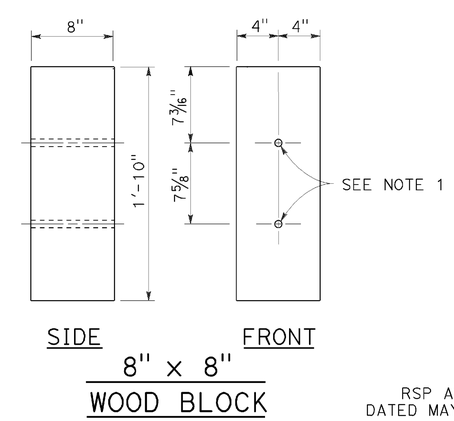

8" x 8"
WOOD BLOCK

NOTES:

1. All holes in steel post to be 13/16" Dia maximum. Holes in wood posts and wood blocks to be 3/4" Dia ±1/16".
2. Dimensions shown for wood post are nominal.
3. For use with W6 x 8.5 or W6 x 9 steel post.
4. For use with W6 x 15 steel post.
5. Notched face of block faces steel post.

STATE OF CALIFORNIA
DEPARTMENT OF TRANSPORTATION

THRIE BEAM BARRIER POST AND BLOCK DETAILS

NO SCALE

RSP A78C2 DATED JULY 19, 2013 SUPERSEDES STANDARD PLAN A78C2 DATED MAY 20, 2011 - PAGE 92 OF THE STANDARD PLANS BOOK DATED 2010.

REVISED STANDARD PLAN RSP A78C2

2010 REVISED STANDARD PLAN RSP A78C2

DATE PLOTTED => 28-MAY-2014
TIME PLOTTED => 14:58

Dist	COUNTY	ROUTE	POST MILES TOTAL PROJECT	SHEET No.	TOTAL SHEETS
02	Tri	299	12.3/12.9	74	149

Randell D. Hiatt
REGISTERED CIVIL ENGINEER

July 19, 2013
PLANS APPROVAL DATE

REGISTERED PROFESSIONAL ENGINEER
Randell D. Hiatt
No. C50200
Exp. 6-30-15
CIVIL
STATE OF CALIFORNIA

THE STATE OF CALIFORNIA OR ITS OFFICERS OR AGENTS SHALL NOT BE RESPONSIBLE FOR THE ACCURACY OR COMPLETENESS OF SCANNED COPIES OF THIS PLAN SHEET.

TO ACCOMPANY PLANS DATED 03-26-14

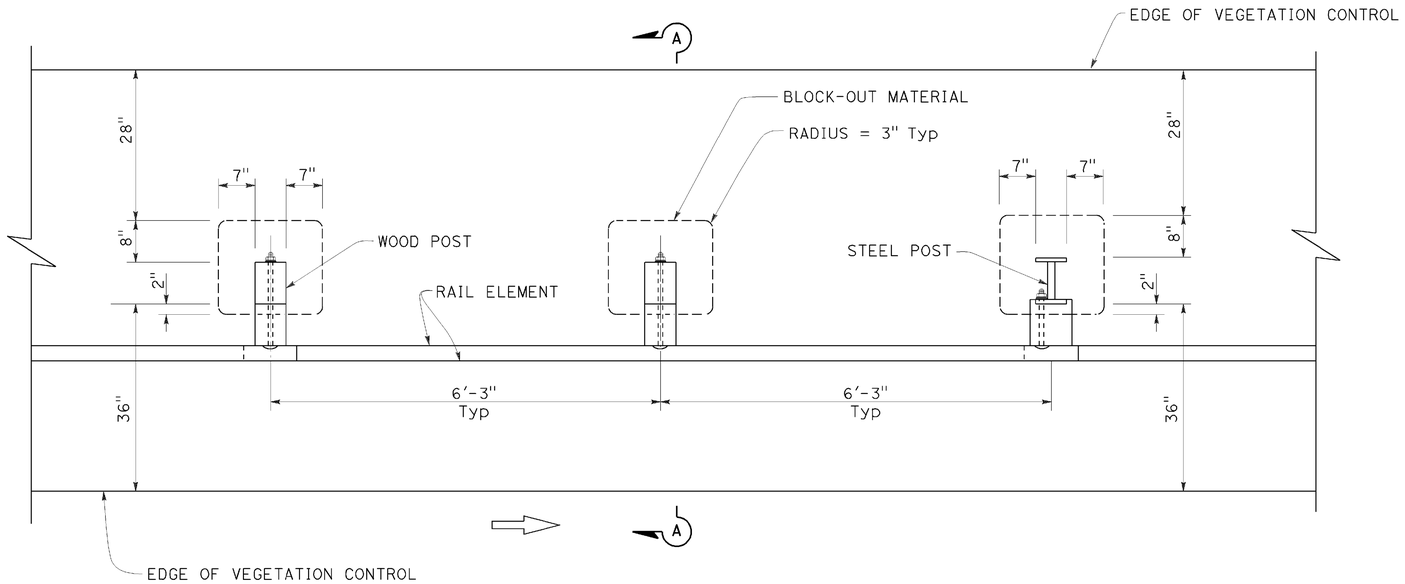

PLAN

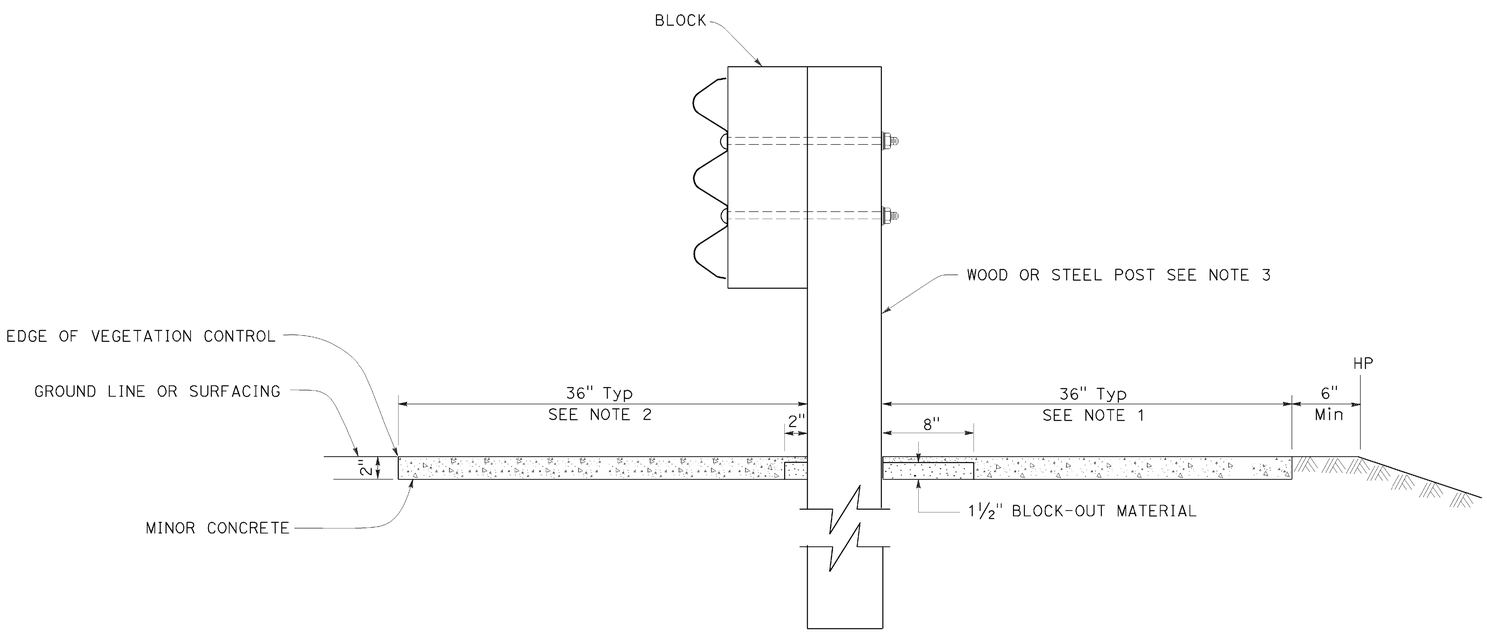

SECTION A-A

NOTES:

1. Where the distance between back of post and hinge point is less than 42", construct vegetation control to 6" from hinge point while maintaining the 8" block-out at back of post. If the 8" block-out at back of post can not be maintained, construct vegetation control flush with the back edge of post.
2. Where dike is constructed under barrier, construct vegetation control to back edge of dike. Where paved shoulder is constructed within 36" in front of the post, construct vegetation control to the edge of paved shoulder.
3. For wood and steel post sizes, see Revised Standard Plan RSP A77N2.
4. For details not shown, see Standard Plan A78B and Revised Standard Plan RSP A78A.

STATE OF CALIFORNIA
DEPARTMENT OF TRANSPORTATION

SINGLE THRIE BEAM BARRIER TYPICAL VEGETATION CONTROL STANDARD BARRIER RAILING SECTION

NO SCALE

RSP A78C3 DATED JULY 19, 2013 SUPERSEDES STANDARD PLAN A78C3
DATED MAY 20, 2011 - PAGE 93 OF THE STANDARD PLANS BOOK DATED 2010.

REVISED STANDARD PLAN RSP A78C3

2010 REVISED STANDARD PLAN RSP A78C3

DATE PLOTTED => 28-MAY-2014
TIME PLOTTED => 14:58

Dist	COUNTY	ROUTE	POST MILES TOTAL PROJECT	SHEET No.	TOTAL SHEETS
02	Tri	299	12.3/12.9	75	149

Randell D. Hiatt
REGISTERED CIVIL ENGINEER

July 19, 2013
PLANS APPROVAL DATE

REGISTERED PROFESSIONAL ENGINEER
Randell D. Hiatt
No. C50200
Exp. 6-30-15
CIVIL
STATE OF CALIFORNIA

THE STATE OF CALIFORNIA OR ITS OFFICERS OR AGENTS SHALL NOT BE RESPONSIBLE FOR THE ACCURACY OR COMPLETENESS OF SCANNED COPIES OF THIS PLAN SHEET.

TO ACCOMPANY PLANS DATED 03-26-14

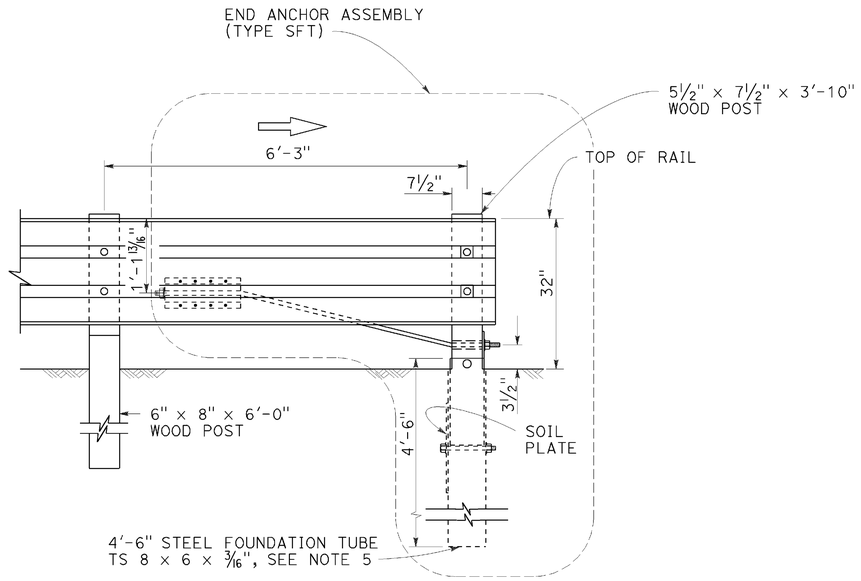

END ANCHOR FOR TRAFFIC DEPARTURE END OF SINGLE THRIE BEAM BARRIER

(For one-way roadways)
See Note 1

NOTES:

1. For additional details of End Anchor Assembly (Type SFT), see Revised Standard Plan RSP A77S1.
2. The "W" beam to thrie beam section is only required where the terminal system connection to the thrie beam barrier is a "W" beam rail.
3. In-line Terminal System End Treatments are used where site conditions will not accommodate a flared end treatment. The type of terminal system to be used will be shown on the Project Plans. Do not use a Caltrans approved 31" end treatment.
4. A Caltrans approved crash cushion should be used in place of a terminal system end treatment where the backside of the railing would be exposed to traffic.
5. A 6'-0" length steel foundation tube, TS 8 x 6 x 3/16, without a soil plate, may be furnished and installed in place of the 4'-6" length steel foundation tube and soil plate shown. Minimum embedment of the 6'-0" length tube shall be 5'-9". A 5/8" Ø hex head bolt and nut shall be installed in the hole in the 6'-0" length tube to keep the wood postfrom dropping into the tube.

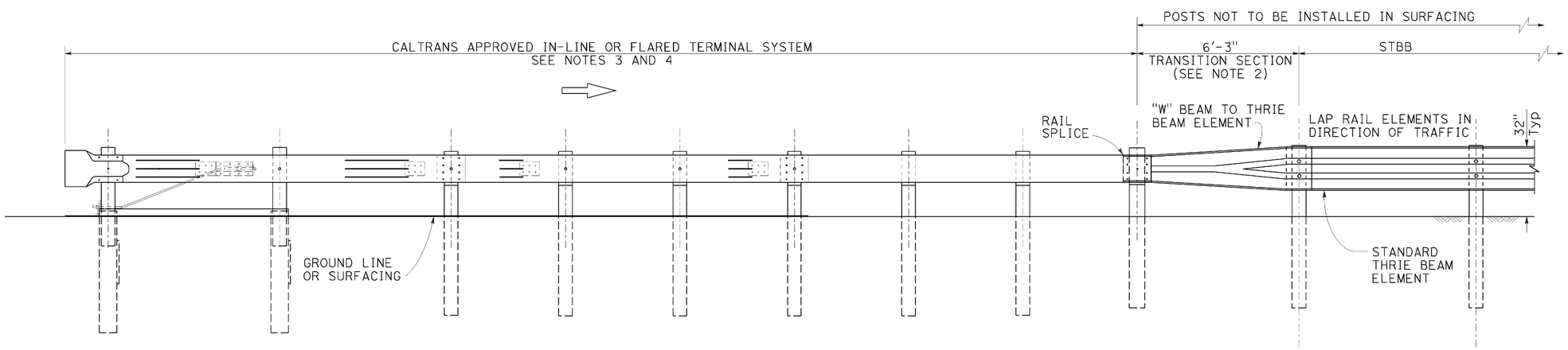

ELEVATION

END TREATMENT FOR TRAFFIC APPROACH END OF SINGLE THRIE BEAM BARRIER

STATE OF CALIFORNIA
DEPARTMENT OF TRANSPORTATION

SINGLE THRIE BEAM BARRIER END ANCHOR ASSEMBLY AND TERMINAL SYSTEM END TREATMENT

NO SCALE

RSP A78E1 DATED JULY 19, 2013 SUPERSEDES STANDARD PLAN A78E1
DATED MAY 20, 2011 - PAGE 99 OF THE STANDARD PLANS BOOK DATED 2010.

REVISED STANDARD PLAN RSP A78E1

2010 REVISED STANDARD PLAN RSP A78E1

DATE PLOTTED => 28-MAY-2014
TIME PLOTTED => 14:58

Dist	COUNTY	ROUTE	POST MILES TOTAL PROJECT	SHEET No.	TOTAL SHEETS
02	Tri	299	12.3/12.9	76	149

REGISTERED CIVIL ENGINEER

July 19, 2013
PLANS APPROVAL DATE

REGISTERED PROFESSIONAL ENGINEER Michael Janzen No. 44788 Exp. 03-31-14 CIVIL STATE OF CALIFORNIA

THE STATE OF CALIFORNIA OR ITS OFFICERS OR AGENTS SHALL NOT BE RESPONSIBLE FOR THE ACCURACY OR COMPLETENESS OF SCANNED COPIES OF THIS PLAN SHEET.

TO ACCOMPANY PLANS DATED 03-26-14

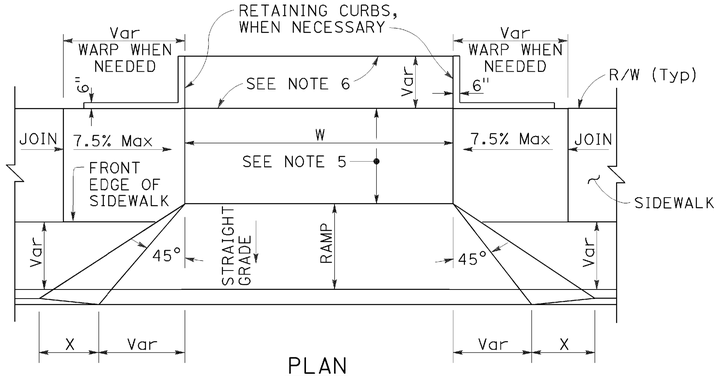

PLAN

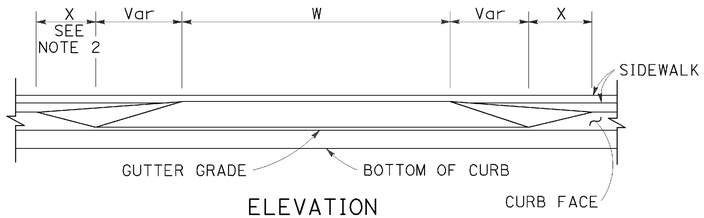

ELEVATION

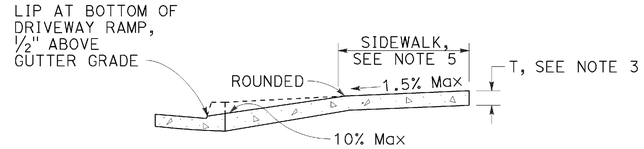

CASE A

Typical driveway, sidewalk not depressed

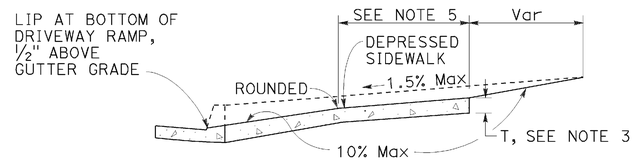

CASE B

Driveway with depressed sidewalk

SECTIONS

TABLE A

CURB TYPE	DIMENSIONS			
	"H1"	"H2"	"W1"	"W2"
A1-6	1'-2"	6"	7½"	1½"
A1-8	1'-4"	8"	8"	2"
A2-6	1'-0"	6"	2'-7½"	1½"
A2-8	1'-2"	8"	2'-8"	2"
A3-6	6"	5"	7¼"	1¼"
A3-8	8"	7"	7¾"	1¾"
B1-4	1'-0"	4"	7½"	2½"
B1-6	1'-2"	6"	9"	4"
B2-4	10"	4"	2'-7½"	2½"
B2-6	1'-0"	6"	2'-9"	4"
B3-4	4"	3"	7"	2"
B3-6	6"	5"	8½"	3½"
D-4	10"	4"	1'-6"	1'-1"
D-6	1'-0"	6"	2'-2"	1'-9"

CURB QUANTITIES

TYPE	CUBIC YARDS PER LINEAR FOOT
A1-6	0.02585
A1-8	0.03084
A2-6	0.05903
A2-8	0.06379
A3-6	0.01036
A3-8	0.01435
B1-4	0.02185
B1-6	0.02930
B2-4	0.05515
B2-6	0.06171
B3-4	0.00641
B3-6	0.01074
B4	0.05709
D-4	0.04083
D-6	0.06804
E	0.06661

DRIVEWAYS

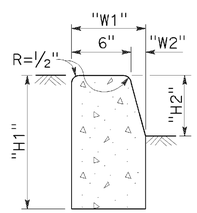

TYPE A1 CURBS

See Table A

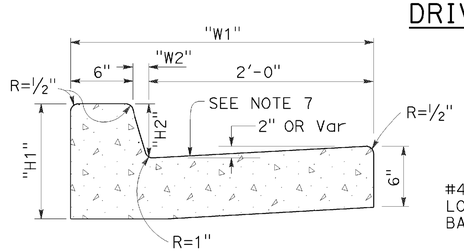

TYPE A2 CURBS

See Table A

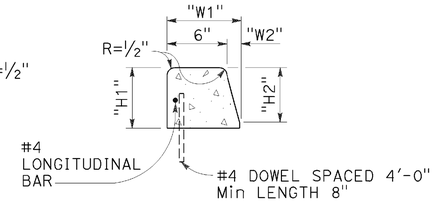

TYPE A3 CURBS

Superimposed on existing pavement
See Table A

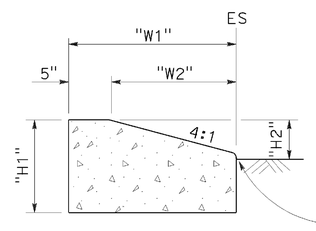

TYPE D CURBS

See Table A

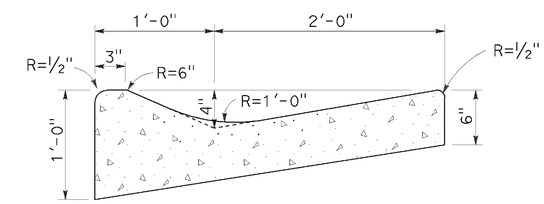

TYPE E CURB

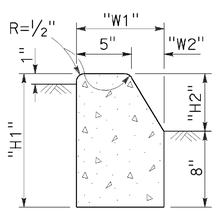

TYPE B1 CURBS

See Table A

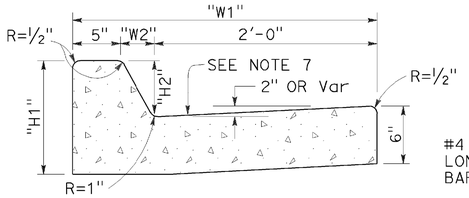

TYPE B2 CURBS

See Table A

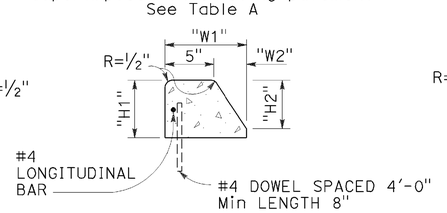

TYPE B3 CURBS

Superimposed on existing pavement
See Table A

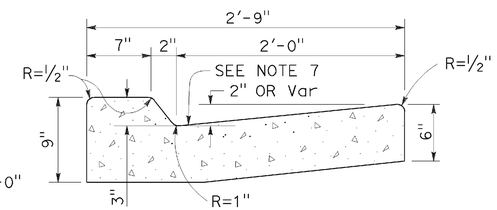

TYPE B4 CURBS

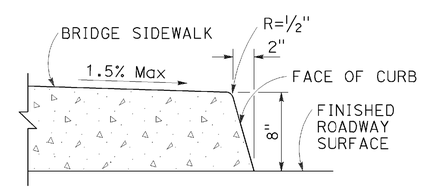

TYPE H CURB

On Bridges

CURBS

NOTES:

1. Case A driveway section typically applies.
2. X=3'-0" except for curb heights over 10" where 4:1 slopes shall be used on curb slope.
3. Sidewalk and ramp thickness "T" at driveway shall be 4" for residental and 6" for commercial.
4. Difference in slope of the driveway ramp and the slope of a line between the gutter and a point on the roadway 5'-0" from gutter line shall not exceed 15%. Reduce driveway ramp slope, not gutter slope, where required.
5. Minimum width of clear passageway for sidewalk shall be 4'-2".
6. Retaining curbs and acquisition of construction easement may be necessary for narrow sidewalks or curb heights in excess of 6".
7. Across the pedestrian route at curb ramp locations, the gutter pan slope shall not exceed 1" of depth for each 2'-0" of width.

STATE OF CALIFORNIA
DEPARTMENT OF TRANSPORTATION

CURBS AND DRIVEWAYS

NO SCALE

RSP A87A DATED JULY 19, 2013 SUPERSEDES STANDARD PLAN A87A
DATED MAY 20, 2011 - PAGE 119 OF THE STANDARD PLANS BOOK DATED 2010.

REVISED STANDARD PLAN RSP A87A

2010 REVISED STANDARD PLAN RSP A87A

DATE PLOTTED => 28-MAY-2014
TIME PLOTTED => 14:59

Dist	COUNTY	ROUTE	POST MILES TOTAL PROJECT	SHEET No.	TOTAL SHEETS
02	Tri	299	12.3/12.9	77	149

REGISTERED CIVIL ENGINEER

July 19, 2013
PLANS APPROVAL DATE

REGISTERED PROFESSIONAL ENGINEER
Michael Janzen
No. 44788
Exp. 03-31-14
CIVIL
STATE OF CALIFORNIA

THE STATE OF CALIFORNIA OR ITS OFFICERS OR AGENTS SHALL NOT BE RESPONSIBLE FOR THE ACCURACY OR COMPLETENESS OF SCANNED COPIES OF THIS PLAN SHEET.

TO ACCOMPANY PLANS DATED 03-26-14

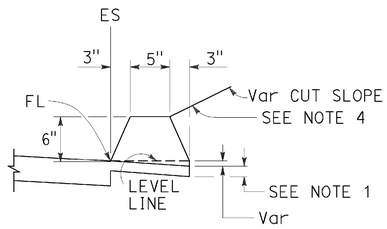

TYPE A
See Note 3

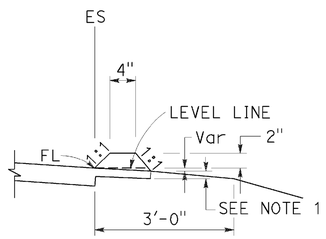

TYPE C

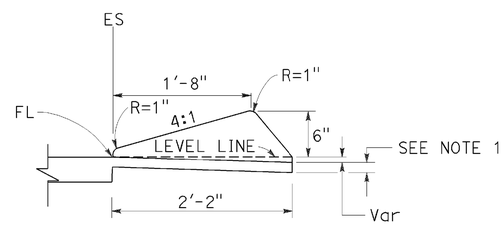

TYPE D

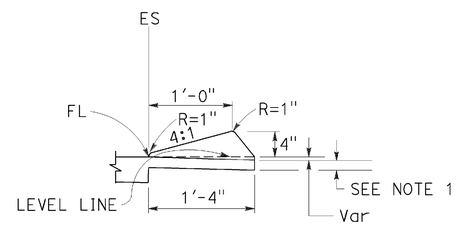

TYPE E

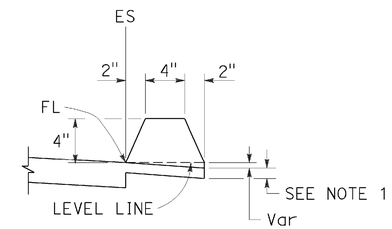

TYPE F
See Note 5

DIKES

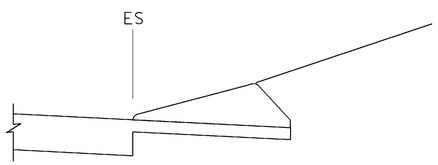

CASE C-1
Cut Slope

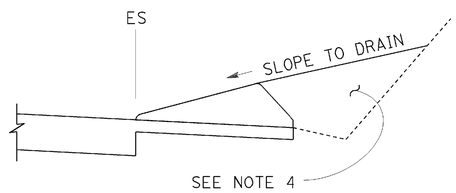

CASE C-2
Cut Slope

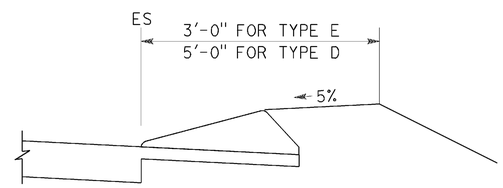

CASE F

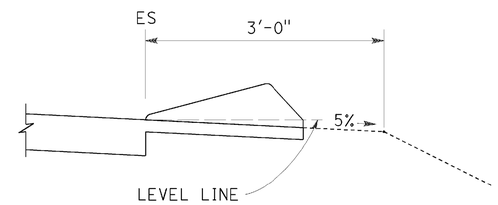

CASE R
See Note 2

TYPE D AND E BACKFILL DETAILS

NOTES:

1. For HMA shoulders only, extend top layer of HMA placed on the shoulder under dike with no joint at the ES. For projects with OGFC shoulders, do not extend OGFC under dike. See project plans for modified dike detail.
2. Case R applies to retrofit only projects where restrictive conditions do not provide enough width for Case F backfill.
3. Type A dike only to be used where restrictive slope conditions do not provide enough width to use Type D or Type E dike.
4. Fill and compact with excavated material to top of dike.
5. Use Type F dike, where dike is required with guard railing installations. See Revised Standard Plan RSP A77N4 for dike positioning details.

DIKE QUANTITIES

TYPE	CUBIC YARDS PER LINEAR FOOT
A	0.0135
C	0.0038
D	0.0293
E	0.0130
F	0.0066

Quantities based on 5% cross slope.

STATE OF CALIFORNIA
DEPARTMENT OF TRANSPORTATION

HOT MIX ASPHALT DIKES

NO SCALE

RSP A87B DATED JULY 19, 2013 SUPERSEDES STANDARD PLAN A87B
DATED MAY 20, 2011 - PAGE 120 OF THE STANDARD PLANS BOOK DATED 2010.

REVISED STANDARD PLAN RSP A87B

2010 REVISED STANDARD PLAN RSP A87B

DATE PLOTTED => 28-MAY-2014
TIME PLOTTED => 14:59

TO ACCOMPANY PLANS DATED _____

Dist	COUNTY	ROUTE	POST MILES TOTAL PROJECT	SHEET No.	TOTAL SHEETS
02	Tri	299	12.3/12.9	78	149

REGISTERED CIVIL ENGINEER

October 19, 2012
PLANS APPROVAL DATE

REGISTERED PROFESSIONAL ENGINEER Glenn DeCou No. C34547 Exp. 9-30-13 CIVIL STATE OF CALIFORNIA

THE STATE OF CALIFORNIA OR ITS OFFICERS OR AGENTS SHALL NOT BE RESPONSIBLE FOR THE ACCURACY OR COMPLETENESS OF SCANNED COPIES OF THIS PLAN SHEET.

03-26-14

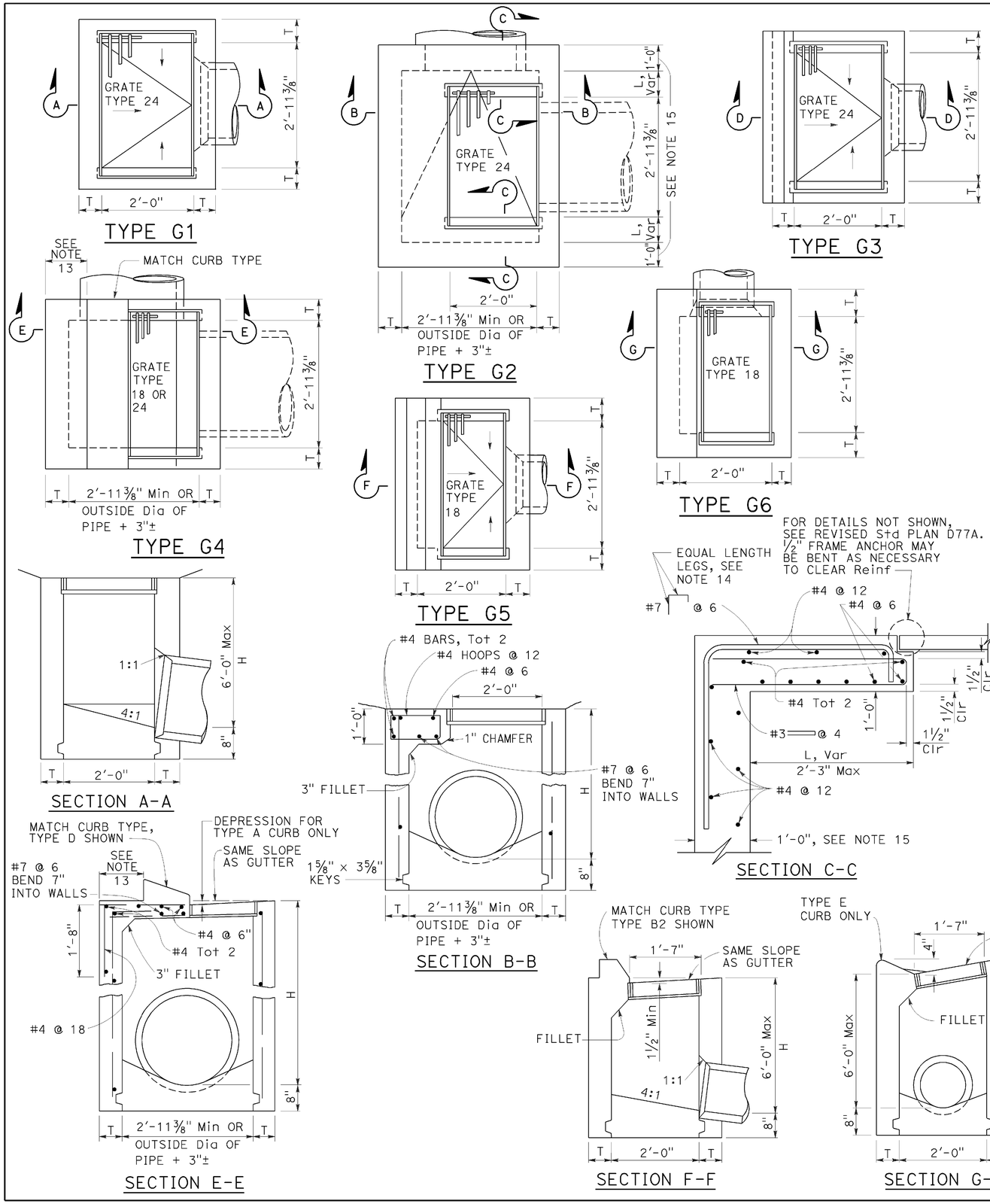

NOTES:

1. "H" is the difference in elevation between the outlet pipe flow line and the normal gutter grade line undepressed.
2. For "T" wall thickness, see Table A below.
3. Wall reinforcing not required when "H" is 8'-0" or less and the unsupported width or length is 7'-0" or less. Walls exceeding these limits shall be reinforced with #4 bars @ 1'-6" ± centers placed 1½" clear to inside of box unless otherwise shown.
4. Inlet bottom reinforcing not required. See Standard Plan D74C for alternative reinforced bottom and alternative half round bottom.
5. Steps-None required where "H" is less than 2'-6". Where "H" is 2'-6" or more, install steps with lowest rung 1'-0" above the floor and highest rung not more than 6" below top of inlet. The distance between steps shall not exceed 1'-0" and shall be uniform throughout the length of the wall. Place steps in the wall without an opening. Steps inserts may be substituted for the bar steps. Step inserts shall comply with State Industrial Safety requirements. See Standard Plan D74C for step details.
6. Details shown apply to both metal and concrete pipe.
7. Pipe(s) can be placed in any wall.
8. Curb section shall match adjacent curb.
9. Basin floors shall have wood trowel finish and a minimum slope of 12:3 from all directions toward outlet pipe.
10. Set inlet so that grate bars are parallel to direction of principal surface flow.
11. See Revised Standard Plans D77A and D77B for grate and frame details and weights of miscellaneous iron and steel.
12. See Standard Plan D78A for gutter depression details.
13. This dimenison will vary with different grates, curbs types, box width and wall thickness.
14. Bar may be rotated as necessary to clear opening. Where "L" is 6" or less, bar may be omitted.
15. Where "L" is 6" or less, wall thickness shall be as shown in Table A.
16. Cast-in-place inlets to be formed around all pipes/stubs intersecting the inlet, and concrete poured in one continuous operation. Precast inlets shall have mortared connections conforming to details for Type GCP Inlet shown on Standard Plan D75B. See Standard Specifications for mortar composition.

TABLE A

CONCRETE QUANTITIES				
TYPE	H=3'-0" TO 8'-0" (T=6")		H=8'-1" TO 20'-0" (T=8")	
	H=3'-0" (CY)	ADDITIONAL PCC PER FOOT (CY)	H=8'-1" (CY)	ADDITIONAL PCC PER FOOT (CY)
G-1	0.95	0.220	See Note A	SEE NOTE A
G-2*	1.31	0.255	3.50	0.357
G-3	1.03	0.220	See Note A	SEE NOTE A
G-4* (TYPE 24)	1.27	0.255	3.48	0.357
G-4* (TYPE 18)	1.30	0.255	3.50	0.357
G-5	1.02	0.220	SEE NOTE A	SEE NOTE A
G-6	1.04	0.220	SEE NOTE A	SEE NOTE A

TABLE BASED ON 8" FLOOR SLAB. NO DEDUCTIONS ARE TO BE MADE TO THESE QUANTITIES BECAUSE OF PIPE OPENINGS, DIFFERENT FLOOR ALTERNATIVES OR DIFFERENT CURB TYPES. * QUANTITIES FOR TYPE G-2 AND G-4 INLETS BASED ON THE MINIMUM INTERIOR DIMENSIONS.

NOTE A:

Maximum allowable height 6'-0".

STATE OF CALIFORNIA
DEPARTMENT OF TRANSPORTATION

DRAINAGE INLETS

NO SCALE

RSP D73 DATED OCTOBER 19, 2012 SUPERSEDES STANDARD PLAN D73 DATED MAY 20, 2011 - PAGE 156 OF THE STANDARD PLANS BOOK DATED 2010.

REVISED STANDARD PLAN RSP D73

2010 REVISED STANDARD PLAN RSP D73

DATE PLOTTED => 28-MAY-2014
TIME PLOTTED => 14:59

Dist	COUNTY	ROUTE	POST MILES TOTAL PROJECT	SHEET No.	TOTAL SHEETS
02	Tri	299	12.3/12.9	79	149

Raymond Don Tsztoo
REGISTERED CIVIL ENGINEER

April 19, 2013
PLANS APPROVAL DATE

REGISTERED PROFESSIONAL ENGINEER Raymond Don Tsztoo No. C37332 Exp. 6-30-14 CIVIL STATE OF CALIFORNIA

THE STATE OF CALIFORNIA OR ITS OFFICERS OR AGENTS SHALL NOT BE RESPONSIBLE FOR THE ACCURACY OR COMPLETENESS OF SCANNED COPIES OF THIS PLAN SHEET.

TO ACCOMPANY PLANS DATED 03-26-14

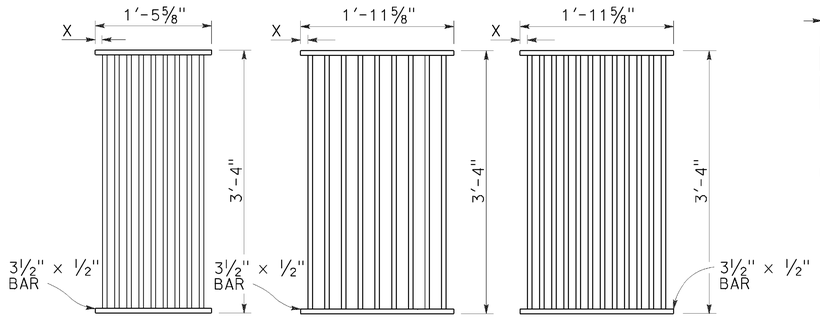

TYPE 18-9

1⅜" Clear spacing. Use within the roadbed on highways where bicycles and pedestrians are excluded.

TYPE 24-9

2" Clear spacing. Use in locations off the roadbed on all types of highways.

TYPE 24-12

1⅜" Clear spacing. Use within the roadbed on highways where bicycles and pedestrians are excluded.

RECTANGULAR GRATE DETAILS

(See table below)

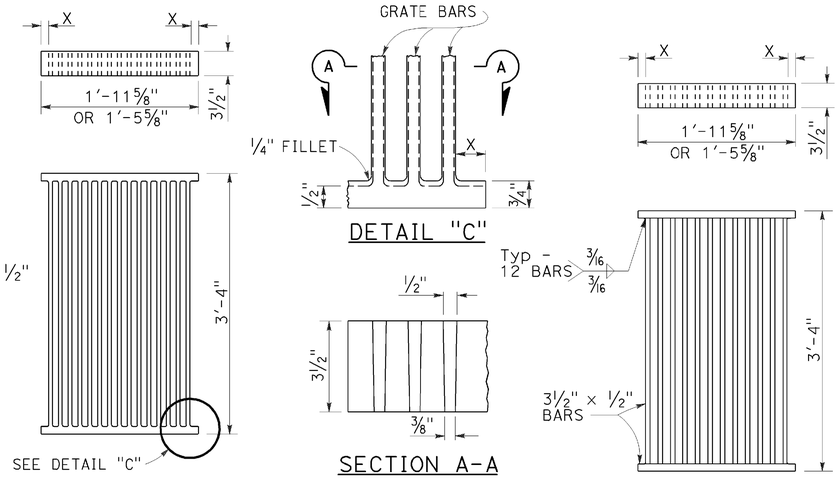

ALTERNATIVE CAST DUCTILE IRON GRATE OR CAST CARBON STEEL GRATE

ALTERNATIVE WELDED GRATE

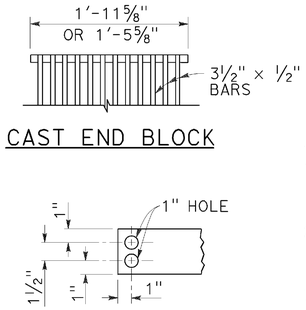

CAST END BLOCK

END OF BAR

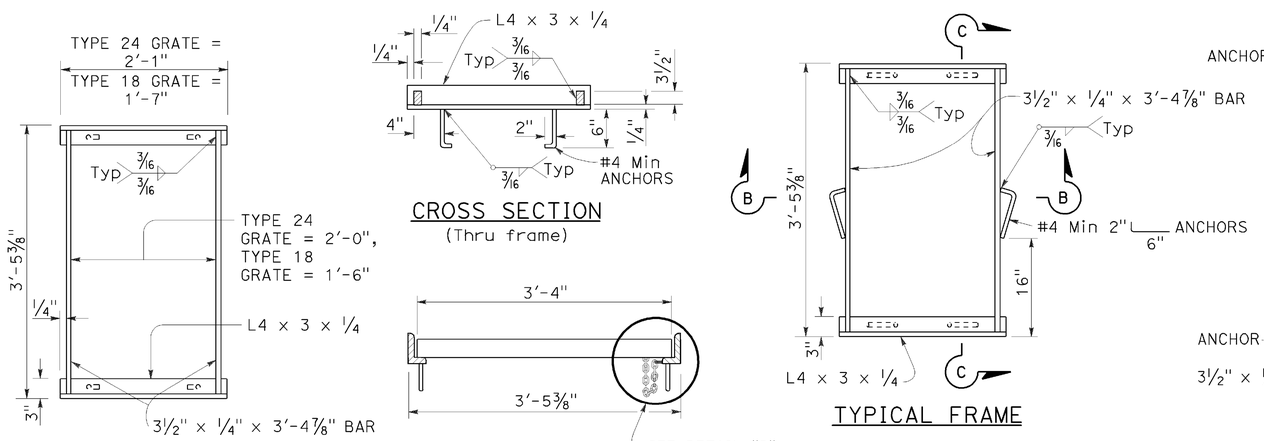

TYPICAL FRAME

CROSS SECTION
(Thru frame)

LONGITUDINAL SECTION
(Thru frame and grate)

TYPICAL FRAME

SECTION B-B

SECTION C-C

RECTANGULAR FRAME DETAILS

(For all rectangular grates)

ALTERNATIVE ANCHOR FOR RECTANGULAR FRAME

(For details not shown, See Rectangular Frame Details)

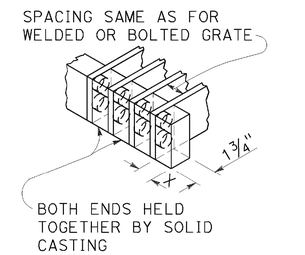

ALTERNATIVE CAST DUCTILE IRON OR CAST CARBON STEEL END BLOCK GRATE

NOTES:

1. Grate type numbers refer to approximate width of grate in inches and number of bars, respectively.
2. Contractor has the option of using cast ductile iron, cast carbon steel, welded, bolted, or cast end block grate.
3. Rounded top of bars optional on all grates.
4. Pipe inlets with a grate shall be placed so that bars parallel direction of principle surface flow.
5. Complete joint penetration butt welds may be substituted for the fillet welds on all anchors.
6. Standard square, hexagon, round or equivalent headed anchors may be substituted for the right angle hooks on the anchors shown on this plan.
7. Grate and frame weights are based on welded grates (weights of face angles, steps, protection bars, etc. are not included).
8. Connect chain to grate and frame only at locations shown on the plans. When chain is required, do not use cast ductile iron grates.

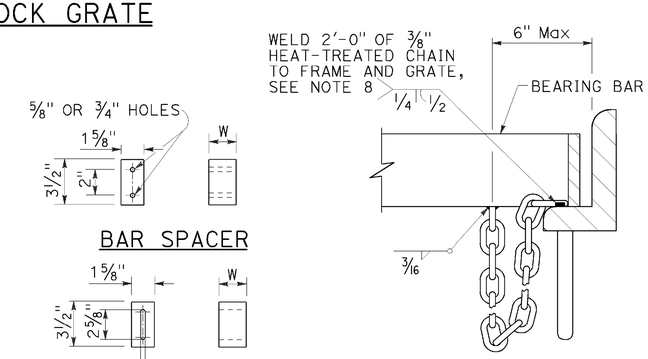

BAR SPACER

ALTERNATIVE SPACER
W = 1⅜" or 2"

DETAIL "D"
(Steel grates only)

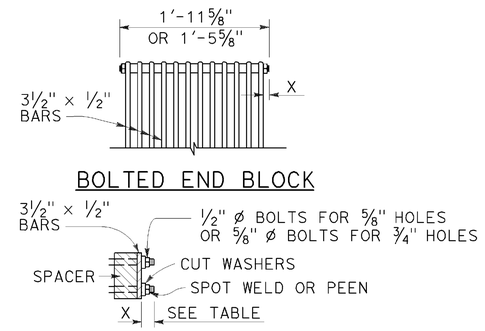

BOLTED END BLOCK

BOLTING DETAIL

ALTERNATIVE BOLTED GRATE

GRATE BAR SPACING TABLE

TYPE	No. OF BARS	CLEAR BAR SPACING	X
18-9	9	1⅜"	1 1/16"
24-9	9	2"	1 9/16"
24-12	12	1⅜"	1¼"

INLET TYPE	COVER TYPE	WEIGHT LB
OS	PLATE	174
OL-7	PLATE	170
OL-10	PLATE	170
OL-14	PLATE	170
OL-21	PLATE	170
OCP	PLATE	112
OCPI	PLATE	112
OCPI	REDWOOD	42
OMP	PLATE	177
OMPI	PLATE	177

INLET TYPE	GRATE TYPE	No. OF GRATES	WEIGHT LB
GDO	24-12	2	634
GOL-7	24-12	1	326
GOL-10	24-12	1	326
GO,G1,G2,G3,G4 (TYPE 24)	24-9	1	263
	24-12	1	326
G4 (TYPE 18),G5,G6	18-9	1	249
GT1	18-9	2	498
GT2	18-9	2	498
GT3	24-12	2	652
GT4	24-12	2	652
TRASH RACK			22
GRATE CHAIN			3

BASIS FOR Misc IRON & STEEL FINAL PAY WEIGHTS FOR DRAINAGE INLETS

(See Note 7)

STATE OF CALIFORNIA
DEPARTMENT OF TRANSPORTATION

GRATE DETAILS No. 1

NO SCALE

RSP D77A DATED APRIL 19, 2013 SUPERSEDES RSP D77A DATED JULY 20, 2012 AND STANDARD PLAN D77A DATED MAY 20, 2011 - PAGE 164 OF THE STANDARD PLANS BOOK DATED 2010.

REVISED STANDARD PLAN RSP D77A

2010 REVISED STANDARD PLAN RSP D77A

DATE PLOTTED => 28-MAY-2014
TIME PLOTTED => 14:59

Dist	COUNTY	ROUTE	POST MILES TOTAL PROJECT	SHEET No.	TOTAL SHEETS
02	Tri	299	12.3/12.9	80	149

Raymond Don Tsztoo
REGISTERED CIVIL ENGINEER

April 19, 2013
PLANS APPROVAL DATE

REGISTERED PROFESSIONAL ENGINEER Raymond Don Tsztoo No. C37332 Exp. 6-30-14 CIVIL STATE OF CALIFORNIA

THE STATE OF CALIFORNIA OR ITS OFFICERS OR AGENTS SHALL NOT BE RESPONSIBLE FOR THE ACCURACY OR COMPLETENESS OF SCANNED COPIES OF THIS PLAN SHEET.

TO ACCOMPANY PLANS DATED 03-26-14

2010 REVISED STANDARD PLAN RSP D77B

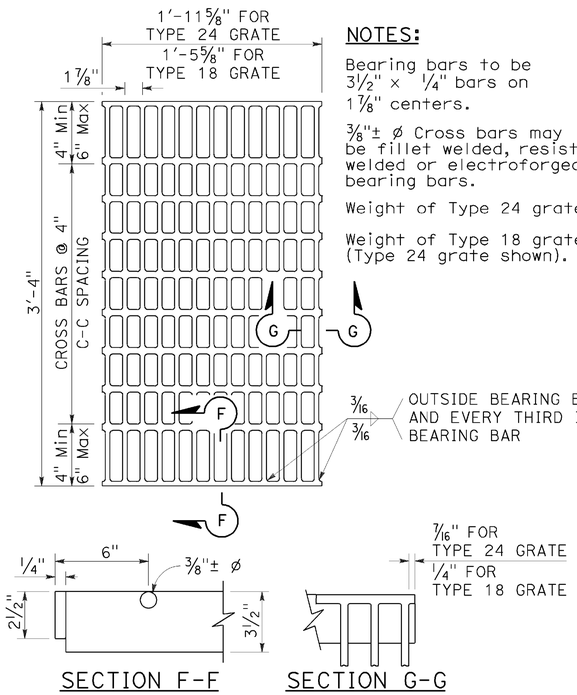

SECTION F-F SECTION G-G

TYPE 18-10 AND 24-13 GRATE

(Welded Steel)

NOTES:

Bearing bars to be 3½" × ¼" bars on 1⅞" centers.

⅜"± ø Cross bars may be fillet welded, resistance welded or electroforged to bearing bars.

Weight of Type 24 grate = 141 LBS.

Weight of Type 18 grate = 107 LBS. (Type 24 grate shown).

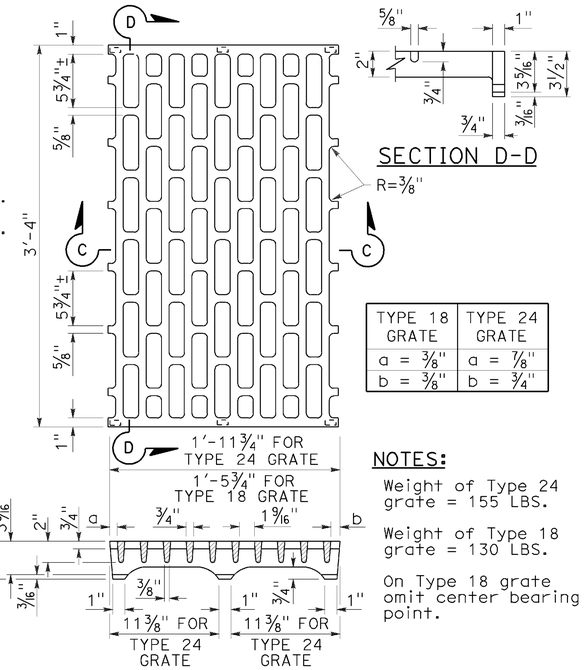

SECTION D-D

TYPE 18 GRATE	TYPE 24 GRATE
a = ⅜"	a = ⅞"
b = ⅜"	b = ¾"

NOTES:

Weight of Type 24 grate = 155 LBS.

Weight of Type 18 grate = 130 LBS.

On Type 18 grate omit center bearing point.

SECTION C-C

TYPE 18-8C AND 24-10C GRATE

(Cast ductile iron)

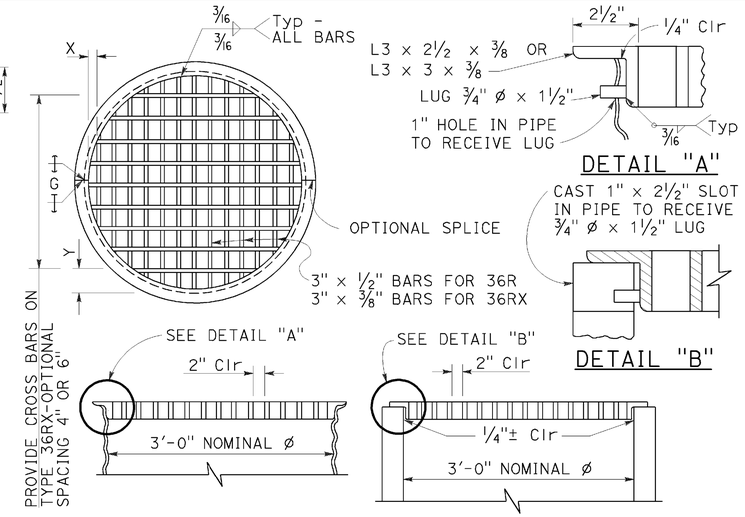

TYPE 36R AND 36RX GRATE DETAILS

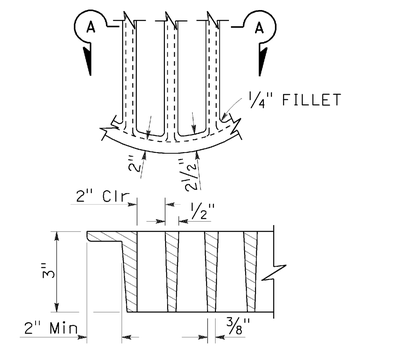

SECTION A-A

ALTERNATIVE CAST DUCTILE IRON GRATE OR CAST CARBON STEEL GRATE TYPE 36R AND 36RX

BASIS FOR Misc IRON AND STEEL FINAL PAY WEIGHTS FOR DRAINAGE INLETS

INLET TYPE	GRATE TYPE	No. OF GRATES	WEIGHT LB
GDO (SEE NOTE 4)	24-10C	2	391
	24-10S	2	456
	24-12X	2	473
	24-13	2	374
GO,GOL,G1,G2, G3,G4 (TYPE 24)	24-10C	1	202
	24-10S	1	229
	24-12X	1	239
	24-13	1	188
G4 (TYPE 18) G5,G6	18-8S	1	187
	18-9X	1	187
	18-10	1	149
GT1,GT2	18-8S	2	374
	18-9X	2	374
	18-10	2	298
GT3,GT4	24-10C	2	404
	24-10S	2	458
	24-12X	2	478
	24-13	2	376
ODI	36RX (Mod)	1	196
GMP,GCP,GCPI	36RX	1	215
ODI	36R (Mod)	1	220
GMP,GCP,GCPI	36R	1	236
TRASH RACK			22
GRATE CHAIN			3

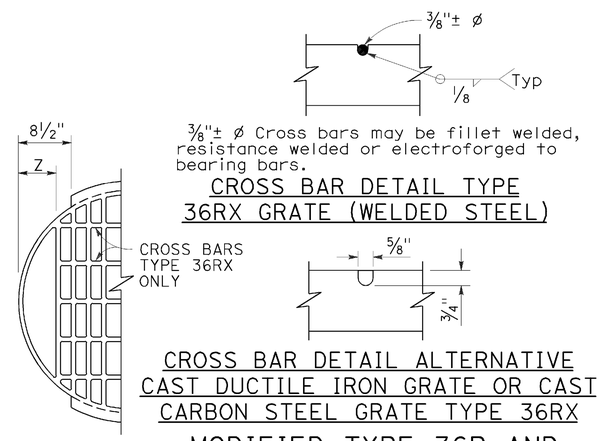

⅜"± ø Cross bars may be fillet welded, resistance welded or electroforged to bearing bars.

CROSS BAR DETAIL TYPE 36RX GRATE (WELDED STEEL)

CROSS BAR DETAIL ALTERNATIVE CAST DUCTILE IRON GRATE OR CAST CARBON STEEL GRATE TYPE 36RX

MODIFIED TYPE 36R AND 36RX GRATE FOR ODI INLET

NOTES:

1. When alternative grates are allowed - Final pay based on alternative with the lesser weight.
2. Use frame shown on Standard Plan D74A, D74B or RSP D77A as appropriate.
3. When Type 24-10S, 24-12X or 24-13 grates are used with GDO Inlets, a ¼" × 3½" × 3'-4⅞" steel bar shall be welded across the center of inlet frame to separate the individual grates.
4. See Revised Standard Plan RSP D77A for connecting chain to welded grate and frame. When chain is required, do not use cast ductile iron grate.

GRATE BAR SPACING TABLE

TYPE	No. OF BARS	CLEAR BAR SPACING	X	Y 4" SPACING	Y 6" SPACING	Z
36R	13	2"	2⅛"	-	-	-
36RX (STEEL)	15	2"	9/16"	3¾"	5¾"	-
36RX (CAST)	13	2"	2⅛"	3¾"	5¾"	-
36R Mod	12	2"	2⅛"	-	-	5"
36RX Mod (STEEL)	13	2"	9/16"	3¾"	5¾"	5 11/16"
36RX Mod (CAST)	12	2"	2⅛"	3¾"	5¾"	5"

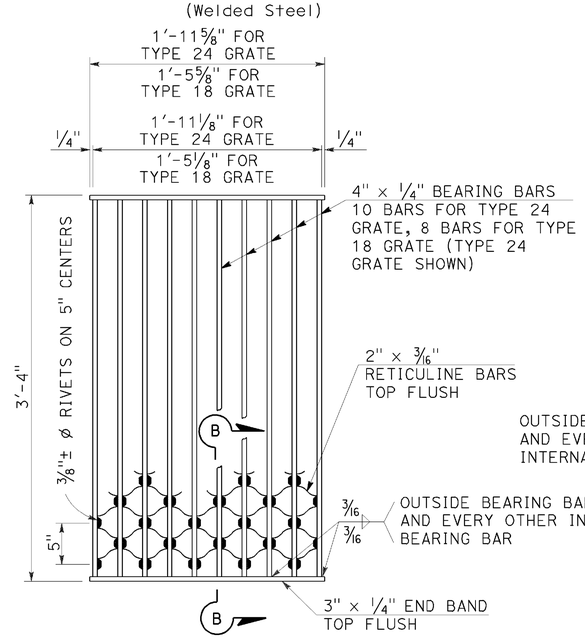

NOTES:

Weight of Type 24 grate = 182 LBS.
Weight of Type 18 grate = 145 LBS.

SECTION B-B

TYPE 18-8S AND 24-10S GRATE

(Welded Steel) Reticuline type

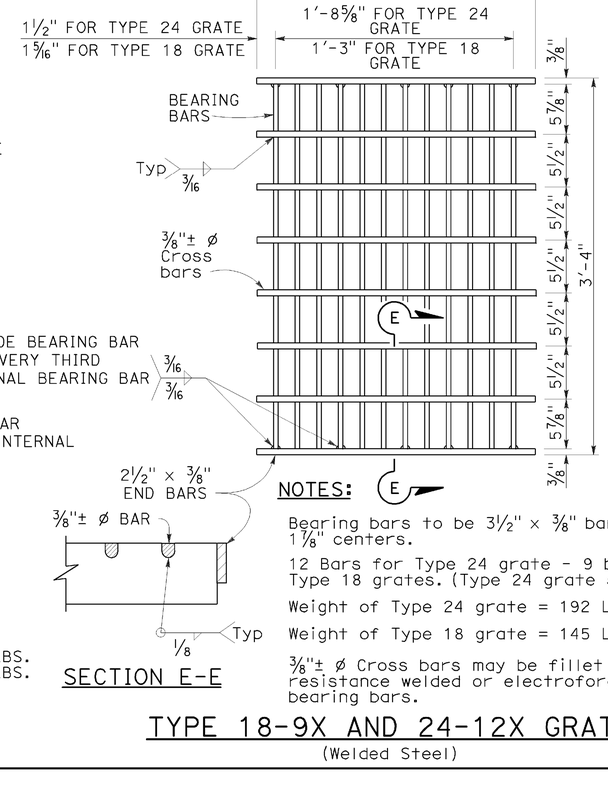

NOTES:

Bearing bars to be 3½" × ⅜" bars on 1⅞" centers.

12 Bars for Type 24 grate - 9 bars for Type 18 grates. (Type 24 grate shown).

Weight of Type 24 grate = 192 LBS.

Weight of Type 18 grate = 145 LBS.

⅜"± ø Cross bars may be fillet welded, resistance welded or electroforged to bearing bars.

SECTION E-E

TYPE 18-9X AND 24-12X GRATE

(Welded Steel)

STATE OF CALIFORNIA
DEPARTMENT OF TRANSPORTATION

GRATE DETAILS No. 2

NO SCALE

RSP D77B DATED APRIL 19, 2013 SUPERSEDES RSP D77B DATED JULY 20, 2012 AND STANDARD PLAN D77B DATED MAY 20, 2011 - PAGE 165 OF THE STANDARD PLANS BOOK DATED 2010.

REVISED STANDARD PLAN RSP D77B

DATE PLOTTED => 28-MAY-2014
TIME PLOTTED => 14:59

Dist	COUNTY	ROUTE	POST MILES TOTAL PROJECT	SHEET No.	TOTAL SHEETS
02	Tri	299	12.3/12.9	81	149

Gregory A. Balzer
LICENSED LANDSCAPE ARCHITECT

July 19, 2013
PLANS APPROVAL DATE

THE STATE OF CALIFORNIA OR ITS OFFICERS OR AGENTS SHALL NOT BE RESPONSIBLE FOR THE ACCURACY OR COMPLETENESS OF SCANNED COPIES OF THIS PLAN SHEET.

LICENSED LANDSCAPE ARCHITECT — Gregory A. Balzer — 2516 — Expiration Date 2-28-15 — Renewal Date 7-19-13 — Date — STATE OF CALIFORNIA

TO ACCOMPANY PLANS DATED 03-26-14

A

AB	AGGREGATE BASE
ABS	ACRYLONITRILE-BUTADIENE-STYRENE
AC	ASPHALT CONCRETE
ACC	ARMOR-CLAD CONDUCTORS
Adj	ADJACENT/ADJUSTABLE
AIC	AUXILIARY IRRIGATION CONTROLLER
Alt	ALTERNATIVE
AMEND	AMENDMENT
ARV	AIR RELEASE VALVE
AUTO	AUTOMATIC
AUX	AUXILIARY
AVB	ATMOSPHERIC VACUUM BREAKER

B

B&B	BALLED AND BURLAPPED
B/B	BRASS/BRONZE
B/B/PL	BRASS/BRONZE/PLASTIC
B/PL	BRASS/PLASTIC
BFM	BONDED FIBER MATRIX
Bit Ctd	BITUMINOUS COATED
BP	BOOSTER PUMP
BPA	BACKFLOW PREVENTER ASSEMBLY
BPE	BACKFLOW PREVENTER ENCLOSURE
BV	BALL VALVE

C

C	CONDUIT
CAP	CORRUGATED ALUMINUM PIPE
CARV	COMBINATION AIR RELEASE VALVE
CB	COUPLING BAND
CCA	CAM COUPLER ASSEMBLY
CEC	CONTROLLER ENCLOSURE CABINET
CHDPE	CORRUGATED HIGH DENSITY POLYETHYLENE
CL	CHAIN LINK
CNC	CONTROL AND NEUTRAL CONDUCTORS
Conc	CONCRETE
CP	COPPER PIPE
CS	COMPOST SOCK
CSP	CORRUGATED STEEL PIPE
CST	CENTER STRIP
CV	CHECK VALVE

D

Dia	DIAMETER
DIP	DUCTILE IRON PIPE
DIT	DRIP IRRIGATION TUBING
DG	DECOMPOSED GRANITE
DN	DIAMETER NOMINAL
DVA	DRIP VALVE ASSEMBLY

E

EC	EROSION CONTROL
ECTC	EROSION CONTROL TECHNOLOGY COUNCIL
Elect	ELECTRIC/ELECTRICAL
Elev	ELEVATION
ELL	ELBOW
ENCL	ENCLOSURE
EP	EDGE OF PAVEMENT
ES	EDGE OF SHOULDER
EST	END STRIP
ESTB	ESTABLISHMENT
ETW	EDGE OF TRAVELED WAY

F

F	FULL CIRCLE
F/P	FULL/PART CIRCLE
FCV	FLOW CONTROL VALVE
FERT	FERTILIZER
FG	FINISHED GRADE
FH	FLEXIBLE HOSE
FIPT	FEMALE IRON PIPE THREAD
FIS	FERTILIZER INJECTOR SYSTEM
FL	FLOW LINE
FR	FIBER ROLL
FS	FLOW SENSOR
FSC	FLOW SENSOR CABLE
FV	FLUSH VALVE

G

Galv	GALVANIZED
GARV	GARDEN VALVE
GARVA	GARDEN VALVE ASSEMBLY
GM	GRAVEL MULCH
GPH	GALLONS PER HOUR
GPM	GALLONS PER MINUTE
GSP	GALVANIZED STEEL PIPE
GV	GATE VALVE

H

H	HALF CIRCLE
HDPE	HIGH DENSITY POLYETHYLENE
HP	HORSEPOWER/HINGE POINT
HPL	HIGH PRESSURE LINE
Hwy	HIGHWAY

I

IC	IRRIGATION CONTROLLER
ICC	IRRIGATION CONTROLLER(S) IN CONTROLLER ENCLOSURE CABINET
ID	INSIDE DIAMETER
IFS	IRRIGATION FILTRATION SYSTEM
IPS	IRON PIPE SIZE
IPT	IRON PIPE THREAD
Irr	IRRIGATION

L

L	LENGTH

M

Max	MAXIMUM
MBGR	METAL BEAM GUARD RAILING
MCV	MANUAL CONTROL VALVE
MIC	MASTER IRRIGATION CONTROLLER
Min	MINIMUM
MIPT	MALE IRON PIPE THREAD
Misc	MISCELLANEOUS
Mtl	MATERIAL
MVP	MAINTENANCE VEHICLE PULLOUT

N

NCN	NO COMMON NAME
NL	NOZZLE LINE
No.	NUMBER
NPT	NATIONAL PIPE THREAD

O

O/C	ON CENTER
OD	OUTSIDE DIAMETER
OL	OVERLAP

P

P	PART CIRCLE
PB	PULL BOX
PCC	PORTLAND CEMENT CONCRETE
PE	POLYETHYLENE
Pkt	PACKET
PL	PLASTIC
PLS	PURE LIVE SEED
PLT	PLANT/PLANTING
PLT ESTB	PLANT ESTABLISHMENT
PM	POST MILE
PR	PRESSURE RATED
PRLV	PRESSURE RELIEF VALVE
PRV	PRESSURE REGULATING VALVE
PVC	POLYVINYL CHLORIDE
Pvmt	PAVEMENT

Q

Q	QUARTER CIRCLE
QCV	QUICK COUPLING VALVE

R

R	RADIUS
RCP	REINFORCED CONCRETE PIPE
RCV	REMOTE CONTROL VALVE
RCVM	REMOTE CONTROL VALVE (MASTER)
RCVMF	REMOTE CONTROL VALVE (MASTER) W/FLOW SENSOR
RCVP	REMOTE CONTROL VALVE W/PRESSURE REGULATOR
RCW	RECYCLED WATER
RECP	ROLLED EROSION CONTROL PRODUCT
REQ	REQUIRED
RICS	REMOTE IRRIGATION CONTROL SYSTEM
R/W	RIGHT OF WAY

S

S	SLIP
SCH	SCHEDULE
SF	STATE-FURNISHED
Shld	SHOULDER
Sq	SQUARE
SST	SIDE STRIP
Sta	STATION
Std	STANDARD
SW	SIDEWALK/SOUND WALL

T

T	THIRD CIRCLE/THREAD
TLS	TRUCK LOADING STANDPIPE
TQ	THREE QUARTER CIRCLE
TRM	TURF REINFORCEMENT MAT
TT	TWO-THIRDS CIRCLE
TWSA	TREE WELL SPRINKLER ASSEMBLY
Typ	TYPICAL

U

UG	UNDERGROUND

W

W	WIDTH
W/	WITH
WM	WATER METER
WS	WYE STRAINER
WSA	WYE STRAINER ASSEMBLY
WSP	WELDED STEEL PIPE
WWM	WELDED WIRE MESH

NOTE:
For additional abbreviations, see Standard Plans A10A and A10B.

STATE OF CALIFORNIA
DEPARTMENT OF TRANSPORTATION

LANDSCAPE AND EROSION CONTROL ABBREVIATIONS

NO SCALE

RSP H1 DATED JULY 19, 2013 SUPERSEDES STANDARD PLAN H1 DATED MAY 20, 2011 - PAGE 218 OF THE STANDARD PLANS BOOK DATED 2010.

REVISED STANDARD PLAN RSP H1

2010 REVISED STANDARD PLAN RSP H1

DATE PLOTTED => 28-MAY-2014
TIME PLOTTED => 15:00

Dist	COUNTY	ROUTE	POST MILES TOTAL PROJECT	SHEET No.	TOTAL SHEETS
02	Tri	299	12.3/12.9	82	149

LICENSED LANDSCAPE ARCHITECT

November 15, 2013
PLANS APPROVAL DATE

Gregory A. Balzer 2516
02-28-15
Renewal Date
11-15-13
Date
LICENSED LANDSCAPE ARCHITECT
STATE OF CALIFORNIA

THE STATE OF CALIFORNIA OR ITS OFFICERS OR AGENTS SHALL NOT BE RESPONSIBLE FOR THE ACCURACY OR COMPLETENESS OF SCANNED COPIES OF THIS PLAN SHEET.

TO ACCOMPANY PLANS DATED 03-26-14

EXISTING	NEW	ITEM DESCRIPTION
		WATER METER (WM)
		BACKFLOW PREVENTER ASSEMBLY (BPA)
		BACKFLOW PREVENTER ENCLOSURE (BPE)
		BOOSTER PUMP (BP)
		TRUCK LOADING STANDPIPE (TLS)
	FS	FLOW SENSOR (FS)
		MASTER IRRIGATION CONTROLLER (MIC)
		AUXILIARY IRRIGATION CONTROLLER (AIC)
		IRRIGATION CONTROLLER (IC) IRRIGATION CONTROLLER (IC) (BATTERY) IRRIGATION CONTROLLER (IC) (SOLAR) IRRIGATION CONTROLLER (IC) (TWO WIRE) IRRIGATION CONTROLLER(S) IN CONTROLLER ENCLOSURE CABINET (ICC)
acc	ACC	ARMOR-CLAD CONDUCTORS (ACC)
cnc	CNC	CONTROL AND NEUTRAL CONDUCTORS (CNC)
		IRRIGATION CONDUIT
		EXTEND IRRIGATION CONDUIT
dip	DIP	DUCTILE IRON PIPE (SUPPLY LINE) (MAIN) (DIP)
		GALVANIZED STEEL PIPE (SUPPLY LINE) (MAIN) (GSP)
		GALVANIZED STEEL PIPE (SUPPLY LINE) (LATERAL) (GSP)
		PLASTIC PIPE (SUPPLY LINE) (MAIN)
		PLASTIC PIPE (SUPPLY LINE) (LATERAL)
cp	CP	COPPER PIPE (SUPPLY LINE)
dit	DIT	DRIP IRRIGATION TUBING
		REMOTE CONTROL VALVE (RCV) REMOTE CONTROL VALVE (MASTER) (RCVM) REMOTE CONTROL VALVE (MASTER) W/FLOW METER (RCVMF)
P	P	REMOTE CONTROL VALVE W/PRESSURE REGULATOR (RCVP)
		EXISTING MANUAL CONTROL VALVE (MCV)
V	V	DRIP VALVE ASSEMBLY (DVA)
Y	Y	WYE STRAINER ASSEMBLY (WSA)

EXISTING	NEW	ITEM DESCRIPTION
		GATE VALVE (GV)
		BALL VALVE (BV)
		QUICK COUPLING VALVE (QCV)
		CAM COUPLER ASSEMBLY (CCA)
		GARDEN VALVE ASSEMBLY (GARVA)
		PRESSURE REGULATING VALVE (PRV)
		PRESSURE RELIEF VALVE (PRLV)
		FLOW CONTROL VALVE (FCV)
		COMBINATION AIR RELEASE VALVE (CARV)
		CHECK VALVE (CV)
		FLUSH VALVE (FV)
		EXISTING NOZZLE LINE W/TURNING UNION
		EXISTING IRRIGATION SYSTEM
		EXISTING IRRIGATION SYSTEM TO BE REMOVED
		CHAIN LINK GATE
		QUICK COUPLING VALVE W/SPRINKLER PROTECTOR
3	3	SPRINKLER W/SPRINKLER PROTECTOR
	C	CONNECT TO EXISTING SYSTEM
		CAP
		CAP EXISTING
	\\\FR\\\	FIBER ROLL
	\\\CS\\\	COMPOST SOCK

RCV SIZE
IRRIGATION CONTROLLER
CONTROLLER STATION
VALVE IN PARALLEL (IF APPLICABLE)
GPM
QUANTITY OF SPRINKLERS (WHEN SHOWN)

* 2½"-A-2b-40-60

VALVE CODE

* VALVE CODES FOR EXISTING VALVES ARE SHOWN IN A DASHED ENCLOSURE.

STATE OF CALIFORNIA
DEPARTMENT OF TRANSPORTATION

LANDSCAPE AND EROSION CONTROL SYMBOLS

NO SCALE

RSP H2 DATED NOVEMBER 15, 2013 SUPERSEDES RSP H2 DATED JULY 19, 2013 AND STANDARD PLAN H2 DATED MAY 20, 2011 - PAGE 219 OF THE STANDARD PLANS BOOK DATED 2010.

REVISED STANDARD PLAN RSP H2

2010 REVISED STANDARD PLAN RSP H2

DATE PLOTTED => 28-MAY-2014
TIME PLOTTED => 15:00

Dist	COUNTY	ROUTE	POST MILES TOTAL PROJECT	SHEET No.	TOTAL SHEETS
02	Tri	299	12.3/12.9	83	149

REGISTERED CIVIL ENGINEER

July 19, 2013
PLANS APPROVAL DATE

REGISTERED PROFESSIONAL ENGINEER
Gurinderpal Bhullar
No. C48815
Exp. 9-30-14
CIVIL
STATE OF CALIFORNIA

THE STATE OF CALIFORNIA OR ITS OFFICERS OR AGENTS SHALL NOT BE RESPONSIBLE FOR THE ACCURACY OR COMPLETENESS OF SCANNED COPIES OF THIS PLAN SHEET.

TO ACCOMPANY PLANS DATED 03-26-14

TABLE 1

TAPER LENGTH CRITERIA AND CHANNELIZING DEVICE SPACING

SPEED (S)	MINIMUM TAPER LENGTH * FOR WIDTH OF OFFSET 12 FEET (W)				MAXIMUM CHANNELIZING DEVICE SPACING		
					X	Y	Z **
	TANGENT 2L	MERGING L	SHIFTING L/2	SHOULDER L/3	TAPER	TANGENT	CONFLICT
mph	ft	ft	ft	ft	ft	ft	ft
20	160	80	40	27	20	40	10
25	250	125	63	42	25	50	12
30	360	180	90	60	30	60	15
35	490	245	123	82	35	70	17
40	640	320	160	107	40	80	20
45	1080	540	270	180	45	90	22
50	1200	600	300	200	50	100	25
55	1320	660	330	220	55	110	27
60	1440	720	360	240	60	120	30
65	1560	780	390	260	65	130	32
70	1680	840	420	280	70	140	35

* - For other offsets, use the following merging taper length formula for L:
For speed of 40 mph or less, $L = WS^2/60$
For speed of 45 mph or more, $L = WS$

Where: L = Taper length in feet
W = Width of offset in feet
S = Posted speed limit, off-peak 85th-percentile speed prior to work starting, or the anticipated operating speed in mph

** - Use for taper and tangent sections where there are no pavement markings or where there is a conflict between existing pavement markings and channelizers (CA).

TABLE 2

LONGITUDINAL BUFFER SPACE AND FLAGGER STATION SPACING

SPEED *	Min D **	DOWNGRADE Min D ***		
		-3%	-6%	-9%
mph	ft	ft	ft	ft
20	115	116	120	126
25	155	158	165	173
30	200	205	215	227
35	250	257	271	287
40	305	315	333	354
45	360	378	400	427
50	425	446	474	507
55	495	520	553	593
60	570	598	638	686
65	645	682	728	785
70	730	771	825	891

* - Speed is posted speed limit, off-peak 85th-percentile speed prior to work starting, or the anticipated operating speed in mph

** - Longitudinal buffer space or flagger station spacing

*** - Use on sustained downgrade steeper than -3 percent and longer than 1 mile.

TABLE 3

ADVANCE WARNING SIGN SPACING

ROAD TYPE	DISTANCE BETWEEN SIGNS *		
	A	B	C
	ft	ft	ft
URBAN - 25 mph OR LESS	100	100	100
URBAN - MORE THAN 25 mph TO 40 mph	250	250	250
URBAN - MORE THAN 40 mph	350	350	350
RURAL	500	500	500
EXPRESSWAY / FREEWAY	1000	1500	2640

* - The distances are approximate, are intended for guidance purposes only, and should be applied with engineering judgment. These distances should be adjusted by the Engineer for field conditions, if necessary, by increasing or decreasing the recommmended distances.

STATE OF CALIFORNIA
DEPARTMENT OF TRANSPORTATION

TRAFFIC CONTROL SYSTEM TABLES FOR LANE AND RAMP CLOSURES

NO SCALE

RSP T9 DATED JULY 19, 2013 SUPERSEDES RSP T9 DATED APRIL 19, 2013 THAT SUPPLEMENTS THE STANDARD PLANS BOOK DATED 2010.

REVISED STANDARD PLAN RSP T9

2010 REVISED STANDARD PLAN RSP T9

DATE PLOTTED => 28-MAY-2014
TIME PLOTTED => 15:00

Dist	COUNTY	ROUTE	POST MILES TOTAL PROJECT	SHEET No.	TOTAL SHEETS
02	Tri	299	12.3/12.9	84	149

REGISTERED CIVIL ENGINEER

April 19, 2013
PLANS APPROVAL DATE

REGISTERED PROFESSIONAL ENGINEER Gurinderpal Bhullar No. C48815 Exp. 9-30-14 CIVIL STATE OF CALIFORNIA

THE STATE OF CALIFORNIA OR ITS OFFICERS OR AGENTS SHALL NOT BE RESPONSIBLE FOR THE ACCURACY OR COMPLETENESS OF SCANNED COPIES OF THIS PLAN SHEET.

TO ACCOMPANY PLANS DATED 03-26-14

NOTES:

See Revised Standard Plan RSP T9 for tables.

Use cone spacing X for taper segment, Y for tangent segment or Z for conflict situations, as approriate, per Table 1, unless X, Y, or Z cone spacing is shown on this sheet.

Unless otherwise specified in the special provisions, all temporary warning signs shall have black legend on fluorescent orange background.

California codes are designated by (CA). Otherwise, Federal (MUTCD) codes are shown.

TYPICAL LANE CLOSURE WITH REVERSIBLE CONTROL

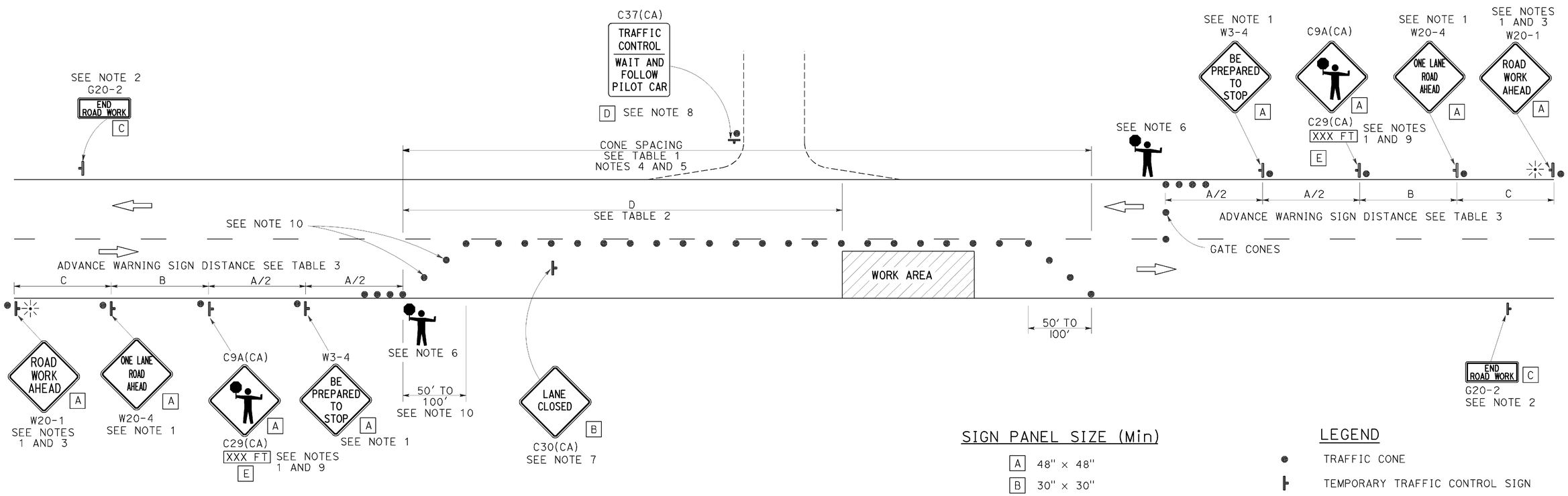

SIGN PANEL SIZE (Min)

A	48" × 48"
B	30" × 30"
C	36" × 18"
D	36" × 42"
E	20" × 7"

LEGEND

- TRAFFIC CONE
- TEMPORARY TRAFFIC CONTROL SIGN
- PORTABLE FLASHING BEACON
- FLAGGER

NOTES:

1. Each advance warning sign in each direction of travel shall be equipped with at least two flags for daytime closure. Each flag shall be at least 16" x 16" in size and shall be orange or fluorescent red-orange in color. Flashing beacons shall be placed at the locations indicated for lane closure during hours of darkness.
2. A G20-2 "END ROAD WORK" sign, as appropriate, shall be placed at the end of the lane control unless the end of work area is obvious, or ends within a larger project's limits.
3. If the W20-1 sign would follow within 2000' of a stationary W20-1 or G20-1 "ROAD WORK NEXT _____ MILES", use a W20-4 sign for the first advance warning sign.
4. All cones used for lane closures during the hours of darkness shall be fitted with retroreflective bands (or sleeves) as specified in the specifications.
5. Portable delineators, placed at one-half the spacing indicated for traffic cones, may be used instead of cones for daytime closures only.
6. Additional advance flaggers may be required. Flagger should stand in a conspicuous place, be visible to approaching traffic as well as approaching vehicles after the first vehicle has stopped. During the hours of darkness, the flagging-station and flagger shall be illuminated and clearly visible to approaching traffic. The illumination footprint of the lighting on the ground shall be at least 20' in diameter. Place a minimum of four cones at 50' intervals in advance of flagger station as shown.
7. Place C30(CA) "LANE CLOSED" sign at 500' to 1000' intervals throughout extended work areas. They are optional if the work area is visible from the flagger station.
8. When a pilot car is used, place a C37(CA) "TRAFFIC CONTROL-WAIT AND FOLLOW PILOT CAR" sign with black legend on white background at all intersections, driveways and alleys without a flagger within traffic control area. Signs shall be clean and visible at all times. Where traffic can not be effectively self-regulated, at least one flagger shall be used at each intersection within traffic control area.
9. An optional C29(CA) sign may be placed below the C9A(CA) sign.
10. Either traffic cones or barricades shall be placed on the taper. Barricades shall be Type I, II, or III.

STATE OF CALIFORNIA
DEPARTMENT OF TRANSPORTATION

TRAFFIC CONTROL SYSTEM FOR LANE CLOSURE ON TWO LANE CONVENTIONAL HIGHWAYS

NO SCALE

RSP T13 DATED APRIL 19, 2013 SUPERSEDES STANDARD PLAN T13 DATED MAY 20, 2011 - PAGE 241 OF THE STANDARD PLANS BOOK DATED 2010.

REVISED STANDARD PLAN RSP T13

2010 REVISED STANDARD PLAN RSP T13

DATE PLOTTED => 28-MAY-2014
TIME PLOTTED => 15:00

Dist	COUNTY	ROUTE	POST MILES TOTAL PROJECT	SHEET No.	TOTAL SHEETS
02	Tri	299	12.3/12.9	85	149

REGISTERED CIVIL ENGINEER

November 15, 2013
PLANS APPROVAL DATE

REGISTERED PROFESSIONAL ENGINEER — Tillat Satter, No. C42892, Exp. 3-31-14, CIVIL, STATE OF CALIFORNIA

THE STATE OF CALIFORNIA OR ITS OFFICERS OR AGENTS SHALL NOT BE RESPONSIBLE FOR THE ACCURACY OR COMPLETENESS OF SCANNED COPIES OF THIS PLAN SHEET.

TO ACCOMPANY PLANS DATED 03-26-14

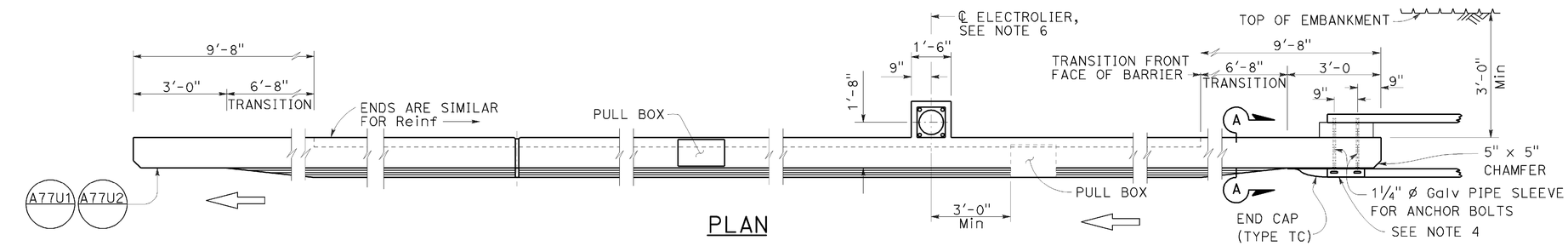

PLAN

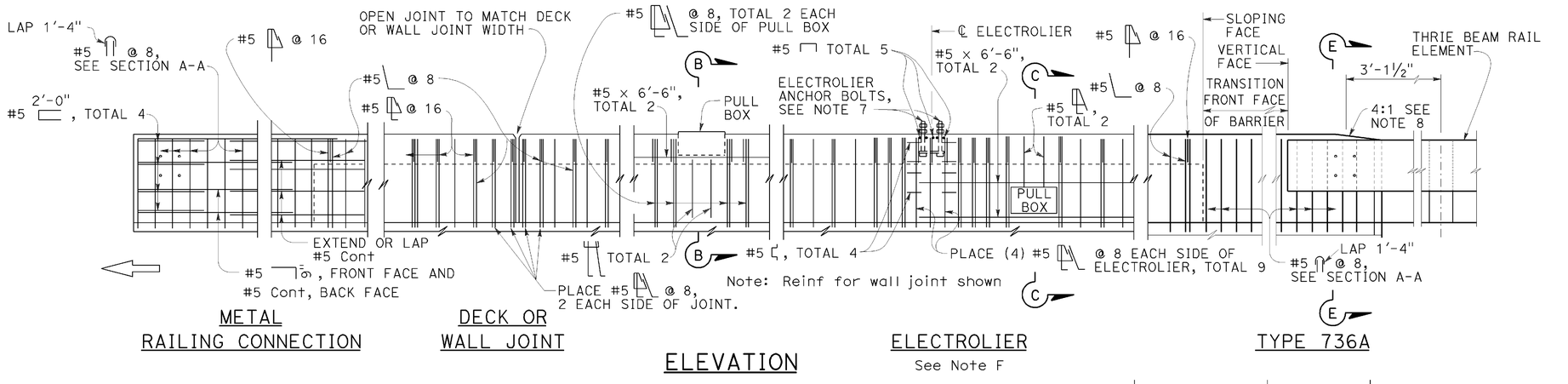

METAL RAILING CONNECTION

DECK OR WALL JOINT

ELEVATION

ELECTROLIER
See Note F

TYPE 736A

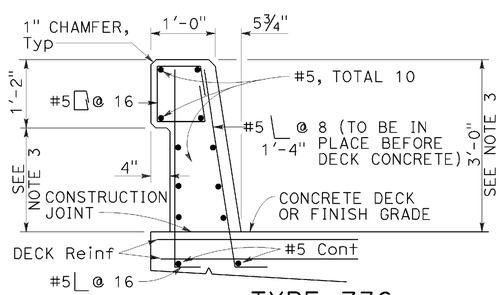

TYPE 736

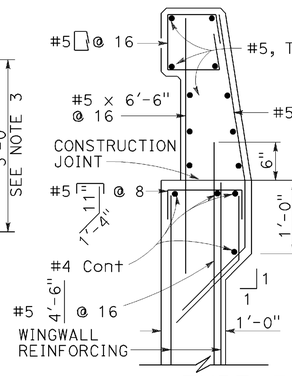

TYPE 736A

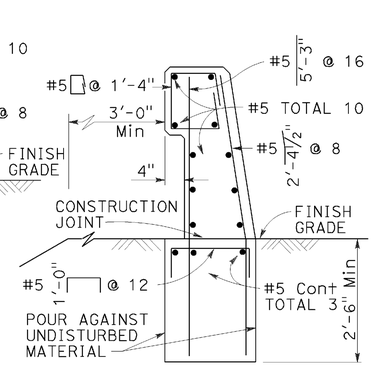

TYPE 736B

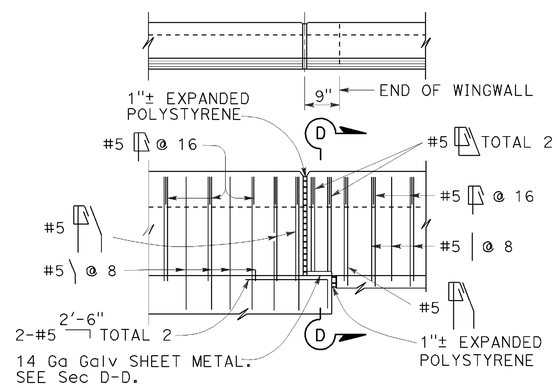

TYPE 736A TYPE 736B

NOTES:

1. Walls are to be backfilled before barrier is placed.
2. Clearance to reinforcing steel in barrier to be 1", except as noted. Longitudinal reinforcement to stop at all expansion joints.
3. Dimensions may vary with roadway cross slope and with certain thickness of surfacing. See Project Plans.
4. For typical metal railing connection details not shown, see Revised Standard Plans RSP A77U1 and RSP A77U2.
5. See Standard Plans ES-9A, ES-9B, ES-9C, ES-9D and ES-9E for electrical details. The maximum number of conduits in the barrier is limited to two 2" conduits along with one 3" conduit. When a 3" conduit is used, it is restricted to the base of the barrier.
6. For electrolier mounting details, See Standard Plans ES-6A and ES-6B.
7. Minimum concrete edge distance, to the reinforcing shown, shall be maintained. Edge distance may be adjusted to accommodate increase in concrete cover for architectual treatment.
8. Taper the top of the end of the bridge railing at 4:1 to match the top elevation of the thrie beam rail element.

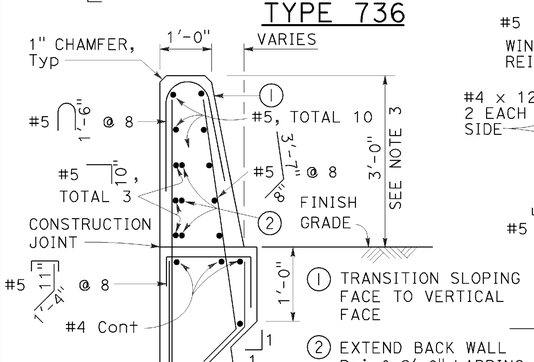

SECTION A-A

Details shown for barrier anchorage to Type 736A. Anchorgae for barrier Types 736 and 736B are similar to their respective details.

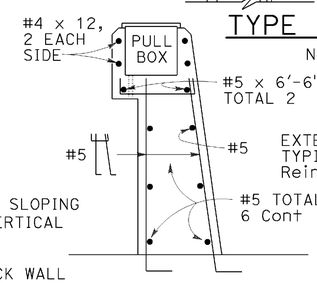

SECTION B-B

Note: Types 736A & 736B are similar to Type 736 except as noted

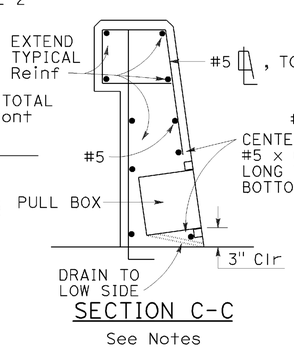

SECTION C-C
See Notes

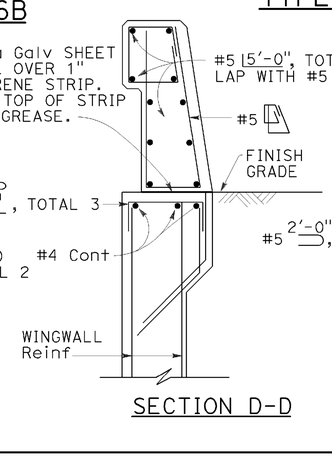

SECTION D-D

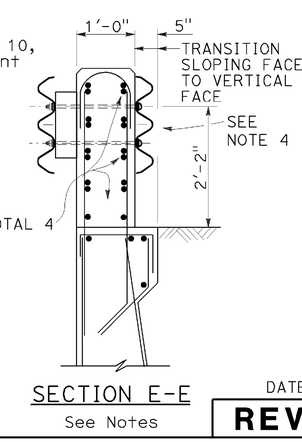

SECTION E-E
See Notes

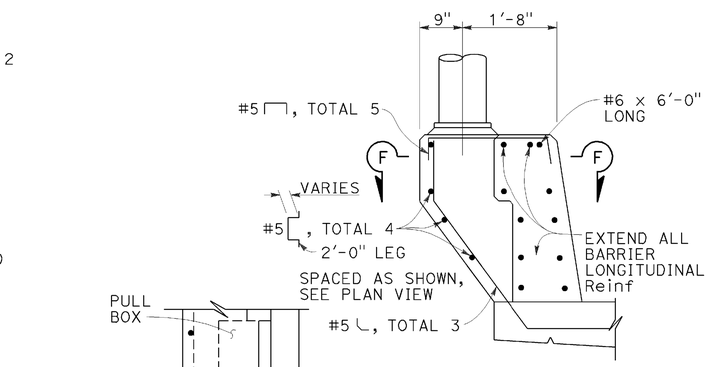

PEDESTAL ELEVATION

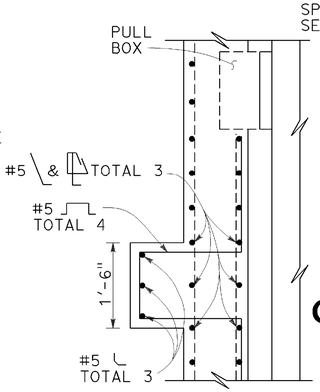

SECTION F-F

STATE OF CALIFORNIA
DEPARTMENT OF TRANSPORTATION

CONCRETE BARRIER TYPE 736

NO SCALE

RSP B11-56 DATED NOVEMBER 15, 2013 SUPERSEDES RSP B11-56 DATED JULY 19, 2013 AND STANDARD PLAN B11-56 DATED MAY 20, 2011 - PAGE 298 OF THE STANDARD PLANS BOOK DATED 2010.

REVISED STANDARD PLAN RSP B11-56

2010 REVISED STANDARD PLAN RSP B11-56

DATE PLOTTED => 28-MAY-2014
TIME PLOTTED => 15:00

USERNAME => s123119
DGN FILE => 23e790va017.dgn

P:\proj1\02\3E790_plans\pse\23e790va017.dgn

10-4-13

Dist	COUNTY	ROUTE	POST MILES TOTAL PROJECT	SHEET No.	TOTAL SHEETS
02	Tri	299	12.3/12.9	86	149

Theresa Gabriel
REGISTERED ELECTRICAL ENGINEER

July 19, 2013
PLANS APPROVAL DATE

REGISTERED PROFESSIONAL ENGINEER Theresa Aziz Gabriel No. E15129 Exp. 6-30-14 ELECTRICAL STATE OF CALIFORNIA

THE STATE OF CALIFORNIA OR ITS OFFICERS OR AGENTS SHALL NOT BE RESPONSIBLE FOR THE ACCURACY OR COMPLETENESS OF SCANNED COPIES OF THIS PLAN SHEET.

TO ACCOMPANY PLANS DATED 03-26-14

LEGEND:

- AB — ABANDON. IF APPLIED TO CONDUIT, REMOVE CONDUCTORS
- BC — INSTALL PULL BOX IN EXISTING CONDUIT RUN
- BP — PEDESTRIAN BARRICADE, TYPE AS INDICATED ON PLAN
- CB — INSTALL CONDUIT INTO EXISTING PULL BOX
- CC — CONNECT NEW AND EXISTING CONDUIT. REMOVE EXISTING CONDUCTORS AND INSTALL CONDUCTORS AS INDICATED
- CF — CONDUIT TO REMAIN FOR FUTURE USE. REMOVE CONDUCTORS. INSTALL PULL TAPE
- DH — DETECTOR HANDHOLE
- FA — FOUNDATION TO BE ABANDONED
- IS — INSTALL SIGN ON SIGNAL MAST ARM
- NS — NO SLIP BASE ON STANDARD
- PEC — PHOTOELECTRIC CONTROL
- PEU — PHOTOELECTRIC UNIT
- RC — EQUIPMENT OR MATERIAL TO BE REMOVED AND BECOME THE PROPERTY OF THE CONTRACTOR
- RE — REMOVE ELECTROLIER, FUSES AND BALLAST. TAPE ENDS OF CONDUCTORS
- RL — RELOCATE EQUIPMENT
- RR — REMOVE AND REUSE EQUIPMENT
- RS — REMOVE AND SALVAGE EQUIPMENT
- SC — SPLICE NEW TO EXISTING CONDUCTORS
- SD — SERVICE DISCONNECT
- TSP — TELEPHONE SERVICE POINT

ABBREVIATIONS

APS	ACCESSIBLE PEDESTRIAN SIGNAL
BBS	BATTERY BACKUP SYSTEM
BC	BOLT CIRCLE
BPB	BICYCLE PUSH BUTTON
C	CONDUIT
CB	CIRCUIT BREAKER
CCTV	CLOSED CIRCUIT TELEVISION
Ckt	CIRCUIT
CMS	CHANGEABLE MESSAGE SIGN
Ctid	CALTRANS IDENTIFICATION
Comm	COMMUNICATION
DLC	LOOP DETECTOR LEAD-IN CABLE
EMS	EXTINGUISHABLE MESSAGE SIGN
EVUC	EMERGENCY VEHICLE UNIT CABLE
EVUD	EMERGENCY VEHICLE UNIT DETECTOR
FB	FLASHING BEACON
FBCA	FLASHING BEACON CONTROL ASSEMBLY
FBS	FLASHING BEACON WITH SLIP BASE
FO	FIBER OPTIC
G	EQUIPMENT GROUNDING CONDUCTOR
GB	GROUND BUS
GFCI	GROUND FAULT CIRCUIT INTERRUPTER
HAR	HIGHWAY ADVISORY RADIO
Hex	HEXAGONAL
HPS	HIGH PRESSURE SODIUM
IISNS	INTERNALLY ILLUMINATED STREET NAME SIGN
ISL	INDUCTION SIGN LIGHTING
LED	LIGHT EMITTING DIODE
LMA	LUMINAIRE MAST ARM
LPS	LOW PRESSURE SODIUM
Ltg	LIGHTING
Lum	LUMINAIRE
M	METERED
MAT	MAST ARM MOUNTING TOP ATTACHMENT
MAS	MAST ARM MOUNTING SIDE ATTACHMENT
M/M	MULTIPLE TO MULTIPLE TRANSFORMER
Mtg	MOUNTING
MV	MERCURY VAPOR LIGHTING FIXTURE
MVDS	MICROWAVE VEHICLE DETECTION SYSTEM
N	NEUTRAL (GROUNDED CONDUCTOR)
NB	NEUTRAL BUS
NC	NORMALLY CLOSE
NO	NORMALLY OPEN
P	CIRCUIT BREAKER'S POLE
PB	PULL BOX
PBA	PUSH BUTTON ASSEMBLY
PEC	PHOTOELECTRIC CONTROL
Ped	PEDESTRIAN
PEU	PHOTOELECTRIC UNIT
PT	CONDUIT WITH PULL TAPE
RE	RELOCATED EQUIPMENT
RM	RAMP METERING
RWIS	ROADSIDE WEATHER INFORMATION SYSTEM
SB	SLIP BASE
SIC	SIGNAL INTERCONNECT CABLE
Sig	SIGNAL
SMA	SIGNAL MAST ARM
SNS	STREET NAME SIGN
SP	SERVICE POINT
TDC	TELEPHONE DEMARCATION CABINET
TMS	TRAFFIC MONITORING STATION
TOS	TRAFFIC OPERATIONS SYSTEM
Veh	VEHICLE
VIVDS	VIDEO IMAGE VEHICLE DETECTION SYSTEM
WIM	WEIGH-IN-MOTION
Xfmr	TRANSFORMER

SOFFIT AND WALL MOUNTED LUMINAIRES

- PENDANT, 70 W HPS UNLESS OTHERWISE SPECIFIED
- FLUSH, 70 W HPS UNLESS OTHERWISE SPECIFIED
- WALL SURFACE, 70 W HPS UNLESS OTHERWISE SPECIFIED
- EXISTING SOFFIT OR WALL LUMINAIRE TO REMAIN UNMODIFIED
- (M) EXISTING SOFFIT OR WALL LUMINAIRE TO BE MODIFIED AS SPECIFIED

NOTE:
Arrow indicates "street side" of luminaire.

COMMONLY USED SYMBOLS FOR UNITED STATES CUSTOMARY UNITS OF MEASUREMENT:

SYMBOL USED	DEFINITIONS
Ω	OHMS
min	MINUTE
s	SECOND
bps	BITS PER SECOND
Bps	BYTES PER SECOND
A	AMPERE
V	VOLT
V(dc)	VOLT (DIRECT CURRENT)
V(ac)	VOLT (ALTERNATING CURRENT)
FC	FOOT - CANDLE
W	WATTS
VA	VOLT-AMPERE
M	MEGA
k	KILO
m	MILLI
μ	MICRO
P	PICO
Hz	HERTZ

MISCELLANEOUS ELECTROLIERS

NEW	EXISTING	
		LUMINAIRE ON WOOD POLE
		NON-STANDARD ELECTROLIER (SEE PROJECT NOTES OR PROJECT PLANS)
		CITY ELECTROLIER
		ELECTROLIER FOUNDATION (FUTURE INSTALLATION)

NOTES:

1. HPS luminaires shall be 310 W HPS when installed on Type 21, 21D, 30, 31 and 32 Standards, unless otherwise specified. HPS luminaires shall be 200 W when installed on other type standards or poles, unless otherwise specified.
2. LED luminaires shall be 235 W when installed on Type 21, 21D, 30, 31 and 32 Standards, unless otherwise specified. LED luminaires shall be 165 W when installed on other type standards or poles, unless otherwise specified.
3. Luminaires shall be the cutoff type, ANSI Type III medium cutoff lighting distribution, unless otherwise specified.

STANDARD ELECTROLIER

NEW	EXISTING	STANDARD TYPE
		15
		15D
		15 STRUCTURE
		15D STRUCTURE
		21
		21D
		21 STRUCTURE
		21D STRUCTURE
		30
		31
		32

STATE OF CALIFORNIA
DEPARTMENT OF TRANSPORTATION

ELECTRICAL SYSTEMS (LEGEND AND ABBREVIATIONS)

NO SCALE

RSP ES-1A DATED JULY 19, 2013 SUPERSEDES STANDARD PLAN ES-1A DATED MAY 20, 2011 - PAGE 425 OF THE STANDARD PLANS BOOK DATED 2010.

REVISED STANDARD PLAN RSP ES-1A

2010 REVISED STANDARD PLAN RSP ES-1A

DATE PLOTTED => 28-MAY-2014
TIME PLOTTED => 15:01

Dist	COUNTY	ROUTE	POST MILES TOTAL PROJECT	SHEET No.	TOTAL SHEETS
02	Tri	299	12.3/12.9	87	149

Theresa Gabriel
REGISTERED ELECTRICAL ENGINEER

July 19, 2013
PLANS APPROVAL DATE

REGISTERED PROFESSIONAL ENGINEER
Theresa Aziz Gabriel
No. E15129
Exp. 6-30-14
ELECTRICAL
STATE OF CALIFORNIA

THE STATE OF CALIFORNIA OR ITS OFFICERS OR AGENTS SHALL NOT BE RESPONSIBLE FOR THE ACCURACY OR COMPLETENESS OF SCANNED COPIES OF THIS PLAN SHEET.

TO ACCOMPANY PLANS DATED 03-26-14

CONDUIT

NEW	EXISTING	
		LIGHTING CONDUIT, UNLESS OTHERWISE INDICATED OR NOTED
		TRAFFIC SIGNAL CONDUIT
C	c	COMMUNICATION CONDUIT
T	t	TELEPHONE CONDUIT
F	f	FIRE ALARM CONDUIT
FO	fo	FIBER OPTIC CONDUIT
		CONDUIT TERMINATION
R	r	CONDUIT RISER ATTACHED TO THE STRUCTURE OR SERVICE POLE

SERVICE EQUIPMENT

NEW	EXISTING	
OH	oh	OVERHEAD LINES
U	U	WOOD POLE, "U" INDICATES UTILITY OWNED
		POLE GUY WITH ANCHOR
		UTILITY TRANSFORMER - GROUND MOUNTED
III	III	SERVICE EQUIPMENT ENCLOSURE TYPE. DOOR INDICATES FRONT OF ENCLOSURE
T	t	TELEPHONE DEMARCATION CABINET

POLE-MOUNTED SERVICE DESIGNATION

TYPE H SERVICE, 28'-10" — TYPE OF INSTALLATION AND POLE HEIGHT ABOVE GRADE

FLASHING BEACON

NEW	EXISTING	
R	R	FLASHING BEACON (ONE VEHICLE SIGNAL HEAD WITH BACKPLATE AND VISOR) "R" INDICATES RED INDICATION, "Y" INDICATES YELLOW INDICATION
Y Y	Y Y	FLASHING BEACON WITH TYPE 15-FBS STANDARD AND A SIGN.
R R	R R	FLASHING BEACON WITH TYPES 9, 9A OR 9B SIGN UNLESS OTHERWISE SPECIFIED OR INDICATED

SIGNAL EQUIPMENT

NEW	EXISTING	
C	C	PEDESTRIAN SIGNAL HEAD "C" INDICATES COUNTDOWN PEDESTRIAN HEAD
		PUSH BUTTON ASSEMBLY POST
		PEDESTRIAN BARRICADE
		VEHICLE SIGNAL HEAD (WITH BACKPLATE AND 3-SECTIONS: RED, YELLOW AND GREEN)
		VEHICLE SIGNAL HEAD WITH ANGLE VISOR
PV	PV	MODIFICATIONS OF BASIC SYMBOL: "L" INDICATES ALL NON-ARROW SECTIONS LOUVERED "LG" INDICATES LOUVERED GREEN SECTION ONLY "PV" INDICATES ALL 12" SECTIONS PROGRAMMED VISIBILITY "8" INDICATES ALL 8" SECTIONS (ONLY WHEN SPECIFIED)
		VEHICLE SIGNAL HEAD CONSISTING OF RED, YELLOW AND GREEN LEFT ARROW SECTIONS
		VEHICLE SIGNAL HEAD CONSISTING OF RED AND YELLOW SECTIONS WITH AN UP GREEN ARROW SECTION
		VEHICLE SIGNAL HEAD (5 SECTION) CONSISTING OF RED, YELLOW AND GREEN SECTIONS WITH YELLOW AND GREEN RIGHT ARROW SECTIONS
		TYPE 15TS STANDARD WITH VEHICLE SIGNAL HEAD AND LUMINAIRE
		TYPE 21TS STANDARD WITH VEHICLE SIGNAL HEAD AND LUMINAIRE
		STANDARD WITH LUMINAIRE AND SIGNAL MAST ARMS AND ATTACHED VEHICLE SIGNAL HEADS
		TYPE 1 STANDARD WITH ATTACHED VEHICLE SIGNAL HEADS
		STANDARD WITH A SIGNAL MAST ARM, ATTACHED VEHICLE SIGNAL HEADS AND INTERNALLY ILLUMINATED STREET NAME SIGN
		CONTROLLER ASSEMBLY. DOOR INDICATES FRONT OF CABINET

SIGNAL EQUIPMENT Cont

NEW	EXISTING	
		GUARD POST
		TYPE 1 STANDARD WITH RAMP METERING SIGN
		OPTICAL DETECTOR FOR THE EMERGENCY VEHICLE DETECTION SYSTEM

NOTES:

1. All signal sections shall be 12" unless shown otherwise.
2. Signal heads shall be provided with backplates unless shown otherwise.

ILLUMINATED OVERHEAD SIGN

NEW	EXISTING	
		SINGLE POST, SINGLE ILLUMINATED SIGN, BALANCED BUTTERFLY
		SINGLE POST, DOUBLE ILLUMINATED SIGN, BALANCED BUTTERFLY
		SINGLE POST, SINGLE ILLUMINATED SIGN, FULL CANTILEVER
		DOUBLE POST, SINGLE ILLUMINATED SIGN
		SINGLE ILLUMINATED SIGN MOUNTED ON STRUCTURE
		DOUBLE POST, SINGLE ILLUMINATED SIGN WITH ELECTROLIER

STATE OF CALIFORNIA
DEPARTMENT OF TRANSPORTATION

ELECTRICAL SYSTEMS (LEGEND AND ABBREVIATIONS)

NO SCALE

RSP ES-1B DATED JULY 19, 2013 SUPERSEDES STANDARD PLAN ES-1B DATED MAY 20, 2011 - PAGE 426 OF THE STANDARD PLANS BOOK DATED 2010.

REVISED STANDARD PLAN RSP ES-1B

2010 REVISED STANDARD PLAN RSP ES-1B

DATE PLOTTED => 28-MAY-2014
TIME PLOTTED => 15:01

Dist	COUNTY	ROUTE	POST MILES TOTAL PROJECT	SHEET No.	TOTAL SHEETS
02	Tri	299	12.3/12.9	88	149

Theresa Gabriel
REGISTERED ELECTRICAL ENGINEER

July 19, 2013
PLANS APPROVAL DATE

REGISTERED PROFESSIONAL ENGINEER
Theresa Aziz Gabriel
No. E15129
Exp. 6-30-14
ELECTRICAL
STATE OF CALIFORNIA

THE STATE OF CALIFORNIA OR ITS OFFICERS OR AGENTS SHALL NOT BE RESPONSIBLE FOR THE ACCURACY OR COMPLETENESS OF SCANNED COPIES OF THIS PLAN SHEET.

TO ACCOMPANY PLANS DATED 03-26-14

EQUIPMENT IDENTIFICATION

ILLUMINATED SIGN IDENTIFICATION NUMBER:

SIGN No. 12345
10 ISL SCI 1.0

- SIGN NUMBER - PLACE ON POST OR STRUCTURE
- TRANSFORMER RATING (kVA)
- LIGHTING CONTROL TYPE
- NUMBER AND TYPE OF FIXTURES

} DO NOT PLACE ON STANDARD OR STRUCTURE

ELECTROLIER OR EQUIPMENT IDENTIFICATION NUMBER:

12345 - 15'-0"

- MAST ARM LENGTH, IF SHOWN. DO NOT PLACE ON STANDARD OR STRUCTURE
- EQUIPMENT NUMBER - PLACE ON STANDARD OR STRUCTURE. EXISTING EQUIPMENT NUMBERS ARE SHOWN IN PARENTHESIS

CONDUIT AND CONDUCTOR IDENTIFICATION:

1½"C, 2#10, 15#14, 2 DLC, 12P#18 (PAIR)

- NUMBER AND SIZE OF CONDUCTORS AND CABLES
- SIZE OF CONDUIT IN INCHES

ø1, ø2, ø2P, etc.	TRAFFIC PHASE IDENTIFICATION FOR SIGNAL FACES, DETECTORS AND PHASE DIAGRAMS
1 2 3	LEGEND NUMBERS
A B C	EQUIPMENT, SIGNAL POLES, INSTALLATION OR ITEMS
1 2 3	CONDUIT RUN NUMBERS

SIGNAL AND LIGHTING STANDARD (TYPICAL DESIGNATION):

19A - 3 - 100

- WIND VELOCITY = 100 mph
- CASE 3 ARM LOADING
- STANDARD TYPE
- STANDARD PLAN SHEET NUMBER
- DETAIL, NUMBER, SECTION, TYPE OR ELEVATION

MISCELLANEOUS EQUIPMENT

NEW	EXISTING	
CMS	cms	CHANGEABLE MESSAGE SIGN
		CLOSED CIRCUIT TELEVISION CAMERA
		HIGHWAY ADVISORY RADIO POLE AND ANTENNA
EMS	ems	EXTINGUISHABLE MESSAGE SIGN
M V	m v	DETECTION DEVICE M = MICROWAVE SENSOR V = VIDEO IMAGE SENSOR

WIRING DIAGRAM LEGEND

- EXTERNAL CONDUCTOR
- CONDUCTOR OR BUS
- TIE POINT
- CONTACTOR COIL
- CONTACTOR, NO CONTACT
- TERMINAL BLOCKS
- CONTACTOR, NC CONTACT
- ENCLOSURE BOND
- GROUNDING ELECTRODE
- CIRCUIT BREAKER
- RECEPTACLE

PULL BOXES

NEW	EXISTING	
		PULL BOX, No. 5 UNLESS OTHERWISE INDICATED OR NOTED
3	9A(21)	PULL BOX, ADDITIONAL DESIGNATIONS OR DESCRIPTIONS

3 No. 3½ PULL BOX
5 No. 5 PULL BOX
6 No. 6 PULL BOX
7 No. 7 (CEILING PULL BOX)
8 No. 8 (PENDANT SOFFIT PULL BOX)
9 No. 9 PULL BOX
9A No. 9A PULL BOX

(C) COMMUNICATIONS PULL BOX
(E) PULL BOX WITH EXTENSION
(S) SPRINKLER CONTROL PULL BOX
(21) ANCHOR BOLTS AND CONDUIT FOR FUTURE INSTALLATION OF TYPE 21 STANDARD
(T) TRAFFIC PULL BOX

VEHICLE DETECTORS

5 J 9 U

- VEHICLE DETECTOR DESIGNATION
- U = UPPER
  L = LOWER
- SLOT NUMBER IN INPUT FILE
- INPUT FILE (I OR J)
- PHASE

NEW	EXISTING	
		TYPE A DETECTOR LOOP. OUTLINE OF SAWCUT SHOWN
		TYPE B DETECTOR LOOP. OUTLINE OF SAWCUT SHOWN
		TYPE C DETECTOR LOOP. OUTLINE OF SAWCUT SHOWN
		TYPE D DETECTOR LOOP. OUTLINE OF SAWCUT SHOWN
		TYPE E DETECTOR LOOP. OUTLINE OF SAWCUT SHOWN
		TYPE Q DETECTOR LOOP. OUTLINE OF SAWCUT SHOWN
		MAGNETIC DETECTOR
DH	dh	DETECTOR HANDHOLE
		MICROWAVE OR VIDEO DETECTION ZONE

STATE OF CALIFORNIA
DEPARTMENT OF TRANSPORTATION

ELECTRICAL SYSTEMS (LEGEND AND ABBREVIATIONS)

NO SCALE

RSP ES-1C DATED JULY 19, 2013 SUPERSEDES STANDARD PLAN ES-1C DATED MAY 20, 2011 - PAGE 427 OF THE STANDARD PLANS BOOK DATED 2010.

REVISED STANDARD PLAN RSP ES-1C

2010 REVISED STANDARD PLAN RSP ES-1C

DATE PLOTTED => 28-MAY-2014
TIME PLOTTED => 15:01

Dist	COUNTY	ROUTE	POST MILES TOTAL PROJECT	SHEET No.	TOTAL SHEETS
02	Tri	299	12.3/12.9	89	149

Theresa Gabriel
REGISTERED ELECTRICAL ENGINEER

July 19, 2013
PLANS APPROVAL DATE

REGISTERED PROFESSIONAL ENGINEER
Theresa Aziz Gabriel
No. E15129
Exp. 6-30-14
ELECTRICAL
STATE OF CALIFORNIA

THE STATE OF CALIFORNIA OR ITS OFFICERS OR AGENTS SHALL NOT BE RESPONSIBLE FOR THE ACCURACY OR COMPLETENESS OF SCANNED COPIES OF THIS PLAN SHEET.

TO ACCOMPANY PLANS DATED 03-26-14

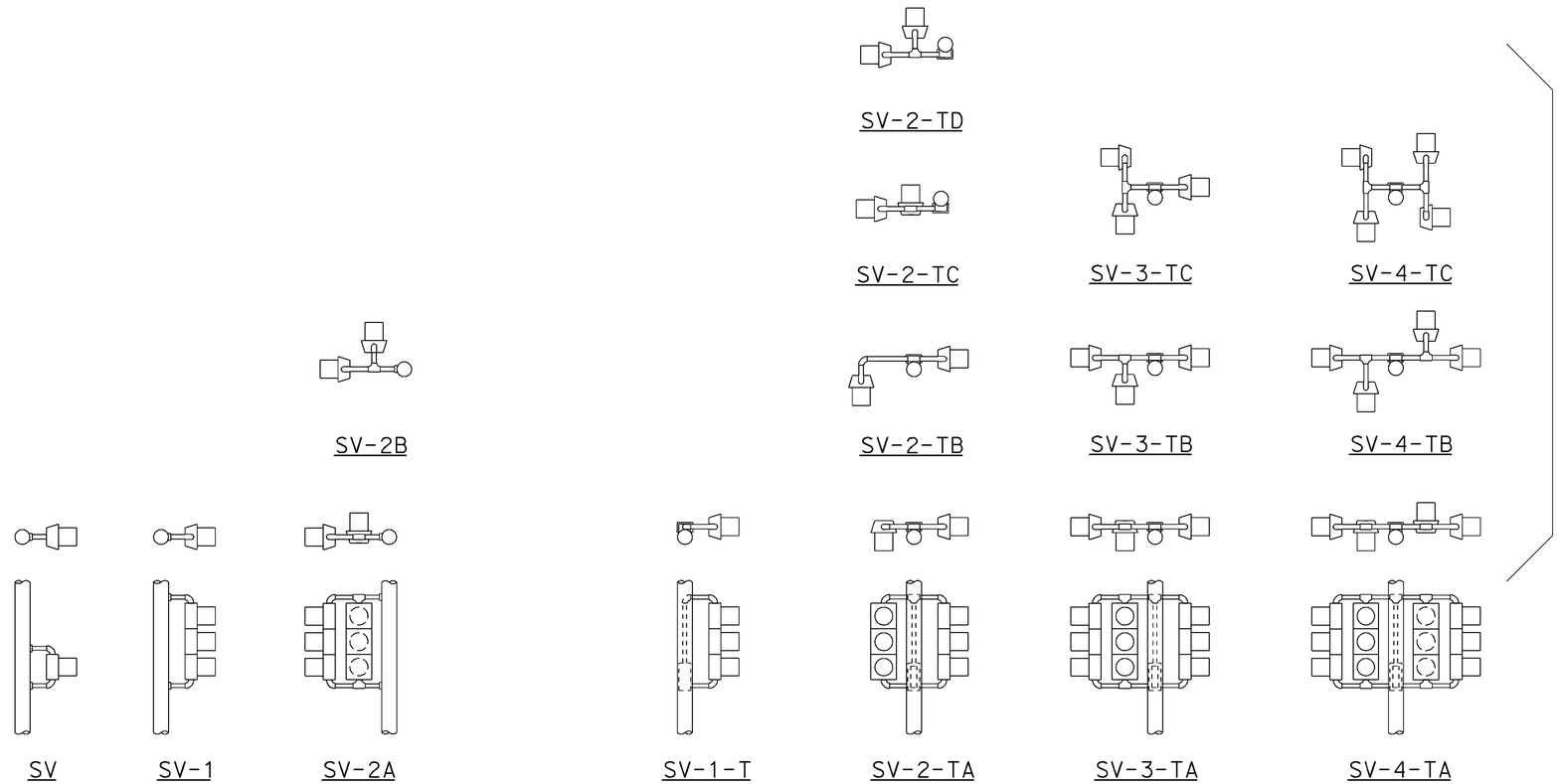

SIDE MOUNTINGS

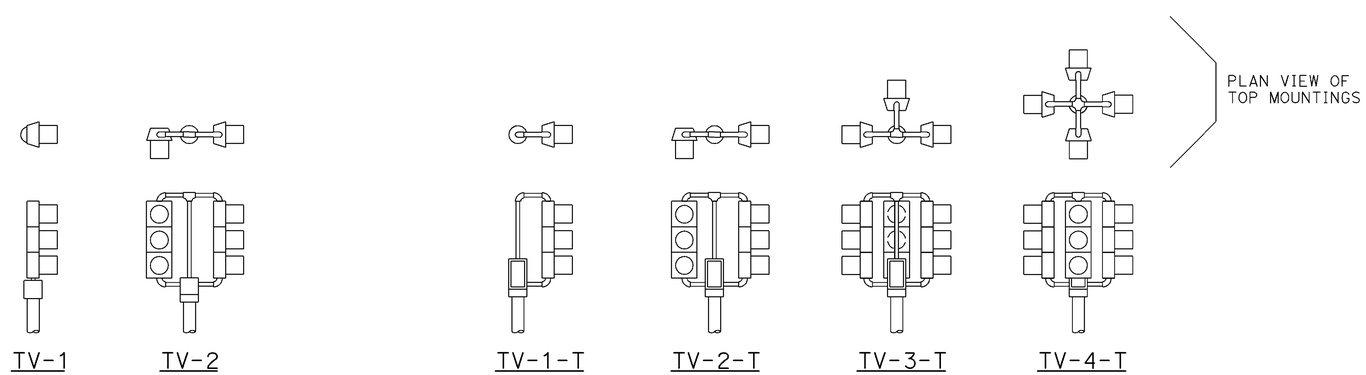

TOP MOUNTINGS

ABBREVIATIONS:

SV	SIDE MOUNTED VEHICLE SIGNALS
T	TERMINAL COMPARTMENT
TV	TOP MOUNTED VEHICLE SIGNALS
1, 2, 3, 4	NUMBER OF SIGNAL FACES (3 - SECTION, UNLESS OTHERWISE INDICATED)
A, B, C, D	CONFIGURATION OF SIGNALS

NOTES:

1. Mountings shall be oriented to provide maximum horizontal clearance to adjacent roadway.
2. Bracket arms shall be long enough to permit proper alignment of signals and backplate installation.
3. See Standard Plans ES-4D and ES-4E for attachment fitting details.

STATE OF CALIFORNIA
DEPARTMENT OF TRANSPORTATION

ELECTRICAL SYSTEMS (VEHICULAR SIGNAL HEADS AND MOUNTINGS)

NO SCALE

RSP ES-4A DATED JULY 19, 2013 SUPERSEDES STANDARD PLAN ES-4A DATED MAY 20, 2011 - PAGE 443 OF THE STANDARD PLANS BOOK DATED 2010.

REVISED STANDARD PLAN RSP ES-4A

2010 REVISED STANDARD PLAN RSP ES-4A

DATE PLOTTED => 28-MAY-2014
TIME PLOTTED => 15:01

Dist	COUNTY	ROUTE	POST MILES TOTAL PROJECT	SHEET No.	TOTAL SHEETS
02	Tri	299	12.3/12.9	90	149

Theresa Gabriel
REGISTERED ELECTRICAL ENGINEER

July 19, 2013
PLANS APPROVAL DATE

REGISTERED PROFESSIONAL ENGINEER Theresa Aziz Gabriel No. E15129 Exp. 6-30-14 ELECTRICAL STATE OF CALIFORNIA

THE STATE OF CALIFORNIA OR ITS OFFICERS OR AGENTS SHALL NOT BE RESPONSIBLE FOR THE ACCURACY OR COMPLETENESS OF SCANNED COPIES OF THIS PLAN SHEET.

TO ACCOMPANY PLANS DATED 03-26-14

VISORS

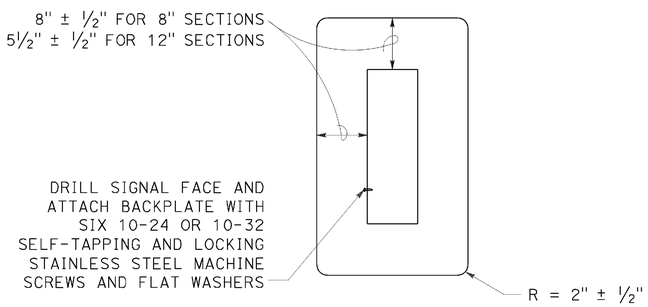

8" AND 12" SECTIONS

BACKPLATE

1/16" minimum thickness
3001-14 aluminum or plastic
when specified

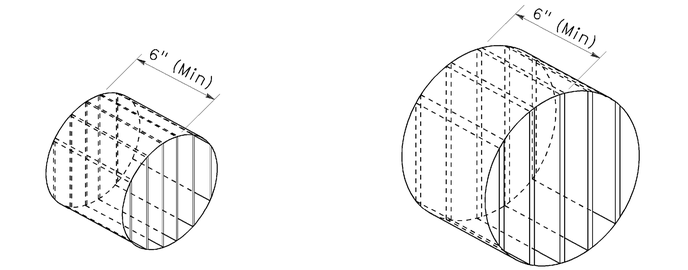

ISOMETRIC VIEW

ISOMETRIC VIEW

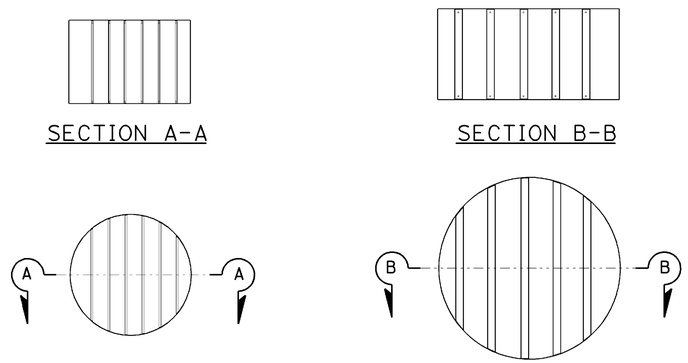

SECTION A-A

SECTION B-B

8" DIAMETER FRONT VIEW

12" DIAMETER FRONT VIEW

DIRECTIONAL LOUVER

Directional louvers shall be oriented as directed by the Engineer and secured in place with one plated brass machine screw and nut.

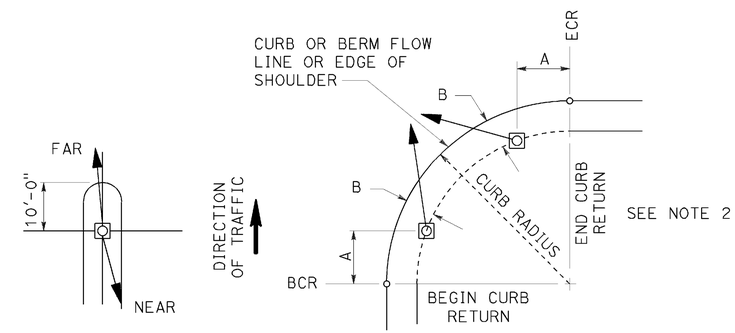

NOTES:

1. Typical signal pole placement unless dimensioned on plans.
2. For A and B dimensions, see Pole Schedule, or as directed by the Engineer.

SIGNAL STANDARD PLACEMENT DIMENSIONS AND EQUIPMENT LOCATIONS

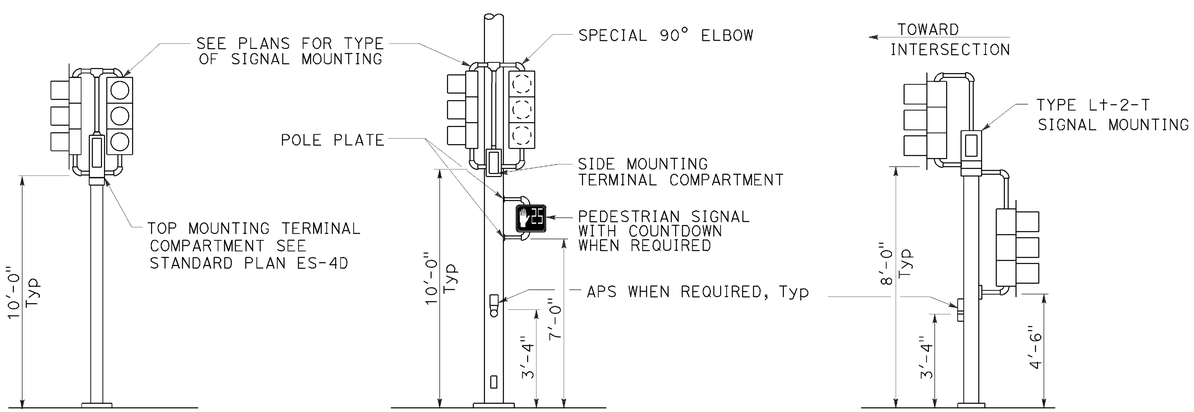

TOP MOUNTED SIGNALS (TV)

Type 1-A, 1-B, 1-C and 1-D standard as indicated on the plans

SIDE MOUNTED SIGNALS (SV AND SP)

Normally used on standards with luminaire or signal mast arm

LEFT TURN LANE SIGNAL

Type 1-A, 1-B, 1-C and 1-D standard as indicated on plans

TYPICAL SIGNAL INSTALLATIONS

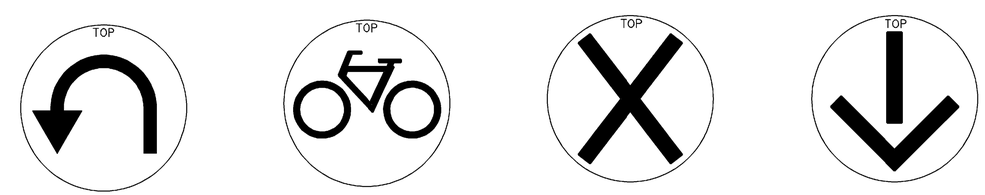

U-TURN

BICYCLE

LANE CONTROL

LANE CONTROL

SIGNAL FACES

STATE OF CALIFORNIA
DEPARTMENT OF TRANSPORTATION

ELECTRICAL SYSTEMS (VEHICULAR SIGNAL HEADS AND MOUNTINGS)

NO SCALE

RSP ES-4C DATED JULY 19, 2013 SUPERSEDES STANDARD PLAN ES-04C DATED MAY 20, 2011 - PAGE 445 OF THE STANDARD PLANS BOOK DATED 2010.

REVISED STANDARD PLAN RSP ES-4C

2010 REVISED STANDARD PLAN RSP ES-4C

DATE PLOTTED => 28-MAY-2014
TIME PLOTTED => 15:01

Dist	COUNTY	ROUTE	POST MILES TOTAL PROJECT	SHEET No.	TOTAL SHEETS
02	Tri	299	12.3/12.9	91	149

Theresa Gabriel
REGISTERED ELECTRICAL ENGINEER

July 19, 2013
PLANS APPROVAL DATE

REGISTERED PROFESSIONAL ENGINEER Theresa Aziz Gabriel No. E15129 Exp. 6-30-14 ELECTRICAL STATE OF CALIFORNIA

THE STATE OF CALIFORNIA OR ITS OFFICERS OR AGENTS SHALL NOT BE RESPONSIBLE FOR THE ACCURACY OR COMPLETENESS OF SCANNED COPIES OF THIS PLAN SHEET.

TO ACCOMPANY PLANS DATED 03-26-14

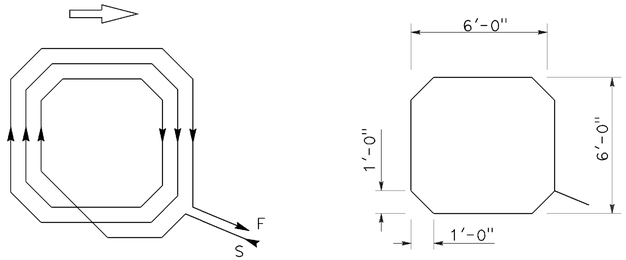

WINDING DETAIL SAWCUT DETAIL

TYPE A LOOP DETECTOR CONFIGURATION

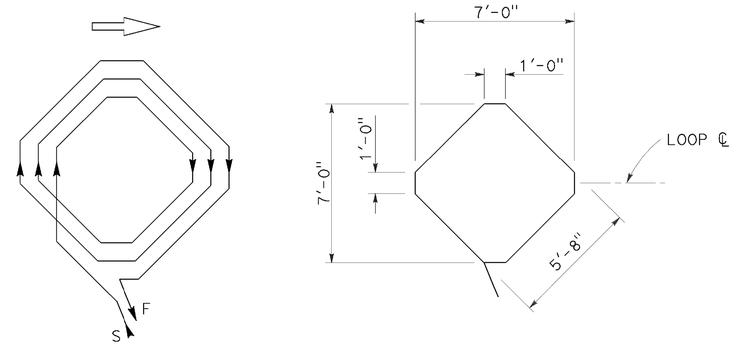

WINDING DETAIL SAWCUT DETAIL

TYPE B LOOP DETECTOR CONFIGURATION

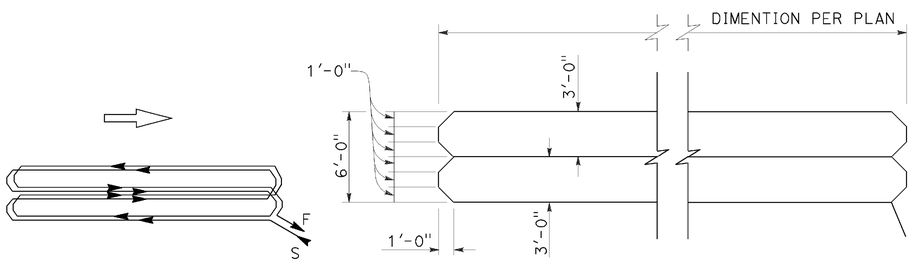

WINDING DETAIL SAWCUT DETAIL

TYPE C LOOP DETECTOR CONFIGURATION

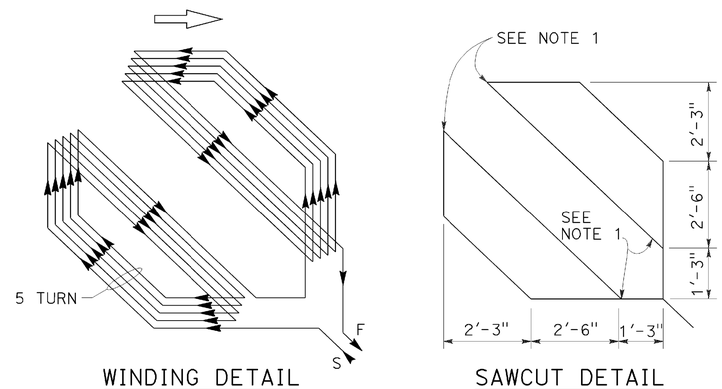

WINDING DETAIL SAWCUT DETAIL

TYPE D LOOP DETECTOR CONFIGURATION

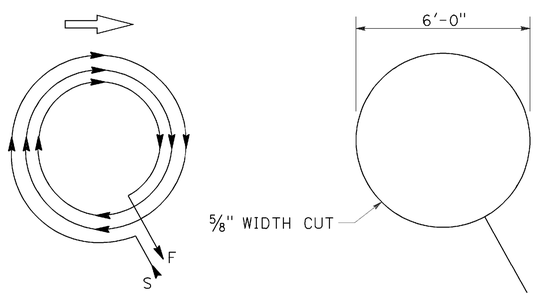

WINDING DETAIL SAWCUT DETAIL

TYPE E LOOP DETECTOR CONFIGURATION

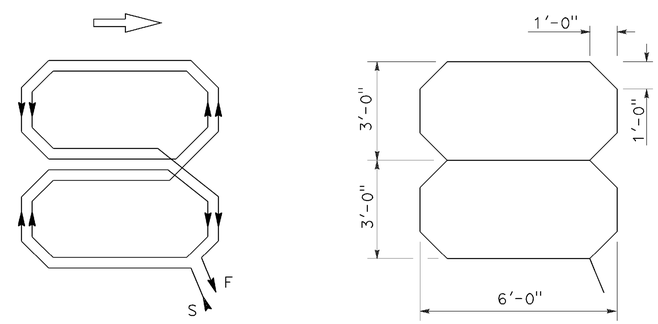

WINDING DETAIL SAWCUT DETAIL

TYPE Q LOOP DETECTOR CONFIGURATION

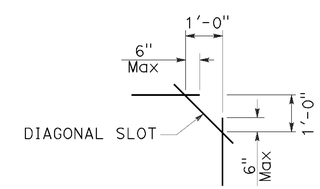

PLAN VIEW OF DIAGONAL SLOT AT CORNERS

NOTES:

1. Round corners of acute angle sawcuts to prevent damage to conductors.
2. Typical distance separating loops from edge to edge is 10' for Type A, B, D and E installation in single lane.

STATE OF CALIFORNIA
DEPARTMENT OF TRANSPORTATION

ELECTRICAL SYSTEMS (DETECTORS)

NO SCALE

RSP ES-5B DATED JULY 19, 2013 SUPERSEDES STANDARD PLAN ES-5B DATED MAY 20, 2011 - PAGE 449 OF THE STANDARD PLANS BOOK DATED 2010.

REVISED STANDARD PLAN RSP ES-5B

2010 REVISED STANDARD PLAN RSP ES-5B

DATE PLOTTED => 28-MAY-2014
TIME PLOTTED => 15:02

Dist	COUNTY	ROUTE	POST MILES TOTAL PROJECT	SHEET No.	TOTAL SHEETS
02	Tri	299	12.3/12.9	92	149

Theresa Gabriel
REGISTERED ELECTRICAL ENGINEER

July 19, 2013
PLANS APPROVAL DATE

REGISTERED PROFESSIONAL ENGINEER
Theresa Aziz Gabriel
No. E15129
Exp. 6-30-14
ELECTRICAL
STATE OF CALIFORNIA

THE STATE OF CALIFORNIA OR ITS OFFICERS OR AGENTS SHALL NOT BE RESPONSIBLE FOR THE ACCURACY OR COMPLETENESS OF SCANNED COPIES OF THIS PLAN SHEET.

TO ACCOMPANY PLANS DATED 03-26-14

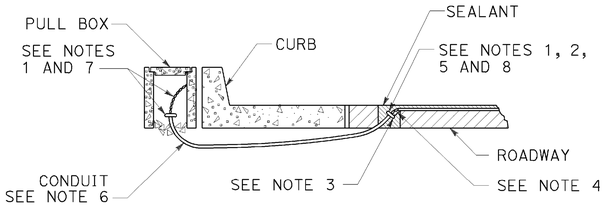

TYPE A
CURB TERMINATION DETAIL

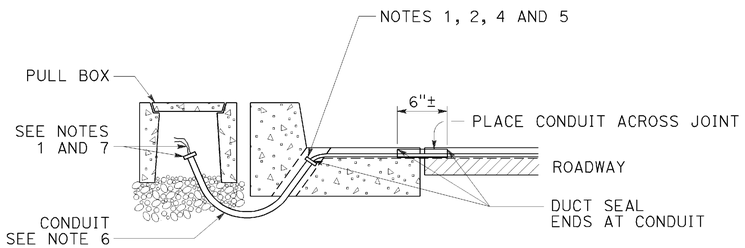

CROSS SECTION

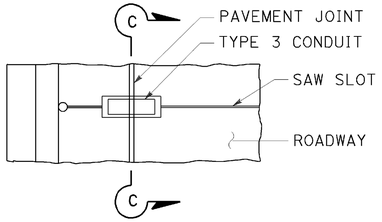

PLAN VIEW

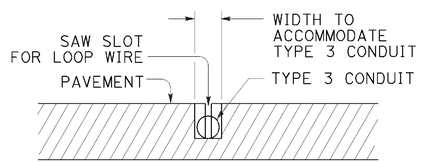

SECTION C-C

TYPE B
CURB TERMINATION DETAIL

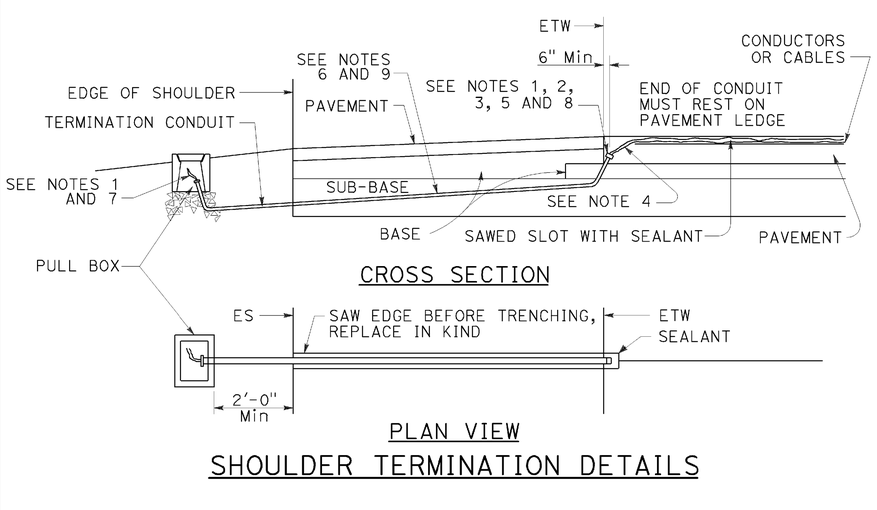

CROSS SECTION

PLAN VIEW

SHOULDER TERMINATION DETAILS

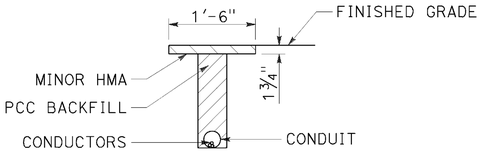

"T" TRENCH
DETAIL T

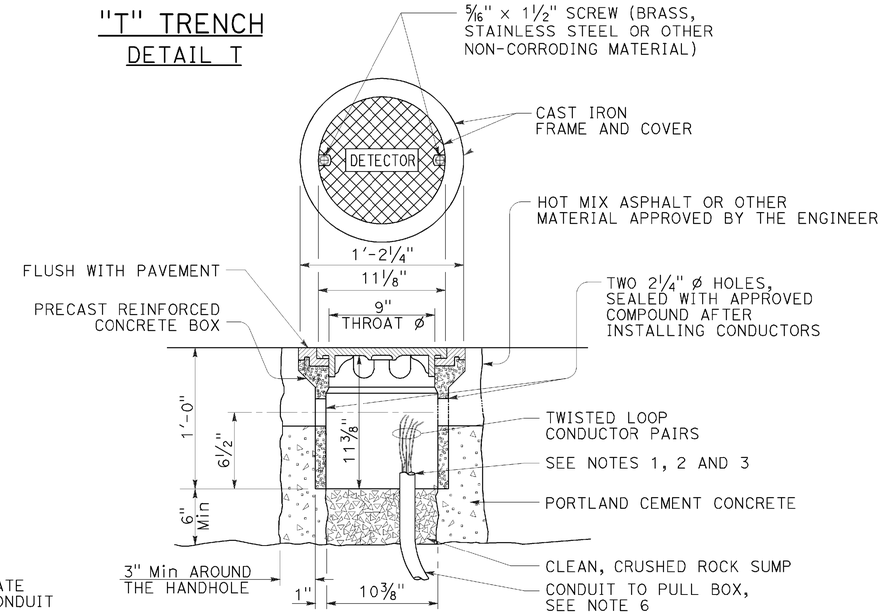

DETECTOR HANDHOLE DETAIL

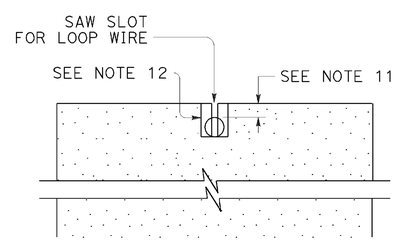

SECTION A-A

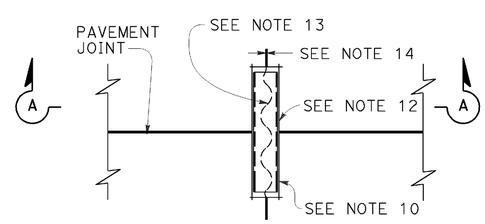

PLAN VIEW

TYPICAL LOOP LEAD-IN DETAIL AT PAVEMENT JOINT

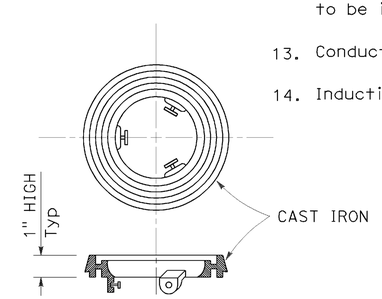

LOCKING GRADE RING

NOTES:

1. Bushing shall be used at end of conduit.
2. Tape detector conductors or cables 3" each side of bushings.
3. Install duct seal compound to each end of termination conduit before installing sealant.
4. Round all sharp edges where detector conductors or cables have to pass.
5. End of conduit shall be 3⅛" below roadway surface.
6.

Conduit size	Loop conductors
1"C minimum	1 to 2 pairs
1½"C minimum	3 to 4 pairs
2"C minimum	5 or more pairs

7. Splice detector conductors or cables to detector lead-in-cable.
8. Location of detector handhole when shown on plans.
9. When the shoulder and traveled way are paved with the same material and there is no joint between them, the conduit shall extend only 2'-0" into the shoulder pavement.
10. ¾"C, Type 3 conduit 6" long minimum, plug both ends with duct compound to keep out sealant.
11. ½" Minimum between top of conduit and pavement surface.
12. Sawcut shall not exceed 1" in width and ⅛" longer than conduit to be installed.
13. Conductors with ½" minimum slack inside conduit.
14. Inductive loop detector saw slot.

STATE OF CALIFORNIA
DEPARTMENT OF TRANSPORTATION

ELECTRICAL SYSTEMS (CURB TERMINATION AND HANDHOLE)

NO SCALE

RSP ES-5D DATED JULY 19, 2013 SUPERSEDES STANDARD PLAN ES-5D DATED MAY 20, 2011 - PAGE 451 OF THE STANDARD PLANS BOOK DATED 2010.

REVISED STANDARD PLAN RSP ES-5D

2010 REVISED STANDARD PLAN RSP ES-5D

DATE PLOTTED => 28-MAY-2014
TIME PLOTTED => 15:02

DIST	COUNTY	ROUTE	POST MILES TOTAL PROJECT	SHEET NO.	TOTAL SHEETS
02	Tri	299	12.3/12.9	93	149

Theresa Gabriel
REGISTERED ELECTRICAL ENGINEER

July 19, 2013
PLANS APPROVAL DATE

REGISTERED PROFESSIONAL ENGINEER Theresa Aziz Gabriel No. E15129 Exp. 6-30-14 ELECTRICAL STATE OF CALIFORNIA

THE STATE OF CALIFORNIA OR ITS OFFICERS OR AGENTS SHALL NOT BE RESPONSIBLE FOR THE ACCURACY OR COMPLETENESS OF SCANNED COPIES OF THIS PLAN SHEET.

TO ACCOMPANY PLANS DATED 03-26-14

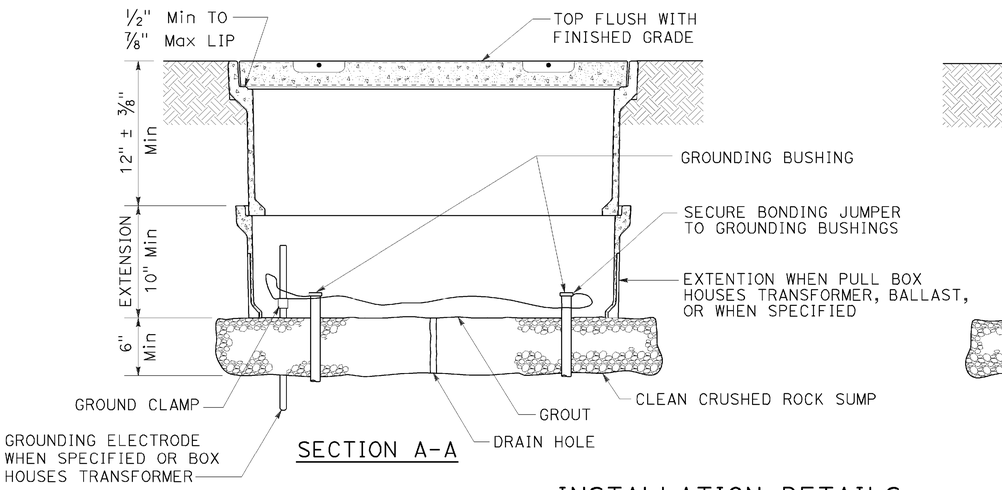

SECTION A-A

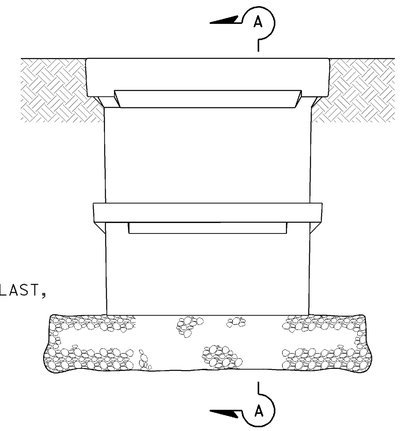

SIDE VIEW

INSTALLATION DETAILS

DETAIL A

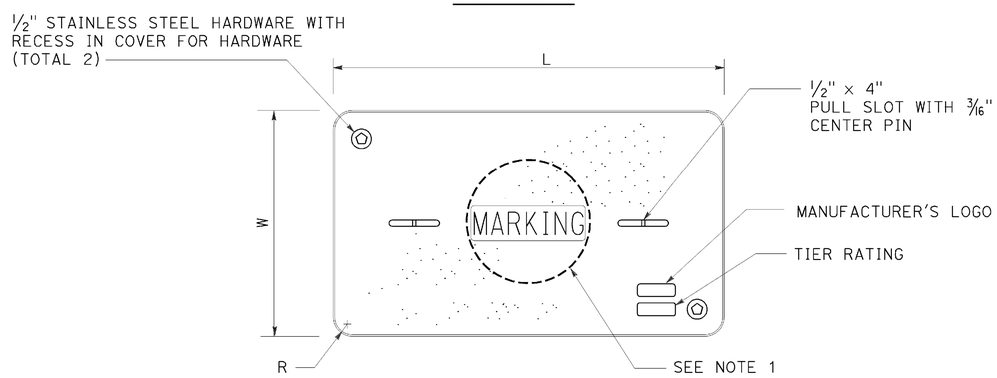

COVER TOP VIEW

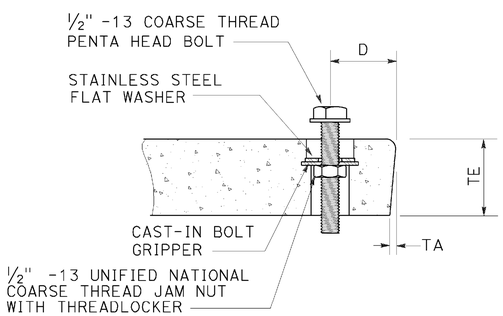

TYPICAL COVER CAPTIVE BOLT

OR SIMILAR

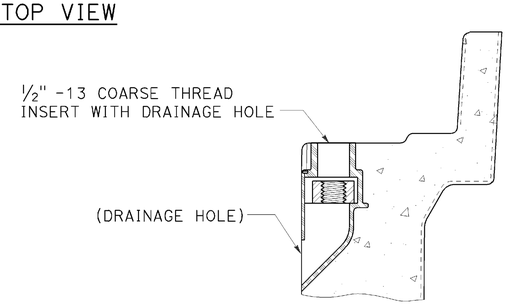

TYPICAL THREADED INSERT

OR SIMILAR

DIMENSION TABLE

PULL BOX	PULL BOX			COVER						
	MINIMUM DEPTH BOX	MINIMUM DEPTH EXTENSION	MAXIMUM WEIGHT	L	W	R	TE	TA	D	MAXIMUM WEIGHT
No. 3½	12"	N/A	40 lb	1′ - 3⅜"	10⅛"	1⅜"	2"	⅛"	1¾"	30 lb
No. 5	12"	10"	55 lb	1′ - 11¼"	1′ - 1¾"	1⅜"	2"	⅛"	1¾"	60 lb
No. 6	12"	10"	70 lb	2′ - 6½"	1′ - 5½"	1⅜"	2"	⅛"	2"	85 lb

NOTES:

1. Pull box covers shall be marked as follows: "SERVICE" Service circuits between service point and service disconnect; "SPRINKLER-CONTROL" sprinkler control circuits, 50 V or less; "CALTRANS" on all pull boxes, except pull boxes marked "SPRINKLER-CONTROL"; and "TELEPHONE" Telephone service;
   - A) No. 3½ pull box.
     - 1) "SIGNAL" - Traffic signal circuits with or without lighting or sign lighting circuits.
     - 2) "LIGHTING" - Lighting or sign lighting circuits where voltage is under 600 V.
   - B) No. 5, 6, 9 or 9A pull box.
     - 1) "TRAFFIC SIGNAL" - Traffic signal circuits with or without lighting or sign lighting circuits.
     - 2) "LIGHTING" - Lighting or sign lighting circuits where voltage is under 600 V.
     - 3) "LIGHTING-HIGH VOLTAGE" - Lighting or sign lighting circuits where voltage is above 600 V.
     - 4) "IRRIGATION" - Circuits to irrigation controller 120 V or more.
     - 5) "RAMP METER" - Ramp meter circuits.
     - 6) "COUNT STATION" - Count or speed monitor circuits.
     - 7) "COMMUNICATIONS" - Communication circuits.
     - 8) "TOS COMMUNICATIONS" - TOS communication line.
     - 9) "TOS POWER" - TOS power.
     - 10) "TDC POWER" - Telephone demarcation cabinet power.
     - 11) "CCTV" - Closed circuit television circuits.
     - 12) "TMS" - Traffic monitoring station circuits.
     - 13) "CMS" - Changeable message sign circuits.
     - 14) "HAR" - Highway advisory radio circuits.
     - 15) "BOOSTER PUMP" - Booster pump circuit.
2. The nominal dimensions of the opening in which the cover sets shall be the same as the cover dimensions except the length and width dimensions shall be ⅛" greater.
3. Covers and boxes shall be interchangeable with California standard male and female gages. When interchanged with a standard male or female gage, the top surfaces shall be flush within ⅛". Top outside radius of covers and pull boxes shall have a ⅛" radius.
4. Pull box extension may be another pull box as long as the bottom edge of the pull box can fit into the cover opening.
5. All dimensions for the cover for non-traffic pull box are nominal values.

STATE OF CALIFORNIA
DEPARTMENT OF TRANSPORTATION

ELECTRICAL SYSTEMS (NON-TRAFFIC PULL BOX)

NO SCALE

RSP ES-8A DATED JULY 19, 2013 SUPERSEDES RSP ES-8A DATED JANUARY 20, 2012 THAT SUPPLEMENTS THE STANDARD PLANS BOOK DATED 2010.

REVISED STANDARD PLAN RSP ES-8A

2010 REVISED STANDARD PLAN RSP ES-8A

DATE PLOTTED => 28-MAY-2014
TIME PLOTTED => 15:02

Dist	COUNTY	ROUTE	POST MILES TOTAL PROJECT	SHEET No.	TOTAL SHEETS
02	Tri	299	12.3/12.9	94	149

Theresa Gabriel
REGISTERED ELECTRICAL ENGINEER

July 19, 2013
PLANS APPROVAL DATE

REGISTERED PROFESSIONAL ENGINEER
Theresa Aziz Gabriel
No. E15129
Exp. 6-30-14
ELECTRICAL
STATE OF CALIFORNIA

THE STATE OF CALIFORNIA OR ITS OFFICERS OR AGENTS SHALL NOT BE RESPONSIBLE FOR THE ACCURACY OR COMPLETENESS OF SCANNED COPIES OF THIS PLAN SHEET.

TO ACCOMPANY PLANS DATED 03-26-14

ISOFOOTCANDLE CURVE - MINIMUM

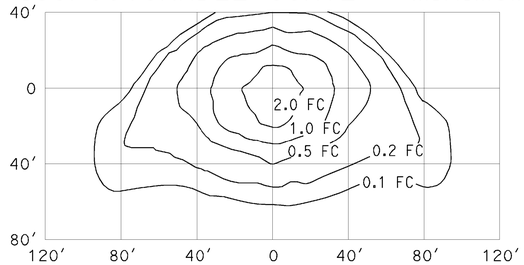

TYPE III MEDIUM CUTOFF

Cutoff Luminaire
34′ Mounting Height
Lamp operated at 22,000 lm
200-W high pressure sodium lamp
ANSI Designation S66

ISOFOOTCANDLE CURVE - MINIMUM

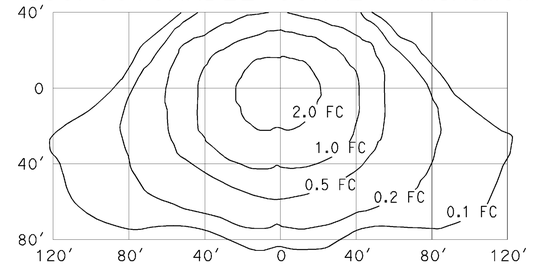

TYPE III MEDIUM CUTOFF

Cutoff Luminaire
40′ Mounting Height
Lamp operated at 37,000 lm
310-W high pressure sodium lamp
ANSI Designation S67

ISOFOOTCANDLE CURVE - MINIMUM

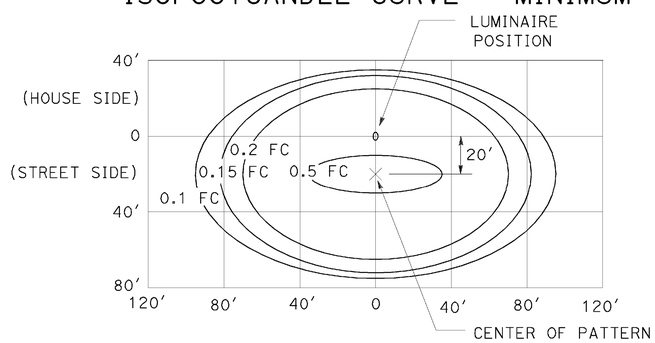

LED LUMINAIRE ROADWAY 1

165-W at 34′ Mounting Height

ISOFOOTCANDLE CURVE - MINIMUM

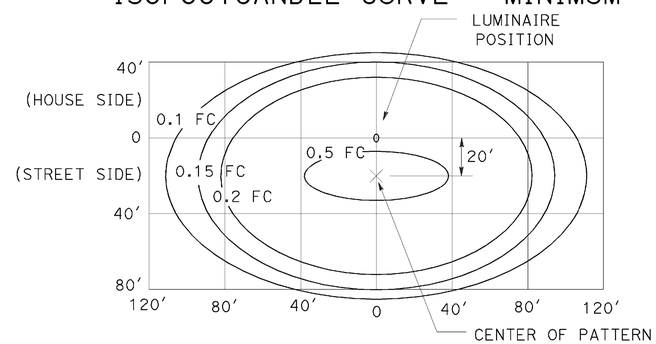

LED LUMINAIRE ROADWAY 2

235-W at 40′ Mounting Height

ISOFOOTCANDLE CURVE - MINIMUM

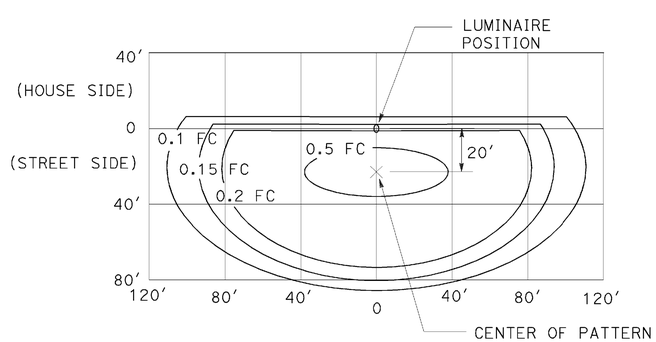

LED LUMINAIRE ROADWAY 3

235-W at 40′ Mounting Height
with back side control

ISOFOOTCANDLE CURVE - MINIMUM

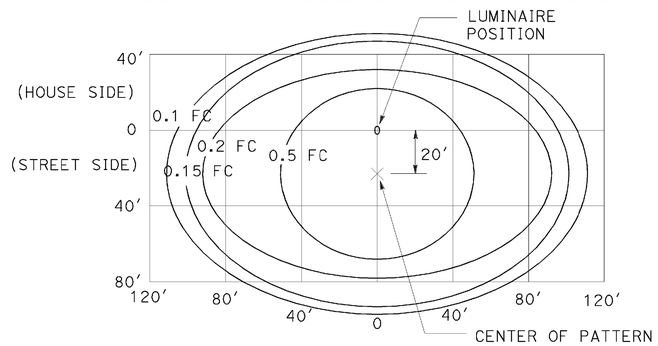

LED LUMINAIRE ROADWAY 4

300-W at 40′ Mounting Height

ISOFOOTCANDLE CURVE - MINIMUM

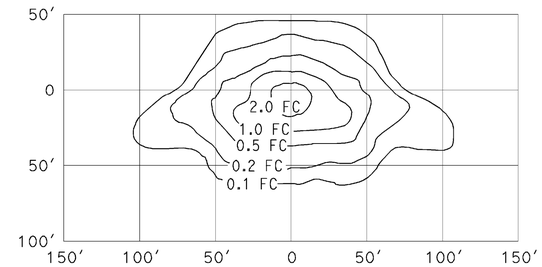

TYPE III MEDIUM CUTOFF

Cutoff Luminaire
30′ Mounting Height
Lamp operated at 16,000 lm
150-W high pressure sodium lamp
ANSI Designation S55

ISOFOOTCANDLE CURVE - MINIMUM

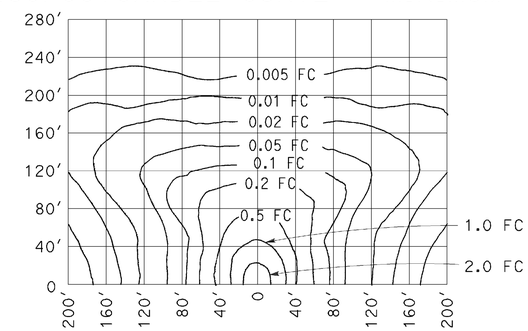

LOW PRESSURE SODIUM LUMINAIRE

40′ Mounting Height
Lamp operated at 33,000 lm
180-W low pressure sodium lamp

STATE OF CALIFORNIA
DEPARTMENT OF TRANSPORTATION

ELECTRICAL SYSTEMS (ISOFOOTCANDLE DIAGRAMS)

NO SCALE

RSP ES-10A DATED JULY 19, 2013 SUPERSEDES RSP ES-10A DATED JULY 20, 2012 THAT SUPPLEMENTS THE STANDARD PLANS BOOK DATED 2010.

REVISED STANDARD PLAN RSP ES-10A

2010 REVISED STANDARD PLAN RSP ES-10A

DATE PLOTTED => 28-MAY-2014
TIME PLOTTED => 15:02