Dist	COUNTY	ROUTE	POST MILES TOTAL PROJECT	SHEET No.	TOTAL SHEETS
02	Sha	44, 273, 299	Var	1	78

ACSTP-X089(104)E

STATE OF CALIFORNIA
DEPARTMENT OF TRANSPORTATION

PROJECT PLANS FOR CONSTRUCTION ON
STATE HIGHWAY
IN SHASTA COUNTY AT VARIOUS LOCATIONS

INDEX OF PLANS

SHEET No.	DESCRIPTION
1	TITLE AND LOCATION MAP
2-3	TYPICAL CROSS SECTIONS
4-6	LAYOUTS
7-14	CONSTRUCTION DETAILS
15-21	DRAINAGE PLANS, PROFILES, DETAILS AND QUANTITIES
22-23	UTILITY PLANS
24	CONSTRUCTION AREA SIGNS
25-29	STAGE CONSTRUCTION PLANS AND TRAFFIC HANDLING PLANS
30-31	DETOUR PLANS AND QUANTITIES
32-34	PAVEMENT DELINEATION PLANS AND QUANTITIES
35-46	SIGN PLANS, DETAILS AND QUANTITIES
47	SUMMARY OF QUANTITIES
48-53	ELECTRICAL PLANS
54-78	REVISED AND NEW STANDARD PLANS

THE STANDARD PLANS LIST APPLICABLE TO THIS CONTRACT IS INCLUDED IN THE NOTICE TO BIDDERS AND SPECIAL PROVISIONS BOOK.

TO BE SUPPLEMENTED BY STANDARD PLANS DATED MAY 2006

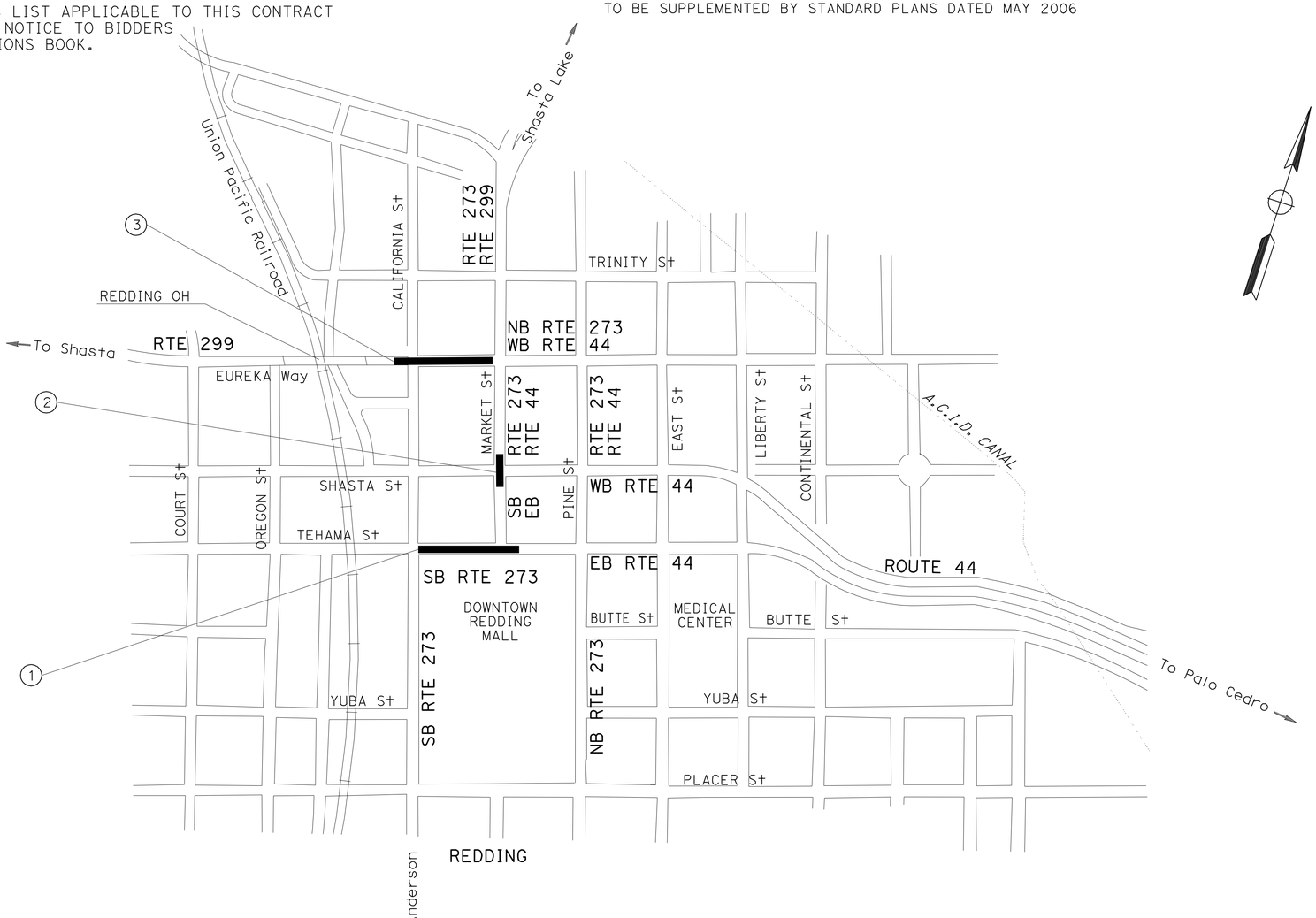

LOCATIONS OF CONSTRUCTION

No.	COUNTY	ROUTE	POST MILE
1	SHA	273/44	R16.7/R16.8
2	SHA	44	L0.98
3	SHA	299	24.02/24.09

THE CONTRACTOR SHALL POSSESS THE CLASS (OR CLASSES) OF LICENSE AS SPECIFIED IN THE "NOTICE TO BIDDERS."

NO SCALE

12-06-11
PROJECT ENGINEER REGISTERED CIVIL ENGINEER — DATE

February 6, 2012
PLANS APPROVAL DATE

REGISTERED PROFESSIONAL ENGINEER JAMES D. RASMUSSEN No. C76401 Exp. 12-31-12 CIVIL STATE OF CALIFORNIA

THE STATE OF CALIFORNIA OR ITS OFFICERS OR AGENTS SHALL NOT BE RESPONSIBLE FOR THE ACCURACY OR COMPLETENESS OF SCANNED COPIES OF THIS PLAN SHEET.

CONTRACT No.	02-3E6004
PROJECT ID	0200020046

LAST REVISION 12-07-11
DATE PLOTTED => 07-MAR-2012
TIME PLOTTED => 06:00

PROJECT MANAGER: PHIL BAKER
DESIGN ENGINEER: JOHN L. MARTIN

P:\proj1\02\3E600_plans\pse\0200020046db001.dgn

Dist	COUNTY	ROUTE	POST MILES TOTAL PROJECT	SHEET No.	TOTAL SHEETS
02	Sha	44, 273, 299	Var	2	78

REGISTERED CIVIL ENGINEER 12-06-11 DATE

2-6-12
PLANS APPROVAL DATE

REGISTERED PROFESSIONAL ENGINEER JAMES D. RASMUSSEN No. C76401 Exp. 12-31-12 CIVIL STATE OF CALIFORNIA

THE STATE OF CALIFORNIA OR ITS OFFICERS OR AGENTS SHALL NOT BE RESPONSIBLE FOR THE ACCURACY OR COMPLETENESS OF SCANNED COPIES OF THIS PLAN SHEET.

NOTES:

1. DIMENSIONS OF THE PAVEMENT STRUCTURES (STRUCTURAL SECTIONS) ARE SUBJECT TO TOLERANCES SPECIFIED IN THE STANDARD SPECIFICATIONS.
2. SUPERELEVATION AS SHOWN OR AS DIRECTED BY THE ENGINEER.
3. EXACT LOCATIONS AND TYPES OF CURBS, GUTTER, AND SIDEWALKS ARE SHOWN ON THE LAYOUTS, CONSTRUCTION DETAILS, AND THE SUMMARY OF QUANTITIES SHEETS.
4. FOR DETAILS ON MINOR CONCRETE (CURB), SEE CONSTRUCTION DETAILS SHEET C-2.

ABBREVIATIONS:

SC SAWCUT
TCE TEMPORARY CONSTRUCTION EASEMENT

DESIGN DESIGNATION

SHA 44 PM L0/0.18

AADT	2012	32,000
AADT	2032	34,000
DHV	2032	5,800
D	63%	
T	3%	

SHA 273 PM 16.73/16.8

AADT	2012	17,400
AADT	2032	21,900
DHV	2032	2,800
D	55%	
T	2%	

SHA 299 PM 24/24.088

AADT	2012	20,400
AADT	2032	25,500
DHV	2032	2,300
D	53%	
T	3%	

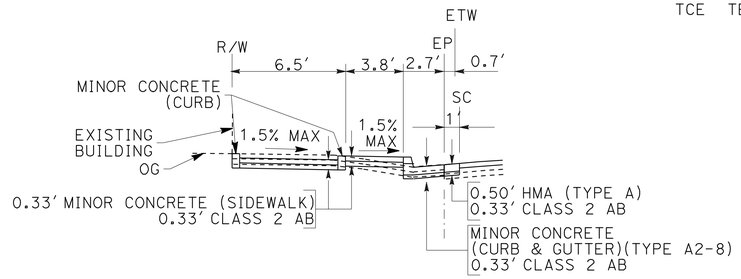

"T" 20+09.9 TO "T" 20+34.6

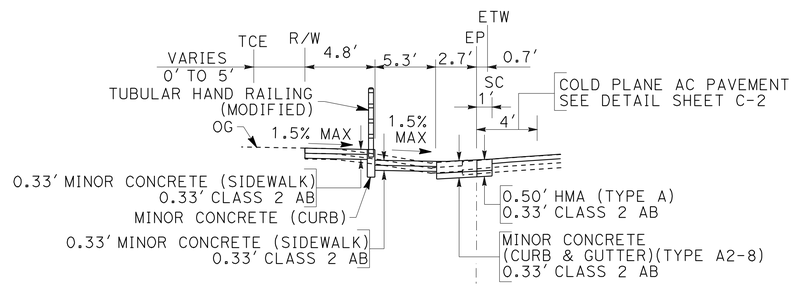

"T" 19+21.3 TO "T" 19+62.8

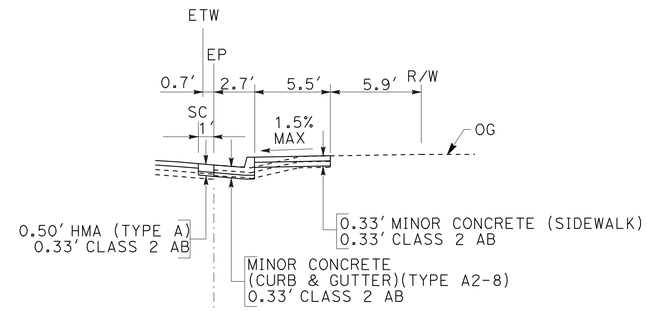

"T" 20+13.7 TO "T" 20+26.6

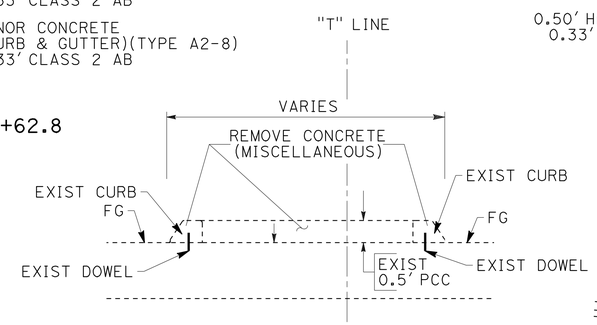

"T" 19+63.0 TO "T" 19+96.2

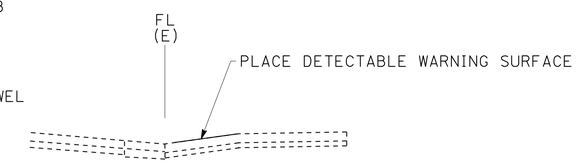

"T" 19+60.4 TO "T" 19+66.9

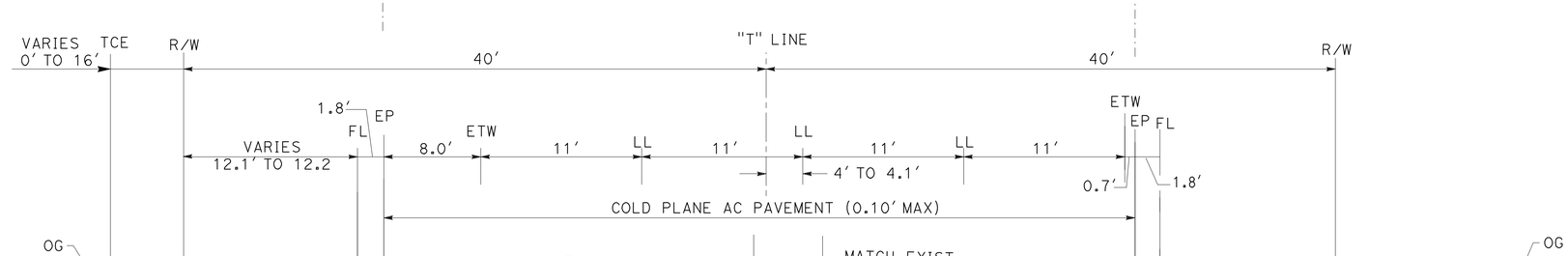

ROUTE 273 - TEHAMA STREET

"T" 16+44.6 TO "T" 20+26.6

TYPICAL CROSS SECTIONS

NO SCALE

X-1

REVISED BY | DATE REVISED
JOLENA ASTIN | JAMES D. RASMUSSEN
CALCULATED-DESIGNED BY | CHECKED BY
FUNCTIONAL SUPERVISOR: JOHN L. MARTIN

STATE OF CALIFORNIA - DEPARTMENT OF TRANSPORTATION
Caltrans
DESIGN

P:\proj\02\3E600_plans\pse\02000200046ca001.dgn

LAST REVISION 10-23-11 | DATE PLOTTED => 08-FEB-2012 | TIME PLOTTED => 11:17

Dist	COUNTY	ROUTE	POST MILES TOTAL PROJECT	SHEET No.	TOTAL SHEETS
02	Sha	44,273, 299	Var	3	78

REGISTERED CIVIL ENGINEER 12-06-11 DATE

2-6-12
PLANS APPROVAL DATE

REGISTERED PROFESSIONAL ENGINEER JAMES D. RASMUSSEN No. C76401 Exp. 12-31-12 CIVIL STATE OF CALIFORNIA

THE STATE OF CALIFORNIA OR ITS OFFICERS OR AGENTS SHALL NOT BE RESPONSIBLE FOR THE ACCURACY OR COMPLETENESS OF SCANNED COPIES OF THIS PLAN SHEET.

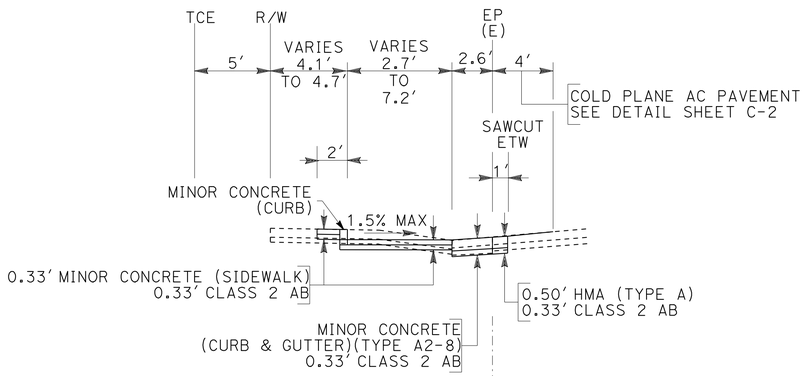

"M" 14+01.6 TO "M" 14+28.2

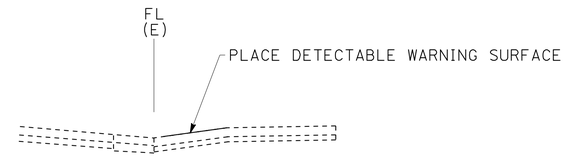

"M" 14+07.0 TO "M" 14+11.9

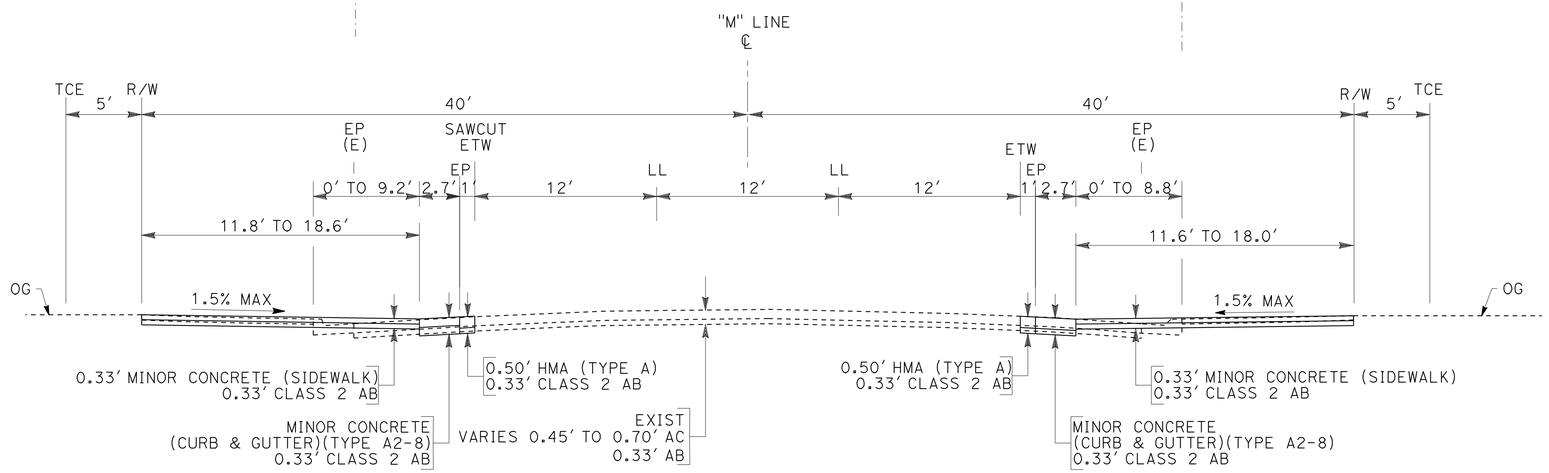

ROUTE 44 - MARKET STREET

"M" 13+30.7 TO "M" 13+61.4

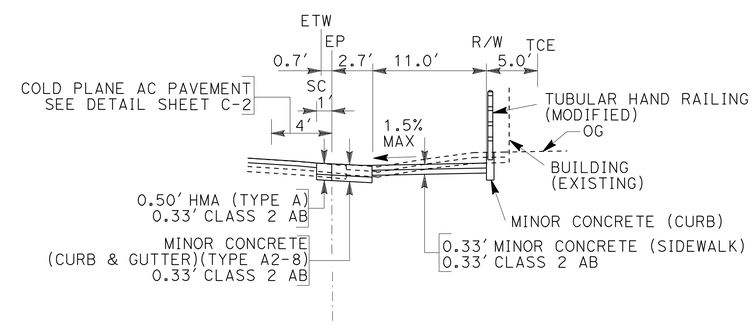

"M" 10+39.34 TO "M" 10+50.34

TYPICAL CROSS SECTIONS

NO SCALE

X-2

REVISED BY	DATE REVISED

CALCULATED-DESIGNED BY	CHECKED BY
JOLENA ASTIN	JAMES D. RASMUSSEN

FUNCTIONAL SUPERVISOR: JOHN L. MARTIN

STATE OF CALIFORNIA - DEPARTMENT OF TRANSPORTATION
Caltrans
DESIGN

P:\proj1\02\3E600_plans\pse\resubmit 01-19-12\0200020046ca002.dgn

LAST REVISION 10-23-11 | DATE PLOTTED => 07-FEB-2012 | TIME PLOTTED => 14:05

Dist	COUNTY	ROUTE	POST MILES TOTAL PROJECT	SHEET No.	TOTAL SHEETS
02	Sha	44,273, 299	Var	4	78

REGISTERED CIVIL ENGINEER 12-06-11 DATE

2-6-12
PLANS APPROVAL DATE

REGISTERED PROFESSIONAL ENGINEER JAMES D. RASMUSSEN No. C76401 Exp. 12-31-12 CIVIL STATE OF CALIFORNIA

THE STATE OF CALIFORNIA OR ITS OFFICERS OR AGENTS SHALL NOT BE RESPONSIBLE FOR THE ACCURACY OR COMPLETENESS OF SCANNED COPIES OF THIS PLAN SHEET.

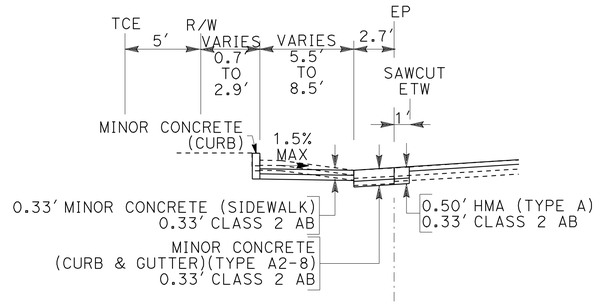

"E" 12+90.1 TO "E" 13+15.2

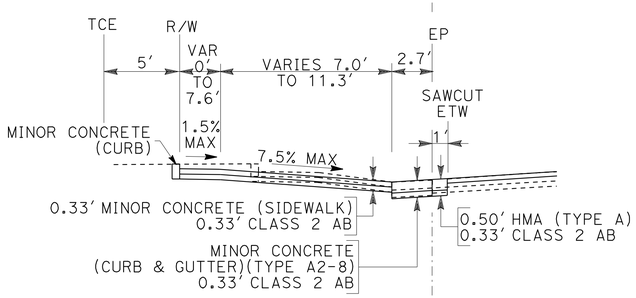

"E" 12+14.0 TO "E" 12+41.2

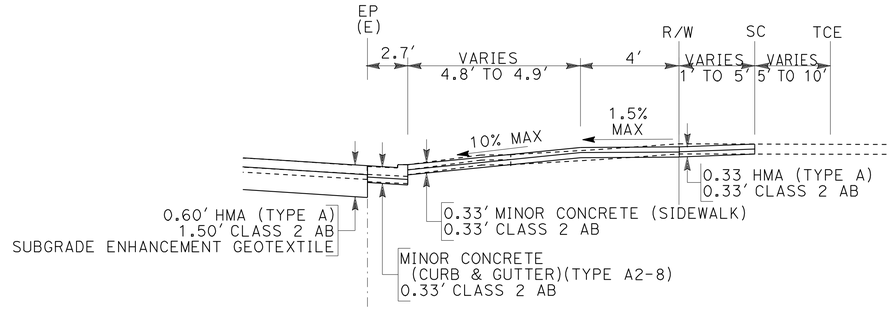

"E" 14+39.4 TO "E" 14+70.8
"E" 14+79.7 TO "E" 15+13.3

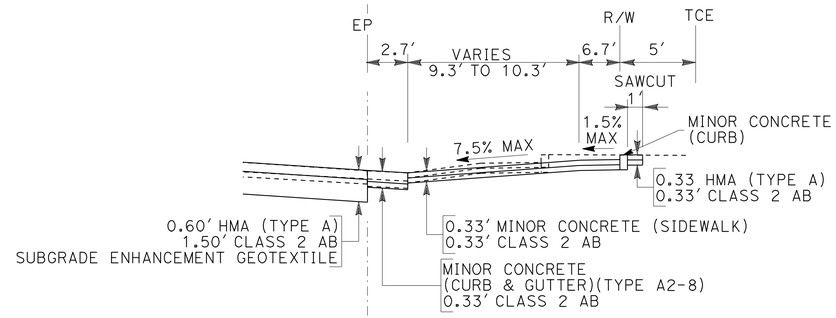

"E" 12+90.5 TO "E" 13+06.3

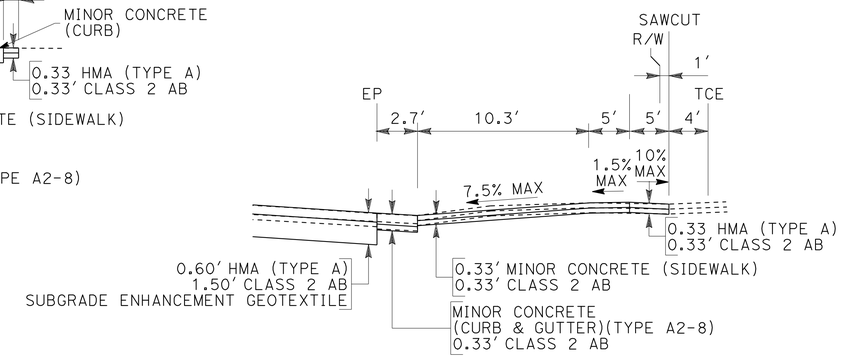

"E" 11+96.5 TO "E" 12+37.6

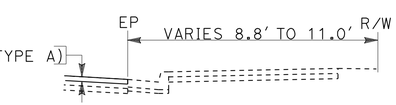

"E" 10+84.0 TO "E" 12+17.5
"E" 15+13.3 TO "E" 15+98.1

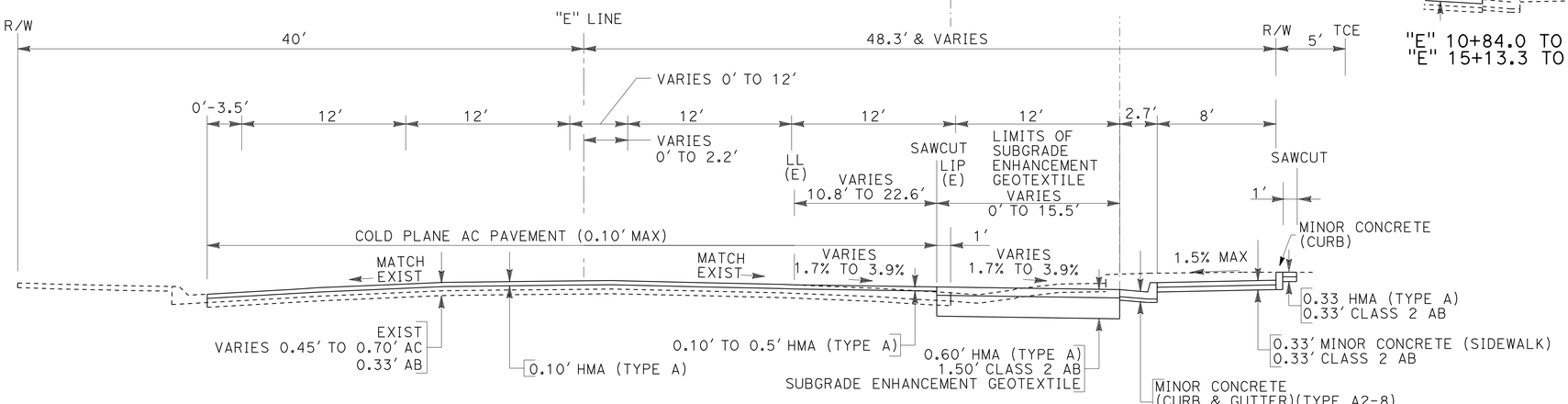

ROUTE 299 - EUREKA WAY

"E" 10+27.0 TO "E" 15+98.1

TYPICAL CROSS SECTIONS

NO SCALE

X-3

STATE OF CALIFORNIA - DEPARTMENT OF TRANSPORTATION

DESIGN

Caltrans

FUNCTIONAL SUPERVISOR: JOHN L. MARTIN

CALCULATED-DESIGNED BY: JOLENA ASTIN

CHECKED BY: JAMES D. RASMUSSEN

REVISED BY

DATE REVISED

P:\proj1\02\3E600_plans\pse\0200020046ca003.dgn

LAST REVISION 10-23-11

DATE PLOTTED => 08-FEB-2012
TIME PLOTTED => 11:17

Dist	COUNTY	ROUTE	POST MILES TOTAL PROJECT	SHEET No.	TOTAL SHEETS
02	Sha	44,273, 299	Var	5	78

REGISTERED CIVIL ENGINEER 12-06-11 DATE

2-6-12
PLANS APPROVAL DATE

REGISTERED PROFESSIONAL ENGINEER JAMES D. RASMUSSEN No. C76401 Exp. 12-31-12 CIVIL STATE OF CALIFORNIA

THE STATE OF CALIFORNIA OR ITS OFFICERS OR AGENTS SHALL NOT BE RESPONSIBLE FOR THE ACCURACY OR COMPLETENESS OF SCANNED COPIES OF THIS PLAN SHEET.

NOTES:

1. FOR ACCURATE RIGHT OF WAY DATA, CONTACT RIGHT OF WAY ENGINEERING AT THE DISTRICT OFFICE.
2. SEE SHEET C-2 FOR CROSSWALK CONFORM

LEGEND:

COLD PLANE — COLD PLANE ASPHALT CONCRETE PAVEMENT

CROSSWALK CONFORM

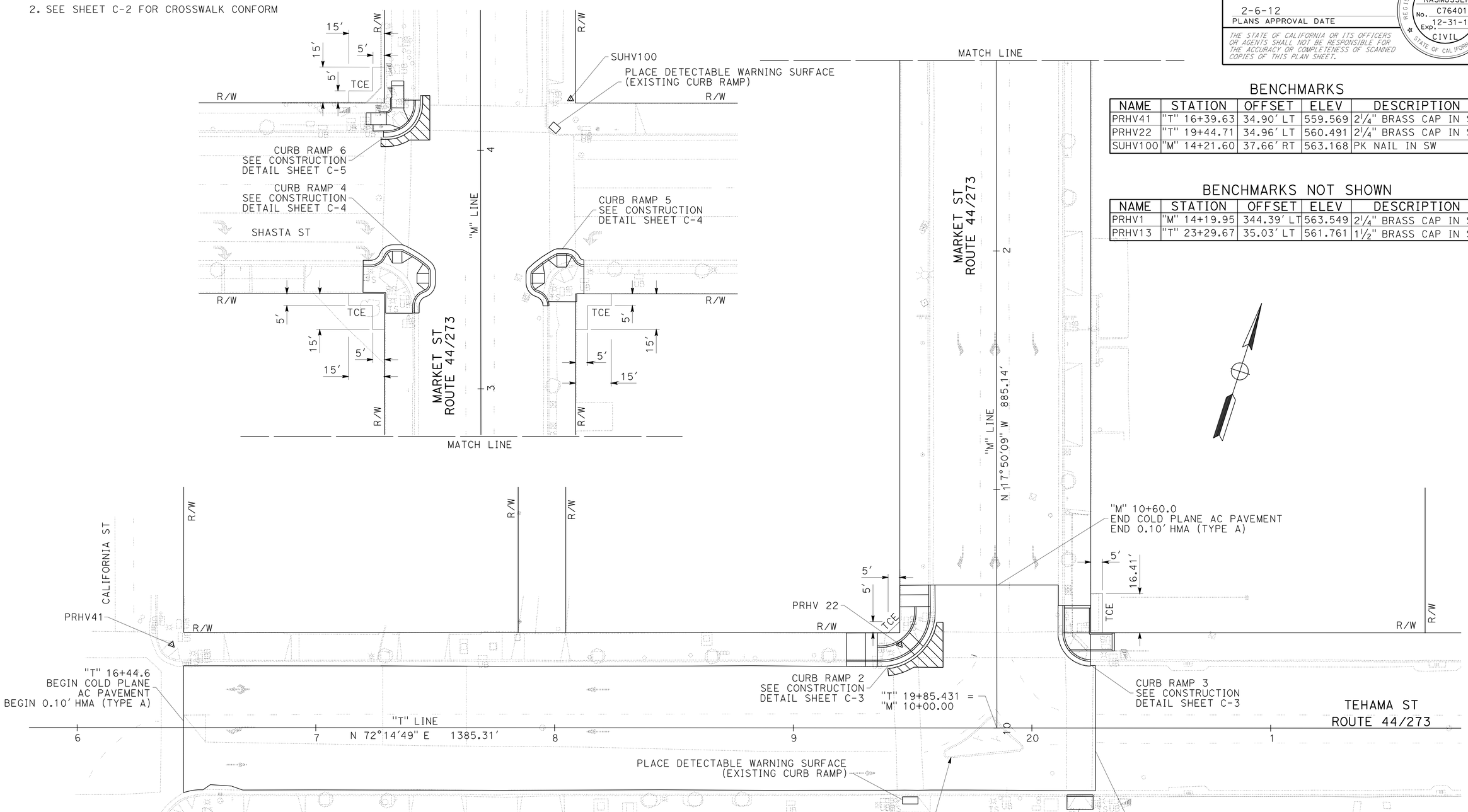

BENCHMARKS

NAME	STATION	OFFSET	ELEV	DESCRIPTION
PRHV41	"T" 16+39.63	34.90′ LT	559.569	2¼" BRASS CAP IN SW
PRHV22	"T" 19+44.71	34.96′ LT	560.491	2¼" BRASS CAP IN SW
SUHV100	"M" 14+21.60	37.66′ RT	563.168	PK NAIL IN SW

BENCHMARKS NOT SHOWN

NAME	STATION	OFFSET	ELEV	DESCRIPTION
PRHV1	"M" 14+19.95	344.39′ LT	563.549	2¼" BRASS CAP IN SW
PRHV13	"T" 23+29.67	35.03′ LT	561.761	1½" BRASS CAP IN SW

LAYOUT

SCALE: 1" = 20′

L-1

REVISED BY | DATE REVISED
BETH A. ELMORE | JAMES D. RASMUSSEN
CALCULATED-DESIGNED BY | CHECKED BY
FUNCTIONAL SUPERVISOR: JOHN L. MARTIN

STATE OF CALIFORNIA - DEPARTMENT OF TRANSPORTATION
Caltrans® DESIGN

P:\proj1\02\3E600_plans\pse\02000200046ea001.dgn

LAST REVISION | DATE PLOTTED => 07-FEB-2012 | TIME PLOTTED => 14:05
09-06-11

Dist	COUNTY	ROUTE	POST MILES TOTAL PROJECT	SHEET No.	TOTAL SHEETS
02	Sha	44,273, 299	Var	6	78

REGISTERED CIVIL ENGINEER 12-06-11 DATE

2-6-12
PLANS APPROVAL DATE

REGISTERED PROFESSIONAL ENGINEER JAMES D. RASMUSSEN No. C76401 Exp. 12-31-12 CIVIL STATE OF CALIFORNIA

THE STATE OF CALIFORNIA OR ITS OFFICERS OR AGENTS SHALL NOT BE RESPONSIBLE FOR THE ACCURACY OR COMPLETENESS OF SCANNED COPIES OF THIS PLAN SHEET.

NOTES:

1. FOR ACCURATE RIGHT OF WAY DATA, CONTACT RIGHT OF WAY ENGINEERING AT THE DISTRICT OFFICE.

BENCHMARKS

NAME	STATION	OFFSET	ELEV	DESCRIPTION
SUHV2402	"E" 13+00.13	35.08' RT	565.022	1½" BRASS DISK IN SW
SUHV1000	"E" 14+78.27	32.02' LT	565.084	PK NAIL IN SW

BENCHMARKS NOT SHOWN

NAME	STATION	OFFSET	ELEV	DESCRIPTION
SUHV21	"M" 18+49.80	35.26' RT	564.408	2¼" BRASS CAP IN SW

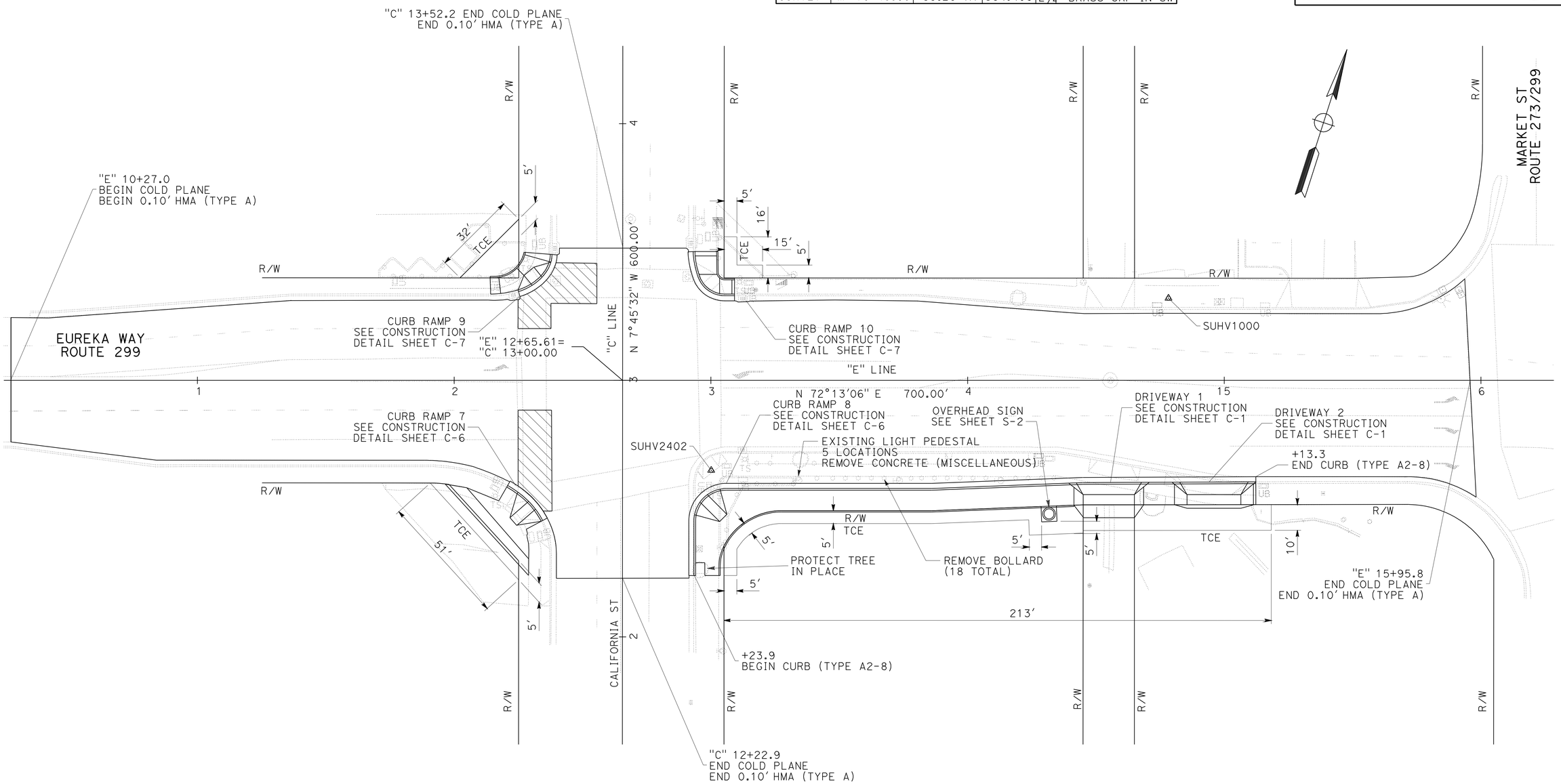

LAYOUT

SCALE: 1" = 20'

L-2

REVISED BY	DATE REVISED
BETH A. ELMORE	JAMES D. RASMUSSEN

CALCULATED-DESIGNED BY | CHECKED BY

FUNCTIONAL SUPERVISOR: JOHN L. MARTIN

STATE OF CALIFORNIA - DEPARTMENT OF TRANSPORTATION

Caltrans® **DESIGN**

P:\proj\02\3E600_plans\pse\02000200046ea002.dgn

LAST REVISION 10-24-11 | DATE PLOTTED => 07-FEB-2012 | TIME PLOTTED => 14:05

BORDER LAST REVISED 7/2/2010 | USERNAME => s114937 | DGN FILE => 0200020046ea002.dgn | RELATIVE BORDER SCALE IS IN INCHES 0 1 2 3 | UNIT 0315 | PROJECT NUMBER & PHASE 02000200461

Dist	COUNTY	ROUTE	POST MILES TOTAL PROJECT	SHEET No.	TOTAL SHEETS
02	Sha	44,273, 299	Var	7	78

12-06-11
REGISTERED CIVIL ENGINEER DATE

2-6-12
PLANS APPROVAL DATE

REGISTERED PROFESSIONAL ENGINEER
JAMES D. RASMUSSEN
No. C76401
Exp. 12-31-12
CIVIL
STATE OF CALIFORNIA

THE STATE OF CALIFORNIA OR ITS OFFICERS OR AGENTS SHALL NOT BE RESPONSIBLE FOR THE ACCURACY OR COMPLETENESS OF SCANNED COPIES OF THIS PLAN SHEET.

NOTE:

1. SEE REVISED STANDARD PLAN RSP A87A FOR DETAILS NOT SHOWN.
2. ELEVATIONS ARE AT GUTTER LIP

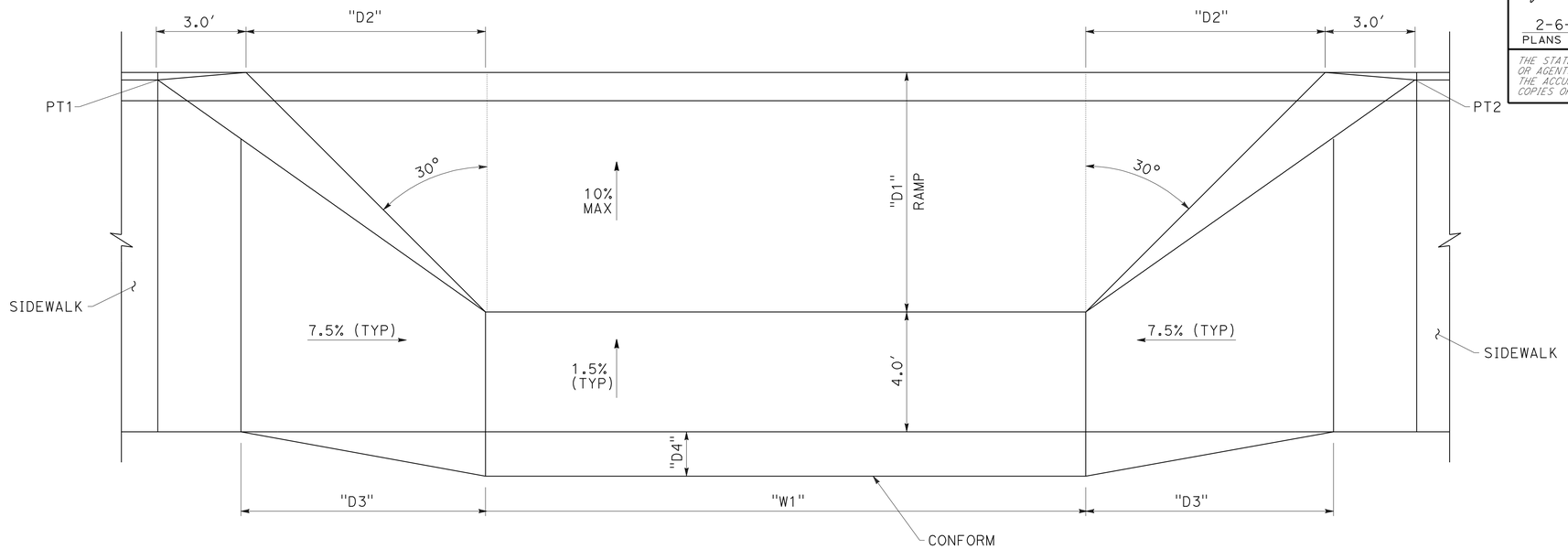

PLAN

DRIVEWAY DATA

DRIVEWAY	PT1 STATION, OFFSET	PT2 STATION, OFFSET	"W1" (FT)	"D1" (FT)	"D2" (FT)	"D3" (FT)	"D4" (FT)
1	"E" 14+39.4, 40.1' RT	"E" 14+70.8, 39.7' RT	20.0	4.8	2.6	3.6	5'
2	"E" 14+79.7, 39.7' RT	"E" 15+12.3, 39.6' RT	21.0	4.9	2.8	4.9	1.4'

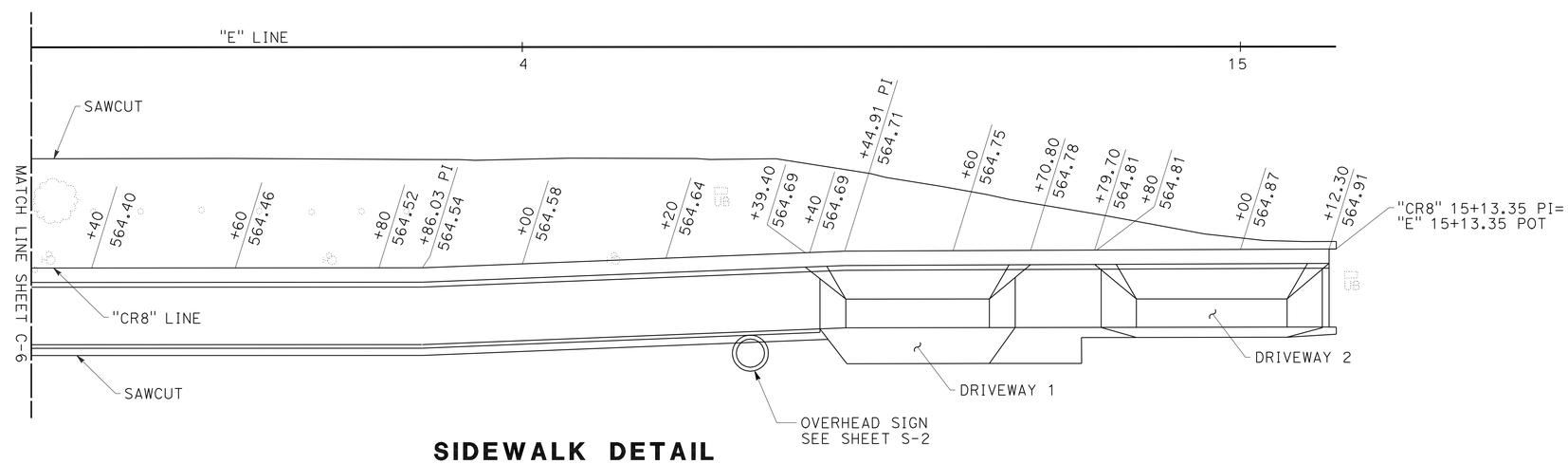

SIDEWALK DETAIL

STATION "CR8" 13+25.53TO STATION "CR8" 15+13.35

CONSTRUCTION DETAILS

NO SCALE

C-1

REVISED BY | DATE REVISED
TRAVIS A. GURNEY | JAMES D. RASMUSSEN
CALCULATED-DESIGNED BY | CHECKED BY
FUNCTIONAL SUPERVISOR
JOHN L. MARTIN

STATE OF CALIFORNIA - DEPARTMENT OF TRANSPORTATION
Caltrans
DESIGN

P:\proj1\02\3E600_plans\pse\02000200046ga001.dgn

LAST REVISION 11-03-11 | DATE PLOTTED => 07-FEB-2012 | TIME PLOTTED => 14:06

Dist	COUNTY	ROUTE	POST MILES TOTAL PROJECT	SHEET No.	TOTAL SHEETS
02	Sha	44,273, 299	Var	8	78

REGISTERED CIVIL ENGINEER 12-06-11 DATE

2-6-12
PLANS APPROVAL DATE

REGISTERED PROFESSIONAL ENGINEER JAMES D. RASMUSSEN No. C76401 Exp. 12-31-12 CIVIL STATE OF CALIFORNIA

THE STATE OF CALIFORNIA OR ITS OFFICERS OR AGENTS SHALL NOT BE RESPONSIBLE FOR THE ACCURACY OR COMPLETENESS OF SCANNED COPIES OF THIS PLAN SHEET.

NOTE:

1. SEE LAYOUT SHEETS AND CONSTRUCTION DETAIL SHEETS FOR LIMITS OF COLD PLANE ASPHALT CONCRETE AT CROSSWALKS.

CURB WIDTH

CURB RAMP	W
CR2	8"
CR3	6" & 8"
CR6	6"
CR8	6"
CR9	6"
CR10	6"

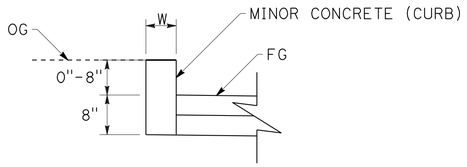

MINOR CONCRETE CURB DETAIL

TEHAMA ST
ROUTE 44/273

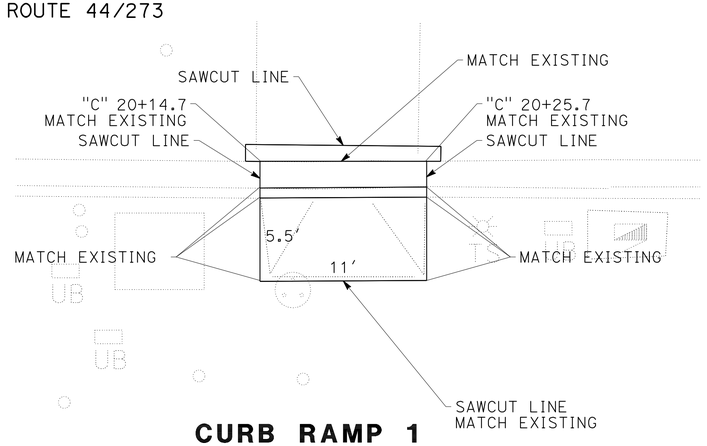

CURB RAMP 1

"T" 20+37 TO 20+66

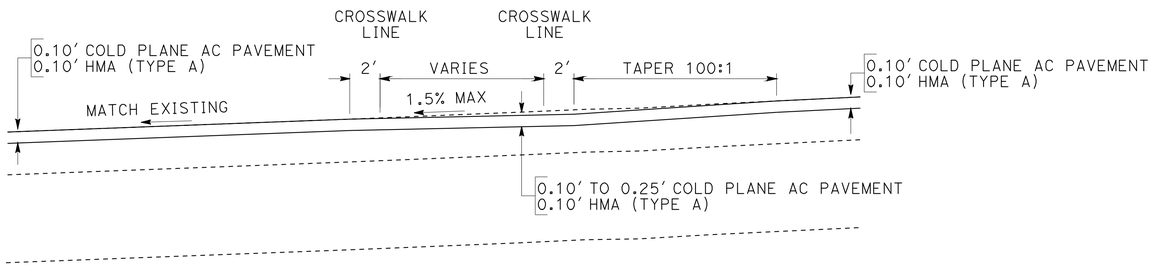

DETAIL A

CROSSWALK CONFORM FOR
CURB RAMPS 2, 7, & 9

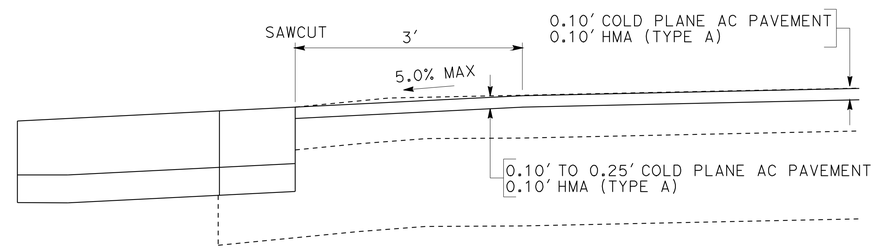

DETAIL B

CROSSWALK CONFORM FOR
CURB RAMP 2

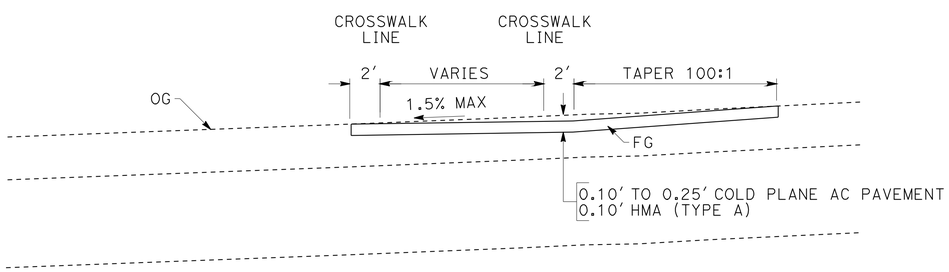

DETAIL C

CROSSWALK CONFORM FOR
CURB RAMP 6

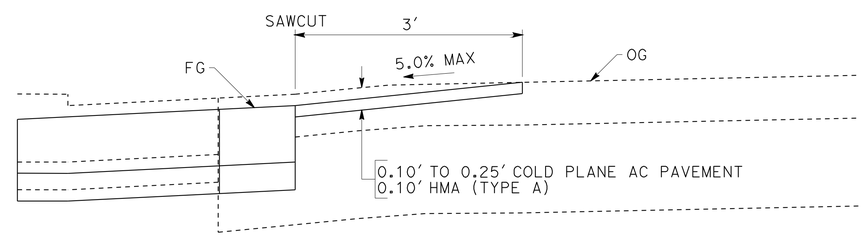

DETAIL D

CROSSWALK CONFORM FOR
CURB RAMP 6

CONSTRUCTION DETAILS

NO SCALE

C-2

REVISED BY	DATE REVISED

CALCULATED-DESIGNED BY: BETH A. ELMORE
CHECKED BY: JAMES D. RASMUSSEN
FUNCTIONAL SUPERVISOR: JOHN L. MARTIN

STATE OF CALIFORNIA - DEPARTMENT OF TRANSPORTATION
Caltrans
DESIGN

P:\proj\02\3E600_plans\pse\0200020046ga002.dgn

LAST REVISION 11-23-11
DATE PLOTTED => 10-FEB-2012
TIME PLOTTED => 08:05

Dist	COUNTY	ROUTE	POST MILES TOTAL PROJECT	SHEET No.	TOTAL SHEETS
02	Sha	44,273, 299	Var	9	78

REGISTERED CIVIL ENGINEER 12-06-11 DATE

2-6-12
PLANS APPROVAL DATE

REGISTERED PROFESSIONAL ENGINEER JAMES D. RASMUSSEN No. C76401 Exp. 12-31-12 CIVIL STATE OF CALIFORNIA

THE STATE OF CALIFORNIA OR ITS OFFICERS OR AGENTS SHALL NOT BE RESPONSIBLE FOR THE ACCURACY OR COMPLETENESS OF SCANNED COPIES OF THIS PLAN SHEET.

NOTE:

1. DETECTABLE WARNING SURFACE AND CURB RAMP OUTLINE GROOVING NOT SHOWN. SEE STANDARD PLAN RSP A88A FOR DETAILS.
2. SEE UTILITY PLAN SHEETS FOR UTILITY WORK.

TYPICAL PAVEMENT STRUCTURAL SECTION

A — MINOR CONCRETE (CURB AND GUTTER) (TYPE A2-8) / 0.33′ CLASS 2 AB

B — 0.33′ MINOR CONCRETE (SIDEWALK) / 0.33 CLASS 2 AB

C — 0.50′ HMA (TYPE A) / 0.33 CLASS 2 AB

D — 0.33′ HMA (TYPE A) / 0.33 CLASS 2 AB

E — 0.60′ HMA (TYPE A) / 0.33′ CLASS 2 AB / SUBGRADE ENHANCEMENT GEOTEXTILE

RAMP DATA

No. #	STATION	OFFSET	TC	FL/FG
1	"CR2" 10+53.00	8.00′ LT	560.39′	560.39′
2	"CR2" 10+69.44	8.00′ LT	560.87′	559.82′
3	"CR2" 10+74.63	8.00′ LT	560.88′	559.79′
4	"CR2" 10+47.96	14.10′ LT		560.49′
5	"CR2" 10+53.00	13.97′ LT		560.49′
6	"CR2" 10+61.99	13.67′ LT		560.85′
7	"CR2" 10+59.26	8.67′ LT	560.80′	560.41′
8	"CR2" 10+71.17	11.11′ LT		560.85′
9	"CR2" 10+79.87	13.95′ LT		560.85′
10	"CR2" 10+83.93	8.67′ LT	560.50′	560.81′
11	"CR2" 10+93.00	14.78′ LT		560.72′
12	"CR2" 10+98.00	14.73′ LT		560.72′
13	"CR3" 10+93.00	8.00′ LT	560.61′	560.61′
14	"CR3" 9+99.55	2.70′ LT		560.95′
15	"CR3" 9+99.55	13.17′ LT	561.13′	561.13′
16	"CR3" 10+09.95	13.16′ LT	561.15′	560.52′
17	"CR3" 10+31.51	13.65′ LT	561.15′	560.51′
18	"CR3" 10+40.59	13.40′ LT	560.86′	560.86′
19	"CR3" 10+40.59	6.93′ LT	560.84′	560.84′
20	"CR3" 10+20.18	2.70′ LT	560.87′	

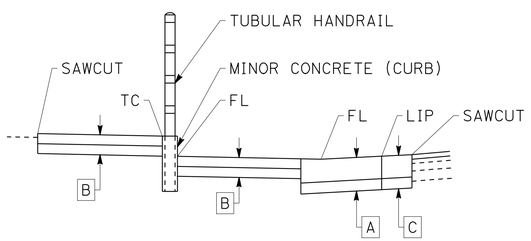

SECTION A-A

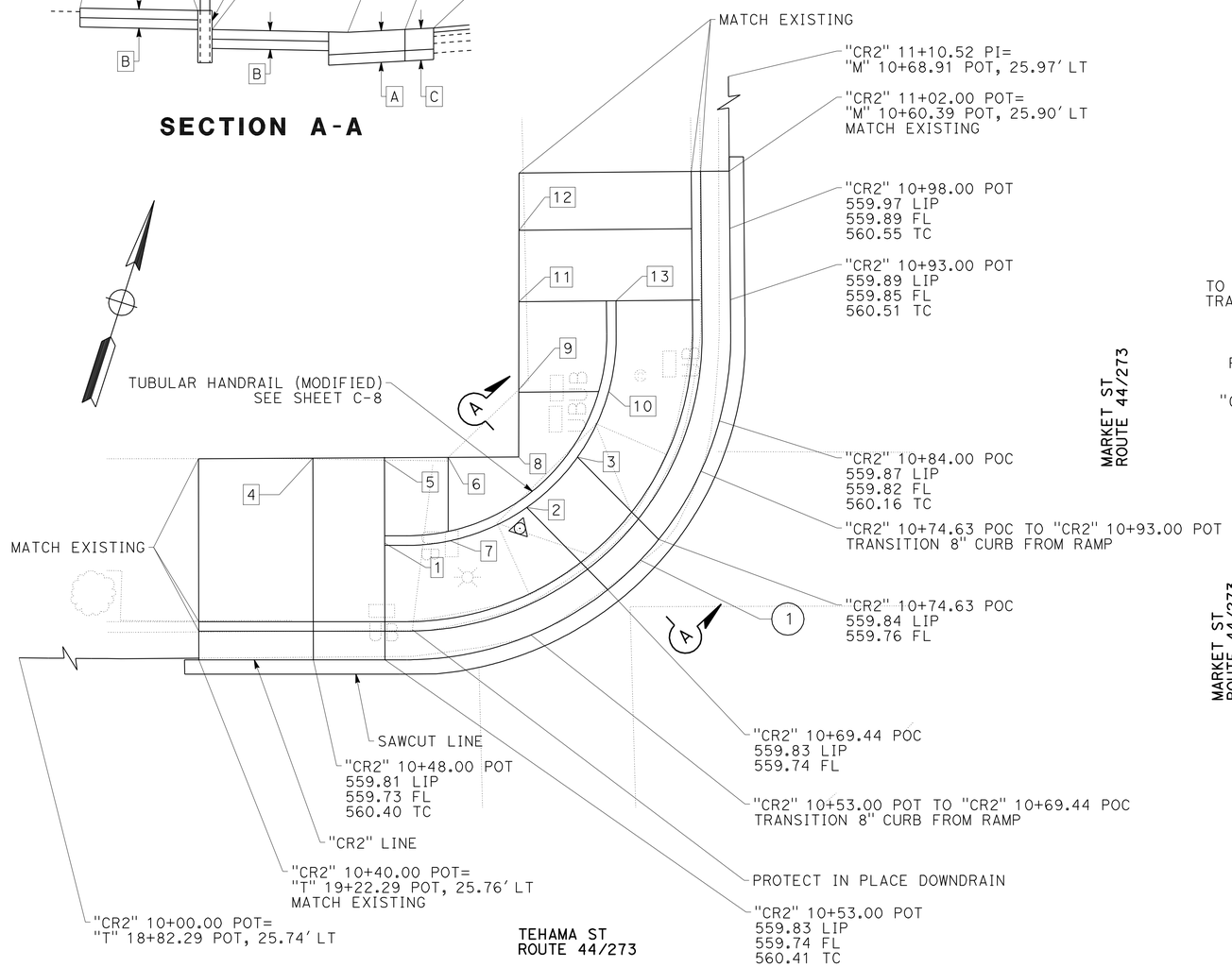

CURB RAMP 2
CASE C

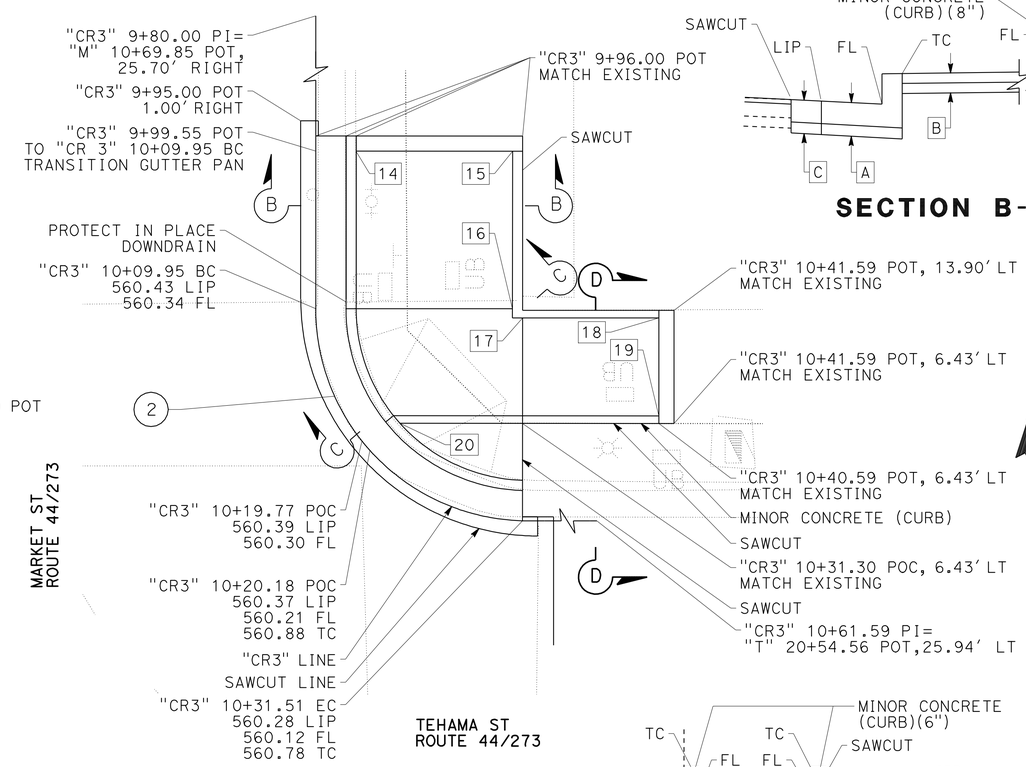

CURB RAMP 3
CASE C

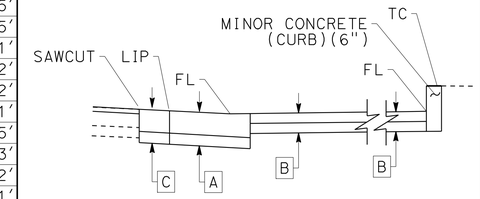

SECTION C-C

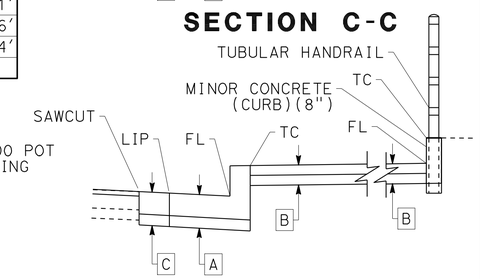

SECTION B-B

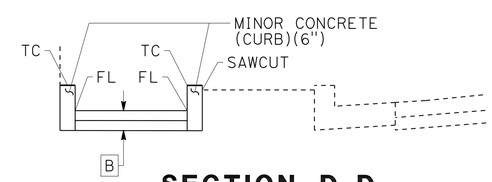

SECTION D-D

CURVE DATA

No. ⊕	R	Δ	T	L	BC STATION	EC STATION
1	22.67′	90°23′18"	22.82′	35.76′	"CR2" 10+54.55	"CR2" 10+90.31
2	14.00′	90°00′00"	14.00′	21.99′	"CR3" 10+09.95	"CR3" 10+31.94

CONSTRUCTION DETAILS

NO SCALE

C-3

STATE OF CALIFORNIA - DEPARTMENT OF TRANSPORTATION
DESIGN
Caltrans

FUNCTIONAL SUPERVISOR: JOHN L. MARTIN
CALCULATED-DESIGNED BY: BETH A. ELMORE
CHECKED BY: JAMES D. RASMUSSEN
REVISED BY / DATE REVISED

P:\proj\02\3E600_plans\pse\resubmit 01-19-12\0200020046ga003.dgn

LAST REVISION 11-21-11 | DATE PLOTTED => 07-FEB-2012 | TIME PLOTTED => 14:06

Dist	COUNTY	ROUTE	POST MILES TOTAL PROJECT	SHEET No.	TOTAL SHEETS
02	Sha	44,273, 299	Var	10	78

REGISTERED CIVIL ENGINEER 12-06-11 DATE

2-6-12
PLANS APPROVAL DATE

REGISTERED PROFESSIONAL ENGINEER JAMES D. RASMUSSEN No. C76401 Exp. 12-31-12 CIVIL STATE OF CALIFORNIA

THE STATE OF CALIFORNIA OR ITS OFFICERS OR AGENTS SHALL NOT BE RESPONSIBLE FOR THE ACCURACY OR COMPLETENESS OF SCANNED COPIES OF THIS PLAN SHEET.

CURVE DATA

No. #	R	Δ	T	L	BC STATION	EC STATION
5	4.00′	69°30′18"	2.78′	4.85′	"CR4" 10+03.17	"CR4" 10+08.02
6	6.00′	69°14′37"	4.14′	7.25′	"CR4" 10+08.02	"CR4" 10+15.28
7	4.00′	25°01′20"	0.89′	1.75′	"CR4" 10+18.56	"CR4" 10+20.30
8	47.81′	15°06′43"	6.34′	12.61′	"CR4" 10+20.30	"CR4" 10+32.91
9	6.00′	50°01′30"	2.80′	5.24′	"CR4" 10+32.91	"CR4" 10+38.15
10	6.00′	71°13′32"	4.30′	7.46′	"CR4" 10+42.53	"CR4" 10+49.98
11	4.00′	71°13′26"	2.86′	4.97′	"CR4" 10+49.98	"CR4" 10+54.96
12	4.00′	73°03′26"	2.96′	5.10′	"CR5" 10+00.05	"CR5" 10+05.15
13	6.00′	73°01′06"	4.44′	7.65′	"CR5" 10+05.15	"CR5" 10+12.80
14	4.00′	46°56′05"	1.74′	3.28′	"CR5" 10+16.39	"CR5" 10+19.67
15	47.47′	15°17′32"	6.37′	12.67′	"CR5" 10+19.67	"CR5" 10+32.34
16	4.00′	27°48′14"	0.99′	1.94′	"CR5" 10+32.34	"CR5" 10+34.28
17	6.00′	65°09′22"	3.83′	6.82′	"CR5" 10+37.79	"CR5" 10+44.61
18	2.00′	65°07′43"	1.28′	2.27′	"CR5" 10+44.61	"CR5" 10+46.89

RAMP DATA

No. #	STATION	OFFSET	FG
1	"CR4" 10+07.39	6.46′ RT	563.09′
2	"CR4" 10+22.59	7.09′ RT	563.09′
3	"CR4" 10+31.69	7.34′ RT	563.09′
4	"CR4" 10+42.52	7.67′ RT	563.09′
5	"CR5" 10+12.94	7.67′ RT	563.34′
6	"CR5" 10+22.97	6.14′ RT	563.40′
7	"CR5" 10+29.77	6.96′ RT	563.35′
8	"CR5" 10+37.74	7.67′ RT	563.29′
9	"CR5" 10+00.76	5.84′ RT	563.38′
10	"CR5" 10+00.43	14.16′ RT	563.15′
11	"CR5" 10+01.16	14.31′ RT	562.23′

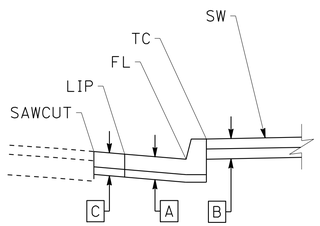

SECTION A-A

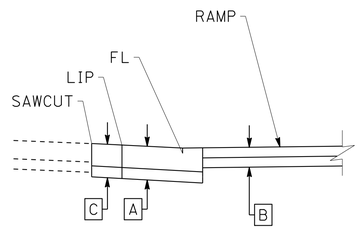

SECTION B-B

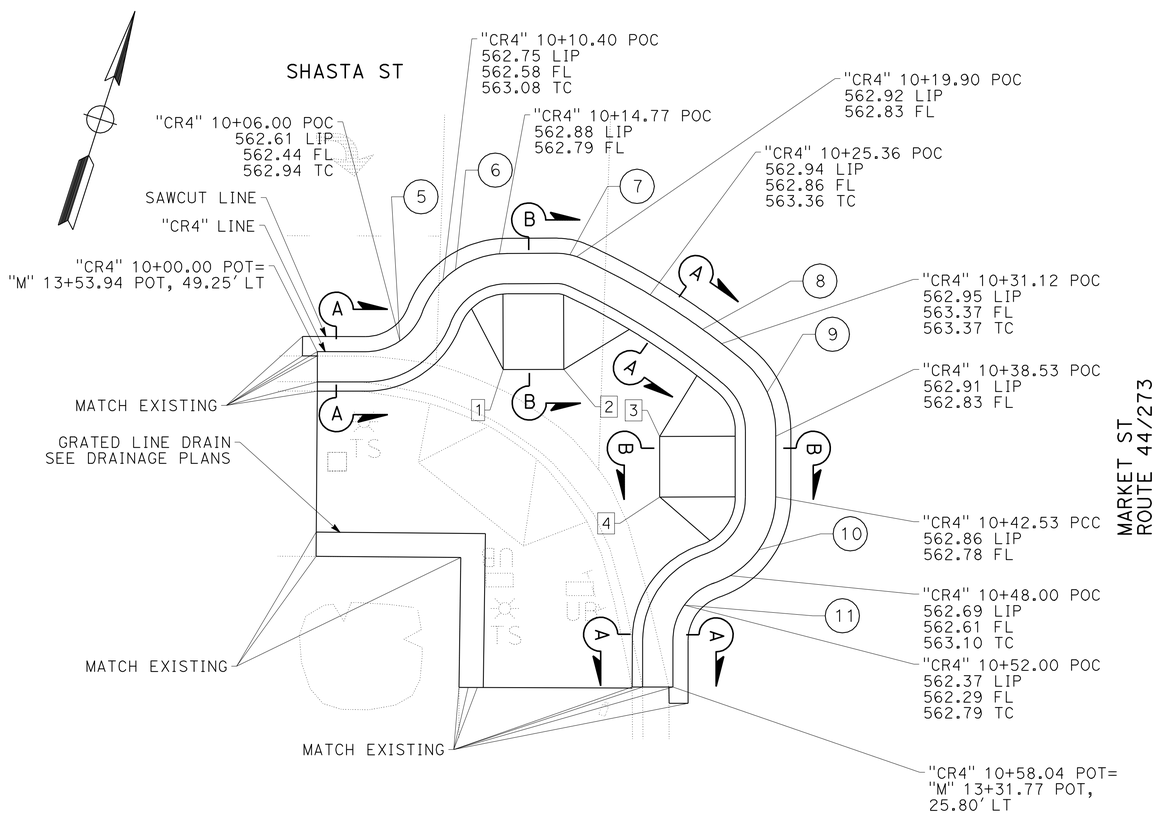

CURB RAMP 4

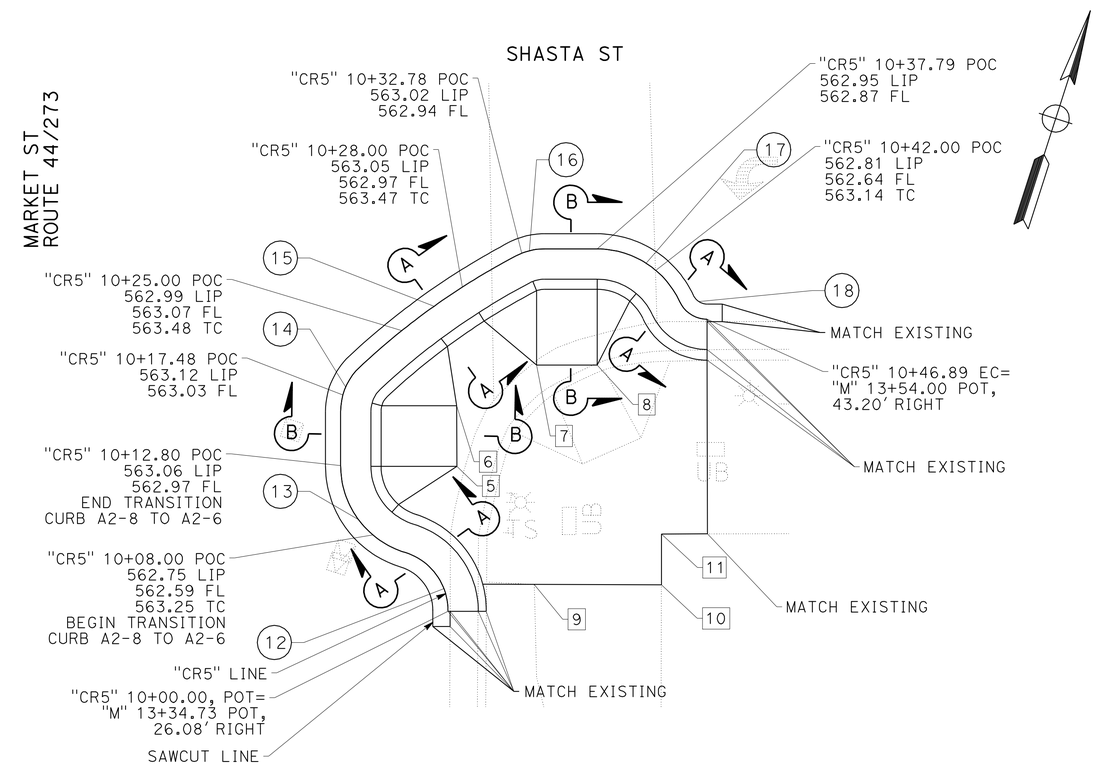

CURB RAMP 5

CONSTRUCTION DETAILS

NO SCALE

C-4

STATE OF CALIFORNIA - DEPARTMENT OF TRANSPORTATION
Caltrans®
DESIGN

FUNCTIONAL SUPERVISOR: JOHN L. MARTIN
CALCULATED-DESIGNED BY: JAMES D. RASMUSSEN
CHECKED BY: BETH A. ELMORE
REVISED BY
DATE REVISED

P:\proj\02\3E600_plans\pse\0200020046ga004.dgn

LAST REVISION 11-21-11
DATE PLOTTED => 07-FEB-2012
TIME PLOTTED => 13:58

Dist	COUNTY	ROUTE	POST MILES TOTAL PROJECT	SHEET No.	TOTAL SHEETS
02	Sha	44,273, 299	Var	11	78

12-06-11
REGISTERED CIVIL ENGINEER DATE

2-6-12
PLANS APPROVAL DATE

REGISTERED PROFESSIONAL ENGINEER
JAMES D. RASMUSSEN
No. C76401
Exp. 12-31-12
CIVIL
STATE OF CALIFORNIA

THE STATE OF CALIFORNIA OR ITS OFFICERS OR AGENTS SHALL NOT BE RESPONSIBLE FOR THE ACCURACY OR COMPLETENESS OF SCANNED COPIES OF THIS PLAN SHEET.

CURVE DATA

No. ⊕	R	Δ	T	L	BC STATION	EC STATION
19	14.00′	90°11′10″	14.05′	22.04′	"CR6" 10+15.98	"CR6" 10+38.01
20	0.75′	90°00′00″	0.75′	1.18′	"CR6" 10+23.02, 9.01 LT	"CR6" 10+26.01, 9.19 LT

RAMP DATA

No. #	STATION	OFFSET	TC	FL/FG
1	"CR6" 10+12.78	10.13 LT	562.98′	562.53′
2	"CR6" 10+15.80	5.12′ LT		562.23′
3	"CR6" 10+09.30	5.12′ LT		562.72′
4	"CR6" 10+09.30	10.13′ LT		562.82′
5	"CR6" 10+15.80	10.13′ LT	562.79′	562.29′
6	"CR6" 10+27.95	11.28′ LT	562.82′	562.32′
7	"CR6" 10+45.53	11.91′ LT	563.02′	562.64′
8	"CR6" 10+33.96	6.34′ LT		562.26′
9	"CR6" 10+45.51	6.81′ LT		562.96′
10	"CR6" 10+45.53	11.91′ LT		563.02′
11	"CR6" 10+32.86	6.34′ LT		562.24′
12	"CR6" 10+18.17	5.12′ LT		562.51′

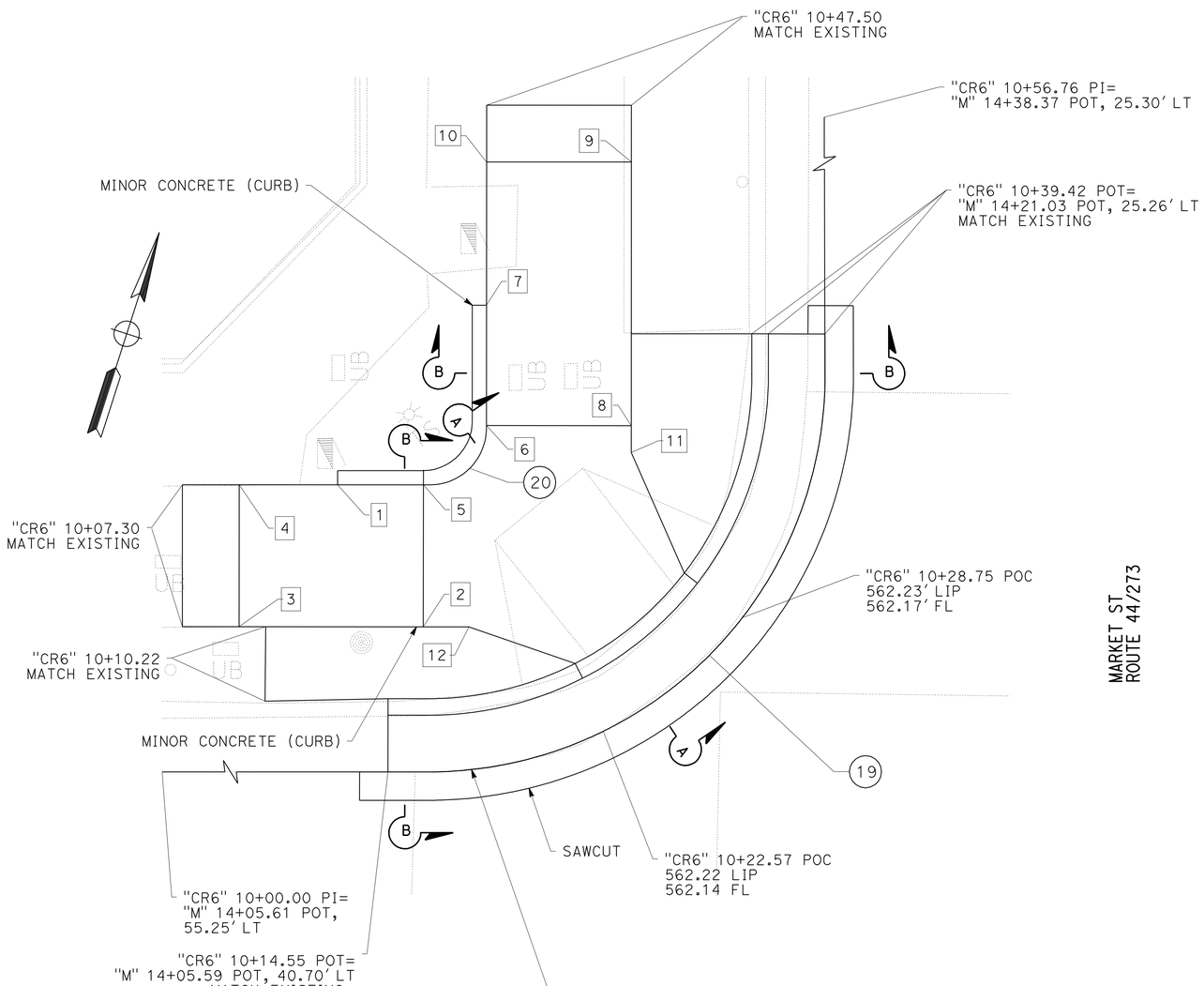

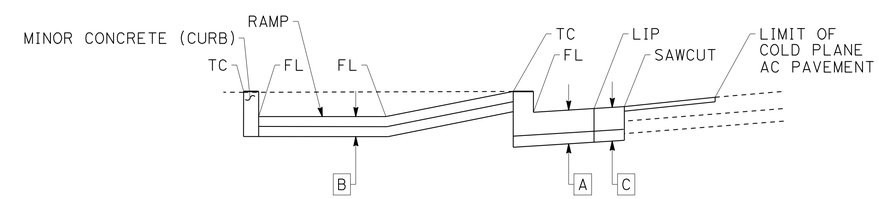

SECTION B-B

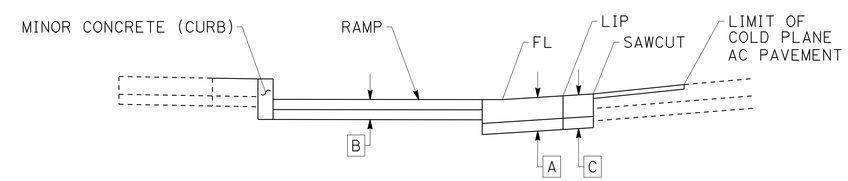

SECTION A-A

CURB RAMP 6
CASE C

CONSTRUCTION DETAILS

NO SCALE

C-5

REVISED BY	DATE REVISED
BETH A. ELMORE	JAMES D. RASMUSSEN
CALCULATED-DESIGNED BY	CHECKED BY
FUNCTIONAL SUPERVISOR	JOHN L. MARTIN

STATE OF CALIFORNIA - DEPARTMENT OF TRANSPORTATION
DESIGN
Caltrans

P:\proj1\02\3E600_plans\pse\02000200046ga005.dgn

LAST REVISION 11-21-11 | DATE PLOTTED => 07-FEB-2012 | TIME PLOTTED => 13:58

Dist	COUNTY	ROUTE	POST MILES TOTAL PROJECT	SHEET No.	TOTAL SHEETS
02	Sha	44,273, 299	Var	12	78

REGISTERED CIVIL ENGINEER 12-06-11 DATE

2-6-12
PLANS APPROVAL DATE

REGISTERED PROFESSIONAL ENGINEER JAMES D. RASMUSSEN No. C76401 Exp. 12-31-12 CIVIL STATE OF CALIFORNIA

THE STATE OF CALIFORNIA OR ITS OFFICERS OR AGENTS SHALL NOT BE RESPONSIBLE FOR THE ACCURACY OR COMPLETENESS OF SCANNED COPIES OF THIS PLAN SHEET.

CURVE DATA

No. ⊕	R	Δ	T	L	BC STATION	EC STATION
21	67.00′	26°37′05"	15.85′	31.13′	"CR7" 10+28.11	"CR7" 10+59.24
23	44.00′	12°48′44"	4.94′	9.84′	"CR7" 10+59.24	"CR7" 10+69.08
24	33.59′	30°35′37"	9.19′	17.94′	"CR7" 10+69.08	"CR7" 10+87.01
25	14.67′	89°59′19"	14.66′	23.04′	"CR8" 12+83.02	"CR8" 13+06.06
26	16.00′	23°22′44"	3.31′	6.53′	"CR8" 12+65.72, 11.77 RT	"CR8" 12+72.05, 13.20 RT
27	25.00′	66°19′30"	16.34′	28.94′	"CR8" 12+72.05, 13.20 RT	"CR8" 13+27.40, 10.67 RT

RAMP DATA

No. #	STATION	OFFSET	TC	FL/FG
1	"CR7" 10+71.62	11.65, RT		565.21′
2	"CR7" 10+77.76	11.67′ RT		565.23′
3	"CR7" 10+48.00	9.98′ RT		565.38′
4	"CR7" 10+70.72	16.64′ RT		565.29′
5	"CR7" 10+78.66	16.64′ RT		565.30′
6	"CR8" 12+83.24	12.01′ RT		565.12′
7	"CR8" 13+06.23	12.05′ RT		565.20′
8	"CR8" 12+65.72	11.77′ RT	565.52′	565.02′
9	"CR8" 12+79.60	18.24′ RT	565.80′	565.30′
10	"CR8" 13+27.40	10.67′ RT	565.70′	565.20′

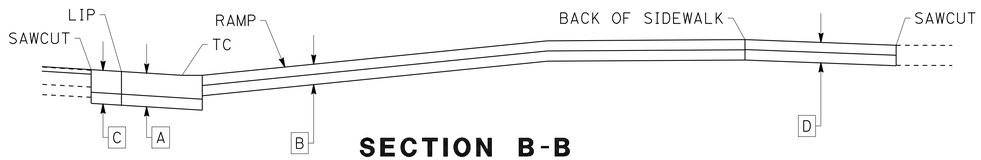

SECTION B-B

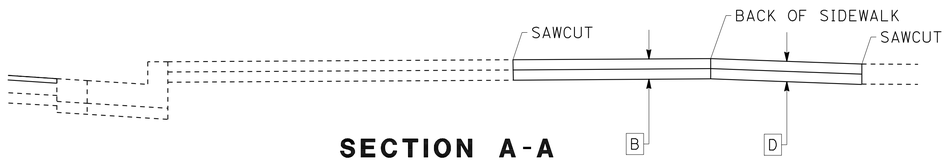

SECTION A-A

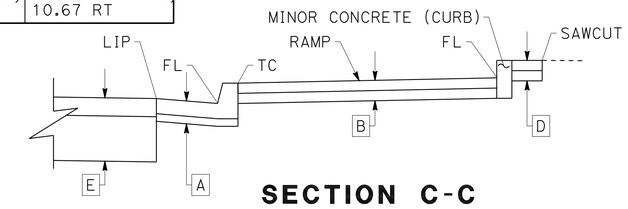

SECTION C-C

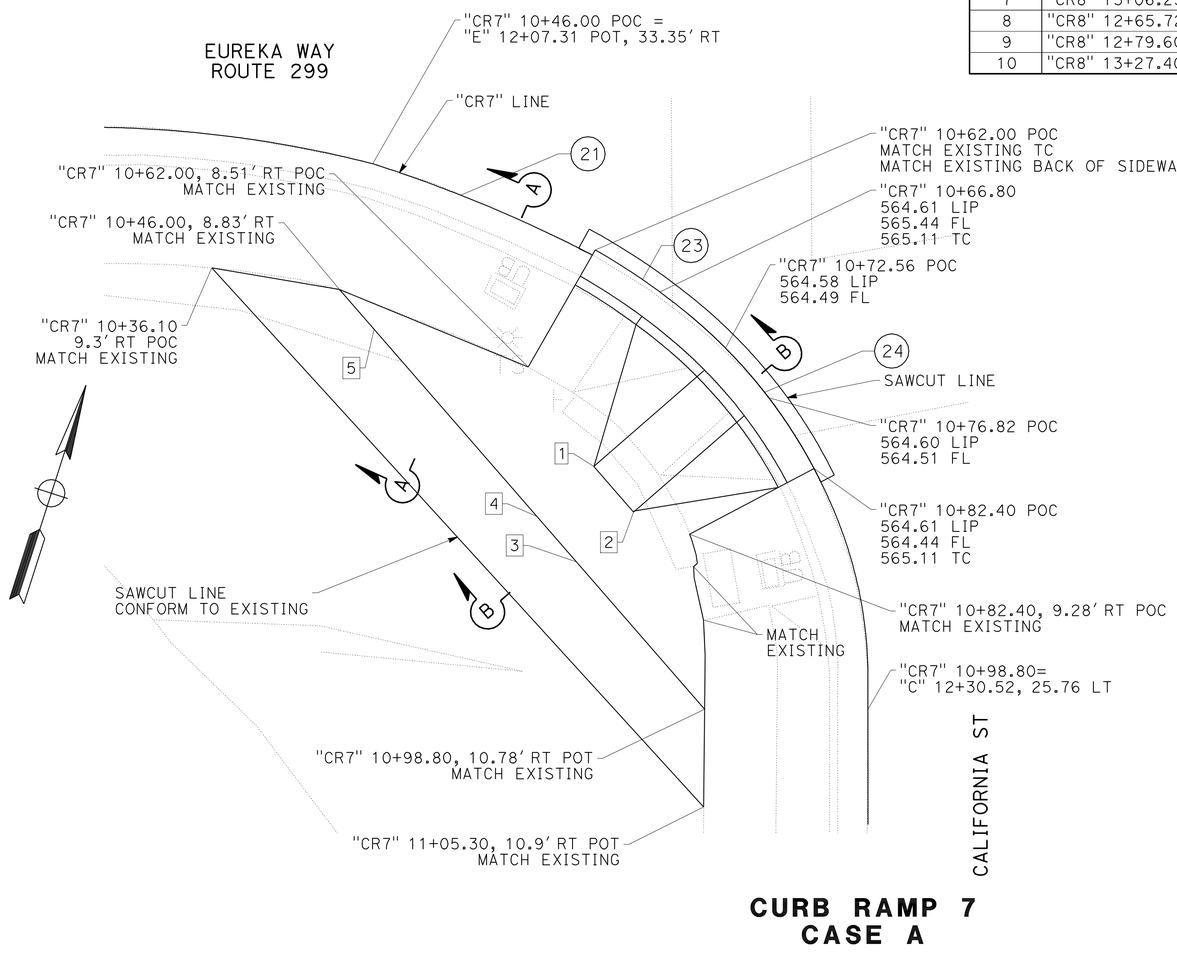

CURB RAMP 7
CASE A

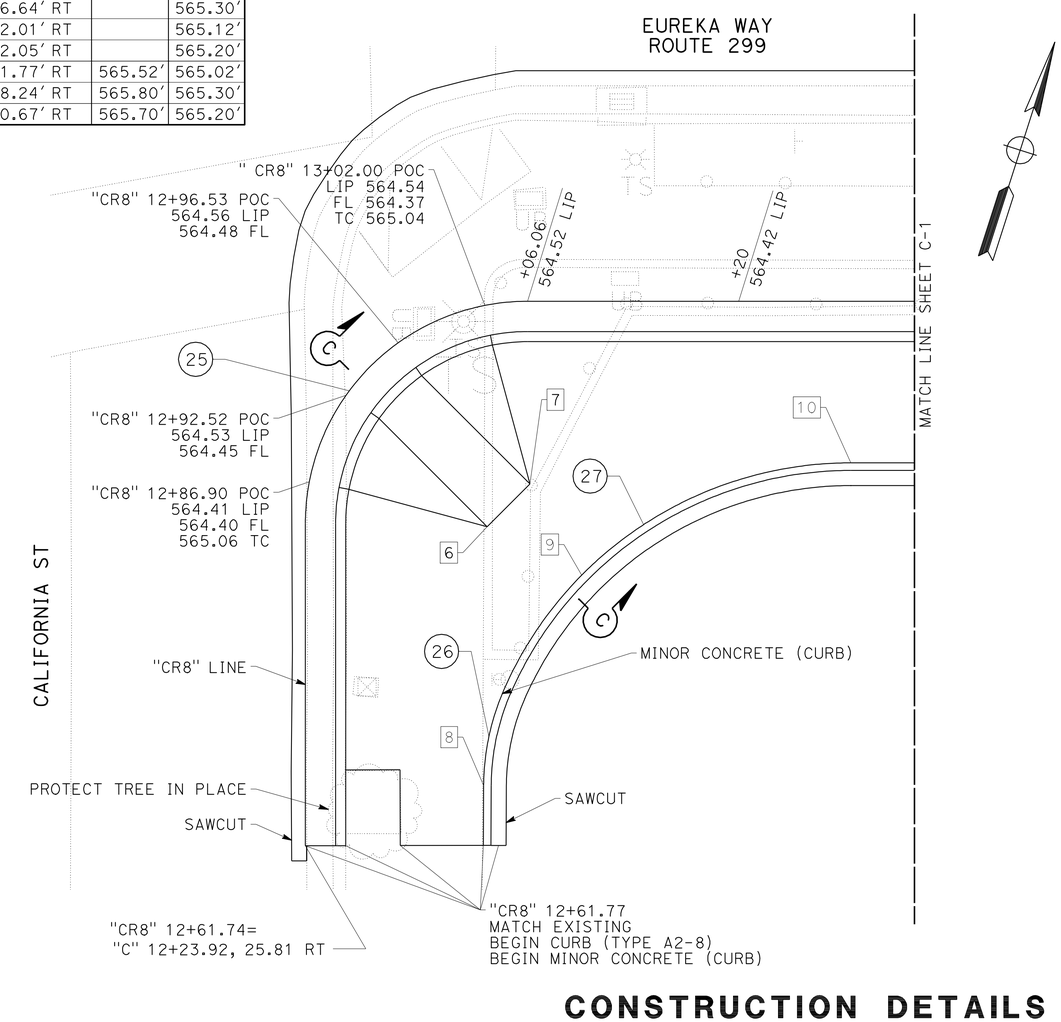

CURB RAMP 8
CASE A

CONSTRUCTION DETAILS

NO SCALE

C-6

REVISED BY	DATE REVISED
BETH A. ELMORE	JAMES D. RASMUSSEN
CALCULATED-DESIGNED BY	CHECKED BY
FUNCTIONAL SUPERVISOR	JOHN L. MARTIN

STATE OF CALIFORNIA - DEPARTMENT OF TRANSPORTATION
Caltrans
DESIGN

P:\proj1\02\3E600_plans\pse\0200020046ga006.dgn

LAST REVISION 11-21-11 | DATE PLOTTED => 07-FEB-2012 | TIME PLOTTED => 13:58

Dist	COUNTY	ROUTE	POST MILES TOTAL PROJECT	SHEET No.	TOTAL SHEETS
02	Sha	44,273, 299	Var	13	78

REGISTERED CIVIL ENGINEER 12-06-11 DATE

2-6-12
PLANS APPROVAL DATE

REGISTERED PROFESSIONAL ENGINEER JAMES D. RASMUSSEN No. C76401 Exp. 12-31-12 CIVIL STATE OF CALIFORNIA

THE STATE OF CALIFORNIA OR ITS OFFICERS OR AGENTS SHALL NOT BE RESPONSIBLE FOR THE ACCURACY OR COMPLETENESS OF SCANNED COPIES OF THIS PLAN SHEET.

"CR9" CURVE DATA

No. ⊛	R	Δ	T	L	BC STATION	EC STATION
32	46.33′	15°09′36"	6.17′	12.26′	"CR9" 10+17.70	"CR9" 10+53.51
33	22.83′	33°39′25"	6.90′	13.41′	"CR9" 10+29.96	"CR9" 10+43.37
34	15.33′	40°49′52"	5.71′	10.93′	"CR9" 10+43.37	"CR9" 10+54.30
37	12.50′	18°01′50"	9.61′	16.39′	"CR9" 10+21.47, 9.85′ RT	"CR9" 10+54.48, 12.42′ RT

"CR10" CURVE DATA

No. ⊛	R	Δ	T	L	BC STATION	EC STATION
38	35.00′	14°50′22"	6.12′	12.12′	"CR10" 10+17.91	"CR10" 10+30.03
39	13.00′	70°10′08"	9.13′	15.92′	"CR10" 10+30.03	"CR10" 10+45.95
40	3.05′	79°56′41"	2.56′	4.26′	"CR10" 10+32.80, 9.99′ RT	"CR10" 10+44.91, 8.21′ RT

RAMP DATA

No. #	STATION	OFFSET	TC	FL/FG
1	"CR9" 10+22.97	8.98′ LT	566.30′	565.39′
2	"CR9" 10+33.94	10.73′ LT	566.03′	565.15′
3	"CR9" 10+50.03	12.55′ LT	565.94′	565.13′
4	"CR9" 10+35.87	6.95′ LT		565.09′
5	"CR9" 10+43.09	6.97′ LT		565.02′
6	"CR10" 10+22.23	11.02′ LT	565.96′	565.27′
7	"CR10" 10+35.21	9.03′ LT	565.90′	564.74′
8	"CR10" 10+40.02	8.57′ LT	565.87′	564.75′
9	"CR10" 10+48.75	8.22′ LT	565.90	565.15′

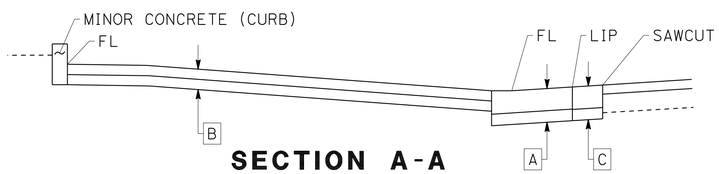

SECTION A-A

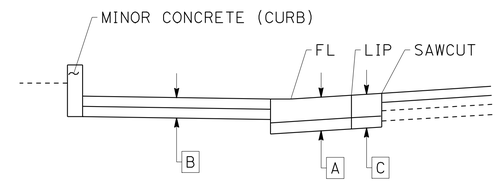

SECTION B-B

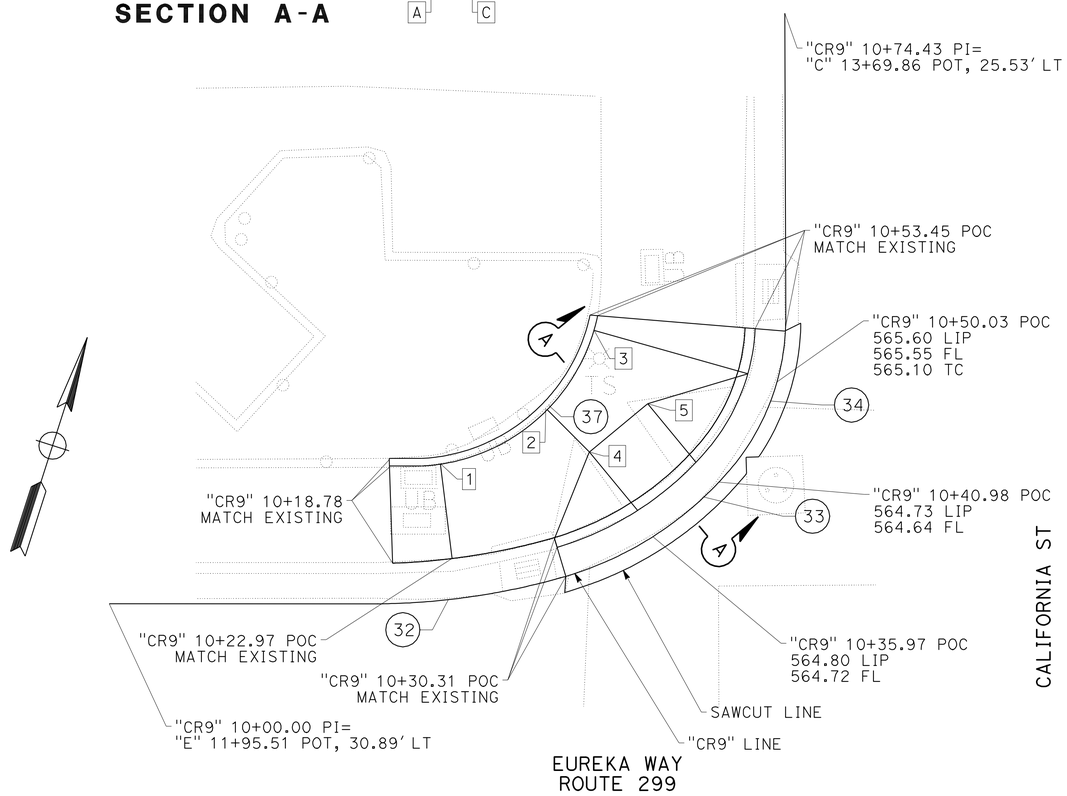

CURB RAMP 9
CASE B

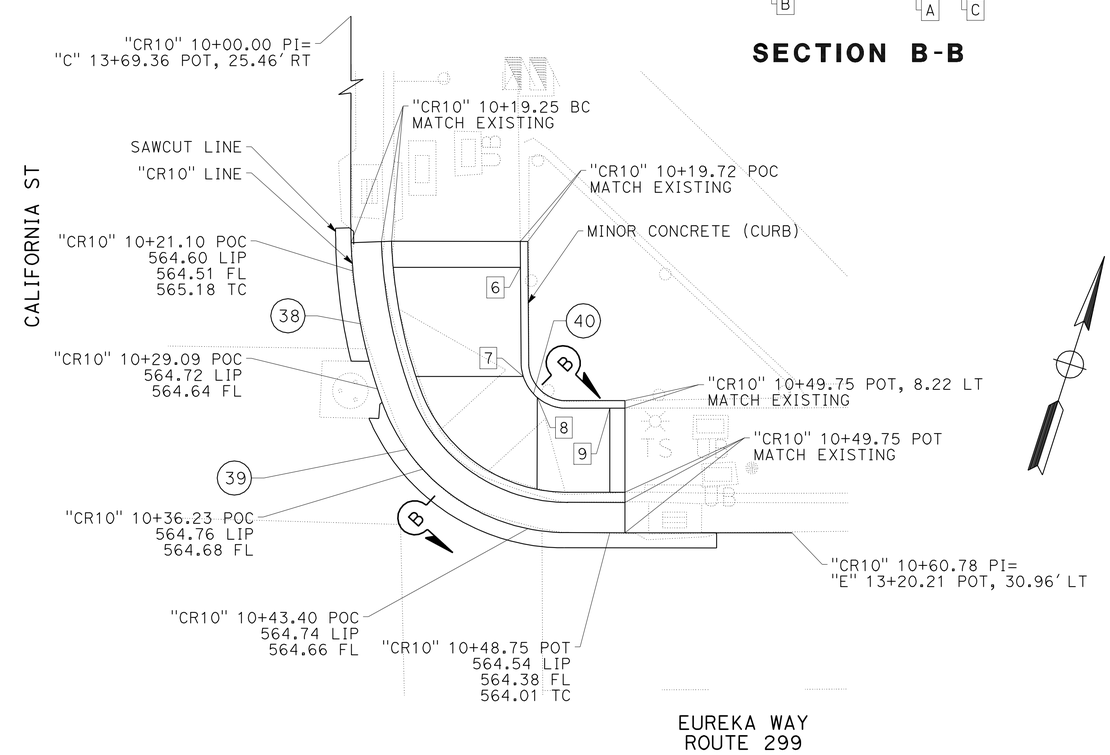

CURB RAMP 10
CASE C

CONSTRUCTION DETAILS

NO SCALE

C-7

REVISED BY	DATE REVISED

BETH A. ELMORE — JAMES D. RASMUSSEN — CALCULATED-DESIGNED BY — CHECKED BY

FUNCTIONAL SUPERVISOR: JOHN L. MARTIN

STATE OF CALIFORNIA - DEPARTMENT OF TRANSPORTATION — DESIGN

P:\proj1\02\3E600_plans\pse\02000200046ga007.dgn

LAST REVISION 11-21-11 — DATE PLOTTED => 07-FEB-2012 — TIME PLOTTED => 13:58

Dist	COUNTY	ROUTE	POST MILES TOTAL PROJECT	SHEET No.	TOTAL SHEETS
02	Sha	44,273, 299	Var	14	78

12-07-11
REGISTERED CIVIL ENGINEER DATE

2-6-12
PLANS APPROVAL DATE

REGISTERED PROFESSIONAL ENGINEER M.B. SULLIVAN No. C65245 Exp. 9-30-13 CIVIL STATE OF CALIFORNIA

THE STATE OF CALIFORNIA OR ITS OFFICERS OR AGENTS SHALL NOT BE RESPONSIBLE FOR THE ACCURACY OR COMPLETENESS OF SCANNED COPIES OF THIS PLAN SHEET.

NOTE:

1. EQ = POST SPACING APPROXIMATELY 3' OC - EXACT MEASURMENT DEPENDANT ON ACTUAL FIELD CONDITIONS
2. PICKET SPACING = ALL EQUAL SPACING; APPROXIMATELY 4" OC - EXACT MEASURMENT DEPENDANT ON ACTUAL FIELD CONDITIONS
3. TUBULAR HANDRAIL MUST CONFORM TO RAMP RADIUS AS SHOWN
4. 1½" DIA RAILS & POSTS TO BE 0.20" WALL THICKNESS

ABBREVIATIONS:

EQ EQUAL DISTANCE
OC ON CENTER

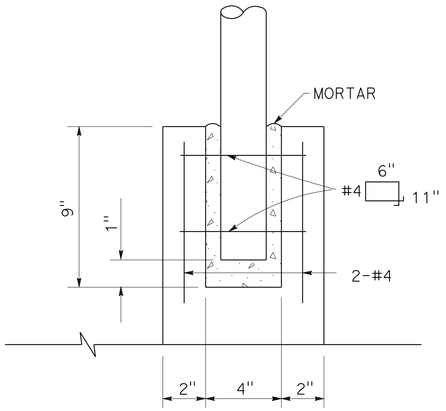

DETAIL A

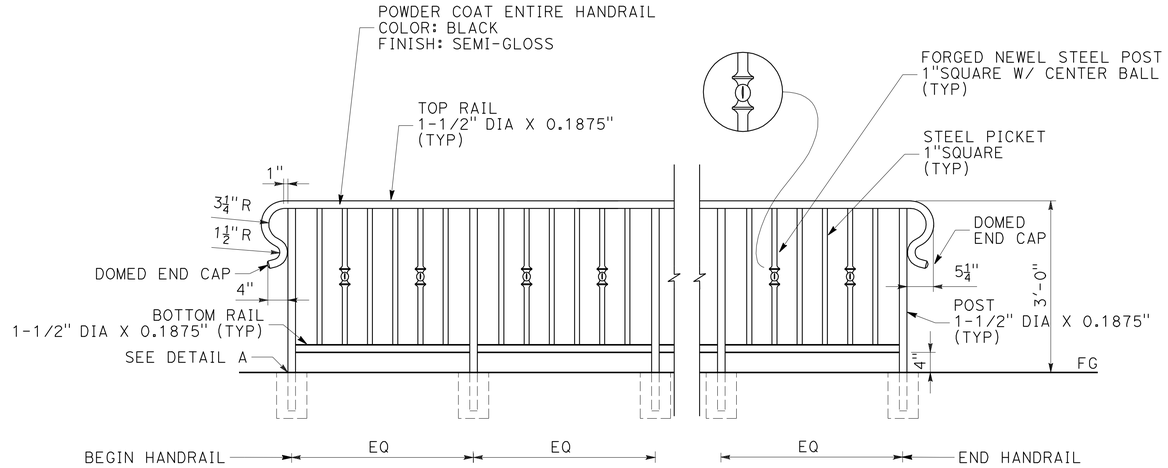

TUBULAR HANDRAIL (MODIFIED)

ELEVATION

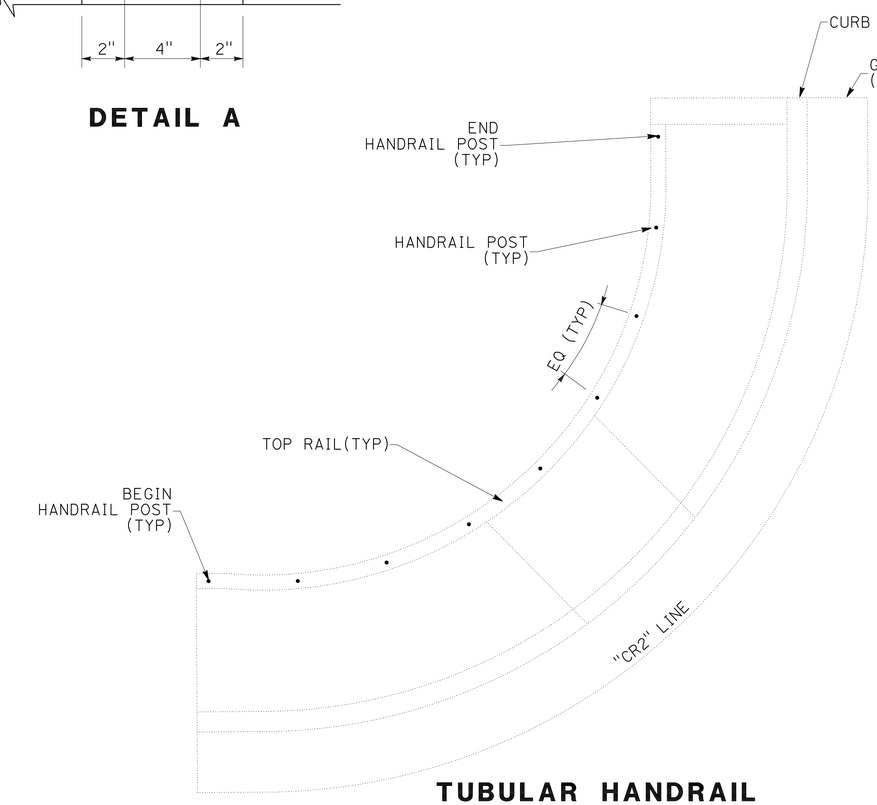

TUBULAR HANDRAIL (MODIFIED) CURB RAMP 2

PLAN

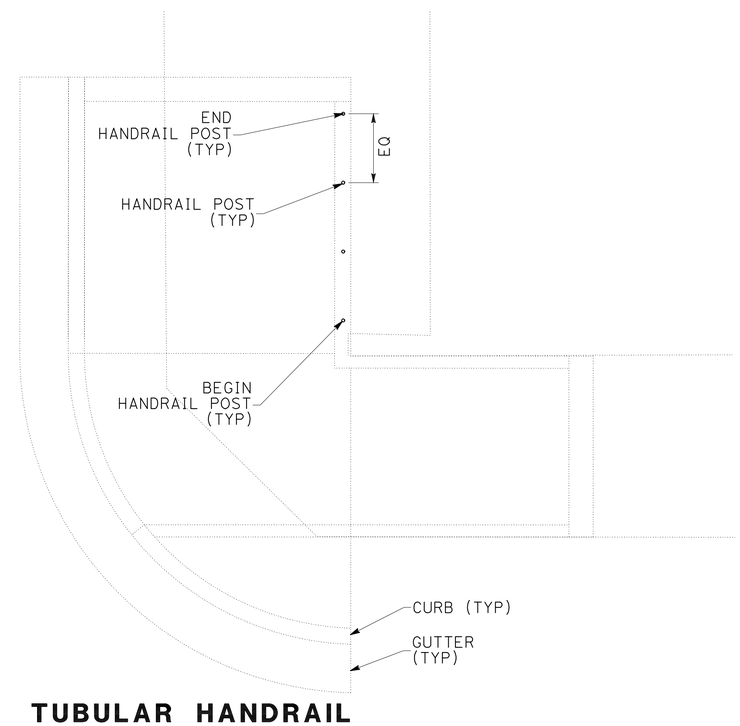

TUBULAR HANDRAIL (MODIFIED) CURB RAMP 3

PLAN

TUBULAR HANDRAIL

CONSTRUCTION DETAILS

NO SCALE

C-8

REVISED BY	DATE REVISED

CALCULATED-DESIGNED BY	CHECKED BY
MICHAEL SULLIVAN	JAMES D. RASMUSSEN

FUNCTIONAL SUPERVISOR: JOHN MARTIN

STATE OF CALIFORNIA - DEPARTMENT OF TRANSPORTATION
Caltrans® DESIGN

P:\proj1\02\3E600_plans\pse\resubmit 01-19-12\0200020046ga008.dgn

LAST REVISION 10-24-11 | DATE PLOTTED => 07-FEB-2012 | TIME PLOTTED => 13:58

Dist	COUNTY	ROUTE	POST MILES TOTAL PROJECT	SHEET No.	TOTAL SHEETS
02	Sha	44,273, 299	Var	15	78

REGISTERED CIVIL ENGINEER 12-06-11 DATE

2-6-12
PLANS APPROVAL DATE

REGISTERED PROFESSIONAL ENGINEER JAMES D. RASMUSSEN No. C76401 Exp. 12-31-12 CIVIL STATE OF CALIFORNIA

THE STATE OF CALIFORNIA OR ITS OFFICERS OR AGENTS SHALL NOT BE RESPONSIBLE FOR THE ACCURACY OR COMPLETENESS OF SCANNED COPIES OF THIS PLAN SHEET.

NOTE:

1. FOR ACCURATE RIGHT OF WAY DATA, CONTACT RIGHT OF WAY ENGINEERING AT THE DISTRICT OFFICE.

ABBREVIATIONS:

HWCP NON-REINFORCED CONCRETE PIPE (EXTRA STRENGTH)

LEGEND:

DRAINAGE SYSTEM NUMBER

DRAINAGE UNIT

FLOW DIRECTION

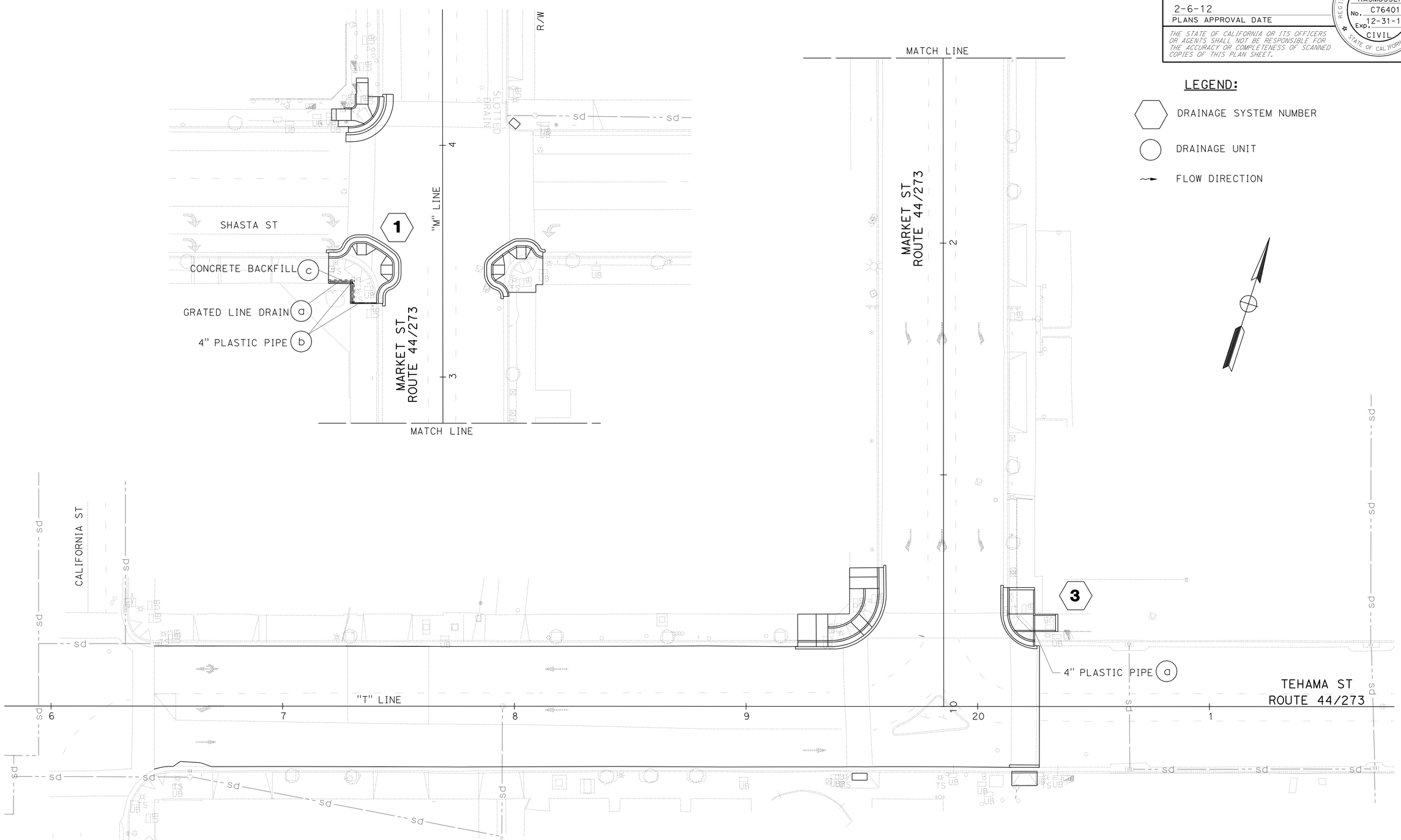

APPROVED FOR DRAINAGE WORK ONLY

DRAINAGE PLAN

SCALE: 1" = 20'

D-1

REVISED BY	JOLENA ASTIN
DATE REVISED	
CALCULATED-DESIGNED BY	JAMES D. RASMUSSEN
CHECKED BY	
FUNCTIONAL SUPERVISOR	JOHN L. MARTIN

STATE OF CALIFORNIA - DEPARTMENT OF TRANSPORTATION

Caltrans® DESIGN

P:\proj1\02\3E600_plans\pse\02000200046ia001.dgn

LAST REVISION 08-04-11 | DATE PLOTTED => 07-FEB-2012 | TIME PLOTTED => 13:58

Dist	COUNTY	ROUTE	POST MILES TOTAL PROJECT	SHEET No.	TOTAL SHEETS
02	Sha	44,273, 299	Var	16	78

RESISTERED CIVIL ENGINEER 12-06-11 DATE

2-6-12
PLANS APPROVAL DATE

REGISTERED PROFESSIONAL ENGINEER JAMES D. RASMUSSEN No. C76401 Exp. 12-31-12 CIVIL STATE OF CALIFORNIA

THE STATE OF CALIFORNIA OR ITS OFFICERS OR AGENTS SHALL NOT BE RESPONSIBLE FOR THE ACCURACY OR COMPLETENESS OF SCANNED COPIES OF THIS PLAN SHEET.

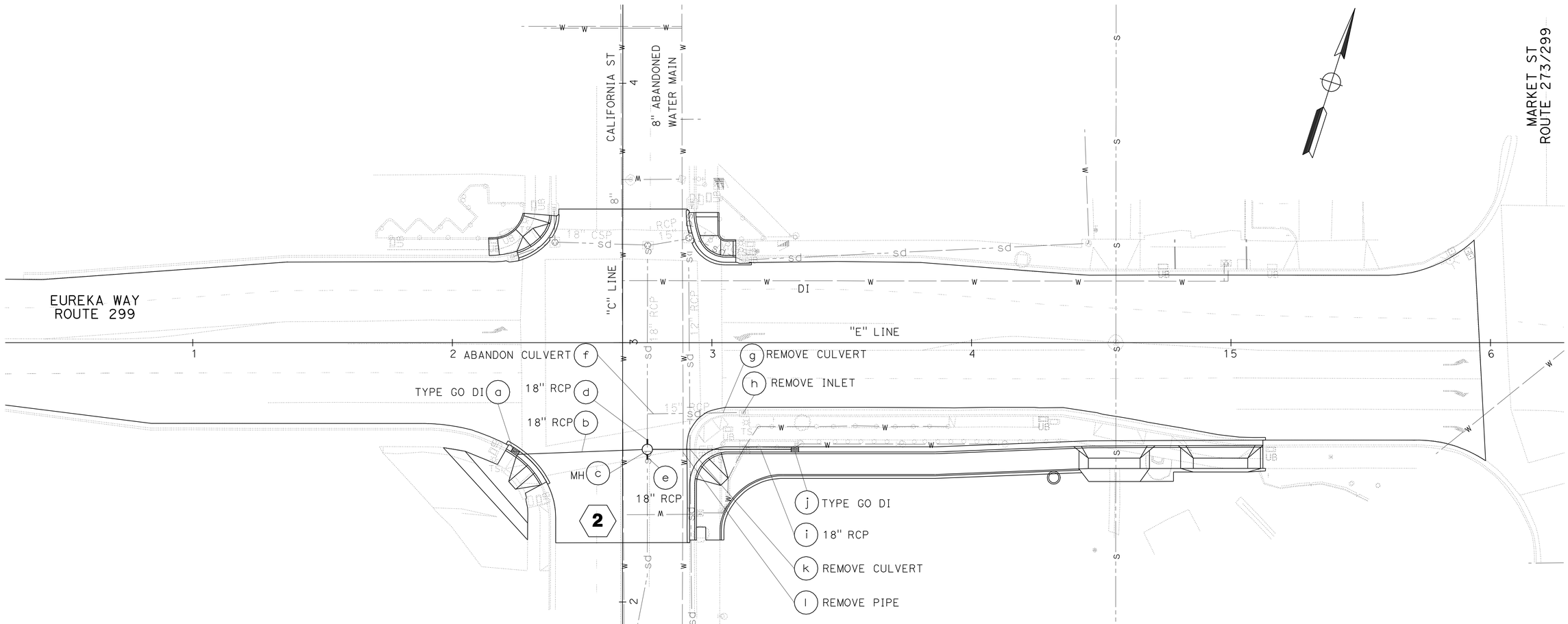

APPROVED FOR DRAINAGE WORK ONLY

DRAINAGE PLAN

SCALE: 1" = 20'

D-2

REVISED BY	DATE REVISED

CALCULATED-DESIGNED BY: BETH A. ELMORE
CHECKED BY: JAMES D. RASMUSSEN
FUNCTIONAL SUPERVISOR: JOHN L. MARTIN

STATE OF CALIFORNIA - DEPARTMENT OF TRANSPORTATION
Caltrans
DESIGN

P:\proj1\02\3E600_plans\pse\02000200046ia002.dgn

LAST REVISION 09-30-11 | DATE PLOTTED => 07-FEB-2012 | TIME PLOTTED => 13:58

Dist	COUNTY	ROUTE	POST MILES TOTAL PROJECT	SHEET No.	TOTAL SHEETS
02	Sha	44,273, 299	Var	17	78

REGISTERED CIVIL ENGINEER 12-06-11 DATE

2-6-12
PLANS APPROVAL DATE

REGISTERED PROFESSIONAL ENGINEER JAMES D. RASMUSSEN No. C76401 Exp. 12-31-12 CIVIL STATE OF CALIFORNIA

THE STATE OF CALIFORNIA OR ITS OFFICERS OR AGENTS SHALL NOT BE RESPONSIBLE FOR THE ACCURACY OR COMPLETENESS OF SCANNED COPIES OF THIS PLAN SHEET.

NOTE:

1. SEE DRAINAGE DETAIL SHEET DD-1, FOR GRATED LINE DRAIN ELBOW CONNECTIONS AND UNDER SIDEWALK DRAIN.

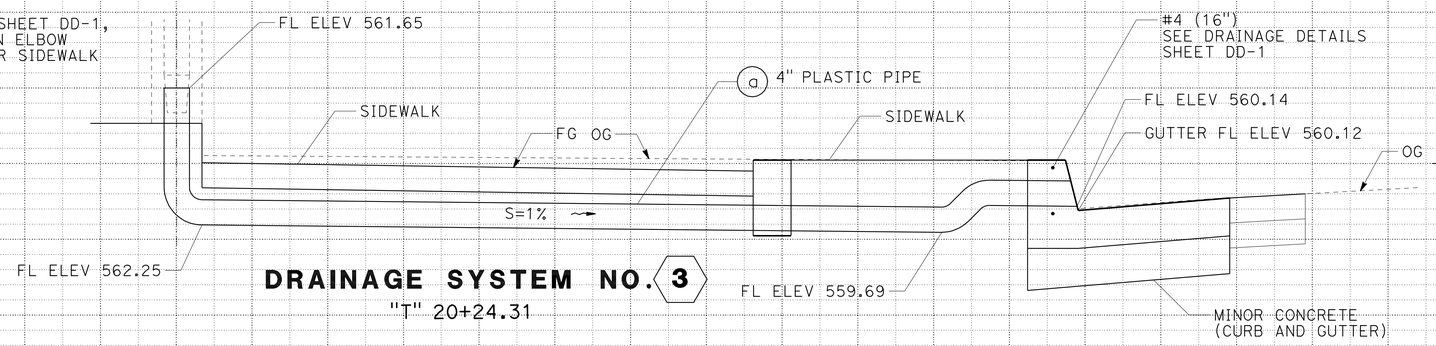

DRAINAGE SYSTEM NO. 3
"T" 20+24.31

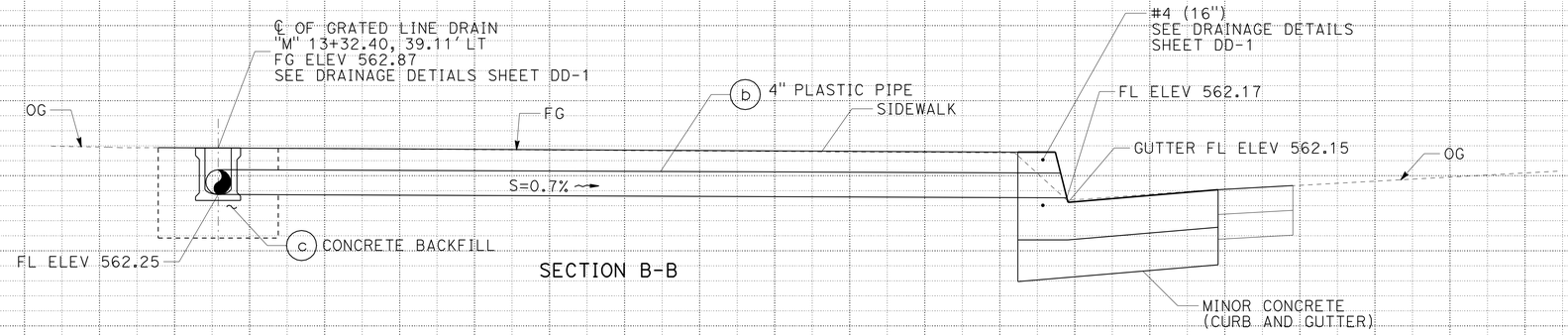

SECTION B-B

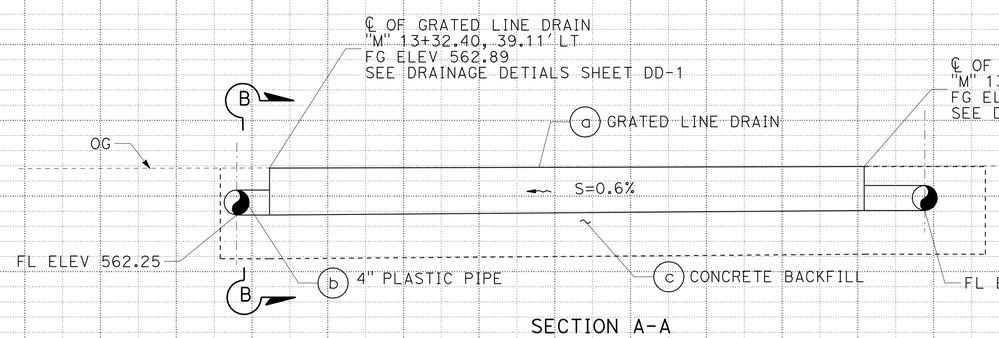

SECTION A-A

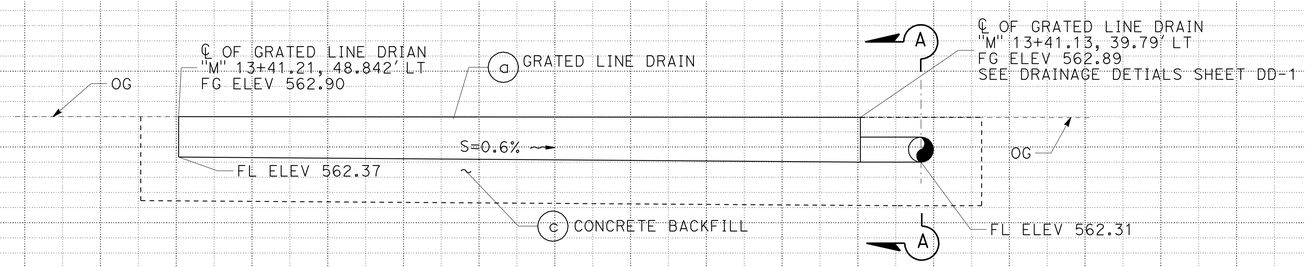

DRAINAGE SYSTEM NO. 1
"M"13+41.21 TO "M" 13+32.40

DRAINAGE PROFILES
SCALE: 1" = 1' Horiz
1" = 1' Vert

DP-1

STATION		TOTAL
CY	Exc	
	Emb	

REVISED BY | DATE REVISED
JOLENA ASTIN | JAMES D. RASMUSSEN
CALCULATED-DESIGNED BY | CHECKED BY
FUNCTIONAL SUPERVISOR: JOHN L. MARTIN

STATE OF CALIFORNIA - DEPARTMENT OF TRANSPORTATION
Caltrans
DESIGN

P:\proj1\02\3E600_plans\pse\resubmit 01-19-12\0200020046ib001.dgn

LAST REVISION 10-17-11 | DATE PLOTTED => 07-FEB-2012 | TIME PLOTTED => 13:58

Dist	COUNTY	ROUTE	POST MILES TOTAL PROJECT	SHEET No.	TOTAL SHEETS
02	Sha	44,273, 299	Var	18	78

REGISTERED CIVIL ENGINEER 12-06-11 DATE

2-6-12
PLANS APPROVAL DATE

REGISTERED PROFESSIONAL ENGINEER JAMES D. RASMUSSEN No. C76401 Exp. 12-31-12 CIVIL STATE OF CALIFORNIA

THE STATE OF CALIFORNIA OR ITS OFFICERS OR AGENTS SHALL NOT BE RESPONSIBLE FOR THE ACCURACY OR COMPLETENESS OF SCANNED COPIES OF THIS PLAN SHEET.

NOTES:

1. FLOW LINE CENTER IS THE DI CENTER AT THE FLOW LINE.
2. 18" RCP TO USE TONGUE & GROOVE JOINT.

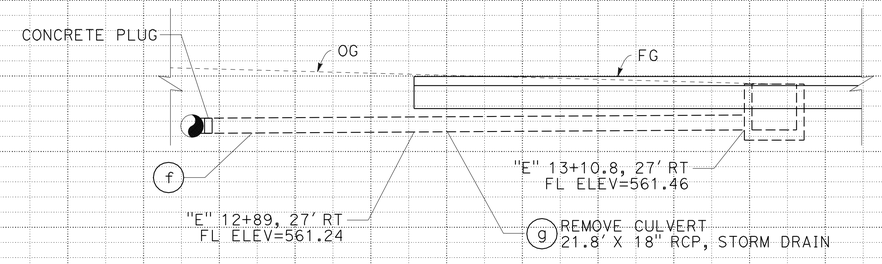

REMOVE CULVERT

"E" 12+89, 27' RT TO "E" 13+10.8, 27' RT

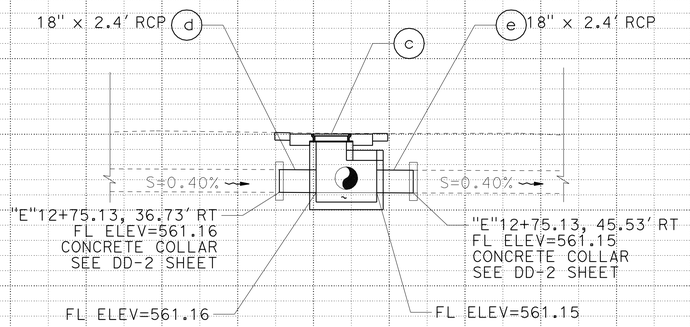

SECTION A-A

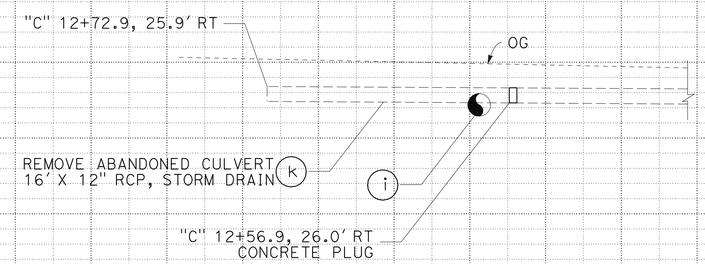

SECTION B-B

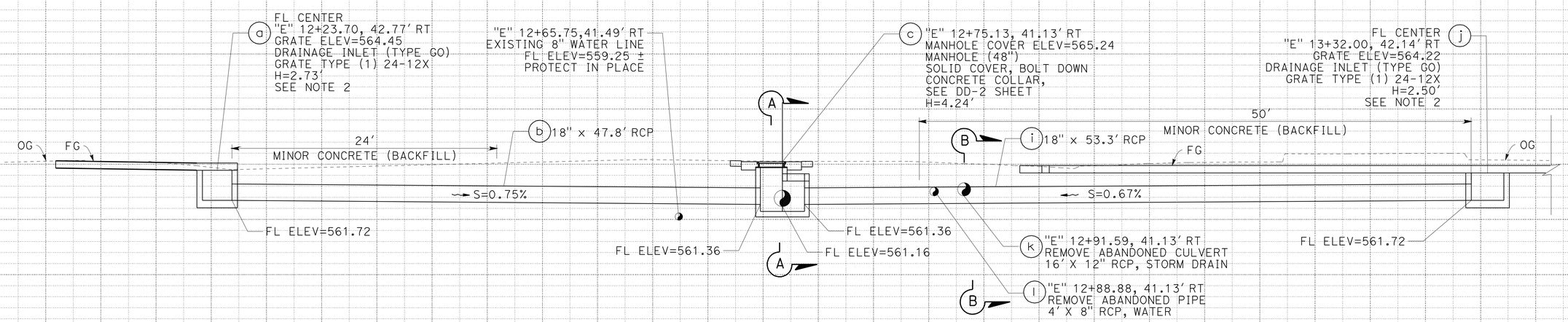

DRAINAGE SYSTEM NO. 2

"E" 12+23.70, 42.77' RT TO "E" 13+32.00, 42.14' RT

DRAINAGE PROFILES

SCALE: 1" = 5' Horiz
1" = 5' Vert

DP-2

STATION		TOTAL
CY	Exc	
	Emb	

REVISED BY | DATE REVISED
JOLENA ASTIN | JAMES D. RASMUSSEN
CALCULATED-DESIGNED BY | CHECKED BY
FUNCTIONAL SUPERVISOR: JOHN L. MARTIN

STATE OF CALIFORNIA - DEPARTMENT OF TRANSPORTATION
Caltrans® DESIGN

P:\proj\02\3E600_plans\pse\resubmit 01-19-12\0200020046ib002.dgn

LAST REVISION 11-21-11 | DATE PLOTTED => 07-FEB-2012 | TIME PLOTTED => 13:58

Dist	COUNTY	ROUTE	POST MILES TOTAL PROJECT	SHEET No.	TOTAL SHEETS
02	Sha	44,273, 299	Var	19	78

REGISTERED CIVIL ENGINEER 12-08-11 DATE

2-6-12
PLANS APPROVAL DATE

REGISTERED PROFESSIONAL ENGINEER JAMES D. RASMUSSEN No. C76401 Exp. 12-31-12 CIVIL STATE OF CALIFORNIA

THE STATE OF CALIFORNIA OR ITS OFFICERS OR AGENTS SHALL NOT BE RESPONSIBLE FOR THE ACCURACY OR COMPLETENESS OF SCANNED COPIES OF THIS PLAN SHEET.

NOTE:

1. FOR HMA, SEE CONSTRUCTION DETAILS SHEET C-2.

LEGEND

- DRAINAGE SYSTEM NUMBER
- DRAINAGE UNIT
- FLOW DIRECTION

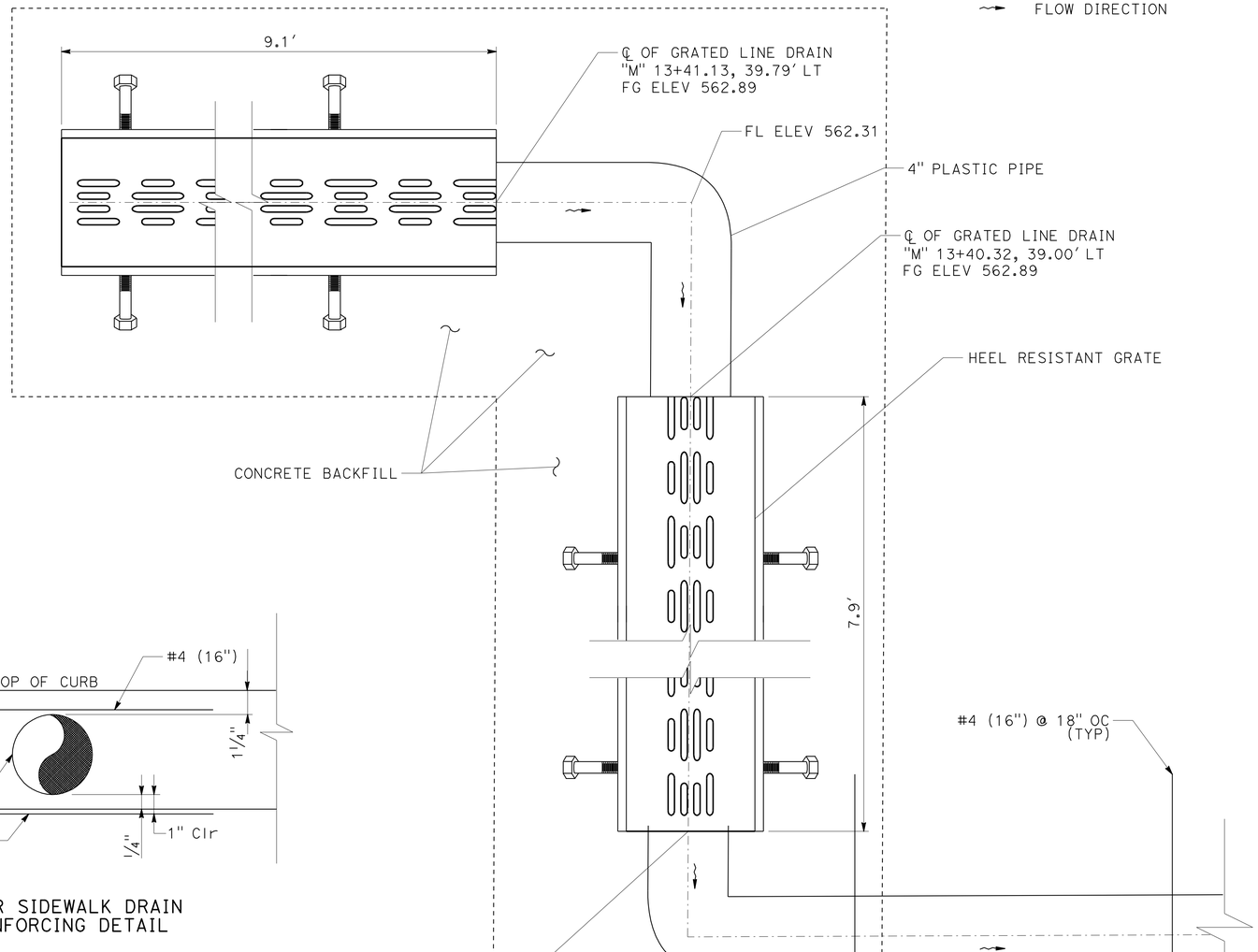

GRATED LINE DRAIN ELBOW CONNECTIONS

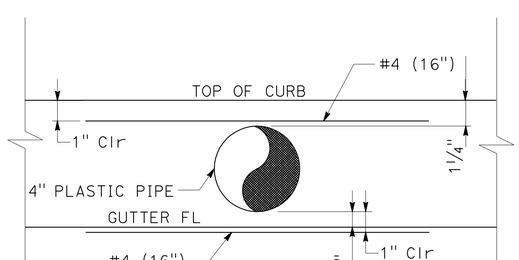

UNDER SIDEWALK DRAIN
REINFORCING DETAIL

DRAINAGE SYSTEM NO. 1

"M" 13+41.21 TO "M" 13+32.40

DRAINAGE DETAILS

NO SCALE

DD-1

REVISED BY	DATE REVISED

JOLENA ASTIN — JAMES D. RASMUSSEN

CALCULATED-DESIGNED BY — CHECKED BY

FUNCTIONAL SUPERVISOR: JOHN L. MARTIN

STATE OF CALIFORNIA - DEPARTMENT OF TRANSPORTATION

Caltrans® DESIGN

P:\proj\02\3E600_plans\pse\02000200046ic001.dgn

LAST REVISION 11-21-11 — DATE PLOTTED => 07-FEB-2012 — TIME PLOTTED => 13:59

Dist	COUNTY	ROUTE	POST MILES TOTAL PROJECT	SHEET No.	TOTAL SHEETS
02	Sha	44,273, 299	Var	20	78

REGISTERED CIVIL ENGINEER 12-06-11 DATE

2-6-12
PLANS APPROVAL DATE

REGISTERED PROFESSIONAL ENGINEER JAMES D. RASMUSSEN No. C76401 Exp. 12-31-12 CIVIL STATE OF CALIFORNIA

THE STATE OF CALIFORNIA OR ITS OFFICERS OR AGENTS SHALL NOT BE RESPONSIBLE FOR THE ACCURACY OR COMPLETENESS OF SCANNED COPIES OF THIS PLAN SHEET.

NOTES:

1. FIRST PIPE JOINT OR FLEXIBLE COUPLING SHALL BE NO GREATER THAN 2′ FROM OUTSIDE FACE OF STRUCTURE.
2. FOR DETAILS NOT SHOWN SEE STANDARD PLANS D73 & RSP D74B.

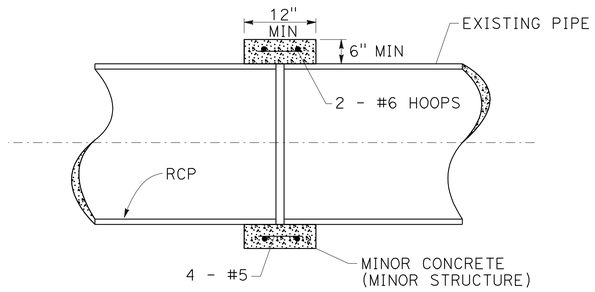

CONCRETE COLLAR DETAIL

2c

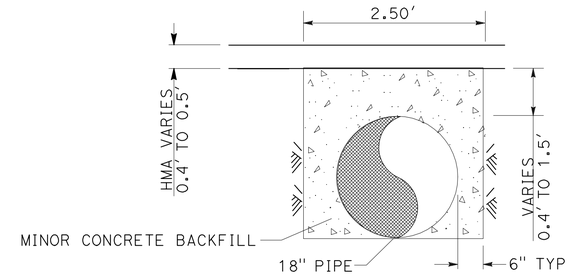

MINOR CONCRETE (BACKFILL)

DRAINAGE SYSTEM NO. 2

(b) "E" 12+23.70

(i) "E" 13+32.00

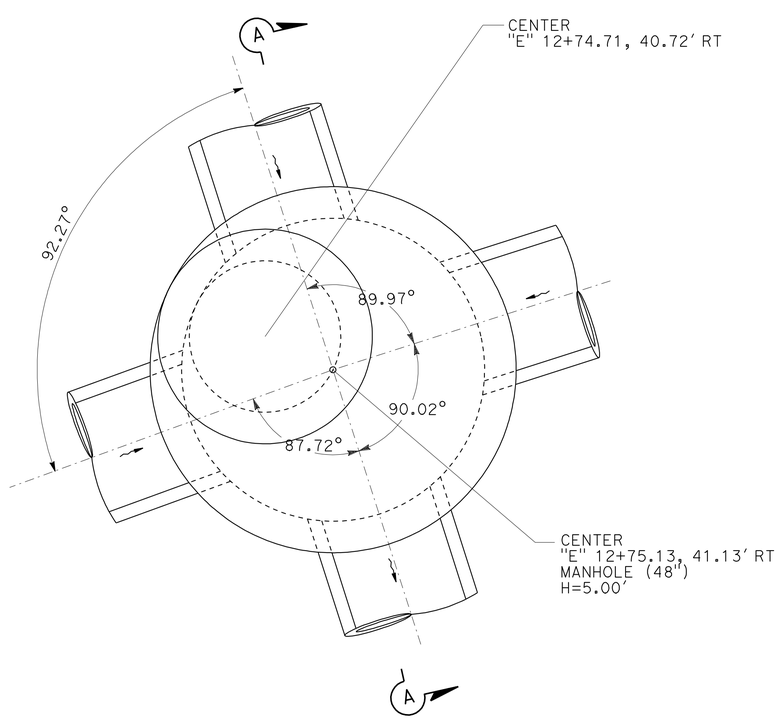

DRAINAGE SYSTEM NO. 2 (c)

"E1" STA 12+75.13, 41.13′ RT

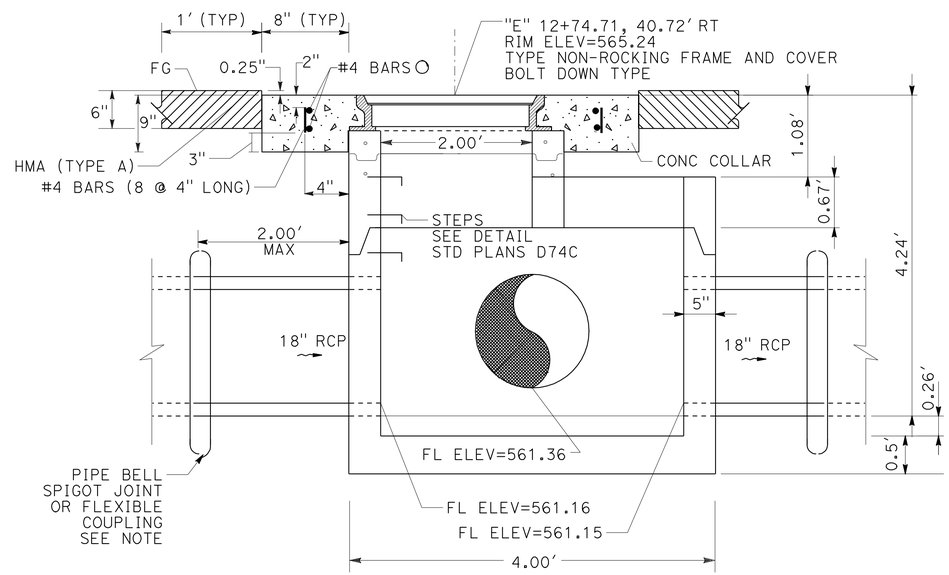

SECTION A-A

DRAINAGE DETAILS

NO SCALE

DD-2

CALCULATED-DESIGNED BY	REVISED BY	FUNCTIONAL SUPERVISOR	JOLENA ASTIN
CHECKED BY	DATE REVISED	JOHN L. MARTIN	JAMES D. RASMUSSEN

STATE OF CALIFORNIA - DEPARTMENT OF TRANSPORTATION

Caltrans DESIGN

P:\proj\02\3E600_plans\pse\0200020046ic002.dgn

LAST REVISION 11-21-11 DATE PLOTTED => 07-FEB-2012 TIME PLOTTED => 13:59

Dist	COUNTY	ROUTE	POST MILES TOTAL PROJECT	SHEET No.	TOTAL SHEETS
02	Sha	44, 273, 299	Var	21	78

12-06-11
REGISTERED CIVIL ENGINEER DATE

2-6-12
PLANS APPROVAL DATE

REGISTERED PROFESSIONAL ENGINEER JAMES D. RASMUSSEN No. C76401 Exp. 12-31-12 CIVIL STATE OF CALIFORNIA

THE STATE OF CALIFORNIA OR ITS OFFICERS OR AGENTS SHALL NOT BE RESPONSIBLE FOR THE ACCURACY OR COMPLETENESS OF SCANNED COPIES OF THIS PLAN SHEET.

NOTE:

1. (N) - NOT A SEPARATE PAY ITEM, FOR INFORMATION ONLY

DRAINAGE QUANTITIES

DRAINAGE PROFILE OR PLAN SHEET NO.	DRAINAGE SYSTEM NO. ⬡	DRAINAGE UNIT NO. ○	ABANDON CULVERT (LF)	REMOVE CULVERT (LF)	REMOVE PIPE (LF)	REMOVE INLET	MINOR CONCRETE (BACKFILL)	(N) SAND BACKFILL	(N) CONCRETE BACKFILL	HOT MIX ASPHALT (TYPE A)	PLACE HOT MIX ASPHALT (MISCELLANEOUS AREA)	MINOR CONCRETE (MINOR STRUCTURE)	4" PLASTIC PIPE	18" REINFORCED CONCRETE PIPE (CLASS V)	GRATED LINE DRAIN	MISCELLANEOUS IRON AND STEEL	(N) "H" DI HEIGHT	DRAINAGE SYSTEM NO. ⬡	DRAINAGE UNIT NO. ○	ALIGNMENT	STATION	DESCRIPTION
			LF	LF	LF	EA	CY	CY	CY	TON	SQYD	CY	LF	LF	LF	LB	FT					
DP-1	1	a													17.0			1	a	M	13+41.21	17.0′ GRATED LINE DRAIN
DP-1	1	b											14.8					1	b	M	13+41.21	4" X 1.8′, 4" X 13′ PLASTIC PIPE
DP-1	1	c							1.1									1	c	M	13+41.21	CONCRETE BACKFILL
DP-2	2	a										1.2				239	2.73	2	a	E	12+23.70	TYPE GO DI, W/ (1) GRATE TYPE 24-12X
DP-2	2	b					0.6							47.8				2	b	E	12+23.70	18" X 47.8′ RCP
DP-2	2	c								0.7	1.8	1.8				435		2	c	E	12+75.13	MANHOLE H=5.00
DP-2	2	d										0.2		2.4				2	d	E	12+75.13	18" X 2.4′ RCP, CONCRETE COLLAR
DP-2	2	e										0.2		2.4				2	e	E	12+75.13	18" X 2.4′ RCP, CONCRETE COLLAR
D-2	2	f	13.9					0.6										2	f	E	12+75.13	ABANDON CULVERT
D-2	2	g		21.8														2	g	E	12+89.00	REMOVE CULVERT
D-2	2	h				1												2	h	E	13+32.00	REMOVE INLET
DP-2	2	i					4.2							53.3				2	i	E	13+32.00	18" X 53.3′ RCP
DP-2	2	j										1.2				239	2.50	2	j	E	13+32.00	TYPE GO DI, W/ (1) GRATE TYPE 24-12X
DP-2	2	k		16														2	k	E	12+91.59	REMOVE CULVERT, 16′ X 12" RCP STORM DRAIN
DP-2	2	l			4													2	l	E	12+91.59	REMOVE PIPE, 4′ X 8" RCP WATER
DP-2	3	a											12.7					3	a	T	20+24.31	4" X 12.7′ PLASTIC PIPE
SHEET TOTAL			13.9	37.8	4	1	4.8	0.6	1.1	0.7 *	1.8 *	4.6	27.5	105.9	17.0	913						

* ADDITIONAL QUANTITIES SHOWN ELSEWHERE SEE SHEET Q-1 FOR TOTAL QUANTITY.

BETH A. ELMORE — REVISED BY
JAMES D. RASMUSSEN — DATE REVISED
CALCULATED-DESIGNED BY
CHECKED BY
JOHN L. MARTIN — FUNCTIONAL SUPERVISOR

STATE OF CALIFORNIA - DEPARTMENT OF TRANSPORTATION
Caltrans
DESIGN

P:\proj1\02\3E60X_plans\pse\resubmit 01-19-12\0200020046id001.dgn

DRAINAGE QUANTITIES
DQ-1

LAST REVISION 11-21-11 | DATE PLOTTED => 10-FEB-2012 | TIME PLOTTED => 08:06

Dist	COUNTY	ROUTE	POST MILES TOTAL PROJECT	SHEET No.	TOTAL SHEETS
02	Sha	44, 273, 299	Var	22	78

12-06-11
REGISTERED CIVIL ENGINEER DATE

2-6-12
PLANS APPROVAL DATE

REGISTERED PROFESSIONAL ENGINEER
JAMES D. RASMUSSEN
No. C76401
Exp. 12-31-12
CIVIL
STATE OF CALIFORNIA

THE STATE OF CALIFORNIA OR ITS OFFICERS OR AGENTS SHALL NOT BE RESPONSIBLE FOR THE ACCURACY OR COMPLETENESS OF SCANNED COPIES OF THIS PLAN SHEET.

NOTES:

1. FOR ACCURATE RIGHT OF WAY DATA, CONTACT RIGHT OF WAY ENGINEERING AT THE DISTRICT OFFICE.
2. ADJUST TO GRADE STATE OWNED UTILITIES IN CONSTRUCTION AREA.

NOTE:

1. UTILITY OWNERSHIP ON THIS PROJECT

GAS - PACIFIC GAS AND ELECTRIC (PG&E)
ELECTRICAL - REDDING ELECTRIC UTILITY (REU)
WATER - CITY OF REDDING (COR)
STORM DRAIN - CITY OF REDDING (COR)
SEWER - CITY OF REDDING (COR)
TELEPHONE - AMERICAN TELEPHONE & TELEGRAPH (AT&T)
CABLE - CHARTER COMMUNICATIONS (CC)
FIBER OPTIC - (AT&T)
FIBER OPTIC - CHARTER COMMUNICATIONS (CC)
RED LIGHT PHOTO ENFORCEMENT - REDFLEX TRAFFIC SYSTEMS, INC (RTS)

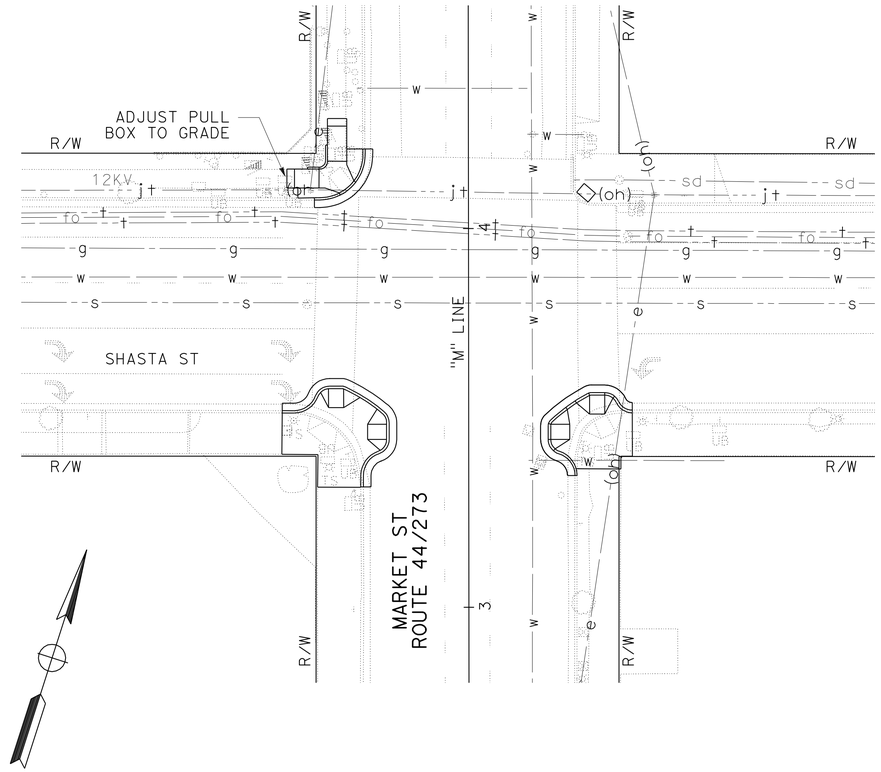

UTILITY ADJUSTMENTS

SHEET	LOCATION				DESCRIPTION	ADJUST MANHOLE TO GRADE	ADJUST WATER METER BOX TO GRADE	ADJUST PULL BOX TO GRADE	OWNER
	ALIGNMENT	STATION	OFFSET	LT/RT		EA	EA	EA	
U-1	"M"	14+13.01	48.45′	LT	ELECTRICAL UTILITY BOX			1	REU
U-1	"T"	17+94.95	0.00′	LT	SANITARY SEWER	1			COR
U-2	"C"	12+34.41	29.89′	RT	WATER METER BOX		1		COR
U-2	"E"	12+39.52	38.71′	LT	STORM DRAIN	1			COR
U-2	"E"	12+75.25	37.51′	LT	STORM DRAIN	1			COR
U-2	"E"	12+91.05	40.33′	LT	STORM DRAIN	1			COR
U-2	"E"	14+55.72	0.00′	LT	SANITARY SEWER	1			COR
					TOTAL	5	1	1	COR

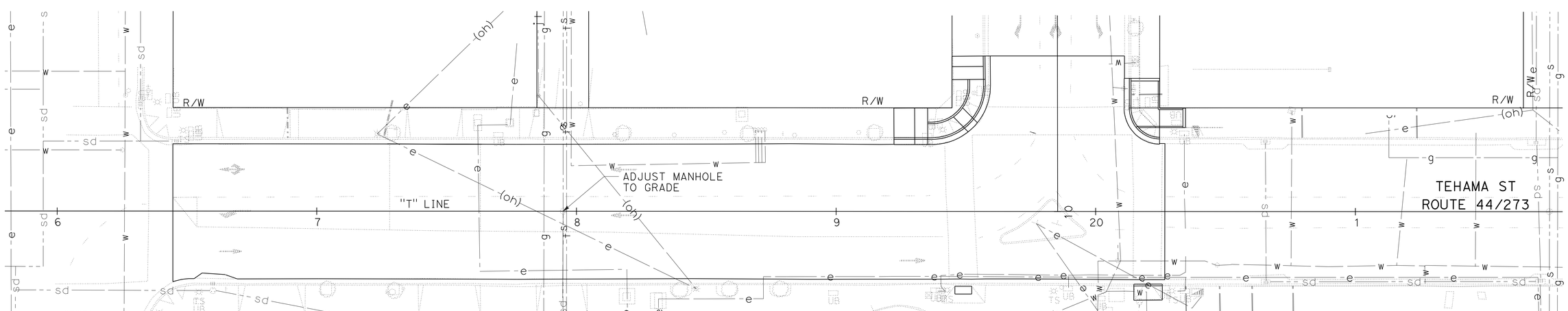

APPROVED FOR UTILITY INFORMATION ONLY

UTILITY PLAN

SCALE: 1" = 20′

U-1

STATE OF CALIFORNIA - DEPARTMENT OF TRANSPORTATION
DESIGN

FUNCTIONAL SUPERVISOR: JOHN L. MARTIN
CALCULATED-DESIGNED BY: BETH A. ELMORE
CHECKED BY: JAMES D. RASMUSSEN
REVISED BY
DATE REVISED

P:\proj1\02\3E600_plans\pse\02000200046ka001.dgn

LAST REVISION 11-21-11
DATE PLOTTED => 07-FEB-2012
TIME PLOTTED => 14:05

BORDER LAST REVISED 7/2/2010
USERNAME => s123631
DGN FILE => 0200020046ka001.dgn
RELATIVE BORDER SCALE IS IN INCHES 0 1 2 3
UNIT 0315
PROJECT NUMBER & PHASE 02000200461

Dist	COUNTY	ROUTE	POST MILES TOTAL PROJECT	SHEET No.	TOTAL SHEETS
02	Sha	44, 273, 299	Var	23	78

REGISTERED CIVIL ENGINEER 12-06-11 DATE

2-6-12
PLANS APPROVAL DATE

REGISTERED PROFESSIONAL ENGINEER JAMES D. RASMUSSEN No. C76401 Exp. 12-31-12 CIVIL STATE OF CALIFORNIA

THE STATE OF CALIFORNIA OR ITS OFFICERS OR AGENTS SHALL NOT BE RESPONSIBLE FOR THE ACCURACY OR COMPLETENESS OF SCANNED COPIES OF THIS PLAN SHEET.

NOTES:

1. FOR ACCURATE RIGHT OF WAY DATA, CONTACT RIGHT OF WAY ENGINEERING AT THE DISTRICT OFFICE.
2. SEE SHEET U-1 FOR QUANTITIES.
3. FOR HMA, SEE CONSTRUCTION DETAILS SHEET C-2.

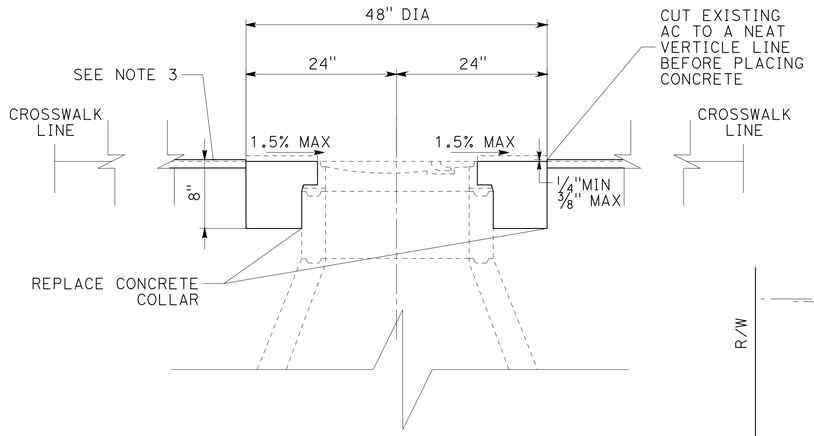

ADJUST MANHOLE TO GRADE

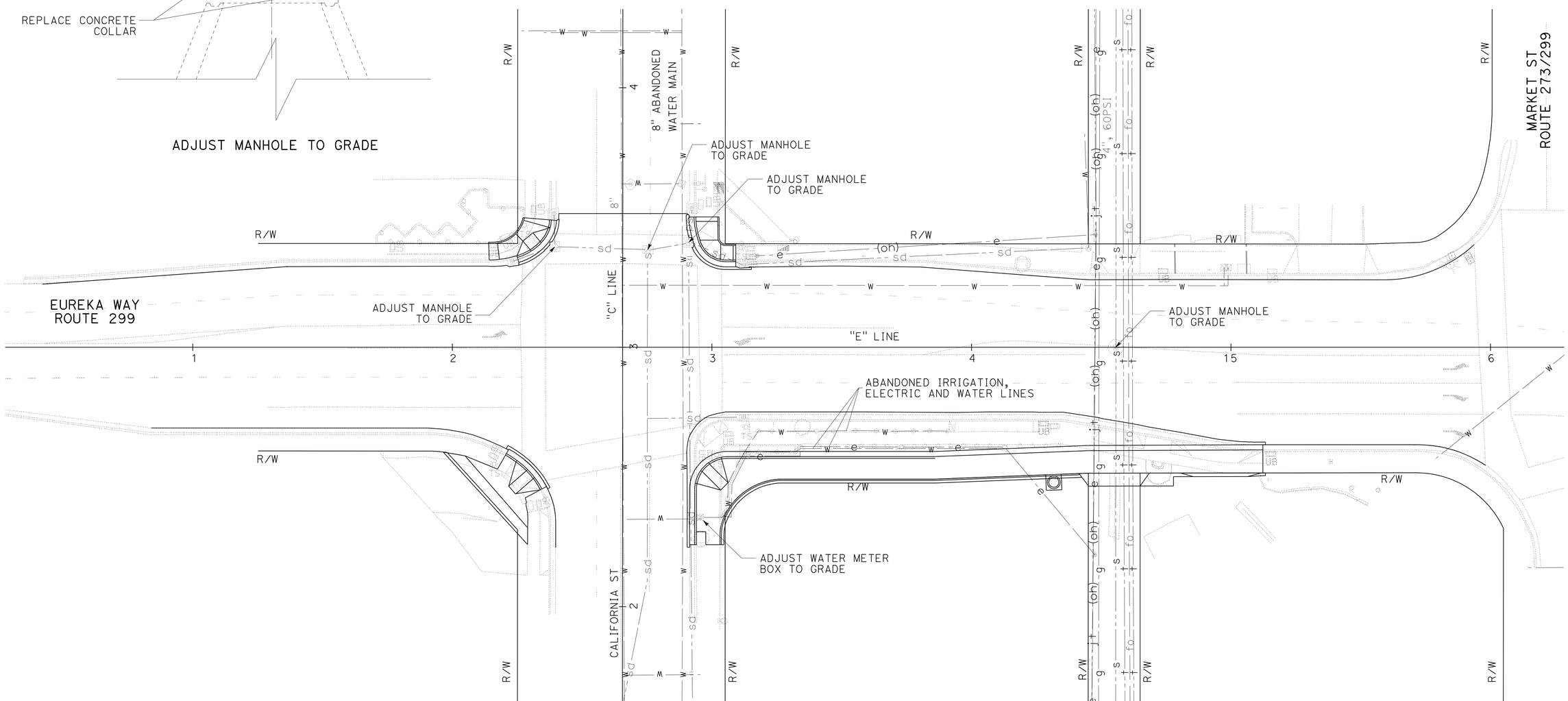

APPROVED FOR UTILITY INFORMATION ONLY

UTILITY PLAN

SCALE: 1" = 20'

U-2

BETH A. ELMORE — REVISED BY
JAMES D. RASMUSSEN — DATE REVISED
CALCULATED-DESIGNED BY
CHECKED BY
JOHN L. MARTIN — FUNCTIONAL SUPERVISOR

STATE OF CALIFORNIA - DEPARTMENT OF TRANSPORTATION
Caltrans®
DESIGN

P:\proj1\02\3E600_plans\pse\02000200046ka002.dgn

LAST REVISION 10-24-11
DATE PLOTTED => 07-FEB-2012
TIME PLOTTED => 14:05

Dist	COUNTY	ROUTE	POST MILES TOTAL PROJECT	SHEET No.	TOTAL SHEETS
02	Sha	44, 273, 299	Var	24	78

RESISTERED CIVIL ENGINEER 12-06-11 DATE

2-6-12
PLANS APPROVAL DATE

REGISTERED PROFESSIONAL ENGINEER JAMES D. RASMUSSEN No. C76401 Exp. 12-31-12 CIVIL STATE OF CALIFORNIA

THE STATE OF CALIFORNIA OR ITS OFFICERS OR AGENTS SHALL NOT BE RESPONSIBLE FOR THE ACCURACY OR COMPLETENESS OF SCANNED COPIES OF THIS PLAN SHEET.

NOTES:

1. EXACT LOCATION OF ALL SIGNS TO BE DETERMINED BY THE ENGINEER.
2. ALL SIGNS SHALL BE BLACK ON ORANGE.
3. CALIFORNIA CODES ARE DESIGNATED BY (CA) OTHERWISE FEDERAL CODES ARE SHOWN.

CONSTRUCTION AREA SIGNS (STATIONARY MOUNTED)

SIGN NO. (X)	SIGN CODE	PANEL SIZE	SIGN MESSAGE	NUMBER OF POSTS AND SIZE	NUMBER OF SIGNS
A	W20-1	48" X 48"	ROAD WORK AHEAD	1 - 4" X 6"	5
B	G20-2	36" X 18"	END ROAD WORK	1 - 4" X 4"	11
C	W20-1 C23B(CA)	48" X 48" 36" X 18"	ROAD WORK AHEAD INTERSECTION IMPROVEMENT	2 - 4" X 6"	6

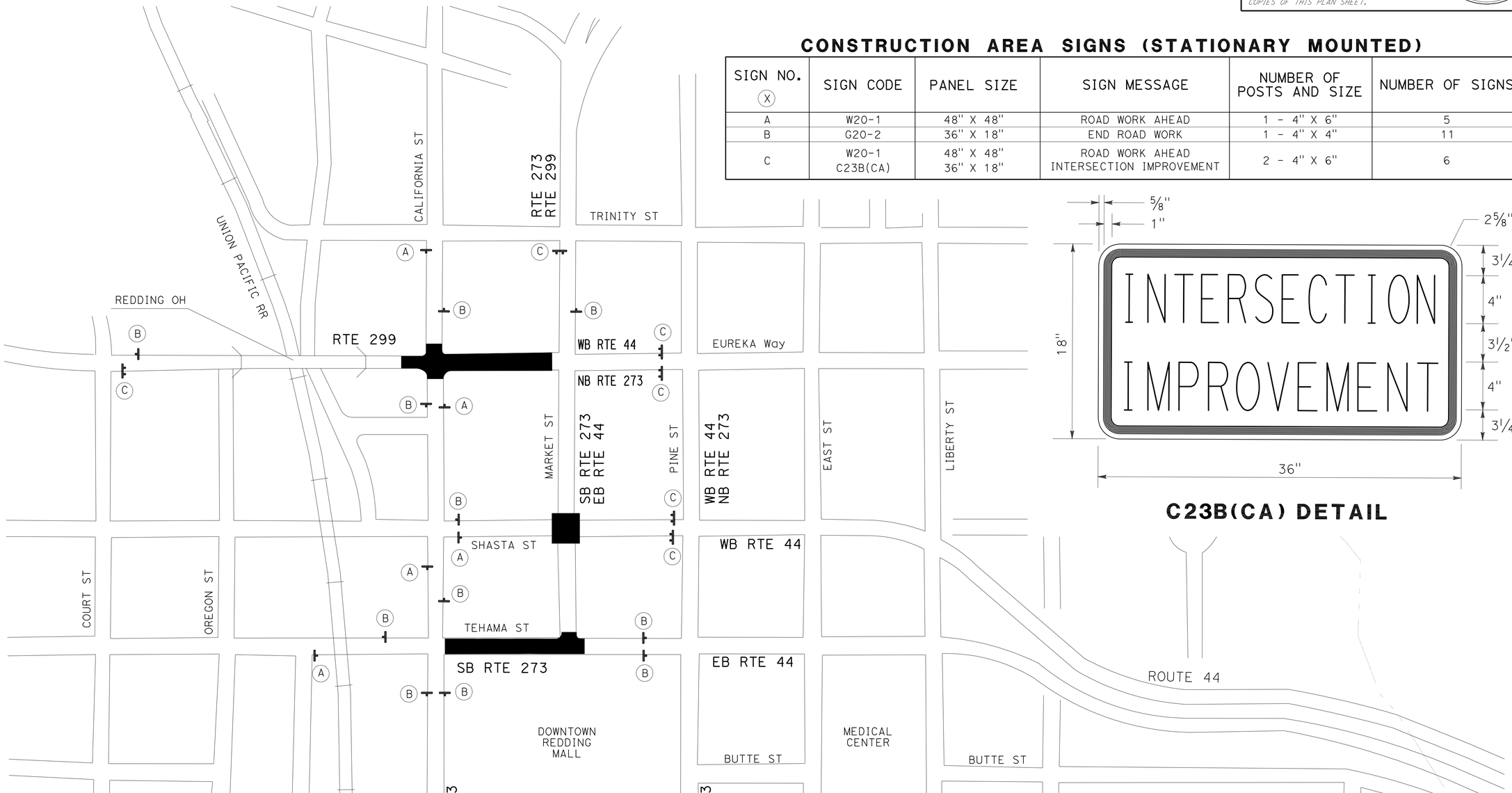

C23B(CA) DETAIL

CONSTRUCTION AREA SIGNS

NO SCALE

CS-1

APPROVED FOR CONSTRUCTION AREA SIGN WORK ONLY

REVISED BY | DATE REVISED
BETH A. ELMORE | JAMES D. RASMUSSEN
CALCULATED-DESIGNED BY | CHECKED BY
FUNCTIONAL SUPERVISOR: JOHN L. MARTIN

STATE OF CALIFORNIA - DEPARTMENT OF TRANSPORTATION
Caltrans
DESIGN

O:\Dist02\02-3e6001\02000200461a001.dgn

LAST REVISION 11-23-11 | DATE PLOTTED => 07-FEB-2012 | TIME PLOTTED => 14:05

Dist	COUNTY	ROUTE	POST MILES TOTAL PROJECT	SHEET No.	TOTAL SHEETS
02	Sha	44, 273, 299	Var	25	78

REGISTERED CIVIL ENGINEER 12-06-11 DATE

2-6-12
PLANS APPROVAL DATE

REGISTERED PROFESSIONAL ENGINEER JAMES D. RASMUSSEN No. C76401 Exp. 12-31-12 CIVIL STATE OF CALIFORNIA

THE STATE OF CALIFORNIA OR ITS OFFICERS OR AGENTS SHALL NOT BE RESPONSIBLE FOR THE ACCURACY OR COMPLETENESS OF SCANNED COPIES OF THIS PLAN SHEET.

NOTES:

1. TRAFFIC CONE SPACING SHALL BE 25 FT PARALLEL TO MAINLINE AND 12 FT THRU TAPERS AND AROUND INTERSECTION CORNERS.
2. FOR PEDESTRAIN DETOUR DETAILS, SEE SHEET SCD-1
3. FOR CONSTRUCTION AREAS USE LANE CLOSURE PER STANDARD PLAN T11

STAGE 1 TRAFFIC HANDLING

1. PLACE TEMPORARY TRAFFIC STRIPES ON EUREKA WAY BETWEEN CALIFORNIA STREET AND MARKET STREET AND SHIFT TRAFFIC
2. PLACE SIGNS AND BARRICADES TO DETOUR PEDESTRIANS AROUND STAGE 1 WORK AREAS

STAGE 1 CONSTRUCTION

1. WIDEN SOUTH SIDE OF EUREKA WAY BETWEEN CALIFORNIA STREET AND MARKET STREET
2. CONSTRUCT SIDEWALK, CURB AND GUTTER AT SOUTHEAST CORNER OF MARKET AND SHASTA STREETS

STAGE 2 TRAFFIC HANDLING

1. PLACE SIGNS AND BARRICADES TO DETOUR PEDESTRIANS AROUND STAGE 2 WORK AREAS

STAGE 2 CONSTRUCTION

1. CONSTRUCT SIDEWALK, CURB AND GUTTER AT NORTHEAST CORNER SIDE OF EUREKA WAY CALIFORNIA STREET
2. CONSTRUCT SIDEWALK, CURB AND GUTTER AT SOUTHWEST CORNER OF MARKET AND SHASTA STREETS

STAGE 3 TRAFFIC HANDLING

1. PLACE SIGNS AND BARRICADES TO DETOUR PEDESTRIANS AROUND STAGE 3 WORK AREAS

STAGE 3 CONSTRUCTION

1. CONSTRUCT SIDEWALK, CURB AND GUTTER AT SOUTHWEST CORNER OF EUREKA WAY AND CALIFORNIA STREET
2. CONSTRUCT SIDEWALK, CURB AND GUTTER AT NORTHWEST CORNER OF MARKET AND SHASTA STREETS
3. CONSTRUCT SIDEWALK, CURB AND GUTTER AT NORTHWEST CORNER OF MARKET AND TEHAMA STREETS

STAGE 4 TRAFFIC HANDLING

1. PLACE SIGNS AND BARRICADES TO DETOUR PEDESTRIANS AROUND STAGE 4 WORK AREAS

STAGE 4 CONSTRUCTION

1. CONSTRUCT SIDEWALK, CURB AND GUTTER AT NORTHEAST CORNER OF MARKET AND TEHAMA STREETS
2. CONSTRUCT SIDEWALK, CURB AND GUTTER AT NORTHWEST CORNER OF CALIFORNIA STREET AND EUREKA WAY
3. CONSTRUCT SIDEWALK, CURB AND GUTTER ON SOUTH SIDE OF TEHAMA STREET AT MARKET STREET
4. REMOVE ISLAND AT MARKET/TEHAMA INTERSECTION
5. PLACE HMA OVERLAY
6. PLACE PAVEMENT DELINEATION

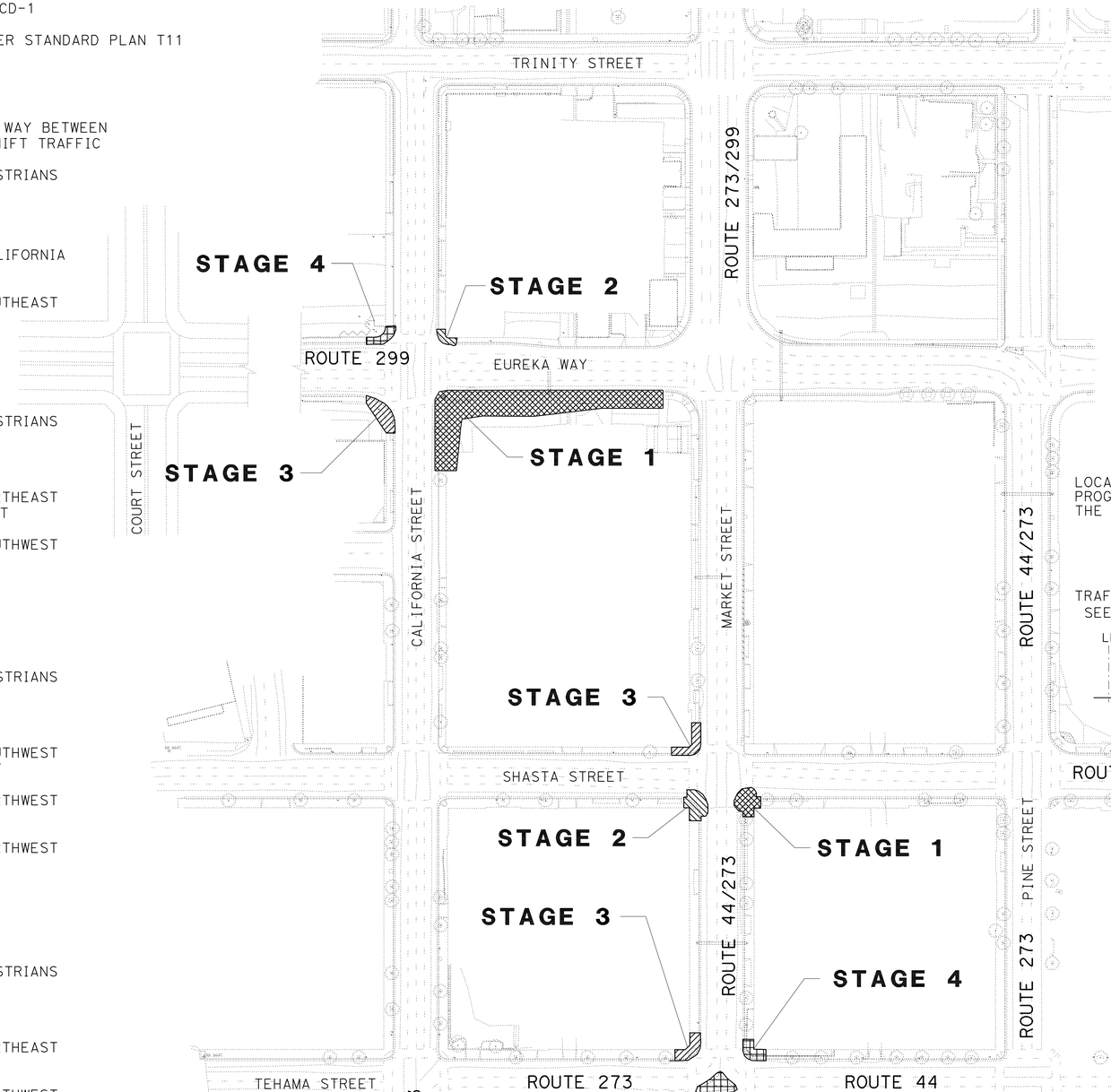

LEGEND:

STAGE 1
STAGE 2
STAGE 3
STAGE 4

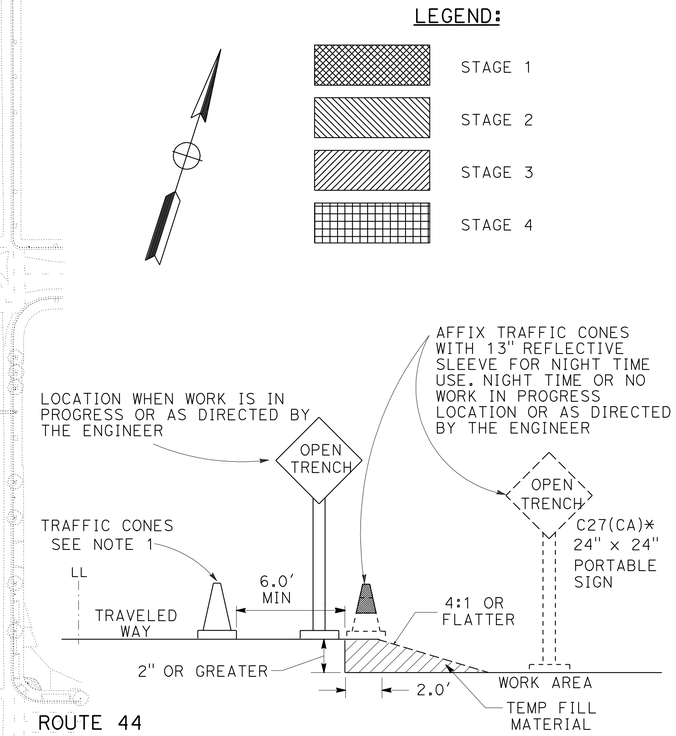

OPEN TRENCH SIGNING AND MARKING
* PLACE AT 250' INTERVALS THROUGH THE OPEN TRENCH AREA

STAGE CONSTRUCTION AND TRAFFIC HANDLING PLAN

NO SCALE

SC-1

APPROVED FOR STAGE CONSTRUCTION AND TRAFFIC HANDLING WORK ONLY

REVISED BY | DATE REVISED
TRAVIS A. GURNEY | JAMES D. RASMUSSEN
CALCULATED-DESIGNED BY | CHECKED BY
FUNCTIONAL SUPERVISOR: JOHN L. MARTIN
STATE OF CALIFORNIA - DEPARTMENT OF TRANSPORTATION
Caltrans DESIGN

P:\proj1\02\3E600_plans\pse\02000200046ma001.dgn

LAST REVISION | DATE PLOTTED => 07-FEB-2012 | TIME PLOTTED => 14:05

Dist	COUNTY	ROUTE	POST MILES TOTAL PROJECT	SHEET No.	TOTAL SHEETS
02	Sha	44, 273, 299	Var	26	78

REGISTERED CIVIL ENGINEER 12-06-11 DATE

2-6-12
PLANS APPROVAL DATE

REGISTERED PROFESSIONAL ENGINEER JAMES D. RASMUSSEN No. C76401 Exp. 12-31-12 CIVIL STATE OF CALIFORNIA

THE STATE OF CALIFORNIA OR ITS OFFICERS OR AGENTS SHALL NOT BE RESPONSIBLE FOR THE ACCURACY OR COMPLETENESS OF SCANNED COPIES OF THIS PLAN SHEET.

NOTES:

1. SIDEWALK CLOSURE SIGNS SHALL HAVE BLACK LETTERING AND BORDER WITH WHITE BACKGROUND
2. CALIFORNIA SIGN CODES ARE DESIGNATED BY (CA), OTHERWISE, FEDERAL MUTCD SIGN CODES ARE SHOWN.

LEGEND:

- TYPE III BARRICADE
- CONSTRUCTION AREA SIGN (PORTABLE)
- BATTERY OPERATED FLASHER

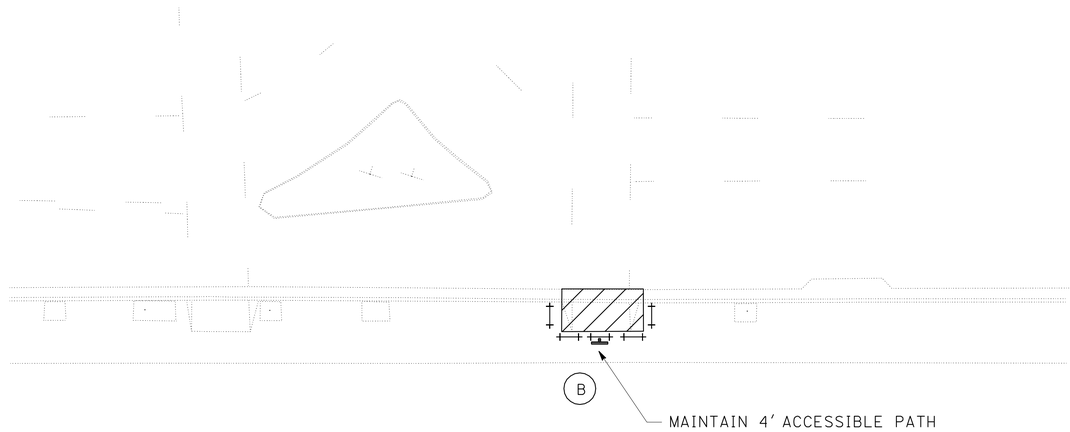

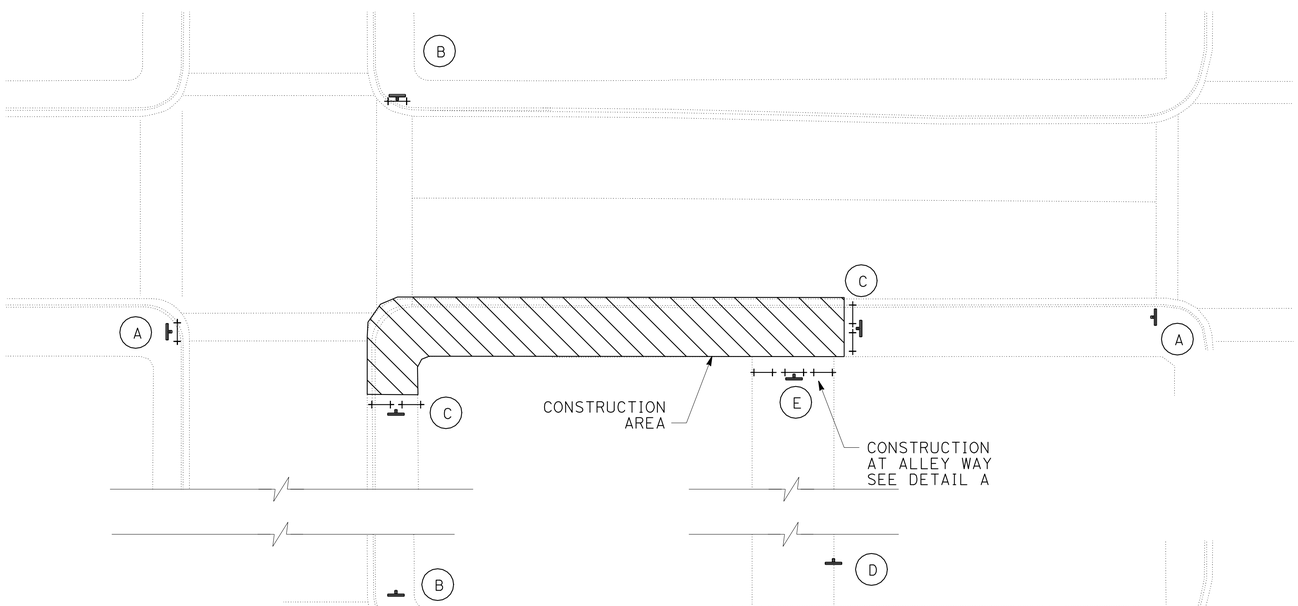

PEDESTRIAN DETOUR DETAILS
WORK AT CORNER

CONSTRUCTION AREA SIGNS (PORTABLE SIGNS)

SIGN NO.	CODE	PANEL SIZE	REMARKS	STAGE 1	STAGE 2	STAGE 3	STAGE 4
○				No. OF SIGNS	No. OF SIGNS	No. OF SIGNS	No. OF SIGNS
A	R9-11	24" x 12"	"SIDEWALK CLOSED AHEAD" → "CROSS HERE"	4	4	6	4
B	R9-11	24" x 12"	"SIDEWALK CLOSED AHEAD" ← "CROSS HERE"	4	4	6	4
C	R9-9	30" x 18"	"SIDEWALK" "CLOSED"	4	4	6	4
D	R11-4	60" x 30"	"ROAD CLOSED TO THRU TRAFFIC"	1	-	-	-
E	R11-2	48" x 30"	"ROAD CLOSED"	2	-	-	-

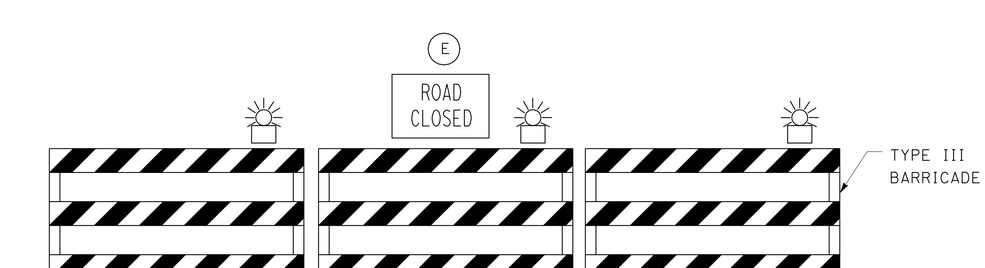

DETAIL A
CLOSURE OF DRIVEWAYS AND ALLEYS

STAGE CONSTRUCTION AND TRAFFIC HANDLING DETAILS
NO SCALE

SCD-1

APPROVED FOR STAGE CONSTRUCTION AND TRAFFIC HANDLING WORK ONLY

REVISED BY | DATE REVISED
TRAVIS A. GURNEY | JAMES D. RASMUSSEN
CALCULATED-DESIGNED BY | CHECKED BY
FUNCTIONAL SUPERVISOR: JOHN L. MARTIN

STATE OF CALIFORNIA - DEPARTMENT OF TRANSPORTATION
Caltrans®
DESIGN

P:\proj\02\3E600_plans\pse\0200020046mb001.dgn

LAST REVISION 10-24-11 | DATE PLOTTED => 08-FEB-2012 | TIME PLOTTED => 11:17

Dist	COUNTY	ROUTE	POST MILES TOTAL PROJECT	SHEET No.	TOTAL SHEETS
02	Sha	44, 273, 299	Var	27	78

REGISTERED CIVIL ENGINEER 12-06-11 DATE

2-6-12
PLANS APPROVAL DATE

REGISTERED PROFESSIONAL ENGINEER JAMES D. RASMUSSEN No. C76401 Exp. 12-31-12 CIVIL STATE OF CALIFORNIA

THE STATE OF CALIFORNIA OR ITS OFFICERS OR AGENTS SHALL NOT BE RESPONSIBLE FOR THE ACCURACY OR COMPLETENESS OF SCANNED COPIES OF THIS PLAN SHEET.

NOTE:

1. EXACT LOCATION OF SIGNS TO BE DETERMINED BY THE ENGINEER.

ABBREVIATIONS:

LIP	LIP OF GUTTER
LL	LANE LINE
Var	VARIES
REMOVE STRIPE	REMOVE THERMOPLASTIC TRAFFIC STRIPE
REMOVE YELLOW STRIPE	REMOVE YELLOW THERMOPLASTIC TRAFFIC STRIPE (HAZARDOUS WASTE)
REMOVE MARKING	REMOVE THERMOPLASTIC PAVEMENT MARKING

LEGEND:

- TYPE III ARROW
- SINGLE STRIPE MARKER
- STRIPE CHANGE LOCATION
- T-CW — TEMPORARY CROSSWALK MARKINGS
- T-XX — TEMPORARY TRAFFIC STRIPE DETAIL NUMBER
- CW — TRAFFIC STRIPE DETAIL NUMBER
- CHANNELIZER (SURFACE MOUNTED)
- WORK AREA

CONSTRUCTION AREA SIGNS (PORTABLE SIGNS)

SIGN NO.	SIGN CODE	PANEL SIZE	REMARKS	No. OF SIGNS
A	G28-2 (273) M6-4 M4-5 G28-2 (5) M6-4	24" X 24" 12" X 24" 12" X 24" 24" X 24" 12" X 24"	ROUTE SHIELD "273" ARROW ⇔ "TO" SIGN ROUTE SHIELD "5" ARROW ⇔	1
B	G28-2 (299) M3-2 M6-1(LEFT) M4-5 G28-2 (44) M3-2 M6-1(RIGHT)	24" X24" 12" X 24" 12" X 24" 12" X 24" 24" X 24" 12" X 24" 12" X 24"	ROUTE SHIELD "299" EAST ⇦ LEFT TO ROUTE SHIELD "44" EAST RIGHT ⇨	1

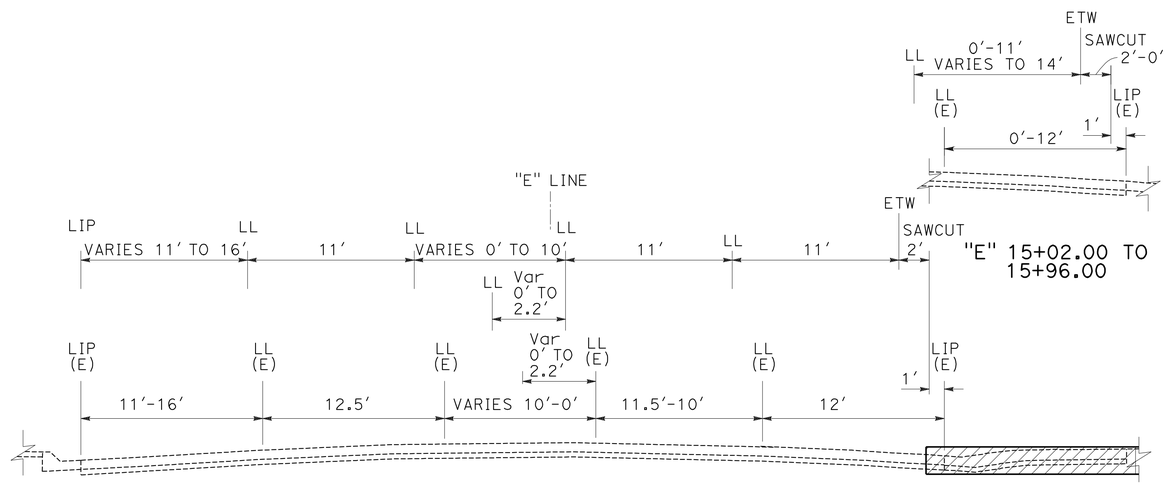

ROUTE 299 - EUREKA WAY STAGE 1

"E" 13+03.00 TO 15+96.00

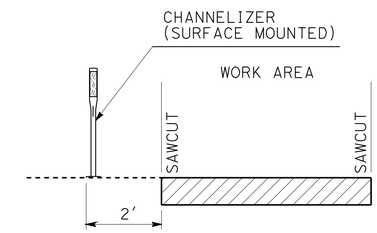

SECTION A-A

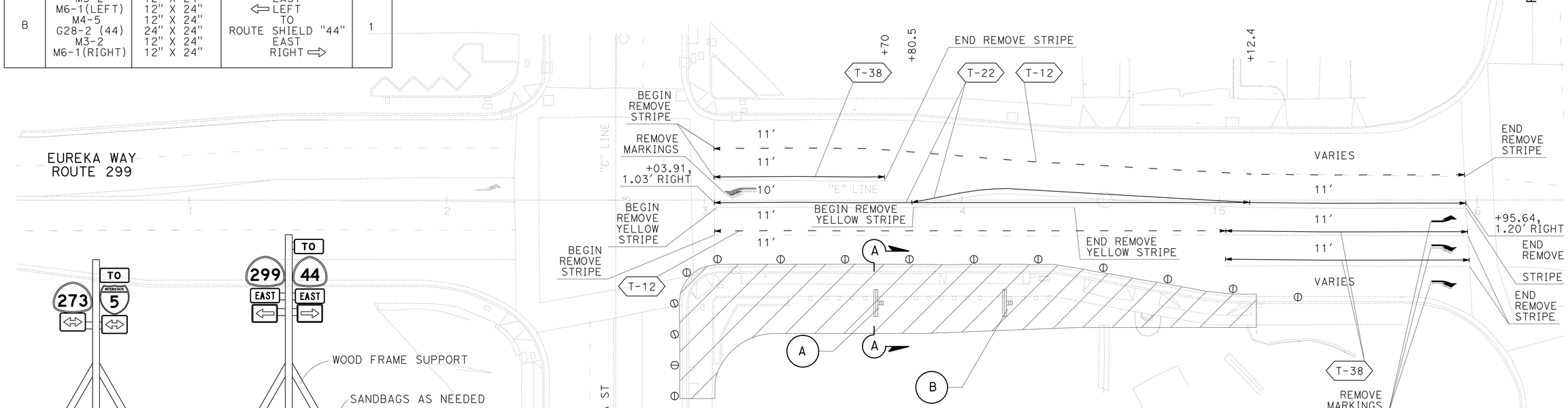

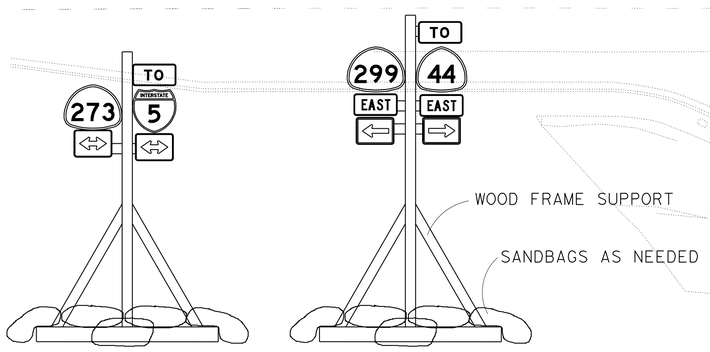

TYPICAL SIGN MOUNTING — A (NO SCALE)

TYPICAL SIGN MOUNTING — B (NO SCALE)

ROUTE 299 - EUREKA WAY STAGE 1

APPROVED FOR STAGE CONSTRUCTION AND TRAFFIC HANDLING WORK ONLY

STAGE CONSTRUCTION AND TRAFFIC HANDLING DETAILS

NO SCALE

SCD-2

REVISED BY	DATE REVISED
BETH A. ELMORE	JAMES D. RASMUSSEN

CALCULATED-DESIGNED BY / CHECKED BY

FUNCTIONAL SUPERVISOR: JOHN L. MARTIN

STATE OF CALIFORNIA - DEPARTMENT OF TRANSPORTATION — DESIGN

Caltrans

P:\proj1\02\3E600_plans\pse\02000200046mb002.dgn

LAST REVISION 10-24-11 | DATE PLOTTED => 07-FEB-2012 | TIME PLOTTED => 14:06

Dist	COUNTY	ROUTE	POST MILES TOTAL PROJECT	SHEET No.	TOTAL SHEETS
02	Sha	44, 273, 299	Var	28	78

REGISTERED CIVIL ENGINEER 12-06-11 DATE

2-6-12
PLANS APPROVAL DATE

REGISTERED PROFESSIONAL ENGINEER
JAMES D. RASMUSSEN
No. C76401
Exp. 12-31-12
CIVIL
STATE OF CALIFORNIA

THE STATE OF CALIFORNIA OR ITS OFFICERS OR AGENTS SHALL NOT BE RESPONSIBLE FOR THE ACCURACY OR COMPLETENESS OF SCANNED COPIES OF THIS PLAN SHEET.

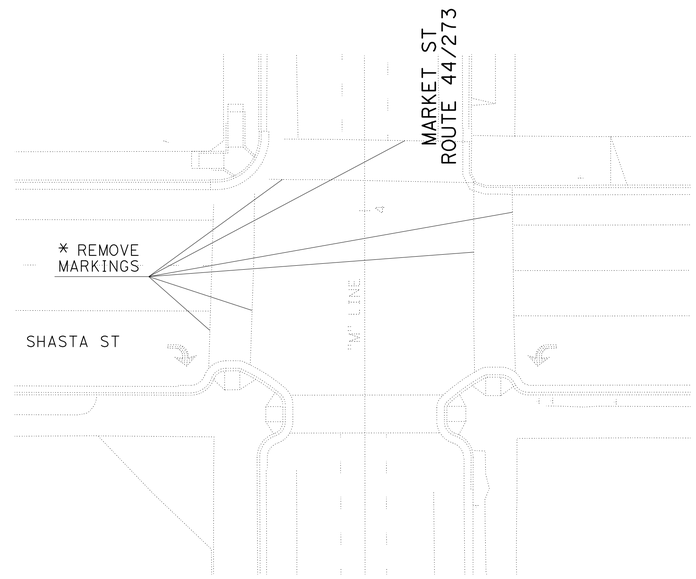

ROUTE 273/44 - SHASTA STREET STAGE 4

* SEE PD-1 FOR PAVEMENT DELINEATION AND PDQ-1 FOR QUANTITIES.

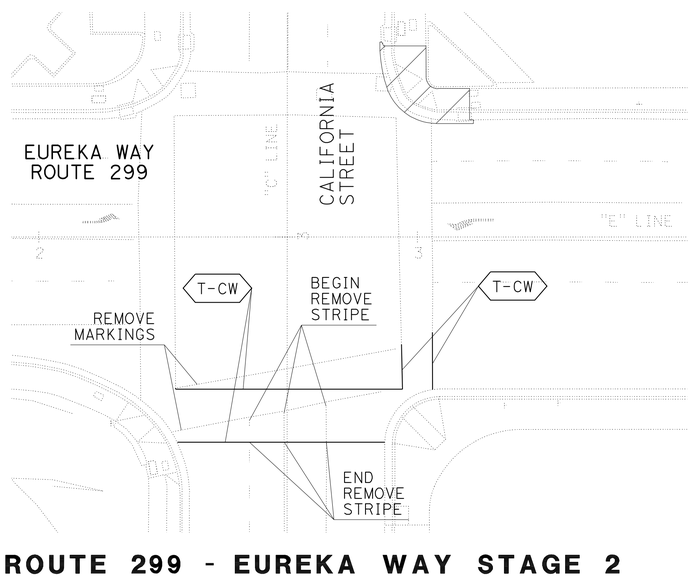

ROUTE 299 - EUREKA WAY STAGE 2

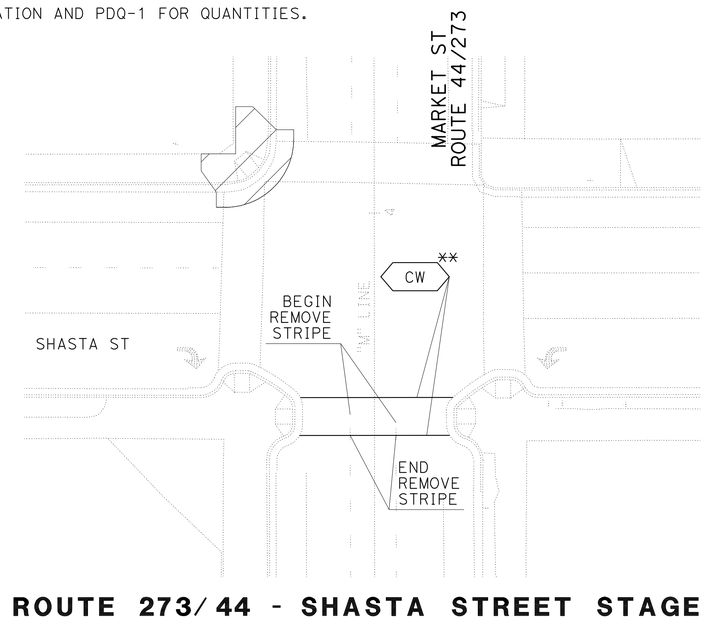

ROUTE 273/44 - SHASTA STREET STAGE 3

** SEE PDQ-1 FOR FOR QUANTITY.

STAGE CONSTRUCTION AND TRAFFIC HANDLING DETAILS

NO SCALE

APPROVED FOR STAGE CONSTRUCTION AND TRAFFIC HANDLING WORK ONLY

SCD-3

REVISED BY	DATE REVISED

CALCULATED-DESIGNED BY	BETH A. ELMORE
CHECKED BY	JAMES D. RASMUSSEN
FUNCTIONAL SUPERVISOR	JOHN L. MARTIN

STATE OF CALIFORNIA - DEPARTMENT OF TRANSPORTATION
Caltrans
DESIGN

P:\proj1\02\3E600_plans\pse\02000200046mb003.dgn

LAST REVISION 10-24-11
DATE PLOTTED => 07-FEB-2012
TIME PLOTTED => 14:06

Dist	COUNTY	ROUTE	POST MILES TOTAL PROJECT	SHEET No.	TOTAL SHEETS
02	Sha	44, 273, 299	Var	29	78

REGISTERED CIVIL ENGINEER 12-06-11 DATE

2-6-12
PLANS APPROVAL DATE

REGISTERED PROFESSIONAL ENGINEER JAMES D. RASMUSSEN No. C76401 Exp. 12-31-12 CIVIL STATE OF CALIFORNIA

THE STATE OF CALIFORNIA OR ITS OFFICERS OR AGENTS SHALL NOT BE RESPONSIBLE FOR THE ACCURACY OR COMPLETENESS OF SCANNED COPIES OF THIS PLAN SHEET.

THERMOPLASTIC REMOVAL

STAGE	SHEET	STATION	REMOVE YELLOW THERMOPLASTIC TRAFFIC STRIPE (HAZARDOUS WASTE)	REMOVE THERMOPLASTIC TRAFFIC STRIPE				REMOVE THERMOPLASTIC PAVEMENT MARKING
			DETAIL 22	DETAIL 9	DETAIL 12	DETAIL 27B	DETAIL 38	
			LF	LF	LF	LF	LF	SQFT
1	SCD-2	"E" 13+03 TO 16+00	354		123		254	168
2	SCD-3	"E" 12+30 TO 12+96						118
2	SCD-3	"C" 12+45 TO 12+56	8	1		10		
3	SCD-3	"M" 10+60 TO 13+50			4			62
4	SCD-3	"M" 13+54 TO 14+18						410
		SUBTOTAL	362	1	127	10	254	758
		TOTAL	362	392				758

TRAFFIC CONTROL DEVICES

STAGE	CHANNELIZER (SURFACE MOUNTED)	TYPE III BARRICADE
	EA	EA
1	19	18
2		12
3		18
4		16
DETOURS		12
TOTAL	19	76

TRAFFIC HANDLING QUANTITIES

STAGE	SHEET	STATION	TEMPORARY TRAFFIC STRIPE (PAINT)			TEMPORARY PAVEMENT MARKER			TEMPORARY PAVEMENT MARKING (PAINT)
						TYPE D	TYPE G		
			DETAIL 22	DETAIL 12	DETAIL 38	DETAIL 22	DETAIL 12	DETAIL 38	
			LF	LF	LF	EA	EA	EA	SQFT
1	SCD-2	"E" 13+03 TO 16+00	425	494	255	41	14	14	168
2	SCD-3	"E" 12+36 TO 12+96							115
2	SCD-3	"C" 12+59 TO 12+75							27
		SUBTOTAL	425	494	255	41	14	14	310
		TOTAL	1174			69			310

STAGE CONSTRUCTION AND TRAFFIC HANDLING QUANTITIES
SCQ-1

REVISED BY | DATE REVISED
TRAVIS A. GURNEY | JAMES D. RASMUSSEN
CALCULATED-DESIGNED BY | CHECKED BY
FUNCTIONAL SUPERVISOR
JOHN L. MARTIN

STATE OF CALIFORNIA - DEPARTMENT OF TRANSPORTATION
Caltrans
DESIGN

P:\proj1\02\3E600_plans\pse\0200020046mc001.dgn

LAST REVISION 10-23-11 | DATE PLOTTED => 07-FEB-2012 | TIME PLOTTED => 14:06

Dist	COUNTY	ROUTE	POST MILES TOTAL PROJECT	SHEET No.	TOTAL SHEETS
02	Sha	44, 273, 299	Var	30	78

REGISTERED CIVIL ENGINEER 12-06-11 DATE

2-6-12
PLANS APPROVAL DATE

REGISTERED PROFESSIONAL ENGINEER JAMES D. RASMUSSEN No. C76401 Exp. 12-31-12 CIVIL STATE OF CALIFORNIA

THE STATE OF CALIFORNIA OR ITS OFFICERS OR AGENTS SHALL NOT BE RESPONSIBLE FOR THE ACCURACY OR COMPLETENESS OF SCANNED COPIES OF THIS PLAN SHEET.

NOTES:

1. PLACE 7 DAYS PRIOR TO CLOSURE, MESSAGE SHOULD READ

FRAME 1	INFO FOR ROUTE 299 CLOSURE	TUNE TO 1610 AM	FRAME 2

1A. PRE-NOTIFICATION PCMS: PLACE AND ACTIVATE APPROXIMATELY 12 HOURS BEFORE ROAD CLOSURE.

FRAME 1	ROUTE 299 EAST	CLOSED TONIGHT 0 PM - 0 AM	FRAME 2

1B. PRE-NOTIFICATION PCMS: PLACE AND ACTIVATE APPROXIMATELY 12 HOURS BEFORE ROAD CLOSURE.

FRAME 1	ROUTE 299 WEST	CLOSED TONIGHT 0 PM - 0 AM	FRAME 2

2. ACTIVATE DURING ROAD CLOSURE.

FRAME 1	USE LOCAL ROADS OR	FOLLOW DETOUR	FRAME 2

2A. ACTIVATE DURING ROAD CLOSURE.

FRAME 1	ROUTE 299 EAST CLOSED	FOLLOW DETOUR	FRAME 2

2B. ACTIVATE DURING ROAD CLOSURE.

FRAME 1	ROUTE 299 WEST CLOSED	FOLLOW DETOUR	FRAME 2

2C. ACTIVATE DURING ROAD CLOSURE.

FRAME 1	TURN LEFT NB ROUTE 273/299	TURN RIGHT SB ROUTE 44/273	FRAME 2

3. CALIFORNIA SIGN CODES ARE DESIGNATED BY (CA), OTHERWISE, FEDERAL MUTCD SIGN CODES ARE SHOWN.

4. EXACT SIGN LOCATIONS TO BE DETERMINED BY THE ENGINEER.

ABBREVIATIONS

PCMS PORTABLE CHANGEABLE MESSAGE SIGN

LEGEND:

- BARRICADE TYPE III
- BATTERY OPERATED FLASHER
- DETOUR ROUTE
- DETOUR ROUTE
- PCMS LOCATION
- PORTABLE SIGN LOCATION
- XXX ROADWAY CLOSURE
- # SEE NOTES

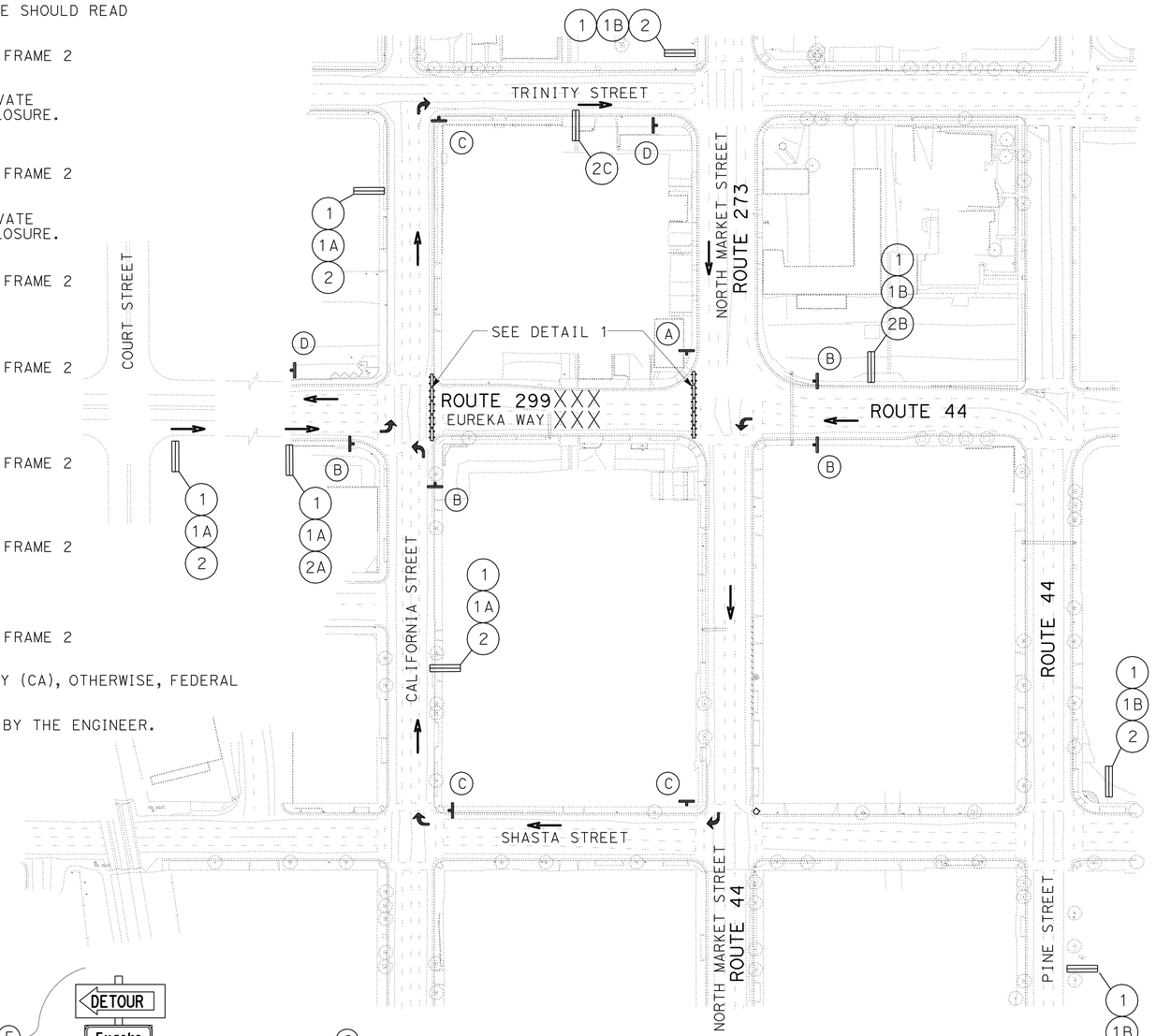

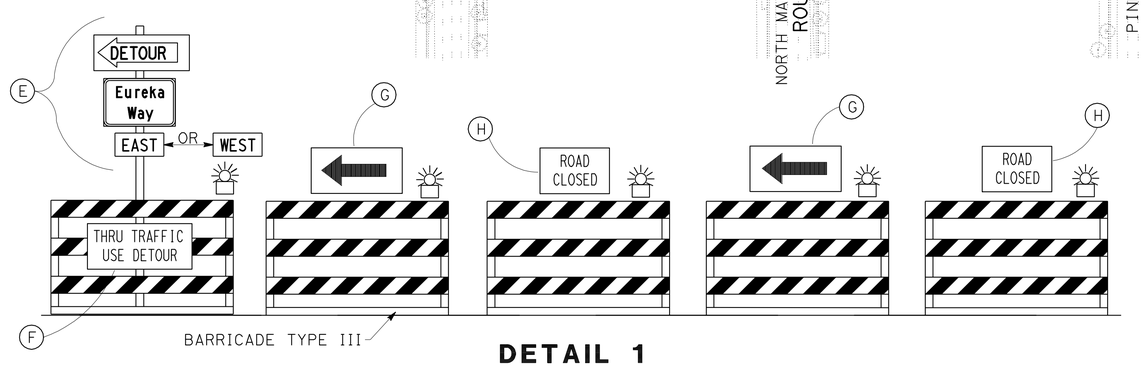

DETAIL 1
BARRICADES AND SIGNS FOR CLOSURE OF EUREKA WAY
NO SCALE

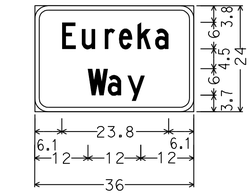

3.0" RADIUS, 1.0" BORDER, 0.4"
BLACK ON ORANGE; [Eureka] C; [Way] C

SPECIAL SIGN NO. 1 DETAIL
ALL DIMENSIONS ARE IN INCHES

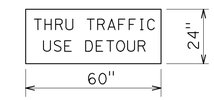

1. 6" UPPER CASE LETTERS BLACK ON ORANGE
2. ALL DIMENSIONS ARE IN INCHES

SPECIAL SIGN NO. 2 DETAIL

CONSTRUCTION AREA SIGNS (PORTABLE SIGNS)

SIGN NO.	CODE	PANEL SIZE	REMARKS	No. OF SIGNS
A	SC3(CA) SPECIAL SIGN NO.1	48" x 18" 36" x 24"	"DETOUR" Eureka Way	1
B	M4-10 L SPECIAL SIGN NO.1	48" x 18" 36" x 24"	"DETOUR" Eureka Way	4
C	M4-10 R SPECIAL SIGN NO.1	48" x 18" 36" x 24"	"DETOUR" Eureka Way	3
D	M4-8A	24" x 18"	"END DETOUR"	2
E	M4-10 L SPECIAL SIGN NO. 1	48" x 18" 36" x 24"	"DETOUR" EUREKA WAY	2
F	SPECIAL SIGN NO. 2	60" x 24"	"THRU TRAFFIC" "USE DETOUR"	2
G	W1-6 (LT)	48" x 24"		4
H	R11-2	36" x 24"	"ROAD CLOSED"	4

DETOUR PLAN
NO SCALE

DE-1

APPROVED FOR DETOUR CONSTRUCTION WORK ONLY

STATE OF CALIFORNIA - DEPARTMENT OF TRANSPORTATION
Caltrans
DESIGN

FUNCTIONAL SUPERVISOR: JOHN L. MARTIN
CALCULATED-DESIGNED BY: TRAVIS A. GURNEY
CHECKED BY: JAMES D. RASMUSSEN
REVISED BY
DATE REVISED

P:\proj\02\3E600_plans\pse\0200020046mg001.dgn

LAST REVISION DATE PLOTTED => 07-FEB-2012
TIME PLOTTED => 14:06

Dist	COUNTY	ROUTE	POST MILES TOTAL PROJECT	SHEET No.	TOTAL SHEETS
02	Sha	44, 273, 299	Var	31	78

REGISTERED CIVIL ENGINEER 12-06-11 DATE

2-6-12
PLANS APPROVAL DATE

REGISTERED PROFESSIONAL ENGINEER JAMES D. RASMUSSEN No. C76401 Exp. 12-31-12 CIVIL STATE OF CALIFORNIA

THE STATE OF CALIFORNIA OR ITS OFFICERS OR AGENTS SHALL NOT BE RESPONSIBLE FOR THE ACCURACY OR COMPLETENESS OF SCANNED COPIES OF THIS PLAN SHEET.

NOTES:

1. PLACE 7 DAYS PRIOR TO CLOSURE, MESSAGE SHOULD READ

FRAME 1	INFO FOR TEHAMA ST CLOSURE	TUNE TO 1610 AM	FRAME 2

2. PRE-NOTIFICATION PCMS: PLACE AND ACTIVATE APPROXIMATELY 12 HOURS BEFORE ROAD CLOSURE.

FRAME 1	TEHAMA STREET EAST	CLOSED TONIGHT 0 PM - 0 AM	FRAME 2

3. ACTIVATE DURING ROAD CLOSURE.

FRAME 1	USE LOCAL ROADS OR	FOLLOW DETOUR	FRAME 2

4. ACTIVATE DURING ROAD CLOSURE.

FRAME 1	TEHAMA ST EAST CLOSED	FOLLOW DETOUR	FRAME 2

5. CALIFORNIA SIGN CODES ARE DESIGNATED BY (CA), OTHERWISE, FEDERAL MUTCD SIGN CODES ARE SHOWN.
6. EXACT SIGN LOCATIONS TO BE DETERMINED BY THE ENGINEER.

ABBREVIATIONS

PCMS PORTABLE CHANGEABLE MESSAGE SIGN

LEGEND:

- BARRICADE TYPE III
- BATTERY OPERATED FLASHER
- DETOUR ROUTE
- DETOUR ROUTE
- PCMS LOCATION
- PORTABLE SIGN LOCATION
- XXX ROADWAY CLOSURE
- (#) SEE NOTES

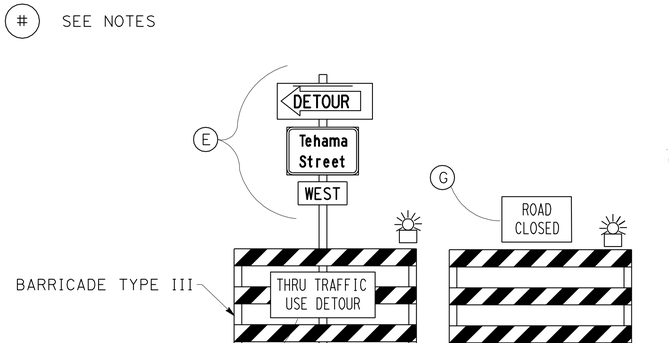

DETAIL 1
BARRICADES AND SIGNS FOR CLOSURE OF TEHAMA STREET
NO SCALE

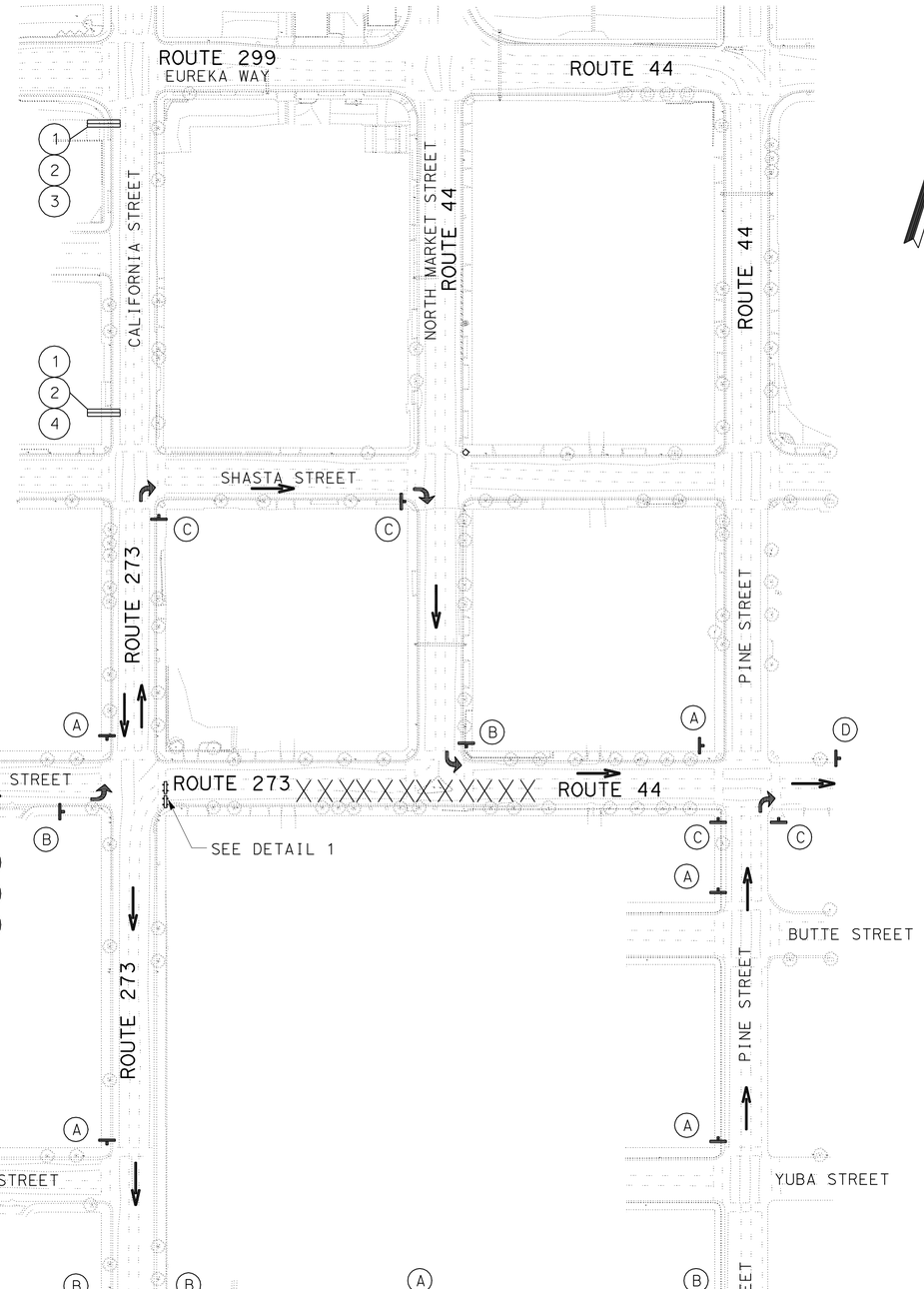

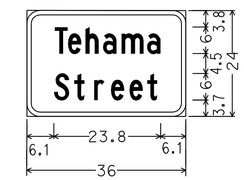

3.0" RADIUS, 1.0" BORDER, 0.4"
BLACK ON ORANGE;
[TEHAMA] C; [Street] C

SPECIAL SIGN NO. 3 DETAIL
ALL DIMENSIONS ARE IN INCHES

CONSTRUCTION AREA SIGNS (PORTABLE SIGNS)

SIGN NO.	CODE	PANEL SIZE	REMARKS	No. OF SIGNS
A	SC3(CA) SPECIAL SIGN NO.1	48" x 18" 36" x 24"	↑ "DETOUR" Tehama Street	6
B	M4-10 L SPECIAL SIGN NO.1	48" x 18" 36" x 24"	← "DETOUR" Tehama Street	5
C	M4-10 R SPECIAL SIGN NO.1	48" x 18" 36" x 24"	"DETOUR" → Tehama Street	4
D	M4-8A	24" x 18"	"END DETOUR"	1
E	M4-10 L SPECIAL SIGN NO. 3	48" x 18" 36" x 24"	"DETOUR" ← Tehama Street	1
F	SPECIAL SIGN NO. 2	60" x 24"	"THRU TRAFFIC" "USE DETOUR"	1
G	R11-2	36" x 24"	"ROAD CLOSED"	1

DETOUR PLAN
NO SCALE
DE-2

APPROVED FOR DETOUR CONSTRUCTION WORK ONLY

REVISED BY | DATE REVISED
TRAVIS A. GURNEY | JAMES D. RASMUSSEN
CALCULATED-DESIGNED BY | CHECKED BY
FUNCTIONAL SUPERVISOR: JOHN L. MARTIN
STATE OF CALIFORNIA - DEPARTMENT OF TRANSPORTATION
DESIGN
Caltrans

P:\proj1\02\3E600_plans\pse\02000200046mg002.dgn

LAST REVISION 08-22-11 | DATE PLOTTED => 08-FEB-2012 | TIME PLOTTED => 11:17

Dist	COUNTY	ROUTE	POST MILES TOTAL PROJECT	SHEET No.	TOTAL SHEETS
02	Sha	44, 273, 299	Var	32	78

REGISTERED CIVIL ENGINEER 12-06-11 DATE

2-6-12
PLANS APPROVAL DATE

REGISTERED PROFESSIONAL ENGINEER JAMES D. RASMUSSEN No. C76401 Exp. 12-31-12 CIVIL STATE OF CALIFORNIA

THE STATE OF CALIFORNIA OR ITS OFFICERS OR AGENTS SHALL NOT BE RESPONSIBLE FOR THE ACCURACY OR COMPLETENESS OF SCANNED COPIES OF THIS PLAN SHEET.

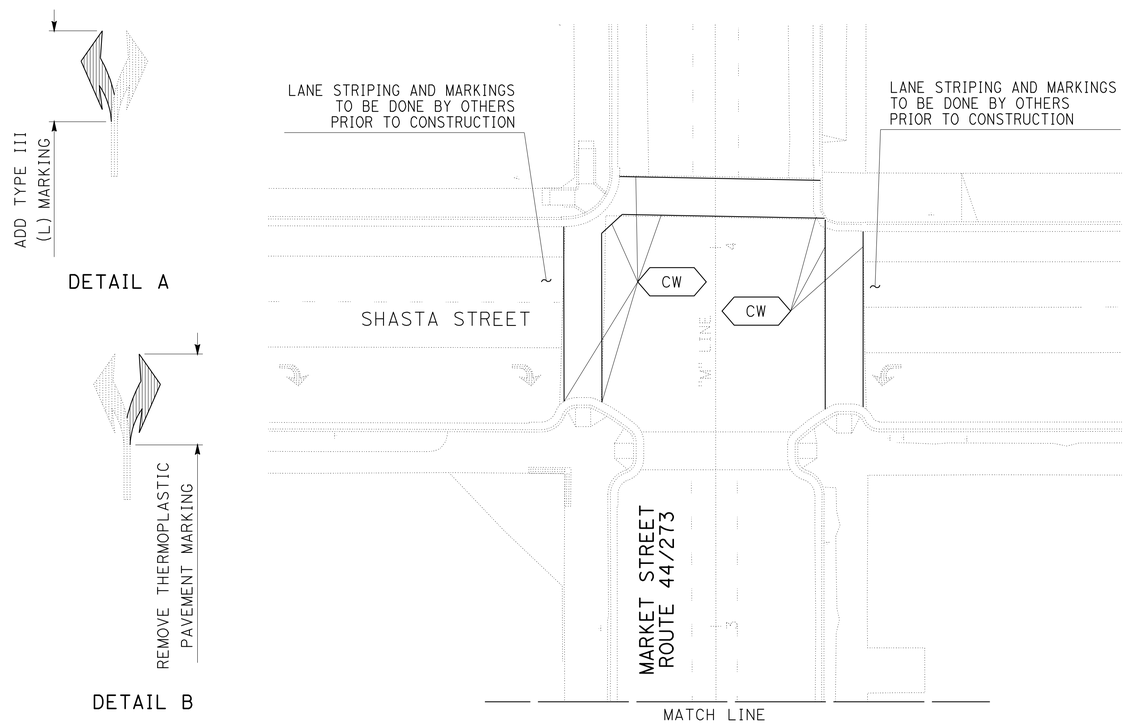

LEGEND:

- SINGLE STRIPE MARKER
- STRIPE CHANGE LOCATION
- CW — CROSSWALK MARKINGS
- LL — LIMIT LINE MARKINGS
- XX — PAVEMENT DELINEATION STRIPE DETAIL
- TYPE II (B) ARROW
- TYPE III ARROW
- TYPE III (B) ARROW
- TYPE V ARROW
- THERMOPLASTIC CROSSWALK MARKING (RECESSED)

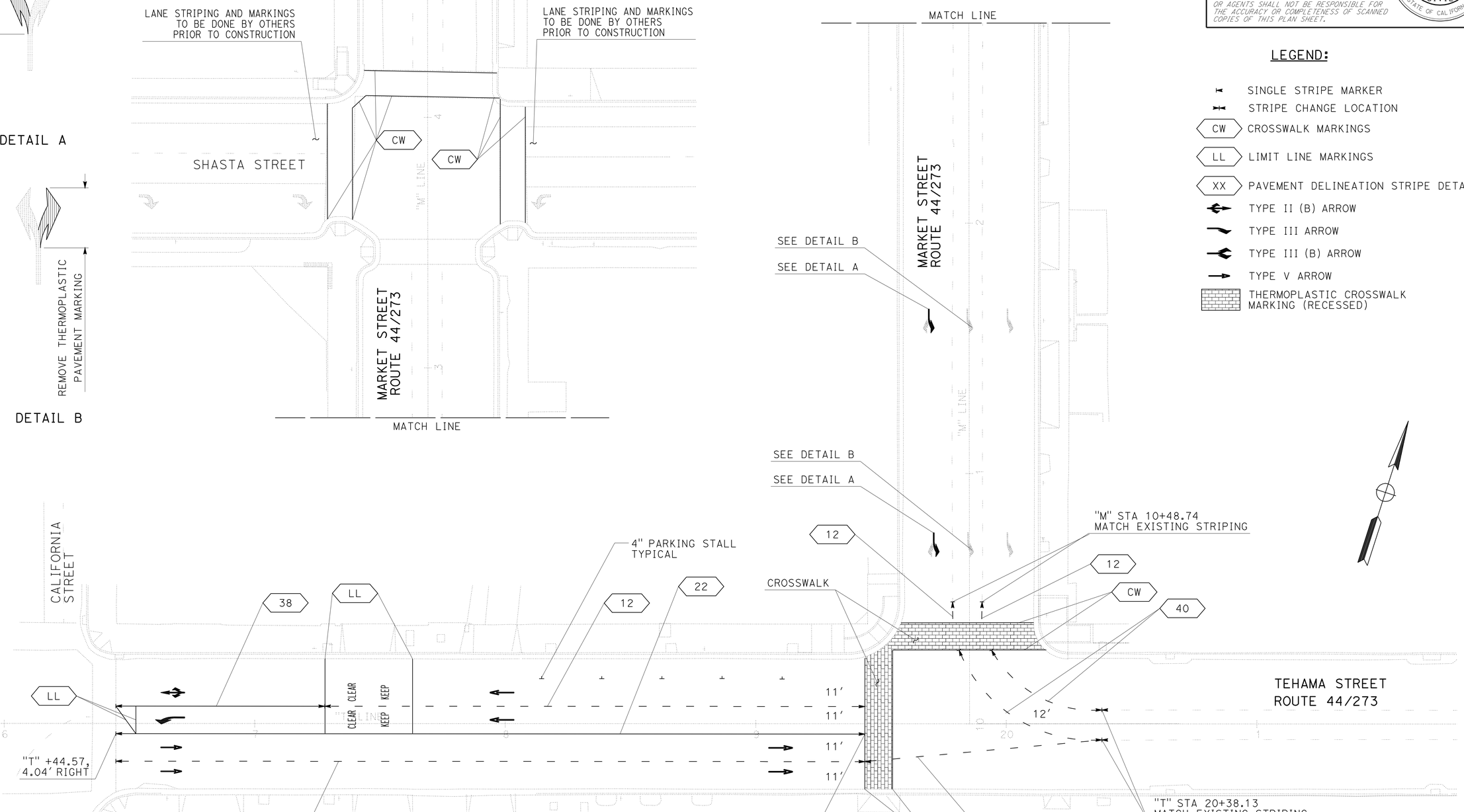

PAVEMENT DELINEATION PLAN

SCALE: 1" = 20'

APPROVED FOR PAVEMENT DELINEATION WORK ONLY

PD-1

REVISED BY	DATE REVISED
BETH A. ELMORE	JOHN L. MARTIN
CALCULATED-DESIGNED BY	CHECKED BY
FUNCTIONAL SUPERVISOR	JOHN L. MARTIN

STATE OF CALIFORNIA - DEPARTMENT OF TRANSPORTATION **DESIGN**

Caltrans

P:\proj1\02\3E600_plans\pse\02000200046na001.dgn

LAST REVISION | DATE PLOTTED => 07-FEB-2012 | TIME PLOTTED => 14:06 | 09-19-11

Dist	COUNTY	ROUTE	POST MILES TOTAL PROJECT	SHEET No.	TOTAL SHEETS
02	Sha	44, 273, 299	Var	33	78

REGISTERED CIVIL ENGINEER 12-06-11 DATE

2-6-12
PLANS APPROVAL DATE

REGISTERED PROFESSIONAL ENGINEER JAMES D. RASMUSSEN No. C76401 Exp. 12-31-12 CIVIL STATE OF CALIFORNIA

THE STATE OF CALIFORNIA OR ITS OFFICERS OR AGENTS SHALL NOT BE RESPONSIBLE FOR THE ACCURACY OR COMPLETENESS OF SCANNED COPIES OF THIS PLAN SHEET.

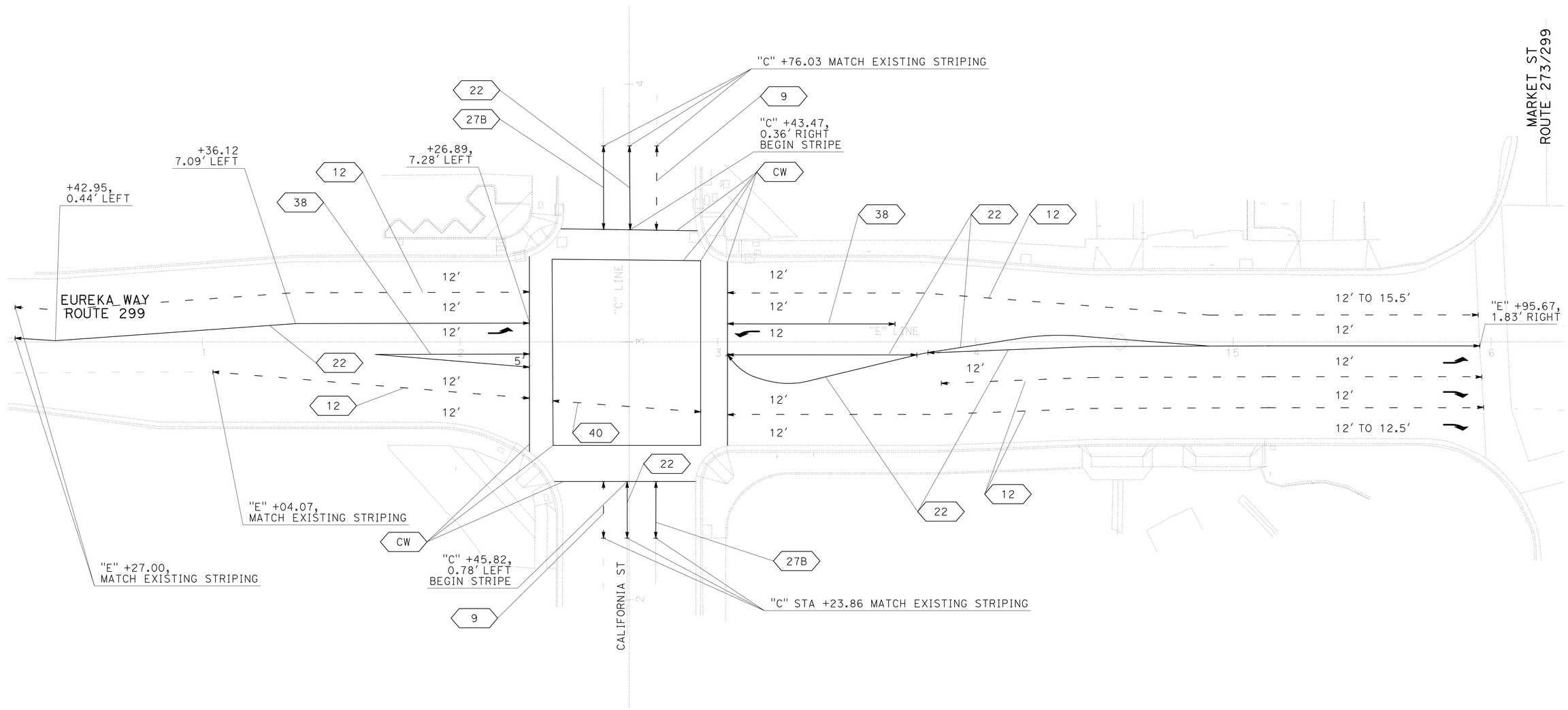

APPROVED FOR PAVEMENT DELINEATION WORK ONLY

PAVEMENT DELINEATION PLAN

SCALE: 1" = 20'

PD-2

REVISED BY	DATE REVISED
BETH A. ELMORE	
JAMES D. RASMUSSEN	

CALCULATED-DESIGNED BY / CHECKED BY

FUNCTIONAL SUPERVISOR: JOHN L. MARTIN

STATE OF CALIFORNIA - DEPARTMENT OF TRANSPORTATION

Caltrans® **DESIGN**

P:\proj1\02\3E600_plans\pse\02000200046na002.dgn

LAST REVISION 09-20-11 | DATE PLOTTED => 07-FEB-2012 | TIME PLOTTED => 14:07

Dist	COUNTY	ROUTE	POST MILES TOTAL PROJECT	SHEET No.	TOTAL SHEETS
02	Sha	44, 273, 299	Var	34	78

REGISTERED CIVIL ENGINEER 12-06-11 DATE

2-6-12
PLANS APPROVAL DATE

REGISTERED PROFESSIONAL ENGINEER JAMES D. RASMUSSEN No. C76401 Exp. 12-31-12 CIVIL STATE OF CALIFORNIA

THE STATE OF CALIFORNIA OR ITS OFFICERS OR AGENTS SHALL NOT BE RESPONSIBLE FOR THE ACCURACY OR COMPLETENESS OF SCANNED COPIES OF THIS PLAN SHEET.

TRAFFIC STRIPE, PAVEMENT MARKINGS AND PAVEMENT MARKERS

SHEET NO.	LOCATION			LT/RT	THERMOPLASTIC TRAFFIC STRIPE (SPRAYABLE)						PAVEMENT MARKER (RETROREFLECTIVE)		THERMOPLASTIC PAVEMENT MARKING	THERMOPLASTIC CROSSWALK MARKING (RECESSED)	TYPE PAVEMENT MARKING
					YELLOW	WHITE									
					4"	4"				8"					
					DETAIL	DETAIL	DETAIL	DETAIL	DETAIL	DETAIL					
					22	9	12	40	27B	38	TYPE D	TYPE G			
					LF	LF	LF	LF	LF	LF	EA	EA	SQFT	SQFT	
PD-1	"T"	16+44	19+44	RT	598		299				27	8	132		TYPE V
	"T"	19+43	19+55										108	612	CROSSWALK
	"T"	19+43	20+39	RT				95							
	"T"	16+44	16+53	LT									25		LIMIT LINE
	"T"	16+44	17+00	LT									42		TYPE III
	"T"	16+44	17+00	LT									59		TYPE IIB
	"T"	16+44	19+44	LT			216			83		11	66		TYPE V
	"T"	17+28	17+63	LT									102		"KEEP" "CLEAR"
	"T"	17+28	17+63	LT									60		LIMIT LINE
	"T"	18+10	19+40	LT									4		PARKING STALLS
	"M"/"T"	10+29	20+39	RT				72							
	"M"/"T"	10+29	20+39	LT				53							
	"T"	19+54	20+16	LT									114	619	CROSSWALK
	"M"	10+40	10+49	RT			8					2			
	"M"	10+40	11+80	LT			8					2	84		TYPE III
	"M"	13+41	13+52										80		CROSSWALK
	"M"	14+08	14+19										114		CROSSWALK
	"M"	13+57	14+08	RT									96		CROSSWALK
	"M"	13+59	14+06	LT									91		CROSSWALK
PD-2	"E"	10+27	12+27	LT	400		200				19	6			
	"E"	11+67	12+27	RT						120		6	42		TYPE III
	"E"	10+27	16+00	RT	970		703	58			46	20	126		TYPE III
	"E"	13+03	15+96	LT			292			66		12	42		TYPE III
	"E"	12+35	12+93	RT									113		CROSSWALK
	"E"	12+35	12+94	LT									112		CROSSWALK
	"C"	12+23	12+46	LT	44	22					4	2			
	"C"	12+23	13+76	RT	65	33			22		5	2			
	"C"	13+43	13+76	LT					32						
	"C"	12+59	13+32	RT									143		CROSSWALK
	"C"	12+57	13+34	LT									148		CROSSWALK
SUBTOTAL					2077	55	1726	278	54	269	101	71	1903	1231	
TOTAL					4459						172		1903	1231	

PAVEMENT DELINEATION QUANTITIES

PDQ-1

BETH A. ELMORE — REVISED BY
JAMES D. RASMUSSEN — DATE REVISED
CALCULATED-DESIGNED BY
CHECKED BY
JOHN L. MARTIN — FUNCTIONAL SUPERVISOR

STATE OF CALIFORNIA - DEPARTMENT OF TRANSPORTATION
Caltrans
DESIGN

P:\proj1\02\3E600_plans\pse\02000200046nc001.dgn

LAST REVISION 09-22-11 | DATE PLOTTED => 08-FEB-2012 | TIME PLOTTED => 11:17

Dist	COUNTY	ROUTE	POST MILES TOTAL PROJECT	SHEET No.	TOTAL SHEETS
02	Sha	44, 273, 299	Var	35	78

REGISTERED CIVIL ENGINEER DATE 12-07-11

2-6-12
PLANS APPROVAL DATE

REGISTERED PROFESSIONAL ENGINEER FRANK RIVAS No. C53592 Exp. 6-30-13 CIVIL STATE OF CALIFORNIA

THE STATE OF CALIFORNIA OR ITS OFFICERS OR AGENTS SHALL NOT BE RESPONSIBLE FOR THE ACCURACY OR COMPLETENESS OF SCANNED COPIES OF THIS PLAN SHEET.

NOTES:

1. FOR ACCURATE RIGHT OF WAY DATA, CONTACT RIGHT OF WAY ENGINEERING AT THE DISTRICT OFFICE.
2. CALIFORNIA SIGN CODES ARE DESIGNATED BY (CA), OTHERWISE, FEDERAL MUTCD SIGN CODES ARE SHOWN.

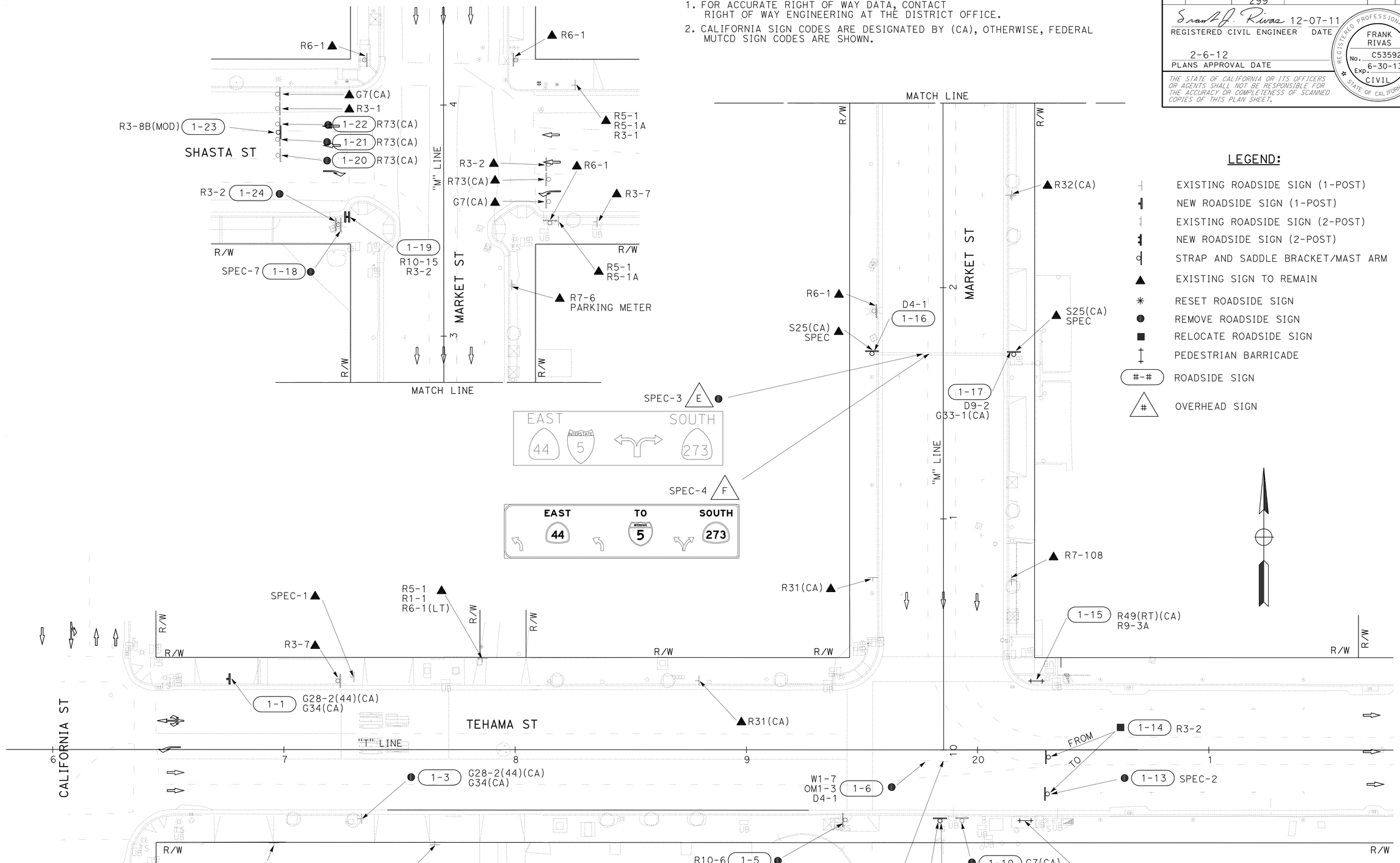

LEGEND:

- EXISTING ROADSIDE SIGN (1-POST)
- NEW ROADSIDE SIGN (1-POST)
- EXISTING ROADSIDE SIGN (2-POST)
- NEW ROADSIDE SIGN (2-POST)
- STRAP AND SADDLE BRACKET/MAST ARM
- EXISTING SIGN TO REMAIN
- RESET ROADSIDE SIGN
- REMOVE ROADSIDE SIGN
- RELOCATE ROADSIDE SIGN
- PEDESTRIAN BARRICADE
- #-# ROADSIDE SIGN
- # OVERHEAD SIGN

APPROVED FOR SIGN WORK ONLY

SIGN PLAN

SCALE: 1" = 20'

S-1

REVISED BY	DATE REVISED
FRANK RIVAS	JEFF STEPPAT

CALCULATED-DESIGNED BY / CHECKED BY

FUNCTIONAL SUPERVISOR: ROB STINGER

STATE OF CALIFORNIA - DEPARTMENT OF TRANSPORTATION

Caltrans® TRAFFIC OPS

P:\proj1\02\3E601_plans\pse\02000200460a001.dgn

LAST REVISION 02-03-11 | DATE PLOTTED => 07-FEB-2012 | TIME PLOTTED => 14:07

BORDER LAST REVISED 7/2/2010 | USERNAME => s123631 | DGN FILE => 02000200460a001.dgn | RELATIVE BORDER SCALE IS IN INCHES 0 1 2 3 | UNIT 0147 | PROJECT NUMBER & PHASE 02000200461 | EA: 23E601

Dist	COUNTY	ROUTE	POST MILES TOTAL PROJECT	SHEET No.	TOTAL SHEETS
02	Sha	44, 273, 299	Var	36	78

REGISTERED CIVIL ENGINEER 12-07-11 DATE

2-6-12
PLANS APPROVAL DATE

REGISTERED PROFESSIONAL ENGINEER FRANK RIVAS No. C53592 Exp. 6-30-13 CIVIL STATE OF CALIFORNIA

THE STATE OF CALIFORNIA OR ITS OFFICERS OR AGENTS SHALL NOT BE RESPONSIBLE FOR THE ACCURACY OR COMPLETENESS OF SCANNED COPIES OF THIS PLAN SHEET.

NOTE:

1. FOR ACCURATE RIGHT OF WAY DATA, CONTACT RIGHT OF WAY ENGINEERING AT THE DISTRICT OFFICE.

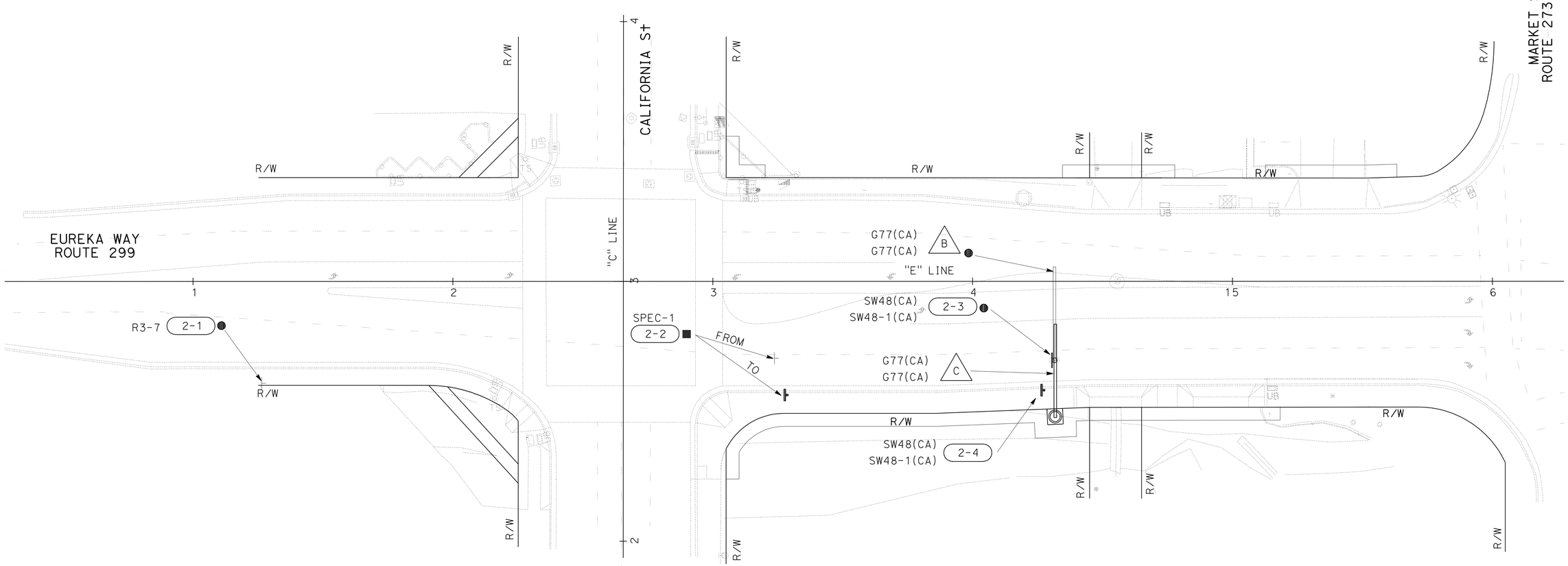

APPROVED FOR SIGN WORK ONLY

SIGN PLAN

SCALE: 1" = 20'

S-2

REVISED BY | DATE REVISED

FRANK RIVAS | JEFF STEPPAT

CALCULATED-DESIGNED BY | CHECKED BY

FUNCTIONAL SUPERVISOR: ROB STINGER

STATE OF CALIFORNIA - DEPARTMENT OF TRANSPORTATION

Caltrans® TRAFFIC OPS

P:\proj\02\3E600_plans\pse\02000200460a002.dgn

LAST REVISION 12-07-11 | DATE PLOTTED => 07-FEB-2012 | TIME PLOTTED => 14:07

BORDER LAST REVISED 7/2/2010 | USERNAME => s123631 | DGN FILE => 02000200460a002.dgn | RELATIVE BORDER SCALE IS IN INCHES 0 1 2 3 | UNIT 0147 | PROJECT NUMBER & PHASE 02000200461 | EA: 23E601

Dist	COUNTY	ROUTE	POST MILES TOTAL PROJECT	SHEET No.	TOTAL SHEETS
02	Sha	44, 273, 299	Var	37	78

Frank J. Rivas 12-07-11
REGISTERED CIVIL ENGINEER DATE

2-6-12
PLANS APPROVAL DATE

REGISTERED PROFESSIONAL ENGINEER
FRANK RIVAS
No. C53592
Exp. 6-30-13
CIVIL
STATE OF CALIFORNIA

THE STATE OF CALIFORNIA OR ITS OFFICERS OR AGENTS SHALL NOT BE RESPONSIBLE FOR THE ACCURACY OR COMPLETENESS OF SCANNED COPIES OF THIS PLAN SHEET.

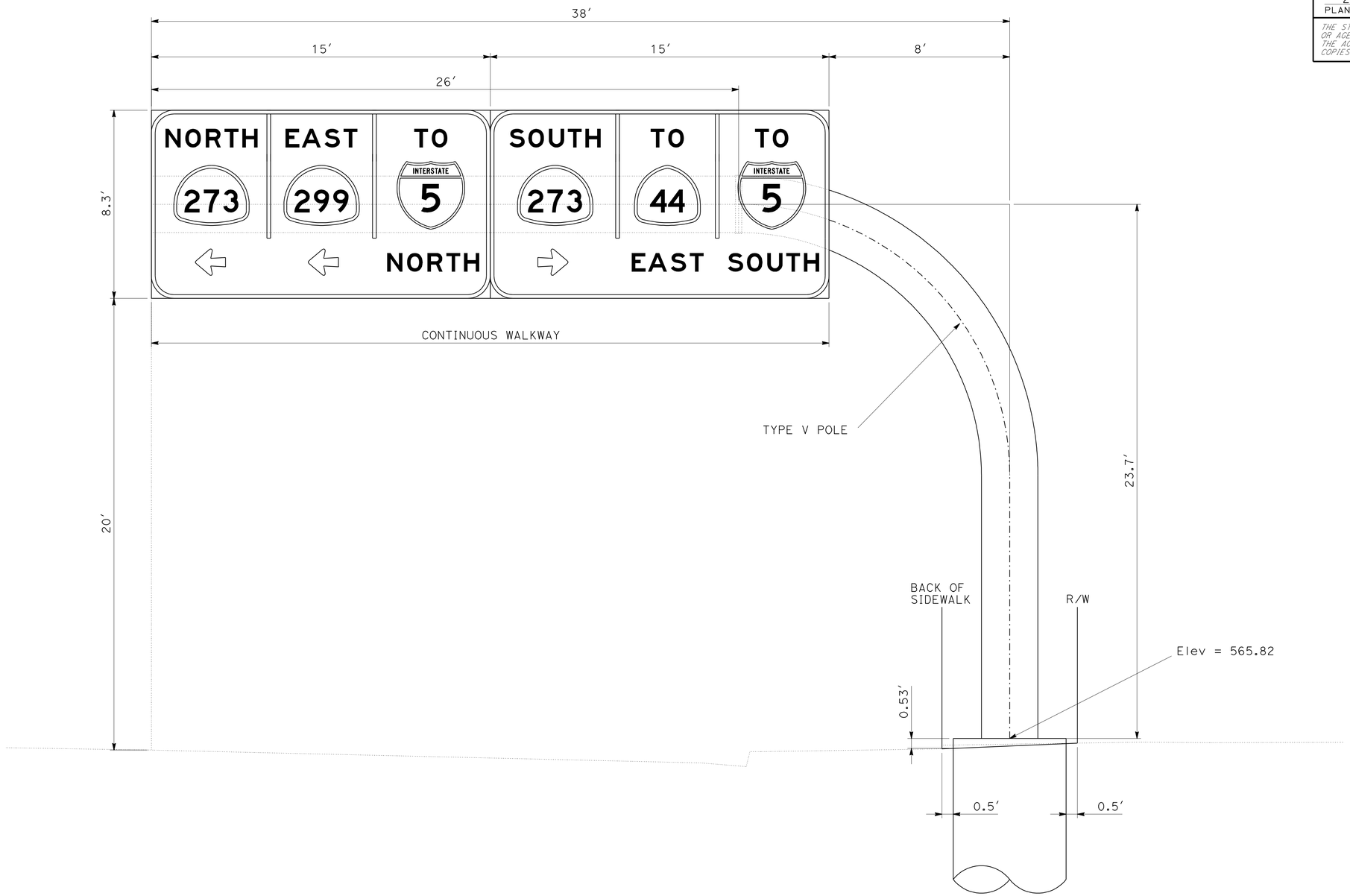

C FEBT STA 14+32 "E"
TUBULAR SINGLE POST TYPE
LAMINATED PANEL TYPE A

SIGN DETAILS

NO SCALE **SD-1**

REVISED BY	DATE REVISED

FRANK RIVAS — JEFF STEPPAT — ROB STINGER

CALCULATED-DESIGNED BY / CHECKED BY

FUNCTIONAL SUPERVISOR

STATE OF CALIFORNIA - DEPARTMENT OF TRANSPORTATION
Caltrans® TRAFFIC OPS

P:\proj1\02\3E600_plans\pse\02000200046ob001.dgn

LAST REVISION 12-07-11 | DATE PLOTTED => 07-FEB-2012 | TIME PLOTTED => 13:37

Dist	COUNTY	ROUTE	POST MILES TOTAL PROJECT	SHEET No.	TOTAL SHEETS
02	Sha	44, 273, 299	Var	38	78

REGISTERED CIVIL ENGINEER 12-07-11 DATE

2-6-12
PLANS APPROVAL DATE

REGISTERED PROFESSIONAL ENGINEER FRANK RIVAS No. C53592 Exp. 6-30-13 CIVIL STATE OF CALIFORNIA

THE STATE OF CALIFORNIA OR ITS OFFICERS OR AGENTS SHALL NOT BE RESPONSIBLE FOR THE ACCURACY OR COMPLETENESS OF SCANNED COPIES OF THIS PLAN SHEET.

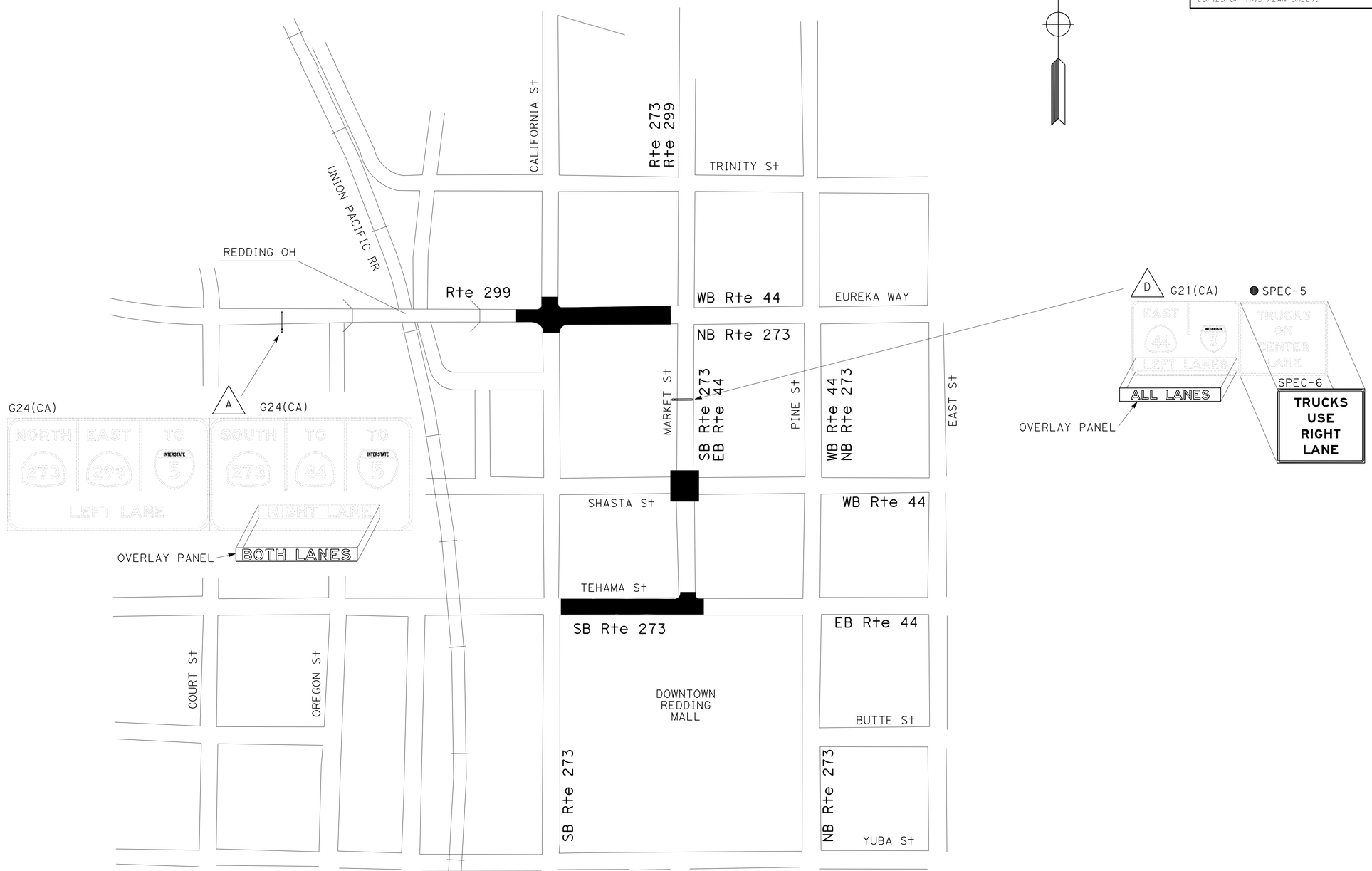

SIGN DETAILS

NO SCALE

SD-2

REVISED BY	DATE REVISED

FRANK RIVAS — CALCULATED-DESIGNED BY
JEFF STEPPAT — CHECKED BY
FUNCTIONAL SUPERVISOR: ROB STINGER

STATE OF CALIFORNIA - DEPARTMENT OF TRANSPORTATION
Caltrans® TRAFFIC OPS

P:\proj1\02\3E600_plans\pse\02000200460b002.dgn

LAST REVISION 12-07-11 | DATE PLOTTED => 07-FEB-2012 | TIME PLOTTED => 13:37

Dist	COUNTY	ROUTE	POST MILES TOTAL PROJECT	SHEET No.	TOTAL SHEETS
02	Sha	44, 273, 299	Var	39	78

Frank J. Rivas 12-07-11
REGISTERED CIVIL ENGINEER DATE

2-6-12
PLANS APPROVAL DATE

REGISTERED PROFESSIONAL ENGINEER
FRANK RIVAS
No. C53592
Exp. 6-30-13
CIVIL
STATE OF CALIFORNIA

THE STATE OF CALIFORNIA OR ITS OFFICERS OR AGENTS SHALL NOT BE RESPONSIBLE FOR THE ACCURACY OR COMPLETENESS OF SCANNED COPIES OF THIS PLAN SHEET.

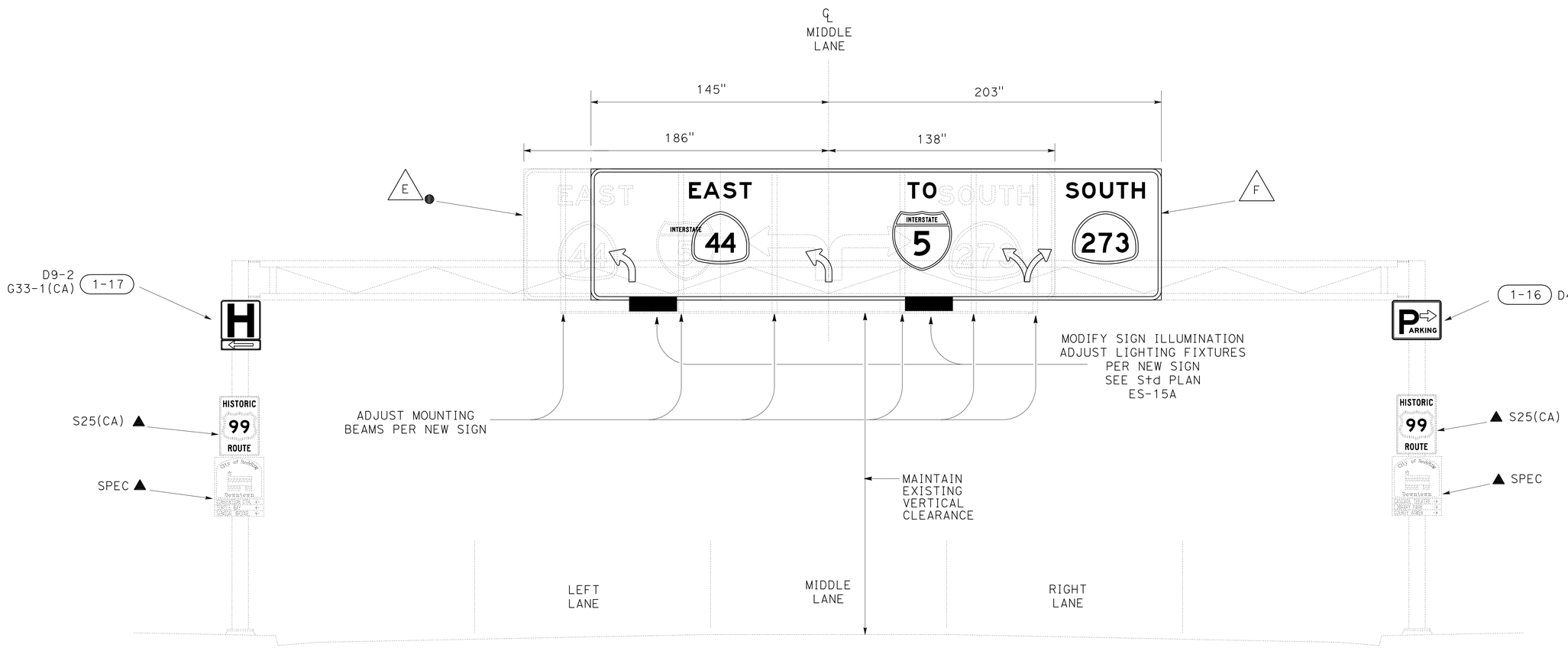

SIGN DETAILS

NO SCALE

SD-3

FUNCTIONAL SUPERVISOR	ROB STINGER
CALCULATED-DESIGNED BY	FRANK RIVAS
CHECKED BY	JEFF STEPPAT
REVISED BY	
DATE REVISED	

STATE OF CALIFORNIA - DEPARTMENT OF TRANSPORTATION
Caltrans® TRAFFIC OPS

P:\proj1\02\3E600_plans\pse\02000200460b003.dgn

LAST REVISION 12-07-11
DATE PLOTTED => 07-FEB-2012
TIME PLOTTED => 13:37

Dist	COUNTY	ROUTE	POST MILES TOTAL PROJECT	SHEET No.	TOTAL SHEETS
02	Sha	44, 273, 299	Var	40	78

REGISTERED CIVIL ENGINEER 12-07-11 DATE

2-6-12
PLANS APPROVAL DATE

REGISTERED PROFESSIONAL ENGINEER FRANK RIVAS No. C53592 Exp. 6-30-13 CIVIL STATE OF CALIFORNIA

THE STATE OF CALIFORNIA OR ITS OFFICERS OR AGENTS SHALL NOT BE RESPONSIBLE FOR THE ACCURACY OR COMPLETENESS OF SCANNED COPIES OF THIS PLAN SHEET.

NOTE:

1. ALL DIMENSIONS ARE IN INCHES.

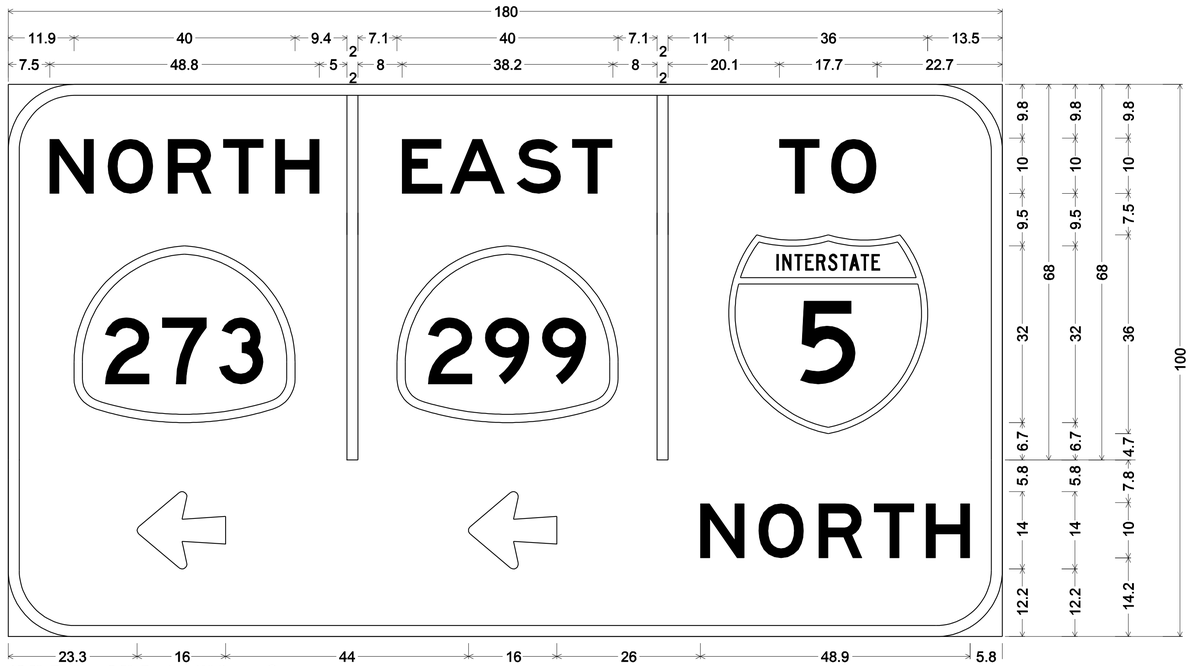

12.0" Radius, 2.0" Border, White on Green;
[NORTH] E; [EAST] E; [TO] E;
Arrow 10CAP-1L - 16.0" 180°; Arrow 10CAP-1L - 16.0" 180°; [NORTH] E;

C
G77(CA)

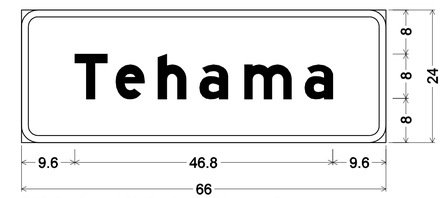

3.0" Radius, 1.3" Border, White on Green;
[Tehama] E Mod;

1-11
G7(CA)

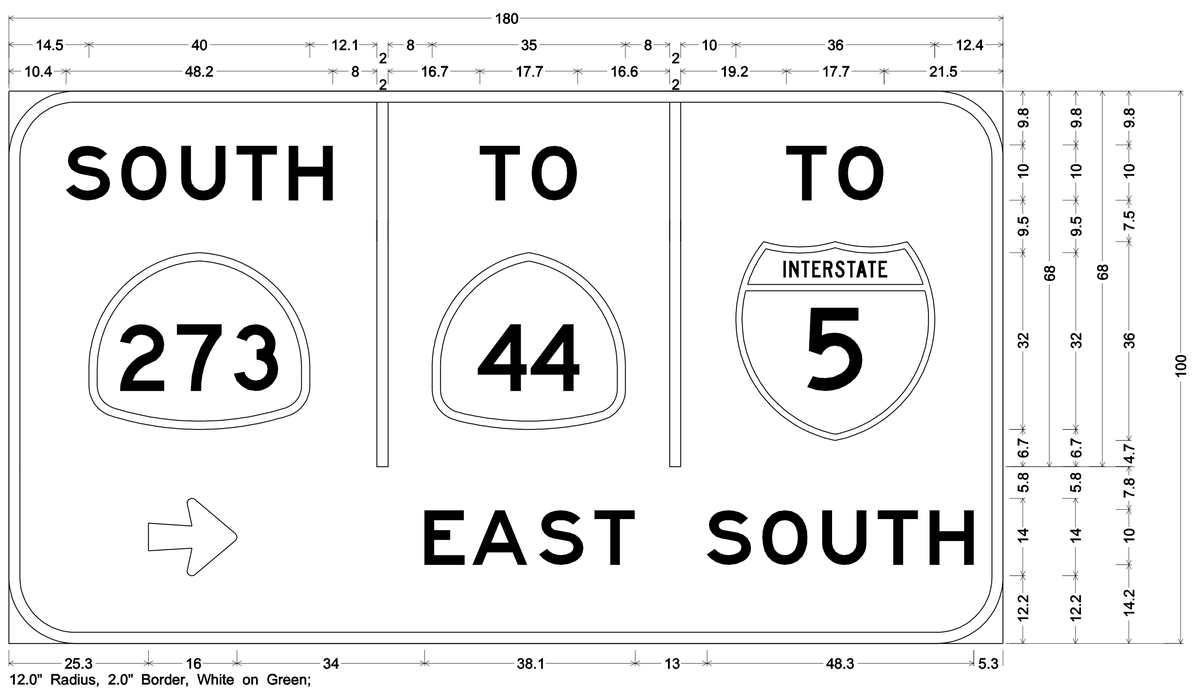

12.0" Radius, 2.0" Border, White on Green;
[SOUTH] E; [TO] E; [TO] E;
Arrow 10CAP-1L - 16.0" 0°; [EAST] E; [SOUTH] E;

C
G77(CA)

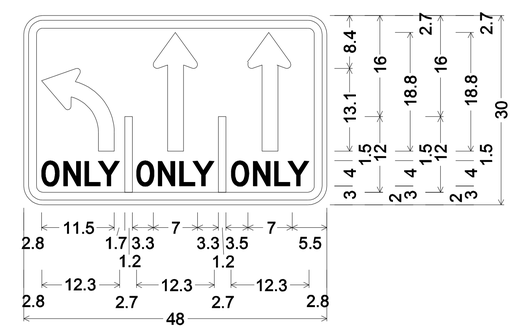

3.0" Radius, 1.3" Border, 0.8" Indent, Black on White;
EL ir=5.813, s=2.5;
[ONLY] D 2K 40% spacing;
C h=18.875, s=2.5;
[ONLY] D 2K 40% spacing;
C h=18.875, s=2.5;
[ONLY] D 2K 40% spacing;

1-23
R3-8B(MOD)

SIGN DETAILS
NO SCALE

SD-4

REVISED BY	DATE REVISED

FRANK RIVAS — JEFF STEPPAT — CALCULATED-DESIGNED BY — CHECKED BY

FUNCTIONAL SUPERVISOR: ROB STINGER

STATE OF CALIFORNIA - DEPARTMENT OF TRANSPORTATION
Caltrans® TRAFFIC OPS

P:\proj1\02\3E600_plans\pse\02000200046ob004.dgn

LAST REVISION 12-07-11 | DATE PLOTTED => 07-FEB-2012 | TIME PLOTTED => 13:37

Dist	COUNTY	ROUTE	POST MILES TOTAL PROJECT	SHEET No.	TOTAL SHEETS
02	Sha	44, 273, 299	Var	41	78

Frank J. Rivas 12-07-11
REGISTERED CIVIL ENGINEER DATE

2-6-12
PLANS APPROVAL DATE

REGISTERED PROFESSIONAL ENGINEER
FRANK RIVAS
No. C53592
Exp. 6-30-13
CIVIL
STATE OF CALIFORNIA

THE STATE OF CALIFORNIA OR ITS OFFICERS OR AGENTS SHALL NOT BE RESPONSIBLE FOR THE ACCURACY OR COMPLETENESS OF SCANNED COPIES OF THIS PLAN SHEET.

NOTE:

1. ALL DIMENSIONS ARE IN INCHES.

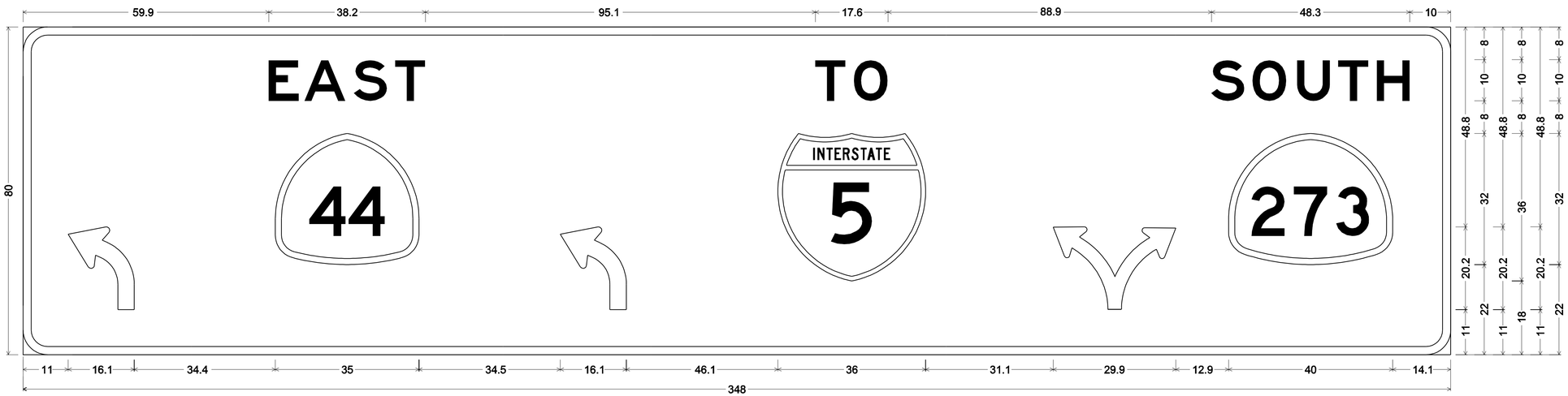

6.0" Radius, 2.0" Border, White on Green;
[EAST] E; [TO] E;
R3-8 left turn arrow ir=9.2, s=4; R3-8 left turn arrow ir=9.2, s=4; R3-8 double headed arrow ir=23.2, s=4;
[SOUTH] E;

F
SPEC-4

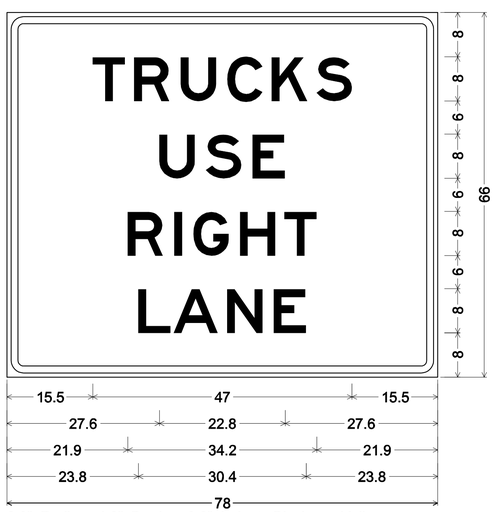

3.0" Radius, 1.3" Border, 0.8" Indent, Black on Yellow;
[TRUCKS] E; [USE] E; [RIGHT] E; [LANE] E;

D
SPEC-6

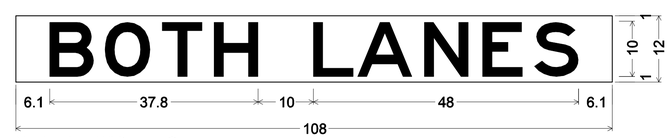

No border, White on Green;
[BOTH LANES] White E;

A
G24(CA)

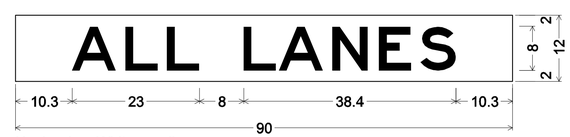

No border, White on Green;
[ALL LANES] White E;

D
G21(CA)

SIGN DETAILS
NO SCALE

SD-5

REVISED BY	DATE REVISED
FRANK RIVAS	JEFF STEPPAT
CALCULATED-DESIGNED BY	CHECKED BY
FUNCTIONAL SUPERVISOR	ROB STINGER

STATE OF CALIFORNIA - DEPARTMENT OF TRANSPORTATION
Caltrans® TRAFFIC OPS

P:\proj1\02\3E60X_plans\pse\02000200460b005.dgn

LAST REVISION 12-07-11 | DATE PLOTTED => 07-FEB-2012 | TIME PLOTTED => 13:37

Dist	COUNTY	ROUTE	POST MILES TOTAL PROJECT	SHEET No.	TOTAL SHEETS
02	Sha	44, 273, 299	Var	42	78

REGISTERED CIVIL ENGINEER 12-07-11 DATE

2-6-12
PLANS APPROVAL DATE

REGISTERED PROFESSIONAL ENGINEER FRANK RIVAS No. C53592 Exp. 6-30-13 CIVIL STATE OF CALIFORNIA

THE STATE OF CALIFORNIA OR ITS OFFICERS OR AGENTS SHALL NOT BE RESPONSIBLE FOR THE ACCURACY OR COMPLETENESS OF SCANNED COPIES OF THIS PLAN SHEET.

NOTES:

1. USE A 3" Sq TUBE X 36" LONG, 3/16" THICK ANCHOR SLEEVE FOR 2-1/2" POSTS.
2. USE A 5/16" CORNER BOLT OR TWO DRIVE RIVETS TO FASTEN ASSEMBLED SIGN AND POST INTO ANCHOR SLEEVE. INSTALL CORNER BOLT OR DRIVE RIVETS INTO THE SIDES FACING TRAFFIC.
3. REMOVE EXISTING AC OR PCC, DRIVE ANCHOR SLEEVE INTO SOIL AND RECAP WITH LIKE MATERIAL, MATCHING EXISTING THICKNESS.
4. 2-1/2" POSTS SHALL BE 1/8" THICK, PERFORATIONS OF 7/16" IN DIAMETER SHALL BE 1" ON CENTER ON ALL SIDES, 2-1/2" POSTS SHALL BE 60" IN LENGTH.
5. FOR DETAILS NOT SHOWN, REFER TO THE STANDARD PLANS.
6. ALL ANCHOR SLEEVES SHALL BE EMBEDDED IN PCC, EXCEPT FOR INSTALLATIONS IN PAVEMENTS OR SIDEWALKS, OR IN ROCKY SOIL CONDITIONS WHERE APPROVED BY THE ENGINEER.
7. INSTALL R49 SIGN FACING SIDEWALK AND R9-3A SIGN FACING TRAFFIC.

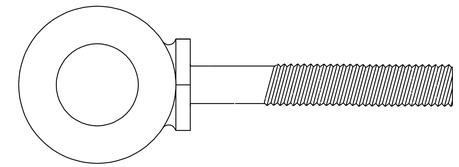

3/8" X 4" FORGED EYE BOLT

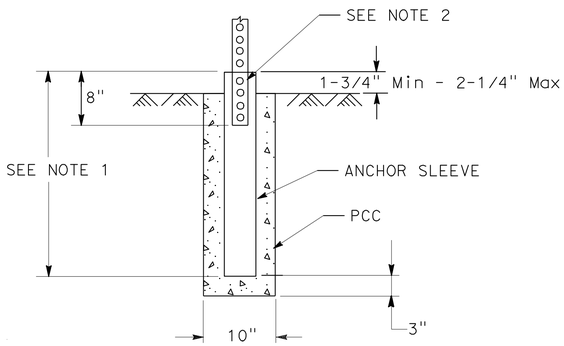

INSTALLATION IN SOIL (PCC)

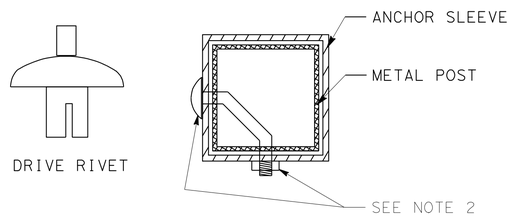

FASTENER DETAILS

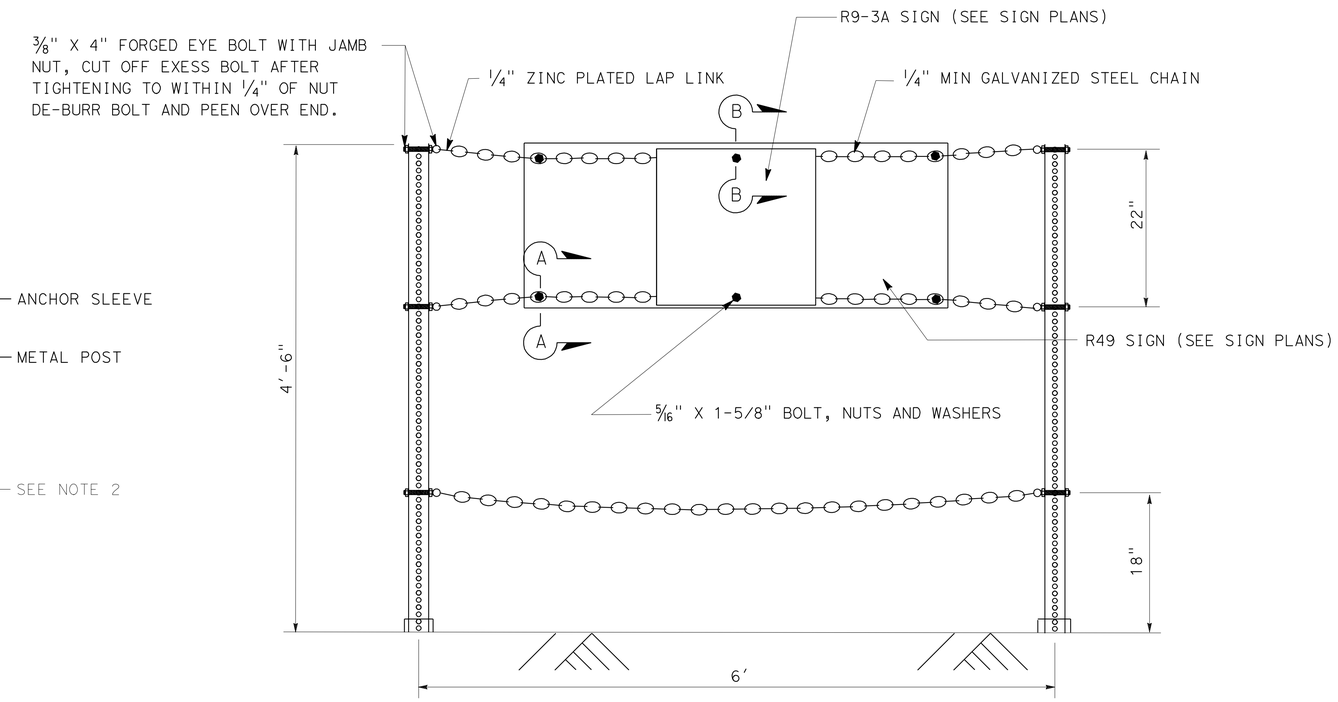

TYPE II PEDESTRIAN BARRICADE
UNISTRUT INSTALLATION

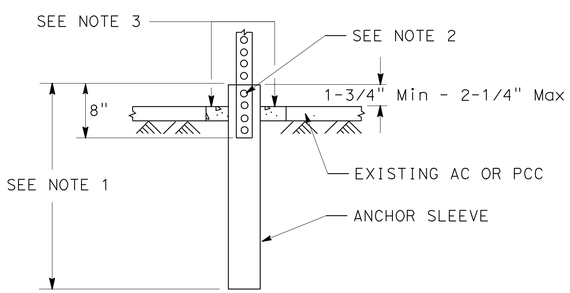

INSTALLATION IN EXISTING AC OR PCC

METAL SIGN POST
INSTALLATION DETAILS

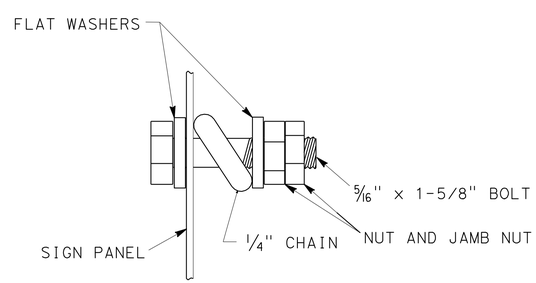

SECTION A-A

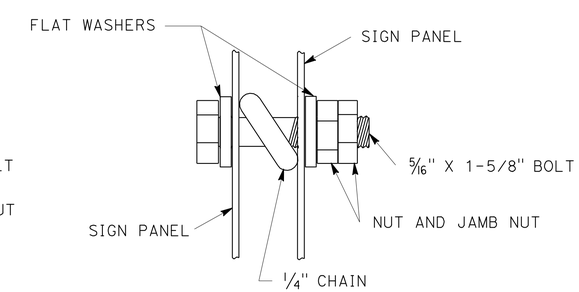

SECTION B-B

PEDESTRIAN BARRICADE UNISTRUT INSTALLATION

SIGN DETAILS

NO SCALE

SD-6

REVISED BY | DATE REVISED
FRANK RIVAS | JEFF STEPPAT
CALCULATED-DESIGNED BY | CHECKED BY
FUNCTIONAL SUPERVISOR: ROB STINGER

STATE OF CALIFORNIA - DEPARTMENT OF TRANSPORTATION
Caltrans® TRAFFIC OPS

P:\proj1\02\3E600_plans\pse\02000200046ob006.dgn

LAST REVISION 12-07-11 | DATE PLOTTED => 07-FEB-2012 | TIME PLOTTED => 13:37

Dist	COUNTY	ROUTE	POST MILES TOTAL PROJECT	SHEET No.	TOTAL SHEETS
02	Sha	44, 273, 299	Var	43	78

REGISTERED CIVIL ENGINEER 12-07-11 DATE

2-6-12
PLANS APPROVAL DATE

REGISTERED PROFESSIONAL ENGINEER FRANK RIVAS No. C53592 Exp. 6-30-13 CIVIL STATE OF CALIFORNIA

THE STATE OF CALIFORNIA OR ITS OFFICERS OR AGENTS SHALL NOT BE RESPONSIBLE FOR THE ACCURACY OR COMPLETENESS OF SCANNED COPIES OF THIS PLAN SHEET.

NOTES:

1. USE A 2¼" Sq TUBE x 30" LONG, 3/16" THICK ANCHOR FOR 2" POSTS.
   USE A 3" Sq TUBE x 3' LONG, 3/16" THICK ANCHOR FOR 2-1/2 " POSTS.
2. USE A 5/16" CORNER BOLT OR TWO DRIVE RIVETS TO FASTEN ASSEMBLED SIGN AND POST INTO ANCHOR. INSTALL CORNER BOLT OR DRIVE RIVETS INTO THE SIDES FACING TRAFFIC.
3. REMOVE EXISTING AC OR PCC, DRIVE ANCHOR SLEEVE INTO SOIL AND RECAP WITH LIKE MATERIAL, MATCHING EXISTING THICKNESS.
4. 2" POSTS ARE TO BE 1/8" THICK, PERFORATIONS OF 7/16" IN DIAMETER ARE 1" ON CENTER ON ALL SIDES, LENGTHS ARE 10' AND 12'.
5. 2-1/2" POSTS ARE TO BE 1/8" THICK, PERFORATIONS OF 7/16" IN DIAMETER ARE 1" ON CENTER ON ALL SIDES, 2-1/2" POSTS ARE 12' AND 14' IN LENGTH.
6. FOR DETAILS NOT SHOWN, REFER TO THE STANDARD PLANS.
7. 2-1/2" POSTS SHALL BE USED IN SIDEWALK AND HIGH PEDESTRIAN USE PLACEMENTS.
8. ALL ANCHOR SLEEVES SHALL BE EMBEDDED IN PCC, EXCEPT FOR INSTALLATIONS IN PAVEMENTS OR SIDEWALKS, OR WHERE APPROVED BY THE ENGINEER.

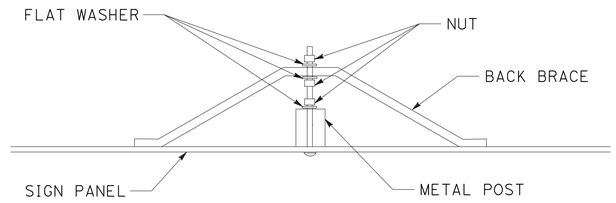

BACK BRACE MOUNTING DETAIL

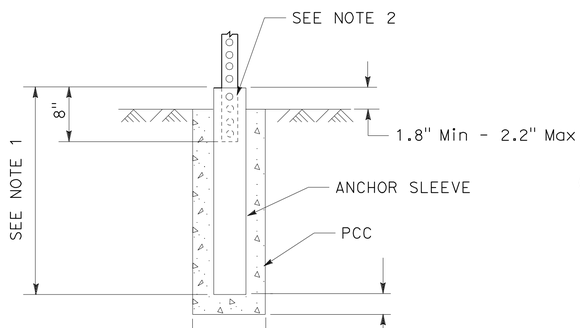

INSTALLATION IN SOIL (PCC)
(SEE NOTE 8)

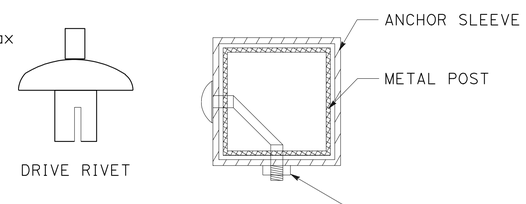

FASTENER DETAILS

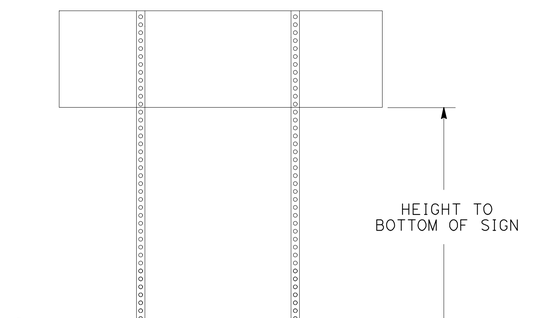

TWO POSTS INSTALLATION
(POST SIZE, SEE CHART BELOW)

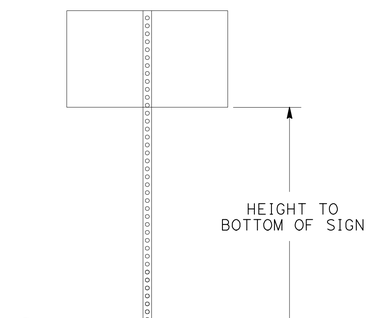

SINGLE POST INSTALLATION
(POST SIZE, SEE CHART BELOW)

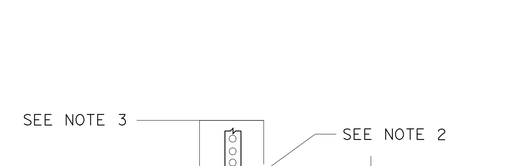

INSTALLATION IN EXISTING AC OR PCC

Max Sq Ft OF SIGN

POST SIZE	60"	72"	84"	96"	108"	120"
2"	18	16	14	12	10	8
2.5"	35	32	28	24	21	21

HEIGHT TO BOTTOM OF SIGN
DOUBLE POST GROUND SIGNS
70 MPH WIND SPEED

Max Sq Ft OF SIGN

POST SIZE	60"	72"	84"	96"	108"	120"
2"	10.5	10	8.7	7.4	6.2	5
2.5"	16	16	16	16	12	12

HEIGHT TO BOTTOM OF SIGN
SINGLE POST GROUND SIGNS
70 MPH WIND SPEED

METAL SIGN POST DETAIL

METAL SIGN POST INSTALLATION DETAILS

SIGN DETAILS

NO SCALE

SD-7

FRANK RIVAS | REVISED BY | DATE REVISED
JEFF STEPPAT | CALCULATED-DESIGNED BY | CHECKED BY
ROB STINGER | FUNCTIONAL SUPERVISOR

STATE OF CALIFORNIA - DEPARTMENT OF TRANSPORTATION
Caltrans® TRAFFIC OPS

P:\proj\02\3E600_plans\pse\02000200046ob007.dgn

LAST REVISION 12-07-11 | DATE PLOTTED => 07-FEB-2012 | TIME PLOTTED => 13:37

Dist	COUNTY	ROUTE	POST MILES TOTAL PROJECT	SHEET No.	TOTAL SHEETS
02	Sha	44,273, 299	Var	44	78

Frank J. Rivas 12-07-11
REGISTERED CIVIL ENGINEER DATE

2-6-12
PLANS APPROVAL DATE

REGISTERED PROFESSIONAL ENGINEER FRANK RIVAS No. C53592 Exp. 6-30-13 CIVIL STATE OF CALIFORNIA

THE STATE OF CALIFORNIA OR ITS OFFICERS OR AGENTS SHALL NOT BE RESPONSIBLE FOR THE ACCURACY OR COMPLETENESS OF SCANNED COPIES OF THIS PLAN SHEET.

OVERHEAD SIGNS

SIGN No. #	REMOVE SIGN STRUCTURE (EA)	FURNISH SIGN STRUCTURE (TUBULAR) (LB)	INSTALL SIGN STRUCTURE (TUBULAR) (LB)	60" CIDH CONCRETE PILE (SIGN STRUCTURE) (LF)
B	1			
C		19,160	19,160	33
TOTAL	1	19,160	19,160	33

ROADSIDE SIGNS

SIGN No. ---	SIGN CODE	PANEL SIZE IN x IN	POST SIZE & LENGTH (FT) METAL POST (2.5" x 2.5")	REMOVE ROADSIDE SIGN (EA)	REMOVE ROADSIDE SIGN MOUNTED ON MAST ARM (EA)	REMOVE ROADSIDE SIGN (STRAP AND SADDLE BRACKET METHOD) (EA)	REMOVE OVERHEAD SIGN PANEL (EA)	RELOCATE ROADSIDE SIGN (EA)	ROADSIDE SIGN - ONE POST (EA)	INSTALL SIGN (STRAP AND SADDLE BRACKET METHOD) (EA)	INSTALL SIGN OVERLAY (SQFT)	INSTALL SIGN PANEL ON EXISTING FRAME (EA)	COMMENTS
1-1	G28-2(44)(CA)	28 x 25	11						1				
	G34(CA)	21 x 15											
1-2	SIGN DELETED												
1-3	G28-2(44)(CA)	28 x 25		1									
	G34(CA)	21 x 15											
1-4	SIGN DELETED												
1-5	R10-6	24 x 36				1							
1-6	W1-7	36 x 18		1									
	OM1-3	24 x 24											
	D4-1	30 x 24											
1-7	G28-2(44)(CA)	24 x 25		1									
	G34(CA)	21 x 15											
	D9-2	24 x 24											
	G33-1(CA)	24 x 6											
1-8	R61-24(CA)	54 x 30								1			
1-9	W1-7	36 x 18								1			
	OM1-3	24 x 24											
1-10	G7(CA)	66 x 24			1								
1-11	G7(CA)	66 x 24								1			
1-12	R49(LT)(CA)	42 x 18											PLACE SIGNS BACK TO BACK ON PEDESTRIAN BARRICADE
	R9-3A	18 x 18											
1-13	SPEC-2	24 x 30			1								
1-14	R3-2	24 x 24						1					
1-15	R49(RT)(CA)	42 x 18											PLACE SIGNS BACK TO BACK ON PEDESTRIAN BARRICADE
	R9-3A	18 x 18											
1-16	D4-1	30 x 24								1			
1-17	D9-2	24 x 24								1			
	G33-1(CA)	24 x 6											
TOTAL THIS SHEET				3	2	1		1	1	5			

SIGN QUANTITIES
SQ-1

REVISED BY | DATE REVISED
FRANK RIVAS | JEFF STEPPAT
CALCULATED-DESIGNED BY | CHECKED BY
FUNCTIONAL SUPERVISOR: ROB STINGER

STATE OF CALIFORNIA - DEPARTMENT OF TRANSPORTATION
Caltrans® TRAFFIC OPS

P:\proj1\02\3E600_plans\pse\02000200046oc001.dgn

LAST REVISION 12-07-11 | DATE PLOTTED => 07-FEB-2012 | TIME PLOTTED => 15:52

Dist	COUNTY	ROUTE	POST MILES TOTAL PROJECT	SHEET No.	TOTAL SHEETS
02	Sha	44,273, 299	Var	45	78

Frank J. Rivas 12-07-11
REGISTERED CIVIL ENGINEER DATE

2-6-12
PLANS APPROVAL DATE

REGISTERED PROFESSIONAL ENGINEER FRANK RIVAS No. C53592 Exp. 6-30-13 CIVIL STATE OF CALIFORNIA

THE STATE OF CALIFORNIA OR ITS OFFICERS OR AGENTS SHALL NOT BE RESPONSIBLE FOR THE ACCURACY OR COMPLETENESS OF SCANNED COPIES OF THIS PLAN SHEET.

ROADSIDE SIGNS (CONTINUED)

SIGN No. (---)	SIGN CODE	PANEL SIZE IN x IN	POST SIZE & LENGTH (FT) METAL POST (2.5" x 2.5")	REMOVE ROADSIDE SIGN (EA)	REMOVE ROADSIDE SIGN MOUNTED ON MAST ARM (EA)	REMOVE ROADSIDE SIGN (STRAP AND SADDLE BRACKET METHOD) (EA)	REMOVE OVERHEAD SIGN PANEL (EA)	RELOCATE ROADSIDE SIGN (EA)	ROADSIDE SIGN - ONE POST (EA)	INSTALL SIGN (STRAP AND SADDLE BRACKET METHOD) (EA)	INSTALL SIGN OVERLAY (SQFT)	INSTALL SIGN PANEL ON EXISTING FRAME (EA)	COMMENTS
1-18	SPEC-7	28 x 32				1							
1-19	R10-15	30 x 36	11						1				PLACE SIGNS BACK TO BACK ON POST
	R3-2	24 x 24											USE SALVAGED PANEL FROM (1-24)
1-20	R73(CA)	30 x 30			1								
1-21	R73(CA)	30 x 30			1								
1-22	R73(CA)	30 x 30			1								
1-23	R3-8B(MOD)	48 x 30								1			
1-24	R3-2	24 x 24				1							
2-1	R3-7	30 x 30		1									SALVAGE PANEL FOR REUSE ON (1-19)
2-2	SPEC-1	21 x 15						1					
E	SPEC-3	324 x 80					1						
F	SPEC-4	348 x 80										1	
2-3	SW48(CA)	48 x 36				1							SALVAGE PANELS FOR
	SW48-1(CA)	48 x 12											REUSE ON (2-4)
2-4	SW48(CA)	48 x 36	12						1				USE SALVAGED PANELS
	SW48-1(CA)	48 x 12											FROM (2-3)
A	G24(CA)	108 x 12									9		
D	G21(CA)	90 x 12									7.5		
D	SPEC-5	78 x 66					1						
D	SPEC-6	78 x 66										1	
TOTAL THIS SHEET				1	3	3	2	1	2	1	16.5	2	
TOTAL				4	5	4	2	2	3	6	16.5	2	

SIGN QUANTITIES
SQ-2

REVISED BY | DATE REVISED
FRANK RIVAS | JEFF STEPPAT
CALCULATED-DESIGNED BY | CHECKED BY
FUNCTIONAL SUPERVISOR: ROB STINGER
STATE OF CALIFORNIA - DEPARTMENT OF TRANSPORTATION
Caltrans® TRAFFIC OPS

P:\proj1\02\3E600_plans\pse\02000200046oc002.dgn

LAST REVISION 12-07-11 | DATE PLOTTED => 07-FEB-2012 | TIME PLOTTED => 13:54

Dist	COUNTY	ROUTE	POST MILES TOTAL PROJECT	SHEET No.	TOTAL SHEETS
02	Sha	44,273, 299	Var	46	78

Frank J. Rivas 12-07-11
REGISTERED CIVIL ENGINEER DATE

2-6-12
PLANS APPROVAL DATE

REGISTERED PROFESSIONAL ENGINEER FRANK RIVAS No. C53592 Exp. 6-30-13 CIVIL STATE OF CALIFORNIA

THE STATE OF CALIFORNIA OR ITS OFFICERS OR AGENTS SHALL NOT BE RESPONSIBLE FOR THE ACCURACY OR COMPLETENESS OF SCANNED COPIES OF THIS PLAN SHEET.

CONTRACTOR FURNISHED SIGNS

SIGN No.	SIGN CODE	SIGN SIZE L x D (In x In)	SINGLE FACED	SIGN FACING MATERIAL						SIGN PANEL SUBSTRATE MATERIAL (SQFT)				DESCRIPTION (REMARKS)
										ROADSIDE			OVERHEAD	
										SINGLE-SHEET				
				BACKGROUND		LEGEND		PROTECTIVE FILM		FRAMED ALUMINUM	UNFRAMED ALUMINUM			
				SHEETING COLOR	RETROREFLECTIVE ASTM TYPE	SHEETING COLOR	RETROREFLECTIVE ASTM TYPE	STANDARD	PREMIUM	0.080"	0.063"	0.080"	LAMINATED (1" - TYPE A)	
1-1	G28-2(44)(CA)	28 x 25	X	GREEN	III	WHITE	III				4.9			44 ROUTE SHIELD
1-1	G34(CA)	21 x 15	X	GREEN	III	WHITE	III				2.2			ARROW
1-8	R61-24(CA)	54 x 30	X	WHITE	III	BLACK	II					11.3		LANE DESIGNATION, MIRROR IMAGE
1-9	W1-7	36 x 18	X	YELLOW	III	BLACK	II	X			4.5			DOUBLE ARROW
1-9	OM1-3	24 x 24	X	YELLOW	III	BLACK	II	X			4			OBJECT MARKER
1-11	G7(CA)	66 x 24	X	GREEN	III	WHITE	III					11		STREET NAME - TEHAMA
1-12	R49(LT)(CA)	42 x 18	X	WHITE	III	BLACK	II				5.3			NO PED CROSSING, USE CROSSWALK
1-12	R9-3A	18 x 18	X	WHITE	III	RED/BLACK	III				2.3			NO PED SYMBOL
1-15	R49(RT)(CA)	42 x 18	X	WHITE	III	BLACK	II				5.3			NO PED CROSSING, USE CROSSWALK
1-15	R9-3A	18 x 18	X	WHITE	III	RED/BLACK	III				2.3			NO PED SYMBOL
1-16	D4-1	30 x 24	X	WHITE	III	GREEN	III				5			PARKING RT ARROW
1-17	D9-2	24 x 24	X	BLUE	III	WHITE	III				4			HOSPITAL SYMBOL
1-17	G33-1(CA)	24 x 6	X	BLUE	III	WHITE	III				1			ARROW
1-19	R10-15	30 x 36	X	WHITE	III	BLACK	II				7.5			TURNING TRAFFIC MUST YIELD TO PEDESTRIANS
1-23	R3-8B(MOD)	48 x 30	X	WHITE	III	BLACK	II					10		LANE DESIGNATION
F	SPEC-4	348 x 80	X	GREEN	IV	WHITE	IV						193.3	44 EAST, TO 5, SOUTH 273
A	G24(CA)	108 x 12	X	GREEN	IV	WHITE	IV				9			OVERLAY PANEL - BOTH LANES
C	G77(CA)	180 x 100	X	GREEN	IV	WHITE	IV						125	NORTH 273, EAST 299, TO 5 NORTH
C	G77(CA)	180 x 100	X	GREEN	IV	WHITE	IV						125	SOUTH 273, TO 44 EAST, TO 5 SOUTH
D	G21(CA)	90 x 12	X	GREEN	IV	WHITE	IV				7.5			OVERLAY PANEL - ALL LANES
D	SPEC-6	78 x 66	X	YELLOW	IV	BLACK	II			35.8				TRUCKS USE RIGHT LANE
									TOTAL (SQFT)	35.8	64.8	32.3	443.3	

SIGN QUANTITIES
SQ-3

FRANK RIVAS | REVISED BY | DATE REVISED
JEFF STEPPAT | CALCULATED-DESIGNED BY | CHECKED BY
ROB STINGER | FUNCTIONAL SUPERVISOR

STATE OF CALIFORNIA - DEPARTMENT OF TRANSPORTATION
Caltrans® TRAFFIC OPS

P:\proj\02\3E600_plans\pse\02000200460c003.dgn

LAST REVISION | DATE PLOTTED => 07-FEB-2012 | TIME PLOTTED => 13:54
12-07-11

Dist	COUNTY	ROUTE	POST MILES TOTAL PROJECT	SHEET No.	TOTAL SHEETS
02	Sha	44,273, 299	Var	47	78

REGISTERED CIVIL ENGINEER 12-06-11 DATE

2-6-12
PLANS APPROVAL DATE

REGISTERED PROFESSIONAL ENGINEER JAMES D. RASMUSSEN No. C76401 Exp. 12-31-12 CIVIL STATE OF CALIFORNIA

THE STATE OF CALIFORNIA OR ITS OFFICERS OR AGENTS SHALL NOT BE RESPONSIBLE FOR THE ACCURACY OR COMPLETENESS OF SCANNED COPIES OF THIS PLAN SHEET.

STORM WATER POLLUTION PREVENTION

ITEM	UNIT	QTY
TEMPORARY GRAVEL BAG BERM	LF	39
TEMPORARY DRAINAGE INLET PROTECTION	EA	13

ROADWAY ITEMS

ALIGNMENT	CURVE RAMP NUMBER/ SHEET NUMBER	STATION BEG Sta		STATION END Sta	LOCATION Lt/Rt	REMOVE BOLLARD EA	COLD PLANE ASPHALT CONCRETE PAVEMENT SQYD	REMOVE CONCRETE SQYD	REMOVE CONCRETE (CURB AND GUTTER) LF	REMOVE CONCRETE (MISCELLANEOUS) CY	ROADWAY EXCAVATION CY	SUBGRADE ENHANCEMENT GEOTEXTILE, CLASS A1 SQYD	CLASS 2 AGGREGATE BASE CY	HOT MIX ASPHALT (TYPE A) TON	PLACE HOT MIX ASPHALT (MISCELLANEOUS AREA) SQYD	TACK COAT TON	MINOR CONCRETE (CURB) LF	DETECTABLE WARNING SURFACE (EXISTING CURB RAMP) SF	MINOR CONCRETE (CURB AND GUTTER) LF	MINOR CONCRETE (SIDEWALK) CY	TUBULAR HANDRAILING (MODIFIED) LF	DESCRIPTION
"T"		16+44.6	TO	20+26.6			2404.9			5.4				178.6		1.2						TEHAMA STREET COLD PLANE & OVERLAY
"T"	CR1	20+13.7	TO	20+26.6	Rt			6.3	10.9		3.1		1.2	0.6	1.5	0.1			10.9	0.7		DOWNTOWN MALL RAMP
"T"		19+60.4	TO	19+66.9	Rt													12				SOUTH WEST CORNER OF TEHAMA St & MARKET St
"T"	CR2	19+21.3	TO	19+62.8	Lt			61.2	57.4		23.0		8.6	2.7	7.2	0.1	25.9		57.4	6.7	24	NORTH WEST CORNER OF TEHAMA St & MARKET St
"T"	CR3	20+09.9	TO	20+34.6	Lt			32.8	33.0		12.1		5.0	1.5	4.0	0.1	38.0		33.0	3.6	11	NORTH EAST CORNER OF TEHAMA St & MARKET St
"M"	CR4	13+30.7	TO	13+61.4	Lt			27.5	36.0		19.4		8.1	2.5	6.8	0.1			58.0	5.5		SOUTH WEST CORNER OF SHASTA St & MARKET St
"M"	CR5	13+33.7	TO	13+59.6	Rt			21.9	30.0		9.8		6.3	2.1	5.5	0.1			47.0	4.3		SOUTH EAST CORNER OF SHASTA St & MARKET St
"M"		14+07.0	TO	14+11.9	Rt													20				NORTH EAST CORNER OF SHASTA St & MARKET St
"M"	CR6	14+01.6	TO	14+28.2	Lt		14.8	15.5	24.6		7.0		2.8	1.4	3.7	0.1	33.6		25.2	1.7		NORTH WEST CORNER OF SHASTA St & MARKET St
"E"	CR7	11+97.5	TO	12+37.6	Rt			12.0	20.7	0.5	15.5		4.6	6.6	46.2	0.2			20.7	3.6		SOUTH WEST CORNER OF CALIFORNIA St & EUREKA WAY
"E"		10+27.0	TO	15+98.1	Rt	18	3864.1	218.9	267.3	4.5	353.1	420.3	184.8	406.1	175.0	2.1	152.7		251.7	28.9		EUREKA WAY WIDENING, COLD PLANE & OVERLAY (INCLUDES CR8)
"E"	CR9	12+14.0	TO	12+41.2	Lt			21.8	20.7	0.2	8.3		3.4	0.7	2.7	0.1	17.7		20.7	2.4		NORTH WEST CORNER OF CALIFORNIA St & EUREKA WAY
"E"	CR10	12+90.1	TO	13+15.2	Lt			16.9	75.9	0.3	8.6		3.3	1.1	4.4	0.1	15.8		15.8	1.9		NORTH EAST CORNER OF CALIFORNIA St & EUREKA WAY
"E"	DQ-1	12+75.1	TO	12+75.1	Rt									0.7 *	1.8 *							DRAINAGE
TOTAL						18	6283.8	434.8	576.5	10.9	459.9	420.3	228.1	604.6	258.8	4.3	283.7	32	540.4	59.3	35	

* ADDITIONAL QUANTITIES SHOWN ELSEWHERE SEE SHEET DQ-1.

SUMMARY OF QUANTITIES

Q-1

CALCULATED-DESIGNED BY JOLENA ASTIN
CHECKED BY JAMES D. RASMUSSEN
REVISED BY
DATE REVISED
FUNCTIONAL SUPERVISOR JOHN L. MARTIN

STATE OF CALIFORNIA - DEPARTMENT OF TRANSPORTATION
Caltrans DESIGN

P:\proj\02\3E600_plans\pse\0200020046pa001.dgn

LAST REVISION 11-29-11 DATE PLOTTED => 29-FEB-2012 TIME PLOTTED => 10:48

Dist	COUNTY	ROUTE	POST MILES TOTAL PROJECT	SHEET No.	TOTAL SHEETS
02	Sha	44, 273, 299	Var	48	78

J. Hannigan 12-06-11
REGISTERED ELECTRICAL ENGINEER DATE

2-6-12
PLANS APPROVAL DATE

REGISTERED PROFESSIONAL ENGINEER J.M. HANNIGAN No. E13665 Exp. 6-30-13 ELECTRICAL STATE OF CALIFORNIA

THE STATE OF CALIFORNIA OR ITS OFFICERS OR AGENTS SHALL NOT BE RESPONSIBLE FOR THE ACCURACY OR COMPLETENESS OF SCANNED COPIES OF THIS PLAN SHEET.

NOTE:

1. FOR ACCURATE RIGHT OF WAY DATA, CONTACT RIGHT OF WAY ENGINEERING AT THE DISTRICT OFFICE.

LEGEND:

GA	GREEN ARROW
LEDCPSM	LIGHT EMITTING DIODE COUNTDOWN PEDESTRIAN SIGNAL MODULE
vivds	EXISTING VIDEO IMAGE VEHICLE DETECTION SYSTEM
VIVDS	NEW VIDEO IMAGE VEHICLE DETECTION SYSTEM

EXISTING LOOP DETECTORS TO BE MAINTAINED

Sta No.	PM	TYPE	DESCRIPTION
320	Sha-44-L0.13	3-Control Loops	211' South of Shasta St

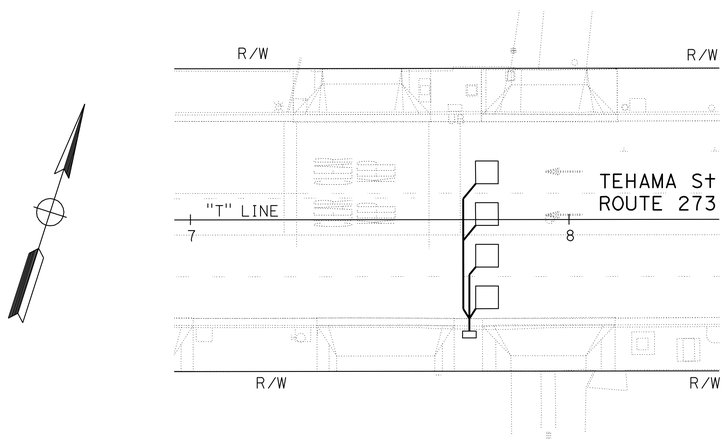

TMS No. 355

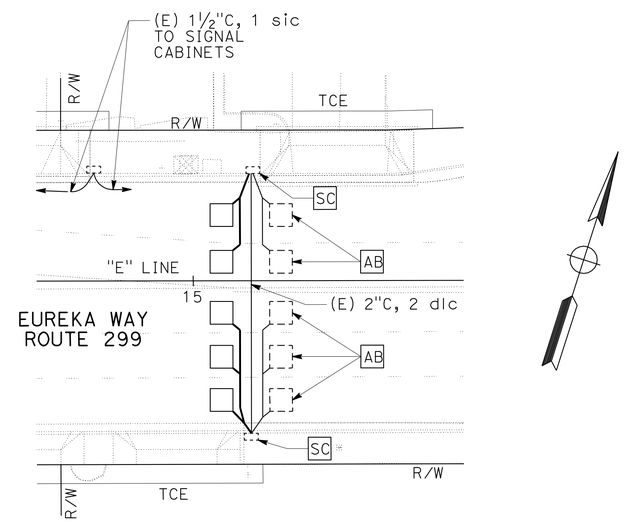

TMS No. 316

MODIFY TRAFFIC MONITORING STATION

SCALE: 1" = 20'

E-1

APPROVED FOR ELECTRICAL WORK ONLY

REVISED BY | DATE REVISED
J.M. HANNIGAN | JIM ELGIN
CALCULATED-DESIGNED BY | CHECKED BY
FUNCTIONAL SUPERVISOR: ROB STINGER

STATE OF CALIFORNIA - DEPARTMENT OF TRANSPORTATION
Caltrans® ELECTRICAL DESIGN

P:\proj\02\36600_plans\pse\resubmit 02-01-12\0200020046ua001.dgn

LAST REVISION | DATE PLOTTED => 14-FEB-2012 | TIME PLOTTED => 08:55

Dist	COUNTY	ROUTE	POST MILES TOTAL PROJECT	SHEET No.	TOTAL SHEETS
02	Sha	44, 273, 299	Var	49	78

REGISTERED ELECTRICAL ENGINEER 12-06-11 DATE

2-6-12
PLANS APPROVAL DATE

REGISTERED PROFESSIONAL ENGINEER J.M. HANNIGAN No. E13665 Exp. 6-30-13 ELECTRICAL STATE OF CALIFORNIA

THE STATE OF CALIFORNIA OR ITS OFFICERS OR AGENTS SHALL NOT BE RESPONSIBLE FOR THE ACCURACY OR COMPLETENESS OF SCANNED COPIES OF THIS PLAN SHEET.

NOTE:

1. FOR ACCURATE RIGHT OF WAY DATA, CONTACT RIGHT OF WAY ENGINEERING AT THE DISTRICT OFFICE.

NOTES (THIS SHEET):

1. TYPE 1-B POLE WITH LEDCPSM AND HOUSING WITH TP-1-T MOUNTING.
2. Exist 1½"C, 1 sic, REMOVE 1 sic, ADD 1 SIC TO Exist TRAFFIC SIGNAL CONTROLLER ON THE NORTHWEST CORNER OF CALIFORNIA STREET AND TEHAMA STREET INTERSECTION, APPROXIMATELY 400′.
3. Exist 1½"C, 1 sic, REMOVE 1 sic, ADD 1 SIC TO Exist TRAFFIC SIGNAL CONTROLLER ON THE NORTHWEST CORNER OF MARKET STREET AND SHASTA STREET INTERSECTION, APPROXIMATELY 400′.
4. Exist 2"C, 1 sic TO Exist TRAFFIC SIGNAL CONTROLLER ON THE NORTHWEST CORNER OF TEHAMA STREET AND PINE STREET INTERSECTION, APPROXIMATELY 350′.
5. RS Exist PEDESTRIAN SIGNAL MODULE. INSTALL LEDCPSM IN EXISTING HOUSING.
6. LEDCPSM AND HOUSING WITH SP-1-T MOUNTING.

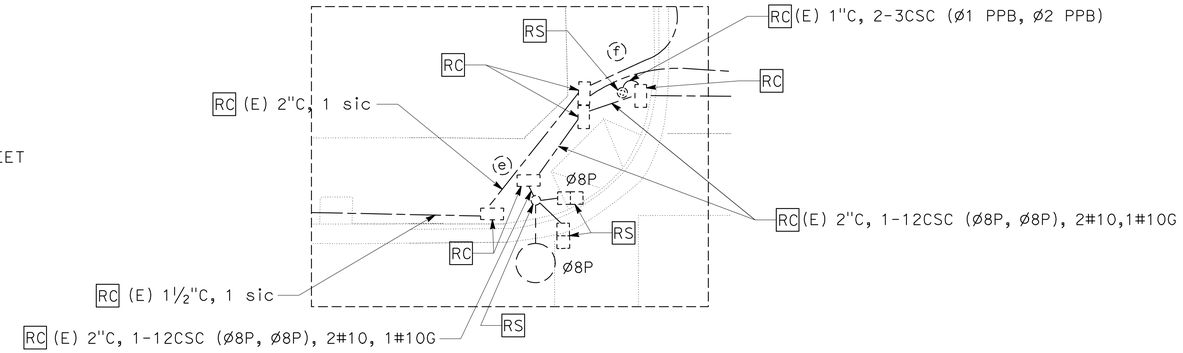

DETAIL C

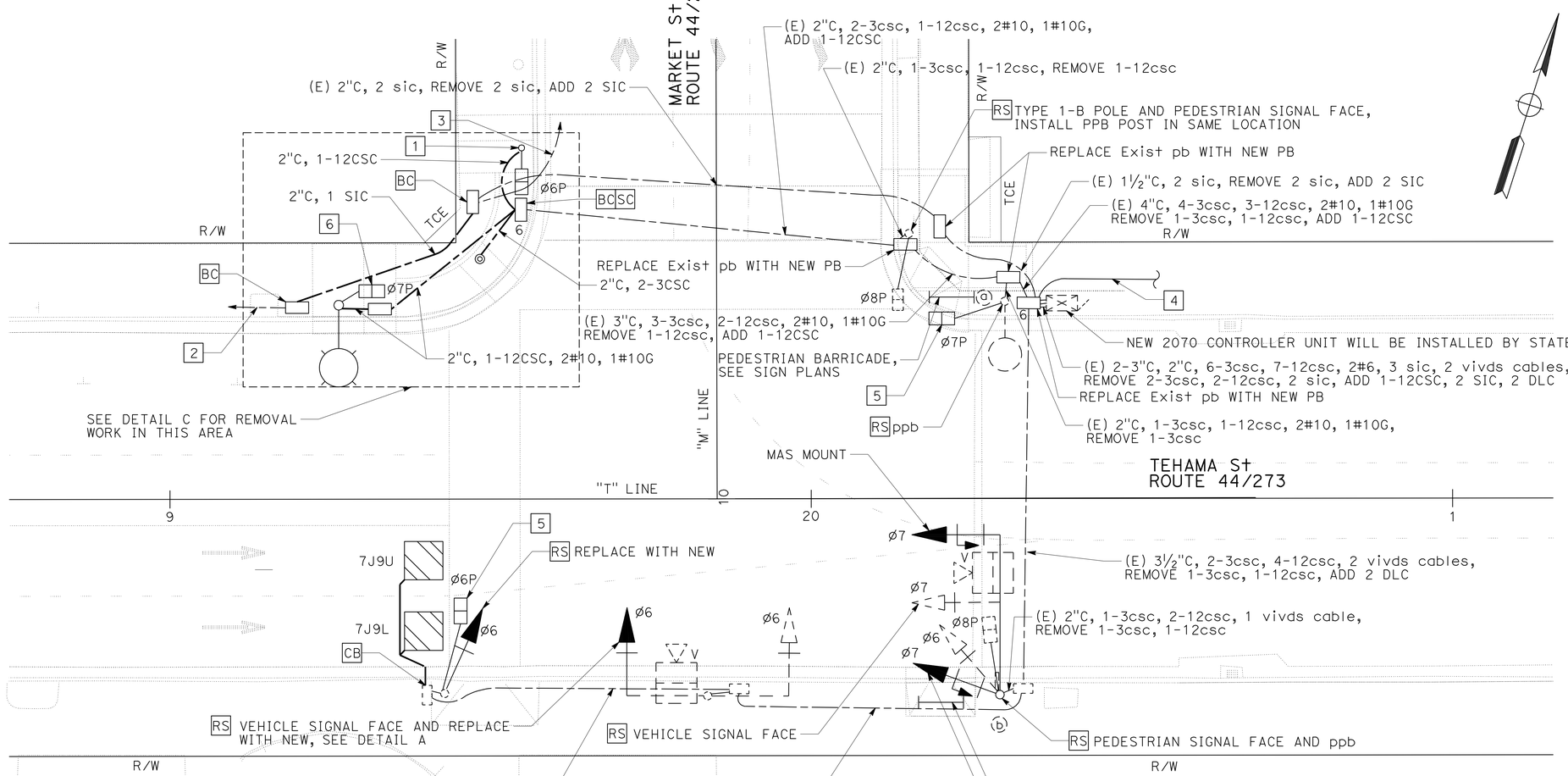

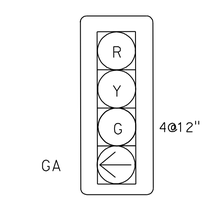

DETAIL A

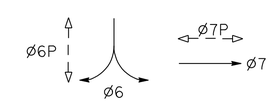

PHASE DIAGRAM

MODIFY SIGNAL AND LIGHTING (LOCATION 1)

(MARKET STREET & TEHAMA STREET)

SCALE: 1" = 10′

E-2

APPROVED FOR ELECTRICAL WORK ONLY

J.M. HANNIGAN — JIM ELGIN — ROB STINGER

STATE OF CALIFORNIA - DEPARTMENT OF TRANSPORTATION — Caltrans® ELECTRICAL DESIGN

REVISED BY — DATE REVISED — CALCULATED-DESIGNED BY — CHECKED BY — FUNCTIONAL SUPERVISOR

P:\proj1\02\3E600_plans\pse\resubmit 02-01-12\02000200046ua002.dgn

LAST REVISION — DATE PLOTTED => 14-FEB-2012 — TIME PLOTTED => 08:55

Dist	COUNTY	ROUTE	POST MILES TOTAL PROJECT	SHEET No.	TOTAL SHEETS
02	Sha	44, 273, 299	Var	50	78

J. Hannigan 12-06-11
REGISTERED ELECTRICAL ENGINEER DATE

2-6-12
PLANS APPROVAL DATE

REGISTERED PROFESSIONAL ENGINEER J.M. HANNIGAN No. E13665 Exp. 6-30-13 ELECTRICAL STATE OF CALIFORNIA

THE STATE OF CALIFORNIA OR ITS OFFICERS OR AGENTS SHALL NOT BE RESPONSIBLE FOR THE ACCURACY OR COMPLETENESS OF SCANNED COPIES OF THIS PLAN SHEET.

NOTE:

1. FOR ACCURATE RIGHT OF WAY DATA, CONTACT RIGHT OF WAY ENGINEERING AT THE DISTRICT OFFICE.

NOTES (THIS SHEET):

1. RED LIGHT ENFORCEMENT EQUIPMENT NOT SHOWN.

2 RS Exist VEHICLE HEAD, ADD VEHICLE HEAD, SEE DETAIL D.

3 RS Exist VEHICLE HEAD, ADD VEHICLE HEAD, SEE DETAIL E.

4 LEDCPSM AND HOUSING WITH SP-1-T MOUNTING.

5 RS Exist PEDESTRIAN SIGNAL MODLUE. ADD LEDCPSM IN EXISTING HOUSING.

6 RC Exist PULL BOX, INSTALL PULL BOX.

7 Exist POLE (a) EQUIPMENT NOT SHOWN FOR CLARITY. SEE RELOCATED POLE FOR EQUIPMENT BEING REPLACED.

8 (E) 2"C, 2-12csc, 2-3csc, PULL CONDUCTORS BACK TO PULL BOX AND REROUTE TO NEW POLE (a) LOCATION. RC CONDUIT.

9 Exist 1½"C, 1 sic, REMOVE 1 sic, ADD 1 SIC TO TRAFFIC SIGNAL CONTROLLER ON THE NORTHEAST CORNER OF MARKET STREET AND TEHAMA STREET INTERSECTION, APPROXIMATELY 400'.

10 MAS MOUNT.

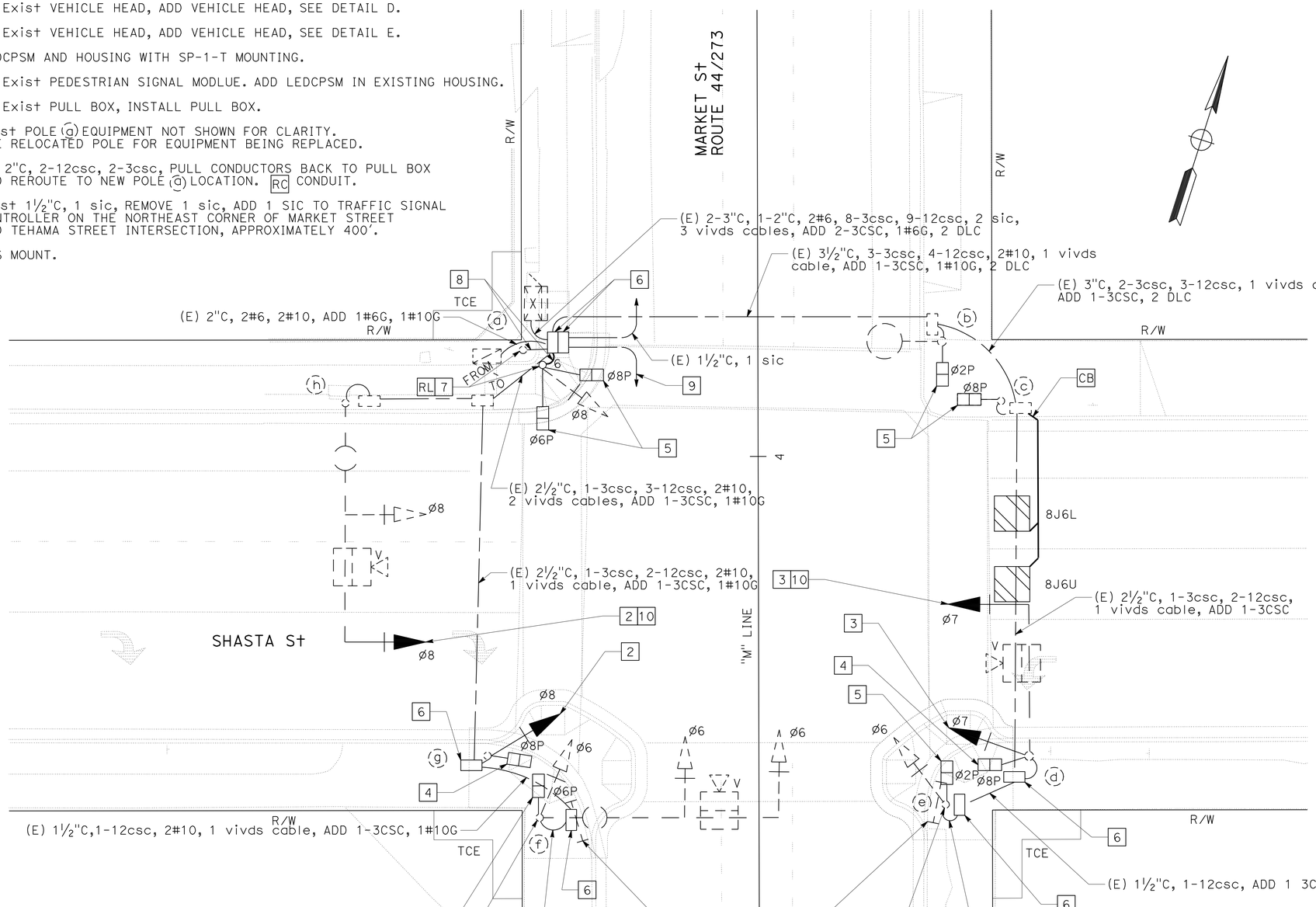

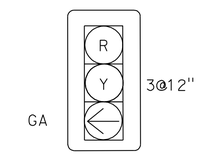

DETAIL D

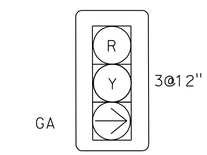

DETAIL E

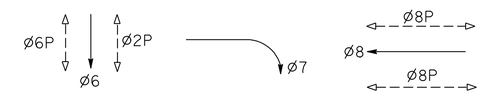

PHASE DIAGRAM

MODIFY SIGNAL AND LIGHTING (LOCATION 2)

(MARKET STREET & SHASTA STREET)

SCALE: 1" = 10'

E-3

APPROVED FOR ELECTRICAL WORK ONLY

REVISED BY | DATE REVISED | J.M. HANNIGAN | JIM ELGIN | CALCULATED-DESIGNED BY | CHECKED BY | FUNCTIONAL SUPERVISOR | ROB STINGER

STATE OF CALIFORNIA - DEPARTMENT OF TRANSPORTATION

Caltrans® ELECTRICAL DESIGN

P:\proj1\02\3E600_plans\pse\resubmit 02-01-12\0200020046ua003.dgn

LAST REVISION | DATE PLOTTED => 14-FEB-2012 | TIME PLOTTED => 08:55

Dist	COUNTY	ROUTE	POST MILES TOTAL PROJECT	SHEET No.	TOTAL SHEETS
02	Sha	44, 273, 299	Var	51	78

REGISTERED ELECTRICAL ENGINEER 12-06-11 DATE

2-6-12
PLANS APPROVAL DATE

REGISTERED PROFESSIONAL ENGINEER J.M. HANNIGAN No. E13665 Exp. 6-30-13 ELECTRICAL STATE OF CALIFORNIA

THE STATE OF CALIFORNIA OR ITS OFFICERS OR AGENTS SHALL NOT BE RESPONSIBLE FOR THE ACCURACY OR COMPLETENESS OF SCANNED COPIES OF THIS PLAN SHEET.

NOTE:

1. FOR ACCURATE RIGHT OF WAY DATA, CONTACT RIGHT OF WAY ENGINEERING AT THE DISTRICT OFFICE.

NOTES (THIS SHEET):

1. SEE SHEET E-5 FOR REMOVAL WORK.

2 TO TRAFFIC SIGNAL CONTROLLER ON THE SOUTHEAST CORNER OF MARKET STREET AND EUREKA WAY INTERSECTION.

3 ADD LEDCPSM IN EXISTING HOUSING.

4 LEDCPSM AND HOUSING WITH SP-1-T MOUNTING.

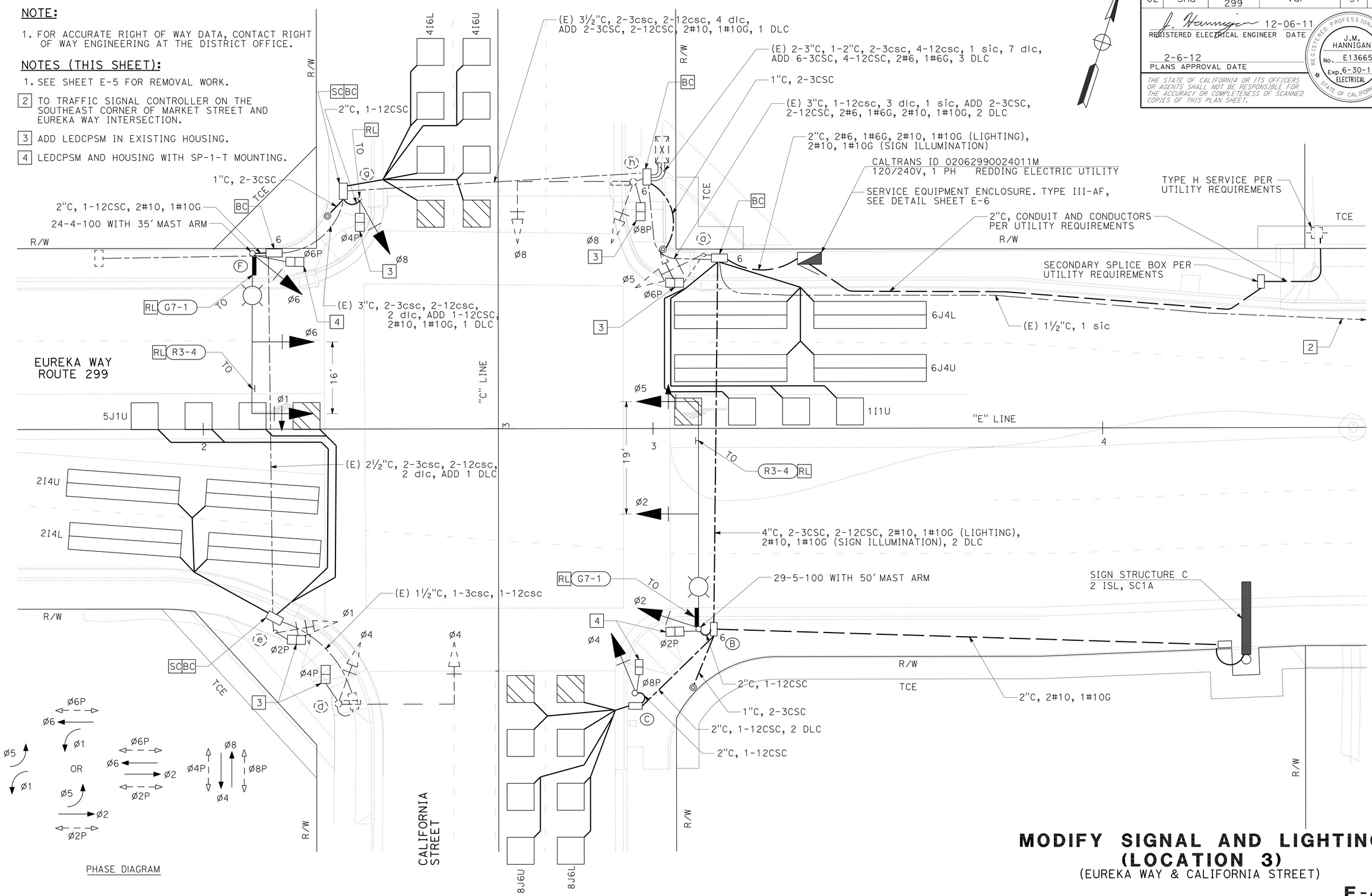

APPROVED FOR ELECTRICAL WORK ONLY

MODIFY SIGNAL AND LIGHTING (LOCATION 3)

(EUREKA WAY & CALIFORNIA STREET)

SCALE: 1" = 10'

E-4

STATE OF CALIFORNIA - DEPARTMENT OF TRANSPORTATION
Caltrans® ELECTRICAL DESIGN

FUNCTIONAL SUPERVISOR: ROB STINGER
CALCULATED-DESIGNED BY: JIM ELGIN
CHECKED BY: J.M. HANNIGAN
REVISED BY / DATE REVISED

P:\proj1\02\3E600_plans\pse\resubmit 02-01-12\02000200046ua004.dgn

LAST REVISION DATE PLOTTED => 14-FEB-2012 TIME PLOTTED => 08:55

BORDER LAST REVISED 7/2/2010 | USERNAME => s121614 | DGN FILE => 0200020046ua004.dgn | RELATIVE BORDER SCALE IS IN INCHES 0 1 2 3 | UNIT 0147 | PROJECT NUMBER & PHASE 02000200461

Dist	COUNTY	ROUTE	POST MILES TOTAL PROJECT	SHEET No.	TOTAL SHEETS
02	Sha	44, 273, 299	Var	52	78

REGISTERED ELECTRICAL ENGINEER 12-06-11 DATE

2-6-12 PLANS APPROVAL DATE

REGISTERED PROFESSIONAL ENGINEER J.M. HANNIGAN No. E13665 Exp. 6-30-13 ELECTRICAL STATE OF CALIFORNIA

THE STATE OF CALIFORNIA OR ITS OFFICERS OR AGENTS SHALL NOT BE RESPONSIBLE FOR THE ACCURACY OR COMPLETENESS OF SCANNED COPIES OF THIS PLAN SHEET.

NOTE:

1. FOR ACCURATE RIGHT OF WAY DATA, CONTACT RIGHT OF WAY ENGINEERING AT THE DISTRICT OFFICE.

NOTE (THIS SHEET):

1. SEE SHEET E-4 FOR IMPROVEMENT WORK.

2 RS Exist PEDESTRIAN SIGNAL MODULE

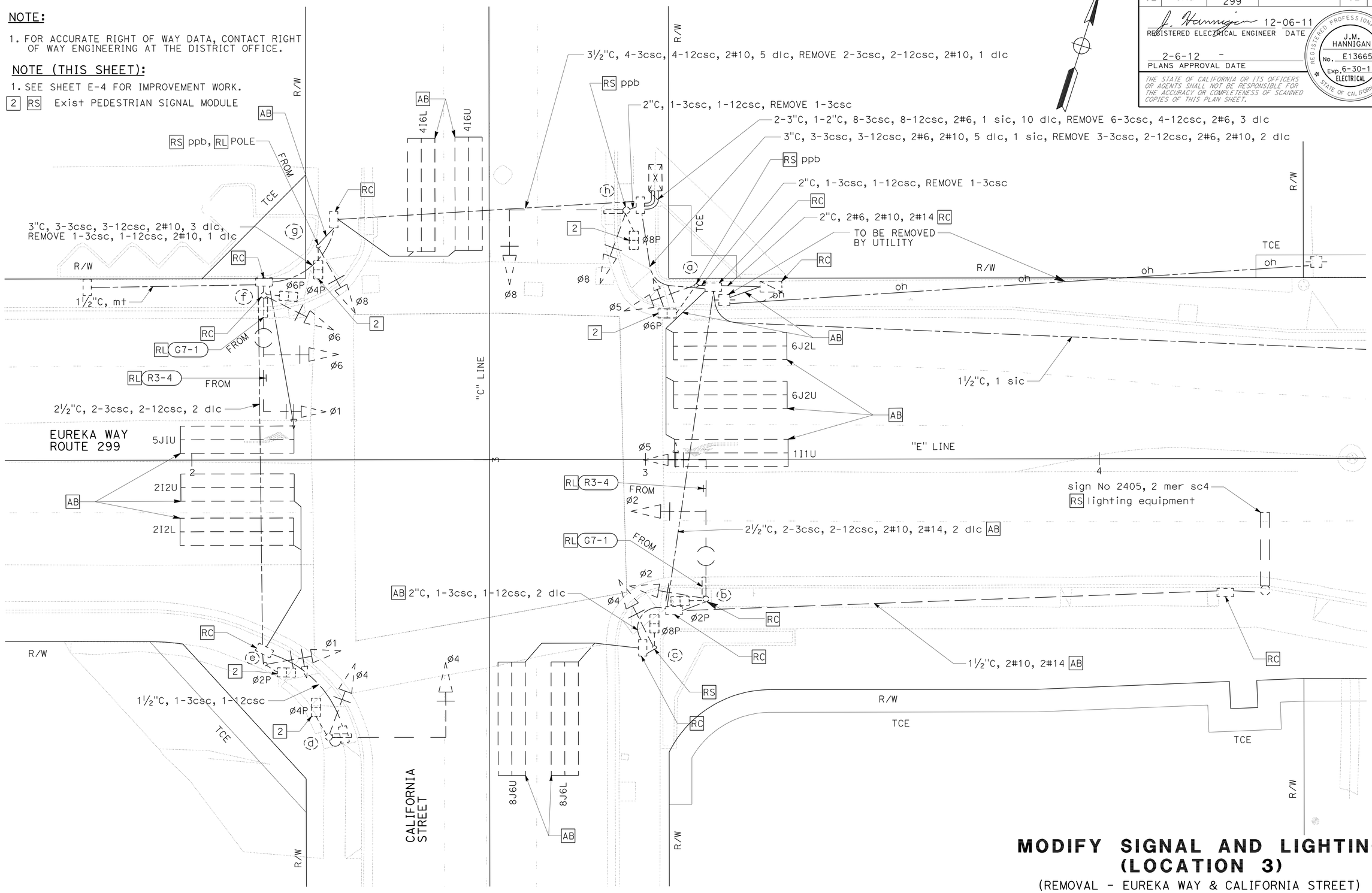

MODIFY SIGNAL AND LIGHTING (LOCATION 3)

(REMOVAL - EUREKA WAY & CALIFORNIA STREET)

SCALE: 1" = 10'

E-5

APPROVED FOR ELECTRICAL WORK ONLY

STATE OF CALIFORNIA - DEPARTMENT OF TRANSPORTATION

Caltrans® ELECTRICAL DESIGN

FUNCTIONAL SUPERVISOR: ROB STINGER

CALCULATED-DESIGNED BY: J.M. HANNIGAN

CHECKED BY: JIM ELGIN

REVISED BY / DATE REVISED

P:\proj1\02\3E600_plans\pse\resubmit 02-01-12\02000200046ua005.dgn

LAST REVISION DATE PLOTTED => 14-FEB-2012 TIME PLOTTED => 09:03

BORDER LAST REVISED 7/2/2010 | USERNAME => s121614 DGN FILE => 0200020046ua005.dgn | RELATIVE BORDER SCALE IS IN INCHES 0 1 2 3 | UNIT 0147 | PROJECT NUMBER & PHASE 02000200461

Dist	COUNTY	ROUTE	POST MILES TOTAL PROJECT	SHEET No.	TOTAL SHEETS
02	Sha	44, 273, 299	Var	53	78

REGISTERED ELECTRICAL ENGINEER 12-06-11 DATE

2-6-12
PLANS APPROVAL DATE

REGISTERED PROFESSIONAL ENGINEER J.M. HANNIGAN No. E13665 Exp. 6-30-13 ELECTRICAL STATE OF CALIFORNIA

THE STATE OF CALIFORNIA OR ITS OFFICERS OR AGENTS SHALL NOT BE RESPONSIBLE FOR THE ACCURACY OR COMPLETENESS OF SCANNED COPIES OF THIS PLAN SHEET.

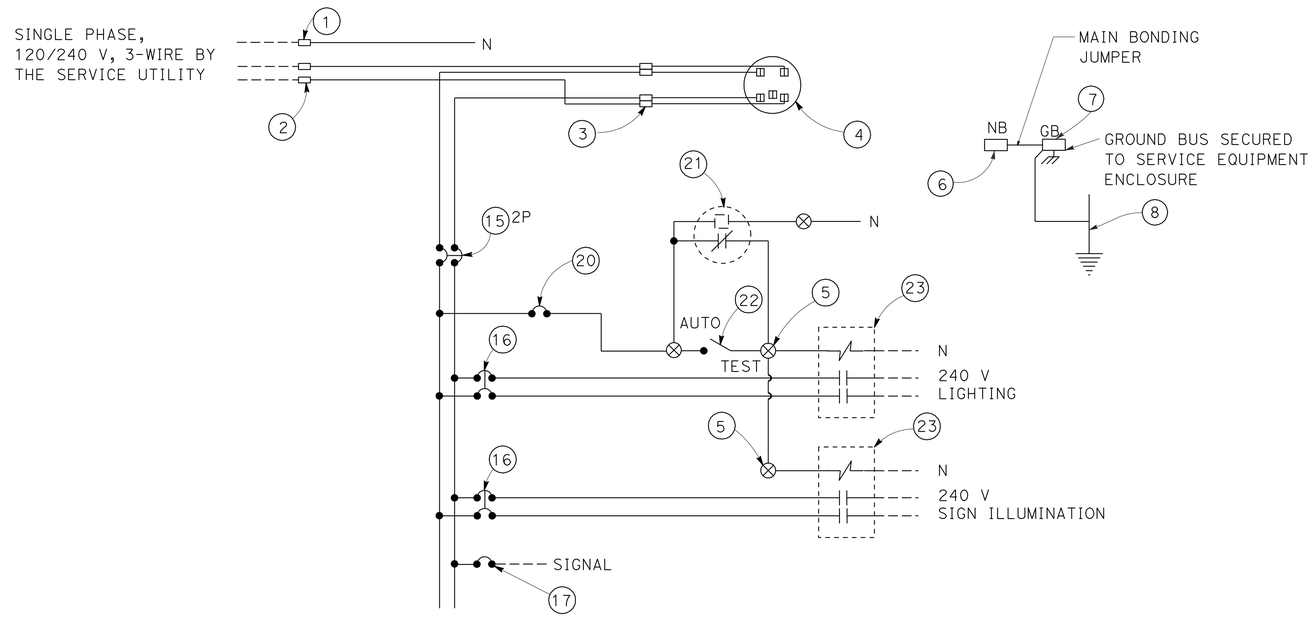

SERVICE WIRING DIAGRAM - LOCATION 3

SEE Std PLANS FOR DETAILS NOT SHOWN

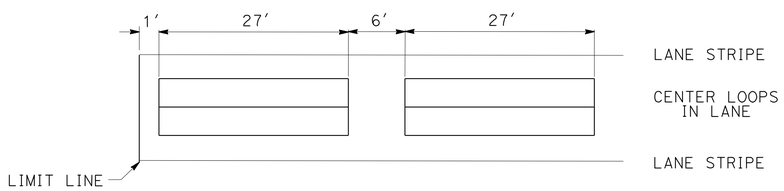

TYPE C LOOP ARRAY

NO SCALE

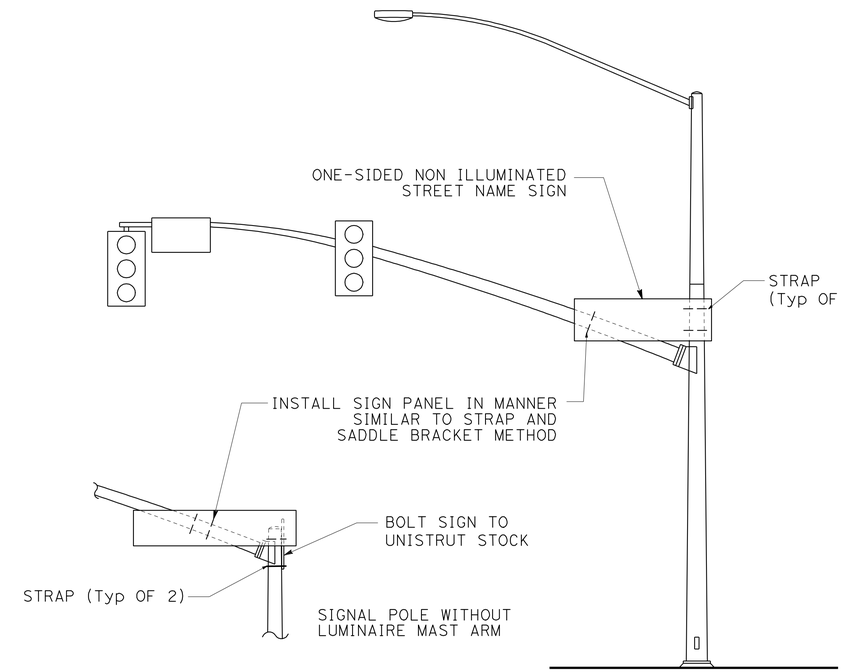

SIGN MOUNTED TO SIGNAL POLE/MAST ARM

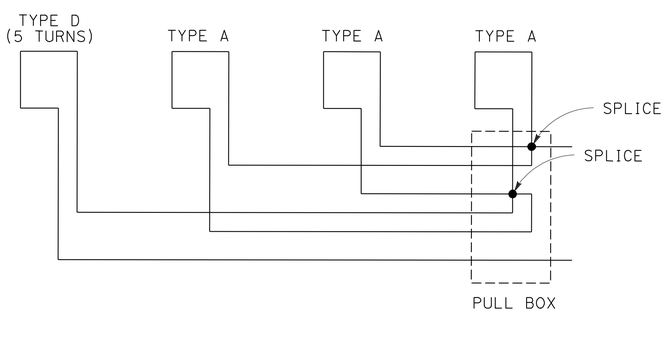

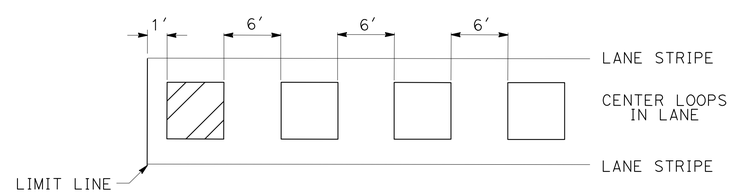

TYPE D/TYPE A LOOP ARRAY

NO SCALE

APPROVED FOR ELECTRICAL WORK ONLY

DETAILS

NO SCALE

E-6

REVISED BY	DATE REVISED

CALCULATED-DESIGNED BY: J.M. HANNIGAN
CHECKED BY: JIM ELGIN
FUNCTIONAL SUPERVISOR: ROB STINGER

STATE OF CALIFORNIA - DEPARTMENT OF TRANSPORTATION
Caltrans® ELECTRICAL DESIGN

P:\proj1\02\3E600_plans\pse\resubmit 02-01-12\0200020046ua006.dgn

LAST REVISION | DATE PLOTTED => 07-FEB-2012 | TIME PLOTTED => 14:43

DIST	COUNTY	ROUTE	POST MILES TOTAL PROJECT	SHEET NO.	TOTAL SHEETS
02	Sha	44, 273, 299	Var	54	78

REGISTERED CIVIL ENGINEER

November 17, 2006
PLANS APPROVAL DATE

REGISTERED PROFESSIONAL ENGINEER Dallas Forester No. C37765 Exp. 12-31-06 CIVIL STATE OF CALIFORNIA

The State of California or its officers or agents shall not be responsible for the accuracy or completeness of electronic copies of this plan sheet.

To accompany plans dated 2-6-12

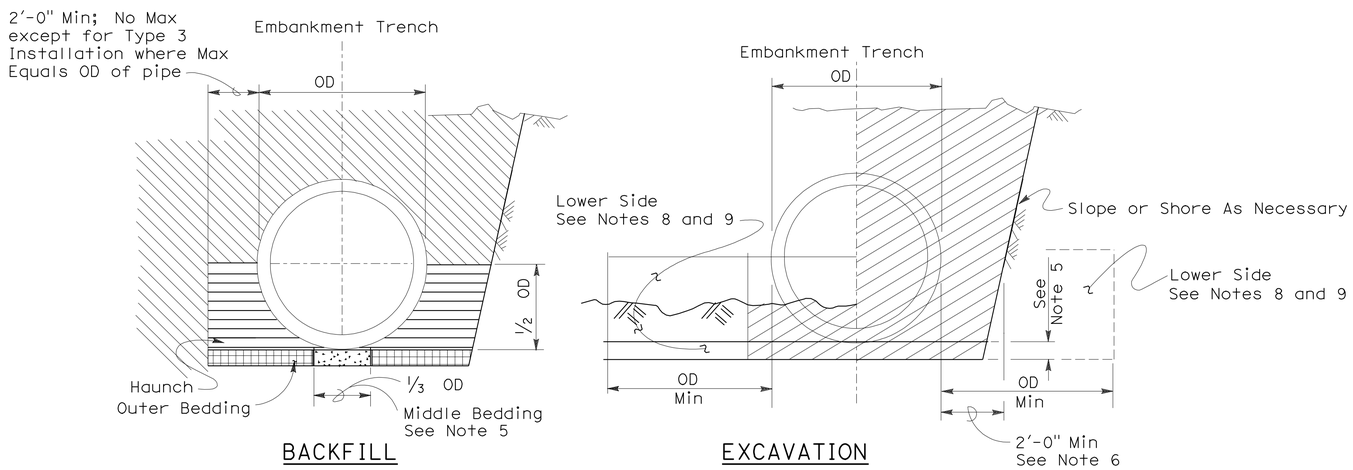

Roadway Embankment

Structure Backfill (Culvert) See Note 6

Structure Backfill (Culvert) See Note 6

Loose Backfill

Excavation Structure (Culvert)

TYPE 1 INSTALLATION:

The haunch and outer bedding shall be compacted to a minimum 90 percent relative compaction. In addition, the minimum sand equivalent in these areas shall be 30 and the maximum percentage passing the 75 μm sieve size shall be 12.

TYPE 2 INSTALLATION:

The haunch and outer bedding shall be compacted to a minimum 90 percent relative compaction. In addition, the minimum sand equivalent in these areas shall be 25.

TYPE 3 INSTALLATION:

The haunch and outer bedding shall be compacted to a minimum 85 percent relative compaction. 90 percent relative compaction will be required where the fill over the pipe is less than 4'-0" or 1/2 OD.

INSTALLATION TYPE 1

MINIMUM CLASS AND D-LOAD	COVER	
	108" Dia AND SMALLER	OVER 108" Dia
Class II 1000D	14.9'	12.9'
Class III 1350D	15.0' - 20.9'	13.0' - 18.9'
Class III Special 1700D	21.0' - 26.9'	19.0' - 24.9'
Class IV 2000D	27.0' - 31.9'	25.0' - 29.9'
Class IV Special 2500D	32.0' - 40.9'	30.0' - 38.9'
Class V 3000D	41.0' - 49.9'	39.0' - 46.9'
Class V Special 3600D	50.0' - 59.0'	47.0' - 58.0'

INSTALLATION TYPE 2

MINIMUM CLASS AND D-LOAD	COVER
Class II 1000D	9.9'
Class III 1350D	10.0'- 14.9'
Class III Special 1700D	15.0' - 19.9'
Class IV 2000D	20.0' - 24.9'
Class IV Special 2500D	25.0' - 31.9'
Class V 3000D	32.0' - 38.9'
Class V Special 3600D	39.0' - 47.0'

INSTALLATION TYPE 3

MINIMUM CLASS AND D-LOAD	COVER	
	48" Dia AND SMALLER	OVER 48" Dia
Class II 1000D	7.9'	5.9'
Class III 1350D	8.0' - 10.9'	6.0' - 8.9'
Class III Special 1700D	11.0' - 14.9'	9.0' - 12.9'
Class IV 2000D	15.0' - 17.9'	13.0' - 15.9'
Class IV Special 2500D	18.0' - 21.9'	16.0' - 19.9'
Class V 3000D	22.0' - 26.9'	20.0' - 24.9'
Class V Special 3600D	30.0' - 33.0'	25.0' - 31.0'

NOTES:

1. Unless otherwise shown on the plans or specified in the special provision, the Contractor shall have the option of selecting the class of RCP and the type of installation to be used, provided the height of cover does not exceed the value shown for the RCP selected.
   Example: 24" RCP culvert with maximum cover of 19'-0" the options are:
   a) Class III or stronger with Installation Type 1.
   b) Class III Special or stronger with Installation Type 2.
   c) Class IV Special or stronger with Installation Type 3.
   Cover is defined as the maximum vertical distance from top of the pipe to finished grade within the length of any given culvert.
2. The class of RCP and Installation Type selected shall be the same throughout the length of any given culvert.
3. The "length of any culvert" is defined as the culvert between:
   a) Successive drainage structure (inlets, junction boxes, headwalls, etc.).
   b) A drainage structure and the inlet or outlet end of the culvert.
   c) The inlet and outlet end of the culvert when there are no intervening drainage structures.
4. Oval and arch shaped RCP shall not be used.
5. 1/25 OD Min, not less than 3".
6. Slurry cement backfill may be substituted for backfill in the outer bedding and haunch areas. If slurry is used the outer and middle beddings shall be omitted. Prior to installation the soil under the middle 1/3 of the outside diameter of the pipe shall be softened by scarifying or other means to a minimum depth of 1/25 OD, but not less than 3". Where slurry cement backfill is used clear distance to trench wall may be reduced as set forth in Section 19-3.062 of the Standard Specifications.
7. Backfill shall be placed full width of excavation except where dimensions are shown for backfill width or thickness. Dimensions shown are minimums.
8. Lower side shall be suitable material as determined by the Engineer. Otherwise it shall be considered unsuitable as set forth in Section 19-2.02 of the Standard Specifications. See Note 9.
9. Where the pipe is placed in a trench, if the trench walls are sloped at 5 vertical to 1 horizontal or steeper for at least 90 percent of the trench height or up to not less than 12" from the grading plane, the firmness of the soil in the lower side need not be considered.
10. Non-reinforced precast concrete pipe sizes 3'-0" or smaller may be placed under installation Types 1, 2 or 3.

STATE OF CALIFORNIA
DEPARTMENT OF TRANSPORTATION

EXCAVATION AND BACKFILL CONCRETE PIPE CULVERTS

NO SCALE

RSP A62DA DATED NOVEMBER 17, 2006 SUPERSEDES STANDARD PLAN A62DA DATED MAY 1, 2006 - PAGE 20 OF THE STANDARD PLANS BOOK DATED MAY 2006.

REVISED STANDARD PLAN RSP A62DA

2006 REVISED STANDARD PLAN RSP A62DA

10-26-06

DIST	COUNTY	ROUTE	POST MILES TOTAL PROJECT	SHEET NO.	TOTAL SHEETS
02	Sha	44, 273, 299	Var	55	78

REGISTERED CIVIL ENGINEER

November 17, 2006
PLANS APPROVAL DATE

REGISTERED PROFESSIONAL ENGINEER Michael Janzen No. 44788 Exp. 03-31-08 CIVIL STATE OF CALIFORNIA

The State of California or its officers or agents shall not be responsible for the accuracy or completeness of electronic copies of this plan sheet.

To accompany plans dated 2-6-12

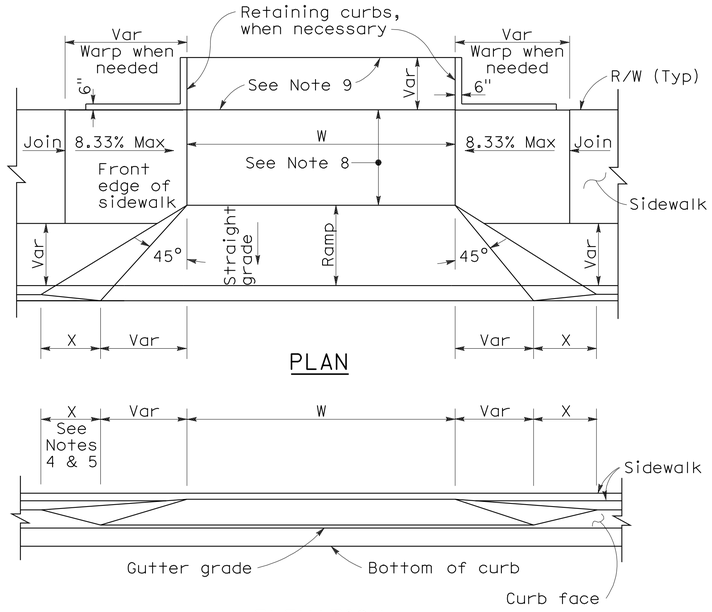

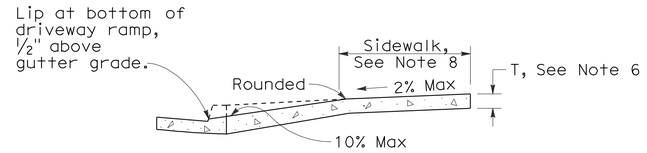

CASE A

Typical driveway, sidewalk not depressed

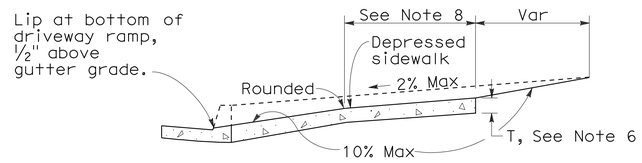

CASE B

Driveway with depressed sidewalk

SECTIONS

CURB QUANTITIES

TYPE	CUBIC YARDS PER LINEAR FOOT
A1-6	0.02585
A1-8	0.03084
A2-6	0.05903
A2-8	0.06379
A3-6	0.01036
A3-8	0.01435
B1-4	0.02185
B1-6	0.02930
B2-4	0.05515
B2-6	0.06171
B3-4	0.00641
B3-6	0.01074
B4	0.05709
D-4	0.04083
D-6	0.06804
E	0.06661

TABLE A

CURB TYPE	DIMENSIONS "H1"	"H2"	"W1"	"W2"
A1-6	1'-2"	6"	7½"	1½"
A1-8	1'-4"	8"	8"	2"
A2-6	1'-0"	6"	2'-7½"	1½"
A2-8	1'-2"	8"	2'-8"	2"
A3-6	6"	5"	7¼"	1¼"
A3-8	8"	7"	7¾"	1¾"
B1-4	1'-0"	4"	7½"	2½"
B1-6	1'-2"	6"	9"	4"
B2-4	10"	4"	2'-7½"	2½"
B2-6	1'-0"	6"	2'-9"	4"
B3-4	4"	3"	7"	2"
B3-6	6"	5"	8½"	3½"
D-4	10"	4"	1'-6"	1'-1"
D-6	1'-0"	6"	2'-2"	1'-8"

DRIVEWAYS

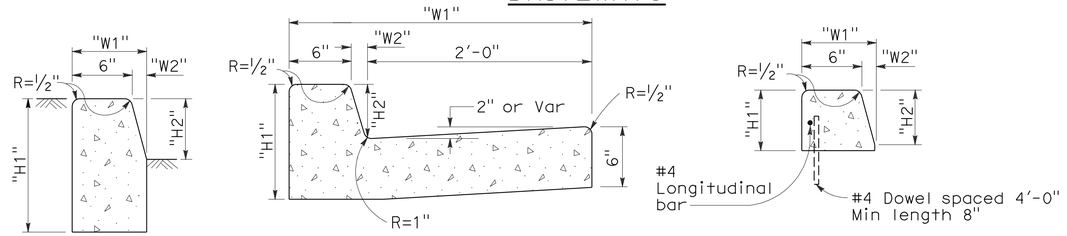

TYPE A1 CURBS
See Table A

TYPE A2 CURBS
See Table A

TYPE A3 CURBS
Superimposed on existing pavement
See Table A

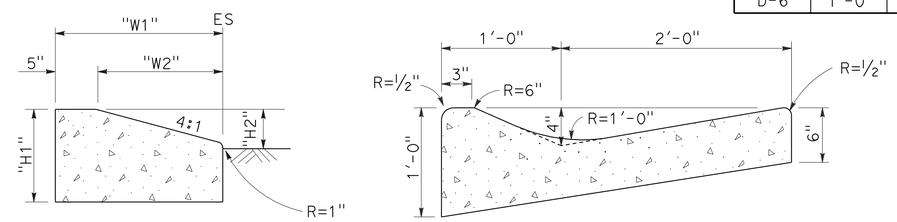

TYPE D CURBS
See Table A

TYPE E CURB

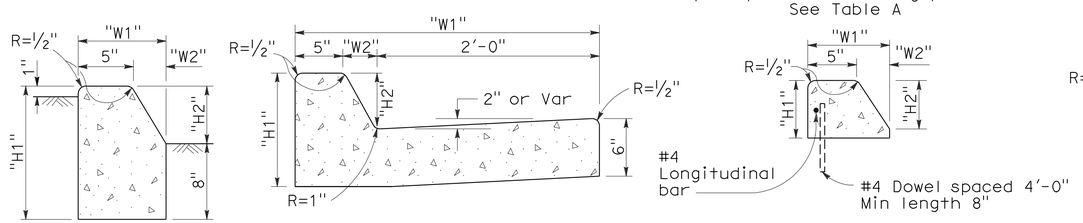

TYPE B1 CURBS
See Table A

TYPE B2 CURBS
See Table A

TYPE B3 CURBS
Superimposed on existing pavement
See Table A

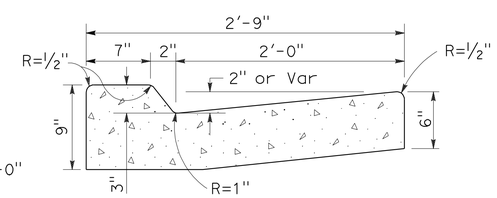

TYPE B4 CURBS

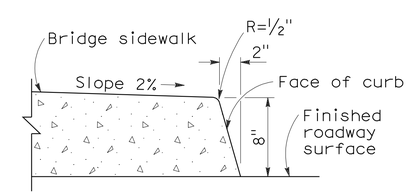

TYPE H CURB
On Bridges

CURBS

NOTES:

1. Case A driveway section typically applies.
2. Use Case B driveway section when ramp slopes would exceed 10% in Case A.
3. Use Case B driveway section when sidewalk cross slope would exceed 2% in Case A.
4. X=3'-0" except for curb heights over 10" where 4:1 slopes shall be used on curb slope.
5. X is a variable when sidewalk is located where wheelchairs may traverse the surface. Slopes shall not exceed 8.33%.
6. Sidewalk and ramp thickness "T" at driveway shall be 4" for residental and 6" for commercial.
7. Difference in slope of the driveway ramp and the slope of a line between the gutter and a point on the roadway 5'-0" from gutter line shall not exceed 15%. Reduce driveway ramp slope, not gutter slope, where required.
8. Minimum width of clear passageway for sidewalk shall be 4'-0".
9. Retaining curbs and acquisition of construction easement may be necessary for narrow sidewalks or curb heights in excess of 6".
10. Across the pedestrian route at curb ramp locations, the gutter pan slope shall not exceed 1" of depth for each 2'-0" of width.

STATE OF CALIFORNIA
DEPARTMENT OF TRANSPORTATION

CURBS AND DRIVEWAYS

NO SCALE

RSP A87A DATED NOVEMBER 17, 2006 SUPERSEDES STANDARD PLAN A87A DATED MAY 1, 2006 - PAGE 113 OF THE STANDARD PLANS BOOK DATED MAY 2006.

REVISED STANDARD PLAN RSP A87A

2006 REVISED STANDARD PLAN RSP A87A

10-25-06

DIST	COUNTY	ROUTE	POST MILES TOTAL PROJECT	SHEET NO.	TOTAL SHEETS
02	Sha	44, 273, 299	Var	56	78

REGISTERED CIVIL ENGINEER

September 1, 2006
PLANS APPROVAL DATE

REGISTERED PROFESSIONAL ENGINEER — Hector David Cordova — No. C41957 — Exp. 3-31-08 — CIVIL — STATE OF CALIFORNIA

The State of California or its officers or agents shall not be responsible for the accuracy or completeness of electronic copies of this plan sheet.

To accompany plans dated 2-6-12

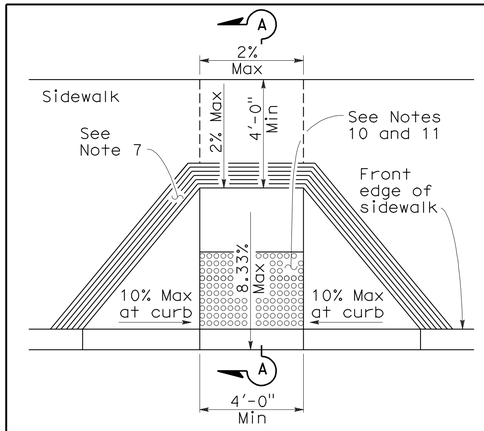

CASE A

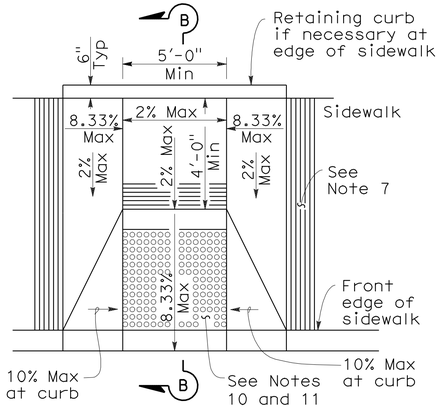

CASE B

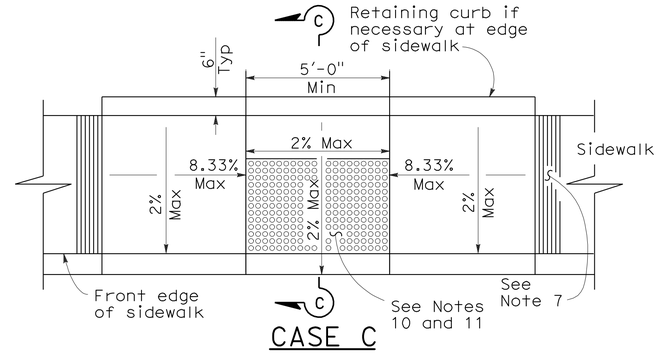

CASE C

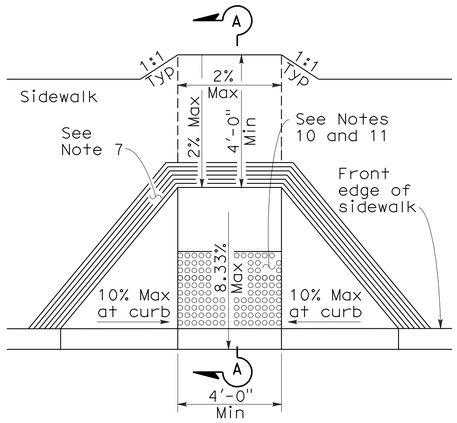

CASE D

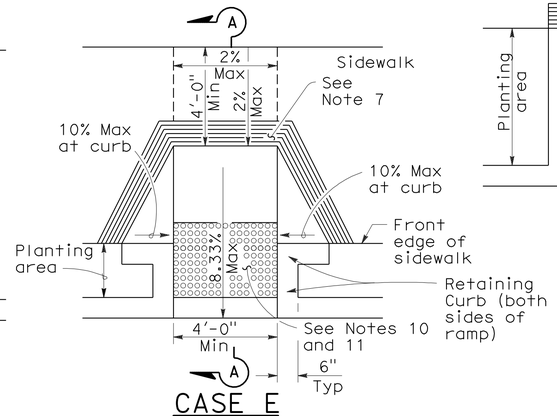

CASE E

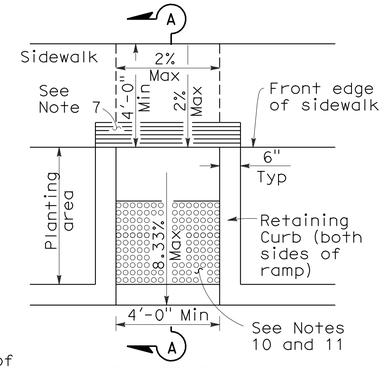

CASE F

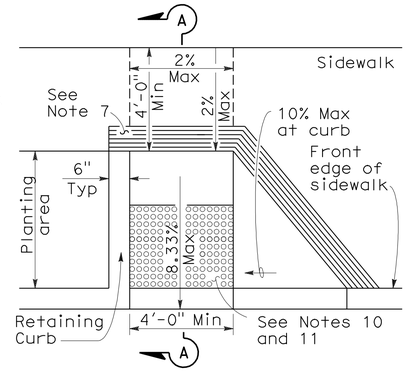

CASE G
See Note 4

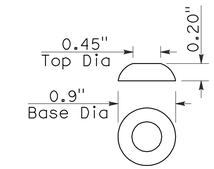

RAISED TRUNCATED DOME

SECTION A-A

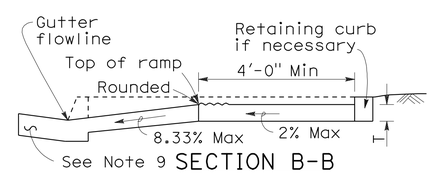

SECTION B-B
Depress entire sidewalk as required

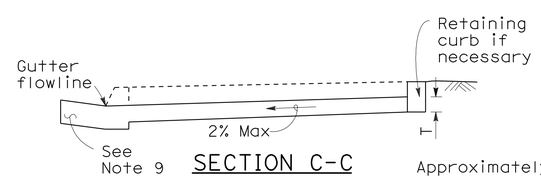

SECTION C-C

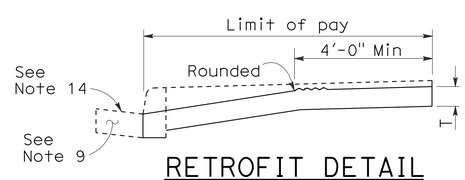

RETROFIT DETAIL
Existing curb and sidewalk

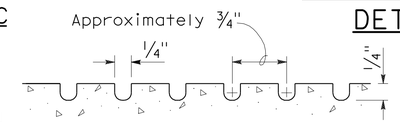

GROOVING DETAIL

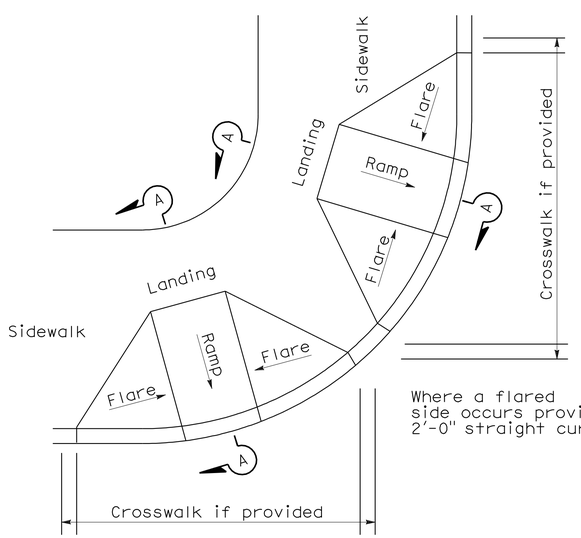

DETAIL A
TYPICAL TWO-RAMP CORNER INSTALLATION
See Note 1

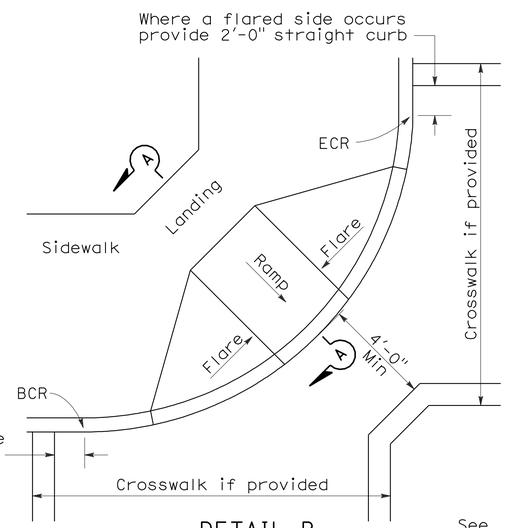

DETAIL B
TYPICAL ONE-RAMP CORNER INSTALLATION
See Notes 1 and 3

NOTES:

1. As site conditions dictate, Case A through Case G curb ramps may be used for corner installations similar to those shown in Detail A and Detail B. The case of curb ramps used in Detail A do not have to be the same. Case A through Case G curb ramps also may be used at mid block locations, as site conditions dictate.
2. If distance from curb to back of sidewalk is too short to accommodate ramp and 4'-0" platform (landing) as shown in Case A, the sidewalk may be depressed longitudinally as in Case B, or C or may be widened as in Case D.
3. When ramp is located in center of curb return, crosswalk configuration must be similar to that shown for Detail B.
4. As site conditions dictate, the retaining curb side and the flared side of the Case G ramp shall be constructed in reversed position.
5. If located on a curve, the sides of the ramp need not be parallel, but the minimum width of the ramp shall be 4'-0".
6. Side slope of ramp flares vary uniformly from a maximum of 10% at curb to conform with longitudinal sidewalk slope adjacent to top of the ramp, except in Case C and Case F.
7. The curb ramp shall be outlined, as shown, with a 1'-0" wide border with 1/4" grooves approximately 3/4" on center. See grooving detail.
8. Transitions from ramps and landing to walks, gutters or streets shall be flush and free of abrupt changes.
9. Maximum slopes of adjoining gutters, the road surface immediately adjacent to the curb ramp or accessible route shall not exceed 5 percent within 4'-0" of the top and bottom of the curb ramp.
10. Curb ramps shall have a detectable warning surface that extends the full width and 3'-0" depth of the ramp. Detectable Warning Surfaces shall conform to the details on this plan and the requirements in the Special Provisions.
11. The edge of the detectable warning surface nearest the street shall be between 6" and 8" from the gutter flowline.
12. Sidewalk and ramp thickness, "T", shall be 3 1/2" minimum.
13. Utility pull boxes, manholes, vaults and all other utility facilities within the boundaries of the curb ramp will be relocated or adjusted to grade by the owner prior to, or in conjunction with, curb ramp construction.
14. For retrofit conditions, removal and replacement of curb apron will be at the Contractor's option, unless otherwise shown on project plans.

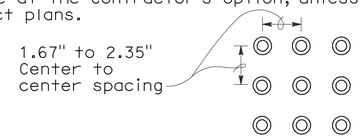

RAISED TRUNCATED DOME PATTERN (IN-LINE)
DETECTABLE WARNING SURFACE
See Note 10

STATE OF CALIFORNIA
DEPARTMENT OF TRANSPORTATION

CURB RAMP DETAILS

NO SCALE

RSP A88A DATED SEPTEMBER 1, 2006 SUPERSEDES STANDARD PLAN A88A DATED MAY 1, 2006 - PAGE 115 OF THE STANDARD PLANS BOOK DATED MAY 2006.

REVISED STANDARD PLAN RSP A88A

2006 REVISED STANDARD PLAN RSP A88A

8-3-06

DIST	COUNTY	ROUTE	POST MILES TOTAL PROJECT	SHEET NO.	TOTAL SHEETS
02	Sha	44, 273, 299	Var	57	78

REGISTERED CIVIL ENGINEER

June 15, 2007
PLANS APPROVAL DATE

REGISTERED PROFESSIONAL ENGINEER Glenn DeCou No. C34547 Exp. 9-30-07 CIVIL STATE OF CALIFORNIA

The State of California or its officers or agents shall not be responsible for the accuracy or completeness of electronic copies of this plan sheet.

To accompany plans dated 2-6-12

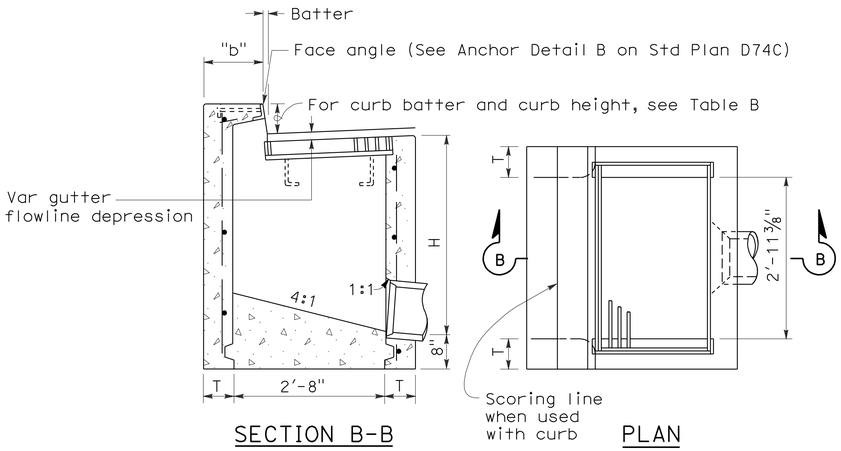

SECTION B-B PLAN

TYPE GO

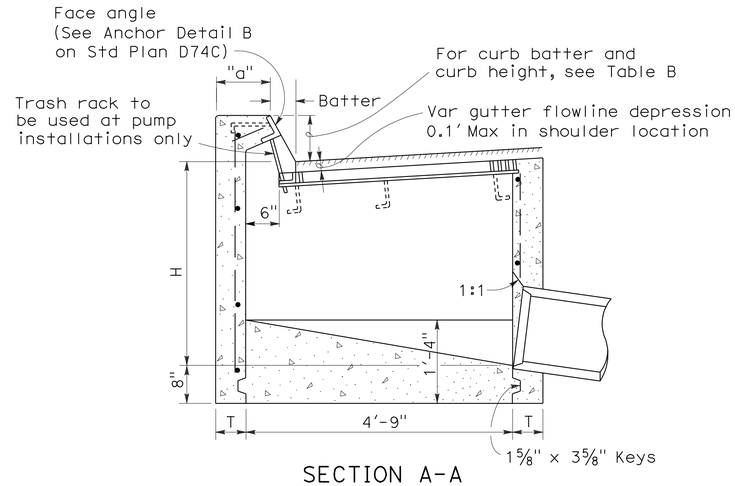

SECTION A-A

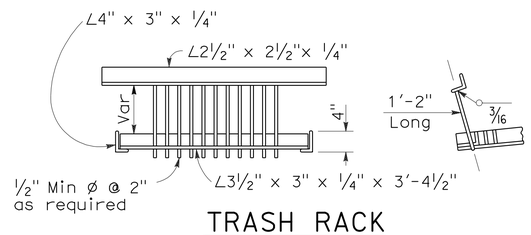

TRASH RACK

(For use with pump installation)

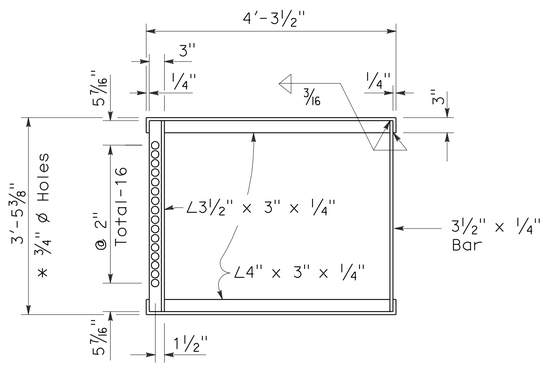

* 3/4" ø Holes required only with trash rack

GRATE FRAME FOR TYPE GDO INLET

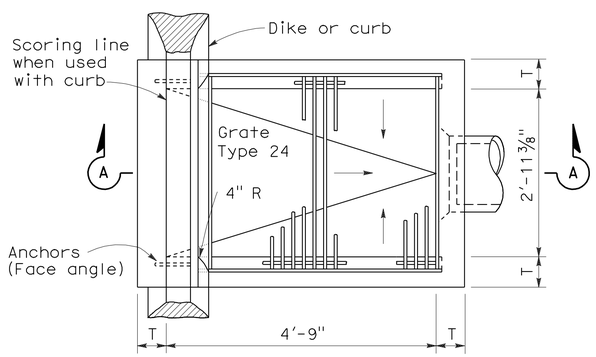

PLAN

TYPE GDO

TABLE A

CONCRETE QUANTITIES				
	H=3'-0" TO 8'-0" (T=6")		H=8'-1" TO 20'-0" (T=8")	
TYPE	H=3'-0" (CY)	ADDITIONAL PCC PER FOOT (CY)	H=8'-1" (CY)	ADDITIONAL PCC PER FOOT (CY)
GO	1.24	0.245	3.39	0.346
GDO	1.62	0.322	4.36	0.446

Table based on 8" floor slab, no deduction for pipe openings, and curb type giving highest quantity of concrete. No deductions or adjustments are to be made to these quantities because of pipe openings, different floor alternatives or different curb type.

TABLE B

CURB TYPE	NORMAL CURB HEIGHT	CURB BATTER	"a" DIMENSION	"b" DIMENSION
A1-6	6"	1 1/2"	T+7 1/2"	T+6 1/2"
A1-8	8"	2"	T+7"	T+6"
B1-6	6"	4"	T+5"	T+4"
Type A Dike	6"	3"	T+6"	T+5"

NOTES:

1. "H" is the difference in elevation between the outlet pipe flow line and the normal gutter grade line undepressed.
2. For "T" wall thickness, see Table A below.
3. Wall reinforcing not required when "H" is 8'-0" or less and the unsupported width or length is 7'-0" or less. Walls exceeding these limits shall be reinforced with #4 @ 18"± centers placed 1 1/2" clear to inside of box unless otherwise shown.
4. Inlet bottom reinforcing not required. See Standard Plan D74C for alternative reinforced bottom.
5. Steps - None required where "H" is less than 2'-6" Where "H" is 2'-6" or more, install steps with lowest rung 1'-0" above the floor and highest rung not more than 6" below top of inlet. The distance between steps shall not exceed 1'-0" and shall be uniform throughout the length of the wall. Place steps in the wall without an opening. Step inserts may be substituted for the bar steps. Step Inserts shall comply with State Industrial Safety requirements. See Standard Plan D74C for step details.
6. When shown on the project plans, place a 3/4" plain round protection bar horizontally across the length of the opening and bend back 4" into the inlet wall on each side.
7. Pipe(s) can be placed in any wall.
8. Curb section shall match adjacent curb.
9. Basin floors shall have wood trowel finish and shall slope toward the outlet pipe as shown.
10. Galvanizing - See Standard Specifications or Special Provisions.
11. See Standard Plan D77A and D77B for grate and frame details and weights of miscellaneous iron and Steel.
12. See Standard Plan D78A for gutter depression details.
13. Full penetration butt welds may be substituted for the fillet welds on all anchors.
14. Standard square, hexagon, round or equivalent headed anchors may be substituted for the right angle hooks on the anchors shown on this plan.
15. Cast-in-place or precast alternative is optional with contractor. See Standard Specifications.
16. Cast-in-place inlets to be formed around all pipes/stubs intersecing the inlet and concrete poured in one continuous operation. Precast inlets shall have mortared pipe connections conforming to details for Type GCP inlets on Standard Plan D75B. See Standard Specifications for mortar composition.

STATE OF CALIFORNIA
DEPARTMENT OF TRANSPORTATION

DRAINAGE INLETS

NO SCALE

RSP D74B DATED JUNE 15, 2007 SUPERSEDES STANDARD PLAN D74B DATED MAY 1, 2006 - PAGE 150 OF THE STANDARD PLANS BOOK DATED MAY 2006.

REVISED STANDARD PLAN RSP D74B

2006 REVISED STANDARD PLAN RSP D74B

4-16-07

DIST	COUNTY	ROUTE	POST MILES TOTAL PROJECT	SHEET NO.	TOTAL SHEETS
02	Sha	44, 273, 299	Var	58	78

Raymond Don Tsztoo
REGISTERED CIVIL ENGINEER

January 18, 2008
PLANS APPROVAL DATE

REGISTERED PROFESSIONAL ENGINEER
Raymond Don Tsztoo
No. C37332
Exp. 6-30-08
CIVIL
STATE OF CALIFORNIA

The State of California or its officers or agents shall not be responsible for the accuracy or completeness of electronic copies of this plan sheet.

To accompany plans dated 2-6-12

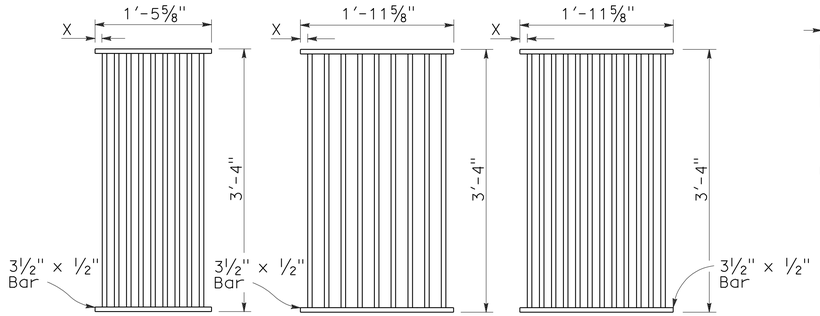

TYPE 18-9

1⅜" Clear spacing. Use within the roadbed on highways where bicycles and pedestrians are excluded.

TYPE 24-9

2" Clear spacing. Use in locations off the roadbed on all types of highways.

TYPE 24-12

1⅜" Clear spacing. Use within the roadbed on highways where bicycles and pedestrians are excluded.

RECTANGULAR GRATE DETAILS

(See table below)

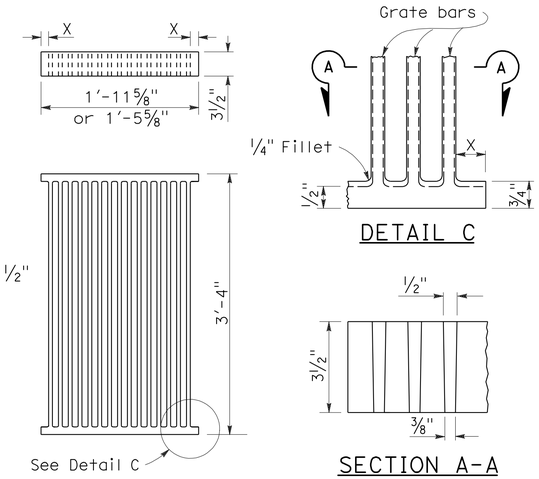

ALTERNATIVE CAST NODULAR IRON GRATE OR CAST STEEL GRATE

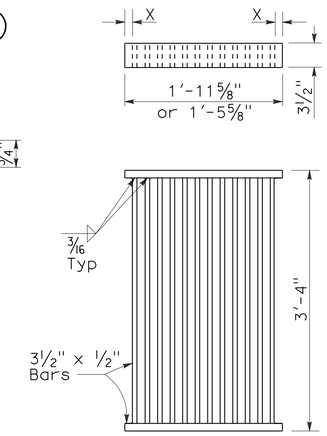

ALTERNATIVE WELDED GRATE

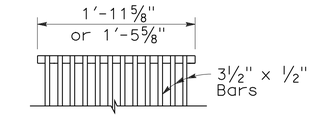

CAST END BLOCK

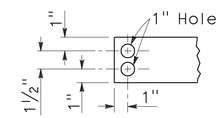

END OF BAR

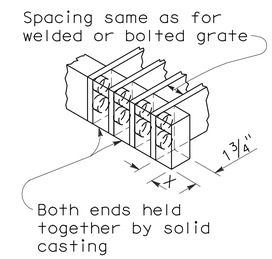

ALTERNATIVE CAST NODULAR IRON OR CAST STEEL END BLOCK GRATE

NOTES:

1. Grate type numbers refer to approximate width of grate in inches and number of bars, respectively.
2. Contractor has the option of using cast nodular iron, cast steel, welded, bolted, or cast end block grate.
3. See Special Provisions for requirements pertaining to galvanizing or asphalt dipping of grates and frames.
4. Rounded top of bars optional on all grates.
5. Pipe inlets with a grate shall be placed so that bars parallel direction of principle surface flow.
6. Full penetration butt welds may be substituted for the fillet welds on all anchors.
7. Standard square, hexagon, round or equivalent headed anchors may be substituted for the right angle hooks on the anchors shown on this plan.
8. Grate and frame weights are based on welded grates (weights of face angles, steps, protection bars, etc. are not included).

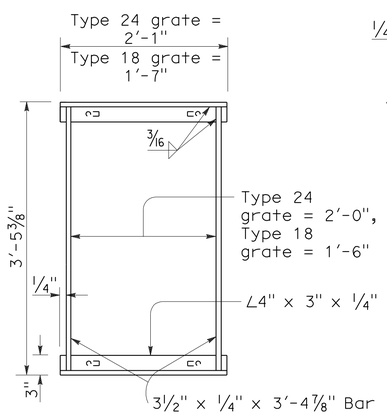

TYPICAL FRAME

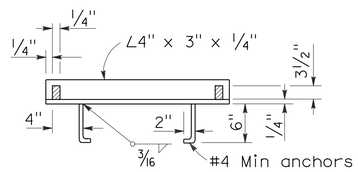

CROSS SECTION

(Thru frame)

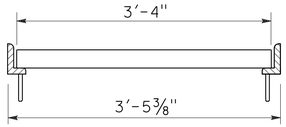

LONGITUDINAL SECTION

(Thru frame and grate)

RECTANGULAR FRAME DETAILS

(For all rectangular grates)

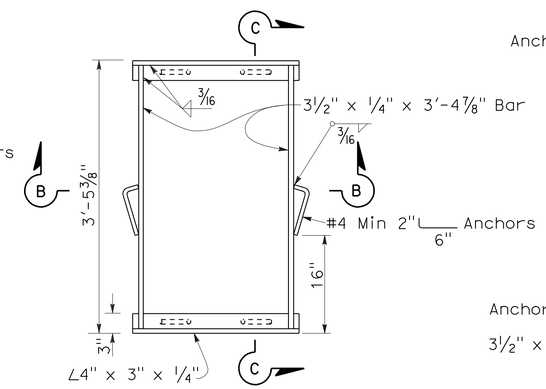

TYPICAL FRAME

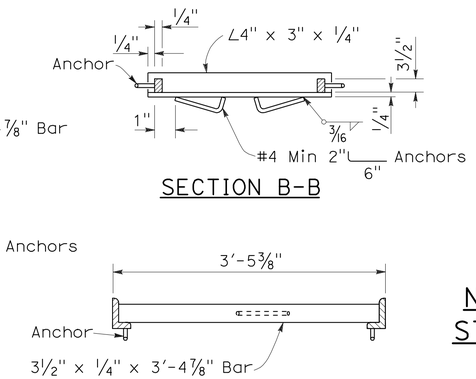

SECTION B-B

SECTION C-C

ALTERNATIVE ANCHOR FOR RECTANGULAR FRAME

(For details not shown, See Rectangular Frame Details)

INLET TYPE	GRATE TYPE	No. OF GRATES	WEIGHT LB
GDO	24-12	2	634
GOL-7	24-12	1	326
GOL-10	24-12	1	326
GO,G1,G2,G3,G4 (TYPE 24)	24-9	1	263
	24-12	1	326
G4 (TYPE 18),G5,G6	18-9	1	249
GT1	18-9	2	498
GT2	18-9	2	498
GT3	24-12	2	652
GT4	24-12	2	652
TRASH RACK			22

INLET TYPE	COVER TYPE	WEIGHT LB
OS	PLATE	174
OL-7	PLATE	170
OL-10	PLATE	170
OL-14	PLATE	170
OL-21	PLATE	170
OCP	PLATE	112
OCPI	PLATE	112
OCPI	REDWOOD	42
OMP	PLATE	177
OMPI	PLATE	177

BASIS FOR MISC IRON & STEEL FINAL PAY WEIGHTS FOR DRAINAGE INLETS

(See General Notes, No 8)

GRATE BAR SPACING TABLE

TYPE	No. OF BARS	CLEAR BAR SPACING	X
18-9	9	1⅜"	1 1/16"
24-9	9	2"	1 9/16"
24-12	12	1⅜"	1¼"

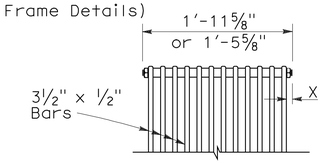

BOLTED END BLOCK

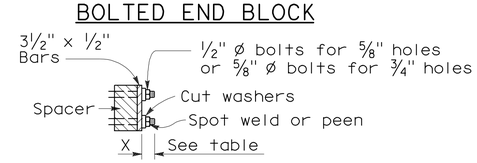

BOLTING DETAIL

ALTERNATIVE BOLTED GRATE

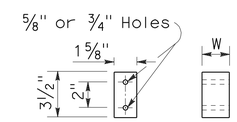

BAR SPACER

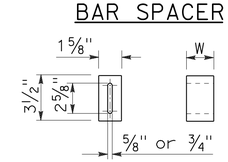

ALTERNATIVE SPACER

W = 1⅜" or 2"

STATE OF CALIFORNIA
DEPARTMENT OF TRANSPORTATION

GRATE DETAILS

NO SCALE

RSP D77A DATED JANUARY 18, 2008 SUPERSEDES STANDARD PLAN D77A DATED MAY 1, 2006 - PAGE 155 OF THE STANDARD PLANS BOOK DATED MAY 2006.

REVISED STANDARD PLAN RSP D77A

2006 REVISED STANDARD PLAN RSP D77A

12-14-07

DIST	COUNTY	ROUTE	POST MILES TOTAL PROJECT	SHEET NO.	TOTAL SHEETS
02	Sha	44, 273, 299	Var	59	78

Raymond Don Tsztoo
REGISTERED CIVIL ENGINEER

January 18, 2008
PLANS APPROVAL DATE

REGISTERED PROFESSIONAL ENGINEER
Raymond Don Tsztoo
No. C37332
Exp. 6-30-08
CIVIL
STATE OF CALIFORNIA

The State of California or its officers or agents shall not be responsible for the accuracy or completeness of electronic copies of this plan sheet.

To accompany plans dated 2-6-12

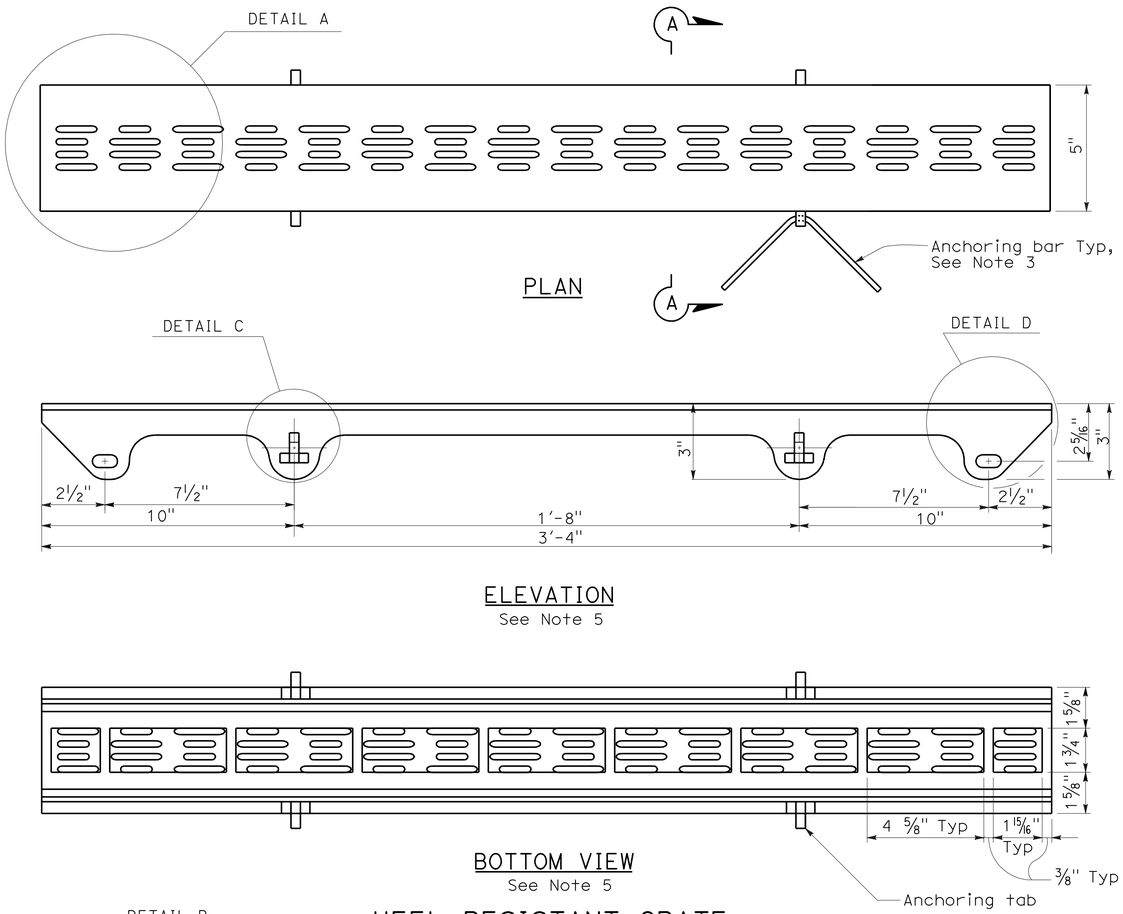

PLAN

ELEVATION
See Note 5

BOTTOM VIEW
See Note 5

HEEL RESISTANT GRATE

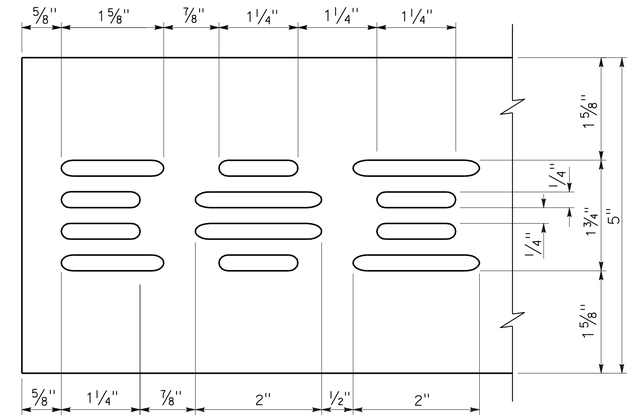

DETAIL A

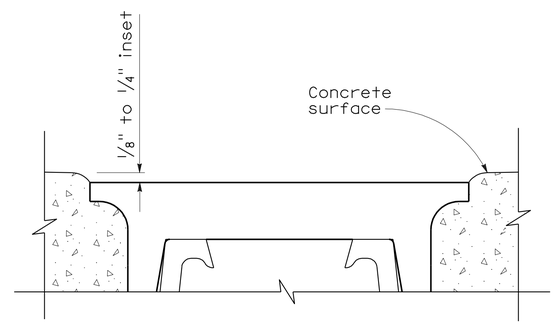

DETAIL B

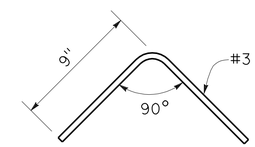

ANCHORING BAR DETAIL
See Note 3

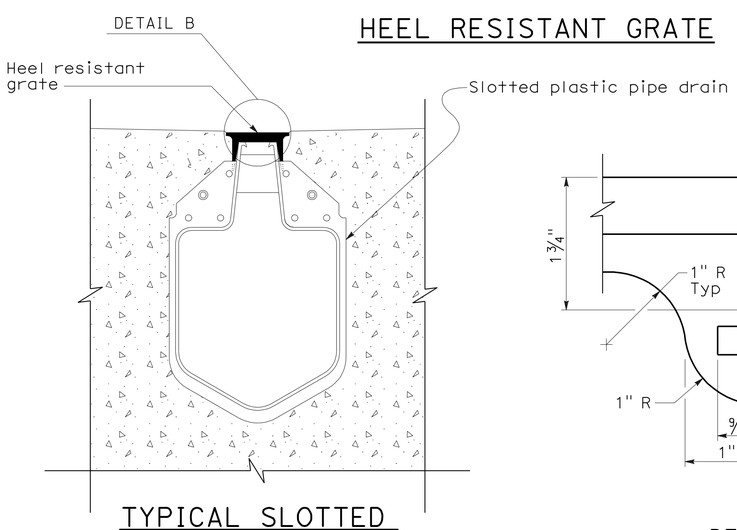

TYPICAL SLOTTED PLASTIC PIPE DRAIN WITH HEEL RESISTANT GRATE

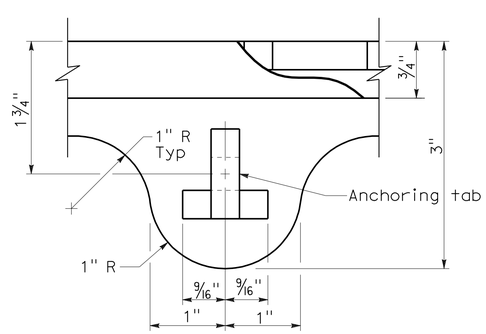

DETAIL C

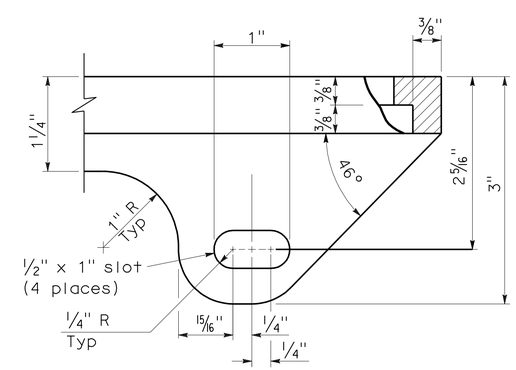

DETAIL D
See Note 4

NOTES:

1. Grate patterns may vary from detail shown. See special provisions for requirements.
2. 3/16" maximum gap between adjacent gratings.
3. Use anchoring bar through each anchoring tab to anchor heel resistant grate to concrete backfill. 4 locations for each grate section.
4. Use 3/8" diameter bolt, nut, and washer to hold grate to slotted drain, prior to backfilling with concrete. 4 locations.
5. Anchoring bars are not shown.

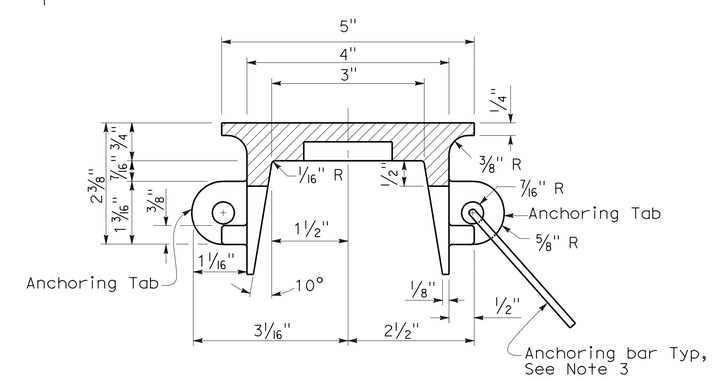

SECTION A-A

STATE OF CALIFORNIA
DEPARTMENT OF TRANSPORTATION

HEEL RESISTANT GRATE FOR SLOTTED PLASTIC PIPE DRAIN

NO SCALE

NSP D98E DATED JANUARY 18, 2008 SUPPLEMENTS
THE STANDARD PLANS BOOK DATED MAY 2006.

NEW STANDARD PLAN NSP D98E

2006 NEW STANDARD PLAN NSP D98E

11-19-07

DIST	COUNTY	ROUTE	POST MILES TOTAL PROJECT	SHEET NO.	TOTAL SHEETS
02	Sha	44, 273, 299	Var	60	78

Randell D. Hiatt
REGISTERED CIVIL ENGINEER

June 6, 2008
PLANS APPROVAL DATE

REGISTERED PROFESSIONAL ENGINEER
Randell D. Hiatt
No. C50200
Exp. 6-30-09
CIVIL
STATE OF CALIFORNIA

The State of California or its officers or agents shall not be responsible for the accuracy or completeness of electronic copies of this plan sheet.

To accompany plans dated 2-6-12

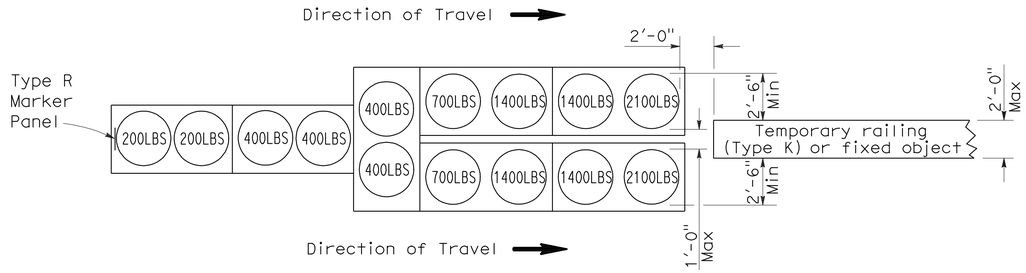

ARRAY 'TU14'

Approach speed 45 mph or more

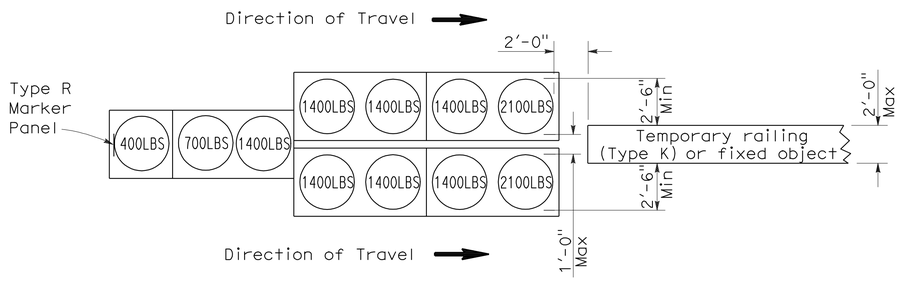

ARRAY 'TU11'

Approach speed less than 45 mph

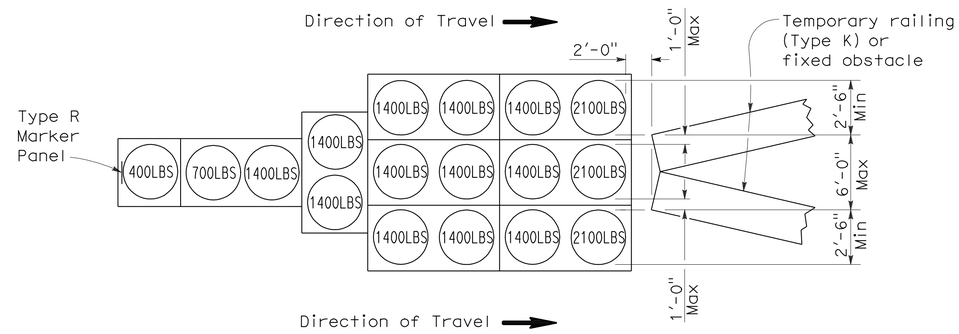

ARRAY 'TU17'

Approach speed less than 45 mph

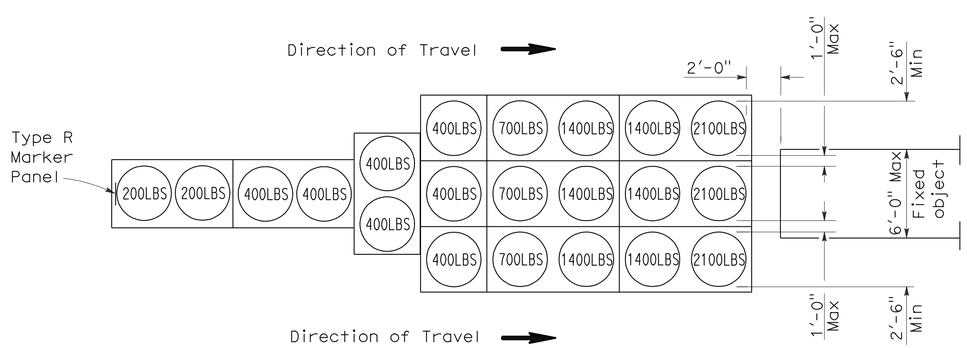

ARRAY 'TU21'

Approach speed 45 mph or more

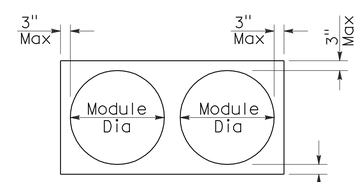

PLAN

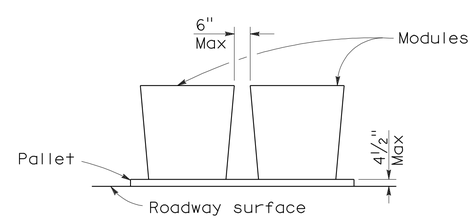

ELEVATION

CRASH CUSHION PALLET DETAIL

See Note 7

NOTES:

1. (XXX) Indicates sand filled module location and weight of sand in pounds for each module. Module spacing is based on the greater diameter of the module.
2. All sand weights are nominal.
3. Temporary crash cushion arrays shall not encroach on the traveled way.
4. Place the top of Type R marker panel 1" below the module lid.
5. Refer to Standard Plan A73B for marker details.
6. Approach speeds indicated conform to NCHRP 350 Report criteria.
7. Use of pallets is optional.

STATE OF CALIFORNIA
DEPARTMENT OF TRANSPORTATION

TEMPORARY CRASH CUSHION, SAND FILLED (UNIDIRECTIONAL)

NO SCALE

RSP T1A DATED JUNE 6, 2008 SUPERSEDES STANDARD PLAN T1A
DATED MAY 1, 2006 - PAGE 211 OF THE STANDARD PLANS BOOK DATED MAY 2006.

REVISED STANDARD PLAN RSP T1A

2006 REVISED STANDARD PLAN RSP T1A

5-15-08

DIST	COUNTY	ROUTE	POST MILES TOTAL PROJECT	SHEET NO.	TOTAL SHEETS
02	Sha	44, 273, 299	Var	61	78

Randell D. Hiatt
REGISTERED CIVIL ENGINEER

June 6, 2008
PLANS APPROVAL DATE

REGISTERED PROFESSIONAL ENGINEER
Randell D. Hiatt
No. C50200
Exp. 6-30-09
CIVIL
STATE OF CALIFORNIA

The State of California or its officers or agents shall not be responsible for the accuracy or completeness of electronic copies of this plan sheet.

To accompany plans dated 2-6-12

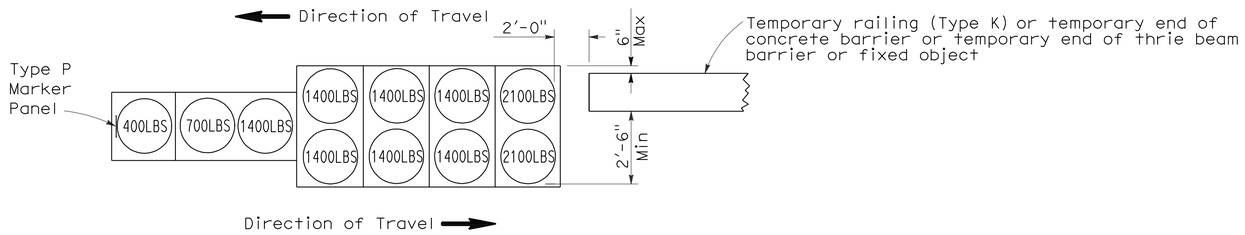

ARRAY 'TB11'

Approach speed less than 45 mph

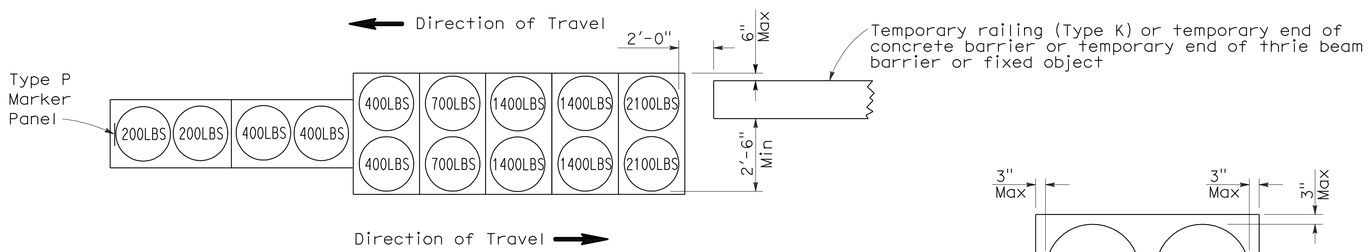

ARRAY 'TB14'

Approach speed 45 mph or more

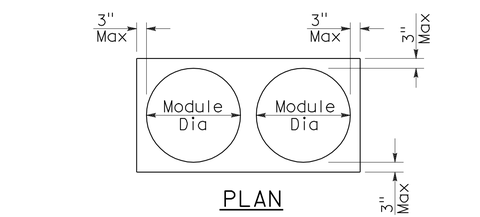

PLAN

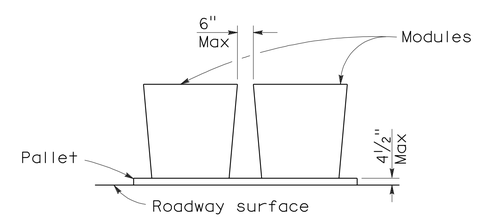

ELEVATION

CRASH CUSHION PALLET DETAIL

See Note 7

NOTES:

1. (XXX) Indicates sand filled module location and weight of sand in pounds for each module. Module spacing is based on the greater diameter of the module.
2. All sand weights are nominal.
3. Temporary crash cushion arrays shall not encroach on the traveled way.
4. Place the Type P marker panel so that the bottom of the panel rests upon the pallet.
5. Refer to Standard Plan A73B for marker details.
6. Approach speeds indicated conform to NCHRP 350 Report criteria.
7. Use of pallets is optional.

STATE OF CALIFORNIA
DEPARTMENT OF TRANSPORTATION

TEMPORARY CRASH CUSHION, SAND FILLED (BIDIRECTIONAL)

NO SCALE

RSP T1B DATED JUNE 6, 2008 SUPERSEDES STANDARD PLAN T1B
DATED MAY 1, 2006 - PAGE 212 OF THE STANDARD PLANS BOOK DATED MAY 2006.

REVISED STANDARD PLAN RSP T1B

2006 REVISED STANDARD PLAN RSP T1B

DIST	COUNTY	ROUTE	POST MILES TOTAL PROJECT	SHEET NO.	TOTAL SHEETS
02	Sha	44, 273, 299	Var	62	78

Randell D. Hiatt
REGISTERED CIVIL ENGINEER

June 6, 2008
PLANS APPROVAL DATE

REGISTERED PROFESSIONAL ENGINEER
Randell D. Hiatt
No. C50200
Exp. 6-30-09
CIVIL
STATE OF CALIFORNIA

The State of California or its officers or agents shall not be responsible for the accuracy or completeness of electronic copies of this plan sheet.

To accompany plans dated 2-6-12

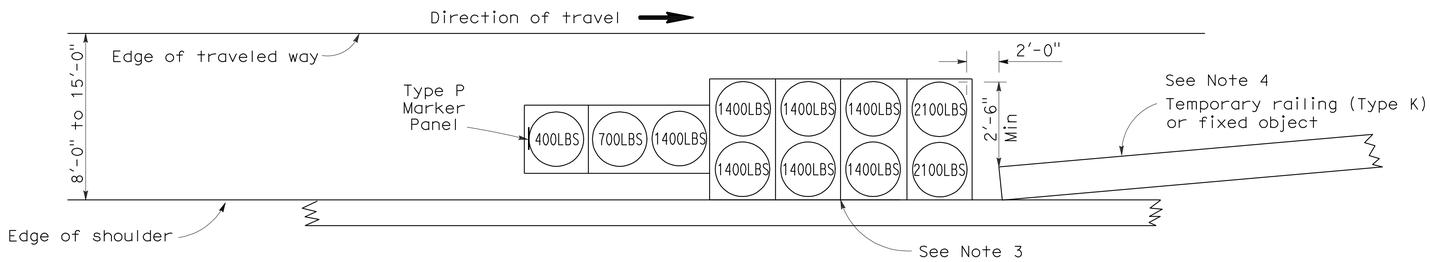

ARRAY 'TS11'

Approach speed less than 45 mph
See Note 9

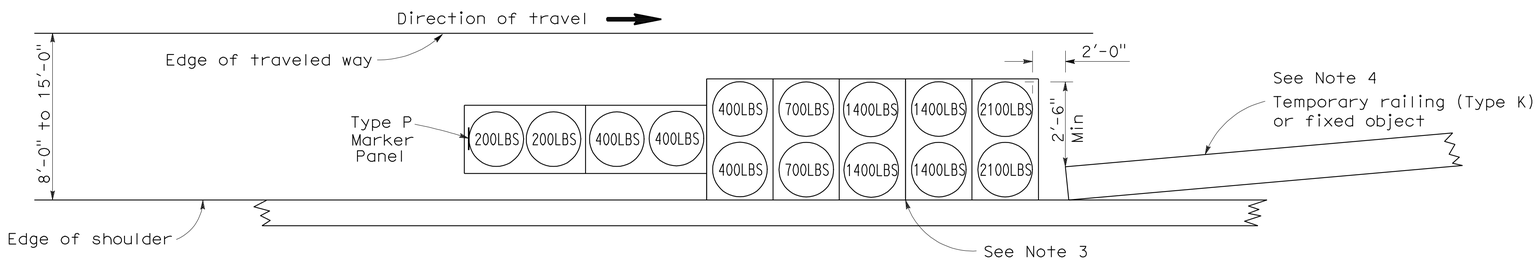

ARRAY 'TS14'

Approach speed 45 mph or more
See Note 9

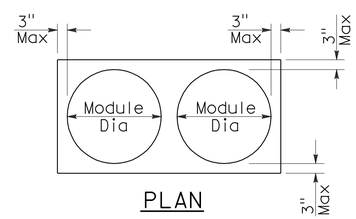

PLAN

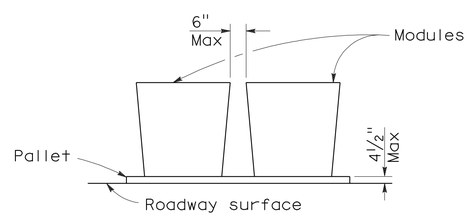

ELEVATION

CRASH CUSHION PALLET DETAIL

See Note 11

NOTES:

1. (XXX) Indicates sand filled module location and weight of sand in pounds for each module. Module spacing is based on the greater diameter of the module.
2. All sand weights are nominal.
3. The temporary crash cushion arrays shown on this plan shall be used only in locations where there will be traffic on one side of the temporary crash cushion array.
4. If the fixed object or approach end of the temporary railing is less than 15'-0" from the edge of traveled way, a temporary crash cushion is required in a construction or work zone.
5. Temporary crash cushion arrays shall not encroach on the traveled way.
6. Arrays for median shoulders shall conform to details shown on this plan for outside shoulders.
7. Place the Type P marker panel so that the bottom of the panel rests upon the pallet and faces traffic.
8. Refer to Standard Plan A73B for marker details.
9. For shoulder widths less than 8'-0", appropriate approved crash cushion protection, other than sand filled modules, shall be provided at fixed objects and at approach ends of temporary railing. The specific type of crash cushion shall be as shown on the project plans or as specified in the Special Provisions, or if not shown on the project plans or specified in the Special Provisions, shall be as approved by the Engineer.
10. Approach speeds indicated conform to NCHRP 350 Report criteria.
11. Use of pallets is optional.

STATE OF CALIFORNIA
DEPARTMENT OF TRANSPORTATION

TEMPORARY CRASH CUSHION, SAND FILLED (SHOULDER INSTALLATIONS)

NO SCALE

RSP T2 DATED JUNE 6, 2008 SUPERSEDES STANDARD PLAN T2
DATED MAY 1, 2006 - PAGE 213 OF THE STANDARD PLANS BOOK DATED MAY 2006.

REVISED STANDARD PLAN RSP T2

2006 REVISED STANDARD PLAN RSP T2

Dist	COUNTY	ROUTE	POST MILES TOTAL PROJECT	SHEET No.	TOTAL SHEETS
02	Sha	44, 273, 299	Var	63	78

Randell D. Hiatt
REGISTERED CIVIL ENGINEER

May 20, 2011
PLANS APPROVAL DATE

REGISTERED PROFESSIONAL ENGINEER
Randell D. Hiatt
No. C50200
Exp. 6-30-11
CIVIL
STATE OF CALIFORNIA

The State of California or its officers or agents shall not be responsible for the accuracy or completeness of electronic copies of this plan sheet.

To accompany plans dated 2-6-12

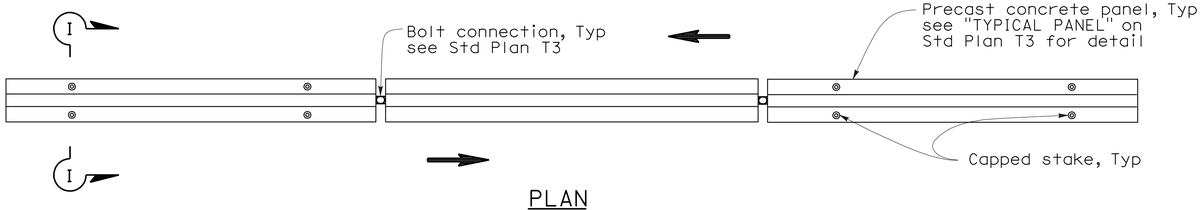

PLAN

RAILING STAKING CONFIGURATION FOR TWO-WAY TRAFFIC

See Note 1

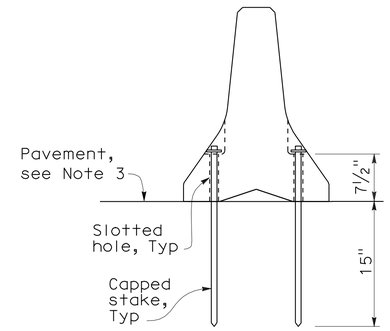

SECTION I-I

NOTES:

1. Where Type K Temporary Railing is placed as a temporary or long term barrier in two-way traffic on highways with less than 24" from the edge of traveled way, use four capped stakes per every other panel with end panels staked.
2. Where Type K Temporary Railing is placed 3" to 24" from the edge of an excavation on highways, use two capped stakes per panel along the traffic side.
3. Staked Type K Temporary Railing must be supported by at least 4" thick concrete, hot mix asphalt or existing asphalt concrete pavement.
4. The minimum yield strength for the washer must be 60,000 psi.
5. Direction of adjacent traffic indicated by ⟹.

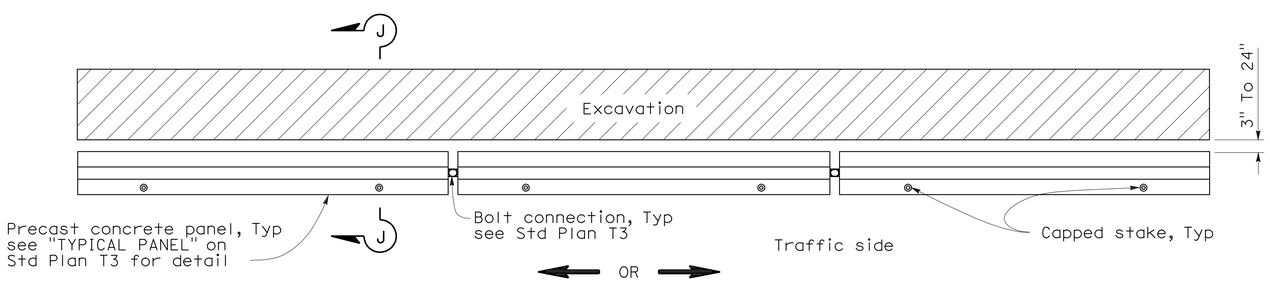

PLAN

RAILING STAKING CONFIGURATION ADJACENT TO AN EXCAVATION

See Note 2

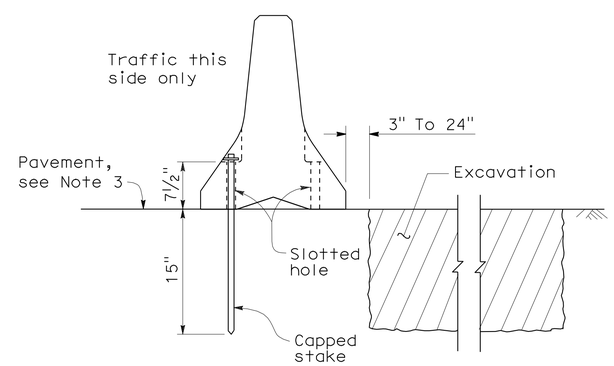

SECTION J-J

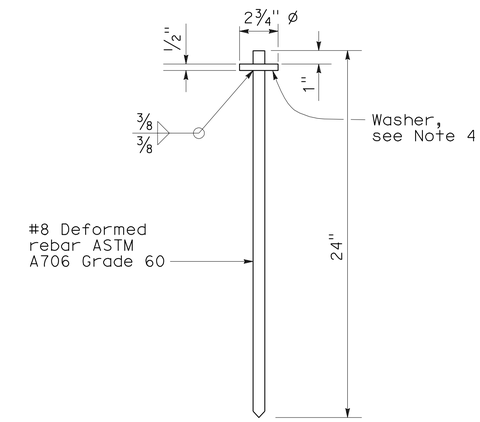

CAPPED STAKE DETAIL

STATE OF CALIFORNIA
DEPARTMENT OF TRANSPORTATION

TEMPORARY RAILING (TYPE K)

NO SCALE

NSP T3A DATED MAY 20, 2011 SUPPLEMENTS THE STANDARD PLANS BOOK DATED MAY 2006.

NEW STANDARD PLAN NSP T3A

2006 NEW STANDARD PLAN NSP T3A

DIST	COUNTY	ROUTE	POST MILES TOTAL PROJECT	SHEET NO.	TOTAL SHEETS
02	Sha	44, 273, 299	Var	64	78

LICENSED LANDSCAPE ARCHITECT

August 15, 2008
PLANS APPROVAL DATE

The State of California or its officers or agents shall not be responsible for the accuracy or completeness of electronic copies of this plan sheet.

LICENSED LANDSCAPE ARCHITECT — Robert B. Schott — Signature — 11-04-08 Renewal Date — 08-11-08 Date — STATE OF CALIFORNIA

To accompany plans dated 2-6-12

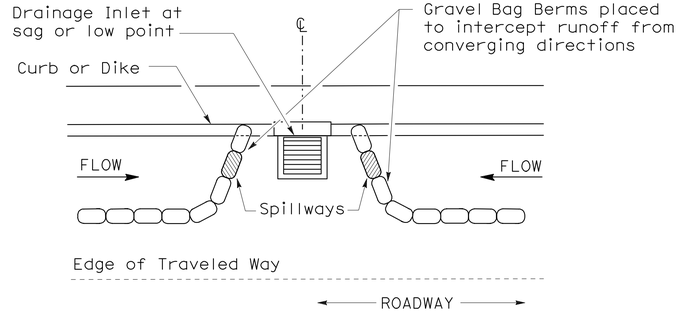

PLAN

CONFIGURATION FOR SAG POINT INLET (GRAVEL BAG BERM)

GRAVEL BAG BERM (TYPE 3A) SPACING TABLE

SLOPE OF ROADWAY (PERCENT)	1 to 3.9	4 to 5.9	6 to 7.9	8 to 10	10+
INTERVAL BETWEEN BERM	100′	75′	50′	25′	12′

For slope of less than 1%, install barriers only if erosion/sediment is prevalent

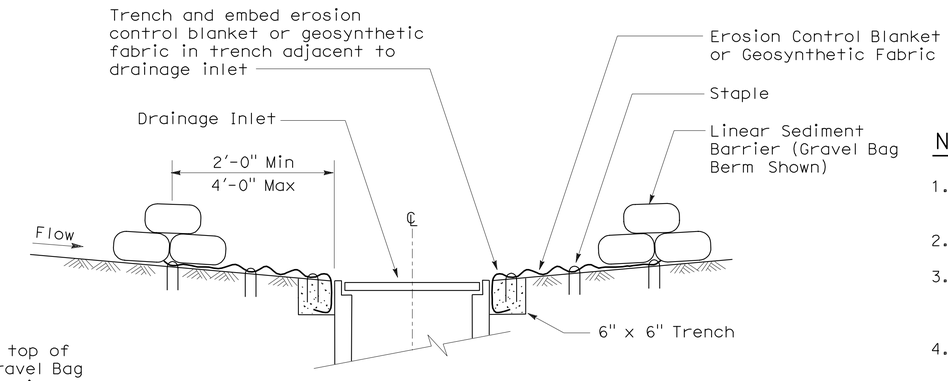

SECTION A-A

NOTES:

1. Place safety cones adjacent to drainage inlet protection.
2. Dimensions may vary to fit field conditions.
3. Install a minimum of 3 gravel bag berms upstream of each drainage inlet to be protected.
4. Position erosion control blanket or geosynthetic fabric at edge of concrete apron and secure in trench.
5. Erosion control blanket or geosynthetic fabric is not required if the area adjacent to the drainage inlet is vegetated or paved.

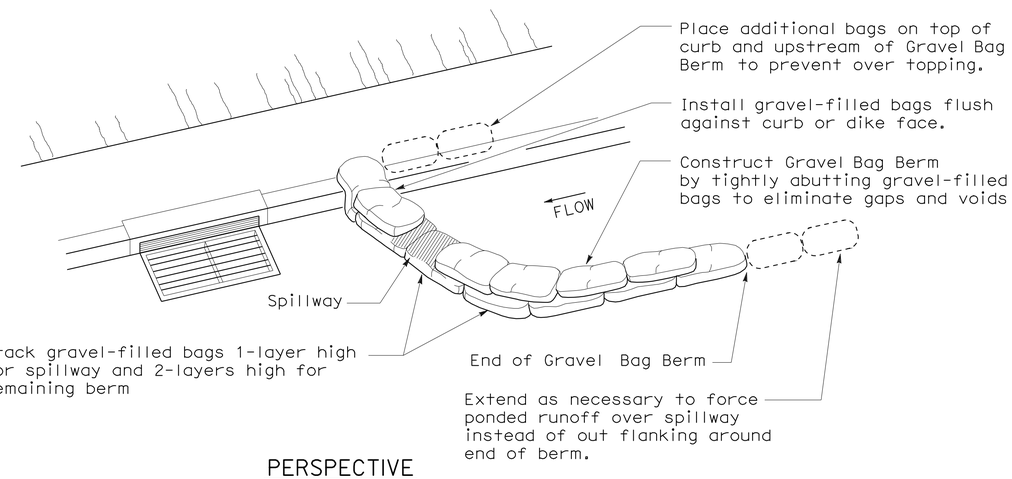

PERSPECTIVE

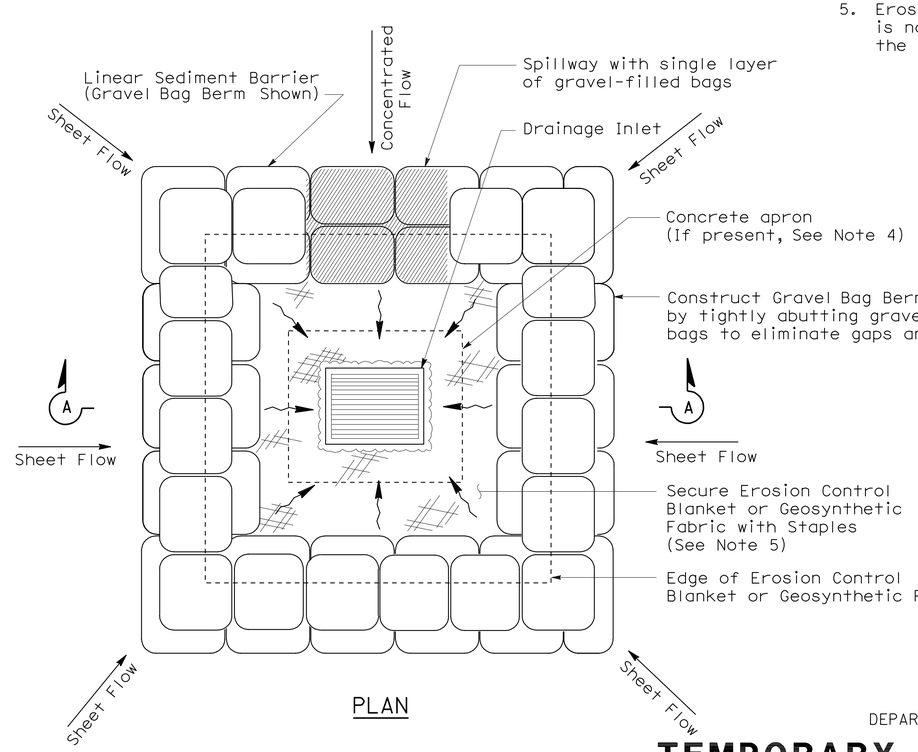

PLAN

TEMPORARY DRAINAGE INLET PROTECTION (TYPE 3B)

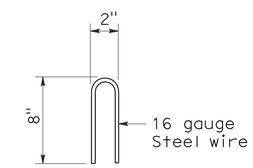

STAPLE DETAIL

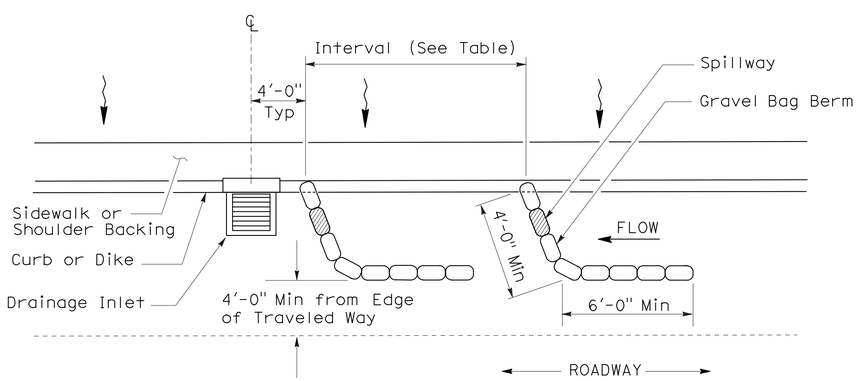

PLAN

TEMPORARY DRAINAGE INLET PROTECTION (TYPE 3A) (GRAVEL BAG BERM)

STATE OF CALIFORNIA
DEPARTMENT OF TRANSPORTATION

TEMPORARY WATER POLLUTION CONTROL DETAILS (TEMPORARY DRAINAGE INLET PROTECTION)

NO SCALE

NSP T62 DATED AUGUST 15, 2008 SUPPLEMENTS THE STANDARD PLANS BOOK DATED MAY 2006.

NEW STANDARD PLAN NSP T62

2006 NEW STANDARD PLAN NSP T62

7-11-08

DIST	COUNTY	ROUTE	POST MILES TOTAL PROJECT	SHEET NO.	TOTAL SHEETS
02	Sha	44, 273, 299	Var	65	78

REGISTERED ELECTRICAL ENGINEER

October 5, 2007
PLANS APPROVAL DATE

REGISTERED PROFESSIONAL ENGINEER Jeffery G. McRae No. E14512 Exp. 6-30-08 ELECTRICAL STATE OF CALIFORNIA

The State of California or its officers or agents shall not be responsible for the accuracy or completeness of electronic copies of this plan sheet.

To accompany plans dated 2-6-12

ELECTROLIERS

STANDARD TYPES
15, 15D
15 STRUCTURE
21, 21D STRUCTURE
30
31
32
35
36-20A

High mast light pole

Double Arm lighting standard

Existing electrolier

Electrolier foundation (Future installation)

NOTES:

1. Luminaires shall be 310 W HPS when installed on Type 21, 21D, 30, 31, 32, 35 and 36-20A Standards, unless otherwise specified. Luminaires shall be 200 W HPS when installed on other type standards or poles, unless otherwise specified.
2. Luminaires shall be the cutoff type, ANSI Type Ⅲ medium cutoff lighting distribution, unless otherwise specified.
3. Variations noted adjacent to symbol on project plans.

Electrolier (see project notes or project plans)

Luminaire on wood pole

STANDARD NOTES:

- AB — Abandon. If applied to conduit, remove conductors.
- BC — Install pull box in existing conduit run.
- BP — Pedestrian barricade, type as indicated on plan.
- CB — Install conduit into existing pull box.
- CC — Connect new and existing conduit. Remove existing conductors and install conductors as indicated.
- CF — Conduit to remain for future use. Remove conductors. Install pull wire or rope.
- DH — Detector handhole.
- FA — Foundation to be abandoned.
- IS — Install sign on signal mast arm.
- NS — No slip base on standard.
- PEC — Photoelectric control.
- PEU — Photoelectric unit.
- RC — Equipment or material to be removed and become the property of the Contractor.
- RE — Remove electrolier, fuses and ballast. Tape ends of conductors.
- RL — Relocate equipment.
- RR — Remove and reuse equipment.
- RS — Remove and salvage equipment.
- SC — Splice new to existing conductors.
- SD — Service disconnect.
- SF — Standard to remain for future use. Remove luminaire, pole conductors, fuses and ballast.
- TSP — Telephone service point.

ABBREVIATIONS AND EQUIPMENT DESIGNATIONS

PROPOSED	EXISTING	
BBS	bbs	Battery backup system
BC	bc	Bolt circle
C	C	Conduit
CCTV	cctv	Closed circuit television
CKT	ckt	Circuit
CMS	cms	Changeable message sign
DLC	dlc	Loop detector lead-in cable
EMS	ems	Extinguishable message sign
EVC	evc	Emergency vehicle cable
EVD	evd	Emergency vehicle detector
FB	fb	Flashing beacon
FBCA	fbca	Flashing beacon control assembly
FBS	fbs	Flashing beacon with slip base
FO	fo	Fiber optic
G	G	Ground (Equipment Grounding Conductor)
GFCI	GFCI	Ground fault circuit interrupt
HAR	har	Highway advisory radio
HEX	hex	Hexagonal
HPS	hps	High pressure sodium
IISNS	iisns	Internally illuminated street name sign
ISL	isl	Induction sign lighting
LED	led	Light emitting diode
LMA	lma	Luminaire mast arm
LPS	lps	Low pressure sodium
LTG	ltg	Lighting
LUM	lum	Luminaire
MAT	mat	Mast arm mounting vehicle signal faces, top attachment
MAS	mas	Mast arm mounting vehicle signal faces, side attachment
MAS-4A	mas-4A	Mast arm mounting vehicle signal faces, side attachment - 4 signal section
MAS-4B	mas-4B	
MAS-4C	mas-4C	
MAS-5A	mas-5A	Mast arm mounting vehicle signal faces, side attachment - 5 signal section
MAS-5B	mas-5B	
MC	mc	Mercury contactor
M/M	m/m	Multiple to multiple transformer
MT	mt	Conduit with pull wire or rope only
MTG	mtg	Mounting
	mv	Mercury vapor lighting fixture
N	N	Neutral (Grounded Conductor)
NC	NC	Normally closed
NO	NO	Normally open
PB	pb	Pull box
PEC	pec	Photoelectric control (Type Ⅰ, Ⅱ, Ⅲ, Ⅳ or Ⅴ as shown)
PED	ped	Pedestrian
PEU	peu	Photoelectric unit
PPB	ppb	Pedestrian push button
RL		Relocated equipment
RM	rm	Ramp metering
SB	sb	Slip base
SIC	sic	Signal interconnect cable
SIG	sig	Signal
SMA	sma	Signal mast arm
SNS	sns	Street name sign
SP	sp	Service point
TDC	tdc	Telephone demarcation cabinet
TMS	tms	Traffic monitoring station
TOS	tos	Traffic Operations System
VEH	veh	Vehicle
XFMR	xfmr	Transformer
COMM	comm	Communication
RWIS	rwis	Roadway weather information system

SOFFIT AND WALL MOUNTED LUMINAIRES

Pendant, 70 W HPS unless otherwise specified.

Flush, 70 W HPS unless otherwise specified.

Wall surface, 70 W HPS unless otherwise specified.

Existing soffit or wall luminaire to remain unmodified.

Existing soffit or wall luminaire to be modified as specified.

NOTE:

Arrow indicates "street side" of luminaire.

STATE OF CALIFORNIA
DEPARTMENT OF TRANSPORTATION

ELECTRICAL SYSTEMS (SYMBOLS AND ABBREVIATIONS)

NO SCALE

RSP ES-1A DATED OCTOBER 5, 2007 SUPERSEDES STANDARD PLAN ES-1A
DATED MAY 1, 2006 - PAGE 400 OF THE STANDARD PLANS BOOK DATED MAY 2006.

REVISED STANDARD PLAN RSP ES-1A

2006 REVISED STANDARD PLAN RSP ES-1A

DIST	COUNTY	ROUTE	POST MILES TOTAL PROJECT	SHEET NO.	TOTAL SHEETS
02	Sha	44, 273, 299	Var	66	78

REGISTERED ELECTRICAL ENGINEER

October 5, 2007
PLANS APPROVAL DATE

REGISTERED PROFESSIONAL ENGINEER Jeffery G. McRae No. E14512 Exp. 6-30-08 ELECTRICAL STATE OF CALIFORNIA

The State of California or its officers or agents shall not be responsible for the accuracy or completeness of electronic copies of this plan sheet.

To accompany plans dated 2-6-12

CONDUIT

PROPOSED	EXISTING	
		Lighting Conduit, unless otherwise indicated or noted
		Traffic signal conduit
C	c	Communication conduit
T	t	Telephone conduit
F	f	Fire alarm conduit
FO	fo	Fiber optic conduit
		Conduit termination (RSP ES-9A C)
R	r	Conduit riser in/on structure or service pole

SERVICE EQUIPMENT

PROPOSED	EXISTING	
OH	oh	Overhead lines
U	U	Wood pole "U" indicates utility owned
		Pole guy with anchor
		Utility transformer - ground mounted
III		Service equipment enclosure type
		Service equipment enclosure door indicates front of enclosure
T	t	Telephone demarcation cabinet

POLE-MOUNTED SERVICE DESIGNATION

Type of installation

TYPE H SERVICE - 28'-10" ← Pole height above grade

ILLUMINATED OVERHEAD SIGN

PROPOSED	EXISTING	
		Overhead sign - Single post
		Overhead sign - Two post
		Overhead sign - Mounted on structure
		Overhead sign with electrolier

SIGNAL EQUIPMENT

PROPOSED	EXISTING	
		Pedestrian signal face
		Pedestrian push button post
		Pedestrian barricade
		Vehicle signal face (with backplate, 3-Section: red, yellow and green)
		Vehicle signal face with angle visors
PV	PV	Modifications of basic symbols: "L" indicates all non-arrow sections louvered "LG" indicates louvered green section only "PV" indicates 12" programmed visibility sections "8" indicates all 8" sections (only when specified)
		Type 15TS and Vehicle signal face
		Vehicle signal face with red, yellow and green left arrow sections
		Vehicle signal face with red and yellow sections and up green arrow
		Vehicle signal face (5 Section) with red, yellow and green sections and yellow and green right arrows
		Type 1 Standard and attached vehicle signal faces
		Standard with signal mast arm only and attached vehicle signal faces and internally illuminated street name sign
		Type 33 Standard, Left-turn vehicle signal face and sign
		Standard with luminaire and signal mast arms and attached vehicle signal faces
		Cantilever flashing beacon Type 9 Frame, with a sign unless otherwise specified or indicated
		Type 15-FBS Standard with two vehicle signal face sections with lens, backplate and visor with a sign
R	Y	Flashing beacon. One vehicle signal face section with lens, backplate and visor. "R" indicates red indication, "Y" indicates yellow indication
		Controller assembly. Door indicates front of cabinet

SIGNAL EQUIPMENT Cont

PROPOSED	EXISTING	
		Guard post
		Type 1 Standard with "Meter On" sign
		Emergency Vehicle detector

NOTES:

1. All signal sections shall be 12" unless shown otherwise.
2. Signal heads shall be provided with backplates unless shown otherwise.
3. Signal indication shall be LED.

STATE OF CALIFORNIA
DEPARTMENT OF TRANSPORTATION

ELECTRICAL SYSTEMS (SYMBOLS AND ABBREVIATIONS)

NO SCALE

RSP ES-1B DATED OCTOBER 5, 2007 SUPERCEDES STANDARD PLAN ES-1B DATED MAY 1, 2006 - PAGE 401 OF THE STANDARD PLANS BOOK DATED MAY 2006.

REVISED STANDARD PLAN RSP ES-1B

2006 REVISED STANDARD PLAN RSP ES-1B

DIST	COUNTY	ROUTE	POST MILES TOTAL PROJECT	SHEET NO.	TOTAL SHEETS
02	Sha	44, 273, 299	Var	67	78

REGISTERED ELECTRICAL ENGINEER

October 5, 2007
PLANS APPROVAL DATE

REGISTERED PROFESSIONAL ENGINEER
Jeffery G. McRae
No. E14512
Exp. 6-30-08
ELECTRICAL
STATE OF CALIFORNIA

The State of California or its officers or agents shall not be responsible for the accuracy or completeness of electronic copies of this plan sheet.

To accompany plans dated 2-6-12

EQUIPMENT IDENTIFICATION

ILLUMINATED SIGN IDENTIFICATION NUMBER:

Sign No. 12345

10 ISL SCI 1.0

- Sign number - Place on post or structure
- Transformer rating (kVA)
- Lighting control type
- Number and type of fixtures

Do NOT place on standard or structure

ELECTROLIER OR EQUIPMENT IDENTIFICATION NUMBER:

12345 - 15'-0"

- Mast arm length, if shown. Do not place on standard or structure.
- Equipment number - Place on standard or structure. Existing equipment numbers are shown in parenthesis

CONDUIT AND CONDUCTOR IDENTIFICATION:

1½"C, 2#10, 15#14, 2 DLC

- Number and size of conductors and cables
- Size of conduit in inches

Ø1, Ø2, Ø2P, etc.	Traffic phase identification for signal faces, detectors and phase diagrams
1 2 3	Project note numbers
A B C	Equipment description, installation or item numbers
1 2 3	Conduit run numbers

SIGNAL AND LIGHTING STANDARD (TYPICAL DESIGNATION):

19A - 3 - 100

- Wind velocity = 100 mph
- Case 3 arm loading
- Standard type
- Standard Plan sheet number
- Detail number or letter

MISCELLANEOUS EQUIPMENT

PROPOSED	EXISTING	
CMS	cms	Changeable message sign
		Closed circuit television camera
		Highway advisory radio pole and antenna
EMS	ems	Extinguishable message sign
M V	m v	Detection device M = Microwave sensor V = Video image sensor

WIRING DIAGRAM LEGEND

P	Pole
CB	Circuit breaker
A	Ampere
V	Volt
M	Metered
UM	Unmetered
NB	Neutral bus
GB	Ground bus
G	Equipment grounding conductor
N	Grounded conductor (Neutral)

- External conductor
- Conductor or bus
- Tie point
- Contactor coil
- Contactor, Contact NO
- Terminal blocks
- Contactor, Contact NC
- Enclosure bond
- Grounding electrode
- Circuit breaker
- Receptacle

PULL BOXES

PROPOSED EXISTING

Pull box-No. 5 unless otherwise indicated or noted.

3 9A(21)

Pull box-Additional designations or descriptions

3	= No. 3½ pull box
5	= No. 5 pull box
6	= No. 6 pull box
7	= No. 7 (Ceiling pull box)
8	= No. 8 (Pendant soffit pull box)
9	= No. 9 pull box
9A	= No. 9A pull box

(C)	= Communications pull box
(E)	= Pull box with extension
(S)	= Sprinkler control pull box
(21)	= Anchor bolts and conduit for future installation of Type 21 Standard
(T)	= Traffic pull box

VEHICLE DETECTORS

5 J 9 U

- Vehicle detector designation
- U = Upper
  L = Lower
- Slot number in input file
- Input file (I or J)
- Phase

PROPOSED EXISTING

- Type A detector loop. Outline of sawcut shown.
- Type B detector loop. Outline of sawcut shown.
- Type C detector loop. Outline of sawcut shown.
- Type D detector loop. Outline of sawcut shown.
- Type E detector loop. Outline of sawcut shown.
- Type Q detector loop. Outline of sawcut shown.
- Magnetic detector
- DH / dh — Detector handhole
- Microwave or video detection zone

STATE OF CALIFORNIA
DEPARTMENT OF TRANSPORTATION

ELECTRICAL SYSTEMS (SYMBOLS AND ABBREVIATIONS)

NO SCALE

RSP ES-1C DATED OCTOBER 5, 2007 SUPERCEDES STANDARD PLAN ES-1C DATED MAY 1, 2006 - PAGE 402 OF THE STANDARD PLANS BOOK DATED MAY 2006.

REVISED STANDARD PLAN RSP ES-1C

2006 REVISED STANDARD PLAN RSP ES-1C

DIST	COUNTY	ROUTE	POST MILES TOTAL PROJECT	SHEET NO.	TOTAL SHEETS
02	Sha	44, 273, 299	Var	68	78

REGISTERED ELECTRICAL ENGINEER

October 5, 2007
PLANS APPROVAL DATE

REGISTERED PROFESSIONAL ENGINEER
Jeffery G. McRae
No. E14512
Exp. 6-30-08
ELECTRICAL
STATE OF CALIFORNIA

The State of California or its officers or agents shall not be responsible for the accuracy or completeness of electronic copies of this plan sheet.

To accompany plans dated 2-6-12

2006 REVISED STANDARD PLAN RSP ES-2C

NOTES-TYPE III SERVICE EQUIPMENT ENCLOSURES:

1. Service equipment enclosure and metering equipment shall meet the requirements of the service utility. The meter area shall have a sealable, lockable, weathertight cover that can be removed without the use of tools.

2. Service equipment enclosures shall be factory wired and conform to NEMA standards.

3. Dimensions of service equipment enclosures shall meet the requirements of the service utility.

4. The dead front panels on Type III service equipment enclosures shall have a continuous stainless steel or aluminum piano hinge. The panel in front of the breakers shall be secured with a latch or captive screws. No live parts shall be mounted on the dead front panel.

5. The exterior door shall have provisions for padlocking. The padlock hole shall be a minimum diameter of 7/16".

6. Enclosures housing transformers of more than one kVA shall have effective screened ventilation louver of not less than 50 square inches. Screen shall be stainless steel No. 304, with a No. 10 size mesh. Framed screen shall be secured with at least four bolts.

7. Fasteners on the exterior of the enclosure shall be vandal-resistant and shall not be removable from the exterior. Exterior screws, nuts, bolts and washers shall be stainless steel.

8. Landing lugs for incoming service conductors shall be compatible with either copper or aluminum conductors sized to suit the conductors shown on the plan. Landing lugs shall be copper or tin-plated aluminum. Neutral bus shall be rated for 125 A and be suitable for copper or aluminum conductors unless otherwise specified. The terminal shall include but not be limited to:

   a) Incoming terminals (landing lugs)
   b) Neutral lugs
   c) Solid neutral terminal strip

9. At least 6 standard single pole circuit breaker spaces, 3/4" nominal, shall be provided for branch circuits. Circuit breaker interiors shall be copper. Interiors of enclosure shall accept plug-in or cable-in/cable-out circuit breakers.

10. Control wiring shall be 600 V, 14 stranded machine tool wire. Where subject to flexing, 19 strand wire shall be used.

11. Main bus shall be rated for 125 A and shall be tin-plated copper.

12. A plastic laminated wiring diagram shall be provided with brass mounting eyelets and attached to the inside of the enclosure and the wiring diagram shall be affixed to the interior with a UL or ETL approved method.

13. An engraved phenolic nameplate on the dead front panel indicating the function of each circuit or device shall be installed with stainless steel rivets or stainless steel screws:

    a) Adjacent to the breaker or device with character size a minimum of 1/8".

    b) At the top of the exterior door panel indicating State system number, voltage level and number of phases with character size a minimum of 3/16".

14. The plan shows the approximate location of devices within the enclosure. Components may be rearranged, however, the "working" clearances within the service equipment enclosure shall be maintained.

15. In unpaved areas a raised portland cement concrete pad 2'-0" x 4" x width of foundation shall be constructed in front of new service equipment enclosure installation. Pad shall be set to elevation of foundation.

16. Foundation shall extend 2" minimum beyond edge of service equipment enclosure.

17. Internal bus, where shown, is typical only. Alternative design of proposed service equipment enclosure shall be submitted to the Engineer for approval.

18. Plug-in circuit breakers may be mounted in the vertical or horizontal position. Cable-in/cable-out circuit breakers shall be mounted in the vertical position.

19. Type III-AF and Type III-BF service equipment enclosures shall have the meter viewing windows located on the front side of the service equipment enclosures.

20. Type III-AR and Type III-BR service equipment enclosures shall be similarly constructed as Type III-AF and Type III-BF respectively, except the meter viewing windows shall be located on the back side of the service equipment enclosures.

21. Minimum clearance shall be required for front and back of service equipment enclosure per National Electrical Code, Article 110.26, "Spaces About Electric Equipment (600 Volts, Nominal, or Less)."

STATE OF CALIFORNIA
DEPARTMENT OF TRANSPORTATION

ELECTRICAL SYSTEMS (SERVICE EQUIPMENT NOTES TYPE III SERIES)

NO SCALE

RSP ES-2C DATED OCTOBER 5, 2007 SUPERCEDES STANDARD PLAN ES-2C DATED MAY 1, 2006 - PAGE 405 OF THE STANDARD PLANS BOOK DATED MAY 2006.

REVISED STANDARD PLAN RSP ES-2C

DIST	COUNTY	ROUTE	POST MILES TOTAL PROJECT	SHEET NO.	TOTAL SHEETS
02	Sha	44, 273, 299	Var	69	78

REGISTERED ELECTRICAL ENGINEER

October 5, 2007
PLANS APPROVAL DATE

REGISTERED PROFESSIONAL ENGINEER Jeffery G. McRae No. E14512 Exp. 6-30-08 ELECTRICAL STATE OF CALIFORNIA

The State of California or its officers or agents shall not be responsible for the accuracy or completeness of electronic copies of this plan sheet.

To accompany plans dated 2-6-12

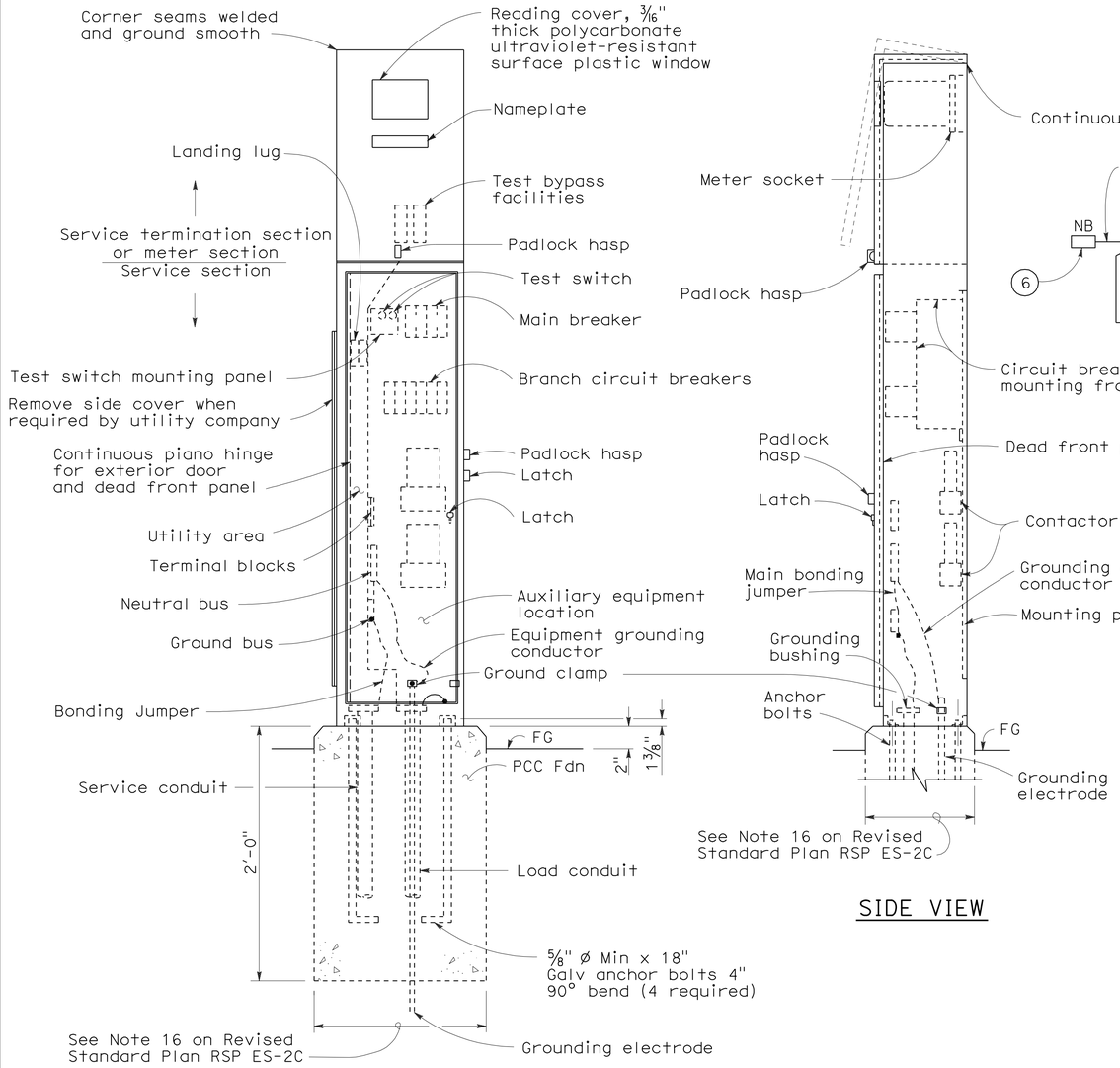

FRONT VIEW

SIDE VIEW

TYPE III-AF SERVICE EQUIPMENT ENCLOSURE (TYPICAL)

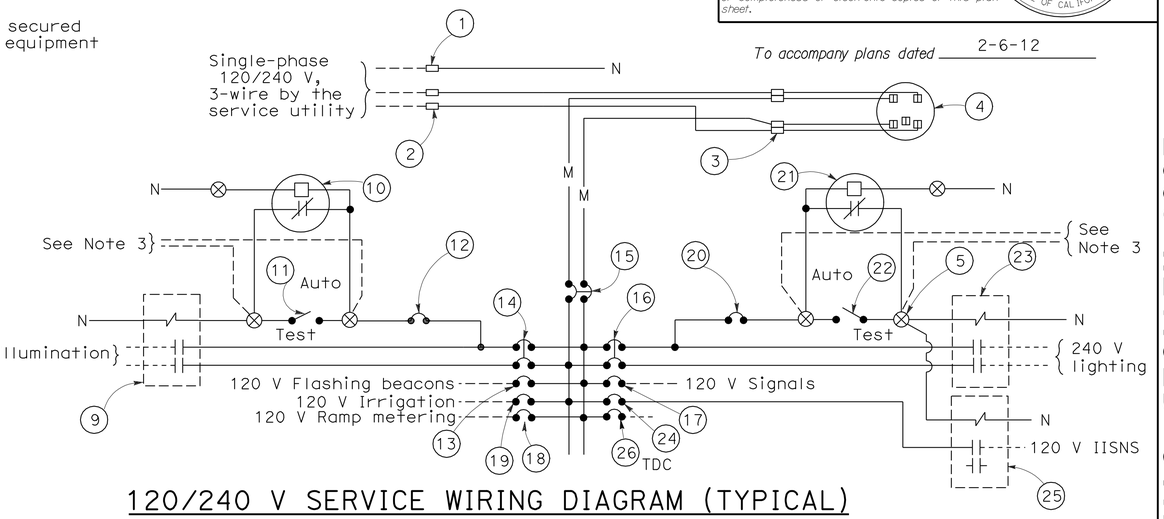

120/240 V SERVICE WIRING DIAGRAM (TYPICAL)

TYPE III-A SERVICE (120/240 V) EQUIPMENT LEGEND

ITEM No.	COMPONENT	NAME PLATE DESCRIPTION	ITEM No.	COMPONENT	NAME PLATE DESCRIPTION
1	Neutral lug		14	30 A, 240 V, 2P, CB	Sign Illumination
2	Landing lug (Note 6)		15	100 A, 240 V, 2P, CB	Main Breaker
3	Test bypass facility		16	30 A, 240 V, 2P, CB	Lighting
4	Meter socket and support		17	50 A, 120 V, 1P, CB	Signals
5	Terminal blocks		18	30 A, 120 V, 1P, CB	Ramp Metering
6	Neutral bus		19	20 A, 120 V, 1P, CB	Irrigation
7	Ground bus		20	15 A, 120 V, 1P, CB	Lighting Control
8	Grounding electrode		21	Photoelectric unit (Note 7)	
9	30 A, 2PNO Contactor	Sign Illumination	22	15 A, 1P, Test switch	Lighting Test Switch
10	Photoelectric unit (Note 7)		23	60 A, 2PNO Contactor	Lighting
11	15 A, 1P, Test switch	Sign Illumination Test Switch	24	15 A, 120 V, 1P, CB	IISNS
12	15 A, 120 V, 1P, CB	Sign Illumination Control	25	30 A, 2PNO Contactor	IISNS
13	15 A, 120 V, 1P, CB	Flashing Beacon	26	20 A, 120 V, 1P, CB	Telephone Demarcation Cabinet

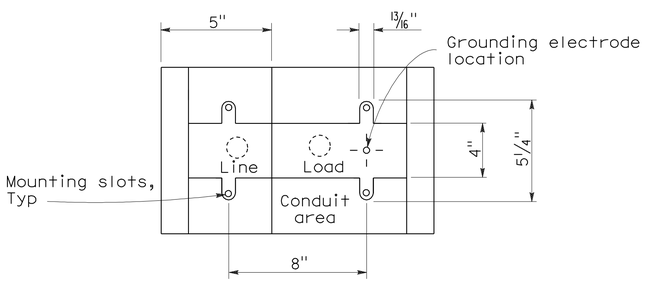

BASE FOR TYPE III-A SERVICE EQUIPMENT ENCLOSURE

NOTES: (FOR SERVICE EQUIPMENT ENCLOSURE)

1. Voltage ratings of service equipment shall conform to the service voltages indicated on the plans.
2. Unless otherwise indicated on the plans, service equipment items shall be provided for each service equipment enclosure as shown.
3. Connect to remote test switch mounted on lighting standards, sign post or structure when required.
4. Items No. 1 and 6 shall be isolated from the service equipment enclosure.
5. Meter sockets shall be 5 clip type.
6. The landing lug shall be suitable for multiple conductors.
7. Type V photoelectric control shall be used unless otherwise indicated on the plans.

STATE OF CALIFORNIA
DEPARTMENT OF TRANSPORTATION

ELECTRICAL SYSTEMS (SERVICE EQUIPMENT AND TYPICAL WIRING DIAGRAM, TYPE III-A SERIES)

NO SCALE

RSP ES-2D DATED OCTOBER 5, 2007 SUPERCEDES STANDARD PLAN ES-2D DATED MAY 1, 2006 - PAGE 406 OF THE STANDARD PLANS BOOK DATED MAY 2006.

REVISED STANDARD PLAN RSP ES-2D

2006 REVISED STANDARD PLAN RSP ES-2D

DIST	COUNTY	ROUTE	POST MILES TOTAL PROJECT	SHEET NO.	TOTAL SHEETS
02	Sha	44, 273, 299	Var	70	78

REGISTERED ELECTRICAL ENGINEER

June 6, 2008
PLANS APPROVAL DATE

REGISTERED PROFESSIONAL ENGINEER
Jeffery G. McRae
No. E14512
Exp. 6-30-10
ELECTRICAL
STATE OF CALIFORNIA

The State of California or its officers or agents shall not be responsible for the accuracy or completeness of electronic copies of this plan sheet.

To accompany plans dated 2-6-12

VISORS

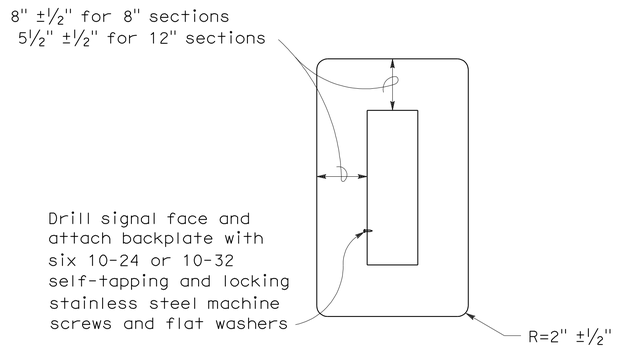

8" AND 12" SECTIONS

BACKPLATE

1/16" minimum thickness
3001-14 aluminum, or plastic when specified

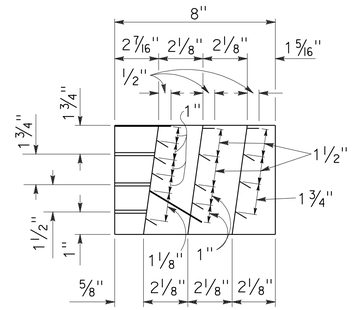

SECTION A-A

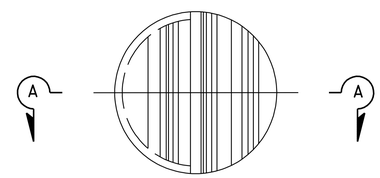

FRONT VIEW

DIRECTIONAL LOUVER

Directional louvers shall be oriented as directed by the Engineer and secured in place with one plated brass machine screw and nut.

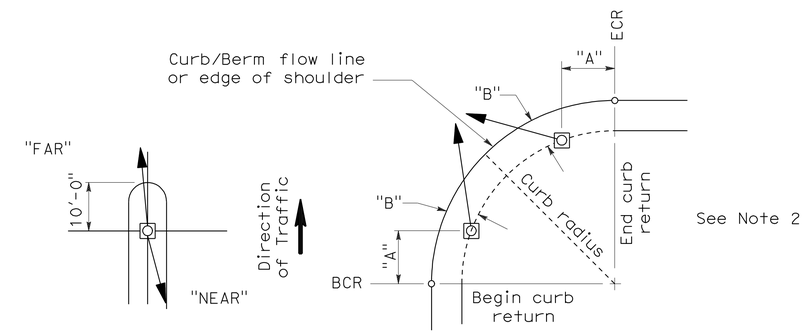

NOTES:

1. Typical signal pole placement unless dimensioned on plans.
2. For "A" and "B" dimensions, see Pole Schedule, or as directed by the Engineer.

SIGNAL STANDARD PLACEMENT DIMENSIONS AND EQUIPMENT LOCATIONS

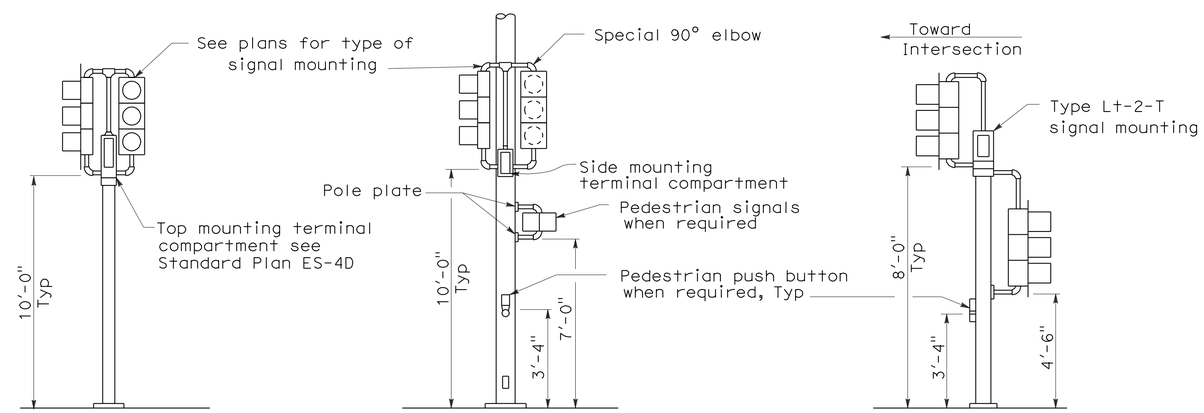

TOP MOUNTED SIGNALS (TV)

Type 1-A, 1-B, 1-C and 1-D standard as indicated on the plans

SIDE MOUNTED SIGNALS (SV AND SP)

Normally used on standards with luminaire or signal mast arm

LEFT TURN LANE SIGNAL

Type 1-A, 1-B, 1-C and 1-D standard as indicated on plans

TYPICAL SIGNAL INSTALLATIONS

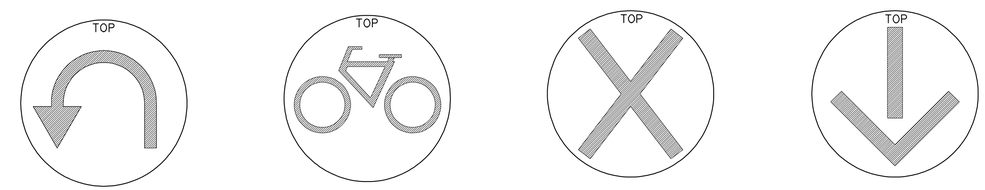

U-TURN SIGNAL FACE | BICYCLE SIGNAL FACE | LANE CONTROL SIGNAL FACE | LANE CONTROL SIGNAL FACE

STATE OF CALIFORNIA
DEPARTMENT OF TRANSPORTATION

ELECTRICAL SYSTEMS (SIGNAL HEADS AND MOUNTINGS)

NO SCALE

RSP ES-4C DATED JUNE 6, 2008 SUPERSEDES STANDARD PLAN ES-4C DATED MAY 1, 2006 - PAGE 420 OF THE STANDARD PLANS BOOK DATED MAY 2006.

REVISED STANDARD PLAN RSP ES-4C

2006 REVISED STANDARD PLAN RSP ES-4C

5-19-08

DIST	COUNTY	ROUTE	POST MILES TOTAL PROJECT	SHEET NO.	TOTAL SHEETS
02	Sha	44, 273, 299	Var	71	78

REGISTERED ELECTRICAL ENGINEER

June 6, 2008
PLANS APPROVAL DATE

REGISTERED PROFESSIONAL ENGINEER Jeffery G. McRae No. E14512 Exp. 6-30-10 ELECTRICAL STATE OF CALIFORNIA

The State of California or its officers or agents shall not be responsible for the accuracy or completeness of electronic copies of this plan sheet.

To accompany plans dated 2-6-12

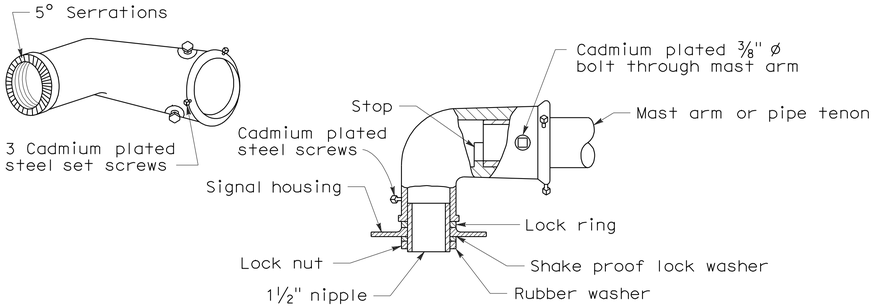

MAST ARM MOUNTING - TYPE "MAT"

For 2 NPS pipe, see Note 1.

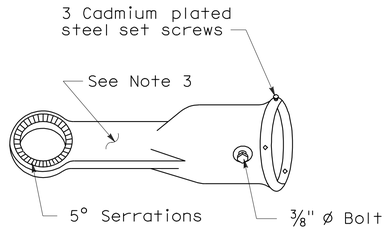

MAST ARM MOUNTING - TYPE "MAS"

For 2 NPS pipe. See Note 1.

SIGNAL SLIP FITTERS

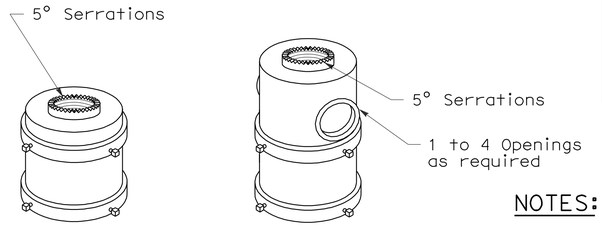

For one mounting For mulitiple mountings

TOP MOUNTINGS

For 4 NPS pipe, see Note 2.

NOTES:

1. After mast arm signal has been plumbed and secured, drill 7/16" hole through mast arm tenon in line with slip fitter hole. Place a cadmium plated 3/8" ø galvanized bolt with washer under bolt head through hole and secure with washer, nut, and locknut. Seal openings between mast arm mountings and mast arm with mastic.
2. (a) Threaded top mounted slip fitter openings shall be 1½ NPS.
   (b) Serrations in fittings shall match those on bottom of signal heads or in lock ring.
   (c) Top opening shall be offset when backplate is used.
3. Wireway shall have a cross section area of 0.95 square inch minimum. Minimum width of ½".

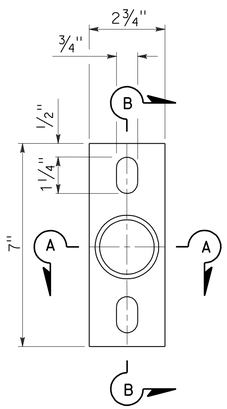

POLE PLATE

For side mountings

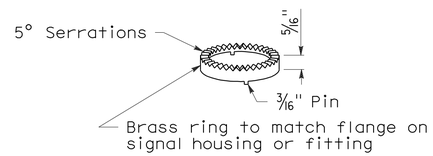

LOCK RING

Use where locking ring is not integral with signal housing or fitting.

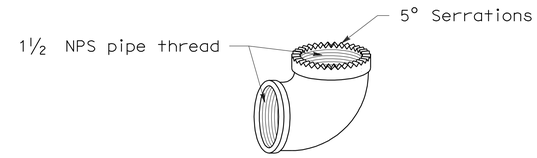

SPECIAL 90° ELBOW

One for each signal head, except those with special slip fitter mounting

MISCELLANEOUS MOUNTING HARDWARE

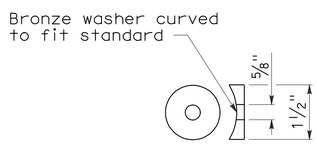

DETAIL "C"

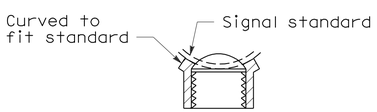

SECTION A-A

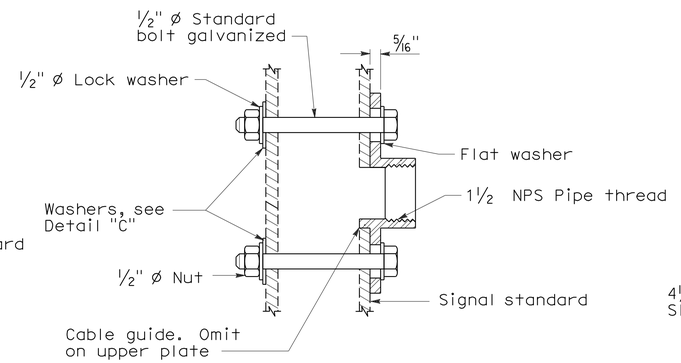

SECTION B-B

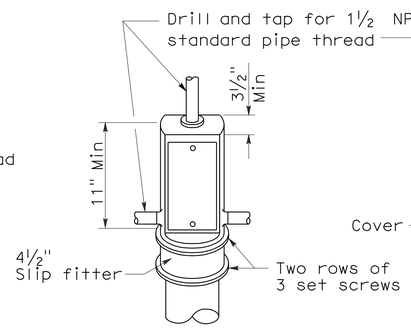

TOP MOUNTING

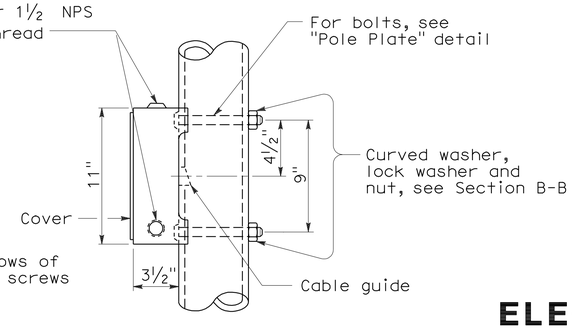

SIDE MOUNTING

TERMINAL COMPARTMENTS

STATE OF CALIFORNIA
DEPARTMENT OF TRANSPORTATION

ELECTRICAL SYSTEMS (SIGNAL HEADS AND MOUNTINGS)

NO SCALE

RSP ES-4D DATED June 6, 2008 SUPERSEDES STANDARD PLAN ES-4D
DATED MAY 1, 2006 - PAGE 421 OF THE STANDARD PLANS BOOK DATED MAY 2006.

REVISED STANDARD PLAN RSP ES-4D

2006 REVISED STANDARD PLAN RSP ES-4D

5-19-08

DIST	COUNTY	ROUTE	POST MILES TOTAL PROJECT	SHEET NO.	TOTAL SHEETS
02	Sha	44, 273, 299	Var	72	78

REGISTERED ELECTRICAL ENGINEER

October 5, 2007
PLANS APPROVAL DATE

REGISTERED PROFESSIONAL ENGINEER Jeffery G. McRae No. E14512 Exp. 6-30-08 ELECTRICAL STATE OF CALIFORNIA

The State of California or its officers or agents shall not be responsible for the accuracy or completeness of electronic copies of this plan sheet.

To accompany plans dated 2-6-12

LOOP INSTALLATION PROCEDURE

1. Loops shall be centered in lanes.
2. Saw slots in pavement for loop conductors as shown in details.
3. Distance between side of loop and a lead-in saw cut from adjacent detectors shall be 2'-0" minimum. Distance between lead-in saw cuts shall be 6" minimum.
4. Bottom of saw slot shall be smooth with no sharp edges.
5. Slots shall be washed until clean, blown out and thoroughly dried before installing loop conductors.
6. Adjacent loops on the same sensor unit channel shall be wound in opposite directions.
7. Identify and tag loop circuit pairs in the pull box with loop number, start (S) and finish (F) of conductor. Identify and tag lead-in-cable with sensor number and phase.
8. Install loop conductor in slot using a 3/16" to 1/4" thick wood paddle. Hold loop conductors with wood paddles (at the bottom of the sawed slot) during sealant placement.
9. No more than 2 twisted pairs shall be installed in one sawed slot.
10. Allow additional 5'-0" of slack length of conductor for the lead-in run to pull box.
11. The additional length of each conductor for each loop shall be twisted together into a pair (6 turns per 3'-4" minimum) before being placed in the slot and conduit leading to pull box.
12. Test each loop circuit for continuity, circuit resistance and insulation resistance at the pull box before filling slots.
13. Fill slots as shown in details.
14. Splice loop conductors to lead-in-cable. Splices shall be soldered.
15. End of lead-in-cable and Type 2 loop conductor shall be waterproofed prior to installing in conduit to prevent moisture from entering the cable.
16. Lead-in-cable shall not be spliced between the pull box and the controller cabinet terminals.
17. Test each loop circuit for continuity, circuit resistance and insulation resistance at the controller cabinet location.
18. Where loop conductors are not to be spliced to a lead-in-cable, the ends of the conductors shall be taped and waterproofed with electrical insulating coating.

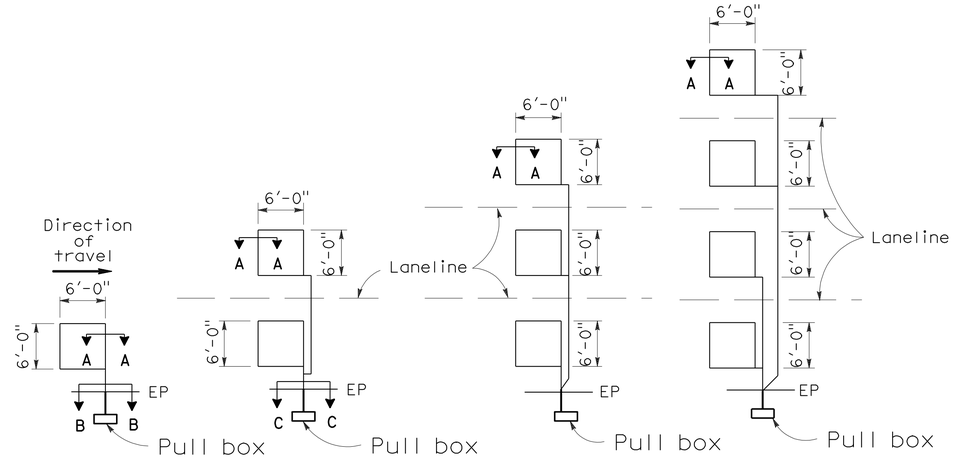

TYPE 1A INSTALLATION | TYPE 2A INSTALLATION | TYPE 3A INSTALLATION | TYPE 4A INSTALLATION

SAWCUT DETAILS

(Type A loop detector configurations illustrated)

1. 1A thru 4A = 1 Type A loop configuration in each lane.
2. 1B thru 4B = 1 Type B loop configuration in each lane.
3. 1C = 1 Type C loop configuration entering lanes as required.
4. 1D thru 4D = 1 Type D loop configuration in each lane.
5. 1E thru 4E = 1 Type E loop configuration in each lane.
6. 1Q thru 4Q = 1 Type Q loop configuration in each lane. (Use Type A, B, C, D, E or Q loop detector configurations only when specified or shown on plans)

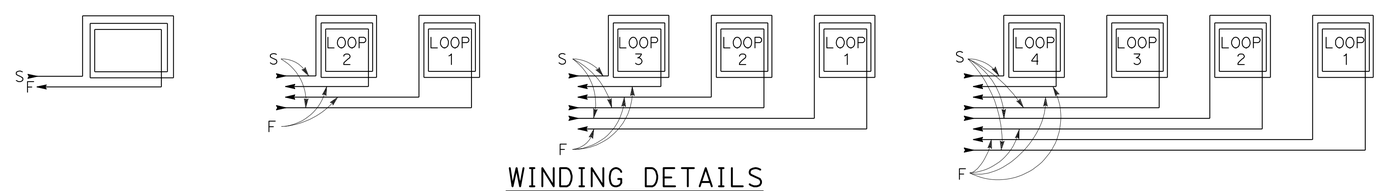

WINDING DETAILS

See Notes 6 and 7

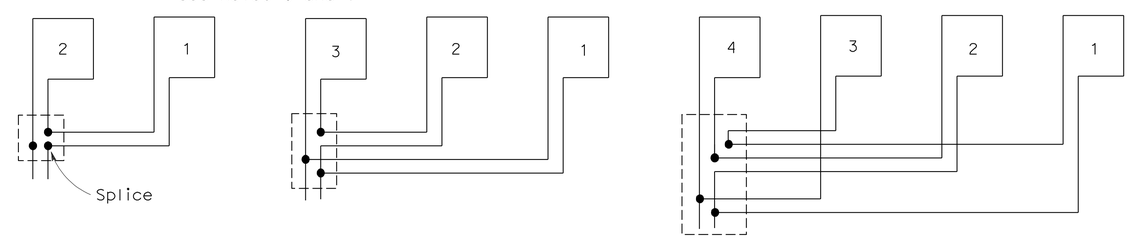

TYPICAL LOOP CONNECTIONS

(Dashed lines represent the pull box)

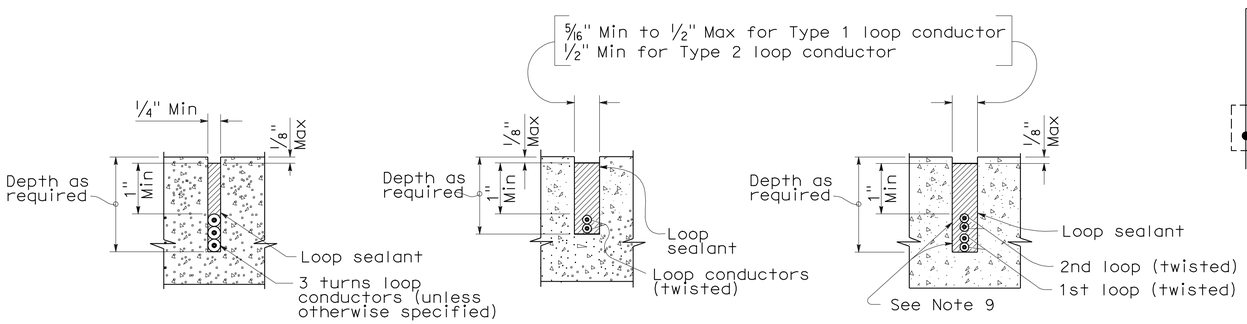

SECTION A-A | SECTION B-B | SECTION C-C

SLOT DETAILS - TYPE 1 AND TYPE 2 LOOP CONDUCTOR

STATE OF CALIFORNIA
DEPARTMENT OF TRANSPORTATION

ELECTRICAL SYSTEMS (DETECTORS)

NO SCALE

RSP ES-5A DATED OCTOBER 5, 2007 SUPERCEDES STANDARD PLAN ES-5A DATED MAY 1, 2006 - PAGE 423 OF THE STANDARD PLANS BOOK DATED MAY 2006.

REVISED STANDARD PLAN RSP ES-5A

2006 REVISED STANDARD PLAN RSP ES-5A

DIST	COUNTY	ROUTE	POST MILES TOTAL PROJECT	SHEET NO.	TOTAL SHEETS
02	Sha	44, 273, 299	Var	73	78

REGISTERED CIVIL ENGINEER

October 5, 2007
PLANS APPROVAL DATE

REGISTERED PROFESSIONAL ENGINEER
Stanley P. Johnson
No. C57793
Exp. 3-31-08
CIVIL
STATE OF CALIFORNIA

The State of California or its officers or agents shall not be responsible for the accuracy or completeness of electronic copies of this plan sheet.

To accompany plans dated 2-6-12

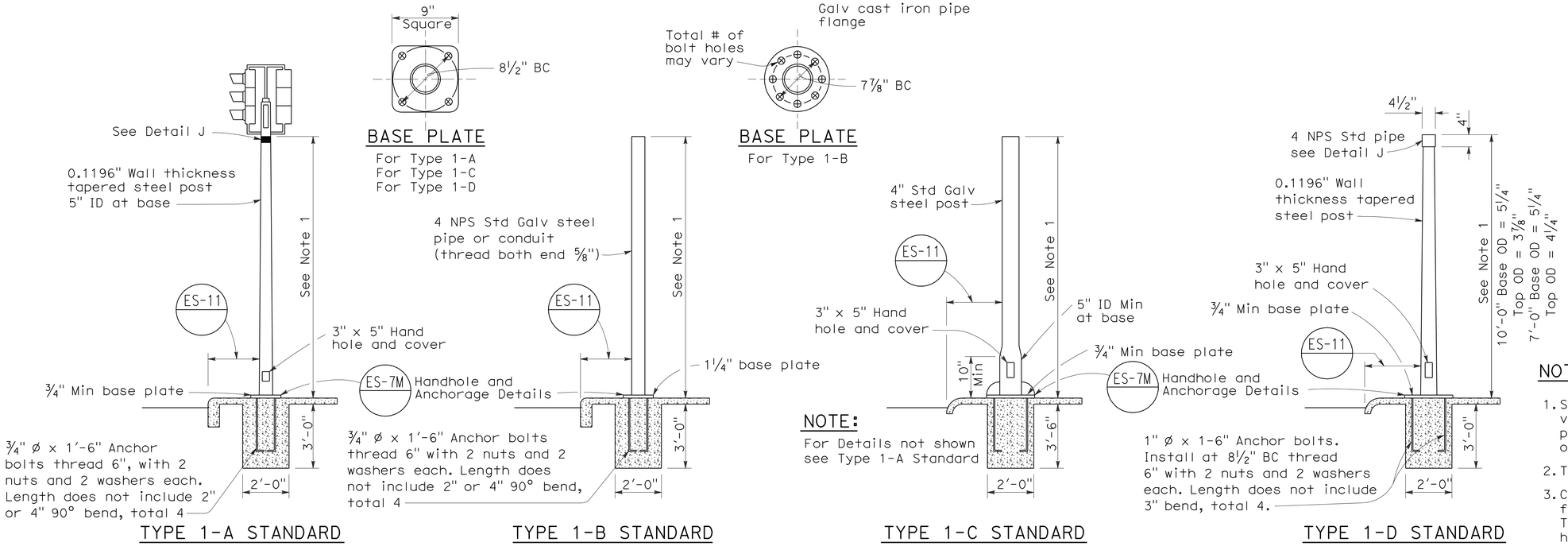

TYPE 1 SIGNAL STANDARDS

NOTES:

1. Standards shall be 10'-0" ± 2" for vehicle signals and 7'-0" ± 2" for pedestrian signals unless otherwise noted on plans.
2. Top of standards shall be 4½" OD.
3. Conduits shall extend 2" maximum above finished surface of foundation and for Types 1-A, 1-C and 1-D shall be sloped toward handhole.
4. Anchor bolts shall be bonded to conduit or grounding conductor.
5. Conduit between standard and adjacent pull box shall be 2" minimum.
6. Paint numbers on roadway side facing traffic when electrolier or post is left of direction of traffic.

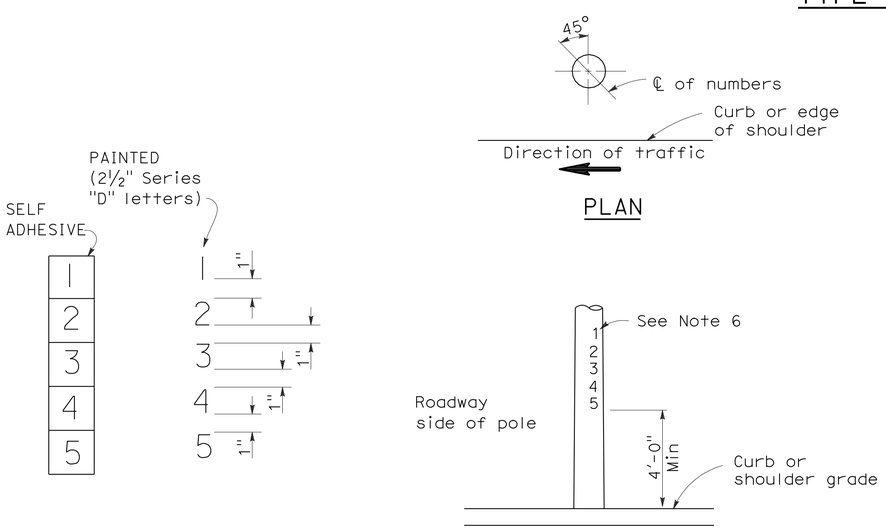

LOCATION OF EQUIPMENT NUMBERS ON STANDARDS AND POSTS

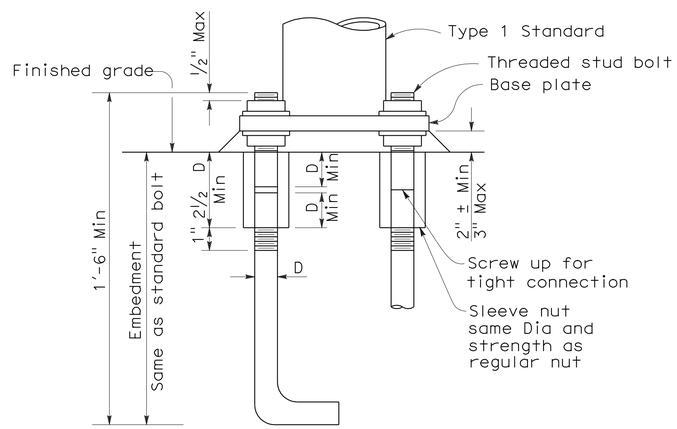

ANCHOR BOLTS WITH SLEEVE NUTS

Sleeve nuts to be used only when shown or specified on Project Plans

D = Diameter of anchor bolt

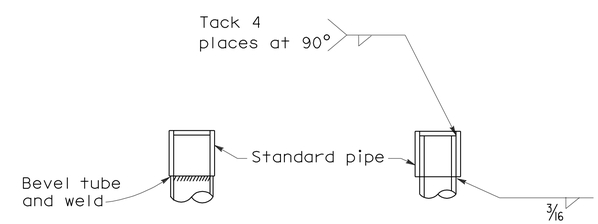

DETAIL J

Tube may be inserted into pipe or butted as required

STATE OF CALIFORNIA
DEPARTMENT OF TRANSPORTATION

ELECTRICAL SYSTEMS (SIGNAL AND LIGHTING STANDARD TYPE 1 STANDARD AND EQUIPMENT NUMBERING)

NO SCALE

RSP ES-7B DATED OCTOBER 5, 2007 SUPERCEDES STANDARD PLAN ES-7B DATED MAY 1, 2006 - PAGE 438 OF THE STANDARD PLANS BOOK DATED MAY 2006.

REVISED STANDARD PLAN RSP ES-7B

2006 REVISED STANDARD PLAN RSP ES-7B

7-10-07

DIST	COUNTY	ROUTE	POST MILES TOTAL PROJECT	SHEET NO.	TOTAL SHEETS
02	Sha	44, 273, 299	Var	74	78

REGISTERED CIVIL ENGINEER

October 5, 2007
PLANS APPROVAL DATE

REGISTERED PROFESSIONAL ENGINEER Stanley P. Johnson No. C57793 Exp. 3-31-08 CIVIL STATE OF CALIFORNIA

The State of California or its officers or agents shall not be responsible for the accuracy or completeness of electronic copies of this plan sheet.

To accompany plans dated 2-6-12

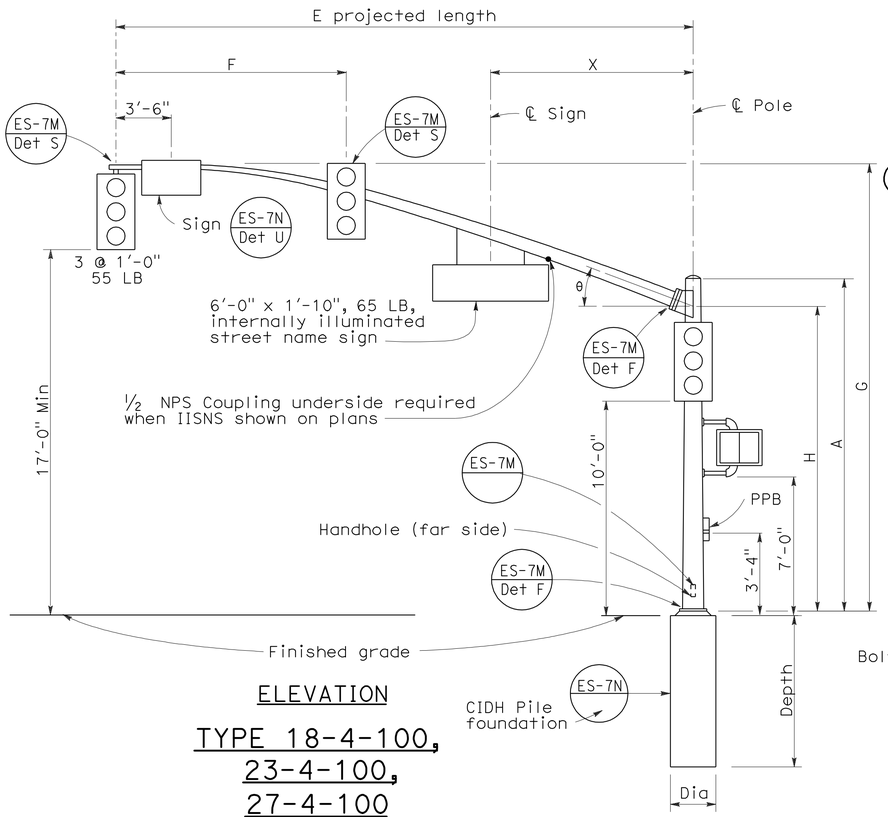

ELEVATION

TYPE 18-4-100, 23-4-100, 27-4-100

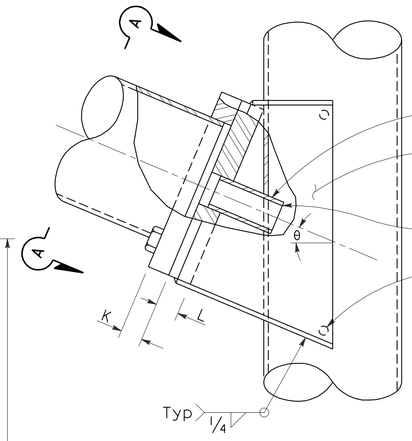

ELEVATION

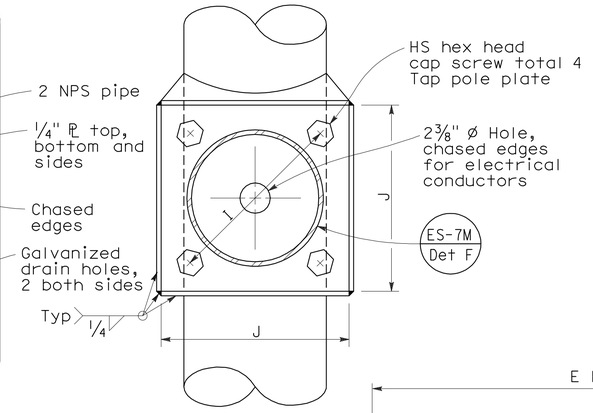

VIEW A-A

SIGNAL ARM CONNECTION DETAILS

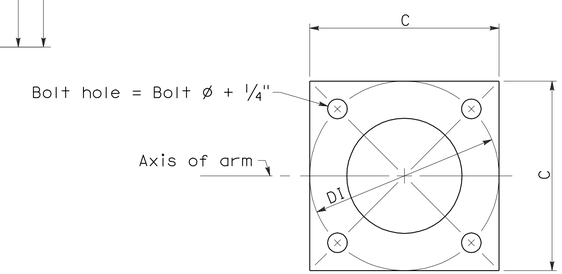

BASE PLATE

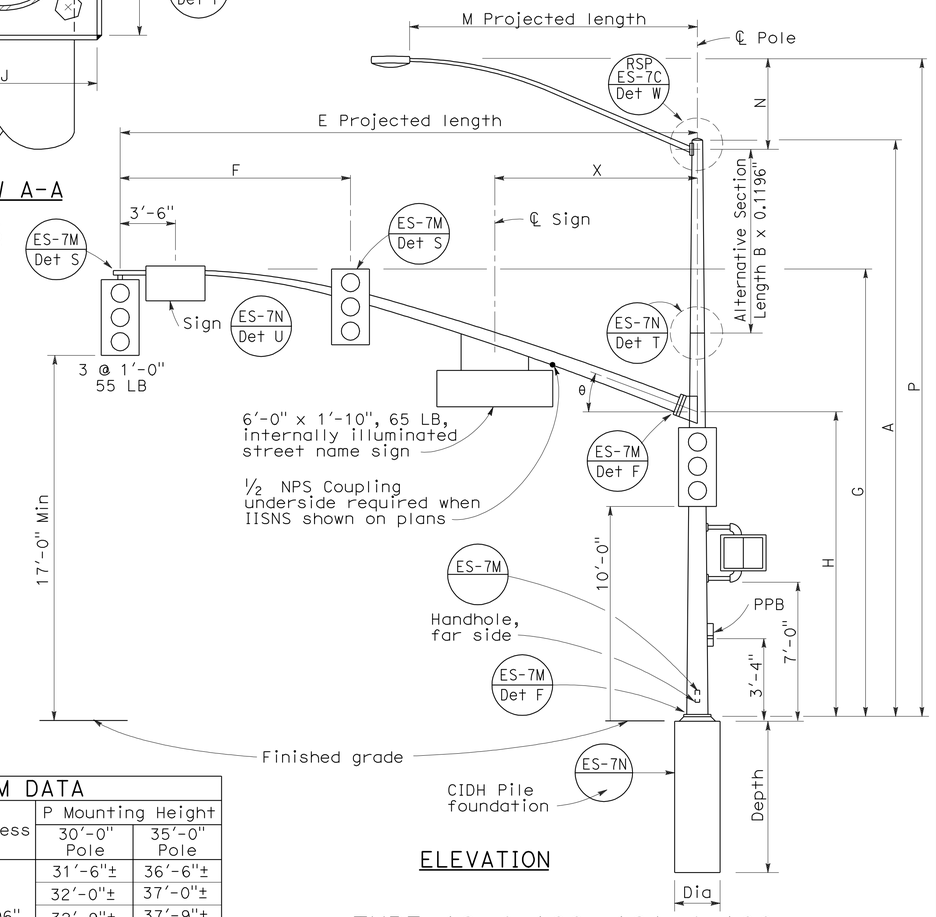

ELEVATION

TYPE 19-4-100, 19A-4-100, 24-4-100, 24A-4-100, 26-4-100, 26A-4-100

SIGNAL ARM DATA												
E Projected Length	F Min Spacing	G Mounting Height	H	Min OD at Pole	Thickness	I Bolt Circle	HS Cap Screws	J Plate Size	K Arm PL Thickness	L Pole PL Thickness	θ	X Max
25'-0"	10'-0"	22'-8"±	16'-0"	7 5/16"	0.2391"	12"	1¼"-7NC-3"	1'-0"	1¼"	1½"	23°	10'-6"
30'-0"	12'-0"	23'-0"±		8"								
35'-0"	14'-0"			8 11/16"		13½"		1'-1½"	1½"	1¾"	21°	13'-0"
40'-0"	15'-0"			9⅜"							15°	
45'-0"		23'-8"±		10¼"								

LUMINAIRE ARM DATA					
M Projected Length	N Rise	Min OD at Pole	Thickness	P Mounting Height 30'-0" Pole	P Mounting Height 35'-0" Pole
6'-0"	2'-0"±	3¼"	0.1196"	31'-6"±	36'-6"±
8'-0"	2'-6"±	3½"		32'-0"±	37'-0"±
10'-0"	3'-3"±	3⅞"		32'-9"±	37'-9"±
12'-0"	4'-3"±			33'-9"±	38'-9"±
15'-0"	4'-9"±	4¼"		34'-3"±	39'-3"±

POLE DATA									BASE PLATE DATA						CIDH PILE FOUNDATION		
Pole Type	Load Case	Wind Velocity mph	A Height	Min OD Base	Min OD Top	Thickness	Alternative Section B Length	Alternative Section Bottom	Alternative Section Top	C	DI Bolt Circle	Thickness	Anchor Bolts Size	Luminaire Arm	Signal Arm	Dia	Depth	Reinforced
18-4-100	4	100	17'-0"	12"	9"	0.2391"	None	9⅜"		1'-6"	1'-6"	1½"	2" Ø x 42" x 6"	None	25'-0", 30'-0"	3'-0"	9'-0"	Yes
19-4-100			30'-0"		8"		10'-0"		8"					6'-15' 12'-0"				
19A-4-100			35'-0"		7 5/16"		15'-0'		7 5/16"					6'-15' 15'-0"				
23-4-100			17'-0"		9"		None							None	35'-0"			
24-4-100			30'-0"		8"		10'-0"	9⅜"	8"					6'-15' 12'-0"				
24A-4-100			35'-0"		7 5/16"		15'-0"		7 5/16"					6'-15' 15'-0"				
26-4-100			30'-0"	12½"	8"	0.3125"	10'-0"	9¾"	8⅜"					6'-15' 12'-0"	40'-0", 45'-0"			
26A-4-100			35'-0"		7 5/16"		15'-0"		7 11/16"					6'-15' 15'-0"				
27-4-100			17'-0"		9¾"		None							None				

☐ Indicates arm length to be used unless otherwise noted on plans.

STATE OF CALIFORNIA
DEPARTMENT OF TRANSPORTATION

ELECTRICAL SYSTEMS (SIGNAL AND LIGHTING STANDARD CASE 4 ARM LOADING WIND VELOCITY=100 MPH ARM LENGTHS 25' TO 45')

NO SCALE

RSP ES-7F DATED OCTOBER 5, 2007 SUPERCEDES RSP ES-7F DATED NOVEMBER 17, 2006 AND STANDARD PLAN ES-7F DATED MAY 1, 2006 - PAGE 442 OF THE STANDARD PLANS BOOK DATED MAY 2006.

REVISED STANDARD PLAN RSP ES-7F

2006 REVISED STANDARD PLAN RSP ES-7F

7-10-07

DIST	COUNTY	ROUTE	POST MILES TOTAL PROJECT	SHEET NO.	TOTAL SHEETS
02	Sha	44, 273, 299	Var	75	78

REGISTERED CIVIL ENGINEER

November 17, 2006
PLANS APPROVAL DATE

REGISTERED PROFESSIONAL ENGINEER
Stanley P. Johnson
No. C57793
Exp. 03-31-08
CIVIL
STATE OF CALIFORNIA

The State of California or its officers or agents shall not be responsible for the accuracy or completeness of electronic copies of this plan sheet.

To accompany plans dated 2-6-12

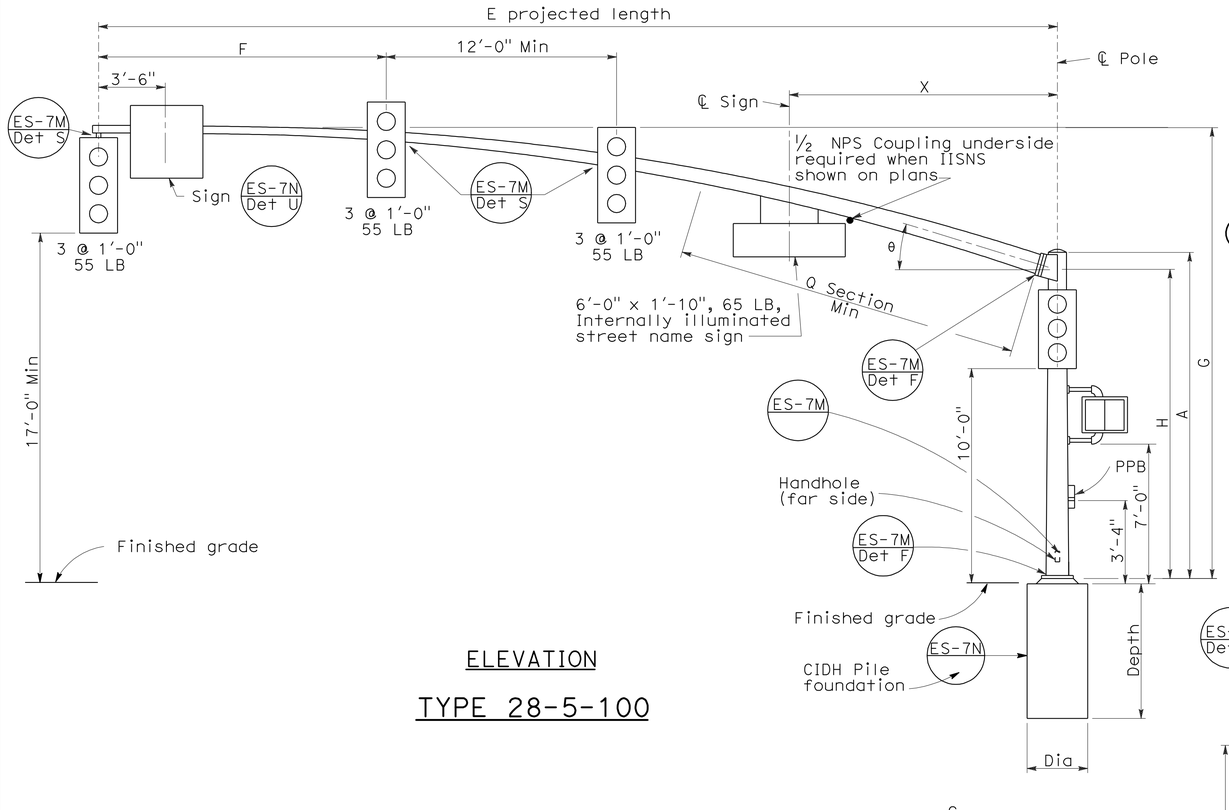

ELEVATION

TYPE 28-5-100

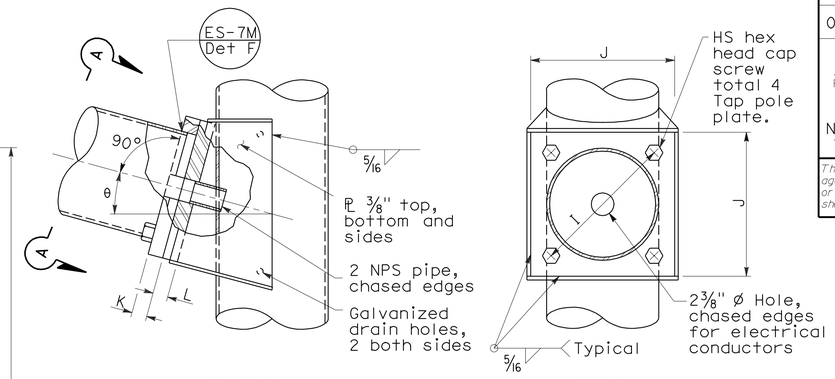

ELEVATION

VIEW A-A

SIGNAL ARM CONNECTION DETAILS

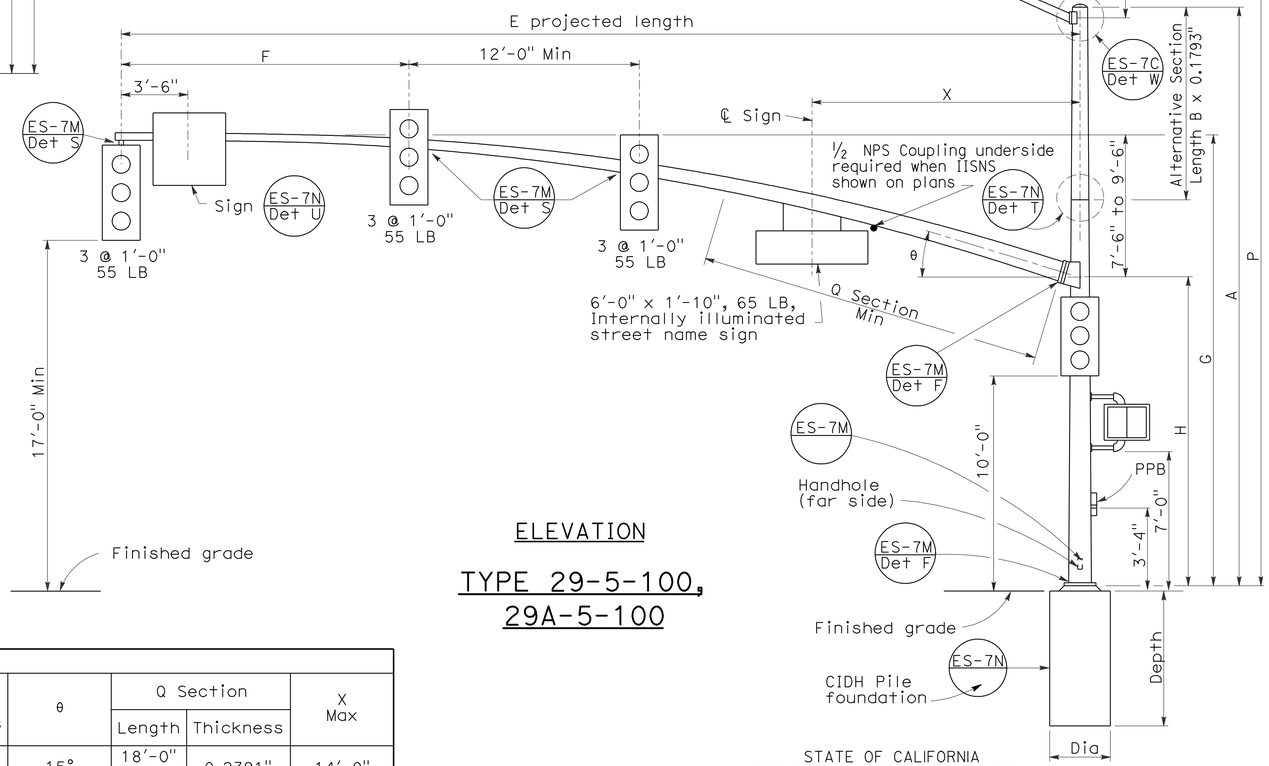

ELEVATION

TYPE 29-5-100, 29A-5-100

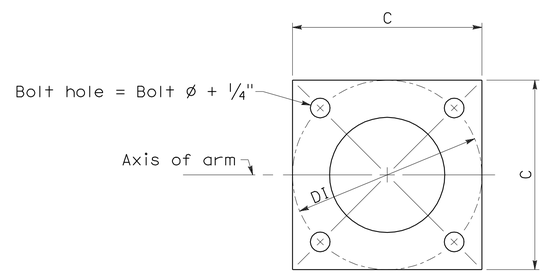

BASE PLATE

LUMINAIRE ARM DATA					
M Projected Length	N Rise	Min OD at Pole	Thickness	P Mounting Height 30'-0" Pole	P Mounting Height 35'-0" Pole
6'-0"	2'-0"±	3¼"	0.1196"	31'-6"±	36'-6"±
8'-0"	2'-6"±	3½"		32'-0"±	37'-0"±
10'-0"	3'-3"±	3⅞"		32'-9"±	37'-9"±
12'-0"	4'-3"±			33'-9"±	38'-9"±
15'-0"	4'-9"±	4¼"		34'-3"±	39'-3"±

SIGNAL ARM DATA														
E Projected Length	F Min Spacing	G Mounting Height	H	Min OD at Pole	Thickness	I Bolt Circle	HS Cap Screws	J Plate Size	K Arm ℄ Thickness	L Pole ℄ Thickness	θ	Q Section Length	Q Section Thickness	X Max
50'-0"	15'-0"	23'-7"± to 25'-7"±	16'-0"	11 7/16"	0.1793"	16"	1½"-6NC-3¼"	1'-4"	1¾"	1¾"	15°	18'-0"	0.2391"	14'-0"
55'-0"				1'-¼"								23'-0"		

POLE DATA									BASE PLATE DATA						CIDH PILE FOUNDATION		
Pole Type	Load Case	Wind Velocity mph	A Height	Min OD Base	Min OD Top	Thickness	Alternative Section B Length	Alternative Section Bottom	Alternative Section Top	C	DI Bolt Circle	Thickness	Anchor Bolts Size	Luminaire Arm	Signal Arm	Dia	Depth	Reinforced
28-5-100	5	100	17'-0"	14"	11 11/16"	0.3125"	None	11¼"	9⅞"	21"	21"	1¾"	2" ø x 42" x 6"	None	50'-0", 55'-0"	3'-0"	9'-2"	Yes
29-5-100			30'-0"		9⅞"		10'-0"							6'-15' [15'-0"]				
29A-5-100			35'-0"		9 3/16"		15'-0"		9 3/16"	23"	23"							

[ ] Indicates arm length to be used unless otherwise noted on plans.

STATE OF CALIFORNIA
DEPARTMENT OF TRANSPORTATION

ELECTRICAL SYSTEMS (SIGNAL AND LIGHTING STANDARD CASE 5 ARM LOADING WIND VELOCITY=100 MPH ARM LENGTHS 50' TO 55')

NO SCALE

RSP ES-7G DATED NOVEMBER 17, 2006 SUPERSEDES STANDARD PLAN ES-7G DATED MAY 1, 2006 - PAGE 443 OF THE STANDARD PLANS BOOK DATED MAY 2006.

REVISED STANDARD PLAN RSP ES-7G

2006 REVISED STANDARD PLAN RSP ES-7G

5-15-06

DIST	COUNTY	ROUTE	POST MILES TOTAL PROJECT	SHEET NO.	TOTAL SHEETS
02	Sha	44, 273, 299	Var	76	78

REGISTERED ELECTRICAL ENGINEER

January 20, 2012
PLANS APPROVAL DATE

REGISTERED PROFESSIONAL ENGINEER Jeffery G. McRae No. E14512 Exp. 6-30-12 ELECTRICAL STATE OF CALIFORNIA

The State of California or its officers or agents shall not be responsible for the accuracy or completeness of electronic copies of this plan sheet.

To accompany plans dated 2-6-12

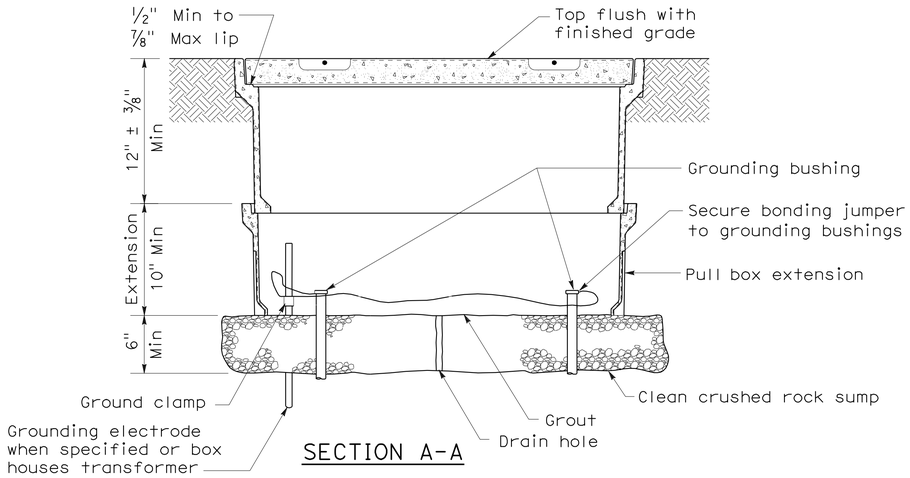

SECTION A-A

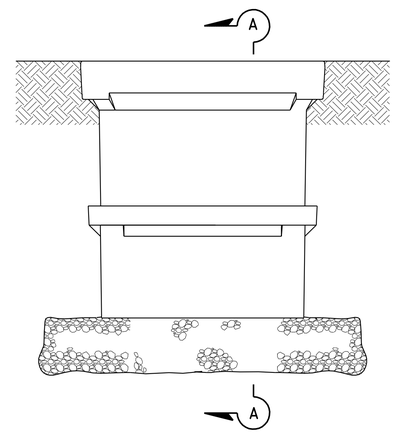

SIDE VIEW

INSTALLATION DETAILS

DETAIL A

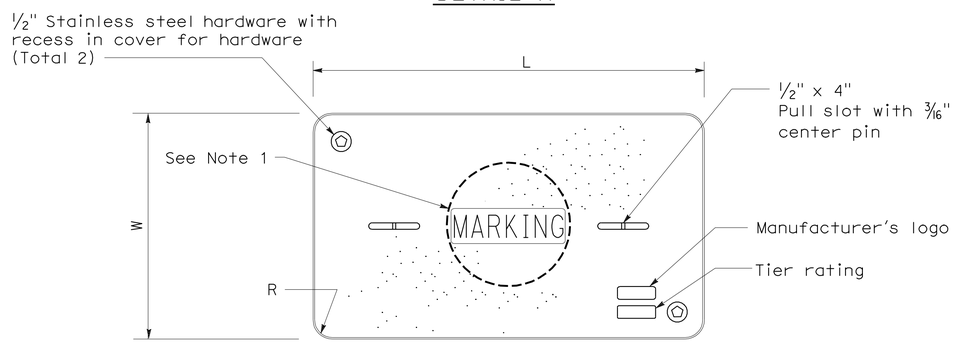

COVER TOP VIEW

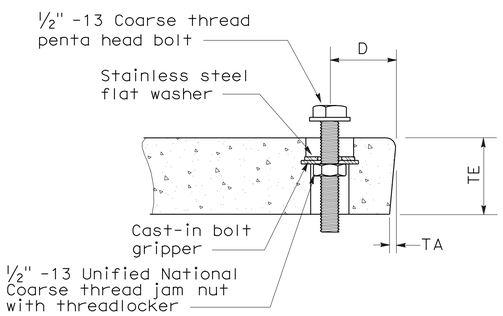

TYPICAL COVER CAPTIVE BOLT

(Or similar)

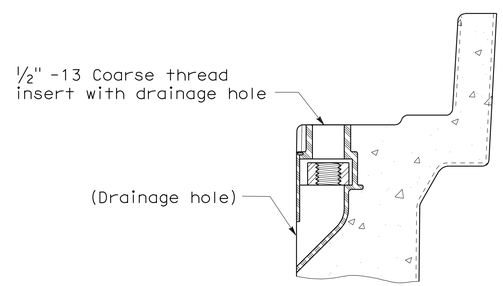

TYPICAL THREADED INSERT

(Or similar)

DIMENSION TABLE										
PULL BOX	PULL BOX			COVER						
	Minimum Depth Box	Minimum Depth Extension	Maximum Weight	L	W	R	TE	TA	D	Maximum Weight
No. 3 1/2	12"	N/A	40 lb	1' - 3 3/8"	10 1/8"	1 3/8"	2"	1/8"	1 3/4"	30 lb
No. 5	12"	10"	55 lb	1' - 11 1/4"	1' - 1 3/4"	1 3/8"	2"	1/8"	1 3/4"	60 lb
No. 6	12"	10"	70 lb	2' - 6 1/2"	1' - 5 1/2"	1 3/8"	2"	1/8"	2"	85 lb

NOTES ON PULL BOXES:

1. Pull box covers must be marked as follows: "SERVICE" Service circuits between service point and service disconnect; "SPRINKLER-CONTROL" sprinkler control circuits, 50 V or less; "CALTRANS" on all pull boxes, except pull boxes marked "SPRINKLER-CONTROL"; and "TELEPHONE" Telephone service;

   A) No. 3 1/2 pull box.
      1) "SIGNAL" - Traffic signal circuits with or without street or sign lighting circuits.
      2) "ST LIGHTING" - Street or sign lighting circuits where voltage is under 600 V.

   B) No. 5, 6, 9 or 9A pull box.
      1) "TRAFFIC SIGNAL" - Traffic signal circuits with or without street or sign lighting circuits.
      2) "STREET LIGHTING" - Street or sign lighting circuits where voltage is under 600 V.
      3) "STREET LIGHTING-HIGH VOLTAGE" - Street or sign lighting circuits where voltage is above 600 V.
      4) "IRRIGATION" - Circuits to irrigation controller 120 V or more.
      5) "RAMP METER" - Ramp meter circuits.
      6) "COUNT STATION" - Count or speed monitor circuits.
      7) "COMMUNICATIONS" - Communication circuits.
      8) "TOS COMMUNICATIONS" - TOS communication line.
      9) "TOS POWER" -TOS power.
      10) "TDC POWER" - Telephone demarcation cabinet power.
      11) "CCTV" - Closed circuit television circuits.
      12) "TMS" - Traffic monitoring station circuits.
      13) "CMS" - Changeable message sign circuits.
      14) "HAR" - Highway advisory radio circuits.

2. The nominal dimensions of the opening in which the cover sets must be the same as the cover dimensions (L and W) plus 1/8" or greater.

3. Covers and boxes must be interchangeable with California Standard. When interchanged with a standard, the top surfaces must be flush within 1/8". Top outside radius of covers and pull boxes must have a 1/8" radius.

4. Pull box extension may be another pull box as long as the bottom edge of the pull box can fit into the cover opening.

STATE OF CALIFORNIA
DEPARTMENT OF TRANSPORTATION

ELECTRICAL SYSTEMS (PULL BOX)

NO SCALE

NSP ES-8A DATED JANUARY 20, 2012 SUPPLEMENTS THE STANDARD PLANS BOOK DATED MAY 2006.

NEW STANDARD PLAN NSP ES-8A

2006 NEW STANDARD PLAN NSP ES-8A

9-28-11

DIST	COUNTY	ROUTE	POST MILES TOTAL PROJECT	SHEET NO.	TOTAL SHEETS
02	Sha	44, 273, 299	Var	77	78

REGISTERED ELECTRICAL ENGINEER

January 20, 2012
PLANS APPROVAL DATE

REGISTERED PROFESSIONAL ENGINEER Jeffery G. McRae No. E14512 Exp. 6-30-12 ELECTRICAL STATE OF CALIFORNIA

The State of California or its officers or agents shall not be responsible for the accuracy or completeness of electronic copies of this plan sheet.

To accompany plans dated 2-6-12

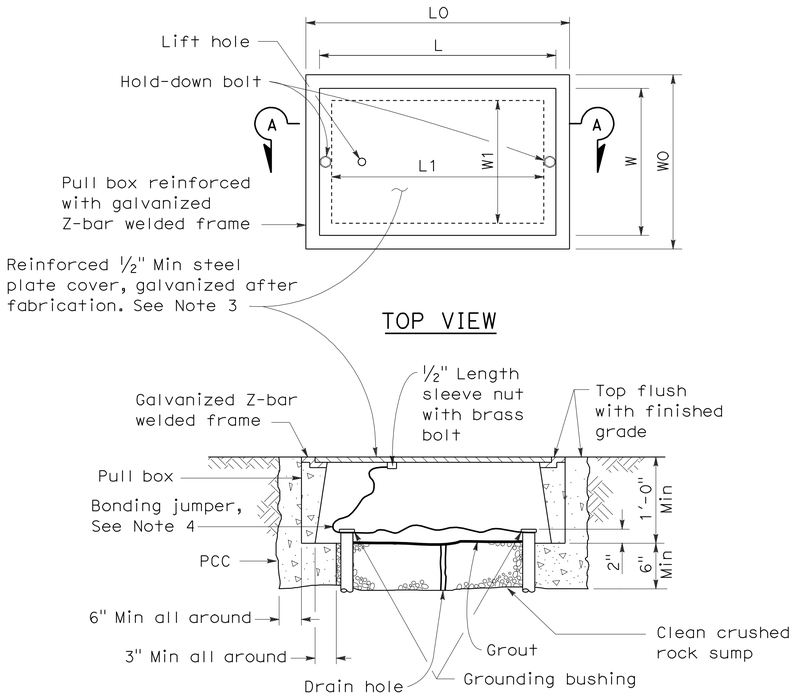

No. 3½(T), No. 5(T) AND No. 6(T) TRAFFIC PULL BOX

NOTES ON PULL BOXES:

1. Traffic pull box shall be provided with steel cover and special concrete footing. Steel cover shall have embossed non-skid pattern.
2. Steel reinforcing shall be as regularly used in the standard products of the respective manufacturer.
3. Pull box covers must be marked as follows: "SERVICE" Service circuits between service point and service disconnect; "SPRINKLER-CONTROL" Sprinkler control circuits, 50 V or less; "CALTRANS" On all pull boxes, except pull boxes marked "SPRINKLER-CONTROL"; and "TELEPHONE" Telephone service.
   A) No. 3½(T) pull box.
      1) "SIGNAL" - Traffic signal circuits with or without street or sign lighting circuits.
      2) "ST LIGHTING" - Street or sign lighting circuits where voltage is under 600 V.
   B) No. 5(T) or 6(T) pull box.
      1) "TRAFFIC SIGNAL" - Traffic signal circuits with or without street or sign lighting circuits.
      2) "STREET LIGHTING" - Street or sign lighting circuits where voltage is under 600 V.
      3) "STREET LIGHTING-HIGH VOLTAGE" - Street or sign lighting circuits where voltage is above 600 V.
      4) "IRRIGATION" - Circuits to irrigation controller 120 V or more.
      5) "RAMP METER" - Ramp meter circuits.
      6) "COUNT STATION" - Count or speed monitor circuits.
      7) "COMMUNICATION" - Communication circuits.
      8) "TOS COMMUNICATIONS" - TOS communications line.
      9) "TOS POWER" - TOS power.
      10) "TDC POWER" - Telephone demarcation cabinet power.
      11) "CCTV" - Closed circuit television circuits.
      12) "TMS" - Traffic monitoring station circuits.
      13) "CMS" - Changeable message sign circuits.
      14) "HAR" - Highway advisory radio circuits.
4. Bonding jumper for metal covers shall be 3' long, minimum.
5. The nominal dimensions of the opening in which the cover sets must be the same as the cover dimensions except the length and width dimensions shall be ⅛" greater.
6. Covers and boxes must be interchangeable with California standard male and female gages. When interchanged with a standard male or female gage, the top surfaces must be flush within ⅛".

DIMENSION TABLE

PULL BOX	BOX						COVER				
	Minimum * Thickness	Minimum Depth Box and Extension	WO	LO	L1	W1	L **	W **	R	Edge Thickness	Edge Taper
No. 3½(T)	1½"	1'-0"	1'-5"± 1"	1'-8⅞"±	1'-2½"±	10⅝"± 1"	1'-8"±	1'-1¾"±	0"	½"	None
No. 5(T)	1¾"	1'-0"	1'-11½"± 1"	2'-5½"±	1'-7"±	1'-1"± 1"	2'-3"±	1'-4"±	0"	½"	None
No. 6(T)	2"	1'-0"	2'-6"± 1"	2'-11½"±	1'-11½"±	1'-5"± 1"	2'-9"±	1'-8"±	0"	½"	None

* Excluding conduit web ** Top dimension

STATE OF CALIFORNIA
DEPARTMENT OF TRANSPORTATION

ELECTRICAL SYSTEMS (TRAFFIC RATED PULL BOX)

NO SCALE

NSP ES-8B DATED JANUARY 20, 2012 SUPPLEMENTS THE STANDARD PLANS BOOK DATED MAY 2006.

NEW STANDARD PLAN NSP ES-8B

2006 NEW STANDARD PLAN NSP ES-8B

9-28-11

DIST	COUNTY	ROUTE	POST MILES TOTAL PROJECT	SHEET NO.	TOTAL SHEETS
02	Sha	44, 273, 299	Var	78	78

REGISTERED ELECTRICAL ENGINEER

October 5, 2007
PLANS APPROVAL DATE

REGISTERED PROFESSIONAL ENGINEER
Jeffery G. McRae
No. E14512
Exp. 6-30-08
ELECTRICAL
STATE OF CALIFORNIA

The State of California or its officers or agents shall not be responsible for the accuracy or completeness of electronic copies of this plan sheet.

To accompany plans dated 2-6-12

2006 REVISED STANDARD PLAN RSP ES-15D

NOTES: (FOR LIGHTING AND SIGN ILLUMINATION CONTROL)

1. The ballast voltages of lighting fixtures and luminaires shall match line service voltages.
2. Voltage rating of photoelectric controls shall conform to the service voltage indicated on the plans.
3. Terminal strip shall be provided for wiring to fixtures.
4. Type SC1A, SC2A, SC3A controls are similar to Types SC1, SC2 and SC3 controls respectively except test switch and wiring are not required.

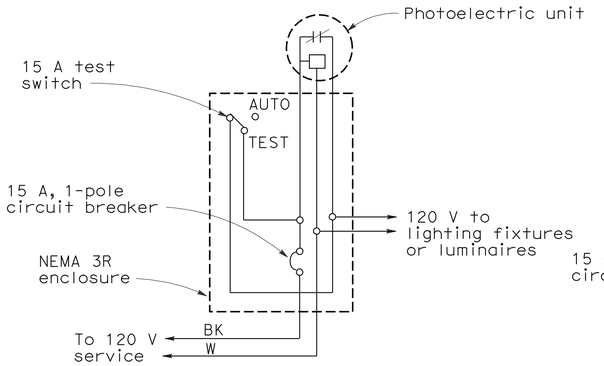

TYPE LC1 CONTROL

For 120 V unswitched circuit with no more than 800 W load.

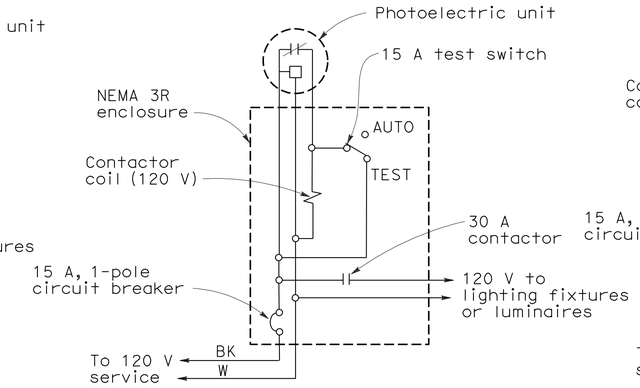

TYPE LC2 CONTROL

For 120 V unswitched circuit

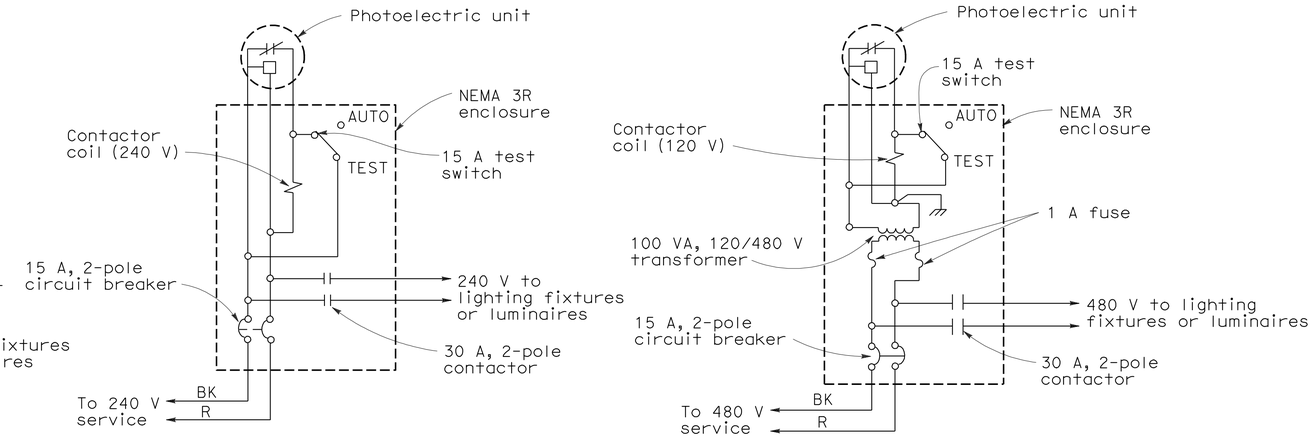

TYPE LC3 CONTROL

For 240 V and 480 V unswitched circuits

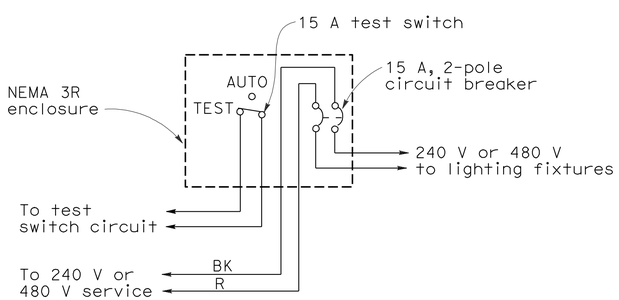

TYPE SC1 CONTROL

For 240 V or 480 V switched circuit, see Note 4 for Type SC1A

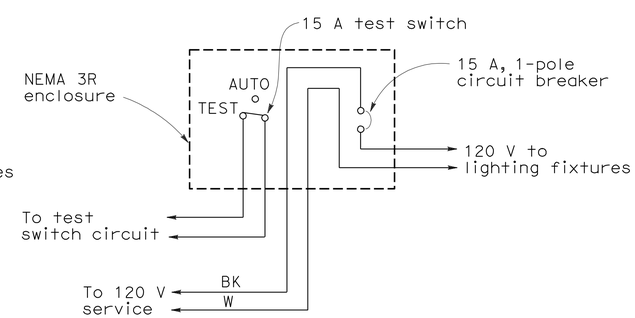

TYPE SC2 CONTROL

For 120 V switched circuit, see Note 4 for Type SC2A

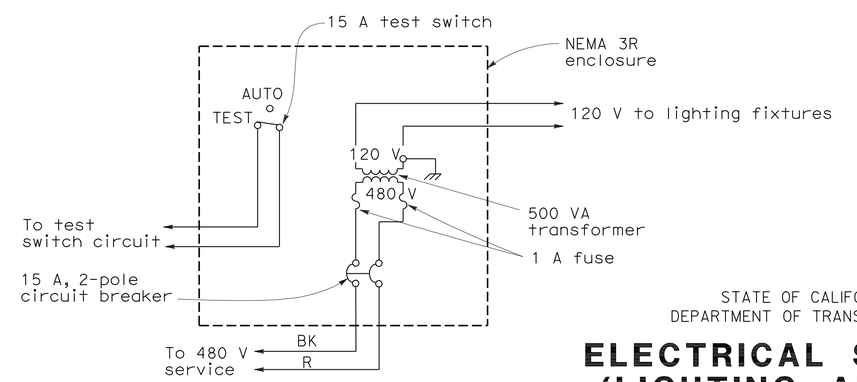

TYPE SC3 CONTROL

For 480 V switched sign circuit, see Note 4 for Type SC3A

STATE OF CALIFORNIA
DEPARTMENT OF TRANSPORTATION

ELECTRICAL SYSTEMS (LIGHTING AND SIGN ILLUMINATION CONTROL)

NO SCALE

RSP ES-15D DATED OCTOBER 5, 2007 SUPERCEDES STANDARD PLAN ES-15D DATED MAY 1, 2006 - PAGE 472 OF THE STANDARD PLANS BOOK DATED MAY 2006.

REVISED STANDARD PLAN RSP ES-15D