Dist	COUNTY	ROUTE	POST MILES TOTAL PROJECT	SHEET No.	TOTAL SHEETS
02	Sis	5	2.7/R11.4	2	30

Denise Fuzeré 10-06-10
REGISTERED CIVIL ENGINEER DATE

07-16-10
PLANS APPROVAL DATE

REGISTERED PROFESSIONAL ENGINEER DENISE FUZERE No. C69865 Exp. 09/30/10 CIVIL STATE OF CALIFORNIA

THE STATE OF CALIFORNIA OR ITS OFFICERS OR AGENTS SHALL NOT BE RESPONSIBLE FOR THE ACCURACY OR COMPLETENESS OF SCANNED COPIES OF THIS PLAN SHEET.

NOTES:

1. DIMENSIONS OF THE PAVEMENT STRUCTURES (STRUCTURAL SECTIONS) ARE SUBJECT TO TOLERANCES SPECIFIED IN THE STANDARD SPECIFICATIONS.
2. SUPERELEVATIONS AS SHOWN OR AS DIRECTED BY THE ENGINEER.
3. EXISTING UTILITY FACILITIES HAVE NOT BEEN PLOTTED ON THESE PLANS.
4. FOR COMPLETE RIGHT OF WAY AND ACCURATE ACCESS DATA, SEE RIGHT OF WAY RECORD MAPS AT THE DISTRICT OFFICE.

ABBREVIATIONS

ON	ON-RAMP
OFF	OFF-RAMP
CPACP	COLD PLANE ASPHALT CONCRETE PAVEMENT
RAC	RUBBERIZED ASPHALT CONCRETE

3

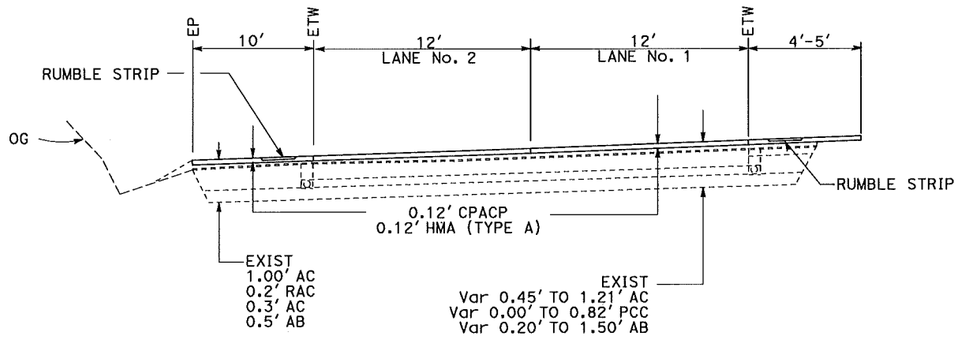

PM R7.24/R6.75 SB

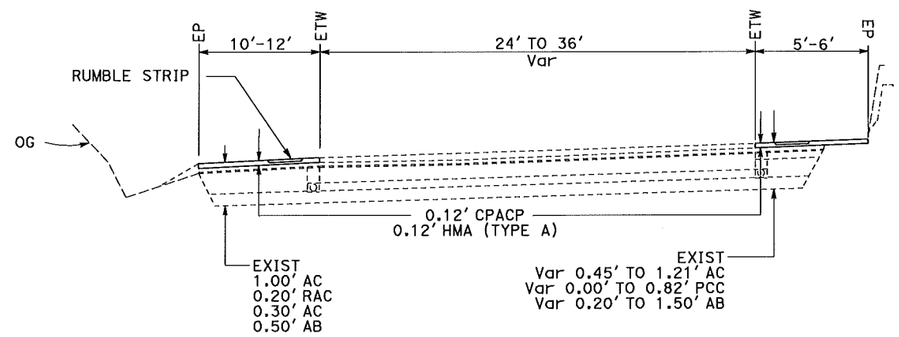

PM R9.32/R11.35 SB

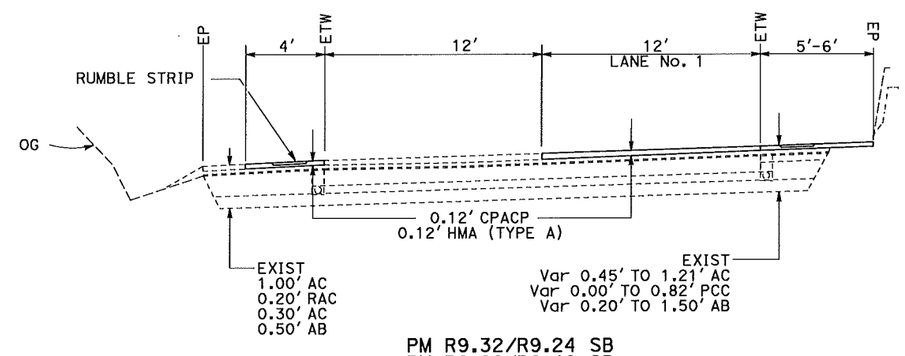

PM R9.32/R9.24 SB
PM R9.68/R8.46 SB
PM R8.43/R7.24 SB

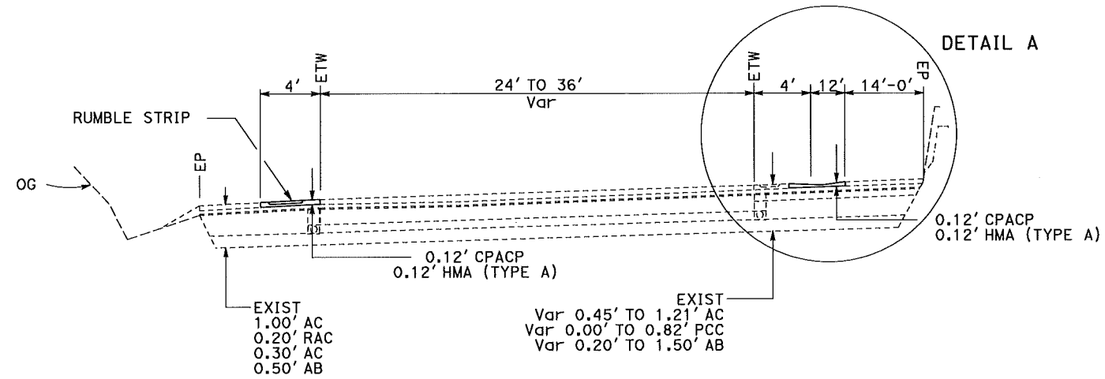

MEDIAN SHOULDER ONLY PM 4.60/4.23 SB
R† SHOULDER ONLY PM 3.05/R6.75 SB

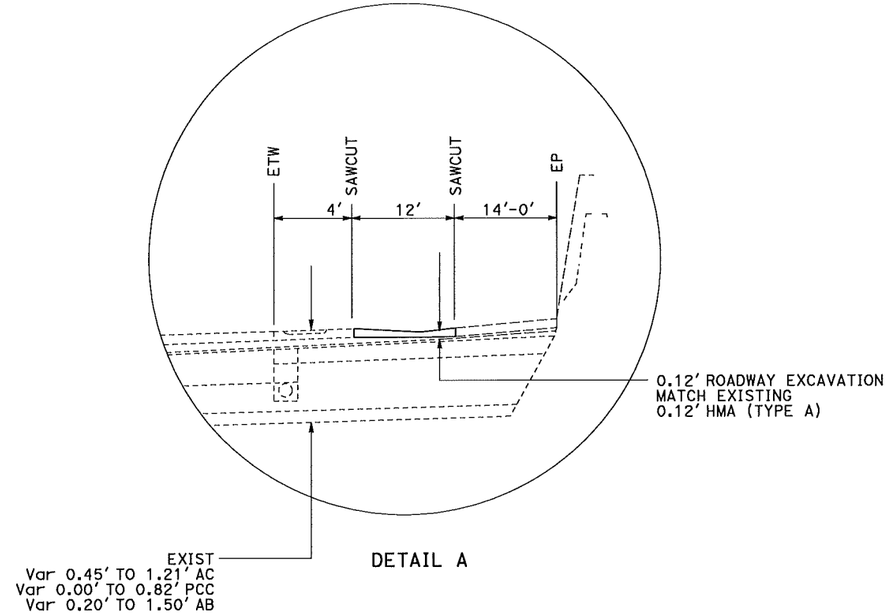

DETAIL A

3 REVISED PER ADDENDA NO. 3 DATED OCTOBER 7, 2010

TYPICAL CROSS SECTIONS

NO SCALE

X-1

REVISED BY	DATE REVISED

DENISE FUZERÉ — KARLIE J. SMITH — CALCULATED-DESIGNED BY / CHECKED BY

FUNCTIONAL SUPERVISOR — LANCE BROWN

STATE OF CALIFORNIA - DEPARTMENT OF TRANSPORTATION — MAINTENANCE ENGINEERING

P:\proj1\02\35000\plans\pse\Addendum_10_06_2010\23e000ca001.add

LAST REVISION 07-16-10 — DATE PLOTTED => 07-OCT-2010 — TIME PLOTTED => 10:53

Dist	COUNTY	ROUTE	POST MILES TOTAL PROJECT	SHEET No.	TOTAL SHEETS
02	Sis	5	2.7/R11.4	2A	30

Denise Fuzeré 10-06-10
REGISTERED CIVIL ENGINEER DATE

07-16-10
PLANS APPROVAL DATE

REGISTERED PROFESSIONAL ENGINEER DENISE FUZERE No. C69865 Exp. 09/30/10 CIVIL STATE OF CALIFORNIA

THE STATE OF CALIFORNIA OR ITS OFFICERS OR AGENTS SHALL NOT BE RESPONSIBLE FOR THE ACCURACY OR COMPLETENESS OF SCANNED COPIES OF THIS PLAN SHEET.

3

NOTES:

1. DIMENSIONS OF THE PAVEMENT STRUCTURES (STRUCTURAL SECTIONS) ARE SUBJECT TO TOLERANCES SPECIFIED IN THE STANDARD SPECIFICATIONS.
2. SUPERELEVATIONS AS SHOWN OR AS DIRECTED BY THE ENGINEER.
3. EXISTING UTILITY FACILITIES HAVE NOT BEEN PLOTTED ON THESE PLANS.
4. FOR COMPLETE RIGHT OF WAY AND ACCURATE ACCESS DATA, SEE RIGHT OF WAY RECORD MAPS AT THE DISTRICT OFFICE.
5. DO NOT PAVE WEIGH-IN-MOTION SCALES

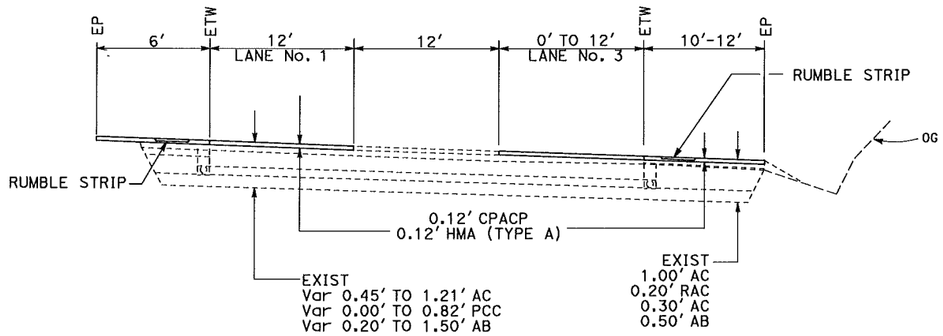

PM R6.06/R9.16 NB

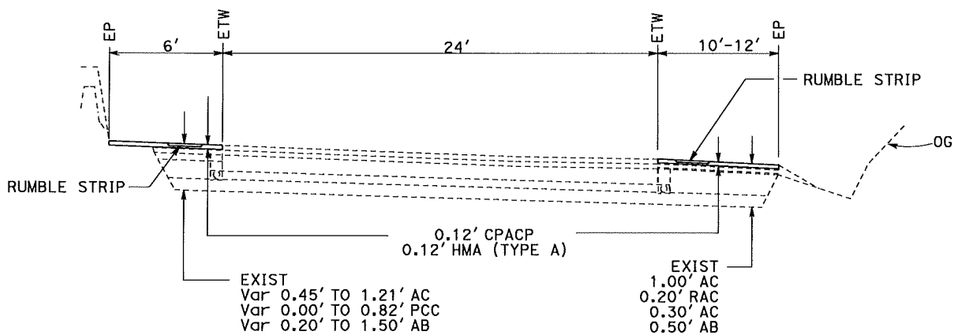

PM R9.26/R11.30 NB

OG

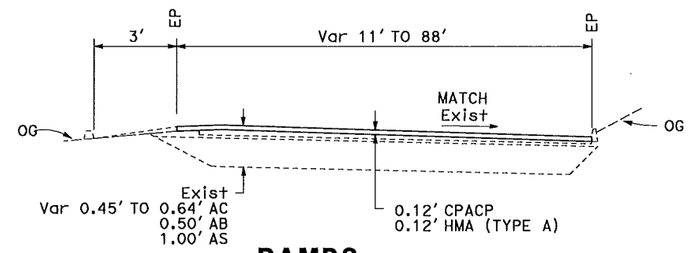

RAMPS

DUNSMUIR Ave NB/SB OFF PM 3.90
DUNSMUIR Ave NB/SB ON PM 3.90
MOTT Rd NB/SB OFF PM 5.90
MOTT Rd NB/SB ON PM 5.90
CENTRAL DUNSMUIR Ave SB OFF PM 3.05
ROUTE 89 NB OFF PM R8.60
ROUTE 89 NB ON PM R9.00

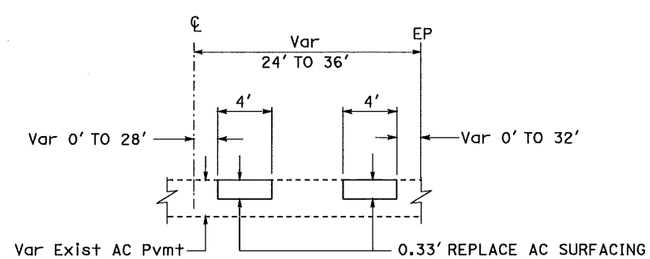

REPLACE AC SURFACING
(TYPICAL BOTH DIRECTIONS)

3 **ADDED PER ADDENDA NO. 3 DATED OCTOBER 7, 2010**

TYPICAL CROSS SECTIONS
NO SCALE **X-1A**

REVISED BY	DATE REVISED

CALCULATED-DESIGNED BY	DENISE FUZERÉ
CHECKED BY	KARLIE J. SMITH
FUNCTIONAL SUPERVISOR	LANCE BROWN

STATE OF CALIFORNIA - DEPARTMENT OF TRANSPORTATION
Caltrans MAINTENANCE ENGINEERING

P:\proj\02\3E000_plans\pse\Addendum_10_06_2010\23e000ca001a.add

LAST REVISION 00-00-00 | DATE PLOTTED => 06-OCT-2010 | TIME PLOTTED => 13:47

Dist	COUNTY	ROUTE	POST MILES TOTAL PROJECT	SHEET No.	TOTAL SHEETS
02	Sis	5	2.7/R11.4	21	30

Denise Fuzeré 10-06-10
REGISTERED CIVIL ENGINEER DATE

07-16-10
PLANS APPROVAL DATE

REGISTERED PROFESSIONAL ENGINEER DENISE FUZERE No. C69865 Exp. 09/30/10 CIVIL STATE OF CALIFORNIA

THE STATE OF CALIFORNIA OR ITS OFFICERS OR AGENTS SHALL NOT BE RESPONSIBLE FOR THE ACCURACY OR COMPLETENESS OF SCANNED COPIES OF THIS PLAN SHEET.

NOTES:

1. (N) NOT A SEPARATE PAY ITEM, FOR INFORMATION ONLY
2. EXISTING UTILITY FACILITIES HAVE NOT BEEN PLOTTED ON THESE PLANS.

ABBREVIATIONS:

ON ON-RAMP
OFF OFF-RAMP

3

ROADWAY QUANTITIES SUMMARY

DESCRIPTION	POSTMILE LIMITS	COLD PLANE ASPHALT CONCRETE PAVEMENT	HMA	TACK COAT	RUMBLE STRIP
		SQYD	TON	TON	Sta
NB LANES No. 1 AND 3, MEDIAN AND Rt SHOULDER	R6.06/R9.16	120,818	19,641	68.8	925
NB MEDIAN AND Rt SHOULDER	R9.26/R11.30				
SB Rt SHOULDER	3.05/R6.75				
SB LANE No. 1, MEDIAN AND Rt SHOULDER	R8.43/R7.24				
SB LANE No. 1, MEDIAN AND Rt SHOULDER	R9.18/R8.46				
SB LANE No. 1, MEDIAN AND Rt SHOULDER	R9.32/R9.24				
SB MEDIAN AND Rt SHOULDER	R9.32/R11.35				
SB LANES No. 1 AND 2, MEDIAN AND Rt SHOULDER	R7.24/R6.75				
ROADWAY EXCAVATION	4.60/4.43	2388	247*	0.8	
FULL-DEPTH DIG OUT	R9.19/R9.20				
RAMPS:		61,023	5102	17.9	
DUNSMUIR Ave OFF NB	3.74/3.85				
DUNSMUIR Ave ON NB	3.87/4.00				
DUNSMUIR Ave OFF SB	3.88/4.12				
DUNSMUIR Ave ON SB	3.57/3.85				
MOTT Rd OFF NB	5.80/5.94				
MOTT Rd ON NB	5.96/R6.13				
MOTT Rd OFF SB	5.92/R6.28				
MOTT Rd ON SB	5.51/5.89				
CENTRAL DUNSMUIR Ave OFF SB	2.82/3.05				
Rte 5/89 OFF NB	R8.86/R8.98				
Rte 5/89 ON / Mt SHASTA OFF NB	R8.49/R8.62				
TRUCK INSPECTION FACILITY OFF	R7.29/R7.43				
	TOTAL	184,229	24,990	87.5	925

ROADWAY EXCAVATION

POSTMILE LIMITS	ROADWAY EXCAVATION	HMA	CLASS II AB	CTPB	3" PLASTIC PIPE (ED)	3" PLASTIC PIPE (EDO)	FILTER FABRIC	TPM
	CY	TON	CY	CY	LF	LF	SQYD	SQYD
PM R9.19/R9.20	51.0	28	14.0	13.0	60.0	45.0	81.0	2.0
PM 4.60/4.23	104.1	219						
TOTAL	155.1	247*	14.0	13.0	60.0	45.0	81.0	2.0

* TOTAL ON QUANTITY SUMMARY TABLE

REPLACE ASPHALT CONCRETE SURFACING

POST MILE LIMITS	DIRECTION	Approx No. OF DIGOUTS	DEPTH (N)	WIDTH (N)	QUANTITY
PM - PM			LF	LF	CY
R6.12-R11.35	NB	20	.33	4-6	125
2.77-R11.35	SB	20	.33	4-6	125
TOTAL					250

3 REVISED PER ADDENDA NO. 3 DATED OCTOBER 7, 2010

SUMMARY OF QUANTITIES

Q-1

REVISED BY | DATE REVISED
DENISE FUZERÉ | KARLIE J. SMITH
CALCULATED-DESIGNED BY | CHECKED BY
FUNCTIONAL SUPERVISOR | LANCE BROWN
STATE OF CALIFORNIA - DEPARTMENT OF TRANSPORTATION
Caltrans MAINTENANCE ENGINEERING

P:\proj1\02\3E000_plans\pse\Addendum_10_06_2010\23e000pa001.add

LAST REVISION 07-16-10 | DATE PLOTTED => 07-OCT-2010 | TIME PLOTTED => 11:06