| Dist | COUNTY | ROUTE | POST MILES TOTAL PROJECT | SHEET No. | TOTAL SHEETS |
|---|---|---|---|---|---|
| 02 | Las | 395 | 61.5/R76.6 | 72 | 161 |

REGISTERED CIVIL ENGINEER 01-10-14 DATE

03-24-14
PLANS APPROVAL DATE

REGISTERED PROFESSIONAL ENGINEER BYRON STANLEY No. C60161 Exp. 6-30-14 CIVIL STATE OF CALIFORNIA

*THE STATE OF CALIFORNIA OR ITS OFFICERS OR AGENTS SHALL NOT BE RESPONSIBLE FOR THE ACCURACY OR COMPLETENESS OF SCANNED COPIES OF THIS PLAN SHEET.*

2

NOTE:

1. PLACE HMA (Misc AREA) TO DRAIN AFTER MBGR INSTALLATION.

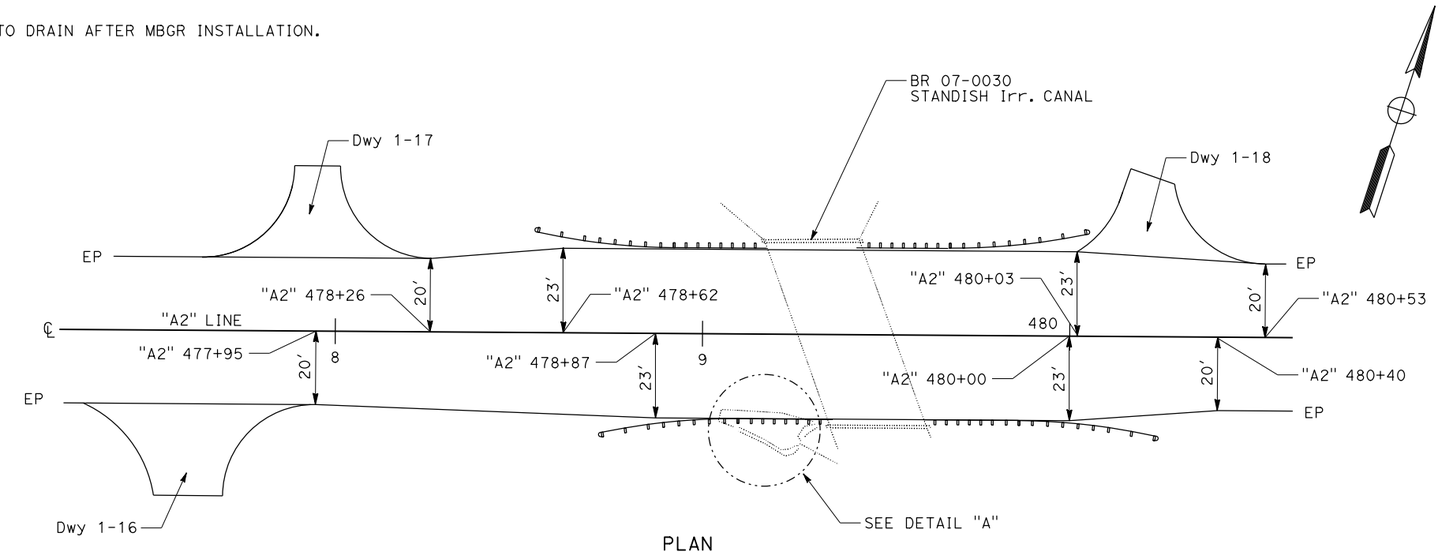


PLAN

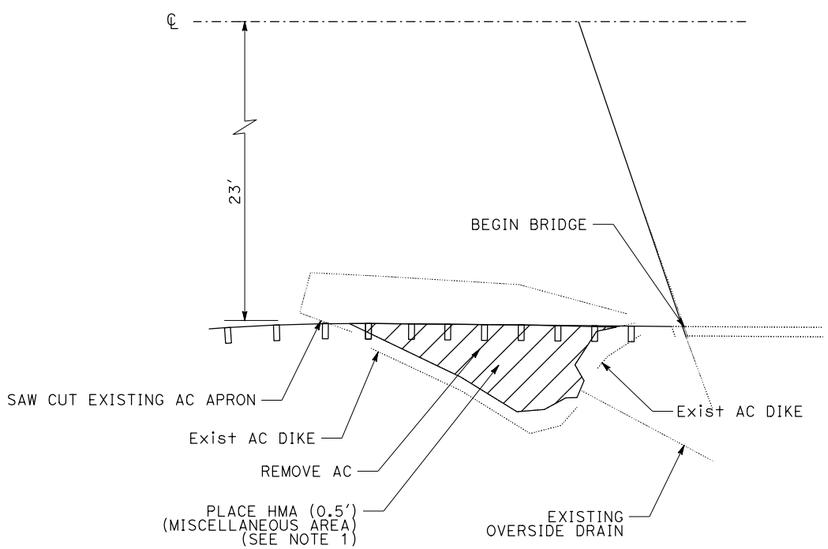


**DETAIL A**

**STANDISH IRRIGATION CANAL, BRIDGE No. 07-0030, PM 62.19**

**2 REPLACED PER ADDENDUM No. 2 DATED MAY 23, 2014**

**CONSTRUCTION DETAILS**

NO SCALE

**C-7**

STATE OF CALIFORNIA - DEPARTMENT OF TRANSPORTATION

Caltrans® **DESIGN**

FUNCTIONAL SUPERVISOR: STEVE TOPAL

CALCULATED-DESIGNED BY: WILL LESLIE

CHECKED BY: BYRON STANLEY

REVISED BY

DATE REVISED

P:\proj2\02\3c071_plans\contract_plans\Addenda 05-23-14\23c071ga007.dgn

LAST REVISION 01-10-14

DATE PLOTTED => 23-MAY-2014
TIME PLOTTED => 08:41

| Dist | COUNTY | ROUTE | POST MILES TOTAL PROJECT | SHEET No. | TOTAL SHEETS |
|---|---|---|---|---|---|
| 02 | Las | 395 | 61.5/R76.6 | 75 | 161 |

REGISTERED CIVIL ENGINEER 01-10-14 DATE

03-24-14
PLANS APPROVAL DATE

REGISTERED PROFESSIONAL ENGINEER BYRON STANLEY No. C60161 Exp. 6-30-14 CIVIL STATE OF CALIFORNIA

*THE STATE OF CALIFORNIA OR ITS OFFICERS OR AGENTS SHALL NOT BE RESPONSIBLE FOR THE ACCURACY OR COMPLETENESS OF SCANNED COPIES OF THIS PLAN SHEET.*

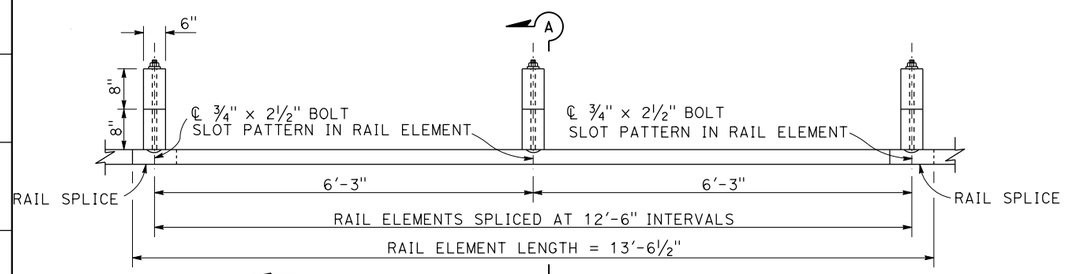


PLAN

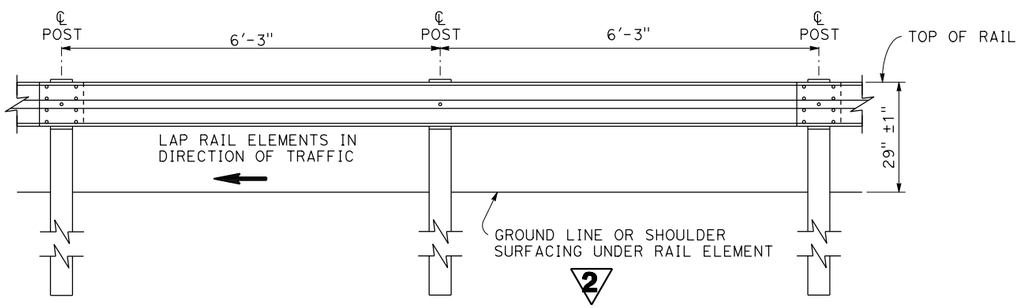


ELEVATION

## METAL BEAM GUARD RAILING WITH WOOD POST AND BLOCKS

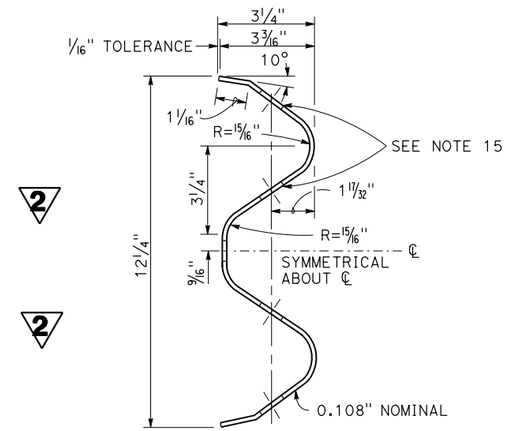


SECTION THRU
RAIL ELEMENT

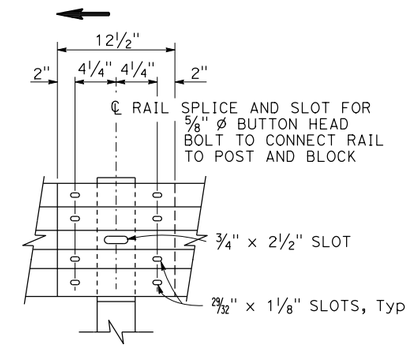


ELEVATION

## RAIL ELEMENT SPLICE DETAIL

a) Connect the over lapped end of the rail elements with ⅝" Ø x 1⅜" button head oval shoulder splice bolts inserted into the 29⁄32" x 1⅛" slots and bolted together with ⅝" Ø recessed hex nuts. Recess of hex nut points toward rail element. A total of 8 bolts and nuts are to be used at each rail splice connection.

b) The ends of the rail elements are to be overlapped in the direction of traffic (see details).

c) Where end cap is to be attached to the end of a rail element, a total of 4 of the above described splice bolts and nuts are to be used.

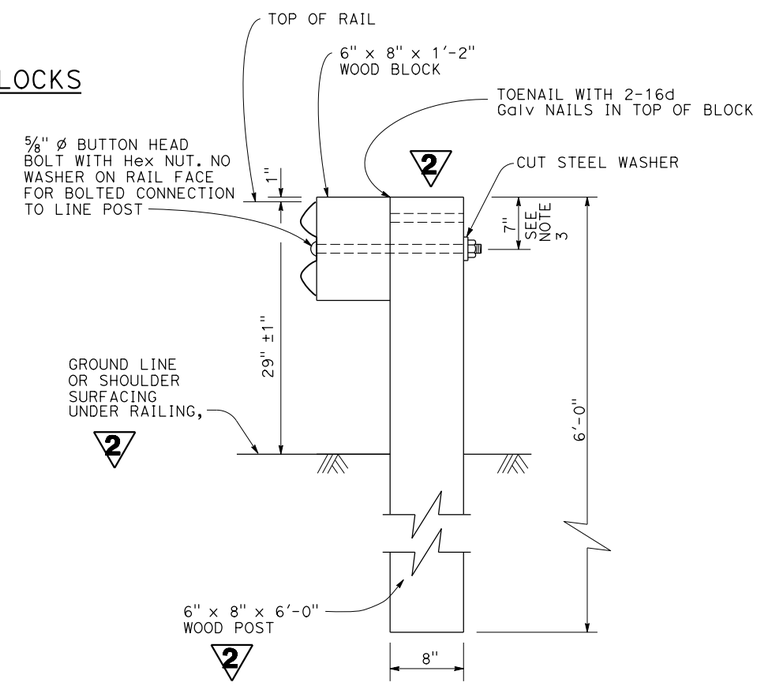


SECTION A-A
TYPICAL WOOD LINE
POST INSTALLATION
See Note 4

**2 REPLACED PER ADDENDUM No. 2 DATED MAY 23, 2014**

# CONSTRUCTION DETAILS
# METAL BEAM GUARD RAILING
# STANDARD RAILING SECTION
# (WOOD POST WITH WOOD BLOCK)

NO SCALE

**C-10**

| REVISED BY | DATE REVISED |
|---|---|
| WILL LESLIE | BYRON STANLEY |
| CALCULATED-DESIGNED BY | CHECKED BY |
| FUNCTIONAL SUPERVISOR | STEVE TOPAL |

STATE OF CALIFORNIA - DEPARTMENT OF TRANSPORTATION
Caltrans® DESIGN

P:\proj2\02\3c071_plans\contract_plans\Addenda 05-23-14\23c071ga010.dgn

LAST REVISION 01-10-14 | DATE PLOTTED => 23-MAY-2014 | TIME PLOTTED => 08:41

| Dist | COUNTY | ROUTE | POST MILES TOTAL PROJECT | SHEET No. | TOTAL SHEETS |
|---|---|---|---|---|---|
| 02 | Las | 395 | 61.5/R76.6 | 102 | 161 |

REGISTERED CIVIL ENGINEER 01-10-14 DATE

03-24-14
PLANS APPROVAL DATE

REGISTERED PROFESSIONAL ENGINEER
BYRON STANLEY
No. C60161
Exp. 6-30-14
CIVIL
STATE OF CALIFORNIA

*THE STATE OF CALIFORNIA OR ITS OFFICERS OR AGENTS SHALL NOT BE RESPONSIBLE FOR THE ACCURACY OR COMPLETENESS OF SCANNED COPIES OF THIS PLAN SHEET.*

# TRAFFIC HANDLING QUANTITES

| SHEET NUMBER | TEMPORARY RAILING (TYPE K) | TEMPORARY IN-LINE CRASH CUSHION | CHANNELIZER (SURFACE MOUNTED) |
|---|---|---|---|
| | LF | EA | EA |
| TH-1 | 240 | 4 | 30 |
| TOTAL | 240 | 4 | 30 |

2

2

2

2 REPLACED PER ADDENDUM No. 2 DATED MAY 23, 2014

## TRAFFIC HANDLING QUANTITES
## THQ-1

STATE OF CALIFORNIA - DEPARTMENT OF TRANSPORTATION
Caltrans® DESIGN

FUNCTIONAL SUPERVISOR: STEVE TOPAL
CALCULATED-DESIGNED BY: WILL LESLIE
CHECKED BY: BYRON STANLEY
REVISED BY
DATE REVISED

P:\proj2\02\3c071_plans\contract_plans\Addenda 05-23-14\23c071mf001.dgn

LAST REVISION 01-10-14
DATE PLOTTED => 23-MAY-2014
TIME PLOTTED => 08:41

| Dist | COUNTY | ROUTE | POST MILES TOTAL PROJECT | SHEET No. | TOTAL SHEETS |
|---|---|---|---|---|---|
| 02 | Las | 395 | 61.5/R76.6 | 132 | 161 |

REGISTERED CIVIL ENGINEER 01-10-14 DATE

03-24-14
PLANS APPROVAL DATE

REGISTERED PROFESSIONAL ENGINEER BYRON STANLEY No. C60161 Exp. 6-30-14 CIVIL STATE OF CALIFORNIA

*THE STATE OF CALIFORNIA OR ITS OFFICERS OR AGENTS SHALL NOT BE RESPONSIBLE FOR THE ACCURACY OR COMPLETENESS OF SCANNED COPIES OF THIS PLAN SHEET.*

# ROADSIDE SIGN QUANTITIES

| SHEET No. | SIGN No. (1-2) | SIGN CODE FEDERAL | SIGN CODE CALIFORNIA | PANEL SIZE INCHES | SIGN MESSAGE/DESCRIPTION | POST SIZE AND LENGTH METAL | | ROADSIDE SIGN ONE POST EACH | ROADSIDE SIGN TWO POST EACH | FURNISH SINGLE SHEET ALUMINUM SIGN (0.063"-UNFRAMED) SQFT | REMOVE ROADSIDE SIGN EACH | RESET ROADSIDE SIGN EACH | REMARKS |
|---|---|---|---|---|---|---|---|---|---|---|---|---|---|
| 14 | 14-12 | | SR4 | | | | | | | | | 1 | |
| | 14-13 | S5-2 | | | END SCHOOL ZONE | | | | | | | 1 | |
| | 14-14 | G78 | | | | | | | | | | 1 | |
| | | G25 | | | LASSEN A-27 | | | | | | | | |
| | | G36 | | | DIRECTIONAL ARROW | | | | | | | | |
| | 14-15 | W11-1 | | | BICYCLE CROSSING | | | | | | | 1 | FLOURESCENT YELLOW-GREEN |
| | | W16-1P | | | SHARE THE ROAD | | | | | | | | |
| | 14-16 | | G26-2 | | 395 | | | | | | | | |
| | | G47 | | | | | | | | | | 1 2 | NORTH |
| 15 | 15-1 | W1-4 | | | REVERSE CURVE | | | | | | | 1 | FACING SOUTH BOUND, LEFT |
| | | W13-1 | | | 40 MPH | | | | | | | | DOUBLE SIDED ONE POST |
| | | S1-1 | | | SCHOOL PLAQUE | | | | | | | | FACING NORTH BOUND, FYG |
| | | W16-7P | | | SCHOOL CROSSING | | | | | | | | FLOURESCENT YELLOW-GREEN |
| | 15-2 | W1-4 | | | LEFT | | | | | | | 1 | |
| | | W13-1 | | | 40 MPH | | | | | | | | |
| | 15-3 | S1-1 | | | SCHOOL PLAQUE | | | | | | | 1 | FLOURESCENT YELLOW-GREEN |
| | | W16-7P | | | SCHOOL CROSSING | | | | | | | | FLOURESCENT YELLOW-GREEN |
| | 15-4 | G9 | | 72" x 30" | | | | | | | | 1 | LITCHFIELD |
| | 15-5 | G5 | | 78" x 42" | | | | | | | | 1 | RAVENDALE 27, ALTURAS 87, LAKEVIEW 142 |
| | 15-6 | | SPL | | RADAR FEEDBACK | | | | | | | 1 | SOLAR |
| | 15-7 | | SR4 | | | | | | | | | 1 | SCHOOL, SPEED LIMIT 25 |
| | 15-8 | S5-2 | | | END SCHOOL ZONE | | | | | | | 1 | FLOURESCENT YELLOW-GREEN |
| | 15-9 | G90 | | 84" x 30" | NEXT SERVICES 70 MILES | | | | | | | 1 | |
| | 15-10 | R2-1 | | | 65 MPH | | | | | | | 1 | |
| | | | R48-1 | | RADAR ENFORCED | | | | | | | | |
| | 15-11 | R2-1 | | | 50 MPH | | | | | | | 1 | |
| | | | R48-1 | | RADAR ENFORCED | | | | | | | | |
| 16 | 16-1 | | R6-3 | | TRUCKS 3 AXELS OR MORE, 55 MAXIMUM | | | | | | | 1 | |
| | 16-2 | | R2-4 | | SPEED ZONE AHEAD (50) | | | | | | | 1 | |
| | 16-3 | | R6-4 | | ALL VEHICLES WHEN TOWING 55 MAXIMUM | | | | | | | 1 | |
| | 16-4 | | S32 | | ADOPT A HIGHWAY | 2½" x 2½" | 12' | 1 | | 7.5 | | | |
| | | | S32A | | | | | | | 0.83 | | | |
| | | | S32-1 | | | | | | | | | | RECOGNITION PANEL PROVIDED BY STATE |
| | 16-5 | | S32 | | ADOPT A HIGHWAY | | | | | | | 1 | |
| | | | S32A | | | | | | | | | | |
| | | | S32-1 | | | | | | | | | | |
| 20 | 20-1 | G91 | | 78" x 18" | | | | | | | | 1 | HONEY LAKE WILDLIFE AREA, FLEMING UNIT |
| | | | G200-81 | | WILDLIFE VIEWING | | | | | | | | |
| | | | G200-81A | | | | | | | | | | |
| | 20-2 | | S32 | | ADOPT A HIGHWAY | | | | | | | 1 | DOUBLE SIDED |
| | | | S32A | | | | | | | | | | |
| | | | S32-1 | | | | | | | | | | |
| | 20-3 | R1-1 | | | STOP | | | | | | | 1 | |
| | 20-4 | G91 | | 78" x 18" | | | | | | | | 1 | HONEY LAKE WILDLIFE AREA, FLEMING UNIT |
| | | | G200-81 | | WILDLIFE VIEWING | | | | | | | | |
| | | | G200-81A | | | | | | | | | | |
| 21 | 21-1 | | G81-66 | | | | | | | | | 1 | |
| SHEET 1 TOTALS | | | | | | | | 1 | 0 | 6.25 | 0 | 34 | |
| SHEET 2 TOTALS | | | | | | | | 0 | 0 | 0 | 2 | 33 | |
| SHEET 3 TOTALS | | | | | | | | 1 | 0 | 8.33 | 0 | 25 2 | |
| GRAND TOTAL | | | | | | | | 2 | 0 | 14.58 | 2 | 92 | |

2 **REPLACED PER ADDENDUM No. 2 DATED MAY 23, 2014**

2

**SIGN QUANTITIES**

**SQ-3**

| REVISED BY | DATE REVISED |
|---|---|
| WILL LESLIE | FRANK RIVAS |

CALCULATED-DESIGNED BY / CHECKED BY

FUNCTIONAL SUPERVISOR: STEVE TOPAL

STATE OF CALIFORNIA - DEPARTMENT OF TRANSPORTATION

Caltrans® DESIGN

P:\proj2\02\3c071_plans\contract_plans\Addenda 05-23-14\23c071oc003.dgn

LAST REVISION 01-10-14 | DATE PLOTTED => 23-MAY-2014 | TIME PLOTTED => 08:41

| Dist | COUNTY | ROUTE | POST MILES TOTAL PROJECT | SHEET No. | TOTAL SHEETS |
|---|---|---|---|---|---|
| 02 | Las | 395 | 61.5/R76.6 | 133 | 161 |

REGISTERED CIVIL ENGINEER 01-10-14 DATE

03-24-14
PLANS APPROVAL DATE

REGISTERED PROFESSIONAL ENGINEER BYRON STANLEY No. C60161 Exp. 6-30-14 CIVIL STATE OF CALIFORNIA

*THE STATE OF CALIFORNIA OR ITS OFFICERS OR AGENTS SHALL NOT BE RESPONSIBLE FOR THE ACCURACY OR COMPLETENESS OF SCANNED COPIES OF THIS PLAN SHEET.*

NOTE:

1. (N) - NOT A SEPARATE PAY ITEM, FOR INFORMATION ONLY

## ROADWAY QUANTITIES

| POSTMILE | | STATION | | | HMA TYPE A | CLASS 2 AGGREGATE BASE | ROADWAY EXCAVATION | SHOULDER BACKING | TACK COAT | PULVERIZED ROADBED | ASPHALTIC EMULSION (PULVERIZED ROADBED) | CEMENT (PULVERIZED ROADBED) | SAND COVER (PULVERIZED ROADBED) | (N) EMBANKMENT | COMMENTS |
|---|---|---|---|---|---|---|---|---|---|---|---|---|---|---|---|
| BEGIN | END | LINE | BEGIN | END | TON | CY | CY | TON | TON | SQYD | TON | TON | TON | CY | |
| R61.6 | 62.2 | "A2" | 444+50 | 479+40 | 5698 | 5125 | 6442 | 536 | 6.6 | | | | | 620 | BEGIN LOCATION 1 |
| 62.2 | 62.7 | "A2" | 479+40 | 506+00 | 4322 | 3897 | 5473 | 450 | 5.0 | | | | | 954 | |
| 62.7 | 63.2 | "A2" | 506+00 | 532+40 | 4329 | 3908 | 5197 | 450 | 5.0 | | | | | 954 | |
| 63.2 | 63.7 | "A2" | 532+40 | 558+80 | 4320 | 3894 | 5116 | 466 | 5.0 | | | | | 785 | |
| 63.7 | 64.3 | "A2" | 558+80 | 590+11 | 5168 | 4662 | 6100 | 544 | 6.0 | | | | | 694 | |
| 64.3 | 64.8 | "A2" | 590+11 | 615+68 | 4104 | 3724 | 4834 | 484 | 4.8 | | | | | 262 | |
| 64.8 | 65.1 | "A2" | 615+68 | 630+25 | 2119 | 1914 | 2780 | 246 | 2.5 | | | | | 45 | END LOCATION 1 |
| | | | | | | | | | | | | | | | |
| 69.5 | 70.1 | "A3" | 3669+50 | 3703+57 | 4953 | 4461 | 6681 | 510 | 5.7 | | | | | 983 | BEGIN LOCATION 2 ( ROAD A3) |
| 70.1 | 70.6 | "A3" | 3703+57 | 3729+00 | 3998 | 3593 | 5254 | 358 | 4.6 | | | | | 252 | END LOCATION 2 |
| | | | | | | | | | | | | | | | |
| 71.0 | 71.5 | "A4" | 3760+60 | 3776+60 | 2140 | 1941 | 2908 | 392 | 2.5 | | | | | 62 | Beg LOCATION 3 ,LAMBERT LANE |
| 71.5 | 71.8 | "A4" | 3776+60 | 3792+00 | 2103 | 1899 | 2775 | 316 | 2.5 | | | | | 45 | CUTOFF ROAD |
| 71.8 | 72.5 | "A4" | 3792+00 | 3828+00 | 4002 | 3633 | 5638 | 722 | 4.7 | | | | | 68 | TULE AVENUE |
| 72.5 | 72.8 | "A4" | 3828+00 | 3842+00 | 1830 | 1649 | 2343 | 268 | 2.2 | | | | | 20 | CENTER ROAD |
| 72.8 | 73.0 | "A4" | 3842+00 | 3854+50 | 1629 | 1468 | 1915 | 226 | 1.9 | | | | | 53 | |
| 73.0 | 73.5 | "A4" | 3854+50 | 3883+00 | 3730 | | | 630 | 4.3 | 10,362 | 2.4 | 51.8 | 15.5 | 665 | BEGIN PULVERIZATION |
| 73.5 | 74.0 | "A4" | 3883+00 | 3907+20 | 3154 | | | 620 | 3.7 | 8760 | 2.0 | 43.8 | 13.1 | 750 | STURGILL LANE (LOOP) |
| 74.0 | 74.5 | "A4" | 3907+20 | 3933+60 | 3478 | | 2 | 640 | 4.0 | 9660 | 2.2 | 48.3 | 14.5 | 554 | |
| 74.5 | 75.0 | "A4" | 3933+60 | 3960+00 | 3478 | | | 646 | 4.0 | 9660 | 2.2 | 48.3 | 14.5 | 647 | STURGILL LANE (LOOP) |
| 75.0 | 75.5 | "A4" | 3960+00 | 3986+40 | 3478 | | | 652 | 4.0 | 9660 | 2.2 | 48.3 | 14.5 | 698 | |
| 75.5 | R76.0 | "A4" | 3986+40 | 4005+12 | 2428 | | | 456 | 2.8 | 6745 | 1.5 | 33.7 | 10.1 | 423 | MAPES LANE |
| R76.0 | R76.6 | "A4" | 4005+12 | 4040+50 | 4657 | | | 854 | 5.4 | 12,936 | 3.0 | 64.7 | 19.4 | 662 | END LOCATON 3 |
| | | | | ROADWAY TOTAL | 75,118 | 45,768 | 63,456 | 10,466 | 87.2 | 67,783 | 15.5 | 338.9 | 101.7 | 10,196 | |
| | | | | DRIVEWAY TOTAL | 1866 | 1730 | 1170 | 450 | 4.3 | | | | | | |
| | | | | ROAD CONNECTIONS TOTAL | 330 | 311 | 15 | 98 | 1.1 | | | | | | |
| | | | | TOTAL | 77,314 | 47,809 | 64,641 | 11,014 | 92.6 | 67,783 | 15.5 | 338.9 | 101.7 | 10,196 | |

## RESET MAILBOX

| STATION | MAILBOX EA |
|---|---|
| "A2" 446+95 | 2 |
| "A2" 451+60 | 3 |
| "A2" 469+36 | 2 |
| "A2" 472+10 | 2 |
| "A2" 473+26 | 1 |
| "A2" 474+71 | 1 |
| "A2" 477+21 | 3 |
| "A2" 482+53 | 1 |
| "A2" 486+40 | 1 |
| "A2" 510+50 | 1 |
| "A2" 534+99 | 1 |
| "A2" 540+40 | 1 |
| "A2" 545+50 | 2 |
| "A2" 554+50 | 3 |
| "A2" 557+69 | 1 |
| "A2" 561+67 | 2 |
| "A2" 565+56 | 1 |
| "A2" 569+03 | 1 |
| "A2" 575+95 | 1 |
| "A2" 620+45 | 1 |
| "A2" 626+95 | 1 |
| "A2" 629+15 | 1 |
| TOTAL | 33 |

2

2

2

## RUMBLE STRIP

| LOCATION | STA |
|---|---|
| "A2" 444+00 TO 633+50 | 380 |
| TOTAL | 380 |

## SUBGRADE ENHANCEMENT GEOTEXTILE, (CLASS A1)

| STATION | | AREA |
|---|---|---|
| BEGIN | END | SQYD |
| "A2" 470+00 | "A2" 630+25 | 71,028 |
| "A4" 3761+00 | "A4" 3854+40 | 35,311 |
| | TOTAL | 106,339 |

## PLACE HMA (MISCELLANEOUS AREA)

| STATION | | AREA |
|---|---|---|
| BEGIN | END | SQYD |
| "A2" 479+04 | "A2" 479+31 | 10 |
| | TOTAL | 10 |

## COLD PLANE ASPHALT CONCRETE PAVEMENT

| LOCATION | SHEET | COLD PLANE ASPHALT CONCRETE PAVEMENT SQYD |
|---|---|---|
| MAINLINE "A2" | L-1 | 180 |
| STANDISH CANAL | L-4 | 6 |
| BUFFUM Rd | L-11 | 165 |
| COTTONWOOD Rd | L-12 | 155 |
| LEAVIT Ln | L-13 | 245 |
| MAINLINE "A2" | L-14 | 115 |
| MAINLINE "A3" | L-15 | 115 |
| SIERRA St | L-16 | 110 |
| MILFORD STREET | L-17 | 55 |
| STANDISH BUNTINGVILLE Rd | L-17 | 290 |
| CHURCH St | L-17 | 170 |
| MAINLINE "A3" | L-18 | 130 |
| MAINLINE "A4" DILL SLOUGH | L-19 | 180 |
| LAMBERT Ln | L-20 | 515 |
| CUTOFF Rd | L-22 | 550 |
| MARKET St | L-25 | 120 |
| CENTER Rd | L-25 | 275 |
| MAPES ROAD | L-37 | 530 |
| MAINLINE "A4" | L-39 | 720 |
| TOTAL | | 4626 |

2 REPLACED PER ADDENDUM No. 2 DATED MAY 23, 2014

## SUMMARY OF QUANTITIES

Q-1

REVISED BY | DATE REVISED

BYRON STANLEY | WILL LESLIE

CALCULATED-DESIGNED BY | CHECKED BY

FUNCTIONAL SUPERVISOR: STEVE TOPAL

STATE OF CALIFORNIA - DEPARTMENT OF TRANSPORTATION

Caltrans® DESIGN

P:\proj2\02\3c071_plans\contract_plans\Addenda 05-23-14\23c071pa001.dgn

LAST REVISION 01-10-14 | DATE PLOTTED => 23-MAY-2014 | TIME PLOTTED => 08:41