Dist	COUNTY	ROUTE	POST MILES TOTAL PROJECT	SHEET No.	TOTAL SHEETS
02	Sha	44	L0.3/R0.1	1	40

INDEX OF PLANS

SHEET No.	DESCRIPTION
1	TITLE
2-4	CONSTRUCTION AREA SIGNS
5	PLANT LIST
6-12	PLANTING PLAN
13-24	IRRIGATION PLAN
25, 26	LANDSCAPE DETAILS
27-29	IRRIGATION QUANTITIES
30-40	NEW AND REVISED STANDARD PLANS

STATE OF CALIFORNIA

DEPARTMENT OF TRANSPORTATION

PROJECT PLANS FOR CONSTRUCTION ON

STATE HIGHWAY

IN SHASTA COUNTY IN REDDING FROM LIBERTY STREET TO HILLTOP DRIVE OVERCROSSING

TO BE SUPPLEMENTED BY STANDARD PLANS DATED JULY 2006

LOCATION MAP

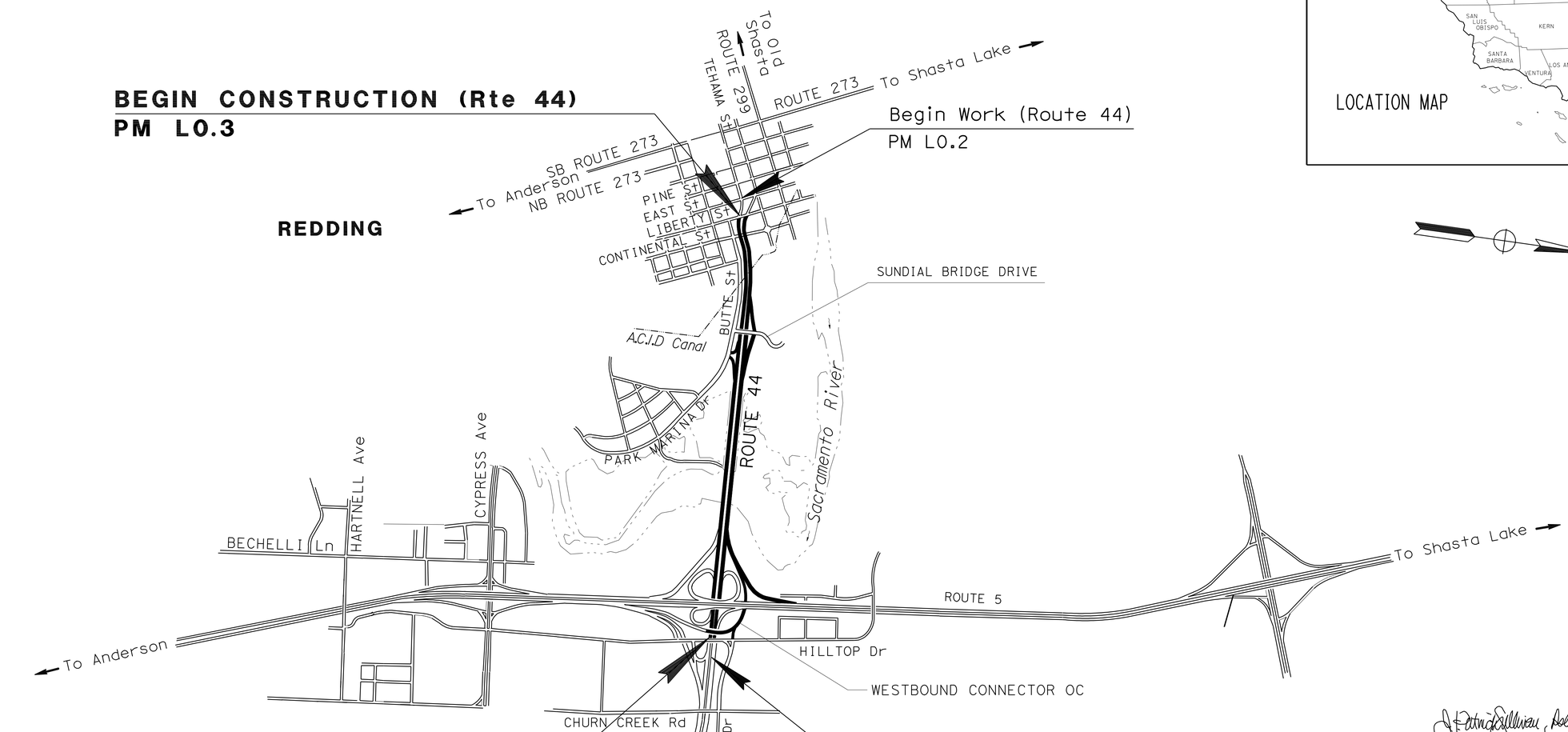

NO SCALE

THE CONTRACTOR SHALL POSSESS THE CLASS (OR CLASSES) OF LICENSE AS SPECIFIED IN THE "NOTICE TO BIDDERS."

LICENSED LANDSCAPE ARCHITECT

August 24, 2010

PLANS APPROVAL DATE

THE STATE OF CALIFORNIA OR ITS OFFICERS OR AGENTS SHALL NOT BE RESPONSIBLE FOR THE ACCURACY OR COMPLETENESS OF SCANNED COPIES OF THIS PLAN SHEET.

LICENSED LANDSCAPE ARCHITECT J. PATRICK SULLIVAN #3125 Signature 08-18-10 Renewal Date 03-29-12 Date STATE OF CALIFORNIA

CONTRACT No.	02-328044
PROJECT ID	0200000243

PROJECT MANAGER: PHIL BAKER

SENIOR LANDSCAPE ARCHITECT: RON FLORY

P:\proj2\02\32804_plans\pse\232804ab001.dgn

LAST REVISION 08-18-10

DATE PLOTTED => 25-AUG-2010
TIME PLOTTED => 09:37

DIST	COUNTY	ROUTE	POST MILES TOTAL PROJECT	SHEET No	TOTAL SHEETS
02	Sha	44	L0.3/R0.1	2	40

LICENSED LANDSCAPE ARCHITECT

08-24-10

PLANS APPROVAL DATE

LICENSED LANDSCAPE ARCHITECT J. PATRICK SULLIVAN #3125 Signature 06-28-12 Renewal Date 08-19-10 Date STATE OF CALIFORNIA

The State of California or its officers or agents shall not be responsible for the accuracy or completeness of electronic copies of this plan sheet.

To get to the Caltrans web site, go to: http://www.dot.ca.gov

NOTE:

1. FOR COMPLETE RIGHT OF WAY AND ACCURATE ACCESS DATA, SEE RIGHT OF WAY RECORD MAPS AT DISTRICT OFFICE.

LEGEND

1 POST SIGN

2 POST SIGN

ABBREVIATIONS

TCE TEMPORARY CONSTRUCTION EASEMENT

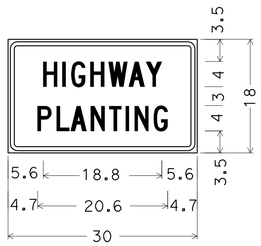

1.5" Radius, 0.6" Border, 0.4" Indent, Black on Orange;
[HIGHWAY] C;
[PLANTING] C;

C23B(CA) SIGN PANEL DETAIL

CONSTRUCTION AREA SIGNS (STATIONARY MOUNTED)

SIGN TYPE	SIGN CODE	PANEL SIZE (in)	SIGN MESSAGE	No. OF POSTS AND SIZE (in)	No. OF SIGNS
A	W20-1 & C23B (CA)	48 x 48 30 x 18	ROAD WORK AHEAD HIGHWAY PLANTING	(1)-4 x 6	6
B	G20-2	36.5 x 18.25	END ROAD WORK	(2)-4 x 4	5

EXACT SIGN LOCATION WILL BE DETERMINED BY ENGINEER

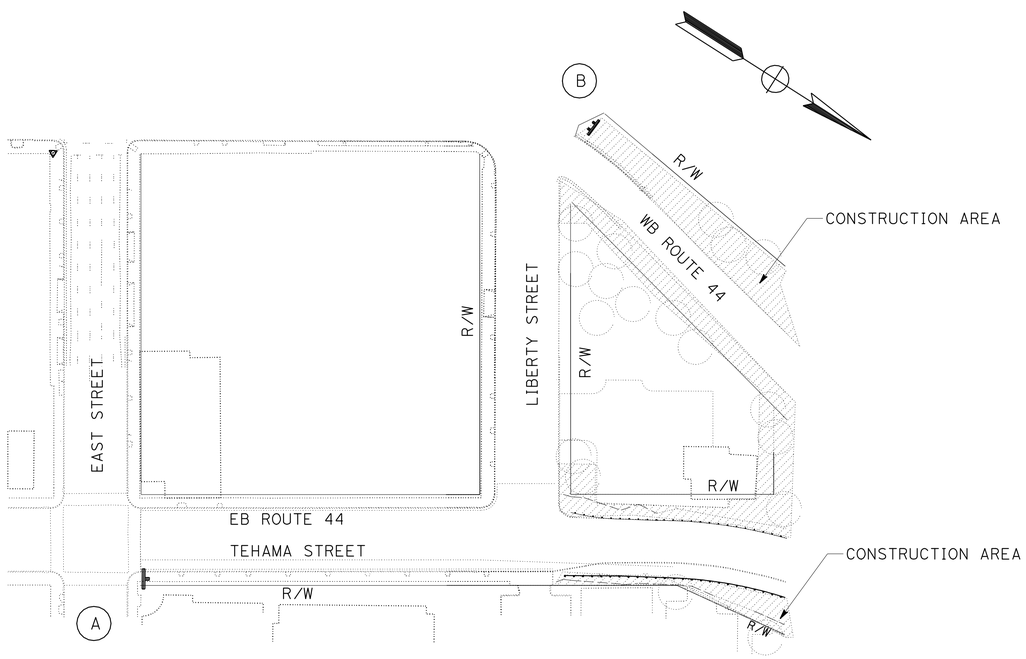

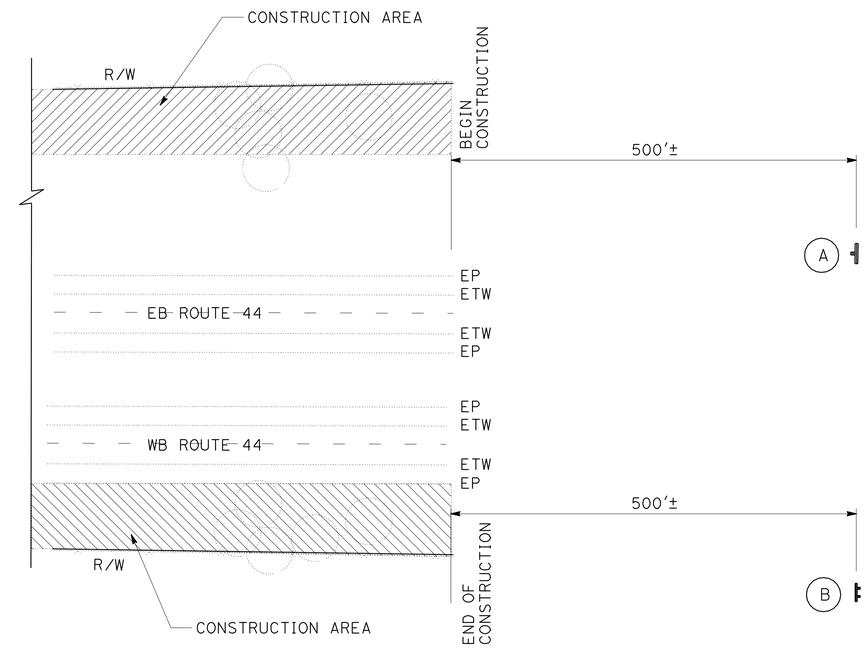

CONSTRUCTION AREA SIGN PLAN

CONSTRUCTION AREA SIGNS

NO SCALE

CS-1

THIS SHEET ACCURATE FOR LANDSCAPE WORK ONLY.

DATE	REVISED BY	DATE REVISED

CALCULATED/DESIGNED BY: J. PATRICK SULLIVAN
CHECKED BY: RON FLORY
PROJECT LANDSCAPE ARCHITECT: RON FLORY

STATE OF CALIFORNIA - DEPARTMENT OF TRANSPORTATION
Caltrans LANDSCAPE ARCHITECTURE

P:\proj2\02\32804_plans\pse\2328041a001.dgn

LAST REVISION 08-24-10
DATE PLOTTED => 25-AUG-2010
TIME PLOTTED => 09:37

DIST	COUNTY	ROUTE	POST MILES TOTAL PROJECT	SHEET No	TOTAL SHEETS
02	Sha	44	L0.3/R0.1	3	40

LICENSED LANDSCAPE ARCHITECT

08-24-10

PLANS APPROVAL DATE

LICENSED LANDSCAPE ARCHITECT J. PATRICK SULLIVAN #3125 Signature 06-28-12 Renewal Date 08-19-10 Date STATE OF CALIFORNIA

The State of California or its officers or agents shall not be responsible for the accuracy or completeness of electronic copies of this plan sheet.

To get to the Caltrans web site, go to: http://www.dot.ca.gov

NOTE:

1. FOR COMPLETE RIGHT OF WAY AND ACCURATE ACCESS DATA, SEE RIGHT OF WAY RECORD MAPS AT DISTRICT OFFICE.

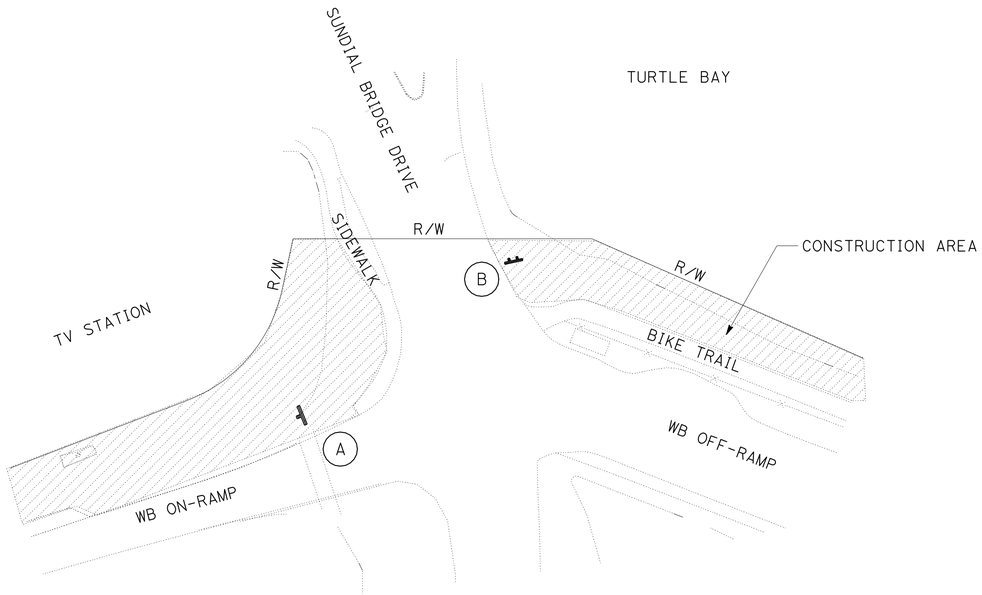

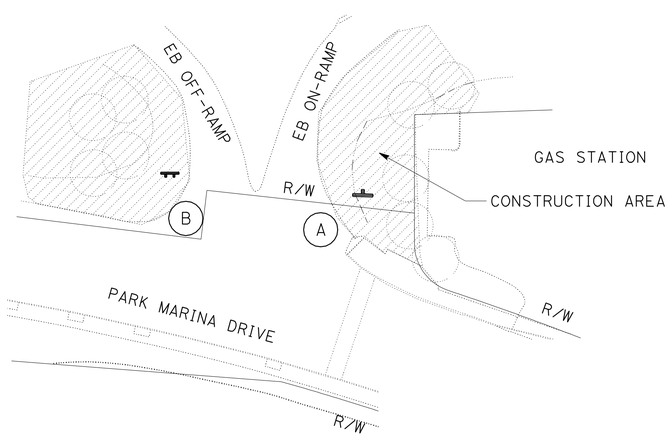

EXISTING LOOP DETECTORS

ID No.	ACT LOC	TYPE	DESCRIPTION
302	Sha-44, PM L0.384	TREND	MAINLINE Approx 60 FT EAST OF LIBERTY ST (2 LOOPS EB & 2 LOOPS WB)
R113	Sha-44, PM L0.843	RAMP	AUDITORIUM DR WB ON-RAMP Approx 270 FT BACK OF GORE NOSE (1 LOOP)
R114	Sha-44, PM L0.843	RAMP	PARK MARINA EB OFF-RAMP Approx 100 FT FROM PARK MARINA CL (1 LOOP)
R115	Sha-44, PM L0.958	RAMP	PARK MARINA EB ON-RAMP Approx 320 FT FROM GORE NOSE (1 LOOP)
R116	Sha-44, PM L0.969	RAMP	AUDITORIUM DR WB OFF-RAMP Approx 65 FT FROM GORE NOSE (2 LOOPS)
161	Sha-44, PM L0.969	CONTROL	ON MAINLINE 800FT EAST OF AUDITORIUM OC (2 LOOPS WB & 2 LOOPS EB)
R117	Sha-44, PM L1.562	RAMP	SR 44 EB OFF TO SB I-5 Approx 260 FT FROM GORE NOSE (1 LOOP)
TBD	TBD	RAMP	DANA TO WB SR 44 ON-RAMP (NEW) Approx 360 FT FROM HILLTOP CL (2 LOOPS)
R1	Sha-05, PM R15.71	RAMP	NB I-5 TO WB SR 44 Approx 100 FT FROM DANA RAMP MERGE (2 LOOPS)
R5	Sha-05, PM R15.71	RAMP	SB I-5 TO WB SR 44 Approx 130 FT FROM GORE NOSE (1 LOOP)

EXISTING TRAFFIC MANAGEMENT SYSTEM ELEMENTS (N)

ELEMENT	LOCATION CO-RTE-PM	DESCRIPTION
CCTV	Sha-44-PM L0.85	NEAR BUTTE ST OC (TO BE INSTALLED AS PART OF D2D)
CCTV	Sha-05-PM R15.42	IN I-5 MEDIAN AT CENTRAL I/C

CONSTRUCTION AREA SIGN PLAN SUNDAIL BRIDGE DRIVE VICINITY

CONSTRUCTION AREA SIGNS

NO SCALE

CS-2

THIS SHEET ACCURATE FOR LANDSCAPE WORK ONLY.

STATE OF CALIFORNIA - DEPARTMENT OF TRANSPORTATION
Caltrans LANDSCAPE ARCHITECTURE

PROJECT LANDSCAPE ARCHITECT: RON FLORY
CALCULATED/DESIGNED BY: J. PATRICK SULLIVAN
CHECKED BY: RON FLORY
REVISED BY | DATE REVISED | DATE

P:\proj2\02\32804_plans\pse\2328041a002.dgn

LAST REVISION 08-24-10
DATE PLOTTED => 25-AUG-2010
TIME PLOTTED => 09:37

DIST	COUNTY	ROUTE	POST MILES TOTAL PROJECT	SHEET No	TOTAL SHEETS
02	Sha	44	L0.3/R0.1	4	40

LICENSED LANDSCAPE ARCHITECT

08-24-10

PLANS APPROVAL DATE

LICENSED LANDSCAPE ARCHITECT #3125 J. PATRICK SULLIVAN Signature 06-28-12 Renewal Date 08-19-10 Date STATE OF CALIFORNIA

The State of California or its officers or agents shall not be responsible for the accuracy or completeness of electronic copies of this plan sheet.

To get to the Caltrans web site, go to: http://www.dot.ca.gov

NOTE:

1. FOR COMPLETE RIGHT OF WAY AND ACCURATE ACCESS DATA, SEE RIGHT OF WAY RECORD MAPS AT DISTRICT OFFICE.

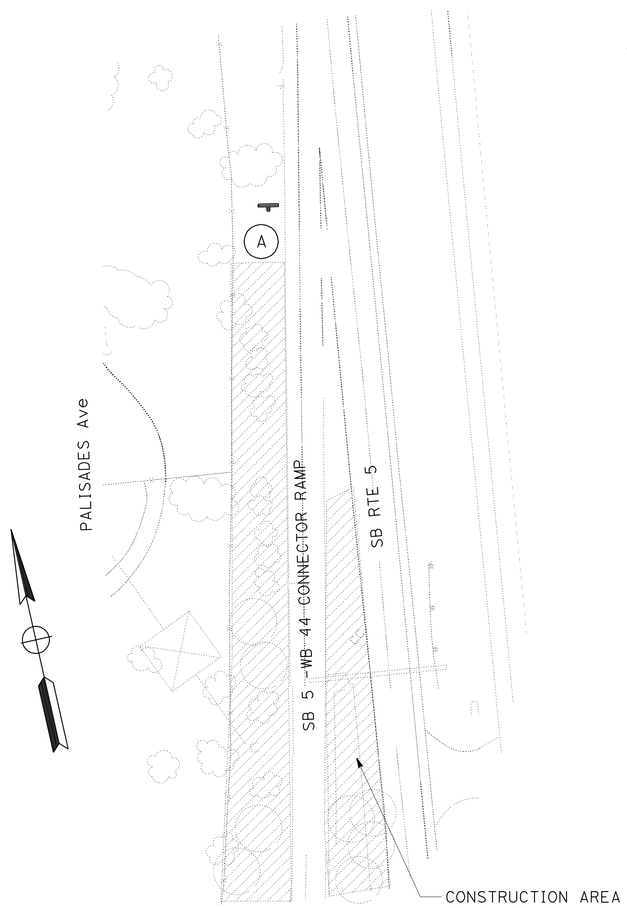

SB 5-WB 44 CONNECTOR

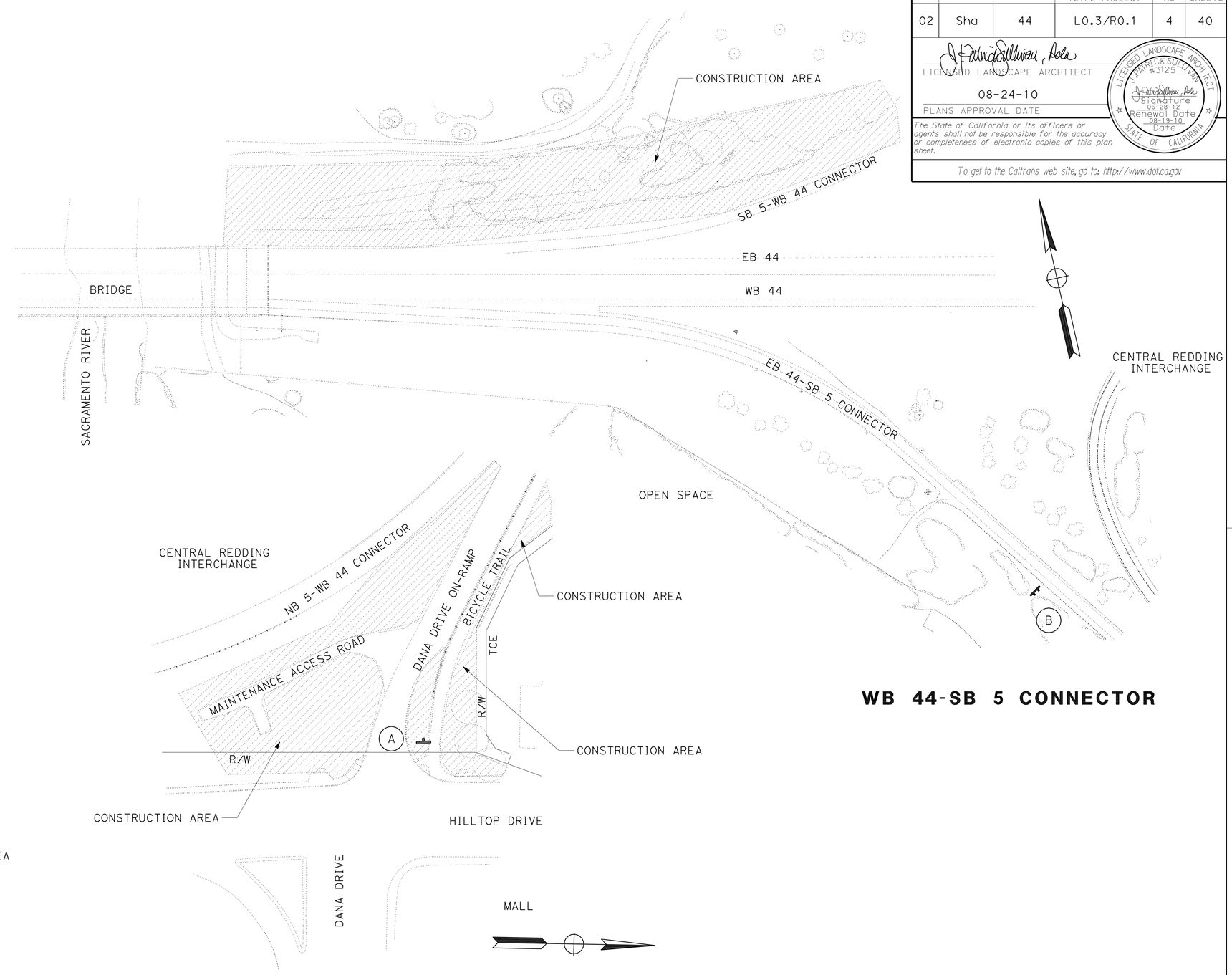

WB 44-SB 5 CONNECTOR

DANA ON-RAMP - WB 44 CONNECTOR

CONSTRUCTION AREA SIGN PLAN
CENTRAL REDDING INTERCHANGE VICINITY
DANA RAMPS ON-RAMP

THIS SHEET ACCURATE FOR LANDSCAPE WORK ONLY.

CONSTRUCTION AREA SIGNS

NO SCALE

CS-3

	DATE	REVISED BY	DATE REVISED
CALCULATED/DESIGNED BY	J. PATRICK SULLIVAN		
CHECKED BY	RON FLORY		
PROJECT LANDSCAPE ARCHITECT	RON FLORY		

STATE OF CALIFORNIA - DEPARTMENT OF TRANSPORTATION
Caltrans LANDSCAPE ARCHITECTURE

P:\proj2\02\32804_plans\pse\2328041a003.dgn

LAST REVISION 08-24-10 DATE PLOTTED => 25-AUG-2010 TIME PLOTTED => 09:37

DIST	COUNTY	ROUTE	POST MILES TOTAL PROJECT	SHEET No	TOTAL SHEETS
02	Sha	44	L0.3/R0.1	5	40

LICENSED LANDSCAPE ARCHITECT

08-24-10

PLANS APPROVAL DATE

LICENSED LANDSCAPE ARCHITECT #3125 J. PATRICK SULLIVAN STATE OF CALIFORNIA Signature 06-28-12 Renewal Date 08-19-10 Date

The State of California or its officers or agents shall not be responsible for the accuracy or completeness of electronic copies of this plan sheet.

To get to the Caltrans web site, go to: http://www.dot.ca.gov

ABBREVIATIONS

AMEND — amendment
B & B — balled and burlapped
DIA — diameter
EA — each
ft — foot/feet
in — inch(es)
MAX — maximum
MIN — minimum
No — number
PLT ESTB — plant establishment
PVMT — pavement
R/W — right of way
SF — state furnished
tab — tablet(s)
TRVD — traveled

NOTE:
Underlined portions of botanical name indicate abbreviations used on Planting Plans.

APPLICABLE WHEN CIRCLED:

1 - Quantities shown are "per plant" unless shown as SQYD or SQFT application rates.
2 - Sufficient to receive root ball.
3 - Does not apply to mulch areas.
4 - As shown on plans.
5 - Unless otherwise shown on plans.
6 - See detail.
7 - See Special Provisions.
8 - See Mulch Placement (Planting Plans)
9 - Apply 4" depth of mulch in basin for non-mulched areas (refer to plans) Plant basin = 3.3 cu. ft. per plant

PLANT LIST AND PLANTING SPECIFICATIONS

PLANT GROUP	PLANT No.	SYMBOL	BOTANICAL NAME	COMMON NAME	SIZE	QUANTITY EACH	HOLE SIZE (IN) DIA	HOLE SIZE (IN) DEPTH	BASIN TYPE	IRON SULFATE	SOIL AMEND 1	COMMERCIAL FERTILIZER 1 PLANTING	COMMERCIAL FERTILIZER 1 PLT ESTB	MULCH 8 9	STAKING 6	PLANTING LIMITS MINIMUM DISTANCE (ft) FROM TRVD WAY	PVMT	FENCE	WALL	PAVED DITCH	EARTH DITCH	ON CENTER (ft)	REMARKS
A	1		CERCIS OCCIDENTALIS	WESTERN REDBUD	No.1	115	14"	24"	I	-	1 CF	1 Pkt	4 Oz	-	X	12	10	10	-	8	8	15	NATIVE DECIDUOUS SHRUB
	2		COTONEASTER 'LOWFAST'	LOWFAST COTONEASTER	No.1	287	14"	24"	I	-	1 CF	1 Pkt	4 Oz	-	X	-	6	6	-	6	6	5	BANK/GROUNDCOVER
	3		EUONYMUS F. 'EMERALD & GOLD'	EMERALD & GOLD EUYONMOUS	No.1	174	14"	24"	I	-	1 CF	1 Pkt	4 Oz	-	X	-	6	6	-	6	6	6	WINTER INTEREST GROUNDCOVER
	4		EUONYMUS F. 'COLORATA'	WINTERCREEPER EUYONMOUS	No.1	30	14"	24"	I	-	1 CF	1 Pkt	4 Oz	-	X	-	6	6	-	6	6	6	WINTER INTEREST GROUNDCOVER
	5		HETEROMELES ARBUTIFOLIA	TOYON	No.1	151	14"	24"	I	-	1 CF	1 Pkt	4 Oz	-	X		-	-	-	10	10	15	NATIVE FLOWERING SHRUB
	6		NERIUM OLEANDER	FLOWERING OLEANDER MIX WHITE & RED	No.1	43	14"	24"	I	-	1 CF	1 Pkt	4 Oz	-	X	12	8	6	-	6	6	8	SUMMER FLOWERING FREEWAY SHRUB
	7		LONICERA JAPONICA 'HALLIANA'	HALL'S HONEYSUCKLE	No.1	188	14"	24"	I	-	1 CF	1 Pkt	4 Oz	-	X	-	-	8	-	6	6	10	BANK/GROUNDCOVER
	8		JASMINUM MESNYI	PRIMROSE JASMINE	No.1	550	14"	24"	I	-	1 CF	1 Pkt	4 Oz	-	X	-	-	-	-	10	10	10	BANK/GROUNDCOVER
	9		PARTHENOCISSUS TRICUSPIDATA	BOSTON IVY	No.1	10	14"	24"	I	-	1 CF	1 Pkt	4 Oz	-	X	-	-	-	-	6	6	4	CREEPING VINE
	10		ROSA BANKSIAE	BANK'S ROSE	No.1	271	14"	24"	I	-	1 CF	1 Pkt	4 Oz	-	X	-	-	-	-	10	10	10	BANK/GROUNDCOVER
	11		TEUCRIUM FRUTICANS	BUSH GERIMANDER	No.1	25	14"	24"	I	-	1 CF	1 Pkt	4 Oz	-	X	-	8	-	-	-	-	8	FLOWERING SHRUB DROUGHT RESISTANT
	12		TRACHELOSPERMUM JASMINOIDES	STAR JASMINE	No.1	174	14"	24"	I	-	1 CF	1 Pkt	4 Oz	-	X	-	8	6	-	6	6	5	FLOWERING GROUNDCOVER
	13		ZAUSHNERIA CALIFORNICA	CALIFORNIA FUCHSIA	No.1	99	14"	24"	I	-	1 CF	1 Pkt	4 Oz	-	X	-	8	-	-	6	6	5	NATIVE GROUNDCOVER ACCENT
B	14		LAGERSTROEMIA X CATABAWA	PURPLE CREPE MYRTLE	No.5	57	24"	24"	I	-	1 CF	2 Pkt	8 Oz	-	X	30	10	10	-	10	10	4	MULTI -STEM SUMMER FLOWERING TREE
	15		LAGERSTROEMIA X DYNAMITE	DEEP RED CREPE MYRTLE	No.5	115	24"	24"	I	-	1 CF	2 Pkt	8 Oz	-	X	30	10	10	-	10	10	4	MULTI -STEM SUMMER FLOWERING TREE
	16		CEDRUS DEODARA	DEODAR CEDARS	No.5	14	36"	36"	I	-	2 CF	3 Pkt	12 Oz	-	X	36	-	18	-	10	10	4	EVERGREEN TREE
	17		PISTACHIA CHINENSIS	CHINESE PISTACHE	No.5	36	36"	36"	I	-	2 CF	3 Pkt	12 Oz	-	X	36	-	18	-	10	10	4	FALL COLOR DECIDUOUS TREE
	18		PLATANUS ACERFOLIA 'YARWOOD'	HYBRID SYCAMORES	No.5	72	36"	36"	I	-	2 CF	3 Pkt	12 Oz	-	X	36	-	18	-	10	10	4	DECIDUOUS SHADE TREE
	19		QUERCUS LOBATA	VALLEY OAK	No.5	55	36"	36"	I	-	2 CF	3 Pkt	12 Oz	-	X	36	-	18	-	10	10	4	NATIVE DECIDUOUS TREE
	20		QUERCUS WISLIZENII	INTERIOR LIVE OAK OAK	No.5	65	36"	36"	I	-	2 CF	3 Pkt	12 Oz	-	X	36	-	18	-	10	10	4	NATIVE EVERGREEN TREE

X IN BOX DENOTES REQUIREMENT

PLANT LIST
PL-1

REVISED BY | DATE REVISED
DATE
J. PATRICK SULLIVAN | RON FLORY
CALCULATED/DESIGNED BY
CHECKED BY
PROJECT LANDSCAPE ARCHITECT | RON FLORY

STATE OF CALIFORNIA - DEPARTMENT OF TRANSPORTATION
Caltrans® LANDSCAPE ARCHITECTURE

P:\proj2\02\32804_plans\pse\232804te001.dgn

LAST REVISION 08-24-10 | DATE PLOTTED => 25-AUG-2010 TIME PLOTTED => 09:37

DIST	COUNTY	ROUTE	POST MILES TOTAL PROJECT	SHEET No	TOTAL SHEETS
02	Sha	44	L0.3/R0.1	6	40

LICENSED LANDSCAPE ARCHITECT

08-24-10

PLANS APPROVAL DATE

LICENSED LANDSCAPE ARCHITECT J. PATRICK SULLIVAN #3125 Signature 06-28-12 Renewal Date 08-19-10 Date STATE OF CALIFORNIA

The State of California or its officers or agents shall not be responsible for the accuracy or completeness of electronic copies of this plan sheet.

To get to the Caltrans web site, go to: http://www.dot.ca.gov

NOTE:

1. FOR COMPLETE RIGHT OF WAY AND ACCURATE ACCESS DATA, SEE RIGHT OF WAY RECORD MAPS AT DISTRICT OFFICE.

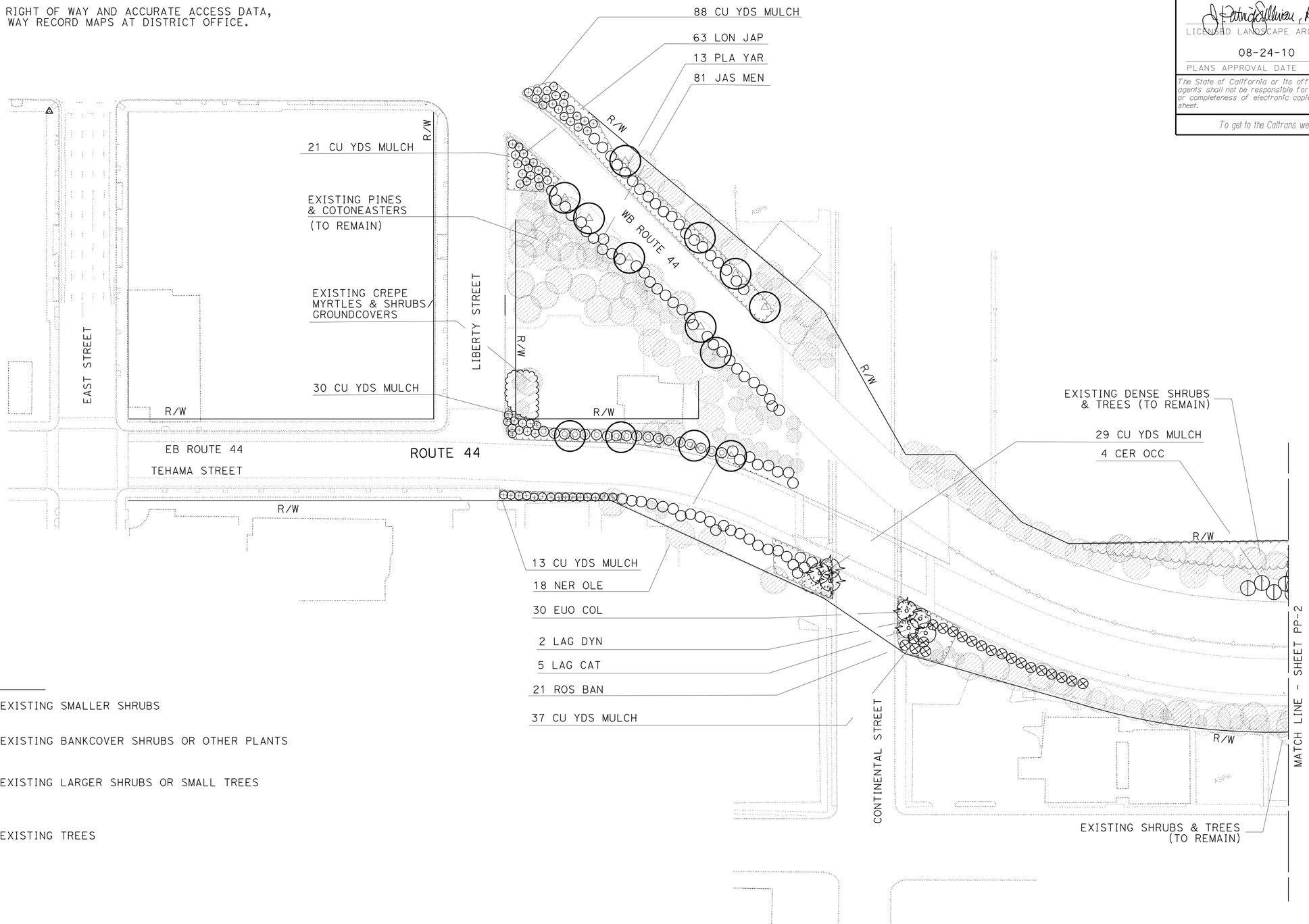

LEGEND

-EXISTING SMALLER SHRUBS

-EXISTING BANKCOVER SHRUBS OR OTHER PLANTS

-EXISTING LARGER SHRUBS OR SMALL TREES

-EXISTING TREES

PLANTING PLAN

SCALE: 1" = 50'

PP-1

THIS SHEET ACCURATE FOR LANDSCAPE WORK ONLY.

	DATE	REVISED BY	DATE REVISED
CALCULATED/ DESIGNED BY	J. PATRICK SULLIVAN		
CHECKED BY	RON FLORY		
PROJECT LANDSCAPE ARCHITECT	RON FLORY		

STATE OF CALIFORNIA - DEPARTMENT OF TRANSPORTATION

Caltrans LANDSCAPE ARCHITECTURE

P:\proj2\02\32804_plans\pse\232804ti001.dgn

LAST REVISION 08-24-10 | DATE PLOTTED => 25-AUG-2010 | TIME PLOTTED => 09:37

DIST	COUNTY	ROUTE	POST MILES TOTAL PROJECT	SHEET No	TOTAL SHEETS
02	Sha	44	L0.3/R0.1	7	40

LICENSED LANDSCAPE ARCHITECT

08-24-10

PLANS APPROVAL DATE

LICENSED LANDSCAPE ARCHITECT J. PATRICK SULLIVAN #3125 STATE OF CALIFORNIA

Signature 06-28-12 Renewal Date 08-19-10 Date

The State of California or its officers or agents shall not be responsible for the accuracy or completeness of electronic copies of this plan sheet.

To get to the Caltrans web site, go to: http://www.dot.ca.gov

NOTE:

1. FOR COMPLETE RIGHT OF WAY AND ACCURATE ACCESS DATA, SEE RIGHT OF WAY RECORD MAPS AT DISTRICT OFFICE.

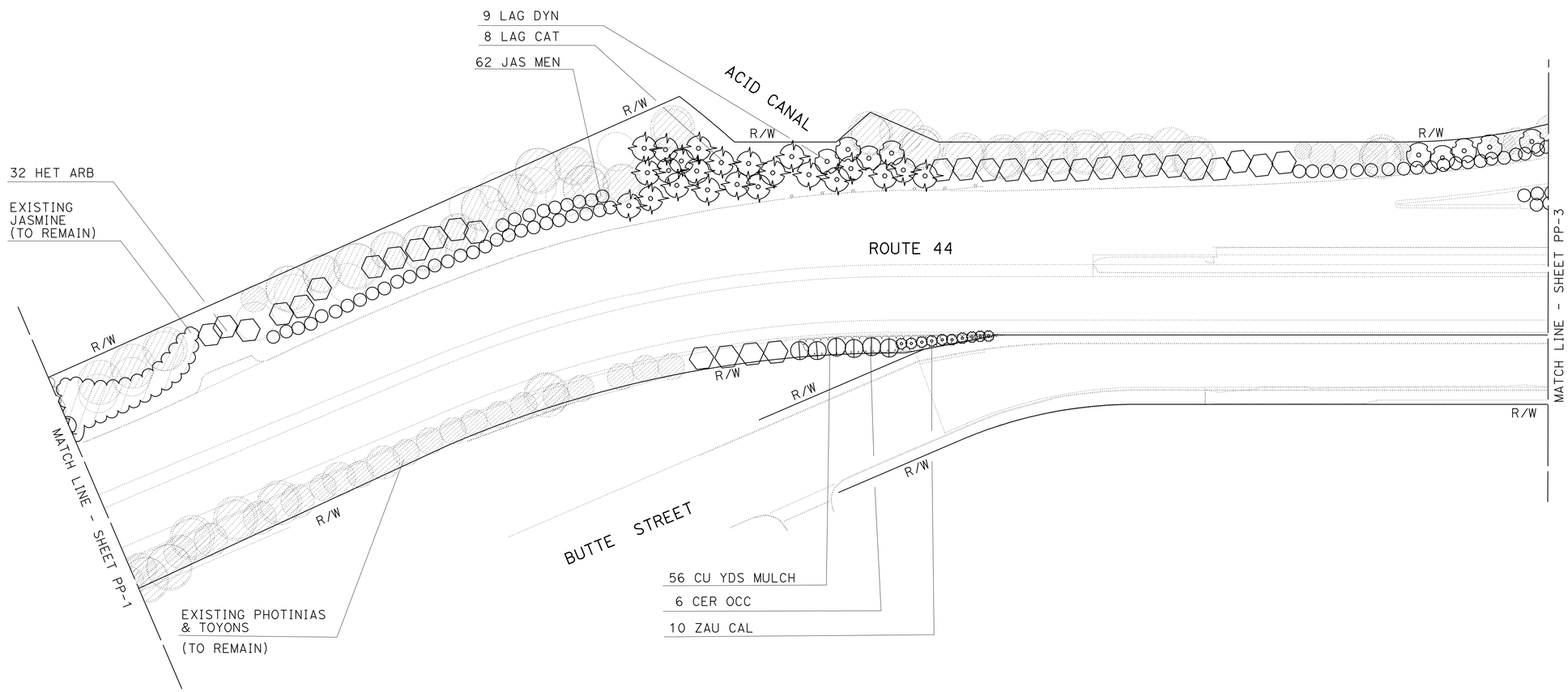

PLANTING PLAN

SCALE: 1" = 50'

PP-2

THIS SHEET ACCURATE FOR LANDSCAPE WORK ONLY.

CALCULATED/DESIGNED BY	J. PATRICK SULLIVAN
CHECKED BY	RON FLORY
PROJECT LANDSCAPE ARCHITECT	RON FLORY
REVISED BY	DATE
DATE REVISED	

STATE OF CALIFORNIA - DEPARTMENT OF TRANSPORTATION

Caltrans LANDSCAPE ARCHITECTURE

P:\proj2\02\32804_plans\pse\232804ti002.dgn

LAST REVISION 08-24-10 | DATE PLOTTED => 25-AUG-2010 TIME PLOTTED => 09:38

DIST	COUNTY	ROUTE	POST MILES TOTAL PROJECT	SHEET No	TOTAL SHEETS
02	Sha	44	L0.3/R0.1	8	40

LICENSED LANDSCAPE ARCHITECT

08-24-10

PLANS APPROVAL DATE

LICENSED LANDSCAPE ARCHITECT J. PATRICK SULLIVAN #3125 Signature 06-28-12 Renewal Date 08-19-10 Date STATE OF CALIFORNIA

The State of California or its officers or agents shall not be responsible for the accuracy or completeness of electronic copies of this plan sheet.

To get to the Caltrans web site, go to: http://www.dot.ca.gov

NOTE:

1. FOR COMPLETE RIGHT OF WAY AND ACCURATE ACCESS DATA, SEE RIGHT OF WAY RECORD MAPS AT DISTRICT OFFICE.

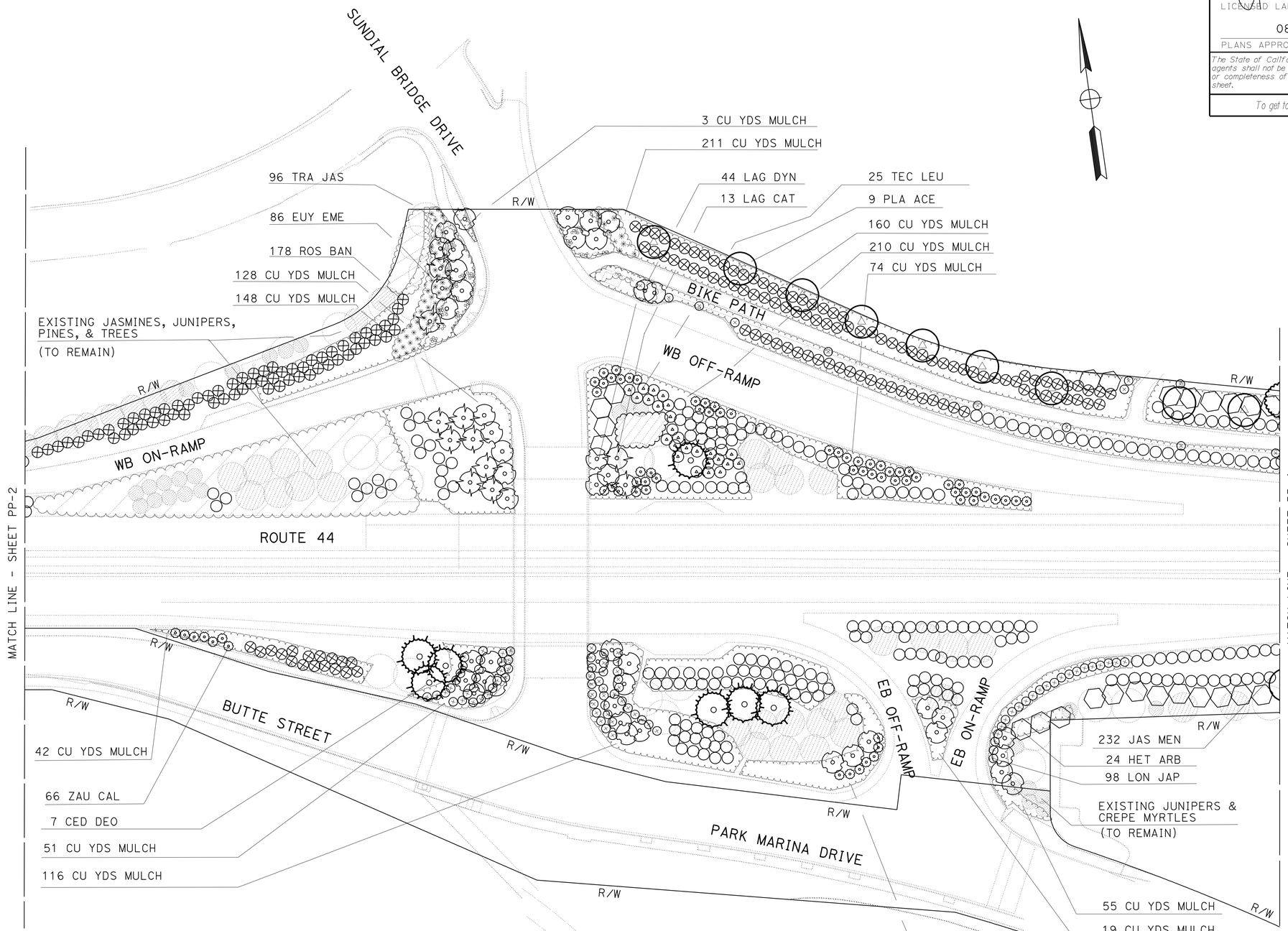

PLANTING PLAN

SCALE: 1" = 50'

PP-3

THIS SHEET ACCURATE FOR LANDSCAPE WORK ONLY.

STATE OF CALIFORNIA - DEPARTMENT OF TRANSPORTATION

Caltrans LANDSCAPE ARCHITECTURE

PROJECT LANDSCAPE ARCHITECT: RON FLORY

CALCULATED/DESIGNED BY: J. PATRICK SULLIVAN

CHECKED BY: RON FLORY

DATE | REVISED BY | DATE REVISED

P:\proj2\02\32804_plans\pse\232804ti003.dgn

LAST REVISION 08-24-10 | DATE PLOTTED => 25-AUG-2010 | TIME PLOTTED => 09:38

BORDER LAST REVISED 7/2/2010 | USERNAME => s115152 | DGN FILE => 232804ti003.dgn | RELATIVE BORDER SCALE IS IN INCHES 0 1 2 3 | UNIT 0383 | PROJECT NUMBER & PHASE 02000002431

DIST	COUNTY	ROUTE	POST MILES TOTAL PROJECT	SHEET No	TOTAL SHEETS
02	Sha	44	L0.3/R0.1	9	40

LICENSED LANDSCAPE ARCHITECT

08-24-10

PLANS APPROVAL DATE

LICENSED LANDSCAPE ARCHITECT J. PATRICK SULLIVAN #3125 Signature 06-28-12 Renewal Date 08-19-10 Date STATE OF CALIFORNIA

The State of California or its officers or agents shall not be responsible for the accuracy or completeness of electronic copies of this plan sheet.

To get to the Caltrans web site, go to: http://www.dot.ca.gov

NOTE:

1. FOR COMPLETE RIGHT OF WAY AND ACCURATE ACCESS DATA, SEE RIGHT OF WAY RECORD MAPS AT DISTRICT OFFICE.

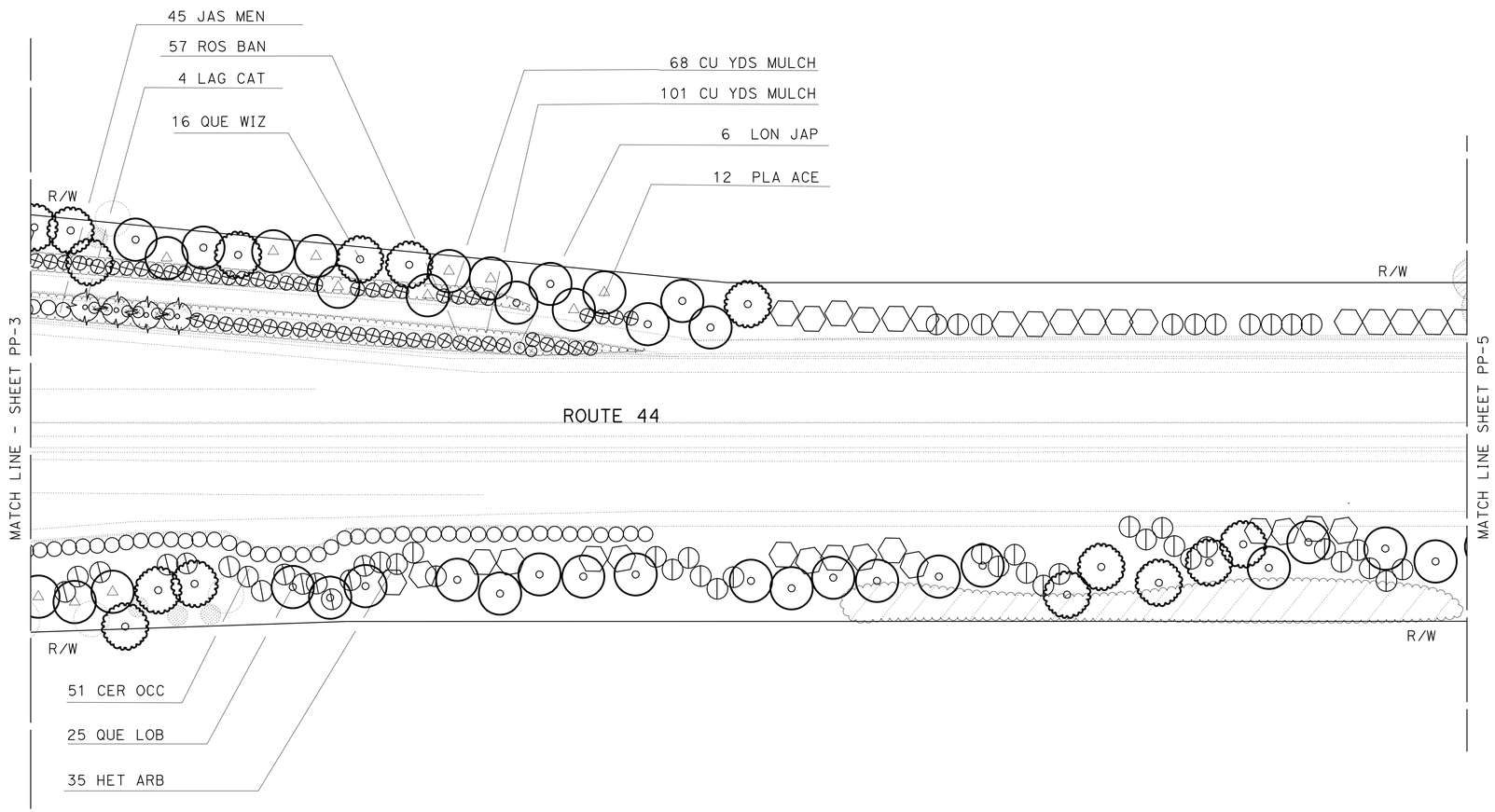

PLANTING PLAN

SCALE: 1" = 50'

PP-4

THIS SHEET ACCURATE FOR LANDSCAPE WORK ONLY.

STATE OF CALIFORNIA - DEPARTMENT OF TRANSPORTATION

Caltrans LANDSCAPE ARCHITECTURE

PROJECT LANDSCAPE ARCHITECT: RON FLORY

CALCULATED/DESIGNED BY: J. PATRICK SULLIVAN

CHECKED BY: RON FLORY

DATE

REVISED BY

DATE REVISED

P:\proj2\02\32804_plans\pse\232804ti004.dgn

LAST REVISION 08-24-10

DATE PLOTTED => 25-AUG-2010

TIME PLOTTED => 09:38

DIST	COUNTY	ROUTE	POST MILES TOTAL PROJECT	SHEET No	TOTAL SHEETS
02	Sha	44	L0.3/R0.1	10	40

LICENSED LANDSCAPE ARCHITECT

08-24-10

PLANS APPROVAL DATE

LICENSED LANDSCAPE ARCHITECT J. PATRICK SULLIVAN #3125 Signature 06-28-12 Renewal Date 08-19-10 Date STATE OF CALIFORNIA

The State of California or its officers or agents shall not be responsible for the accuracy or completeness of electronic copies of this plan sheet.

To get to the Caltrans web site, go to: http://www.dot.ca.gov

NOTE:

1. FOR COMPLETE RIGHT OF WAY AND ACCURATE ACCESS DATA, SEE RIGHT OF WAY RECORD MAPS AT DISTRICT OFFICE.

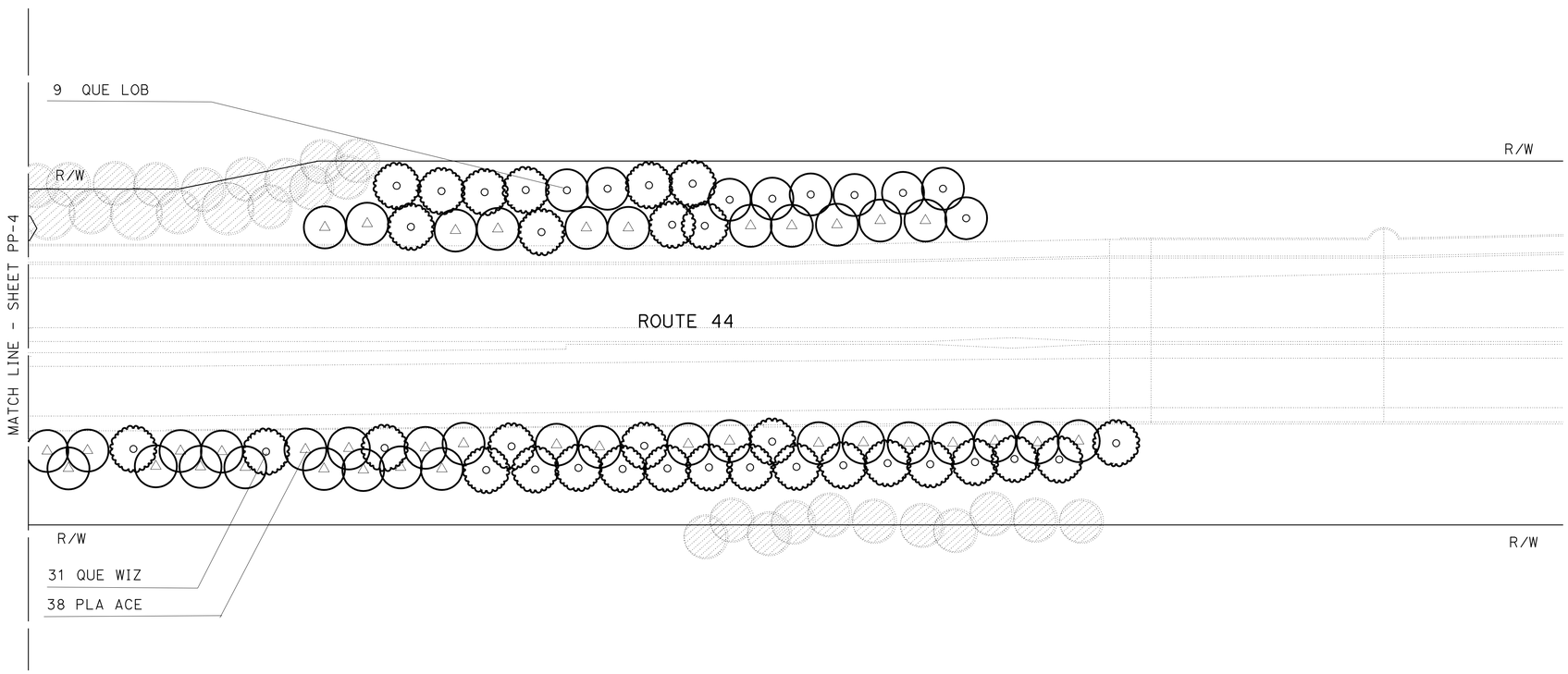

PLANTING PLAN

SCALE: 1" = 50'

PP-5

THIS SHEET ACCURATE FOR LANDSCAPE WORK ONLY.

CALCULATED/DESIGNED BY	J. PATRICK SULLIVAN
CHECKED BY	RON FLORY
PROJECT LANDSCAPE ARCHITECT	RON FLORY
REVISED BY	DATE
DATE REVISED	

STATE OF CALIFORNIA - DEPARTMENT OF TRANSPORTATION

Caltrans® LANDSCAPE ARCHITECTURE

P:\proj2\02\32804_plans\pse\232804ti005.dgn

LAST REVISION 08-24-10 | DATE PLOTTED => 25-AUG-2010 TIME PLOTTED => 09:38

DIST	COUNTY	ROUTE	POST MILES TOTAL PROJECT	SHEET No	TOTAL SHEETS
02	Sha	44	L0.3/R0.1	11	40

LICENSED LANDSCAPE ARCHITECT

08-24-10

PLANS APPROVAL DATE

LICENSED LANDSCAPE ARCHITECT J. PATRICK SULLIVAN #3125 Signature 06-28-12 Renewal Date 08-19-10 Date STATE OF CALIFORNIA

The State of California or its officers or agents shall not be responsible for the accuracy or completeness of electronic copies of this plan sheet.

To get to the Caltrans web site, go to: http://www.dot.ca.gov

NOTE:

1. FOR COMPLETE RIGHT OF WAY AND ACCURATE ACCESS DATA, SEE RIGHT OF WAY RECORD MAPS AT DISTRICT OFFICE.

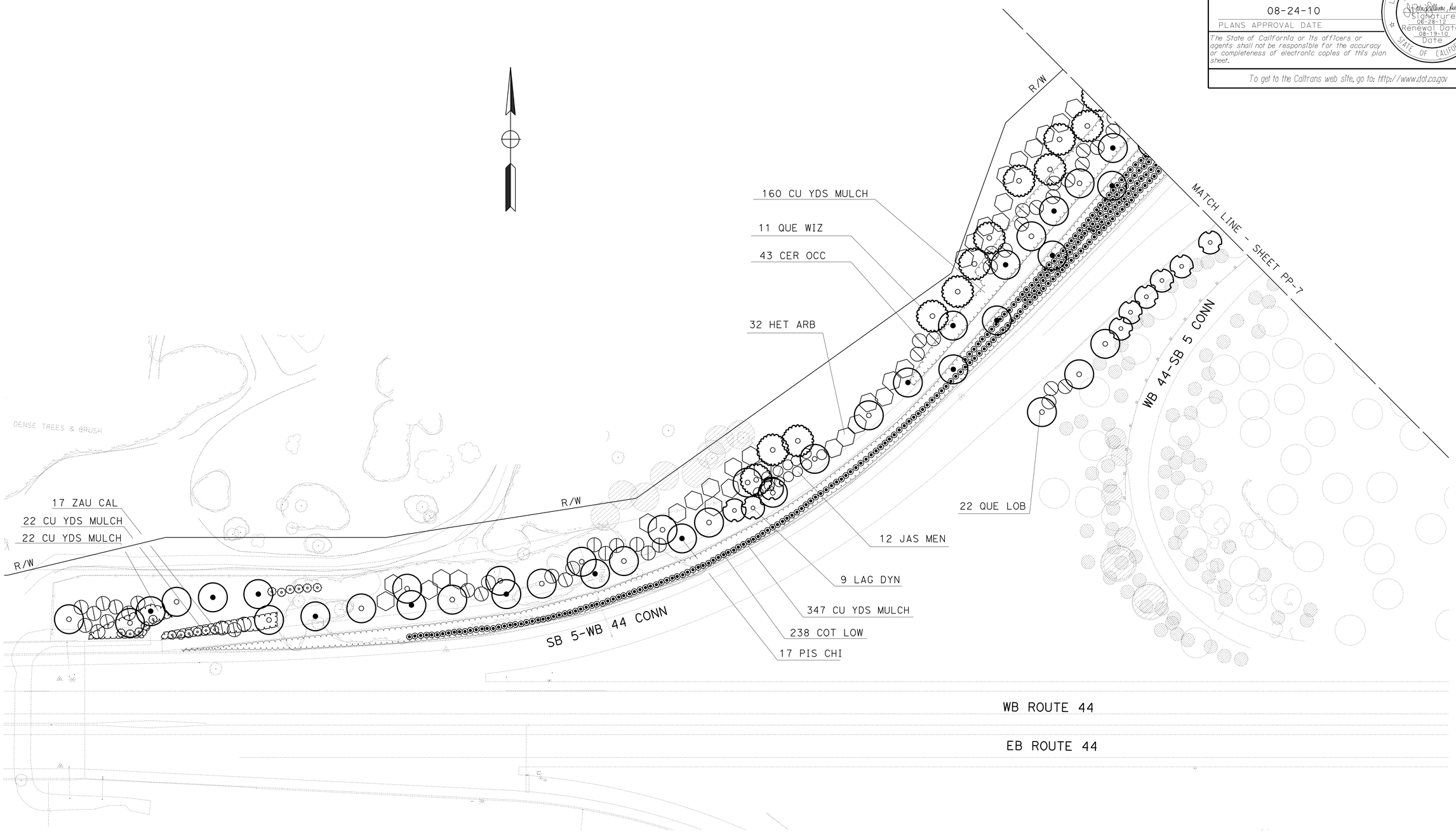

PLANTING PLAN

SCALE: 1" = 50'

PP-6

THIS SHEET ACCURATE FOR LANDSCAPE WORK ONLY.

REVISED BY	DATE	DATE REVISED

CALCULATED/DESIGNED BY: J. PATRICK SULLIVAN
CHECKED BY: RON FLORY

PROJECT LANDSCAPE ARCHITECT: RON FLORY

STATE OF CALIFORNIA - DEPARTMENT OF TRANSPORTATION
Caltrans LANDSCAPE ARCHITECTURE

P:\proj2\02\32804_plans\pse\232804ti006.dgn

LAST REVISION 08-24-10 | DATE PLOTTED => 25-AUG-2010 TIME PLOTTED => 09:38

NOTE:

1. FOR COMPLETE RIGHT OF WAY AND ACCURATE ACCESS DATA, SEE RIGHT OF WAY RECORD MAPS AT DISTRICT OFFICE.

DIST	COUNTY	ROUTE	POST MILES TOTAL PROJECT	SHEET No	TOTAL SHEETS
02	Sha	44	L0.3/R0.1	12	40

LICENSED LANDSCAPE ARCHITECT

08-24-10

PLANS APPROVAL DATE

LICENSED LANDSCAPE ARCHITECT J. PATRICK SULLIVAN #3125 Signature 06-28-12 Renewal Date 08-19-10 Date STATE OF CALIFORNIA

The State of California or its officers or agents shall not be responsible for the accuracy or completeness of electronic copies of this plan sheet.

To get to the Caltrans web site, go to: http://www.dot.ca.gov

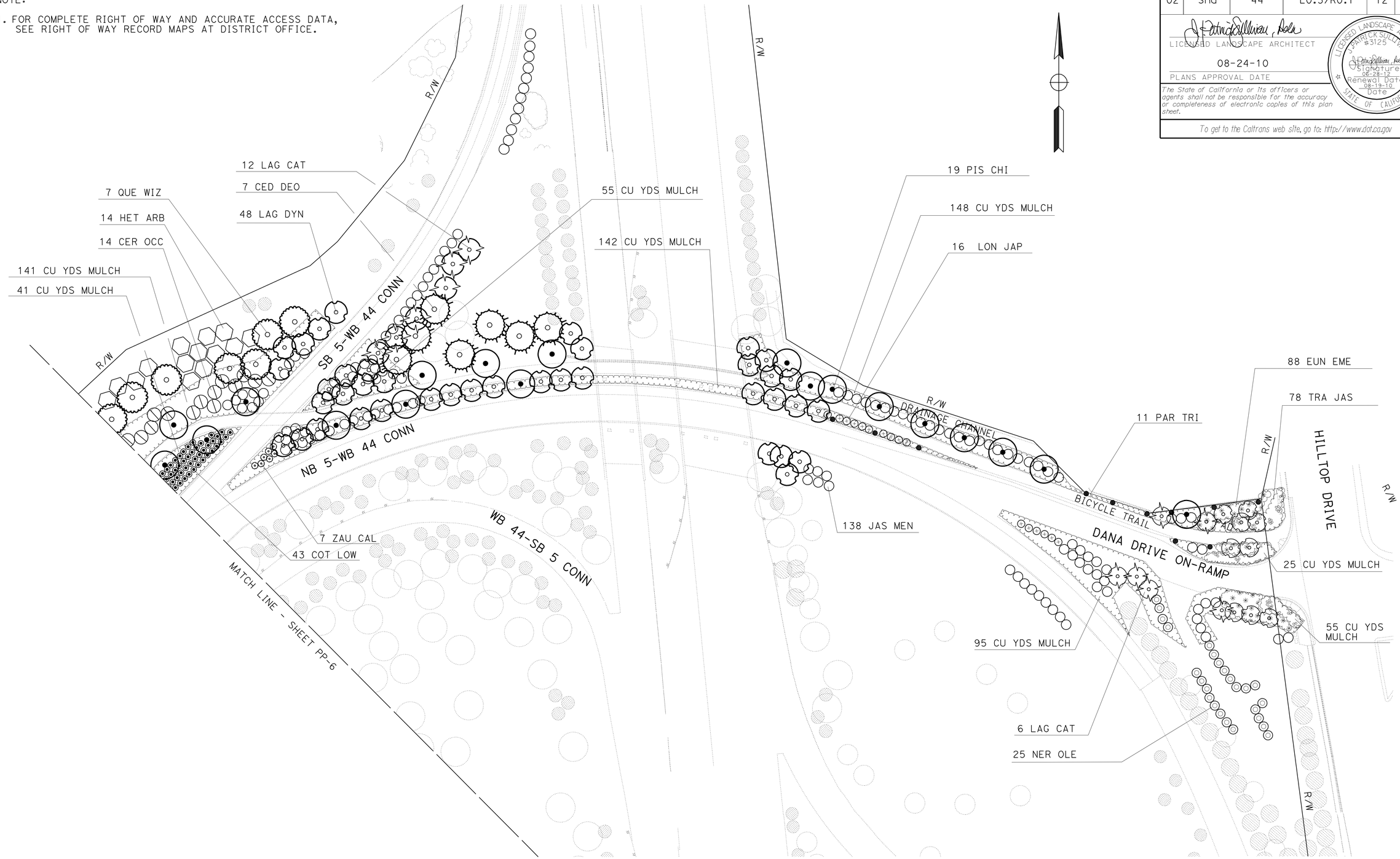

PLANTING PLAN

SCALE: 1" = 50'

PP-7

THIS SHEET ACCURATE FOR LANDSCAPE WORK ONLY.

STATE OF CALIFORNIA - DEPARTMENT OF TRANSPORTATION

Caltrans LANDSCAPE ARCHITECTURE

PROJECT LANDSCAPE ARCHITECT: RON FLORY

CALCULATED/DESIGNED BY: J. PATRICK SULLIVAN

CHECKED BY: RON FLORY

DATE REVISED BY

DATE REVISED

P:\proj2\02\32804_plans\pse\232804ti007.dgn

LAST REVISION 08-24-10

DATE PLOTTED => 25-AUG-2010

TIME PLOTTED => 09:38

DIST	COUNTY	ROUTE	POST MILES TOTAL PROJECT	SHEET No	TOTAL SHEETS
02	Sha	44	L0.3/R0.1	13	40

LICENSED LANDSCAPE ARCHITECT

08-24-10

PLANS APPROVAL DATE

LICENSED LANDSCAPE ARCHITECT J. PATRICK SULLIVAN #3125 Signature 06-28-12 Renewal Date 08-19-10 Date STATE OF CALIFORNIA

The State of California or its officers or agents shall not be responsible for the accuracy or completeness of electronic copies of this plan sheet.

To get to the Caltrans web site, go to: http://www.dot.ca.gov

NOTE:

1. FOR COMPLETE RIGHT OF WAY AND ACCURATE ACCESS DATA, SEE RIGHT OF WAY RECORD MAPS AT DISTRICT OFFICE.

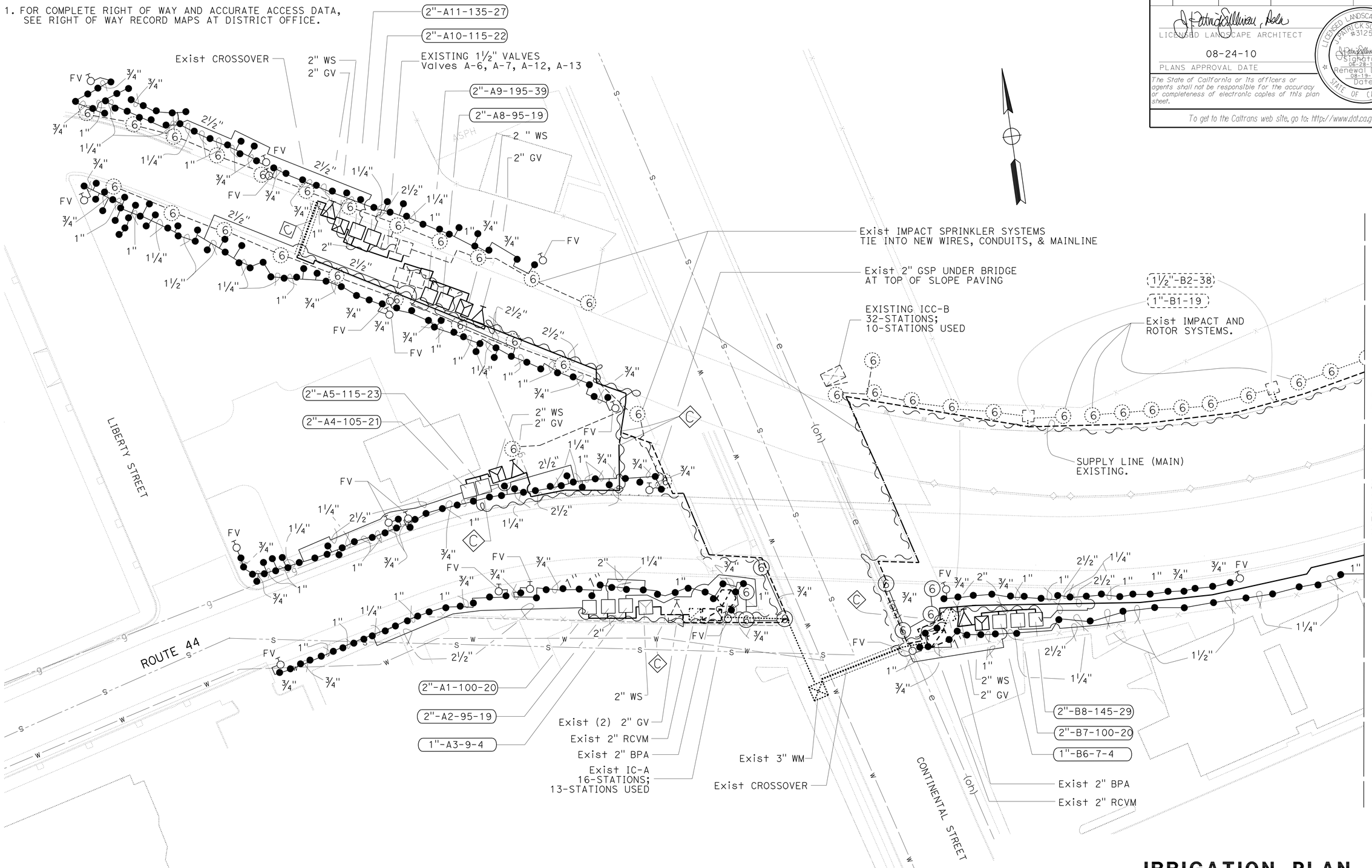

IRRIGATION PLAN

SCALE: 1" = 30'

IP-1

THIS SHEET ACCURATE FOR LANDSCAPE WORK ONLY.

STATE OF CALIFORNIA - DEPARTMENT OF TRANSPORTATION

Caltrans LANDSCAPE ARCHITECTURE

PROJECT LANDSCAPE ARCHITECT: RON FLORY

CALCULATED/DESIGNED BY: J. PATRICK SULLIVAN

CHECKED BY: RON FLORY

DATE

REVISED BY

DATE REVISED

P:\proj2\02\32804_plans\pse\232804t1001.dgn

DATE PLOTTED => 25-AUG-2010
TIME PLOTTED => 09:38

LAST REVISION 08-24-10

NOTE:

1. FOR COMPLETE RIGHT OF WAY AND ACCURATE ACCESS DATA, SEE RIGHT OF WAY RECORD MAPS AT DISTRICT OFFICE.

DIST	COUNTY	ROUTE	POST MILES TOTAL PROJECT	SHEET No	TOTAL SHEETS
02	Sha	44	L0.3/R0.1	14	40

LICENSED LANDSCAPE ARCHITECT

08-24-10

PLANS APPROVAL DATE

LICENSED LANDSCAPE ARCHITECT J. PATRICK SULLIVAN #3125 Signature 06-28-12 Renewal Date 08-19-10 Date STATE OF CALIFORNIA

The State of California or its officers or agents shall not be responsible for the accuracy or completeness of electronic copies of this plan sheet.

To get to the Caltrans web site, go to: http://www.dot.ca.gov

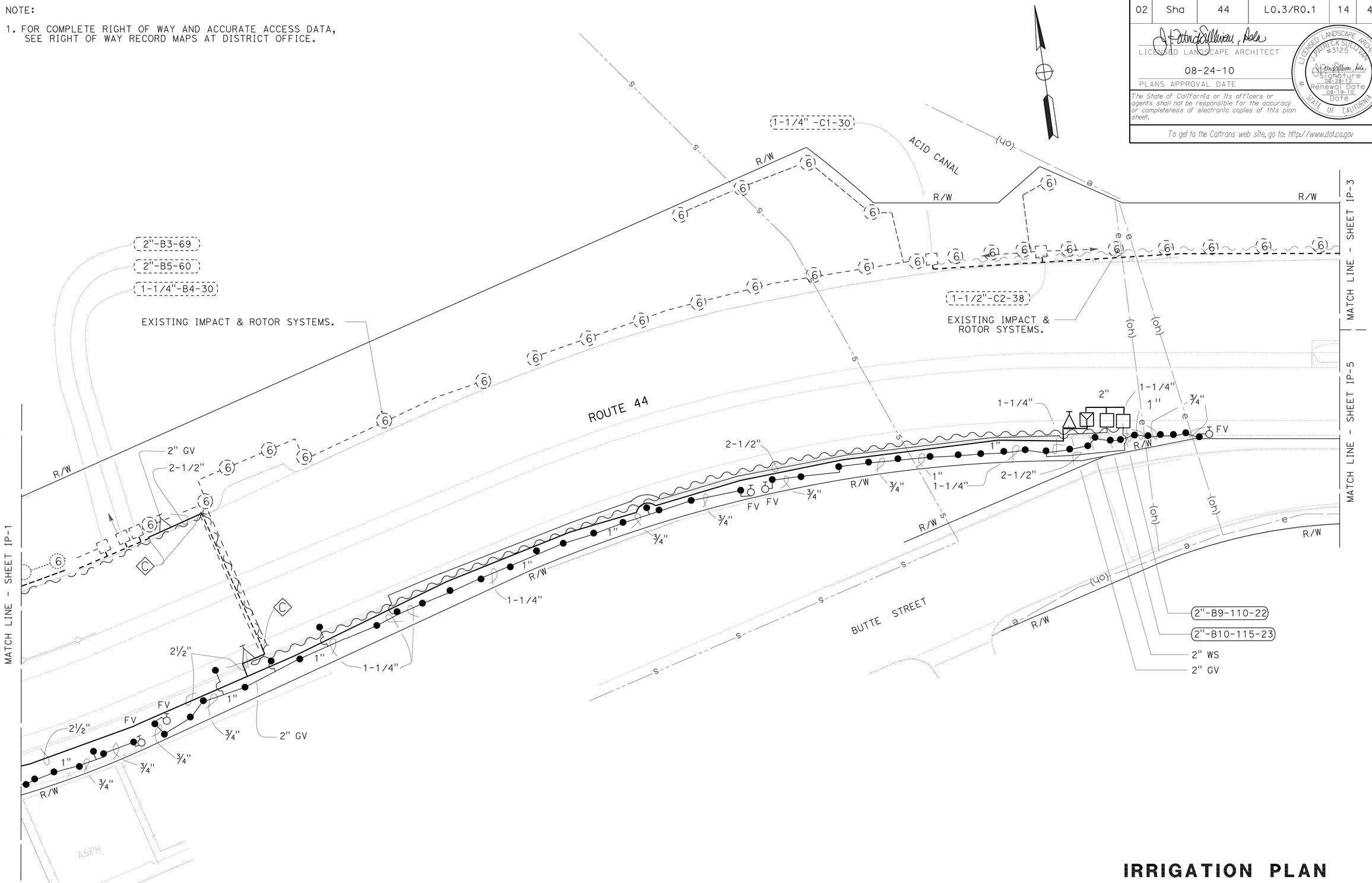

IRRIGATION PLAN

SCALE: 1" = 30'

IP-2

THIS SHEET ACCURATE FOR LANDSCAPE WORK ONLY.

STATE OF CALIFORNIA - DEPARTMENT OF TRANSPORTATION

Caltrans LANDSCAPE ARCHITECTURE

PROJECT LANDSCAPE ARCHITECT: RON FLORY

CALCULATED/DESIGNED BY: J. PATRICK SULLIVAN

CHECKED BY: RON FLORY

DATE | REVISED BY | DATE REVISED

P:\proj2\02\32804_plans\pse\232804t1002.dgn

LAST REVISION 08-24-10

DATE PLOTTED => 25-AUG-2010

TIME PLOTTED => 09:39

NOTE:

1. FOR COMPLETE RIGHT OF WAY AND ACCURATE ACCESS DATA, SEE RIGHT OF WAY RECORD MAPS AT DISTRICT OFFICE.

DIST	COUNTY	ROUTE	POST MILES TOTAL PROJECT	SHEET No	TOTAL SHEETS
02	Sha	44	L0.3/R0.1	15	40

LICENSED LANDSCAPE ARCHITECT

08-24-10

PLANS APPROVAL DATE

LICENSED LANDSCAPE ARCHITECT J. PATRICK SULLIVAN #3125 Signature 06-28-12 Renewal Date 08-19-10 Date STATE OF CALIFORNIA

The State of California or its officers or agents shall not be responsible for the accuracy or completeness of electronic copies of this plan sheet.

To get to the Caltrans web site, go to: http://www.dot.ca.gov

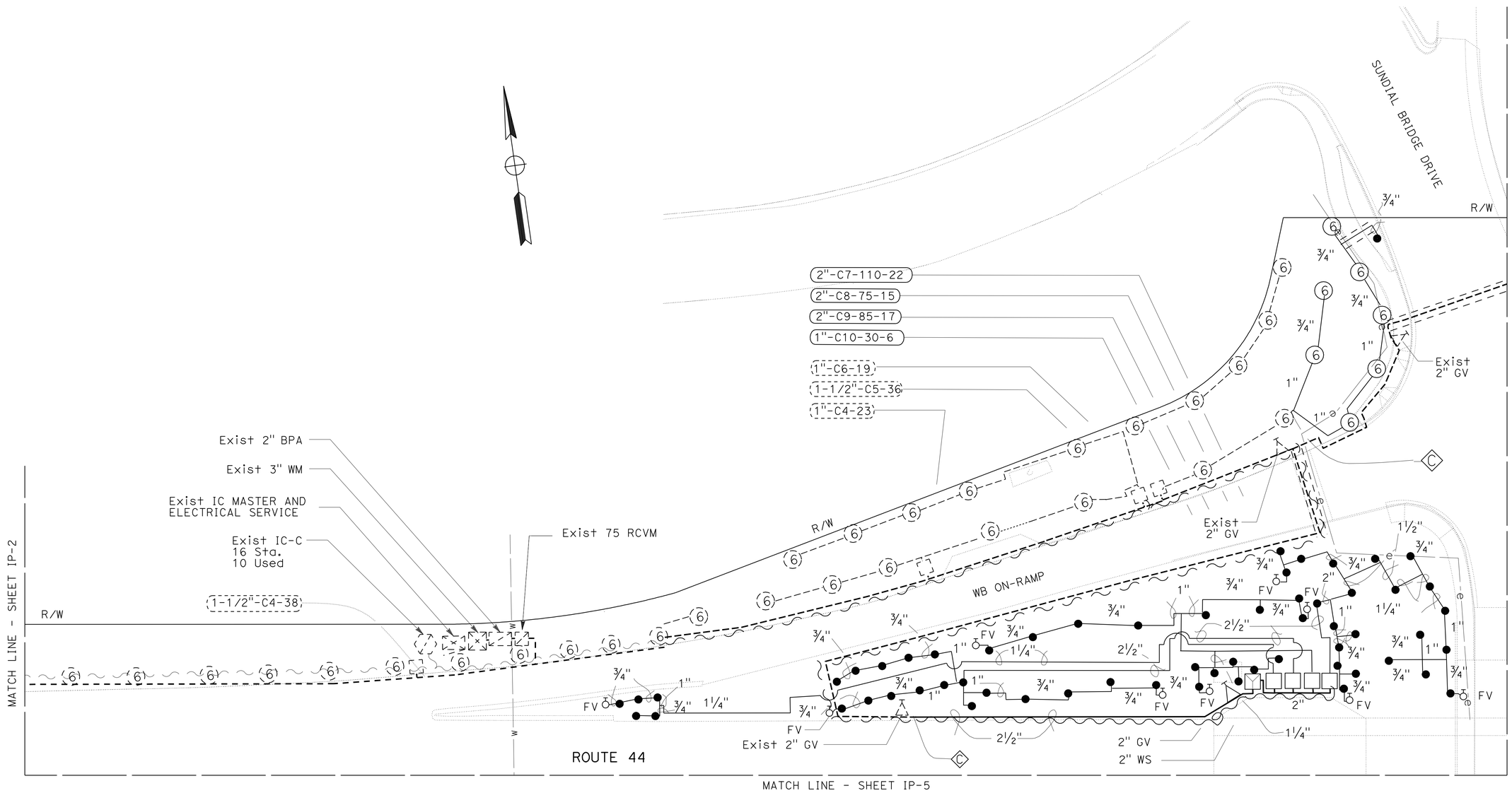

IRRIGATION PLAN

SCALE: 1" = 30'

IP-3

THIS SHEET ACCURATE FOR LANDSCAPE WORK ONLY.

STATE OF CALIFORNIA - DEPARTMENT OF TRANSPORTATION
Caltrans
LANDSCAPE ARCHITECTURE

PROJECT LANDSCAPE ARCHITECT: RON FLORY
CALCULATED/DESIGNED BY: J. PATRICK SULLIVAN
CHECKED BY: RON FLORY
REVISED BY / DATE REVISED / DATE

P:\proj2\02\32804_plans\pse\232804t1003.dgn

LAST REVISION 08-24-10 | DATE PLOTTED => 25-AUG-2010 | TIME PLOTTED => 09:39

BORDER LAST REVISED 7/2/2010 | USERNAME => s115152 | DGN FILE => 232804t1003.dgn | RELATIVE BORDER SCALE IS IN INCHES 0 1 2 3 | UNIT 0383 | PROJECT NUMBER & PHASE 02000002431

DIST	COUNTY	ROUTE	POST MILES TOTAL PROJECT	SHEET No	TOTAL SHEETS
02	Sha	44	L0.3/R0.1	16	40

LICENSED LANDSCAPE ARCHITECT

08-24-10

PLANS APPROVAL DATE

LICENSED LANDSCAPE ARCHITECT #3125 J. PATRICK SULLIVAN STATE OF CALIFORNIA

Signature 06-28-12 Renewal Date 08-19-10 Date

The State of California or its officers or agents shall not be responsible for the accuracy or completeness of electronic copies of this plan sheet.

To get to the Caltrans web site, go to: http://www.dot.ca.gov

NOTE:

1. FOR COMPLETE RIGHT OF WAY AND ACCURATE ACCESS DATA, SEE RIGHT OF WAY RECORD MAPS AT DISTRICT OFFICE.

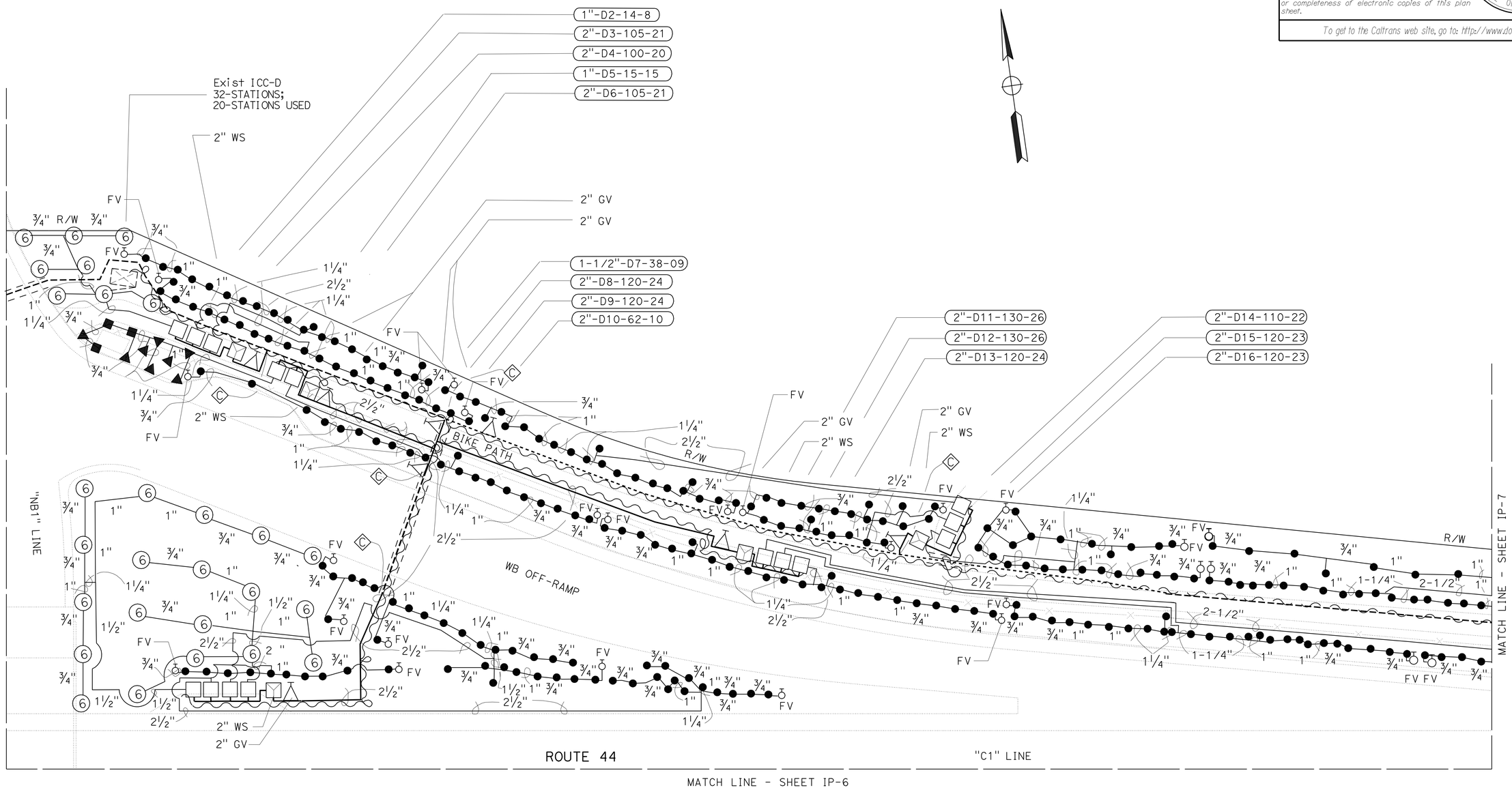

IRRIGATION PLAN

SCALE: 1" = 30'

IP-4

THIS SHEET ACCURATE FOR LANDSCAPE WORK ONLY.

STATE OF CALIFORNIA - DEPARTMENT OF TRANSPORTATION

LANDSCAPE ARCHITECTURE

PROJECT LANDSCAPE ARCHITECT: RON FLORY

CALCULATED/DESIGNED BY: J. PATRICK SULLIVAN

CHECKED BY: RON FLORY

REVISED BY | DATE REVISED | DATE

P:\proj2\02\32804_plans\pse\232804t1004.dgn

LAST REVISION 08-24-10

DATE PLOTTED => 25-AUG-2010
TIME PLOTTED => 09:39

BORDER LAST REVISED 7/2/2010

USERNAME => s115152
DGN FILE => 232804t1004.dgn

RELATIVE BORDER SCALE IS IN INCHES 0 1 2 3

UNIT 0383

PROJECT NUMBER & PHASE 02000002431

DIST	COUNTY	ROUTE	POST MILES TOTAL PROJECT	SHEET No	TOTAL SHEETS
02	Sha	44	L0.3/R0.1	17	40

LICENSED LANDSCAPE ARCHITECT

08-24-10

PLANS APPROVAL DATE

LICENSED LANDSCAPE ARCHITECT J. PATRICK SULLIVAN #3125 Signature 06-28-12 Renewal Date 08-19-10 Date STATE OF CALIFORNIA

The State of California or its officers or agents shall not be responsible for the accuracy or completeness of electronic copies of this plan sheet.

To get to the Caltrans web site, go to: http://www.dot.ca.gov

NOTE:

1. FOR COMPLETE RIGHT OF WAY AND ACCURATE ACCESS DATA, SEE RIGHT OF WAY RECORD MAPS AT DISTRICT OFFICE.

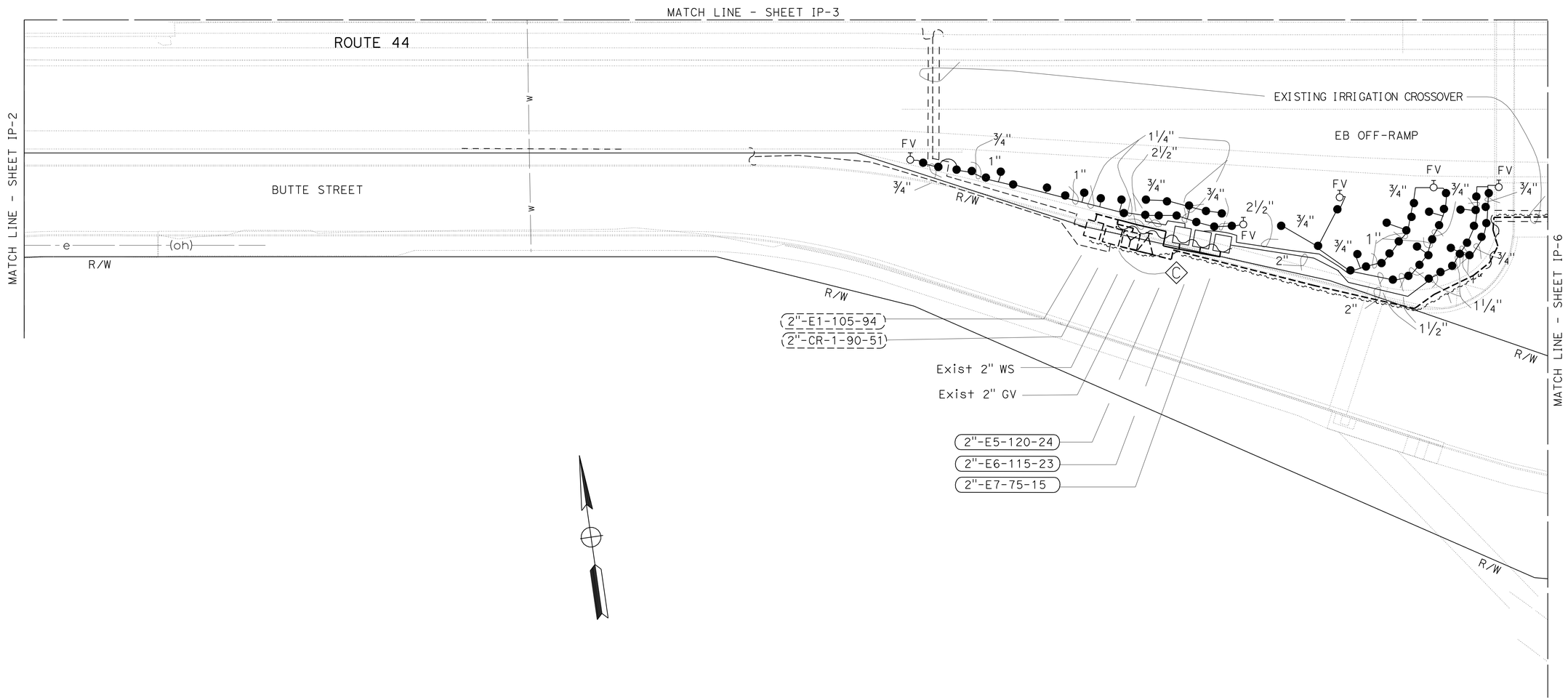

IRRIGATION PLAN

SCALE: 1" = 30'

IP-5

THIS SHEET ACCURATE FOR LANDSCAPE WORK ONLY.

REVISED BY	
DATE REVISED	
DATE	
CALCULATED/DESIGNED BY	J. PATRICK SULLIVAN
CHECKED BY	RON FLORY
PROJECT LANDSCAPE ARCHITECT	RON FLORY

STATE OF CALIFORNIA - DEPARTMENT OF TRANSPORTATION

Caltrans LANDSCAPE ARCHITECTURE

P:\proj2\02\32804_plans\pse\232804t1005.dgn

LAST REVISION 08-24-10 DATE PLOTTED => 25-AUG-2010 TIME PLOTTED => 09:39

NOTE:

1. FOR COMPLETE RIGHT OF WAY AND ACCURATE ACCESS DATA, SEE RIGHT OF WAY RECORD MAPS AT DISTRICT OFFICE.

DIST	COUNTY	ROUTE	POST MILES TOTAL PROJECT	SHEET No	TOTAL SHEETS
02	Sha	44	L0.3/R0.1	18	40

LICENSED LANDSCAPE ARCHITECT

08-24-10

PLANS APPROVAL DATE

LICENSED LANDSCAPE ARCHITECT J. PATRICK SULLIVAN #3125 STATE OF CALIFORNIA

Signature 06-28-12 Renewal Date 08-19-10 Date

The State of California or its officers or agents shall not be responsible for the accuracy or completeness of electronic copies of this plan sheet.

To get to the Caltrans web site, go to: http://www.dot.ca.gov

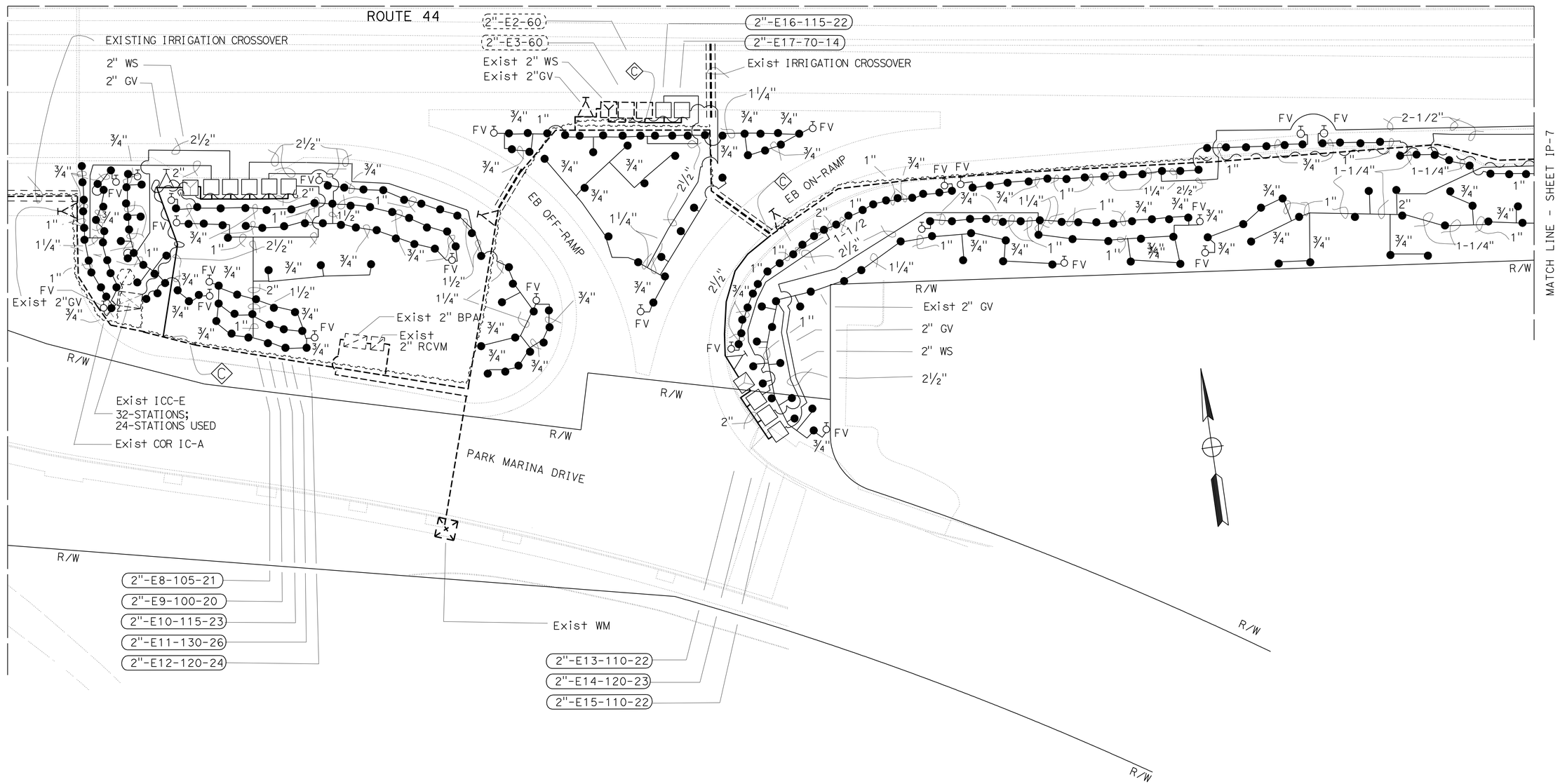

IRRIGATION PLAN

SCALE: 1" = 30'

IP-6

THIS SHEET ACCURATE FOR LANDSCAPE WORK ONLY.

REVISED BY	DATE REVISED

CALCULATED/DESIGNED BY: J. PATRICK SULLIVAN
CHECKED BY: RON FLORY

PROJECT LANDSCAPE ARCHITECT: RON FLORY

STATE OF CALIFORNIA - DEPARTMENT OF TRANSPORTATION
Caltrans® LANDSCAPE ARCHITECTURE

P:\proj2\02\32804_plans\pse\232804t1006.dgn

LAST REVISION 08-24-10 DATE PLOTTED => 25-AUG-2010 TIME PLOTTED => 09:39

DIST	COUNTY	ROUTE	POST MILES TOTAL PROJECT	SHEET No	TOTAL SHEETS
02	Sha	44	L0.3/R0.1	19	40

LICENSED LANDSCAPE ARCHITECT

08-24-10

PLANS APPROVAL DATE

LICENSED LANDSCAPE ARCHITECT #3125 J. PATRICK SULLIVAN Signature 06-28-12 Renewal Date 08-19-10 Date STATE OF CALIFORNIA

The State of California or its officers or agents shall not be responsible for the accuracy or completeness of electronic copies of this plan sheet.

To get to the Caltrans web site, go to: http://www.dot.ca.gov

NOTE:

1. FOR COMPLETE RIGHT OF WAY AND ACCURATE ACCESS DATA, SEE RIGHT OF WAY RECORD MAPS AT DISTRICT OFFICE.

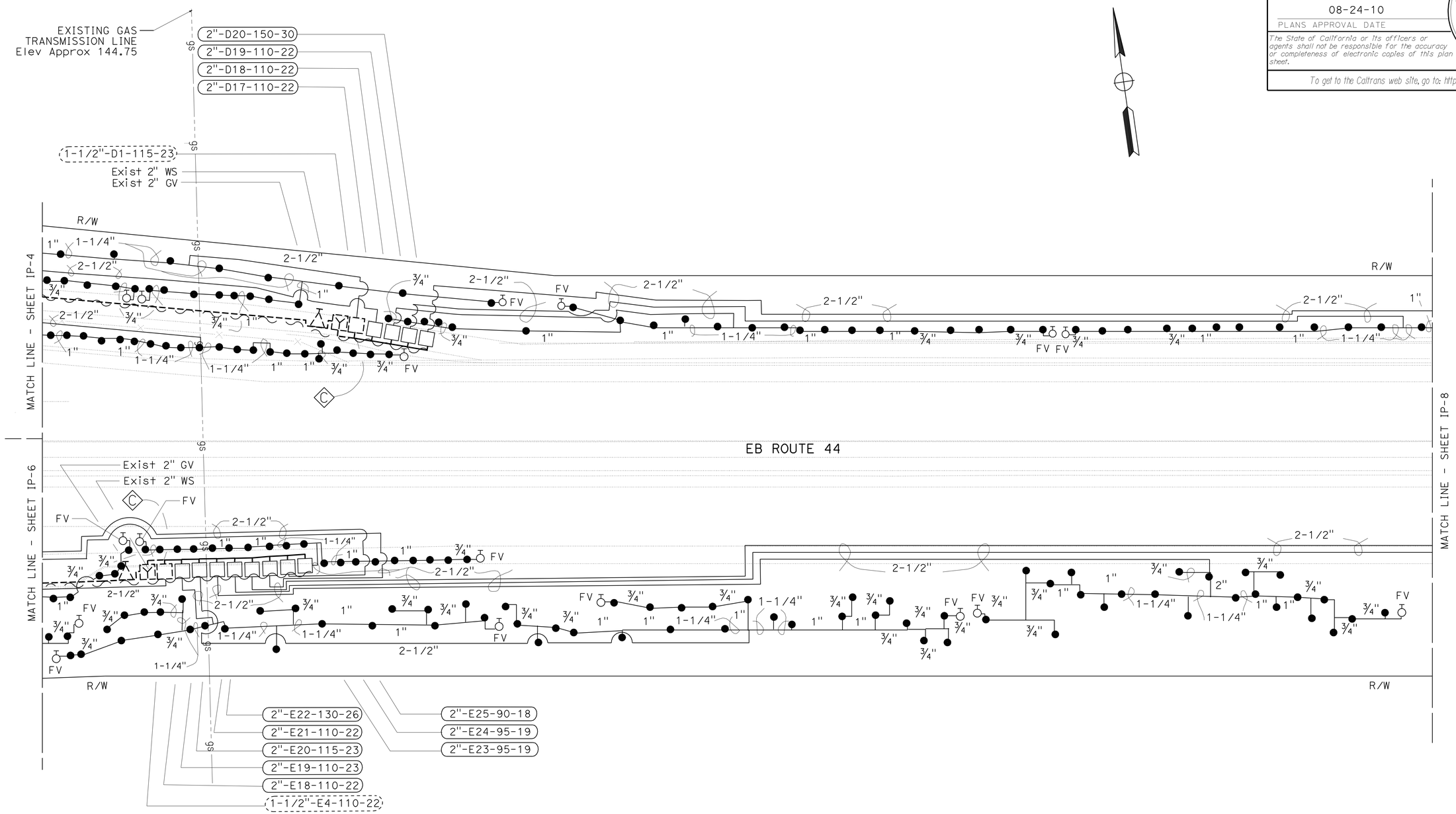

IRRIGATION PLAN

SCALE: 1" = 30'

IP-7

THIS SHEET ACCURATE FOR LANDSCAPE WORK ONLY.

REVISED BY	DATE REVISED

CALCULATED/DESIGNED BY: J. PATRICK SULLIVAN
CHECKED BY: RON FLORY
PROJECT LANDSCAPE ARCHITECT: RON FLORY

STATE OF CALIFORNIA - DEPARTMENT OF TRANSPORTATION
Caltrans
LANDSCAPE ARCHITECTURE

P:\proj2\02\32804_plans\pse\232804I007.dgn

LAST REVISION 08-24-10 DATE PLOTTED => 25-AUG-2010 TIME PLOTTED => 09:39

NOTE:

1. FOR COMPLETE RIGHT OF WAY AND ACCURATE ACCESS DATA, SEE RIGHT OF WAY RECORD MAPS AT DISTRICT OFFICE.

DIST	COUNTY	ROUTE	POST MILES TOTAL PROJECT	SHEET No	TOTAL SHEETS
02	Sha	44	L0.3/R0.1	20	40

LICENSED LANDSCAPE ARCHITECT

08-24-10

PLANS APPROVAL DATE

LICENSED LANDSCAPE ARCHITECT J. PATRICK SULLIVAN #3125 Signature 06-28-12 Renewal Date 08-19-10 Date STATE OF CALIFORNIA

The State of California or its officers or agents shall not be responsible for the accuracy or completeness of electronic copies of this plan sheet.

To get to the Caltrans web site, go to: http://www.dot.ca.gov

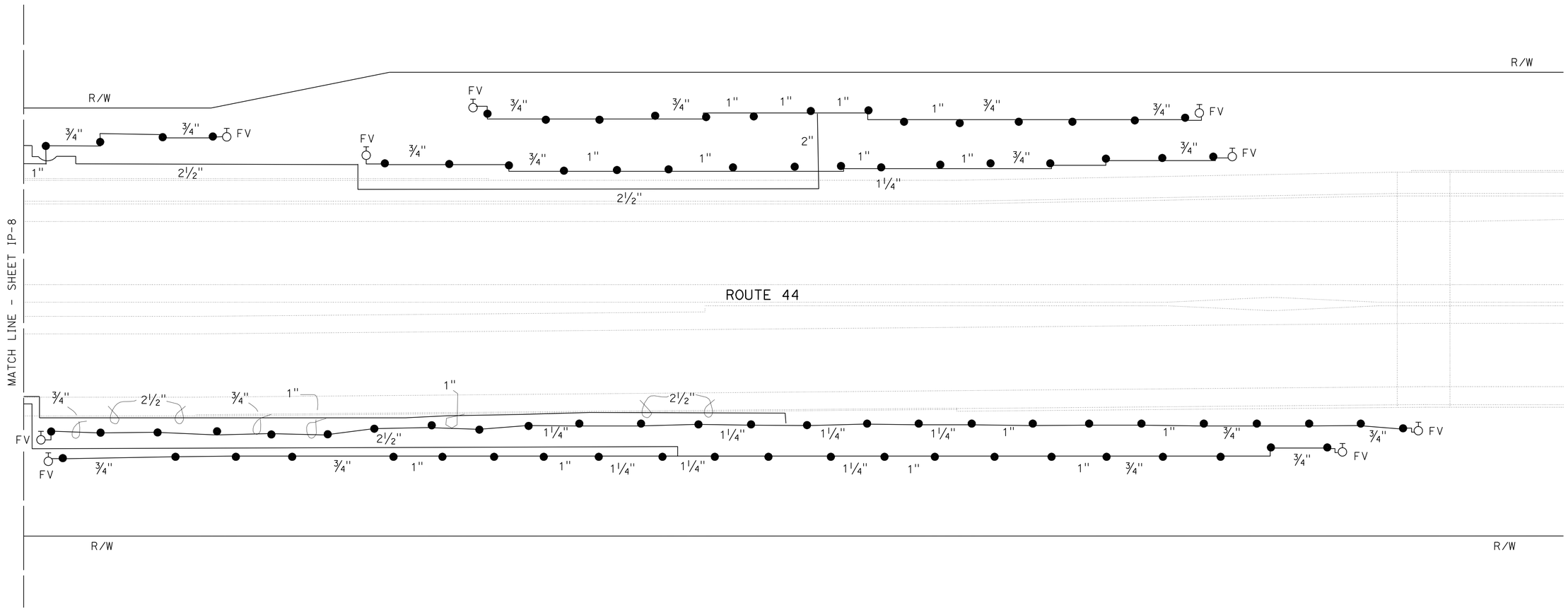

IRRIGATION PLAN

SCALE: 1" = 30'

IP-8

THIS SHEET ACCURATE FOR LANDSCAPE WORK ONLY.

STATE OF CALIFORNIA - DEPARTMENT OF TRANSPORTATION

Caltrans LANDSCAPE ARCHITECTURE

PROJECT LANDSCAPE ARCHITECT: RON FLORY

CALCULATED/DESIGNED BY: J. PATRICK SULLIVAN

CHECKED BY: RON FLORY

REVISED BY | DATE REVISED | DATE

P:\proj2\02\32804_plans\pse\232804t1008.dgn

LAST REVISION 08-24-10 | DATE PLOTTED => 25-AUG-2010 | TIME PLOTTED => 09:39

DIST	COUNTY	ROUTE	POST MILES TOTAL PROJECT	SHEET No	TOTAL SHEETS
02	Sha	44	L0.3/R0.1	21	40

LICENSED LANDSCAPE ARCHITECT

08-24-10

PLANS APPROVAL DATE

LICENSED LANDSCAPE ARCHITECT J. PATRICK SULLIVAN #3125 Signature 06-28-12 Renewal Date 08-19-10 Date STATE OF CALIFORNIA

The State of California or its officers or agents shall not be responsible for the accuracy or completeness of electronic copies of this plan sheet.

To get to the Caltrans web site, go to: http://www.dot.ca.gov

NOTE:

1. FOR COMPLETE RIGHT OF WAY AND ACCURATE ACCESS DATA, SEE RIGHT OF WAY RECORD MAPS AT DISTRICT OFFICE.

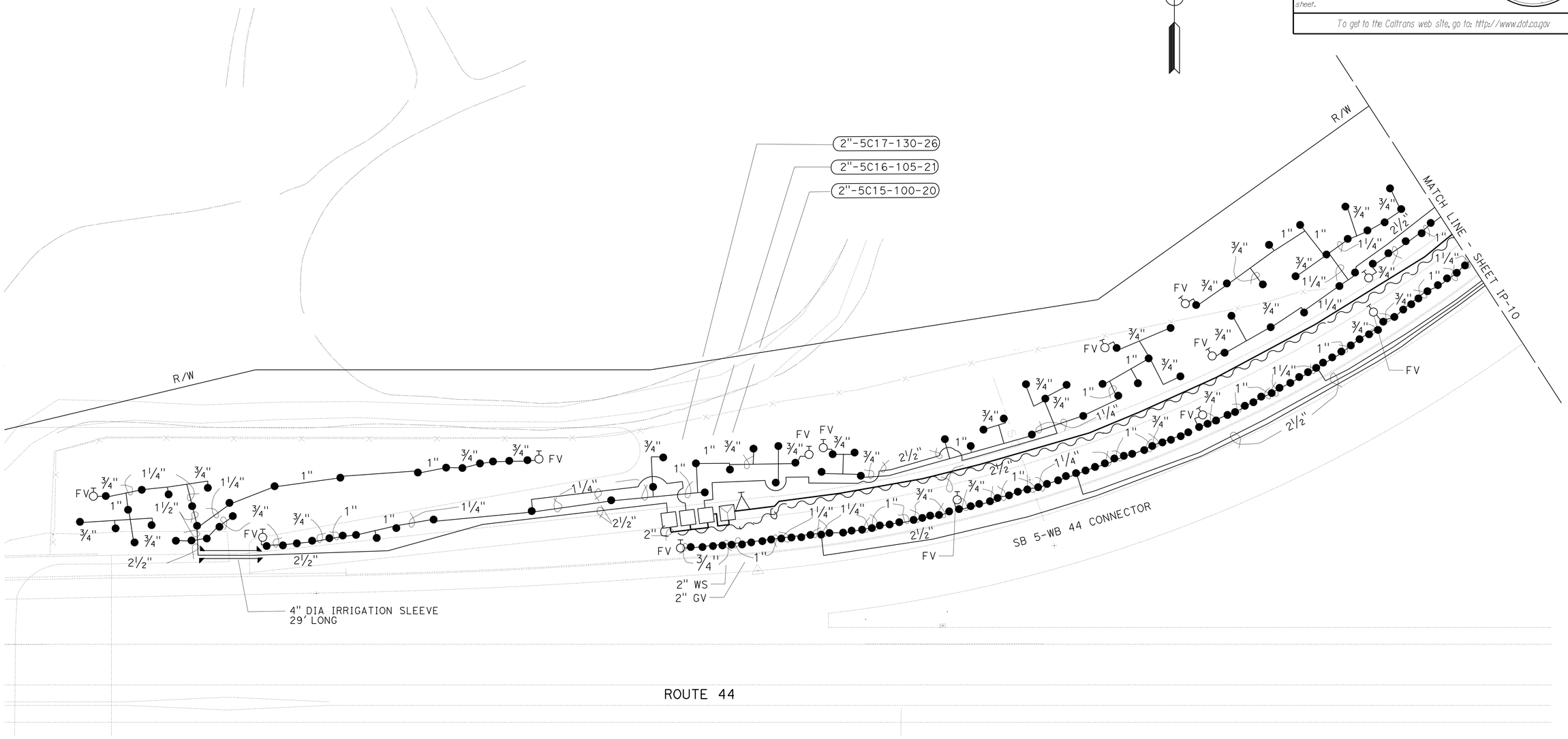

IRRIGATION PLAN

SCALE: 1" = 30'

IP-9

THIS SHEET ACCURATE FOR LANDSCAPE WORK ONLY.

PROJECT LANDSCAPE ARCHITECT: RON FLORY

CALCULATED/DESIGNED BY: J. PATRICK SULLIVAN

CHECKED BY: RON FLORY

REVISED BY | DATE | DATE REVISED

STATE OF CALIFORNIA - DEPARTMENT OF TRANSPORTATION

Caltrans LANDSCAPE ARCHITECTURE

P:\proj2\02\32804_plans\pse\232804t1009.dgn

LAST REVISION 08-24-10 | DATE PLOTTED => 25-AUG-2010 | TIME PLOTTED => 09:40

DIST	COUNTY	ROUTE	POST MILES TOTAL PROJECT	SHEET No	TOTAL SHEETS
02	Sha	44	L0.3/R0.1	22	40

LICENSED LANDSCAPE ARCHITECT

08-24-10

PLANS APPROVAL DATE

LICENSED LANDSCAPE ARCHITECT #3125 J. PATRICK SULLIVAN STATE OF CALIFORNIA

Signature 08-28-10 Renewal Date 08-19-10 Date

The State of California or its officers or agents shall not be responsible for the accuracy or completeness of electronic copies of this plan sheet.

To get to the Caltrans web site, go to: http://www.dot.ca.gov

NOTE:

1. FOR COMPLETE RIGHT OF WAY AND ACCURATE ACCESS DATA, SEE RIGHT OF WAY RECORD MAPS AT DISTRICT OFFICE.

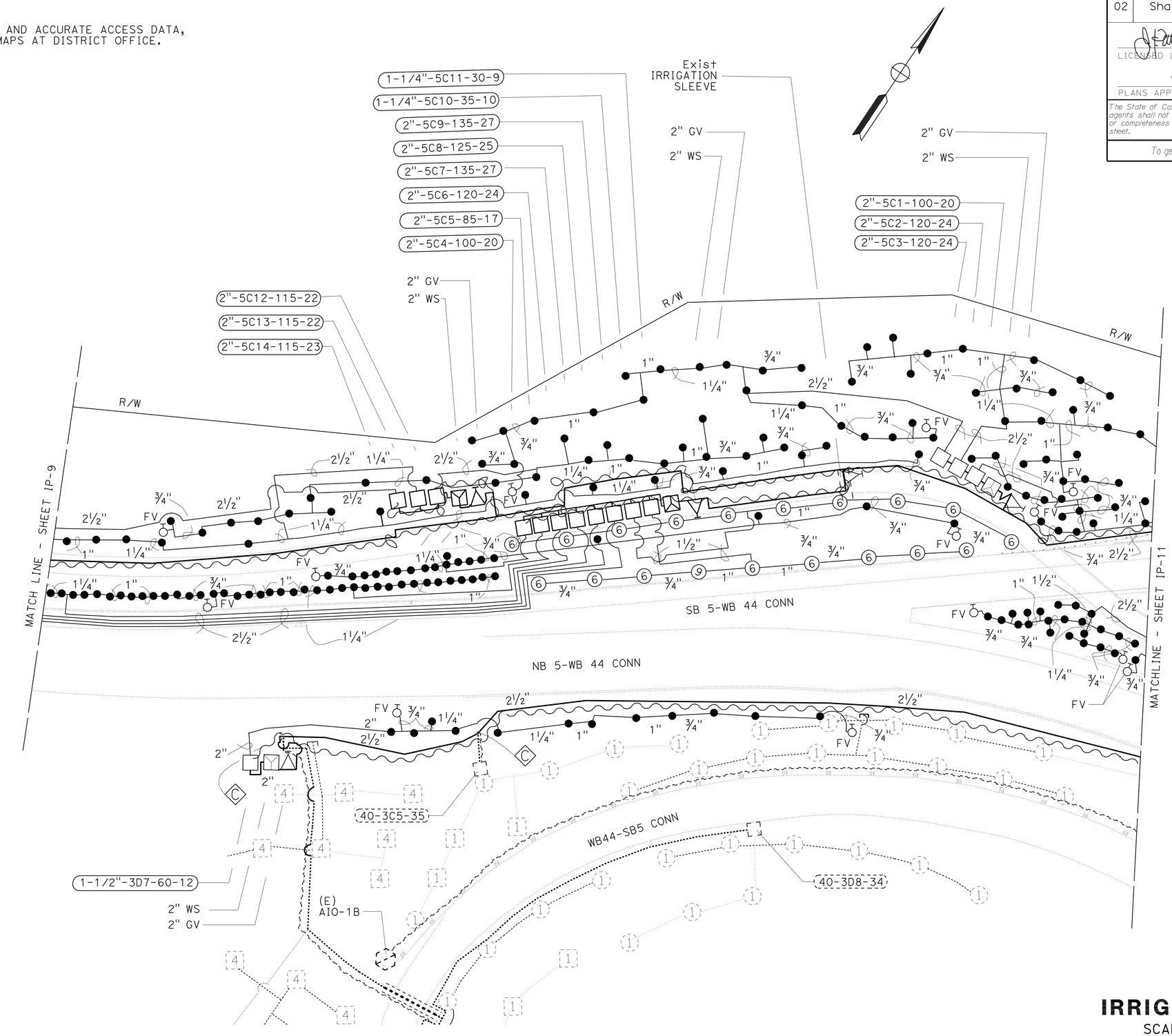

IRRIGATION PLAN

SCALE: 1" = 30'

IP-10

THIS SHEET ACCURATE FOR LANDSCAPE WORK ONLY.

STATE OF CALIFORNIA - DEPARTMENT OF TRANSPORTATION

Caltrans

LANDSCAPE ARCHITECTURE

PROJECT LANDSCAPE ARCHITECT: RON FLORY

CALCULATED/DESIGNED BY: J. PATRICK SULLIVAN

CHECKED BY: RON FLORY

REVISED BY | DATE | DATE REVISED

P:\proj2\02\32804_plans\pse\232804t1010.dgn

LAST REVISION 08-24-10 | DATE PLOTTED => 25-AUG-2010 | TIME PLOTTED => 09:40

BORDER LAST REVISED 7/2/2010 | USERNAME => s115152 | DGN FILE => 232804t1010.dgn | RELATIVE BORDER SCALE IS IN INCHES 0 1 2 3 | UNIT 0383 | PROJECT NUMBER & PHASE 02000002431

DIST	COUNTY	ROUTE	POST MILES TOTAL PROJECT	SHEET No	TOTAL SHEETS
02	Sha	44	L0.3/R0.1	23	40

LICENSED LANDSCAPE ARCHITECT

08-24-10

PLANS APPROVAL DATE

LICENSED LANDSCAPE ARCHITECT J. PATRICK SULLIVAN #3125 Signature 08-28-10 Renewal Date 08-19-10 Date STATE OF CALIFORNIA

The State of California or its officers or agents shall not be responsible for the accuracy or completeness of electronic copies of this plan sheet.

To get to the Caltrans web site, go to: http://www.dot.ca.gov

NOTE:

1. FOR COMPLETE RIGHT OF WAY AND ACCURATE ACCESS DATA, SEE RIGHT OF WAY RECORD MAPS AT DISTRICT OFFICE.

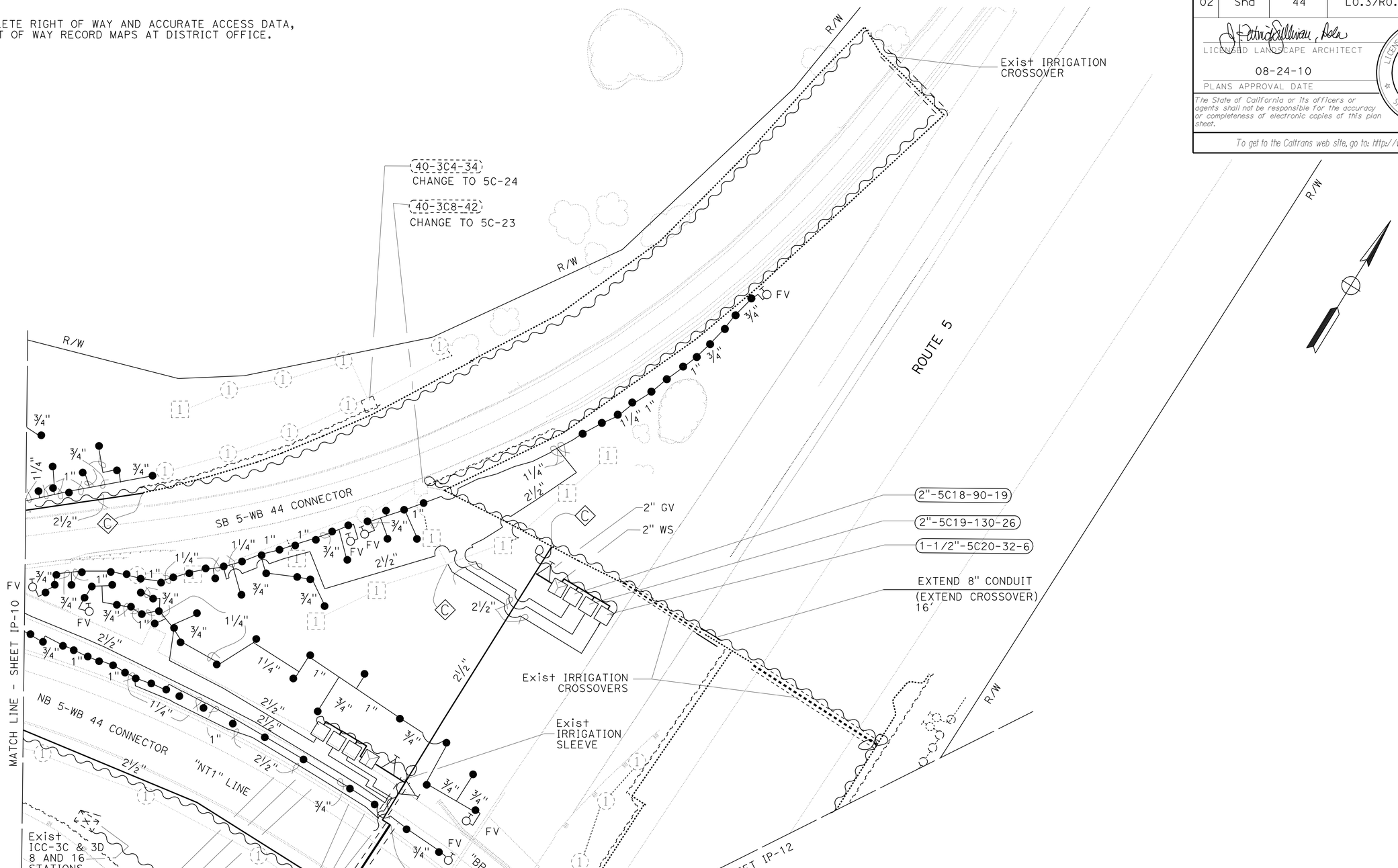

IRRIGATION PLAN

SCALE: 1" = 30'

IP-11

THIS SHEET ACCURATE FOR LANDSCAPE WORK ONLY.

CALCULATED/DESIGNED BY	J. PATRICK SULLIVAN	DATE
CHECKED BY	RON FLORY	REVISED BY
PROJECT LANDSCAPE ARCHITECT	RON FLORY	DATE REVISED

STATE OF CALIFORNIA - DEPARTMENT OF TRANSPORTATION

Caltrans LANDSCAPE ARCHITECTURE

P:\proj2\02\32804_plans\pse\232804t1011.dgn

LAST REVISION 08-24-10 | DATE PLOTTED => 25-AUG-2010 | TIME PLOTTED => 09:40

BORDER LAST REVISED 7/2/2010 | USERNAME => s115152 | DGN FILE => 232804t1011.dgn | RELATIVE BORDER SCALE IS IN INCHES 0 1 2 3 | UNIT 0383 | PROJECT NUMBER & PHASE 02000002431

DIST	COUNTY	ROUTE	POST MILES TOTAL PROJECT	SHEET No	TOTAL SHEETS
02	Sha	44	L0.3/R0.1	24	40

LICENSED LANDSCAPE ARCHITECT

08-24-10

PLANS APPROVAL DATE

J. PATRICK SULLIVAN #3125 LICENSED LANDSCAPE ARCHITECT STATE OF CALIFORNIA

Signature 08-28-10 Renewal Date 08-19-10 Date

The State of California or its officers or agents shall not be responsible for the accuracy or completeness of electronic copies of this plan sheet.

To get to the Caltrans web site, go to: http://www.dot.ca.gov

NOTE:

1. FOR COMPLETE RIGHT OF WAY AND ACCURATE ACCESS DATA, SEE RIGHT OF WAY RECORD MAPS AT DISTRICT OFFICE.

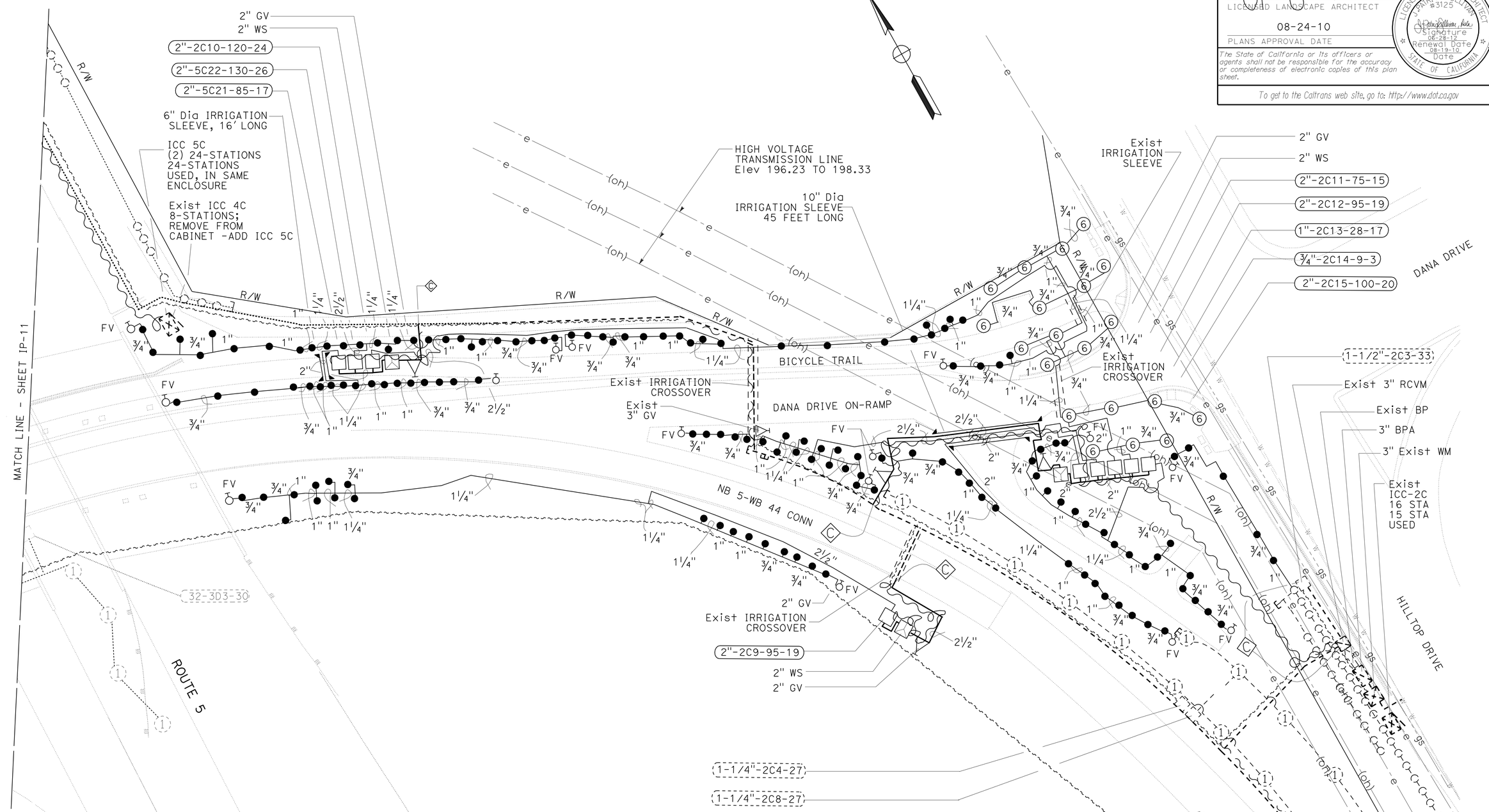

IRRIGATION PLAN

SCALE: 1" = 30'

IP-12

THIS SHEET ACCURATE FOR LANDSCAPE WORK ONLY.

REVISED BY	DATE REVISED

CALCULATED/DESIGNED BY: J. PATRICK SULLIVAN
CHECKED BY: RON FLORY

PROJECT LANDSCAPE ARCHITECT: RON FLORY

STATE OF CALIFORNIA - DEPARTMENT OF TRANSPORTATION
Caltrans
LANDSCAPE ARCHITECTURE

P:\proj2\02\32804_plans\pse\232804t1012.dgn

LAST REVISION 08-24-10
DATE PLOTTED => 25-AUG-2010
TIME PLOTTED => 09:40

DIST	COUNTY	ROUTE	POST MILES TOTAL PROJECT	SHEET No	TOTAL SHEETS
02	Sha	44	L0.3/R0.1	25	40

LICENSED LANDSCAPE ARCHITECT

08-24-10

PLANS APPROVAL DATE

LICENSED LANDSCAPE ARCHITECT J. PATRICK SULLIVAN #3125 Signature 06-28-12 Renewal Date 08-19-10 Date STATE OF CALIFORNIA

The State of California or its officers or agents shall not be responsible for the accuracy or completeness of electronic copies of this plan sheet.

To get to the Caltrans web site, go to: http://www.dot.ca.gov

SPRINKLER SCHEDULE

SYMBOL	TYPE	DESCRIPTION	SPRAY PATTERN	OPERATING PRESSURE (PSI)	PRESSURE COMPENSATING	PLUS/MINUS 5% ② DISCHARGE GALLONS PER MINUTE (GPM)	PLUS/MINUS 5% ② DISCHARGE GALLONS PER HOUR (GPH)	PLUS/MINUS 5% ② RADIUS (Ft)	PLUS/MINUS 5% ② WIDTH x LENGTH (Ft)	MATERIAL	INLET CONNECTION (NPT INCH)	POSITIVE-LOCKING ADJ ARC STOP	BACKSPLASH PREVENTER	DIFFUSER PIN	DISTANCE CONTROL FLAP	ADJ DISCHARGE	RISER TYPE	RISER MATERIAL PLASTIC	RISER MATERIAL GALVANIZED	RISER SIZE (IPS INCH)	RISER HEIGHT (INCH)	RISER FLOW SHUTOFF DEVICE	⑤ SWING JOINT (TYPE)	RISER SUPPORT	SPRINKLER PROTECTOR (TYPE) ⑧	REMARKS
⑥	A-6	POP UP ROTOR	PC	35	—	1.0/ 4.0	—	26/ 38	—	PL	¾	X	—	X	—	X	I	X	—	¾	—	X	I	X	I	POP UP ADJUSTABLE ROTOR ⑦
▲	B-2	POP UP SPRAY	PC/ F	30	X	.8/ 4.0	—	8/ 15	—	PL	½	—	—	—	—	X	I	X	—	½	—	—	I	—	I	POP UP ADJUSTABLE SHRUB SPRAY ⑦
■	B-4	STRIP SPRAY	EST/ SST	30	X	.6/ 1.2	—	—		PL	½	—	—	—	—	X	I	X	—	½	—	—	I	—	I	POP UP STRIP SPRAY ⑦
●	C-2	ADJ BUBBLER	F	30	—	.5/ 4.99	—	1.5/ 2	—	PL	½	—	—	—	—	X	X	X	—	½	14	X	—	—	—	ADJUSTABLE BUBBLER

X IN BOX DENOTES REQUIREMENT

APPLICABLE WHEN CIRCLED BELOW:

1 - See Special Provisions.
2 - If a pressure compensating device is specified, the discharge and radii shown reflect its use.
3 - Arc Stop shall be fitted with a nut and bolt.
4 - Vinyl-coated cast iron housing.
5 - Swing Joints required adjacent to shoulders, curbs, sidewalks, and dikes.
6 - Unless otherwise shown on plans.

⑦ - 12" POP-UPS REQUIRED.
⑧ - SPRINKLER PROTECTOR ADJACENT TO TO EDGE OF TRAVEL WAY/ASPHALT

ABBREVIATIONS

F — full circle
P — part circle
F/P — full/part circle
Q — quarter circle
T — third circle
H — half circle
TT — two third circle
TQ — three quarter circle
CST — center strip
SST — side strip
EST — end strip
Ft — feet/foot
GPM — gallons per minute
GPH — gallons per hour
Adj — adjustable
PL — plastic
B/B — brass/bronze
B/PL — brass/plastic
B/B/PL — brass/bronze/plastic
NPT — national pipe thread
IPS — iron pipe size
PSI — pounds per square inch

LANDSCAPE DETAILS SPRINKLER SCHEDULE

LD-1

STATE OF CALIFORNIA - DEPARTMENT OF TRANSPORTATION
Caltrans® LANDSCAPE ARCHITECTURE

PROJECT LANDSCAPE ARCHITECT: RON FLORY
CALCULATED/DESIGNED BY: J. PATRICK SULLIVAN
CHECKED BY: RON FLORY
DATE
REVISED BY
DATE REVISED

P:\proj2\02\32804_plans\pse\232804tn001.dgn

LAST REVISION 08-24-10
DATE PLOTTED => 25-AUG-2010
TIME PLOTTED => 09:40

DIST	COUNTY	ROUTE	POST MILES TOTAL PROJECT	SHEET No	TOTAL SHEETS
02	Sha	44	L0.3/R0.1	26	40

LICENSED LANDSCAPE ARCHITECT

08-24-10

PLANS APPROVAL DATE

LICENSED LANDSCAPE ARCHITECT J. PATRICK SULLIVAN #3125 Signature 06-28-12 Renewal Date 08-19-10 Date STATE OF CALIFORNIA

The State of California or its officers or agents shall not be responsible for the accuracy or completeness of electronic copies of this plan sheet.

To get to the Caltrans web site, go to: http://www.dot.ca.gov

EXTEND IRRIGATION CROSSOVERS

LOCATION	SIDE		EXTEND CONDUIT		CB	OL	(N) WATER LINE CROSSOVER	(N) SPRINKLER CONTROL CROSSOVER
			SIZE (INCH)					
POST MILE	R†	L†	8	—			SIZE (INCH)	SIZE (INCH)
			LENGTH (LF)					
15.616 (IN MEDIAN)		X	16	—	—	X	3"	2"
TOTAL								

(N) - NOT A SEPARATE PAY ITEM FOR INFORMATION ONLY
X - DENOTES REQUIREMENT

CB - COUPLING BAND
OL - OVERLAP

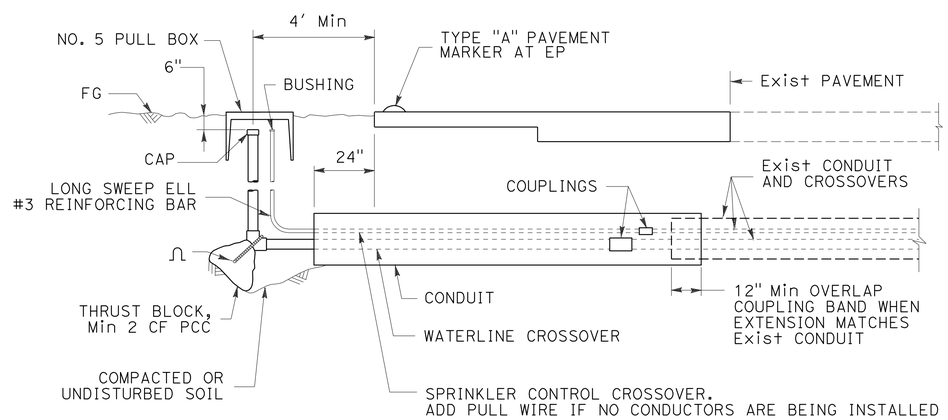

SECTION

EXTEND IRRIGATION CROSSOVER

LANDSCAPE DETAILS EXTEND CROSSOVER

NO SCALE

LD-2

REVISED BY	DATE	REVISED
J. PATRICK SULLIVAN		RON FLORY

CALCULATED/DESIGNED BY: J. PATRICK SULLIVAN
CHECKED BY: RON FLORY

PROJECT LANDSCAPE ARCHITECT: RON FLORY

STATE OF CALIFORNIA - DEPARTMENT OF TRANSPORTATION
Caltrans
LANDSCAPE ARCHITECTURE

P:\proj2\02\32804_plans\pse\232804tn002.dgn

LAST REVISION 08-24-10 | DATE PLOTTED => 25-AUG-2010 | TIME PLOTTED => 09:41

DIST	COUNTY	ROUTE	POST MILES TOTAL PROJECT	SHEET No	TOTAL SHEETS
02	Sha	44	L0.3/R0.1	27	40

LICENSED LANDSCAPE ARCHITECT

08-24-10

PLANS APPROVAL DATE

LICENSED LANDSCAPE ARCHITECT J. PATRICK SULLIVAN #3125 STATE OF CALIFORNIA

Signature 06-28-12 Renewal Date 08-19-10 Date

The State of California or its officers or agents shall not be responsible for the accuracy or completeness of electronic copies of this plan sheet.

To get to the Caltrans web site, go to: http://www.dot.ca.gov

ABBREVIATIONS

EA — each
DIP — ductile iron pipe
GSP — galvanized steel pipe
Ft — foot/feet
PR — pressure rated

SUBTOTALS PER VALVE ON LATERAL SUPPLY SIDE OF CONTROL VALVE

DESCRIPTION			UNIT	A-1	A-2	A-4	A-4	A-5	A-8	A-9	A-10	A-11	B-6	B-7	B-8	B-9	B-10	C-6	C-7	C-8	C-9	C-10	D-1	D-2	D-3	D-4	D-5	D-6	D-7	D-8	D-9	D-10	D-11	D-12	D-13	D-14	D-15	D-16	D-17	D-18	D-19	D-20	SUBTOTALS	UNIT	DESCRIPTION		
PLASTIC PIPE SUPPLY LINE	Sch 40	¾" PIPE	Ft	74	58	38	83	87	160	116	161	106	98	132	90	275	141	120	172	214	156	52	298	176	82	119	154	164	192	221	202	173	141	91	113	96	154	249	172	164	177	499	5970	Ft	¾" PIPE	Sch 40	PLASTIC PIPE SUPPLY LINE
		1" PIPE		54	122	8	32	59	62	68	35	67	82	115	77	100	96	149	43	84	124	4	132	24	99	64	20	105	121	33	38	96	78	71	52	75	51	73	94	214	91	279	3191		1" PIPE		
		1-1/4" PIPE		53	42	—	40	45	71	26	72	74	—	154	31	135	64	—	62	9	—	360	145	63	62	68	64	58	6	2	57	25	80	73	64	51	13	17	50	65	69	62	2332		1-1/4" PIPE		
		1-1/2" PIPE		—	—	—	—	—	35	—	—	—	—	82	—	—	—	—	9	—	—	—	—	—	—	—	—	—	114	—	11	16	—	—	—	—	—	—	—	—	—	—	267		1-1/2" PIPE		
		2" PIPE		—	—	—	—	—	—	—	—	—	—	—	—	—	—	—	—	—	—	—	—	—	—	—	—	—	—	45	—	41	—	—	—	—	—	—	—	—	—	62	148		2" PIPE		
		2-1/2" PIPE	✓	185	34	—	118	60	72	166	150	30	—	107	70	512	48	—	67	107	172	—	132	—	86	63	—	75	—	312	206	—	532	266	55	215	40	208	230	645	635	1136	6735	✓	2-1/2" PIPE		
	PR 315	NONE	—	—	—	—	—	—	—	—	—	—	—	—	—	—	—	—	—	—	—	—	—	—	—	—	—	—	—	—	—	—	—	—	—	—	—	—	—	—	—	—	—	—	NONE	NONE	PR 315	PLASTIC PIPE SUPPLY LINE
			—	—	—	—	—	—	—	—	—	—	—	—	—	—	—	—	—	—	—	—	—	—	—	—	—	—	—	—	—	—	—	—	—	—	—	—	—	—	—	—	—	—				
			—	—	—	—	—	—	—	—	—	—	—	—	—	—	—	—	—	—	—	—	—	—	—	—	—	—	—	—	—	—	—	—	—	—	—	—	—	—	—	—	—	—				
			—	—	—	—	—	—	—	—	—	—	—	—	—	—	—	—	—	—	—	—	—	—	—	—	—	—	—	—	—	—	—	—	—	—	—	—	—	—	—	—	—	—				
			—	—	—	—	—	—	—	—	—	—	—	—	—	—	—	—	—	—	—	—	—	—	—	—	—	—	—	—	—	—	—	—	—	—	—	—	—	—	—	—	—	—				
		✓	—	—	—	—	—	—	—	—	—	—	—	—	—	—	—	—	—	—	—	—	—	—	—	—	—	—	—	—	—	—	—	—	—	—	—	—	—	—	—	—	—	—	✓	✓		
GSP		NONE	—	—	—	—	—	—	—	—	—	—	—	—	—	—	—	—	—	—	—	—	—	—	—	—	—	—	—	—	—	—	—	—	—	—	—	—	—	—	—	—	—	—	NONE	NONE	GSP	
			—	—	—	—	—	—	—	—	—	—	—	—	—	—	—	—	—	—	—	—	—	—	—	—	—	—	—	—	—	—	—	—	—	—	—	—	—	—	—	—	—	—				
		✓	—	—	—	—	—	—	—	—	—	—	—	—	—	—	—	—	—	—	—	—	—	—	—	—	—	—	—	—	—	—	—	—	—	—	—	—	—	—	—	—	—	—				
DIP		NONE	—	—	—	—	—	—	—	—	—	—	—	—	—	—	—	—	—	—	—	—	—	—	—	—	—	—	—	—	—	—	—	—	—	—	—	—	—	—	—	—	—	—			DIP	
			—	—	—	—	—	—	—	—	—	—	—	—	—	—	—	—	—	—	—	—	—	—	—	—	—	—	—	—	—	—	—	—	—	—	—	—	—	—	—	—	—	—				
		✓	—	—	—	—	—	—	—	—	—	—	—	—	—	—	—	—	—	—	—	—	—	—	—	—	—	—	—	—	—	—	—	—	—	—	—	—	—	—	—	—	—	—	✓	✓		
SPRINKLER TYPE		A-6	EA	—	—	4	—	—	—	—	—	—	4	—	—	—	—	8	—	—	—	—	—	8	—	—	—	—	9	—	—	10	—	—	—	—	—	—	—	—	—	—	—	43	EA	A-6	SPRINKLER TYPE	
		B-2		—	—	—	—	—	—	—	—	—	—	—	—	—	—	—	—	—	—	—	—	—	—	—	8	—	—	—	—	—	—	—	—	—	—	—	—	—	—	—	—	8		B-2		
		B-4		—	—	—	—	—	—	—	—	—	—	—	—	—	—	—	—	—	—	—	—	—	—	—	3	—	—	—	—	—	—	—	—	—	—	—	—	—	—	—	—	3		B-4		
		C-2	✓	20	19	—	21	23	19	39	22	27	—	19	28	22	23	1	22	15	17	5	23	—	22	21	—	21	—	25	25	—	26	26	23	22	23	23	22	22	22	30	718	✓	C-2		
			—	—	—	—	—	—	—	—	—	—	—	—	—	—	—	—	—	—	—	—	—	—	—	—	—	—	—	—	—	—	—	—	—	—	—	—	—	—	—	—	—	—				
			—	—	—	—	—	—	—	—	—	—	—	—	—	—	—	—	—	—	—	—	—	—	—	—	—	—	—	—	—	—	—	—	—	—	—	—	—	—	—	—	—	—				
			—	—	—	—	—	—	—	—	—	—	—	—	—	—	—	—	—	—	—	—	—	—	—	—	—	—	—	—	—	—	—	—	—	—	—	—	—	—	—	—	—	—				

DESCRIPTION			UNIT	E-4	E-5	E-6	E-7	E-8	E-9	E-10	E-11	E-12	E-13	E-14	E-15	E-16	E-17	E-18	E-19	E-20	E-21	E-22	2C-3	2C-9	2C-10	2C-11	2C-12	2C-13	2C-14	2C-15	5C-1	5C-2	5C-3	5C-4	5C-5	5C-6	5C-7	5C-8	5C-9	✳ 5C-10	✳ 5C-11	✳ 5C-12	SUBTOTALS	UNIT	DESCRIPTION		
PLASTIC PIPE SUPPLY LINE	Sch 40	¾" PIPE	Ft	432	140	207	73	197	153	203	158	382	60	223	217	149	213	264	349	301	250	329	113	89	215	111	128	306	48	123	232	143	319	360	320	62	60	84	51	204	188	75	7531	Ft	¾" PIPE	Sch 40	PLASTIC PIPE SUPPLY LINE
		1" PIPE		48	20	36	21	73	69	31	102	27	55	49	62	27	—	164	88	79	247	241	21	53	152	53	34	28	40	94	130	52	83	43	32	42	56	47	50	127	70	53	2699		1" PIPE		
		1-1/4" PIPE		68	60	41	8	—	20	63	—	—	—	120	21	72	74	102	81	80	279	162	—	244	160	70	20	96	—	45	111	45	81	62	30	66	48	68	48	70	—	54	2569		1-1/4" PIPE		
		1-1/2" PIPE		—	—	32	—	—	—	24	15	12	21	—	—	—	—	—	—	—	—	—	—	—	—	—	—	—	—	—	—	—	—	—	—	—	—	—	—	—	—	—	104		1-1/2" PIPE		
		2" PIPE		14	—	—	137	—	—	—	—	10	—	—	—	—	—	—	—	14	—	—	—	—	—	—	—	46	—	—	—	—	—	—	—	—	—	—	—	85	105	—	410		2" PIPE		
		2-1/2" PIPE	✓	189	12	127	—	112	95	156	88	140	154	95	286	30	150	50	385	632	1198	1152	—	176	232	175	205	—	—	44	175	113	62	89	118	168	340	506	659	826	—	80	9019	✓	2-1/2" PIPE		
	PR 315	NONE	—	—	—	—	—	—	—	—	—	—	—	—	—	—	—	—	—	—	—	—	—	—	—	—	—	—	—	—	—	—	—	—	—	—	—	—	—	—	—	—	—	—	NONE	NONE	PR 315	PLASTIC PIPE SUPPLY LINE
			—	—	—	—	—	—	—	—	—	—	—	—	—	—	—	—	—	—	—	—	—	—	—	—	—	—	—	—	—	—	—	—	—	—	—	—	—	—	—	—	—	—				
			—	—	—	—	—	—	—	—	—	—	—	—	—	—	—	—	—	—	—	—	—	—	—	—	—	—	—	—	—	—	—	—	—	—	—	—	—	—	—	—	—	—				
			—	—	—	—	—	—	—	—	—	—	—	—	—	—	—	—	—	—	—	—	—	—	—	—	—	—	—	—	—	—	—	—	—	—	—	—	—	—	—	—	—	—				
			—	—	—	—	—	—	—	—	—	—	—	—	—	—	—	—	—	—	—	—	—	—	—	—	—	—	—	—	—	—	—	—	—	—	—	—	—	—	—	—	—	—				
		✓	—	—	—	—	—	—	—	—	—	—	—	—	—	—	—	—	—	—	—	—	—	—	—	—	—	—	—	—	—	—	—	—	—	—	—	—	—	—	—	—	—	—	✓	✓		
GSP		NONE	—	—	—	—	—	—	—	—	—	—	—	—	—	—	—	—	—	—	—	—	—	—	—	—	—	—	—	—	—	—	—	—	—	—	—	—	—	—	—	—	—	—	NONE		GSP	
			—	—	—	—	—	—	—	—	—	—	—	—	—	—	—	—	—	—	—	—	—	—	—	—	—	—	—	—	—	—	—	—	—	—	—	—	—	—	—	—	—	—				
		✓	—	—	—	—	—	—	—	—	—	—	—	—	—	—	—	—	—	—	—	—	—	—	—	—	—	—	—	—	—	—	—	—	—	—	—	—	—	—	—	—	—	—				
DIP		NONE	—	—	—	—	—	—	—	—	—	—	—	—	—	—	—	—	—	—	—	—	—	—	—	—	—	—	—	—	—	—	—	—	—	—	—	—	—	—	—	—	—	—			DIP	
			—	—	—	—	—	—	—	—	—	—	—	—	—	—	—	—	—	—	—	—	—	—	—	—	—	—	—	—	—	—	—	—	—	—	—	—	—	—	—	—	—	—				
		✓	—	—	—	—	—	—	—	—	—	—	—	—	—	—	—	—	—	—	—	—	—	—	—	—	—	—	—	—	—	—	—	—	—	—	—	—	—	—	—	—	—	—	✓			
SPRINKLER TYPE		A-6	EA	—	—	—	—	—	—	—	—	—	—	—	—	—	—	—	—	—	—	—	—	—	—	—	—	3	17	—	—	—	—	—	—	—	—	—	—	10	9	—	39	EA	A-6	SPRINKLER TYPE	
		B-2		—	—	—	—	—	—	—	—	—	—	—	—	—	—	—	—	—	—	—	—	—	—	—	—	—	—	—	—	—	—	—	—	—	—	—	—	—	—	—	—	—		B-2		
		B-4		—	—	—	—	—	—	—	—	—	—	—	—	—	—	—	—	—	—	—	—	—	—	—	—	—	—	—	—	—	—	—	—	—	—	—	—	—	—	—	—	—		B-4		
		C-2	✓	22	24	23	15	21	20	23	26	24	22	23	22	22	14	22	23	23	23	26	5	21	19	15	19	—	—	20	20	24	24	22	20	25	24	27	25	—	—	22	750	✓	C-2		
			—	—	—	—	—	—	—	—	—	—	—	—	—	—	—	—	—	—	—	—	—	—	—	—	—	—	—	—	—	—	—	—	—	—	—	—	—	—	—	—	—	—				
			—	—	—	—	—	—	—	—	—	—	—	—	—	—	—	—	—	—	—	—	—	—	—	—	—	—	—	—	—	—	—	—	—	—	—	—	—	—	—	—	—	—				
			—	—	—	—	—	—	—	—	—	—	—	—	—	—	—	—	—	—	—	—	—	—	—	—	—	—	—	—	—	—	—	—	—	—	—	—	—	—	—	—	—	—				

IRRIGATION QUANTITIES

IQ-1

STATE OF CALIFORNIA - DEPARTMENT OF TRANSPORTATION
Caltrans® LANDSCAPE ARCHITECTURE

PROJECT LANDSCAPE ARCHITECT: RON FLORY
CALCULATED/DESIGNED BY: J. PATRICK SULLIVAN
CHECKED BY: RON FLORY
REVISED BY / DATE REVISED

P:\proj2\02\32804_plans\pse\232804to001.dgn

LAST REVISION 08-24-10 | DATE PLOTTED => 25-AUG-2010 | TIME PLOTTED => 09:41

DIST	COUNTY	ROUTE	POST MILES TOTAL PROJECT	SHEET No	TOTAL SHEETS
02	Sha	44	L0.3/R0.1	28	40

LICENSED LANDSCAPE ARCHITECT

08-24-10

PLANS APPROVAL DATE

LICENSED LANDSCAPE ARCHITECT J. PATRICK SULLIVAN #3125 Signature 06-28-12 Renewal Date 08-19-10 Date STATE OF CALIFORNIA

The State of California or its officers or agents shall not be responsible for the accuracy or completeness of electronic copies of this plan sheet.

To get to the Caltrans web site, go to: http://www.dot.ca.gov

ABBREVIATIONS

EA — each
DIP — ductile iron pipe
GSP — galvanized steel pipe
Ft — foot/feet
PR — pressure rated

SUBTOTALS PER VALVE ON LATERAL SUPPLY SIDE OF CONTROL VALVE

DESCRIPTION			UNIT	VALVE OR ASSEMBLY NUMBER																																				SUBTOTALS	UNIT	DESCRIPTION		
				5C-13	5C-14	5C-15	5C-16	5C-17	5C-18	5C-19	5C-20	5C-21	5C-22	3D-7	3D-9	3D-10	3D-11																												
PLASTIC PIPE SUPPLY LINE	Sch 40	¾" PIPE	Ft	403	69	318	179	216	127	153	—	53	135	30	127	142	266																									2218	Ft	¾" PIPE	Sch 40	PLASTIC PIPE SUPPLY LINE
		1" PIPE		63	63	98	107	160	61	98	—	41	105	112	99	18	112																									1137		1" PIPE		
		1-1/4" PIPE		60	166	38	168	114	138	117	—	29	26	9	55	30	104																									1054		1-1/4" PIPE		
		1-1/2" PIPE		—	—	—	—	—	—	—	—	—	—	—	—	7	—																									7		1-1/2" PIPE		
		2" PIPE		—	—	—	—	—	—	—	—	62	—	18	—	—	—																									80		2" PIPE		
		2-1/2" PIPE	✓	299	236	230	93	298	168	228	101	—	33	—	228	333	155																									2402	✓	2-1/2" PIPE		
	PR 315	NONE	—	—	—	—	—	—	—	—	—	—	—	—	—	—	—																									—	NONE	NONE	PR 315	
			—	—	—	—	—	—	—	—	—	—	—	—	—	—	—																													
			—	—	—	—	—	—	—	—	—	—	—	—	—	—	—																													
			—	—	—	—	—	—	—	—	—	—	—	—	—	—	—																													
		✓	—	—	—	—	—	—	—	—	—	—	—	—	—	—	—																										✓	✓	
GSP		NONE	—	—	—	—	—	—	—	—	—	—	—	—	—	—	—																									—	NONE	NONE	GSP	
			—	—	—	—	—	—	—	—	—	—	—	—	—	—	—																													
		✓	—	—	—	—	—	—	—	—	—	—	—	—	—	—	—																										✓	✓	
DIP		NONE	—	—	—	—	—	—	—	—	—	—	—	—	—	—	—																													
			—	—	—	—	—	—	—	—	—	—	—	—	—	—	—																													
		✓	—	—	—	—	—	—	—	—	—	—	—	—	—	—	—																										✓	✓	
SPRINKLER TYPE		A-6	EA	—	—	—	—	—	—	—	—	—	—	—	—	—	—																										EA	A-6	SPRINKLER TYPE	
		B-2		—	—	—	—	—	—	—	—	—	—	—	—	—	—																											B-2		
		B-4		—	—	—	—	—	—	—	—	—	—	—	—	—	—																											B-4		
		C-2	✓	22	23	20	21	26	19	26	—	17	26	12	21	24	24																									279	✓	C-2		
			—	—	—	—	—	—	—	—	—	—	—	—	—	—	—																													
			—	—	—	—	—	—	—	—	—	—	—	—	—	—	—																													
			—	—	—	—	—	—	—	—	—	—	—	—	—	—	—																													

IRRIGATION QUANTITIES

IQ-2

J. PATRICK SULLIVAN | DATE | REVISED BY | DATE REVISED

RON FLORY

CALCULATED/DESIGNED BY | CHECKED BY

PROJECT LANDSCAPE ARCHITECT

RON FLORY

STATE OF CALIFORNIA - DEPARTMENT OF TRANSPORTATION

Caltrans LANDSCAPE ARCHITECTURE

P:\proj2\02\32804_plans\pse\232804to002.dgn

LAST REVISION 08-24-10 | DATE PLOTTED => 25-AUG-2010 TIME PLOTTED => 09:41

DIST	COUNTY	ROUTE	POST MILES TOTAL PROJECT	SHEET No	TOTAL SHEETS
02	Sha	44	L0.3/R0.1	29	40

LICENSED LANDSCAPE ARCHITECT

08-24-10

PLANS APPROVAL DATE

LICENSED LANDSCAPE ARCHITECT J. PATRICK SULLIVAN #3125 Signature 06-28-12 Renewal Date 08-19-10 Date STATE OF CALIFORNIA

The State of California or its officers or agents shall not be responsible for the accuracy or completeness of electronic copies of this plan sheet.

To get to the Caltrans web site, go to: http://www.dot.ca.gov

ABBREVIATIONS

BPA — backflow preventer assembly
BV — ball valve
CV — check valve
CEC — controller enclosure cabinet
CSP — corrugated steel pipe
DIP — ductile iron pipe
EA — each
FAU — filter assembly unit
FCV — flow control valve
FS — flow sensor
FV — flush valve
GSP — galvanized steel pipe
GV — gate valve
MCV — manual control valve
Ft — foot/feet
PR — pressure rated
PRV — pressure reducing valve
PRLV — pressure relief valve
QCV — quick coupling valve
RCV — remote control valve
RCVM — remote control valve (master)
VAU — valve assembly unit
WSP — welded steel pipe
WS — wye strainer

SUBTOTALS PER PLAN SHEET ON MAIN SUPPLY SIDE OF CONTROL VALVE

DESCRIPTION			UNIT	SHEET NUMBER IP-1	IP-2	IP-3	IP-4	IP-5	IP-6	IP-7	IP-8	IP-9	IP-10	IP-11	IP-12	SUBTOTALS
BPA		ENCLOSURE														
BOOSTER PUMP																
IRRIGATION CONTROLLER		24 STATION	Ea											2		2
		STATION														
		STATION														
	CEC	SINGLE														
		DOUBLE														
VALVES AND ASSEMBLIES																
	RCV	¾" SIZE	Ea												1	1
		1" SIZE		2		1	2								1	6
		1-1/4" SIZE											2			2
		1-1/2" SIZE					1						1	1		3
		2" SIZE		10	2	3	12	3	10	12		3	9	5	7	76
	GV	2" SIZE		3	3	1	7		2			1	4	3	3	27
	QCV															
	FV	½" SIZE	Ea	19	5	9	26	5	23	21	9	13	13	7	15	154
	WS	2" SIZE	Ea	5	1	1	4		2			1	4	2	3	23
CONDUIT	CSP															
	WSP															
PLASTIC PIPE SUPPLY LINE	Sch 40	¾" PIPE	Ft	1110	467	768	2227	420	2487	1668	1181	1192	2293	777	1373	15963
		1" PIPE		807	154	404	954	77	616	626	799	651	944	373	621	7026
		1-1/4" PIPE		772	200	431	593	109	638	928	503	183	952	336	860	6505
		1-1/2" PIPE		152		9	141	32	72				8			414
		2" PIPE		238	44	44	252	149	99	165		36	255	120	168	1570
		2-1/2" PIPE		1559	1247	560	2522	163	2329	4540	1304	1378	3487	1610	1235	21934
	PR 315															
GSP																
DIP																
IRRIGATION SLEEVING (PR 315)		4" DIA	Ft									29				29 Ft
		6" DIA													16	16 Ft
		10" DIA													45	45 Ft

TOTAL QUANTITIES

TOTALS	UNIT	DESCRIPTION		
				BPA
		ENCLOSURE		BPA
		BOOSTER PUMP		
2	Ea	24 STATION		IRRIGATION CONTROLLER
		STATION		IRRIGATION CONTROLLER
		STATION		IRRIGATION CONTROLLER
		SINGLE	CEC	IRRIGATION CONTROLLER
		DOUBLE	CEC	IRRIGATION CONTROLLER
1		¾" SIZE	RCV	VALVES AND ASSEMBLIES
6		1" SIZE	RCV	VALVES AND ASSEMBLIES
2		1-1/4" SIZE	RCV	VALVES AND ASSEMBLIES
3		1-1/2" SIZE	RCV	VALVES AND ASSEMBLIES
76		2" SIZE	RCV	VALVES AND ASSEMBLIES
27	Ea	2" SIZE	GV	VALVES AND ASSEMBLIES
154	Ea	½" SIZE	FV	VALVES AND ASSEMBLIES
23	Ea	2" SIZE	WS	VALVES AND ASSEMBLIES
15963	Ft	¾" PIPE	Sch 40	PLASTIC PIPE SUPPLY LINE
7026		1" PIPE	Sch 40	PLASTIC PIPE SUPPLY LINE
6505		1-1/4" PIPE	Sch 40	PLASTIC PIPE SUPPLY LINE
414		1-1/2" PIPE	Sch 40	PLASTIC PIPE SUPPLY LINE
1570		2" PIPE	Sch 40	PLASTIC PIPE SUPPLY LINE
21934		2-1/2" PIPE	Sch 40	PLASTIC PIPE SUPPLY LINE
101		A-6		SPRINKLER TYPE
8		B-2		SPRINKLER TYPE
3		B-4		SPRINKLER TYPE
1784		C-2		SPRINKLER TYPE

TEMPORARY EROSION CONTROL

TEMPORARY DRAINAGE INLET PROTECTION	EA	15
TEMPORARY MULCH	SQYD	9680

IRRIGATION QUANTITIES AND TEMPORARY EROSION CONTROL

IQ-3

STATE OF CALIFORNIA - DEPARTMENT OF TRANSPORTATION
Caltrans LANDSCAPE ARCHITECTURE

PROJECT LANDSCAPE ARCHITECT: RON FLORY
CALCULATED/DESIGNED BY: J. PATRICK SULLIVAN
CHECKED BY: RON FLORY
REVISED BY / DATE REVISED

P:\proj2\02\32804_plans\pse\232804to003.dgn

LAST REVISION 08-24-10 | DATE PLOTTED => 25-AUG-2010 | TIME PLOTTED => 09:41

DIST	COUNTY	ROUTE	POST MILES TOTAL PROJECT	SHEET NO.	TOTAL SHEETS
02	Sha	44	L0.3/R0.1	30	40

Robert B Schott
LICENSED LANDSCAPE ARCHITECT

August 15, 2008
PLANS Approval DATE

The State of California or its officers or agents shall not be responsible for the accuracy or completeness of electronic copies of this plan sheet.

LICENSED LANDSCAPE ARCHITECT
Robert B. Schott 3685
Signature
11-04-08
Renewal Date
08-11-08
Date
STATE OF CALIFORNIA

To accompany plans dated 08-24-10

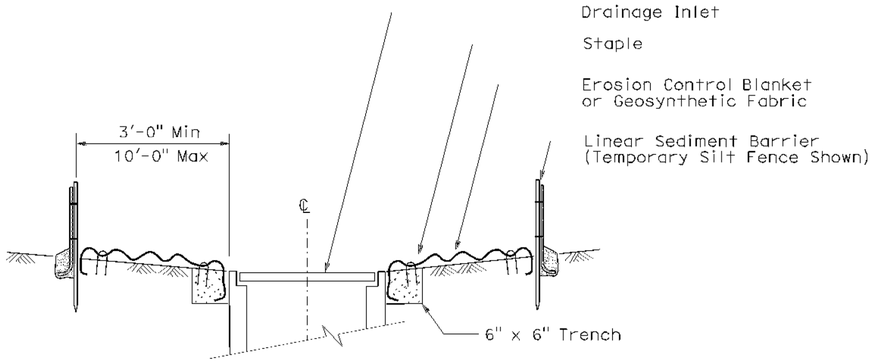

SECTION A-A

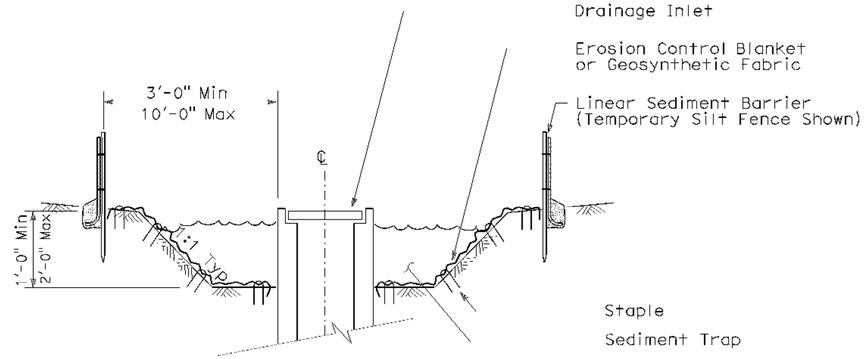

SECTION B-B

NOTES:

1. See Standard Plan T51 for Temporary Silt Fence.
2. Dimensions may vary to fit field conditions.

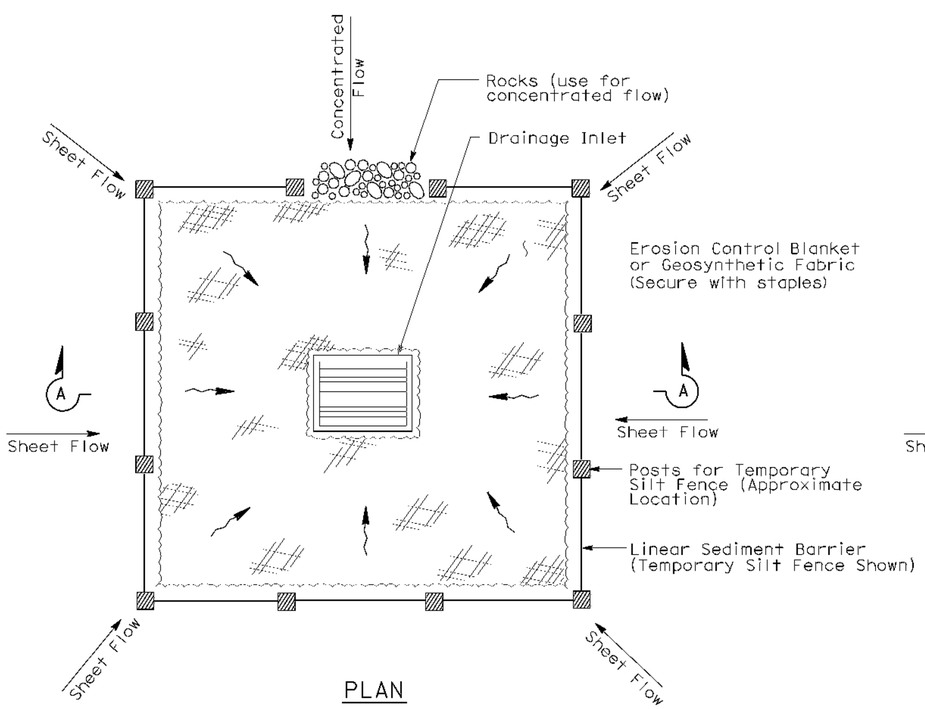

PLAN

TEMPORARY DRAINAGE INLET PROTECTION (TYPE 1)

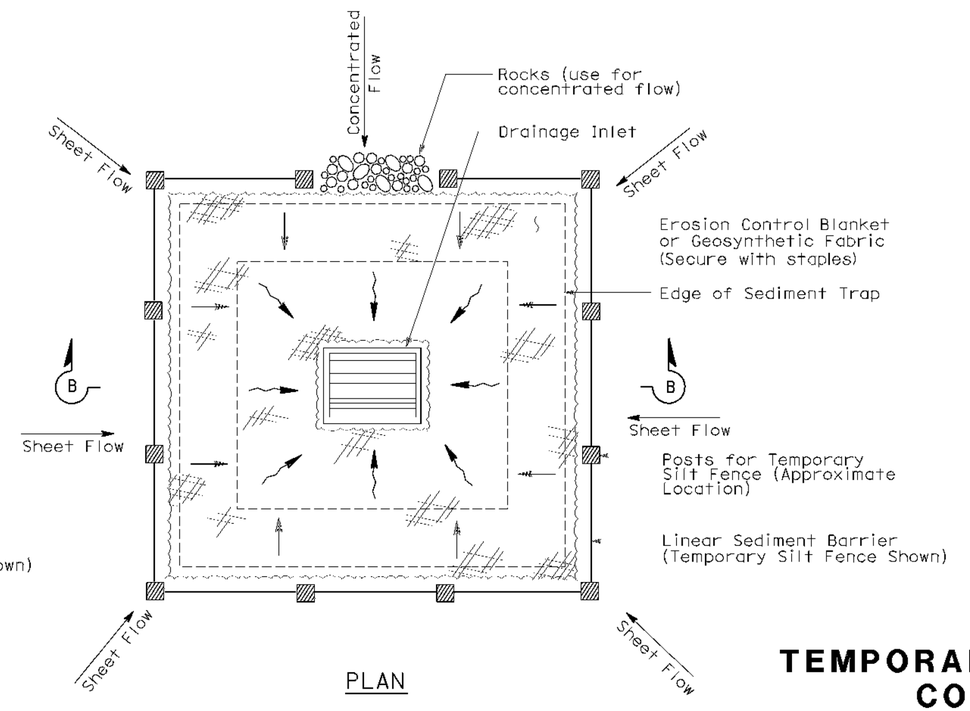

PLAN

TEMPORARY DRAINAGE INLET PROTECTION (TYPE 2) (EXCAVATED SEDIMENT TRAP)

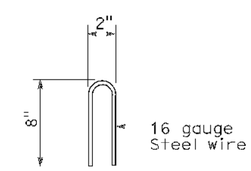

STAPLE DETAIL

STATE OF CALIFORNIA
DEPARTMENT OF TRANSPORTATION

TEMPORARY WATER POLLUTION CONTROL DETAILS (TEMPORARY DRAINAGE INLET PROTECTION)

NO SCALE

Nsp t61 dated august 15, 2008 supplements the standard plans book dated may 2006.

NEW STANDARD PLAN NSP T61

2006 NEW STANDARD PLAN NSP T61

P:\proj2\02\32804_plans\pse\232804va030.dgn

DIST	COUNTY	ROUTE	POST MILES TOTAL PROJECT	SHEET NO.	TOTAL SHEETS
02	Sha	44	L0.3/R0.1	31	40

Robert B Schott
LICENSED LANDSCAPE ARCHITECT

August 15, 2008
PLANS APPROVAL DATE

LICENSED LANDSCAPE ARCHITECT Robert B. Schott 3685 Signature 11-04-08 Renewal Date 08-11-08 Date STATE OF CALIFORNIA

The State of California or its officers or agents shall not be responsible for the accuracy or completeness of electronic copies of this plan sheet.

To accompany plans dated 08-24-10

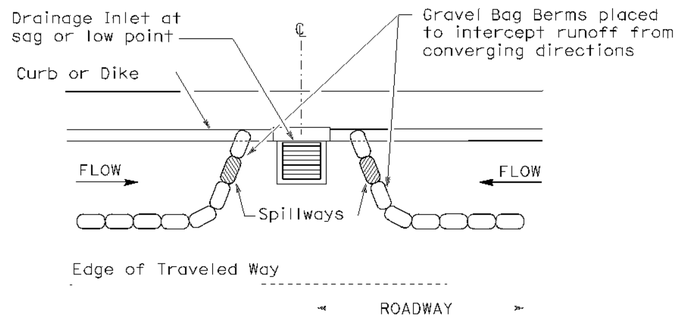

PLAN

CONFIGURATION FOR SAG POINT INLET (GRAVEL BAG BERM)

GRAVEL BAG BERM (TYPE 3A) SPACING TABLE

SLOPE OF ROADWAY (PERCENT)	1 to 3.9	4 to 5.9	6 to 7.9	8 to 10	10+
INTERVAL BETWEEN BERM	100'	75'	50'	25'	12'

For slope of less than 1%, install barriers only if erosion/sediment is prevalent

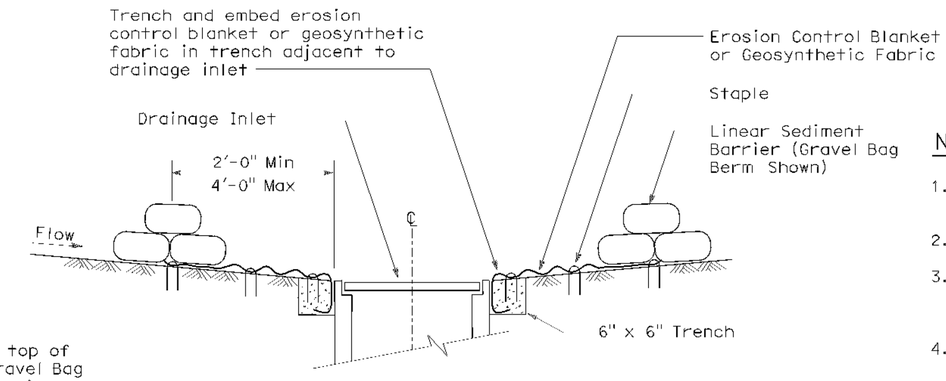

SECTION A-A

NOTES:

1. Place safety cones adjacent to drainage inlet protection.
2. Dimensions may vary to fit field conditions.
3. Install a minimum of 3 gravel bag berms upstream of each drainage inlet to be protected.
4. Position erosion control blanket or geosynthetic fabric at edge of concrete apron and secure in trench.
5. Erosion control blanket or geosynthetic fabric is not required if the area adjacent to the drainage inlet is vegetated or paved.

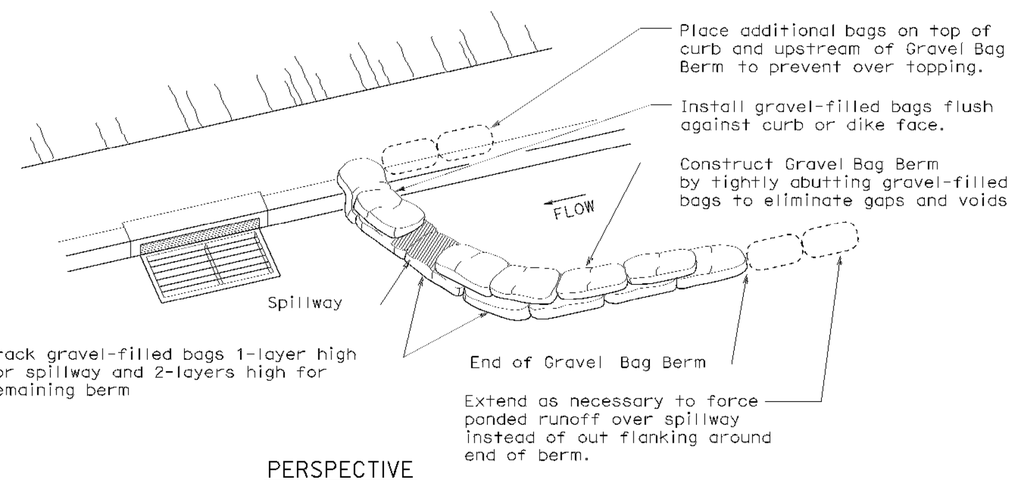

PERSPECTIVE

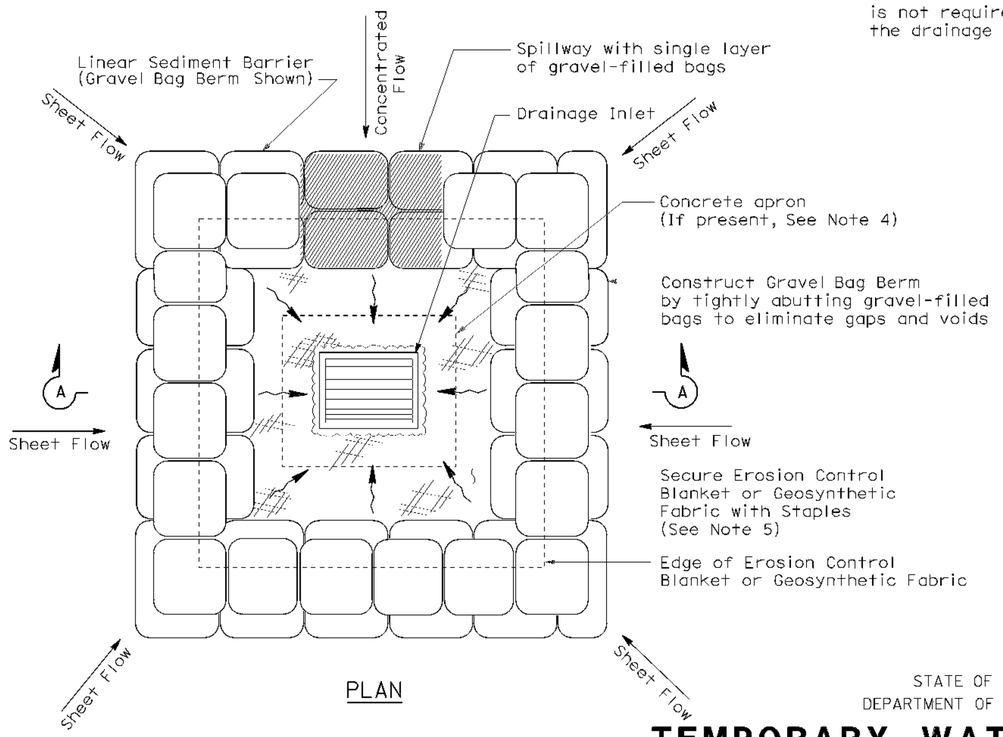

PLAN

TEMPORARY DRAINAGE INLET PROTECTION (TYPE 3B)

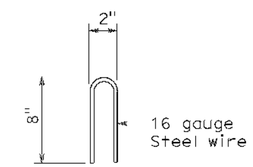

STAPLE DETAIL

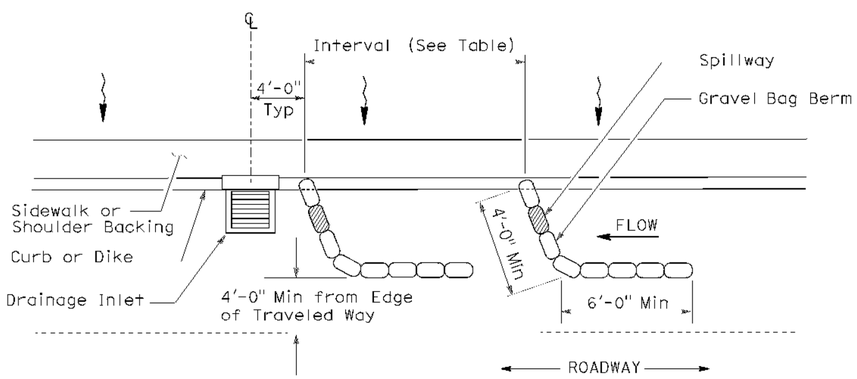

PLAN

TEMPORARY DRAINAGE INLET PROTECTION (TYPE 3A) (GRAVEL BAG BERM)

STATE OF CALIFORNIA
DEPARTMENT OF TRANSPORTATION

TEMPORARY WATER POLLUTION CONTROL DETAILS (TEMPORARY DRAINAGE INLET PROTECTION)

NO SCALE

NSP T62 DATED AUGUST 15, 2008 SUPPLEMENTS
THE STANDARD PLANS BOOK DATED MAY 2006.

NEW STANDARD PLAN NSP T62

2006 NEW STANDARD PLAN NSP T62

P:\proj2\02\32804_plans\pse\232804va031.dgn

DIST	COUNTY	ROUTE	POST MILES TOTAL PROJECT	SHEET NO.	TOTAL SHEETS
02	Sha	44	L0.3/R0.1	32	40

Robert B Schott
LICENSED LANDSCAPE ARCHITECT

August 15, 2008
PLANS APPROVAL DATE

LICENSED LANDSCAPE ARCHITECT
Robert B. Schott 3655
Signature
11-04-08
Renewal Date
08-11-08
Date
STATE OF CALIFORNIA

The State of California or its officers or agents shall not be responsible for the accuracy or completeness of electronic copies of this plan sheet.

To accompany plans dated 08-24-10

FLEXIBLE SEDIMENT BARRIER SPACING TABLE

SLOPE OF ROADWAY (PERCENT)	0 to 0.9	1 to 1.9	2 to 2.9	3 to 4	5+
INTERVAL BETWEEN BARRIERS	50′	35′	30′	25′	20′
ANGLE FROM FACE OF CURB	70°	70°	70°	45°	45°
SUGGESTED BARRIER LENGTH	6′	6′	6′	6′	6′

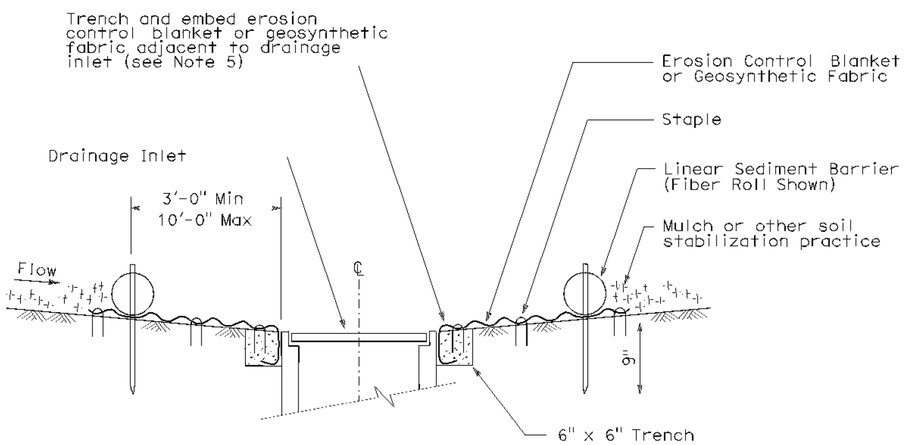

SECTION A-A

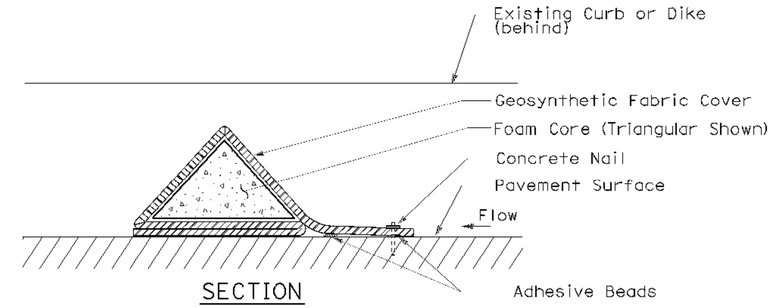

SECTION

FLEXIBLE SEDIMENT BARRIER DETAIL
(FOAM BARRIER SHOWN)

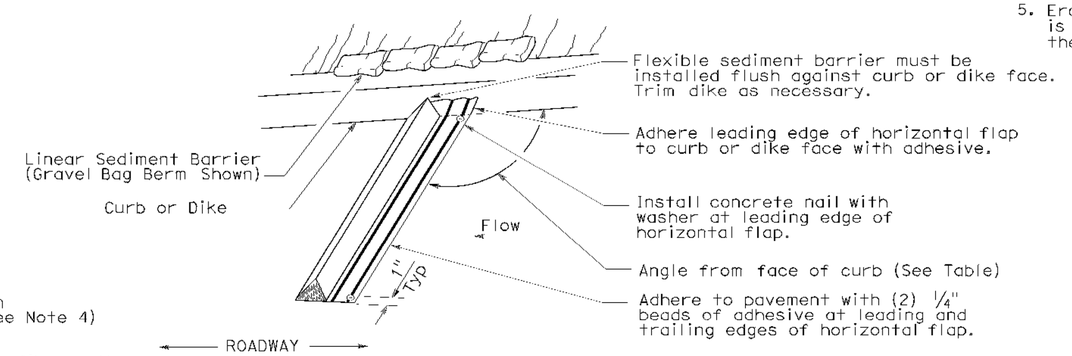

PERSPECTIVE

NOTES:

1. See Standard Plan T51 for Temporary Silt Fence.
2. Dimensions may vary to fit field conditions.
3. Install a minimum of 3 flexible sediment barriers upstream of each drainage inlet to be protected.
4. Position erosion control blanket or geosynthetic fabric at edge of concrete apron and secure in trench.
5. Erosion control blanket or geosynthetic fabric is not required if the area adjacent to the drainage inlet is vegetated.

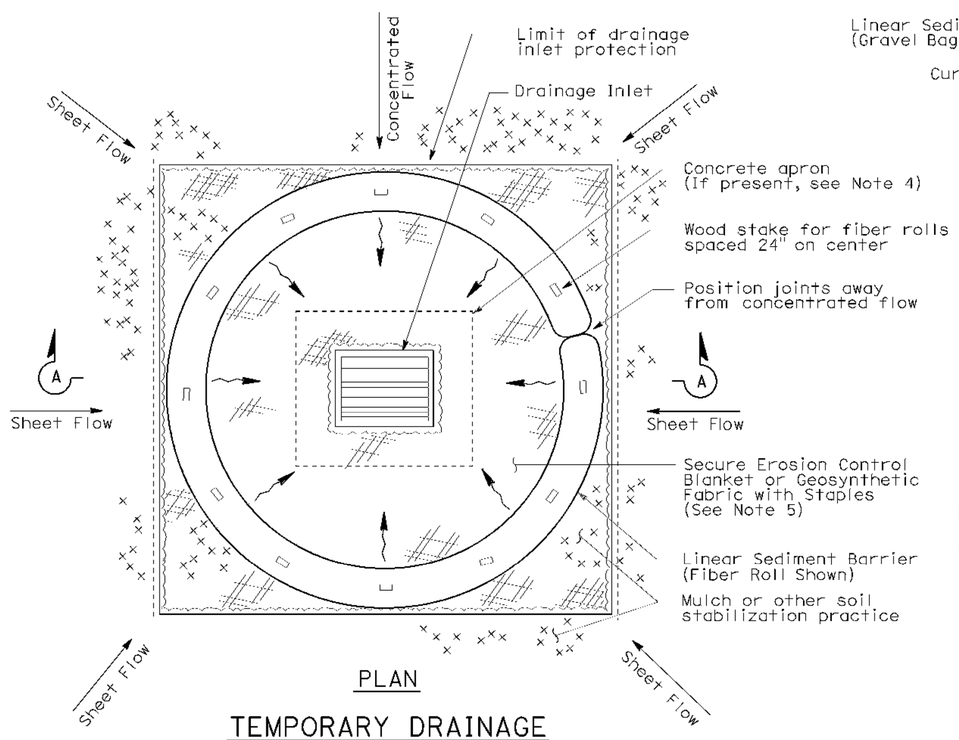

PLAN

TEMPORARY DRAINAGE
INLET PROTECTION (TYPE 4A)

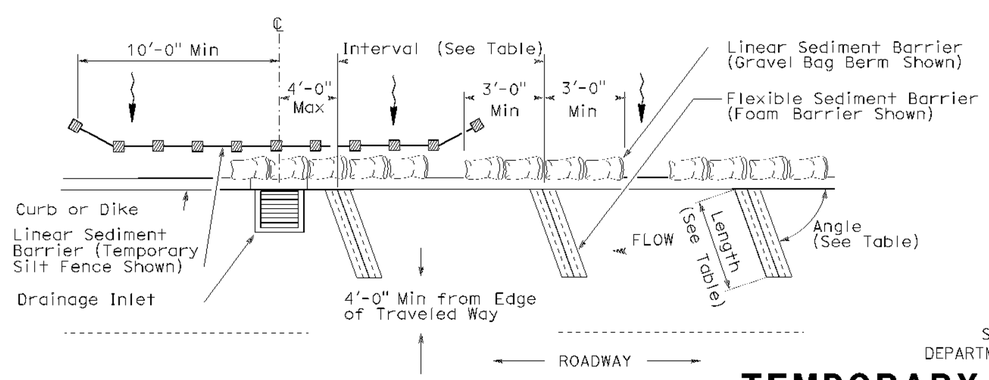

PLAN

TEMPORARY DRAINAGE
INLET PROTECTION (TYPE 4B)
FLEXIBLE SEDIMENT BARRIER

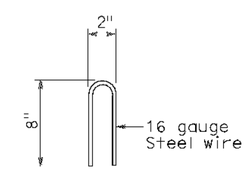

STAPLE DETAIL

STATE OF CALIFORNIA
DEPARTMENT OF TRANSPORTATION

TEMPORARY WATER POLLUTION CONTROL DETAILS (TEMPORARY DRAINAGE INLET PROTECTION)

NO SCALE

NSP T63 DATED AUGUST 15, 2008 SUPPLEMENTS
THE STANDARD PLANS BOOK DATED MAY 2006.

NEW STANDARD PLAN NSP T63

2006 NEW STANDARD PLAN NSP T63

P:\proj2\02\32804_plans\pse\232804va032.dgn

DIST	COUNTY	ROUTE	POST MILES TOTAL PROJECT	SHEET NO.	TOTAL SHEETS
02	Sha	44	L0.3/R0.1	33	40

LICENSED LANDSCAPE ARCHITECT

August 15, 2008
PLANS APPROVAL DATE

The State of California or its officers or agents shall not be responsible for the accuracy or completeness of electronic copies of this plan sheet.

LICENSED LANDSCAPE ARCHITECT — Robert B. Schott — Signature — 11-04-08 Renewal Date — 08-11-08 Date — STATE OF CALIFORNIA

To accompany plans dated 08-24-10

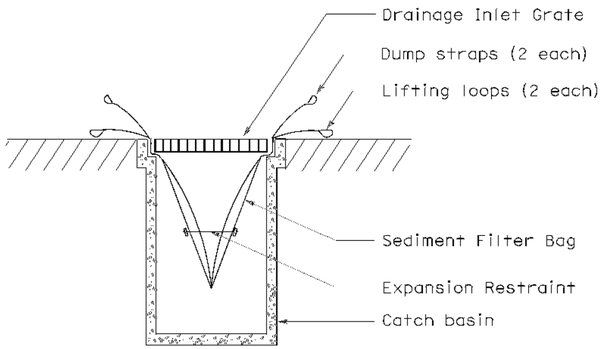

SECTION B-B

SEDIMENT FILTER BAG DETAIL

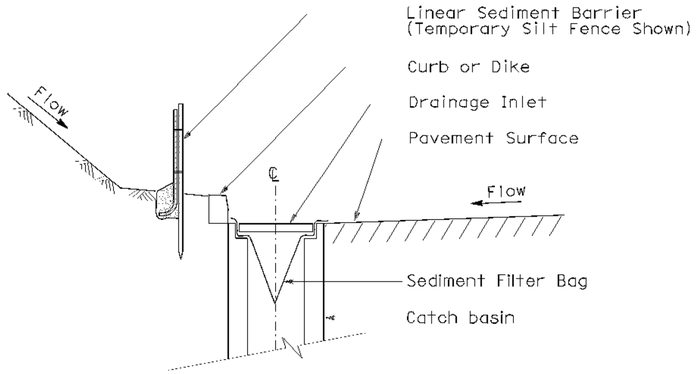

SECTION A-A

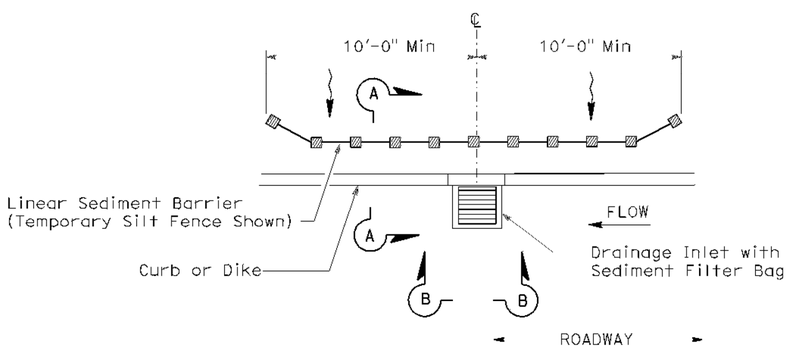

PLAN

TEMPORARY DRAINAGE INLET PROTECTION (TYPE 5) (SEDIMENT FILTER BAG)

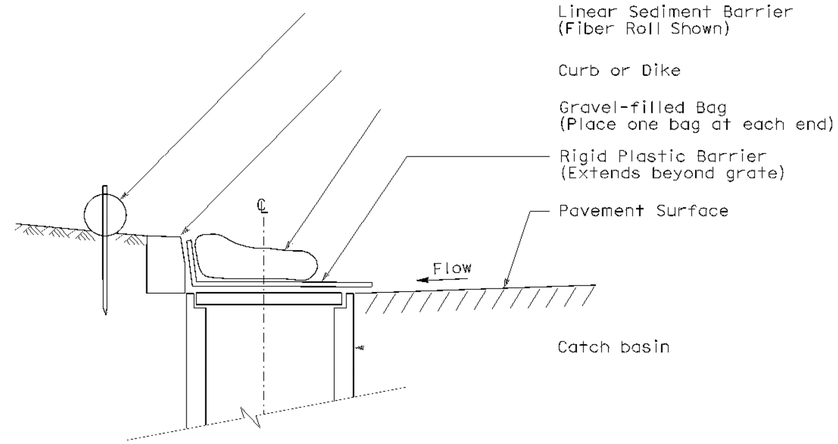

SECTION

TEMPORARY DRAINAGE INLET PROTECTION (TYPE 6A) (CATCH BASIN WITH GRATE)

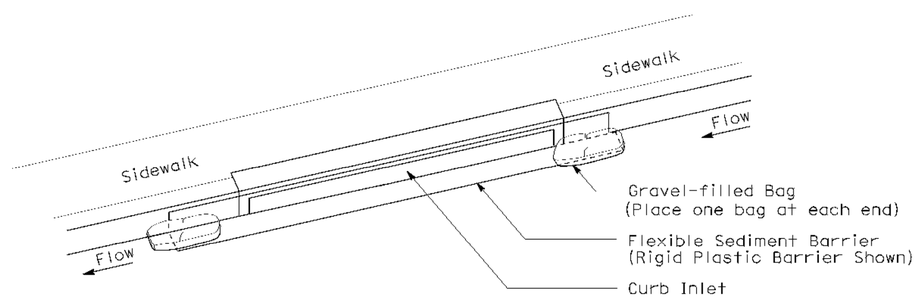

PERSPECTIVE

TEMPORARY DRAINAGE INLET PROTECTION (TYPE 6B) (CURB INLET WITHOUT GRATE)

NOTES:

1. See Standard Plan T51 for Temporary Silt Fence.
2. Dimensions may vary to fit field conditions.

STATE OF CALIFORNIA
DEPARTMENT OF TRANSPORTATION

TEMPORARY WATER POLLUTION CONTROL DETAILS (TEMPORARY DRAINAGE INLET PROTECTION)

NO SCALE

NSP T64 DATED AUGUST 15, 2008 SUPPLEMENTS
THE STANDARD PLANS BOOK DATED MAY 2006.

NEW STANDARD PLAN NSP T64

2006 NEW STANDARD PLAN NSP T64

P:\proj2\02\32804_plans\pse\232804va033.dgn

(11 08

DIST	COUNTY	ROUTE	POST MILES TOTAL PROJECT	SHEET NO.	TOTAL SHEETS
02	Sha	44	L0.3/R0.1	34	40

Gregory A. Bolger
LICENSED LANDSCAPE ARCHITECT

June 5, 2009
PLANS APPROVAL DATE

LICENSED LANDSCAPE ARCHITECT Gregory A. Bolger 2578 Expiration Date 2-28-11 Renewal Date 5-14-09 Date STATE OF CALIFORNIA

The State of California or its officers or agents shall not be responsible for the accuracy or completeness of electronic copies of this plan sheet.

To accompany plans dated 08-24-10

A

AB	aggregate base
ABS	acrylonitrile-butadiene-styrene
AC	asphalt concrete
Adj	adjacent/adjustable
AIC	auxiliary irrigation controller
Alt	alternative
AMEND	amendment
ARV	air release valve
AUTO	automatic
AUX	auxiliary
AVB	atmospheric vacuum breaker

B

B&B	balled and burlapped
B/B	brass/bronze
B/B/PL	brass/bronze/plastic
B/PL	brass/plastic
BFM	bonded fiber matrix
Bit Ctd	bituminous coated
BP	booster pump
BPA	backflow preventer assembly
BPAE	backflow preventer assembly in enclosure
BPE	backflow preventer enclosure
BV	ball valve

C

CAP	corrugated aluminum pipe
CARV	combination air release valve
CCA	cam coupler assembly
CEC	controller enclosure cabinet
CHDPE	corrugated high density polyethylene
CL	chain link
CNC	control and neutral conductors
Conc	concrete
Cond	conduit
CSP	corrugated steel pipe
CST	center strip
CV	check valve

D

Dia	diameter
DIP	ductile iron pipe
DN	diameter nominal

E

EA	each
Elect	electric/electrical
Elev	elevation
ENCL	enclosure
EP	edge of pavement
ES	edge of shoulder
EST	end strip
ESTB	establishment
ETW	edge of traveled way

F

F	full circle
F/P	full/part circle
FAU	filter assembly unit
FCV	flow control valve
FERT	fertilizer
FG	finished grade
FIPT	female iron pipe thread
FIS	fertilizer injector system
FL	flow line
FM	flow monitor
FS	flow sensor
Ft	foot/feet
FV	flush valve

G

GAL	Gallon(s)
Galv	galvanized
GARV	garden valve
GPH	gallons per hour
GPM	gallons per minute
GSP	galvanized steel pipe
GV	gate valve

H

H	half circle
HB	hose bib
HDPE	high density polyethylene
HP	horsepower/hinge point
HPL	high pressure line
Hwy	highway

I

IC	irrigation controller
ICC	irrigation controller(s) in controller enclosure cabinet
ID	inside diameter
In	inches
IFS	irrigation filtration system
IPS	iron pipe size
IPT	iron pipe thread
Irr	irrigation

L

L	length
LF	linear foot

M

Max	maximum
MBGR	metal beam guard railing
MCV	manual control valve
MIC	master irrigation controller
Min	minimum
MIPT	male iron pipe thread
Misc	miscellaneous
Mtl	material
MVP	maintenance vehicle pullout

N

NCN	no common name
NL	nozzle line
No.	number
NPT	national pipe thread

O

O/C	on center
OD	outside diameter
Oz	ounce

P

P	part circle
PB	pull box
PCC	portland cement concrete
PE	polyethylene
Pkt	packet
PL	plastic
PLT	plant/planting
PLT ESTB	plant establishment
PM	post mile
PR	pressure rated
PRLV	pressure relief valve
PSFM	polymer stabilized fiber matrix
PSI	pounds per square inch
PRV	pressure reducing valve
PVC	polyvinyl chloride
Pvmt	pavement

Q

Q	quarter circle
QCV	quick coupling valve

R

R	radius
RCP	reinforced concrete pipe
RCV	remote control valve
RCVM	remote control valve (master)
RCVMF	remote control valve (master) w/ flow meter
RCW	recycled/reclaimed water
RECP	rolled erosion control product
REQ	required
R/W	right of way

S

S	slip
SCC	sprinkler control conduit
SCH	schedule
SF	state-furnished
Shld	shoulder
SQFT	square foot/feet
SQYD	square yard(s)
SST	side strip
Sta	station
Std	standard
SW	sidewalk/sound wall

T

T	third circle/thread
TLS	truck loading standpipe
TQ	three quarter circle
TRM	turf reinforcement mat
TRVD	traveled
TT	two third circle
Typ	typical

U

UG	underground

V

VAU	valve assembly unit

W

W	width
W/	with
WM	water meter
WS	wye strainer
WSP	welded steel pipe
WWM	welded wire mesh

NOTE:

FOR ADDITIONAL ABBREVIATIONS, SEE STANDARD PLANS A10A AND A10B.

STATE OF CALIFORNIA
DEPARTMENT OF TRANSPORTATION

PLANTING AND IRRIGATION ABBREVIATIONS

NO SCALE

RSP H1 DATED JUNE 5, 2009 SUPERSEDES STANDARD PLAN H1 DATED MAY 1, 2006 - PAGE 201 OF THE STANDARD PLANS BOOK DATED MAY 2006.

REVISED STANDARD PLAN RSP H1

2006 REVISED STANDARD PLAN RSP H1

P:\proj2\02\32804_plans\pse\232804va034.dgn

5 28 09

DIST	COUNTY	ROUTE	POST MILES TOTAL PROJECT	SHEET NO.	TOTAL SHEETS
02	Sha	44	L0.3/R0.1	35	40

Gregory A. Bolger
LICENSED LANDSCAPE ARCHITECT

June 5, 2009
PLANS APPROVAL DATE

LICENSED LANDSCAPE ARCHITECT Gregory A. Bolger 2578 Expiration Date 2-28-11 Renewal Date 5-14-09 Date STATE OF CALIFORNIA

The State of California or its officers or agents shall not be responsible for the accuracy or completeness of electronic copies of this plan sheet.

To accompany plans dated 08-24-10

EXISTING	PROPOSED	ITEM DESCRIPTION
		WATER METER (WM)
		BACKFLOW PREVENTER ASSEMBLY (BPA)
		BACKFLOW PREVENTER ASSEMBLY IN ENCLOSURE (BPAE)
		BACKFLOW PREVENTER ENCLOSURE (BPE)
		BOOSTER PUMP (BP)
		TRUCK LOADING STANDPIPE (TLS)
	FS	FLOW SENSOR (FS)
X		MASTER IRRIGATION CONTROLLER (MIC)
		AUXILIARY IRRIGATION CONTROLLER (AIC)
		IRRIGATION CONTROLLER (IC)/ IRRIGATION CONTROLLER (IC) (BATTERY) IRRIGATION CONTROLLER (IC) (SOLAR)
		IRRIGATION CONTROLLER(S) IN CONTROLLER ENCLOSURE CABINET (ICC)
		CONTROL AND NEUTRAL CONDUCTORS (CNC)
SCC	SCC	SPRINKLER CONTROL CONDUIT (SCC)
		IRRIGATION CROSSOVER
		EXTEND IRRIGATION CROSSOVER
		IRRIGATION SLEEVE
dip	DIP	DUCTILE IRON PIPE (SUPPLY LINE) (MAIN) (DIP)
		GALVANIZED STEEL PIPE (SUPPLY LINE) (MAIN) (GSP)
		GALVANIZED STEEL PIPE (SUPPLY LINE) (LATERAL) (GSP)
		PLASTIC PIPE (PR 200) (SUPPLY LINE) (MAIN)
		PLASTIC PIPE (PR 200) (SUPPLY LINE) (LATERAL)
		PLASTIC PIPE (IRRIGATION LINE)
		REMOTE CONTROL VALVE (RCV) REMOTE CONTROL VALVE (MASTER) (RCVM) REMOTE CONTROL VALVE (MASTER) W/FLOW METER (RCVMF)
		MANUAL CONTROL VALVE (MCV)
		VALVE ASSEMBLY UNIT (VAU)
		WYE STRAINER (WS)
		FILTER ASSEMBLY UNIT (FAU)
		GATE VALVE (GV)
		BALL VALVE (BV)

EXISTING	PROPOSED	ITEM DESCRIPTION
		QUICK COUPLING VALVE (QCV)
		CAM COUPLER ASSEMBLY (CCA)
		PRESSURE REDUCING VALVE (PRV)
		PRESSURE RELIEF VALVE (PRLV)
		FLOW CONTROL VALVE (FCV)
		COMBINATION AIR RELEASE VALVE (CARV)
		CHECK VALVE (CV)
		FLUSH VALVE (FV)
		NOZZLE LINE W/TURNING UNION
		IRRIGATION SYSTEM
		IRRIGATION SYSTEM TO BE REMOVED
		CHAIN LINK GATE
		QUICK COUPLING VALVE W/SPRINKLER PROTECTOR
3	3	SPRINKLER W/SPRINKLER PROTECTOR
	C	CONNECT TO EXISTING SYSTEM
		CAP
		CAP EXISTING

VALVE CODE

RCV SIZE
IRRIGATION CONTROLLER
CONTROLLER STATION
VALVE IN PARALLEL (IF APPLICABLE)
GPM
QUANTITY OF SPRINKLERS (WHEN SHOWN)

* 2½"-A-2b-40 -60

MCV SIZE
VALVE NUMBER
GPM
QUANTITY OF TYPE SPRINKLERS (WHEN SHOWN)

* 2"-3-30 -50

* VALVE CODES FOR EXISTING VALVES ARE SHOWN IN A DASHED ENCLOSURE.

STATE OF CALIFORNIA
DEPARTMENT OF TRANSPORTATION

PLANTING AND IRRIGATION SYMBOLS

NO SCALE

RSP H2 DATED JUNE 5, 2009 SUPERSEDES RSP H2 DATED MARCH 7, 2008 AND STANDARD PLAN H2 DATED MAY 1, 2006 - PAGE 202 OF THE STANDARD PLANS BOOK DATED MAY 2006.

REVISED STANDARD PLAN RSP H2

2006 REVISED STANDARD PLAN RSP H2

P:\proj2\02\32804_plans\pse\232804va035.dgn

DIST	COUNTY	ROUTE	POST MILES TOTAL PROJECT	SHEET NO.	TOTAL SHEETS
02	Sha	44	L0.3/R0.1	36	40

Gregory A. Balzer
LICENSED LANDSCAPE ARCHITECT

June 5, 2009
PLANS APPROVAL DATE

LICENSED LANDSCAPE ARCHITECT
Gregory A. Balzer 2576
Signature
2-28-11
Renewal Date
5-14-09
Date
STATE OF CALIFORNIA

The State of California or its officers or agents shall not be responsible for the accuracy or completeness of electronic copies of this plan sheet.

To accompany plans dated 08-24-10

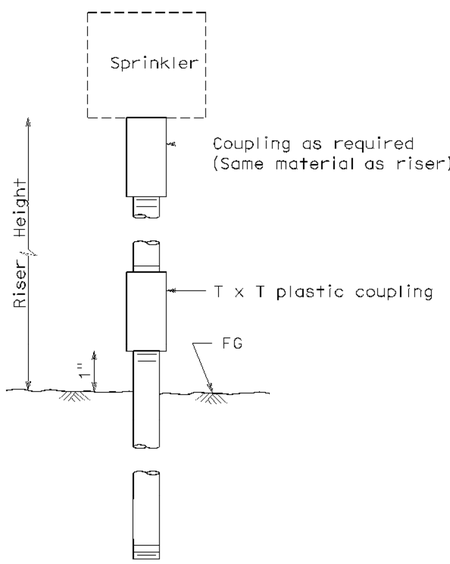

ELEVATION
RISER TYPE I

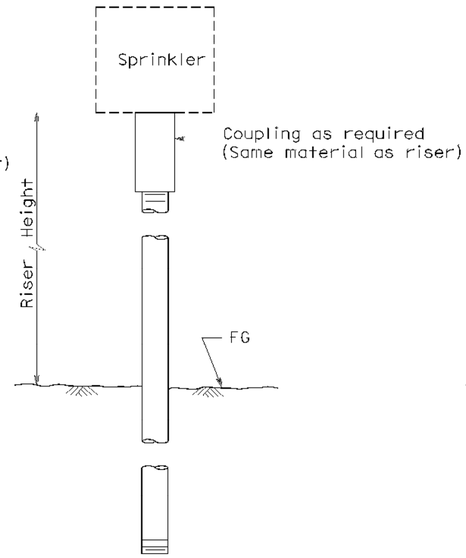

ELEVATION
RISER TYPE II

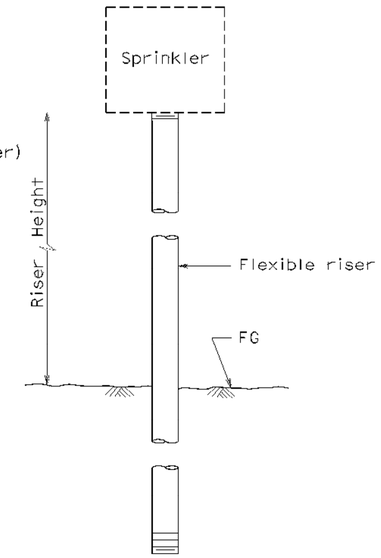

ELEVATION
RISER TYPE III

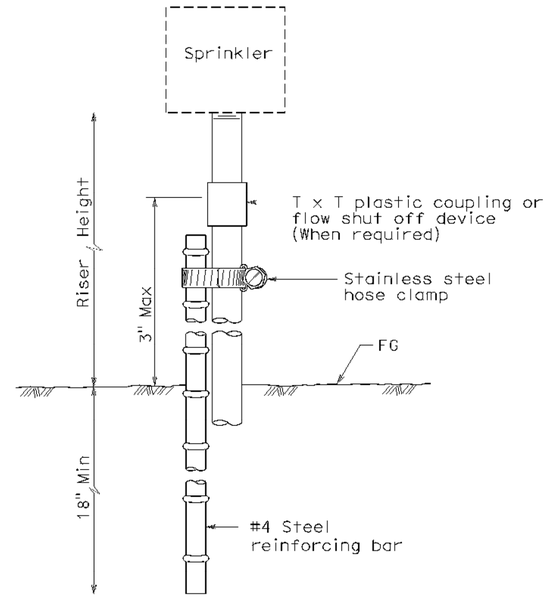

ELEVATION
RISER TYPE IV

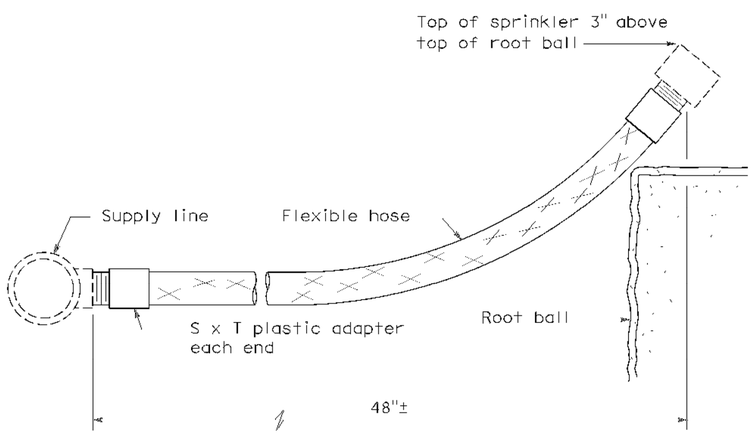

ELEVATION
RISER TYPE V

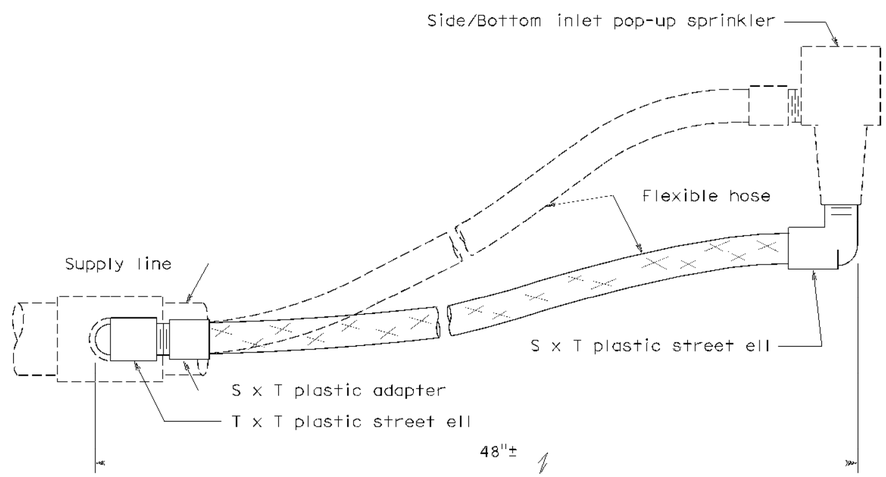

ELEVATION
RISER TYPE VI

STATE OF CALIFORNIA
DEPARTMENT OF TRANSPORTATION

PLANTING AND IRRIGATION DETAILS

NO SCALE

RSP H5 DATED JUNE 5, 2009 SUPERSEDES STANDARD PLAN H5
DATED MAY 1, 2006 - PAGE 205 OF THE STANDARD PLANS BOOK DATED MAY 2006.

REVISED STANDARD PLAN RSP H5

2006 REVISED STANDARD PLAN RSP H5

P:\proj2\02\32804_plans\pse\232804va036.dgn

DIST	COUNTY	ROUTE	POST MILES TOTAL PROJECT	SHEET NO.	TOTAL SHEETS
02	Sha	44	L0.3/R0.1	37	40

Gregory A. Balzer
LICENSED LANDSCAPE ARCHITECT

June 5, 2009
PLANS APPROVAL DATE

LICENSED LANDSCAPE ARCHITECT
Gregory A. Balzer 2576
Registered Professional Engineer
Signature 2-28-11
Renewal Date 5-14-09
Date
STATE OF CALIFORNIA

The State of California or its officers or agents shall not be responsible for the accuracy or completeness of electronic copies of this plan sheet.

To accompany plans dated 08-24-10

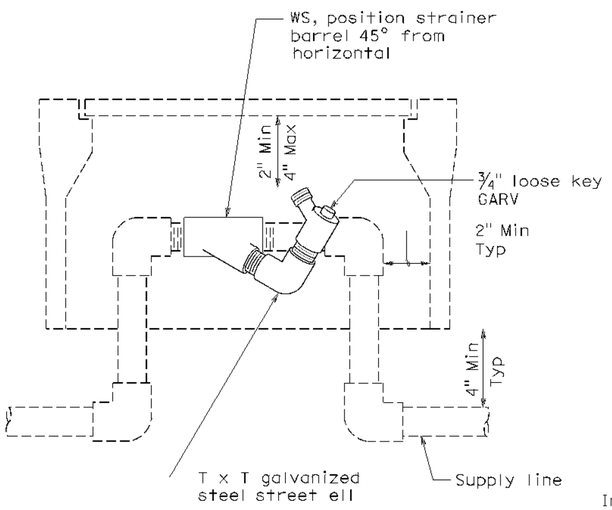

ELEVATION
WYE STRAINER

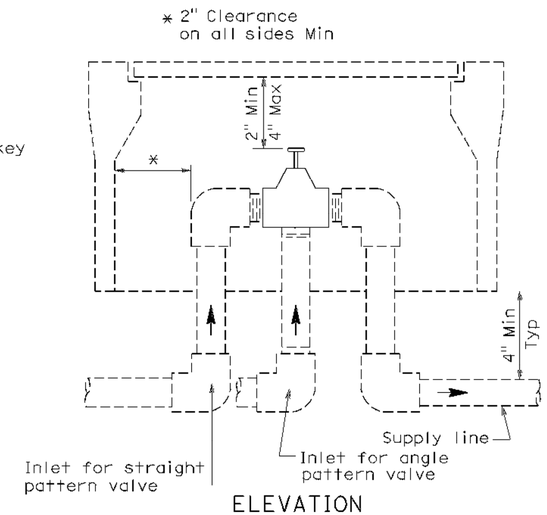

ELEVATION
VALVE

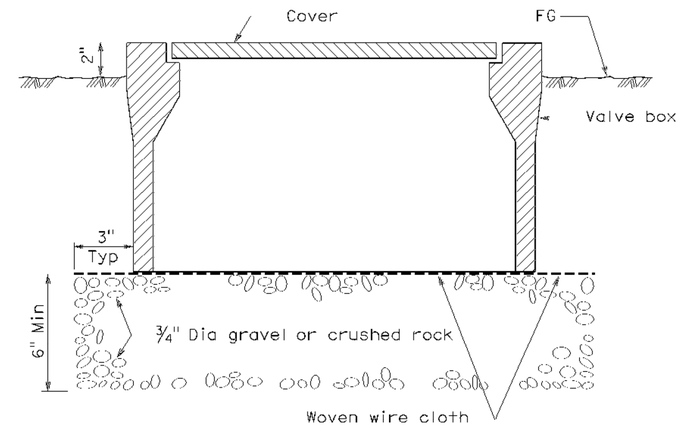

SECTION
VALVE BOX

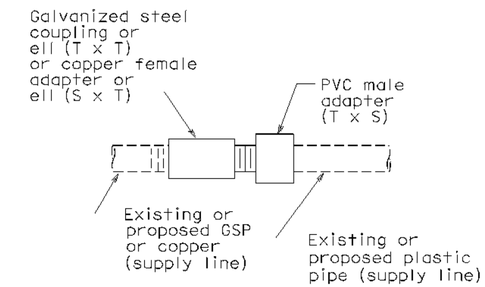

PLAN
GALVANIZED OR COPPER PIPE CONNECTION TO PLASTIC PIPE

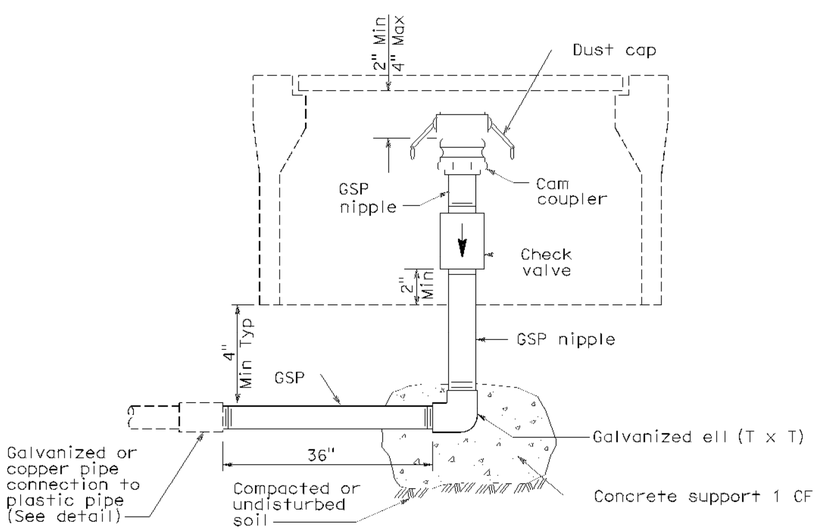

ELEVATION
CAM COUPLER ASSEMBLY

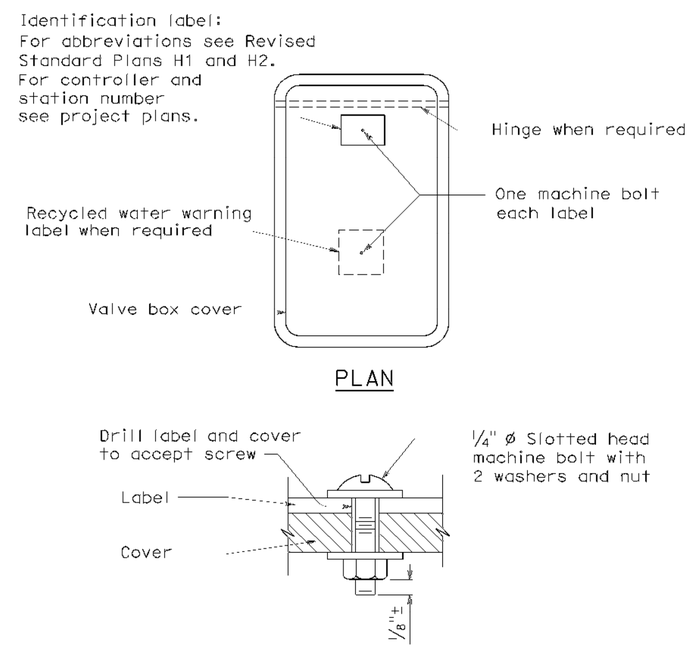

PLAN

SECTION
VALVE BOX IDENTIFICATION

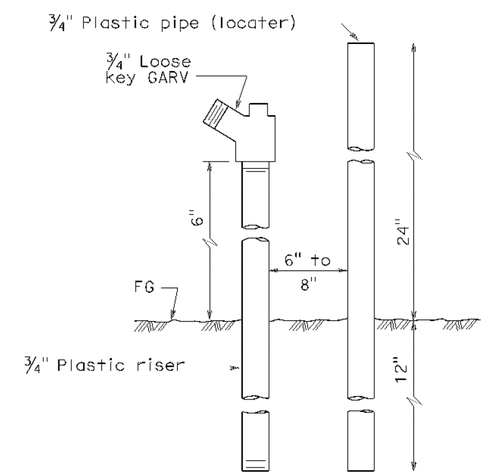

ELEVATION
FLUSH VALVE

STATE OF CALIFORNIA
DEPARTMENT OF TRANSPORTATION

PLANTING AND IRRIGATION DETAILS

NO SCALE

RSP H7 DATED JUNE 5, 2009 SUPERSEDES STANDARD PLAN H7
DATED MAY 1, 2006 - PAGE 207 OF THE STANDARD PLANS BOOK DATED MAY 2006.

REVISED STANDARD PLAN RSP H7

2006 REVISED STANDARD PLAN RSP H7

P:\proj2\02\32804_plans\pse\232804va037.dgn

DIST	COUNTY	ROUTE	POST MILES TOTAL PROJECT	SHEET NO.	TOTAL SHEETS
02	Sha	44	L0.3/R0.1	38	40

Randell D. Hiatt
REGISTERED CIVIL ENGINEER

June 6, 2008
PLANS APPROVAL DATE

REGISTERED PROFESSIONAL ENGINEER
Randell D. Hiatt
No. C50200
Exp. 6-30-09
CIVIL
STATE OF CALIFORNIA

The State of California or its officers or agents shall not be responsible for the accuracy or completeness of electronic copies of this plan sheet.

To accompany plans dated 08-24-10

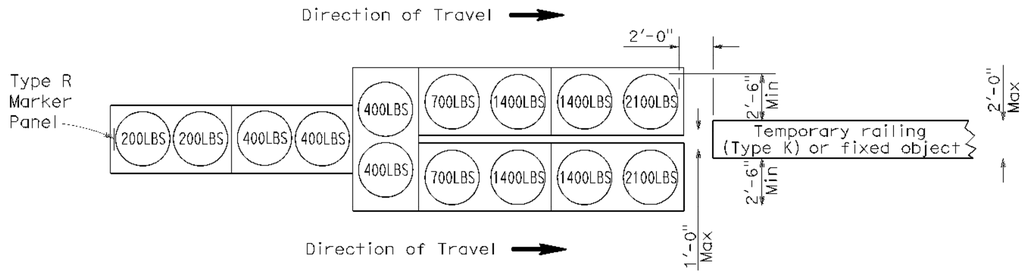

ARRAY 'TU14'

Approach speed 45 mph or more

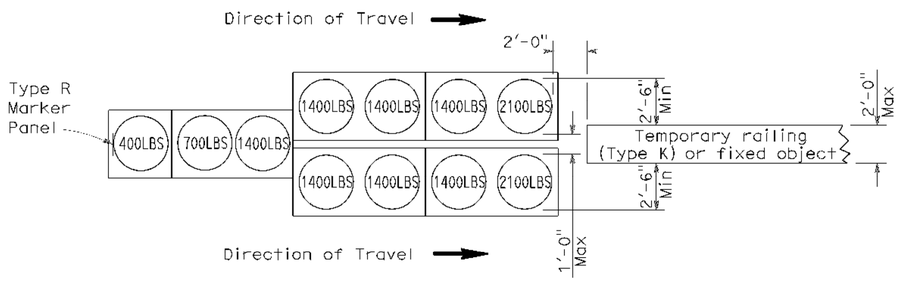

ARRAY 'TU11'

Approach speed less than 45 mph

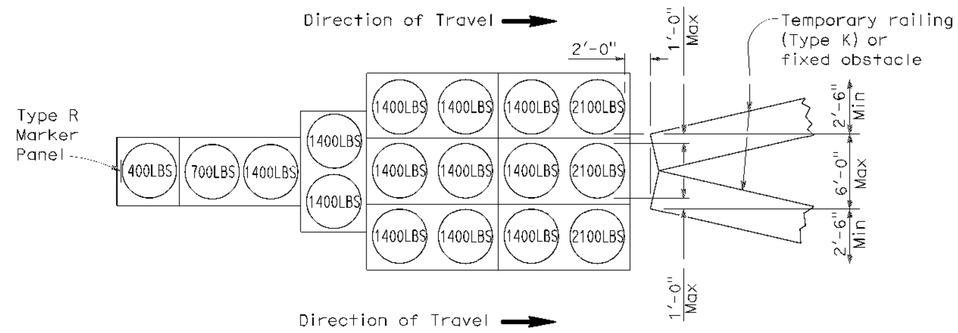

ARRAY 'TU17'

Approach speed less than 45 mph

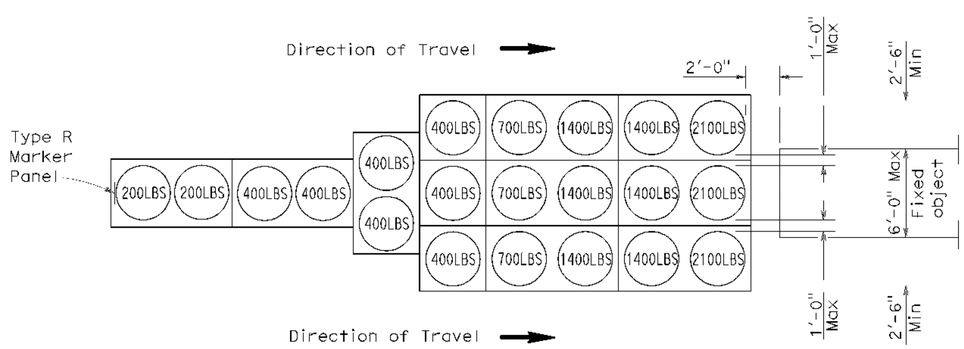

ARRAY 'TU21'

Approach speed 45 mph or more

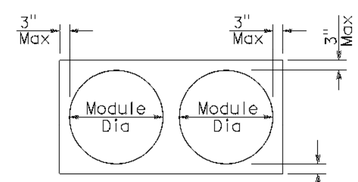

PLAN

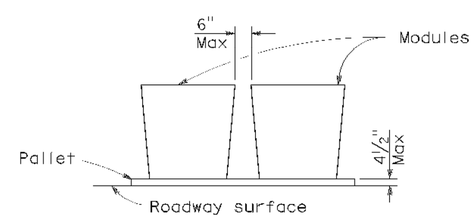

ELEVATION

CRASH CUSHION PALLET DETAIL

See Note 7

NOTES:

1. (XXX) Indicates sand filled module location and weight of sand in pounds for each module. Module spacing is based on the greater diameter of the module.
2. All sand weights are nominal.
3. Temporary crash cushion arrays shall not encroach on the traveled way.
4. Place the top of Type R marker panel 1" below the module lid.
5. Refer to Standard Plan A73B for marker details.
6. Approach speeds indicated conform to NCHRP 350 Report criteria.
7. Use of pallets is optional.

STATE OF CALIFORNIA
DEPARTMENT OF TRANSPORTATION

TEMPORARY CRASH CUSHION, SAND FILLED (UNIDIRECTIONAL)

NO SCALE

RSP T1A DATED JUNE 6, 2008 SUPERSEDES STANDARD PLAN T1A
DATED MAY 1, 2006 - PAGE 211 OF THE STANDARD PLANS BOOK DATED MAY 2006.

REVISED STANDARD PLAN RSP T1A

2006 REVISED STANDARD PLAN RSP T1A

P:\proj2\02\32804_plans\pse\232804va038.dgn

5 15 08

DIST	COUNTY	ROUTE	POST MILES TOTAL PROJECT	SHEET NO.	TOTAL SHEETS
02	Sha	44	L0.3/R0.1	39	40

Randell D. Hiatt
REGISTERED CIVIL ENGINEER

June 6, 2008
PLANS APPROVAL DATE

REGISTERED PROFESSIONAL ENGINEER
Randell D. Hiatt
No. C50200
Exp. 6-30-09
CIVIL
STATE OF CALIFORNIA

The State of California or its officers or agents shall not be responsible for the accuracy or completeness of electronic copies of this plan sheet.

To accompany plans dated 08-24-10

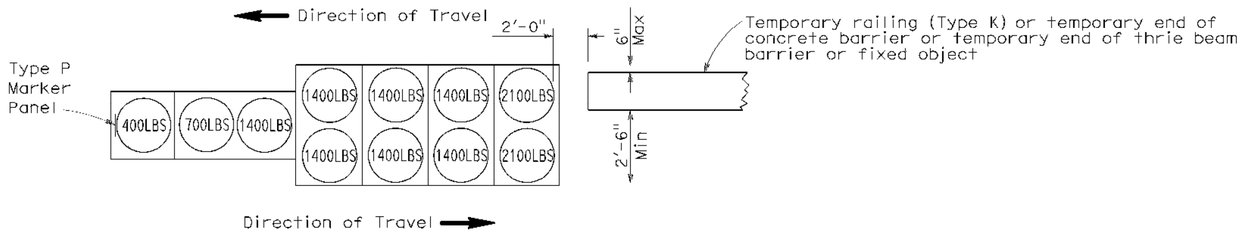

ARRAY 'TB11'

Approach speed less than 45 mph

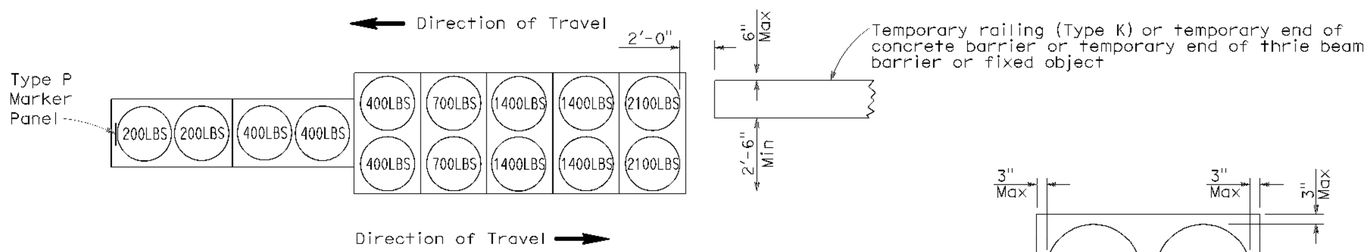

ARRAY 'TB14'

Approach speed 45 mph or more

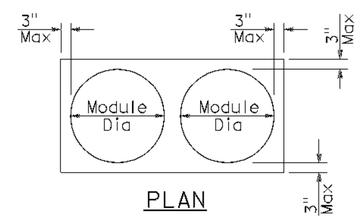

PLAN

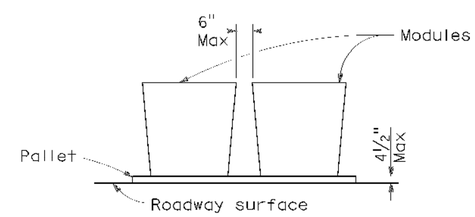

ELEVATION

CRASH CUSHION PALLET DETAIL

See Note 7

NOTES:

1. (XXX) Indicates sand filled module location and weight of sand in pounds for each module. Module spacing is based on the greater diameter of the module.
2. All sand weights are nominal.
3. Temporary crash cushion arrays shall not encroach on the traveled way.
4. Place the Type P marker panel so that the bottom of the panel rests upon the pallet.
5. Refer to Standard Plan A73B for marker details.
6. Approach speeds indicated conform to NCHRP 350 Report criteria.
7. Use of pallets is optional.

STATE OF CALIFORNIA
DEPARTMENT OF TRANSPORTATION

TEMPORARY CRASH CUSHION, SAND FILLED (BIDIRECTIONAL)

NO SCALE

RSP T1B DATED JUNE 6, 2008 SUPERSEDES STANDARD PLAN T1B
DATED MAY 1, 2006 - PAGE 212 OF THE STANDARD PLANS BOOK DATED MAY 2006.

REVISED STANDARD PLAN RSP T1B

2006 REVISED STANDARD PLAN RSP T1B

P:\proj2\02\32804_plans\pse\232804va039.dgn

5 15 08

DIST	COUNTY	ROUTE	POST MILES TOTAL PROJECT	SHEET NO.	TOTAL SHEETS
02	Sha	44	L0.3/R0.1	40	40

Randell D. Hiatt
REGISTERED CIVIL ENGINEER

June 6, 2008
PLANS APPROVAL DATE

REGISTERED PROFESSIONAL ENGINEER
Randell D. Hiatt
No. C50200
Exp. 6-30-09
CIVIL
STATE OF CALIFORNIA

The State of California or its officers or agents shall not be responsible for the accuracy or completeness of electronic copies of this plan sheet.

To accompany plans dated 08-24-10

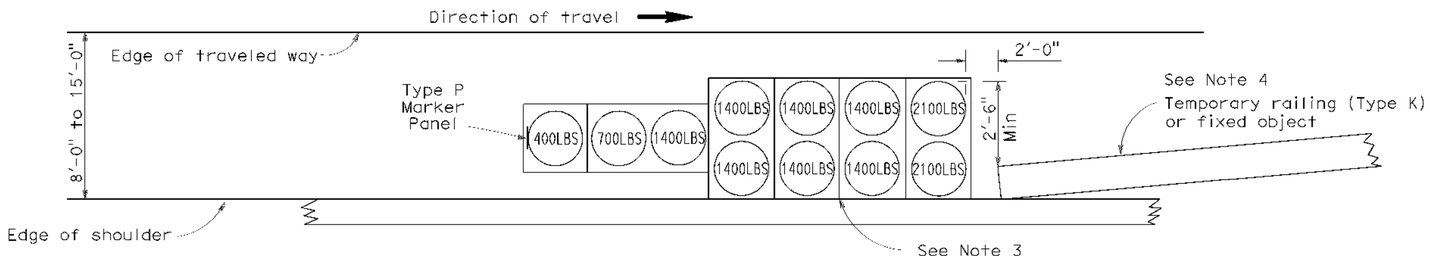

ARRAY 'TS11'

Approach speed less than 45 mph
See Note 9

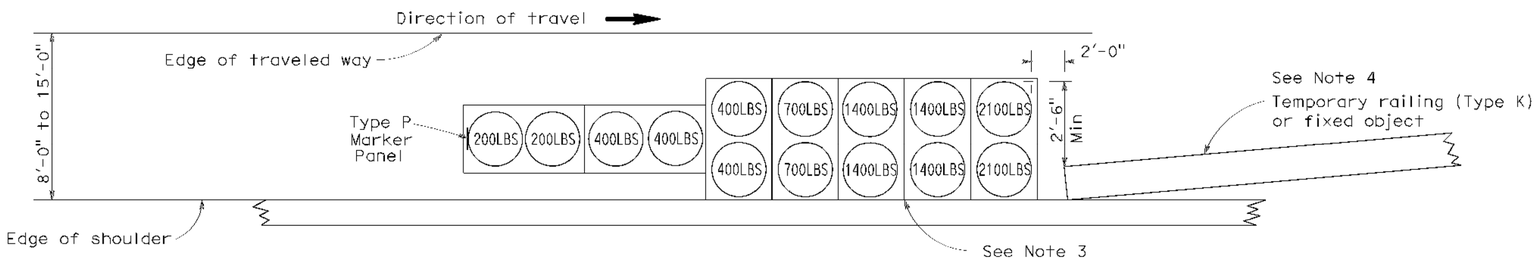

ARRAY 'TS14'

Approach speed 45 mph or more
See Note 9

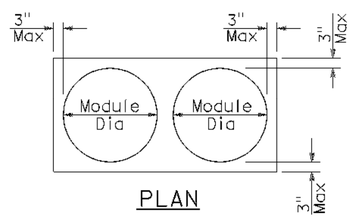

PLAN

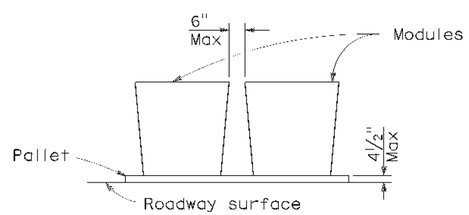

ELEVATION

CRASH CUSHION PALLET DETAIL

See Note 11

NOTES:

1. (XXX) Indicates sand filled module location and weight of sand in pounds for each module. Module spacing is based on the greater diameter of the module.
2. All sand weights are nominal.
3. The temporary crash cushion arrays shown on this plan shall be used only in locations where there will be traffic on one side of the temporary crash cushion array.
4. If the fixed object or approach end of the temporary railing is less than 15'-0" from the edge of traveled way, a temporary crash cushion is required in a construction or work zone.
5. Temporary crash cushion arrays shall not encroach on the traveled way.
6. Arrays for median shoulders shall conform to details shown on this plan for outside shoulders.
7. Place the Type P marker panel so that the bottom of the panel rests upon the pallet and faces traffic.
8. Refer to Standard Plan A73B for marker details.
9. For shoulder widths less than 8'-0", appropriate approved crash cushion protection, other than sand filled modules, shall be provided at fixed objects and at approach ends of temporary railing. The specific type of crash cushion shall be as shown on the project plans or as specified in the Special Provisions, or if not shown on the project plans or specified in the Special Provisions, shall be as approved by the Engineer.
10. Approach speeds indicated conform to NCHRP 350 Report criteria.
11. Use of pallets is optional.

STATE OF CALIFORNIA
DEPARTMENT OF TRANSPORTATION

TEMPORARY CRASH CUSHION, SAND FILLED (SHOULDER INSTALLATIONS)

NO SCALE

RSP T2 DATED JUNE 6, 2008 SUPERSEDES STANDARD PLAN T2
DATED MAY 1, 2006 - PAGE 213 OF THE STANDARD PLANS BOOK DATED MAY 2006.

REVISED STANDARD PLAN RSP T2

2006 REVISED STANDARD PLAN RSP T2

P:\proj2\02\32804_plans\pse\232804va040.dgn

5 15 08