Dist	COUNTY	ROUTE	POST MILES TOTAL PROJECT	SHEET No.	TOTAL SHEETS
02	Las,Plu, Teh	32,70, 395	Var	1	17

INDEX OF PLANS

SHEET No.	DESCRIPTION
1	TITLE
2	TYPICAL CROSS SECTIONS
3	CONSTRUCTION DETAILS
4	CONSTRUCTION AREA SIGNS
5	PAVEMENT DELINEATION DETAILS
6	PAVEMENT DELINEATION QUANTITIES
7-8	SUMMARY OF QUANTITIES
9	TRAFFIC MONITORING STATION
10-17	REVISED STANDARD PLANS

THE STANDARD PLANS LIST APPLICABLE TO THIS CONTRACT IS INCLUDED IN THE NOTICE TO BIDDERS AND SPECIAL PROVISIONS BOOK.

STATE OF CALIFORNIA

DEPARTMENT OF TRANSPORTATION

PROJECT PLANS FOR CONSTRUCTION ON

STATE HIGHWAY

IN LASSEN, PLUMAS AND TEHAMA COUNTIES AT VARIOUS LOCATIONS

TO BE SUPPLEMENTED BY STANDARD PLANS DATED MAY 2006

LOCATION MAP

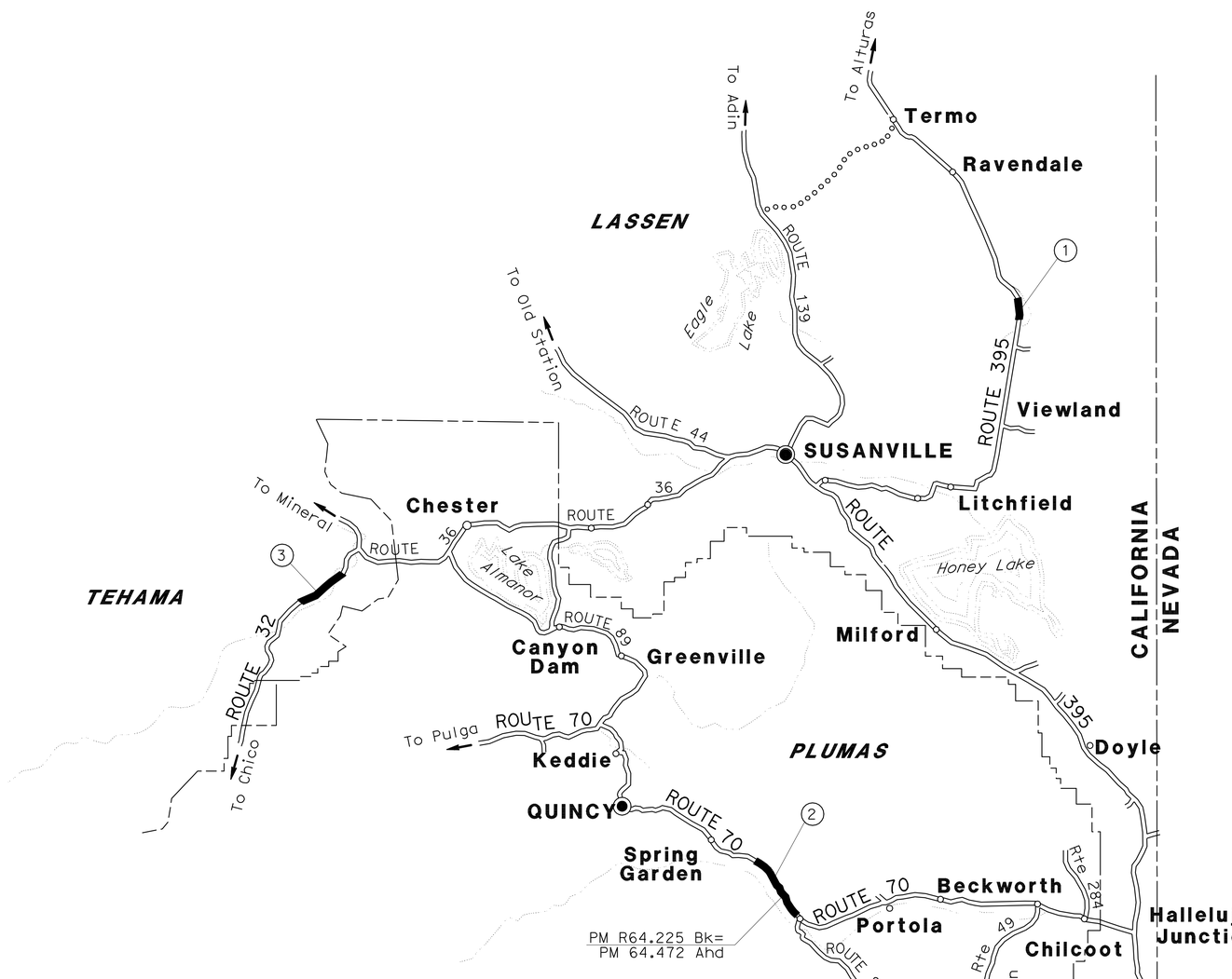

NO SCALE

LOCATIONS OF CONSTRUCTION

No.	COUNTY	ROUTE	POST MILE
1	Las	395	94.0/96.0
2	Plu	70	58.4/R66.4
3	Teh	32	16.0/21.5

1-20-11

PROJECT ENGINEER REGISTERED CIVIL ENGINEER — DATE

January 20, 2011

PLANS APPROVAL DATE

REGISTERED PROFESSIONAL ENGINEER MICHAEL A. CONNER No. C73123 Exp. 12-31-12 CIVIL STATE OF CALIFORNIA

THE STATE OF CALIFORNIA OR ITS OFFICERS OR AGENTS SHALL NOT BE RESPONSIBLE FOR THE ACCURACY OR COMPLETENESS OF SCANNED COPIES OF THIS PLAN SHEET.

THE CONTRACTOR SHALL POSSESS THE CLASS (OR CLASSES) OF LICENSE AS SPECIFIED IN THE "NOTICE TO BIDDERS."

CONTRACT No.	02-2E7104
PROJECT ID	0200000597

P:\proj2\02\2E710_plans\pse\22E710ab001.dgn

DESIGN ENGINEER	PROJECT MANAGER
LANCE BROWN	LANCE BROWN

LAST REVISION 01-19-11 DATE PLOTTED => 21-JAN-2011 TIME PLOTTED => 07:46

Dist	COUNTY	ROUTE	POST MILES TOTAL PROJECT	SHEET No.	TOTAL SHEETS
02	Las,Plu, Teh	32,70, 395	Var	2	17

REGISTERED CIVIL ENGINEER 1-20-11 DATE

1-20-11
PLANS APPROVAL DATE

REGISTERED PROFESSIONAL ENGINEER MICHAEL A. CONNER No. C73123 Exp. 12-31-12 CIVIL STATE OF CALIFORNIA

THE STATE OF CALIFORNIA OR ITS OFFICERS OR AGENTS SHALL NOT BE RESPONSIBLE FOR THE ACCURACY OR COMPLETENESS OF SCANNED COPIES OF THIS PLAN SHEET.

NOTES:

1. DIMENSIONS OF THE STRUCTURAL SECTIONS ARE SUBJECT TO TOLERANCES SPECIFIED IN THE STANDARD SPECIFICATIONS.
2. SUPERELEVATIONS AS SHOWN OR AS DIRECTED BY THE ENGINEER.
3. EXISTING UTILITY FACILITIES HAVE NOT BEEN POSITIVELY LOCATED, AND HAVE NOT BEEN PLOTTED ON PORTIONS OF THESE PLANS.
4. DO NOT PAVE BRIDGE DECKS.

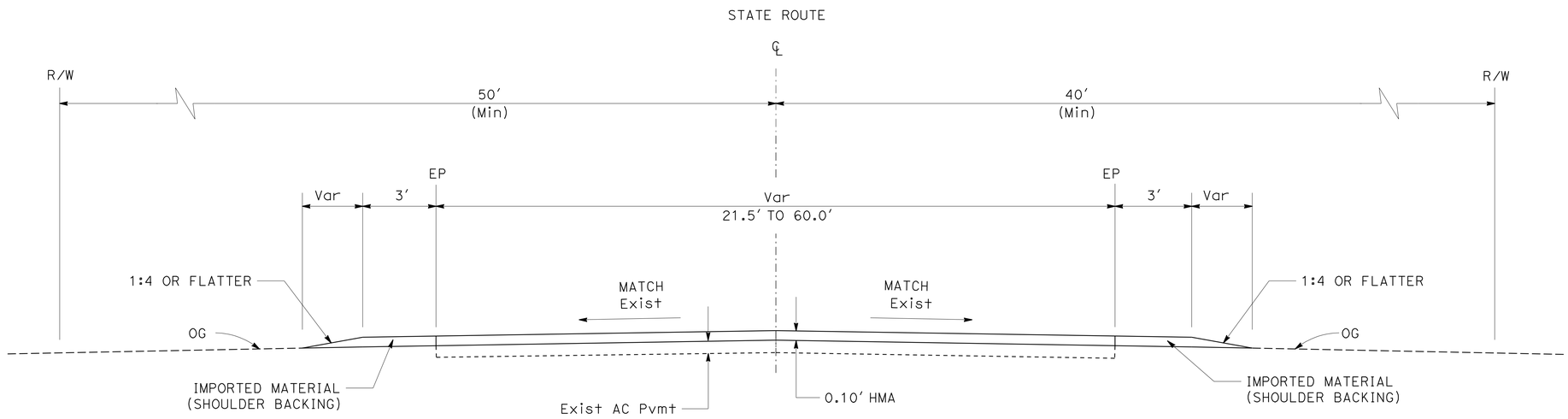

TYPICAL CROSS SECTION
See Note 4
Las-395-PM 94.0/96.0
Plu-70-PM 58.4/R66.4
Teh-32PM 16.0/21.5

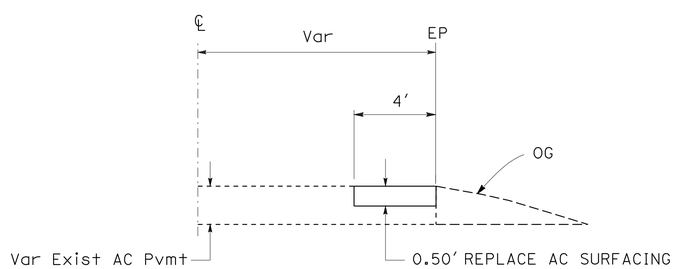

REPLACE AC SURFACING (0.5' DEEP)
(TYPICAL BOTH DIRECTIONS)
Plu-70-PM 58.4/R66.4

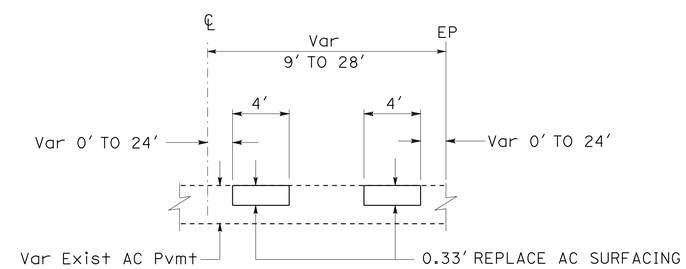

REPLACE AC SURFACING (0.33' DEEP)
(TYPICAL BOTH DIRECTIONS)
Las-395-PM 94.0/96.0
Plu-70-PM 58.4/R66.4
Teh-32PM 16.0/21.5

TYPICAL CROSS SECTIONS

NO SCALE

X-1

REVISED BY	DATE REVISED
MICHAEL CONNER	KARLIE SMITH
CALCULATED-DESIGNED BY	CHECKED BY
FUNCTIONAL SUPERVISOR	LANCE BROWN

STATE OF CALIFORNIA - DEPARTMENT OF TRANSPORTATION
Caltrans® MAINTENANCE

P:\proj2\02\2E710_plans\pse\22E710ca001.dgn

LAST REVISION 01-19-11 | DATE PLOTTED => 21-JAN-2011 TIME PLOTTED => 07:46

Dist	COUNTY	ROUTE	POST MILES TOTAL PROJECT	SHEET No.	TOTAL SHEETS
02	Las,Plu, Teh	32,70, 395	Var	3	17

REGISTERED CIVIL ENGINEER 1-20-11 DATE

1-20-11
PLANS APPROVAL DATE

REGISTERED PROFESSIONAL ENGINEER MICHAEL A. CONNER No. C73123 Exp.12-31-12 CIVIL STATE OF CALIFORNIA

THE STATE OF CALIFORNIA OR ITS OFFICERS OR AGENTS SHALL NOT BE RESPONSIBLE FOR THE ACCURACY OR COMPLETENESS OF SCANNED COPIES OF THIS PLAN SHEET.

NOTES:

1. EXISTING UTILITY FACILITIES HAVE NOT BEEN POSITIVELY LOCATED, AND HAVE NOT BEEN PLOTTED ON PORTIONS OF THESE PLANS.
2. DO NOT PAVE BRIDGE DECKS.

LEGEND:

COLD PLANE AC PAVEMENT

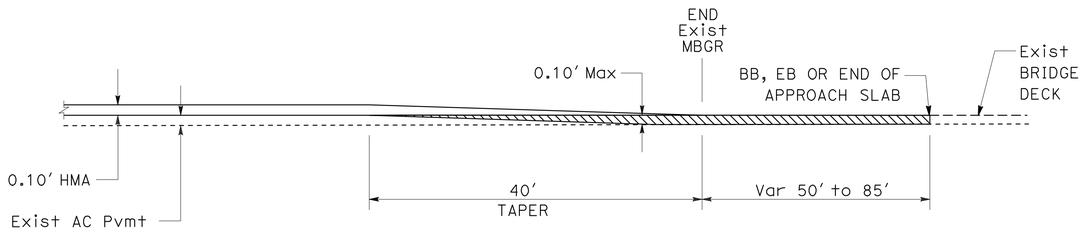

BRIDGE CONFORM TAPER

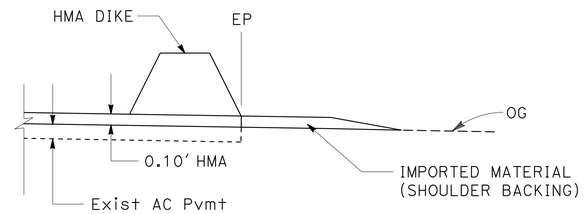

PLACE HMA DIKE
(TYPICAL BOTH DIRECTIONS)

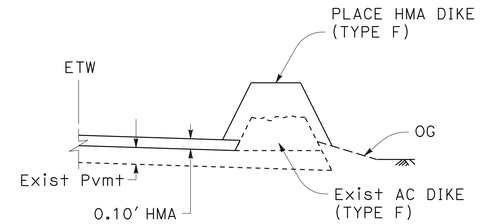

CAP Exist AC DIKE
(TYPICAL BOTH DIRECTIONS)

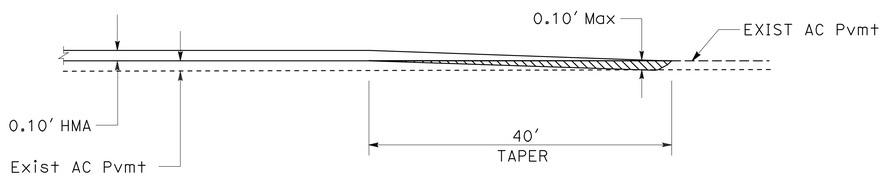

MAINLINE CONFORM TAPER

PAVED ROAD CONNECTIONS

LOCATION	Co-Rte	ROAD CONNECTION	POST MILE	DIMENSIONS A (LF)	DIMENSIONS B (LF)
2	Plu-70	CROMBERG CEMETARY Rd - Rt	T59.64	147	80
		ROAD CONNECTION - Rt	R59.98	160	55
		ROAD CONNECTION - Lt	R59.98	128	60
		ROAD CONNECTION - Lt	R60.41	170	57
		CAMP LAYMAN Rd - Rt	R61.51	227	109
		TWO RIVERS Rd - Rt	R62.68	324	53
		PARKERS Rd - Rt	R63.27	185	46
		ROAD CONNECTION - Lt	R64.07	287	78
		BONITA RIDGE Rd - Rt	64.72	265	33
		BONITA RIDGE Rd - Lt	64.72	320	62
		LITTLE BEAR Rd - Rt	65.41	133	80
		ROAD CONNECTION - Rt	R65.93	141	60
		ROAD CONNECTION - Lt	R66.03	153	63

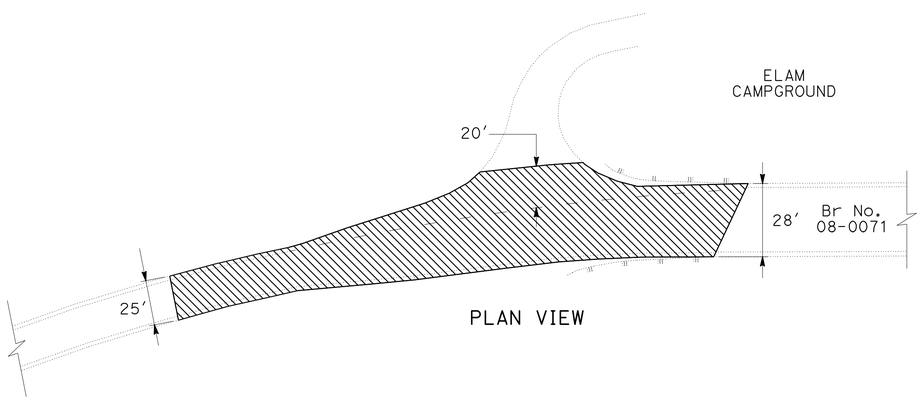

CONFORM DETAIL
Teh-32-PM 21.45

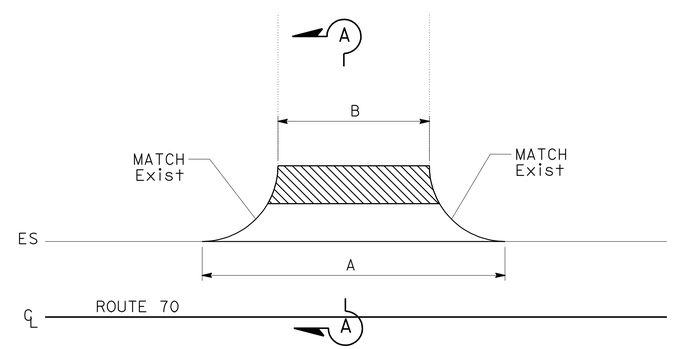

PAVED ROAD CONNECTIONS

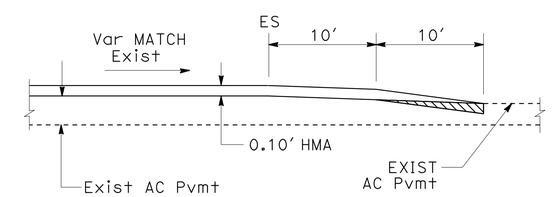

SECTION A-A

CONSTRUCTION DETAILS
NO SCALE

C-1

STATE OF CALIFORNIA - DEPARTMENT OF TRANSPORTATION
Caltrans® MAINTENANCE

FUNCTIONAL SUPERVISOR: LANCE BROWN
CALCULATED-DESIGNED BY: MICHAEL CONNER
CHECKED BY: KARLIE SMITH
REVISED BY / DATE REVISED

P:\proj2\02\2E710_plans\pse\22E710ga001.dgn

LAST REVISION 01-19-11
DATE PLOTTED => 21-JAN-2011
TIME PLOTTED => 07:46

Dist	COUNTY	ROUTE	POST MILES TOTAL PROJECT	SHEET No.	TOTAL SHEETS
02	Las,Plu, Teh	32,70, 395	Var	4	17

REGISTERED CIVIL ENGINEER 1-20-11 DATE

1-20-11
PLANS APPROVAL DATE

REGISTERED PROFESSIONAL ENGINEER MICHAEL A. CONNER No. C73123 Exp.12-31-12 CIVIL STATE OF CALIFORNIA

THE STATE OF CALIFORNIA OR ITS OFFICERS OR AGENTS SHALL NOT BE RESPONSIBLE FOR THE ACCURACY OR COMPLETENESS OF SCANNED COPIES OF THIS PLAN SHEET.

NOTES:

1. EXACT LOCATION OF ALL SIGNS TO BE DETERMINED BY THE ENGINEER.
2. CALIFORNIA CODES ARE DESIGNATED BY (CA), OTHERWISE FEDERAL CODES ARE SHOWN.
3. INTERMEDIATE G20-1 SIGNS SHOULD BE PLACED EVERY 3 TO 5 MILES AS NECESSARY.

LEGEND:

ONE POST STATIONARY MOUNTED SIGN

DIRECTION OF TRAFFIC

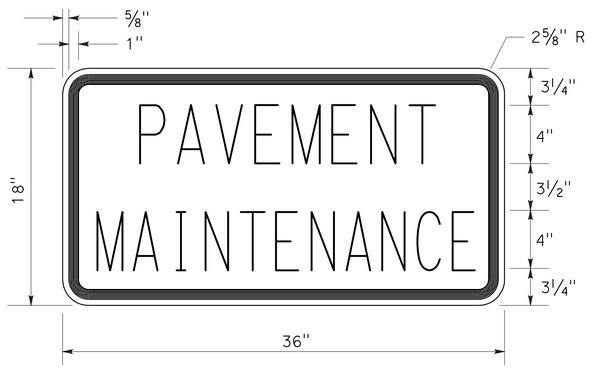

C23B(CA) SIGN PANEL DETAIL

ROAD CONNECTIONS

Loc	Co-Rte	PM	DESCRIPTION
2	Plu-70	T59.64	CROMBERG CEMETARY Rd - Rt
		R59.98	ROAD CONNECTION - Rt & Lt
		R60.41	ROAD CONNECTION - Lt
		R61.51	CAMP LAYMAN Rd - Rt
		R62.68	TWO RIVERS Rd - Rt
		R63.27	PARKERS Rd - Rt
		R64.07	ROAD CONNECTION - Lt
		64.72	BONITA RIDGE Rd - Rt & Lt
		65.41	LITTLE BEAR Rd - Rt
		R65.93	ROAD CONNECTION - Rt
		R66.03	ROAD CONNECTION - Lt
3	Teh-32	21.48	ROAD TO ELAM CAMPGROUND - Lt

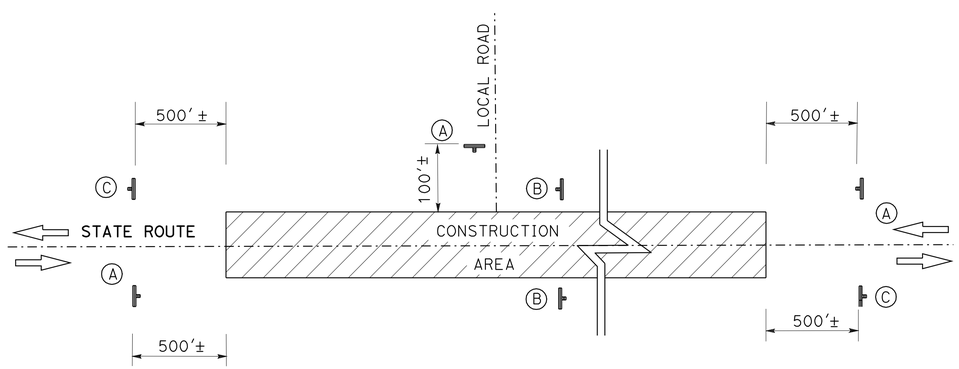

CONSTRUCTION AREA SIGNS (STATIONARY MOUNTED)

CONSTRUCTION AREA SIGNS (STATIONARY MOUNTED)

TYPE	CODE	PANEL SIZE	SIGN MESSAGE	NUMBER AND SIZE OF POST	No. OF SIGNS
A	W20-1 C23B(CA)	48" x 48" 36" x 18"	ROAD WORK AHEAD PAVEMENT MAINTENANCE	1-4" x 6"	20
B	G20-1	36" x 18"	ROAD WORK NEXT XX MILES	1-4" x 4"	4
C	G20-2	36" x 18"	END ROAD WORK	1-4" x 4"	6

CONSTRUCTION AREA SIGNS

NO SCALE

CS-1

REVISED BY | DATE REVISED
MICHAEL CONNER | KARLIE SMITH
CALCULATED-DESIGNED BY | CHECKED BY
FUNCTIONAL SUPERVISOR | LANCE BROWN

STATE OF CALIFORNIA - DEPARTMENT OF TRANSPORTATION
Caltrans® MAINTENANCE

P:\proj2\02\2E710_plans\pse\22E710ia001.dgn

LAST REVISION 01-19-11 | DATE PLOTTED => 21-JAN-2011 | TIME PLOTTED => 07:46

Dist	COUNTY	ROUTE	POST MILES TOTAL PROJECT	SHEET No.	TOTAL SHEETS
02	Las,Plu, Teh	32,70, 395	Var	5	17

REGISTERED CIVIL ENGINEER 1-20-11 DATE

1-20-11
PLANS APPROVAL DATE

REGISTERED PROFESSIONAL ENGINEER MICHAEL A. CONNER No. C73123 Exp.12-31-12 CIVIL STATE OF CALIFORNIA

THE STATE OF CALIFORNIA OR ITS OFFICERS OR AGENTS SHALL NOT BE RESPONSIBLE FOR THE ACCURACY OR COMPLETENESS OF SCANNED COPIES OF THIS PLAN SHEET.

LEGEND:

⇨ DIRECTION OF TRAFFIC

27B TRAFFIC STRIPE DETAIL No.

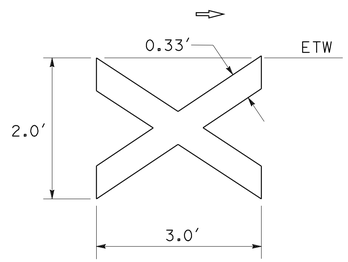

DETAIL B

0.33′ SOLID WHITE THERMOPLASTIC PAVEMENT MARKING

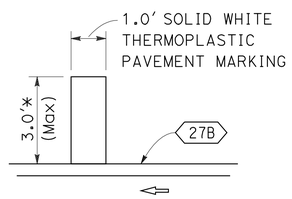

DETAIL A

* ACTUAL LENGTH MAY VARY DUE TO PAVEMENT WIDTH

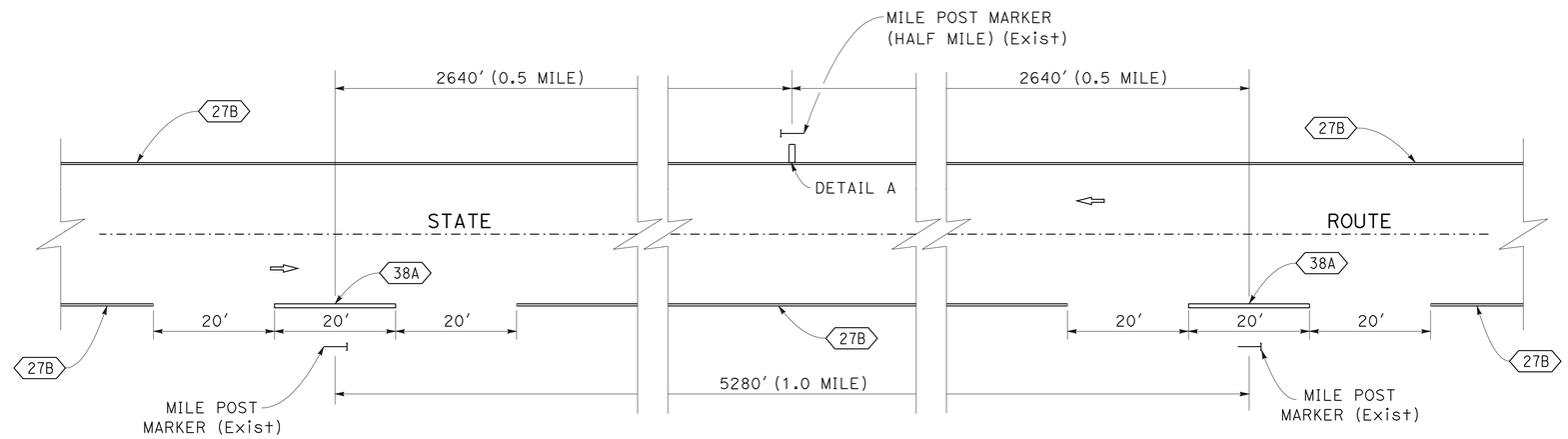

TYPICAL HALF MILE AND MILE POST STRIPE

NO HALF MILE STRIPE WITHIN AN EQUATION

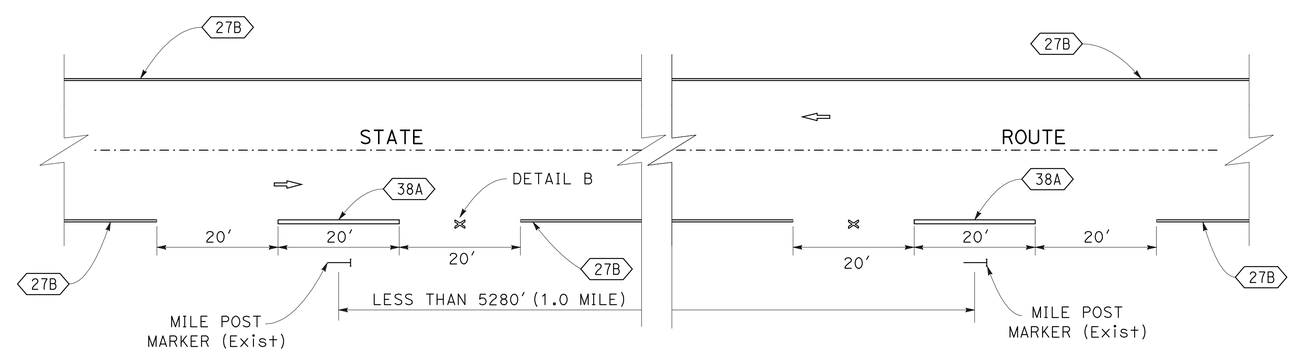

TYPICAL MILE POST STRIPE FOR EQUATIONS

NO HALF MILE STRIPE WITHIN AN EQUATION

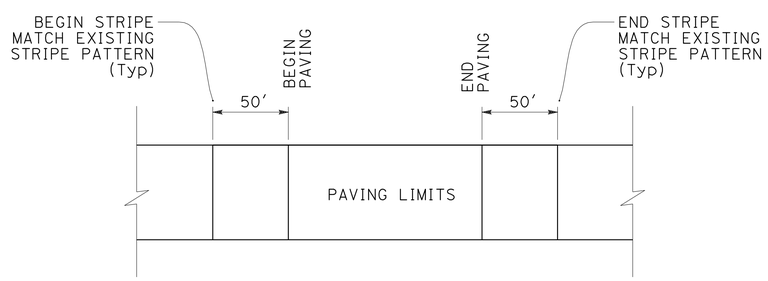

TRAFFIC STRIPE MATCH DETAIL

PAVEMENT DELINEATION DETAILS

NO SCALE

PDD-1

REVISED BY	DATE REVISED
MICHAEL CONNER	KARLIE SMITH
CALCULATED-DESIGNED BY	CHECKED BY
FUNCTIONAL SUPERVISOR	LANCE BROWN

STATE OF CALIFORNIA - DEPARTMENT OF TRANSPORTATION
Caltrans MAINTENANCE

P:\proj2\02\2E710_plans\pse\22E710nb001.dgn

LAST REVISION 01-19-11 DATE PLOTTED => 21-JAN-2011 TIME PLOTTED => 07:46

Dist	COUNTY	ROUTE	POST MILES TOTAL PROJECT	SHEET No.	TOTAL SHEETS
02	Las,Plu, Teh	32,70, 395	Var	6	17

REGISTERED CIVIL ENGINEER 1-20-11 DATE

1-20-11
PLANS APPROVAL DATE

REGISTERED PROFESSIONAL ENGINEER MICHAEL A. CONNER No. C73123 Exp.12-31-12 CIVIL STATE OF CALIFORNIA

THE STATE OF CALIFORNIA OR ITS OFFICERS OR AGENTS SHALL NOT BE RESPONSIBLE FOR THE ACCURACY OR COMPLETENESS OF SCANNED COPIES OF THIS PLAN SHEET.

THERMOPLASTIC PAVEMENT MARKING

Loc	Co-Rte	PM	Lt	Rt	EA	SQFT	REMARKS
1	Las-395	MAINLINE	X		2	6.0	DETAIL A
2	Plu-70	MAINLINE	X		6	18.0	DETAIL A
		MAINLINE		X	3	7.2	DETAIL B
		T59.64		X	1	24.0	ROAD CONNECTION LIMIT LINE
		T59.64		X	1	22.0	STOP
		R59.91		X	1	42.0	TYPE III (R) ARROW
		R59.98	X	X	2	81.0	ROAD CONNECTION LIMIT LINE
		R59.98	X	X	2	44.0	STOP
		R60.02	X		1	42.0	TYPE III (R) ARROW
		R60.41	X		1	47.0	ROAD CONNECTION LIMIT LINE
		R60.41	X		1	22.0	STOP
		R60.44	X		1	42.0	TYPE III (R) ARROW
		R61.43		X	1	42.0	TYPE III (R) ARROW
		R61.51		X	1	68.0	ROAD CONNECTION LIMIT LINE
		R61.51		X	1	22.0	STOP
		R61.73	X		1	42.0	TYPE VI ARROW
		R61.76	X		1	42.0	TYPE VI ARROW
		R61.80	X		1	42.0	TYPE VI ARROW
		R62.16		X	1	42.0	TYPE VI ARROW
		R62.20		X	1	42.0	TYPE VI ARROW
		R62.24		X	1	42.0	TYPE VI ARROW
		R62.68		X	1	42.0	ROAD CONNECTION LIMIT LINE
		R62.68		X	1	22.0	STOP
		R63.27		X	1	33.0	ROAD CONNECTION LIMIT LINE
		R63.27		X	1	22.0	STOP
		R64.07	X		1	45.0	ROAD CONNECTION LIMIT LINE
		R64.07	X		1	22.0	STOP
		64.72	X	X	2	51.0	ROAD CONNECTION LIMIT LINE
		64.72	X	X	2	44.0	STOP
		65.41		X	1	32.0	ROAD CONNECTION LIMIT LINE
		65.41		X	1	22.0	STOP
		R65.93		X	1	20.0	ROAD CONNECTION LIMIT LINE
		R65.93		X	1	22.0	STOP
		R65.99		X	1	42.0	TYPE III (L) ARROW
		R65.96	X		1	42.0	TYPE III (L) ARROW
		R66.03		X	1	38.0	ROAD CONNECTION LIMIT LINE
		R66.03		X	1	22.0	STOP
3	Teh-32	MAINLINE	X		6	18.0	DETAIL A
		21.48	X		1	24.0	ROAD CONNECTION LIMIT LINE
		21.48	X		1	22.0	STOP
TOTAL						1366.2	

PAVEMENT MARKER (RETROREFLECTIVE-RECESSED)

Loc	Co-Rte	PM LIMITS	TYPE D	TYPE G	TYPE H
			EA	EA	EA
1	Las-395	94.00-96.00	474		133
2	Plu-70	58.40-R66.40	3319	222	1205
SUB-TOTAL			3793	222	1338
TOTAL			5353		

THERMOPLASTIC TRAFFIC STRIPE (SPRAYABLE)

Loc	Co-Rte	PM LIMITS	DETAIL 6	DETAIL 12	DETAIL 19	DETAIL 21	DETAIL 22	DETAIL 27B	DETAIL 27C	DETAIL 29	DETAIL 38	DETAIL 38A
		PM-PM	LF	LF	LF	LF	LF	LF	LF	LF	LF	LF
1	Las-395	94.00-96.00	3433		3168		3960	20,880				60
2	Plu-70	58.40-R66.40	1901	6759	28,882		28,882	81,044	3274	3169	1849	160
3	Teh-32	16.00-21.50				28,935		57,509	113			120
SUBTOTAL			5334	6759	32,050	28,935	32,842	159,433	3387	3169	1849	340
TOTAL			274,098									

REMOVE THERMOPLASTIC PAVEMENT MARKING

Loc	Co-Rte	PM	Lt	Rt	EA	SQFT	REMARKS
2	Plu-70	T59.64		X	1	24.0	ROAD CONNECTION LIMIT LINE
		T59.64		X	1	22.0	STOP
		R59.91		X	1	42.0	TYPE III (R) ARROW
		R59.98	X	X	2	81.0	ROAD CONNECTION LIMIT LINE
		R59.98	X	X	2	44.0	STOP
		R60.02	X		1	42.0	TYPE III (R) ARROW
		R60.41	X		1	47.0	ROAD CONNECTION LIMIT LINE
		R60.41	X		1	22.0	STOP
		R60.44	X		1	42.0	TYPE III (R) ARROW
		R61.43		X	1	42.0	TYPE III (R) ARROW
		R61.51		X	1	68.0	ROAD CONNECTION LIMIT LINE
		R61.51		X	1	22.0	STOP
		R61.73	X		1	42.0	TYPE VI ARROW
		R61.76	X		1	42.0	TYPE VI ARROW
		R61.80	X		1	42.0	TYPE VI ARROW
		R62.16		X	1	42.0	TYPE VI ARROW
		R62.20		X	1	42.0	TYPE VI ARROW
		R62.24		X	1	42.0	TYPE VI ARROW
		R62.68		X	1	42.0	ROAD CONNECTION LIMIT LINE
		R62.68		X	1	22.0	STOP
		R63.27		X	1	33.0	ROAD CONNECTION LIMIT LINE
		R63.27		X	1	22.0	STOP
		R64.07	X		1	45.0	ROAD CONNECTION LIMIT LINE
		R64.07	X		1	22.0	STOP
		64.72	X	X	2	51.0	ROAD CONNECTION LIMIT LINE
		64.72	X	X	2	44.0	STOP
		65.41		X	1	32.0	ROAD CONNECTION LIMIT LINE
		65.41		X	1	22.0	STOP
		R65.93		X	1	20.0	ROAD CONNECTION LIMIT LINE
		R65.93		X	1	22.0	STOP
		R65.99		X	1	42.0	TYPE III (L) ARROW
		R65.96	X		1	42.0	TYPE III (L) ARROW
		R66.03		X	1	38.0	ROAD CONNECTION LIMIT LINE
		R66.03		X	1	22.0	STOP
3	Teh-32	21.48	X		1	24.0	ROAD CONNECTION LIMIT LINE
		21.48	X		1	22.0	STOP
TOTAL						1317.0	

PAVEMENT DELINEATION QUANTITIES
PDQ-1

REVISED BY | DATE REVISED
MICHAEL CONNER | KARLIE SMITH
CALCULATED-DESIGNED BY | CHECKED BY
FUNCTIONAL SUPERVISOR | LANCE BROWN

STATE OF CALIFORNIA - DEPARTMENT OF TRANSPORTATION
Caltrans® MAINTENANCE

P:\proj2\02\2E710_plans\pse\22E710nc001.dgn

LAST REVISION 01-19-11 | DATE PLOTTED => 21-JAN-2011 | TIME PLOTTED => 07:46

Dist	COUNTY	ROUTE	POST MILES TOTAL PROJECT	SHEET No.	TOTAL SHEETS
02	Las,Plu, Teh	32,70, 395	Var	7	17

REGISTERED CIVIL ENGINEER 1-20-11 DATE

1-20-11
PLANS APPROVAL DATE

REGISTERED PROFESSIONAL ENGINEER MICHAEL A. CONNER No. C73123 Exp. 12-31-12 CIVIL STATE OF CALIFORNIA

THE STATE OF CALIFORNIA OR ITS OFFICERS OR AGENTS SHALL NOT BE RESPONSIBLE FOR THE ACCURACY OR COMPLETENESS OF SCANNED COPIES OF THIS PLAN SHEET.

NOTE:

1. (N) NOT A SEPARATE PAY ITEM, FOR INFORMATION ONLY

ROADWAY QUANTITY SUMMARY

Loc	Co-Rte	PM LIMITS	(N) LENGTH	(N) WIDTH	HMA	IMPORTED MATERIAL (SHOULDER BACKING)	TACK COAT
		PM - PM	LF	LF	TON	TON	TON
1	Las-395	94.00-94.50	2640	30.0-31.0	2436	1149	11
		94.50-94.60	528	31.0-30.0			
		94.60-95.00	2112	30.0-31.0			
		95.00-95.50	2640	31.0-31.5			
		95.50-96.00	2640	31.5-30.0			
2	Plu-70	58.40-59.00	3169	23.0-25.0	10,691	4437	47
		59.00-59.50	2640	25.0-26.0			
		59.50-T59.89	2060	26.0-26.0			
		59.89-R59.93	212	26.0-53.0			
		R59.93-R60.00	370	53.0-53.0			
		R60.00-R60.10	529	53.0-33.0			
		R60.10-R60.38	1479	33.0-32.0			
		R60.38-R60.41	159	32.0-39.0			
		R60.41-R60.48	370	39.0-42.0			
		R60.48-R60.53	265	42.0-33.0			
		R60.53-R61.00	2482	33.0-33.0			
		R61.00-R61.40	2112	33.0-34.0			
		R61.40-R61.45	265	34.0-42.0			
		R61.45-R61.53	423	42.0-42.0			
		R61.53-R61.56	159	42.0-33.0			
		R61.56-R61.65	476	33.0-47.0			
		R61.65-R61.80	792	47.0-60.0			
		R61.80-R62.00	1057	60.0-60.0			
		R62.00-R62.29	1532	60.0-60.0			
		R62.29-R62.48	1004	60.0-32.0			
		R62.48-R62.71	1215	32.0-32.0			
		R62.71-R63.00	1532	32.0-32.0			
		R63.00-R63.29	1532	32.0-33.0			
		R63.29-R64.00	3749	33.0-34.0			
		R64.00-R64.23	1215	34.0-33.0			
		64.47-64.72	1320	33.0-33.0			
		64.72-65.00	1479	33.0-32.0			
		65.00-65.86	4541	32.0-32.0			
		R65.90-R65.95	264	32.0-32.0			
		R65.95-R65.98	159	32.0-44.0			
		R65.98-R66.10	634	44.0-46.0			
		R66.10-R66.40	1585	46.0-37.0			
		ROAD CONNECTIONS			261	27	2
3	Teh-32	16.00-16.50	2640	21.5	4959	3068	22
		16.50-16.84	1795	21.5-23.5			
		16.89-17.39	2640	24.5-21.5			
		17.41-17.45	211	21.5-28.0			
		17.46-17.78	1690	26.0-22.0			
		17.78-18.50	3802	22.0-25.0			
		18.50-19.00	2640	25.0-24.0			
		19.00-19.63	3326	24.0-23.0			
		19.63-20.21	3062	23.0			
		20.21-20.46	1320	23.0-28.0			
		20.49-20.77	1478	26.0-22.0			
		20.77-21.42	3432	22.0-25.0			
		21.42-21.45	159	25.0-48.0			
TOTALS					18,347	8681	82

COLD PLANE ASPHALT CONCRETE PAVEMENT

Loc	Co-Rte	PM	(N) LENGTH	(N) WIDTH	AREA	REMARKS
			LF	LF	SQYD	
1	Las-395	94.00	40	30	133	MAINLINE CONFORM TAPER AT BEGINNING OF LOCATION 1
		96.00	40	30	133	MAINLINE CONFORM TAPER AT END OF LOCATION 1
2	Plu-70	58.40	40	23	102	MAINLINE CONFORM TAPER AT BEGINNING OF LOCATION 2
		T59.64	10	80	89	ROAD CONNECTION CONFORM - Rt
		R59.98	10	55	61	ROAD CONNECTION CONFORM - Rt
		R59.98	10	60	67	ROAD CONNECTION CONFORM - Lt
		R60.41	10	57	63	ROAD CONNECTION CONFORM - Lt
		R61.51	10	109	121	ROAD CONNECTION CONFORM - Rt
		R62.68	10	53	59	ROAD CONNECTION CONFORM - Rt
		R63.27	10	46	51	ROAD CONNECTION CONFORM - Rt
		R64.07	10	78	87	ROAD CONNECTION CONFORM - Lt
		64.72	10	33	37	ROAD CONNECTION CONFORM - Rt
		64.72	10	62	69	ROAD CONNECTION CONFORM - Lt
		65.41	10	80	89	ROAD CONNECTION CONFORM - Rt
		R65.93	10	60	67	ROAD CONNECTION CONFORM - Rt
		R66.03	10	63	70	ROAD CONNECTION CONFORM - Lt
		R66.40	40	37	164	MAINLINE CONFORM TAPER AT END OF LOCATION 2
3	Teh-32	16.00	40	22	98	MAINLINE CONFORM TAPER AT BEGINNING OF LOCATION 3
		16.84	90	24	240	CONFORM TAPER AT BEGINNING OF Br No. 08-0069
		16.85	90	25	250	CONFORM TAPER AT END OF Br No. 08-0069
		17.44	90	28	280	CONFORM TAPER AT BEGINNING OF Br No. 08-0070
		17.46	90	26	260	CONFORM TAPER AT END OF Br No. 08-0070
		20.46	115	28	358	CONFORM TAPER AT BEGINNING OF Br No. 08-0154
		20.48	125	26	361	CONFORM TAPER AT END OF Br No. 08-0154
		21.45	180	25-48	728	MAINLINE CONFORM TAPER AT END OF LOCATION 3
TOTAL					4037	

SUMMARY OF QUANTITIES
Q-1

REVISED BY | DATE REVISED
MICHAEL CONNER | KARLIE SMITH
CALCULATED-DESIGNED BY | CHECKED BY
FUNCTIONAL SUPERVISOR: LANCE BROWN
STATE OF CALIFORNIA - DEPARTMENT OF TRANSPORTATION
Caltrans MAINTENANCE

P:\proj2\02\2E710_plans\pse\22E710pa001.dgn

LAST REVISION 01-19-11 | DATE PLOTTED => 21-JAN-2011 | TIME PLOTTED => 07:47

Dist	COUNTY	ROUTE	POST MILES TOTAL PROJECT	SHEET No.	TOTAL SHEETS
02	Las,Plu, Teh	32,70, 395	Var	8	17

REGISTERED CIVIL ENGINEER 1-20-11 DATE

1-20-11
PLANS APPROVAL DATE

REGISTERED PROFESSIONAL ENGINEER MICHAEL A. CONNER No. C73123 Exp. 12-31-12 CIVIL STATE OF CALIFORNIA

THE STATE OF CALIFORNIA OR ITS OFFICERS OR AGENTS SHALL NOT BE RESPONSIBLE FOR THE ACCURACY OR COMPLETENESS OF SCANNED COPIES OF THIS PLAN SHEET.

NOTES:

1. (N) NOT A SEPARATE PAY ITEM, FOR INFORMATION ONLY
2. EXACT LOCATIONS OF REPLACE ASPHALT CONCRETE SURFACING TO BE DETERMINED BY ENGINEER.

REPLACE ASPHALT CONCRETE SURFACING

Loc	Co-Rte	PM LIMITS	(N) Approx No. OF DIGOUTS	(N) LENGTH	(N) WIDTH	(N) DEPTH	CY
				LF	LF	LF	
1	Las-395	94.00-95.00	16	100	4	0.33	79
		95.00-96.00	16	100	4	0.33	79
2	Plu-70	58.40-59.00	22	100	4	0.33	108
		58.40-59.00	10	100	4	0.50	75
		59.00-R60.00	22	100	4	0.33	108
		59.00-R60.00	10	100	4	0.50	75
		R60.00-R61.00	24	100	4	0.33	118
		R61.00-R62.00	24	100	4	0.33	118
		R62.00-R62.50	12	100	4	0.33	59
		R62.50-R63.50	10	100	4	0.33	49
		R63.50-R64.00	12	100	4	0.33	59
		R64.00-65.00	24	100	4	0.33	118
		65.00-R66.00	24	100	4	0.33	118
		R66.00-R66.40	10	100	4	0.33	49
3	Teh-32	16.00-17.00	14	100	4	0.33	69
		17.00-18.00	14	100	4	0.33	69
		18.00-19.00	14	100	4	0.33	69
		19.00-20.00	14	100	4	0.33	69
		20.00-21.00	14	100	4	0.33	69
		21.00-21.50	8	100	4	0.33	40
TOTAL							1597

REMOVE ASPHALT CONCRETE DIKE

Loc	Co-Rte	PM LIMITS	SIDE	LENGTH
				LF
2	Plu-70	R60.00-R60.44	R+	2324
		R60.06-R60.37	L+	1637
		R60.43-R60.49	L+	317
		R60.78-R60.90	R+	634
		R60.96-R61.02	L+	317
		R61.17-R61.22	R+	264
		R61.24-R61.29	R+	264
		R61.36-R61.37	R+	53
		R61.54-R61.63	L+	476
		R61.55-R62.00	R+	2377
		R61.67-R61.71	L+	212
		R62.11-R62.24	R+	687
		R62.30-R62.82	R+	2746
		R62.85-R62.94	R+	476
		R63.19-R63.27	L+	423
		R63.20-R63.27	R+	370
		R63.47-R63.62	R+	792
		R66.06-R66.22	R+	845
		R66.14-R66.30	L+	845
3	Teh-32	16.67-16.72	R+	270
TOTAL				16,329

PLACE HOT MIX ASPHALT DIKE (TYPE F)

Loc	Co-Rte	PM LIMITS	SIDE	REMARKS	LENGTH	MINOR HMA
					LF	TON
2	Plu-70	R60.00-R60.44	R+	PLACE HMA DIKE	2324	215
		R60.06-R60.37	L+	PLACE HMA DIKE	1637	
		R60.43-R60.49	L+	PLACE HMA DIKE	317	
		R60.78-R60.90	R+	PLACE HMA DIKE	634	
		R60.96-R61.02	L+	PLACE HMA DIKE	317	
		R61.17-R61.22	R+	PLACE HMA DIKE	264	
		R61.24-R61.29	R+	PLACE HMA DIKE	264	
		R61.36-R61.37	R+	PLACE HMA DIKE	53	
		R61.54-R61.63	L+	PLACE HMA DIKE	476	
		R61.55-R62.00	R+	PLACE HMA DIKE	2377	
		R61.67-R61.71	L+	PLACE HMA DIKE	212	
		R62.11-R62.24	R+	PLACE HMA DIKE	687	
		R62.30-R62.82	R+	PLACE HMA DIKE	2746	
		R62.85-R62.94	R+	PLACE HMA DIKE	476	
		R63.19-R63.27	L+	PLACE HMA DIKE	423	
		R63.20-R63.27	R+	PLACE HMA DIKE	370	
		R63.47-R63.62	R+	PLACE HMA DIKE	792	
		R66.06-R66.22	R+	PLACE HMA DIKE	845	
		R66.14-R66.30	L+	PLACE HMA DIKE	845	
3	Teh-32	16.67-16.72	R+	PLACE HMA DIKE	270	16
		16.75-16.78	R+	CAP Exist AC DIKE	160	
		17.59-17.60	R+	CAP Exist AC DIKE	55	
		18.20-18.24	R+	CAP Exist AC DIKE	185	
		18.30-18.34	R+	CAP Exist AC DIKE	200	
		18.37-18.38	R+	CAP Exist AC DIKE	55	
		18.42-18.45	R+	CAP Exist AC DIKE	160	
		18.88-18.90	R+	CAP Exist AC DIKE	75	
		18.92-18.95	R+	CAP Exist AC DIKE	160	
		19.37-19.40	R+	CAP Exist AC DIKE	160	
		20.09-20.13	R+	CAP Exist AC DIKE	210	
		20.29-20.32	R+	CAP Exist AC DIKE	140	
		20.94-20.97	R+	CAP Exist AC DIKE	160	
		21.11-21.13	R+	CAP Exist AC DIKE	125	
TOTAL					18,174	231

METAL BEAM GUARD RAILING

Loc	Co-Rte	PM LIMITS	SIDE	RECONSTRUCT MBGR	ALTERNATIVE FLARED TERMINAL SYSTEM	(N) BURIED POST END ANCHOR	GUARD RAILING DELINEATOR	REMARKS
				LF	EA	EA	EA	
1	Las-395	94.59-94.62	R+	167	2		2	DELINEATOR Approx Beg AND End
		94.60-94.63	L+	167	2		2	DELINEATOR Approx Beg AND End
2	Plu-70	59.22-59.24	R+	106			2	DELINEATOR Approx Beg AND End
		59.22-59.24	L+	106			2	DELINEATOR Approx Beg AND End
		R60.39-R60.44	R+	264	2		2	DELINEATOR Approx Beg AND End
		R60.86-R61.03	R+	898	2		3	DELINEATOR Approx 300' SPACING
		R60.96-R61.02	L+	317	2		2	DELINEATOR Approx Beg AND End
		R61.54-R61.63	L+	476			2	DELINEATOR Approx Beg AND End
		R61.55-R62.00	R+	2377			6	DELINEATOR Approx 475' SPACING
		R62.11-R62.24	R+	687			3	DELINEATOR Approx Beg AND End
		R62.30-R62.82	R+	2746	2		7	DELINEATOR Approx 460' SPACING
		R62.85-R62.94	R+	476	2		2	DELINEATOR Approx Beg AND End
		R63.19-R63.27	L+	423	2		2	DELINEATOR Approx Beg AND End
		R63.20-R63.27	R+	370	1	1	2	DELINEATOR Approx Beg AND End
		R63.47-R63.62	L+	792		2	3	DELINEATOR Approx 265' SPACING
		R63.47-R63.62	R+	792	1	1	3	DELINEATOR Approx 265' SPACING
		R63.64-R63.68	R+	212	1	1	2	DELINEATOR Approx Beg AND End
		R63.76-R63.90	R+	740	1	1	3	DELINEATOR Approx 245' SPACING
		R64.05-R64.11	R+	317	2		2	DELINEATOR Approx Beg AND End
		R64.14-64.51	R+	650	2		2	DELINEATOR Approx 490' SPACING
		R66.06-R66.22	R+	845	2		3	DELINEATOR Approx 420' SPACING
		R66.14-R66.30	L+	845		2	3	DELINEATOR Approx 420' SPACING
TOTAL				14,773	26		61	

SUMMARY OF QUANTITIES

Q-2

REVISED BY | DATE REVISED
MICHAEL CONNER | KARLIE SMITH
CALCULATED-DESIGNED BY | CHECKED BY
FUNCTIONAL SUPERVISOR: LANCE BROWN

STATE OF CALIFORNIA - DEPARTMENT OF TRANSPORTATION
Caltrans® MAINTENANCE

P:\proj2\02\2E710_plans\pse\22E710pa002.dgn

LAST REVISION 01-19-11 | DATE PLOTTED => 21-JAN-2011 TIME PLOTTED => 07:47

Dist	COUNTY	ROUTE	POST MILES TOTAL PROJECT	SHEET No.	TOTAL SHEETS
02	Las,Plu, Teh	32,70, 395	Var	9	17

ART 1-20-11
REGISTERED ELECTRICAL ENGINEER DATE

1-20-11
PLANS APPROVAL DATE

REGISTERED PROFESSIONAL ENGINEER A.P. ROBLES No. E15293 Exp. 3-31-11 ELECTRICAL STATE OF CALIFORNIA

THE STATE OF CALIFORNIA OR ITS OFFICERS OR AGENTS SHALL NOT BE RESPONSIBLE FOR THE ACCURACY OR COMPLETENESS OF SCANNED COPIES OF THIS PLAN SHEET.

NOTES (THIS SHEET):

1. EXACT LOCATION OF LOOP DETECTORS WILL BE DETERMINED BY THE ENGINEER.

[2] COIL 10' OF LOOP WIRES IN PULL BOX.

LEGEND:

(pb) Exist OBJECT MARKER (TYPE PB)

DIRECTION OF TRAVEL

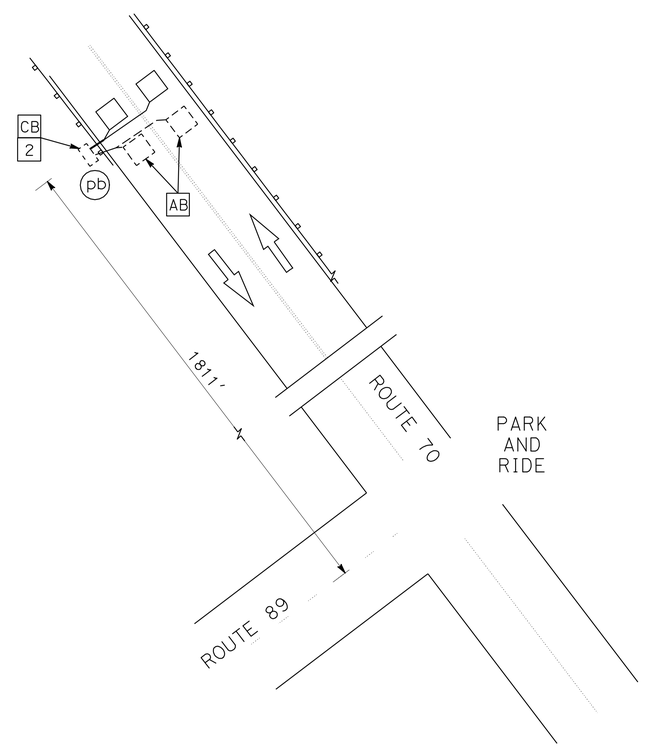

TRAFFIC MONITORING STATION

NO SCALE

E-1

THIS PLAN IS ACCURATE FOR ELECTRICAL WORK ONLY.

STATE OF CALIFORNIA - DEPARTMENT OF TRANSPORTATION
Caltrans ELECTRICAL DESIGN

FUNCTIONAL SUPERVISOR: ROB STINGER
CALCULATED-DESIGNED BY: ARTURO P. ROBLES
CHECKED BY: SCOTT GREGORY
REVISED BY
DATE REVISED

P:\proj2\02\2E710_plans\pse\22e710ua001.dgn

LAST REVISION 07-07-10 | DATE PLOTTED => 21-JAN-2011 | TIME PLOTTED => 07:47

BORDER LAST REVISED 7/2/2010 | USERNAME => s123119 | DGN FILE => 22e710ua001.dgn | RELATIVE BORDER SCALE IS IN INCHES 0 1 2 3 | UNIT 0147 | PROJECT NUMBER & PHASE 02000005971

DIST	COUNTY	ROUTE	POST MILES TOTAL PROJECT	SHEET NO.	TOTAL SHEETS
02	Las,Plu, Teh	32,70, 395	Var	10	17

Randell D. Hiatt
REGISTERED CIVIL ENGINEER

June 6, 2008
PLANS APPROVAL DATE

REGISTERED PROFESSIONAL ENGINEER
Randell D. Hiatt
No. C50200
Exp. 6-30-09
CIVIL
STATE OF CALIFORNIA

The State of California or its officers or agents shall not be responsible for the accuracy or completeness of electronic copies of this plan sheet.

To accompany plans dated 1-21-11

NOTES:

1. When necessary to place dike in front of face of guard railing, only Type C dike may be used. For dike details, see Standard Plan A87B.
2. For standard railing post embedment, see Standard Plans A77C3.
3. Guard railing delineation to be used where shown on the Project Plans.
4. When dike or curb is placed under guard railing, the maximum height of the dike or curb shall be 4". Mountable dike should not be used. For dike and curb details, see Revised Standard Plans RSP A87A and Standard Plan A87B.
5. For details of typical distance between the face of rail and hinge point, see Standard Plan A77C3.

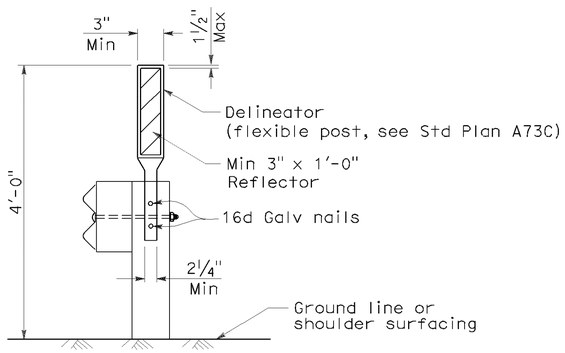

GUARD RAILING DELINEATION

See Note 3

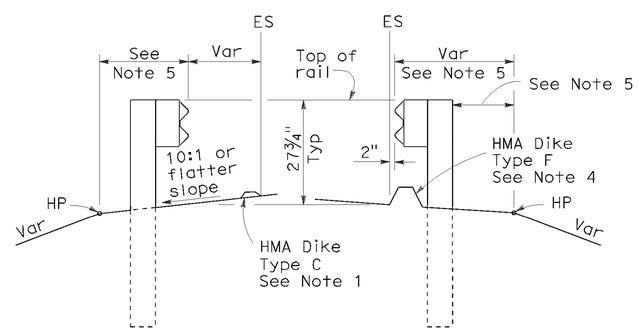

DIKE POSITIONING

See Note 1

STATE OF CALIFORNIA
DEPARTMENT OF TRANSPORTATION

METAL BEAM GUARD RAILING TYPICAL RAILING DELINEATION AND DIKE POSITIONING DETAILS

NO SCALE

RSP A77C4 DATED JUNE 6, 2008 SUPERSEDES STANDARD PLAN A77C4
DATED MAY 1, 2006 - PAGE 47 OF THE STANDARD PLANS BOOK DATED MAY 2006.

REVISED STANDARD PLAN RSP A77C4

2006 REVISED STANDARD PLAN RSP A77C4

P:\proj2\02\2E710_plans\pse\22e710va001.dgn

12-10-07

DIST	COUNTY	ROUTE	POST MILES TOTAL PROJECT	SHEET NO.	TOTAL SHEETS
02	Las,Plu, Teh	32,70, 395	Var	11	17

REGISTERED ELECTRICAL ENGINEER

October 5, 2007
PLANS APPROVAL DATE

REGISTERED PROFESSIONAL ENGINEER Jeffery G. McRae No. E14512 Exp. 6-30-08 ELECTRICAL STATE OF CALIFORNIA

The State of California or its officers or agents shall not be responsible for the accuracy or completeness of electronic copies of this plan sheet.

To accompany plans dated 1-21-11

ELECTROLIERS

STANDARD TYPES
15, 15D
15 STRUCTURE
21, 21D STRUCTURE
30
31
32
35
36-20A

High mast light pole

Double Arm lighting standard

Existing electrolier

Electrolier foundation (Future installation)

NOTES:

1. Luminaires shall be 310 W HPS when installed on Type 21, 21D, 30, 31, 32, 35 and 36-20A Standards, unless otherwise specified. Luminaires shall be 200 W HPS when installed on other type standards or poles, unless otherwise specified.
2. Luminaires shall be the cutoff type, ANSI Type Ⅲ medium cutoff lighting distribution, unless otherwise specified.
3. Variations noted adjacent to symbol on project plans.

Electrolier (see project notes or project plans)

Luminaire on wood pole

STANDARD NOTES:

- AB — Abandon. If applied to conduit, remove conductors.
- BC — Install pull box in existing conduit run.
- BP — Pedestrian barricade, type as indicated on plan.
- CB — Install conduit into existing pull box.
- CC — Connect new and existing conduit. Remove existing conductors and install conductors as indicated.
- CF — Conduit to remain for future use. Remove conductors. Install pull wire or rope.
- DH — Detector handhole.
- FA — Foundation to be abandoned.
- IS — Install sign on signal mast arm.
- NS — No slip base on standard.
- PEC — Photoelectric control.
- PEU — Photoelectric unit.
- RC — Equipment or material to be removed and become the property of the Contractor.
- RE — Remove electrolier, fuses and ballast. Tape ends of conductors.
- RL — Relocate equipment.
- RR — Remove and reuse equipment.
- RS — Remove and salvage equipment.
- SC — Splice new to existing conductors.
- SD — Service disconnect.
- SF — Standard to remain for future use. Remove luminaire, pole conductors, fuses and ballast.
- TSP — Telephone service point.

ABBREVIATIONS AND EQUIPMENT DESIGNATIONS

PROPOSED	EXISTING	
BBS	bbs	Battery backup system
BC	bc	Bolt circle
C	C	Conduit
CCTV	cctv	Closed circuit television
CKT	ckt	Circuit
CMS	cms	Changeable message sign
DLC	dlc	Loop detector lead-in cable
EMS	ems	Extinguishable message sign
EVC	evc	Emergency vehicle cable
EVD	evd	Emergency vehicle detector
FB	fb	Flashing beacon
FBCA	fbca	Flashing beacon control assembly
FBS	fbs	Flashing beacon with slip base
FO	fo	Fiber optic
G	G	Ground (Equipment Grounding Conductor)
GFCI	GFCI	Ground fault circuit interrupt
HAR	har	Highway advisory radio
HEX	hex	Hexagonal
HPS	hps	High pressure sodium
IISNS	iisns	Internally illuminated street name sign
ISL	isl	Induction sign lighting
LED	led	Light emitting diode
LMA	lma	Luminaire mast arm
LPS	lps	Low pressure sodium
LTG	ltg	Lighting
LUM	lum	Luminaire
MAT	mat	Mast arm mounting vehicle signal faces, top attachment
MAS	mas	Mast arm mounting vehicle signal faces, side attachment
MAS-4A	mas-4A	Mast arm mounting vehicle signal faces, side attachment - 4 signal section
MAS-4B	mas-4B	
MAS-4C	mas-4C	
MAS-5A	mas-5A	Mast arm mounting vehicle signal faces, side attachment - 5 signal section
MAS-5B	mas-5B	
MC	mc	Mercury contactor
M/M	m/m	Multiple to multiple transformer
MT	mt	Conduit with pull wire or rope only
MTG	mtg	Mounting
	mv	Mercury vapor lighting fixture
N	N	Neutral (Grounded Conductor)
NC	NC	Normally closed
NO	NO	Normally open
PB	pb	Pull box
PEC	pec	Photoelectric control (Type Ⅰ, Ⅱ, Ⅲ, Ⅳ or Ⅴ as shown)
PED	ped	Pedestrian
PEU	peu	Photoelectric unit
PPB	ppb	Pedestrian push button
RL		Relocated equipment
RM	rm	Ramp metering
SB	sb	Slip base
SIC	sic	Signal interconnect cable
SIG	sig	Signal
SMA	sma	Signal mast arm
SNS	sns	Street name sign
SP	sp	Service point
TDC	tdc	Telephone demarcation cabinet
TMS	tms	Traffic monitoring station
TOS	tos	Traffic Operations System
VEH	veh	Vehicle
XFMR	xfmr	Transformer
COMM	comm	Communication
RWIS	rwis	Roadway weather information system

SOFFIT AND WALL MOUNTED LUMINAIRES

Pendant, 70 W HPS unless otherwise specified.

Flush, 70 W HPS unless otherwise specified.

Wall surface, 70 W HPS unless otherwise specified.

Existing soffit or wall luminaire to remain unmodified.

Existing soffit or wall luminaire to be modified as specified.

NOTE:

Arrow indicates "street side" of luminaire.

STATE OF CALIFORNIA
DEPARTMENT OF TRANSPORTATION

ELECTRICAL SYSTEMS (SYMBOLS AND ABBREVIATIONS)

NO SCALE

RSP ES-1A DATED OCTOBER 5, 2007 SUPERSEDES STANDARD PLAN ES-1A DATED MAY 1, 2006 - PAGE 400 OF THE STANDARD PLANS BOOK DATED MAY 2006.

REVISED STANDARD PLAN RSP ES-1A

2006 REVISED STANDARD PLAN RSP ES-1A

P:\proj2\02\2E710_plans\pse\22e710va002.dgn

7-10-07

DIST	COUNTY	ROUTE	POST MILES TOTAL PROJECT	SHEET NO.	TOTAL SHEETS
02	Las,Plu, Teh	32,70, 395	Var	12	17

REGISTERED ELECTRICAL ENGINEER

October 5, 2007
PLANS APPROVAL DATE

REGISTERED PROFESSIONAL ENGINEER Jeffery G. McRae No. E14512 Exp. 6-30-08 ELECTRICAL STATE OF CALIFORNIA

The State of California or its officers or agents shall not be responsible for the accuracy or completeness of electronic copies of this plan sheet.

To accompany plans dated 1-21-11

CONDUIT

PROPOSED	EXISTING	
		Lighting Conduit, unless otherwise indicated or noted
		Traffic signal conduit
C	c	Communication conduit
T	t	Telephone conduit
F	f	Fire alarm conduit
FO	fo	Fiber optic conduit
		Conduit termination (RSP ES-9A C)
R	r	Conduit riser in/on structure or service pole

SERVICE EQUIPMENT

PROPOSED	EXISTING	
OH	oh	Overhead lines
U	U	Wood pole "U" indicates utility owned
		Pole guy with anchor
		Utility transformer - ground mounted
III		Service equipment enclosure type
		Service equipment enclosure door indicates front of enclosure
T	t	Telephone demarcation cabinet

POLE-MOUNTED SERVICE DESIGNATION

Type of installation

TYPE H SERVICE - 28'-10" ← Pole height above grade

ILLUMINATED OVERHEAD SIGN

PROPOSED	EXISTING	
		Overhead sign - Single post
		Overhead sign - Two post
		Overhead sign - Mounted on structure
		Overhead sign with electrolier

SIGNAL EQUIPMENT

PROPOSED	EXISTING	
		Pedestrian signal face
		Pedestrian push button post
		Pedestrian barricade
		Vehicle signal face (with backplate, 3-Section: red, yellow and green)
		Vehicle signal face with angle visors
PV	PV	Modifications of basic symbols: "L" indicates all non-arrow sections louvered "LG" indicates louvered green section only "PV" indicates 12" programmed visibility sections "8" indicates all 8" sections (only when specified)
		Type 15TS and Vehicle signal face
		Vehicle signal face with red, yellow and green left arrow sections
		Vehicle signal face with red and yellow sections and up green arrow
		Vehicle signal face (5 Section) with red, yellow and green sections and yellow and green right arrows
		Type 1 Standard and attached vehicle signal faces
		Standard with signal mast arm only and attached vehicle signal faces and internally illuminated street name sign
		Type 33 Standard, Left-turn vehicle signal face and sign
		Standard with luminaire and signal mast arms and attached vehicle signal faces
		Cantilever flashing beacon Type 9 Frame, with a sign unless otherwise specified or indicated
		Type 15-FBS Standard with two vehicle signal face sections with lens, backplate and visor with a sign
R	Y	Flashing beacon. One vehicle signal face section with lens, backplate and visor. "R" indicates red indication, "Y" indicates yellow indication
		Controller assembly. Door indicates front of cabinet

SIGNAL EQUIPMENT Cont

PROPOSED	EXISTING	
		Guard post
		Type 1 Standard with "Meter On" sign
		Emergency Vehicle detector

NOTES:

1. All signal sections shall be 12" unless shown otherwise.
2. Signal heads shall be provided with backplates unless shown otherwise.
3. Signal indication shall be LED.

STATE OF CALIFORNIA
DEPARTMENT OF TRANSPORTATION

ELECTRICAL SYSTEMS (SYMBOLS AND ABBREVIATIONS)

NO SCALE

RSP ES-1B DATED OCTOBER 5, 2007 SUPERCEDES STANDARD PLAN ES-1B DATED MAY 1, 2006 - PAGE 401 OF THE STANDARD PLANS BOOK DATED MAY 2006.

REVISED STANDARD PLAN RSP ES-1B

2006 REVISED STANDARD PLAN RSP ES-1B

P:\proj2\02\2E710_plans\pse\22e710va003.dgn

7-10-07

DIST	COUNTY	ROUTE	POST MILES TOTAL PROJECT	SHEET NO.	TOTAL SHEETS
02	Las,Plu, Teh	32,70, 395	Var	13	17

REGISTERED ELECTRICAL ENGINEER

October 5, 2007
PLANS APPROVAL DATE

REGISTERED PROFESSIONAL ENGINEER Jeffery G. McRae No. E14512 Exp. 6-30-08 ELECTRICAL STATE OF CALIFORNIA

The State of California or its officers or agents shall not be responsible for the accuracy or completeness of electronic copies of this plan sheet.

To accompany plans dated 1-21-11

EQUIPMENT IDENTIFICATION

ILLUMINATED SIGN IDENTIFICATION NUMBER:

Sign No. 12345

10 ISL SCI 1.0

- Sign number - Place on post or structure
- Transformer rating (kVA)
- Lighting control type
- Number and type of fixtures

Do NOT place on standard or structure

ELECTROLIER OR EQUIPMENT IDENTIFICATION NUMBER:

12345 - 15'-0"

- Mast arm length, if shown. Do not place on standard or structure.
- Equipment number - Place on standard or structure. Existing equipment numbers are shown in parenthesis

CONDUIT AND CONDUCTOR IDENTIFICATION:

1½"C, 2#10, 15#14, 2 DLC

- Number and size of conductors and cables
- Size of conduit in inches

ø1, ø2, ø2P, etc.	Traffic phase identification for signal faces, detectors and phase diagrams
1 2 3	Project note numbers
A B C	Equipment description, installation or item numbers
1 2 3	Conduit run numbers

SIGNAL AND LIGHTING STANDARD (TYPICAL DESIGNATION):

19A - 3 - 100

- Wind velocity = 100 mph
- Case 3 arm loading
- Standard type
- Standard Plan sheet number
- Detail number or letter

MISCELLANEOUS EQUIPMENT

PROPOSED	EXISTING	
CMS	cms	Changeable message sign
		Closed circuit television camera
		Highway advisory radio pole and antenna
EMS	ems	Extinguishable message sign
M V	m v	Detection device M = Microwave sensor V = Video image sensor

WIRING DIAGRAM LEGEND

P	Pole
CB	Circuit breaker
A	Ampere
V	Volt
M	Metered
UM	Unmetered
NB	Neutral bus
GB	Ground bus
G	Equipment grounding conductor
N	Grounded conductor (Neutral)

- External conductor
- Conductor or bus
- Tie point
- Contactor coil
- Contactor, Contact NO
- Terminal blocks
- Contactor, Contact NC
- Enclosure bond
- Grounding electrode
- Circuit breaker
- Receptacle

PULL BOXES

PROPOSED	EXISTING	
		Pull box-No. 5 unless otherwise indicated or noted.
3	9A(21)	Pull box-Additional designations or descriptions

3 = No. 3½ pull box
5 = No. 5 pull box
6 = No. 6 pull box
7 = No. 7 (Ceiling pull box)
8 = No. 8 (Pendant soffit pull box)
9 = No. 9 pull box
9A = No. 9A pull box

(C) = Communications pull box
(E) = Pull box with extension
(S) = Sprinkler control pull box
(21) = Anchor bolts and conduit for future installation of Type 21 Standard
(T) = Traffic pull box

VEHICLE DETECTORS

5 J 9 U

- Vehicle detector designation
- U = Upper
  L = Lower
- Slot number in input file
- Input file (I or J)
- Phase

PROPOSED	EXISTING	
		Type A detector loop. Outline of sawcut shown.
		Type B detector loop. Outline of sawcut shown.
		Type C detector loop. Outline of sawcut shown.
		Type D detector loop. Outline of sawcut shown.
		Type E detector loop. Outline of sawcut shown.
		Type Q detector loop. Outline of sawcut shown.
		Magnetic detector
DH	dh	Detector handhole
		Microwave or video detection zone

STATE OF CALIFORNIA
DEPARTMENT OF TRANSPORTATION

ELECTRICAL SYSTEMS (SYMBOLS AND ABBREVIATIONS)

NO SCALE

RSP ES-1C DATED OCTOBER 5, 2007 SUPERCEDES STANDARD PLAN ES-1C DATED MAY 1, 2006 - PAGE 402 OF THE STANDARD PLANS BOOK DATED MAY 2006.

REVISED STANDARD PLAN RSP ES-1C

2006 REVISED STANDARD PLAN RSP ES-1C

P:\proj2\02\2E710_plans\pse\22e710va004.dgn

7-10-07

DIST	COUNTY	ROUTE	POST MILES TOTAL PROJECT	SHEET NO.	TOTAL SHEETS
02	Las,Plu, Teh	32,70, 395	Var	14	17

REGISTERED ELECTRICAL ENGINEER

October 5, 2007
PLANS APPROVAL DATE

REGISTERED PROFESSIONAL ENGINEER Jeffery G. McRae No. E14512 Exp. 6-30-08 ELECTRICAL STATE OF CALIFORNIA

The State of California or its officers or agents shall not be responsible for the accuracy or completeness of electronic copies of this plan sheet.

To accompany plans dated 1-21-11

2006 REVISED STANDARD PLAN RSP ES-5A

LOOP INSTALLATION PROCEDURE

1. Loops shall be centered in lanes.
2. Saw slots in pavement for loop conductors as shown in details.
3. Distance between side of loop and a lead-in saw cut from adjacent detectors shall be 2'-0" minimum. Distance between lead-in saw cuts shall be 6" minimum.
4. Bottom of saw slot shall be smooth with no sharp edges.
5. Slots shall be washed until clean, blown out and thoroughly dried before installing loop conductors.
6. Adjacent loops on the same sensor unit channel shall be wound in opposite directions.
7. Identify and tag loop circuit pairs in the pull box with loop number, start (S) and finish (F) of conductor. Identify and tag lead-in-cable with sensor number and phase.
8. Install loop conductor in slot using a 3/16" to 1/4" thick wood paddle. Hold loop conductors with wood paddles (at the bottom of the sawed slot) during sealant placement.
9. No more than 2 twisted pairs shall be installed in one sawed slot.
10. Allow additional 5'-0" of slack length of conductor for the lead-in run to pull box.
11. The additional length of each conductor for each loop shall be twisted together into a pair (6 turns per 3'-4" minimum) before being placed in the slot and conduit leading to pull box.
12. Test each loop circuit for continuity, circuit resistance and insulation resistance at the pull box before filling slots.
13. Fill slots as shown in details.
14. Splice loop conductors to lead-in-cable. Splices shall be soldered.
15. End of lead-in-cable and Type 2 loop conductor shall be waterproofed prior to installing in conduit to prevent moisture from entering the cable.
16. Lead-in-cable shall not be spliced between the pull box and the controller cabinet terminals.
17. Test each loop circuit for continuity, circuit resistance and insulation resistance at the controller cabinet location.
18. Where loop conductors are not to be spliced to a lead-in-cable, the ends of the conductors shall be taped and waterproofed with electrical insulating coating.

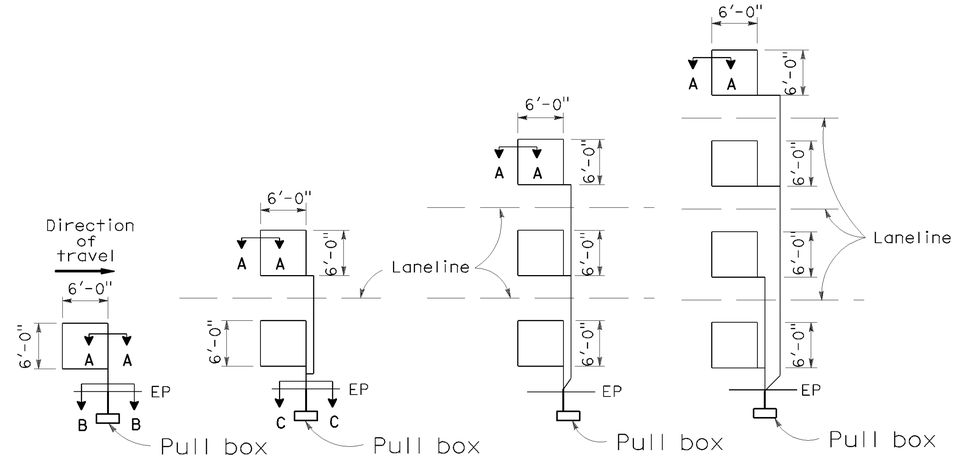

TYPE 1A INSTALLATION | TYPE 2A INSTALLATION | TYPE 3A INSTALLATION | TYPE 4A INSTALLATION

SAWCUT DETAILS

(Type A loop detector configurations illustrated)

1. 1A thru 4A = 1 Type A loop configuration in each lane.
2. 1B thru 4B = 1 Type B loop configuration in each lane.
3. 1C = 1 Type C loop configuration entering lanes as required.
4. 1D thru 4D = 1 Type D loop configuration in each lane.
5. 1E thru 4E = 1 Type E loop configuration in each lane.
6. 1Q thru 4Q = 1 Type Q loop configuration in each lane. (Use Type A, B, C, D, E or Q loop detector configurations only when specified or shown on plans)

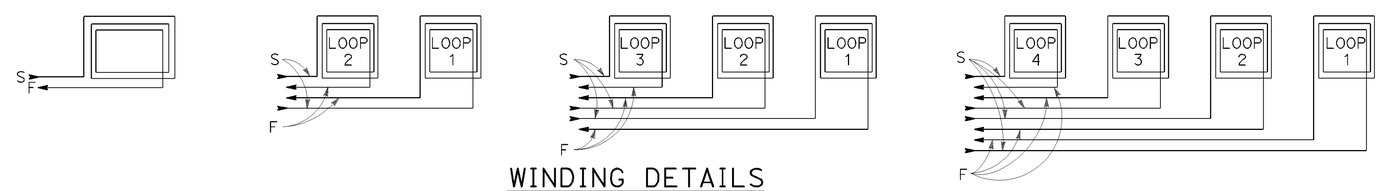

WINDING DETAILS

See Notes 6 and 7

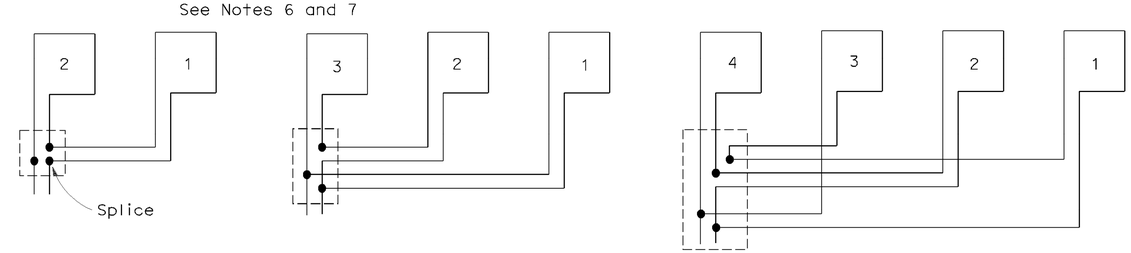

TYPICAL LOOP CONNECTIONS

(Dashed lines represent the pull box)

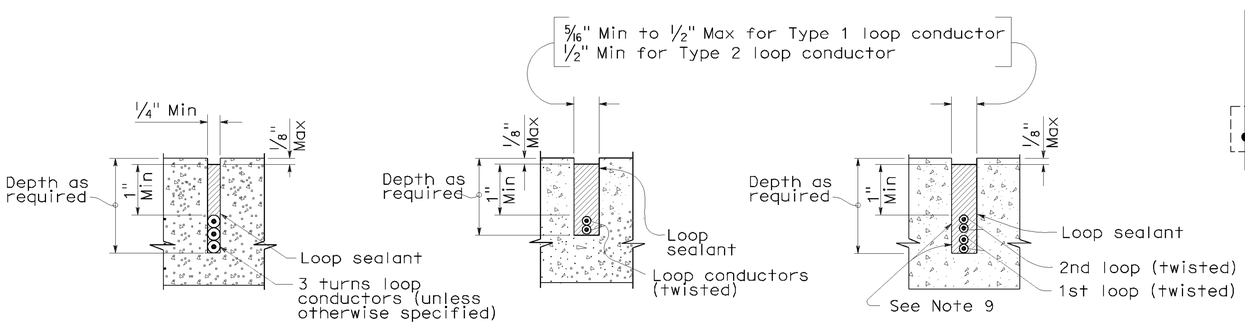

SECTION A-A | SECTION B-B | SECTION C-C

SLOT DETAILS - TYPE 1 AND TYPE 2 LOOP CONDUCTOR

STATE OF CALIFORNIA
DEPARTMENT OF TRANSPORTATION

ELECTRICAL SYSTEMS (DETECTORS)

NO SCALE

RSP ES-5A DATED OCTOBER 5, 2007 SUPERCEDES STANDARD PLAN ES-5A DATED MAY 1, 2006 - PAGE 423 OF THE STANDARD PLANS BOOK DATED MAY 2006.

REVISED STANDARD PLAN RSP ES-5A

P:\proj2\02\2E710_plans\pse\22e710va005.dgn

8-17-07

DIST	COUNTY	ROUTE	POST MILES TOTAL PROJECT	SHEET NO.	TOTAL SHEETS
02	Las,Plu, Teh	32,70, 395	Var	15	17

Randell D. Hiatt
REGISTERED CIVIL ENGINEER

June 6, 2008
PLANS APPROVAL DATE

REGISTERED PROFESSIONAL ENGINEER Randell D. Hiatt No. C50200 Exp. 6-30-09 CIVIL STATE OF CALIFORNIA

The State of California or its officers or agents shall not be responsible for the accuracy or completeness of electronic copies of this plan sheet.

To accompany plans dated 1-21-11

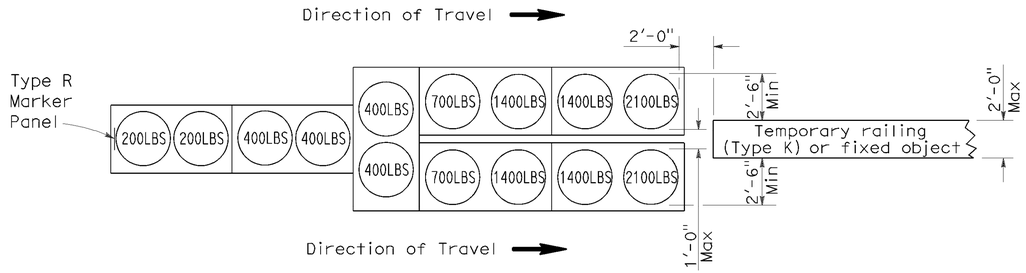

ARRAY 'TU14'

Approach speed 45 mph or more

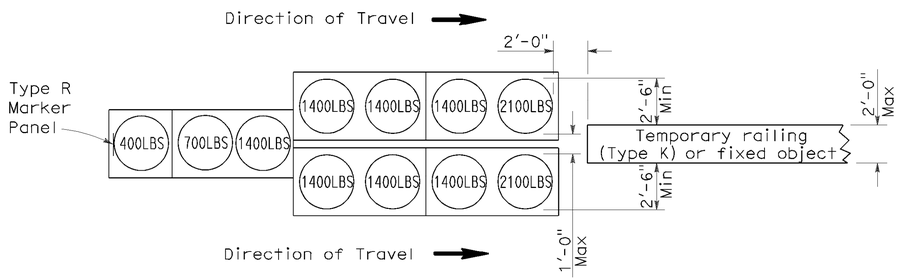

ARRAY 'TU11'

Approach speed less than 45 mph

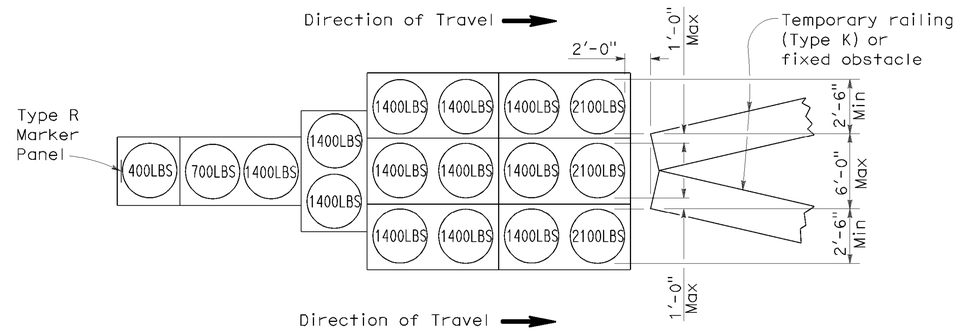

ARRAY 'TU17'

Approach speed less than 45 mph

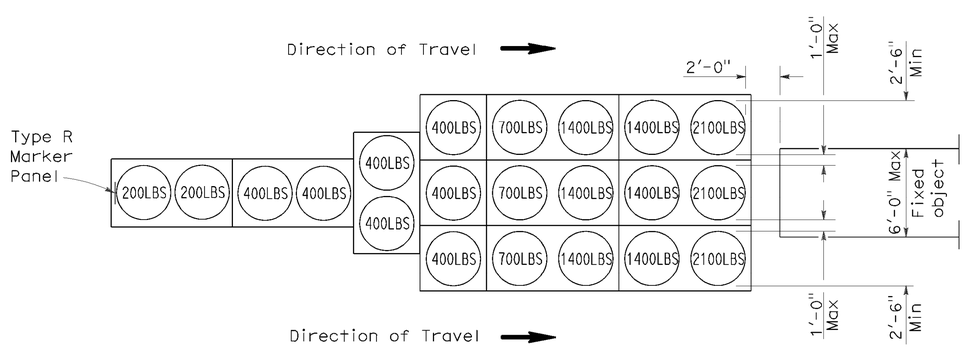

ARRAY 'TU21'

Approach speed 45 mph or more

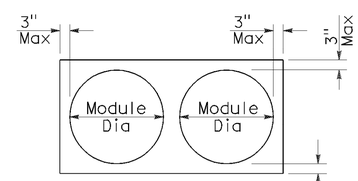

PLAN

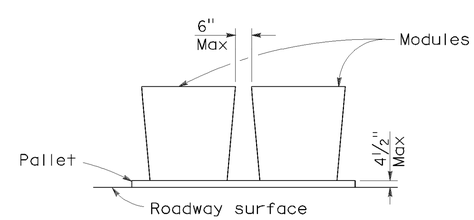

ELEVATION

CRASH CUSHION PALLET DETAIL

See Note 7

NOTES:

1. (XXX) Indicates sand filled module location and weight of sand in pounds for each module. Module spacing is based on the greater diameter of the module.
2. All sand weights are nominal.
3. Temporary crash cushion arrays shall not encroach on the traveled way.
4. Place the top of Type R marker panel 1" below the module lid.
5. Refer to Standard Plan A73B for marker details.
6. Approach speeds indicated conform to NCHRP 350 Report criteria.
7. Use of pallets is optional.

STATE OF CALIFORNIA
DEPARTMENT OF TRANSPORTATION

TEMPORARY CRASH CUSHION, SAND FILLED (UNIDIRECTIONAL)

NO SCALE

RSP T1A DATED JUNE 6, 2008 SUPERSEDES STANDARD PLAN T1A
DATED MAY 1, 2006 - PAGE 211 OF THE STANDARD PLANS BOOK DATED MAY 2006.

REVISED STANDARD PLAN RSP T1A

2006 REVISED STANDARD PLAN RSP T1A

P:\proj2\02\2E710_plans\pse\22e710va006.dgn

5-15-08

DIST	COUNTY	ROUTE	POST MILES TOTAL PROJECT	SHEET NO.	TOTAL SHEETS
02	Las,Plu, Teh	32,70, 395	Var	16	17

Randell D. Hiatt
REGISTERED CIVIL ENGINEER

June 6, 2008
PLANS APPROVAL DATE

REGISTERED PROFESSIONAL ENGINEER
Randell D. Hiatt
No. C50200
Exp. 6-30-09
CIVIL
STATE OF CALIFORNIA

The State of California or its officers or agents shall not be responsible for the accuracy or completeness of electronic copies of this plan sheet.

To accompany plans dated 1-21-11

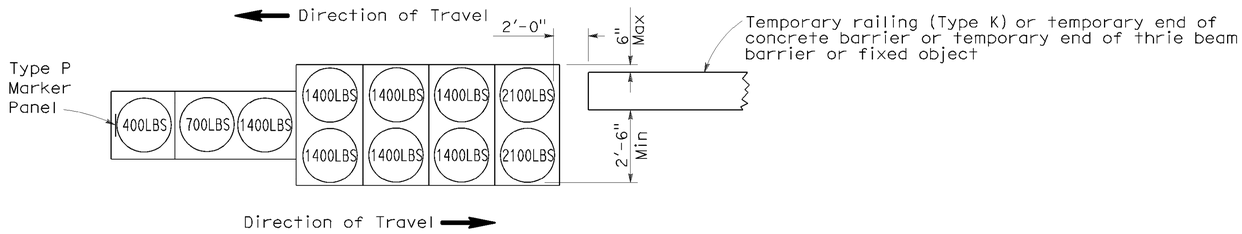

ARRAY 'TB11'

Approach speed less than 45 mph

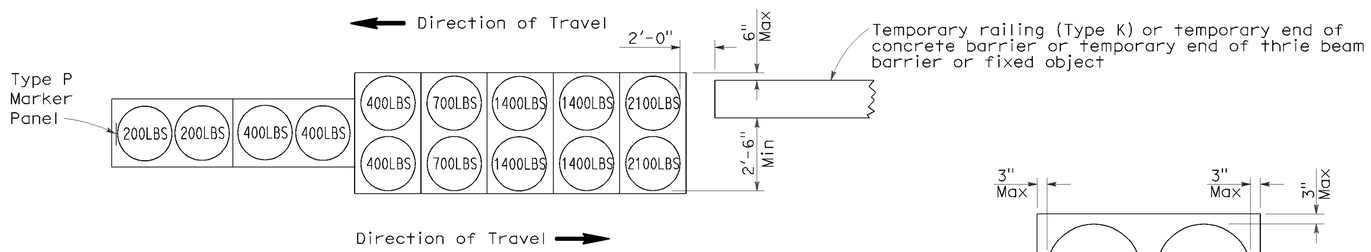

ARRAY 'TB14'

Approach speed 45 mph or more

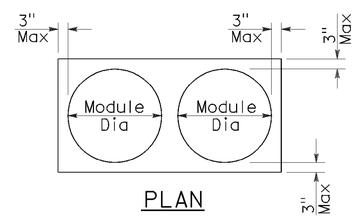

PLAN

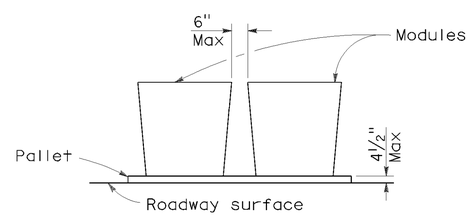

ELEVATION

CRASH CUSHION PALLET DETAIL

See Note 7

NOTES:

1. (XXX) Indicates sand filled module location and weight of sand in pounds for each module. Module spacing is based on the greater diameter of the module.
2. All sand weights are nominal.
3. Temporary crash cushion arrays shall not encroach on the traveled way.
4. Place the Type P marker panel so that the bottom of the panel rests upon the pallet.
5. Refer to Standard Plan A73B for marker details.
6. Approach speeds indicated conform to NCHRP 350 Report criteria.
7. Use of pallets is optional.

STATE OF CALIFORNIA
DEPARTMENT OF TRANSPORTATION

TEMPORARY CRASH CUSHION, SAND FILLED (BIDIRECTIONAL)

NO SCALE

RSP T1B DATED JUNE 6, 2008 SUPERSEDES STANDARD PLAN T1B
DATED MAY 1, 2006 - PAGE 212 OF THE STANDARD PLANS BOOK DATED MAY 2006.

REVISED STANDARD PLAN RSP T1B

2006 REVISED STANDARD PLAN RSP T1B

P:\proj2\02\2E710_plans\pse\22e710va007.dgn

5-15-08

DIST	COUNTY	ROUTE	POST MILES TOTAL PROJECT	SHEET NO.	TOTAL SHEETS
02	Las,Plu, Teh	32,70, 395	Var	17	17

Randell D. Hiatt
REGISTERED CIVIL ENGINEER

June 6, 2008
PLANS APPROVAL DATE

REGISTERED PROFESSIONAL ENGINEER
Randell D. Hiatt
No. C50200
Exp. 6-30-09
CIVIL
STATE OF CALIFORNIA

The State of California or its officers or agents shall not be responsible for the accuracy or completeness of electronic copies of this plan sheet.

To accompany plans dated 1-21-11

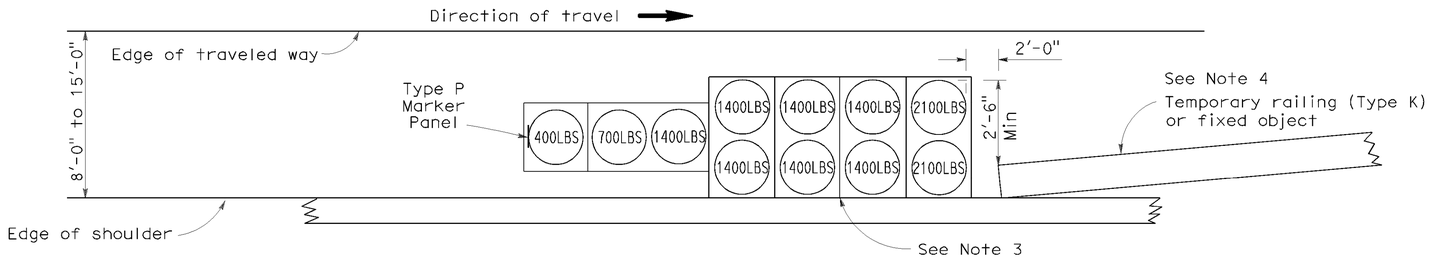

ARRAY 'TS11'

Approach speed less than 45 mph
See Note 9

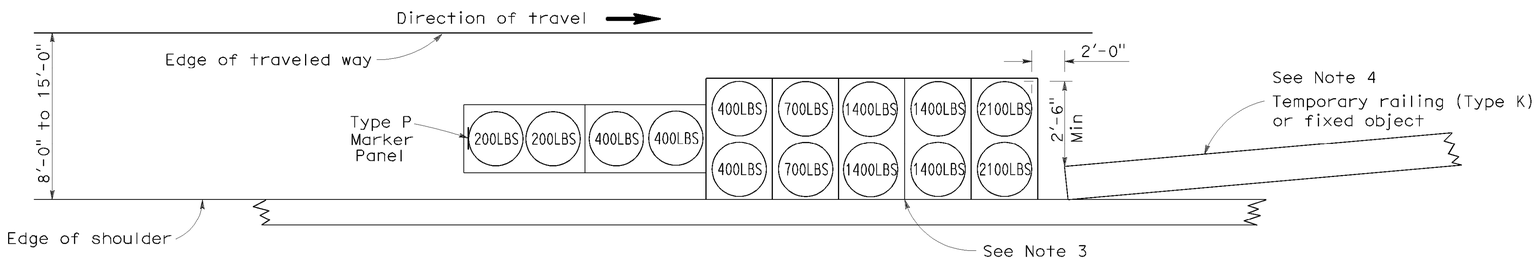

ARRAY 'TS14'

Approach speed 45 mph or more
See Note 9

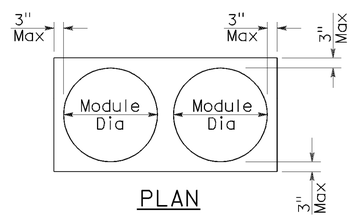

PLAN

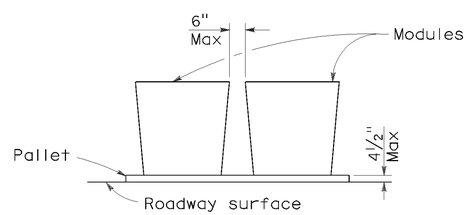

ELEVATION

CRASH CUSHION PALLET DETAIL

See Note 11

NOTES:

1. (XXX) Indicates sand filled module location and weight of sand in pounds for each module. Module spacing is based on the greater diameter of the module.
2. All sand weights are nominal.
3. The temporary crash cushion arrays shown on this plan shall be used only in locations where there will be traffic on one side of the temporary crash cushion array.
4. If the fixed object or approach end of the temporary railing is less than 15'-0" from the edge of traveled way, a temporary crash cushion is required in a construction or work zone.
5. Temporary crash cushion arrays shall not encroach on the traveled way.
6. Arrays for median shoulders shall conform to details shown on this plan for outside shoulders.
7. Place the Type P marker panel so that the bottom of the panel rests upon the pallet and faces traffic.
8. Refer to Standard Plan A73B for marker details.
9. For shoulder widths less than 8'-0", appropriate approved crash cushion protection, other than sand filled modules, shall be provided at fixed objects and at approach ends of temporary railing. The specific type of crash cushion shall be as shown on the project plans or as specified in the Special Provisions, or if not shown on the project plans or specified in the Special Provisions, shall be as approved by the Engineer.
10. Approach speeds indicated conform to NCHRP 350 Report criteria.
11. Use of pallets is optional.

STATE OF CALIFORNIA
DEPARTMENT OF TRANSPORTATION

TEMPORARY CRASH CUSHION, SAND FILLED (SHOULDER INSTALLATIONS)

NO SCALE

RSP T2 DATED JUNE 6, 2008 SUPERSEDES STANDARD PLAN T2
DATED MAY 1, 2006 - PAGE 213 OF THE STANDARD PLANS BOOK DATED MAY 2006.

REVISED STANDARD PLAN RSP T2

2006 REVISED STANDARD PLAN RSP T2

P:\proj2\02\2E710_plans\pse\22e710va008.dgn

5-15-08