Dist	COUNTY	ROUTE	POST MILES TOTAL PROJECT	SHEET No.	TOTAL SHEETS
02	Sis,Tri	97,299	R11.5/17.0 61.0/64.1	1	11

INDEX OF PLANS

SHEET No.	DESCRIPTION
1	TITLE
2	TYPICAL CROSS SECTIONS
3	CONSTRUCTION DETAILS
4	CONSTRUCTION AREA SIGNS
5	PAVEMENT DELINEATION DETAILS
6	PAVEMENT DELINEATION QUANTITIES AND DETAILS
7	SUMMARY OF QUANTITIES
8-11	NEW AND REVISED STANDARD PLANS

STATE OF CALIFORNIA

DEPARTMENT OF TRANSPORTATION

PROJECT PLANS FOR CONSTRUCTION ON

STATE HIGHWAY

IN SISKIYOU AND TRINITY COUNTIES ON ROUTE 97 FROM YELLOW BUTTE ROAD TO 0.5 MILES NORTH OF DEER MOUNTAIN ROAD AND ON ROUTE 299 FROM STEEL BRIDGE ROAD TO 1.4 MILES WEST OF GRASS VALLEY CREEK BRIDGE

TO BE SUPPLEMENTED BY STANDARD PLANS DATED MAY 2006

LOCATION MAP

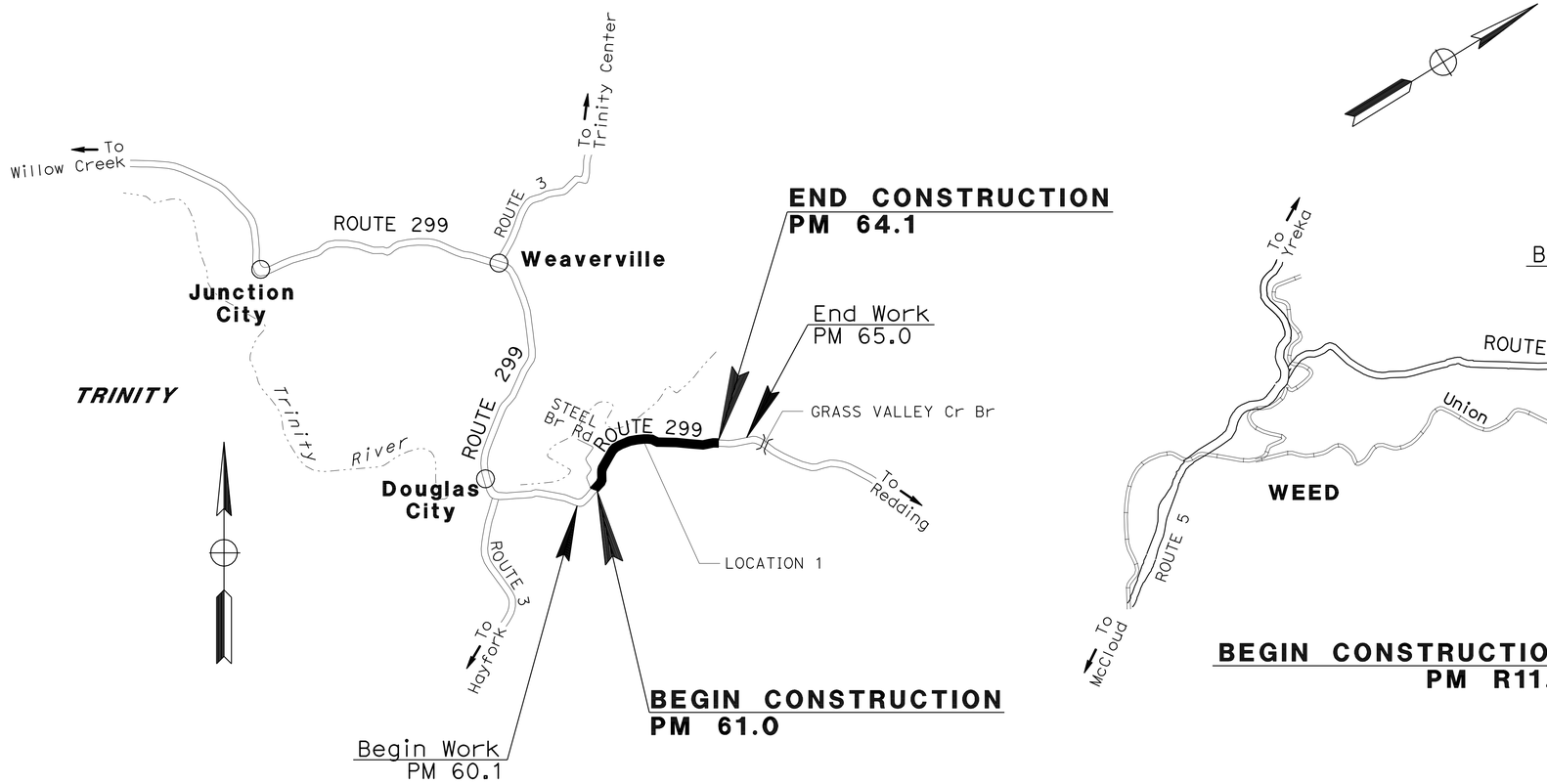

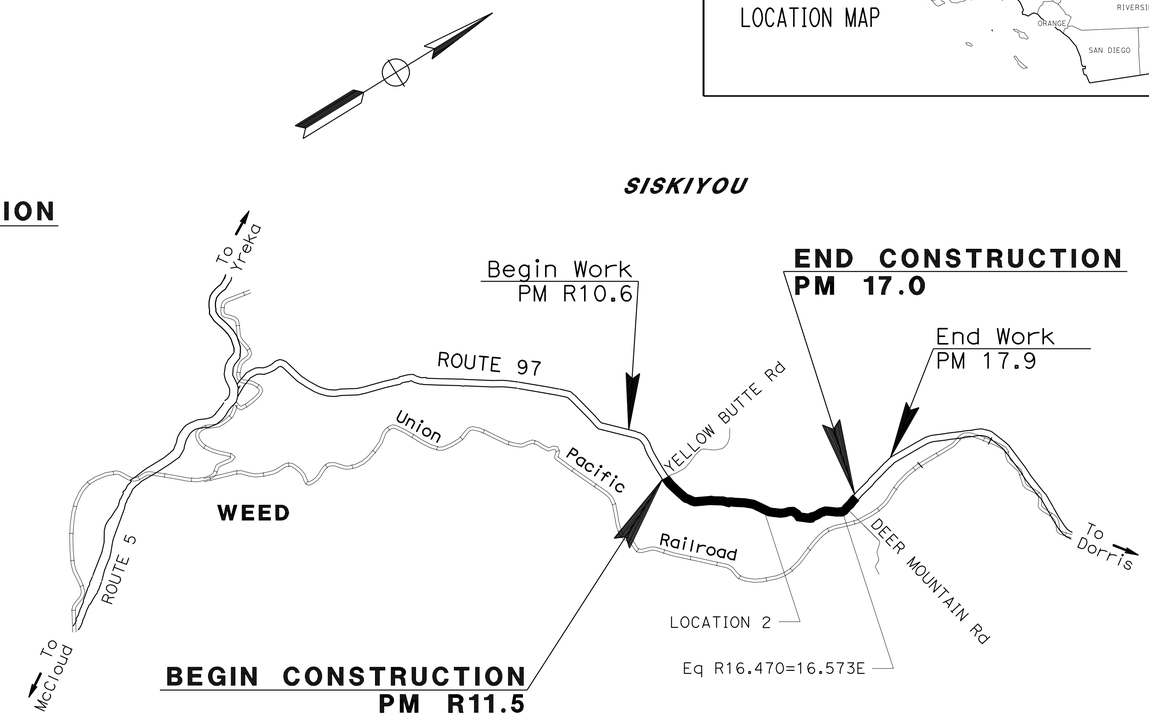

Scott C. Gregory 12-01-10
PROJECT ENGINEER DATE
REGISTERED CIVIL ENGINEER

REGISTERED PROFESSIONAL ENGINEER SCOTT C. GREGORY No. C75565 Exp. 06-30-12 CIVIL STATE OF CALIFORNIA

December 1, 2010
PLANS APPROVAL DATE

THE STATE OF CALIFORNIA OR ITS OFFICERS OR AGENTS SHALL NOT BE RESPONSIBLE FOR THE ACCURACY OR COMPLETENESS OF SCANNED COPIES OF THIS PLAN SHEET.

THE CONTRACTOR SHALL POSSESS THE CLASS (OR CLASSES) OF LICENSE AS SPECIFIED IN THE "NOTICE TO BIDDERS."

NO SCALE

CONTRACT No.	02-2E6704
PROJECT ID	0200000593

PROJECT MANAGER: LANCE BROWN
DESIGN ENGINEER: LANCE BROWN

P:\proj2\02\2E670_plans\pse\22E670ab001.dgn

LAST REVISION 10-29-10 | DATE PLOTTED => 09-DEC-2010 | TIME PLOTTED => 10:56

Dist	COUNTY	ROUTE	POST MILES TOTAL PROJECT	SHEET No.	TOTAL SHEETS
02	Sis, Tri	97, 299	R11.5/17.0 61.0/64.1	2	11

Scott C. Gregory 12-01-10
REGISTERED CIVIL ENGINEER DATE

12-01-10
PLANS APPROVAL DATE

REGISTERED PROFESSIONAL ENGINEER SCOTT C. GREGORY No. C75565 Exp 06-30-12 CIVIL STATE OF CALIFORNIA

THE STATE OF CALIFORNIA OR ITS OFFICERS OR AGENTS SHALL NOT BE RESPONSIBLE FOR THE ACCURACY OR COMPLETENESS OF SCANNED COPIES OF THIS PLAN SHEET.

NOTES:

1. DIMENSIONS OF THE STRUCTURAL SECTIONS ARE SUBJECT TO TOLERANCES SPECIFIED IN THE STANDARD SPECIFICATIONS.
2. SUPERELEVATIONS AS SHOWN OR AS DIRECTED BY THE ENGINEER.
3. EXISTING UTILITY FACILITIES HAVE NOT BEEN POSITIVELY LOCATED, AND HAVE NOT BEEN PLOTTED ON PORTIONS OF THESE PLANS.
4. FOR ACCURATE RIGHT OF WAY DATA, CONTACT RIGHT OF WAY ENGINEERING AT THE DISTRICT OFFICE

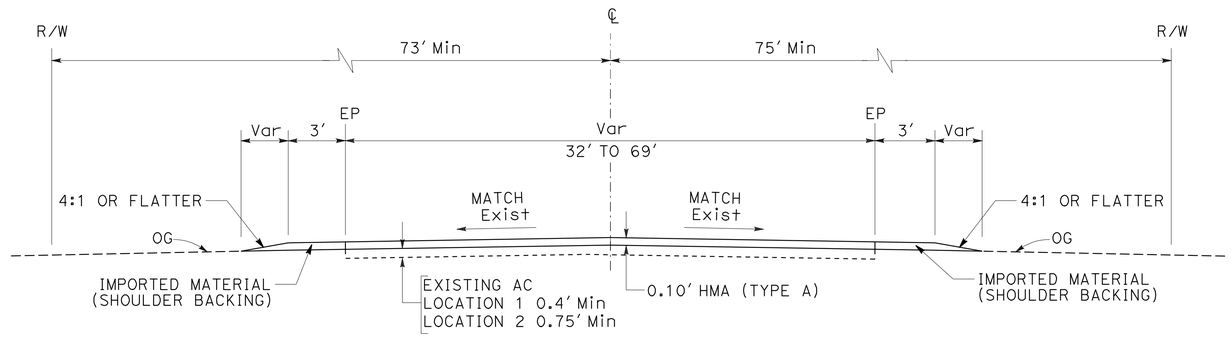

TYPICAL CROSS SECTION

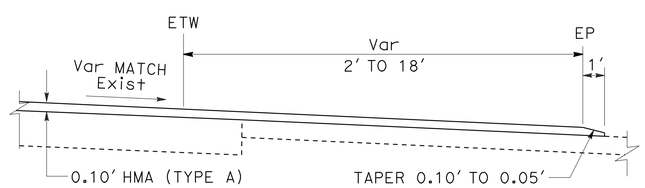

ROUTE 97

LOCATION 2
PM R14.49 TO R14.64 Rt

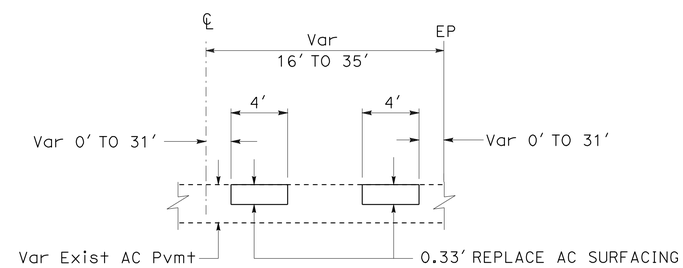

REPLACE AC SURFACING

(TYPICAL BOTH DIRECTIONS)

TYPICAL CROSS SECTIONS

NO SCALE

X-1

REVISED BY | DATE REVISED
SCOTT GREGORY | DENISE FUZERE
CALCULATED-DESIGNED BY | CHECKED BY
FUNCTIONAL SUPERVISOR | LANCE BROWN
STATE OF CALIFORNIA - DEPARTMENT OF TRANSPORTATION
Caltrans® MAINTENANCE

P:\proj2\02\2E670_plans\pse\22E670ca001.dgn

LAST REVISION 10-29-10 | DATE PLOTTED => 09-DEC-2010 | TIME PLOTTED => 10:36

Dist	COUNTY	ROUTE	POST MILES TOTAL PROJECT	SHEET No.	TOTAL SHEETS
02	Sis, Tri	97, 299	R11.5/17.0 61.0/64.1	3	11

REGISTERED CIVIL ENGINEER 12-01-10 DATE

12-01-10
PLANS APPROVAL DATE

REGISTERED PROFESSIONAL ENGINEER SCOTT C. GREGORY No. C75565 Exp 06-30-12 CIVIL STATE OF CALIFORNIA

THE STATE OF CALIFORNIA OR ITS OFFICERS OR AGENTS SHALL NOT BE RESPONSIBLE FOR THE ACCURACY OR COMPLETENESS OF SCANNED COPIES OF THIS PLAN SHEET.

NOTES:

1. DIMENSIONS OF THE STRUCTURAL SECTIONS ARE SUBJECT TO TOLERANCES SPECIFIED IN THE STANDARD SPECIFICATIONS.
2. EXISTING UTILITY FACILITIES HAVE NOT BEEN PLOTTED ON THESE PLANS.

LEGEND:

COLD PLANE AC PAVEMENT

DIRECTION OF TRAFFIC

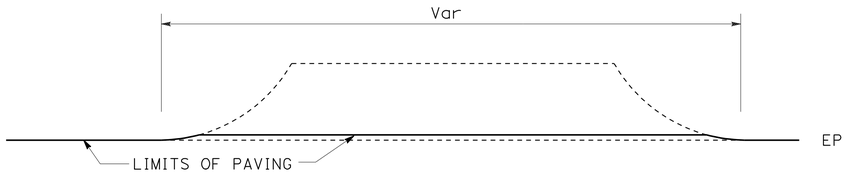

DETAIL FOR PULLOUTS/PARKING AREAS

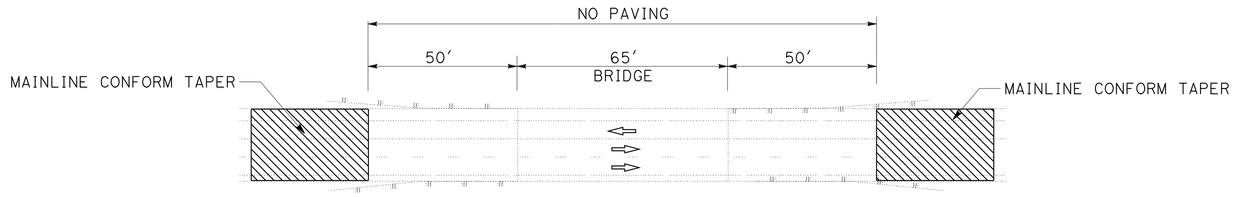

PAVING LIMITS FOR SHEEP ROCK CATTLEPASS LOCATION 2 - PM R14.65

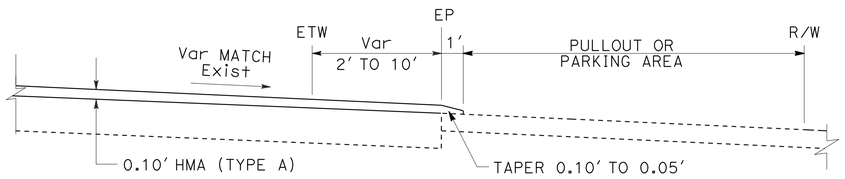

TAPER AT PULLOUTS/PARKING AREAS

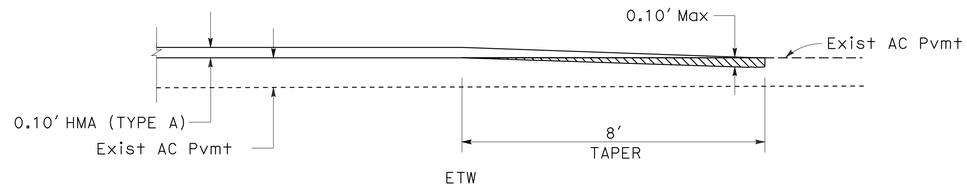

PAVED ROAD CONNECTION CONFORM TAPER

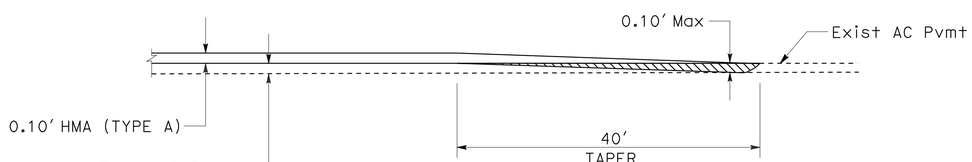

MAINLINE CONFORM TAPER

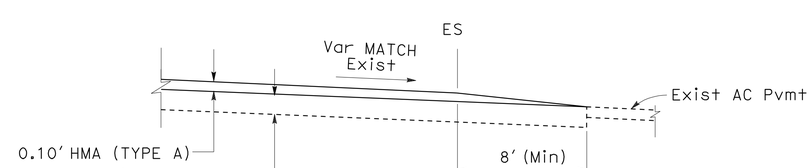

PAVED PRIVATE DRIVE AND PAVED AREA CONFORM TAPER

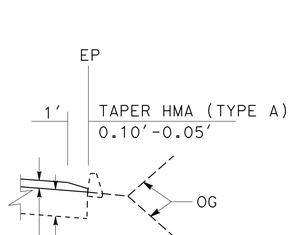

AC DIKE LOCATIONS

(TYPICAL BOTH DIRECTIONS)

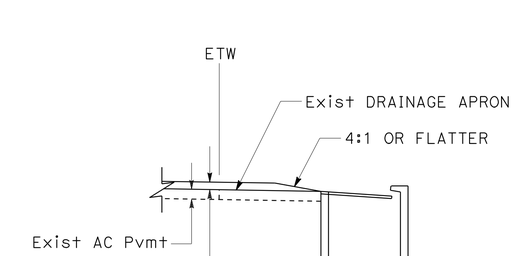

CONFORM TAPER FOR DRAINAGE INLETS

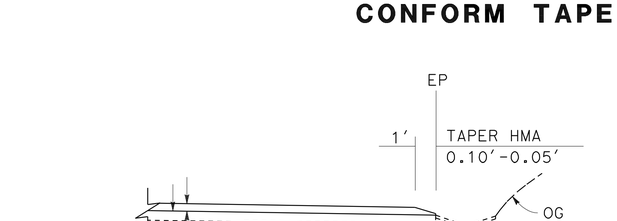

AC DITCH LOCATIONS

LOCATION 2
PM R12.57 TO R12.99 - Lt
PM R15.27 TO R15.57 - Rt
PM R15.27 TO R15.50 - Lt

CONSTRUCTION DETAILS

NO SCALE

C-1

REVISED BY | DATE REVISED
SCOTT GREGORY | DENISE FUZERE
CALCULATED-DESIGNED BY | CHECKED BY
FUNCTIONAL SUPERVISOR | LANCE BROWN

STATE OF CALIFORNIA - DEPARTMENT OF TRANSPORTATION
Caltrans® MAINTENANCE

P:\proj2\02\2E670_plans\pse\22E670ga001.dgn

LAST REVISION | DATE PLOTTED => 09-DEC-2010 | TIME PLOTTED => 10:36 | 11-17-10

Dist	COUNTY	ROUTE	POST MILES TOTAL PROJECT	SHEET No.	TOTAL SHEETS
02	Sis, Tri	97, 299	R11.5/17.0 61.0/64.1	4	11

REGISTERED CIVIL ENGINEER 12-01-10 DATE

12-01-10
PLANS APPROVAL DATE

REGISTERED PROFESSIONAL ENGINEER SCOTT C. GREGORY No. C75565 Exp 06-30-12 CIVIL STATE OF CALIFORNIA

THE STATE OF CALIFORNIA OR ITS OFFICERS OR AGENTS SHALL NOT BE RESPONSIBLE FOR THE ACCURACY OR COMPLETENESS OF SCANNED COPIES OF THIS PLAN SHEET.

NOTES:

1. EXACT LOCATION OF ALL SIGNS TO BE DETERMINED BY THE ENGINEER.
2. CALIFORNIA CODES ARE DESIGNATED BY (CA), OTHERWISE FEDERAL CODES ARE SHOWN.
3. INTERMEDIATE G20-1 SIGNS SHOULD BE PLACED EVERY 3 TO 5 MILES AS NECESSARY.
4. EXISTING UTILITY FACILITIES HAVE NOT BEEN PLOTTED ON THESE PLANS.

LEGEND:

ONE POST STATIONARY MOUNTED SIGN.

DIRECTION OF TRAFFIC

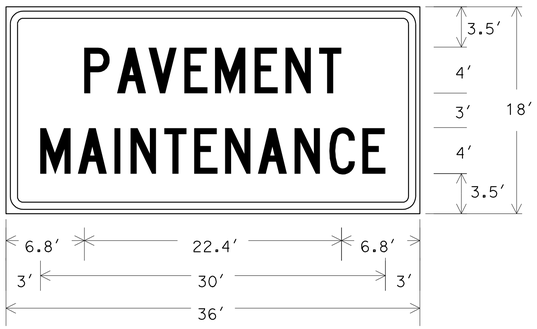

1.5" Radius, 0.6" Border, 0.4" Indent, Black on Orange;
[PAVEMENT] C;
[MAINTENANCE] C;

C23B(CA) SIGN PANEL DETAIL

ROAD CONNECTIONS

LOCATION	PM	DESCRIPTION
1	61.00	STEEL BRIDGE Rd - Lt
	61.98	TOP OF THE GRADE - Rt
	62.56	POKER BAR Rd - Lt
	63.51	LEWISTION Rd - Lt
2	R11.50	YELLOW BUTTE Rd - Lt
	R11.79	BOLAM Rd - Rt
	R12.13	CO Rd A-12 - Lt
	R14.57	MILITARY PASS Rd - Rt
	16.58	DEER MTN Rd - Rt

CONSTRUCTION AREA SIGNS (STATIONARY MOUNTED)

TYPE	CODE	PANEL SIZE	SIGN MESSAGE	No. AND SIZE OF POST	No. OF SIGNS
Ⓐ	W20-1 C23B(CA)	48" x 48" 36" x 18"	ROAD WORK AHEAD "PAVEMENT MAINTENANCE"	1- 4" x 6"	9
Ⓑ	G20-1 C23B(CA)	36" x 18" 36" x 18"	ROAD WORK NEXT XX MILES "PAVEMENT MAINTENANCE"	1- 4" x 6"	4
Ⓒ	G20-1	36" x 18"	ROAD WORK NEXT XX MILES	1- 4" x 4"	2
Ⓓ	G20-2	36" x 18"	END ROAD WORK	1- 4" x 4"	13

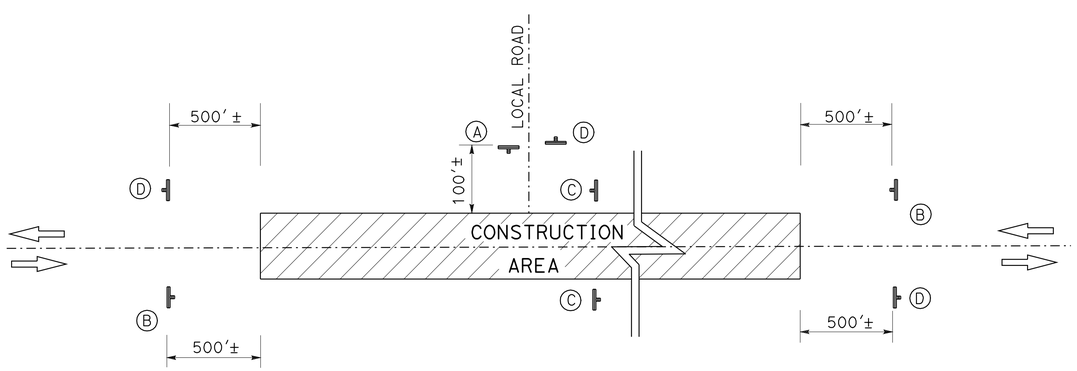

CONSTRUCTION AREA SIGNS

NO SCALE

CS-1

REVISED BY | DATE REVISED
SCOTT GREGORY | DENISE FUZERE
CALCULATED-DESIGNED BY | CHECKED BY
FUNCTIONAL SUPERVISOR | LANCE BROWN
STATE OF CALIFORNIA - DEPARTMENT OF TRANSPORTATION
Caltrans® MAINTENANCE
P:\proj2\02\2E670_plans\pse\22E6701a001.dgn

LAST REVISION | DATE PLOTTED => 09-DEC-2010
11-17-10 | TIME PLOTTED => 10:36

Dist	COUNTY	ROUTE	POST MILES TOTAL PROJECT	SHEET No.	TOTAL SHEETS
02	Sis, Tri	97, 299	R11.5/17.0 61.0/64.1	5	11

REGISTERED CIVIL ENGINEER 12-01-10 DATE

12-01-10
PLANS APPROVAL DATE

REGISTERED PROFESSIONAL ENGINEER SCOTT C. GREGORY No. C75565 Exp 06-30-12 CIVIL STATE OF CALIFORNIA

THE STATE OF CALIFORNIA OR ITS OFFICERS OR AGENTS SHALL NOT BE RESPONSIBLE FOR THE ACCURACY OR COMPLETENESS OF SCANNED COPIES OF THIS PLAN SHEET.

NOTE:

1. EXISTING UTILITY FACILITIES HAVE NOT BEEN PLOTTED ON THESE PLANS.

LEGEND:

⇨ DIRECTION OF TRAFFIC

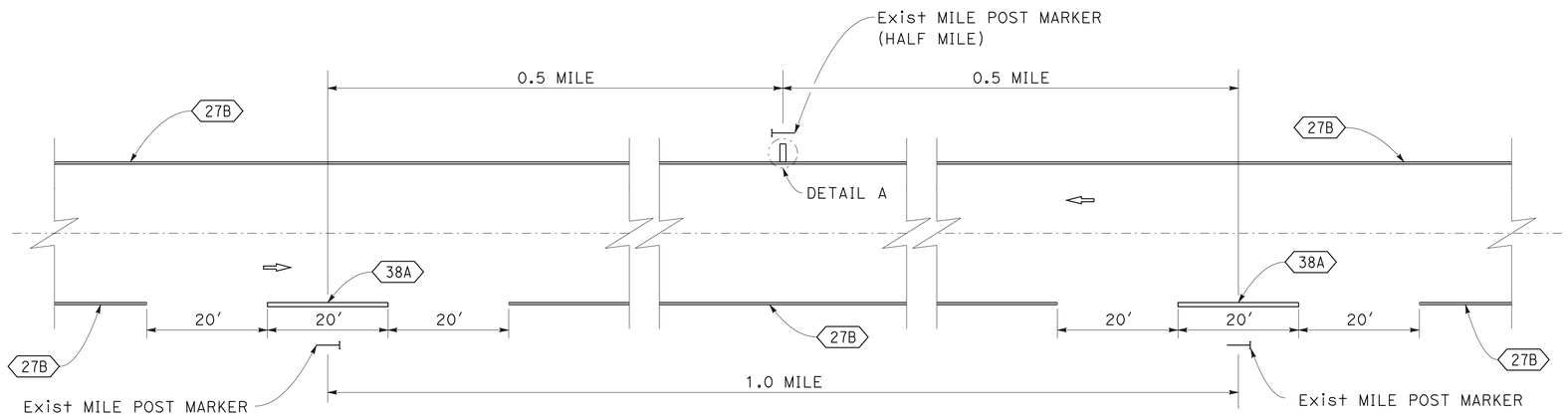

TYPICAL HALF MILE AND MILE POST STRIPE

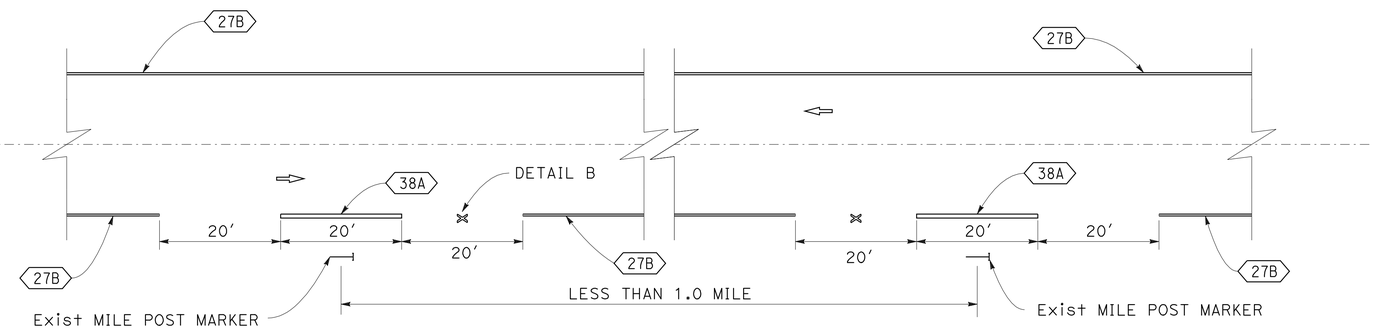

TYPICAL MILE POST STRIPE FOR EQUATIONS

NO HALF MILE MARK WITHIN AN EQUATION

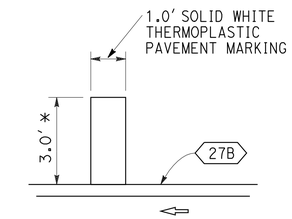

DETAIL A

* ACTUAL LENGTH MAY VARY DUE TO PAVEMENT WIDTH

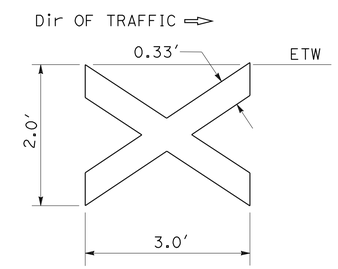

DETAIL B

0.33′ SOLID WHITE THERMOPLASTIC PAVEMENT MARKING

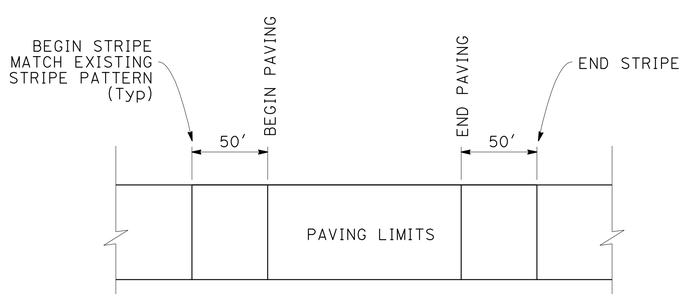

TRAFFIC STRIPE MATCH DETAIL

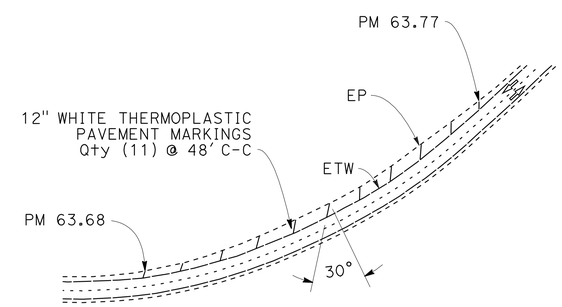

SHOULDER PAVEMENT MARKING DETAIL

LOCATION 1

PAVEMENT DELINEATION DETAILS

NO SCALE

PDD-1

STATE OF CALIFORNIA - DEPARTMENT OF TRANSPORTATION
Caltrans® MAINTENANCE

FUNCTIONAL SUPERVISOR: LANCE BROWN
CALCULATED-DESIGNED BY / CHECKED BY
SCOTT GREGORY / DENISE FUZERE
REVISED BY / DATE REVISED

P:\proj2\02\2E670_plans\pse\22E670nb001.dgn

LAST REVISION 11-17-10 | DATE PLOTTED => 09-DEC-2010 | TIME PLOTTED => 10:36

BORDER LAST REVISED 7/2/2010 | USERNAME => s123119 | DGN FILE => 22E670nb001.dgn | RELATIVE BORDER SCALE IS IN INCHES 0 1 2 3 | UNIT 0156 | PROJECT NUMBER & PHASE 02000005931

Dist	COUNTY	ROUTE	POST MILES TOTAL PROJECT	SHEET No.	TOTAL SHEETS
02	Sis, Tri	97, 299	R11.5/17.0 61.0/64.1	6	11

REGISTERED CIVIL ENGINEER 12-01-10 DATE

12-01-10
PLANS APPROVAL DATE

REGISTERED PROFESSIONAL ENGINEER SCOTT C. GREGORY No. C75565 Exp 06-30-12 CIVIL STATE OF CALIFORNIA

THE STATE OF CALIFORNIA OR ITS OFFICERS OR AGENTS SHALL NOT BE RESPONSIBLE FOR THE ACCURACY OR COMPLETENESS OF SCANNED COPIES OF THIS PLAN SHEET.

NOTES:

1. (N) - NOT A SEPARATE PAY ITEM, FOR INFORMATION ONLY.
2. EXISTING UTILITY FACILITIES HAVE NOT BEEN PLOTTED ON THESE PLANS.

ABBREVIATIONS:

Mid MIDDLE

REMOVE THERMOPLASTIC PAVEMENT MARKING

LOCATION	PM	L†	Mid	R†	EA	SQFT	REMARKS
1	62.51	X			1	42.0	TYPE VI ARROW
	62.54	X			1	42.0	TYPE VI ARROW
	62.56	X			1	22.0	STOP
	62.56	X			1	18.0	ROAD CONNECTION LIMIT LINE
	62.58	X			1	42.0	TYPE VI ARROW
	62.60			X	1	42.0	TYPE VI ARROW
	62.64			X	1	42.0	TYPE VI ARROW
	62.67			X	1	42.0	TYPE VI ARROW
	63.50		X		1	15.0	TYPE IV (L) ARROW
	63.51	X			1	22.0	STOP
	63.51	X			1	18.0	ROAD CONNECTION LIMIT LINE
	63.68-63.77	X			11	100.0	SHOULDER PAVEMENT MARKING
2	R11.79			X	1	22.0	STOP
	R11.79			X	1	18.0	ROAD CONNECTION LIMIT LINE
	R12.13	X			1	22.0	STOP
	R12.13	X			1	18.0	ROAD CONNECTION LIMIT LINE
	R12.14	X			1	42.0	TYPE III (R) TURN ARROW
	R12.16	X			1	42.0	TYPE III (R) TURN ARROW
	R14.00		X		1	641.7	CATTLEGUARD
	R14.57			X	1	22.0	STOP
	R14.57			X	1	18.0	ROAD CONNECTION LIMIT LINE
	R15.28		X		1	247.5	CATTLEGUARD
	16.58			X	1	22.0	STOP
	16.58			X	1	18.0	ROAD CONNECTION LIMIT LINE
	16.91			X	1	42.0	TYPE VI ARROW
	16.95			X	1	42.0	TYPE VI ARROW
	16.99			X	1	42.0	TYPE VI ARROW
TOTAL						1706.2	

THERMOPLASTIC PAVEMENT MARKING

LOCATION	PM	L†	Mid	R†	EA	SQFT	REMARKS
1	61.50-63.50	X			3	9.0	DETAIL A
	62.51	X			1	42.0	TYPE VI ARROW
	62.54	X			1	42.0	TYPE VI ARROW
	62.56	X			1	22.0	STOP
	62.56	X			1	18.0	ROAD CONNECTION LIMIT LINE
	62.58	X			1	42.0	TYPE VI ARROW
	62.60			X	1	42.0	TYPE VI ARROW
	62.64			X	1	42.0	TYPE VI ARROW
	62.67			X	1	42.0	TYPE VI ARROW
	63.50		X		1	15.0	TYPE IV (L) ARROW
	63.51	X			1	22.0	STOP
	63.51	X			1	18.0	ROAD CONNECTION LIMIT LINE
	63.68-63.77	X			11	100.0	SHOULDER PAVEMENT MARKING
2	R11.79			X	1	22.0	STOP
	R11.79			X	1	18.0	ROAD CONNECTION LIMIT LINE
	R12.13	X			1	22.0	STOP
	R12.13	X			1	18.0	ROAD CONNECTION LIMIT LINE
	R12.14	X			1	42.0	TYPE III (R) TURN ARROW
	R12.16	X			1	42.0	TYPE III (R) TURN ARROW
	R14.57			X	1	22.0	STOP
	R14.57			X	1	18.0	ROAD CONNECTION LIMIT LINE
	16.58			X	1	22.0	STOP
	16.58			X	1	18.0	ROAD CONNECTION LIMIT LINE
	16.91			X	1	42.0	TYPE VI ARROW
	16.95			X	1	42.0	TYPE VI ARROW
	16.99			X	1	42.0	TYPE VI ARROW
	R11.50-R15.50	X			5	15.0	DETAIL A
	R16.00-17.00			X	2	4.8	DETAIL B
TOTAL						845.8	

THERMOPLASTIC TRAFFIC STRIPE (SPRAYABLE)

LOCATION	POST MILE LIMITS	DETAIL 9	DETAIL 22	DETAIL 27B	DETAIL 27C	DETAIL 29	DETAIL 38	DETAIL 38A
		LF	LF	LF	LF	LF	LF	LF
1	61.00-64.10	10,296	15,893	30,255	1532	370	106	80
2	R11.50-17.00	28,512	28,512	55,916	1109	0	159	120
TOTAL		172,860						

PAVEMENT MARKER (RETROREFLECTIVE-RECESSED)

LOCATION	POST MILE LIMITS	TYPE D	TYPE G
		EA	EA
1	61.00-64.10	1360	221
2	R11.50-17.00	2378	603
TOTAL		4562	

THERMOPLASTIC TRAFFIC STRIPE (RECESSED)

LOCATION	PM	L†	Mid	R†	EA	LF	REMARKS
2	R14.00	X	X	X	1	1278	CATTLEGUARD
	R15.28	X	X	X	1	495	CATTLEGUARD
TOTAL						1773	

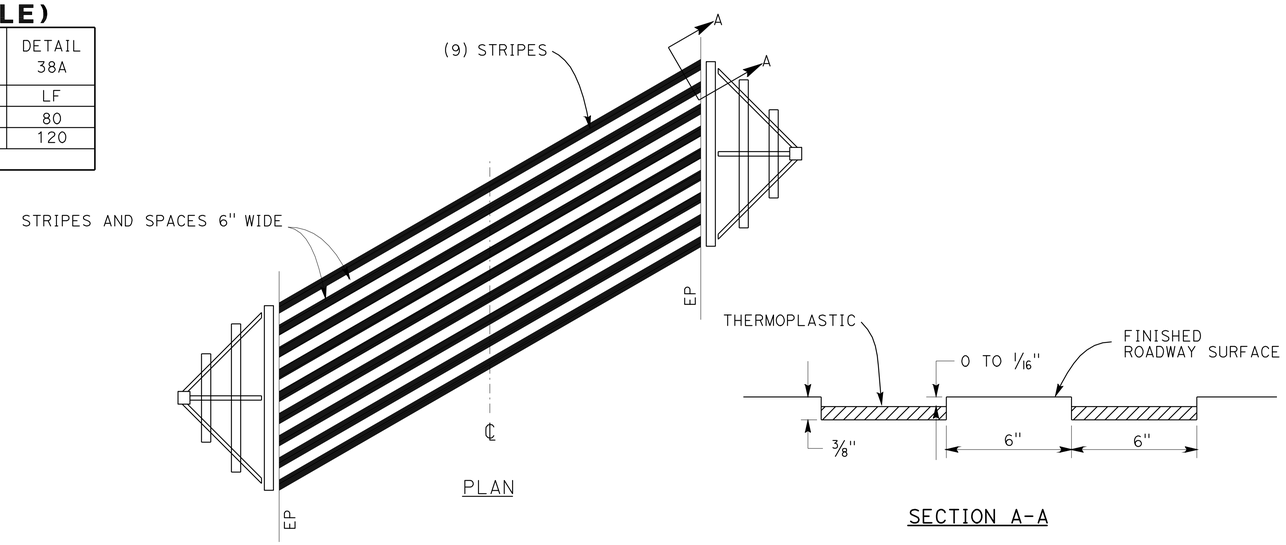

THERMOPLASTIC TRAFFIC STRIPE (RECESSED) CATTLE GUARD

PAVEMENT DELINEATION QUANTITIES AND DETAILS

PDQ-1

STATE OF CALIFORNIA - DEPARTMENT OF TRANSPORTATION
MAINTENANCE
Caltrans
FUNCTIONAL SUPERVISOR: LANCE BROWN
CALCULATED-DESIGNED BY / CHECKED BY
REVISED BY / DATE REVISED
SCOTT GREGORY / DENISE FUZERE

P:\proj2\02\2E670_plans\pse\22E670nc001.dgn

DATE PLOTTED => 09-DEC-2010
TIME PLOTTED => 10:36
LAST REVISION 11-18-10

Dist	COUNTY	ROUTE	POST MILES TOTAL PROJECT	SHEET No.	TOTAL SHEETS
02	Sis, Tri	97, 299	R11.5/17.0 61.0/64.1	7	11

Scott C. Gregory 12-01-10
REGISTERED CIVIL ENGINEER DATE

12-01-10
PLANS APPROVAL DATE

REGISTERED PROFESSIONAL ENGINEER SCOTT C. GREGORY No. C75565 Exp 06-30-12 CIVIL STATE OF CALIFORNIA

THE STATE OF CALIFORNIA OR ITS OFFICERS OR AGENTS SHALL NOT BE RESPONSIBLE FOR THE ACCURACY OR COMPLETENESS OF SCANNED COPIES OF THIS PLAN SHEET.

NOTES:

1. (N) - NOT A SEPARATE PAY ITEM, FOR INFORMATION ONLY.
2. EXISTING UTILITY FACILITIES HAVE NOT BEEN PLOTTED ON THESE PLANS.
3. * ACTUAL LOCATIONS OF REPLACE ASPHALT CONCRETE SURFACING TO BE DETERMINED IN THE FIELD BY THE ENGINEER.

ROADWAY QUANTITIES

LOCATION	POST MILE LIMITS	(N) LENGTH	(N) WIDTH	HMA (TYPE A)	TACK COAT	IMPORTED MATERIAL (SHOULDER BACKING)
	PM - PM	LF	LF	TON	TON	TON
1	61.20-61.74	2851.2	41.2	4743	20.0	1666
	61.74-62.32	3062.4	41.2-50.6			
	62.32-62.44	633.6	50.6-54.0			
	62.44-62.51	369.6	54.0-48.9			
	62.51-62.58	369.6	48.9-50.1			
	62.58-62.73	792.0	50.1-40.4			
	62.73-62.87	739.2	40.4-34.7			
	62.87-63.26	2059.2	34.7-32.8			
	63.26-63.34	422.4	32.8-35.4			
	63.34-63.40	316.8	35.4-44.9			
	63.40-63.50	528.0	44.9-32.5			
	63.50-63.59	475.2	32.5-34.7			
	63.59-63.65	316.8	34.7-44.0			
	63.65-63.67	105.6	44.0-32.6			
	63.67-64.10	2270.4	32.6-32.8			
	HMA DIKE			26		
2	R11.50-R12.00	2640.0	47.0-48.2	10,530	44.3	3085
	R12.00-R12.50	2640.0	48.2-47.9			
	R12.50-R13.00	2640.0	47.9-49.0			
	R13.00-R13.50	2640.0	49.0-46.9			
	R13.50-R14.00	2640.0	46.9-46.0			
	R14.00-R14.49	2587.2	46.0-49.8			
	R14.49-R14.53	211.2	49.8-68.8			
	R14.53-R14.56	158.4	68.8-49.8			
	R14.56-R14.64	422.4	49.8-48.0			
	R14.67-R15.00	1742.4	48.0-47.4			
	R15.00-R15.50	2640.0	47.4-48.0			
	R15.50-R16.00	2640.0	48.0-50.0			
	R16.00-R16.47	2481.6	50.0-49.5			
	16.57-17.00	2270.4	49.5-47.0			
			TOTAL	15,299	64.3	4751

COLD PLANE ASPHALT CONCRETE PAVEMENT

LOCATION	POST MILE LIMITS	(N) LENGTH	(N) WIDTH	AREA	REMARKS
		LF	LF	SQYD	
1	61.20	41.2	40	183.1	MAINLINE CONFORM TAPER
	62.56	40.0	8	35.6	PAVED ROAD CONNECTION CONFORM TAPER - L+
	63.51	40.0	8	35.6	PAVED ROAD CONNECTION CONFORM TAPER - L+
	64.10	32.8	40	145.8	MIANLINE CONFORM TAPER
2	R11.50	47.0	40	208.9	MAINLINE CONFORM TAPER
	R11.50	52.0	8	46.2	PAVED ROAD CONNECTION CONFORM TAPER - L+
	R11.79	32.0	8	28.4	PAVED ROAD CONNECTION CONFORM TAPER - R+
	R12.13	32.0	8	28.4	PAVED ROAD CONNECTION CONFORM TAPER - L+
	R14.57	32.0	8	28.4	PAVED ROAD CONNECTION CONFORM TAPER - R+
	R14.64	48.0	40	213.3	MAINLINE CONFORM TAPER
	R14.67	48.0	40	213.3	MAINLINE CONFORM TAPER
	16.58	32.0	8	28.4	PAVED ROAD CONNECTION CONFORM TAPER - R+
	17.00	47.0	40	208.9	MAINLINE CONFORM TAPER
			TOTAL	1404.3	

METAL BEAM GUARD RAILING

LOCATION	POST MILE LIMITS	SIDE	ADJUST MBGR	RECONSTRUCT MBGR	ALTERNATIVE FLARE TERMINAL SYSTEM	(N) BURIED POST END ANCHOR
			LF	LF	EA	EA
1	61.20-61.25	L+	250			1
	61.41-61.50	L+	450		1	1
	62.26-62.52	L+	1325		1	1
	62.69-62.79	L+	513			2
	62.69-62.78	R+	463			2
	63.09-63.14	R+		200	2	
	63.50-63.54	L+		237		1
	63.62-63.74	R+		562	2	
	63.62-63.83	L+	1125			2
		TOTAL	4126	999	6	10

REPLACE ASPHALT CONCRETE SURFACING

LOCATION	POST MILE LIMITS	(N) Approx No. OF DIGOUTS	(N) LENGTH	(N) WIDTH	(N) DEPTH	* REPLACE ASPHALT CONCRETE SURFACING
	PM - PM		LF	LF	LF	CY
1	61.20-64.10	124	100	4	0.33	606
2	R11.5-17.00	396	100	4	0.33	1936
				TOTAL		2542

REMOVE ASPHALT CONCRETE DIKE

LOCATION	POST MILE LIMITS	SIDE	LENGTH
			LF
1	61.16-61.19	L+	150
	62.70-62.78	R+	422
	62.69-62.74	L+	264
	63.50-63.54	L+	230
	63.62-63.78	L+	850
		TOTAL	1916

PLACE HOT MIX ASPHALT DIKE (TYPE F)

LOCATION	POST MILE LIMITS	SIDE	LENGTH
			LF
1	61.16-61.19	L+	150
	62.70-62.78	R+	422
	62.69-62.74	L+	264
	63.50-63.54	L+	230
	63.62-63.78	L+	850
		TOTAL	1916

SUMMARY OF QUANTITIES
Q-1

REVISED BY	DATE REVISED
SCOTT GREGORY	DENISE FUZERE
CALCULATED-DESIGNED BY	CHECKED BY
FUNCTIONAL SUPERVISOR	LANCE BROWN

STATE OF CALIFORNIA - DEPARTMENT OF TRANSPORTATION
Caltrans® MAINTENANCE

P:\proj2\02\2E670_plans\pse\22E670pa001.dgn

LAST REVISION DATE PLOTTED => 09-DEC-2010
11-18-10 TIME PLOTTED => 10:36

DIST	COUNTY	ROUTE	POST MILES TOTAL PROJECT	SHEET NO.	TOTAL SHEETS
02	Sis,Tri	97,299	R11.517.0, 61.0/64.1	8	11

Randell D. Hiatt
REGISTERED CIVIL ENGINEER

June 6, 2008
PLANS APPROVAL DATE

REGISTERED PROFESSIONAL ENGINEER
Randell D. Hiatt
No. C50200
Exp. 6-30-09
CIVIL
STATE OF CALIFORNIA

The State of California or its officers or agents shall not be responsible for the accuracy or completeness of electronic copies of this plan sheet.

To accompany plans dated 12-01-10

NOTES:

1. When necessary to place dike in front of face of guard railing, only Type C dike may be used. For dike details, see Standard Plan A87B.
2. For standard railing post embedment, see Standard Plans A77C3.
3. Guard railing delineation to be used where shown on the Project Plans.
4. When dike or curb is placed under guard railing, the maximum height of the dike or curb shall be 4". Mountable dike should not be used. For dike and curb details, see Revised Standard Plans RSP A87A and Standard Plan A87B.
5. For details of typical distance between the face of rail and hinge point, see Standard Plan A77C3.

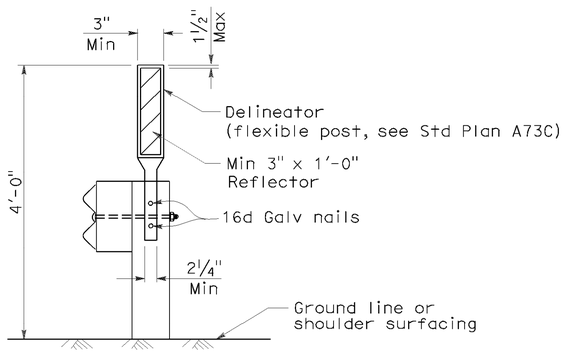

GUARD RAILING DELINEATION

See Note 3

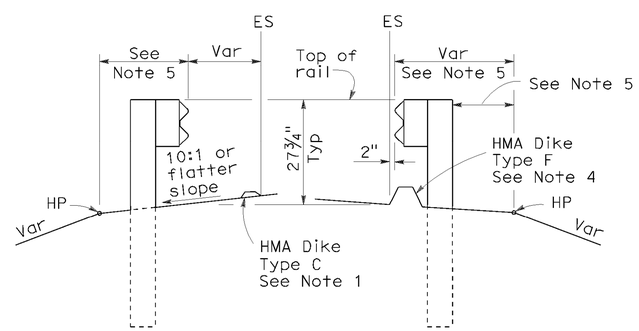

DIKE POSITIONING

See Note 1

STATE OF CALIFORNIA
DEPARTMENT OF TRANSPORTATION

METAL BEAM GUARD RAILING TYPICAL RAILING DELINEATION AND DIKE POSITIONING DETAILS

NO SCALE

RSP A77C4 DATED JUNE 6, 2008 SUPERSEDES STANDARD PLAN A77C4
DATED MAY 1, 2006 - PAGE 47 OF THE STANDARD PLANS BOOK DATED MAY 2006.

REVISED STANDARD PLAN RSP A77C4

2006 REVISED STANDARD PLAN RSP A77C4

P:\proj2\02\2E670_plans\pse\22E670va001.dgn

12-10-07

DIST	COUNTY	ROUTE	POST MILES TOTAL PROJECT	SHEET NO.	TOTAL SHEETS
02	Sis,Tri	97,299	R11.517.0, 61.0/64.1	9	11

Randell D. Hiatt
REGISTERED CIVIL ENGINEER

June 6, 2008
PLANS APPROVAL DATE

REGISTERED PROFESSIONAL ENGINEER
Randell D. Hiatt
No. C50200
Exp. 6-30-09
CIVIL
STATE OF CALIFORNIA

The State of California or its officers or agents shall not be responsible for the accuracy or completeness of electronic copies of this plan sheet.

To accompany plans dated 12-01-10

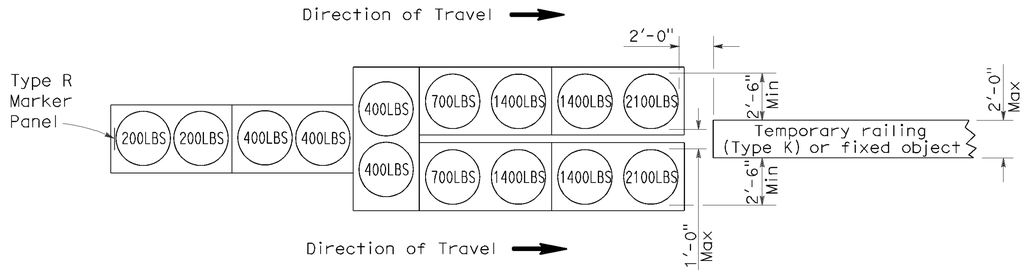

ARRAY 'TU14'

Approach speed 45 mph or more

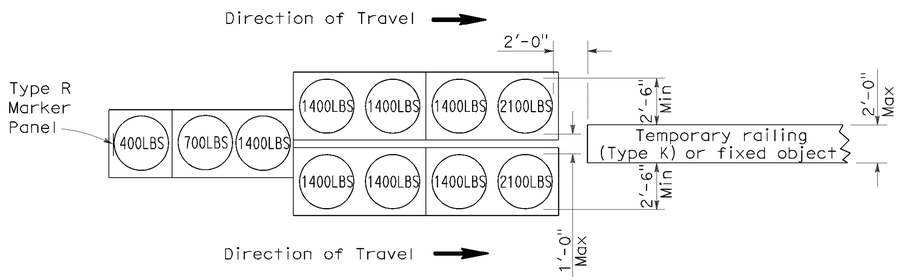

ARRAY 'TU11'

Approach speed less than 45 mph

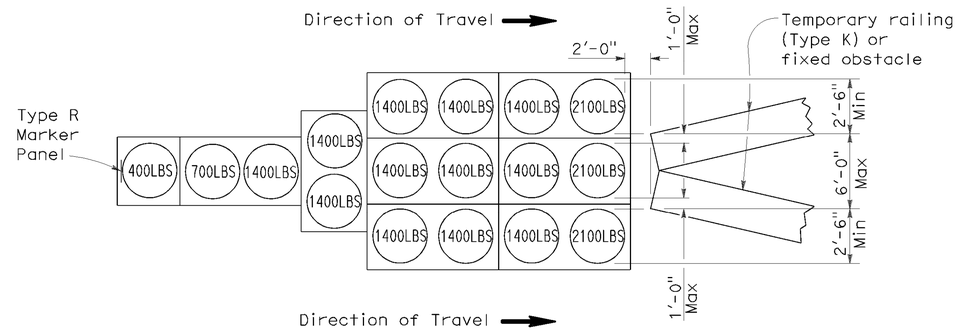

ARRAY 'TU17'

Approach speed less than 45 mph

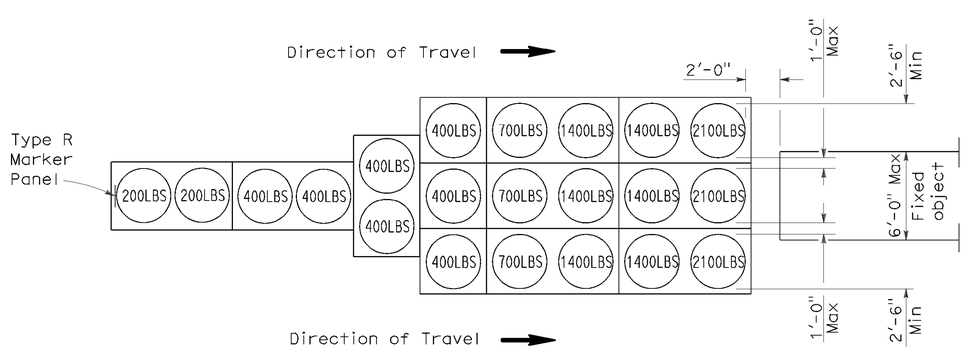

ARRAY 'TU21'

Approach speed 45 mph or more

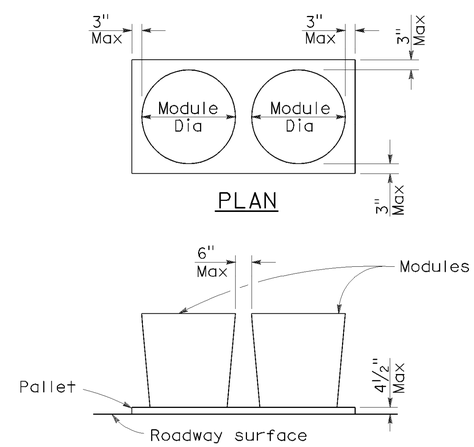

PLAN

ELEVATION

CRASH CUSHION PALLET DETAIL

See Note 7

NOTES:

1. (XXX) Indicates sand filled module location and weight of sand in pounds for each module. Module spacing is based on the greater diameter of the module.
2. All sand weights are nominal.
3. Temporary crash cushion arrays shall not encroach on the traveled way.
4. Place the top of Type R marker panel 1" below the module lid.
5. Refer to Standard Plan A73B for marker details.
6. Approach speeds indicated conform to NCHRP 350 Report criteria.
7. Use of pallets is optional.

STATE OF CALIFORNIA
DEPARTMENT OF TRANSPORTATION

TEMPORARY CRASH CUSHION, SAND FILLED (UNIDIRECTIONAL)

NO SCALE

RSP T1A DATED JUNE 6, 2008 SUPERSEDES STANDARD PLAN T1A
DATED MAY 1, 2006 - PAGE 211 OF THE STANDARD PLANS BOOK DATED MAY 2006.

REVISED STANDARD PLAN RSP T1A

2006 REVISED STANDARD PLAN RSP T1A

P:\proj2\02\2E670_plans\pse\22E670va002.dgn

5-15-08

DIST	COUNTY	ROUTE	POST MILES TOTAL PROJECT	SHEET NO.	TOTAL SHEETS
02	Sis,Tri	97,299	R11.517.0, 61.0/64.1	10	11

Randell D. Hiatt
REGISTERED CIVIL ENGINEER

June 6, 2008
PLANS APPROVAL DATE

REGISTERED PROFESSIONAL ENGINEER
Randell D. Hiatt
No. C50200
Exp. 6-30-09
CIVIL
STATE OF CALIFORNIA

The State of California or its officers or agents shall not be responsible for the accuracy or completeness of electronic copies of this plan sheet.

To accompany plans dated 12-01-10

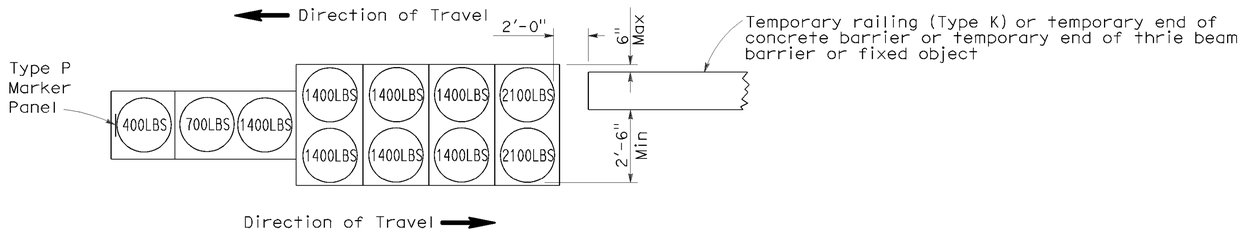

ARRAY 'TB11'

Approach speed less than 45 mph

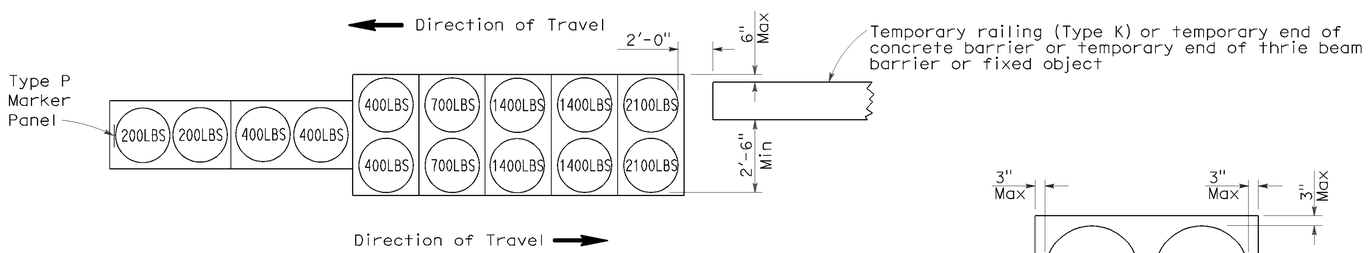

ARRAY 'TB14'

Approach speed 45 mph or more

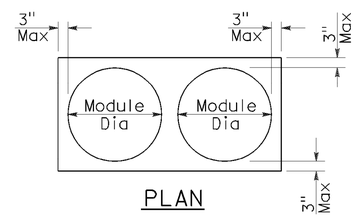

PLAN

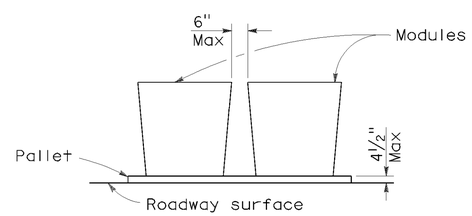

ELEVATION

CRASH CUSHION PALLET DETAIL

See Note 7

NOTES:

1. (XXX) Indicates sand filled module location and weight of sand in pounds for each module. Module spacing is based on the greater diameter of the module.
2. All sand weights are nominal.
3. Temporary crash cushion arrays shall not encroach on the traveled way.
4. Place the Type P marker panel so that the bottom of the panel rests upon the pallet.
5. Refer to Standard Plan A73B for marker details.
6. Approach speeds indicated conform to NCHRP 350 Report criteria.
7. Use of pallets is optional.

STATE OF CALIFORNIA
DEPARTMENT OF TRANSPORTATION

TEMPORARY CRASH CUSHION, SAND FILLED (BIDIRECTIONAL)

NO SCALE

RSP T1B DATED JUNE 6, 2008 SUPERSEDES STANDARD PLAN T1B
DATED MAY 1, 2006 - PAGE 212 OF THE STANDARD PLANS BOOK DATED MAY 2006.

REVISED STANDARD PLAN RSP T1B

2006 REVISED STANDARD PLAN RSP T1B

P:\proj2\02\2E670_plans\pse\22E670va003.dgn

5-15-08

DIST	COUNTY	ROUTE	POST MILES TOTAL PROJECT	SHEET NO.	TOTAL SHEETS
02	Sis,Tri	97,299	R11.517.0, 61.0/64.1	11	11

Randell D. Hiatt
REGISTERED CIVIL ENGINEER

June 6, 2008
PLANS APPROVAL DATE

REGISTERED PROFESSIONAL ENGINEER
Randell D. Hiatt
No. C50200
Exp. 6-30-09
CIVIL
STATE OF CALIFORNIA

The State of California or its officers or agents shall not be responsible for the accuracy or completeness of electronic copies of this plan sheet.

To accompany plans dated 12-01-10

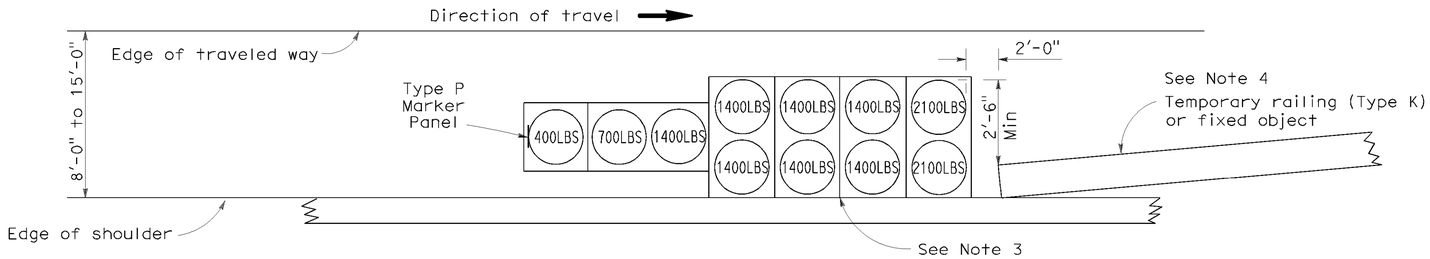

ARRAY 'TS11'

Approach speed less than 45 mph
See Note 9

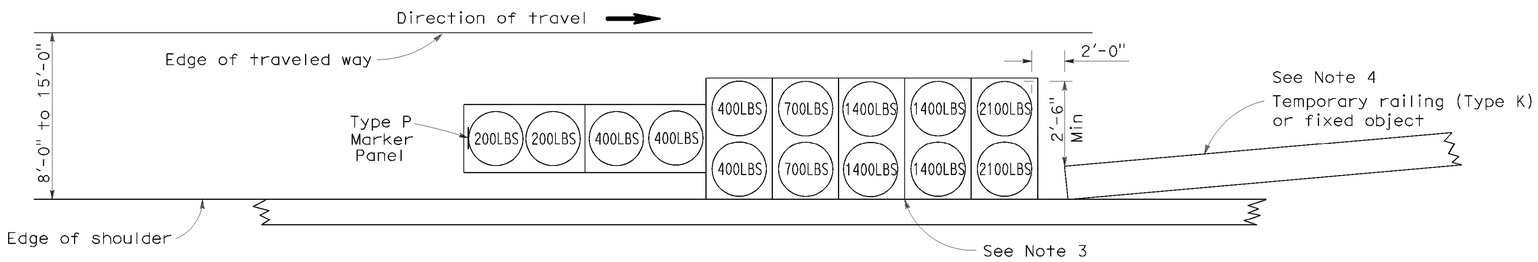

ARRAY 'TS14'

Approach speed 45 mph or more
See Note 9

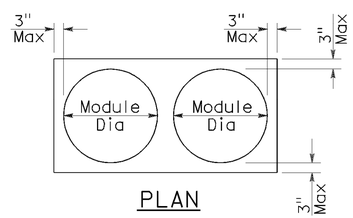

PLAN

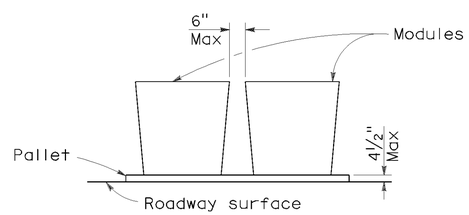

ELEVATION

CRASH CUSHION PALLET DETAIL

See Note 11

NOTES:

1. (XXX) Indicates sand filled module location and weight of sand in pounds for each module. Module spacing is based on the greater diameter of the module.
2. All sand weights are nominal.
3. The temporary crash cushion arrays shown on this plan shall be used only in locations where there will be traffic on one side of the temporary crash cushion array.
4. If the fixed object or approach end of the temporary railing is less than 15'-0" from the edge of traveled way, a temporary crash cushion is required in a construction or work zone.
5. Temporary crash cushion arrays shall not encroach on the traveled way.
6. Arrays for median shoulders shall conform to details shown on this plan for outside shoulders.
7. Place the Type P marker panel so that the bottom of the panel rests upon the pallet and faces traffic.
8. Refer to Standard Plan A73B for marker details.
9. For shoulder widths less than 8'-0", appropriate approved crash cushion protection, other than sand filled modules, shall be provided at fixed objects and at approach ends of temporary railing. The specific type of crash cushion shall be as shown on the project plans or as specified in the Special Provisions, or if not shown on the project plans or specified in the Special Provisions, shall be as approved by the Engineer.
10. Approach speeds indicated conform to NCHRP 350 Report criteria.
11. Use of pallets is optional.

STATE OF CALIFORNIA
DEPARTMENT OF TRANSPORTATION

TEMPORARY CRASH CUSHION, SAND FILLED (SHOULDER INSTALLATIONS)

NO SCALE

RSP T2 DATED JUNE 6, 2008 SUPERSEDES STANDARD PLAN T2
DATED MAY 1, 2006 - PAGE 213 OF THE STANDARD PLANS BOOK DATED MAY 2006.

REVISED STANDARD PLAN RSP T2

2006 REVISED STANDARD PLAN RSP T2

P:\proj2\02\2E670_plans\pse\22E670va004.dgn

5-15-08