Dist	COUNTY	ROUTE	POST MILES TOTAL PROJECT	SHEET No.	TOTAL SHEETS
02	Plu	70	50.6/51.7	1	181

ACST-P070(105)E

STATE OF CALIFORNIA

DEPARTMENT OF TRANSPORTATION

PROJECT PLANS FOR CONSTRUCTION ON

STATE HIGHWAY

IN PLUMAS COUNTY NEAR QUINCY FROM 0.6 MILE WEST TO 0.5 MILE EAST OF SPRING GARDEN BRIDGE OVERHEAD

TO BE SUPPLEMENTED BY STANDARD PLANS DATED MAY 2010

INDEX OF SHEETS

SHEET No.	DESCRIPTION
1	TITLE AND LOCATION MAP
2-3	TYPICAL CROSS SECTIONS
4-5	LAYOUTS
6	PROFILES AND SUPERELEVATION DIAGRAMS
7-13	CONSTRUCTION DETAILS
14-16	DRAINAGE PROFILES, DETAILS AND QUANTITIES
17-18	UTILITY PLANS
19	CONSTRUCTION AREA SIGNS
20-29	STAGE CONSTRUCTION AND TRAFFIC HANDLING PLANS
30-41	TRAFFIC HANDLING DETAILS AND QUANTITIES
42-44	PAVEMENT DELINEATION PLANS AND QUANTITIES
45-46	SIGN DETAILS AND QUANTITIES
47	SUMMARY OF QUANTITIES
48-50	EROSION CONTROL PLANS
51-57	ELECTRICAL PLANS
58-125	REVISED STANDARD PLANS

STRUCTURES

126-181 STRUCTURE PLANS

THE STANDARD PLANS LIST APPLICABLE TO THIS CONTRACT IS INCLUDED IN THE NOTICE TO BIDDERS AND SPECIAL PROVISIONS BOOK.

LOCATION MAP

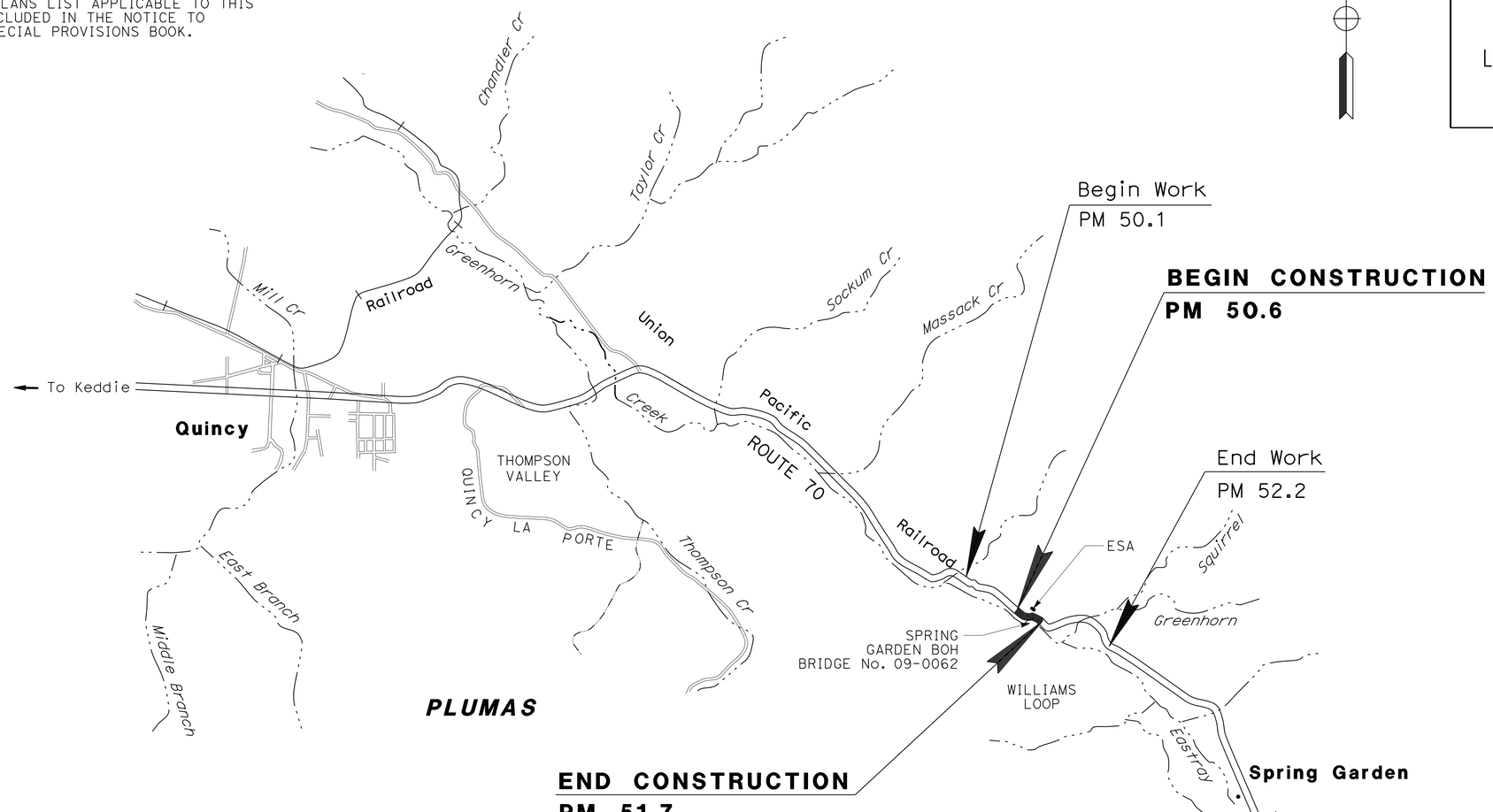

NO SCALE

THE CONTRACTOR SHALL POSSESS THE CLASS (OR CLASSES) OF LICENSE AS SPECIFIED IN THE "NOTICE TO BIDDERS."

Thomas Penick 06-12-16
PROJECT ENGINEER DATE
REGISTERED CIVIL ENGINEER

June 15, 2016
PLANS APPROVAL DATE

REGISTERED PROFESSIONAL ENGINEER TOM PENICK No. C61068 Exp. 12-31-16 CIVIL STATE OF CALIFORNIA

THE STATE OF CALIFORNIA OR ITS OFFICERS OR AGENTS SHALL NOT BE RESPONSIBLE FOR THE ACCURACY OR COMPLETENESS OF SCANNED COPIES OF THIS PLAN SHEET.

CONTRACT No.	02-2C0904
PROJECT ID	0200000161

PROJECT MANAGER: DEENA MATAGULAY
DESIGN ENGINEER: AL TRUJILLO

P:\proj1\02\2c090_plans\pse\22c090ab001.dgn

LAST REVISION 06-12-16 | DATE PLOTTED => 04-AUG-2016 | TIME PLOTTED => 11:56

Dist	COUNTY	ROUTE	POST MILES TOTAL PROJECT	SHEET No.	TOTAL SHEETS
02	Plu	70	50.6/51.7	2	181

Thomas Penick 06-12-16
REGISTERED CIVIL ENGINEER DATE

06-15-16
PLANS APPROVAL DATE

REGISTERED PROFESSIONAL ENGINEER TOM PENICK No. C61068 Exp. 12-31-16 CIVIL STATE OF CALIFORNIA

THE STATE OF CALIFORNIA OR ITS OFFICERS OR AGENTS SHALL NOT BE RESPONSIBLE FOR THE ACCURACY OR COMPLETENESS OF SCANNED COPIES OF THIS PLAN SHEET.

NOTES:

1. DIMENSIONS OF THE PAVEMENT STRUCTURES (STRUCTURAL SECTIONS) ARE SUBJECT TO TOLERANCES SPECIFIED IN THE STANDARD SPECIFICATIONS.
2. SUPERELEVATIONS ARE SHOWN ON THE SUPERELEVATION DIAGRAM.

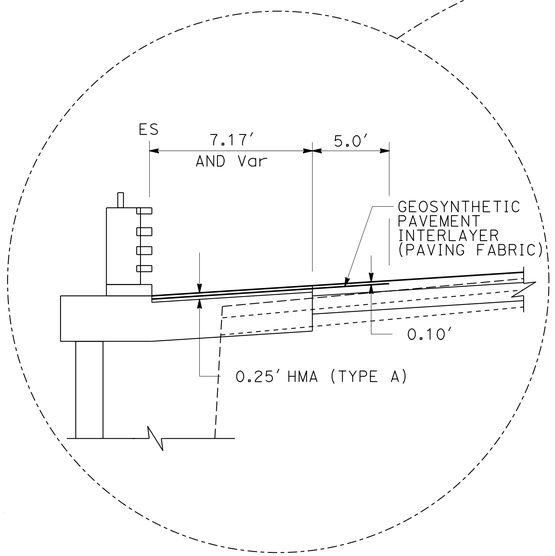

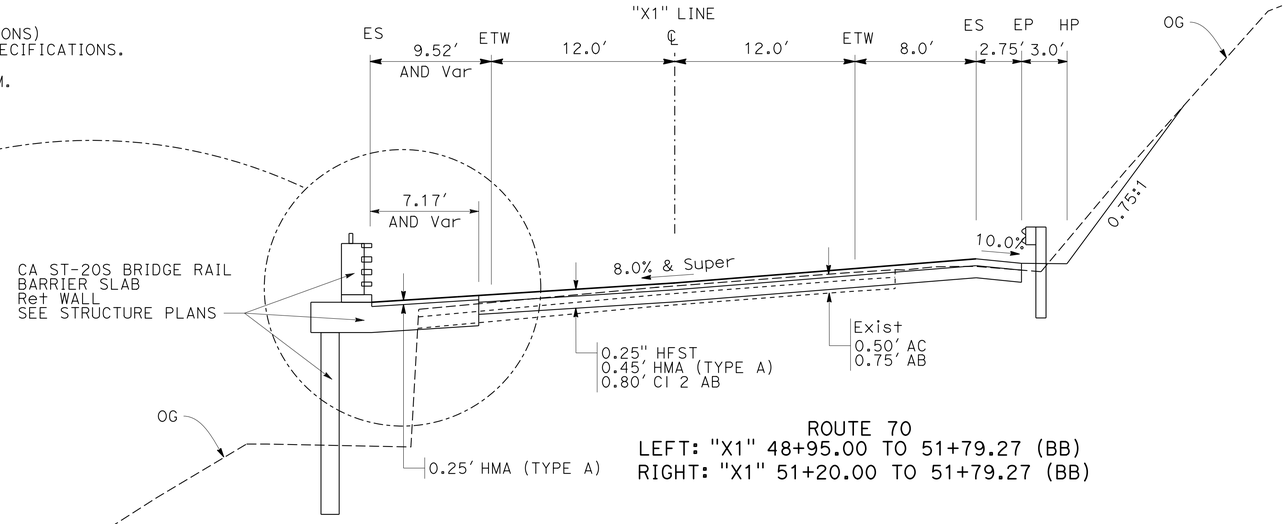

ROUTE 70
LEFT: "X1" 48+95.00 TO 51+79.27 (BB)
RIGHT: "X1" 51+20.00 TO 51+79.27 (BB)

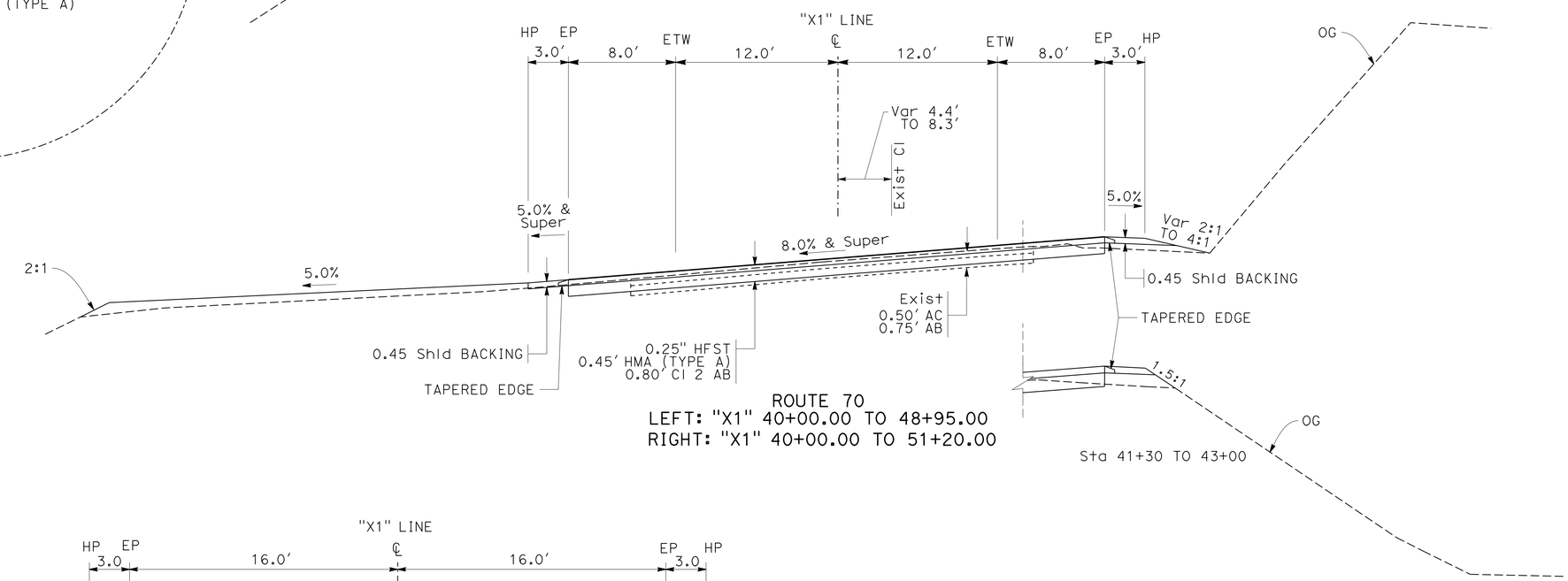

ROUTE 70
LEFT: "X1" 40+00.00 TO 48+95.00
RIGHT: "X1" 40+00.00 TO 51+20.00

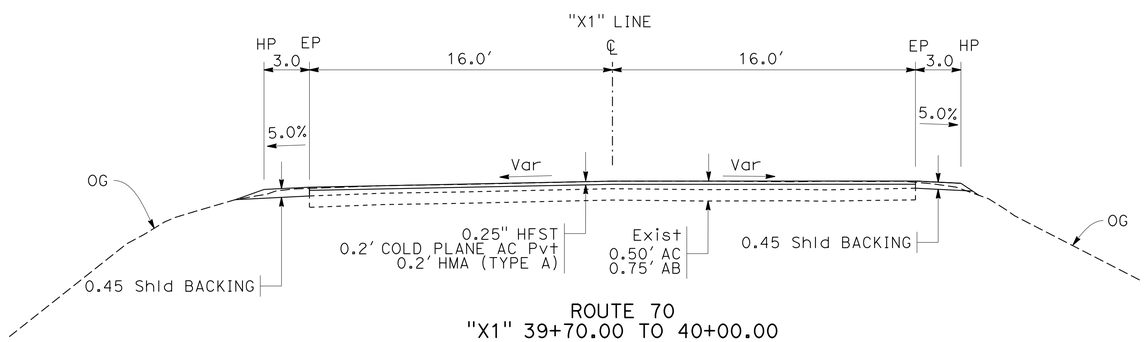

ROUTE 70
"X1" 39+70.00 TO 40+00.00

DESIGN DESIGNATION

ADT (2017)	2,754	D (2013)	59%
ADT (2037)	2,774	T (2013)	6%
DHV (2037)	313	V	55 mph
EAL (2037)	937,500	TI_{20}	9

PAVEMENT CLIMATE REGION: HIGH MOUNTAIN

ABBREVIATIONS:

HFST HIGH FRICTION SURFACE TREATMENT

TYPICAL CROSS SECTIONS

NO SCALE

X-1

REVISED BY | DATE REVISED
TOM PENICK | DAN BROWN
CALCULATED-DESIGNED BY | CHECKED BY
FUNCTIONAL SUPERVISOR: AL TRUJILLO

STATE OF CALIFORNIA - DEPARTMENT OF TRANSPORTATION
Caltrans® DESIGN

P:\proj1\02\2c090_plans\pse\22c090ca001.dgn

LAST REVISION 06-12-16 | DATE PLOTTED => 04-AUG-2016 TIME PLOTTED => 11:56

Dist	COUNTY	ROUTE	POST MILES TOTAL PROJECT	SHEET No.	TOTAL SHEETS
02	Plu	70	50.6/51.7	3	181

Thomas Penick 06-12-16
REGISTERED CIVIL ENGINEER DATE

06-15-16
PLANS APPROVAL DATE

REGISTERED PROFESSIONAL ENGINEER TOM PENICK No. C61068 Exp. 12-31-16 CIVIL STATE OF CALIFORNIA

THE STATE OF CALIFORNIA OR ITS OFFICERS OR AGENTS SHALL NOT BE RESPONSIBLE FOR THE ACCURACY OR COMPLETENESS OF SCANNED COPIES OF THIS PLAN SHEET.

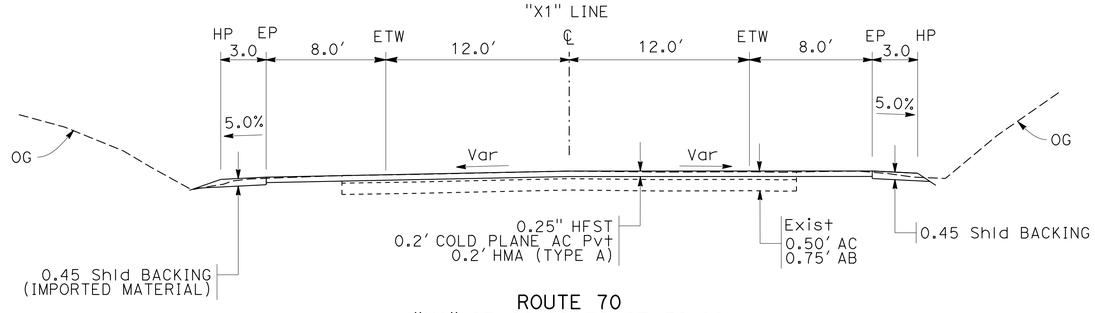

ROUTE 70
"X1" 63+20.00 TO 63+50.00

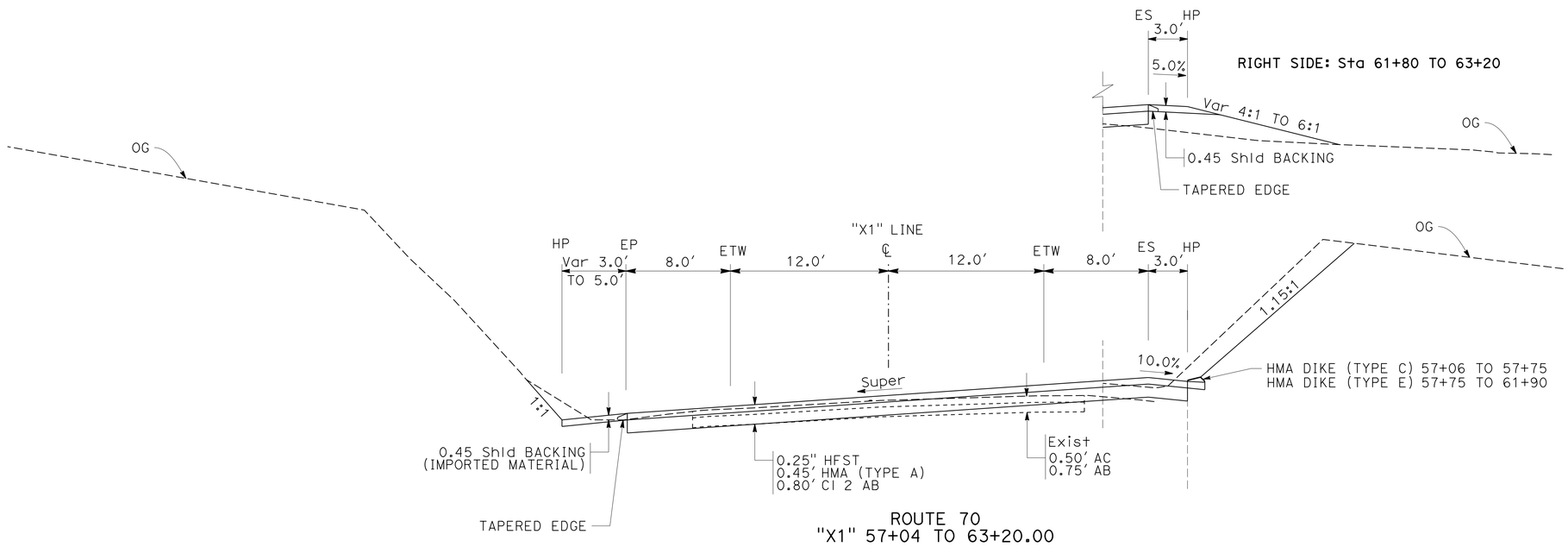

ROUTE 70
"X1" 57+04 TO 63+20.00

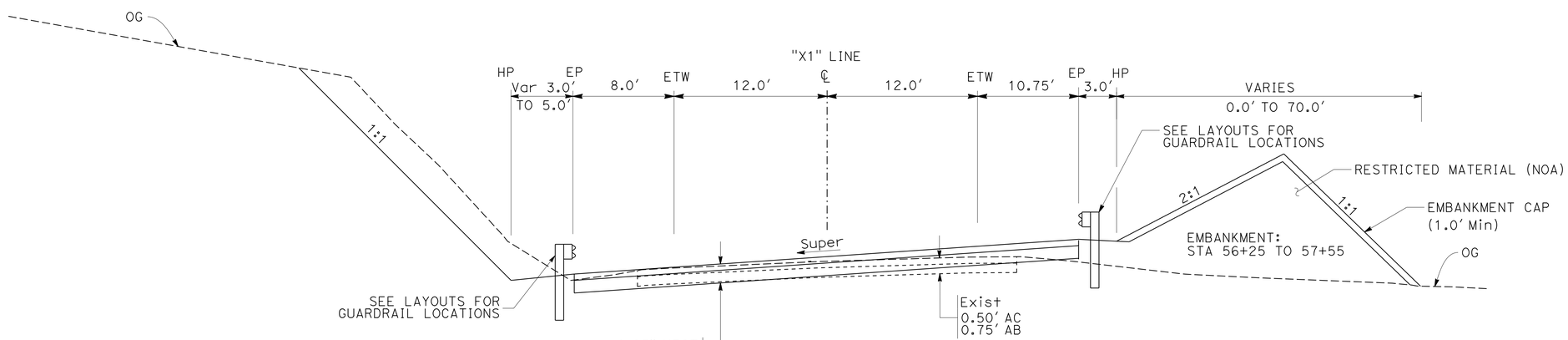

ROUTE 70
"X1" 56+04.93 (EB) TO 57+04

ABBREVIATIONS;

NOA NATURALLY OCCURING ASBESTOS

TYPICAL CROSS SECTIONS

NO SCALE

X-2

REVISED BY	DATE REVISED

CALCULATED-DESIGNED BY	CHECKED BY
TOM PENICK	DAN BROWN

FUNCTIONAL SUPERVISOR: AL TRUJILLO

STATE OF CALIFORNIA - DEPARTMENT OF TRANSPORTATION

Caltrans® DESIGN

P:\proj1\02\2c090_plans\pse\22c090ca002.dgn

LAST REVISION 06-12-16 | DATE PLOTTED => 04-AUG-2016 | TIME PLOTTED => 11:56

Dist	COUNTY	ROUTE	POST MILES TOTAL PROJECT	SHEET No.	TOTAL SHEETS
02	Plu	70	50.6/51.7	4	181

Thomas Penick 06-12-16
REGISTERED CIVIL ENGINEER DATE

06-15-16
PLANS APPROVAL DATE

REGISTERED PROFESSIONAL ENGINEER TOM PENICK No. C61068 Exp. 12-31-16 CIVIL STATE OF CALIFORNIA

THE STATE OF CALIFORNIA OR ITS OFFICERS OR AGENTS SHALL NOT BE RESPONSIBLE FOR THE ACCURACY OR COMPLETENESS OF SCANNED COPIES OF THIS PLAN SHEET.

NOTE:

1. FOR ACCURATE RIGHT OF WAY DATA, CONTACT RIGHT OF WAY ENGINEERING AT THE DISTRICT OFFICE.

LEGEND:

CPACP

BARRIER SLAB

ABBREVIATIONS;

CPACP COLD PLANE ASPHALT CONCRETE PAVEMENT
ROE RIGHT OF ENTRY (TEMPORARY)

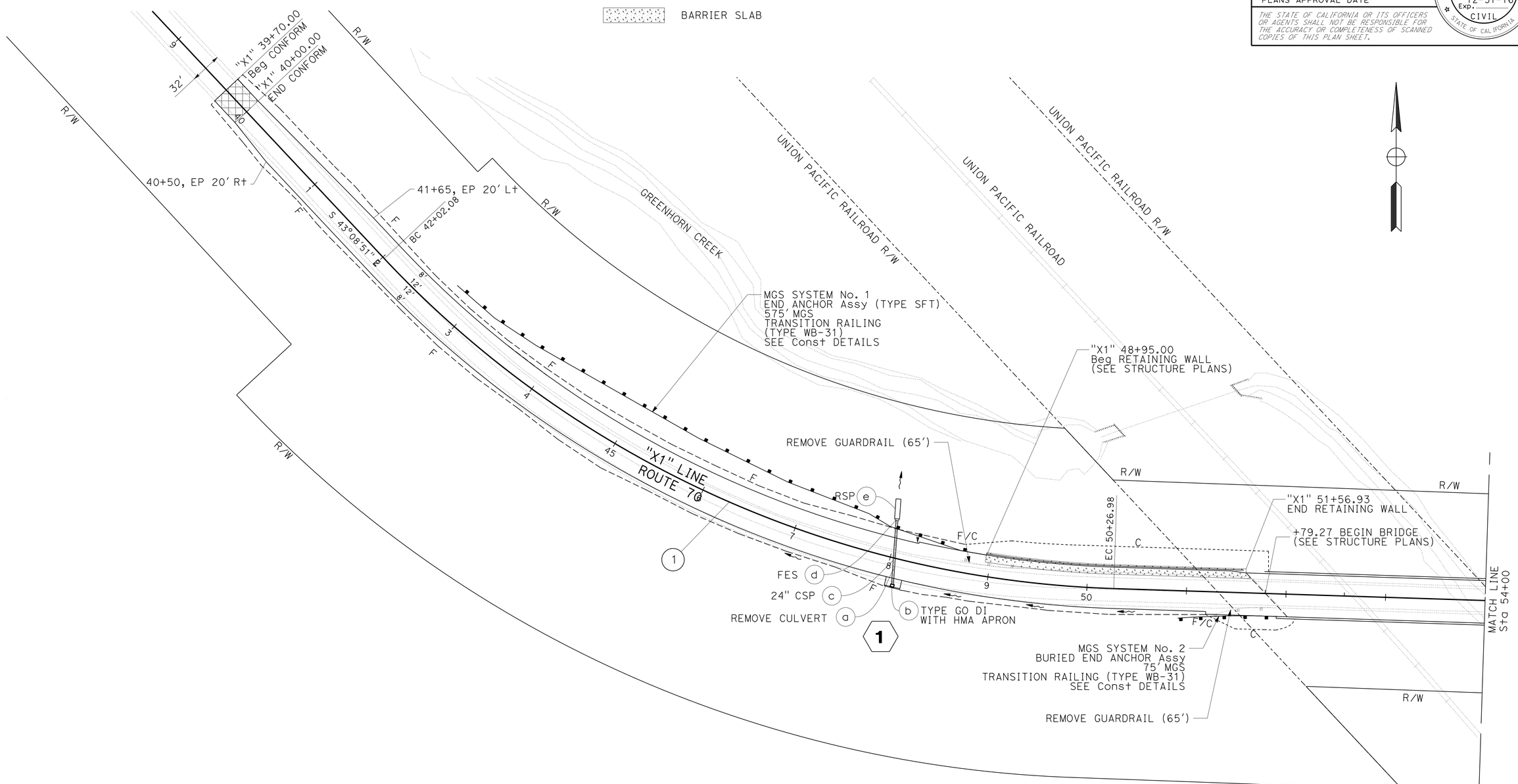

CURVE DATA

No. ⊕	R	Δ	T	L
1	1050.0'	45°00'47"	435.06'	824.91'

LAYOUT

SCALE: 1" = 50'

L-1

REVISED BY	DATE REVISED	TOM PENICK	DAN BROWN	AL TRUJILLO
		CALCULATED-DESIGNED BY	CHECKED BY	FUNCTIONAL SUPERVISOR

STATE OF CALIFORNIA - DEPARTMENT OF TRANSPORTATION
Caltrans
DESIGN

P:\proj1\02\2c090_plans\pse\22c090ea001.dgn

LAST REVISION 06-12-16 | DATE PLOTTED => 04-AUG-2016 | TIME PLOTTED => 11:56

Dist	COUNTY	ROUTE	POST MILES TOTAL PROJECT	SHEET No.	TOTAL SHEETS
02	Plu	70	50.6/51.7	5	181

Thomas Penick 06-12-16
REGISTERED CIVIL ENGINEER DATE

06-15-16
PLANS APPROVAL DATE

REGISTERED PROFESSIONAL ENGINEER TOM PENICK No. C61068 Exp. 12-31-16 CIVIL STATE OF CALIFORNIA

THE STATE OF CALIFORNIA OR ITS OFFICERS OR AGENTS SHALL NOT BE RESPONSIBLE FOR THE ACCURACY OR COMPLETENESS OF SCANNED COPIES OF THIS PLAN SHEET.

NOTE:

1. FOR ACCURATE RIGHT OF WAY DATA, CONTACT RIGHT OF WAY ENGINEERING AT THE DISTRICT OFFICE.

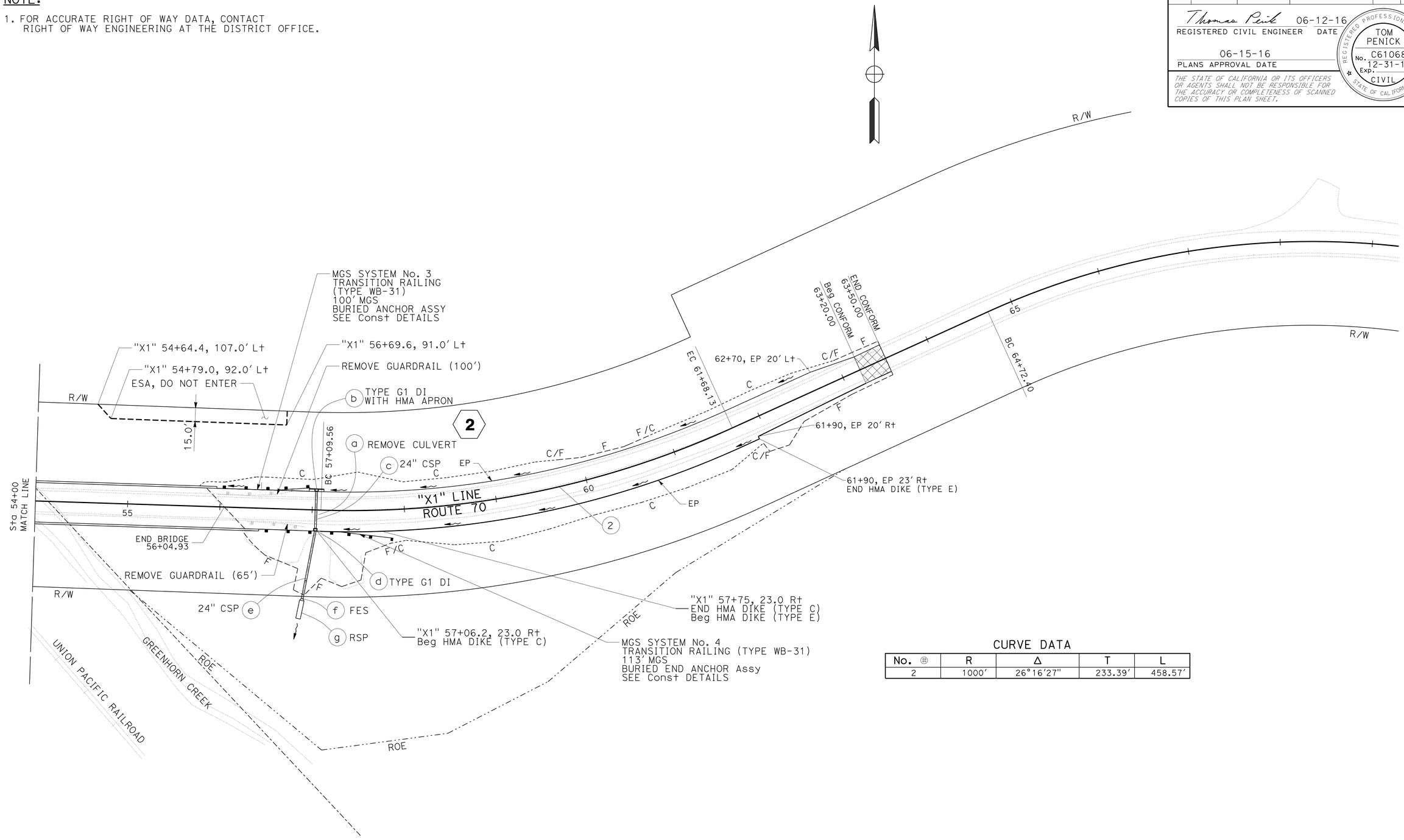

CURVE DATA

No. ⊕	R	Δ	T	L
2	1000′	26°16′27"	233.39′	458.57′

LAYOUT
SCALE: 1" = 50′

L-2

STATE OF CALIFORNIA - DEPARTMENT OF TRANSPORTATION
Caltrans® **DESIGN**

FUNCTIONAL SUPERVISOR: AL TRUJILLO
CALCULATED-DESIGNED BY: TOM PENICK
CHECKED BY: DAN BROWN
REVISED BY
DATE REVISED

P:\proj\02\2c090_plans\pse\22c090ea002.dgn

LAST REVISION 06-12-16
DATE PLOTTED => 04-AUG-2016
TIME PLOTTED => 11:56

Dist	COUNTY	ROUTE	POST MILES TOTAL PROJECT	SHEET No.	TOTAL SHEETS
02	Plu	70	50.6/51.7	6	181

Thomas Penick 06-12-16
REGISTERED CIVIL ENGINEER DATE

06-15-16
PLANS APPROVAL DATE

REGISTERED PROFESSIONAL ENGINEER TOM PENICK No. C61068 Exp. 12-31-16 CIVIL STATE OF CALIFORNIA

THE STATE OF CALIFORNIA OR ITS OFFICERS OR AGENTS SHALL NOT BE RESPONSIBLE FOR THE ACCURACY OR COMPLETENESS OF SCANNED COPIES OF THIS PLAN SHEET.

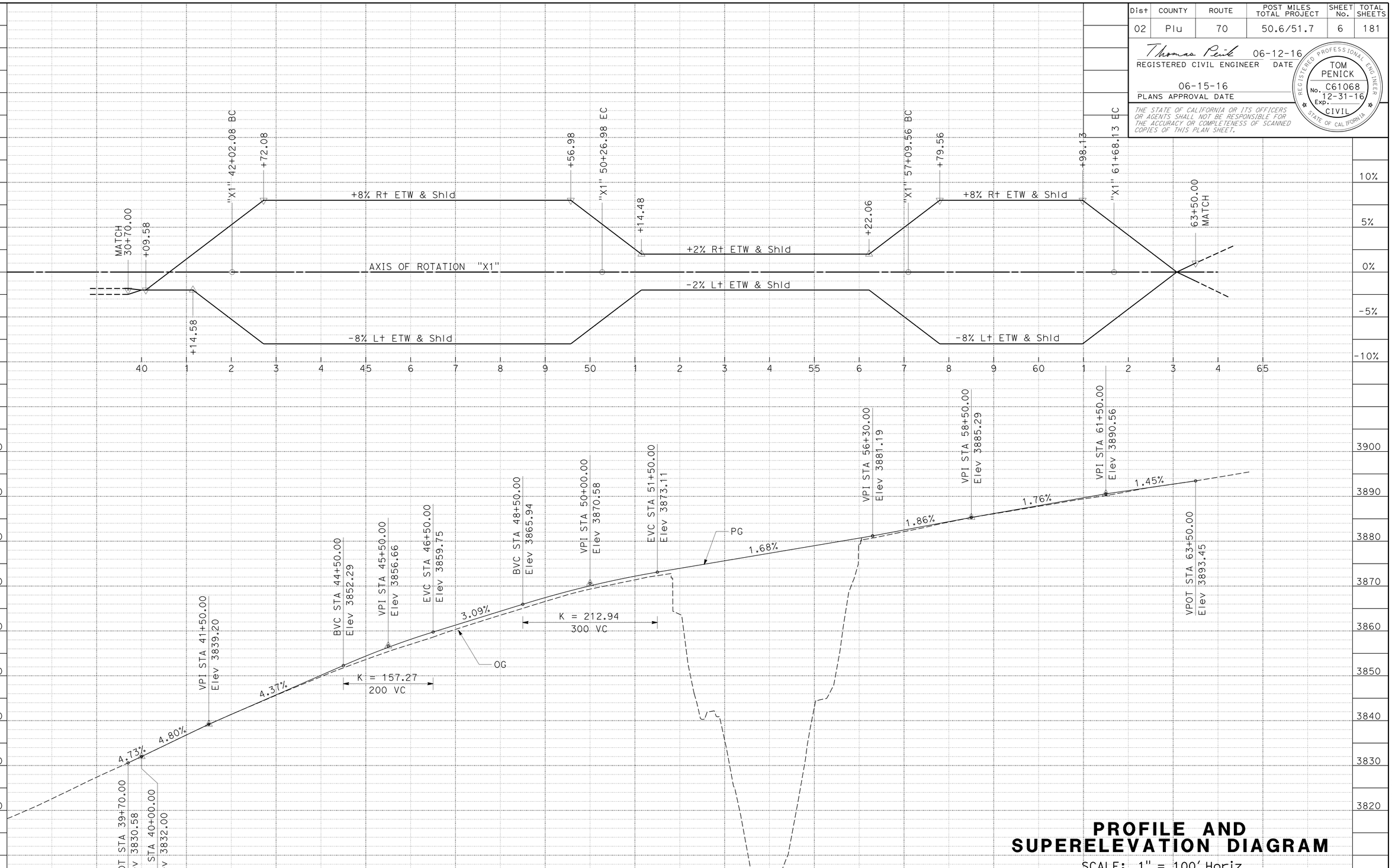

PROFILE AND SUPERELEVATION DIAGRAM

SCALE: 1" = 100' Horiz
1" = 10' Vert

PS-1

REVISED BY | DATE REVISED
TOM PENICK | DAN BROWN
CALCULATED-DESIGNED BY | CHECKED BY
FUNCTIONAL SUPERVISOR: AL TRUJILLO

STATE OF CALIFORNIA - DEPARTMENT OF TRANSPORTATION
Caltrans® DESIGN

P:\proj1\02\2c090_plans\pse\22c090fb001.dgn

LAST REVISION 06-12-16 | DATE PLOTTED => 04-AUG-2016 | TIME PLOTTED => 11:56

Dist	COUNTY	ROUTE	POST MILES TOTAL PROJECT	SHEET No.	TOTAL SHEETS
02	Plu	70	50.6/51.7	7	181

Thomas Penick 06-12-16
REGISTERED CIVIL ENGINEER DATE

06-15-16
PLANS APPROVAL DATE

REGISTERED PROFESSIONAL ENGINEER TOM PENICK No. C61068 Exp. 12-31-16 CIVIL STATE OF CALIFORNIA

THE STATE OF CALIFORNIA OR ITS OFFICERS OR AGENTS SHALL NOT BE RESPONSIBLE FOR THE ACCURACY OR COMPLETENESS OF SCANNED COPIES OF THIS PLAN SHEET.

NOTES:

1. ROLLED EROSION CONTROL PRODUCT (NETTING) WILL COVER ENTIRE EMBANKMENT SLOPE AREA.
2. FASTNER PATTERN PER MANUFACTURERS INSTRUCTIONS, FASTERS INSTALLED AT 3' MAXIMUM SPACING, WITH 12" STAPLES.
3. ROLLED EROSION CONTROL PRODUCT (NETTING) WILL BE CLASS C.

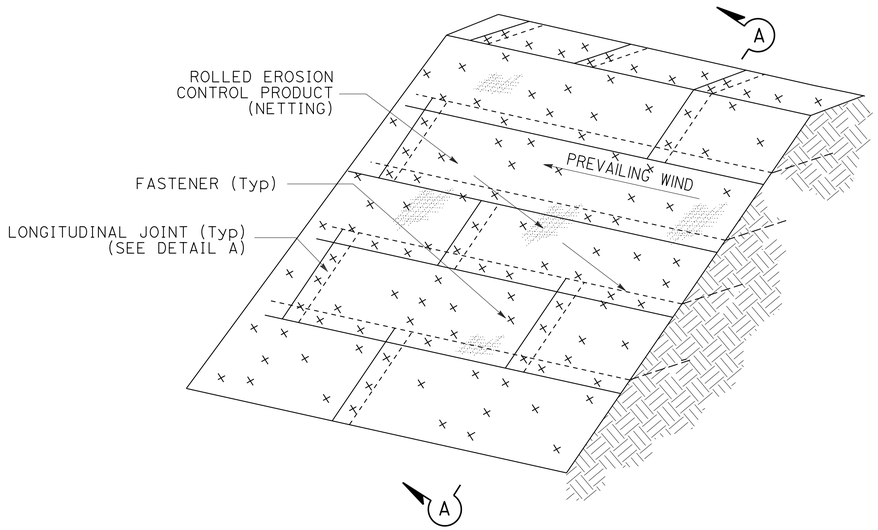

ISOMETRIC

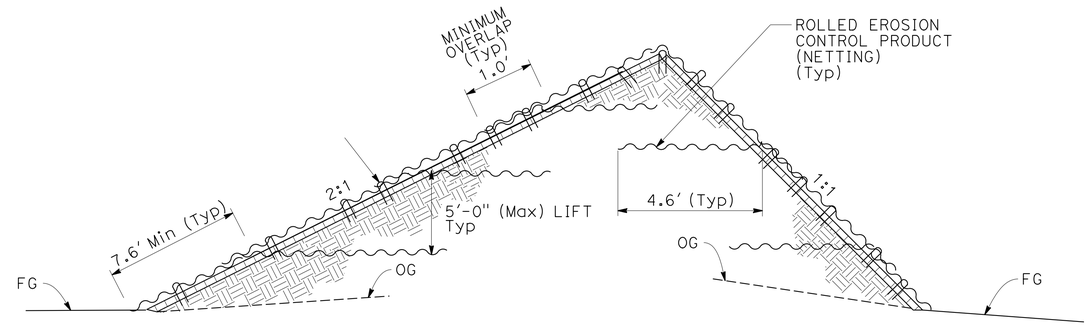

SECTION A-A

ROLLED EROSION CONTROL PRODUCT (NETTING)

"X1"56+38.80 TO 57.+55.00 Rt

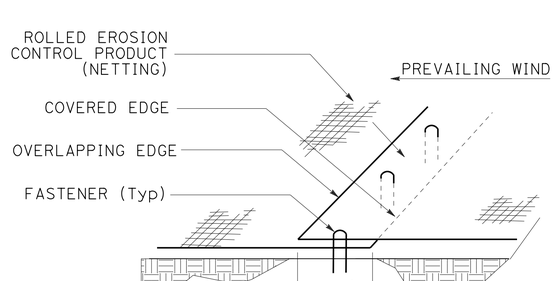

PERSPECTIVE

DETAIL A
LONGITUDINAL JOINT

CONSTRUCTION DETAILS

NO SCALE

C-1

REVISED BY | DATE REVISED
TOM PENICK | DAN BROWN
CALCULATED-DESIGNED BY | CHECKED BY
FUNCTIONAL SUPERVISOR: AL TRUJILLO

STATE OF CALIFORNIA - DEPARTMENT OF TRANSPORTATION
Caltrans
DESIGN

P:\proj1\02\2c090_plans\pse\22c090ga001.dgn

LAST REVISION 06-12-16 | DATE PLOTTED => 04-AUG-2016 | TIME PLOTTED => 11:56

BORDER LAST REVISED 7/2/2010 | USERNAME => s115152 | DGN FILE => 22c090ga001.dgn | RELATIVE BORDER SCALE IS IN INCHES 0 1 2 3 | UNIT 0318 | PROJECT NUMBER & PHASE 02 0000 0161 1

Dist	COUNTY	ROUTE	POST MILES TOTAL PROJECT	SHEET No.	TOTAL SHEETS
02	Plu	70	50.6/51.7	8	181

Thomas Penick 06-12-16
REGISTERED CIVIL ENGINEER DATE

06-15-16
PLANS APPROVAL DATE

REGISTERED PROFESSIONAL ENGINEER TOM PENICK No. C61068 Exp. 12-31-16 CIVIL STATE OF CALIFORNIA

THE STATE OF CALIFORNIA OR ITS OFFICERS OR AGENTS SHALL NOT BE RESPONSIBLE FOR THE ACCURACY OR COMPLETENESS OF SCANNED COPIES OF THIS PLAN SHEET.

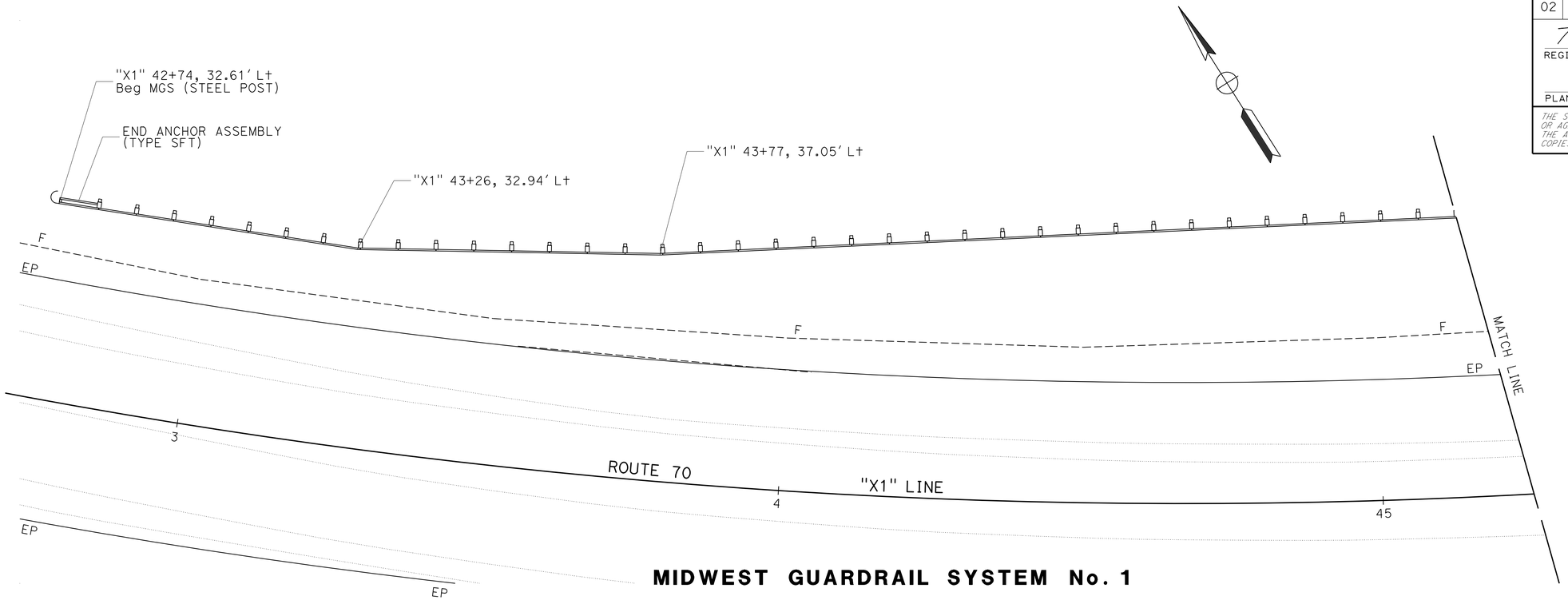

MIDWEST GUARDRAIL SYSTEM No. 1

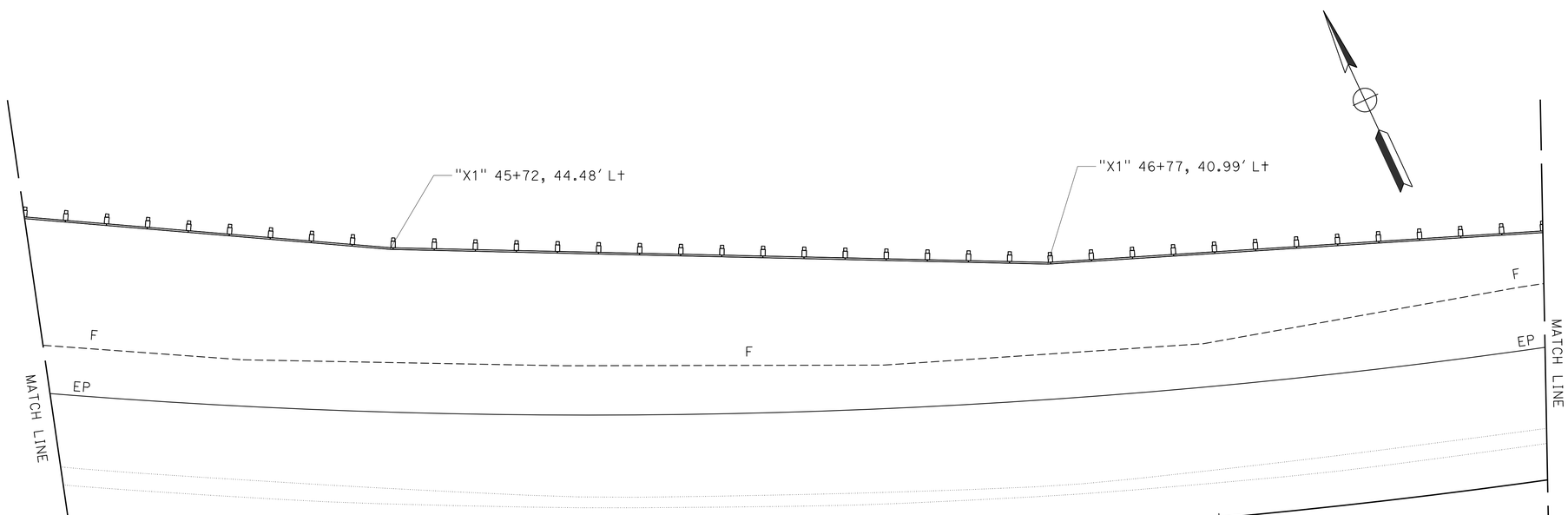

MIDWEST GUARDRAIL SYSTEM No. 1

CONSTRUCTION DETAILS
MIDWEST GUARDRAIL SYSTEM

SCALE: 1" = 10'

C-2

REVISED BY | DATE REVISED
TOM PENICK | DAN BROWN
CALCULATED-DESIGNED BY | CHECKED BY
FUNCTIONAL SUPERVISOR
AL TRUJILLO

STATE OF CALIFORNIA - DEPARTMENT OF TRANSPORTATION
Caltrans
DESIGN

P:\proj1\02\2c090_plans\pse\22c090ga002.dgn

LAST REVISION 06-12-16 | DATE PLOTTED => 04-AUG-2016 | TIME PLOTTED => 11:56

Dist	COUNTY	ROUTE	POST MILES TOTAL PROJECT	SHEET No.	TOTAL SHEETS
02	Plu	70	50.6/51.7	9	181

Thomas Penick 06-12-16
REGISTERED CIVIL ENGINEER DATE

06-15-16
PLANS APPROVAL DATE

REGISTERED PROFESSIONAL ENGINEER TOM PENICK No. C61068 Exp. 12-31-16 CIVIL STATE OF CALIFORNIA

THE STATE OF CALIFORNIA OR ITS OFFICERS OR AGENTS SHALL NOT BE RESPONSIBLE FOR THE ACCURACY OR COMPLETENESS OF SCANNED COPIES OF THIS PLAN SHEET.

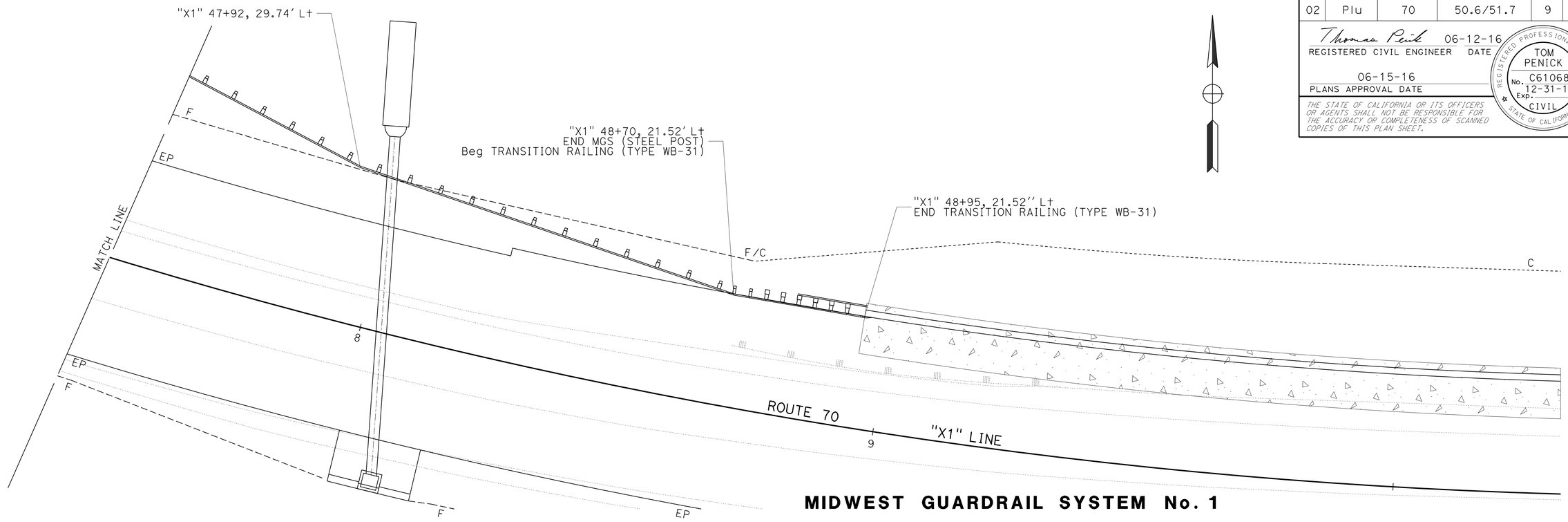

MIDWEST GUARDRAIL SYSTEM No. 1

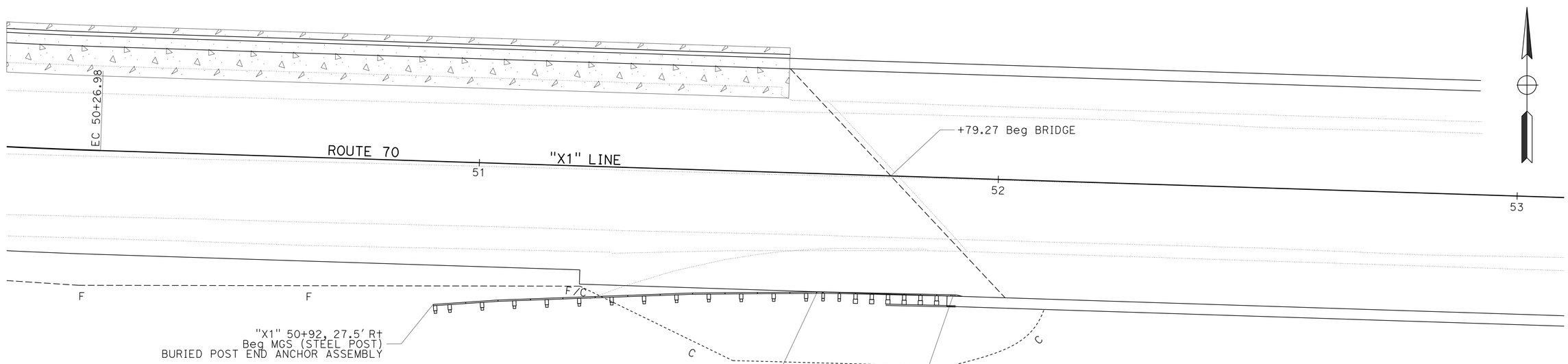

MIDWEST GUARDRAIL SYSTEM No. 2

CONSTRUCTION DETAILS
MIDWEST GUARDRAIL SYSTEM

SCALE: 1" = 10'

C-3

REVISED BY | DATE REVISED
TOM PENICK | DAN BROWN
CALCULATED-DESIGNED BY | CHECKED BY
FUNCTIONAL SUPERVISOR: AL TRUJILLO

STATE OF CALIFORNIA - DEPARTMENT OF TRANSPORTATION
Caltrans® DESIGN

P:\proj1\02\2c090_plans\pse\22c090ga003.dgn

LAST REVISION 06-12-16 | DATE PLOTTED => 04-AUG-2016 | TIME PLOTTED => 11:56

Dist	COUNTY	ROUTE	POST MILES TOTAL PROJECT	SHEET No.	TOTAL SHEETS
02	Plu	70	50.6/51.7	10	181

Thomas Penick 06-12-16
REGISTERED CIVIL ENGINEER DATE

06-15-16
PLANS APPROVAL DATE

REGISTERED PROFESSIONAL ENGINEER TOM PENICK No. C61068 Exp. 12-31-16 CIVIL STATE OF CALIFORNIA

THE STATE OF CALIFORNIA OR ITS OFFICERS OR AGENTS SHALL NOT BE RESPONSIBLE FOR THE ACCURACY OR COMPLETENESS OF SCANNED COPIES OF THIS PLAN SHEET.

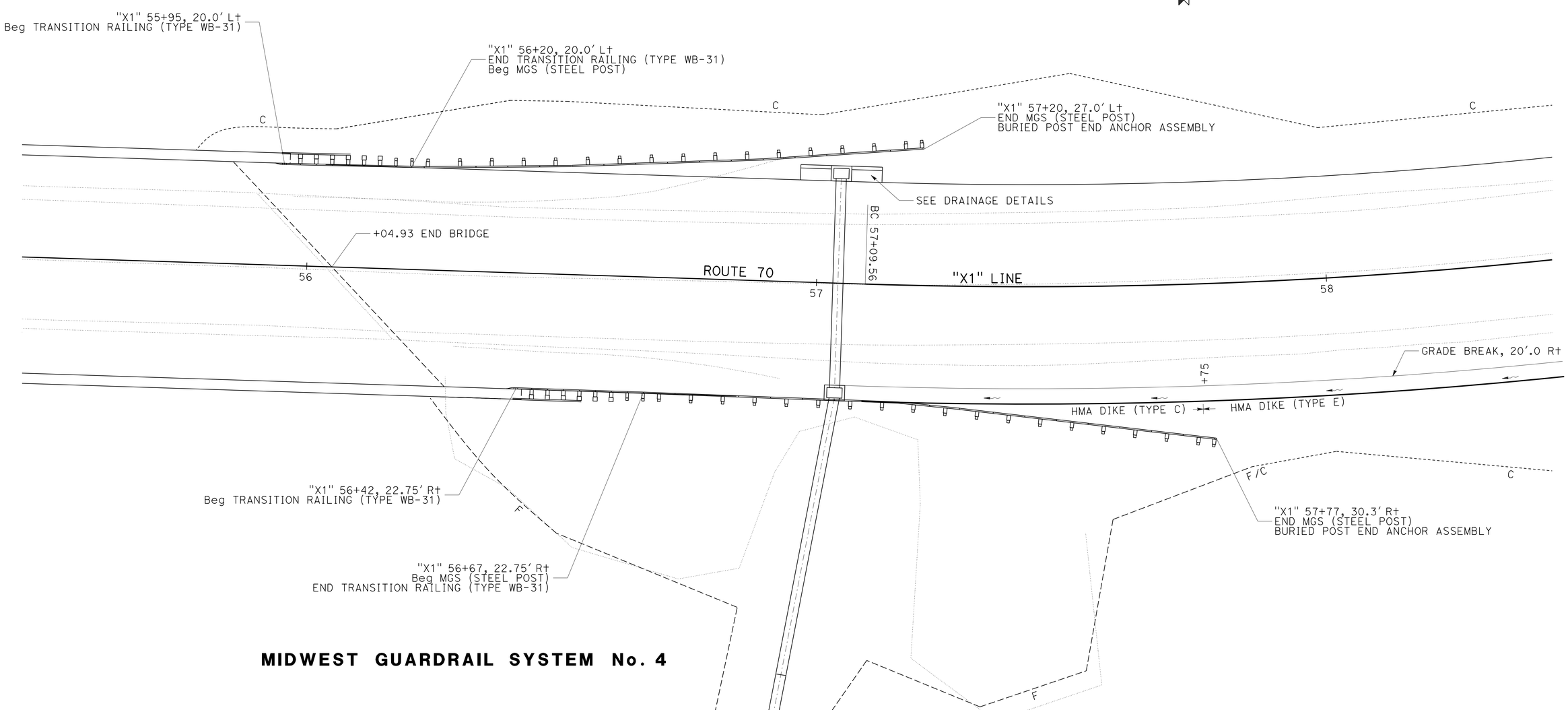

MIDWEST GUARDRAIL SYSTEM No. 4

MIDWEST GUARDRAIL SYSTEM No. 3

CONSTRUCTION DETAILS
MIDWEST GUARDRAIL SYSTEM

SCALE: 1" = 10'

C-4

REVISED BY	DATE REVISED
TOM PENICK	DAN BROWN

CALCULATED-DESIGNED BY
CHECKED BY

FUNCTIONAL SUPERVISOR
AL TRUJILLO

STATE OF CALIFORNIA - DEPARTMENT OF TRANSPORTATION
Caltrans
DESIGN

P:\proj1\02\2c090_plans\pse\22c090ga004.dgn

LAST REVISION 06-12-16 | DATE PLOTTED => 04-AUG-2016 | TIME PLOTTED => 11:56

BORDER LAST REVISED 7/2/2010 | USERNAME => s115152 | DGN FILE => 22c090ga004.dgn | RELATIVE BORDER SCALE IS IN INCHES 0 1 2 3 | UNIT 0318 | PROJECT NUMBER & PHASE 02 0000 0161 1

Dist	COUNTY	ROUTE	POST MILES TOTAL PROJECT	SHEET No.	TOTAL SHEETS
02	Plu	70	50.6/51.7	11	181

REGISTERED CIVIL ENGINEER 06-12-16 DATE

PLANS APPROVAL DATE 06-15-16

REGISTERED PROFESSIONAL ENGINEER JOHN HART No. C69586 Exp. 6-30-18 CIVIL STATE OF CALIFORNIA

THE STATE OF CALIFORNIA OR ITS OFFICERS OR AGENTS SHALL NOT BE RESPONSIBLE FOR THE ACCURACY OR COMPLETENESS OF SCANNED COPIES OF THIS PLAN SHEET.

NOTES:

1. A SINGLE LINE POST MAY BE OFFSET UP TO 12" ALONG THE GUARDRAIL. DO NOT CUT OR DRILL HOLE IN ELEMENT TO ATTACH ELEMENT TO POST AND BLOCK. IF THERE IS NO HOLE IN ELEMENT, ONLY BOLT BLOCK TO POST.
2. POSTS ARE TO BE W6X8.5 OR W6X9 UNLESS OTHERWISE SHOWN. FOR POST AND BLOCK DETAILS SEE STANDARD PLAN A77N2. FOR RAIL ELEMENT AND HARDWARE DETAILS, USE DETAILS SHOWN FOR MGS ON A77L2 AND A77M1.
3. GUARDRAIL POSTS MUST BE A MINIMUM OF 1′ FROM BACK OF RETAINING WALL.
4. WHEN THERE IS A BREAK POINT IN FRONT OF GUARDRAIL BETWEEN 4′-8′ THE HEIGHT WILL BE DETERMINED BY THE ENGINEER.
5. PLACE RUB RAIL (GUARDRAIL ELEMENT) AND ATTACH TO POST WITH NO BLOCK WHEN HEIGHT OF GUARDRAIL IS MORE THAN 2" ABOVE STANDARD PLACEMENT HEIGHT (H).
6. FOR PARABOLIC FLARE OFFSETS, SEE A77P1. DO NOT FLARE GUARDRAIL AT MORE THAN 15:1 AWAY FROM THE ETW UNLESS SHOWN.
7. FOR CURB AND DIKE DETAILS, SEE STANDARD PLAN A87A AND RSP A87B.
8. ONLY TYPE C DIKE MAY BE USED UNDER, OR IN FRONT OF, OR WITHIN 25′ OF APPROACH TO TERMINAL SYSTEMS. SEE GUARDRAIL LAYOUTS IN STANDARD PLANS. ONLY TYPE C DIKE MAY BE PLACED MORE THAN 2" IN FRONT OF FACE OF MBGR AND MORE THAN 7" IN FRONT OF MGS.
9. DIKE OR CURB MUST BE PLACED IN THE STANDARD POSITION OR AS AUTHORIZED. FOR MGS WITH 12" BLOCKS ONLY, THE TOE OF THE DIKE OR CURB MAY BE UP TO 7" IN FRONT OF THE FACE OF RAIL IF AUTHORIZED.
10. THE MAXIMUM HEIGHT OF THE DIKE OR CURB SHALL BE 6" FOR MGS WITH 12" BLOCKS. 6" MOUNTABLE DIKE SHOULD NOT BE USED UNDER GUARDRAIL.
11. IF THE WIDTH OF THE PAVED SHOULDER IS REDUCED APPROACHING A FIXED OBJECT, PLACE A "P" MARKER INSTEAD OF THE L-1 MARKER.
12. EXISTING UTILITY FACILITIES HAVE NOT BEEN INCLUDED ON THESE PLANS

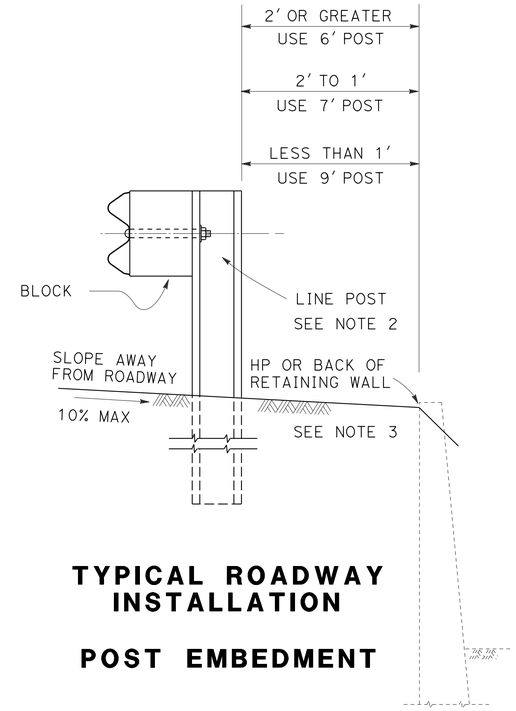

TYPICAL ROADWAY INSTALLATION

POST EMBEDMENT

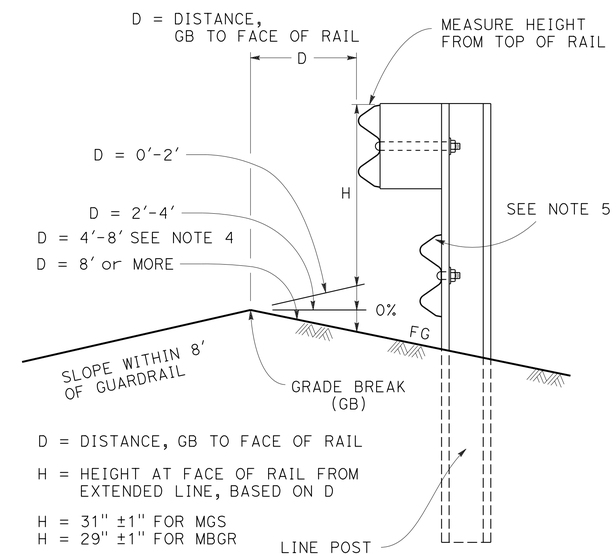

MEASURE HEIGHT DETAIL AT GRADE BREAK (GB)

WHEN THERE IS A GRADE BREAK IN FRONT OF GUARDRAIL MEASURE HEIGHT OF GUARDRAIL BASED ON DISTANCE FROM GRADE BREAK TO ADJUST FOR TRAJECTORY.

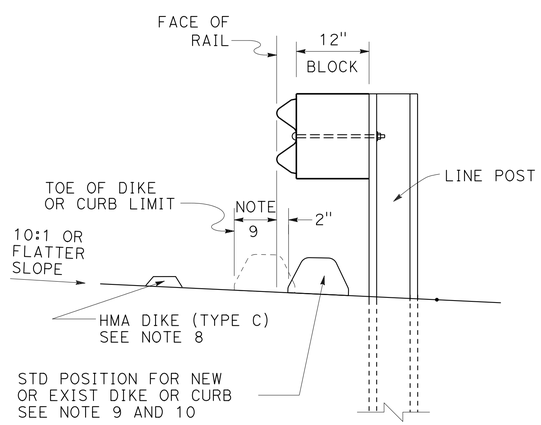

GUARDRAIL WITH 12" BLOCK

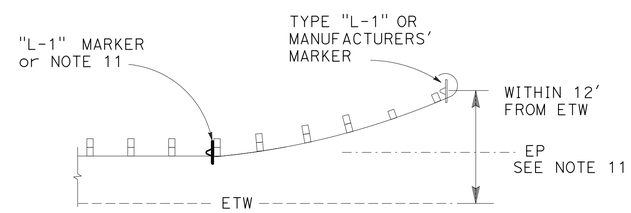

GUARDRAIL DELINEATION

W-BEAM GUARDRAIL DIKE POSITIONING

CONSTRUCTON DETAILS W-BEAM GUARDRAIL

NO SCALE

C-5

REVISED BY | DATE REVISED

JOHN HART | DWIGHT WINTERLIN

CALCULATED-DESIGNED BY | CHECKED BY

FUNCTIONAL SUPERVISOR | KRISTI WESTOBY

STATE OF CALIFORNIA - DEPARTMENT OF TRANSPORTATION

Caltrans® TRAFFIC SAFTEY

P:\proj1\02\2c090_plans\pse\22c090ga005.dgn

LAST REVISION 06-12-16 | DATE PLOTTED => 04-AUG-2016 | TIME PLOTTED => 11:56

Dist	COUNTY	ROUTE	POST MILES TOTAL PROJECT	SHEET No.	TOTAL SHEETS
02	Plu	70	50.6/51.7	12	181

REGISTERED CIVIL ENGINEER 06-12-16 DATE

PLANS APPROVAL DATE 06-15-16

REGISTERED PROFESSIONAL ENGINEER JOHN HART No. C69586 Exp. 6-30-18 CIVIL STATE OF CALIFORNIA

THE STATE OF CALIFORNIA OR ITS OFFICERS OR AGENTS SHALL NOT BE RESPONSIBLE FOR THE ACCURACY OR COMPLETENESS OF SCANNED COPIES OF THIS PLAN SHEET.

NOTES

1. STANDARD 6′ POST CAN BE WOOD OR STEEL, SEE STD PLN A77L1 AND A77L2 FOR ADDITIONAL DETAILS NOT SHOWN ON THIS PLAN
2. CRT POST SHALL BE WOOD.
3. SPLICE LOCATION OF MGS WILL NOT EFFECT SPAN.
4. GUARDRAIL ELEMENTS TO BE STANDARD 12′-6" LENGTH BETWEEN SPLICES.
5. ON ONEWAY ROADS THE NEAR SIDE POSTS DO NOT NEED TO BE CRT POSTS.
6. IF MORE THAN ONE POST IS SKIPPED, THE USE OF THIS DETAIL REQURIES A MIN. LENGTH OF 50′ OF STANDARD GUARDRAIL BEFORE; ANOTHER POST CAN BE SKIPPED, A TERMINAL CAN BE PLACED, OR ANY SPECIAL GUARDRAIL FEATURE IS USED.

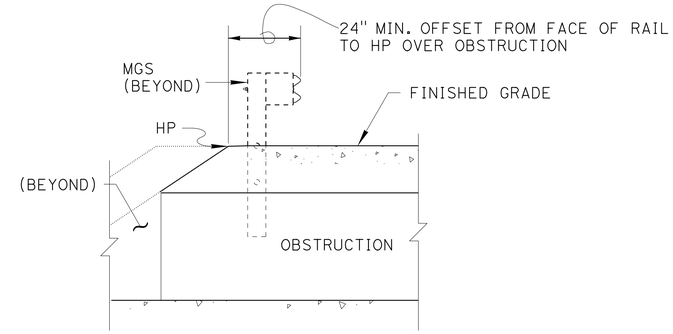

SECTION A-A

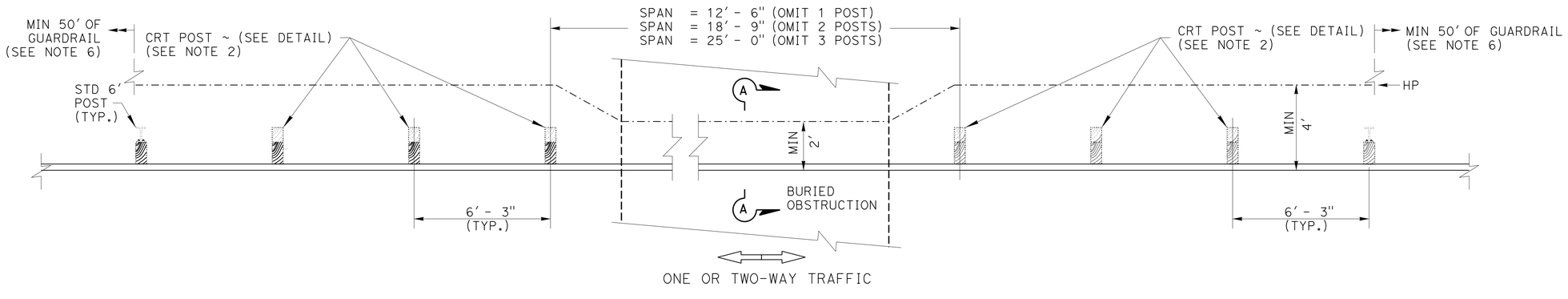

PLAN VIEW

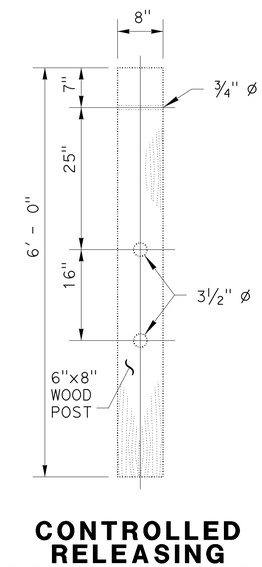

CONTROLLED RELEASING TERMINAL (CRT) POST DETAIL

SEE NOTE 2

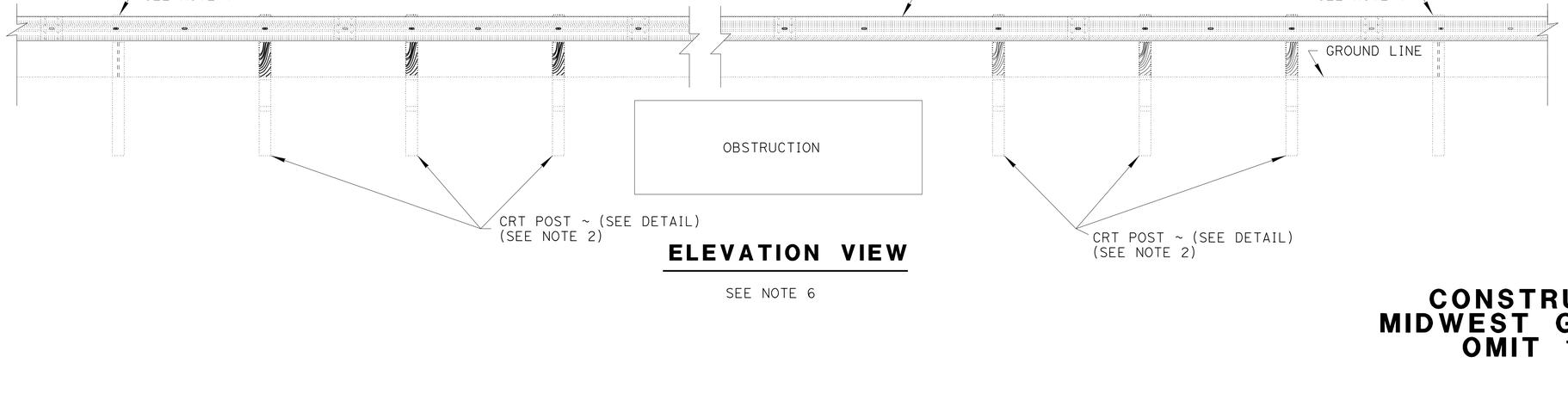

ELEVATION VIEW

SEE NOTE 6

CONSTRUCTION DETAILS MIDWEST GUARDRAIL SYSTEM OMIT 1 TO 3 POSTS

NO SCALE

C-6

STATE OF CALIFORNIA - DEPARTMENT OF TRANSPORTATION
Caltrans® TRAFFIC SAFTEY

FUNCTIONAL SUPERVISOR: KRISTI WESTOBY
CALCULATED-DESIGNED BY: JOHN HART
CHECKED BY: DWIGHT WINTERLIN
REVISED BY / DATE REVISED

P:\proj1\02\2c090_plans\pse\22c090ga006.dgn

LAST REVISION 06-12-16 | DATE PLOTTED => 04-AUG-2016 | TIME PLOTTED => 11:56

Dist	COUNTY	ROUTE	POST MILES TOTAL PROJECT	SHEET No.	TOTAL SHEETS
02	Plu	70	50.6/51.7	13	181

Thomas Penick 06-12-16
REGISTERED CIVIL ENGINEER DATE

06-15-16
PLANS APPROVAL DATE

REGISTERED PROFESSIONAL ENGINEER TOM PENICK No. C61068 Exp. 12-31-16 CIVIL STATE OF CALIFORNIA

THE STATE OF CALIFORNIA OR ITS OFFICERS OR AGENTS SHALL NOT BE RESPONSIBLE FOR THE ACCURACY OR COMPLETENESS OF SCANNED COPIES OF THIS PLAN SHEET.

NOTES:

1. GRIND EXISTING SURFACES TO ACCOMODATE A MINIMUM TAPER THICKNESS OF 0.10′ UNDER EITHER OF THE FOLLOWING CONDITIONS:
   A. HMA MATERIAL SUCH AS RUBBERIZED HMA, POLYMER-MODIFIED BONDED WEARING COURSE, OR OPEN-GRADED FRICTION COURSE IS UNSUITABLE FOR RAKING TO A MAXIMUM 0.02′ THICKNESS AT THE EDGE.
   B. TAPER WILL BE IN PLACE FOR MORE THAN 14 DAYS.
2. PERMANENT SURFACE MAY BE EXISTING OR NEW PAVEMENT.
3. ROADWAY SURFACE IS THE TOP OF EXISTING SURFACE OR THE TOP OF THE PLANED SURFACE.

LEGEND:

HMA OR POLYESTER CONCRETE

IF NECESSARY, GRIND EXISTING PAVEMENT AND PLACE HMA MATERIAL (SEE NOTE 1)

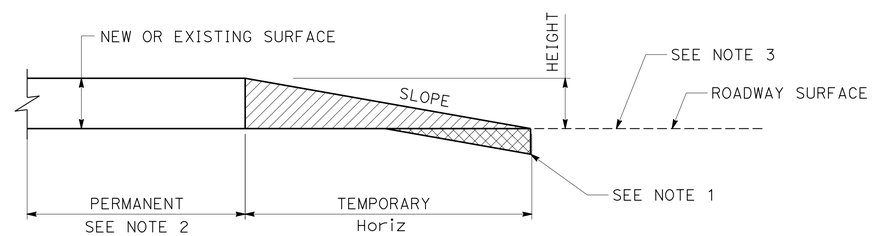

ELEVATION

TEMPORARY TAPERS

HEIGHT DIFFERENTIAL (FOOT)	SLOPE (HORIZONTAL:VERTICAL)	
	TAPER USE OF 14 DAYS OR LESS	TAPER USE OF MORE THAN 14 DAYS
GREATER THAN 0.08	100:1 OR FLATTER	200:1 OR FLATTER
0.04-0.08	70:1 OR FLATTER	70:1 OR FLATTER

CONSTRUCTION DETAILS

NO SCALE

C-7

REVISED BY | DATE REVISED
TOM PENICK | DAN BROWN
CALCULATED-DESIGNED BY | CHECKED BY
FUNCTIONAL SUPERVISOR: AL TRUJILLO

STATE OF CALIFORNIA - DEPARTMENT OF TRANSPORTATION
Caltrans DESIGN

P:\proj1\02\2c090_plans\pse\22c090ga007.dgn

LAST REVISION 06-12-16 | DATE PLOTTED => 04-AUG-2016 TIME PLOTTED => 11:57

Dist	COUNTY	ROUTE	POST MILES TOTAL PROJECT	SHEET No.	TOTAL SHEETS
02	Plu	70	50.6/51.7	14	181

Thomas Penick 06-12-16
REGISTERED CIVIL ENGINEER DATE

06-15-16
PLANS APPROVAL DATE

REGISTERED PROFESSIONAL ENGINEER TOM PENICK No. C61068 Exp. 12-31-16 CIVIL STATE OF CALIFORNIA

THE STATE OF CALIFORNIA OR ITS OFFICERS OR AGENTS SHALL NOT BE RESPONSIBLE FOR THE ACCURACY OR COMPLETENESS OF SCANNED COPIES OF THIS PLAN SHEET.

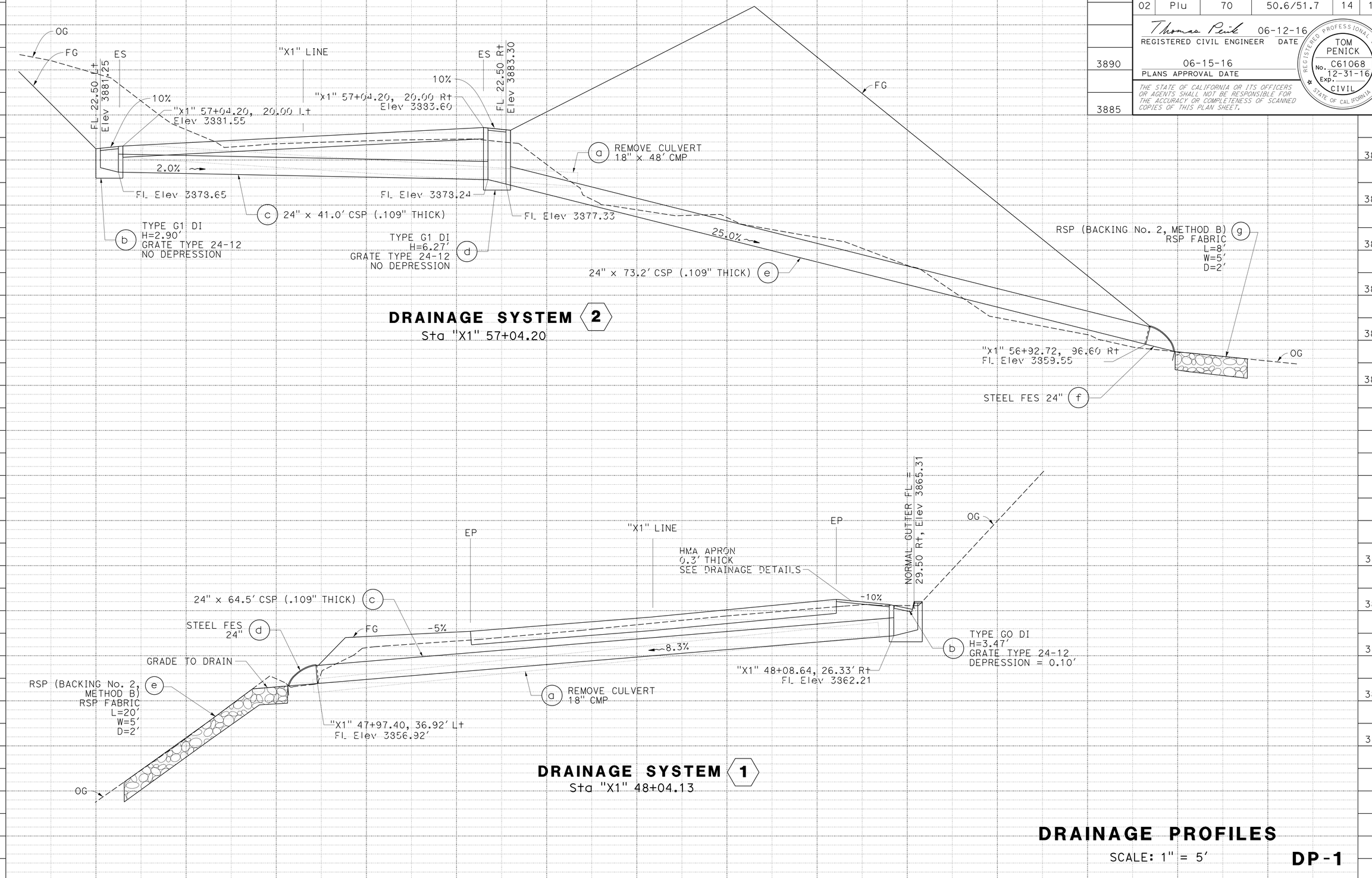

DRAINAGE PROFILES

SCALE: 1" = 5'

DP-1

STATION		TOTAL
CY	Exc	
	Emb	

REVISED BY | DATE REVISED
TOM PENICK | DAN BROWN
CALCULATED-DESIGNED BY | CHECKED BY
FUNCTIONAL SUPERVISOR
AL TRUJILLO

STATE OF CALIFORNIA - DEPARTMENT OF TRANSPORTATION
Caltrans®
DESIGN

P:\proj1\02\2c090_plans\pse\22c090ib001.dgn

LAST REVISION 06-12-16 | DATE PLOTTED => 04-AUG-2016 | TIME PLOTTED => 11:57

Dist	COUNTY	ROUTE	POST MILES TOTAL PROJECT	SHEET No.	TOTAL SHEETS
02	Plu	70	50.6/51.7	15	181

Thomas Penick 06-12-16
REGISTERED CIVIL ENGINEER DATE

06-15-16
PLANS APPROVAL DATE

REGISTERED PROFESSIONAL ENGINEER TOM PENICK No. C61068 Exp. 12-31-16 CIVIL STATE OF CALIFORNIA

THE STATE OF CALIFORNIA OR ITS OFFICERS OR AGENTS SHALL NOT BE RESPONSIBLE FOR THE ACCURACY OR COMPLETENESS OF SCANNED COPIES OF THIS PLAN SHEET.

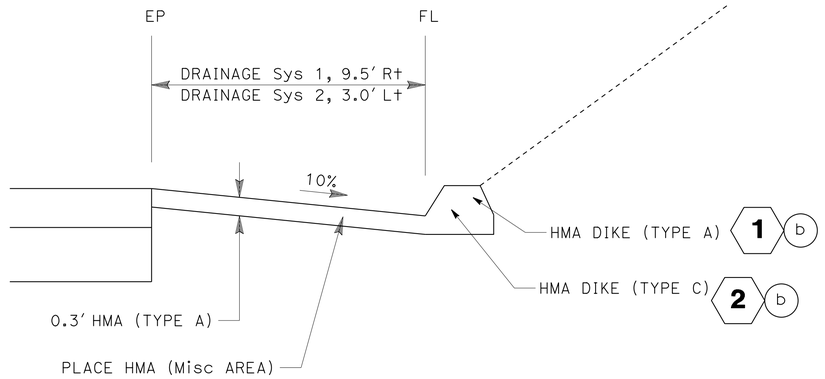

SECTION A-A

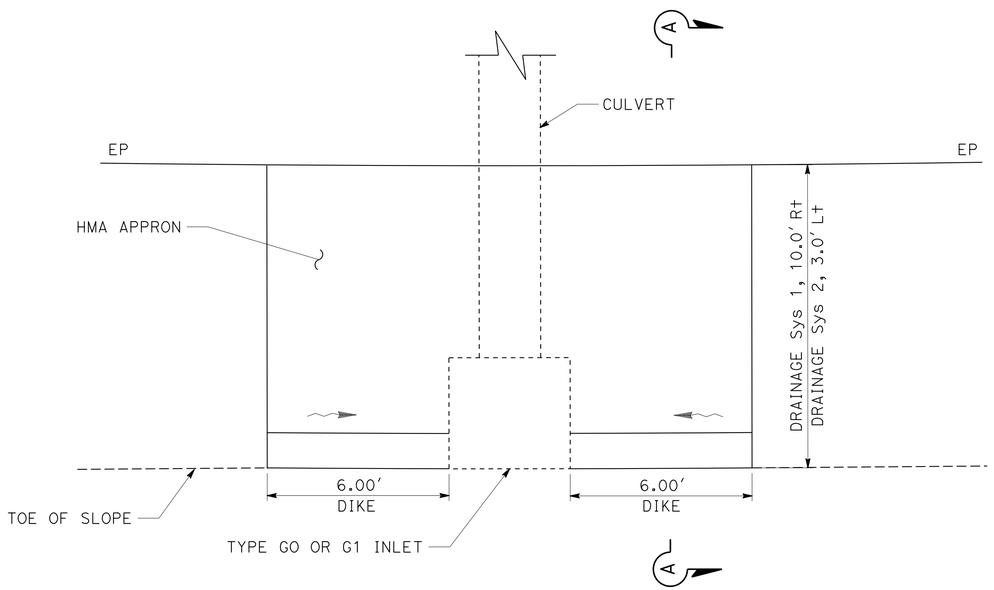

PLAN

APRON & DIKE DETAIL
DRAINAGE SYSTEM

1 b 2 b

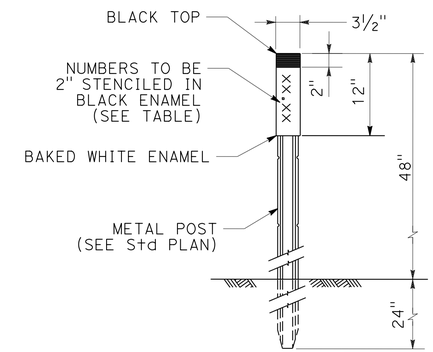

CULVERT MARKER

DRAINAGE DETAILS

NO SCALE

DD-1

STATE OF CALIFORNIA - DEPARTMENT OF TRANSPORTATION
Caltrans® **DESIGN**

FUNCTIONAL SUPERVISOR: AL TRUJILLO
CALCULATED-DESIGNED BY: TOM PENICK
CHECKED BY: DAN BROWN
REVISED BY
DATE REVISED

P:\proj\02\2c090_plans\pse\22c090ic001.dgn

LAST REVISION 06-12-16 | DATE PLOTTED => 04-AUG-2016 | TIME PLOTTED => 11:57

Dist	COUNTY	ROUTE	POST MILES TOTAL PROJECT	SHEET No.	TOTAL SHEETS
02	Plu	70	50.6/51.7	16	181

Thomas Penick 06-12-16
REGISTERED CIVIL ENGINEER DATE

06-15-16
PLANS APPROVAL DATE

REGISTERED PROFESSIONAL ENGINEER TOM PENICK No. C61068 Exp. 12-31-16 CIVIL STATE OF CALIFORNIA

THE STATE OF CALIFORNIA OR ITS OFFICERS OR AGENTS SHALL NOT BE RESPONSIBLE FOR THE ACCURACY OR COMPLETENESS OF SCANNED COPIES OF THIS PLAN SHEET.

NOTES:

1. (N) - NOT A SEPARATE PAY ITEM, FOR INFORMATION ONLY
2. ALL PIPE JOINT CLASSIFICATIONS ARE STANDARD JOINT TYPE.

CULVERT MARKERS

DRAINAGE SYSTEM No.	STATION	POSTMILE	L	R	MARKER (CULVERT) EA	REMARKS
1	"X1" 48+04.1	51.13	X	X	2	CROSS CULVERT
2	"X1" 57+05.1	51.30	X	X	2	CROSS CULVERT
TOTAL					4	

DRAINAGE QUANTITIES

SHEET No.	DRAINAGE SYSTEM No.	DRAINAGE UNIT No.	REMOVE CULVERT LF	MINOR CONCRETE (MINOR STRUCTURE) CY	24" CORRUGATED STEEL PIPE (.109" THICK) LF	24" STEEL FLARED END SECTION EA	Misc IRON AND STEEL LB	ROCK SLOPE PROTECTION (No. 2, METHOD B) CY	RSP FABRIC (CLASS 8) SQYD	STATION "X1" LINE	DESCRIPTION
L-1	1	a	63							48+04.46	Exist 18" CMP CULVERT
		b		1.24			326			48+05.02	DI TYPE GO, H=3.47, GRATE TYPE 24-12
		c			64.5					48+04.46	24" CSP
		d				1				47+93.42	24" STEEL FES
		e						7.4	22.2	47+93.42	RSP BACKING No. 2
L-2	2	a	48							57+05.3	Exist 18" CMP CULVERT
		b		0.95			326			57+04.20	DI TYPE G1, H=2.90, GRATE TYPE 24-12
		c			41.0					57+04.20	24" CSP
		d		1.67			326			57+04.20	DI TYPE G1, H=6.27, GRATE TYPE 24-12
		e			73.2					57+04.20	24" CSP
		f				1				57+02.68	24" STEEL FES
		g						3.0	10.2	57+02.68	RSP BACKING No. 2
TOTAL			111	3.86	178.7	2	978	10.4	32.4		

DRAINAGE QUANTITIES

DQ-1

REVISED BY | DATE REVISED
TOM PENICK | DAN BROWN
CALCULATED-DESIGNED BY | CHECKED BY
FUNCTIONAL SUPERVISOR
AL TRUJILLO

STATE OF CALIFORNIA - DEPARTMENT OF TRANSPORTATION
Caltrans
DESIGN

P:\proj1\02\2c090_plans\pse\22c090id001.dgn

LAST REVISION 06-12-16 | DATE PLOTTED => 04-AUG-2016 | TIME PLOTTED => 11:57

Dist	COUNTY	ROUTE	POST MILES TOTAL PROJECT	SHEET No.	TOTAL SHEETS
02	Plu	70	50.6/51.7	17	181

Thomas Penick 06-12-16
REGISTERED CIVIL ENGINEER DATE

06-15-16
PLANS APPROVAL DATE

REGISTERED PROFESSIONAL ENGINEER TOM PENICK No. C61068 Exp. 12-31-16 CIVIL STATE OF CALIFORNIA

THE STATE OF CALIFORNIA OR ITS OFFICERS OR AGENTS SHALL NOT BE RESPONSIBLE FOR THE ACCURACY OR COMPLETENESS OF SCANNED COPIES OF THIS PLAN SHEET.

NOTE:

1. FOR ACCURATE RIGHT OF WAY DATA, CONTACT RIGHT OF WAY ENGINEERING AT THE DISTRICT OFFICE.

LEGEND:

—— -e —— —— -(oh)—— PLUMAS-SIERRA RURAL ELECTRIC CO-OP
——-- tc —— ——-- tc—— AT&T COMMUNICATIONS
——-- tc —— ——-- tc—— SPRINT COMMUNICATIONS
—— fo —— —— —— fo —— – CALTRANS FIBER OPTIC

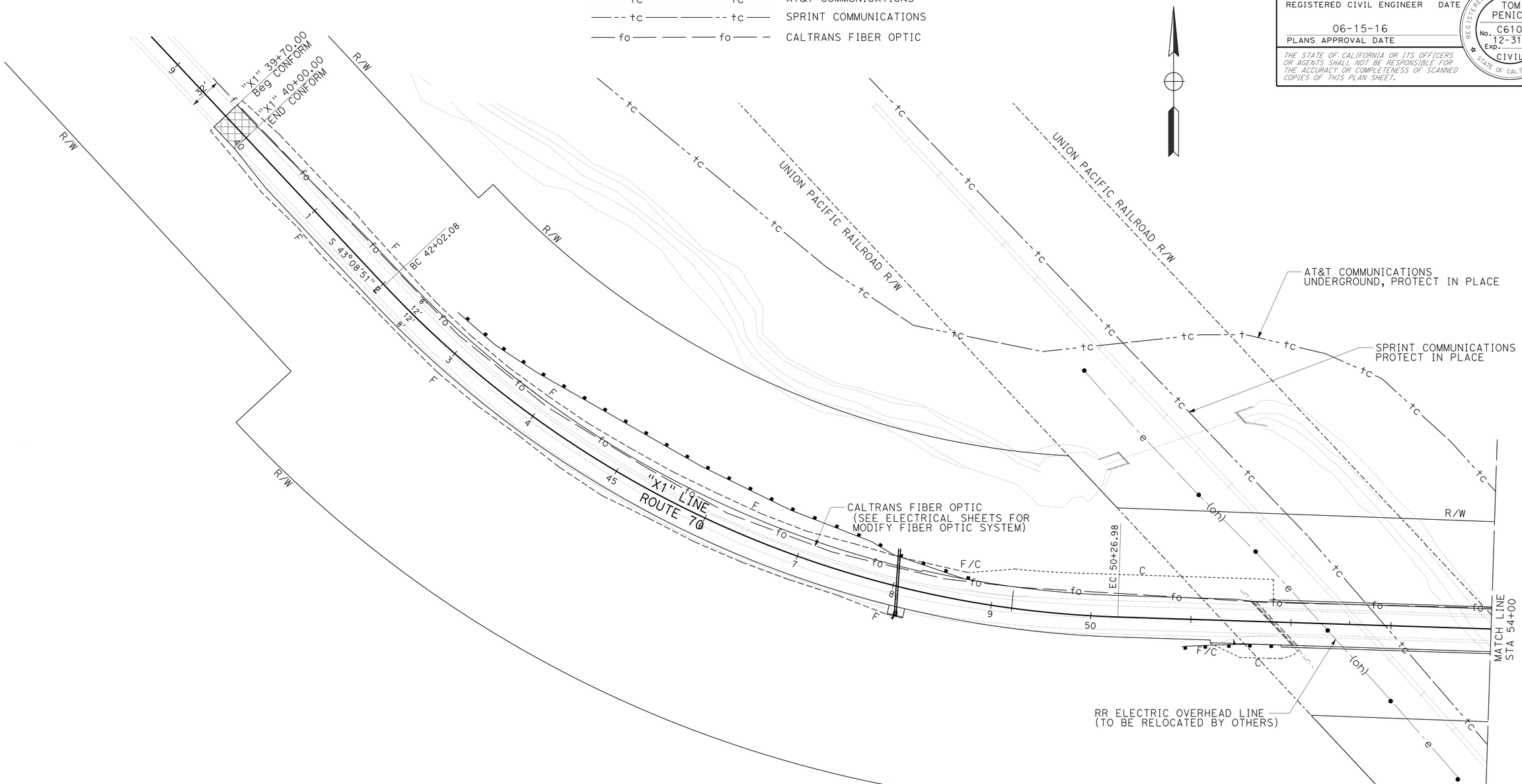

UTILITY PLAN

SCALE: 1" = 50'

U-1

APPROVED FOR UTILITY WORK ONLY

STATE OF CALIFORNIA - DEPARTMENT OF TRANSPORTATION
Caltrans® DESIGN

FUNCTIONAL SUPERVISOR: AL TRUJILLO
CALCULATED-DESIGNED BY: TOM PENICK
CHECKED BY: DAN BROWN
REVISED BY
DATE REVISED

P:\proj1\02\2c090_plans\pse\22c090ka001.dgn

LAST REVISION 06-12-16
DATE PLOTTED => 04-AUG-2016
TIME PLOTTED => 11:57

Dist	COUNTY	ROUTE	POST MILES TOTAL PROJECT	SHEET No.	TOTAL SHEETS
02	Plu	70	50.6/51.7	18	181

Thomas Penick 06-12-16
REGISTERED CIVIL ENGINEER DATE

06-15-16
PLANS APPROVAL DATE

REGISTERED PROFESSIONAL ENGINEER TOM PENICK No. C61068 Exp. 12-31-16 CIVIL STATE OF CALIFORNIA

THE STATE OF CALIFORNIA OR ITS OFFICERS OR AGENTS SHALL NOT BE RESPONSIBLE FOR THE ACCURACY OR COMPLETENESS OF SCANNED COPIES OF THIS PLAN SHEET.

NOTE:

1. FOR ACCURATE RIGHT OF WAY DATA, CONTACT RIGHT OF WAY ENGINEERING AT THE DISTRICT OFFICE.

ABBREVIATIONS;

ROE RIGHT OF ENTRY (TEMPORARY)

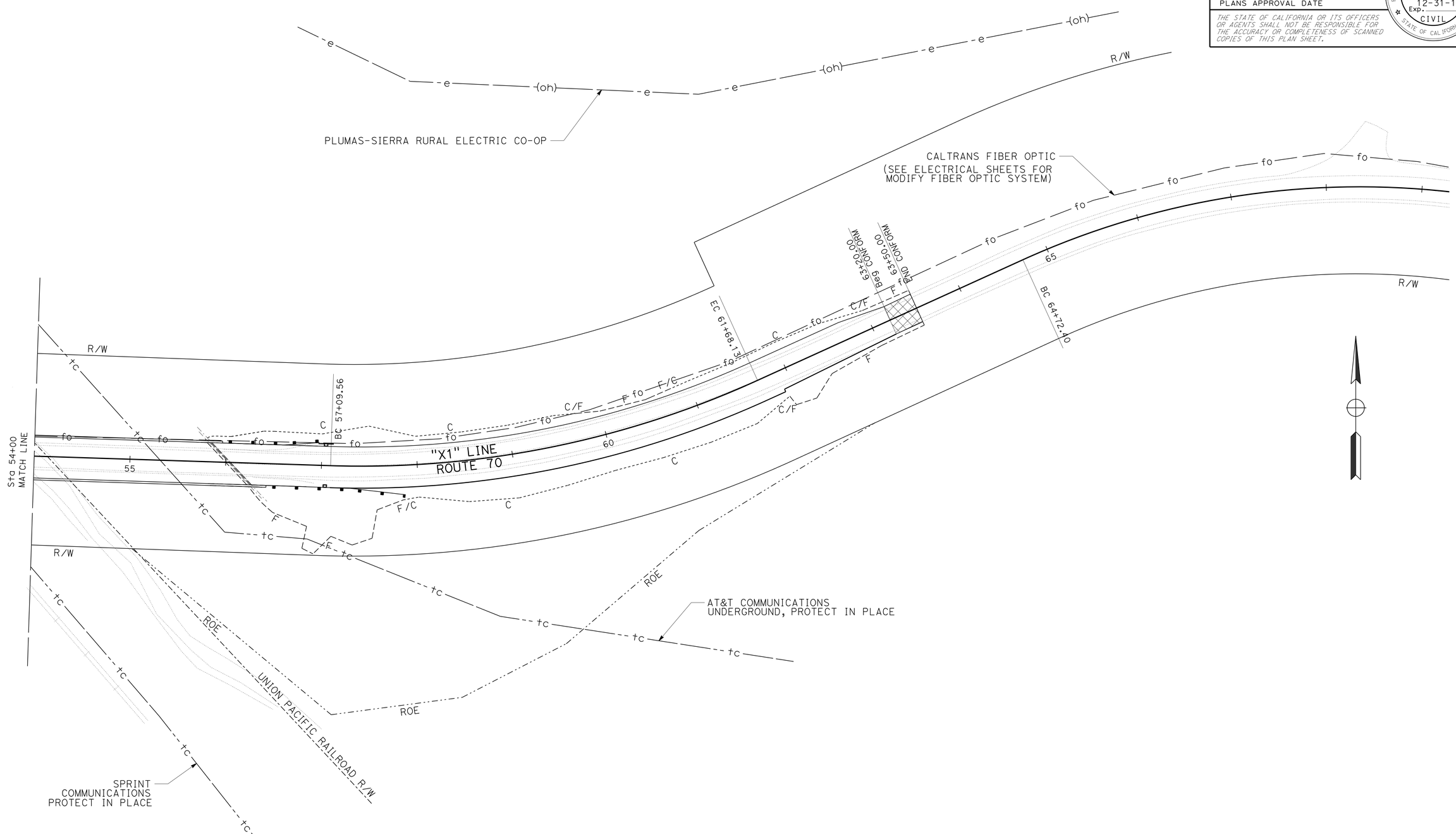

APPROVED FOR UTILITY WORK ONLY

UTILITY PLAN

SCALE: 1" = 50'

U-2

REVISED BY	DATE REVISED

CALCULATED-DESIGNED BY	TOM PENICK
CHECKED BY	DAN BROWN
FUNCTIONAL SUPERVISOR	AL TRUJILLO

STATE OF CALIFORNIA - DEPARTMENT OF TRANSPORTATION

Caltrans®

DESIGN

P:\proj\02\2c090_plans\pse\22c090ka002.dgn

LAST REVISION 06-12-16 | DATE PLOTTED => 04-AUG-2016 | TIME PLOTTED => 11:57

Dist	COUNTY	ROUTE	POST MILES TOTAL PROJECT	SHEET No.	TOTAL SHEETS
02	Plu	70	50.6/51.7	19	181

Thomas Penick 06-12-16
REGISTERED CIVIL ENGINEER DATE

06-15-16
PLANS APPROVAL DATE

REGISTERED PROFESSIONAL ENGINEER TOM PENICK No. C61068 Exp. 12-31-16 CIVIL STATE OF CALIFORNIA

THE STATE OF CALIFORNIA OR ITS OFFICERS OR AGENTS SHALL NOT BE RESPONSIBLE FOR THE ACCURACY OR COMPLETENESS OF SCANNED COPIES OF THIS PLAN SHEET.

CONSTRUCTION AREA SIGNS (STATIONARY MOUNTED)

No.	CODE	PANEL SIZE	MESSAGE	No. AND SIZE OF POSTS	No. OF SIGNS	COMMENTS
A	C23-2(CA) C23B(CA)	48" x 48" 36" x 18"	ROAD WORK AHEAD BRIDGE WORK	1 - 6" x 6"	3	STAGE 1,2,3,4,5
B	W20-4	48" x 48"	ONE LANE ROAD AHEAD	1- 4" x 6"	2	STAGE 1,2,3,4
C	W3-3	48" x 48"	SIGNAL AHEAD SYMBOL SIGN	1- 4" x 6"	2	STAGE 1,2,3,4
D	R10-6	24" x 36"	STOP HERE ON RED	1- 4" x 4"	2	STAGE 1,2,3,4
E	W1-4R	48" x 18"	REVERSE CURVE	1- 4" x 4"	4	STAGE 1, WB, "X1" 47+00 STAGE 2, EB, "X1" 57+50 STAGE 3, EB, "X1" 63+50 STAGE 4, WB, "X1" 39+50
F	G20-2	48" x 18"	END ROAD WORK	1- 4" x 4"	3	STAGE 1,2,3,4,5

SIGNS SHALL BE COVERED WHEN NOT IN USE.

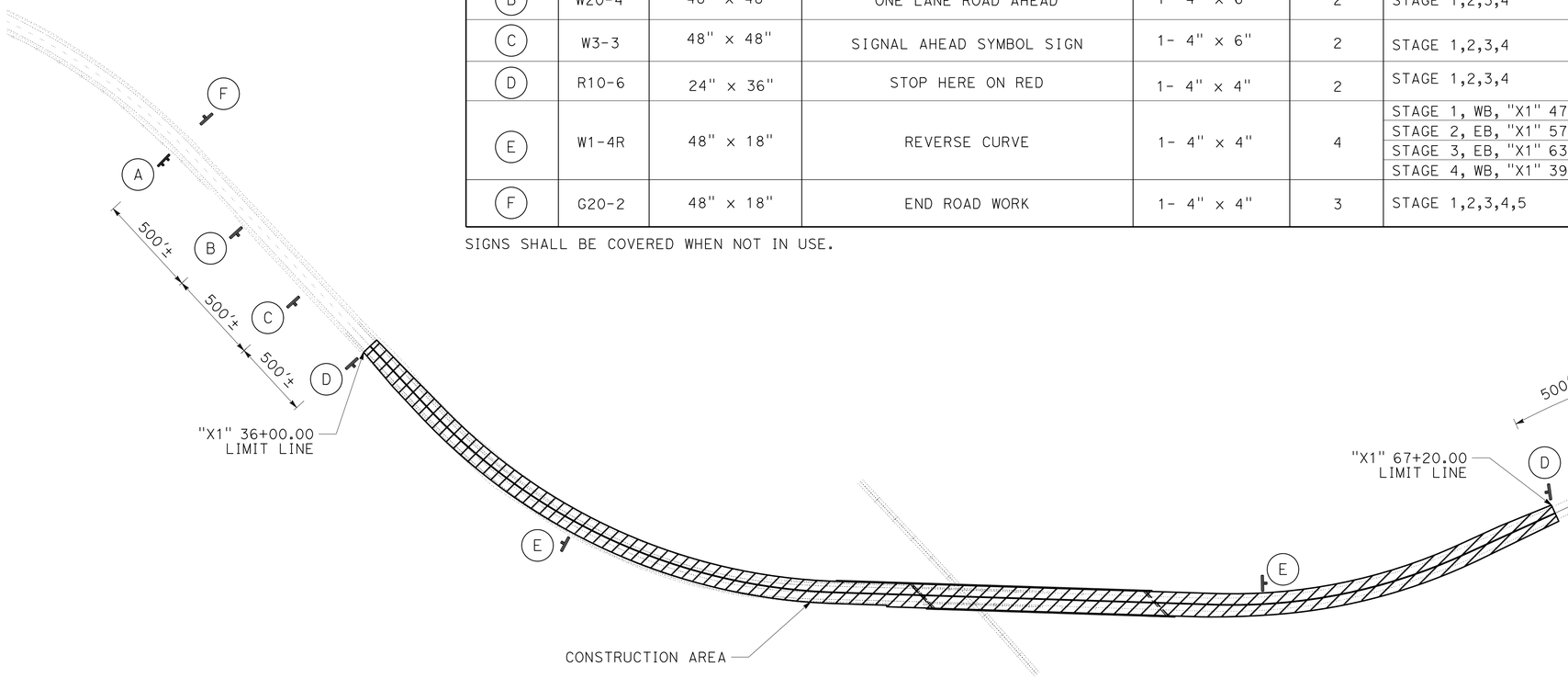

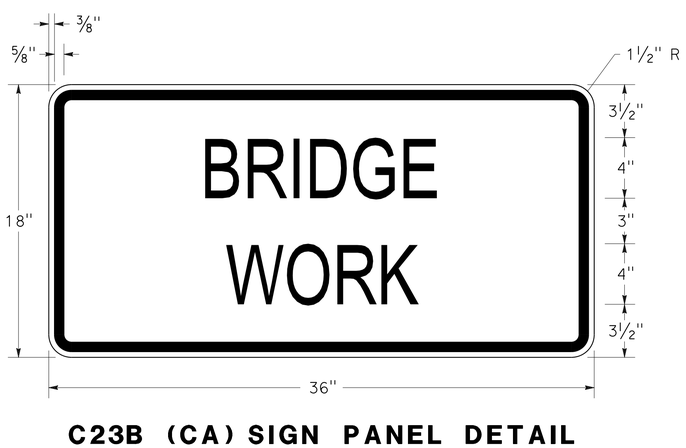

C23B (CA) SIGN PANEL DETAIL

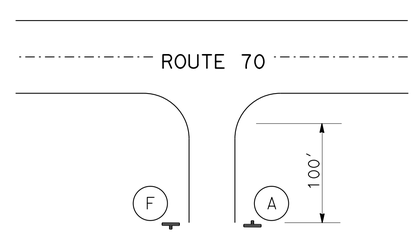

TYPICAL ROAD CONNECTION

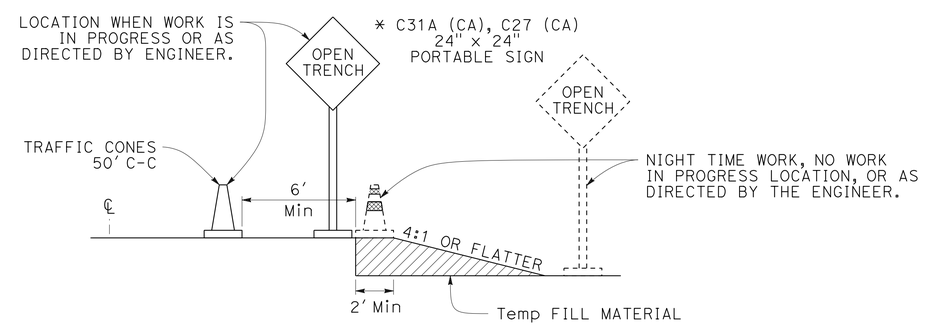

OPEN TRENCH SIGNING AND MARKING

* PLACE AT 450' INTERVALS THROUGH THE OPEN TRENCH AREA. ALTERNATE C27 (CA) (OPEN TRENCH) AND C31A (CA) (NO SHOULDER) SIGNS.

CONSTRUCTION AREA SIGNS

NO SCALE

CS-1

REVISED BY | DATE REVISED
TOM PENICK | DAN BROWN
CALCULATED-DESIGNED BY | CHECKED BY
FUNCTIONAL SUPERVISOR
AL TRUJILLO

STATE OF CALIFORNIA - DEPARTMENT OF TRANSPORTATION
Caltrans® DESIGN

P:\proj1\02\2c090_plans\pse\22c0901a001.dgn

LAST REVISION 06-12-16 | DATE PLOTTED => 04-AUG-2016 | TIME PLOTTED => 11:57

Dist	COUNTY	ROUTE	POST MILES TOTAL PROJECT	SHEET No.	TOTAL SHEETS
02	Plu	70	50.6/51.7	20	181

Thomas Penick 06-12-16
REGISTERED CIVIL ENGINEER DATE

06-15-16
PLANS APPROVAL DATE

REGISTERED PROFESSIONAL ENGINEER TOM PENICK No. C61068 Exp. 12-31-16 CIVIL STATE OF CALIFORNIA

THE STATE OF CALIFORNIA OR ITS OFFICERS OR AGENTS SHALL NOT BE RESPONSIBLE FOR THE ACCURACY OR COMPLETENESS OF SCANNED COPIES OF THIS PLAN SHEET.

LEGEND:

- WORK AREA
- TEMPORARY RAILING (TYPE K)
- REVERSABLE ONE-WAY TRAFFIC
- TEMPORARY CRASH CUSION SYSTEM
- CHANNELIZER (SURFACE MOUNTED)

STAGE 1 TRAFFIC HANDLING

1. SIGNALIZED TRAFFIC CONTROL

STAGE 1 CONSTRUCTION:

1. PLACE TEMPORARY RAILING (TYPE K)
2. INSTALL TEMPORARY SIGNAL SYSTEM
3. CONSTRUCT RETAINING WALL, BRIDGE ABUTMENTS AND SUBSTRUCTURE
4. INSTALL DRAINAGE SYSTEM No. 2
5. PLACE TEMPORARY PAVEMENT WIDENING (WESTBOUND)

STAGE 1
TYPICAL ROADWAY SECTION
"X1" 48+95 TO BB

STAGE 1
TYPICAL ROADWAY SECTION
"X1" 36+00 TO 48+95

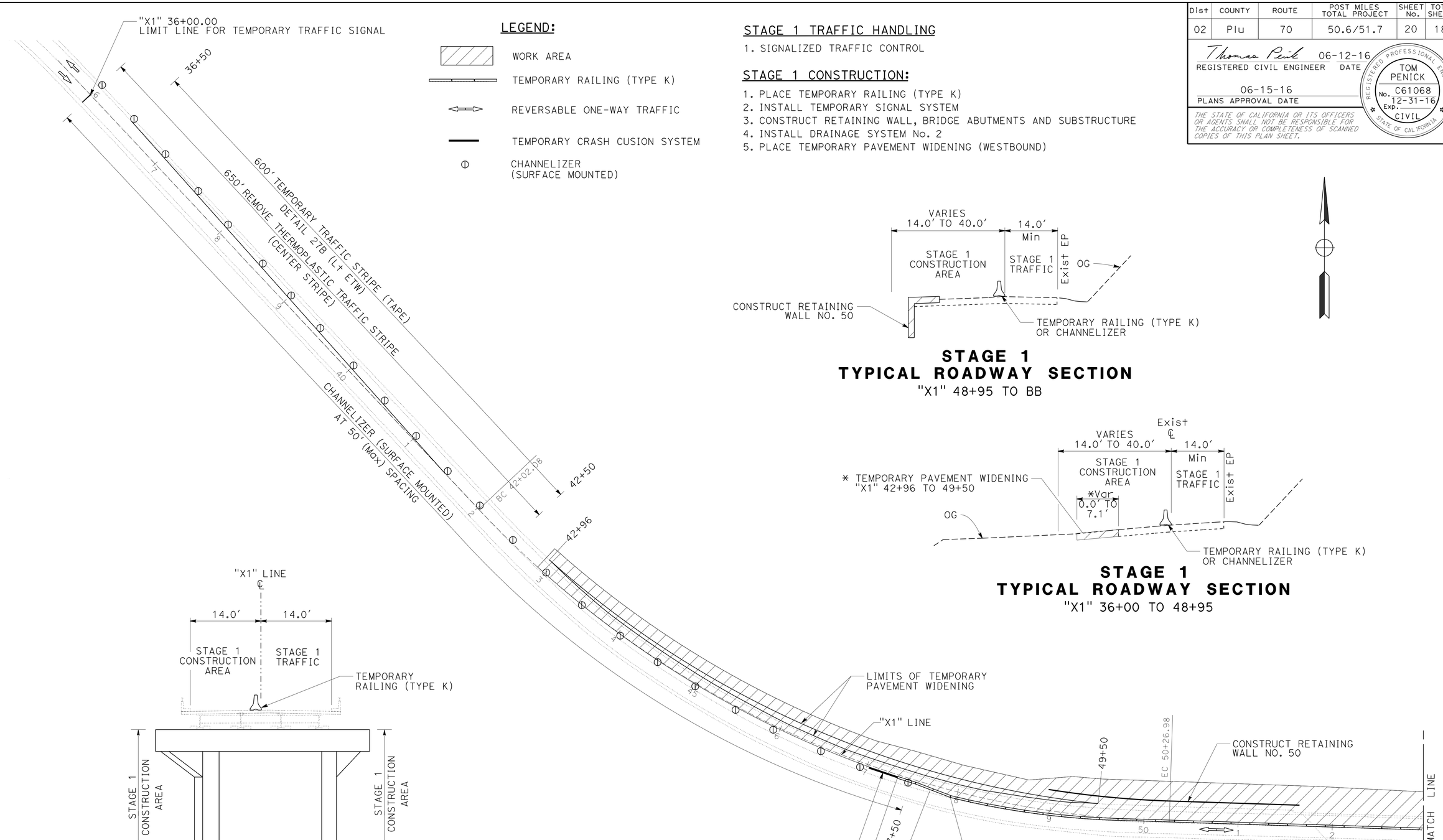

STAGE 1
TYPICAL BRIDGE SECTION

STAGE 1
STAGE CONSTRUCTION AND TRAFFIC HANDLING
SCALE: 1" = 50′

SC-1

APPROVED FOR STAGE CONSTRUCTION AND TRAFFIC HANDLING WORK ONLY

REVISED BY	DATE REVISED

CALCULATED-DESIGNED BY	CHECKED BY
TOM PENICK	DAN BROWN

FUNCTIONAL SUPERVISOR: AL TRUJILLO

STATE OF CALIFORNIA - DEPARTMENT OF TRANSPORTATION
Caltrans
DESIGN

P:\proj1\02\2c090_plans\pse\22c090ma001.dgn

LAST REVISION 06-12-16 | DATE PLOTTED => 04-AUG-2016 | TIME PLOTTED => 11:57

Dist	COUNTY	ROUTE	POST MILES TOTAL PROJECT	SHEET No.	TOTAL SHEETS
02	Plu	70	50.6/51.7	21	181

Thomas Penick 06-12-16
REGISTERED CIVIL ENGINEER DATE

06-15-16
PLANS APPROVAL DATE

REGISTERED PROFESSIONAL ENGINEER TOM PENICK No. C61068 Exp. 12-31-16 CIVIL STATE OF CALIFORNIA

THE STATE OF CALIFORNIA OR ITS OFFICERS OR AGENTS SHALL NOT BE RESPONSIBLE FOR THE ACCURACY OR COMPLETENESS OF SCANNED COPIES OF THIS PLAN SHEET.

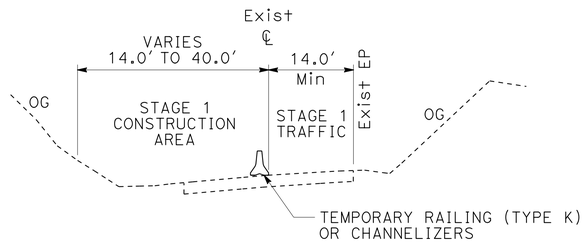

STAGE 1 TYPICAL SECTION

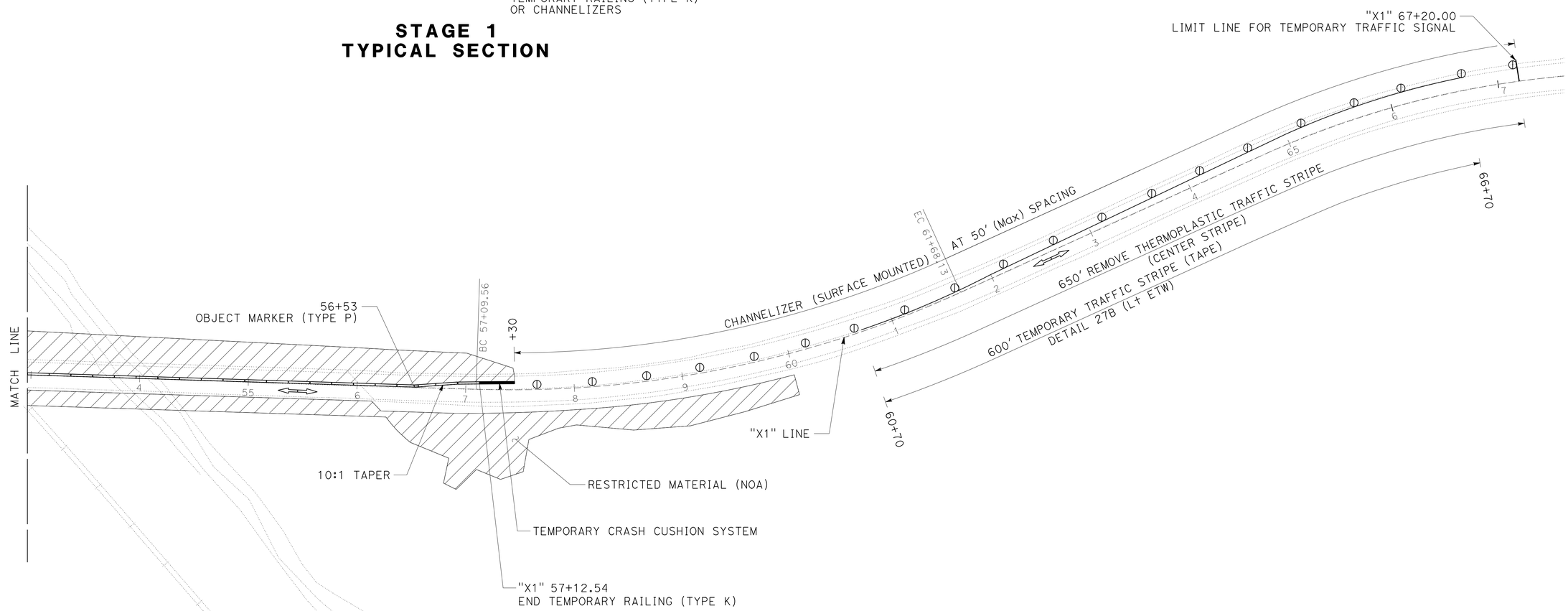

APPROVED FOR STAGE CONSTRUCTION AND TRAFFIC HANDLING WORK ONLY

STAGE 1
STAGE CONSTRUCTION AND TRAFFIC HANDLING

SCALE: 1" = 50'

SC-2

REVISED BY	DATE REVISED

CALCULATED-DESIGNED BY: TOM PENICK
CHECKED BY: DAN BROWN
FUNCTIONAL SUPERVISOR: AL TRUJILLO

STATE OF CALIFORNIA - DEPARTMENT OF TRANSPORTATION
Caltrans
DESIGN

P:\proj\02\2c090_plans\pse\22c090ma002.dgn

LAST REVISION 06-12-16 | DATE PLOTTED => 04-AUG-2016 | TIME PLOTTED => 11:57

BORDER LAST REVISED 7/2/2010 | USERNAME => s115152 | DGN FILE => 22c090ma002.dgn | RELATIVE BORDER SCALE IS IN INCHES 0 1 2 3 | UNIT 0318 | PROJECT NUMBER & PHASE 02 0000 0161 1

Dist	COUNTY	ROUTE	POST MILES TOTAL PROJECT	SHEET No.	TOTAL SHEETS
02	Plu	70	50.6/51.7	22	181

Thomas Penick 06-12-16
REGISTERED CIVIL ENGINEER DATE

06-15-16
PLANS APPROVAL DATE

REGISTERED PROFESSIONAL ENGINEER TOM PENICK No. C61068 Exp. 12-31-16 CIVIL STATE OF CALIFORNIA

THE STATE OF CALIFORNIA OR ITS OFFICERS OR AGENTS SHALL NOT BE RESPONSIBLE FOR THE ACCURACY OR COMPLETENESS OF SCANNED COPIES OF THIS PLAN SHEET.

STAGE 2 TRAFFIC HANDLING

1. SIGNALIZED TRAFFIC CONTROL

STAGE 2 CONSTRUCTION:

1. RELOCATE Temp RAILING (TYPE K)
2. CONSTRUCT BRIDGE ABUTMENTS AND SUBSTRUCTURE
3. REMOVE Temp RAILING (TYPE K)
4. PREPARE SIGNALIZED TRAFFIC CONTROL SYSTEM FOR WINTER SEASON, IF NECESSARY

STAGE 2
TYPICAL ROADWAY SECTION
"X1" 48+95 TO 51+59

STAGE 2
TYPICAL SECTION

STAGE 2
TYPICAL BRIDGE SECTION

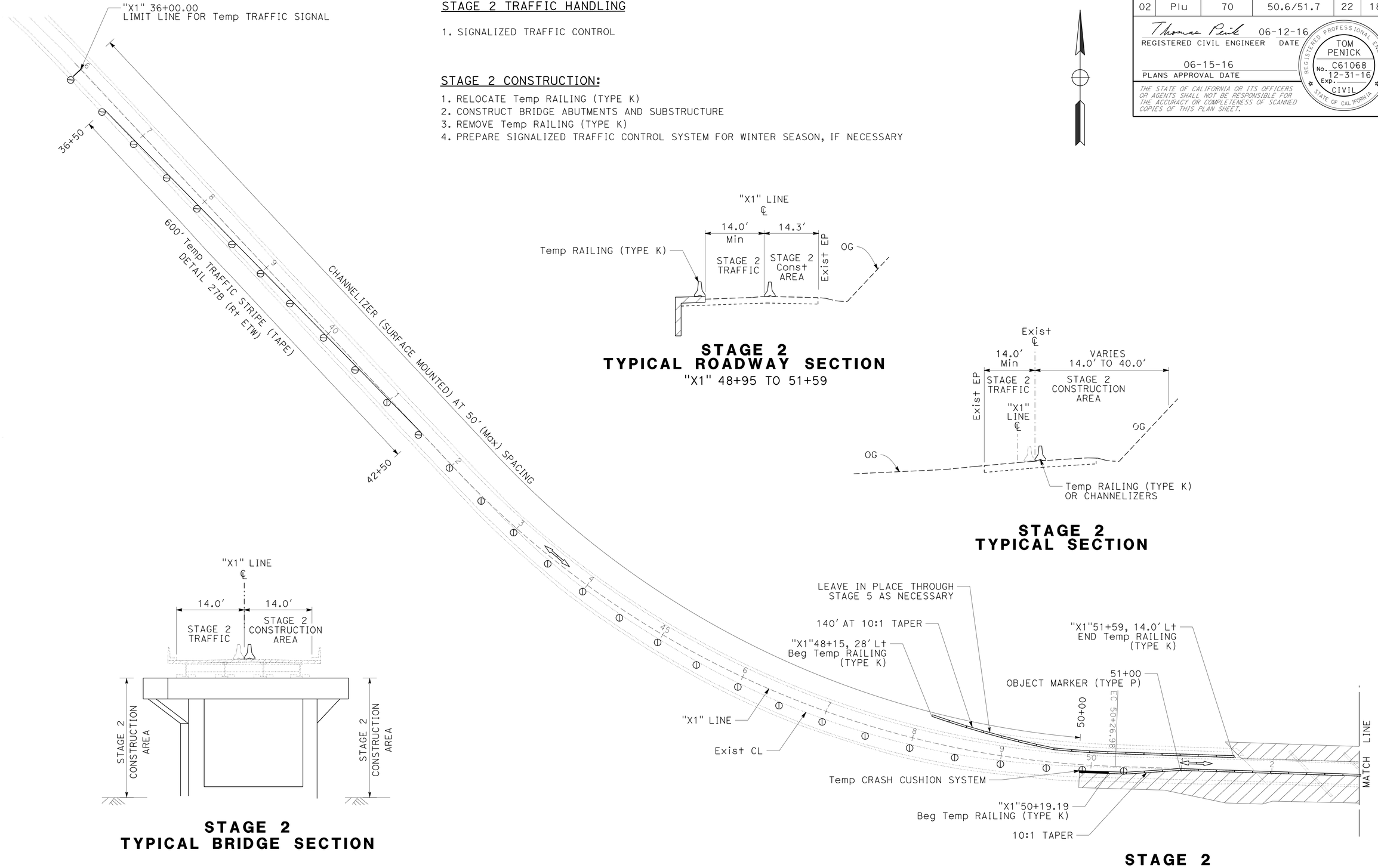

STAGE 2
STAGE CONSTRUCTION AND TRAFFIC HANDLING
SCALE: 1" = 50′

APPROVED FOR STAGE CONSTRUCTION AND TRAFFIC HANDLING WORK ONLY

SC-3

STATE OF CALIFORNIA - DEPARTMENT OF TRANSPORTATION
Caltrans® **DESIGN**

REVISED BY	DATE REVISED	TOM PENICK	DAN BROWN	AL TRUJILLO
		CALCULATED-DESIGNED BY	CHECKED BY	FUNCTIONAL SUPERVISOR

P:\proj\02\2c090_plans\pse\22c090ma003.dgn

LAST REVISION 06-12-16 | DATE PLOTTED => 04-AUG-2016 | TIME PLOTTED => 11:57

Dist	COUNTY	ROUTE	POST MILES TOTAL PROJECT	SHEET No.	TOTAL SHEETS
02	Plu	70	50.6/51.7	23	181

Thomas Penick 06-12-16
REGISTERED CIVIL ENGINEER DATE

06-15-16
PLANS APPROVAL DATE

REGISTERED PROFESSIONAL ENGINEER TOM PENICK No. C61068 Exp. 12-31-16 CIVIL STATE OF CALIFORNIA

THE STATE OF CALIFORNIA OR ITS OFFICERS OR AGENTS SHALL NOT BE RESPONSIBLE FOR THE ACCURACY OR COMPLETENESS OF SCANNED COPIES OF THIS PLAN SHEET.

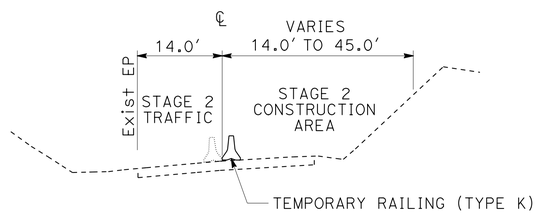

STAGE 2
TYPICAL SECTION

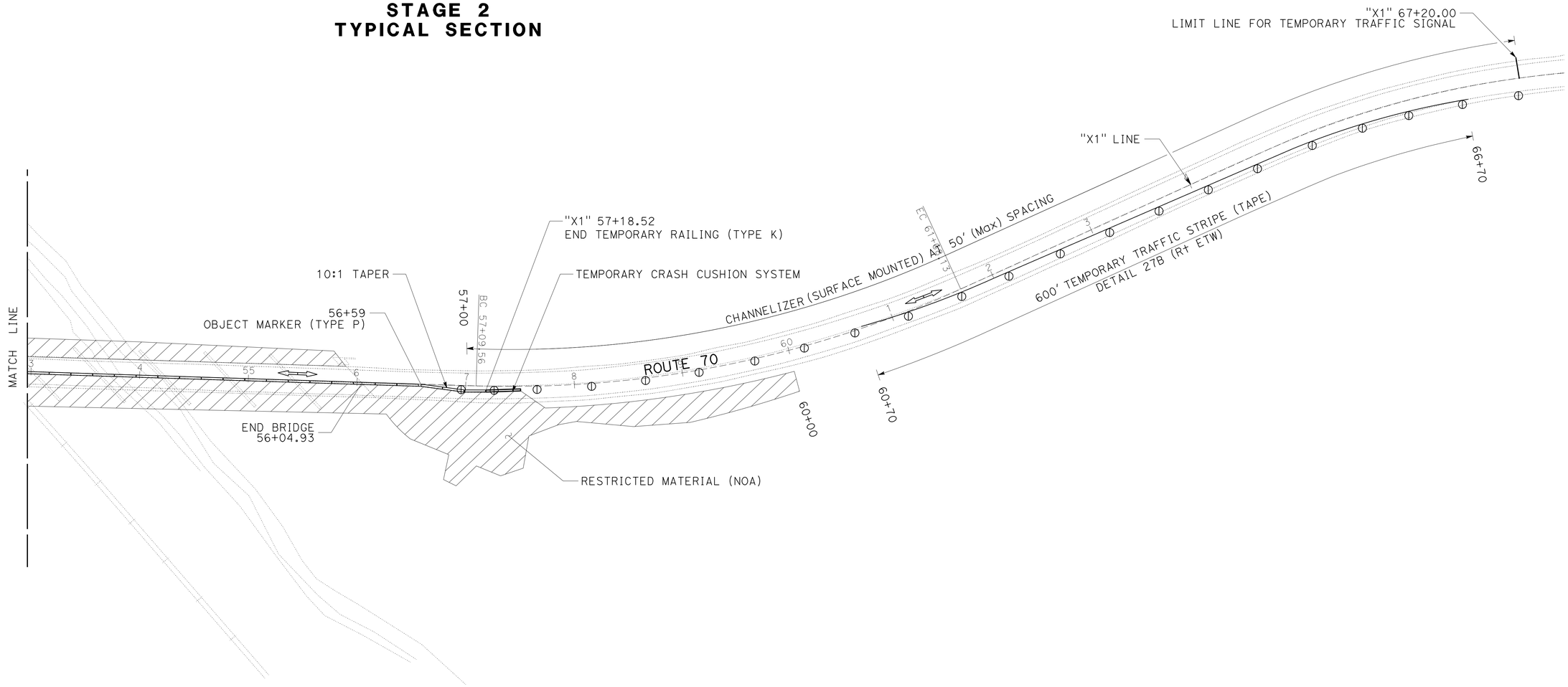

STAGE 2
STAGE CONSTRUCTION AND TRAFFIC HANDLING

SCALE: 1" = 50'

SC-4

APPROVED FOR STAGE CONSTRUCTION AND TRAFFIC HANDLING WORK ONLY

REVISED BY	DATE REVISED

CALCULATED-DESIGNED BY	TOM PENICK
CHECKED BY	DAN BROWN
FUNCTIONAL SUPERVISOR	AL TRUJILLO

STATE OF CALIFORNIA - DEPARTMENT OF TRANSPORTATION
Caltrans® DESIGN

P:\proj1\02\2c090_plans\pse\22c090ma004.dgn

LAST REVISION 06-12-16 | DATE PLOTTED => 04-AUG-2016 | TIME PLOTTED => 11:57

Dist	COUNTY	ROUTE	POST MILES TOTAL PROJECT	SHEET No.	TOTAL SHEETS
02	Plu	70	50.6/51.7	24	181

Thomas Penick 06-12-16
REGISTERED CIVIL ENGINEER DATE

06-15-16
PLANS APPROVAL DATE

REGISTERED PROFESSIONAL ENGINEER TOM PENICK No. C61068 Exp. 12-31-16 CIVIL STATE OF CALIFORNIA

THE STATE OF CALIFORNIA OR ITS OFFICERS OR AGENTS SHALL NOT BE RESPONSIBLE FOR THE ACCURACY OR COMPLETENESS OF SCANNED COPIES OF THIS PLAN SHEET.

STAGE 3 TRAFFIC HANDLING

1. SIGNALIZED TRAFFIC CONTROL

STAGE 3 CONSTRUCTION:

1. PLACE TEMPORARY RAILING (TYPE K)
2. CONSTRUCT BRIDGE SUPERSTRUCTURE - EASTBOUND, CONSTRUCT ROADWAY - EASTBOUND

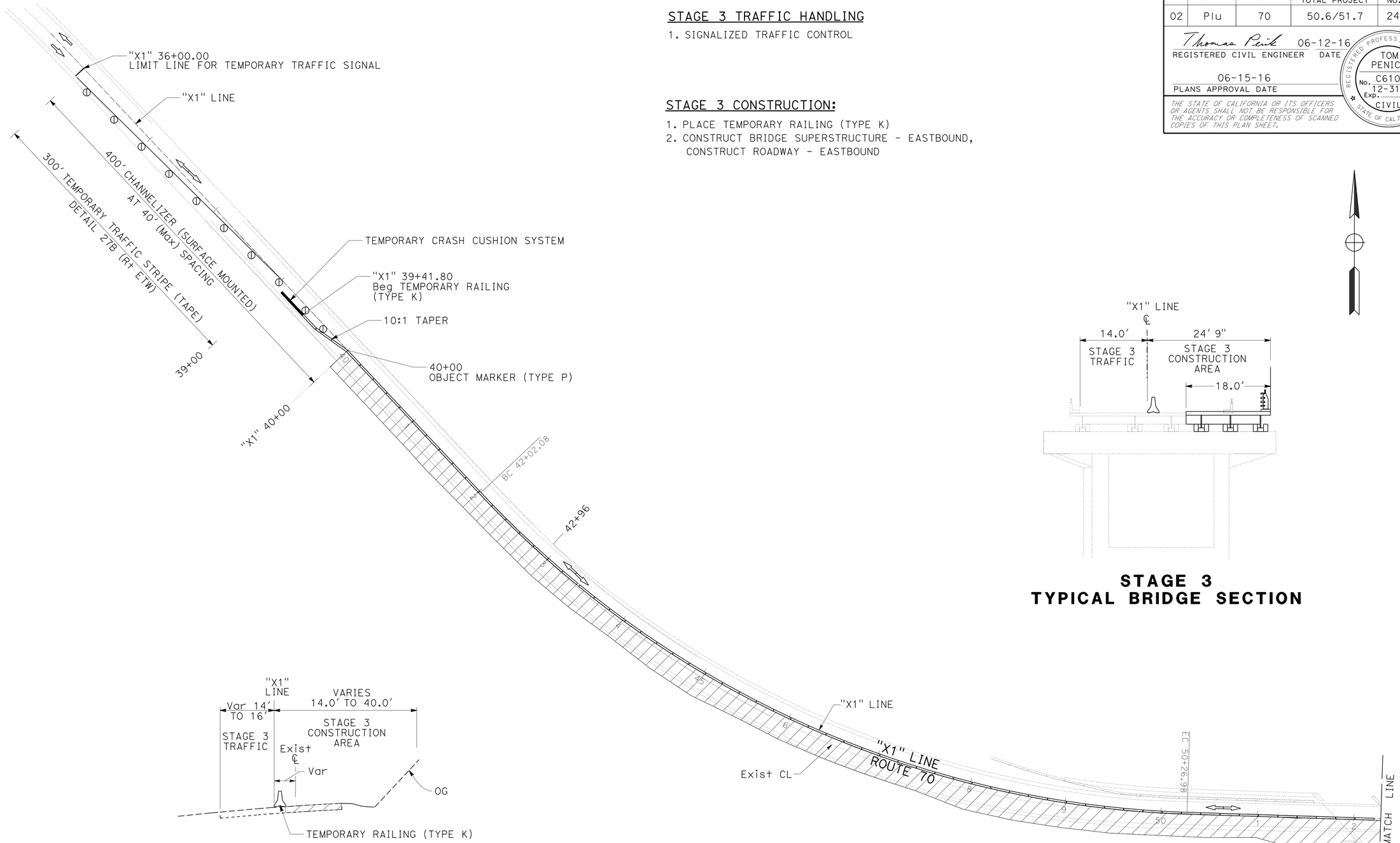

STAGE 3
TYPICAL BRIDGE SECTION

STAGE 3
TYPICAL SECTION

STAGE 3
STAGE CONSTRUCTION AND TRAFFIC HANDLING

NO SCALE

SC-5

APPROVED FOR STAGE CONSTRUCTION AND TRAFFIC HANDLING WORK ONLY

STATE OF CALIFORNIA - DEPARTMENT OF TRANSPORTATION
Caltrans® **DESIGN**

FUNCTIONAL SUPERVISOR: AL TRUJILLO
CALCULATED-DESIGNED BY: TOM PENICK
CHECKED BY: DAN BROWN
REVISED BY
DATE REVISED

P:\proj1\02\2c090_plans\pse\22c090ma005.dgn

LAST REVISION 06-12-16
DATE PLOTTED => 04-AUG-2016
TIME PLOTTED => 11:57

Dist	COUNTY	ROUTE	POST MILES TOTAL PROJECT	SHEET No.	TOTAL SHEETS
02	Plu	70	50.6/51.7	25	181

Thomas Penick 06-12-16
REGISTERED CIVIL ENGINEER DATE

06-15-16
PLANS APPROVAL DATE

REGISTERED PROFESSIONAL ENGINEER TOM PENICK No. C61068 Exp. 12-31-16 CIVIL STATE OF CALIFORNIA

THE STATE OF CALIFORNIA OR ITS OFFICERS OR AGENTS SHALL NOT BE RESPONSIBLE FOR THE ACCURACY OR COMPLETENESS OF SCANNED COPIES OF THIS PLAN SHEET.

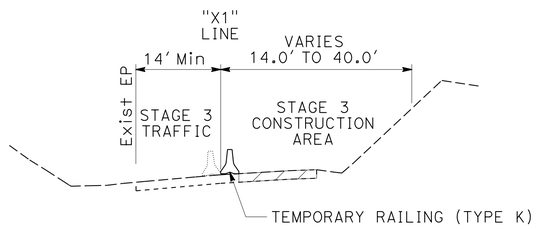

STAGE 3 TYPICAL SECTION

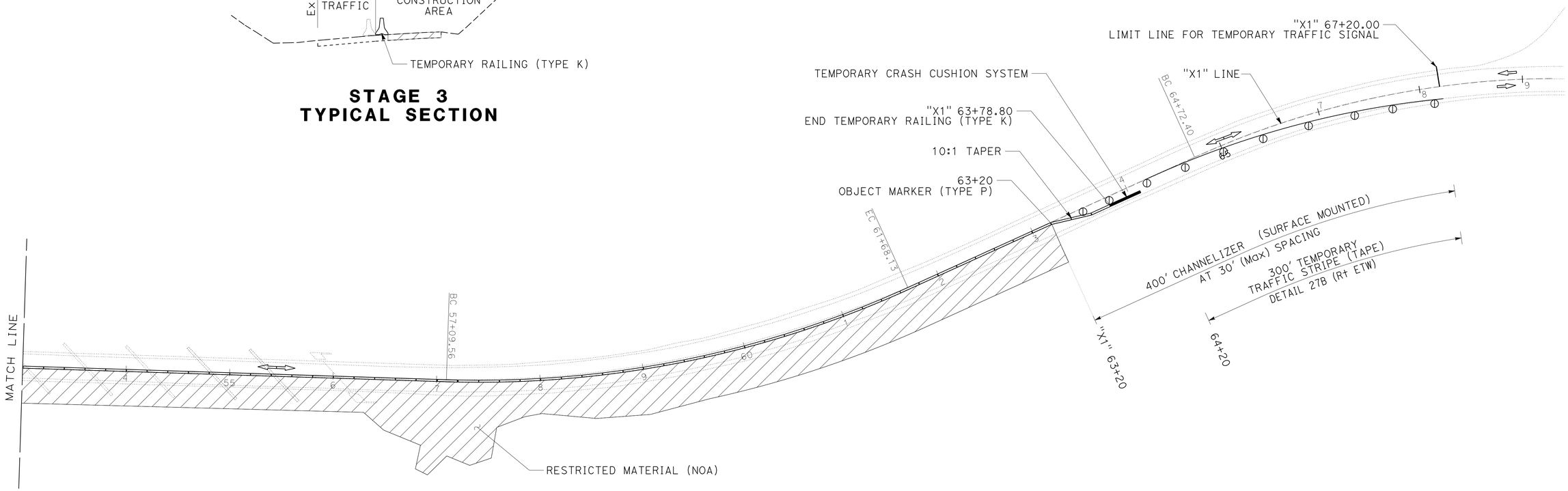

STAGE 3
STAGE CONSTRUCTION AND TRAFFIC HANDLING

NO SCALE

SC-6

APPROVED FOR STAGE CONSTRUCTION AND TRAFFIC HANDLING WORK ONLY

REVISED BY	DATE REVISED

CALCULATED-DESIGNED BY: TOM PENICK
CHECKED BY: DAN BROWN
FUNCTIONAL SUPERVISOR: AL TRUJILLO

STATE OF CALIFORNIA - DEPARTMENT OF TRANSPORTATION
Caltrans DESIGN

P:\proj1\02\2c090_plans\pse\22c090ma006.dgn

LAST REVISION 06-12-16 | DATE PLOTTED => 04-AUG-2016 | TIME PLOTTED => 11:57

Dist	COUNTY	ROUTE	POST MILES TOTAL PROJECT	SHEET No.	TOTAL SHEETS
02	Plu	70	50.6/51.7	26	181

Thomas Penick 06-12-16
REGISTERED CIVIL ENGINEER DATE

06-15-16
PLANS APPROVAL DATE

REGISTERED PROFESSIONAL ENGINEER TOM PENICK No. C61068 Exp. 12-31-16 CIVIL STATE OF CALIFORNIA

THE STATE OF CALIFORNIA OR ITS OFFICERS OR AGENTS SHALL NOT BE RESPONSIBLE FOR THE ACCURACY OR COMPLETENESS OF SCANNED COPIES OF THIS PLAN SHEET.

STAGE 4 TRAFFIC HANDLING

1. SIGNALIZED TRAFFIC CONTROL

STAGE 4 CONSTRUCTION:

1. PLACE TEMPORARY RAILING (TYPE K)
2. CONSTRUCT BRIDGE SUPERSTRUCTURE - WESTBOUND, CONSTRUCT ROADWAY - WESTBOUND
3. REMOVE SIGNALIZED TRAFFIC CONTROL SYSTEM

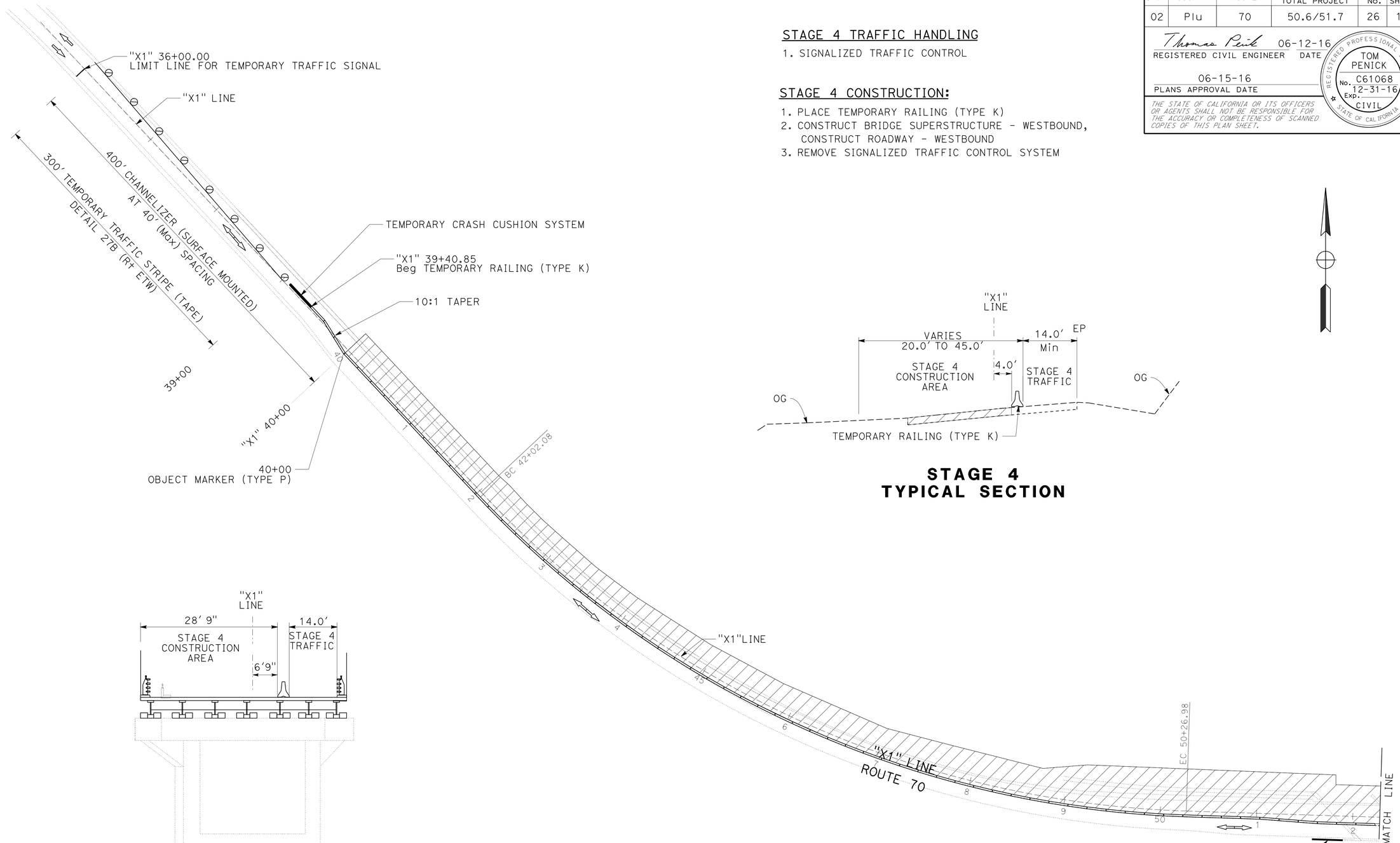

STAGE 4
TYPICAL SECTION

STAGE 4
TYPICAL BRIDGE SECTION

APPROVED FOR STAGE CONSTRUCTION AND TRAFFIC HANDLING WORK ONLY

STAGE 4
STAGE CONSTRUCTION AND TRAFFIC HANDLING
NO SCALE

SC-7

STATE OF CALIFORNIA - DEPARTMENT OF TRANSPORTATION
Caltrans® **DESIGN**

FUNCTIONAL SUPERVISOR: AL TRUJILLO
CALCULATED-DESIGNED BY: TOM PENICK
CHECKED BY: DAN BROWN
REVISED BY
DATE REVISED

P:\proj1\02\2c090_plans\pse\22c090ma007.dgn

LAST REVISION 06-12-16
DATE PLOTTED => 04-AUG-2016
TIME PLOTTED => 11:57

Dist	COUNTY	ROUTE	POST MILES TOTAL PROJECT	SHEET No.	TOTAL SHEETS
02	Plu	70	50.6/51.7	27	181

Thomas Penick 06-12-16
REGISTERED CIVIL ENGINEER DATE

06-15-16
PLANS APPROVAL DATE

REGISTERED PROFESSIONAL ENGINEER TOM PENICK No. C61068 Exp. 12-31-16 CIVIL STATE OF CALIFORNIA

THE STATE OF CALIFORNIA OR ITS OFFICERS OR AGENTS SHALL NOT BE RESPONSIBLE FOR THE ACCURACY OR COMPLETENESS OF SCANNED COPIES OF THIS PLAN SHEET.

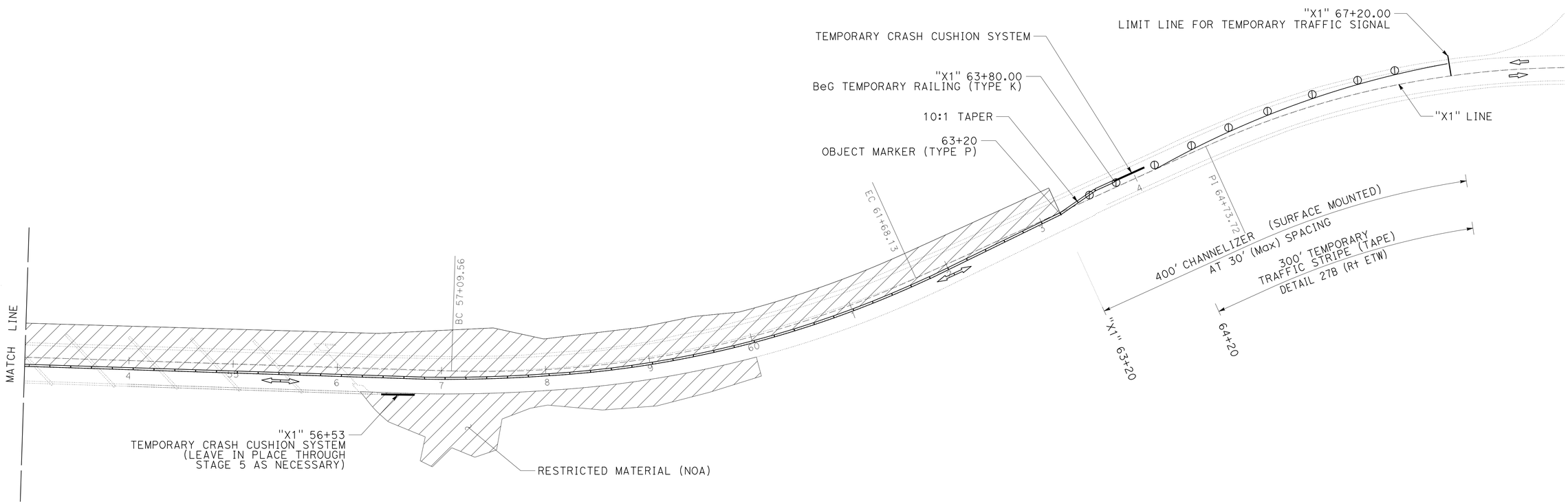

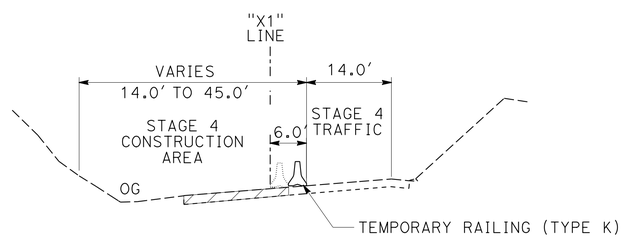

STAGE 4
TYPICAL SECTION

STAGE 4

STAGE CONSTRUCTION AND TRAFFIC HANDLING

NO SCALE

SC-8

APPROVED FOR STAGE CONSTRUCTION AND TRAFFIC HANDLING WORK ONLY

REVISED BY	DATE REVISED

CALCULATED-DESIGNED BY: TOM PENICK
CHECKED BY: DAN BROWN
FUNCTIONAL SUPERVISOR: AL TRUJILLO

STATE OF CALIFORNIA - DEPARTMENT OF TRANSPORTATION
Caltrans
DESIGN

P:\proj1\02\2c090_plans\pse\22c090ma008.dgn

LAST REVISION 06-12-16 | DATE PLOTTED => 04-AUG-2016 | TIME PLOTTED => 11:57

Dist	COUNTY	ROUTE	POST MILES TOTAL PROJECT	SHEET No.	TOTAL SHEETS
02	Plu	70	50.6/51.7	28	181

Thomas Penick 06-12-16
REGISTERED CIVIL ENGINEER DATE

06-15-16
PLANS APPROVAL DATE

REGISTERED PROFESSIONAL ENGINEER TOM PENICK No. C61068 Exp. 12-31-16 CIVIL STATE OF CALIFORNIA

THE STATE OF CALIFORNIA OR ITS OFFICERS OR AGENTS SHALL NOT BE RESPONSIBLE FOR THE ACCURACY OR COMPLETENESS OF SCANNED COPIES OF THIS PLAN SHEET.

STAGE 5 TRAFFIC HANDLING

1. T-13 REVERSIBLE ONE WAY TRAFFIC CONTROL DURING WORK SHIFT

STAGE 5 CONSTRUCTION:

1. PLACE FINAL LIFT HMA, STRIPING AND MARKERS
2. PLACE POLYESTER OVERLAY
3. PLACE GUARD RAILING
4. PLACE SHOULDER BACKING

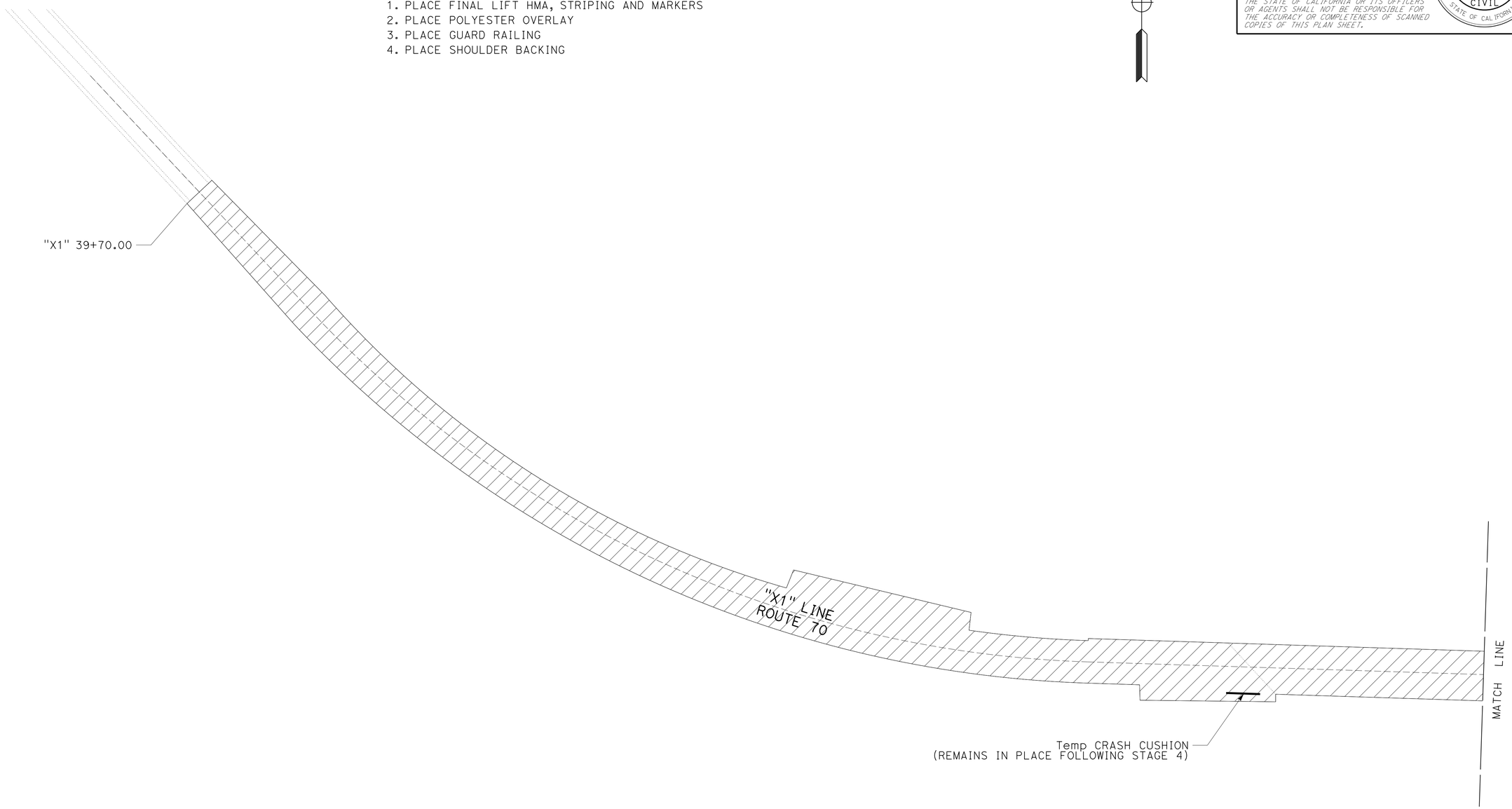

APPROVED FOR STAGE CONSTRUCTION WORK ONLY

STAGE 5

STAGE CONSTRUCTION AND TRAFFIC HANDLING

SCALE: 1" = 50'

SC-9

REVISED BY	DATE REVISED

CALCULATED-DESIGNED BY	CHECKED BY
TOM PENICK	DAN BROWN

FUNCTIONAL SUPERVISOR: AL TRUJILLO

STATE OF CALIFORNIA - DEPARTMENT OF TRANSPORTATION

Caltrans® **DESIGN**

P:\proj1\02\2c090_plans\pse\22c090ma009.dgn

LAST REVISION 06-12-16 | DATE PLOTTED => 04-AUG-2016 | TIME PLOTTED => 11:57

Dist	COUNTY	ROUTE	POST MILES TOTAL PROJECT	SHEET No.	TOTAL SHEETS
02	Plu	70	50.6/51.7	29	181

Thomas Penick 06-12-16
REGISTERED CIVIL ENGINEER DATE

06-15-16
PLANS APPROVAL DATE

REGISTERED PROFESSIONAL ENGINEER
TOM PENICK
No. C61068
Exp. 12-31-16
CIVIL
STATE OF CALIFORNIA

THE STATE OF CALIFORNIA OR ITS OFFICERS OR AGENTS SHALL NOT BE RESPONSIBLE FOR THE ACCURACY OR COMPLETENESS OF SCANNED COPIES OF THIS PLAN SHEET.

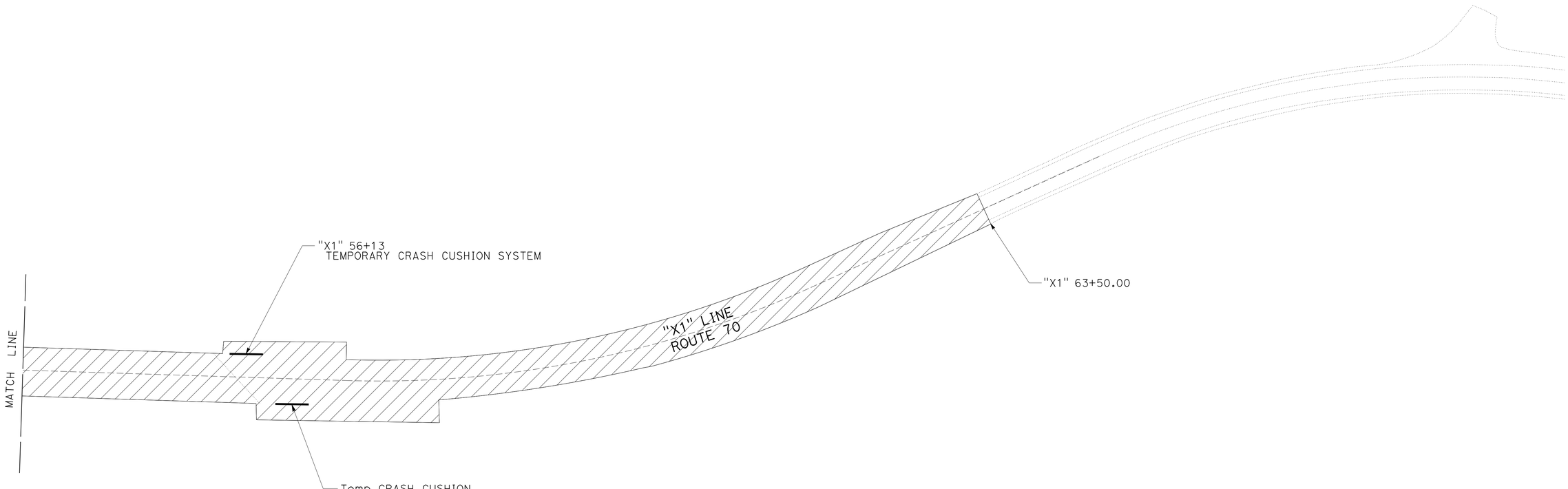

STAGE 5

STAGE CONSTRUCTION AND TRAFFIC HANDLING

SCALE: 1" = 50'

SC-10

APPROVED FOR STAGE CONSTRUCTION AND TRAFFIC HANDLING WORK ONLY

REVISED BY	DATE REVISED

CALCULATED-DESIGNED BY: TOM PENICK
CHECKED BY: DAN BROWN
FUNCTIONAL SUPERVISOR: AL TRUJILLO

STATE OF CALIFORNIA - DEPARTMENT OF TRANSPORTATION
Caltrans
DESIGN

P:\proj1\02\2c090_plans\pse\22c090ma010.dgn

LAST REVISION 06-12-16 | DATE PLOTTED => 04-AUG-2016 | TIME PLOTTED => 11:57

Dist	COUNTY	ROUTE	POST MILES TOTAL PROJECT	SHEET No.	TOTAL SHEETS
02	Plu	70	50.6/51.7	30	173

Thomas Penick 06-10-16
REGISTERED CIVIL ENGINEER DATE

06-15-16
PLANS APPROVAL DATE

REGISTERED PROFESSIONAL ENGINEER TOM PENICK No. C61068 Exp. 12-31-16 CIVIL STATE OF CALIFORNIA

THE STATE OF CALIFORNIA OR ITS OFFICERS OR AGENTS SHALL NOT BE RESPONSIBLE FOR THE ACCURACY OR COMPLETENESS OF SCANNED COPIES OF THIS PLAN SHEET.

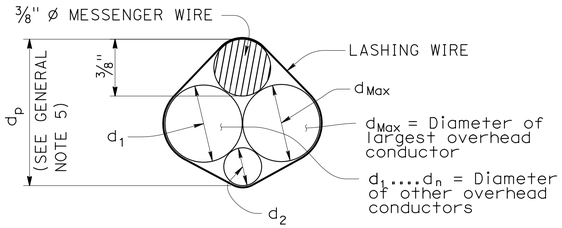

$d_p = 3/8" + d_{Max} + 0.30 * (d_1 + d_2 + \ldots d_n)$

PROJECTED DEPTH OF OVERHEAD BUNDLE, (d_p)

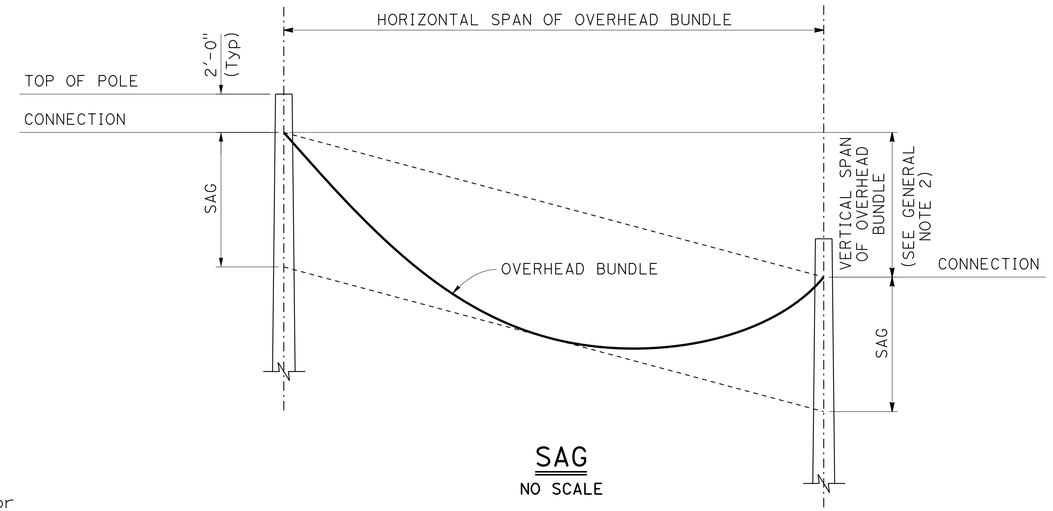

SAG

NO SCALE

Design: AASHTO Standard Specifications for Structural Supports for Highway Signs, Luminaires and Traffic Signals, Fifth Edition (LTS-5).

GROUP LOAD COMBINATIONS:

I Dead Load
II Dead Load + Wind Load
III Dead Load + 0.5 (Wind Load) + Ice Load
IV Fatigue: Not used

LOADING:

Wind Loading: 100 mph (3-second gust)
Wind Recurrence Interval: 10 years
Combined height, exposure, and elevated terrain factor = 1.05 (Exposure C, structure is not located on or over the top half of a ridge, hill, or escarpment)

Ice Loading: 3.0 psf on surfaces, 0.60 in radial thickness of ice at a unit weight of 60 pcf on overhead bundles

BASIC DESIGN VALUES:

Timber Poles: Fb = 1850 psi
Fv = 110 psi
Fcp = 230 psi
Fc = 950 psi
E = 1500 x 10^3 psi

DESIGN WIRE BREAKING STRENGTHS:

ASTM A475, Utilities Grade, 7 strand modified by termination efficiency factor of 0.8

FOUNDATION DESIGN NOTES:

1. Pole embedment depth design is based on Broms' approximate procedure as described in Article 13.6 of AASHTO LTS-5.
2. Embedment depth is calculated based on following soil parameters,
   Cohesive Soil:
   Shear strength of soil c = 1500 psf.
   Cohesionless Soil:
   ø = 30 deg, γ = 120 pcf.
   Soil assumed to be unsaturated.
3. An overload factor of 2.0 and an undercapacity factor of 0.7 were used for safety factor of 2.86.
4. Allowable vertical bearing pressure at the end bearing of poles is 3000 psf at 6 feet or more embedment.
5. Guy wire anchor minimum allowable tension capacity, "Qa" = 8,900 lbs.

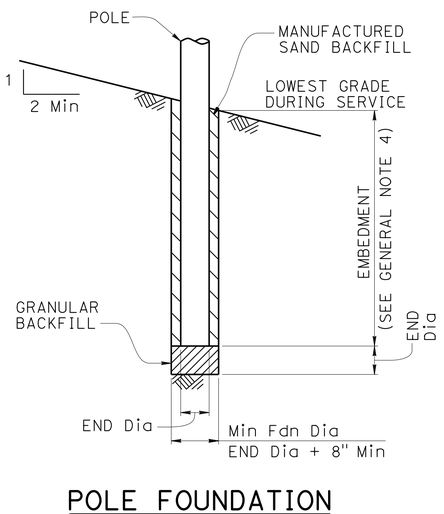

POLE FOUNDATION

GENERAL NOTES:

1. The messenger wire and any combination of overhead conductors must not exceed either a self weight of 3.0 lb/ft or the maximum d in the pole selection tables.
2. The maximum vertical span is 10% of the horizontal span.
3. For poles with adjacent unbalanced horizontal spans, the shortest horizontal span must be at least 50% of the largest horizontal span.
4. Add 2'-0" for slopes above 1V:4H.
5. For a pole supporting multiple spans, calculate d_p for each span and use the largest value.
6.

DIAMETERS AND SELF WEIGHT OF OVERHEAD CONDUCTORS

CONDUCTOR OR CABLE TYPE	DIAMETER d (in)	WEIGHT w (plf)
3 CONDUCTOR SIGNAL CABLE (3CSC)	0.400	0.0980
5 CONDUCTOR SIGNAL CABLE (5CSC)	0.500	0.1560
9 CONDUCTOR SIGNAL CABLE (9CSC)	0.650	0.2760
12 CONDUCTOR SIGNAL CABLE (12CSC)	0.800	0.3970
28 CONDUCTOR SIGNAL CABLE (28CSC)	0.900	0.6490
1-#14	0.166	0.0235
1-#12	0.185	0.0330
1-#10	0.210	0.0476
1-#8	0.271	0.0774
1-#6	0.310	0.1130
1-#4	0.359	0.1690
1-#3	0.388	0.2080
1-#2	0.420	0.2560
1-#1	0.498	0.3340
6-CONDUCTOR SIGNAL INTERCONNECT CABLE (SIC)	0.350	0.0860
12-CONDUCTOR SIGNAL INTERCONNECT CABLE (SIC)	0.500	0.1440
DETECTOR LEAD-IN CABLE (DLC)	0.310	0.0440
12 to 48-STRAND FIBER OPTIC CABLE (48FOC)	0.424	0.0600
72-STRAND FIBER OPTIC CABLE (72FOC)	0.484	0.0770
96-STRAND FIBER OPTIC CABLE (96FOC)	0.535	0.1050
144-STRAND FIBER OPTIC CABLE (144FOC)	0.670	0.1890
3/8" ø MESSENGER WIRE	0.375	0.2730

TRAFFIC HANDLING DETAILS
TEMPORARY WOOD POLES
GENERAL NOTES

NO SCALE

THD-1

REVISED BY | DATE REVISED
TOM PENICK | DAN BROWN
CALCULATED-DESIGNED BY | CHECKED BY
FUNCTIONAL SUPERVISOR: AL TRUJILLO

STATE OF CALIFORNIA - DEPARTMENT OF TRANSPORTATION
Caltrans DESIGN

P:\proj\02\2c090_plans\pse\22c090me001.dgn

LAST REVISION 02-17-16 | DATE PLOTTED => 04-AUG-2016 | TIME PLOTTED => 11:57

Dist	COUNTY	ROUTE	POST MILES TOTAL PROJECT	SHEET No.	TOTAL SHEETS
02	Plu	70	50.6/51.7	31	173

Thomas Penick 06-10-16
REGISTERED CIVIL ENGINEER DATE

06-15-16
PLANS APPROVAL DATE

REGISTERED PROFESSIONAL ENGINEER TOM PENICK No. C61068 Exp. 12-31-16 CIVIL STATE OF CALIFORNIA

THE STATE OF CALIFORNIA OR ITS OFFICERS OR AGENTS SHALL NOT BE RESPONSIBLE FOR THE ACCURACY OR COMPLETENESS OF SCANNED COPIES OF THIS PLAN SHEET.

LEGEND

Wood Pole No Attachments

A Wood Pole with Attachments

—OH— Overhead Bundle

POLE SELECTION TABLE

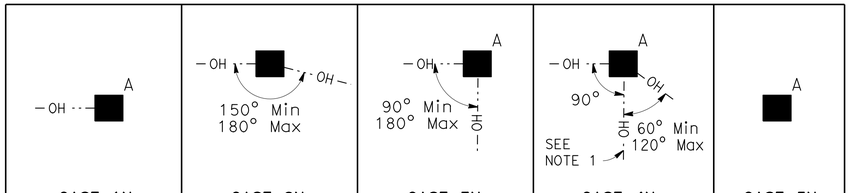

			CASE 1N				CASE 2N				CASE 3N				CASE 4N				CASE 5N
		MAXIMUM d_p	1"	1.5"	2.0"	2.5"	1"	1.5"	2.0"	2.5"	1.0"	1.5"	2.0"	2.5"	1"	1.5"	2.0"	2.5"	N/A
OVERHEAD BUNDLE HORIZONTAL SPAN (Max)	50′	MINIMUM POLE CLASS	H-1	H-2	H-2	H-2	4	3	2	1	H-2	H-2	H-3	H-3	H-4	H-4	H-4	H-5	CLASS 1 E = 10′
		POLE EMBEDMENT (E)	11′				10′				11′				12′				
	100′	MINIMUM POLE CLASS	H-2	H-3	H-4	H-5	1	H-1	H-2	H-3	H-4	H-5	H-5	H-6	H-5	H-5	H-6		
		POLE EMBEDMENT (E)	12′				11′				12′				12′				
	150′	MINIMUM POLE CLASS	H-4	H-5	H-6		H-1	H-2	H-3	H-5	H-6				H-6				
		POLE EMBEDMENT (E)	12′				12′				12′				12′				
	200′	MINIMUM POLE CLASS	H-5	H-6			H-2	H-3	H-5										
		POLE EMBEDMENT (E)	12′				12′												

1. CCTV camera assembly or vehicle detection system
2. Overhead bundle consisting of a ⅜" ø messenger wire, overhead conductors, and lashing wire
3. Luminaire with mast arm
4. Pedestrian push button assembly or accessible push button assembly
5. Signal face with 3 indications or single sheet sign panel (10 SQFT Max)
6. Riser with weather head as required
7. Pull box as required
8. Grounding as required
9. Single flashing beacon or single sheet sign panel (4 SQFT Max)
10. Single sheet sign panel (4′ x 4′ Max) or signal face with 3 indications
11. Flashing beacon control assembly
12. NEMA 3R enclosure, 26"(W) x 56"(H) x 12"(D) Max dimensions. Max weight including batteries, 450 lbs
13. 25′ SQFT Max total photovoltaic panels mounted as shown as required
14. 2-12" flashing beacons

NOTES:

1. In addition to other restrictions on maximum horizontal span, this horizontal span must not exceed 100′.
2. Cases 1N, 3N and 4N may substitute the attachments shown in Case 5N if the photovoltaic panel is not included.
3. For Case 1N without an overhead bundle (item 2) use minimum pole class H-1 with E=11′.

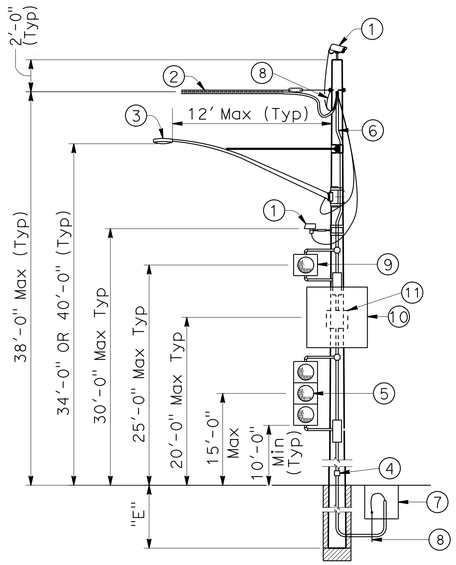

CASE 1N
POLE AT DEAD END WITH ATTACHMENTS
SEE NOTE 2

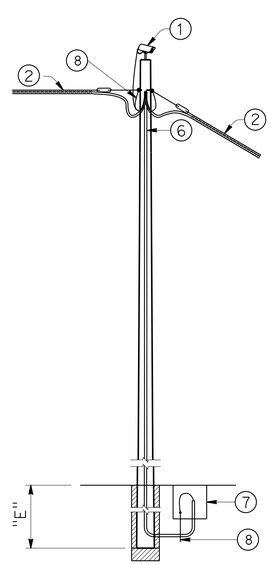

CASE 2N
POLE AT TANGENT WITHOUT ATTACHMENTS

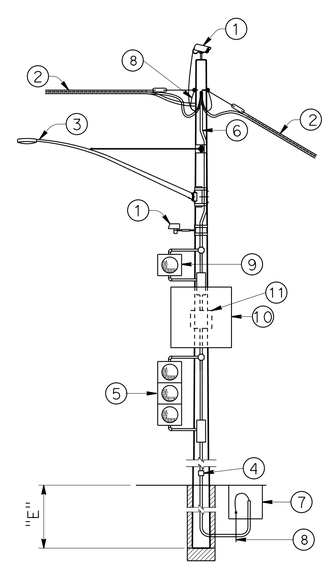

CASE 3N
POLE AT TANGENT OR CORNER WITHOUT ATTACHMENTS
SEE NOTE 2

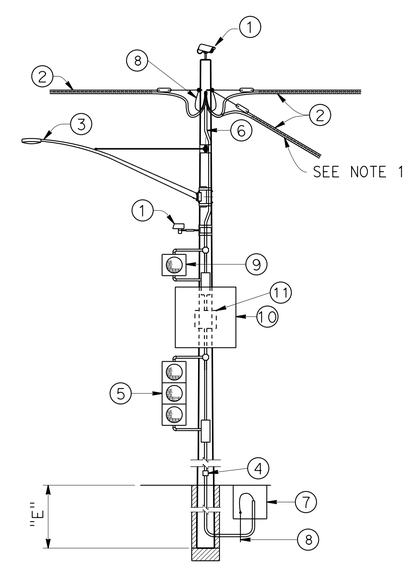

CASE 4N
POLE AT JUNCTION WITHOUT ATTACHMENTS
SEE NOTE 2

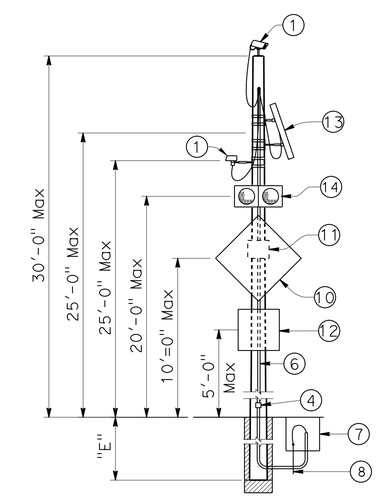

CASE 5N
POLE WITHOUT OVERHEAD BUNDLE WITH ATTACHMENTS

TRAFFIC HANDLING DETAILS
TEMPORARY WOOD POLES
NON-GUYED
NO SIGNALS ON SPANS

NO SCALE

THD-2

STATE OF CALIFORNIA - DEPARTMENT OF TRANSPORTATION
Caltrans® DESIGN

TOM PENICK — REVISED BY
DAN BROWN — DATE REVISED
AL TRUJILLO — FUNCTIONAL SUPERVISOR
CALCULATED-DESIGNED BY
CHECKED BY

P:\proj1\02\2c090_plans\pse\22c090me002.dgn

LAST REVISION 02-17-16 | DATE PLOTTED => 04-AUG-2016 | TIME PLOTTED => 11:57

BORDER LAST REVISED 7/2/2010 | USERNAME => s115152 | DGN FILE => 22c090me002.dgn | RELATIVE BORDER SCALE IS IN INCHES 0 1 2 3 | UNIT 0318 | PROJECT NUMBER & PHASE 02 0000 0161 1

Dist	COUNTY	ROUTE	POST MILES TOTAL PROJECT	SHEET No.	TOTAL SHEETS
02	Plu	70	50.6/51.7	32	173

Thomas Peick 06-10-16
REGISTERED CIVIL ENGINEER DATE

06-15-16
PLANS APPROVAL DATE

REGISTERED PROFESSIONAL ENGINEER TOM PENICK No. C61068 Exp. 12-31-16 CIVIL STATE OF CALIFORNIA

THE STATE OF CALIFORNIA OR ITS OFFICERS OR AGENTS SHALL NOT BE RESPONSIBLE FOR THE ACCURACY OR COMPLETENESS OF SCANNED COPIES OF THIS PLAN SHEET.

LEGEND

A — Wood Pole with Attachments

—OH··— Overhead Bundle

——→ Guy Anchor

POLE SELECTION TABLE

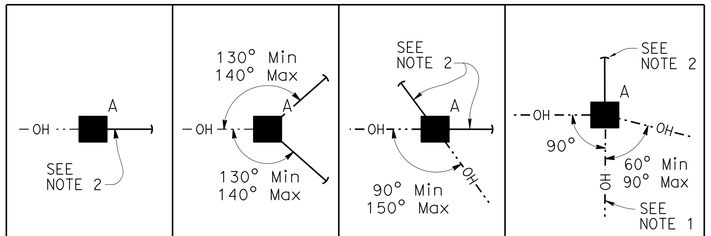

OVERHEAD BUNDLE HORIZONTAL SPAN (Max)		MAXIMUM d_p	1"	1.5"	2.0"	2.5"	1"	1.5"	2.0"	2.5"	1"	1.5"	2.0"	2.5"	1"	1.5"	2.0"	2.5"
	50′	MINIMUM POLE CLASS	H-1	H-1	H-2	H-2	1	1	1	1	1	1	1	H-1	H-2	H-2	H-3	H-3
		POLE EMBEDMENT (E)	10′				9′				9′				11′			
	100′	MINIMUM POLE CLASS	H-2	H-2	H-3	H-4	1	H-1	H-1	H-1	1	H-1	H-2	H-2	H-3	H-3	H-4	H-4
		POLE EMBEDMENT (E)	11′				9′				9′				12′			
	150′	MINIMUM POLE CLASS	H-3	H-3	H-4	H-5	H-1	H-1	H-2	H-2	H-2	H-3	H-3	H-3	H-4	H-5	H-5	H-6
		POLE EMBEDMENT (E)	11′				9′				9′				12′			
	200′	MINIMUM POLE CLASS	H-4	H-4	H-5	H-6	H-1	H-2	H-3	H-3	H-3	H-3	H-4	H-4	H-5	H-6		
		POLE EMBEDMENT (E)	11′				9′				9′				12′			

1. CCTV camera assembly or vehicle detection system
2. Overhead bundle consisting of a 3/8" ø messenger wire, overhead conductors, and lashing wire
3. Luminaire with mast arm
4. Pedestrian push button assembly or accessible push button assembly
5. Signal face with 3 indications or single sheet sign panel (10 SQFT Max)
6. Riser with weather head as required
7. Pull box as required
8. Grounding as required
9. Single flashing beacon or single sheet sign panel (4 SQFT Max)
10. Single sheet sign panel (4′ x 4′ Max) or signal face with 3 indications
11. Flashing beacon control assembly
12. 1/2" ø guy wire with white guy marker and strain insulator (for anchorage see "TEMPORARY WOOD POLES-DETAILS No. 2" sheet)

NOTES:

1. In addition to other restrictions on maximum horizontal span, this horizontal span must not exceed 100′.
2. Guy wire in line with opposing span ± 5°.

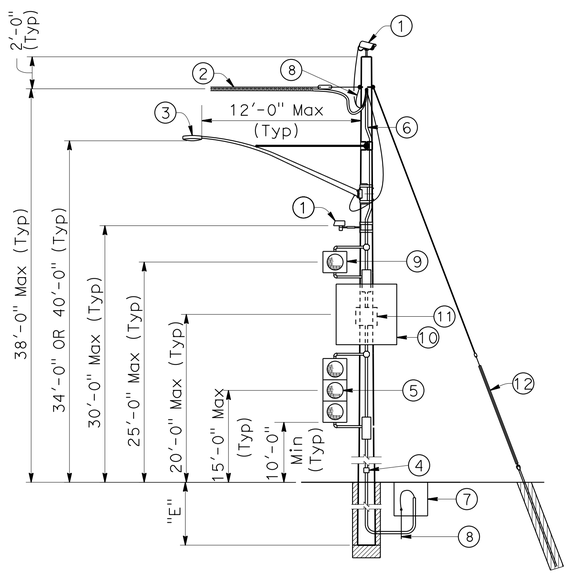

CASE 1G
POLE AT DEAD END WITH ATTACHMENTS

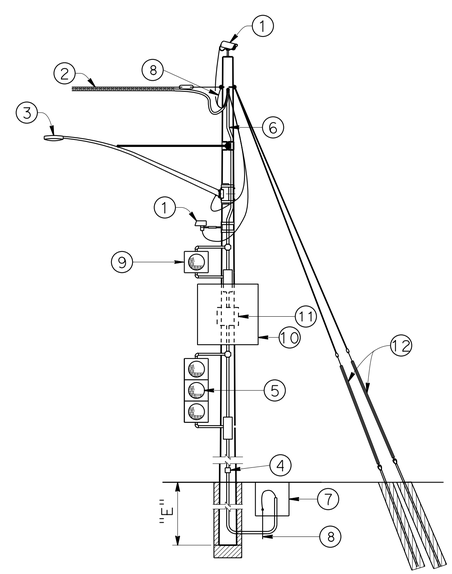

CASE 2G
POLE AT DEAD END WITH ATTACHMENTS

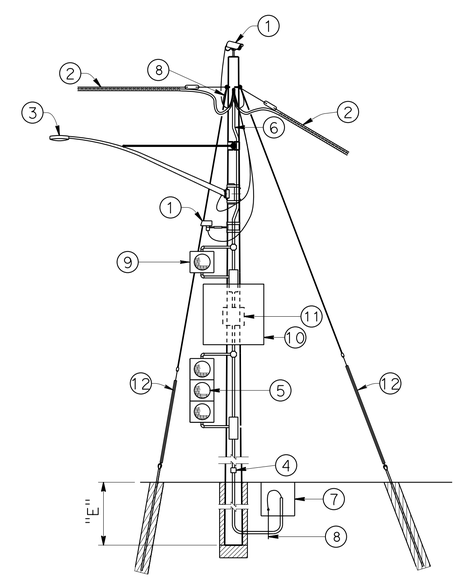

CASE 3G
POLE AT CORNER WITH ATTACHMENTS

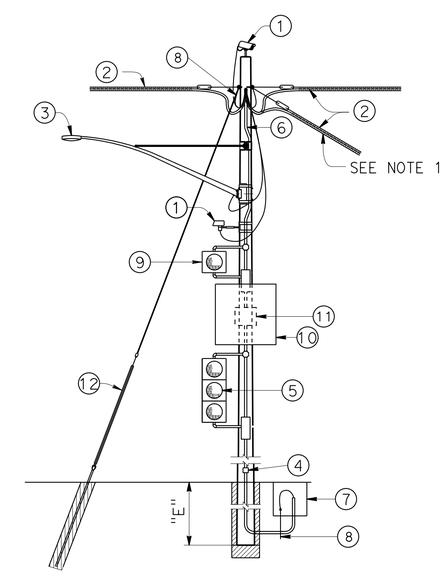

CASE 4G
POLE AT JUNCTION WITH ATTACHMENTS

TRAFFIC HANDLING DETAILS
TEMPORARY WOOD POLES GUYED - NO SIGNALS ON SPANS
NO SCALE

THD-3

REVISED BY	DATE REVISED

TOM PENICK — DAN BROWN — CALCULATED-DESIGNED BY — CHECKED BY

FUNCTIONAL SUPERVISOR: AL TRUJILLO

STATE OF CALIFORNIA - DEPARTMENT OF TRANSPORTATION — DESIGN

P:\proj\02\2c090_plans\pse\22c090me003.dgn

LAST REVISION 02-17-16 — DATE PLOTTED => 04-AUG-2016 — TIME PLOTTED => 11:57

Dist	COUNTY	ROUTE	POST MILES TOTAL PROJECT	SHEET No.	TOTAL SHEETS
02	Plu	70	50.6/51.7	33	173

Thomas Peick 06-10-16
REGISTERED CIVIL ENGINEER DATE

06-15-16
PLANS APPROVAL DATE

REGISTERED PROFESSIONAL ENGINEER TOM PENICK No. C61068 Exp. 12-31-16 CIVIL STATE OF CALIFORNIA

THE STATE OF CALIFORNIA OR ITS OFFICERS OR AGENTS SHALL NOT BE RESPONSIBLE FOR THE ACCURACY OR COMPLETENESS OF SCANNED COPIES OF THIS PLAN SHEET.

LEGEND

- Wood Pole with Attachments
- –TS– Overhead Bundle with Signal Faces (See Note 2)
- –OH– Overhead Bundle
- Guy Anchor

POLE SELECTION TABLE

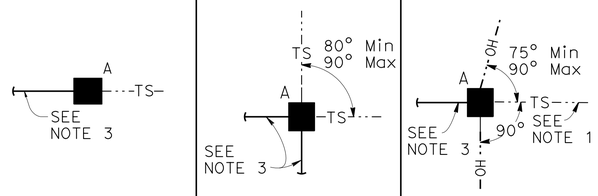

CASE 1GT | CASE 2GT | CASE 3GT

			CASE 1GT			CASE 2GT			CASE 3GT		
		MAXIMUM dp	1"	1.5"	2.0"	1"	1.5"	2.0"	1"	1.5"	2.0"
OVERHEAD BUNDLE HORIZONTAL SPAN Max	50'	MINIMUM POLE CLASS	H-2	H-3	H-3	H-2	H-2	H-2	H-3	H-4	H-4
		POLE EMBEDMENT (E)	10'			10'			11'		
	100'	MINIMUM POLE CLASS	H-3	H-3	H-4	H-2	H-3	H-3	H-4	H-4	H-5
		POLE EMBEDMENT (E)	11'			10'			11'		
	150'	MINIMUM POLE CLASS	H-3	H-4	H-4	H-2	H-3	H-4	H-4	H-5	H-5
		POLE EMBEDMENT (E)	11'			10'			11'		

1. CCTV camera assembly or vehicle detection system
2. Overhead bundle consisting of 3/8" Ø messenger wire and overhead conductors and lashing wire
3. Luminaire with mast arm
4. Pedestrian push button assembly or accessible push button assembly
5. Signal face with 3 indications or single sheet sign panel (10 SQFT Max)
6. Riser with weather head as required
7. Pull box as required
8. Grounding as required
9. 3/8" Ø tether wire
10. 1/2" Ø guy wire with white guy marker and strain insulator. For anchorage see "TEMPORARY WOOD POLES-DETAILS No. 2" sheet
11. Pedestrian signal head

NOTES:

1. In addition to other restrictions on maximum horizontal span, this horizontal span must not exceed 100'.
2. Maximum of 2 SIGNAL FACES per span within the hatched regions indicated by "LOCATION OF SIGNAL FACES".
3. Guy wire in line with opposing span ± 5°.

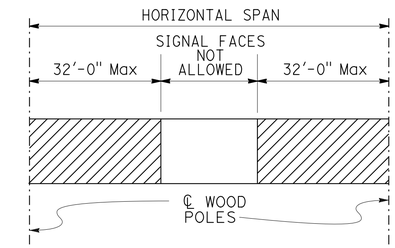

LOCATION OF SIGNAL FACES

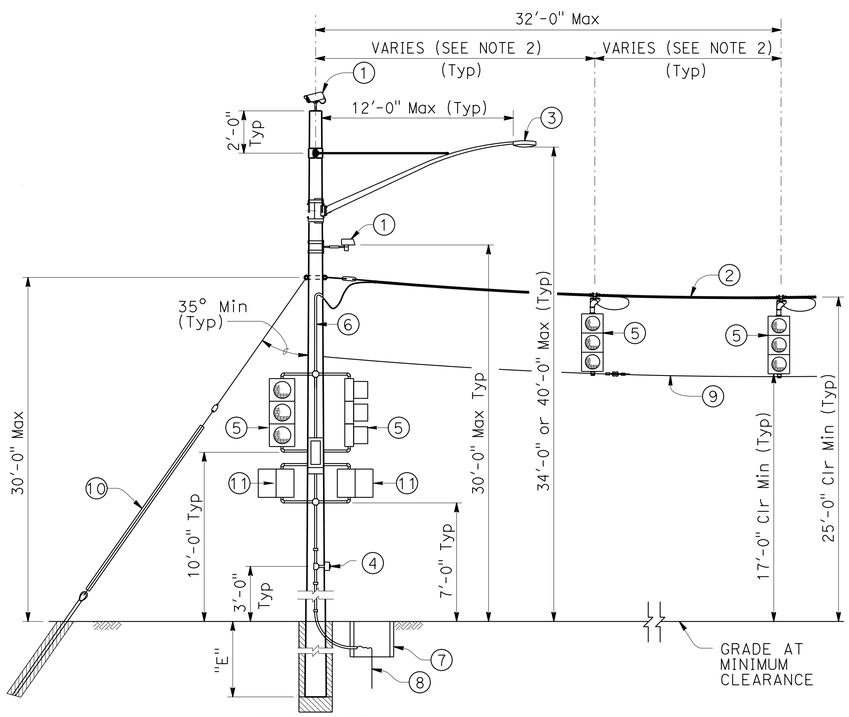

CASE 1GT
POLE AT DEAD END WITH ATTACHMENTS

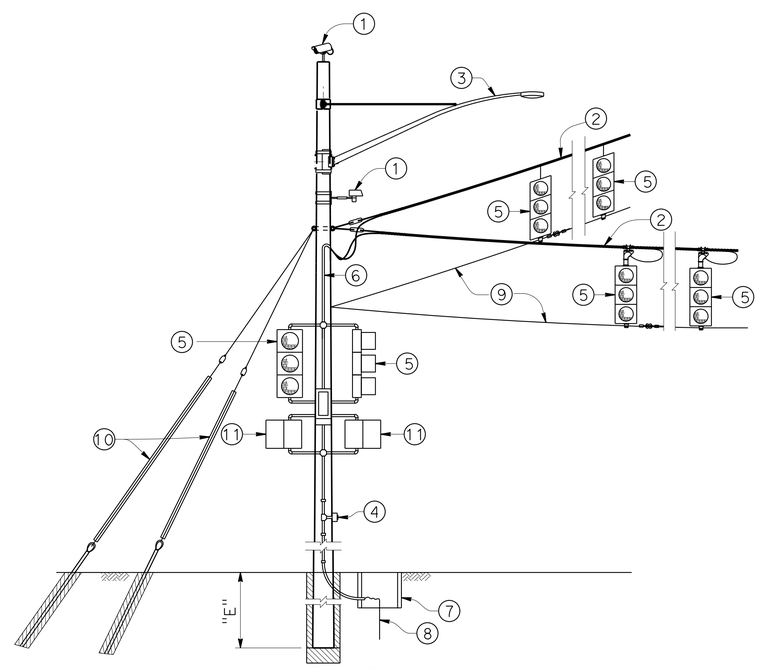

CASE 2GT
POLE AT CORNER WITH ATTACHMENTS

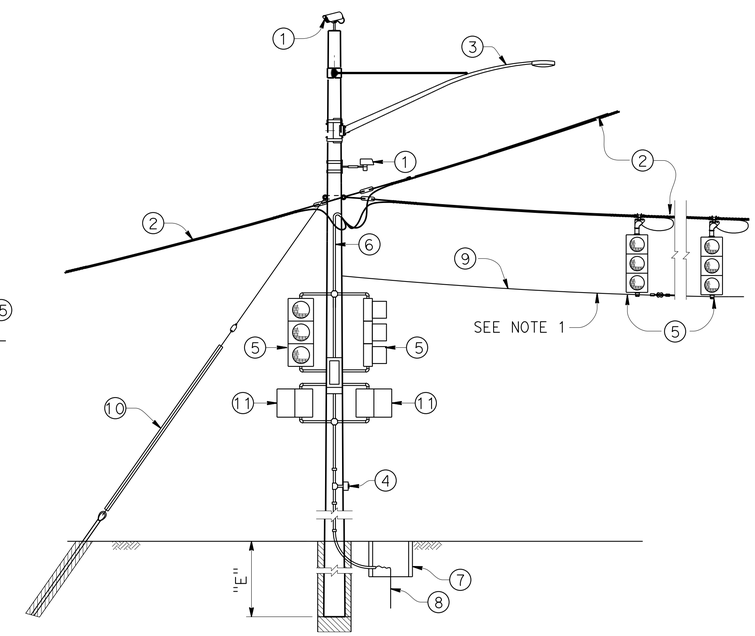

CASE 3GT
POLE AT JUNCTION WITH ATTACHMENTS

TRAFFIC HANDLING DETAILS
TEMPORARY WOOD POLES
GUYED-WITH SIGNAL FACES ON SPANS
NO SCALE

THD-4

STATE OF CALIFORNIA - DEPARTMENT OF TRANSPORTATION
Caltrans® DESIGN
FUNCTIONAL SUPERVISOR: AL TRUJILLO
CALCULATED-DESIGNED BY: TOM PENICK
CHECKED BY: DAN BROWN
REVISED BY | DATE REVISED
P:\proj1\02\2c090_plans\pse\22c090me004.dgn

LAST REVISION 02-17-16 | DATE PLOTTED => 04-AUG-2016 | TIME PLOTTED => 11:57

Dist	COUNTY	ROUTE	POST MILES TOTAL PROJECT	SHEET No.	TOTAL SHEETS
02	Plu	70	50.6/51.7	34	173

Thomas Penick 06-10-16
REGISTERED CIVIL ENGINEER DATE

06-15-16
PLANS APPROVAL DATE

REGISTERED PROFESSIONAL ENGINEER TOM PENICK No. C61068 Exp. 12-31-16 CIVIL STATE OF CALIFORNIA

THE STATE OF CALIFORNIA OR ITS OFFICERS OR AGENTS SHALL NOT BE RESPONSIBLE FOR THE ACCURACY OR COMPLETENESS OF SCANNED COPIES OF THIS PLAN SHEET.

LEGEND

A — Wood Pole with Attachments

—··TS—·· — Overhead Bundle with Signal Faces (See Note 1)

POLE SELECTION TABLE

A —··TS—··—·

CASE 1NT

OVERHEAD BUNDLE HORIZONTAL SPAN (Max)	75'	MAXIMUM d_p	1"	1.5"	2.0"
		MINIMUM POLE CLASS	H-5	H-6	H-6
		POLE EMBEDMENT (E)	13'		

1. CCTV camera assembly or vehicle detection system
2. Overhead bundle consisting of a 3/8" ø messenger wire and overhead conductors and lashing wire
3. Luminaire with mast arm
4. Pedestrian push button assembly or accessible push button assembly
5. Signal face with 3 indications or single sheet sign panel (10 SQFT Max)
6. Riser with weather head as required
7. Pull box as required
8. Grounding as required
9. 3/8" ø tether wire
10. Pedestrian signal head

NOTE:

1. MAXIMUM OF 2 SIGNAL FACES PER SPAN WITHIN THE HATCHED REGIONS INDICATED BY "LOCATION OF SIGNAL FACES".

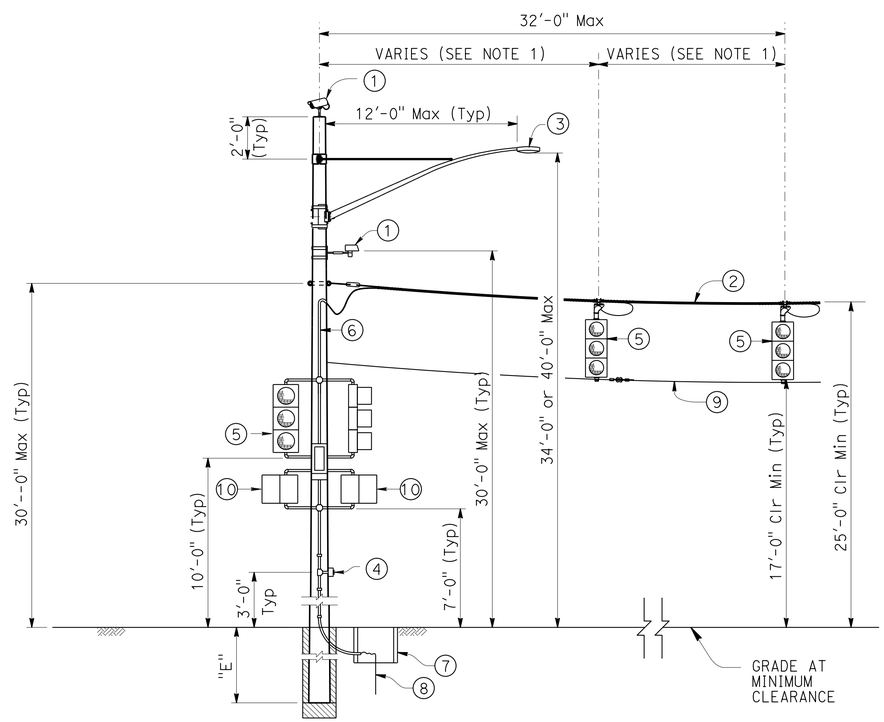

CASE 1NT
POLE AT DEAD END WITH ATTACHMENTS

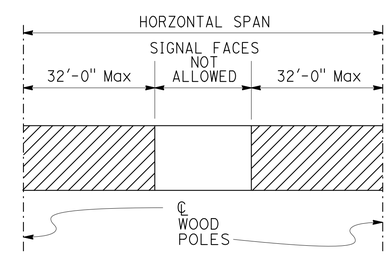

LOCATION OF SIGNAL FACES

TRAFFIC HANDLING DETAILS
TEMPORARY WOOD POLES
NON-GUYED-WITH SIGNAL FACES ON SPAN

NO SCALE

THD-5

STATE OF CALIFORNIA - DEPARTMENT OF TRANSPORTATION
Caltrans® DESIGN

FUNCTIONAL SUPERVISOR: AL TRUJILLO
CALCULATED-DESIGNED BY: TOM PENICK
CHECKED BY: DAN BROWN
REVISED BY
DATE REVISED

P:\proj1\02\2c090_plans\pse\22c090me005.dgn

LAST REVISION 02-17-16
DATE PLOTTED => 04-AUG-2016
TIME PLOTTED => 11:57

Dist	COUNTY	ROUTE	POST MILES TOTAL PROJECT	SHEET No.	TOTAL SHEETS
02	Plu	70	50.6/51.7	35	173

Thomas Penick 06-10-16
REGISTERED CIVIL ENGINEER DATE

06-15-16
PLANS APPROVAL DATE

REGISTERED PROFESSIONAL ENGINEER TOM PENICK No. C61068 Exp. 12-31-16 CIVIL STATE OF CALIFORNIA

THE STATE OF CALIFORNIA OR ITS OFFICERS OR AGENTS SHALL NOT BE RESPONSIBLE FOR THE ACCURACY OR COMPLETENESS OF SCANNED COPIES OF THIS PLAN SHEET.

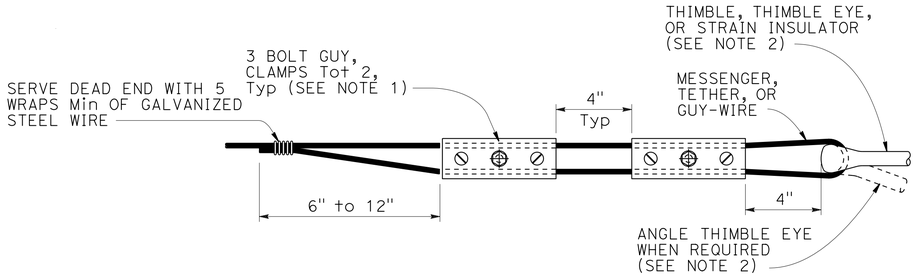

ALTERNATIVE TERMINATION OF MESSENGER WIRES USING GUY CLAMPS

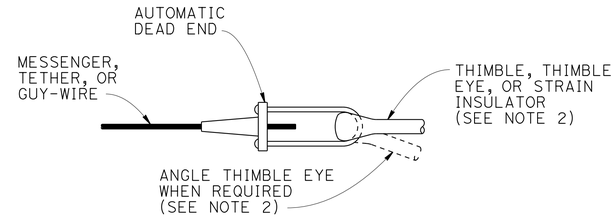

TERMINATION OF WIRES USING AUTOMATIC DEAD END

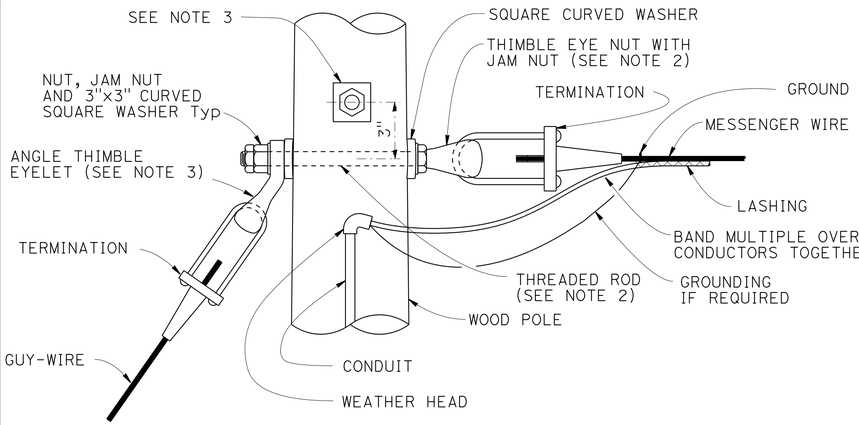

POLE AT DEAD END WITH GUY-WIRE CONNECTION

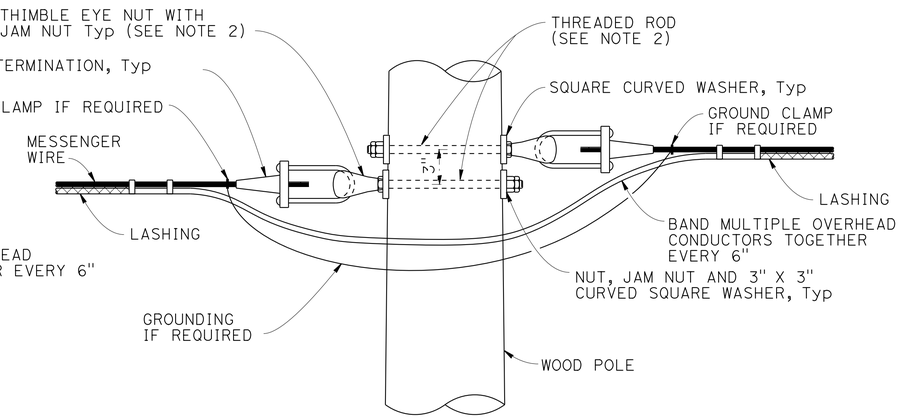

POLE AT TANGENT OR CORNER CONNECTION

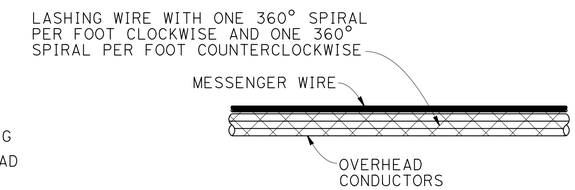

DOUBLE LASHING DETAIL

USE IF d_p IS GREATER THAN 1½"

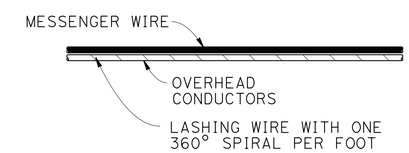

TYPICAL LASHING DETAIL

USE IF d_p IS 1½" OR LESS

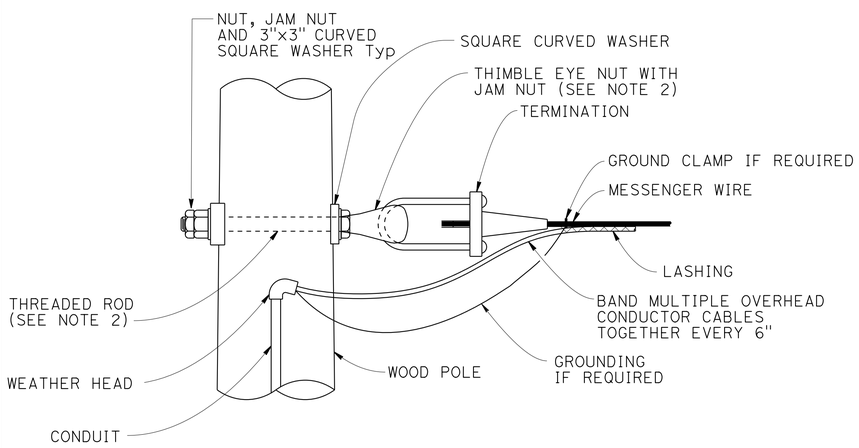

POLE AT DEAD END CONNECTION

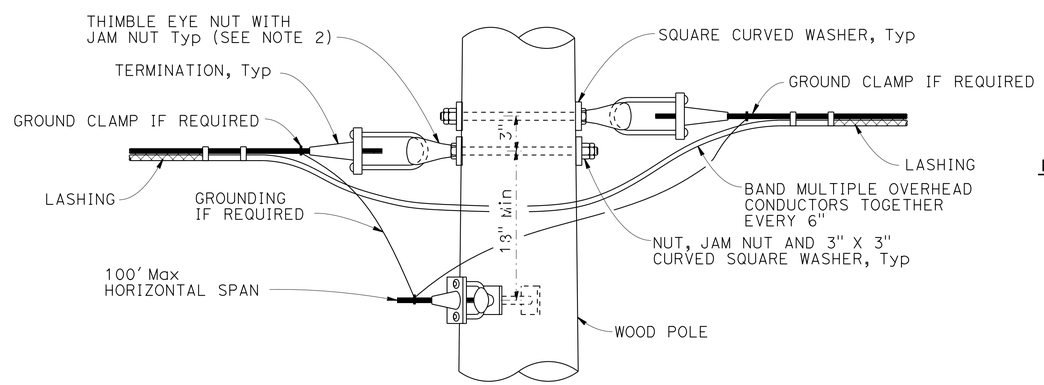

POLE AT JUNCTION CONNECTION

NOTES:

1. For guy wires use 3 clamps.
2. Use ⅝" ø except ¾" ø at guyed wires
3. Install additional angle thimble eyelet at poles with two guy wires.

TRAFFIC HANDLING DETAILS
TEMPORARY WOOD POLES DETAILS No. 1

NO SCALE

THD-6

REVISED BY | DATE REVISED
TOM PENICK | DAN BROWN
CALCULATED-DESIGNED BY | CHECKED BY
FUNCTIONAL SUPERVISOR: AL TRUJILLO

STATE OF CALIFORNIA - DEPARTMENT OF TRANSPORTATION
Caltrans DESIGN

P:\proj1\02\2c090_plans\pse\22c090me006.dgn

LAST REVISION 02-17-16 | DATE PLOTTED => 04-AUG-2016 | TIME PLOTTED => 11:57

Dist	COUNTY	ROUTE	POST MILES TOTAL PROJECT	SHEET No.	TOTAL SHEETS
02	Plu	70	50.6/51.7	36	173

Thomas Penick 06-10-16
REGISTERED CIVIL ENGINEER DATE

06-15-16
PLANS APPROVAL DATE

REGISTERED PROFESSIONAL ENGINEER TOM PENICK No. C61068 Exp. 12-31-16 CIVIL STATE OF CALIFORNIA

THE STATE OF CALIFORNIA OR ITS OFFICERS OR AGENTS SHALL NOT BE RESPONSIBLE FOR THE ACCURACY OR COMPLETENESS OF SCANNED COPIES OF THIS PLAN SHEET.

NOTE:

1. For minimum allowable tension capacity of anchors see "Temporary Wood Poles - General Notes" sheet.

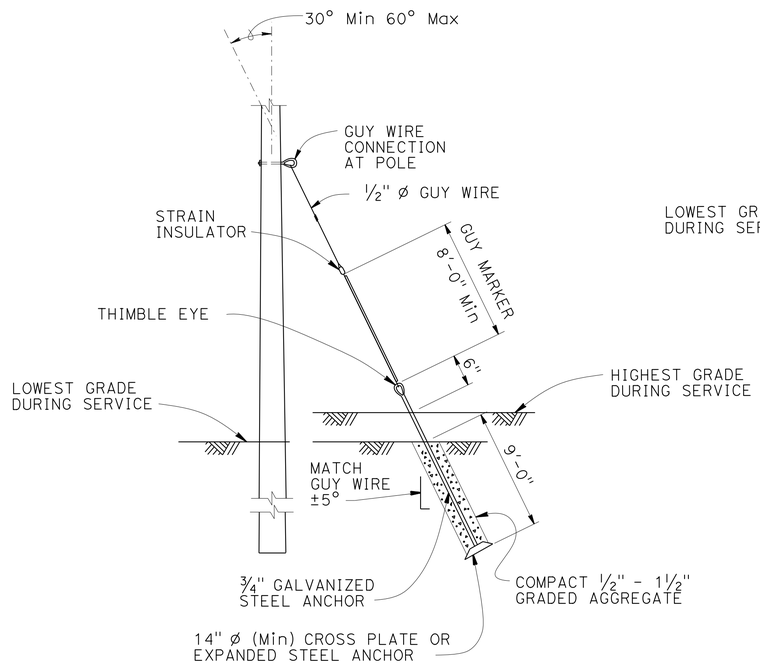

NOTE:

Helical anchor detail may be used in place of expanded steel anchors.

EXPANDED STEEL ANCHOR DETAIL

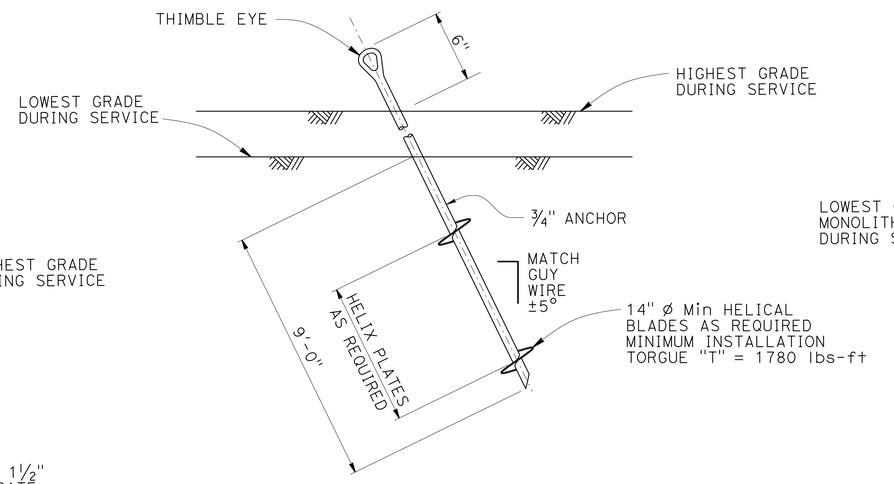

HELICAL ANCHOR DETAIL

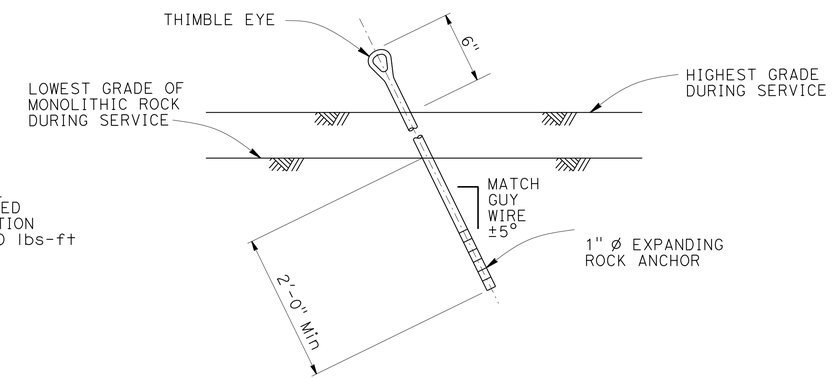

EXPANDING ROCK ANCHOR DETAIL

TRAFFIC HANDLING DETAILS
TEMPORARY WOOD POLES DETAILS No. 2

NO SCALE

THD-7

REVISED BY	DATE REVISED

CALCULATED-DESIGNED BY: TOM PENICK
CHECKED BY: DAN BROWN
FUNCTIONAL SUPERVISOR: AL TRUJILLO

STATE OF CALIFORNIA - DEPARTMENT OF TRANSPORTATION
Caltrans® DESIGN

P:\proj1\02\2c090_plans\pse\22c090me007.dgn

LAST REVISION 02-17-16 | DATE PLOTTED => 04-AUG-2016 | TIME PLOTTED => 11:57

Dist	COUNTY	ROUTE	POST MILES TOTAL PROJECT	SHEET No.	TOTAL SHEETS
02	Plu	70	50.6/51.7	37	173

Thomas Peik 06-10-16
REGISTERED CIVIL ENGINEER DATE

06-15-16
PLANS APPROVAL DATE

REGISTERED PROFESSIONAL ENGINEER TOM PENICK No. C61068 Exp. 12-31-16 CIVIL STATE OF CALIFORNIA

THE STATE OF CALIFORNIA OR ITS OFFICERS OR AGENTS SHALL NOT BE RESPONSIBLE FOR THE ACCURACY OR COMPLETENESS OF SCANNED COPIES OF THIS PLAN SHEET.

NOTES:

1. Luminaire mast arms must be in compliance with Standard Plan ES-6D with noted modifications.
2. Verify pole dimensions at tie-rod attachment height. Fabricate 8" flat bar with "L" Dimension to maintain an open gap between flanges in finished installation.
3. Not all screw heads and bolt heads are shown for clarity.
4. Mast arm not shown for clarity.

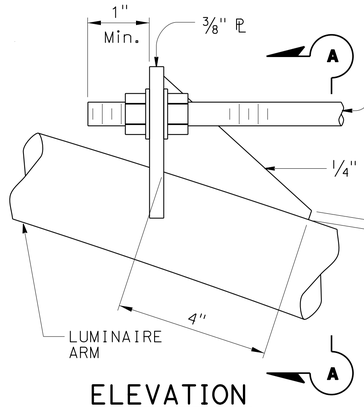

ELEVATION

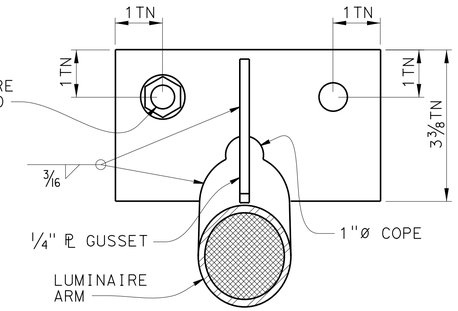

SECTION A-A

DETAIL A
TIE-ROD AT LUMINAIRE ARM
NO SCALE

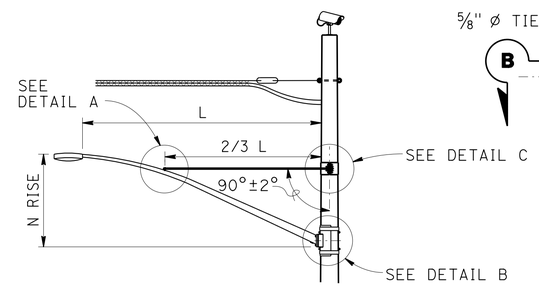

LUMINAIRE MAST ARM

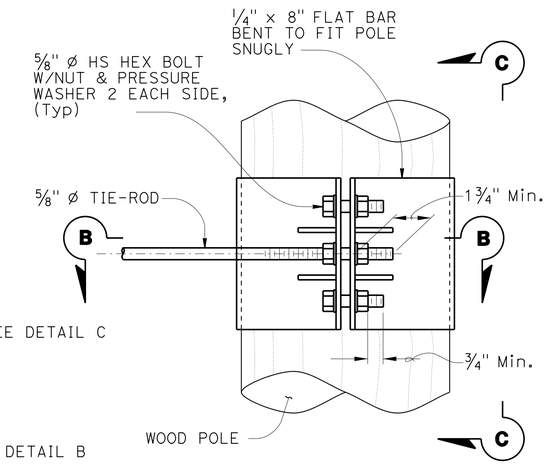

ELEVATION

NOTE:
Not all screw and bolt heads shown for clarity.

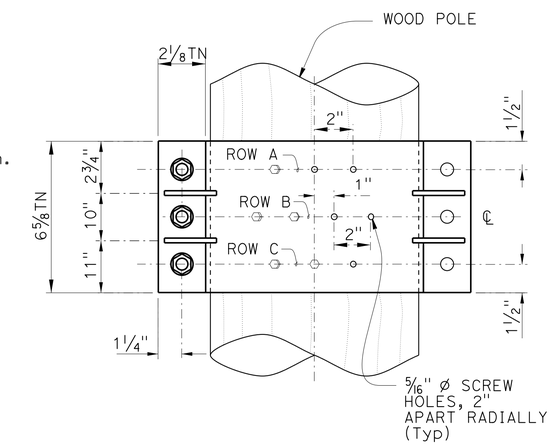

VIEW C-C

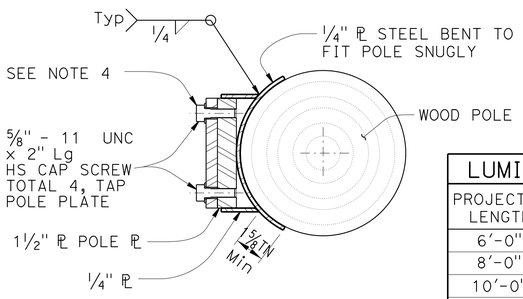

SECTION E-E

LUMINAIRE MAST ARM DATA			
PROJECTED LENGTH	N RISE	Min OD AT POLE	NOMINAL THICKNESS
6'-0"	2'-0"±	3 1/4"	0.1196"
8'-0"	2'-6"±	3 1/2"	
10'-0"	3'-3"±	3 7/8"	
12'-0"	4'-3"±		

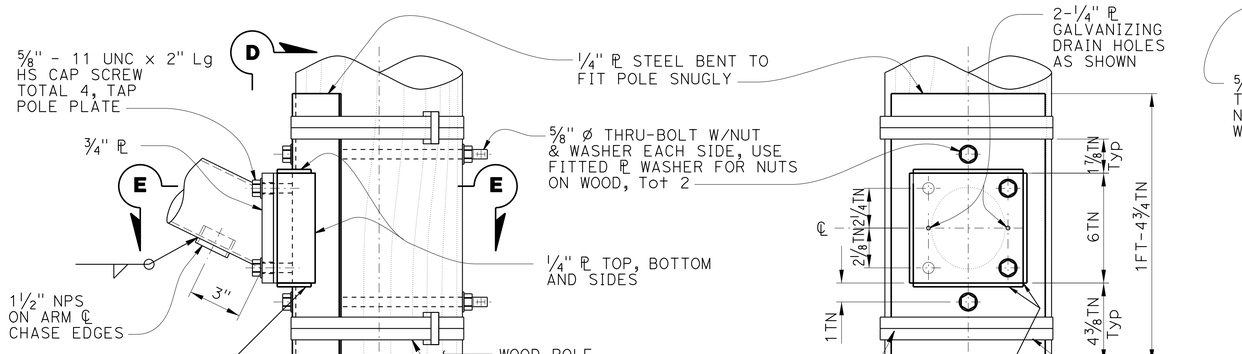

ELEVATION

VIEW D-D

DETAIL B
ARM CONNECTION DETAILS
NO SCALE

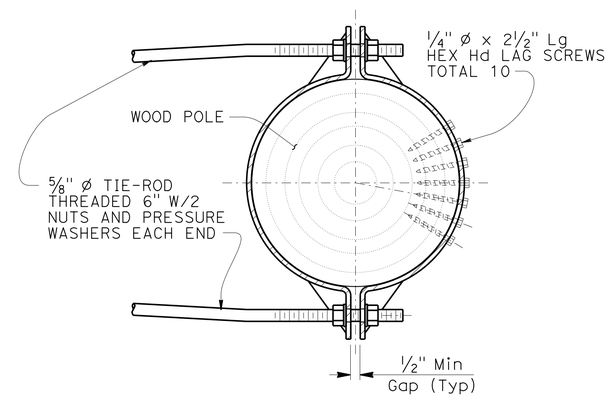

SECTION B-B

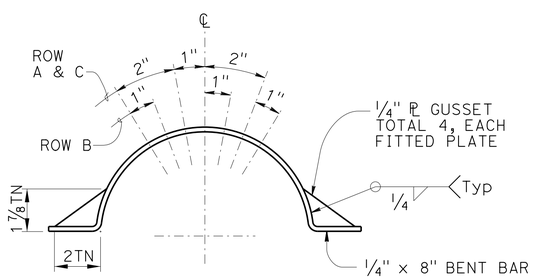

LAG SCREW AND
GUSSET PLATE LAYOUT

DETAIL C
TIE-ROD AT POLE
NO SCALE

TRAFFIC HANDLING DETAILS
TEMPORARY WOOD POLES
DETAILS No. 3
NO SCALE

THD-8

REVISED BY	DATE REVISED	CALCULATED-DESIGNED BY	CHECKED BY	FUNCTIONAL SUPERVISOR
TOM PENICK	DAN BROWN			AL TRUJILLO

STATE OF CALIFORNIA - DEPARTMENT OF TRANSPORTATION
Caltrans DESIGN

P:\proj1\02\2c090_plans\pse\22c090me008.dgn

LAST REVISION 02-17-16 | DATE PLOTTED => 04-AUG-2016 | TIME PLOTTED => 11:57

Dist	COUNTY	ROUTE	POST MILES TOTAL PROJECT	SHEET No.	TOTAL SHEETS
02	Plu	70	50.6/51.7	38	173

Thomas Penick 06-10-16
REGISTERED CIVIL ENGINEER DATE

06-15-16
PLANS APPROVAL DATE

REGISTERED PROFESSIONAL ENGINEER TOM PENICK No. C61068 Exp. 12-31-16 CIVIL STATE OF CALIFORNIA

THE STATE OF CALIFORNIA OR ITS OFFICERS OR AGENTS SHALL NOT BE RESPONSIBLE FOR THE ACCURACY OR COMPLETENESS OF SCANNED COPIES OF THIS PLAN SHEET.

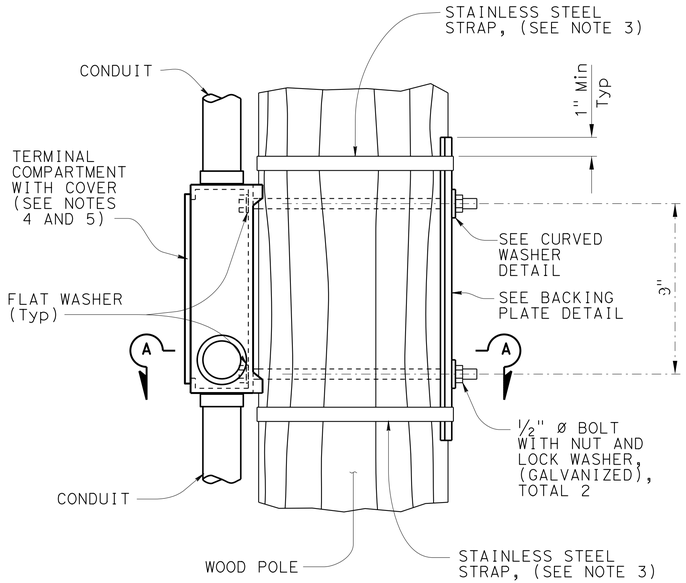

ELEVATION

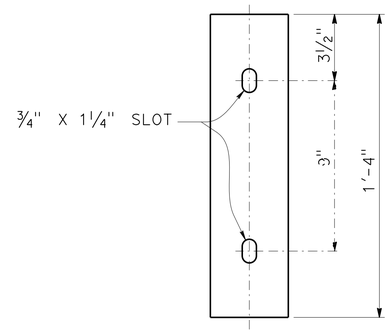

ELEVATION

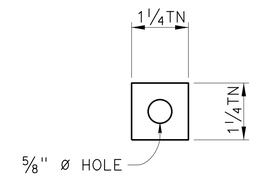

ELEVATION

PLAN

BACKING PLATE DETAIL

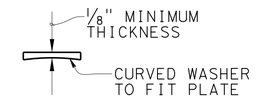

PLAN

CURVED WASHER DETAIL

NOTES:

1. VERIFY POLE DIMENSIONS AT TERMINAL COMPARTMENT FOR FABRICATION OF BACKING PLATE AND CURVED WASHER.
2. BACKING PLATE TO BE GALVANIZED AFTER FABRICATION.
3. " X 0.044" MINIMUM, ROUNDED EDGE STAINLESS STEEL STRAPS, DOUBLE WRAPPED WITH 2" LONG BEND UNDER STAINLESS STEEL STRAP BUCKLE.
4. FOR MISCELLANEOUS DETAILS FOR SIGNAL MOUNTING NOT SHOWN SEE STANDARD PLAN ES-4D.
5. IF THE TERMINAL COMPARTMENT HAS A CABLE ENTRY GUIDE ON THE REAR FACE, REMOVE THE CABLE ENTRY GUIDE TO A LEVEL THAT WILL NOT INTERFERE WITH THE WOOD POST. CLOSE ANY UNUSED CABLE ENTRY LOCATIONS WITH RAINTIGHT CAP.

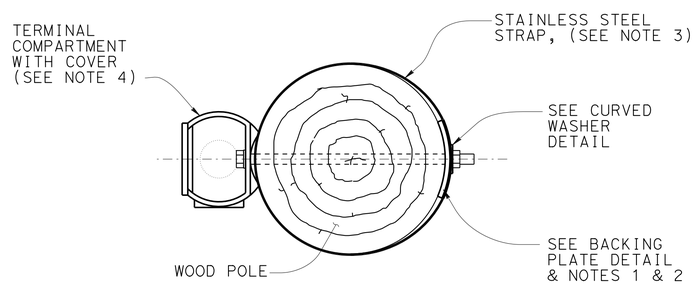

SECTION A-A

SIDE MOUNTING
TERMINAL COMPARTMENT

TRAFFIC HANDLING DETAILS

TEMPORARY WOOD POLES DETAILS No. 4

NO SCALE

THD-9

REVISED BY	DATE REVISED

CALCULATED-DESIGNED BY	CHECKED BY
TOM PENICK	DAN BROWN

FUNCTIONAL SUPERVISOR: AL TRUJILLO

STATE OF CALIFORNIA - DEPARTMENT OF TRANSPORTATION
Caltrans DESIGN

P:\proj1\02\2c090_plans\pse\22c090me009.dgn

LAST REVISION 02-17-16 | DATE PLOTTED => 04-AUG-2016 | TIME PLOTTED => 11:57

Dist	COUNTY	ROUTE	POST MILES TOTAL PROJECT	SHEET No.	TOTAL SHEETS
02	Plu	70	50.6/51.7	39	173

Thomas Penick 06-10-16
REGISTERED CIVIL ENGINEER DATE

06-15-16
PLANS APPROVAL DATE

REGISTERED PROFESSIONAL ENGINEER TOM PENICK No. C61068 Exp. 12-31-16 CIVIL STATE OF CALIFORNIA

THE STATE OF CALIFORNIA OR ITS OFFICERS OR AGENTS SHALL NOT BE RESPONSIBLE FOR THE ACCURACY OR COMPLETENESS OF SCANNED COPIES OF THIS PLAN SHEET.

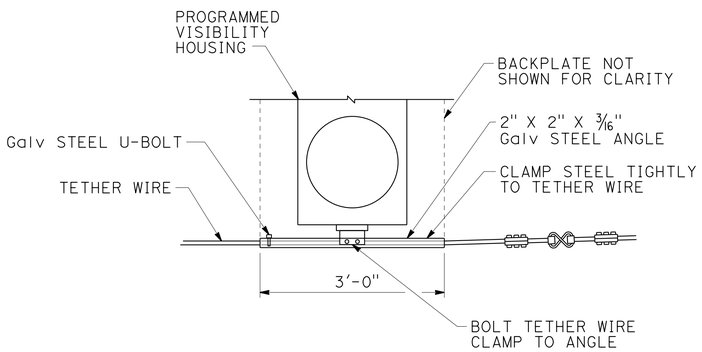

TETHER WIRE ATTACHMENT FOR PROGRAMMED VISIBILITY SIGNAL FACE

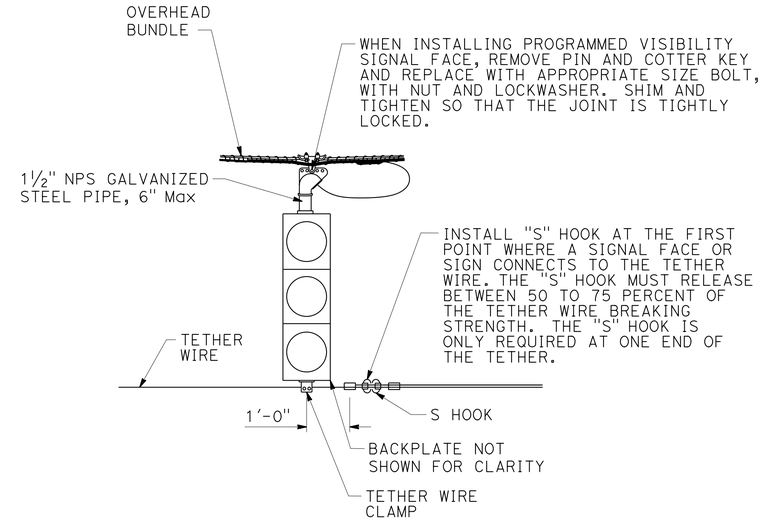

SIGNAL FACE SUPPORT

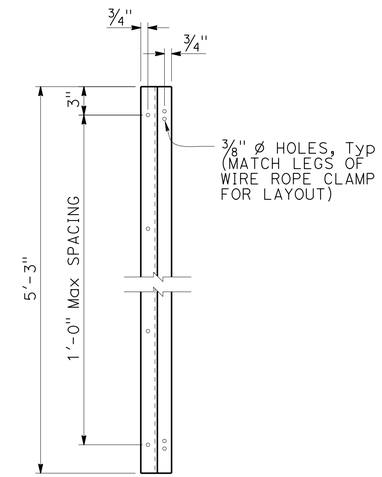

Z-BAR ELEVATION

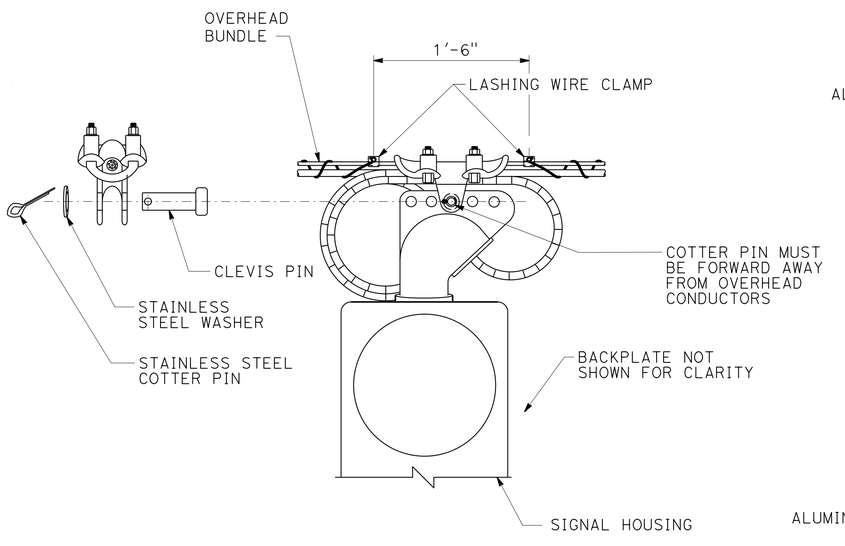

MESSENGER WIRE CLAMP COTTER PIN DETAIL

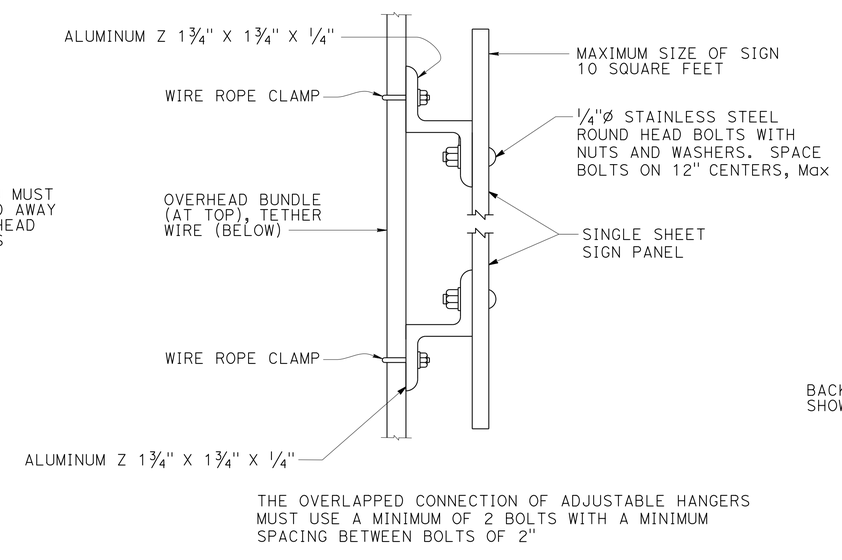

THE OVERLAPPED CONNECTION OF ADJUSTABLE HANGERS MUST USE A MINIMUM OF 2 BOLTS WITH A MINIMUM SPACING BETWEEN BOLTS OF 2"

SIGN MOUNTING DETAIL

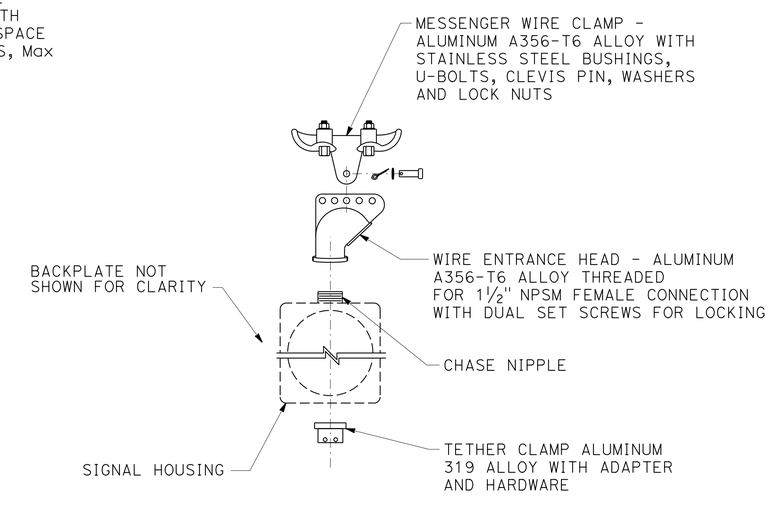

SIGNAL FACE SUPPORT EXPLODED VIEW

TRAFFIC HANDLING DETAILS
TEMPORARY WOOD POLES DETAILS No. 5

NO SCALE

THD-10

REVISED BY	DATE REVISED
TOM PENICK	DAN BROWN

CALCULATED-DESIGNED BY / CHECKED BY

FUNCTIONAL SUPERVISOR: AL TRUJILLO

STATE OF CALIFORNIA - DEPARTMENT OF TRANSPORTATION
Caltrans® DESIGN

P:\proj1\02\2c090_plans\pse\22c090me010.dgn

LAST REVISION 02-17-16 | DATE PLOTTED => 04-AUG-2016 | TIME PLOTTED => 11:57

Dist	COUNTY	ROUTE	POST MILES TOTAL PROJECT	SHEET No.	TOTAL SHEETS
02	Plu	70	50.6/51.7	40	173

Thomas Penick 06-10-16
REGISTERED CIVIL ENGINEER DATE

06-15-16
PLANS APPROVAL DATE

REGISTERED PROFESSIONAL ENGINEER
TOM PENICK
No. C61068
Exp. 12-31-16
CIVIL
STATE OF CALIFORNIA

THE STATE OF CALIFORNIA OR ITS OFFICERS OR AGENTS SHALL NOT BE RESPONSIBLE FOR THE ACCURACY OR COMPLETENESS OF SCANNED COPIES OF THIS PLAN SHEET.

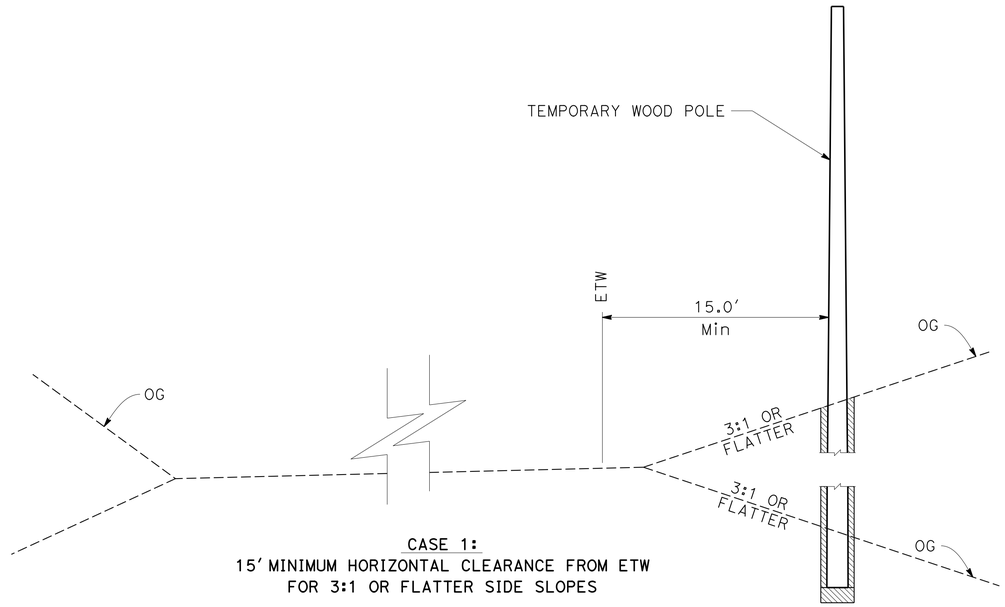

CASE 1:
15′ MINIMUM HORIZONTAL CLEARANCE FROM ETW
FOR 3:1 OR FLATTER SIDE SLOPES

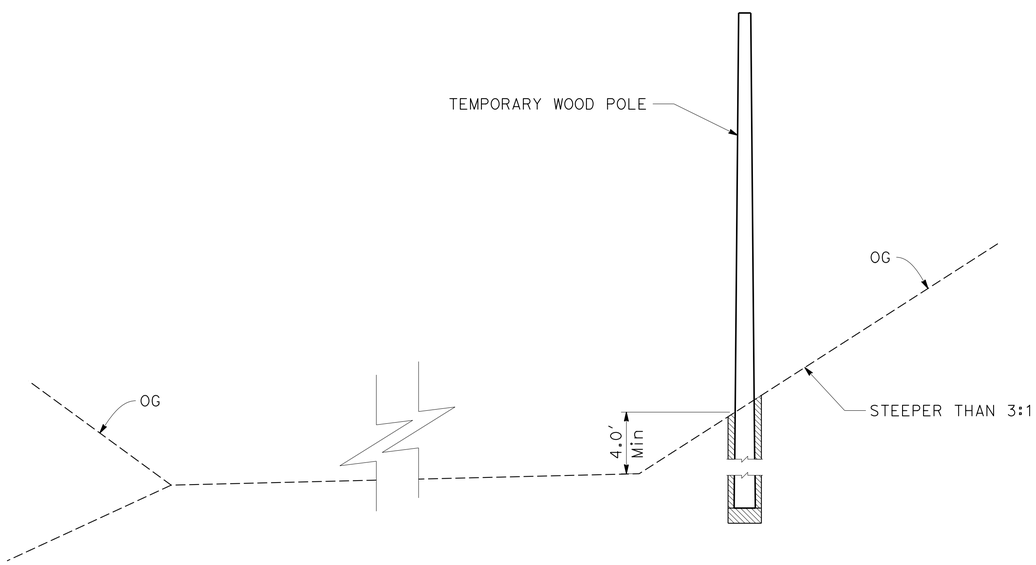

CASE 2:
4′ MINIMUM VERTICAL CLEARANCE FROM ROADWAY
FOR CUT SLOPES STEEPER THAN 3:1

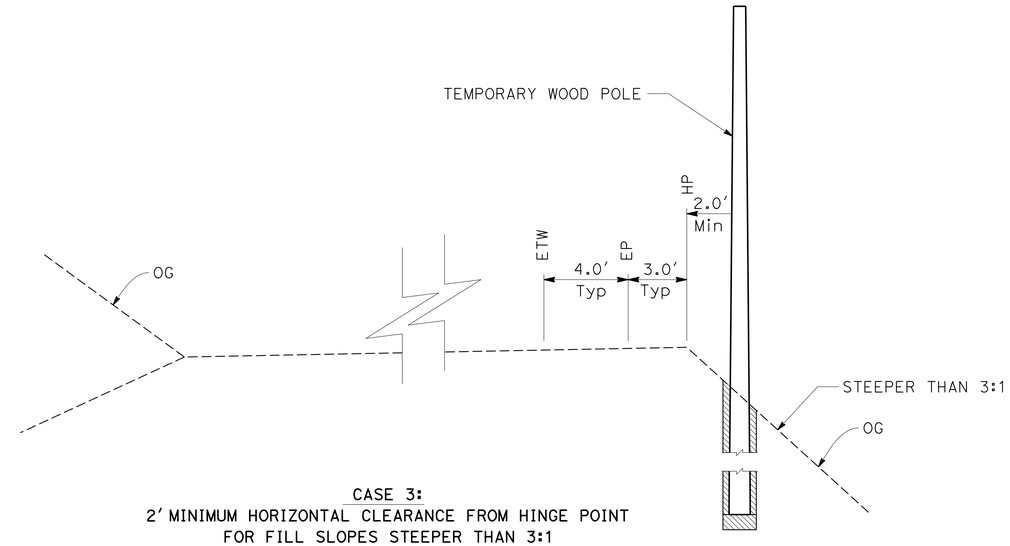

CASE 3:
2′ MINIMUM HORIZONTAL CLEARANCE FROM HINGE POINT
FOR FILL SLOPES STEEPER THAN 3:1

TRAFFIC HANDLING DETAILS

TEMPORARY WOOD POLE ROADWAY CLEARANCE DETAIL

NO SCALE

THD-11

REVISED BY	DATE REVISED

CALCULATED-DESIGNED BY	TOM PENICK
CHECKED BY	DAN BROWN

FUNCTIONAL SUPERVISOR: AL TRUJILLO

STATE OF CALIFORNIA - DEPARTMENT OF TRANSPORTATION
Caltrans® DESIGN

P:\proj1\02\2c090_plans\pse\22c090me011.dgn

LAST REVISION 02-17-16
DATE PLOTTED => 04-AUG-2016
TIME PLOTTED => 11:57

Dist	COUNTY	ROUTE	POST MILES TOTAL PROJECT	SHEET No.	TOTAL SHEETS
02	Plu	70	50.6/51.7	41	181

Thomas Penick 06-12-16
REGISTERED CIVIL ENGINEER DATE

06-15-16
PLANS APPROVAL DATE

REGISTERED PROFESSIONAL ENGINEER TOM PENICK No. C61068 Exp. 12-31-16 CIVIL STATE OF CALIFORNIA

THE STATE OF CALIFORNIA OR ITS OFFICERS OR AGENTS SHALL NOT BE RESPONSIBLE FOR THE ACCURACY OR COMPLETENESS OF SCANNED COPIES OF THIS PLAN SHEET.

TRAFFIC HANDLING QUANTITIES

STATION	STAGE	TEMPORARY TRAFFIC STRIPE (TAPE)	CHANNELIZER (SURFACE MOUNTED)	TEMPORARY RAILING (TYPE K)	TEMPORARY CRASH CUSHION SYSTEM	REMOVE THERMOPLASTIC TRAFFIC STRIPE	OBJECT MARKERS (TYPE P)	TEMPORARY PAVEMENT MARKING (PAINT)	HOT MIX ASPHALT (TYPE A)	NOTES
		LF	EA	LF	EA	LF	EA	SQFT	TON	
"X1" 36+50 TO 42+50	1	600								
"X1" 60+70 TO 66+70		600								
"X1" 36+00 TO 46+50			23							
"X1" 57+50 TO 67+20			21							
"X1" 47+34.50 TO 57+12.54				980			2			
"X1" 47+34					1					
"X1" 57+12					1					
"X1" 36+00 TO 42+50						650				
"X1" 60+70 TO 67+20						650				
"X1" 36+00								12		LIMIT LINE
"X1" 67+20								12		LIMIT LINE
"X1" 42+96 TO 49+50									242	TEMPORARY PAVEMENT WIDENING
"X1" 40+50 TO 46+50	2	600								
"X1" 60+70 TO 66+70		600								
"X1" 36+00 TO 50+00			28							
"X1" 48+35 TO 51+59				340						LEAVE IN PLACE THROUGH STAGE 5
"X1" 57+40 TO 67+20			20							
"X1" 50+19.19 TO 57+18.52				700			2			
"X1" 47+34					1					
"X1" 57+12					1					
"X1" 36+00 TO 39+00	3	300								
"X1" 64+20 TO 67+20		300								
"X1" 36+00 TO 40+00			10							
"X1" 63+20 TO 67+20			10							
"X1" 39+41.80 TO 63+78.80				2440			2			
"X1" 38+80					1					
"X1" 64+20					1					
"X1" 36+00								12		LIMIT LINE
"X1" 67+20								12		LIMIT LINE
"X1" 36+00 TO 39+00	4	300								
"X1" 64+20 TO 67+20		300								
"X1" 36+00 TO 40+00			10							
"X1" 63+20 TO 67+20			10							
"X1" 36+40.84 TO 63+80.00				2740			2			
"X1" 39+40					1					
"X1" 51+79					1					LEAVE IN PLACE THROUGH STAGE 5
"X1" 56+53					1					LEAVE IN PLACE THROUGH STAGE 5
"X1" 63+80					1					
"X1" 56+13	5				1					
	TOTAL	3600	132	7200	11	1300	8	48	242 *	

(N) - NOT A SEPARATE PAY ITEM, FOR INFORMATION ONLY

* ADDITIONAL QUANTITIES FOR HMA (TYPE A) ARE SHOWN ON SHEET Q-1.

TRAFFIC HANDLING QUANTITIES
THQ-1

REVISED BY | DATE REVISED
TOM PENICK | DAN BROWN
CALCULATED-DESIGNED BY | CHECKED BY
FUNCTIONAL SUPERVISOR
AL TRUJILLO

STATE OF CALIFORNIA - DEPARTMENT OF TRANSPORTATION
Caltrans
DESIGN

P:\proj1\02\2c090_plans\pse\22c090mf001.dgn

LAST REVISION 06-12-16 | DATE PLOTTED => 04-AUG-2016 | TIME PLOTTED => 11:57

Dist	COUNTY	ROUTE	POST MILES TOTAL PROJECT	SHEET No.	TOTAL SHEETS
02	Plu	70	50.6/51.7	42	181

Thomas Penick 06-12-16
REGISTERED CIVIL ENGINEER DATE

06-15-16
PLANS APPROVAL DATE

REGISTERED PROFESSIONAL ENGINEER TOM PENICK No. C61068 Exp. 12-31-16 CIVIL STATE OF CALIFORNIA

THE STATE OF CALIFORNIA OR ITS OFFICERS OR AGENTS SHALL NOT BE RESPONSIBLE FOR THE ACCURACY OR COMPLETENESS OF SCANNED COPIES OF THIS PLAN SHEET.

LEGEND:

- MARKER (CULVERT)
- DELINEATOR (CLASS 2), (TYPE E)
- XX — PAVEMENT DELINEATION STRIPE DETAIL No.
- Beg/END STRIPE
- STRIPE CHANGE LOCATION
- REMOVE ROADSIDE SIGN
- METAL SIGN (1-POST)
- S — DELINEATOR SPACING

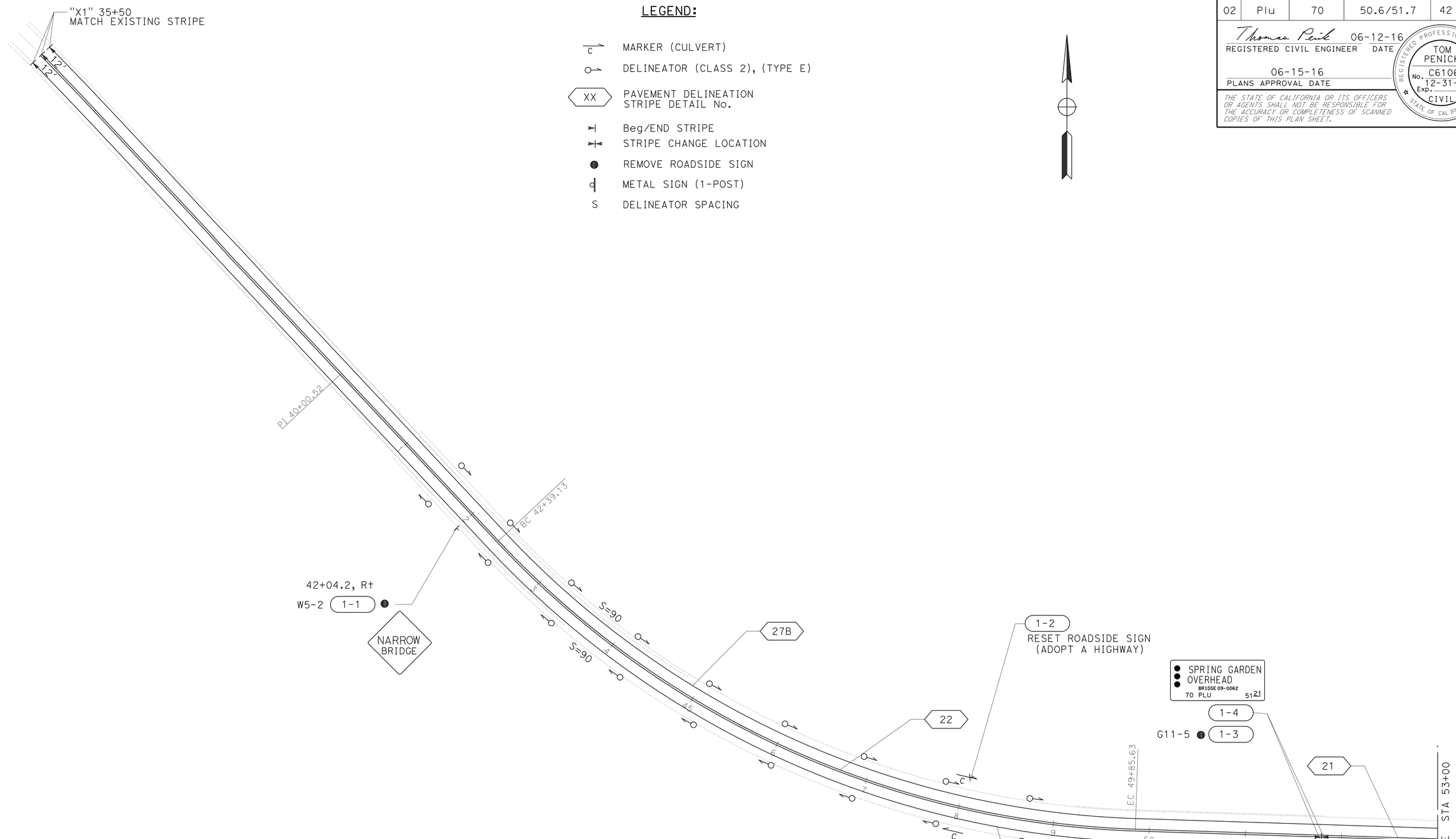

PAVEMENT DELINEATION AND SIGN PLAN

SCALE: 1" = 50'

PD-1

APPROVED FOR PAVEMENT DELINEATION WORK ONLY

STATE OF CALIFORNIA - DEPARTMENT OF TRANSPORTATION
Caltrans®
DESIGN

FUNCTIONAL SUPERVISOR: AL TRUJILLO
CALCULATED-DESIGNED BY: TOM PENICK
CHECKED BY: DAN BROWN
REVISED BY
DATE REVISED

P:\proj1\02\2c090_plans\pse\22c090na001.dgn

LAST REVISION 06-12-16
DATE PLOTTED => 04-AUG-2016
TIME PLOTTED => 11:57

Dist	COUNTY	ROUTE	POST MILES TOTAL PROJECT	SHEET No.	TOTAL SHEETS
02	Plu	70	50.6/51.7	43	181

Thomas Penick 06-12-16
REGISTERED CIVIL ENGINEER DATE

06-15-16
PLANS APPROVAL DATE

REGISTERED PROFESSIONAL ENGINEER
TOM PENICK
No. C61068
Exp. 12-31-16
CIVIL
STATE OF CALIFORNIA

THE STATE OF CALIFORNIA OR ITS OFFICERS OR AGENTS SHALL NOT BE RESPONSIBLE FOR THE ACCURACY OR COMPLETENESS OF SCANNED COPIES OF THIS PLAN SHEET.

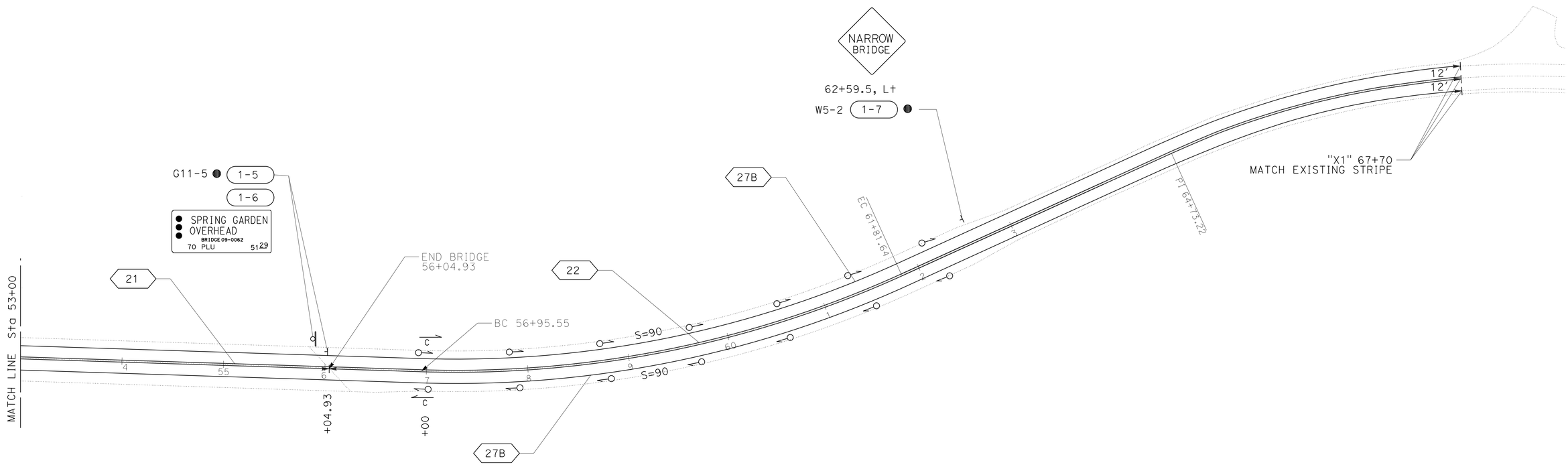

APPROVED FOR PAVEMENT DELINEATION WORK ONLY

PAVEMENT DELINEATION AND SIGN PLAN

SCALE: 1" = 50'

PD-2

REVISED BY	DATE REVISED

CALCULATED-DESIGNED BY: TOM PENICK
CHECKED BY: DAN BROWN
FUNCTIONAL SUPERVISOR: AL TRUJILLO

STATE OF CALIFORNIA - DEPARTMENT OF TRANSPORTATION
Caltrans
DESIGN

P:\proj1\02\2c090_plans\pse\22c090na002.dgn

LAST REVISION 06-12-16
DATE PLOTTED => 04-AUG-2016
TIME PLOTTED => 11:57

Dist	COUNTY	ROUTE	POST MILES TOTAL PROJECT	SHEET No.	TOTAL SHEETS
02	Plu	70	50.6/51.7	44	181

Thomas Penick 06-12-16
REGISTERED CIVIL ENGINEER DATE

06-15-16
PLANS APPROVAL DATE

REGISTERED PROFESSIONAL ENGINEER TOM PENICK No. C61068 Exp. 12-31-16 CIVIL STATE OF CALIFORNIA

THE STATE OF CALIFORNIA OR ITS OFFICERS OR AGENTS SHALL NOT BE RESPONSIBLE FOR THE ACCURACY OR COMPLETENESS OF SCANNED COPIES OF THIS PLAN SHEET.

PAVEMENT DELINEATION & MARKERS

PD SHEET No.	STATION	THERMOPLASTIC TRAFFIC STRIPE (SPRAYABLE)			DELINEATOR (CLASS 2) (TYPE E)	PAVEMENT MARKER (RETROREFLECTIVE RECESSED)	REMARKS
		YELLOW DETAIL 21	YELLOW DETAIL 22	WHITE DETAIL 27B			
		LF	LF	LF	EA	EA	
1	"X1" 35+50 TO 51+79		1629	3500	20	142	
1	"X1" 51+79 TO 53+00	121					
2	"X1" 53+00 TO 56+04	304					
2	"X1" 56+04 TO 67+70		1166	2940	14	100	
	"X1" 36+00 TO 42+50		650				FOR WINTER SUSPENSION
	"X1" 60+70 TO 67+20		650				FOR WINTER SUSPENSION
SUBTOTAL		425	4095	6440			
TOTAL		10,960			34	242	

PAVEMENT DELINEATION QUANTITIES

PDQ-1

REVISED BY	DATE REVISED

CALCULATED-DESIGNED BY	TOM PENICK
CHECKED BY	DAN BROWN
FUNCTIONAL SUPERVISOR	AL TRUJILLO

STATE OF CALIFORNIA - DEPARTMENT OF TRANSPORTATION
Caltrans DESIGN

P:\proj1\02\2c090_plans\pse\22c090nd001.dgn

LAST REVISION 06-12-16 | DATE PLOTTED => 04-AUG-2016 | TIME PLOTTED => 11:58

Dist	COUNTY	ROUTE	POST MILES TOTAL PROJECT	SHEET No.	TOTAL SHEETS
02	Plu	70	50.6/51.7	45	181

Thomas Penick 06-12-16
REGISTERED CIVIL ENGINEER DATE

06-15-16
PLANS APPROVAL DATE

REGISTERED PROFESSIONAL ENGINEER TOM PENICK No. C61068 Exp. 12-31-16 CIVIL STATE OF CALIFORNIA

THE STATE OF CALIFORNIA OR ITS OFFICERS OR AGENTS SHALL NOT BE RESPONSIBLE FOR THE ACCURACY OR COMPLETENESS OF SCANNED COPIES OF THIS PLAN SHEET.

NOTES:

1. USE A 2¼" Sq TUBE x 30" LONG, 3/16" THICK ANCHOR FOR 2" POSTS.
   USE A 3" Sq TUBE x 3' LONG, 3/16" THICK ANCHOR FOR 2-1/2 " POSTS.
2. USE A 5/16" CORNER BOLT OR TWO DRIVE RIVETS TO FASTEN ASSEMBLED SIGN AND POST INTO ANCHOR. INSTALL CORNER BOLT OR DRIVE RIVETS INTO THE SIDES FACING TRAFFIC.
3. REMOVE EXISTING AC OR PCC, DRIVE ANCHOR SLEEVE INTO SOIL AND RECAP WITH LIKE MATERIAL, MATCHING EXISTING THICKNESS.
4. 2" POSTS ARE TO BE 1/8" THICK, PERFORATIONS OF 7/16" IN DIAMETER ARE 1" ON CENTER ON ALL SIDES, LENGTHS ARE 10' AND 12'.
5. 2-1/2" POSTS ARE TO BE 1/8" THICK, PERFORATIONS OF 7/16" IN DIAMETER ARE 1" ON CENTER ON ALL SIDES, 2-1/2" POSTS ARE 12' AND 14' IN LENGTH.
6. FOR DETAILS NOT SHOWN, REFER TO THE STANDARD PLANS.
7. 2-1/2" POSTS SHALL BE USED IN SIDEWALK AND HIGH PEDESTRIAN USE PLACEMENTS.
8. ALL ANCHOR SLEEVES SHALL BE EMBEDDED IN PCC, EXCEPT FOR INSTALLATIONS IN PAVEMENTS OR SIDEWALKS.

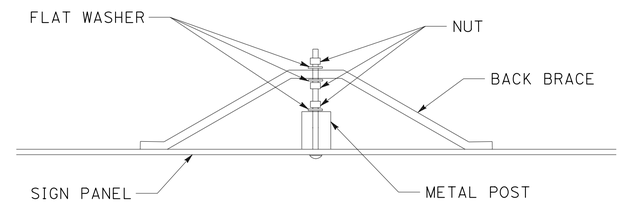

BACK BRACE MOUNTING DETAIL

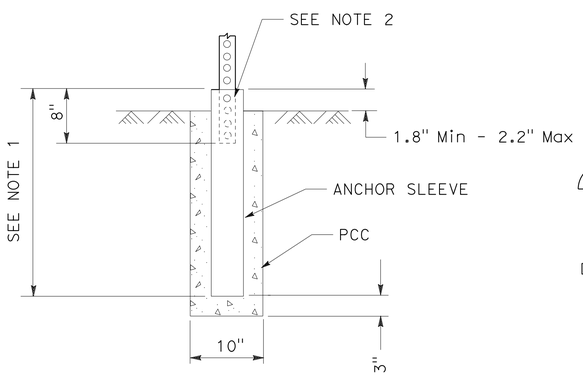

INSTALLATION IN SOIL (PCC)
(SEE NOTE 8)

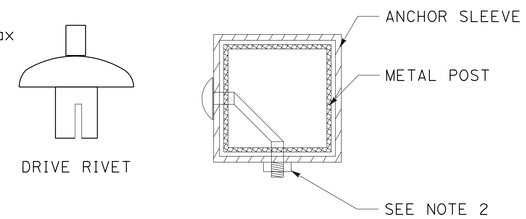

FASTENER DETAILS

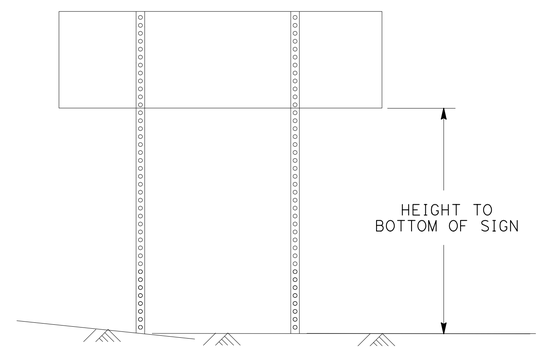

TWO POSTS INSTALLATION
(POST SIZE, SEE CHART BELOW)

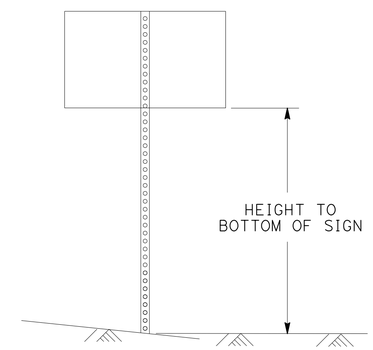

SINGLE POST INSTALLATION
(POST SIZE, SEE CHART BELOW)

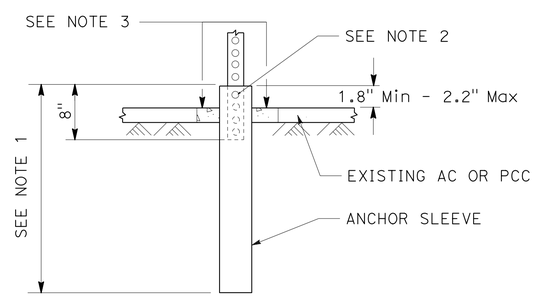

INSTALLATION IN EXISTING AC OR PCC

METAL SIGN POST INSTALLATION DETAILS

Max Sq Ft OF SIGN

POST SIZE	60"	72"	84"	96"	108"	120"
2"	18	16	14	12	10	8
2.5"	35	32	28	24	21	21

HEIGHT TO BOTTOM OF SIGN
DOUBLE POST GROUND SIGNS
70 MPH WIND SPEED

Max Sq Ft OF SIGN

POST SIZE	60"	72"	84"	96"	108"	120"
2"	10.5	10	8.7	7.4	6.2	5
2.5"	16	16	16	16	12	12

HEIGHT TO BOTTOM OF SIGN
SINGLE POST GROUND SIGNS
70 MPH WIND SPEED

METAL SIGN POST DETAIL

SIGN DETAILS

NO SCALE

SD-1

REVISED BY | DATE REVISED
TOM PENICK | DAN BROWN
CALCULATED-DESIGNED BY | CHECKED BY
FUNCTIONAL SUPERVISOR
AL TRUJILLO

STATE OF CALIFORNIA - DEPARTMENT OF TRANSPORTATION
Caltrans
DESIGN

P:\proj1\02\2c090_plans\pse\22c090ob001.dgn

LAST REVISION 06-12-16 | DATE PLOTTED => 04-AUG-2016 | TIME PLOTTED => 11:58

Dist	COUNTY	ROUTE	POST MILES TOTAL PROJECT	SHEET No.	TOTAL SHEETS
02	Plu	70	50.6/51.7	46	181

Thomas Penick 06-12-16
REGISTERED CIVIL ENGINEER DATE

06-15-16
PLANS APPROVAL DATE

REGISTERED PROFESSIONAL ENGINEER TOM PENICK No. C61068 Exp. 12-31-16 CIVIL STATE OF CALIFORNIA

THE STATE OF CALIFORNIA OR ITS OFFICERS OR AGENTS SHALL NOT BE RESPONSIBLE FOR THE ACCURACY OR COMPLETENESS OF SCANNED COPIES OF THIS PLAN SHEET.

NOTE:

1. (N) - NOT A SEPARATE PAY ITEM, FOR INFORMATION ONLY

ABBREVIATIONS:

Fed FEDERAL

ROADSIDE SIGNS

SIGN No.	SIGN CODE		SIGN MESSAGE/DESCRIPTION	PANEL SIZE	POST SIZE AND LENGTH (N) METAL		ROADSIDE SIGN ONE POST	REMOVE ROADSIDE SIGN	RESET ROADSIDE SIGN	TREATED WOOD WASTE
	Fed	CA		In x In	IN	FT	EACH	EACH	EACH	LB
1-1	W5-2		NARROW BRIDGE	36 x 36				1		50
1-2		S32	ADOPT-A-HIGHWAY	30 x 15					1	
1-3		G11-5	SPRING GARDEN OVERHEAD, BR 09-0062	44 x 24				1		50
1-4		G11-5	SPRING GARDEN OVERHEAD, BR 09-0062	44 x 24	2.5x2.5	9	1			
1-5		G11-5	SPRING GARDEN OVERHEAD, BR 09-0062	44 x 24				1		50
1-6		G11-5	SPRING GARDEN OVERHEAD, BR 09-0062	44 x 24	2.5x2.5	9	1			
TOTAL							2	3	1	150 *

* ADDITIONAL TREATED WOOD WASTE QUANTITIES ARE SHOWN ON SHEET Q-1.

ROADSIDE SIGN PANEL QUANTITIES

SHEET No.	SIGN No.	SIGN CODE		SIGN MESSAGE/DESCRIPTION	PANNEL SIZE L x D	SINGLE FACED	SIGN FACING MATERIAL BACKGROUND SHEETING COLOR	BACKGROUND RETROREFLECTIVE ASTM TYPE	LEGEND SHEETING COLOR	FURNISH SINGLE SHEET ALUMINUM SIGN (0.063"-UNFRAMED)
		Fed	CA		INCHES					SQFT
PD-1	1-4		G11-5	SPRING GARDEN OVERHEAD, BR 09-0062	44 x 24	X	WHITE	IX	BLACK	7.33
PD-2	1-6		G11-5	SPRING GARDEN OVERHEAD, BR 09-0062	44 x 24	X	WHITE	IX	BLACK	7.33
TOTAL										14.66

REVISED BY | DATE REVISED
TOM PENICK | DAN BROWN
CALCULATED-DESIGNED BY | CHECKED BY
FUNCTIONAL SUPERVISOR: AL TRUJILLO

STATE OF CALIFORNIA - DEPARTMENT OF TRANSPORTATION
Caltrans® DESIGN

P:\proj1\02\2c090_plans\pse\22c090oc001.dgn

SIGN QUANTITIES
SQ-1

LAST REVISION 06-12-16 | DATE PLOTTED => 04-AUG-2016 TIME PLOTTED => 11:58

Dist	COUNTY	ROUTE	POST MILES TOTAL PROJECT	SHEET No.	TOTAL SHEETS
02	Plu	70	50.6/51.7	47	181

Thomas Penick 06-12-16
REGISTERED CIVIL ENGINEER DATE

06-15-16
PLANS APPROVAL DATE

REGISTERED PROFESSIONAL ENGINEER TOM PENICK No. C61068 Exp. 12-31-16 CIVIL STATE OF CALIFORNIA

THE STATE OF CALIFORNIA OR ITS OFFICERS OR AGENTS SHALL NOT BE RESPONSIBLE FOR THE ACCURACY OR COMPLETENESS OF SCANNED COPIES OF THIS PLAN SHEET.

NOTE:

1. (N) - NOT A SEPARATE PAY ITEM, FOR INFORMATION ONLY

EROSION CONTROL QUANTITIES

	TEMPORARY COVER	TEMPORARY DRAINAGE INLET PROTECTION	TEMPORARY CONSTRUCTION ENTRANCE
	SQYD	EA	EA
TOTAL	100	3	2

GUARDRAIL QUANTITIES

SYSTEM No.	STATION "X1" LINE				REMOVE GUARDRAIL	TREATED WOOD WASTE	MIDWEST GUARDRAIL SYSTEM (STEEL POST)	END ANCHOR ASSEMBLY (TYPE SFT)	TRANSITION RAILING (TYPE WB-31)	(N) BURIED POST END ANCHOR ASSEMBLY
	Beg	END	L+	R+	LF	LB	LF	EA	EA	EA
1	42+74	48+95	X		65	1072	575	1	1	
2	50+92	51+92		X	65	804	75		1	1
3	55+95	57+20	X		100	1273	100		1	1
4	56+42	57+77		X	65	1072	113		1	1
FROM SIGN QUANTITIES						150				
TOTAL					295	4371	863	1	4	3

ROADWAY QUANTITIES

STATION "X1" LINE		ROADWAY EXCAVATION	(N) EMBANKMENT	COLD PLANE AC PAVEMENT	SHOULDER BACKING	CLASS 2 AGGREGATE BASE (CY)	HOT MIX ASPHALT (TYPE A)	TACK COAT	PLACE HOT MIX ASPHALT (MISCELANEOUS AREA)	ROLLED EROSION CONTROL PRODUCT (NETTING)	GEOSYNTHETIC PAVEMENT INTERLAYER (PAVING FABRIC)
Beg	END	CY	CY	SQYD	TON	CY	TON	TON	SQYD	SQFT	SQYD
39+70	40+00			106							
39+70	51+67				285						
39+70	51+79 (BB)	1105	606			1407.1	1597.1	1.12			
52+05 (EB)	63+50	2077	2576			888.3	1013.6	0.72			
48+95	51+79 (BB)										165
56+30	63+50				164						
63+20	63+50			108							
HMA APRONS AND DIKE							15.8		20.4	6840	
FROM SHEET THQ-1							242				
TOTAL		3182	3182	214	449	2295.4	2868.5	1.84	20.4	6840	165

HIGH FRICTION SURFACE TREATMENT

STATION "X1" LINE		HIGH FRICTION SURFACE TREATMENT	DESCRIPTION
Beg	END	SQYD	
39+70	51+79 (BB)	5383	WEST BRIDGE APPROACH, EP TO EP
51+79 (BB)	56+05 (EB)	2009	BRIDGE DECK, EP TO EP
56+05 (EB)	63+50	3440	EAST BRIDGE APPROACH, EP TO EP
		10,832	

HMA DIKE QUANTITIES

STATION "X1" LINE				PLACE HOT MIX ASPHALT DIKE (TYPE A)	PLACE HOT MIX ASPHALT DIKE (TYPE C)	PLACE HOT MIX ASPHALT DIKE (TYPE E)
Beg	END	L+	R+	LF	LF	LF
48+01	48+17		X	12		
57+06	57+75		X		69	
56+96	57+12	X			12	
57+75	61+90		X			415
			TOTAL	12	81	415

SUMMARY OF QUANTITIES

Q-1

REVISED BY	DATE REVISED	TOM PENICK	DAN BROWN
CALCULATED-DESIGNED BY	CHECKED BY	FUNCTIONAL SUPERVISOR	AL TRUJILLO

STATE OF CALIFORNIA - DEPARTMENT OF TRANSPORTATION
Caltrans DESIGN

P:\proj1\02\2c090_plans\pse\22c090pa001.dgn

LAST REVISION 06-12-16 | DATE PLOTTED => 04-AUG-2016 | TIME PLOTTED => 11:58

Dist	COUNTY	ROUTE	POST MILES TOTAL PROJECT	SHEET No.	TOTAL SHEETS
02	Plu	70	50.6/51.7	48	181

LICENSED LANDSCAPE ARCHITECT

06-15-16

PLANS APPROVAL DATE

LICENSED LANDSCAPE ARCHITECT J. PATRICK SULLIVAN #3125 Signature 07/31/16 Renewal Date 07/03/16 Date STATE OF CALIFORNIA

THE STATE OF CALIFORNIA OR ITS OFFICERS OR AGENTS SHALL NOT BE RESPONSIBLE FOR THE ACCURACY OR COMPLETENESS OF SCANNED COPIES OF THIS PLAN SHEET.

LEGEND:

BONDED FIBER MATRIX

NOTE:

1. FOR ACCURATE RIGHT OF WAY DATA, CONTACT RIGHT OF WAY ENGINEERING AT THE DISTRICT OFFICE.

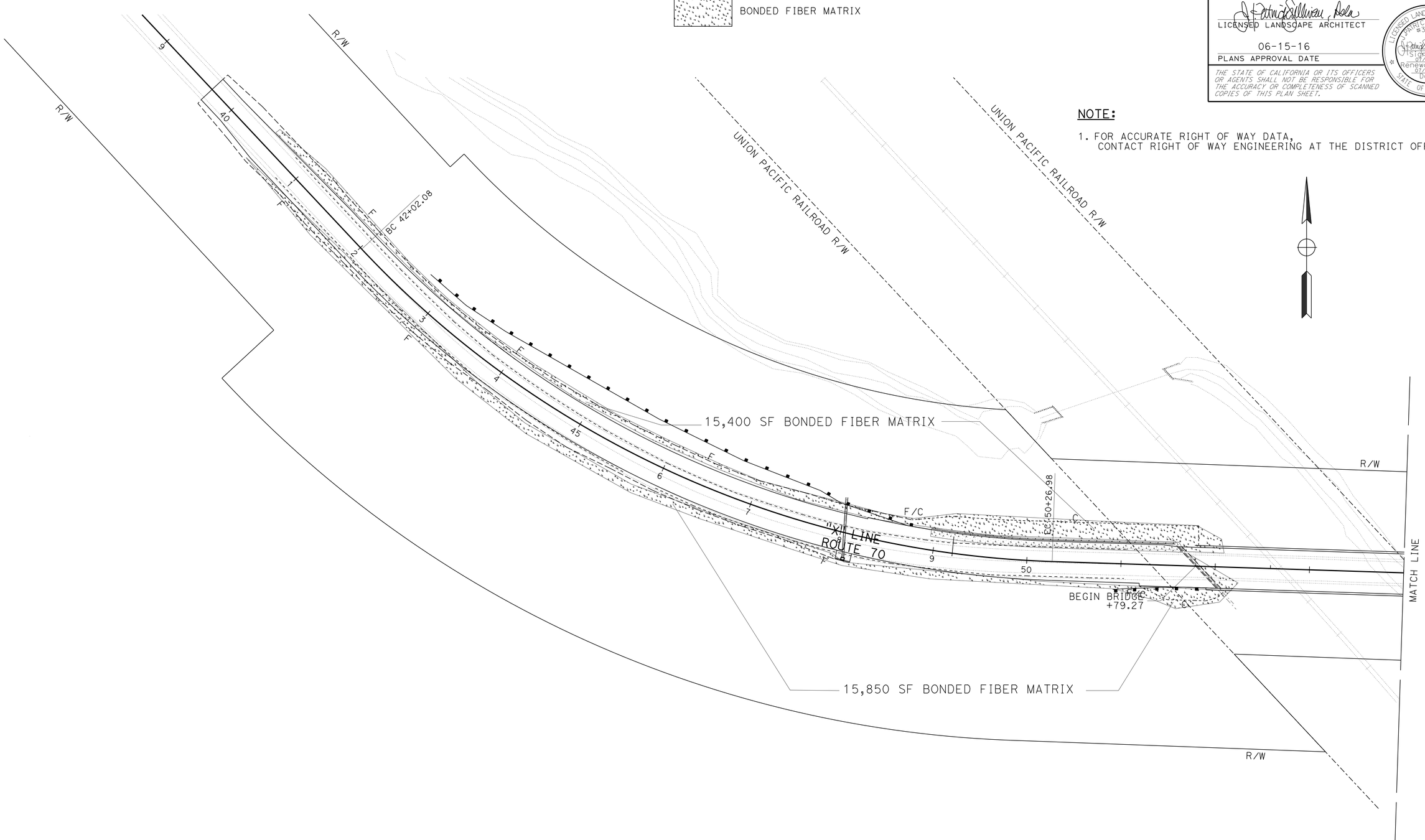

EROSION CONTROL PLAN

SCALE: 1" = 50'

EC-1

APPROVED FOR EROSION CONTROL WORK ONLY

REVISED BY	
DATE REVISED	
J. PATRICK SULLIVAN	
STEVE THORNE	
CALCULATED-DESIGNED BY	
CHECKED BY	
DESIGN UNIT SENIOR	
STEVE THORNE	

STATE OF CALIFORNIA - DEPARTMENT OF TRANSPORTATION

Caltrans® LANDSCAPE ARCHITECTURE

P:\proj1\02\2c090_plans\pse\22c090te001.dgn

LAST REVISION 06-12-16 | DATE PLOTTED => 04-AUG-2016 TIME PLOTTED => 11:58

Dist	COUNTY	ROUTE	POST MILES TOTAL PROJECT	SHEET No.	TOTAL SHEETS
02	Plu	70	50.6/51.7	49	181

LICENSED LANDSCAPE ARCHITECT

06-15-16

PLANS APPROVAL DATE

LICENSED LANDSCAPE ARCHITECT J. PATRICK SULLIVAN #3125 Signature 07/31/16 Renewal Date 07/03/16 Date STATE OF CALIFORNIA

THE STATE OF CALIFORNIA OR ITS OFFICERS OR AGENTS SHALL NOT BE RESPONSIBLE FOR THE ACCURACY OR COMPLETENESS OF SCANNED COPIES OF THIS PLAN SHEET.

NOTES:

1. FOR ACCURATE RIGHT OF WAY DATA, CONTACT RIGHT OF WAY ENGINEERING AT THE DISTRICT OFFICE.

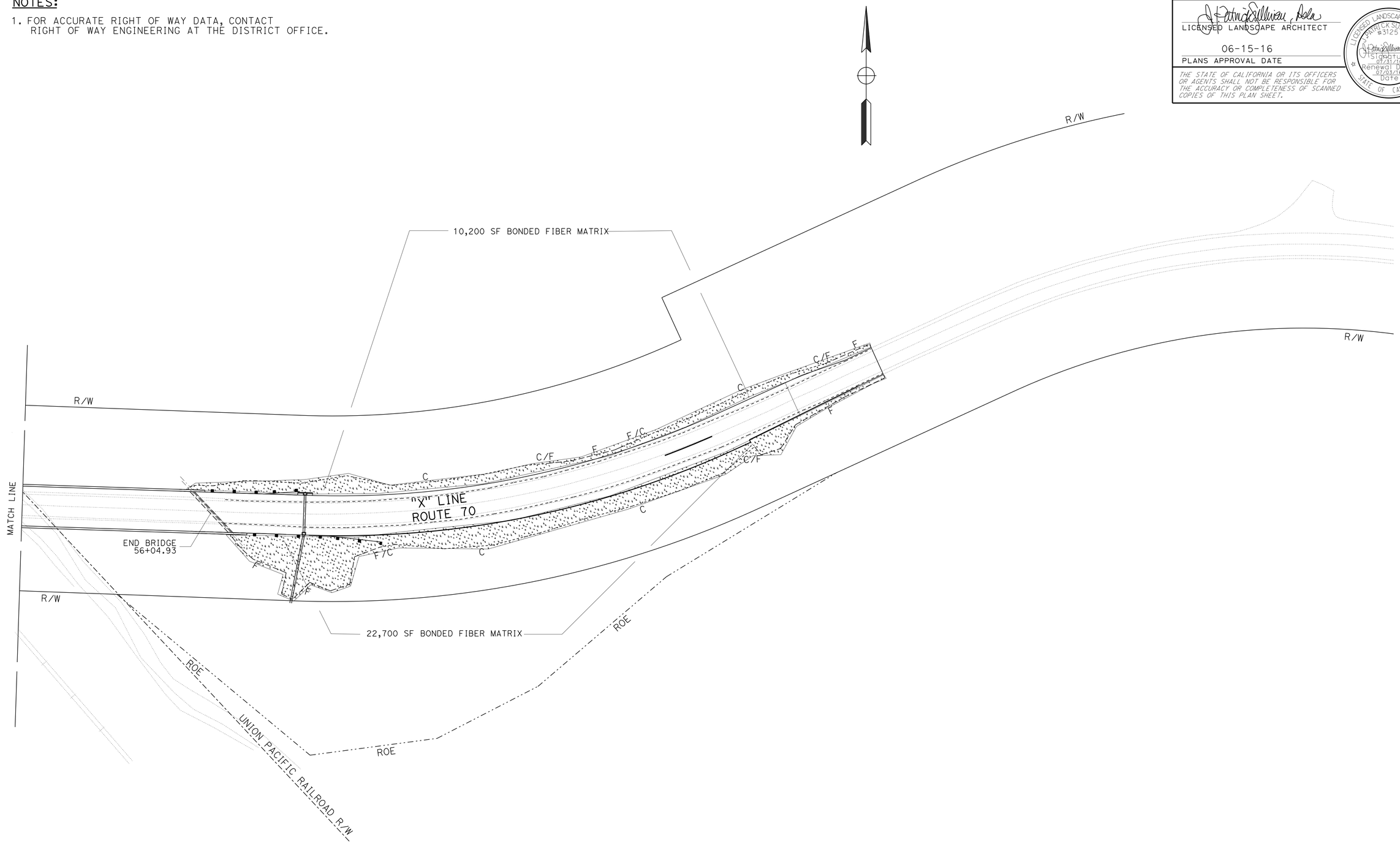

EROSION CONTROL PLAN

SCALE: 1" = 50'

EC-2

APPROVED FOR EROSION CONTROL WORK ONLY

REVISED BY	DATE REVISED

CALCULATED-DESIGNED BY: J. PATRICK SULLIVAN

CHECKED BY: STEVE THORNE

DESIGN UNIT SENIOR: STEVE THORNE

STATE OF CALIFORNIA - DEPARTMENT OF TRANSPORTATION

Caltrans® LANDSCAPE ARCHITECTURE

P:\proj\02\2c090_plans\pse\22c090te002.dgn

LAST REVISION 06-12-16 | DATE PLOTTED => 04-AUG-2016 | TIME PLOTTED => 11:58

Dist	COUNTY	ROUTE	POST MILES TOTAL PROJECT	SHEET No.	TOTAL SHEETS
02	Plu	70	50.6/51.7	50	181

LICENSED LANDSCAPE ARCHITECT

06-15-16
PLANS APPROVAL DATE

LICENSED LANDSCAPE ARCHITECT J. PATRICK SULLIVAN #3125 Signature 07/31/16 Renewal Date 07/03/16 Date STATE OF CALIFORNIA

THE STATE OF CALIFORNIA OR ITS OFFICERS OR AGENTS SHALL NOT BE RESPONSIBLE FOR THE ACCURACY OR COMPLETENESS OF SCANNED COPIES OF THIS PLAN SHEET.

NOTES:

1. (N) - NOT A SEPARATE PAY ITEM, FOR INFORMATION ONLY
2. REFER TO INDIVIDUAL EC SHEETS FOR LOCATIONS, EC TYPES & QUANTITIES.
3. TOTAL BONDED FIBER MATRIX ACREAGE, 1.47 ACRES.
4. ALL SLOPE SQFT QUANTITIES INCLUDE SLOPE FACTORS.

SEED MIX (N)

BOTANICAL NAME (COMMON NAME)	PERCENT GERMINATION (MINIMUM)	POUNDS PURE LIVE SEED PER ACRE (N) (SLOPE MEASUREMENT)
ACHILLEA MILLEFOLIUM (COMMON YARROW)	50	2
BROMUS CARINATUS (CALIF. BROME)	60	15
ELYMUS ELYMOIDES (SQUIRELTAIL RYE)	60	10
FESTUCA IDAHOENSIS (WESTERN FESCUE)	70	15
HORDEUM VULGARE UC 937 (BARLEY -WINTER COVER CROP)	80	25
LOTUS PURSHIANUS (PURSHING)	70	12
LUPINUS BICOLOR (SKY LUPINES)	60	2
VULPIA MICROSTACHYS (SMALL FESCUE)	60	15
	TOTAL	98

EROSION CONTROL (BONDED FIBER MATRIX)

MATERIAL DESCRIPTION	MATERIAL TYPE	TOTALS	
PURE LIVE SEED	MIX	144.06 LBS (N)	EROSION CONTROL BONDED FIBER MATRIX
FIBER	ALTERNATE	5880 LBS (N)	
SLOW RELEASE FERTLIZER	GRANULAR	294 LBS (N)	
COMPOST	RECYCLED WOOD PRODUCTS	1.8 CUYDS (N)	
LOCATIONS			
FROM STA "X-1" 41+28.5 to 63+67.5	SQFT		64,100
		TOTAL SQFT	64,100

EROSION CONTROL (BONDED FIBER MATRIX) SEQUENCE/APPLICATION RATES (N)

SEQUENCE	ITEM	MATERIAL DESCRIPTION	MATERIAL TYPE	APPLICATION RATE (N)
STEP 1	BONDED FIBER MATRIX	PURE LIVE SEED	MIX	98 LB/ACRE
		FIBER	ALTERNATE	1400 LB/ACRE
		SLOW RELEASE FERTLIZER	GRANULAR	200 LB/ACRE
STEP 2	BONDED FIBER MATRIX	COMPOST	RECYCLED WOOD PRODUCTS	1.2 CUYDS/ACRE
		FIBER	ALTERNATE	1200 LB/ACRE
STEP 3	BONDED FIBER MATRIX	FIBER	ALTERNATE	1400 LB/ACRE

EROSION CONTROL QUANTITIES

ECQ-1

REVISED BY | DATE REVISED
J. PATRICK SULLIVAN | STEVE THORNE
CALCULATED-DESIGNED BY | CHECKED BY
DESIGN UNIT SENIOR | STEVE THORNE
STATE OF CALIFORNIA - DEPARTMENT OF TRANSPORTATION
Caltrans® LANDSCAPE ARCHITECTURE
P:\proj1\02\2c090_plans\pse\22c090tg001.dgn

LAST REVISION 06-12-16 | DATE PLOTTED => 04-AUG-2016 | TIME PLOTTED => 11:58

Dist	COUNTY	ROUTE	POST MILES TOTAL PROJECT	SHEET No.	TOTAL SHEETS
02	Plu	70	50.6/51.7	51	181

ART 06-12-16
REGISTERED ELECTRICAL ENGINEER DATE

06-15-16
PLANS APPROVAL DATE

REGISTERED PROFESSIONAL ENGINEER A.P. ROBLES No. E15293 Exp. 3-31-17 ELECTRICAL STATE OF CALIFORNIA

THE STATE OF CALIFORNIA OR ITS OFFICERS OR AGENTS SHALL NOT BE RESPONSIBLE FOR THE ACCURACY OR COMPLETENESS OF SCANNED COPIES OF THIS PLAN SHEET.

NOTE:

1. FOR ACCURATE RIGHT OF WAY DATA, CONTACT RIGHT OF WAY ENGINEERING AT THE DISTRICT OFFICE.
2. FOR TEMPORARY POLE DETAILS SEE TRAFFIC HANDLING PLANS.
3. SEE CONSTRUCTION AREA SIGNS PLAN.

LEGEND:

- ITS — ITS NODE PULL BOX
- BBS BATTERY CABINET
- GENERATOR SYSTEM AND SERVICE
- • PPA ON WOOD POST

ABBREVIATIONS:

SLI	SENSOR LEAD-IN CABLE
SMFO	SINGLE MODE FIBER OPTIC
smfo	Exist SINGLE MODE FIBER OPTIC
ATS	AUTOMATIC TRANSFER SWITCH

LEGEND (THIS SHEET):

1. MESSENGER WIRE, 2#12 (FB), 1#12 G, 1 DLC.
2. MESSENGER WIRE, 2#12 (FB), 1#12 G, 2 DLC.
3. 1½"C, 1 DLC.
4. 1½"C, 3 DLC, 1-3CSC, 1#12 G.
5. 1"C, 1-3CSC, 1#12 G.
6. 2"C, 1-3CSC, 1#12.
7. 4#12 (WB SIGNAL), 2#12 (L+g), 1#12 G.
8. MESSENGER WIRE, 2#12 (FB), 1#12 G, 5 DLC, 1-3CSC.
9. MESSENGER WIRE, 4#12 (WB SIGNAL) 2#12 (FB), 2#12 (L+g), 5 DLC, 1-3CSC, 1#12 G.
10. SPAN MOUNTED SIGNAL FACE.
11. LUMINAIRE MAST ARM WITH 12' LMA AND TYPE IV PEC
12. MESSENGER WIRE, 2#12 (FB), 1#12 G.
13. 1½"C, 2#12, 1#12 G.

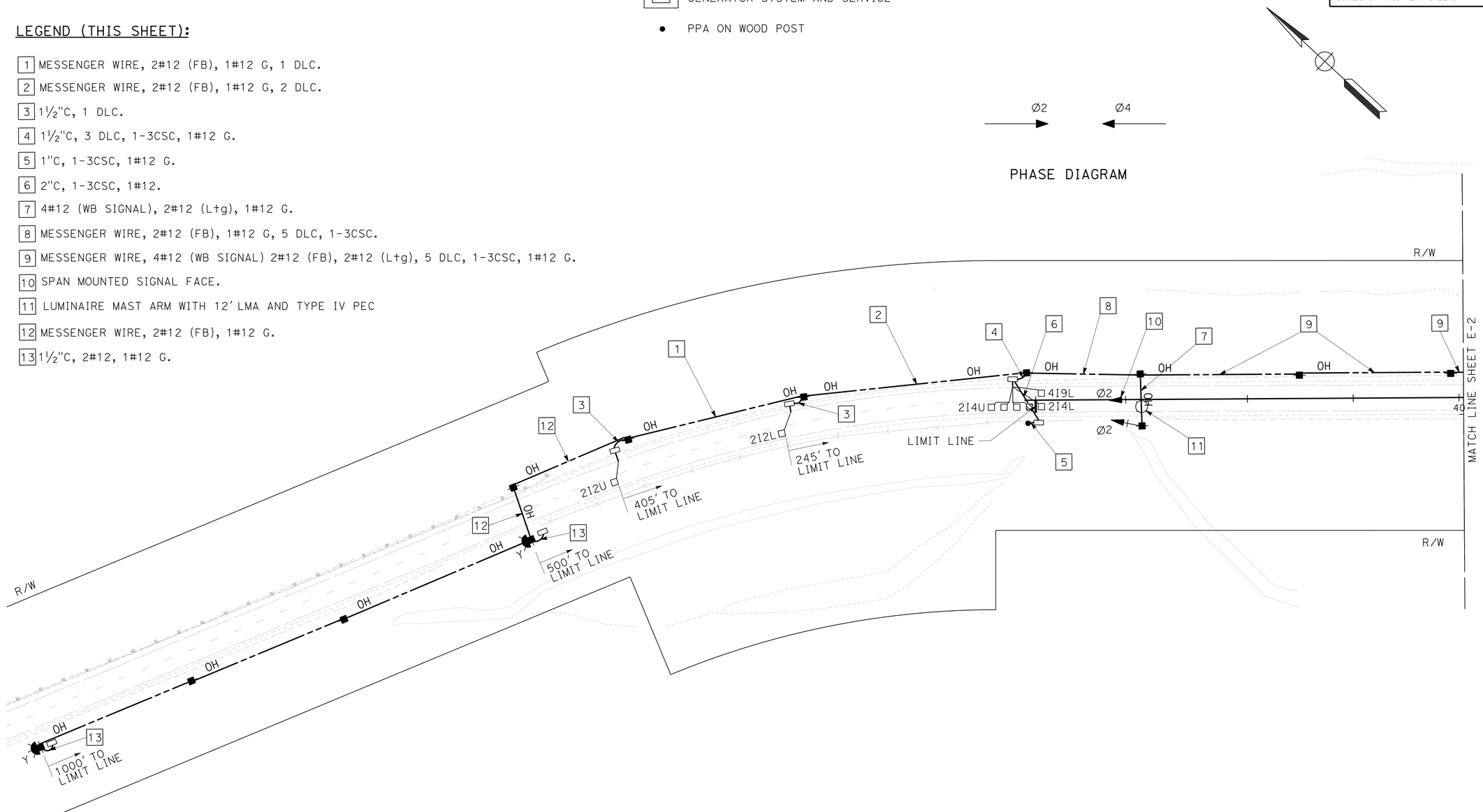

APPROVED FOR ELECTRICAL WORK ONLY

TEMPORARY SIGNAL SYSTEM

SCALE: 1" = 50'

E-1

REVISED BY | DATE REVISED
ARTURO P. ROBLES | JIM HANNIGAN
CALCULATED-DESIGNED BY | CHECKED BY
FUNCTIONAL SUPERVISOR: ROB STINGER

STATE OF CALIFORNIA - DEPARTMENT OF TRANSPORTATION
Caltrans® ELECTRICAL DESIGN

P:\proj\02\2c090_plans\pse\22c090ua001.dgn

LAST REVISION 06-12-16 | DATE PLOTTED => 04-AUG-2016 | TIME PLOTTED => 11:58

Dist	COUNTY	ROUTE	POST MILES TOTAL PROJECT	SHEET No.	TOTAL SHEETS
02	Plu	70	50.6/51.7	52	181

ART 06-12-16
REGISTERED ELECTRICAL ENGINEER DATE

06-15-16
PLANS APPROVAL DATE

REGISTERED PROFESSIONAL ENGINEER A.P. ROBLES No. E15293 Exp. 3-31-17 ELECTRICAL STATE OF CALIFORNIA

THE STATE OF CALIFORNIA OR ITS OFFICERS OR AGENTS SHALL NOT BE RESPONSIBLE FOR THE ACCURACY OR COMPLETENESS OF SCANNED COPIES OF THIS PLAN SHEET.

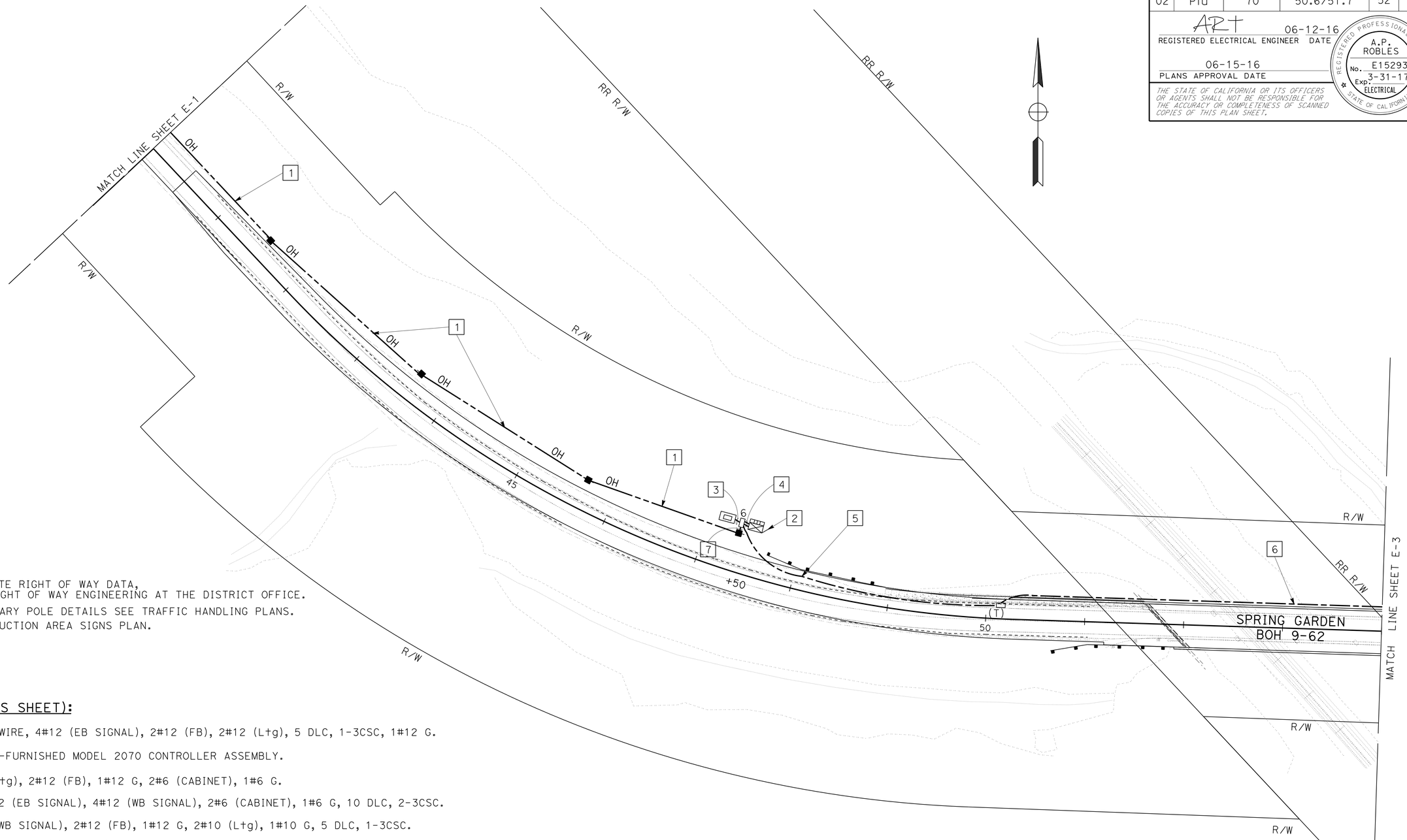

NOTES:

1. FOR ACCURATE RIGHT OF WAY DATA, CONTACT RIGHT OF WAY ENGINEERING AT THE DISTRICT OFFICE.
2. FOR TEMPORARY POLE DETAILS SEE TRAFFIC HANDLING PLANS.
3. SEE CONSTRUCTION AREA SIGNS PLAN.

LEGEND (THIS SHEET):

1 MESSENGER WIRE, 4#12 (EB SIGNAL), 2#12 (FB), 2#12 (L+g), 5 DLC, 1-3CSC, 1#12 G.

2 DEPARTMENT-FURNISHED MODEL 2070 CONTROLLER ASSEMBLY.

3 2"C, 2#8 (L+g), 2#12 (FB), 1#12 G, 2#6 (CABINET), 1#6 G.

4 2-3"C, 4#12 (EB SIGNAL), 4#12 (WB SIGNAL), 2#6 (CABINET), 1#6 G, 10 DLC, 2-3CSC.

5 2"C, 4#12 (WB SIGNAL), 2#12 (FB), 1#12 G, 2#10 (L+g), 1#10 G, 5 DLC, 1-3CSC.

6 SURFACE MOUNTED 2"C, 4#12 (WB SIGNAL), 2#12 (FB), 1#12 G, 2#10 (L+g), 1#10 G, 5 DLC, 1-3CSC.

7 2"C, 4#12 (EB SIGNAL), 2#12 (FB), 1#12 G, 2#12 (L+g), 1#12 G, 5 DLC, 1-3CSC.

APPROVED FOR ELECTRICAL WORK ONLY

TEMPORARY SIGNAL SYSTEM

SCALE: 1" = 50'

E-2

CALCULATED-DESIGNED BY: ARTURO P. ROBLES
CHECKED BY: JIM HANNIGAN
REVISED BY / DATE REVISED
FUNCTIONAL SUPERVISOR: ROB STINGER

STATE OF CALIFORNIA - DEPARTMENT OF TRANSPORTATION
Caltrans® ELECTRICAL DESIGN

P:\proj1\02\2c090_plans\pse\22c090ua002.dgn

LAST REVISION 06-12-16 | DATE PLOTTED => 04-AUG-2016 | TIME PLOTTED => 11:58

Dist	COUNTY	ROUTE	POST MILES TOTAL PROJECT	SHEET No.	TOTAL SHEETS
02	Plu	70	50.6/51.7	53	181

ART 06-12-16
REGISTERED ELECTRICAL ENGINEER DATE

06-15-16
PLANS APPROVAL DATE

REGISTERED PROFESSIONAL ENGINEER A.P. ROBLES No. E15293 Exp. 3-31-17 ELECTRICAL STATE OF CALIFORNIA

THE STATE OF CALIFORNIA OR ITS OFFICERS OR AGENTS SHALL NOT BE RESPONSIBLE FOR THE ACCURACY OR COMPLETENESS OF SCANNED COPIES OF THIS PLAN SHEET.

NOTE:

1. FOR ACCURATE RIGHT OF WAY DATA, CONTACT RIGHT OF WAY ENGINEERING AT THE DISTRICT OFFICE.
2. FOR TEMPORARY WOOD POLE DETAILS SEE TRAFFIC HANDLING PLANS.
3. SEE CONSTRUCTION AREA SIGNS PLAN.

LEGEND (THIS SHEET):

1. SURFACE MOUNTED 2"C, 4#12 (SIGNAL), 2#12 (FB), 1#12 G, 2#10 (Ltg), 1#10 G, 5 DLC, 1-3CSC,
2. MESSENGER WIRE, 4#12 (SIGNAL), 2#12 (FB), 1#12 G, 2#10 (Ltg), 1#10 G, 5 DLC, 1-3CSC,
3. LUMINAIRE WITH 12' LMA AND TYPE IV PEC.
4. SPAN MOUNTED SIGNAL FACE.
5. 1"C, 1-3CSC, 1#10 G.
6. MESSENGER WIRE, 2#12 (FB), 1#12 G, 2 DLC.
7. MESSENGER WIRE, 2#12 (FB), 1#12 G, 1 DLC.
8. 1½"C, 3 DLC, 1-3CSC, 1#10 G.
9. 2"C, 4#12 (WB SIGNAL), 2#10 (Ltg), 1#10 G, 5 DLC, 1-3CSC,
10. MESSENGER WIRE, 4#12 (WB SIGNAL), 2#10 (Ltg), 1#10 G,
11. 1½"C, 1 DLC.
12. MESSENGER WIRE, 5 DLC, 1-3CSC, 1#10 G,
13. MESSENGER WIRE, 2#12 (FB), 1#12 G,
14. 1½"C, 2#12, 1#12 G.

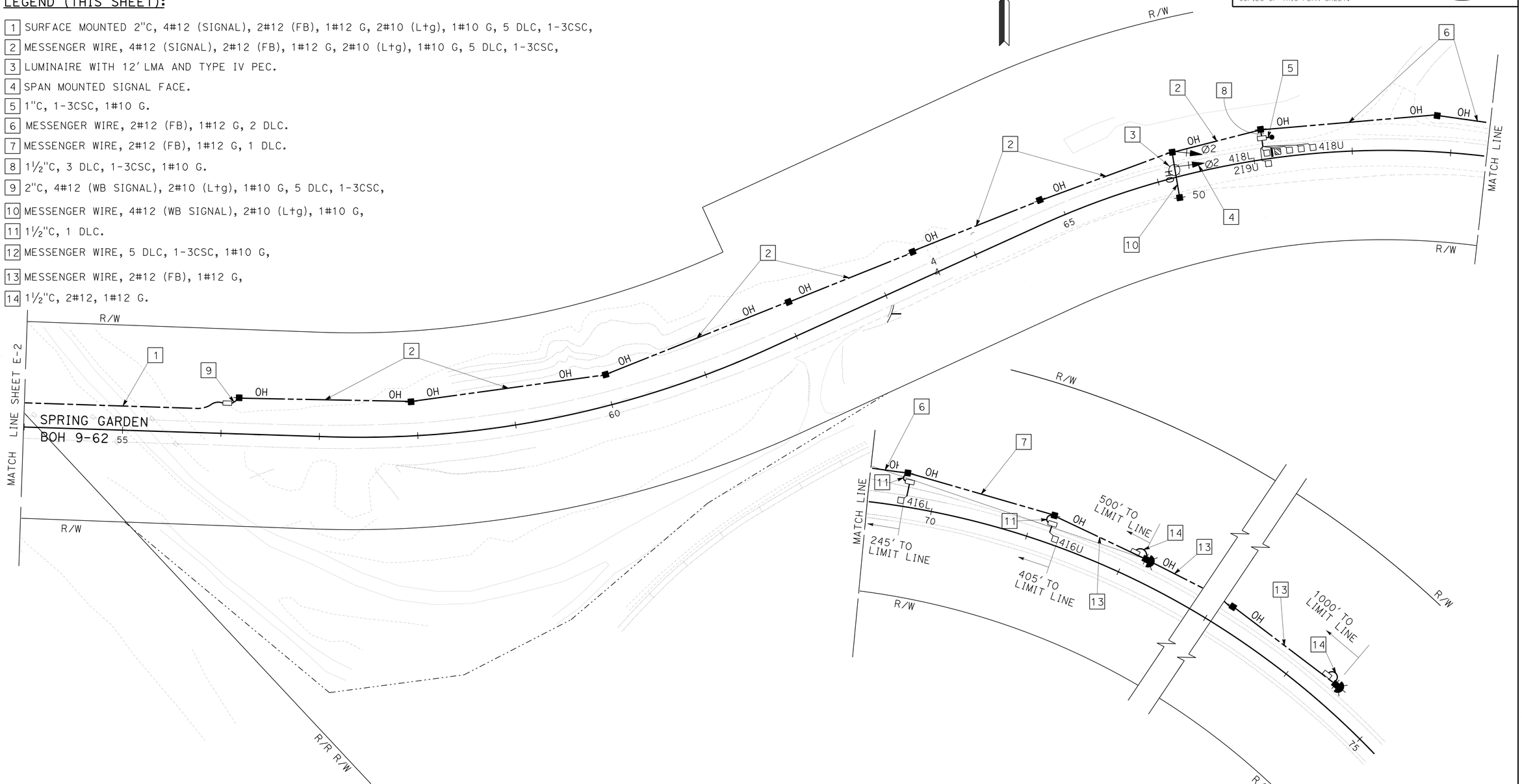

APPROVED FOR ELECTRICAL WORK ONLY

TEMPORARY SIGNAL SYSTEM

SCALE: 1" = 50'

E-3

STATE OF CALIFORNIA - DEPARTMENT OF TRANSPORTATION
Caltrans® **ELECTRICAL DESIGN**

FUNCTIONAL SUPERVISOR: ROB STINGER
CALCULATED-DESIGNED BY: ARTURO P. ROBLES
CHECKED BY: JIM HANNIGAN
REVISED BY
DATE REVISED

P:\proj1\02\2c090_plans\pse\22c090ua003.dgn

LAST REVISION 06-12-16
DATE PLOTTED => 04-AUG-2016
TIME PLOTTED => 11:58

Dist	COUNTY	ROUTE	POST MILES TOTAL PROJECT	SHEET No.	TOTAL SHEETS
02	Plu	70	50.6/51.7	54	181

REGISTERED ENGINEER 06-10-16 DATE

06-15-16 PLANS APPROVAL DATE

REGISTERED PROFESSIONAL ENGINEER KEITH KOEPPEN No. E19870 Exp. 3-31-18 ELECTRICAL STATE OF CALIFORNIA

THE STATE OF CALIFORNIA OR ITS OFFICERS OR AGENTS SHALL NOT BE RESPONSIBLE FOR THE ACCURACY OR COMPLETENESS OF SCANNED COPIES OF THIS PLAN SHEET.

NOTE:

1. FOR ACCURATE RIGHT OF WAY DATA, CONTACT RIGHT OF WAY ENGINEERING AT THE DISTRICT OFFICE.
2. USE SLACK FROM ADJACENT PULL BOXES AS REQUIRED.
3. ROUTE NEW CONDUIT TO NOT INTERFERE WITH GUARDRAIL.

NOTES (THIS SHEET):

1. Exist 2"C, 2#2/0 (480 V), 1#8G
2. Exist 1½"C, PT
3. Exist 2"C, 1 smfo
4. 2"C, 2#2/0 (480 V) 1#8G
5. 2"C, 1 smfo
6. FUSION SPLICE SMFO
7. RC Exist STRUCTURE MOUNTED CONDUIT
8. PULL Exist SMFO TO ADJACENT PULL BOX AND PROTECT WHILE INSTALLING CONDUIT ON STRUCTURE

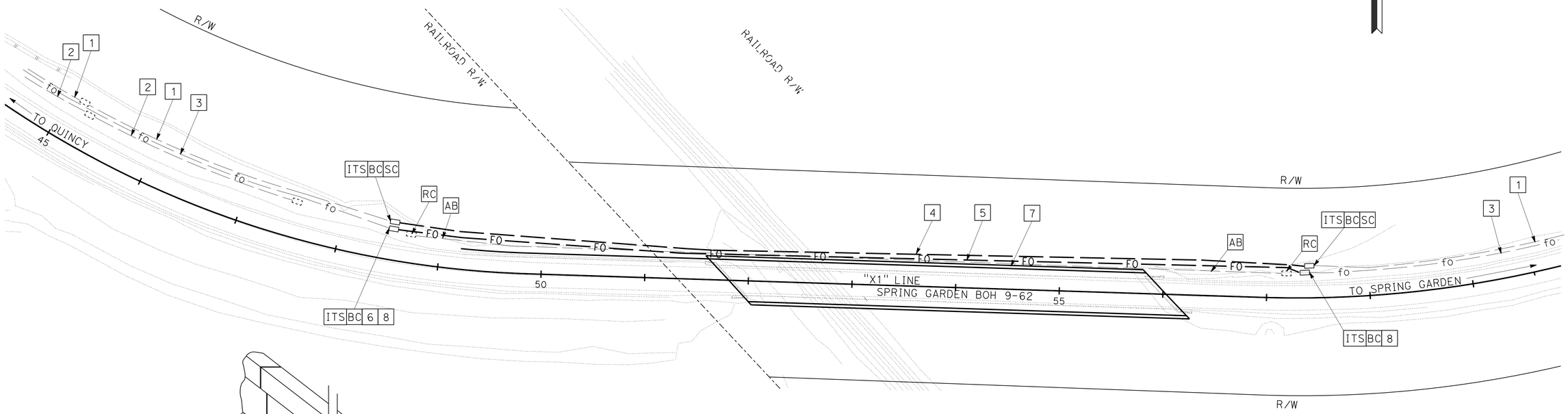

MODIFY FIBER OPTIC CABLE

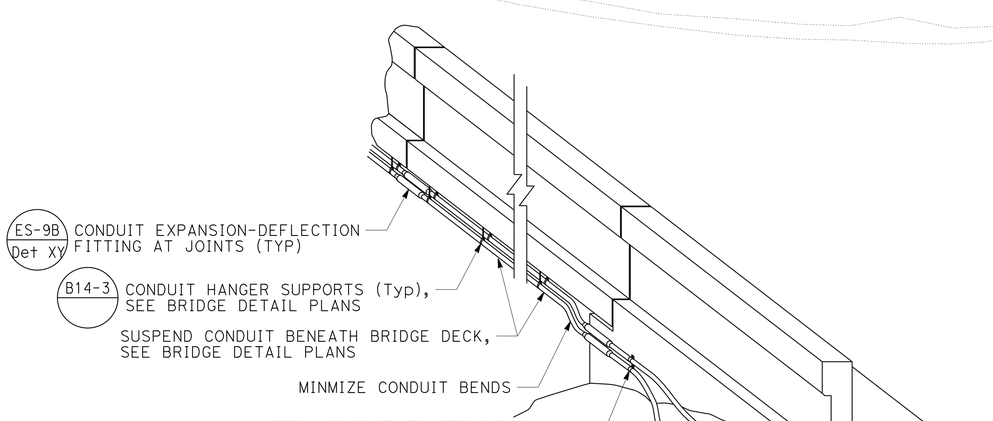

TYPICAL CONDUIT INSTALLATION ON OVERHEAD BRIDGE STRUCTURE

No scale

MODIFY EXISTING ELECTRICAL SYSTEM

SCALE: 1" = 50'

E-4

APPROVED FOR ELECTRICAL WORK ONLY

REVISED BY	DATE REVISED

CALCULATED-DESIGNED BY: KEITH KOEPPEN
CHECKED BY: JIM HANNIGAN
FUNCTIONAL SUPERVISOR: IAN TURNBULL

STATE OF CALIFORNIA - DEPARTMENT OF TRANSPORTATION
Caltrans
ITS ENGINEERING AND SUPPORT

P:\proj1\02\2c090_plans\pse\22c090ua004.dgn

LAST REVISION 05-02-16 | DATE PLOTTED => 04-AUG-2016 | TIME PLOTTED => 11:58

Dist	COUNTY	ROUTE	POST MILES TOTAL PROJECT	SHEET No.	TOTAL SHEETS
02	Plu	70	50.6/51.7	55	181

ART 06-12-16
REGISTERED ELECTRICAL ENGINEER DATE

06-15-16
PLANS APPROVAL DATE

REGISTERED PROFESSIONAL ENGINEER A.P. ROBLES No. E15293 Exp. 3-31-17 ELECTRICAL STATE OF CALIFORNIA

THE STATE OF CALIFORNIA OR ITS OFFICERS OR AGENTS SHALL NOT BE RESPONSIBLE FOR THE ACCURACY OR COMPLETENESS OF SCANNED COPIES OF THIS PLAN SHEET.

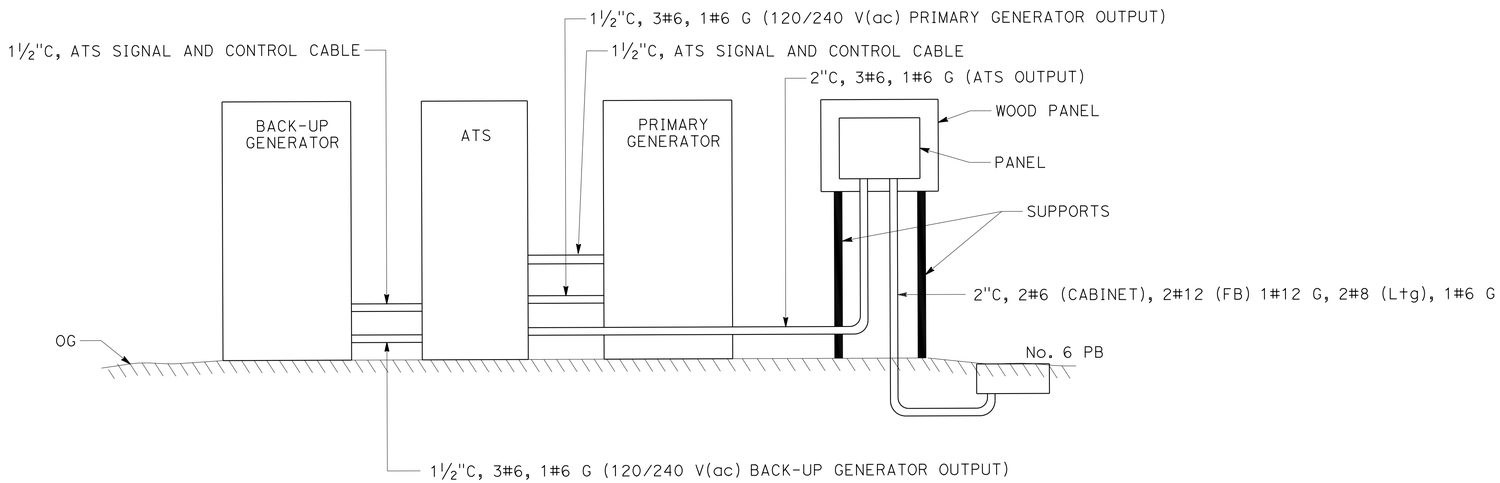

ATS AND GENERATORS

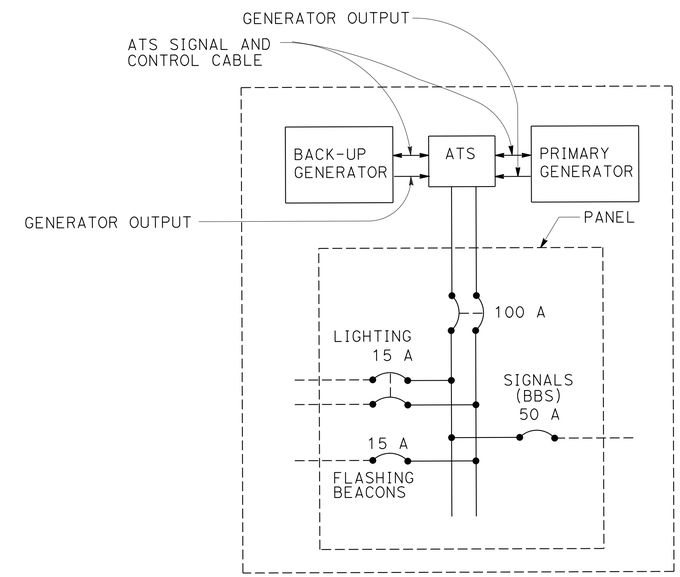

WIRING DIAGRAM

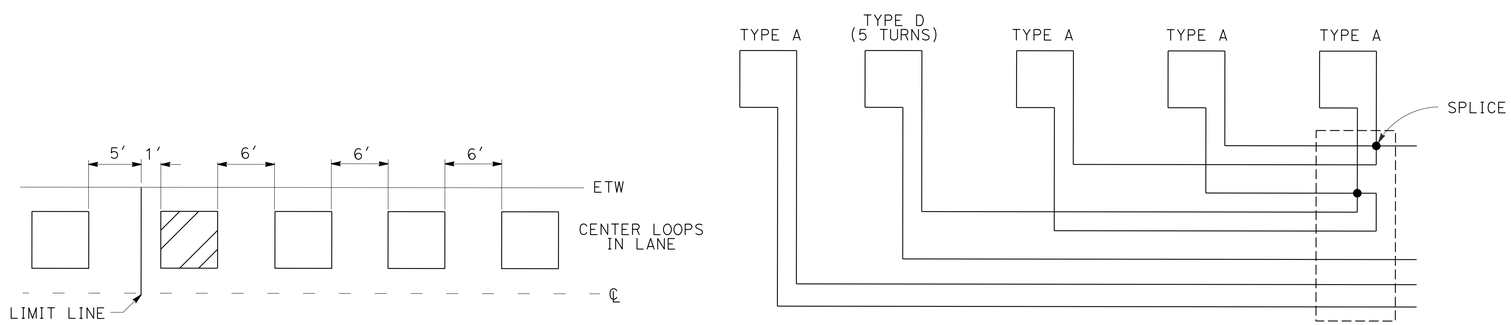

TYPE D/TYPE A LOOP ARRAY

ELECTRICAL DETAILS

NO SCALE

E-5

REVISED BY	DATE REVISED
ARTURO P. ROBLES	JIM HANNIGAN
CALCULATED-DESIGNED BY	CHECKED BY
FUNCTIONAL SUPERVISOR	ROB STINGER

STATE OF CALIFORNIA - DEPARTMENT OF TRANSPORTATION
Caltrans® ELECTRICAL DESIGN

P:\proj1\02\2c090_plans\pse\22c090ua005.dgn

LAST REVISION 06-12-16 | DATE PLOTTED => 04-AUG-2016 | TIME PLOTTED => 11:58

Dist	COUNTY	ROUTE	POST MILES TOTAL PROJECT	SHEET No.	TOTAL SHEETS
02	Plu	70	50.6/51.7	56	181

ART 06-12-16
REGISTERED ELECTRICAL ENGINEER DATE

06-15-16
PLANS APPROVAL DATE

REGISTERED PROFESSIONAL ENGINEER A.P. ROBLES No. E15293 Exp. 3-31-17 ELECTRICAL STATE OF CALIFORNIA

THE STATE OF CALIFORNIA OR ITS OFFICERS OR AGENTS SHALL NOT BE RESPONSIBLE FOR THE ACCURACY OR COMPLETENESS OF SCANNED COPIES OF THIS PLAN SHEET.

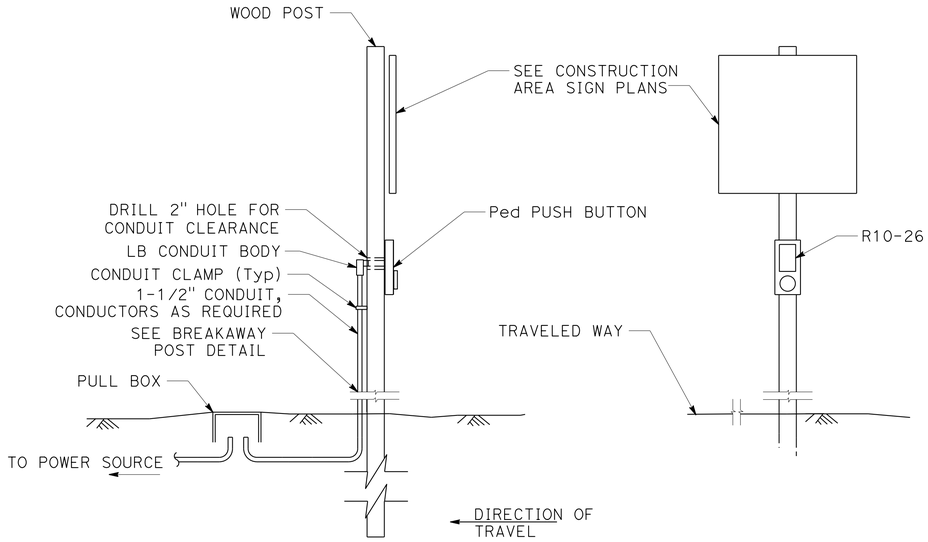

Ped PUSH BUTTON INSTALLATION

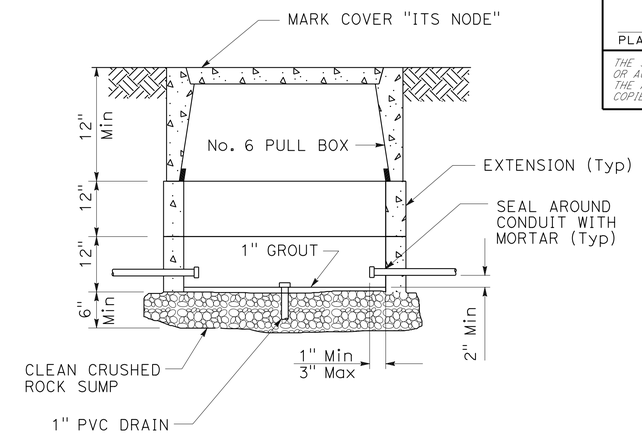

ITS NODE PULL BOX

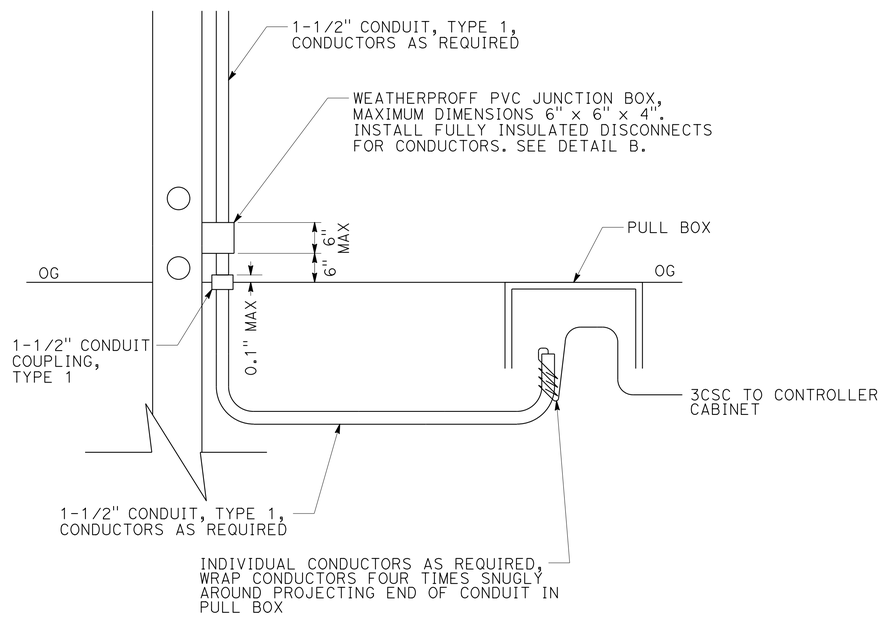

DETAIL A
BREAKAWAY POST
(CONDUIT CONNECTION)

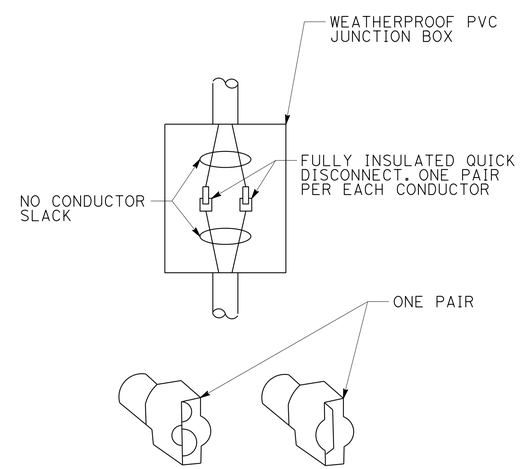

DETAIL B

ELECTRICAL DETAILS

NO SCALE

E-6

STATE OF CALIFORNIA - DEPARTMENT OF TRANSPORTATION
Caltrans® ELECTRICAL DESIGN

FUNCTIONAL SUPERVISOR: ROB STINGER
CALCULATED-DESIGNED BY: ARTURO P. ROBLES
CHECKED BY: JIM HANNIGAN
REVISED BY / DATE REVISED

P:\proj1\02\2c090_plans\pse\22c090ua006.dgn

LAST REVISION 06-12-16 | DATE PLOTTED => 04-AUG-2016 | TIME PLOTTED => 11:58

Dist	COUNTY	ROUTE	POST MILES TOTAL PROJECT	SHEET No.	TOTAL SHEETS
02	Plu	70	50.6/51.7	57	181

REGISTERED ENGINEER 06-10-16 DATE

06-15-16 PLANS APPROVAL DATE

REGISTERED PROFESSIONAL ENGINEER KEITH KOEPPEN No. E19870 Exp. 3-31-18 ELECTRICAL STATE OF CALIFORNIA

THE STATE OF CALIFORNIA OR ITS OFFICERS OR AGENTS SHALL NOT BE RESPONSIBLE FOR THE ACCURACY OR COMPLETENESS OF SCANNED COPIES OF THIS PLAN SHEET.

NOTE:

(N) - NOT A SEPARATE PAY ITEM. FOR INFORMATION ONLY.

TEMPORARY SIGNAL SYSTEM

SHEET No.	(N) 1½" TYPE 3 CONDUIT	(N) 2" TYPE 3 CONDUIT	(N) 2" TYPE 1 CONDUIT SURFACE-MOUNTED	(N) TRENCHING IN PAVEMENT	(N) 3" TYPE 3 CONDUIT	(N) MESSENGER CABLE	(N) WOOD POLE	(N) SIGNAL FACE WITH 3 INDICATIONS	(N) No. 5 PULL BOX	(N) No. 5(T) PULL BOX	(N) No. 6 PULL BOX	(N) No. 12 CONDUCTOR	(N) No. 12 G	(N) No. 10 CONDUCTOR	(N) No. 10 G	(N) No. 6 CONDUCTOR	(N) No. 6 G	(N) DLC	(N) 3CSC	(N) TYPE A LOOP	(N) TYPE D LOOP	(N) SOLAR-POWERED FLASHING BEACON	(N) GENERATOR	(N) BATTERIES (BBS)
	LF	LF	LF	LF	LF	LF	EA	EA	EA	EA	EA	LF	LF	LF	LF	LF	LF	LF	LF	EA	EA	EA	EA	EA
E-1	60			60		900	7	2	4			5500	2000					2800	500	7	1	2		
E-2		300	400	300	20	750	4			1	1	9900	1400	1400	700	50	25	7400	1500				2	4
E-3	60		200	80		1600	12	2	4			9800	2500	2450	1400			7200	1350	7	1	2		

MODIFYING EXISTING ELECTRICAL SYSTEMS

	SHEET No.	(N) 2" TYPE 1 CONDUIT	(N) #2/0 CONDUCTOR	(N) #8 CONDUCTOR	(N) No. 5 PULL BOX	(N) ITS NODE PULL BOX
		LF	LF	EA	EA	EA
	E-4	1900	1900	900	2	2
MODIFY RWIS	E-4					

MAINTAINING EXISTING TRAFFFIC MANAGEMENT SYSTEM ELEMENTS DURING CONSTRUCTION

TYPE	LOCATION	DESCRIPTION
RWIS	Plu-70-50.86	SPRING GARDEN ICWS
CCTV	Plu-70-50.85	SPRING GARDEN CCTV
CMS	Plu-70-51.64	ICY CURVE WARNING SYSTEM CMS
FO CABLE	Plu-70-50.86/51.64	SPRING GARDEN ICWS

ELECTRICAL QUANTITIES

E-7

REVISED BY | DATE REVISED

KEITH KOEPPEN | CALCULATED-DESIGNED BY

JIM HANNIGAN | CHECKED BY

FUNCTIONAL SUPERVISOR

IAN TURNBULL

STATE OF CALIFORNIA - DEPARTMENT OF TRANSPORTATION

Caltrans

ITS ENGINEERING AND SUPPORT

P:\proj1\02\2c090_plans\pse\22c090ua007.dgn

LAST REVISION | DATE PLOTTED => 04-AUG-2016 | 05-02-16 | TIME PLOTTED => 11:58

M

Maint	MAINTENANCE
Max	MAXIMUM
MB	METAL BEAM
MBB	METAL BEAM BARRIER
MBGR	METAL BEAM GUARD RAILING
Med	MEDIAN
MGS	MIDWEST GUARDRAIL SYSTEM
MH	MANHOLE
Min	MINIMUM
Misc	MISCELLANEOUS
Misc I & S	MISCELLANEOUS IRON AND STEEL
Mkr	MARKER
Mod	MODIFIED,
	MODIFY
Mon	MONUMENT
MP	METAL PLATE
MPGR	METAL PLATE GUARD RAILING
MR	MOVEMENT RATING
MSE	MECHANICALLY STABILIZED EMBANKMENT
Mt	MOUNTAIN, MOUNT
Mtl	MATERIAL
MVP	MAINTENANCE VEHICLE PULLOUT

N

N	NORTH
NB	NORTHBOUND
No.	NUMBER (MUST HAVE PERIOD)
Nos.	NUMBERS (MUST HAVE PERIOD)
NPS	NOMINAL PIPE SIZE
NS	NEAR SIDE
NSP	NEW STANDARD PLAN
NTS	NOT TO SCALE

O

Oblr	OBLITERATE
OC	OVERCROSSING
OD	OUTSIDE DIAMETER
OF	OUTSIDE FACE
OG	ORIGINAL GROUND
OGAC	OPEN GRADED ASPHALT CONCRETE
OGFC	OPEN GRADED FRICTION COURSE
OH	OVERHEAD
OHWM	ORDINARY HIGH WATER MARK
O-O	OUT TO OUT
Opp	OPPOSITE
OSD	OVERSIDE DRAIN

P

P	PAGE
PAP	PERFORATED ALUMINUM PIPE
PB	PULL BOX
PC	POINT OF CURVATURE,
	PRECAST
PCC	POINT OF COMPOUND CURVE,
	PORTLAND CEMENT CONCRETE
PCMS	PORTABLE CHANGEABLE MESSAGE SIGN
PCP	PERFORATED CONCRETE PIPE,
	PRESTRESSED CONCRETE PIPE
PCVC	POINT OF COMPOUND VERTICAL CURVE
PEC	PERMIT TO ENTER AND CONSTRUCT
Ped	PEDESTRIAN
Ped OC	PEDESTRIAN OVERCROSSING
Ped UC	PEDESTRIAN UNDERCROSSING
Perm Mtl	PERMEABLE MATERIAL

P continued

PG	PROFILE GRADE
PI	POINT OF INTERSECTION
PJP	PARTIAL JOINT PENETRATION
Pkwy	PARKWAY
ℙ,PL	PLATE
P/L	PROPERTY LINE
PM	POST MILE,
	TIME FROM NOON TO MIDNIGHT
PN	PAVING NOTCH
POC	POINT OF HORIZONTAL CURVE
POT	POINT OF TANGENT
POVC	POINT OF VERTICAL CURVE
PP	PIPE PILE,
	PLASTIC PIPE,
	POWER POLE
PPL	PREFORMED PERMEABLE LINER
PPP	PERFORATED PLASTIC PIPE
PRC	POINT OF REVERSE CURVE
PRF	PAVEMENT REINFORCING FABRIC
PRVC	POINT OF REVERSE VERTICAL CURVE
PS&E	PLANS, SPECIFICATIONS AND ESTIMATES
PS, P/S	PRESTRESSED
PSP	PERFORATED STEEL PIPE
PT	POINT OF TANGENCY
PVC	POLYVINYL CHLORIDE
Pvmt	PAVEMENT

Q

Qty	QUANTITY

R

R	RADIUS
R & D	REMOVE AND DISPOSE
R & S	REMOVE AND SALVAGE
R/C	RATE OF CHANGE
RCA	REINFORCED CONCRETE ARCH
RCB	REINFORCED CONCRETE BOX
RCP	REINFORCED CONCRETE PIPE
RCPA	REINFORCED CONCRETE PIPE ARCH
Rd	ROAD
Reinf	REINFORCED,
	REINFORCEMENT,
	REINFORCING
Rel	RELOCATE
Repl	REPLACEMENT
Ret	RETAINING
Rev	REVISED, REVISION
Rdwy	ROADWAY
RHMA	RUBBERIZED HOT MIX ASPHALT
Riv	RIVER
RM	ROAD-MIXED
RP	RADIUS POINT,
	REFERENCE POINT
RR	RAILROAD
RSP	ROCK SLOPE PROTECTION,
	REVISED STANDARD PLAN
Rt	RIGHT
Rte	ROUTE
RW	REDWOOD,
	RETAINING WALL
R/W	RIGHT OF WAY
Rwy	RAILWAY

S

S	SOUTH,
	SUPPLEMENT
SAE	STRUCTURE APPROACH EMBANKMENT
Salv	SALVAGE
SAPP	STRUCTURAL ALUMINUM PLATE PIPE
SB	SOUTHBOUND
SC	SAND CUSHION
SCSP	SLOTTED CORRUGATED STEEL PIPE
SD	STORM DRAIN
Sec	SECOND,
	SECTION
Sep	SEPARATION
SG	SUBGRADE
Shld	SHOULDER
Sht	SHEET
Sim	SIMILAR
℄	STATION LINE
SM	SELECTED MATERIAL
Spec	SPECIAL,
	SPECIFICATIONS
SPP	SLOTTED PLASTIC PIPE
SS	SLOPE STAKE
SSBM	STRAP AND SADDLE BRACKET METHOD
SSD	STRUCTURAL SECTION DRAIN
SSPA	STRUCTURAL STEEL PLATE ARCH
SSPP	STRUCTURAL STEEL PLATE PIPE
SSPPA	STRUCTURAL STEEL PLATE PIPE ARCH
SSRP	STEEL SPIRAL RIB PIPE
St	STREET
Sta	STATION
STBB	SINGLE THRIE BEAM BARRIER
Std	STANDARD
Str	STRUCTURE
Surf	SURFACING
SW	SIDEWALK,
	SOUND WALL
Swr	SEWER
Sym	SYMMETRICAL
S4S	SURFACE 4 SIDES

T

T	SEMI-TANGENT
Tan	TANGENT
TBB	THRIE BEAM BARRIER
Tbr	TIMBER
TC	TOP OF CURB
TCB	TRAFFIC CONTROL BOX
TCE	TEMPORARY CONSTRUCTION EASEMENT
Tel	TELEPHONE
Temp	TEMPORARY
TG	TOP OF GRADE
Tot	TOTAL
TP	TELEPHONE POLE
TPB	TREATED PERMEABLE BASE
TPM	TREATED PERMEABLE MATERIAL
Trans	TRANSITION

T continued

TS	TRANSVERSE,
	TRAFFIC SIGNAL,
	TUBULAR STEEL
Typ	TYPICAL

U

UC	UNDERCROSSING
UD	UNDERDRAIN
UG	UNDERGROUND
UON	UNLESS OTHERWISE NOTED
UP	UNDERPASS

V

V	VALVE,
	DESIGN SPEED
Var	VARIABLE,
	VARIES
VC	VERTICAL CURVE
VCP	VITRIFIED CLAY PIPE
Vert	VERTICAL
Via	VIADUCT
Vol	VOLUME

W

W	WEST,
	WIDTH
WB	WESTBOUND
WH	WEEP HOLE
WM	WIRE MESH
WS	WATER SURFACE
WSP	WELDED STEEL PIPE
Wt	WEIGHT
WV	WATER VALVE
WW	WINGWALL
WWLOL	WINGWALL LAYOUT LINE

X

X Sec	CROSS SECTION
Xing	CROSSING

Y

Yr	YEAR
Yrs	YEARS

Dist	COUNTY	ROUTE	POST MILES TOTAL PROJECT	SHEET No.	TOTAL SHEETS
02	Plu	70	50.6/51.7	58	181

Grace M. Tsushima
REGISTERED CIVIL ENGINEER

July 19, 2013
PLANS APPROVAL DATE

REGISTERED PROFESSIONAL ENGINEER Grace M. Tsushima No. C49814 Exp. 9-30-14 CIVIL STATE OF CALIFORNIA

THE STATE OF CALIFORNIA OR ITS OFFICERS OR AGENTS SHALL NOT BE RESPONSIBLE FOR THE ACCURACY OR COMPLETENESS OF SCANNED COPIES OF THIS PLAN SHEET.

TO ACCOMPANY PLANS DATED 06-15-16

2010 REVISED STANDARD PLAN RSP A10B

UNIT OF MEASUREMENT SYMBOLS:

Some of the symbols used in the project plan quantity tables and in the Bid Item List are:

TABLE A

SYMBOL USED	DEFINITIONS
ACRE	ACRE
CF	CUBIC FOOT
CY	CUBIC YARD
EA	EACH
GAL	GALLON
LB	POUND
LF	LINEAR FOOT
SQFT	SQUARE FOOT
SQYD	SQUARE YARD
STA	100 FEET
TAB	TABLET
TON	2,000 POUNDS

Some of the symbols used in the plans other than in the project plan quantity tables are:

TABLE B

SYMBOL USED	DEFINITIONS
ksi	KIPS PER SQUARE INCH
ksf	KIPS PER SQUARE FOOT
psi	POUNDS PER SQUARE INCH
psf	POUNDS PER SQUARE FOOT
lb/ft^3, pcf	POUNDS PER CUBIC FOOT
tsf	TONS PER SQUARE FOOT
mph, MPH *	MILES PER HOUR
ø	NOMINAL DIAMETER
oz	OUNCE
lb	POUND
kip	1,000 POUNDS
cal	CALORIE
ft	FOOT OR FEET
gal	GALLON

* For use on a sign panel only

STATE OF CALIFORNIA
DEPARTMENT OF TRANSPORTATION

ABBREVIATIONS (SHEET 2 OF 2)

NO SCALE

RSP A10B DATED JULY 19, 2013 SUPERSEDES STANDARD PLAN A10B DATED MAY 20, 2011 - PAGE 2 OF THE STANDARD PLANS BOOK DATED 2010.

REVISED STANDARD PLAN RSP A10B

DATE PLOTTED => 04-AUG-2016
TIME PLOTTED => 11:58

REFERENCE: CALTRANS SOIL & ROCK LOGGING, CLASSIFICATION, AND PRESENTATION MANUAL (2010)

Dist	COUNTY	ROUTE	POST MILES TOTAL PROJECT	SHEET No.	TOTAL SHEETS
02	Plu	70	50.6/51.7	59	181

CERTIFIED ENGINEERING GEOLOGIST

October 30, 2015
PLANS APPROVAL DATE

REGISTERED GEOLOGIST
CHRIS A. RISDEN
CERTIFIED ENGINEERING GEOLOGIST
No. 2541
Exp. 9-30-17
STATE OF CALIFORNIA

THE STATE OF CALIFORNIA OR ITS OFFICERS OR AGENTS SHALL NOT BE RESPONSIBLE FOR THE ACCURACY OR COMPLETENESS OF SCANNED COPIES OF THIS PLAN SHEET.

TO ACCOMPANY PLANS DATED 06-15-16

ABBREVIATION:

GWS = Ground Water Surface

CEMENTATION

DESCRIPTION	CRITERIA
WEAK	CRUMBLES OR BREAKS WITH HANDLING OR LITTLE FINGER PRESSURE.
MODERATE	CRUMBLES OR BREAKS WITH CONSIDERABLE FINGER PRESSURE.
STRONG	WILL NOT CRUMBLE OR BREAK WITH FINGER PRESSURE.

BOREHOLE IDENTIFICATION

SYMBOL	HOLE TYPE	DESCRIPTION
Size	A	AUGER BORING (HOLLOW OR SOLID STEM BUCKET)
Size	R RW RC P	ROTARY DRILLED BORING (CONVENTIONAL) ROTARY DRILLED WITH SELF-CASING WIRE-LINE ROTARY CORE WITH CONTINUOUSLY-SAMPLED, SELF-CASING WIRE-LINE ROTARY PERCUSSION BORING (AIR)
Size	R RC	ROTARY DRILLED DIAMOND CORE ROTARY DRILLED DIAMOND CORE, CONTINUOUSLY SAMPLED
Size	HD HA	HAND DRIVEN (1-INCH SOIL TUBE) HAND AUGER
●	D	DYNAMIC CONE PENETRATION BORING
▲	CPT	CONE PENETRATION TEST (ASTM D 5778)
⬚	O	OTHER (NOTE ON LOTB)

Note: Size in inches.

CONSISTENCY OF COHESIVE SOILS

DESCRIPTION	SHEAR STRENGTH (tsf)	POCKET PENETROMETER MEASUREMENT, PP, (tsf)	TORVANE MEASUREMENT, TV, (tsf)	VANE SHEAR MEASUREMENT, VS, (tsf)
VERY SOFT	LESS THAN 0.12	LESS THAN 0.25	LESS THAN 0.12	LESS THAN 0.12
SOFT	0.12 - 0.25	0.25 - 0.5	0.12 - 0.25	0.12 - 0.25
MEDIUM STIFF	0.25 - 0.5	0.5 - 1	0.25 - 0.5	0.25 - 0.5
STIFF	0.5 - 1	1 - 2	0.5 - 1	0.5 - 1
VERY STIFF	1 - 2	2 - 4	1 - 2	1 - 2
HARD	GREATER THAN 2	GREATER THAN 4	GREATER THAN 2	GREATER THAN 2

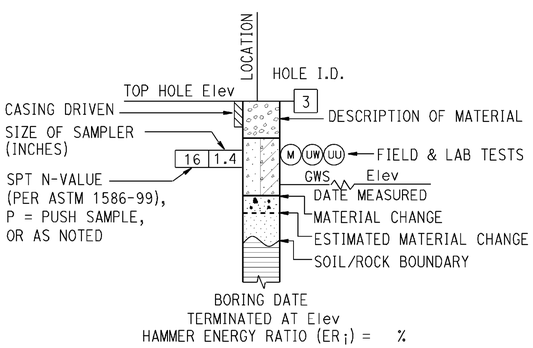

ROTARY BORING

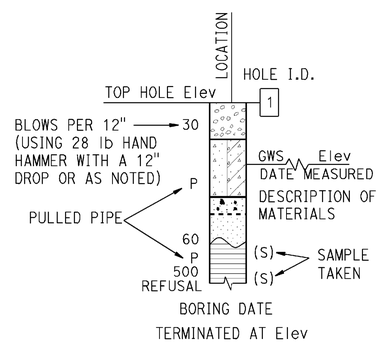

HAND BORING

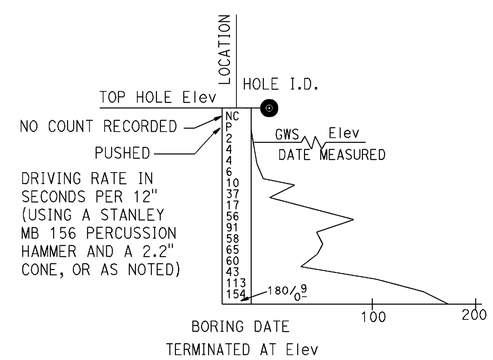

DYNAMIC CONE PENETRATION BORING

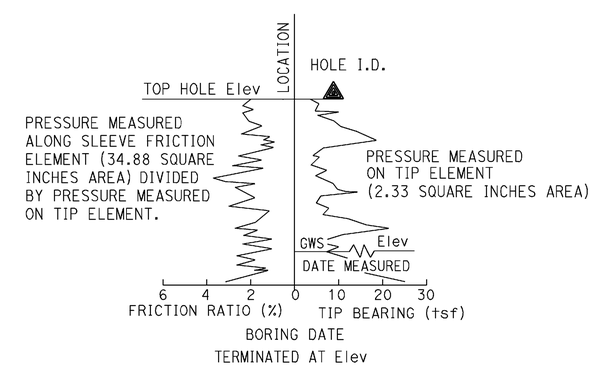

CONE PENETRATION TEST (CPT) BORING

STATE OF CALIFORNIA
DEPARTMENT OF TRANSPORTATION

LEGEND - SOIL (SHEET 1 OF 2)

NO SCALE

RSP A10F DATED OCTOBER 30, 2015 SUPERSEDES STANDARD PLAN A10F DATED MAY 20, 2011 - PAGE 6 OF THE STANDARD PLANS BOOK DATED 2010.

REVISED STANDARD PLAN RSP A10F

2010 REVISED STANDARD PLAN RSP A10F

DATE PLOTTED => 04-AUG-2016
TIME PLOTTED => 11:58

REFERENCE: CALTRANS SOIL & ROCK LOGGING, CLASSIFICATION, AND PRESENTATION MANUAL (2010)

Dist	COUNTY	ROUTE	POST MILES TOTAL PROJECT	SHEET No.	TOTAL SHEETS
02	Plu	70	50.6/51.7	60	181

CERTIFIED ENGINEERING GEOLOGIST

October 30, 2015
PLANS APPROVAL DATE

REGISTERED GEOLOGIST — CHRIS A. RISDEN — CERTIFIED ENGINEERING GEOLOGIST — No. 2541 Exp. 9-30-17 — STATE OF CALIFORNIA

THE STATE OF CALIFORNIA OR ITS OFFICERS OR AGENTS SHALL NOT BE RESPONSIBLE FOR THE ACCURACY OR COMPLETENESS OF SCANNED COPIES OF THIS PLAN SHEET.

TO ACCOMPANY PLANS DATED 06-15-16

GROUP SYMBOLS AND NAMES

GRAPHIC/SYMBOL	GROUP NAMES	GRAPHIC/SYMBOL	GROUP NAMES
GW	WELL-GRADED GRAVEL WELL-GRADED GRAVEL WITH SAND	CL	LEAN CLAY LEAN CLAY WITH SAND LEAN CLAY WITH GRAVEL SANDY LEAN CLAY SANDY LEAN CLAY WITH GRAVEL GRAVELLY LEAN CLAY GRAVELLY LEAN CLAY WITH SAND
GP	POORLY-GRADED GRAVEL POORLY-GRADED GRAVEL WITH SAND		
GW-GM	WELL-GRADED GRAVEL WITH SILT WELL-GRADED GRAVEL WITH SILT AND SAND	CL-ML	SILTY CLAY SILTY CLAY WITH SAND SILTY CLAY WITH GRAVEL SANDY SILTY CLAY SANDY SILTY CLAY WITH GRAVEL GRAVELLY SILTY CLAY GRAVELLY SILTY CLAY WITH SAND
GW-GC	WELL-GRADED GRAVEL WITH CLAY (OR SILTY CLAY) WELL-GRADED GRAVEL WITH CLAY AND SAND (OR SILTY CLAY AND SAND)		
GP-GM	POORLY-GRADED GRAVEL WITH SILT POORLY-GRADED GRAVEL WITH SILT AND SAND	ML	SILT SILT WITH SAND SILT WITH GRAVEL SANDY SILT SANDY SILT WITH GRAVEL GRAVELLY SILT GRAVELLY SILT WITH SAND
GP-GC	POORLY-GRADED GRAVEL WITH CLAY (OR SILTY CLAY) POORLY-GRADED GRAVEL WITH CLAY AND SAND (OR SILTY CLAY AND SAND)		
GM	SILTY GRAVEL SILTY GRAVEL WITH SAND	OL	ORGANIC LEAN CLAY ORGANIC LEAN CLAY WITH SAND ORGANIC LEAN CLAY WITH GRAVEL SANDY ORGANIC LEAN CLAY SANDY ORGANIC LEAN CLAY WITH GRAVEL GRAVELLY ORGANIC LEAN CLAY GRAVELLY ORGANIC LEAN CLAY WITH SAND
GC	CLAYEY GRAVEL CLAYEY GRAVEL WITH SAND		
GC-GM	SILTY, CLAYEY GRAVEL SILTY, CLAYEY GRAVEL WITH SAND	OL	ORGANIC SILT ORGANIC SILT WITH SAND ORGANIC SILT WITH GRAVEL SANDY ORGANIC SILT SANDY ORGANIC SILT WITH GRAVEL GRAVELLY ORGANIC SILT GRAVELLY ORGANIC SILT WITH SAND
SW	WELL-GRADED SAND WELL-GRADED SAND WITH GRAVEL		
SP	POORLY-GRADED SAND POORLY-GRADED SAND WITH GRAVEL	CH	FAT CLAY FAT CLAY WITH SAND FAT CLAY WITH GRAVEL SANDY FAT CLAY SANDY FAT CLAY WITH GRAVEL GRAVELLY FAT CLAY GRAVELLY FAT CLAY WITH SAND
SW-SM	WELL-GRADED SAND WITH SILT WELL-GRADED SAND WITH SILT AND GRAVEL		
SW-SC	WELL-GRADED SAND WITH CLAY (OR SILTY CLAY) WELL-GRADED SAND WITH CLAY AND GRAVEL (OR SILTY CLAY AND GRAVEL)	MH	ELASTIC SILT ELASTIC SILT WITH SAND ELASTIC SILT WITH GRAVEL SANDY ELASTIC SILT SANDY ELASTIC SILT WITH GRAVEL GRAVELLY ELASTIC SILT GRAVELLY ELASTIC SILT WITH SAND
SP-SM	POORLY-GRADED SAND WITH SILT POORLY-GRADED SAND WITH SILT AND GRAVEL		
SP-SC	POORLY-GRADED SAND WITH CLAY (OR SILTY CLAY) POORLY-GRADED SAND WITH CLAY AND GRAVEL (OR SILTY CLAY AND GRAVEL)	OH	ORGANIC FAT CLAY ORGANIC FAT CLAY WITH SAND ORGANIC FAT CLAY WITH GRAVEL SANDY ORGANIC FAT CLAY SANDY ORGANIC FAT CLAY WITH GRAVEL GRAVELLY ORGANIC FAT CLAY GRAVELLY ORGANIC FAT CLAY WITH SAND
SM	SILTY SAND SILTY SAND WITH GRAVEL		
SC	CLAYEY SAND CLAYEY SAND WITH GRAVEL	OH	ORGANIC ELASTIC SILT ORGANIC ELASTIC SILT WITH SAND ORGANIC ELASTIC SILT WITH GRAVEL SANDY ORGANIC ELASTIC SILT SANDY ORGANIC ELASTIC SILT WITH GRAVEL GRAVELLY ORGANIC ELASTIC SILT GRAVELLY ORGANIC ELASTIC SILT WITH SAND
SC-SM	SILTY, CLAYEY SAND SILTY, CLAYEY SAND WITH GRAVEL		
PT	PEAT	OL/OH	ORGANIC SOIL ORGANIC SOIL WITH SAND ORGANIC SOIL WITH GRAVEL SANDY ORGANIC SOIL SANDY ORGANIC SOIL WITH GRAVEL GRAVELLY ORGANIC SOIL GRAVELLY ORGANIC SOIL WITH SAND
	COBBLES COBBLES AND BOULDERS BOULDERS		

FIELD AND LABORATORY TESTING

- (C) CONSOLIDATION (ASTM D2435)
- (CL) COLLAPSE POTENTIAL (ASTM D4546)
- (CP) COMPACTION CURVE (CTM 216)
- (CR) CORROSIVITY TESTING (CTM 643, CTM 422, CTM 417)
- (CU) CONSOLIDATED UNDRAINED TRIAXIAL (ASTM D4767)
- (DS) DIRECT SHEAR (ASTM D3080)
- (EI) EXPANSION INDEX (ASTM D4829)
- (M) MOISTURE CONTENT (ASTM D2216)
- (OC) ORGANIC CONTENT-% (ASTM D2974)
- (P) PERMEABILITY (CTM 220)
- (PA) PARTICLE SIZE ANALYSIS (ASTM D422)
- (PI) PLASTICITY INDEX (AASHTO T 90) LIQUID LIMIT (AASHTO T 89)
- (PL) POINT LOAD INDEX (ASTM D5731)
- (PM) PRESSURE METER
- (R) R-VALUE (CTM 301)
- (SE) SAND EQUIVALENT (CTM 217)
- (SG) SPECIFIC GRAVITY (AASHTO T 100)
- (SL) SHRINKAGE LIMIT (ASTM D4943)
- (SW) SWELL POTENTIAL (ASTM D4546)
- (UC) UNCONFINED COMPRESSION-SOIL (ASTM D2166) UNCONFINED COMPRESSION-ROCK (ASTM D7012 - METHOD C)
- (UU) UNCONSOLIDATED UNDRAINED TRIAXIAL (ASTM D2850)
- (UW) UNIT WEIGHT (ASTM D7263 - METHOD B)

APPARENT DENSITY OF COHESIONLESS SOILS

DESCRIPTION	SPT N_{60} (BLOWS / 12 INCHES)
VERY LOOSE	0 - 5
LOOSE	5 - 10
MEDIUM DENSE	10 - 30
DENSE	30 - 50
VERY DENSE	GREATER THAN 50

MOISTURE

DESCRIPTION	CRITERIA
DRY	NO DISCERNABLE MOISTURE
MOIST	MOISTURE PRESENT, BUT NO FREE WATER
WET	VISIBLE FREE WATER

PERCENT OR PROPORTION OF SOILS

DESCRIPTION	CRITERIA
TRACE	PARTICLES ARE PRESENT BUT ESTIMATED TO BE LESS THAN 5%
FEW	5% - 10%
LITTLE	15% - 25%
SOME	30% - 45%
MOSTLY	50% - 100%

PARTICLE SIZE

DESCRIPTION		SIZE
BOULDER		GREATER THAN 12"
COBBLE		3" - 12"
GRAVEL	COARSE	3/4" - 3"
	FINE	1/5" - 3/4"
SAND	COARSE	1/16" - 1/5"
	MEDIUM	1/64" - 1/16"
	FINE	1/300" - 1/64"
SILT AND CLAY		LESS THAN 1/300"

STATE OF CALIFORNIA
DEPARTMENT OF TRANSPORTATION

LEGEND - SOIL (SHEET 2 OF 2)

NO SCALE

RSP A10G DATED OCTOBER 30, 2015 SUPERSEDES STANDARD PLAN A10G DATED MAY 20, 2011 - PAGE 7 OF THE STANDARD PLANS BOOK DATED 2010.

REVISED STANDARD PLAN RSP A10G

2010 REVISED STANDARD PLAN RSP A10G

DATE PLOTTED => 04-AUG-2016
TIME PLOTTED => 11:59

USERNAME => s115152
DGN FILE => 22c090va003.dgn

P:\proj1\02\2c090_plans\pse\22c090va003.dgn

9-22-15

Dist	COUNTY	ROUTE	POST MILES TOTAL PROJECT	SHEET No.	TOTAL SHEETS
02	Plu	70	50.6/51.7	61	181

REGISTERED CIVIL ENGINEER

July 19, 2013
PLANS APPROVAL DATE

REGISTERED PROFESSIONAL ENGINEER Roberta L. McLaughlin No. C40375 Exp. 3-31-15 CIVIL STATE OF CALIFORNIA

THE STATE OF CALIFORNIA OR ITS OFFICERS OR AGENTS SHALL NOT BE RESPONSIBLE FOR THE ACCURACY OR COMPLETENESS OF SCANNED COPIES OF THIS PLAN SHEET.

TO ACCOMPANY PLANS DATED 06-15-16

EXIT RAMP NEUTRAL AREA (GORE) TREATMENT

DETAIL 36

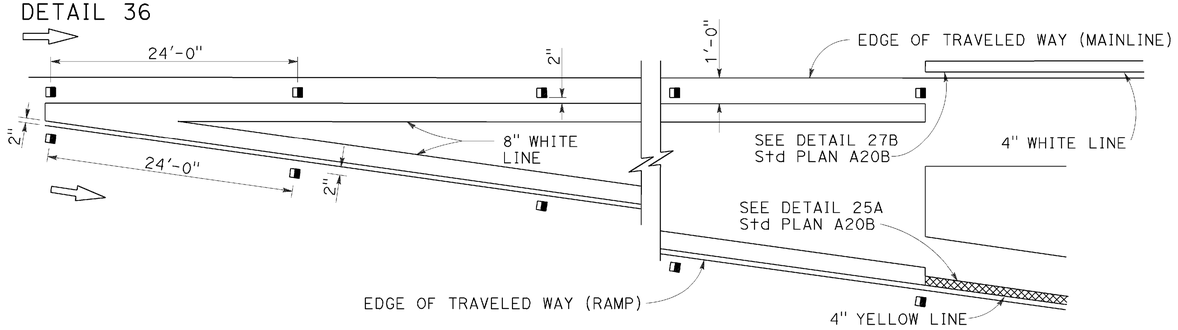

ENTRANCE RAMP NEUTRAL AREA (MERGE) TREATMENT

DETAIL 36A

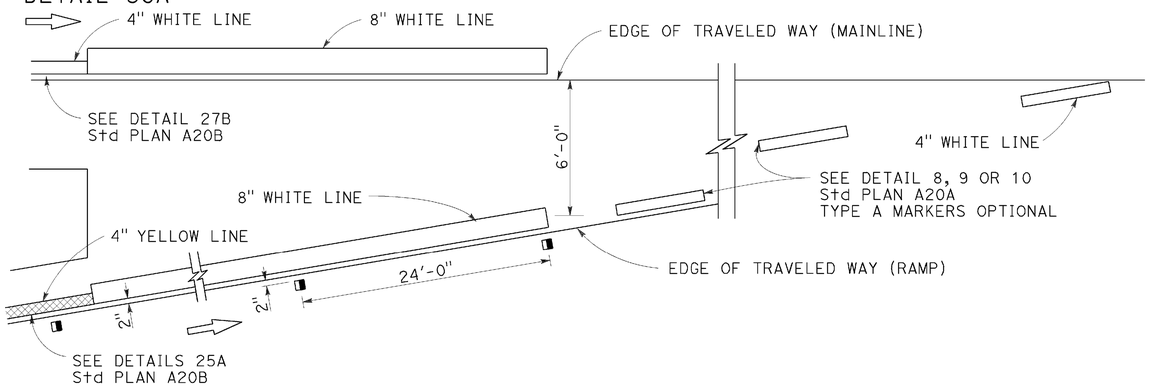

ENTRANCE RAMP NEUTRAL AREA (ACCELERATION LANE) TREATMENT

DETAIL 36B

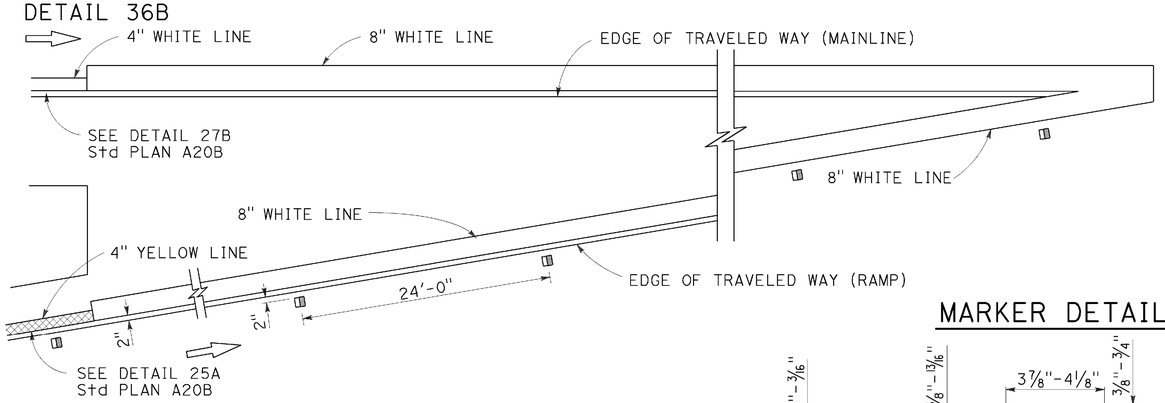

LANE DROP AT EXIT RAMPS

DETAIL 37

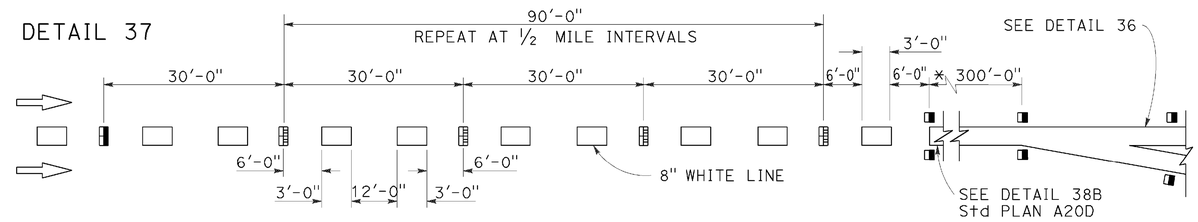

DETAIL 37A

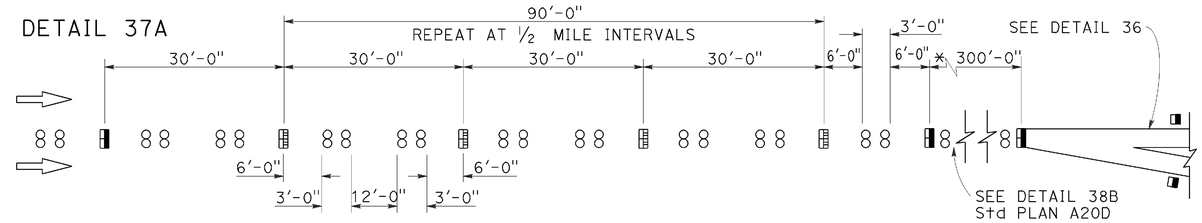

* The solid channelizing line shown may be omitted on short auxiliary lanes where weaving length is critical.

LANE DROP AT INTERSECTIONS

DETAIL 37B

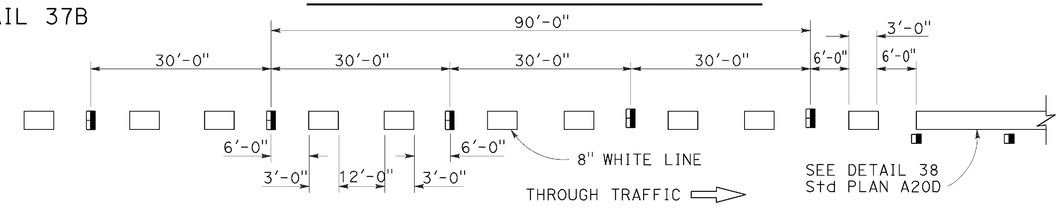

DETAIL 37C

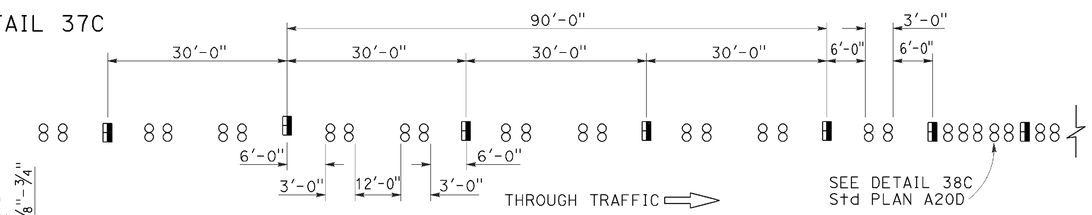

MARKER DETAILS

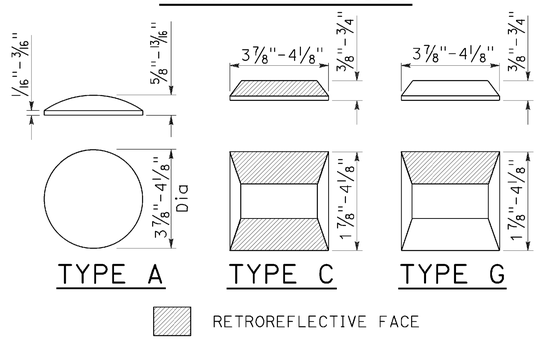

LEGEND:

MARKERS

- ○ TYPE A WHITE NON-REFLECTIVE
- TYPE C RED-CLEAR RETROREFLECTIVE
- TYPE G ONE-WAY CLEAR RETROREFLECTIVE

STATE OF CALIFORNIA
DEPARTMENT OF TRANSPORTATION

PAVEMENT MARKERS AND TRAFFIC LINE TYPICAL DETAILS

NO SCALE

RSP A20C DATED JULY 19, 2013 SUPERSEDES STANDARD PLAN A20C DATED MAY 20, 2011 - PAGE 11 OF THE STANDARD PLANS BOOK DATED 2010.

REVISED STANDARD PLAN RSP A20C

2010 REVISED STANDARD PLAN RSP A20C

DATE PLOTTED => 04-AUG-2016
TIME PLOTTED => 11:59

Dist	COUNTY	ROUTE	POST MILES TOTAL PROJECT	SHEET No.	TOTAL SHEETS
02	Plu	70	50.6/51.7	62	181

REGISTERED CIVIL ENGINEER

July 20, 2012
PLANS APPROVAL DATE

REGISTERED PROFESSIONAL ENGINEER
Roberta L. McLaughlin
No. C40375
Exp. 3-31-13
CIVIL
STATE OF CALIFORNIA

THE STATE OF CALIFORNIA OR ITS OFFICERS OR AGENTS SHALL NOT BE RESPONSIBLE FOR THE ACCURACY OR COMPLETENESS OF SCANNED COPIES OF THIS PLAN SHEET.

TO ACCOMPANY PLANS DATED 06-15-16

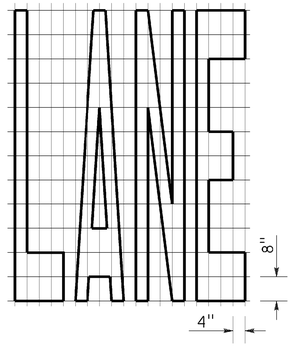

A=24 ft²

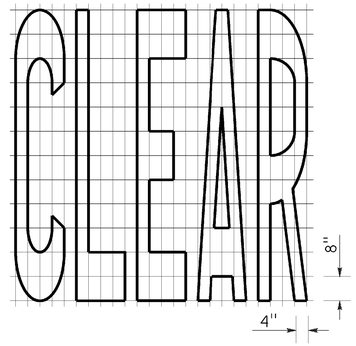

A=27 ft²

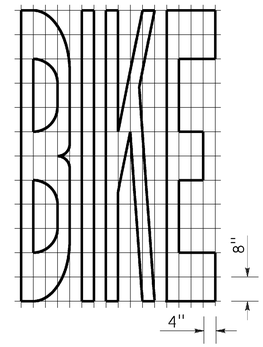

A=21 ft²

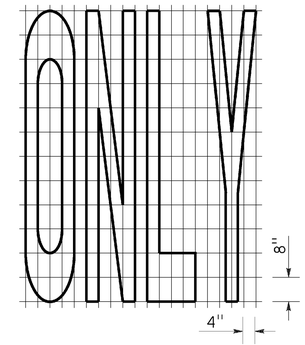

A=22 ft²

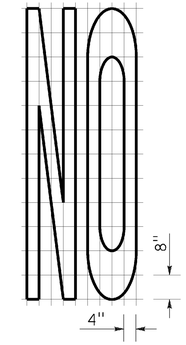

A=14 ft²

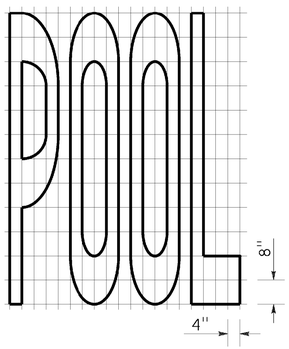

A=23 ft²

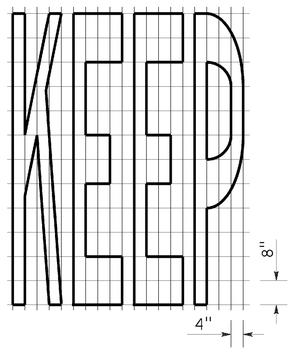

A=24 ft²

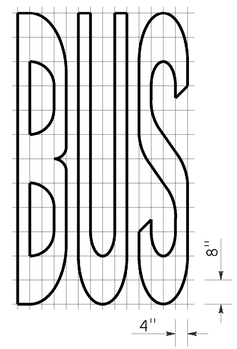

A=20 ft²

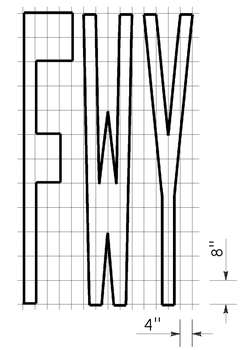

A=16 ft²

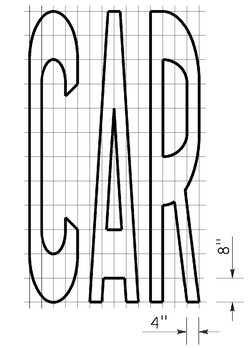

A=17 ft²

WORD MARKINGS			
ITEM	ft²	ITEM	ft²
LANE	24	NO	14
POOL	23	BIKE	21
CAR	17	BUS	20
CLEAR	27	ONLY	22
KEEP	24	FWY	16

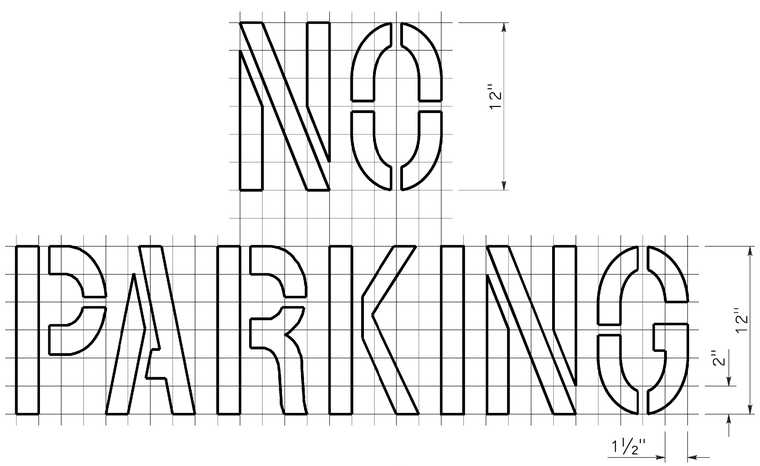

A=2 ft²

See Notes 6 and 7

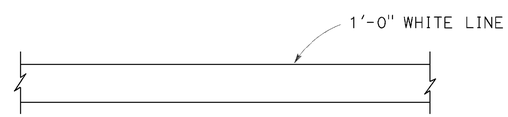

LIMIT LINE (STOP LINE)

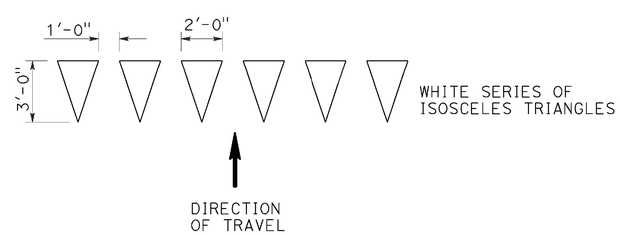

YIELD LINE

NOTES:

1. If a message consists of more than one word, it should read "UP", i.e., the first word should be nearest the driver.
2. The space between words should be at least four times the height of the characters for low speed roads, but not more than ten times the height of the characters. The space may be reduced appropriately where there is limited space because of local conditions.
3. Minor variations in dimensions may be accepted by the Engineer.
4. Portions of a letter, number or symbol may be separated by connecting segments not to exceed 2" in width.
5. The words "NO PARKING" pavement marking is to be used for parking facilities. For typical locations of markings, see Standard Plans A90A and A90B.
6. The words "NO PARKING", shall be painted in white letters no less than 1'-0" high on a contrasting background and located so that it is visible to traffic enforcement officials.

STATE OF CALIFORNIA
DEPARTMENT OF TRANSPORTATION

PAVEMENT MARKINGS WORDS, LIMIT AND YIELD LINES

NO SCALE

RSP A24E DATED JULY 20, 2012 SUPERSEDES STANDARD PLAN A24E
DATED MAY 20, 2011 - PAGE 17 OF THE STANDARD PLANS BOOK DATED 2010.

REVISED STANDARD PLAN RSP A24E

2010 REVISED STANDARD PLAN RSP A24E

DATE PLOTTED => 04-AUG-2016
TIME PLOTTED => 12:00

Dist	COUNTY	ROUTE	POST MILES TOTAL PROJECT	SHEET No.	TOTAL SHEETS
02	Plu	70	50.6/51.7	63	181

REGISTERED CIVIL ENGINEER

October 30, 2015
PLANS APPROVAL DATE

REGISTERED PROFESSIONAL ENGINEER
Carl M. Duan
No. C59976
Exp. 6-30-16
CIVIL
STATE OF CALIFORNIA

THE STATE OF CALIFORNIA OR ITS OFFICERS OR AGENTS SHALL NOT BE RESPONSIBLE FOR THE ACCURACY OR COMPLETENESS OF SCANNED COPIES OF THIS PLAN SHEET.

TO ACCOMPANY PLANS DATED 06-15-16

2010 REVISED STANDARD PLAN RSP A62F

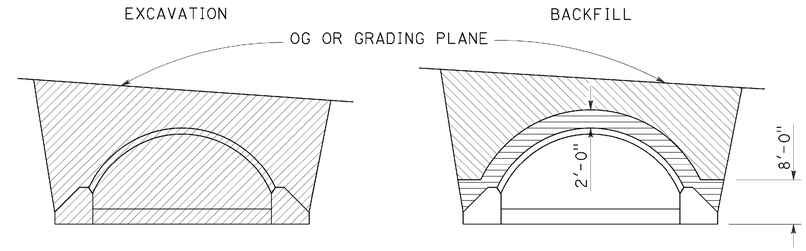

IN TRENCH

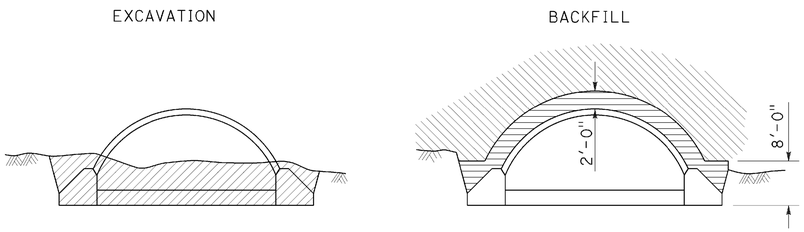

IN EMBANKMENT

STRUCTURAL STEEL PLATE ARCHES

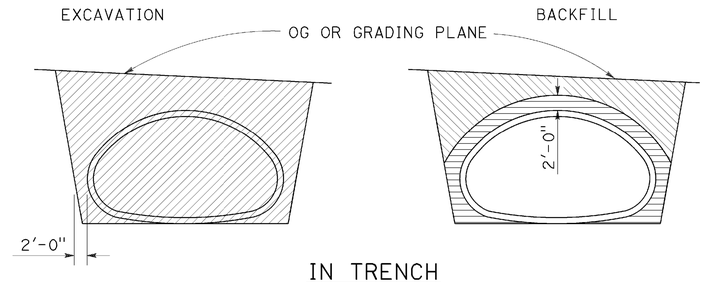

IN TRENCH

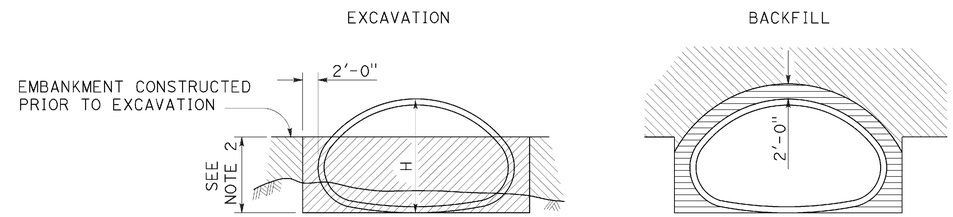

IN EMBANKMENT

STRUCTURAL STEEL PLATE PIPE ARCHES AND VEHICULAR UNDERCROSSING

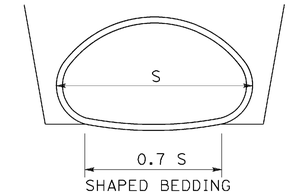

SHAPED BEDDING
S = Larger than 84"

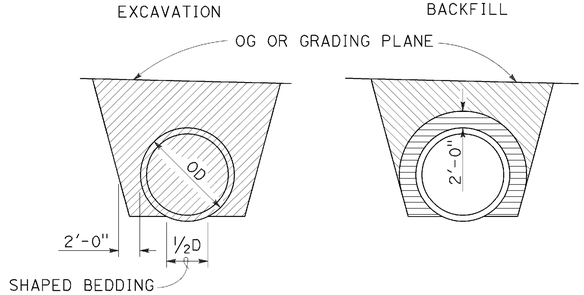

IN TRENCH

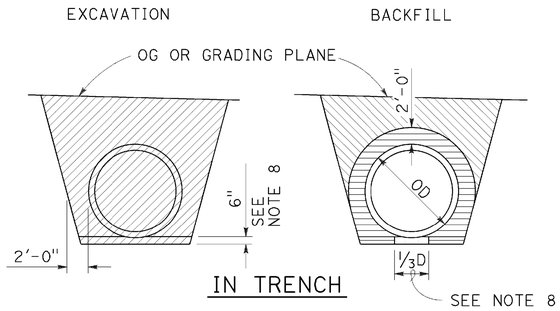

IN TRENCH

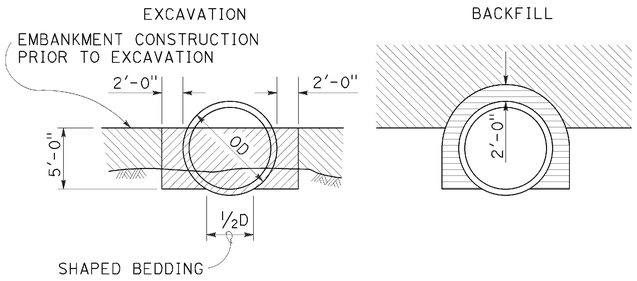

IN EMBANKMENT

PIPES

Larger than 84"

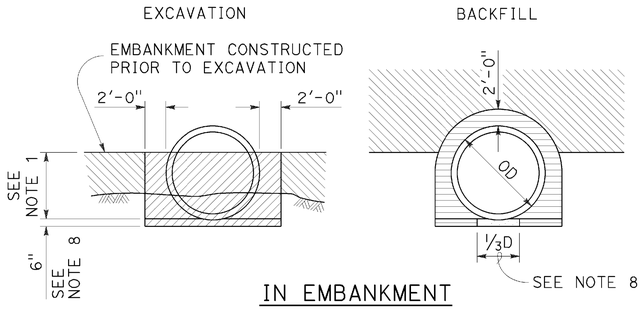

IN EMBANKMENT

METAL AND PLASTIC PIPES AND CORRUGATED METAL PIPE ARCHES

84" or Smaller

NOTES:

1. PIPES: 30" minimum for diameters up to and including 42" then ⅔ diameter but no more than 60" required. CORRUGATED METAL PIPE ARCHES: 30" maximum.
2. ⅔ H up to 60" maximum.
3. Slope or shore excavation sides as necessary.
4. Backfill shall be placed full width of excavation except as noted.
5. Diagrams do not apply to overside drains.
6. Dimensions shown are minimum.
7. Construction strutting of structural steel plate pipe, arches and vehicular undercrossing to be used when shown on the project plans. When shown, see Standard Plan D88A for strutting requirements.
8. Excavation below pipe and 80% relative compaction requirements for plastic pipes only.
9. D is the inside diameter (ID) of the pipe.

LEGEND

- STRUCTURE EXCAVATION (CULVERT)
- ROADWAY EMBANKMENT
- STRUCTURE BACKFILL (CULVERT) 95% RELATIVE COMPACTION
- STRUCTURE BACKFILL (CULVERT) 80% RELATIVE COMPACTION

STATE OF CALIFORNIA
DEPARTMENT OF TRANSPORTATION

EXCAVATION AND BACKFILL METAL AND PLASTIC CULVERTS

NO SCALE

RSP A62F DATED OCTOBER 30, 2015 SUPERSEDES STANDARD PLAN A62F DATED MAY 20, 2011 - PAGE 26 OF THE STANDARD PLANS BOOK DATED 2010.

REVISED STANDARD PLAN RSP A62F

DATE PLOTTED => 04-AUG-2016
TIME PLOTTED => 12:00

Dist	COUNTY	ROUTE	POST MILES TOTAL PROJECT	SHEET No.	TOTAL SHEETS
02	Plu	70	50.6/51.7	64	181

Randell D. Hiatt
REGISTERED CIVIL ENGINEER

July 19, 2013
PLANS APPROVAL DATE

REGISTERED PROFESSIONAL ENGINEER
Randell D. Hiatt
No. C50200
Exp. 6-30-15
CIVIL
STATE OF CALIFORNIA

THE STATE OF CALIFORNIA OR ITS OFFICERS OR AGENTS SHALL NOT BE RESPONSIBLE FOR THE ACCURACY OR COMPLETENESS OF SCANNED COPIES OF THIS PLAN SHEET.

TO ACCOMPANY PLANS DATED 06-15-16

2010 REVISED STANDARD PLAN RSP A77L1

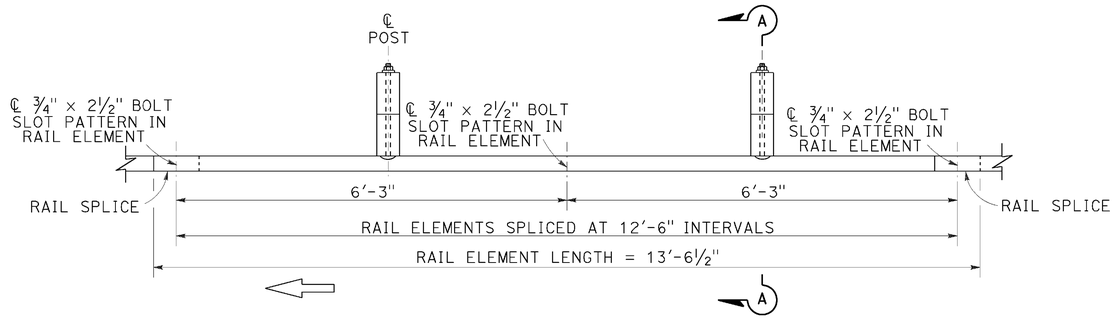

PLAN

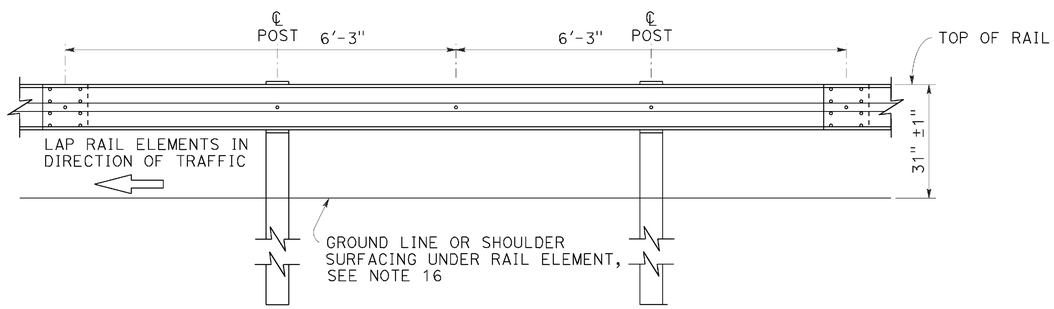

ELEVATION

MIDWEST GUARDRAIL SYSTEM WITH WOOD POST AND BLOCKS

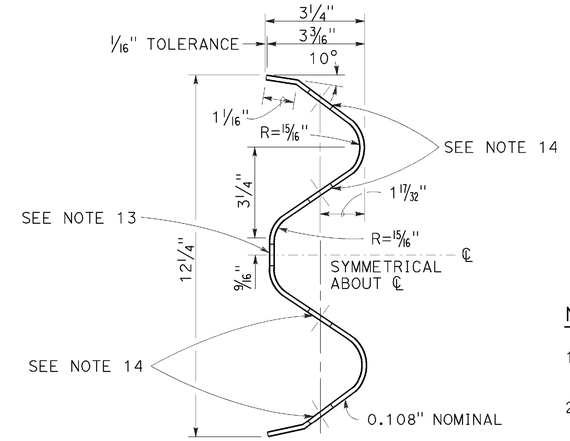

SECTION THRU RAIL ELEMENT

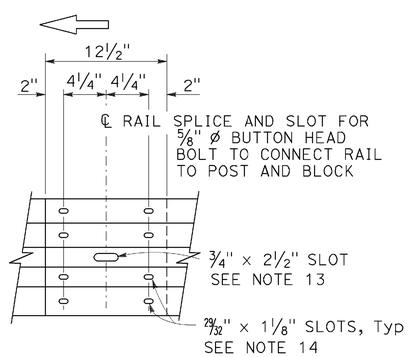

ELEVATION

RAIL ELEMENT SPLICE DETAIL

a) Connect the over lapped end of the rail elements with 5/8" ø × 1 3/8" button head oval shoulder splice bolts inserted into the 29/32" × 1 1/8" slots and bolted together with 5/8" ø recessed hex nuts. Recess of hex nut points toward rail element. A total of 8 bolts and nuts are to be used at each rail splice connection.

b) The ends of the rail elements are to be overlapped in the direction of traffic (see details).

c) Where end cap is to be attached to the end of a rail element, a total of 4 of the above described splice bolts and nuts are to be used.

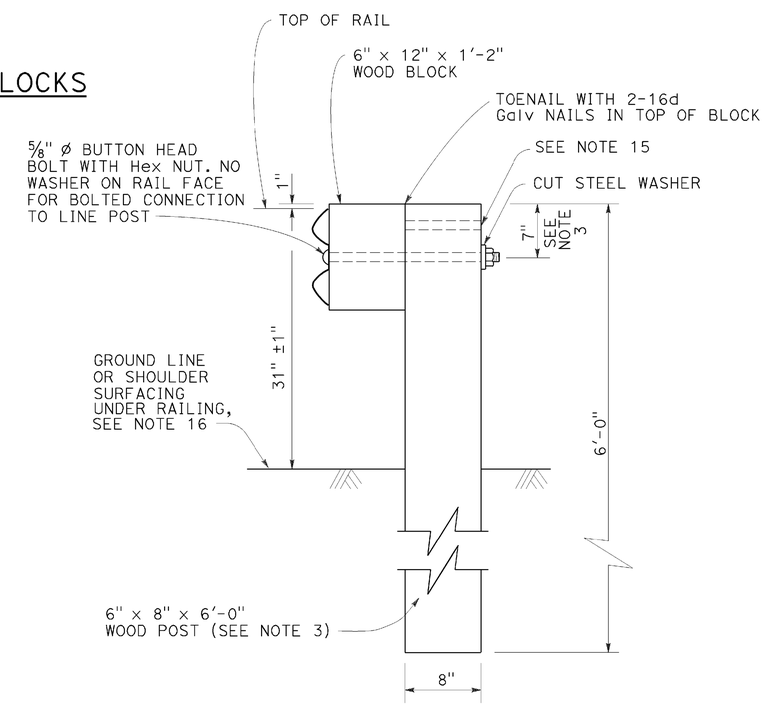

SECTION A-A

TYPICAL WOOD LINE POST INSTALLATION

See Note 4

NOTES:

1. For details of steel post installations, see Revised Standard Plan RSP A77L2.
2. For details of standard hardware used to construct MGS, see Revised Standard Plan RSP A77M1.
3. For details of wood posts and wood blocks used to construct MGS, see Revised Standard Plan RSP A77N1.
4. For additional installation details, see Revised Standard Plan RSP A77N3.
5. MGS post spacing to be 6'-3" center to center, except as otherwise noted.
6. For MGS typical layouts, see the A77P, A77Q and A77R Series of Standard Plans.
7. If railing is connected to terminal system end treatment, use 31" height terminal system end treatment.
8. For MGS end anchor details, see Revised Standard Plans RSP A77S1 and RSP A77T2.
9. For details of MGS transition to bridge railing, see Revised Standard Plan RSP A77U4.
10. For additional details of MSG connection to bridge railing, see Revised Standard Plans RSP A77U1, RSP A77U2 and RSP A77V1.
11. For MGS connection details to abutments and walls, see Revised Standard Plan RSP A77U3.
12. For typical MGS delineation and dike positioning details, see Revised Standard Plan RSP A77N4.
13. Slotted hole for bolted connection of rail element to block and post. See "Section Thru Rail Element".
14. Slotted holes for splice bolts to overlap ends of rail element. See "Section Thru Rail Element".
15. Additional hole in uppermost portion of line post is for potential future adjustments of railing height. See Revised Standard Plan RSP A77N1.
16. Install posts in soil.

STATE OF CALIFORNIA
DEPARTMENT OF TRANSPORTATION

MIDWEST GUARDRAIL SYSTEM STANDARD RAILING SECTION (WOOD POST WITH WOOD BLOCK)

NO SCALE

RSP A77L1 DATED JULY 19, 2013 SUPPLEMENTS STANDARD PLANS BOOK DATED 2010.

REVISED STANDARD PLAN RSP A77L1

DATE PLOTTED => 04-AUG-2016
TIME PLOTTED => 12:00

Dist	COUNTY	ROUTE	POST MILES TOTAL PROJECT	SHEET No.	TOTAL SHEETS
02	Plu	70	50.6/51.7	65	181

Randell D. Hiatt
REGISTERED CIVIL ENGINEER

July 19, 2013
PLANS APPROVAL DATE

REGISTERED PROFESSIONAL ENGINEER Randell D. Hiatt No. C50200 Exp. 6-30-15 CIVIL STATE OF CALIFORNIA

THE STATE OF CALIFORNIA OR ITS OFFICERS OR AGENTS SHALL NOT BE RESPONSIBLE FOR THE ACCURACY OR COMPLETENESS OF SCANNED COPIES OF THIS PLAN SHEET.

TO ACCOMPANY PLANS DATED 06-15-16

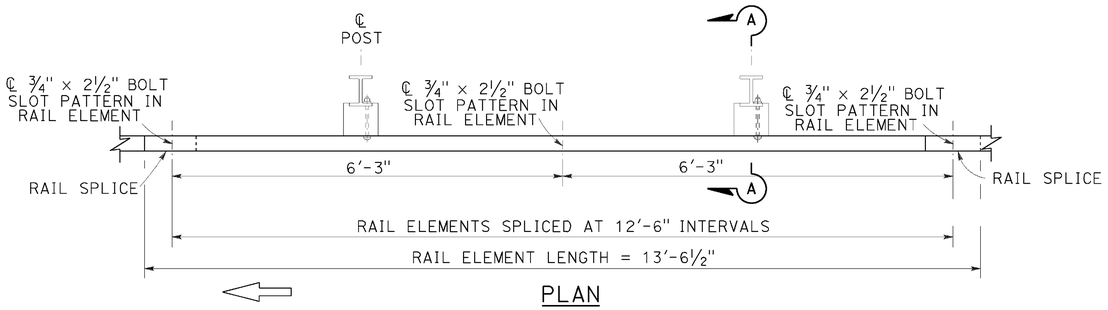

PLAN

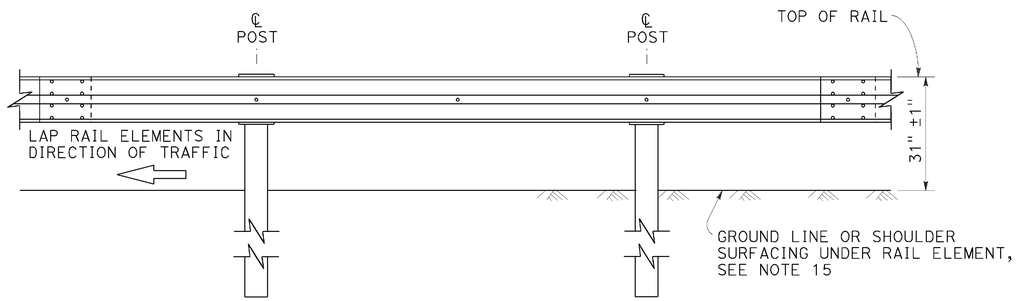

ELEVATION

MIDWEST GUARDRAIL SYSTEM WITH STEEL POSTS AND NOTCHED WOOD OR NOTCHED RECYCLED PLASTIC BLOCKS

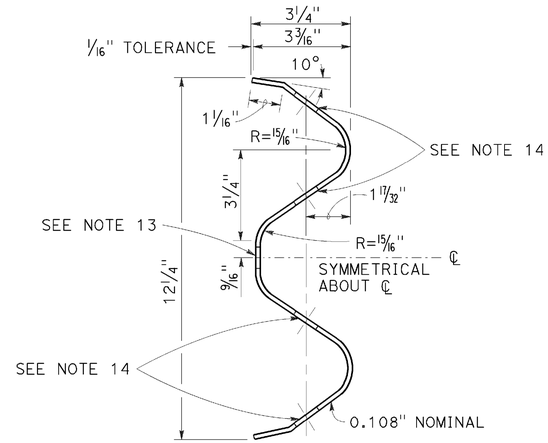

SECTION THRU RAIL ELEMENT

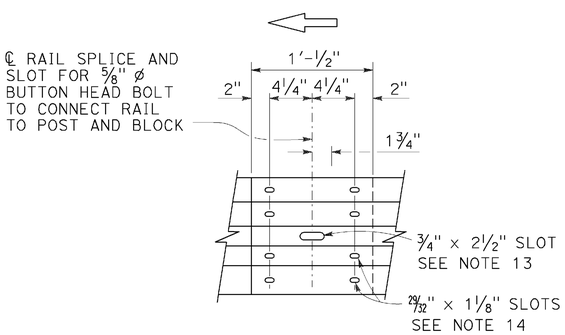

ELEVATION

RAIL ELEMENT SPLICE DETAIL

a) Connect the over lapped end of the rail elements with ⅝" ø × 1⅜" button head oval shoulder splice bolts inserted into the 29⁄32" × 1⅛" slots and bolted together with ⅝" ø recessed hex nuts. Recess of hex nut points toward rail element. A total of 8 bolts and nuts are to be used at each rail splice connection.

b) The ends of the rail elements are to be overlapped in the direction of traffic (see details).

c) Where end cap is to be attached to the end of a rail element, a total of 4 of the above described splice bolts and nuts are to be used.

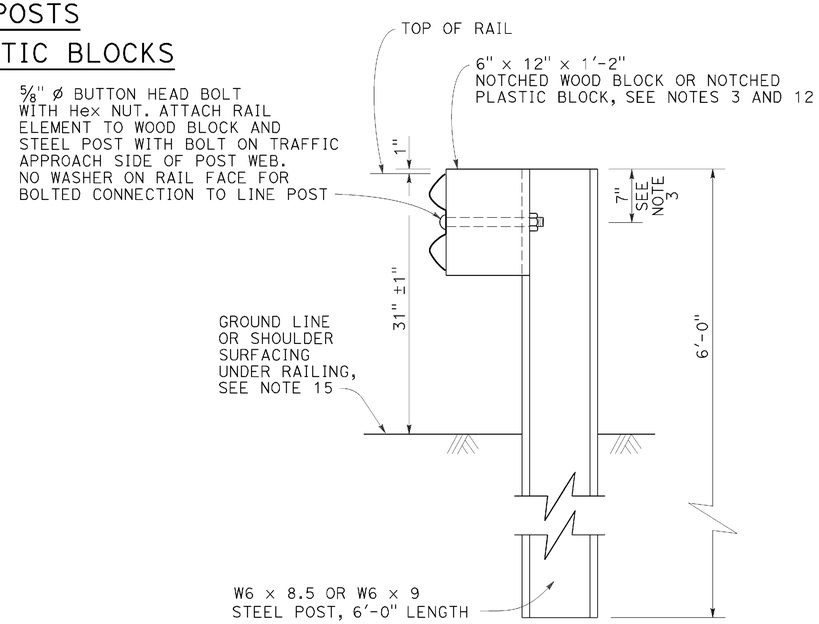

SECTION A-A

TYPICAL STEEL LINE POST INSTALLATION

See Note 4

NOTES:

1. For details of wood post installations, see Revised Standard Plan RSP A77L1.
2. For details of standard hardware used to construct MGS, see Revised Standard Plan RSP A77M1.
3. For details of steel posts and notched wood blocks used to construct MGS, see Revised Standard Plan RSP A77N2.
4. For additional installation details, see Revised Standard Plan RSP A77N3.
5. MGS post spacing to be 6'-3" center to center, except as otherwise noted.
6. For MGS typical layouts, see the A77P, A77Q and A77R Series of Standard Plans.
7. If railing is connected to terminal system end treatment, use 31" height terminal system end treatment.
8. For MGS end anchor details, see Revised Standard Plans RSP A77S1 and RSP A77T2.
9. For details of MGS transition to bridge railing, see Revised Standard Plan RSP A77U4.
10. For additional details of MGS connection to bridge railings, see Revised Standard Plans RSP A77U1, RSP A77U2 and RSP A77V1.
11. For dike positioning and MGS delineation details, see Revised Standard Plan RSP A77N4.
12. Notched face of block faces steel post.
13. Slotted hole for bolted connection of rail element to block and post. See "Section Thru Rail Element".
14. Slotted holes for splice bolts to overlap ends of rail element. See "Section Thru Rail Element".
15. Install posts in soil.

STATE OF CALIFORNIA
DEPARTMENT OF TRANSPORTATION

MIDWEST GUARDRAIL SYSTEM STANDARD RAILING SECTION (STEEL POST WITH NOTCHED WOOD OR NOTCHED RECYCLED PLASTIC BLOCK)

NO SCALE

RSP A77L2 DATED JULY 19, 2013 SUPPLEMENTS THE STANDARD PLANS BOOK DATED 2010.

REVISED STANDARD PLAN RSP A77L2

2010 REVISED STANDARD PLAN RSP A77L2

DATE PLOTTED => 04-AUG-2016
TIME PLOTTED => 12:01

Dist	COUNTY	ROUTE	POST MILES TOTAL PROJECT	SHEET No.	TOTAL SHEETS
02	Plu	70	50.6/51.7	66	181

Randell D. Hiatt
REGISTERED CIVIL ENGINEER

July 19, 2013
PLANS APPROVAL DATE

REGISTERED PROFESSIONAL ENGINEER
Randell D. Hiatt
No. C50200
Exp. 6-30-15
CIVIL
STATE OF CALIFORNIA

THE STATE OF CALIFORNIA OR ITS OFFICERS OR AGENTS SHALL NOT BE RESPONSIBLE FOR THE ACCURACY OR COMPLETENESS OF SCANNED COPIES OF THIS PLAN SHEET.

TO ACCOMPANY PLANS DATED 06-15-16

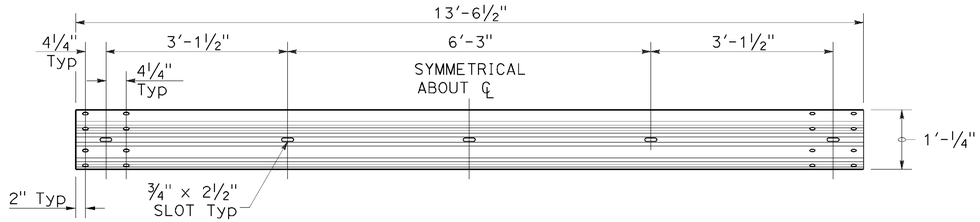

TYPICAL RAIL ELEMENT

NOTE:

1. Slotted holes for splice bolts to overlap ends of rail element.

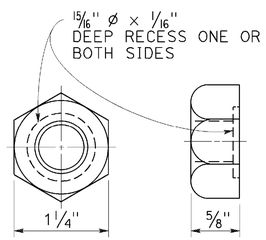

⅝" Ø RECESS NUT

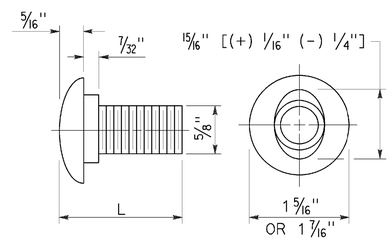

⅝" Ø BUTTON HEAD BOLT

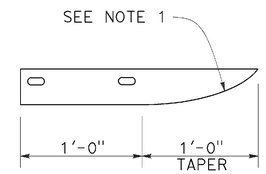

PLAN

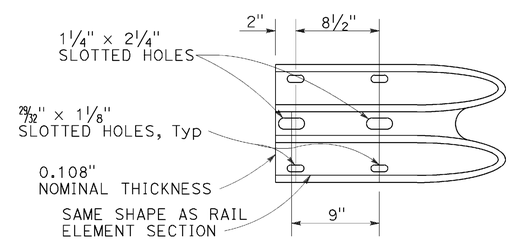

ELEVATION

END CAP
(TYPE A)

BUTTON HEAD BOLT

L	THREAD LENGTH
1⅜"	FULL THREAD LENGTH
2"	FULL THREAD LENGTH
10"	4" Min THREAD LENGTH
18"	4" Min THREAD LENGTH
20"	4" Min THREAD LENGTH
22"	4" Min THREAD LENGTH
26"	4" Min THREAD LENGTH
36"	4" Min THREAD LENGTH
** 2¾"	2" Min THREAD LENGTH
** 19"	4" Min THREAD LENGTH

** For nested rail applications.

STATE OF CALIFORNIA
DEPARTMENT OF TRANSPORTATION

MIDWEST GUARDRAIL SYSTEM STANDARD HARDWARE

NO SCALE

RSP A77M1 DATED JULY 19, 2013 SUPPLEMENTS THE STANDARD PLANS BOOK DATED 2010.

REVISED STANDARD PLAN RSP A77M1

2010 REVISED STANDARD PLAN RSP A77M1

DATE PLOTTED => 04-AUG-2016
TIME PLOTTED => 12:01

Dist	COUNTY	ROUTE	POST MILES TOTAL PROJECT	SHEET No.	TOTAL SHEETS
02	Plu	70	50.6/51.7	67	181

Randell D. Hiatt
REGISTERED CIVIL ENGINEER

July 19, 2013
PLANS APPROVAL DATE

REGISTERED PROFESSIONAL ENGINEER
Randell D. Hiatt
No. C50200
Exp. 6-30-15
CIVIL
STATE OF CALIFORNIA

THE STATE OF CALIFORNIA OR ITS OFFICERS OR AGENTS SHALL NOT BE RESPONSIBLE FOR THE ACCURACY OR COMPLETENESS OF SCANNED COPIES OF THIS PLAN SHEET.

TO ACCOMPANY PLANS DATED 06-15-16

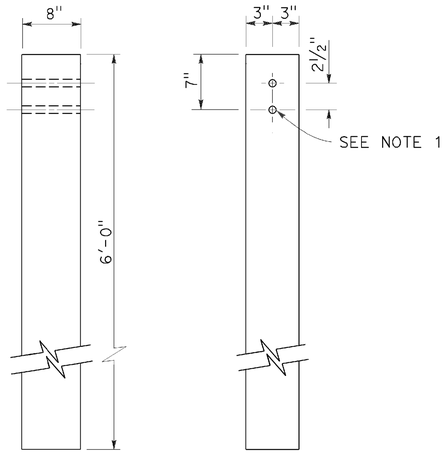

SIDE FRONT

6" x 8" WOOD POST
See Note 3

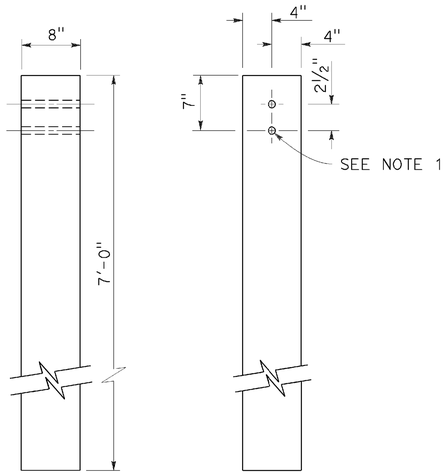

SIDE FRONT

8" x 8" WOOD POST
See Note 4

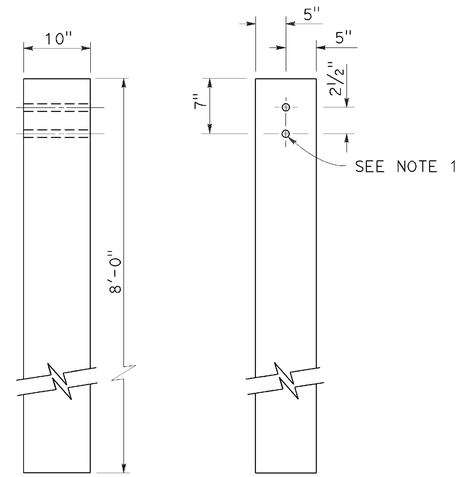

SIDE FRONT

10" x 10" WOOD POST
See Note 5

NOTES:

1. All holes in wood posts and blocks shall be 3/4" Dia ± 1/16".
2. Dimensions shown for wood post are nominal.
3. This post and block combination used for standard line post sections of MGS.
4. This post and 8" x 12" block combination used for line post sections of MGS on narrow roadways.
5. This post and 8" x 12" block combination is typically used where strengthened line post sections of MGS are warranted to shield fixed objects.
6. See Revised Standard Plan RSP A77L3 for use of 6" x 8" and 8" x 8" wood blocks.

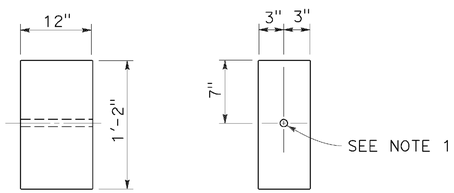

SIDE FRONT

6" x 12" WOOD BLOCK
See Note 3

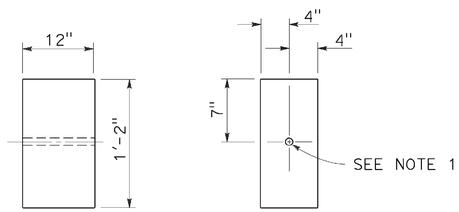

SIDE FRONT

8" x 12" WOOD BLOCK

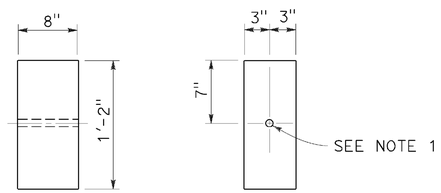

SIDE FRONT

6" x 8" WOOD BLOCK
Only for use with metal beam guard rail see Note 6

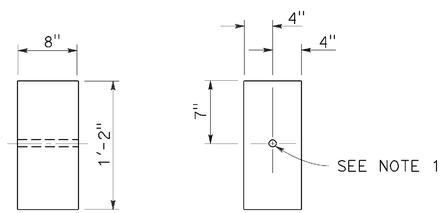

SIDE FRONT

8" x 8" WOOD BLOCK
Only for use with metal beam guard rail see Note 6

STATE OF CALIFORNIA
DEPARTMENT OF TRANSPORTATION

MIDWEST GUARDRAIL SYSTEM WOOD POST AND WOOD BLOCK DETAILS

NO SCALE

RSP A77N1 DATED JULY 19, 2013 SUPPLEMENTS THE STANDARD PLANS BOOK DATED 2010.

REVISED STANDARD PLAN RSP A77N1

2010 REVISED STANDARD PLAN RSP A77N1

DATE PLOTTED => 04-AUG-2016
TIME PLOTTED => 12:01

Dist	COUNTY	ROUTE	POST MILES TOTAL PROJECT	SHEET No.	TOTAL SHEETS
02	Plu	70	50.6/51.7	68	181

Randell D. Hiatt
REGISTERED CIVIL ENGINEER

November 15, 2013
PLANS APPROVAL DATE

REGISTERED PROFESSIONAL ENGINEER
Randell D. Hiatt
No. C50200
Exp. 6-30-15
CIVIL
STATE OF CALIFORNIA

THE STATE OF CALIFORNIA OR ITS OFFICERS OR AGENTS SHALL NOT BE RESPONSIBLE FOR THE ACCURACY OR COMPLETENESS OF SCANNED COPIES OF THIS PLAN SHEET.

TO ACCOMPANY PLANS DATED 06-15-16

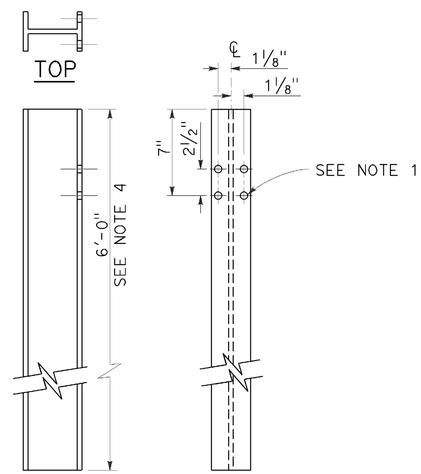

W6 x 9 OR W6 x 8.5
STEEL POST
See Note 4

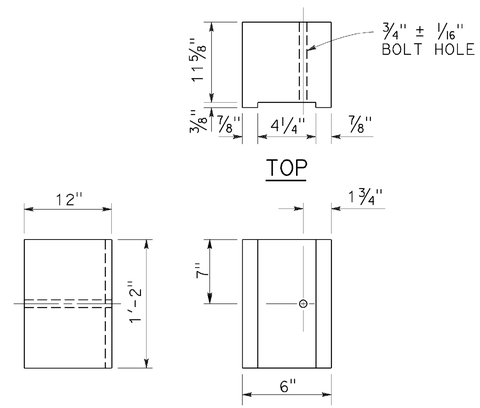

6" x 12"
NOTCHED WOOD BLOCK
See Notes 2 and 3

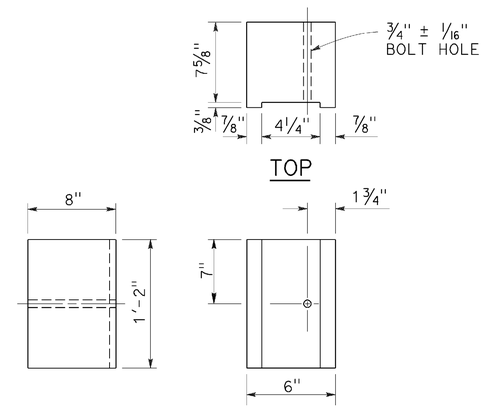

6" x 8"
NOTCHED WOOD BLOCK
Only for use with metal beam guard railing. See Note 5

NOTES:

1. All holes in steel post shall be 13/16" Dia maximum.
2. Dimensions shown for wood block are nominal.
3. Notched face of block faces steel post.
4. 6'-0" length posts to be used for typical roadway installation. See Revised Standard Plan RSP A77N3.
5. See Revised Standard Plan RSP A77L3 for use of 6" x 8" and 8" x 8" notched wood blocks.
6. This post and 8" x 12" block combination to be used for line post sections of MGS on narrow roadways and where strengthened line post sections of MGS are warranted to shield fixed objects.

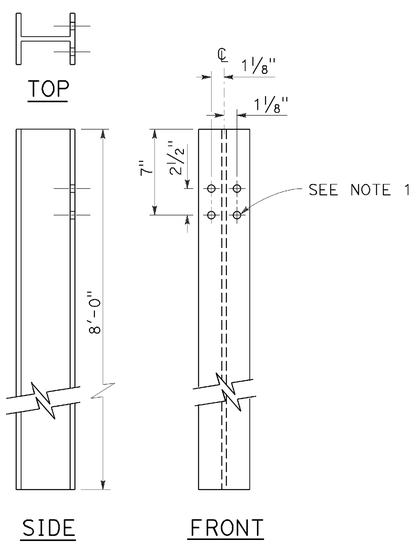

W6 x 15
STEEL POST
See Note 6

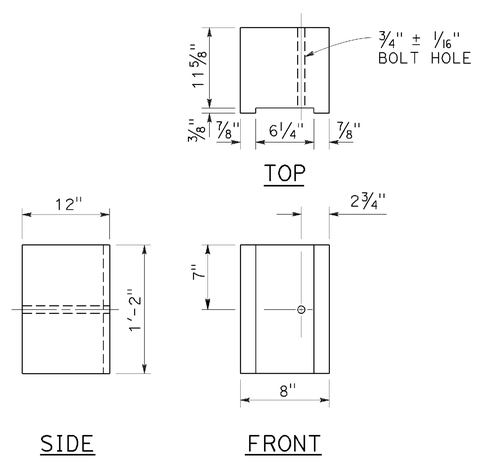

8" x 12"
NOTCHED WOOD BLOCK
See Notes 2 and 3

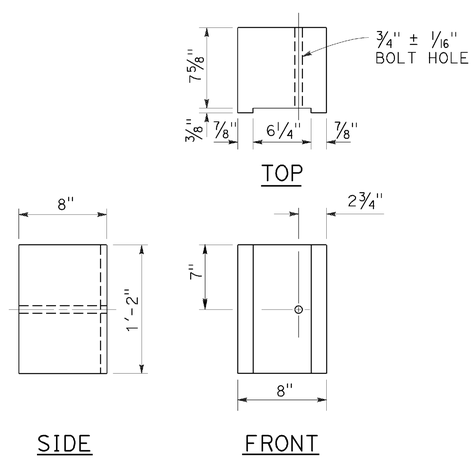

8" x 8"
NOTCHED WOOD BLOCK
Only for use with metal beam guard railing. See Note 5

STATE OF CALIFORNIA
DEPARTMENT OF TRANSPORTATION

MIDWEST GUARDRAIL SYSTEM STEEL POST AND NOTCHED WOOD BLOCK DETAILS

NO SCALE

RSP A77N2 DATED NOVEMBER 15, 2013 SUPERSEDES RSP A77N2
DATED JULY 19, 2013 THAT SUPPLEMENTS THE STANDARD PLANS BOOK DATED 2010.

REVISED STANDARD PLAN RSP A77N2

2010 REVISED STANDARD PLAN RSP A77N2

DATE PLOTTED => 04-AUG-2016
TIME PLOTTED => 12:02

Dist	COUNTY	ROUTE	POST MILES TOTAL PROJECT	SHEET No.	TOTAL SHEETS
02	Plu	70	50.6/51.7	69	181

Randell D. Hiatt
REGISTERED CIVIL ENGINEER

November 15, 2013
PLANS APPROVAL DATE

REGISTERED PROFESSIONAL ENGINEER
Randell D. Hiatt
No. C50200
Exp. 6-30-15
CIVIL
STATE OF CALIFORNIA

THE STATE OF CALIFORNIA OR ITS OFFICERS OR AGENTS SHALL NOT BE RESPONSIBLE FOR THE ACCURACY OR COMPLETENESS OF SCANNED COPIES OF THIS PLAN SHEET.

TO ACCOMPANY PLANS DATED 06-15-16

2010 REVISED STANDARD PLAN RSP A77N3

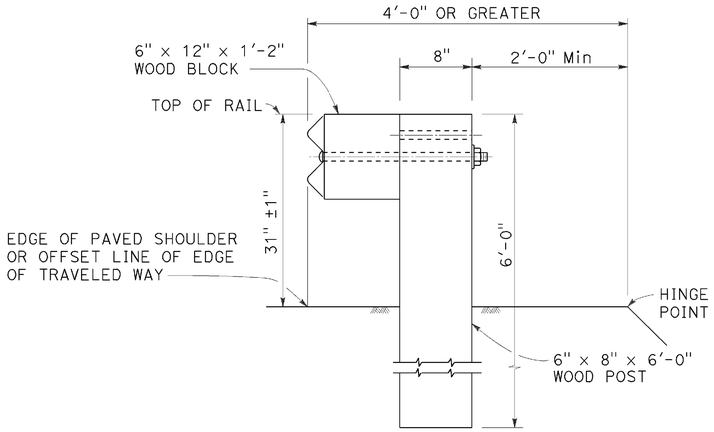

DETAIL A
TYPICAL ROADWAY INSTALLATION
See Note 1

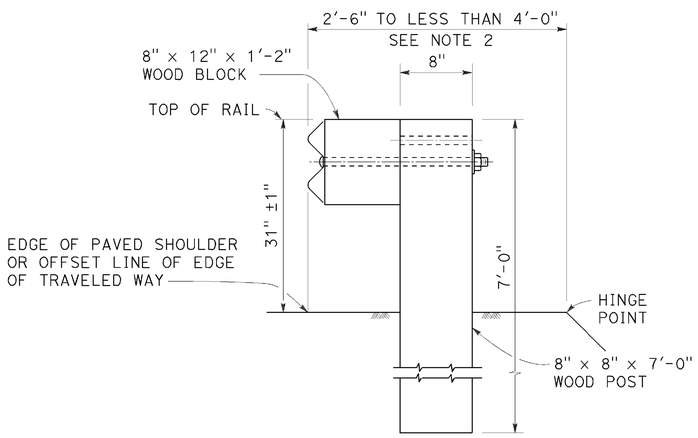

DETAIL B
NARROW ROADWAY INSTALLATION
See Note 1

POST EMBEDMENT

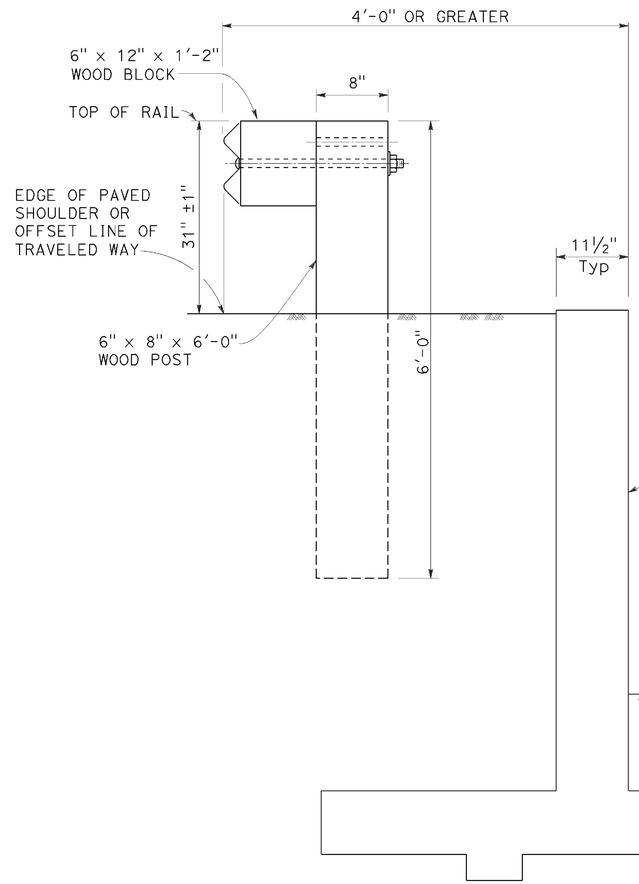

DETAIL C

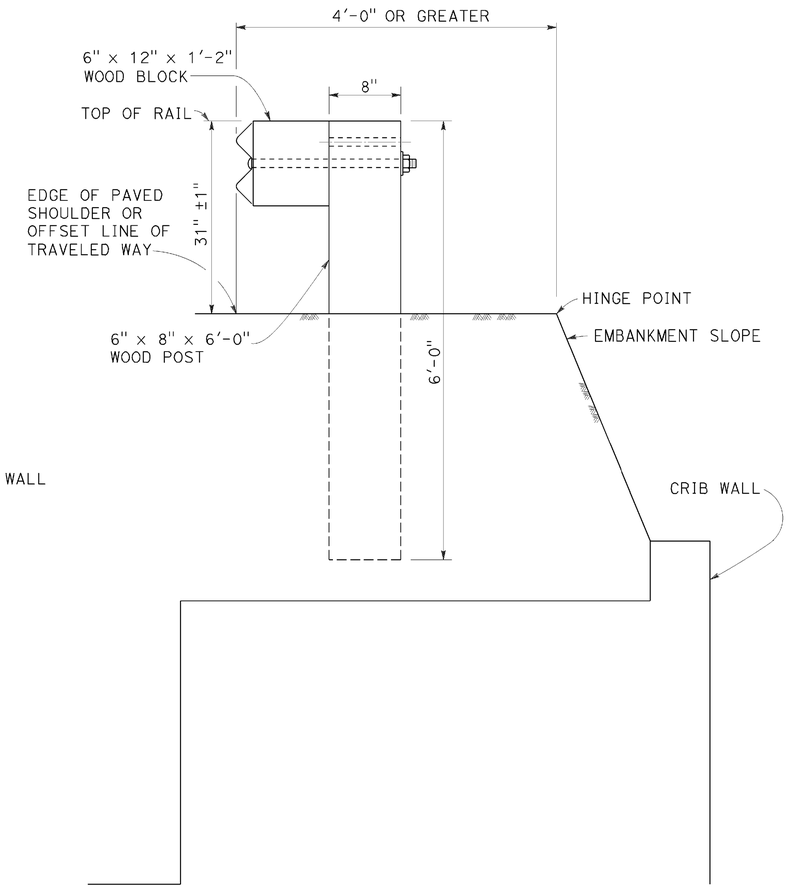

DETAIL D

INSTALLATION AT EARTH RETAINING WALLS

NOTES:

1. These installation details also applicable to steel line post installations. For Detail A, C, and D, where steel line post installations are constructed, W6 x 8.5 or W6 x 9 steel post, 6'-0" in length, with 6" x 12" x 1'-2" notched wood blocks or notched recycled plastic blocks are to be used in place of the size of wood post and wood block shown. For Detail B, where steel line post installations are constructed, W6 x 15 steel post, 8'-0" in length, with 8" x 12" x 1'-2" notched wood blocks or notched recycled plastic blocks are to be used in place of the size of wood post and wood block shown. For additional installation details, see Revised Standard Plan RSP A77L1 and RSP A77L2.
2. Where the distance between the face of the rail and the hinge point is less than 2'-6", see the Project Plans for special details.
3. For dike positioning with MGS installations, see Revised Standard Plan RSP A77N4.

STATE OF CALIFORNIA
DEPARTMENT OF TRANSPORTATION

MIDWEST GUARDRAIL SYSTEM TYPICAL LINE POST EMBEDMENT AND HINGE POINT OFFSET DETAILS

NO SCALE

RSP A77N3 DATED NOVEMBER 15, 2013 SUPERSEDES RSP A77N3
DATED JULY 19, 2013 THAT SUPPLEMENTS THE STANDARD PLANS BOOK DATED 2010.

REVISED STANDARD PLAN RSP A77N3

DATE PLOTTED => 04-AUG-2016
TIME PLOTTED => 12:02

Dist	COUNTY	ROUTE	POST MILES TOTAL PROJECT	SHEET No.	TOTAL SHEETS
02	Plu	70	50.6/51.7	70	181

Randell D. Hiatt
REGISTERED CIVIL ENGINEER

July 19, 2013
PLANS APPROVAL DATE

REGISTERED PROFESSIONAL ENGINEER
Randell D. Hiatt
No. C50200
Exp. 6-30-15
CIVIL
STATE OF CALIFORNIA

THE STATE OF CALIFORNIA OR ITS OFFICERS OR AGENTS SHALL NOT BE RESPONSIBLE FOR THE ACCURACY OR COMPLETENESS OF SCANNED COPIES OF THIS PLAN SHEET.

TO ACCOMPANY PLANS DATED 06-15-16

NOTES:

1. When necessary to place dike more than 7" in front of face of MGS, only Type C dike may be used. For dike details, see Revised Standard Plan RSP A87B.
2. For standard railing post embedment, see Revised Standard Plan RSP A77N3.
3. MGS delineation to be used where shown on the Project Plans.
4. When dike or curb is placed under MGS, the maximum height of the dike or curb shall be 6". Mountable dike should not be used. For dike and curb details, see Revised Standard Plans RSP A87A and RSP A87B.
5. For details of typical distance between the face of rail and hinge point, see Revised Standard Plan RSP A77N3.
6. For steel line posts, use 1/4 - 20 self-tapping screws in 0.22" diameter holes or 1/4" bolts in 9/32" diameter holes.

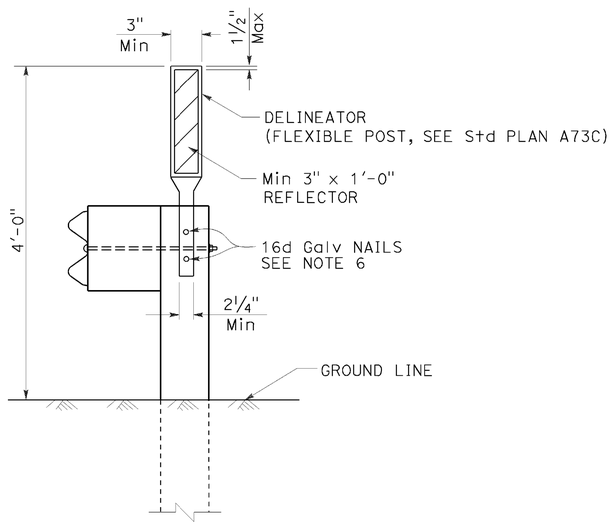

MGS DELINEATION
See Note 3

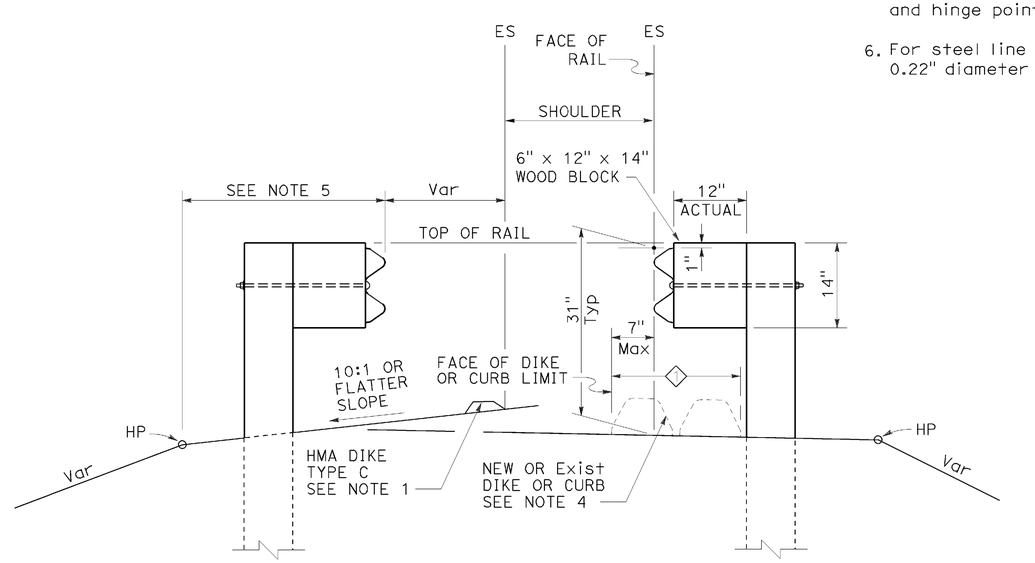

DIKE POSITIONING
See Note 1

1 PERMISSIBLE DIKE OR CURB PLACEMENT AREA

STATE OF CALIFORNIA
DEPARTMENT OF TRANSPORTATION

MIDWEST GUARDRAIL SYSTEM TYPICAL RAILING DELINEATION AND DIKE POSITIONING DETAILS

NO SCALE

RSP A77N4 DATED JULY 19, 2013 SUPPLEMENTS THE STANDARD PLANS BOOK DATED 2010.

REVISED STANDARD PLAN RSP A77N4

2010 REVISED STANDARD PLAN RSP A77N4

DATE PLOTTED => 04-AUG-2016
TIME PLOTTED => 12:03

Dist	COUNTY	ROUTE	POST MILES TOTAL PROJECT	SHEET No.	TOTAL SHEETS
02	Plu	70	50.6/51.7	71	181

Randell D. Hiatt
REGISTERED CIVIL ENGINEER

November 15, 2013
PLANS APPROVAL DATE

REGISTERED PROFESSIONAL ENGINEER Randell D. Hiatt No. C50200 Exp. 6-30-15 CIVIL STATE OF CALIFORNIA

THE STATE OF CALIFORNIA OR ITS OFFICERS OR AGENTS SHALL NOT BE RESPONSIBLE FOR THE ACCURACY OR COMPLETENESS OF SCANNED COPIES OF THIS PLAN SHEET.

TO ACCOMPANY PLANS DATED 06-15-16

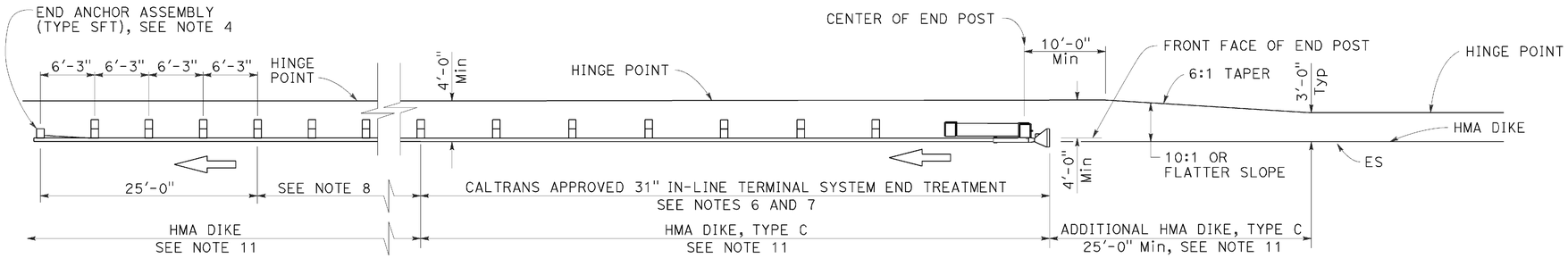

TYPE 11A LAYOUT

(Embankment MGS installation with 31" in-line end treatment at traffic approach end of railing) see Note 5

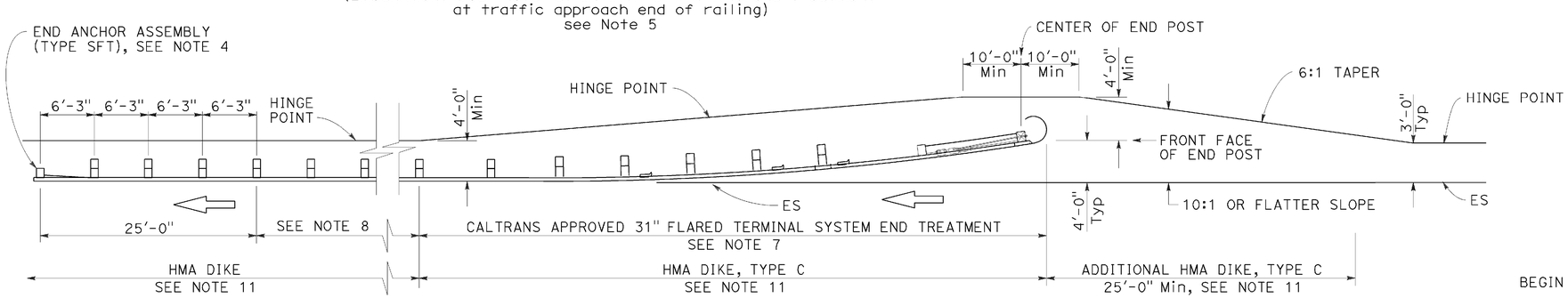

TYPE 11B LAYOUT

(Embankment MGS installation with 31" flared end treatment at traffic approach end of railing) see Note 5

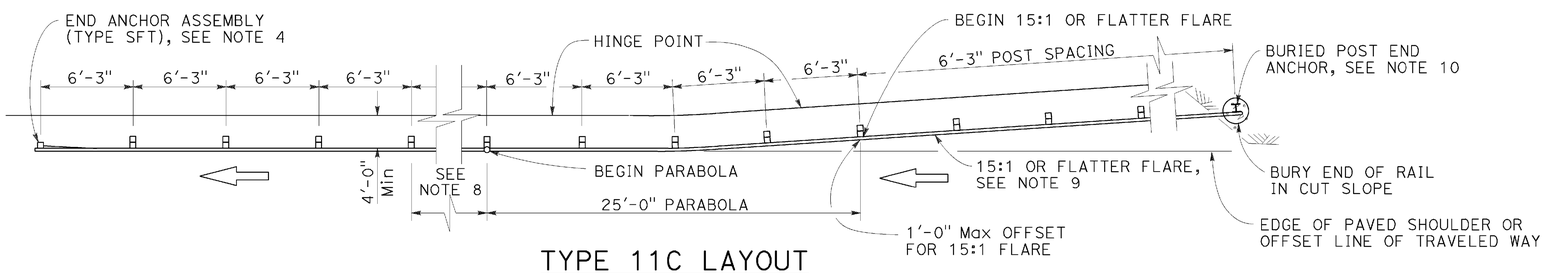

TYPE 11C LAYOUT

(Embankment MGS installation with buried end anchor treatment at traffic approach end of railing) see Notes 5 and 11

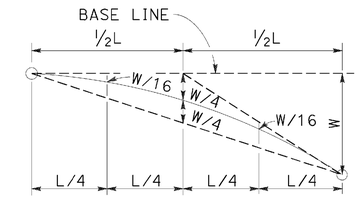

TYPICAL PARABOLIC LAYOUT

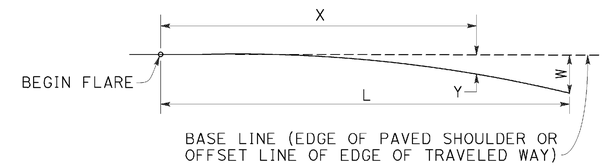

$$Y = \frac{WX^2}{L^2}$$

Y = OFFSET FROM BASE LINE
W = MAXIMUM OFFSET
X = DISTANCE ALONG BASE LINE
L = LENGTH OF FLARE

PARABOLIC FLARE OFFSETS

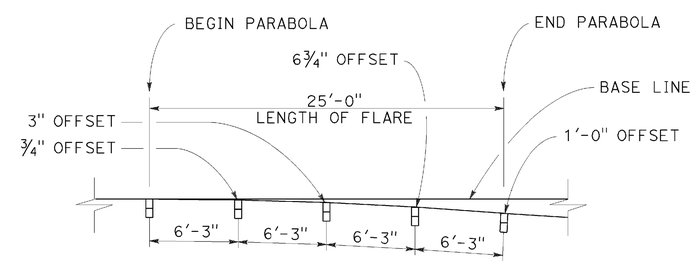

TYPICAL FLARE OFFSETS FOR 1 FOOT Max END OFFSET

NOTES:

1. Line post, blocks and hardware to be used are shown on Revised Standard Plans RSP A77L1, RSP A77L2, RSP A77M1, RSP A77N1 and RSP A77N2.
2. MGS post spacing to be 6'-3" center to center, except as otherwise noted.
3. Except as noted, line posts are 6" x 8" x 6'-0" wood with 6" x 12" x 1'-2" wood blocks. W6 x 8.5 or W6 x 9 steel posts, 6'-0" in length, with 6" x 12" x 1'-2" notched wood blocks or recycled plastic blocks may be used for 6" x 8" x 6'-0" wood post with 6" x 12" x 1'-2" wood blocks where applicable and when specified.
4. For End Anchor Assembly (Type SFT) details, see Revised Standard Plan RSP A77S1.
5. Layout Types 11A, 11B or 11C are typically used where MGS is recommended to shield embankment slopes and a crashworthy end treatment is required for only one direction of traffic.
6. 31" in-line terminal system end treatments are used where site conditions will not accommodate a flared end treatment.
7. The type of 31" terminal system end treatment to be used will be shown on the Project Plans.
8. Dependent on site conditions (embankment height and side slope), construction of additional MGS (length equal to multiples of 12'-6" with 6'-3" post spacing) may be advisable.
9. The 15:1 or flatter flare used with buried end anchors is based on the edge of the paved shoulder or offset line of edge of the traveled way. The length of MGS within the 15:1 or flatter flare is based on site conditions and should be a length equal to multiples of 12'-6".
10. For details of the buried post end anchor used with Type 11C Layout, see Revised Standard Plan RSP A77T2.
11. Where placement of dike is required with MGS installations, see Revised Standard Plan RSP A77N4 for dike positioning details.

STATE OF CALIFORNIA
DEPARTMENT OF TRANSPORTATION

MIDWEST GUARDRAIL SYSTEM TYPICAL LAYOUTS FOR EMBANKMENTS

NO SCALE

RSP A77P1 DATED NOVEMBER 15, 2013 SUPERSEDES RSP A77P1 DATED JULY 19, 2013 THAT SUPPLEMENTS THE STANDARD PLANS BOOK DATED 2010.

REVISED STANDARD PLAN RSP A77P1

2010 REVISED STANDARD PLAN RSP A77P1

DATE PLOTTED => 04-AUG-2016
TIME PLOTTED => 12:03

Dist	COUNTY	ROUTE	POST MILES TOTAL PROJECT	SHEET No.	TOTAL SHEETS
02	Plu	70	50.6/51.7	72	181

Randell D. Hiatt
REGISTERED CIVIL ENGINEER

November 15, 2013
PLANS APPROVAL DATE

REGISTERED PROFESSIONAL ENGINEER
Randell D. Hiatt
No. C50200
Exp. 6-30-15
CIVIL
STATE OF CALIFORNIA

THE STATE OF CALIFORNIA OR ITS OFFICERS OR AGENTS SHALL NOT BE RESPONSIBLE FOR THE ACCURACY OR COMPLETENESS OF SCANNED COPIES OF THIS PLAN SHEET.

TO ACCOMPANY PLANS DATED 06-15-16

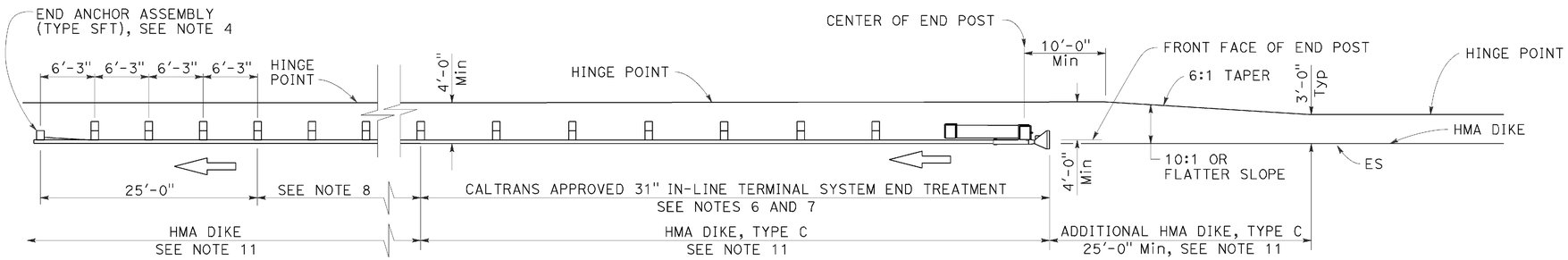

TYPE 11A LAYOUT

(Embankment MGS installation with 31" in-line end treatment at traffic approach end of railing) see Note 5

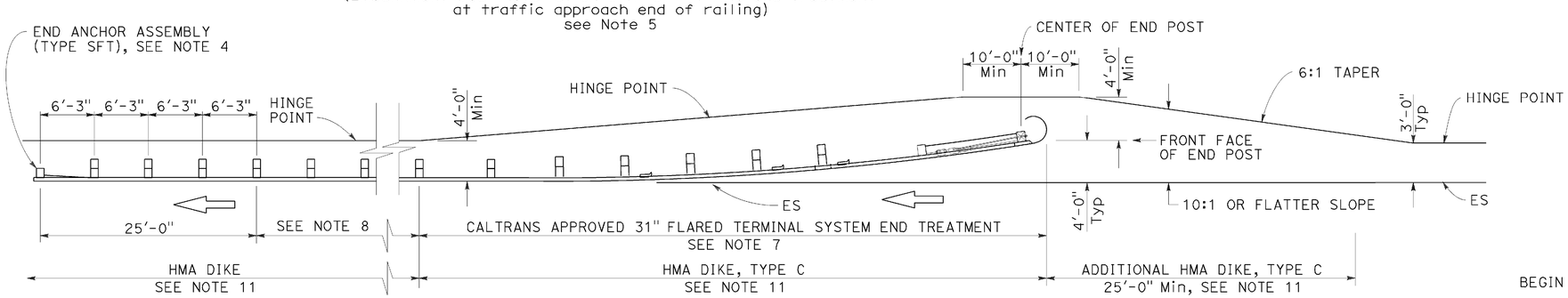

TYPE 11B LAYOUT

(Embankment MGS installation with 31" flared end treatment at traffic approach end of railing) see Note 5

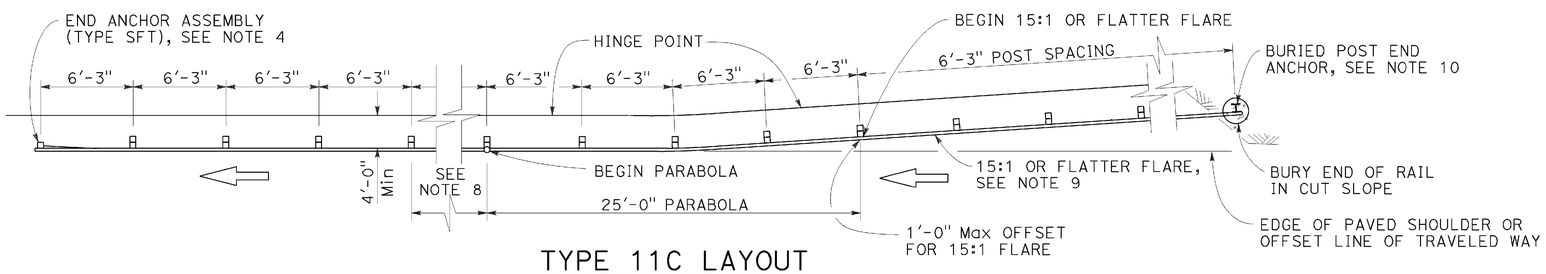

TYPE 11C LAYOUT

(Embankment MGS installation with buried end anchor treatment at traffic approach end of railing) see Notes 5 and 11

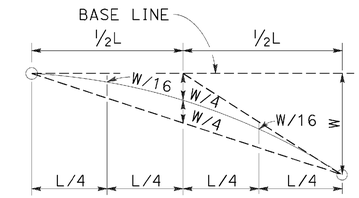

TYPICAL PARABOLIC LAYOUT

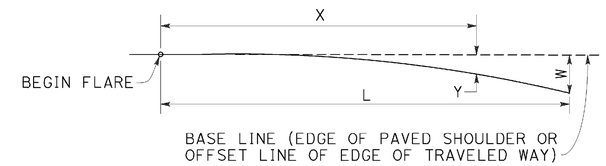

$$Y = \frac{WX^2}{L^2}$$

Y = OFFSET FROM BASE LINE
W = MAXIMUM OFFSET
X = DISTANCE ALONG BASE LINE
L = LENGTH OF FLARE

PARABOLIC FLARE OFFSETS

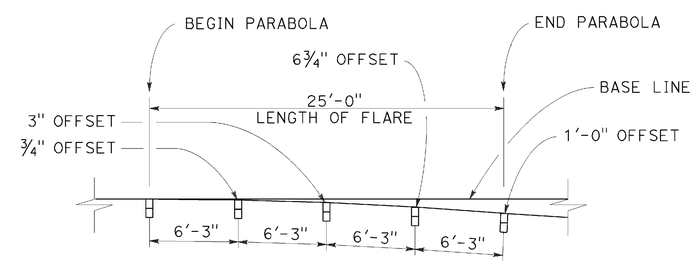

TYPICAL FLARE OFFSETS FOR 1 FOOT Max END OFFSET

NOTES:

1. Line post, blocks and hardware to be used are shown on Revised Standard Plans RSP A77L1, RSP A77L2, RSP A77M1, RSP A77N1 and RSP A77N2.
2. MGS post spacing to be 6'-3" center to center, except as otherwise noted.
3. Except as noted, line posts are 6" x 8" x 6'-0" wood with 6" x 12" x 1'-2" wood blocks. W6 x 8.5 or W6 x 9 steel posts, 6'-0" in length, with 6" x 12" x 1'-2" notched wood blocks or recycled plastic blocks may be used for 6" x 8" x 6'-0" wood post with 6" x 12" x 1'-2" wood blocks where applicable and when specified.
4. For End Anchor Assembly (Type SFT) details, see Revised Standard Plan RSP A77S1.
5. Layout Types 11A, 11B or 11C are typically used where MGS is recommended to shield embankment slopes and a crashworthy end treatment is required for only one direction of traffic.
6. 31" in-line terminal system end treatments are used where site conditions will not accommodate a flared end treatment.
7. The type of 31" terminal system end treatment to be used will be shown on the Project Plans.
8. Dependent on site conditions (embankment height and side slope), construction of additional MGS (length equal to multiples of 12'-6" with 6'-3" post spacing) may be advisable.
9. The 15:1 or flatter flare used with buried end anchors is based on the edge of the paved shoulder or offset line of edge of the traveled way. The length of MGS within the 15:1 or flatter flare is based on site conditions and should be a length equal to multiples of 12'-6".
10. For details of the buried post end anchor used with Type 11C Layout, see Revised Standard Plan RSP A77T2.
11. Where placement of dike is required with MGS installations, see Revised Standard Plan RSP A77N4 for dike positioning details.

STATE OF CALIFORNIA
DEPARTMENT OF TRANSPORTATION

MIDWEST GUARDRAIL SYSTEM TYPICAL LAYOUTS FOR EMBANKMENTS

NO SCALE

RSP A77P1 DATED NOVEMBER 15, 2013 SUPERSEDES RSP A77P1 DATED JULY 19, 2013 THAT SUPPLEMENTS THE STANDARD PLANS BOOK DATED 2010.

REVISED STANDARD PLAN RSP A77P1

2010 REVISED STANDARD PLAN RSP A77P1

DATE PLOTTED => 04-AUG-2016
TIME PLOTTED => 12:03

Dist	COUNTY	ROUTE	POST MILES TOTAL PROJECT	SHEET No.	TOTAL SHEETS
02	Plu	70	50.6/51.7	73	181

Randell D. Hiatt
REGISTERED CIVIL ENGINEER

July 19, 2013
PLANS APPROVAL DATE

REGISTERED PROFESSIONAL ENGINEER
Randell D. Hiatt
No. C50200
Exp. 6-30-15
CIVIL
STATE OF CALIFORNIA

THE STATE OF CALIFORNIA OR ITS OFFICERS OR AGENTS SHALL NOT BE RESPONSIBLE FOR THE ACCURACY OR COMPLETENESS OF SCANNED COPIES OF THIS PLAN SHEET.

TO ACCOMPANY PLANS DATED 06-15-16

2010 REVISED STANDARD PLAN RSP A77P3

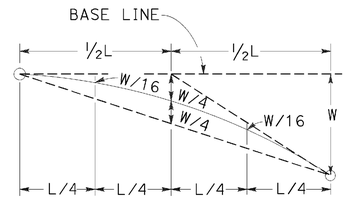

TYPICAL PARABOLIC LAYOUT

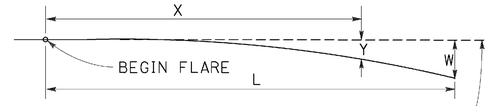

BASE LINE (EDGE OF PAVED SHOULDER OR OFFSET LINE OF EDGE OF TRAVELED WAY)

$$Y = \frac{WX^2}{L^2}$$

Y = OFFSET FROM BASE LINE
W = MAXIMUM OFFSET
X = DISTANCE ALONG BASE LINE
L = LENGTH OF FLARE

PARABOLIC FLARE OFFSETS

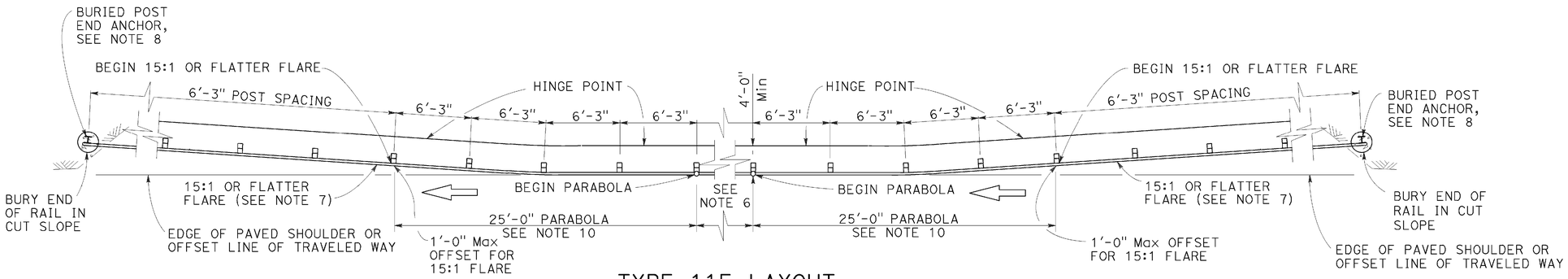

TYPE 11F LAYOUT

(Embankment MGS installation with a buried end anchor treatment at each end of railing)
See Notes 4 and 9

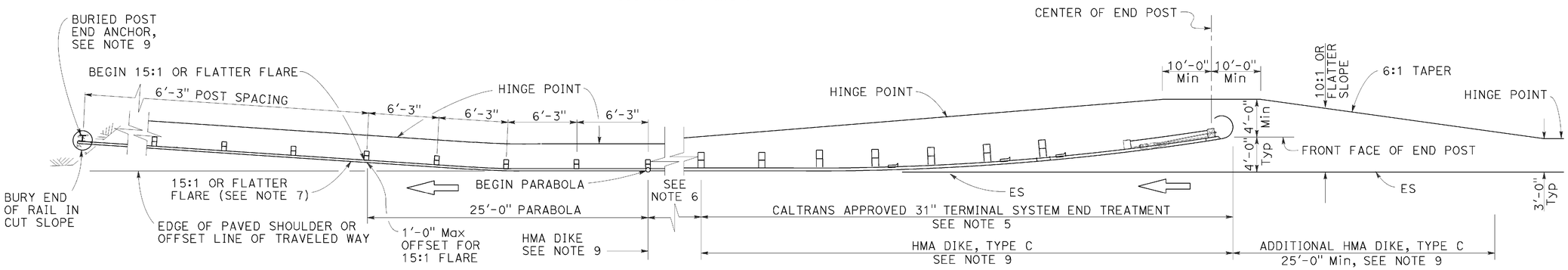

TYPE 11G LAYOUT

(Embankment MGS installation with 31" flared end treatment and a buried end anchor treatment at the ends of railing)
See Notes 4 and 9

NOTES:

1. Line post, blocks and hardware to be used are shown on Revised Standard Plans RSP A77L1, RSP A77L2, RSP A77M1, RSP A77N1 and RSP A77N2.
2. MGS post spacing to be 6'-3" center to center, except as otherwise noted.
3. Except as noted, line posts are 6" x 8" x 6'-0" wood with 6" x 12" x 1'-2" wood blocks. W6 x 8.5 or W6 x 9 steel posts, 6'-0" in length, with 6" x 12" x 1'-2" notched wood blocks or plastic blocks may be used for 6" x 8" x 6'-0" wood post with 6" x 12" x 1'-2" wood blocks where applicable and when specified.
4. Layout Types 11D through 11L, shown on the A77P Series of Standard Plans, are typically used where MGS is recommended to shield embankment slopes and a crashworthy 31" end treatment is required for both directions of traffic.
5. The type of 31" terminal system end treatment to be used will be shown on the Project Plans.
6. Dependent on site conditions (embankment height and side slope), construction of additional MGS (length equal to multiples of 12'-6" with 6'-3" post spacing) may be advisable.
7. The 15:1 or flatter flare used with buried end anchors is based on the edge of the paved shoulder or offset line of edge of the traveled way. The length of MGS within the 15:1 or flatter flare is based on site conditions and should be a length equal to multiples of 12'-6".
8. For details of the buried post end anchor used with Type 11F and 11G Layouts, see Revised Standard Plan RSP A77T2.
9. Where placement of dike is required with MGS installations, see Revised Standard Plan RSP A77N4 for dike positioning details.
10. For typical flare offsets for 25'-0" length parabola with maximum offset of 1'-0", see Revised Standard Plan RSP A77P1.

STATE OF CALIFORNIA
DEPARTMENT OF TRANSPORTATION

MIDWEST GUARDRAIL SYSTEM TYPICAL LAYOUTS FOR EMBANKMENTS

NO SCALE

RSP A77P3 DATED JULY 19, 2013 SUPPLEMENTS THE STANDARD PLANS BOOK DATED 2010.

REVISED STANDARD PLAN RSP A77P3

DATE PLOTTED => 04-AUG-2016
TIME PLOTTED => 12:04

Dist	COUNTY	ROUTE	POST MILES TOTAL PROJECT	SHEET No.	TOTAL SHEETS
02	Plu	70	50.6/51.7	74	181

Randell D. Hiatt
REGISTERED CIVIL ENGINEER

July 19, 2013
PLANS APPROVAL DATE

REGISTERED PROFESSIONAL ENGINEER
Randell D. Hiatt
No. C50200
Exp. 6-30-15
CIVIL
STATE OF CALIFORNIA

THE STATE OF CALIFORNIA OR ITS OFFICERS OR AGENTS SHALL NOT BE RESPONSIBLE FOR THE ACCURACY OR COMPLETENESS OF SCANNED COPIES OF THIS PLAN SHEET.

TO ACCOMPANY PLANS DATED 06-15-16

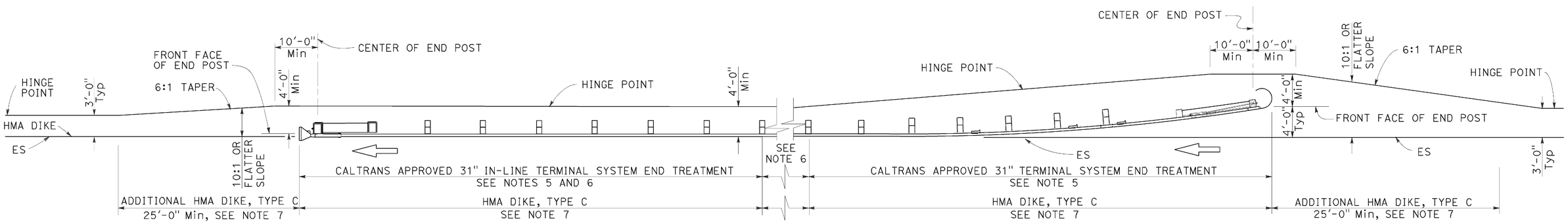

TYPE 11H LAYOUT

(Embankment MGS installation with 31" flared end treatment
and 31" in-line treatment at the ends of railing)
See Notes 4 and 7

NOTES:

1. Line post, blocks and hardware to be used are shown on Revised Standard Plans RSP A77L1, RSP A77L2, RSP A77M1, RSP A77N1 and RSP A77N2.
2. MGS post spacing to be 6'-3" center to center, except as otherwise noted.
3. Except as noted, line posts are 6" x 8" x 6'-0" wood with 6" x 12" x 1'-2" wood blocks. W6 x 8.5 or W6 x 9 steel posts, 6'-0" in length, with 6" x 12" x 1'-2" notched wood blocks or plastic blocks may be used for 6" x 8" x 6'-0" wood post with 6" x 12" x 1'-2" wood blocks where applicable and when specified.
4. Layout Types 11D through 11L, shown on the A77P Series of Standard Plans, are typically used where MGS is recommended to shield embankment slopes and a crashworthy 31" end treatment is required for both directions of traffic.
5. The type of 31" terminal system end treatment to be used will be shown on the Project Plans.
6. Dependent on site conditions (embankment height and side slope), construction of additional MGS (length equal to multiples of 12'-6" with 6'-3" post spacing) may be advisable.
7. Where placement of dike is required with MGS installations, see Revised Standard Plan RSP A77N4 for dike positioning details.

STATE OF CALIFORNIA
DEPARTMENT OF TRANSPORTATION

MIDWEST GUARDRAIL SYSTEM TYPICAL LAYOUTS FOR EMBANKMENTS

NO SCALE

RSP A77P4 DATED JULY 19, 2013 SUPPLEMENTS THE STANDARD PLANS BOOK DATED 2010.

REVISED STANDARD PLAN RSP A77P4

2010 REVISED STANDARD PLAN RSP A77P4

DATE PLOTTED => 04-AUG-2016
TIME PLOTTED => 12:04

Dist	COUNTY	ROUTE	POST MILES TOTAL PROJECT	SHEET No.	TOTAL SHEETS
02	Plu	70	50.6/51.7	75	181

Randell D. Hiatt
REGISTERED CIVIL ENGINEER

July 19, 2013
PLANS APPROVAL DATE

REGISTERED PROFESSIONAL ENGINEER Randell D. Hiatt No. C50200 Exp. 6-30-15 CIVIL STATE OF CALIFORNIA

THE STATE OF CALIFORNIA OR ITS OFFICERS OR AGENTS SHALL NOT BE RESPONSIBLE FOR THE ACCURACY OR COMPLETENESS OF SCANNED COPIES OF THIS PLAN SHEET.

TO ACCOMPANY PLANS DATED 06-15-16

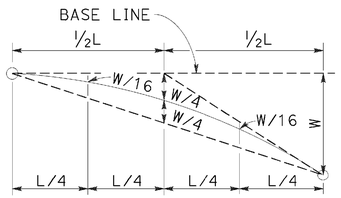

TYPICAL PARABOLIC LAYOUT

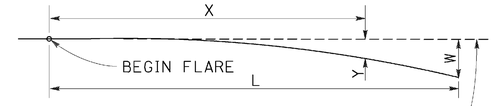

BASE LINE (EDGE OF PAVED SHOULDER OR OFFSET LINE OF EDGE OF TRAVELED WAY)

$$Y = \frac{WX^2}{L^2}$$

Y = OFFSET FROM BASE LINE
W = MAXIMUM OFFSET
X = DISTANCE ALONG BASE LINE
L = LENGTH OF FLARE

PARABOLIC FLARE OFFSETS

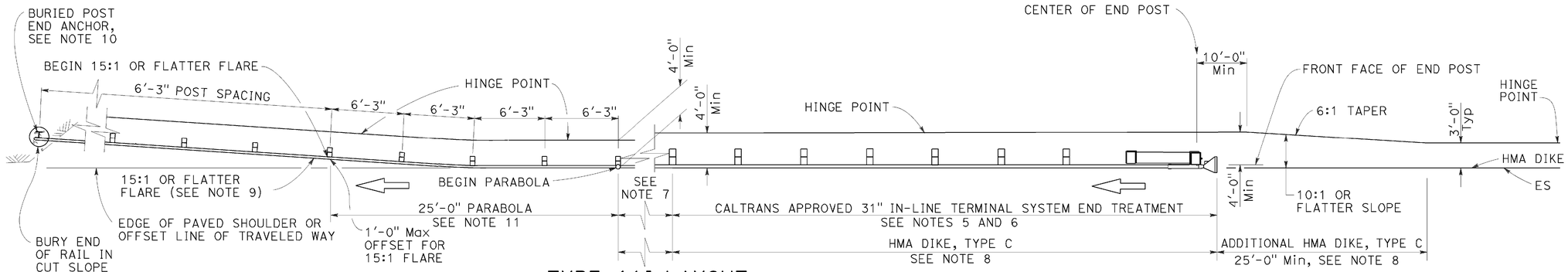

TYPE 11I LAYOUT

(Embankment MGS installation with 31" in-line end treatment and a buried end anchor treatment at the ends of railing)
See Note 4

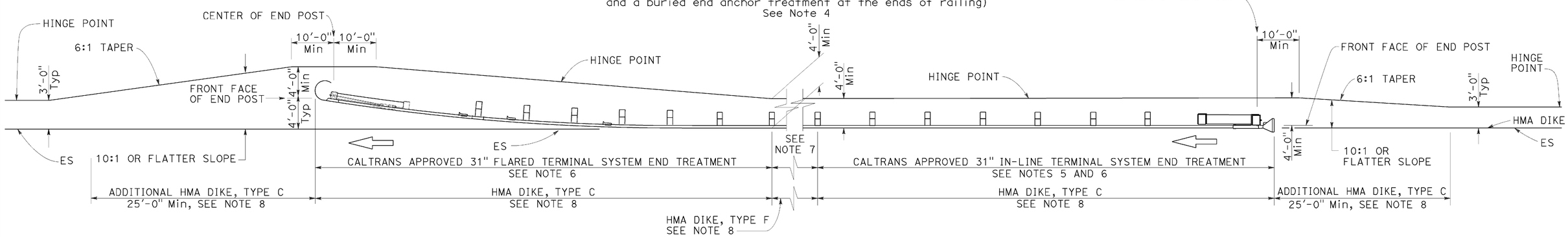

TYPE 11J LAYOUT

(Embankment MGS installation with 31" in-line end treatment and 31" flared end treatment at the ends of railing)
See Note 4

NOTES:

1. Line post, blocks and hardware to be used are shown on Revised Standard Plans RSP A77L1, RSP A77L2, RSP A77M1, RSP A77N1 and RSP A77N2.
2. MGS post spacing to be 6'-3" center to center, except as otherwise noted.
3. Except as noted, line posts are 6" x 8" x 6'-0" wood with 6" x 12" x 1'-2" wood blocks. W6 x 8.5 or W6 x 9 steel posts, 6'-0" in length, with 6" x 12" x 1'-2" notched wood blocks or plastic blocks may be used for 6" x 8" x 6'-0" wood post with 6" x 12" x 1'-2" wood blocks where applicable and when specified.
4. Layout Types 11D through 11L, shown on the A77P Series of Standard Plans, are typically used where MGS is recommended to shield embamkment slopes and a crashworthy 31" end treatment is required for both directions of traffic.
5. 31" in-line terminal system end treatments are used where site conditions will not accommodate a 31" flared end treatment.
6. The type of 31" terminal system end treatment to be used will be shown on the Project Plans.
7. Dependent on site conditions (embankment height and side slope), construction of additional MGS (length equal to multiples of 12'-6" with 6'-3" post spacing) may be advisable.
8. Where placement of dike is required with MGS installations, see Revised Standard Plan RSP A77N4 for dike positioning details.
9. The 15:1 or flatter flare used with buried end anchors is based on the edge of the paved shoulder or offset line of edge of the traveled way. The length of MGS within the 15:1 or flatter flare is based on site conditions and should be a length equal to multiples of 12'-6".
10. For details of the buried post end anchor used with Type 11I Layout, see Revised Standard Plan RSP A77T2.
11. For typical flare offsets for 25'-0" length parabola with maximum offset of 1'-0", see Revised Standard Plan RSP A77P1.

STATE OF CALIFORNIA
DEPARTMENT OF TRANSPORTATION

MIDWEST GUARDRAIL SYSTEM TYPICAL LAYOUTS FOR EMBANKMENTS

NO SCALE

RSP A77P5 DATED JULY 19, 2013 SUPPLEMENTS THE STANDARD PLANS BOOK DATED 2010.

REVISED STANDARD PLAN RSP A77P5

2010 REVISED STANDARD PLAN RSP A77P5

DATE PLOTTED => 04-AUG-2016
TIME PLOTTED => 12:05

Dist	COUNTY	ROUTE	POST MILES TOTAL PROJECT	SHEET No.	TOTAL SHEETS
02	Plu	70	50.6/51.7	76	181

Randell D. Hiatt
REGISTERED CIVIL ENGINEER

July 19, 2013
PLANS APPROVAL DATE

REGISTERED PROFESSIONAL ENGINEER Randell D. Hiatt No. C50200 Exp. 6-30-15 CIVIL STATE OF CALIFORNIA

THE STATE OF CALIFORNIA OR ITS OFFICERS OR AGENTS SHALL NOT BE RESPONSIBLE FOR THE ACCURACY OR COMPLETENESS OF SCANNED COPIES OF THIS PLAN SHEET.

TO ACCOMPANY PLANS DATED 06-15-16

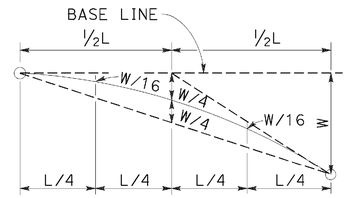

TYPICAL PARABOLIC LAYOUT

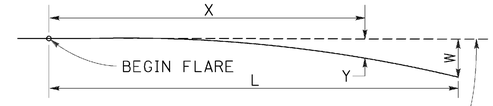

BASE LINE (EDGE OF PAVED SHOULDER OR OFFSET LINE OF EDGE OF TRAVELED WAY)

$$Y = \frac{WX^2}{L^2}$$

Y = OFFSET FROM BASE LINE
W = MAXIMUM OFFSET
X = DISTANCE ALONG BASE LINE
L = LENGTH OF FLARE

PARABOLIC FLARE OFFSETS

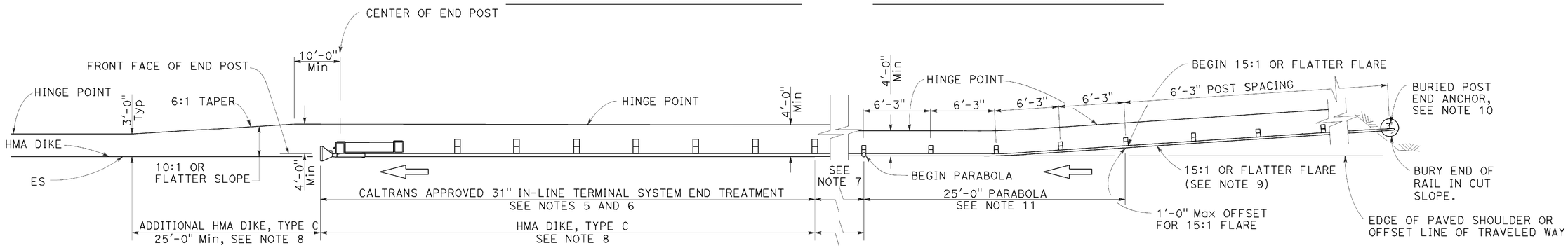

TYPE 11K LAYOUT

(Embankment MGS installation with a buried end anchor treatment and a 31" in-line end treatment at the ends of railing)
See Note 4

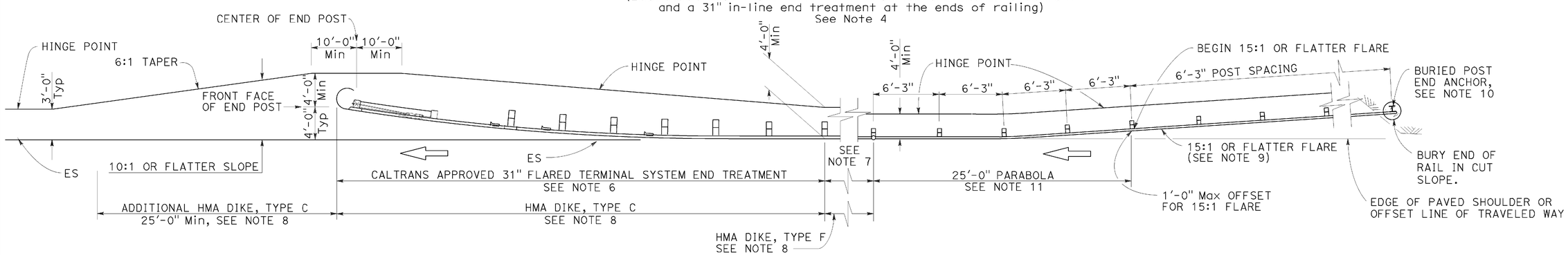

TYPE 11L LAYOUT

(Embankment MGS installation with a buried end anchor treatment and a 31" flared end treatment at the ends of railing)
See Note 4

NOTES:

1. Line post, blocks and hardware to be used are shown on Revised Standard Plans RSP A77L1, RSP A77L2, RSP A77M1, RSP A77N1 and RSP A77N2.
2. MGS post spacing to be 6'-3" center to center, except as otherwise noted.
3. Except as noted, line posts are 6" x 8" x 6'-0" wood with 6" x 12" x 1'-2" wood blocks. W6 x 8.5 or W6 x 9 steel posts, 6'-0" in length, with 6" x 12" x 1'-2" notched wood blocks or plastic blocks may be used for 6" x 8" x 6'-0" wood post with 6" x 12" x 1'-2" wood blocks where applicable and when specified.
4. Layout Types 11D through 11L, shown on the A77P Series of Standard Plans, are typically used where MGS is recommended to shield embamkment slopes and a crashworthy 31" end treatment is required for both directions of traffic.
5. 31" in-line terminal system end treatments are used where site conditions will not accommodate a 31" flared end treatment.
6. The type of 31" terminal system end treatment to be used will be shown on the Project Plans.
7. Dependent on site conditions (embankment height and side slope), construction of additional MGS (length equal to multiples of 12'-6" with 6'-3" post spacing) may be advisable.
8. Where placement of dike is required with MGS installations, see Revised Standard Plan RSP A77N4 for dike positioning details.
9. The 15:1 or flatter flare used with buried end anchors is based on the edge of the paved shoulder or offset line of edge of the traveled way. The length of MGS within the 15:1 or flatter flare is based on site conditions and should be a length equal to multiples of 12'-6".
10. For details of the buried post end anchor used with Type 11K and 11L Layouts, see Revised Standard Plan RSP A77T2.
11. For typical flare offsets for 25'-0" length parabola with maximum offset of 1'-0", see Revised Standard Plan RSP A77P1.

STATE OF CALIFORNIA
DEPARTMENT OF TRANSPORTATION

MIDWEST GUARDRAIL SYSTEM TYPICAL LAYOUTS FOR EMBANKMENTS

NO SCALE

RSP A77P6 DATED JULY 19, 2013 SUPPLEMENTS THE STANDARD PLANS BOOK DATED 2010.

REVISED STANDARD PLAN RSP A77P6

2010 REVISED STANDARD PLAN RSP A77P6

DATE PLOTTED => 04-AUG-2016
TIME PLOTTED => 12:05

Dist	COUNTY	ROUTE	POST MILES TOTAL PROJECT	SHEET No.	TOTAL SHEETS
02	Plu	70	50.6/51.7	77	181

Randell D. Hiatt
REGISTERED CIVIL ENGINEER

August 14, 2015
PLANS APPROVAL DATE

REGISTERED PROFESSIONAL ENGINEER
Randell D. Hiatt
No. C50200
Exp. 6-30-17
CIVIL
STATE OF CALIFORNIA

THE STATE OF CALIFORNIA OR ITS OFFICERS OR AGENTS SHALL NOT BE RESPONSIBLE FOR THE ACCURACY OR COMPLETENESS OF SCANNED COPIES OF THIS PLAN SHEET.

TO ACCOMPANY PLANS DATED 06-15-16

2010 REVISED STANDARD PLAN RSP A77Q1

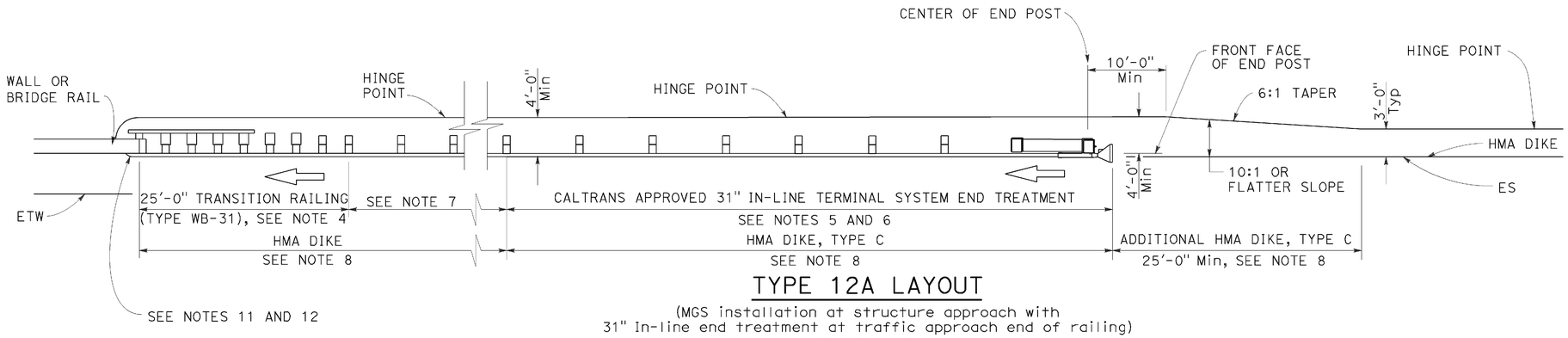

TYPE 12A LAYOUT

(MGS installation at structure approach with
31" In-line end treatment at traffic approach end of railing)
See Note 9

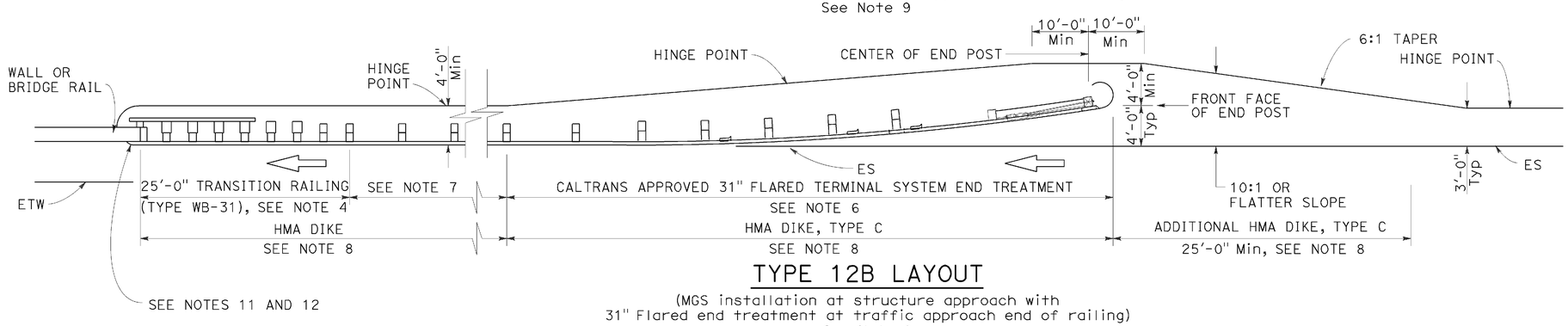

TYPE 12B LAYOUT

(MGS installation at structure approach with
31" Flared end treatment at traffic approach end of railing)
See Note 9

NOTES:

1. Line post, blocks and hardware to be used are shown on Revised Standard Plans RSP A77L1, RSP A77L2, RSP A77M1, RSP A77N1 and RSP A77N2.
2. MGS post spacing to be 6'-3" center to center, except as otherwise noted.
3. Except as noted, line posts are 6" x 8" x 6'-0" wood with 6" x 12" x 1'-2" wood blocks. W6 x 8.5 or W6 x 9 steel posts, 6'-0" in length, with 6" x 12" x 1'-2" notched wood blocks or plastic blocks may be used for 6" x 8" x 6'-0" wood posts with 6" x 12" x 1'-2" wood blocks where applicable and when specified.
4. For Transition Railing (Type WB-31) details for Types 12A and 12B Layouts, see Revised Standard Plan RSP A77U4.
5. 31" in-line terminal system end treatments are used where site conditions will not accommodate a 31" flared end treatment.
6. The type of 31" terminal system end treatment to be used will be shown on the Project Plans.
7. Dependent on site conditions (embankment height, side slopes, or other fixed objects), it may be advisable to construct additional guard railing (a length equal to multiples of 12'-6" with 6'-3" post spacing) between the transition railing and end treatment. A 12.5 degree angle of departure can be drawn on the Project Plans from the edge of traveled way through the outer most point of the fixed object to determine the additional length of railing needed.
8. Where placement of dike is required with guard railing installations, see Revised Standard Plan RSP A77N4 for dike positioning details.
9. Type 12A or Type 12B Layouts are typically used:
   a. To the right of approaching traffic, at the end of a structure, on two-lane conventional highway where the roadbed width across the structure is less than 40 feet.
   b. To the left of approaching traffic, at the end of a structure, on two-lane conventional highway where the roadbed width across the structure is less than 40 feet.
   c. To the right of approaching traffic at the end of each structure on multilane freeways or expressways with separate adjacent or parallel bridges.
   d. To the right of approaching traffic at the end of the structure on multilane freeways or expressways with decked median on the bridge.
10. See Revised Standard Plan RSP A77Q3 for typical layout used left of approaching traffic at the ends of each structure on multilane freeways or expressways with separate adjacent or parallel bridges.
11. For additional details of typical connections to bridge rail, see Connection Detail AA on Revised Standard Plans RSP A77U1 and RSP A77U2 and Connection Detail FF on Revised Standard Plans RSP A77V1 and RSP A77V2.
12. For additional details of a typical connection to walls or abutments, see Revised Standard Plan RSP A77U3.

STATE OF CALIFORNIA
DEPARTMENT OF TRANSPORTATION

MIDWEST GUARDRAIL SYSTEM TYPICAL LAYOUTS FOR STRUCTURE APPROACH

NO SCALE

RSP A77Q1 DATED AUGUST 14, 2015 SUPERSEDES RSP A77Q1 DATED JULY 19, 2013 THAT SUPPLEMENTS THE STANDARD PLANS BOOK DATED 2010.

REVISED STANDARD PLAN RSP A77Q1

DATE PLOTTED => 04-AUG-2016
TIME PLOTTED => 12:05

Dist	COUNTY	ROUTE	POST MILES TOTAL PROJECT	SHEET No.	TOTAL SHEETS
02	Plu	70	50.6/51.7	78	181

Randell D. Hiatt
REGISTERED CIVIL ENGINEER

August 14, 2015
PLANS APPROVAL DATE

REGISTERED PROFESSIONAL ENGINEER
Randell D. Hiatt
No. C50200
Exp. 6-30-17
CIVIL
STATE OF CALIFORNIA

THE STATE OF CALIFORNIA OR ITS OFFICERS OR AGENTS SHALL NOT BE RESPONSIBLE FOR THE ACCURACY OR COMPLETENESS OF SCANNED COPIES OF THIS PLAN SHEET.

TO ACCOMPANY PLANS DATED 06-15-16

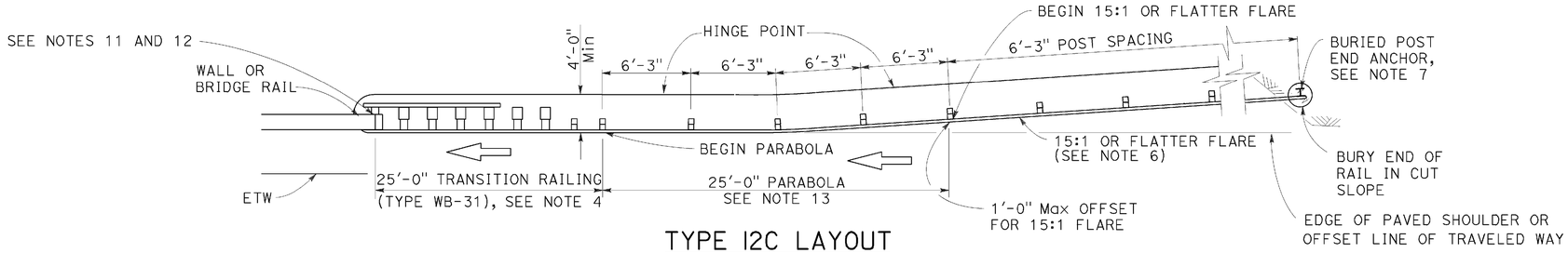

TYPE 12C LAYOUT

(MGS installation at structure approach with a Buried end anchor treatment at traffic approach end of railing)
See Notes 8 and 9

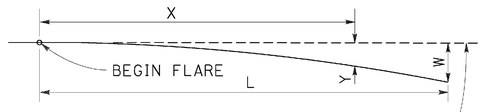

BASE LINE (EDGE OF PAVED SHOULDER OR OFFSET LINE OF EDGE OF TRAVELED WAY)

$$Y = \frac{WX^2}{L^2}$$

Y = OFFSET FROM BASE LINE
W = MAXIMUM OFFSET
X = DISTANCE ALONG BASE LINE
L = LENGTH OF FLARE

PARABOLIC FLARE OFFSETS

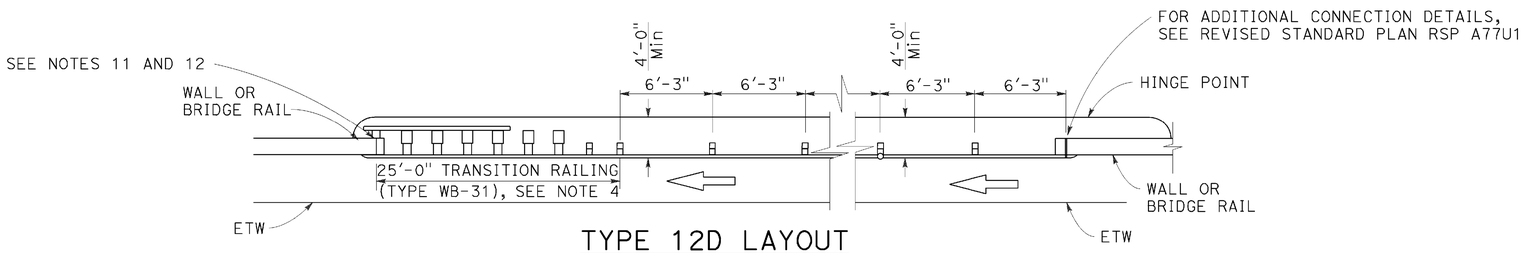

TYPE 12D LAYOUT

(Continuous MGS installation between structures)
See Notes 5 and 9

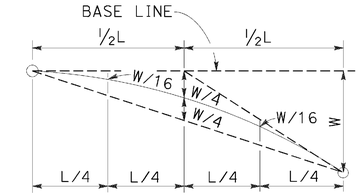

TYPICAL PARABOLIC LAYOUT

NOTES:

1. Line post, blocks and hardware to be used are shown on Revised Standard Plans RSP A77L1, RSP A77L2, RSP A77M1, RSP A77N1 and RSP A77N2.
2. MGS post spacing to be 6'-3" center to center, except as otherwise noted.
3. Except as noted, line posts are 6" x 8" x 6'-0" m wood with 6" x 12" x 1'-2" wood blocks. W6 x 8.5 or W6 x 9 steel posts, 6'-0" in length, with 6" x 12" x 1'-2" notched wood blocks or plastic blocks may be used for 6" x 8" x 6'-0" wood posts with 6" x 12" x 1'-2" wood blocks where applicable and when specified.
4. For Transition Railing (Type WB-31) details for Types 12C and 12D Layouts, see Revised Standard Plan RSP A77U4.
5. Type 12D layout is typically used where continous MGS is recommended between structures.
6. The 15:1 or flatter flare for Type 12C Layout is based on the edge of the paved shoulder or offset line of edge of the traveled way. The length of MGS with the 15:1 or flatter flare is based on site conditions and should be a length equal to multiples of 12'-6".
7. For details of the buried post end anchor used with Type 12C Layout, see Revised Standard Plan RSP A77T2.
8. Where placement of dike is required with MGS installations, see Revised Standard Plan RSP A77N4 for dike positioning details.
9. Type 12C Layout is typically used:
   a. To the right of approaching traffic, at the end of the structure, on two-lane conventional highway where the roadbed width across the structure is less than 40 feet.
   b. To the left of approaching traffic, at each of a structure, on two-lane conventional highway where the roadbed width across the structure is less than 40 feet.
   c. To the right of approaching traffic at the end of each structure on multilane freeways or expressways with separate adjacent or parallel bridges.
   d. To the right of approaching traffic at the end of the structure on multilane freeways or expressways with decked median on the bridge.
10. See Revised Standard Plan RSP A77Q3 for typical layout used left of approaching traffic at the ends of each structure on multilane freeways or expressways with separate adjacent or parallel bridges.
11. For additional details of typical connections to bridge rail, see Connection Detail AA on Revised Standard Plans RSP A77U1 and RSP A77U2 and Connection Detail FF on Revised Standard Plans RSP A77V1 and RSP A77V2.
12. For additional details of a typical connection to walls or abutments, see Revised Standard Plan RSP A77U3.
13. For typical flare offsets for 25'-0" length parabola with maximum offset of 1'-0", see Revised Standard Plan RSP A77P1.

STATE OF CALIFORNIA
DEPARTMENT OF TRANSPORTATION

MIDWEST GUARDRAIL SYSTEM TYPICAL LAYOUTS FOR STRUCTURE APPROACH AND BETWEEN STRUCTURES

NO SCALE

RSP A77Q2 DATED AUGUST 14, 2015 SUPERSEDES RSP A77Q2 DATED JULY 19, 2013 THAT SUPPLEMENTS THE STANDARD PLANS BOOK DATED 2010.

REVISED STANDARD PLAN RSP A77Q2

2010 REVISED STANDARD PLAN RSP A77Q2

DATE PLOTTED => 04-AUG-2016
TIME PLOTTED => 12:06

Dist	COUNTY	ROUTE	POST MILES TOTAL PROJECT	SHEET No.	TOTAL SHEETS
02	Plu	70	50.6/51.7	79	181

Randell D. Hiatt
REGISTERED CIVIL ENGINEER

August 14, 2015
PLANS APPROVAL DATE

REGISTERED PROFESSIONAL ENGINEER
Randell D. Hiatt
No. C50200
Exp. 6-30-17
CIVIL
STATE OF CALIFORNIA

THE STATE OF CALIFORNIA OR ITS OFFICERS OR AGENTS SHALL NOT BE RESPONSIBLE FOR THE ACCURACY OR COMPLETENESS OF SCANNED COPIES OF THIS PLAN SHEET.

TO ACCOMPANY PLANS DATED 06-15-16

2010 REVISED STANDARD PLAN RSP A77Q3

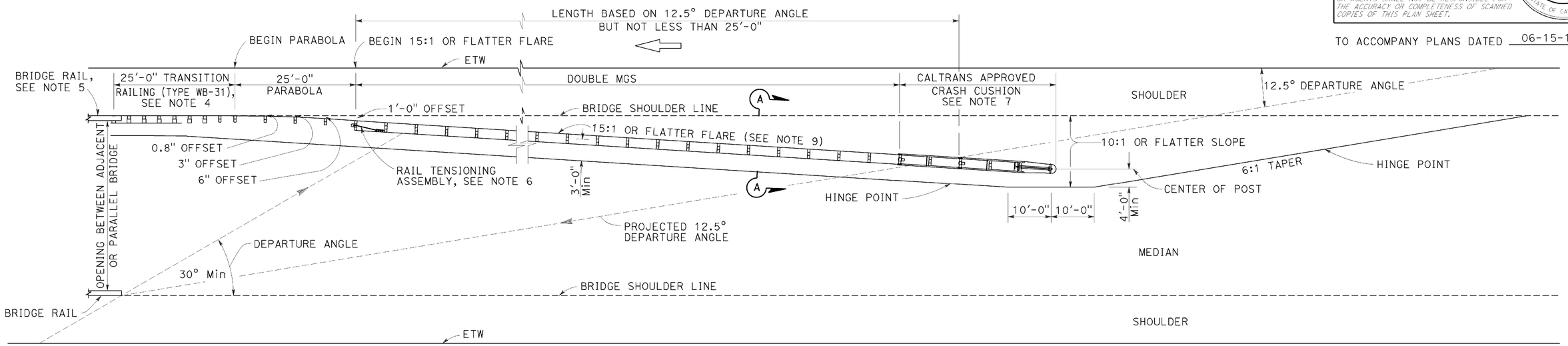

TYPE 12E LAYOUT

See Note 9

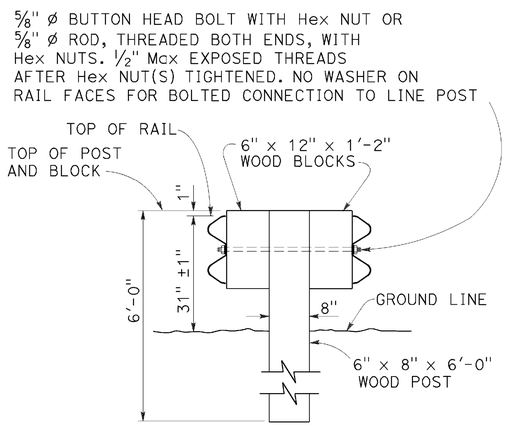

SECTION A-A
TYPICAL DOUBLE MIDWEST GUARDRAIL SYSTEM

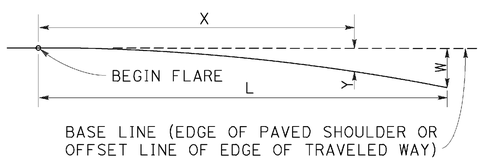

$$Y = \frac{WX^2}{L^2}$$

Y = OFFSET FROM BASE LINE
W = MAXIMUM OFFSET
X = DISTANCE ALONG BASE LINE
L = LENGTH OF FLARE

PARABOLIC FLARE OFFSETS

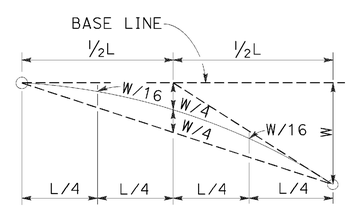

TYPICAL PARABOLIC LAYOUT

NOTES:

1. Line post, blocks and hardware to be used are shown on Revised Standard Plans RSP A77L1, RSP A77L2, RSP A77M1, RSP A77N1 and RSP A77N2.
2. MGS post spacing to be 6'-3" center to center, except as otherwise noted.
3. Except as noted, line posts are 6" x 8" x 6'-0" wood with 6" x 12" x 1'-2" wood blocks. W6 x 8.5 or W6 x 9 steel posts, 6'-0" in length, with 6" x 12" x 1'-2" notched wood blocks or notched recycled plastic blocks may be used for 6" x 8" x 6'-0" wood line posts with 6" x 12" x 1'-2" wood blocks where applicable and when specified.
4. For Transition Railing (Type WB-31) details, see Revised Standard Plan RSP A77U4.
5. For additional details of a typical connection to bridge rail, see Connection Detail AA on Revised Standard Plan RSP A77U1.
6. For Rail Tensioning Assembly details, see Revised Standard Plan RSP A77S2.
7. The type of Crash Cushion to be used will be shown on the Project Plans.
8. Type 12E Layout is typically used left of approaching traffic at the end of each structure on multilane freeways or expressways where a median type barrier is not constructed between separated roadbeds.
9. The 15:1 or flatter flare is measured off of the edge of traveled way.

STATE OF CALIFORNIA
DEPARTMENT OF TRANSPORTATION

MIDWEST GUARDRAIL SYSTEM TYPICAL LAYOUTS FOR STRUCTURE APPROACH

NO SCALE

RSP A77Q3 DATED AUGUST 14, 2015 SUPERSEDES RSP A77Q3 DATED JULY 19, 2013 THAT SUPPLEMENTS THE STANDARD PLANS BOOK DATED 2010.

REVISED STANDARD PLAN RSP A77Q3

DATE PLOTTED => 04-AUG-2016
TIME PLOTTED => 12:06

Dist	COUNTY	ROUTE	POST MILES TOTAL PROJECT	SHEET No.	TOTAL SHEETS
02	Plu	70	50.6/51.7	80	181

Randell D. Hiatt
REGISTERED CIVIL ENGINEER

August 14, 2015
PLANS APPROVAL DATE

REGISTERED PROFESSIONAL ENGINEER
Randell D. Hiatt
No. C50200
Exp. 6-30-17
CIVIL
STATE OF CALIFORNIA

THE STATE OF CALIFORNIA OR ITS OFFICERS OR AGENTS SHALL NOT BE RESPONSIBLE FOR THE ACCURACY OR COMPLETENESS OF SCANNED COPIES OF THIS PLAN SHEET.

TO ACCOMPANY PLANS DATED 06-15-16

2010 REVISED STANDARD PLAN RSP A77Q4

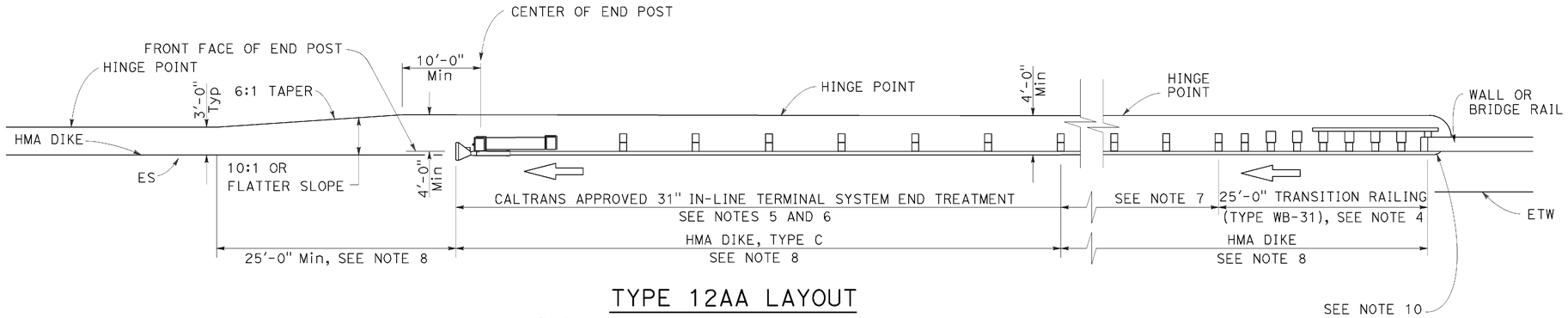

TYPE 12AA LAYOUT

(MGS installation at structure departure with
31" in-line end treatment at trailing end of railing)
See Notes 8 and 9

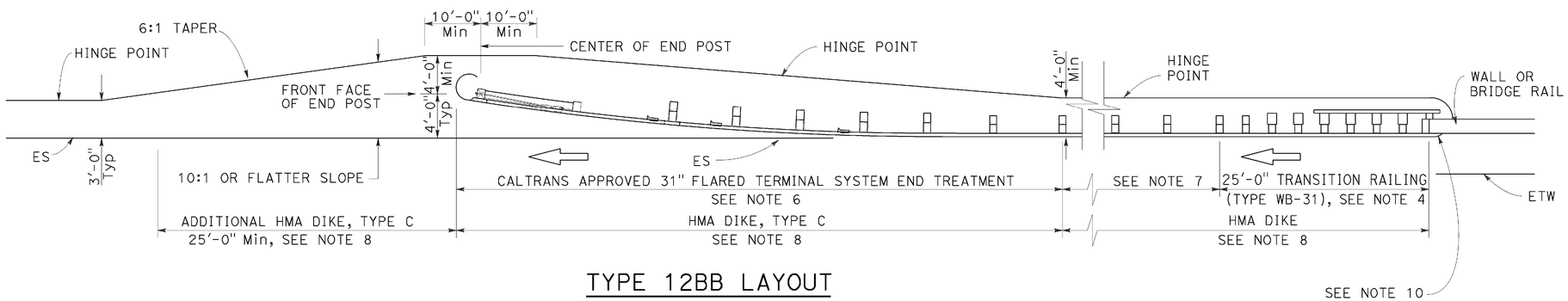

TYPE 12BB LAYOUT

(MGS installation at structure departure with
31" flared end treatment at trailing end of railing)
See Notes 8 and 9

NOTES:

1. Line post, blocks and hardware to be used are shown on Revised Standard Plans RSP A77L1, RSP A77L2, RSP A77M1, RSP A77N1 and RSP A77N2.
2. MGS post spacing to be 6'-3" center to center, except as otherwise noted.
3. Except as noted, line posts are 6" x 8" x 6'-0" wood with 6" x 12" x 1'-2" wood blocks. W6 x 8.5 or W6 x 9 steel posts, 6'-0" in length, with 6" x 12" x 1-2" notched wood blocks or notched recycled plastic blocks may be used for 6" x 8" x 6'-0" wood posts with 6" x 12" x 1'-2" wood blocks where applicable and when specified.
4. For Transition Railing (Type WB-31) details for Types 12AA and 12BB Layouts, see Revised Standard Plan RSP A77U4.
5. 31" in-line terminal system treatments are used where site conditions will not accommodate a 31" flared end treatment.
6. The type of 31" terminal system to be used will be shown on the Project Plans.
7. Dependent on site conditions (embankment height, side slopes, other fixed objects), it may be advisable to construct additional MGS (a length equal to multiples of 12'-6" with 6'-3" post spacing) between the transition railing and 31" end treatments.
8. Where placement of dike is required with MGS installations, see Revised Standard Plan RSP A77N4 for dike positioning details.
9. Type 12AA or Type 12BB Layouts are typically used to the right of traffic departing a structure on two-way conventional highways where the roadbed width across the structure is less than 40 feet.
10. For additional details of typical connections to bridge rail, see Connection Detail CC on Revised Standard Plan RSP A77U2 and Connection Detail HH on Revised Standard Plan RSP A77V2.

STATE OF CALIFORNIA
DEPARTMENT OF TRANSPORTATION

MIDWEST GUARDRAIL SYSTEM TYPICAL LAYOUTS FOR STRUCTURE DEPARTURE

NO SCALE

RSP A77Q4 DATED AUGUST 14, 2015 SUPERSEDES RSP A77Q4 DATED JULY 19, 2013 THAT SUPPLEMENTS THE STANDARD PLANS BOOK DATED 2010.

REVISED STANDARD PLAN RSP A77Q4

DATE PLOTTED => 04-AUG-2016
TIME PLOTTED => 12:07

Dist	COUNTY	ROUTE	POST MILES TOTAL PROJECT	SHEET No.	TOTAL SHEETS
02	Plu	70	50.6/51.7	81	181

Randell D. Hiatt
REGISTERED CIVIL ENGINEER

August 14, 2015
PLANS APPROVAL DATE

REGISTERED PROFESSIONAL ENGINEER
Randell D. Hiatt
No. C50200
Exp. 6-30-17
CIVIL
STATE OF CALIFORNIA

THE STATE OF CALIFORNIA OR ITS OFFICERS OR AGENTS SHALL NOT BE RESPONSIBLE FOR THE ACCURACY OR COMPLETENESS OF SCANNED COPIES OF THIS PLAN SHEET.

TO ACCOMPANY PLANS DATED 06-15-16

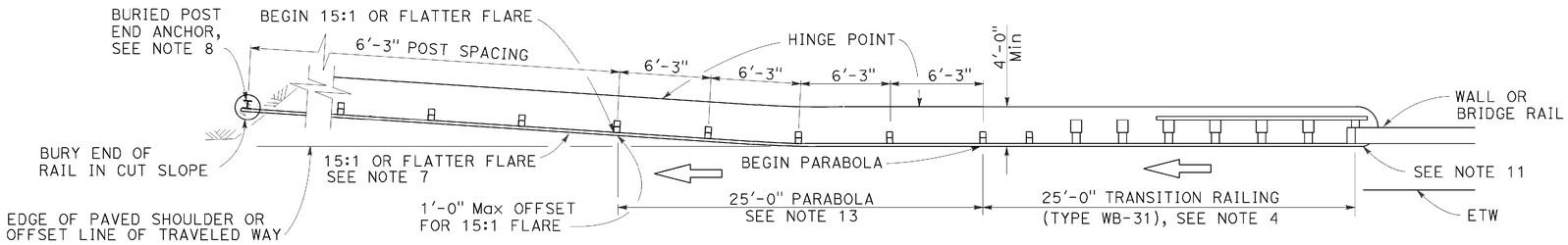

TYPE 12CC LAYOUT

(MGS installation at structure departure with a Buried end anchor treatment at trailing end of railing)
See Notes 9 and 10

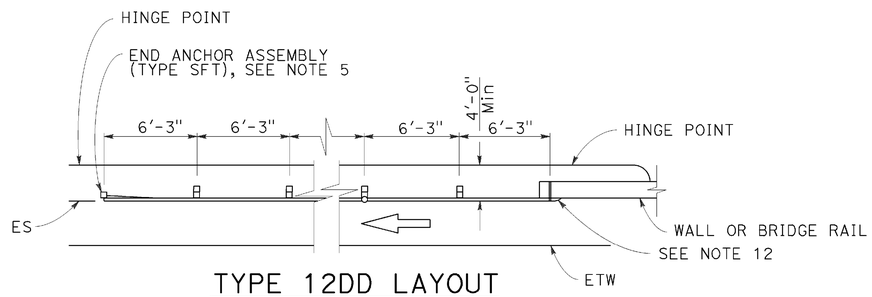

TYPE 12DD LAYOUT

(MGS installation at structure departure With end anchor assembly at trailing end of railing)
See Notes 6 and 9

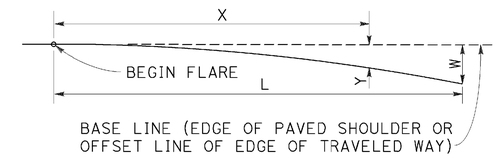

$$Y = \frac{WX^2}{L^2}$$

Y = OFFSET FROM BASE LINE
W = MAXIMUM OFFSET
X = DISTANCE ALONG BASE LINE
L = LENGTH OF FLARE

PARABOLIC FLARE OFFSETS

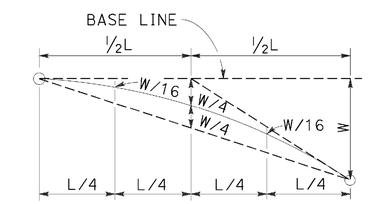

TYPICAL PARABOLIC LAYOUT

NOTES:

1. Line post, blocks and hardware to be used are shown on Revised Standard Plans RSP A77L1, RSP A77L2, RSP A77M1, RSP A77N1 and RSP A77N2.
2. MSG post spacing to be 6'-3" center to center, except as otherwise noted.
3. Except as noted, line posts are 6" x 8" x 6'-0" wood with 6" x 12" x 1'-2" wood blocks. W6 x 8.5 or W6 x 9 steel posts, 6'-0" in length, with 6" x 12" x 1'-2" notched wood blocks or notched recycled plastic blocks may be used for 6" x 8" x 6'-0" wood line posts with 6" x 12" x 1'-2" wood blocks where applicable and when specified.
4. For Transition Railing (Type WB-31) details for Type 12CC Layout, see Revised Standard Plan RSP A77U4.
5. For details of End Anchor Assembly (Type SFT) used with Type 12DD Layout, see Revised Standard Plan RSP A77S1.
6. Type 12DD layout is typically used to the right of traffic departing a structure on two-way conventional highways where the roadbed width across the structure is equal to or greater than 40 feet and MGS is recommended (embankment height, side slopes, other fixed objects). Length of railing to be equal to multiples of 12'-6". For MGS connection details to bridge rail, see Revised Standard Plans RSP A77U1 and RSP A77V1. For MGS connection details to wall, see Revised Standard Plan RSP A77U3.
7. The 15:1 or flatter flare for Type 12CC Layout is based on the edge of the paved shoulder or offset line of edge of the traveled way. The length of MGS within the 15:1 or flatter flare is based on site conditions and should be a length equal to multiples of 12'-6".
8. For details of the buried post end anchor used with Type 12CC Layout, see Revised Standard Plan RSP A77T2.
9. Where placement of dike is required with MGS installations, see Revised Standard Plan RSP A77N4 for dike positioning details.
10. Type 12CC Layout is typically used to the right of traffic departing a structure on two-way conventional highways where the roadbed width across the structure is less than 40 feet.
11. For additional details of a typical connection to bridge rail for Layout Type 12CC, see Connection Detail CC on Revised Standard Plan RSP A77U2 and Connection Detail HH on Revised Standard Plan RSP A77V2.
12. For additional details of a typical connection to bridge rail for Layout Type 12DD, see Connection Detail BB on Revised Standard Plan RSP A77U1 and Connection Detail GG on Revised Standard Plan RSP A77V1.
13. For typical flare offsets for 25'-0" length parabola with maximum offset of 1'-0", see Revised Standard Plan RSP A77P1.

STATE OF CALIFORNIA
DEPARTMENT OF TRANSPORTATION

MIDWEST GUARDRAIL SYSTEM TYPICAL LAYOUTS FOR STRUCTURE DEPARTURE

NO SCALE

RSP A77Q5 DATED AUGUST 14, 2015 SUPERSEDES RSP A77Q5 DATED JULY 19, 2013 THAT SUPPLEMENTS THE STANDARD PLANS BOOK DATED 2010.

REVISED STANDARD PLAN RSP A77Q5

2010 REVISED STANDARD PLAN RSP A77Q5

DATE PLOTTED => 04-AUG-2016
TIME PLOTTED => 12:07

Dist	COUNTY	ROUTE	POST MILES TOTAL PROJECT	SHEET No.	TOTAL SHEETS
02	Plu	70	50.6/51.7	82	181

Randell D. Hiatt
REGISTERED CIVIL ENGINEER

November 15, 2013
PLANS APPROVAL DATE

REGISTERED PROFESSIONAL ENGINEER
Randell D. Hiatt
No. C50200
Exp. 6-30-15
CIVIL
STATE OF CALIFORNIA

THE STATE OF CALIFORNIA OR ITS OFFICERS OR AGENTS SHALL NOT BE RESPONSIBLE FOR THE ACCURACY OR COMPLETENESS OF SCANNED COPIES OF THIS PLAN SHEET.

TO ACCOMPANY PLANS DATED 06-15-16

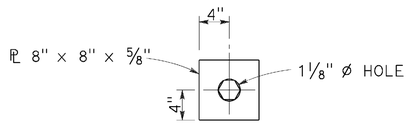

DETAIL "A"
CABLE CONNECTION
END PLATE

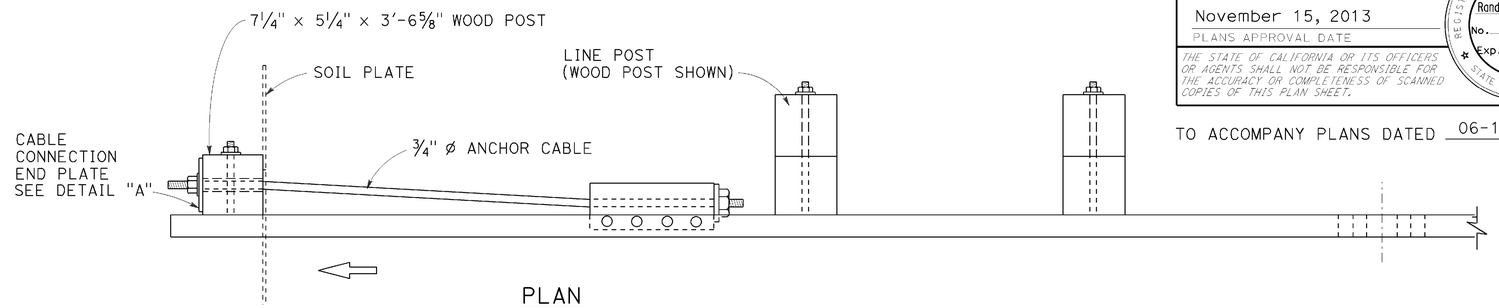

PLAN

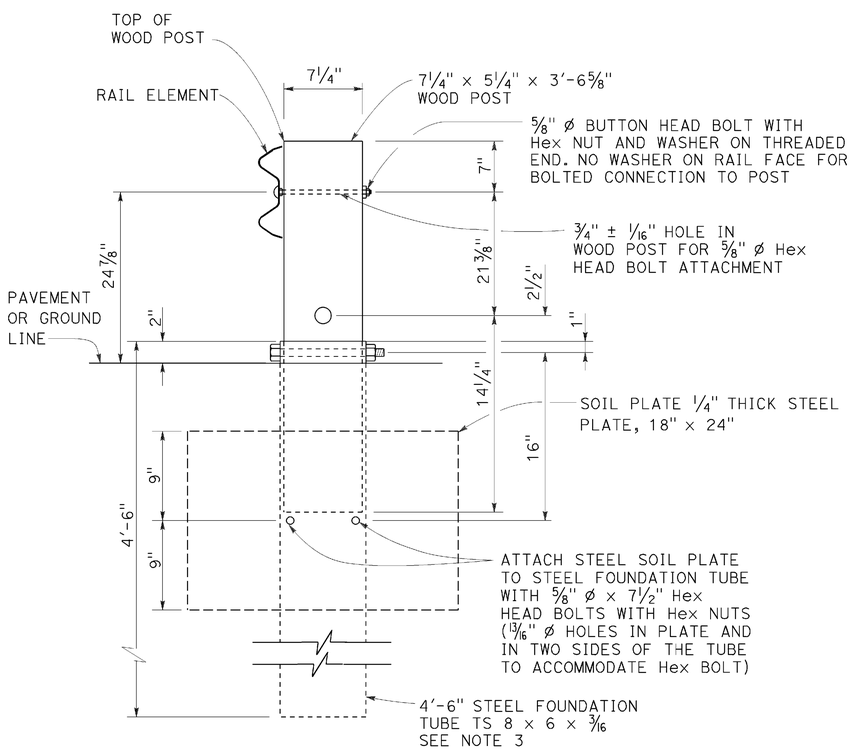

SECTION A-A

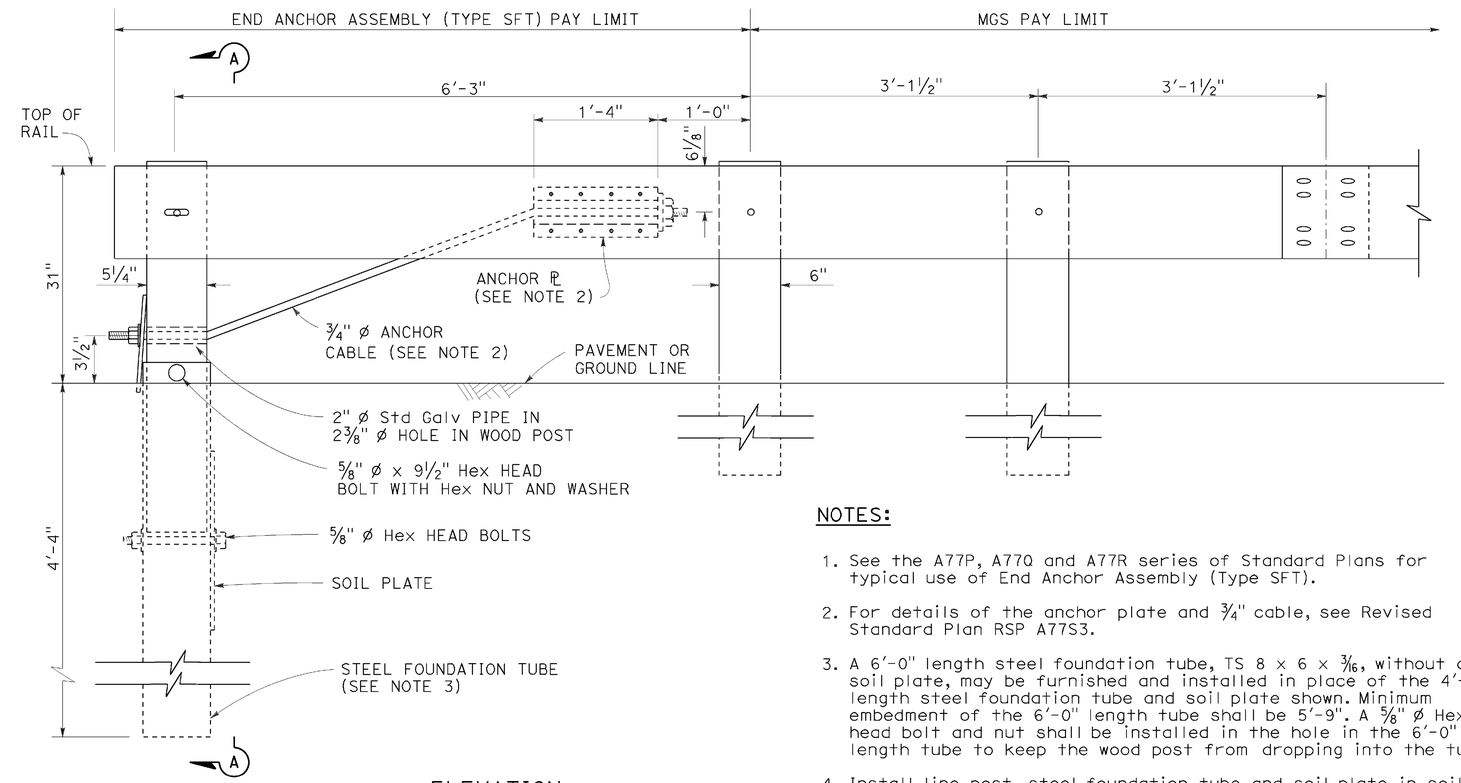

ELEVATION

END ANCHOR
ASSEMBLY (TYPE SFT)
See Note 1

NOTES:

1. See the A77P, A77Q and A77R series of Standard Plans for typical use of End Anchor Assembly (Type SFT).
2. For details of the anchor plate and 3/4" cable, see Revised Standard Plan RSP A77S3.
3. A 6'-0" length steel foundation tube, TS 8 x 6 x 3/16, without a soil plate, may be furnished and installed in place of the 4'-6" length steel foundation tube and soil plate shown. Minimum embedment of the 6'-0" length tube shall be 5'-9". A 5/8" ø Hex head bolt and nut shall be installed in the hole in the 6'-0" length tube to keep the wood post from dropping into the tube.
4. Install line post, steel foundation tube and soil plate in soil.

STATE OF CALIFORNIA
DEPARTMENT OF TRANSPORTATION

MIDWEST GUARDRAIL SYSTEM END ANCHOR ASSEMBLY (TYPE SFT)

NO SCALE

RSP A77S1 DATED NOVEMBER 15, 2013 SUPERSEDES RSP A77S1
DATED JULY 19, 2013 THAT SUPPLEMENTS THE STANDARD PLANS BOOK DATED 2010.

REVISED STANDARD PLAN RSP A77S1

2010 REVISED STANDARD PLAN RSP A77S1

DATE PLOTTED => 04-AUG-2016
TIME PLOTTED => 12:07

USERNAME => s115152
DGN FILE => 22c090va025.dgn

P:\proj1\02\2c090_plans\pse\22c090va025.dgn

10-4-13

Dist	COUNTY	ROUTE	POST MILES TOTAL PROJECT	SHEET No.	TOTAL SHEETS
02	Plu	70	50.6/51.7	83	181

Randell D. Hiatt
REGISTERED CIVIL ENGINEER

November 15, 2013
PLANS APPROVAL DATE

REGISTERED PROFESSIONAL ENGINEER
Randell D. Hiatt
No. C50200
Exp. 6-30-15
CIVIL
STATE OF CALIFORNIA

THE STATE OF CALIFORNIA OR ITS OFFICERS OR AGENTS SHALL NOT BE RESPONSIBLE FOR THE ACCURACY OR COMPLETENESS OF SCANNED COPIES OF THIS PLAN SHEET.

TO ACCOMPANY PLANS DATED 06-15-16

NOTE:

See Revised Standard Plans RSP A77S1, RSP A77S2 and RSP A77T1 for typical use of anchor cable and anchor plate.

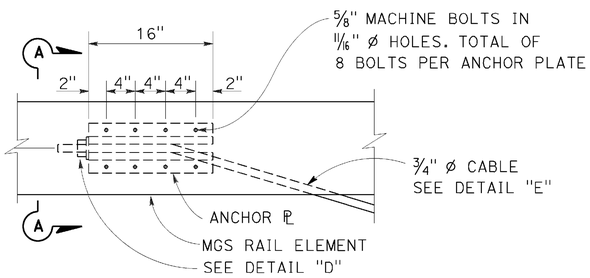

ANCHOR PLATE DETAIL
(MGS shown, TBB similar)

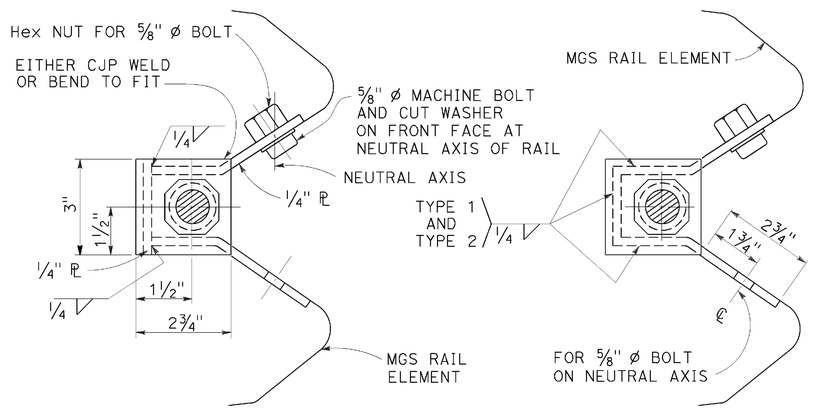

NOTE:
Dimensioning applies to both types.

SECTION A-A
(ALTERNATIVE TYPE 1)

SECTION A-A
(ALTERNATIVE TYPE 2)

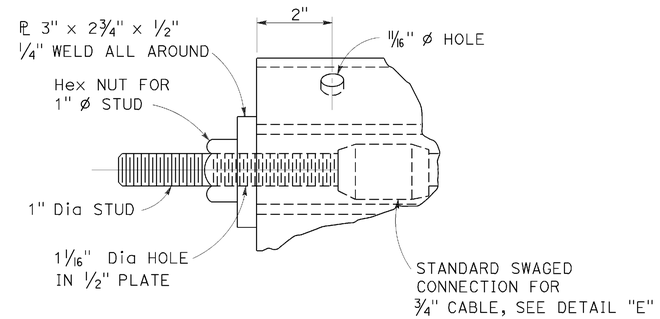

DETAIL "D"

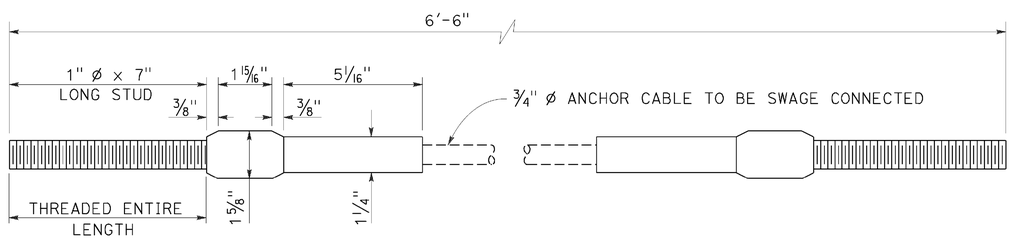

ANCHOR CABLE WITH
SWAGED FITTING AND STUD
DETAIL "E"

STATE OF CALIFORNIA
DEPARTMENT OF TRANSPORTATION

METAL RAILING ANCHOR CABLE AND ANCHOR PLATE DETAILS

NO SCALE

RSP A77S3 DATED NOVEMBER 15, 2013 SUPERSEDES RSP A77S3
DATED JULY 19, 2013 THAT SUPPLEMENTS THE STANDARD PLANS BOOK DATED 2010.

REVISED STANDARD PLAN RSP A77S3

2010 REVISED STANDARD PLAN RSP A77S3

DATE PLOTTED => 04-AUG-2016
TIME PLOTTED => 12:08

Dist	COUNTY	ROUTE	POST MILES TOTAL PROJECT	SHEET No.	TOTAL SHEETS
02	Plu	70	50.6/51.7	84	181

Randell D. Hiatt
REGISTERED CIVIL ENGINEER

November 15, 2013
PLANS APPROVAL DATE

REGISTERED PROFESSIONAL ENGINEER
Randell D. Hiatt
No. C50200
Exp. 6-30-15
CIVIL
STATE OF CALIFORNIA

THE STATE OF CALIFORNIA OR ITS OFFICERS OR AGENTS SHALL NOT BE RESPONSIBLE FOR THE ACCURACY OR COMPLETENESS OF SCANNED COPIES OF THIS PLAN SHEET.

TO ACCOMPANY PLANS DATED 06-15-16

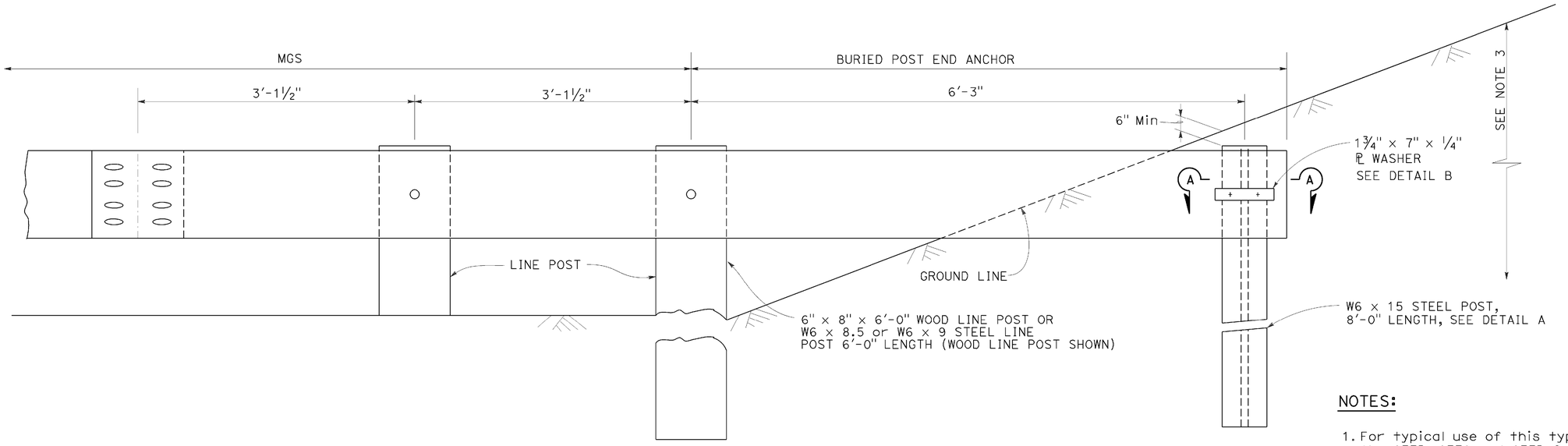

BURIED POST END ANCHOR

See Note 3

NOTES:

1. For typical use of this type of end anchor with MGS see the A77P, A77Q and A77R Series of the Standard Plans.
2. Holes excavation in the slope to construct the buried post end anchor shall be backfilled with selected earth, placed in layers approximately 1'-0" thick. Each layer shall be moistened and thoroughly compacted.
3. The buried post end anchor shall only be constructed at those locations where the slope perpendicular to the roadway is non-traversable.

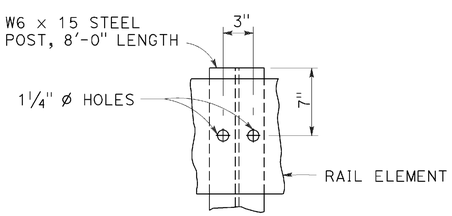

DETAIL A

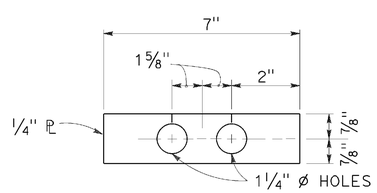

DETAIL B

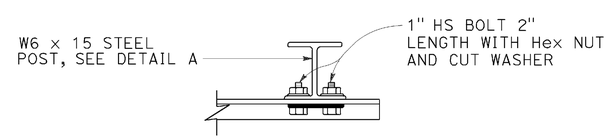

SECTION A-A

STATE OF CALIFORNIA
DEPARTMENT OF TRANSPORTATION

MIDWEST GUARDRAIL SYSTEM BURIED POST END ANCHOR

NO SCALE

RSP A77T2 DATED NOVEMBER 15, 2013 SUPERSEDES RSP A77T2
DATED JULY 19, 2013 THAT SUPPLEMENTS THE STANDARD PLANS BOOK DATED 2010.

REVISED STANDARD PLAN RSP A77T2

2010 REVISED STANDARD PLAN RSP A77T2

DATE PLOTTED => 04-AUG-2016
TIME PLOTTED => 12:08

Dist	COUNTY	ROUTE	POST MILES TOTAL PROJECT	SHEET No.	TOTAL SHEETS
02	Plu	70	50.6/51.7	85	181

Randell D. Hiatt
REGISTERED CIVIL ENGINEER

July 19, 2013
PLANS APPROVAL DATE

REGISTERED PROFESSIONAL ENGINEER
Randell D. Hiatt
No. C50200
Exp. 6-30-15
CIVIL
STATE OF CALIFORNIA

THE STATE OF CALIFORNIA OR ITS OFFICERS OR AGENTS SHALL NOT BE RESPONSIBLE FOR THE ACCURACY OR COMPLETENESS OF SCANNED COPIES OF THIS PLAN SHEET.

TO ACCOMPANY PLANS DATED 06-15-16

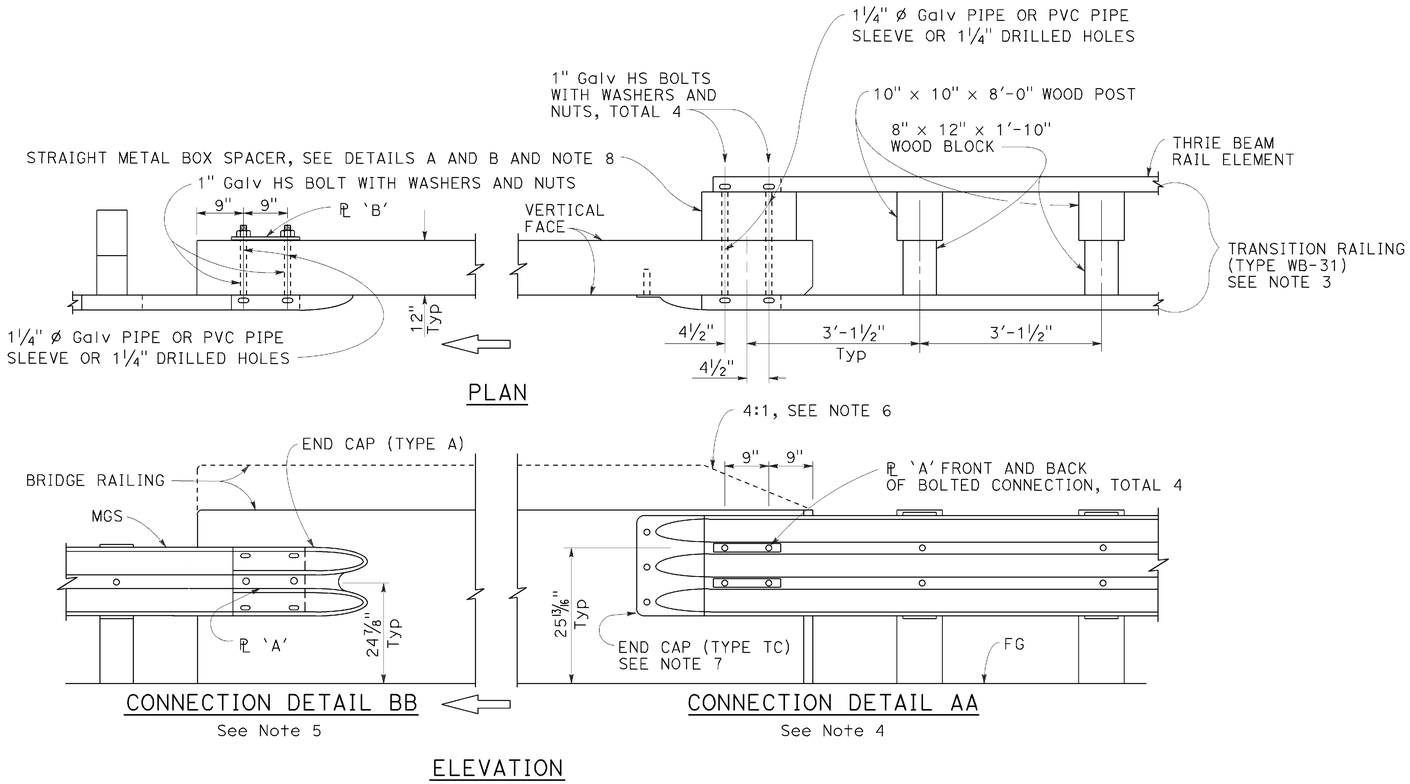

MIDWEST GUARDRAIL SYSTEM CONNECTION TO BRIDGE RAILING WITHOUT SIDEWALK

NOTES:

1. See Revised Standard Plan RSP A77U2 for additional connection details to bridges without sidewalks.
2. Additional details of posts, blocks and hardware are shown on Revised Standard Plans RSP A77M1, RSP A77N1 and RSP A77N2.
3. For additional details of Transition Railing (Type WB-31), see Revised Standard Plan RSP A77U4. Transition Railing (Type WB-31) transitions the 12 gauge MGS railing section to a heavier gage nested thrie beam railing section which is connected to the concrete bridge railing.
4. For typical use of Connection Detail AA, see Layout Types 12A and 12B on Revised Standard Plan RSP A77Q1, Layout Types 12C and 12D on Revised Standard Plan RSP A77Q2, and Layout Type 12E on Revised Standard Plan RSP A77Q3.
5. For typical use of Connection Detail BB, see Layout Type 12D (structure departure railing connection) on Revised Standard Plan RSP A77Q2 and Layout Type 12DD on Revised Standard Plan RSP A77Q5.
6. Where the height of the bridge railing exceeds the height of the thrie beam railing by more than 1" at Connection Detail AA, taper the top of the end of the bridge railing at 4:1 to match the top elevation of the thrie beam rail.
7. For details of End Cap (Type TC), see Revised Standard Plan RSP A77U4.
8. See Revised Standard Plan RSP A77U4 for additional details regarding depth dimension for straight metal box spacer.

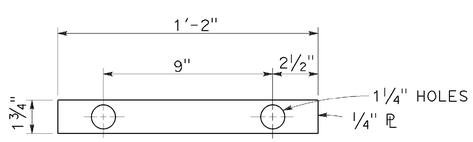

PLATE 'A'

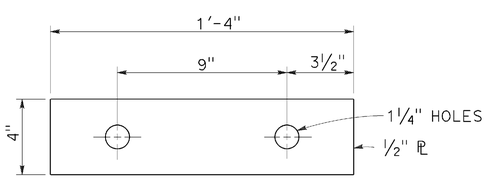

PLATE 'B'
(For backside of connection BB)

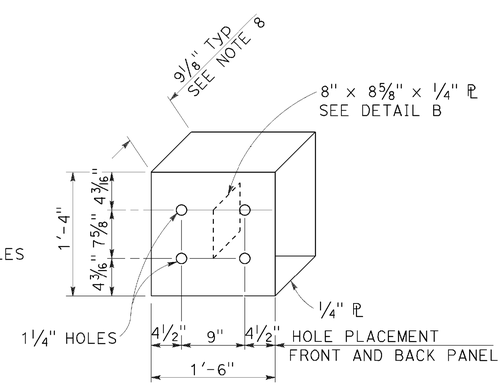

DETAIL A

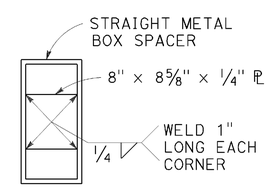

DETAIL B

STRAIGHT METAL BOX SPACER

STATE OF CALIFORNIA
DEPARTMENT OF TRANSPORTATION

MIDWEST GUARDRAIL SYSTEM CONNECTIONS TO BRIDGE RAILINGS WITHOUT SIDEWALKS DETAILS No. 1

NO SCALE

RSP A77U1 DATED JULY 19, 2013 SUPPLEMENTS THE STANDARD PLANS BOOK DATED 2010.

REVISED STANDARD PLAN RSP A77U1

2010 REVISED STANDARD PLAN RSP A77U1

DATE PLOTTED => 04-AUG-2016
TIME PLOTTED => 12:09

Dist	COUNTY	ROUTE	POST MILES TOTAL PROJECT	SHEET No.	TOTAL SHEETS
02	Plu	70	50.6/51.7	86	181

Randell D. Hiatt
REGISTERED CIVIL ENGINEER

July 19, 2013
PLANS APPROVAL DATE

REGISTERED PROFESSIONAL ENGINEER
Randell D. Hiatt
No. C50200
Exp. 6-30-15
CIVIL
STATE OF CALIFORNIA

THE STATE OF CALIFORNIA OR ITS OFFICERS OR AGENTS SHALL NOT BE RESPONSIBLE FOR THE ACCURACY OR COMPLETENESS OF SCANNED COPIES OF THIS PLAN SHEET.

TO ACCOMPANY PLANS DATED 06-15-16

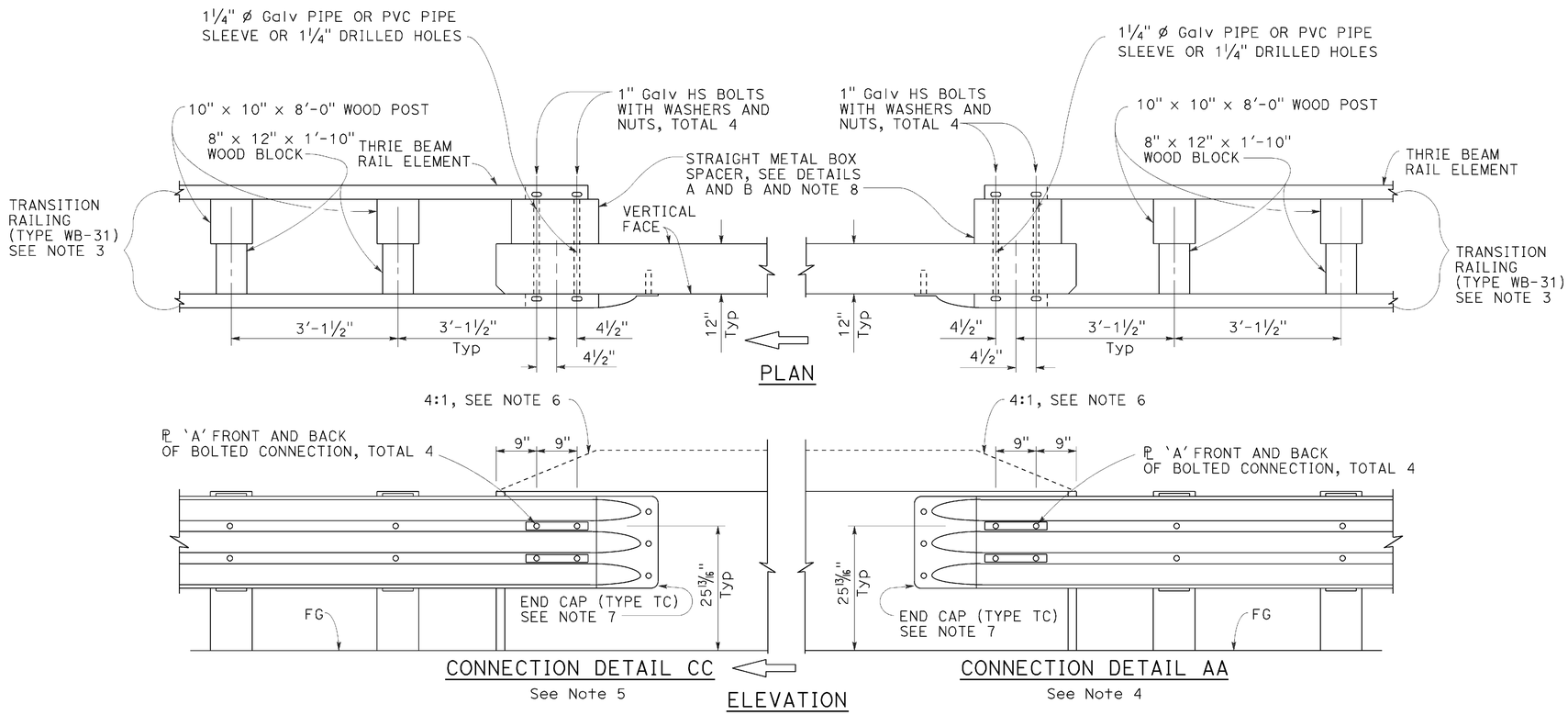

MIDWEST GUARDRAIL SYSTEM CONNECTION TO BRIDGE RAILING WITHOUT SIDEWALK

NOTES:

1. See Revised Standard Plan RSP A77U1 for additional connection details to bridges without sidewalks.
2. Additional details of posts, blocks and hardware are shown on Revised Standard Plans RSP A77M1, RSP A77N1 and RSP A77N2.
3. For additional details of Transition Railing (Type WB-31), see Revised Standard Plan RSP A77U4. Transition Railing (Type WB-31) transitions the 12 gauge MGS railing section to a heavier gage nested thrie beam railing section which is connected to the concrete bridge railing.
4. For typical use of Connection Detail AA, see Layout Types 12A and 12B on Revised Standard Plan RSP A77Q1, Layout Types 12C and 12D on Revised Standard Plan RSP A77Q2, and Layout Type 12E on Revised Standard Plan RSP A77Q3.
5. For typical use of Connection Detail CC, see Layout Types 12AA and 12BB on Revised Standard Plan RSP A77Q4 and Layout Type 12CC on Revised Standard Plan RSP A77Q5.
6. Where the height of the bridge railing exceeds the height of the thrie beam railing by more than 1" at Connection Detail AA and connection Detail CC, taper the top of the end of the bridge railing at 4:1 to match the top elevation of the thrie beam railing.
7. For details of End Cap (Type TC), see Revised Standard Plan RSP A77U4.
8. See Revised Standard Plan RSP A77U4 for additional details regarding depth dimension for straight metal box spacer.

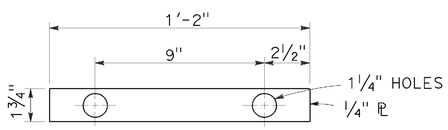

PLATE 'A'

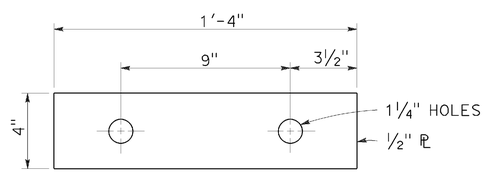

PLATE 'B'
(For backside of connection BB)

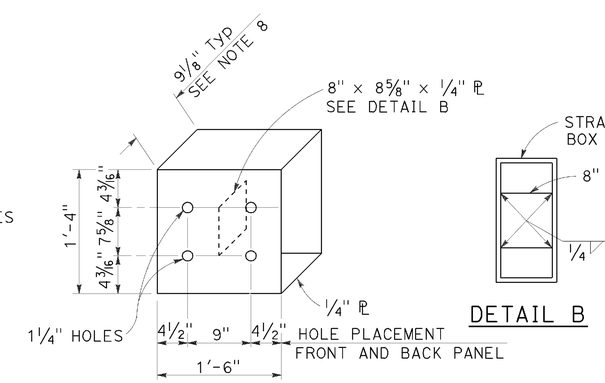

DETAIL A

DETAIL B

STRAIGHT METAL BOX SPACER

STATE OF CALIFORNIA
DEPARTMENT OF TRANSPORTATION

MIDWEST GUARDRAIL SYSTEM CONNECTIONS TO BRIDGE RAILINGS WITHOUT SIDEWALKS DETAILS No. 2

NO SCALE

RSP A77U2 DATED JULY 19, 2013 SUPPLEMENTS THE STANDARD PLANS BOOK DATED 2010.

REVISED STANDARD PLAN RSP A77U2

2010 REVISED STANDARD PLAN RSP A77U2

DATE PLOTTED => 04-AUG-2016
TIME PLOTTED => 12:09

Dist	COUNTY	ROUTE	POST MILES TOTAL PROJECT	SHEET No.	TOTAL SHEETS
02	Plu	70	50.6/51.7	87	181

Randell D. Hiatt
REGISTERED CIVIL ENGINEER

July 19, 2013
PLANS APPROVAL DATE

REGISTERED PROFESSIONAL ENGINEER
Randell D. Hiatt
No. C50200
Exp. 6-30-15
CIVIL
STATE OF CALIFORNIA

THE STATE OF CALIFORNIA OR ITS OFFICERS OR AGENTS SHALL NOT BE RESPONSIBLE FOR THE ACCURACY OR COMPLETENESS OF SCANNED COPIES OF THIS PLAN SHEET.

TO ACCOMPANY PLANS DATED 06-15-16

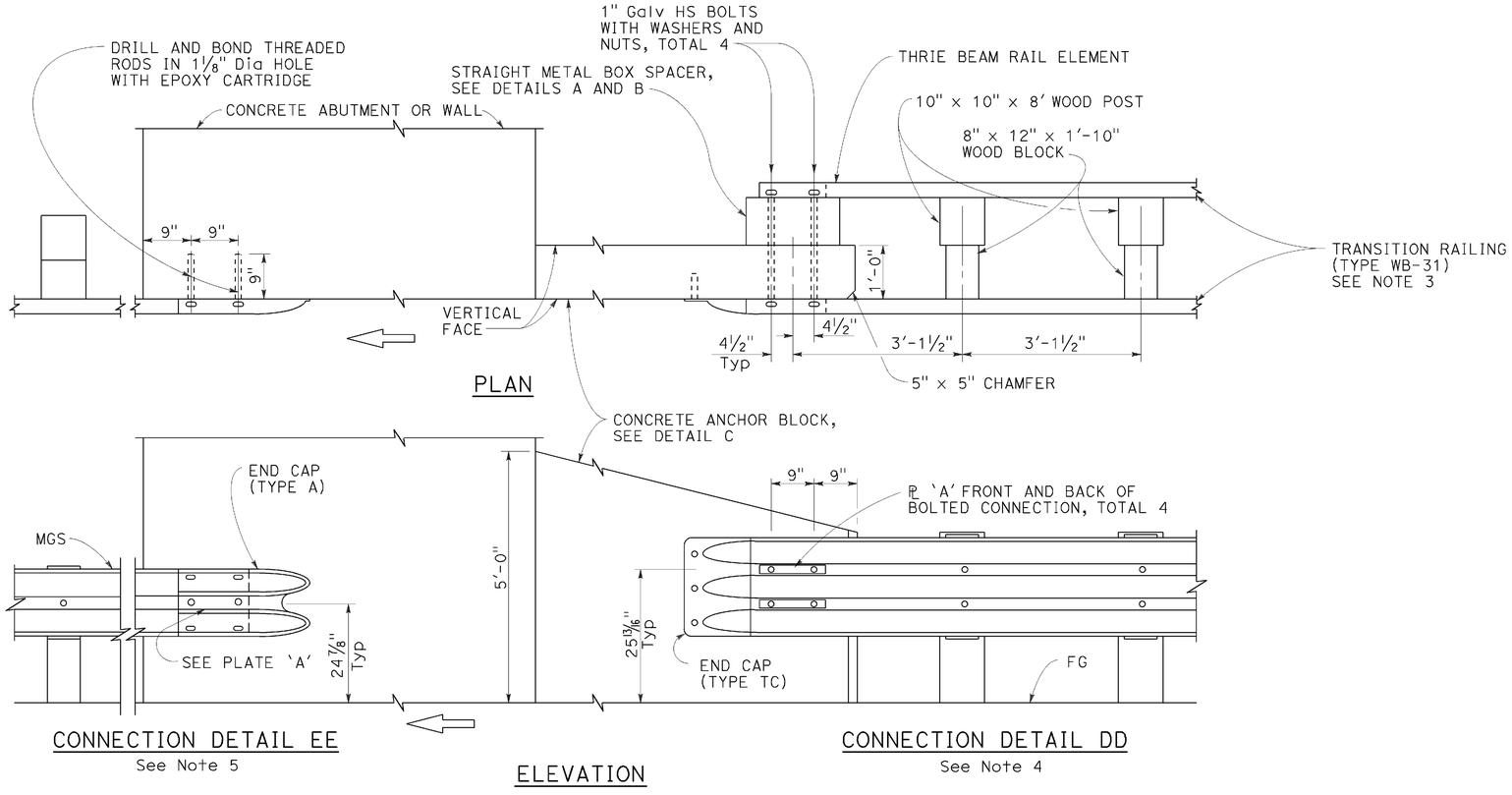

MIDWEST GUARDRAIL SYSTEM CONNECTION TO ABUTMENT OR WALL

NOTES:

1. These connection details apply to abutments and walls.
2. Additional details of posts, blocks and hardware are shown on Revised Standard Plans RSP A77M1, RSP A77N1 and RSP A77N2.
3. For additional details of Transition Railing (Type WB-31), see Revised Standard Plan RSP A77U4. Transition Railing (Type WB-31) transitions the 12 gauge MGS railing section to a heavier gage nested thrie beam railingsection which is connected to the concrete anchor block.
4. For typical use of Connection Details DD, see Layout Types 12A and 12B on Revised Standard Plan RSP A77Q1 and Layout Types 12C and 12D on Revised Standard Plan RSP A77Q2.
5. For typical use of Connection Detail EE, see Layout Type 12D on Revised Standard Plan RSP A77Q2 and Layout Type 12DD on Revised Standard Plan RSP A77Q5.

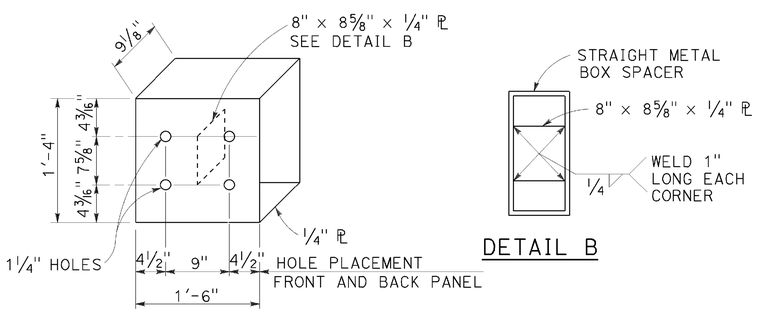

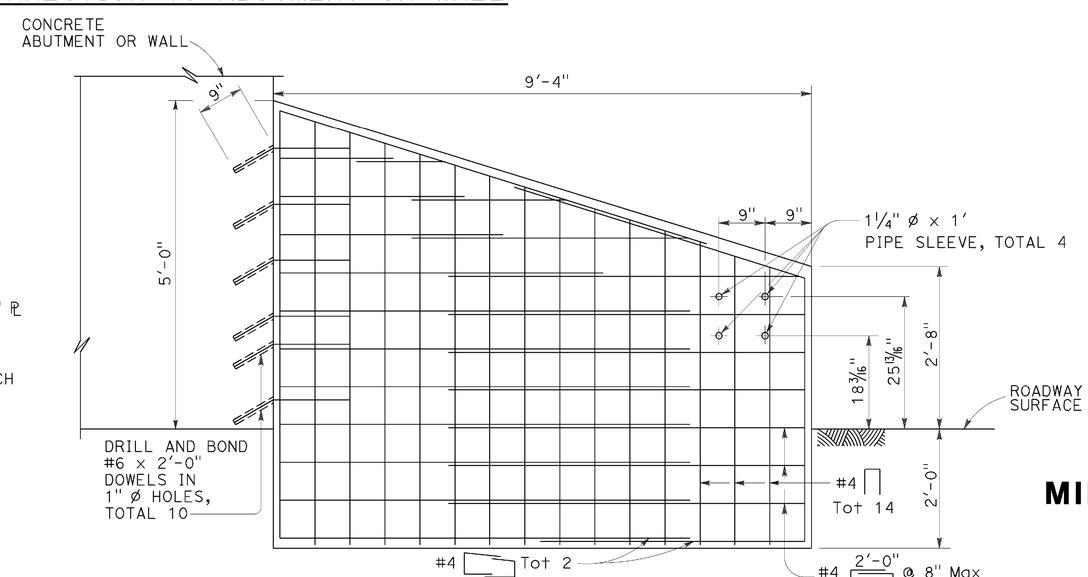

ANCHOR BLOCK FOR TRANSITION RAILING CONNECTION

DETAIL C

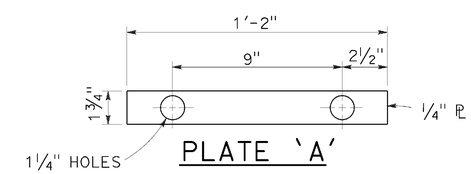

STATE OF CALIFORNIA
DEPARTMENT OF TRANSPORTATION

MIDWEST GUARDRAIL SYSTEM CONNECTIONS TO ABUTMENTS AND WALLS

NO SCALE

RSP A77U3 DATED JULY 19, 2013 SUPPLEMENTS THE STANDARD PLANS BOOK DATED 2010.

REVISED STANDARD PLAN RSP A77U3

2010 REVISED STANDARD PLAN RSP A77U3

DATE PLOTTED => 04-AUG-2016
TIME PLOTTED => 12:09

Dist	COUNTY	ROUTE	POST MILES TOTAL PROJECT	SHEET No.	TOTAL SHEETS
02	Plu	70	50.6/51.7	88	181

Randell D. Hiatt
REGISTERED CIVIL ENGINEER

January 23, 2015
PLANS APPROVAL DATE

REGISTERED PROFESSIONAL ENGINEER
Randell D. Hiatt
No. C50200
Exp. 6-30-15
CIVIL
STATE OF CALIFORNIA

THE STATE OF CALIFORNIA OR ITS OFFICERS OR AGENTS SHALL NOT BE RESPONSIBLE FOR THE ACCURACY OR COMPLETENESS OF SCANNED COPIES OF THIS PLAN SHEET.

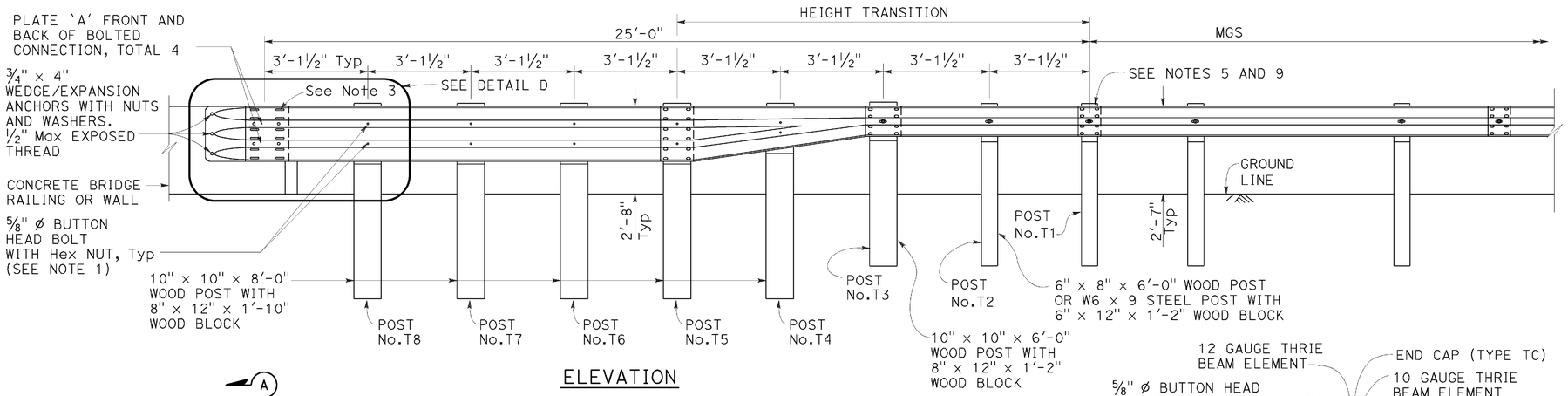

ELEVATION

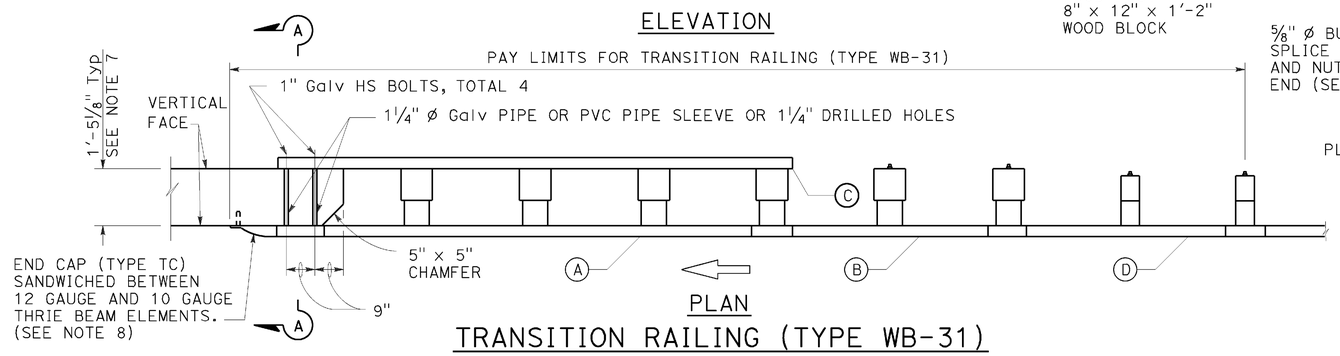

PLAN

TRANSITION RAILING (TYPE WB-31)

(No Blockout Attachment)

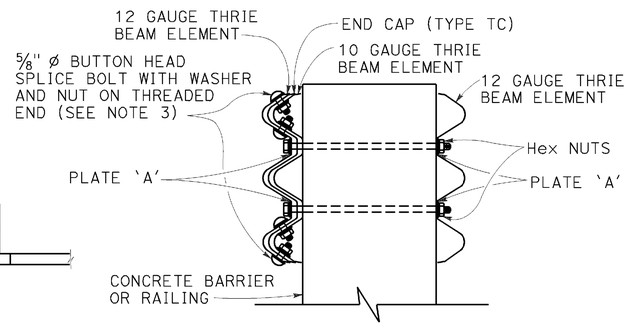

SECTION A-A

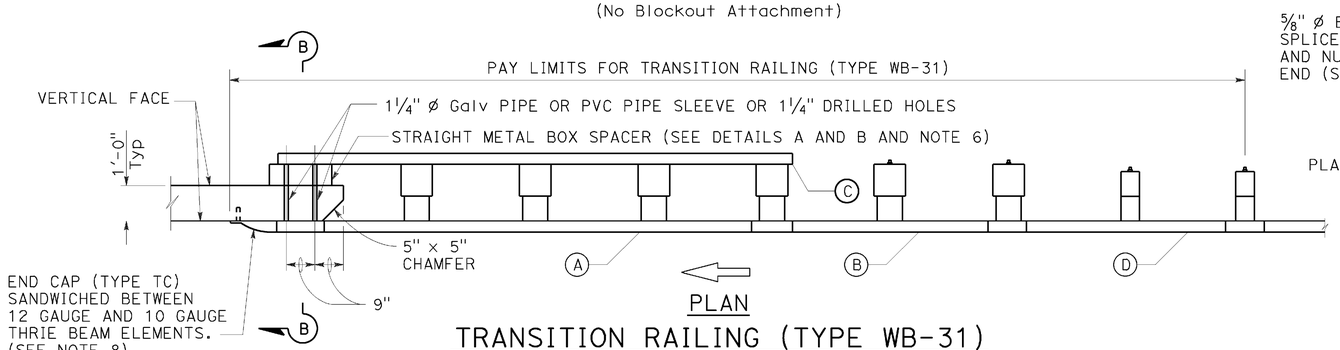

PLAN

TRANSITION RAILING (TYPE WB-31)

(Blockout Attachment)

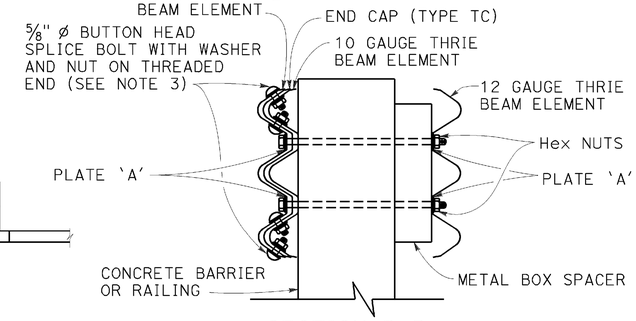

SECTION B-B

LEGEND:

(A) NESTED THRIE BEAM ELEMENTS (ONE 12 GAUGE ELEMENT NESTED OVER ONE 10 GAUGE ELEMENT).

(B) ONE ASYMMETRICAL 10 GAUGE "W" BEAM TO THRIE BEAM ELEMENT.

(C) ONE 12 GAUGE THRIE BEAM ELEMENT.

(D) ONE 10 GAUGE "W" BEAM RAIL ELEMENT (7'-3 1/2" LENGTH)

10 GAUGE = 0.138" THICK
12 GAUGE = 0.108" THICK

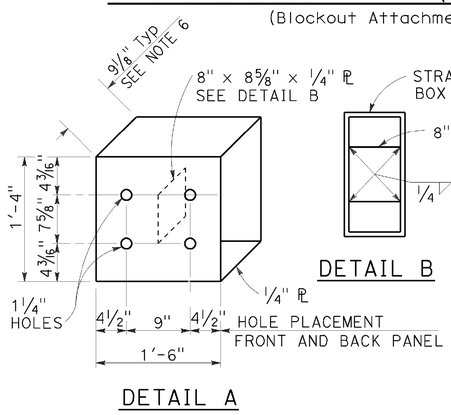

DETAIL A

STRAIGHT METAL BOX SPACER

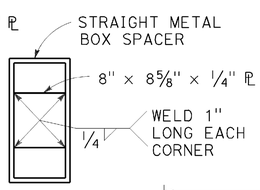

DETAIL B

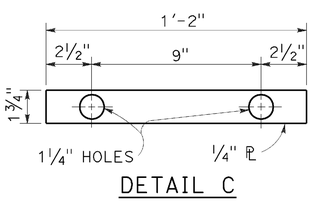

DETAIL C

PLATE 'A'

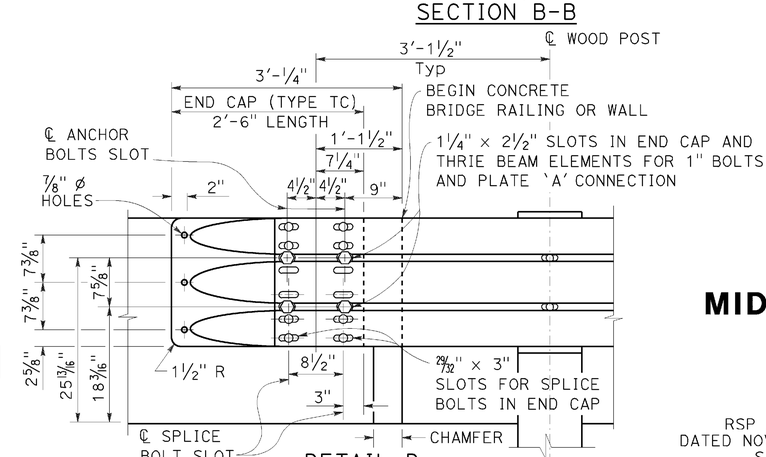

DETAIL D

NOTES:

TO ACCOMPANY PLANS DATED 06-15-16

1. Use 5/8" ø Button head bolts and hex nuts for connections to posts. No washer on rail face for bolted connections to post.

2. The nested rail elements, end cap, and 'W' beam to thrie beam element may be spliced together prior to bolting the elements to the wood post and concrete barrier or railing.

3. Exterior splice bolt holes for rail element splices at Post No. T5 and the connection to the concrete barrier or railing shall be the standard 29/32" x 1 1/8" slot size. Interior splice bolt holes at these locations may be increased up to 1 1/4" ø. Only the top 4 and the bottom 4 splice bolts with washers and nuts are required for rail splices at Post No. T5 and the connection to the concrete barrier or railing.

4. The top elevation of Posts No. T2 through No. T7 shall not project more than 1" above the top elevation of the rail element.

5. Typically, the railing connected to Transition Railing (Type WB-31) will be either standard railing section of MGS with height transition ratio of 150:1 or a Caltrans approved 31" end treatment attached to Post No. T1.

6. The depth of the metal box spacer varies from the 9 1/8" to 1 1/2" and is dependent on the width of the concrete railing or wall. The combined dimension for the depth of the metal box spacer plus the width of railing or wall is typically 21 1/8". Where the space between the backside of the concrete railing or wall and the rear thrie beam element is less than 1 1/2", metal plates similar to Plate 'A' are to be used as spacers.

7. Where the width of the concrete railing or wall is greater than 17 1/8", wood blocks are to be used to fill the space created between the backside of Posts No. T5 through No. T8 and the rear thrie beam element. These wood blocks shall be 8" in width and 1'-2" in length. The dimension between the front thrie beam element and the rear thrie beam element is to match the width of the concrete railing or wall.

8. End cap may be installed over 12 gauge and 10 gauge thrie beam elements where transition railing is installed on the departure end of bridge railing.

9. Conform standard railing section height to 31" at Post No. T1 using height transition ratio of 150:1.

STATE OF CALIFORNIA
DEPARTMENT OF TRANSPORTATION

MIDWEST GUARDRAIL SYSTEM TRANSITION RAILING (TYPE WB-31)

NO SCALE

RSP A77U4 DATED JANUARY 23, 2015 SUPERSEDES RSP A77U4 DATED NOVEMBER 15, 2013 AND RSP A77U4 DATED JULY 19, 2013 THAT SUPPLEMENTS THE STANDARD PLANS BOOK DATED 2010.

REVISED STANDARD PLAN RSP A77U4

2010 REVISED STANDARD PLAN RSP A77U4

DATE PLOTTED => 04-AUG-2016
TIME PLOTTED => 12:10

Dist	COUNTY	ROUTE	POST MILES TOTAL PROJECT	SHEET No.	TOTAL SHEETS
02	Plu	70	50.6/51.7	89	181

REGISTERED CIVIL ENGINEER

January 15, 2016
PLANS APPROVAL DATE

REGISTERED PROFESSIONAL ENGINEER
Michael Janzen
No. 44788
Exp. 3-31-16
CIVIL
STATE OF CALIFORNIA

THE STATE OF CALIFORNIA OR ITS OFFICERS OR AGENTS SHALL NOT BE RESPONSIBLE FOR THE ACCURACY OR COMPLETENESS OF SCANNED COPIES OF THIS PLAN SHEET.

TO ACCOMPANY PLANS DATED 06-15-16

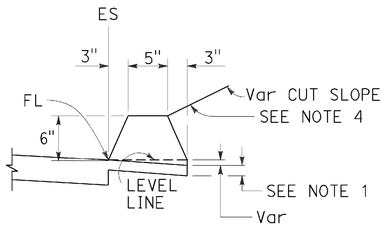

TYPE A
See Notes 3 and 5

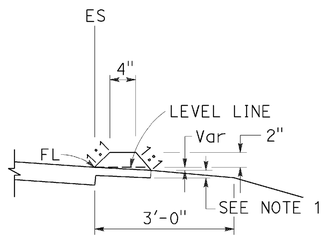

TYPE C

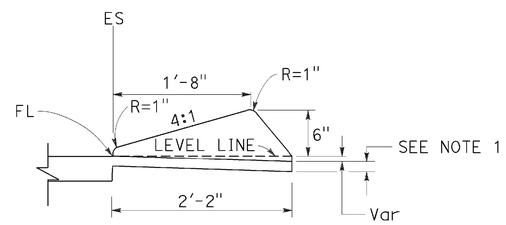

TYPE D

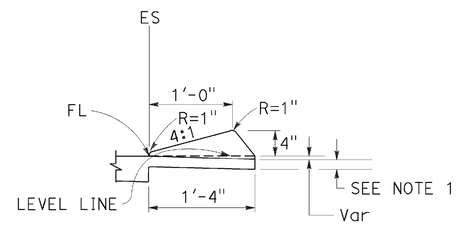

TYPE E

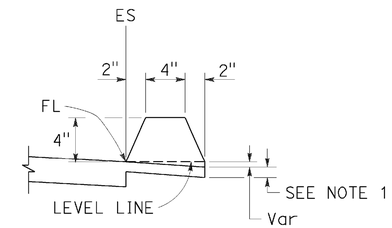

TYPE F
See Note 5

DIKES

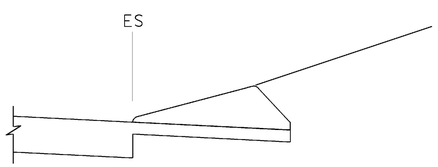

CASE C-1
Cut Slope

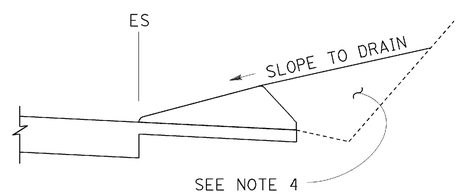

CASE C-2
Cut Slope

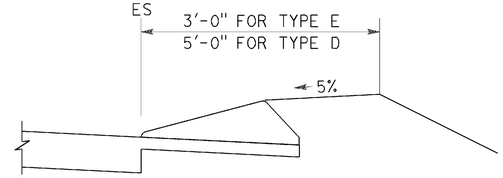

CASE F

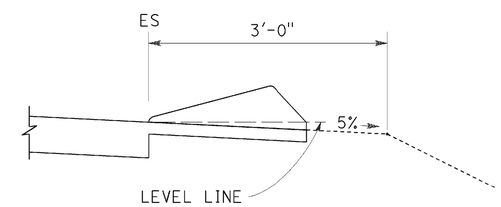

CASE R
See Note 2

TYPE D AND E BACKFILL DETAILS

NOTES:

1. For HMA shoulders only, extend top layer of HMA placed on the shoulder under dike with no joint at the ES. For projects with OGFC shoulders, do not extend OGFC under dike. See project plans for modified dike detail.
2. Case R applies to retrofit only projects where restrictive conditions do not provide enough width for Case F backfill.
3. Type A dike only to be used where restrictive slope conditions do not provide enough width to use Type D or Type E dike.
4. Fill and compact with excavated material to top of dike.
5. Use Type A or F dike, where dike is required with guardrail installations. See Standard Plan A77N4 for dike positioning details. See Standard Plan A77N3 for hinge point offsets with guardrail.

DIKE QUANTITIES

TYPE	CUBIC YARDS PER LINEAR FOOT
A	0.0135
C	0.0038
D	0.0293
E	0.0130
F	0.0066

Quantities based on 5% cross slope.

STATE OF CALIFORNIA
DEPARTMENT OF TRANSPORTATION

HOT MIX ASPHALT DIKES

NO SCALE

RSP A87B DATED JANUARY 15, 2016 SUPERSEDES STANDARD PLAN A87B
DATED OCTOBER 30, 2015 - PAGE 126 OF THE STANDARD PLANS BOOK DATED 2015.

REVISED STANDARD PLAN RSP A87B

2015 REVISED STANDARD PLAN RSP A87B

DATE PLOTTED => 04-AUG-2016
TIME PLOTTED => 12:10

Dist	COUNTY	ROUTE	POST MILES TOTAL PROJECT	SHEET No.	TOTAL SHEETS
02	Plu	70	50.6/51.7	90	181

Srikanth Balasubramanian
REGISTERED CIVIL ENGINEER

October 30, 2015
PLANS APPROVAL DATE

REGISTERED PROFESSIONAL ENGINEER Srikanth N. Balasubramanian No. C56426 Exp. 6-30-17 CIVIL STATE OF CALIFORNIA

THE STATE OF CALIFORNIA OR ITS OFFICERS OR AGENTS SHALL NOT BE RESPONSIBLE FOR THE ACCURACY OR COMPLETENESS OF SCANNED COPIES OF THIS PLAN SHEET.

TO ACCOMPANY PLANS DATED 06-15-16

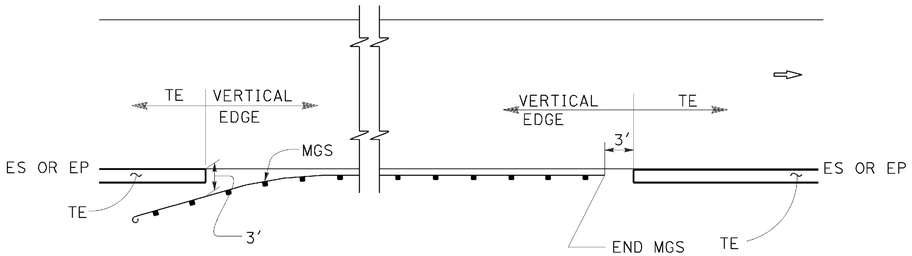

MGS

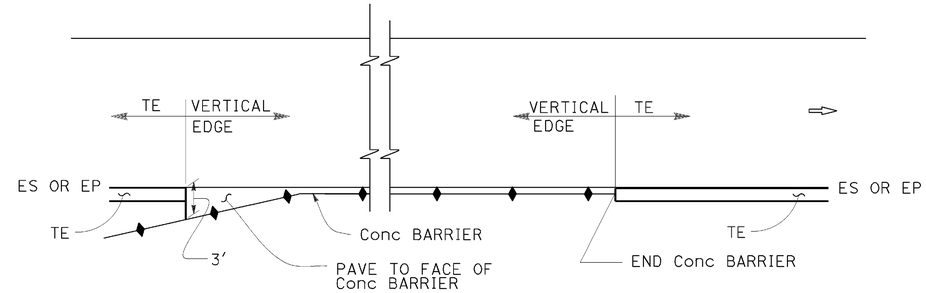

CONCRETE BARRIER

ABBREVIATIONS:

TE TAPERED EDGE

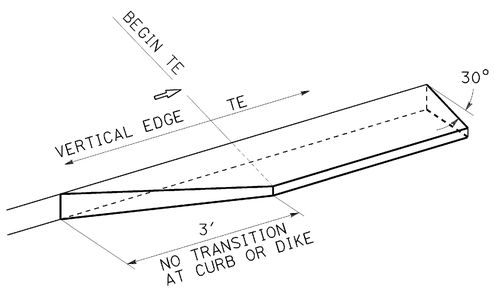

TRANSITION DETAIL FOR CONCRETE ONLY

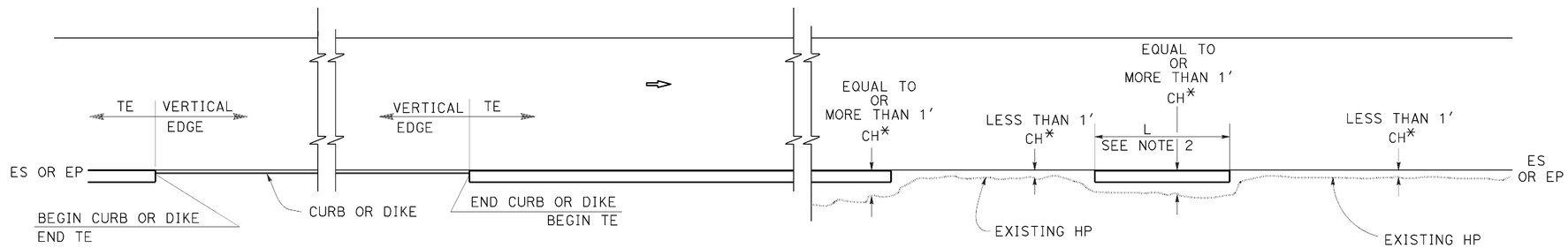

CURB OR DIKE

NARROW SIDE SLOPE

* CH = Distance from ES or EP to existing HP.

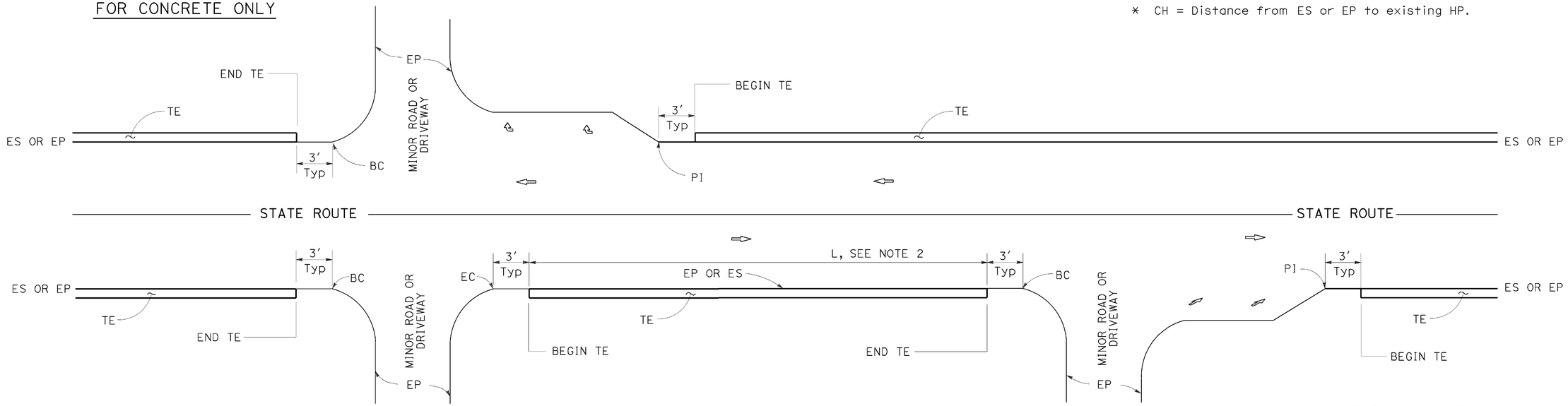

INTERTECTION

MINOR ROADWAY OR DRIVEWAY

DRIVEWAY AND INTERSECTION

STATE OF CALIFORNIA
DEPARTMENT OF TRANSPORTATION

PAVEMENT EDGE TREATMENTS

NO SCALE

NOTES:

1. For details not shown, see Revised Standard Plans RSP P75 and RSP P76.
2. Tapered edge is optional when L is less than 30′.

RSP P74 DATED OCTOBER 30, 2015 SUPERSEDES RSP P74 DATED NOVEMBER 15, 2013 AND RSP P74 DATED JANUARY 20, 2012 THAT SUPPLEMENTS THE STANDARD PLANS BOOK DATED 2010.

REVISED STANDARD PLAN RSP P74

2010 REVISED STANDARD PLAN RSP P74

DATE PLOTTED => 04-AUG-2016
TIME PLOTTED => 12:11

Dist	COUNTY	ROUTE	POST MILES TOTAL PROJECT	SHEET No.	TOTAL SHEETS
02	Plu	70	50.6/51.7	91	181

REGISTERED CIVIL ENGINEER

October 30, 2015
PLANS APPROVAL DATE

REGISTERED PROFESSIONAL ENGINEER Srikanth N. Balasubramanian No. C56426 Exp. 6-30-17 CIVIL STATE OF CALIFORNIA

THE STATE OF CALIFORNIA OR ITS OFFICERS OR AGENTS SHALL NOT BE RESPONSIBLE FOR THE ACCURACY OR COMPLETENESS OF SCANNED COPIES OF THIS PLAN SHEET.

TO ACCOMPANY PLANS DATED 06-15-16

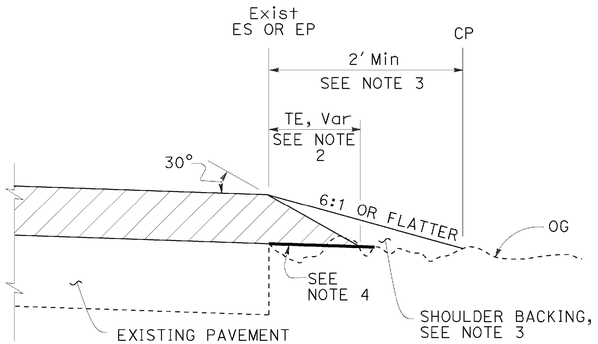

CASE A
Tapered Edge

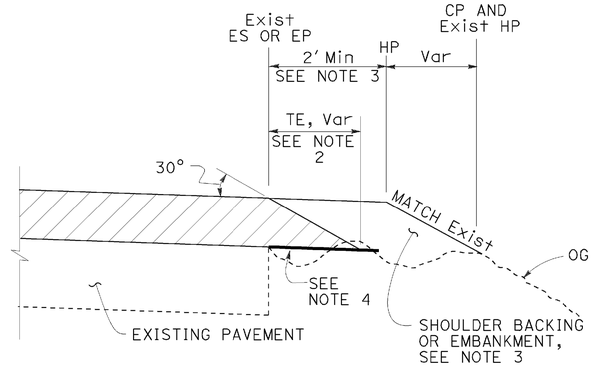

CASE B
Tapered Edge

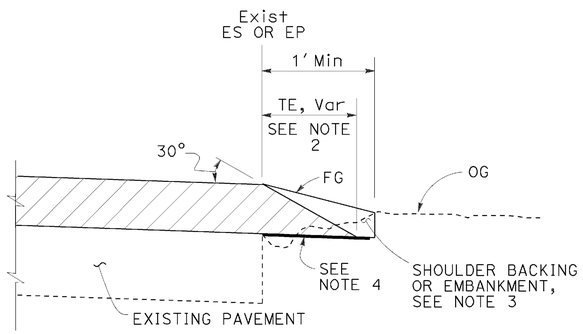

CASE C
Tapered Edge

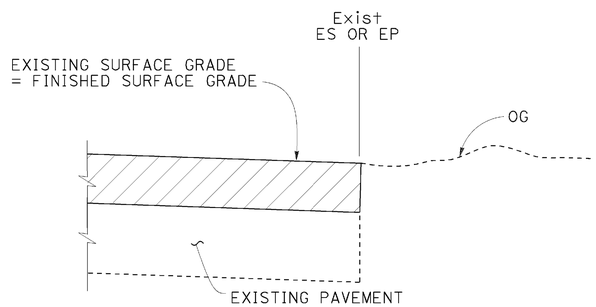

CASE D
Vertical Edge

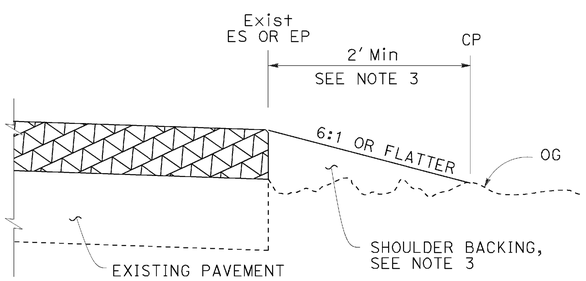

CASE E
Vertical Edge

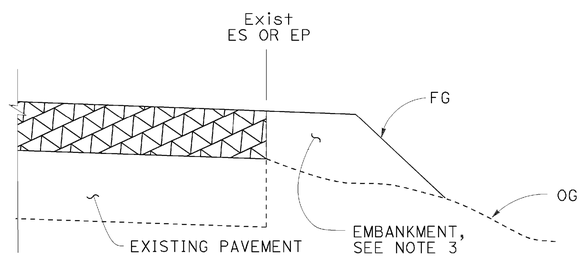

CASE F
Vertical Edge
* See Table A and Revised Std Plan RSP P74

LEGEND:

- HMA OVERLAY
- HMA OR CONCRETE OVERLAY
- CONCRETE OVERLAY

ABBREVIATIONS:

TE TAPERED EDGE
TT TOTAL THICKNESS OF TE

TABLE A
EDGE TREATMENT FOR VARIOUS OVERLAY THICKNESS AND CONDITIONS

	OVERLAY THICKNESS	
FIELD CONDITION	LESS THAN 0.15'	0.15' OR MORE
Exist SLOPE 6:1 OR FLATTER	CASE E	CASE A
Exist SLOPE 3:1 TO 6:1	CASE E	CASE B
Exist SLOPE STEEPER THAN 3:1	CASE F	CASE F
CUT SECTION (REPLACE, COLD PLANE, MILL PAVEMENT)	CASE D	CASE C

ADDITIONAL HMA OR CONCRETE QUANTITIES FOR TE/SIDE/MILE

TYPICAL CROSS SECTION	TT	TOTAL ADDITIONAL MATERIAL FOR TE/SIDE/MILE		
		HMA (TON)	CONCRETE (CY)*	CONCRETE (CY)**
TT	0.15'	7.7	NA	NA
	0.20'	13.7	NA	NA
	0.30'	30.9	NA	NA
	0.40'	54.9	NA	NA
	0.45'	69.4	NA	NA
TT 0.43'	0.50'	84.2	NA	NA
	0.60'	113.9	NA	NA
	0.70'	143.6	70.9	94.2
	0.80'	173.3	85.6	112.2
	0.90'	203.0	100.3	130.2
	1.00'	232.7	114.9	148.2
	1.10'	262.4	129.6	166.2
	1.20'	292.1	144.3	184.2

* For Detail "A"
** For Optional Detail "A"

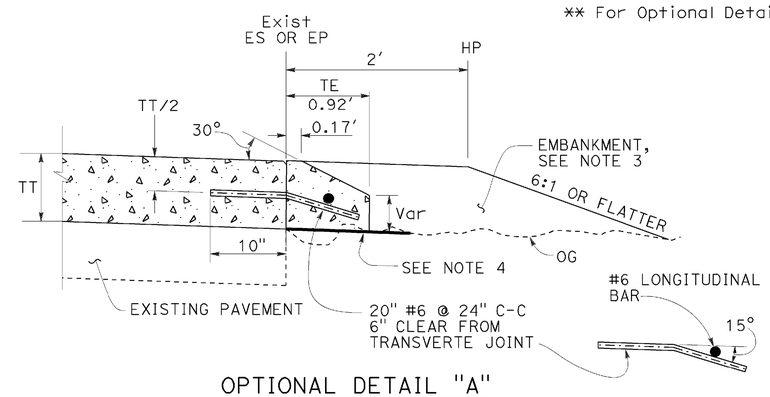

OPTIONAL DETAIL "A"
For concrete overlay
See Note 5

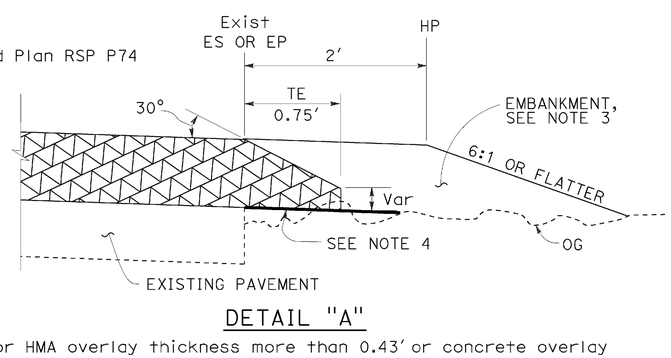

DETAIL "A"
For HMA overlay thickness more than 0.43' or concrete overlay

NOTES:

1. For limits of tapered edge and vertical edge treatments, see Revised Standard Plan RSP P74.
2. Details shown for HMA overlay thickness less than 0.43'. See Detail "A" for HMA overlay thickness more than 0.43' or concrete overlay.
3. For locations and limits of shoulder backing or embankment see project plans.
4. Grade existing ground to place tapered edge. 1' minimum width
5. Tapered edge transverse joint must match overlay transverse joint. End of #6 longitudinal bar must be 2" ±½" clear from transverse joint.
6. Tapered edge is not needed in the area of MGS, barrier, right turn lane and acceleration lane. See Revised Standard Plan RSP P74.

STATE OF CALIFORNIA
DEPARTMENT OF TRANSPORTATION

PAVEMENT EDGE TREATMENTS-OVERLAYS

NO SCALE

RSP P75 DATED OCTOBER 30, 2015 SUPERSEDES RSP P75 DATED NOVEMBER 15, 2013 AND RSP P75 DATED JANUARY 20, 2012 THAT SUPPLEMENTS THE STANDARD PLANS BOOK DATED 2010.

REVISED STANDARD PLAN RSP P75

2010 REVISED STANDARD PLAN RSP P75

DATE PLOTTED => 04-AUG-2016
TIME PLOTTED => 12:11

Dist	COUNTY	ROUTE	POST MILES TOTAL PROJECT	SHEET No.	TOTAL SHEETS
02	Plu	70	50.6/51.7	92	181

Srikanth Balasubramanian
REGISTERED CIVIL ENGINEER

October 30, 2015
PLANS APPROVAL DATE

REGISTERED PROFESSIONAL ENGINEER Srikanth N. Balasubramanian No. C56426 Exp. 6-30-17 CIVIL STATE OF CALIFORNIA

THE STATE OF CALIFORNIA OR ITS OFFICERS OR AGENTS SHALL NOT BE RESPONSIBLE FOR THE ACCURACY OR COMPLETENESS OF SCANNED COPIES OF THIS PLAN SHEET.

TO ACCOMPANY PLANS DATED 06-15-16

LEGEND:

- HMA PAVEMENT
- HMA OR CONCRETE PAVEMENT
- CONCRETE PAVEMENT

ABBREVIATIONS:

TE TAPERED EDGE
TT TOTAL THICKNESS OF TE
HW HINGE WIDTH, DISTANCE FROM ES OR EP TO HP

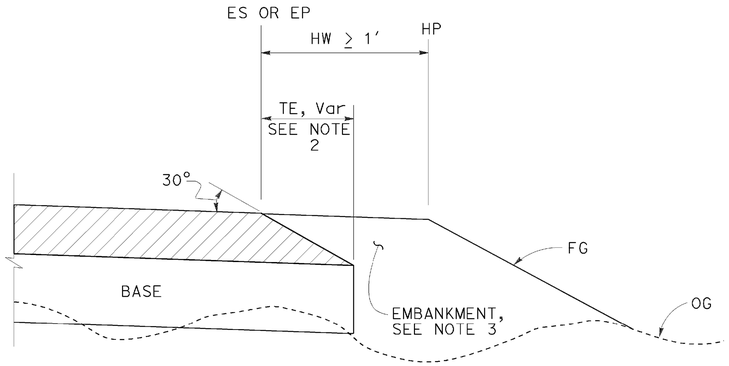

CASE K
Tapered Edge - Fill Section, HW ≥ 1′

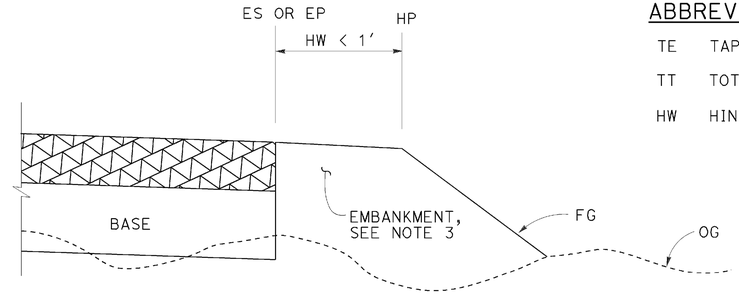

CASE L
Vertical Edge - Fill Section, HW < 1′

FILL SECTION

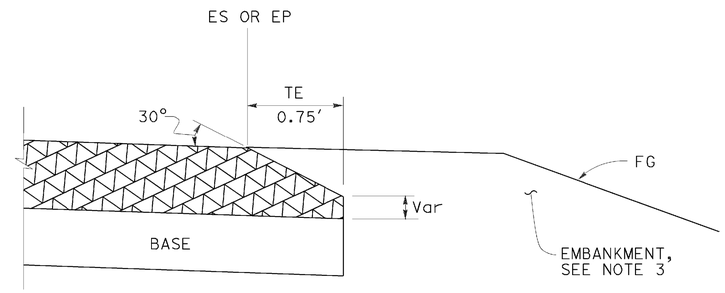

DETAIL "B"
For HMA pavement thickness more than 0.43′ or concrete pavement

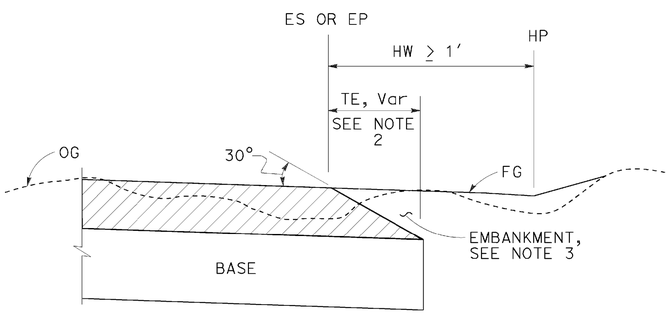

CASE M
Tapered Edge - Cut Section, HW ≥ 1′

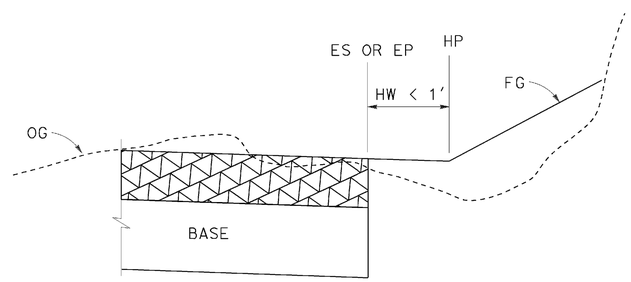

CASE N
Vertical Edge - Cut Section, HW < 1′

CUT SECTION

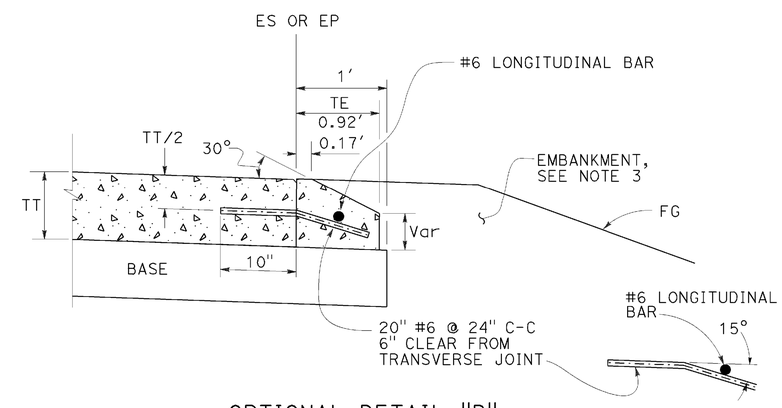

OPTIONAL DETAIL "B"
For concrete pavement
See Note 4

NOTES:

1. For limits of tapered edge and vertical edge treatments, see Revised Standard Plan RSP P74
2. Details shown for HMA pavement thickness less than 0.43′. See Detail "B" for HMA pavement thickness more than 0.43′ or concrete pavement.
3. For locations and limits of embankment see project plans.
4. Tapered edge transverse joint must match pavement transverse joint. End of #6 longitudinal bar must be 2" ±½" clear from transverse joint.
5. Tapered edge is not needed in the area of MGS, barrier, right turn lane and acceleration lane. See Revised Standard Plan RSP P74.

STATE OF CALIFORNIA
DEPARTMENT OF TRANSPORTATION

PAVEMENT EDGE TREATMENTS-NEW CONSTRUCTION

NO SCALE

RSP P76 DATED OCTOBER 30, 2015 SUPERSEDES RSP P76 DATED NOVEMBER 15, 2013 AND RSP P76 DATED JANUARY 20, 2012 THAT SUPPLEMENTS THE STANDARD PLANS BOOK DATED 2010.

REVISED STANDARD PLAN RSP P76

2010 REVISED STANDARD PLAN RSP P76

DATE PLOTTED => 04-AUG-2016
TIME PLOTTED => 12:11

Dist	COUNTY	ROUTE	POST MILES TOTAL PROJECT	SHEET No.	TOTAL SHEETS
02	Plu	70	50.6/51.7	93	181

REGISTERED CIVIL ENGINEER

July 15, 2016
PLANS APPROVAL DATE

REGISTERED PROFESSIONAL ENGINEER Carl M. Duan No. C59976 Exp. 6-30-18 CIVIL STATE OF CALIFORNIA

THE STATE OF CALIFORNIA OR ITS OFFICERS OR AGENTS SHALL NOT BE RESPONSIBLE FOR THE ACCURACY OR COMPLETENESS OF SCANNED COPIES OF THIS PLAN SHEET.

TO ACCOMPANY PLANS DATED 06-15-16

NOTE:

1. For notes and Table 2, See Revised Standard Plan RSP D72C.

TABLE 1		
	T_1	Vert BARS
L_1 AND L_2 < 2'-10"	9"	#4 @ 12
L_1 OR L_2 > 2'-10"	12"	#5 @ 12

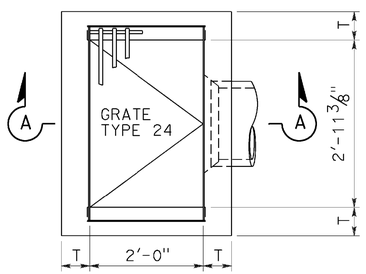

PLAN
TYPE G1

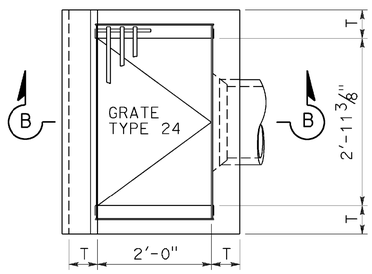

PLAN
TYPE G3

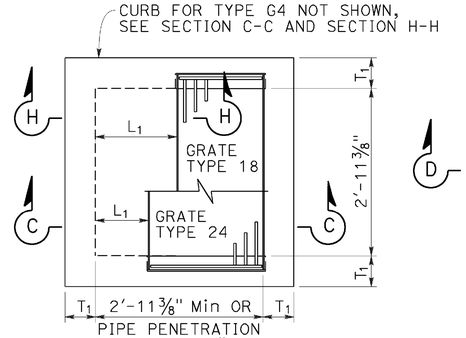

PLAN
STANDARD
TYPE G2 OR G4

FOR "L1", "L2" AND "T1" VALUES, SEE "TABLE 1"

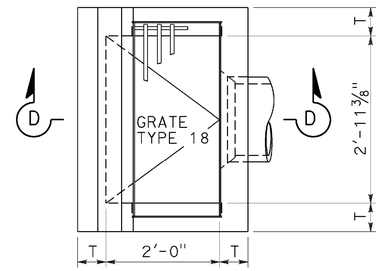

PLAN
TYPE G5

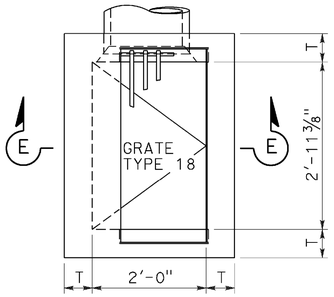

PLAN
TYPE G6

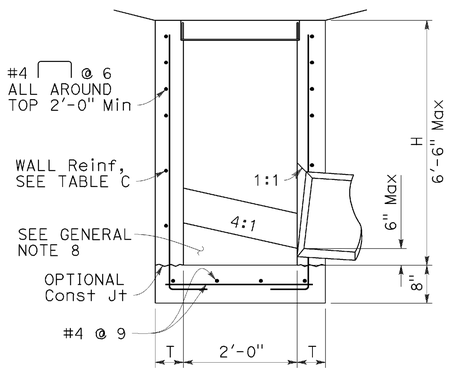

SECTION A-A

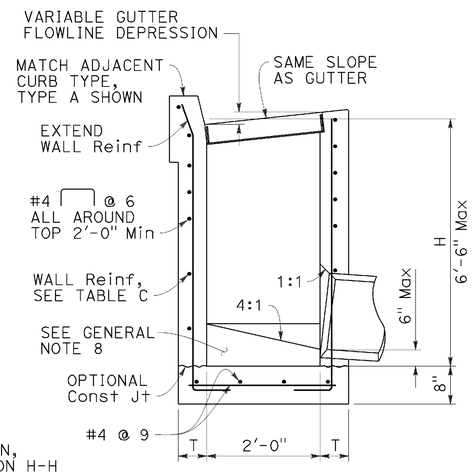

SECTION B-B

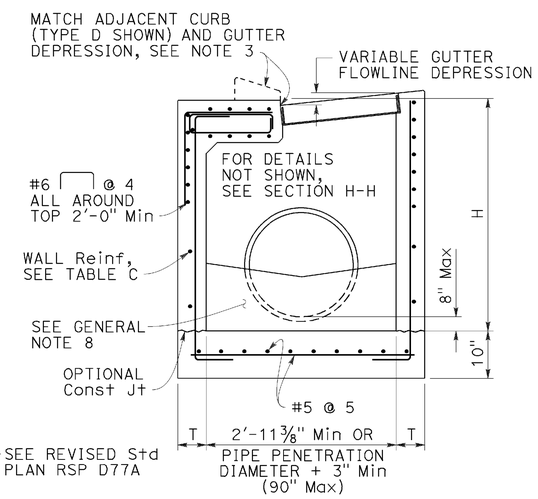

SECTION C-C

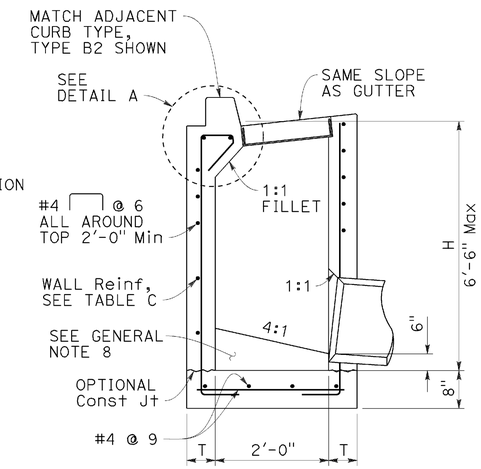

SECTION D-D

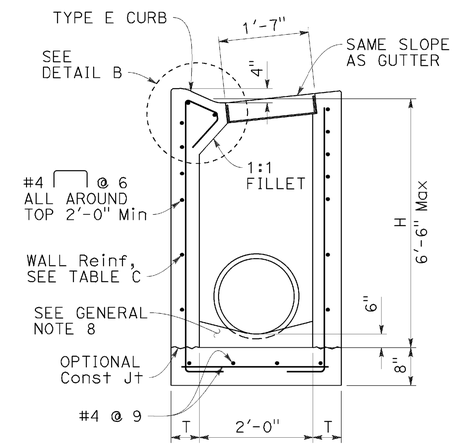

SECTION E-E

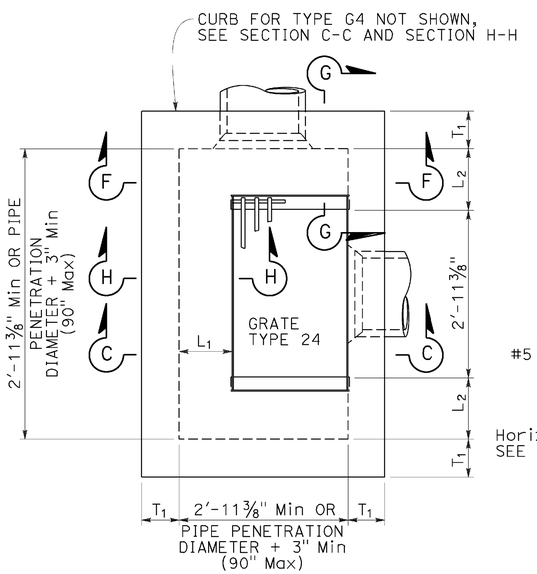

PLAN
EXPANDED
TYPE G2 OR G4

(INTEGRAL TOP ALTERNATIVE)
FOR "L" AND "T" VALUES, SEE TABLE 1

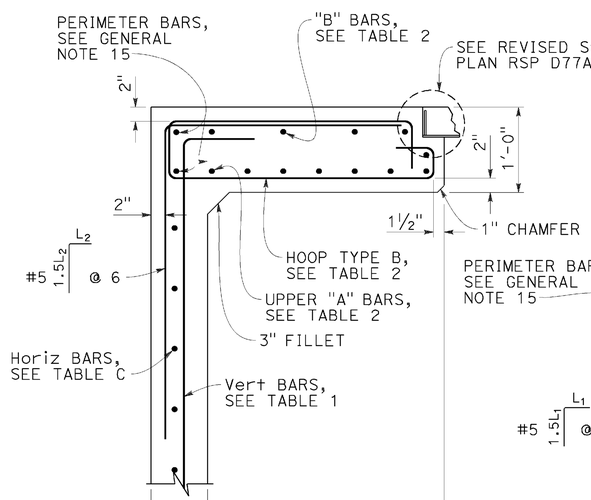

SECTION G-G

FOR "L1", "L2" AND "T1" VALUES, SEE "TABLE 1"

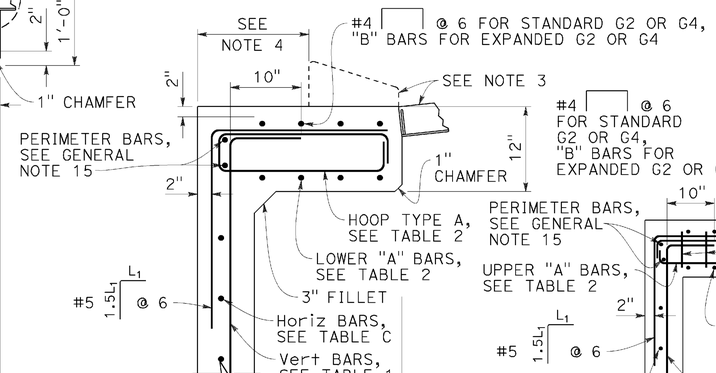

SECTION H-H

FOR "L1", "L2" AND "T1" VALUES, SEE "TABLE 1"

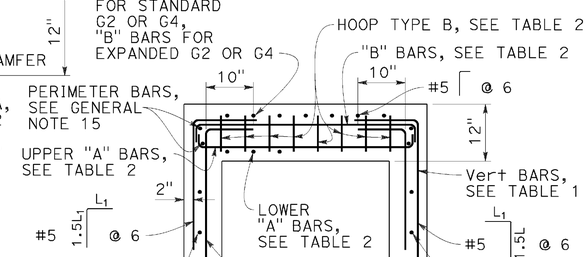

SECTION F-F

FOR "L1", "L2" AND "T1" VALUES, SEE "TABLE 1"

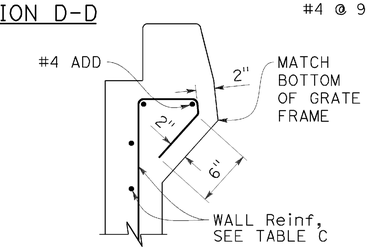

DETAIL A

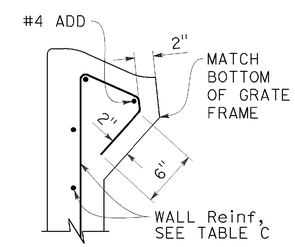

DETAIL B

STATE OF CALIFORNIA
DEPARTMENT OF TRANSPORTATION

CIP DRAINAGE INLETS TYPES G1, G2, G3, G4, G5 AND G6

NO SCALE

RSP D72A DATED JULY 15, 2016 SUPPLEMENTS THE STANDARD PLANS BOOK DATED 2010.

REVISED STANDARD PLAN RSP D72B

2010 REVISED STANDARD PLAN RSP D72B

DATE PLOTTED => 04-AUG-2016
TIME PLOTTED => 12:12

Dist	COUNTY	ROUTE	POST MILES TOTAL PROJECT	SHEET No.	TOTAL SHEETS
02	Plu	70	50.6/51.7	94	181

REGISTERED CIVIL ENGINEER

July 15, 2016
PLANS APPROVAL DATE

REGISTERED PROFESSIONAL ENGINEER
Carl M. Duan
No. C59976
Exp. 6-30-18
CIVIL
STATE OF CALIFORNIA

THE STATE OF CALIFORNIA OR ITS OFFICERS OR AGENTS SHALL NOT BE RESPONSIBLE FOR THE ACCURACY OR COMPLETENESS OF SCANNED COPIES OF THIS PLAN SHEET.

TO ACCOMPANY PLANS DATED 06-15-16

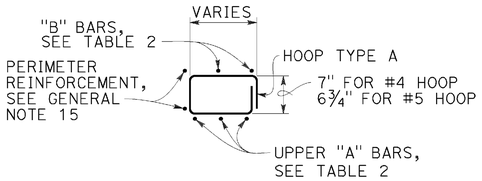

HOOP TYPE A

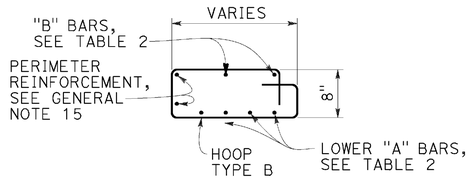

HOOP TYPE B

NOTES:

1. See Revised Standard Plan RSP D72F for General Notes and additional details. See Revised Standard Plan RSP D72G for tables and quantities.
2. Type G4 inlet can use Grate Type 18 or 24. Type G2 inlet uses Grate Type 24.
3. Type G4 inlet details are similar to Type G2 inlet details, except for the addition of a curb and sloped grate to match the adjacent curb and gutter depression.
4. Dimension will vary with different grates, curb types, box width and wall thickness.

TABLE 2 - TOP SLAB REINFORCEMENT

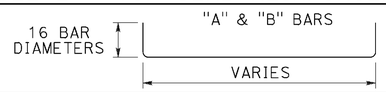

	W/ CURB	W/O CURB
"A" BARS	#4 @ 5 (2 BARS Min)	#5 @ 5 (3 BARS Min)
"B" BARS	#4 @ 10 (2 BARS Min)	#4 @ 12 (2 BARS Min)
HOOPS ("A" & "B")	#4 @ 5	#5 @ 5

ROTATE "A" AND "B" BARS SO HOOKED ENDS WILL MAINTAIN 2" CLEAR COVERAGE.

STATE OF CALIFORNIA
DEPARTMENT OF TRANSPORTATION

CIP DRAINAGE INLETS TYPES G1, G2, G3, G4, G5 AND G6

NO SCALE

RSP D72C DATED JULY 15, 2016 SUPPLEMENTS THE STANDARD PLANS BOOK DATED 2010.

REVISED STANDARD PLAN RSP D72C

2010 REVISED STANDARD PLAN RSP D72C

DATE PLOTTED => 04-AUG-2016
TIME PLOTTED => 12:12

Dist	COUNTY	ROUTE	POST MILES TOTAL PROJECT	SHEET No.	TOTAL SHEETS
02	Plu	70	50.6/51.7	95	181

Raymond Don Tsztoo
REGISTERED CIVIL ENGINEER

April 19, 2013
PLANS APPROVAL DATE

REGISTERED PROFESSIONAL ENGINEER Raymond Don Tsztoo No. C37332 Exp. 6-30-14 CIVIL STATE OF CALIFORNIA

THE STATE OF CALIFORNIA OR ITS OFFICERS OR AGENTS SHALL NOT BE RESPONSIBLE FOR THE ACCURACY OR COMPLETENESS OF SCANNED COPIES OF THIS PLAN SHEET.

TO ACCOMPANY PLANS DATED 06-15-16

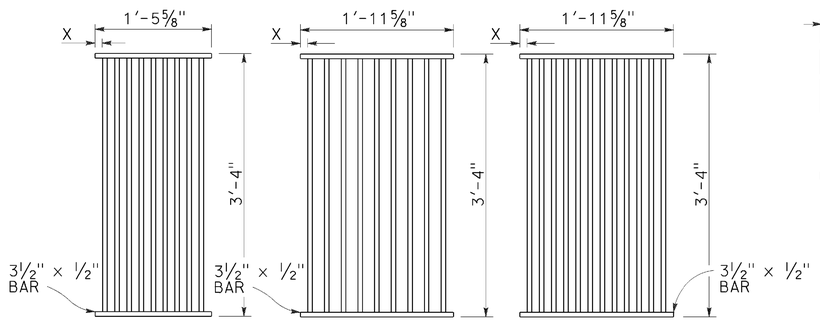

TYPE 18-9

1⅜" Clear spacing. Use within the roadbed on highways where bicycles and pedestrians are excluded.

TYPE 24-9

2" Clear spacing. Use in locations off the roadbed on all types of highways.

TYPE 24-12

1⅜" Clear spacing. Use within the roadbed on highways where bicycles and pedestrians are excluded.

RECTANGULAR GRATE DETAILS

(See table below)

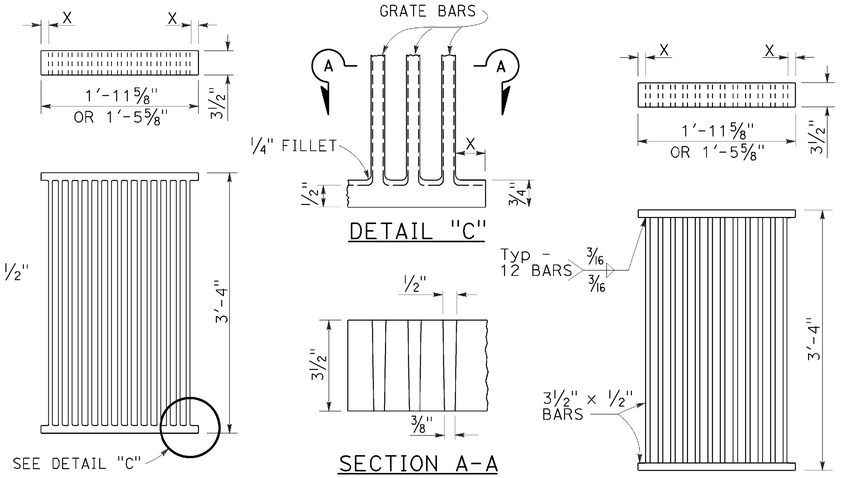

ALTERNATIVE CAST DUCTILE IRON GRATE OR CAST CARBON STEEL GRATE

ALTERNATIVE WELDED GRATE

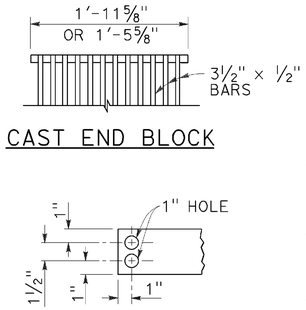

CAST END BLOCK

END OF BAR

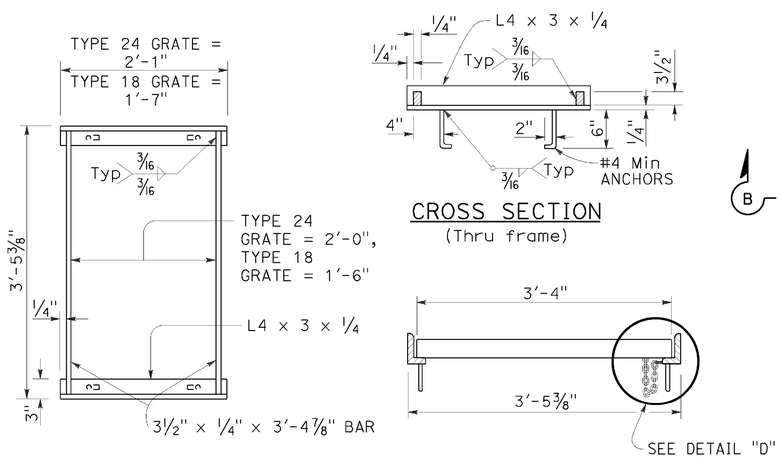

TYPICAL FRAME

CROSS SECTION
(Thru frame)

LONGITUDINAL SECTION
(Thru frame and grate)

RECTANGULAR FRAME DETAILS

(For all rectangular grates)

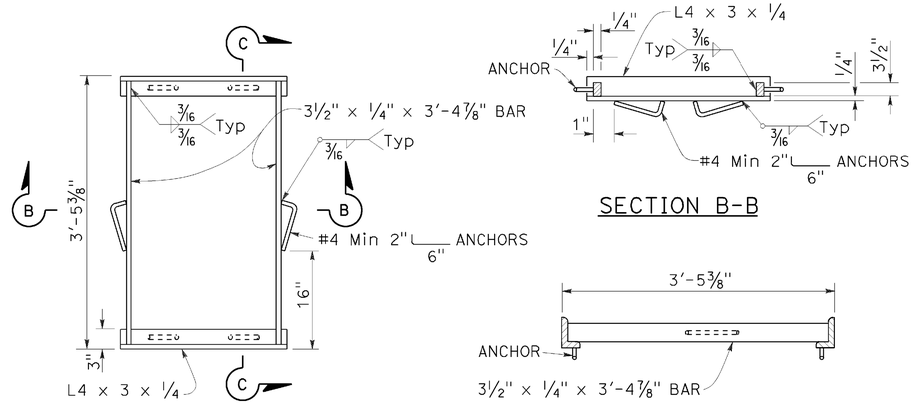

TYPICAL FRAME

SECTION B-B

SECTION C-C

ALTERNATIVE ANCHOR FOR RECTANGULAR FRAME

(For details not shown, See Rectangular Frame Details)

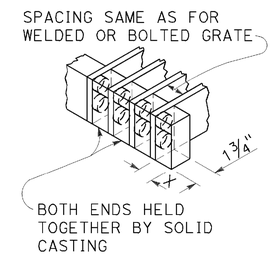

ALTERNATIVE CAST DUCTILE IRON OR CAST CARBON STEEL END BLOCK GRATE

NOTES:

1. Grate type numbers refer to approximate width of grate in inches and number of bars, respectively.
2. Contractor has the option of using cast ductile iron, cast carbon steel, welded, bolted, or cast end block grate.
3. Rounded top of bars optional on all grates.
4. Pipe inlets with a grate shall be placed so that bars parallel direction of principle surface flow.
5. Complete joint penetration butt welds may be substituted for the fillet welds on all anchors.
6. Standard square, hexagon, round or equivalent headed anchors may be substituted for the right angle hooks on the anchors shown on this plan.
7. Grate and frame weights are based on welded grates (weights of face angles, steps, protection bars, etc. are not included).
8. Connect chain to grate and frame only at locations shown on the plans. When chain is required, do not use cast ductile iron grates.

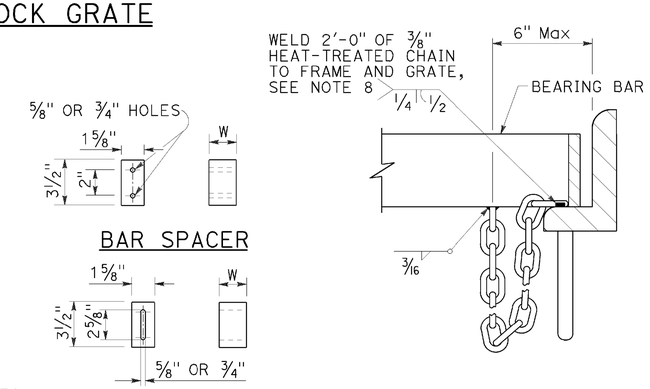

BAR SPACER

ALTERNATIVE SPACER
W = 1⅜" or 2"

DETAIL "D"
(Steel grates only)

ALTERNATIVE BOLTED GRATE

GRATE BAR SPACING TABLE

TYPE	No. OF BARS	CLEAR BAR SPACING	X
18-9	9	1⅜"	1 1/16"
24-9	9	2"	1 9/16"
24-12	12	1⅜"	1¼"

INLET TYPE	COVER TYPE	WEIGHT LB
OS	PLATE	174
OL-7	PLATE	170
OL-10	PLATE	170
OL-14	PLATE	170
OL-21	PLATE	170
OCP	PLATE	112
OCPI	PLATE	112
OCPI	REDWOOD	42
OMP	PLATE	177
OMPI	PLATE	177

INLET TYPE	GRATE TYPE	No. OF GRATES	WEIGHT LB
GDO	24-12	2	634
GOL-7	24-12	1	326
GOL-10	24-12	1	326
GO,G1,G2,G3,G4 (TYPE 24)	24-9	1	263
	24-12	1	326
G4 (TYPE 18),G5,G6	18-9	1	249
GT1	18-9	2	498
GT2	18-9	2	498
GT3	24-12	2	652
GT4	24-12	2	652
TRASH RACK			22
GRATE CHAIN			3

BASIS FOR Misc IRON & STEEL FINAL PAY WEIGHTS FOR DRAINAGE INLETS

(See Note 7)

STATE OF CALIFORNIA
DEPARTMENT OF TRANSPORTATION

GRATE DETAILS No. 1

NO SCALE

RSP D77A DATED APRIL 19, 2013 SUPERSEDES RSP D77A DATED JULY 20, 2012 AND STANDARD PLAN D77A DATED MAY 20, 2011 - PAGE 164 OF THE STANDARD PLANS BOOK DATED 2010.

REVISED STANDARD PLAN RSP D77A

2010 REVISED STANDARD PLAN RSP D77A

DATE PLOTTED => 04-AUG-2016
TIME PLOTTED => 12:13

Dist	COUNTY	ROUTE	POST MILES TOTAL PROJECT	SHEET No.	TOTAL SHEETS
02	Plu	70	50.6/51.7	96	181

REGISTERED CIVIL ENGINEER

July 19, 2013
PLANS APPROVAL DATE

REGISTERED PROFESSIONAL ENGINEER Gurinderpal Bhullar No. C48815 Exp. 9-30-14 CIVIL STATE OF CALIFORNIA

THE STATE OF CALIFORNIA OR ITS OFFICERS OR AGENTS SHALL NOT BE RESPONSIBLE FOR THE ACCURACY OR COMPLETENESS OF SCANNED COPIES OF THIS PLAN SHEET.

TO ACCOMPANY PLANS DATED 06-15-16

2010 REVISED STANDARD PLAN RSP T9

TABLE 1

TAPER LENGTH CRITERIA AND CHANNELIZING DEVICE SPACING

SPEED (S)	MINIMUM TAPER LENGTH * FOR WIDTH OF OFFSET 12 FEET (W)				MAXIMUM CHANNELIZING DEVICE SPACING		
					X	Y	Z **
	TANGENT 2L	MERGING L	SHIFTING L/2	SHOULDER L/3	TAPER	TANGENT	CONFLICT
mph	ft	ft	ft	ft	ft	ft	ft
20	160	80	40	27	20	40	10
25	250	125	63	42	25	50	12
30	360	180	90	60	30	60	15
35	490	245	123	82	35	70	17
40	640	320	160	107	40	80	20
45	1080	540	270	180	45	90	22
50	1200	600	300	200	50	100	25
55	1320	660	330	220	55	110	27
60	1440	720	360	240	60	120	30
65	1560	780	390	260	65	130	32
70	1680	840	420	280	70	140	35

* - For other offsets, use the following merging taper length formula for L:
For speed of 40 mph or less, $L = WS^2/60$
For speed of 45 mph or more, $L = WS$

Where: L = Taper length in feet
W = Width of offset in feet
S = Posted speed limit, off-peak 85th-percentile speed prior to work starting, or the anticipated operating speed in mph

** - Use for taper and tangent sections where there are no pavement markings or where there is a conflict between existing pavement markings and channelizers (CA).

TABLE 2

LONGITUDINAL BUFFER SPACE AND FLAGGER STATION SPACING

SPEED *	Min D **	DOWNGRADE Min D ***		
		-3%	-6%	-9%
mph	ft	ft	ft	ft
20	115	116	120	126
25	155	158	165	173
30	200	205	215	227
35	250	257	271	287
40	305	315	333	354
45	360	378	400	427
50	425	446	474	507
55	495	520	553	593
60	570	598	638	686
65	645	682	728	785
70	730	771	825	891

* - Speed is posted speed limit, off-peak 85th-percentile speed prior to work starting, or the anticipated operating speed in mph

** - Longitudinal buffer space or flagger station spacing

*** - Use on sustained downgrade steeper than -3 percent and longer than 1 mile.

TABLE 3

ADVANCE WARNING SIGN SPACING

ROAD TYPE	DISTANCE BETWEEN SIGNS *		
	A	B	C
	ft	ft	ft
URBAN - 25 mph OR LESS	100	100	100
URBAN - MORE THAN 25 mph TO 40 mph	250	250	250
URBAN - MORE THAN 40 mph	350	350	350
RURAL	500	500	500
EXPRESSWAY / FREEWAY	1000	1500	2640

* - The distances are approximate, are intended for guidance purposes only, and should be applied with engineering judgment. These distances should be adjusted by the Engineer for field conditions, if necessary, by increasing or decreasing the recommmended distances.

STATE OF CALIFORNIA
DEPARTMENT OF TRANSPORTATION

TRAFFIC CONTROL SYSTEM TABLES FOR LANE AND RAMP CLOSURES

NO SCALE

RSP T9 DATED JULY 19, 2013 SUPERSEDES RSP T9 DATED APRIL 19, 2013 THAT SUPPLEMENTS THE STANDARD PLANS BOOK DATED 2010.

REVISED STANDARD PLAN RSP T9

DATE PLOTTED => 04-AUG-2016
TIME PLOTTED => 12:13

Dist	COUNTY	ROUTE	POST MILES TOTAL PROJECT	SHEET No.	TOTAL SHEETS
02	Plu	70	50.6/51.7	97	181

Devinder Singh
REGISTERED CIVIL ENGINEER

October 30, 2015
PLANS APPROVAL DATE

REGISTERED PROFESSIONAL ENGINEER
Devinder Singh
No. C50470
Exp. 6-30-17
CIVIL
STATE OF CALIFORNIA

THE STATE OF CALIFORNIA OR ITS OFFICERS OR AGENTS SHALL NOT BE RESPONSIBLE FOR THE ACCURACY OR COMPLETENESS OF SCANNED COPIES OF THIS PLAN SHEET.

TO ACCOMPANY PLANS DATED 06-15-16

NOTES:

See Revised Standard Plan RSP T9 for tables.

Use cone spacing X for taper segment, Y for tangent segment or Z for conflict situations, as approriate, per Table 1, unless X, Y, or Z cone spacing is shown on this sheet.

Unless otherwise specified in the special provisions, all temporary warning signs shall have black legend on fluorescent orange background.

California codes are designated by (CA). Otherwise, Federal (MUTCD) codes are shown.

TYPICAL LANE CLOSURE WITH REVERSIBLE CONTROL

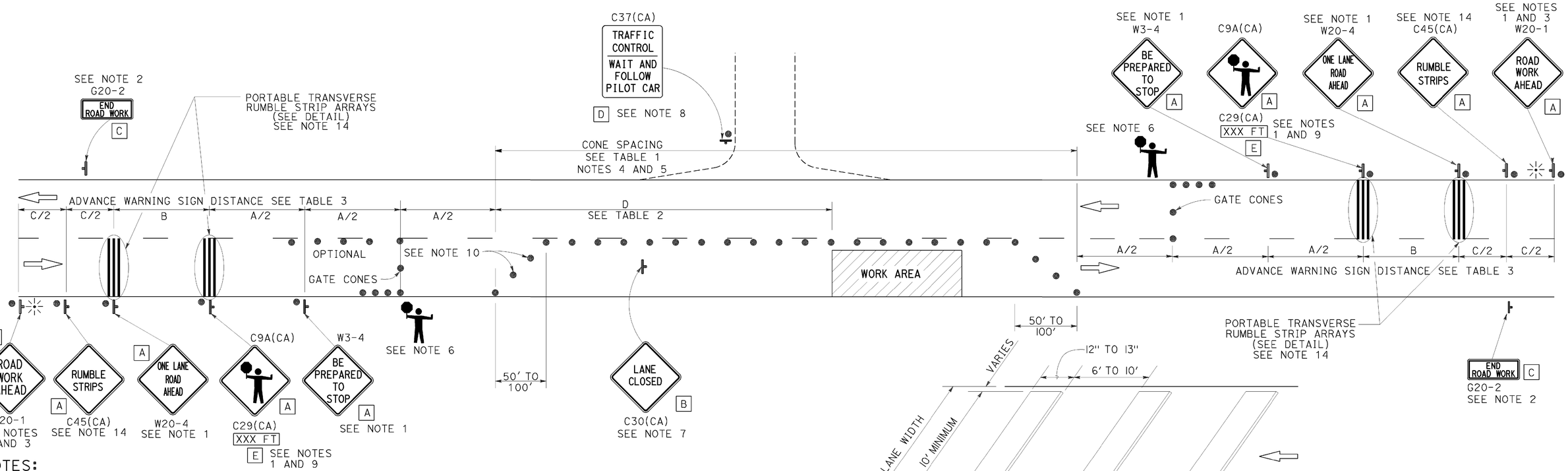

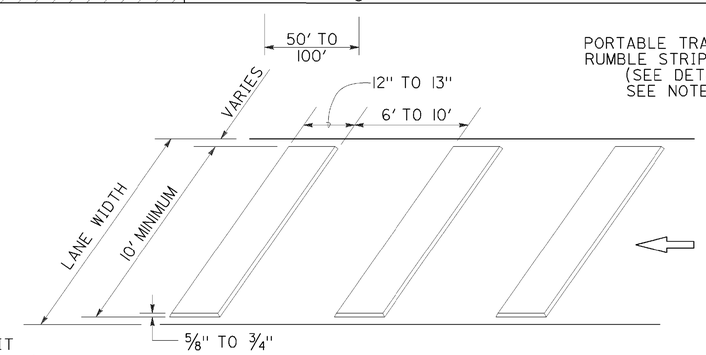

PORTABLE TRANSVERSE RUMBLE STRIP ARRAY DETAIL

NOTES:

1. Each advance warning sign in each direction of travel shall be equipped with at least two flags for daytime closure. Each flag shall be at least 16" x 16" in size and shall be orange or fluorescent red-orange in color. Flashing beacons shall be placed at the locations indicated for lane closure during hours of darkness.
2. A G20-2 "END ROAD WORK" sign, as appropriate, shall be placed at the end of the lane control unless the end of work area is obvious, or ends within a larger project's limits.
3. If the W20-1 sign would follow within 2000' of a stationary W20-1 or G20-1 "ROAD WORK NEXT _____ MILES", use a W20-4 sign for the first advance warning sign.
4. All cones used for lane closures during the hours of darkness shall be fitted with retroreflective bands (or sleeves) as specified in the specifications.
5. Portable delineators, placed at one-half the spacing indicated for traffic cones, may be used instead of cones for daytime closures only.
6. Additional advance flaggers may be required. Flagger should stand in a conspicuous place, be visible to approaching traffic as well as approaching vehicles after the first vehicle has stopped. During the hours of darkness, the flagging-station and flagger shall be illuminated and clearly visible to approaching traffic. The illumination footprint of the lighting on the ground shall be at least 20' in diameter. Place a minimum of four cones at 50' intervals in advance of flagger station as shown.
7. Place C30(CA) "LANE CLOSED" sign at 500' to 1000' intervals throughout extended work areas. They are optional if the work area is visible from the flagger station.
8. When a pilot car is used, place a C37(CA) "TRAFFIC CONTROL-WAIT AND FOLLOW PILOT CAR" sign with black legend on white background at all intersections, driveways and alleys without a flagger within traffic control area. Signs shall be clean and visible at all times. Where traffic can not be effectively self-regulated, at least one flagger shall be used at each intersection within traffic control area.
9. An optional C29(CA) sign may be placed below the C9A(CA) sign.
10. Either traffic cones or barricades shall be placed on the taper. Barricades shall be Type I, II, or III.
11. The color of the portable transverse rumble strips shall be black or orange. Use 2 arrays, each array shall consist of 3 rumble strips.
12. Portable transverse rumble strips shall not be placed on sharp horizontal or vertical curves nor shall they be placed through pedestrian crossings.
13. If the portable transverse rumble strips become out of alignment (skewed) by more than 6 inches, measured from one end to the other, they shall be readjusted to bring the placement back to the original location.
14. Portable transverse rumble strips are not required if any one of the following conditions is satisfied:
    A. Work duration occupies a location for four hours or less
    B. Posted speed limit is below 45 MPH
    C. Work is of emergency nature
    D. Work zone is in snow or icy weather conditions

SIGN PANEL SIZE (Min)

A	48" x 48"
B	30" x 30"
C	36" x 18"
D	36" x 42"
E	20" x 7"

LEGEND

- TRAFFIC CONE
- TEMPORARY TRAFFIC CONTROL SIGN
- PORTABLE FLASHING BEACON
- FLAGGER

STATE OF CALIFORNIA
DEPARTMENT OF TRANSPORTATION

TRAFFIC CONTROL SYSTEM FOR LANE CLOSURE ON TWO LANE CONVENTIONAL HIGHWAYS

NO SCALE

RSP T13 DATED OCTOBER 30, 2015 SUPERSEDES RSP T13 DATED OCTOBER 17, 2014, RSP T13 DATED JULY 18, 2014 AND RSP T13 DATED APRIL 19, 2013 AND STANDARD PLAN T13 DATED MAY 20, 2011 - PAGE 241 OF THE STANDARD PLANS BOOK DATED 2010.

REVISED STANDARD PLAN RSP T13

2010 REVISED STANDARD PLAN RSP T13

DATE PLOTTED => 04-AUG-2016
TIME PLOTTED => 12:14

Dist	COUNTY	ROUTE	POST MILES TOTAL PROJECT	SHEET No.	TOTAL SHEETS
02	Plu	70	50.6/51.7	98	181

REGISTERED CIVIL ENGINEER

October 30, 2015
PLANS APPROVAL DATE

REGISTERED PROFESSIONAL ENGINEER Efthymios Delis No. C51434 Exp. 6-30-17 CIVIL STATE OF CALIFORNIA

THE STATE OF CALIFORNIA OR ITS OFFICERS OR AGENTS SHALL NOT BE RESPONSIBLE FOR THE ACCURACY OR COMPLETENESS OF SCANNED COPIES OF THIS PLAN SHEET.

TO ACCOMPANY PLANS DATED 06-15-16

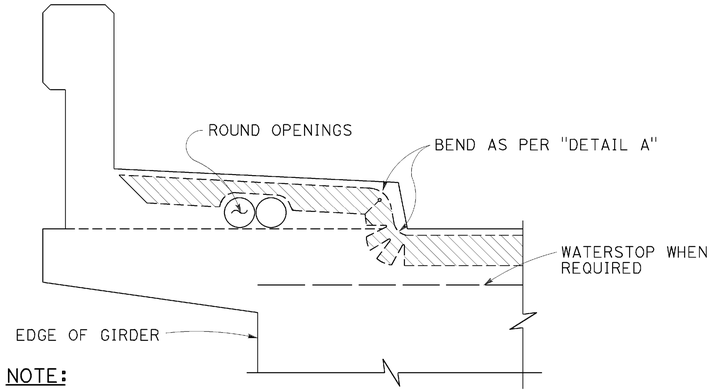

NOTE:
Type "B" seal shown. Type "A" seals to comform to the general path of seal shown, cuts for bending not required. Bend type "A" seals 3" up into curb or barrier rail on only the low end of the seal.

CONCRETE BARRIER AND SIDEWALK

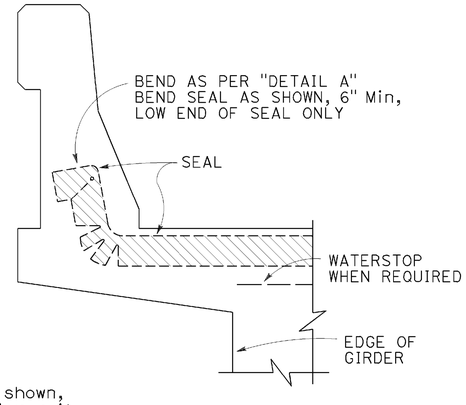

CONCRETE BARRIER

JOINT SEALS DETAILS

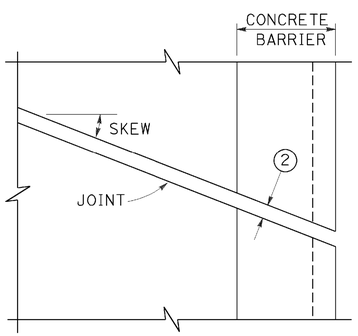

PLAN OF JOINT (SKEW ≤ 20°)

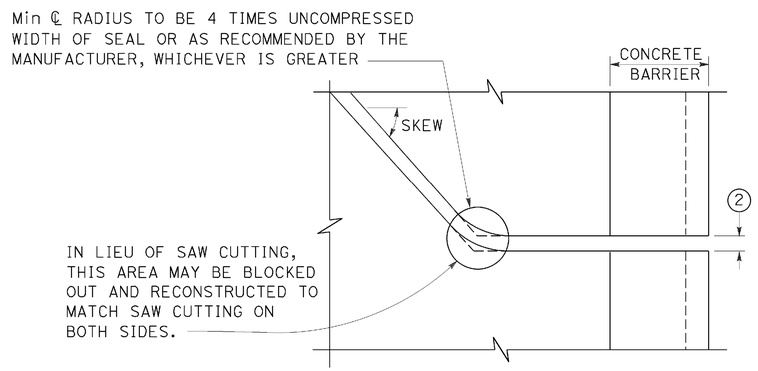

PLAN OF JOINT (SKEW > 20°)

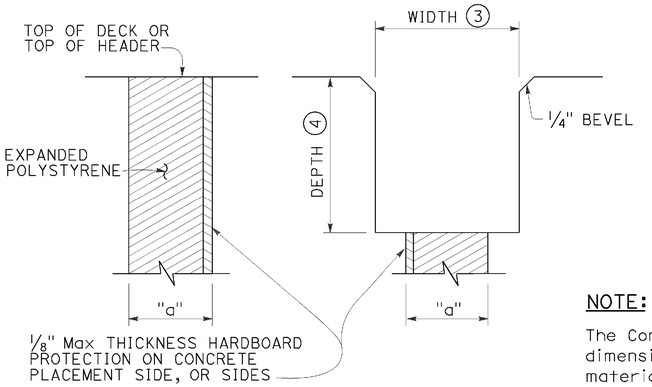

FORMING DETAIL SAWCUT DETAIL

NOTE:
The Contractor shall verify all controlling field dimensions before ordering or fabricatiing any material.

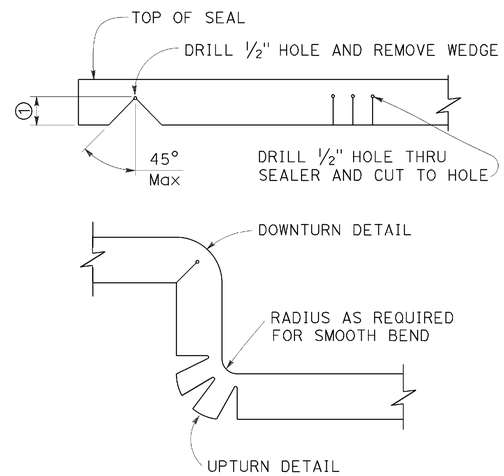

DETAIL A

NOTES:

1. Make smooth cuts from the bottom of seal to 1½" clear of top leaving at least one complete cell between the top of the cut and top of the seal. When necessary cut back of seal to clear conduit and round openings.
2. Opening in barrier to match width of sawn deck joint.
3. Sawcut groove widths shall be as ordered by the Engineer.
4. Depth of sawcut: Type A - Depth to be 2" minimum.
   Type B - Depth to be equal to or greater than the depth of seal measured along the contact surface, when compressed to minimum width position (W_2) plus dimensions shown.
5. MR (movement rating) as shown on other plan sheets.
6. Other depths must be approved by the Engineer.
7. A sidewalk joint shall be covered by an expansion joint armor.

DIMENSIONS "a" OF JOINT REQUIRED

MOVEMENT RATING (MR) 5	BRIDGE TYPE	"a" DIMENSION DECK CONCRETE PLACED		
		WINTER	FALL-SPRING	SUMMER
2"	ALL EXCEPT CIP/PS	1½"	1¼"	¾"
	CIP/PS	1¼"	1"	½"
1½"	ALL EXCEPT CIP/PS	1¼"	1"	½"
	CIP/PS	1"	¾"	½"
1"	ALL EXCEPT CIP/PS	1"	¾"	½"
	CIP/PS	¾"	½"	½"
½"	ALL EXCEPT CIP/PS	¾"	¾"	½"
	CIP/PS	½"	½"	½"

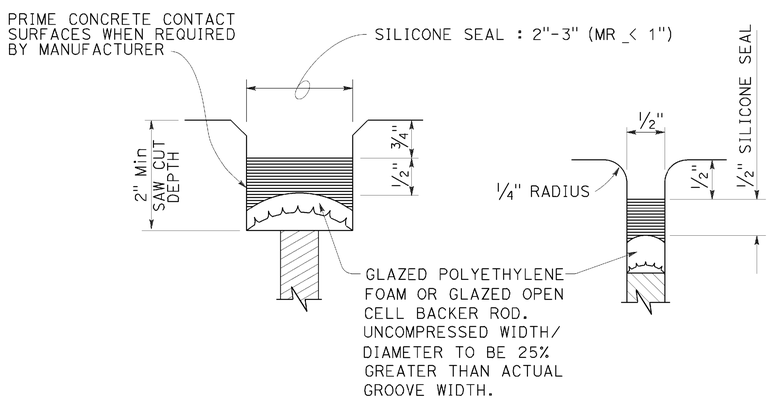

TYPE A SEAL
Movement rating : Silicone = 1" Max

TYPE AL SEAL
Longitudinal joints only

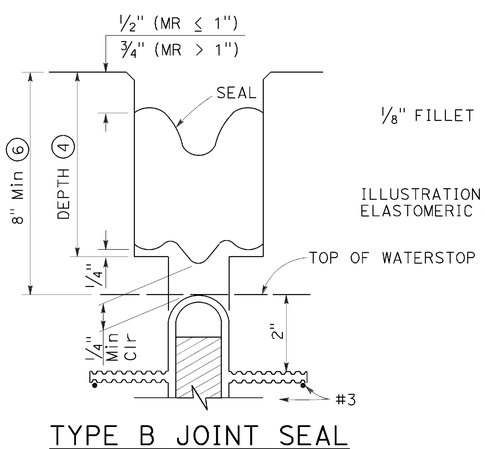

TYPE B JOINT SEAL
IN MINIMUM WIDTH POSITION (W_2)

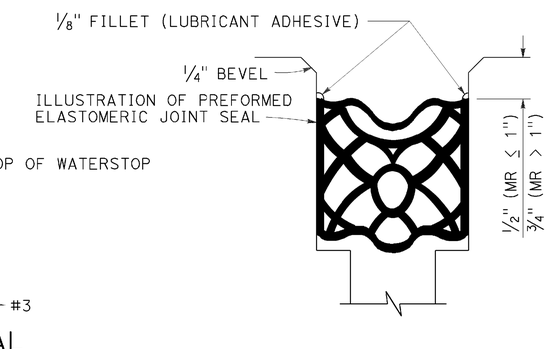

TYPE B SEAL
Movement Rating ≤ 2"

STATE OF CALIFORNIA
DEPARTMENT OF TRANSPORTATION

JOINT SEALS (MAXIMUM MOVEMENT RATING = 2")

NO SCALE

RSP B6-21 DATED OCTOBER 30, 2015 SUPERSEDES STANDARD PLAN B6-21 DATED MAY 20, 2011 - PAGE 283 OF THE STANDARD PLANS BOOK DATED 2010.

REVISED STANDARD PLAN RSP B6-21

2010 REVISED STANDARD PLAN RSP B6-21

DATE PLOTTED => 04-AUG-2016
TIME PLOTTED => 12:14

Dist	COUNTY	ROUTE	POST MILES TOTAL PROJECT	SHEET No.	TOTAL SHEETS
02	Plu	70	50.6/51.7	99	181

Theresa Gabriel
REGISTERED ELECTRICAL ENGINEER

October 30, 2015
PLANS APPROVAL DATE

REGISTERED PROFESSIONAL ENGINEER Theresa Aziz Gabriel No. E15129 Exp. 6-30-16 ELECTRICAL STATE OF CALIFORNIA

THE STATE OF CALIFORNIA OR ITS OFFICERS OR AGENTS SHALL NOT BE RESPONSIBLE FOR THE ACCURACY OR COMPLETENESS OF SCANNED COPIES OF THIS PLAN SHEET.

TO ACCOMPANY PLANS DATED 06-15-16

LEGEND:

- AB — ABANDON. IF APPLIED TO CONDUIT, REMOVE CONDUCTORS
- BC — INSTALL PULL BOX IN EXISTING CONDUIT RUN
- BP — PEDESTRIAN BARRICADE, TYPE AS INDICATED ON PLAN
- CB — INSTALL CONDUIT INTO EXISTING PULL BOX
- CC — CONNECT NEW AND EXISTING CONDUIT. REMOVE EXISTING CONDUCTORS AND INSTALL CONDUCTORS AS INDICATED
- CF — CONDUIT TO REMAIN FOR FUTURE USE. REMOVE CONDUCTORS. INSTALL PULL TAPE
- DH — DETECTOR HANDHOLE
- FA — FOUNDATION TO BE ABANDONED
- IS — INSTALL SIGN ON SIGNAL MAST ARM
- NS — NO SLIP BASE ON STANDARD
- PEC — PHOTOELECTRIC CONTROL
- PEU — PHOTOELECTRIC UNIT
- RC — EQUIPMENT OR MATERIAL TO BE REMOVED AND BECOME THE PROPERTY OF THE CONTRACTOR
- RE — REMOVE ELECTROLIER, FUSES AND BALLAST. TAPE ENDS OF CONDUCTORS
- RL — RELOCATE EQUIPMENT
- RR — REMOVE AND REUSE EQUIPMENT
- RS — REMOVE AND SALVAGE EQUIPMENT
- SC — SPLICE NEW TO EXISTING CONDUCTORS
- SD — SERVICE DISCONNECT
- TSP — TELEPHONE SERVICE POINT

ABBREVIATIONS

AC+	UNDERGROUNDED CONDUCTOR
APS	ACCESSIBLE PEDESTRIAN SIGNAL
Batt	BATTERY
BBS	BATTERY BACKUP SYSTEM
BC	BOLT CIRCLE
Blk	BLACK
BP	BYPASS
BPB	BICYCLE PUSH BUTTON
C	CONDUIT
CB	CIRCUIT BREAKER
CCTV	CLOSED CIRCUIT TELEVISION
Ckt	CIRCUIT
CMS	CHANGEABLE MESSAGE SIGN
Ctid	CALTRANS IDENTIFICATION
Comm	COMMUNICATION
Cntl	CONTROL
DF	DEPARTMENT-FURNISHED
DLC	LOOP DETECTOR LEAD-IN CABLE
EMS	EXTINGUISHABLE MESSAGE SIGN
EVUC	EMERGENCY VEHICLE UNIT CABLE
EVUD	EMERGENCY VEHICLE UNIT DETECTOR
FB	FLASHING BEACON
FBCA	FLASHING BEACON CONTROL ASSEMBLY
FBS	FLASHING BEACON WITH SLIP BASE
FO	FIBER OPTIC
G	EQUIPMENT GROUNDING CONDUCTOR
GB	GROUND BUS
GFCI	GROUND FAULT CIRCUIT INTERRUPTER
Grn	GREEN
HAR	HIGHWAY ADVISORY RADIO
Hex	HEXAGONAL
HPS	HIGH PRESSURE SODIUM
IISNS	INTERNALLY ILLUMINATED STREET NAME SIGN
ISL	INDUCTION SIGN LIGHTING
LED	LIGHT EMITTING DIODE
LMA	LUMINAIRE MAST ARM
LPS	LOW PRESSURE SODIUM
Ltg	LIGHTING
Lum	LUMINAIRE
M	METERED
MAT	MAST ARM MOUNTING TOP ATTACHMENT
MAS	MAST ARM MOUNTING SIDE ATTACHMENT
MBPS	MANUAL BYPASS SWITCH
M/M	MULTIPLE TO MULTIPLE TRANSFORMER
Mtg	MOUNTING
MV	MERCURY VAPOR LIGHTING FIXTURE
MVDS	MICROWAVE VEHICLE DETECTION SYSTEM
N	NEUTRAL (GROUNDED CONDUCTOR)
NB	NEUTRAL BUS
NC	NORMALLY CLOSE
NO	NORMALLY OPEN
P	CIRCUIT BREAKER'S POLE
PB	PULL BOX
PBA	PUSH BUTTON ASSEMBLY
PEC	PHOTOELECTRIC CONTROL
Ped	PEDESTRIAN
PEU	PHOTOELECTRIC UNIT
PT	CONDUIT WITH PULL TAPE
PTR	POWER TRANSFER RELAY
RE	RELOCATED EQUIPMENT
RM	RAMP METERING
RWIS	ROADSIDE WEATHER INFORMATION SYSTEM
SB	SLIP BASE
SIC	SIGNAL INTERCONNECT CABLE
Sig	SIGNAL
SMA	SIGNAL MAST ARM
SNS	STREET NAME SIGN
SP	SERVICE POINT
TB	TERMINAL BOARD
TDC	TELEPHONE DEMARCATION CABINET
Temp	TEMPERATURE
TMS	TRAFFIC MONITORING STATION
TOS	TRAFFIC OPERATIONS SYSTEM
UPS	UNINTERRUPTABLE POWER SUPPLY
UPSC	UNINTERRUPTABLE POWER SUPPLY CONTROLLER
Veh	VEHICLE
VIVDS	VIDEO IMAGE VEHICLE DETECTION SYSTEM
Wht	WHITE
WIM	WEIGH-IN-MOTION
Xfmr	TRANSFORMER

SOFFIT AND WALL-MOUNTED LUMINAIRES

- PENDANT SOFFIT LUMINAIRE, 70 W HPS UNLESS OTHERWISE SPECIFIED
- FLUSH-MOUNTED SOFFIT LUMINAIRE, 70 W HPS UNLESS OTHERWISE SPECIFIED
- WALL-MOUNTED LUMINAIRE, 70 W HPS UNLESS OTHERWISE SPECIFIED
- EXISTING SOFFIT OR WALL-MOUNTED LUMINAIRE TO REMAIN UNMODIFIED
- EXISTING SOFFIT OR WALL-MOUNTED LUMINAIRE TO BE MODIFIED AS SPECIFIED

NOTE:
Arrow indicates "street side" of luminaire.

COMMONLY USED SYMBOLS FOR UNITED STATES CUSTOMARY UNITS OF MEASUREMENT:

SYMBOL	DEFINITIONS
Ω	OHMS
min	MINUTE
s	SECOND
bps	BITS PER SECOND
Bps	BYTES PER SECOND
A	AMPERE
V	VOLT
V(dc)	VOLT (DIRECT CURRENT)
V(ac)	VOLT (ALTERNATING CURRENT)
FC	FOOT - CANDLE
W	WATTS
VA	VOLT-AMPERE
M	MEGA
k	KILO
m	MILLI
μ	MICRO
P	PICO
Hz	HERTZ

MISCELLANEOUS ELECTROLIERS

NEW	EXISTING	
		LUMINAIRE ON WOOD POLE
		NON-STANDARD ELECTROLIER (SEE PROJECT LEGEND)
		CITY ELECTROLIER
		ELECTROLIER FOUNDATION (FUTURE INSTALLATION)

NOTES:

1. LED luminaires shall be 235 W when installed on Type 21, 21D, 30, 31 and 32 Standards, unless otherwise specified. LED luminaires shall be 165 W when installed on other type standards or poles, unless otherwise specified.
2. Luminaires shall be the cutoff type, ANSI Type III medium cutoff lighting distribution, unless otherwise specified.

STANDARD ELECTROLIER

NEW	EXISTING	STANDARD TYPE
		15
		15D
		15 STRUCTURE
		15D STRUCTURE
		21
		21D
		21 STRUCTURE
		21D STRUCTURE
		30
		31
		32

STATE OF CALIFORNIA
DEPARTMENT OF TRANSPORTATION

ELECTRICAL SYSTEMS (LEGEND AND ABBREVIATIONS)

NO SCALE

RSP ES-1A DATED OCTOBER 30, 2015 SUPERSEDES RSP ES-1A DATED JULY 19, 2013 AND STANDARD PLAN ES-1A DATED MAY 20, 2011 - PAGE 425 OF THE STANDARD PLANS BOOK DATED 2010.

REVISED STANDARD PLAN RSP ES-1A

2010 REVISED STANDARD PLAN RSP ES-1A

DATE PLOTTED => 04-AUG-2016
TIME PLOTTED => 12:14

Dist	COUNTY	ROUTE	POST MILES TOTAL PROJECT	SHEET No.	TOTAL SHEETS
02	Plu	70	50.6/51.7	100	181

Theresa Gabriel
REGISTERED ELECTRICAL ENGINEER

October 30, 2015
PLANS APPROVAL DATE

REGISTERED PROFESSIONAL ENGINEER Theresa Aziz Gabriel No. E15129 Exp. 6-30-16 ELECTRICAL STATE OF CALIFORNIA

THE STATE OF CALIFORNIA OR ITS OFFICERS OR AGENTS SHALL NOT BE RESPONSIBLE FOR THE ACCURACY OR COMPLETENESS OF SCANNED COPIES OF THIS PLAN SHEET.

TO ACCOMPANY PLANS DATED 06-15-16

CONDUIT

NEW	EXISTING	
		LIGHTING CONDUIT, UNLESS OTHERWISE INDICATED OR NOTED
		TRAFFIC SIGNAL CONDUIT
C	c	COMMUNICATION CONDUIT
T	t	TELEPHONE CONDUIT
F	f	FIRE ALARM CONDUIT
FO	fo	FIBER OPTIC CONDUIT
		CONDUIT TERMINATION
R	r	CONDUIT RISER ATTACHED TO THE STRUCTURE OR SERVICE POLE

SERVICE EQUIPMENT

NEW	EXISTING	
OH	oh	OVERHEAD LINES
U	U	WOOD POLE, "U" INDICATES UTILITY OWNED
		POLE GUY WITH ANCHOR
		UTILITY TRANSFORMER - GROUND MOUNTED
III	III	SERVICE EQUIPMENT ENCLOSURE TYPE. DOOR INDICATES FRONT OF ENCLOSURE
T	t	TELEPHONE DEMARCATION CABINET

POLE-MOUNTED SERVICE DESIGNATION

TYPE H SERVICE, 28'-10" — TYPE OF INSTALLATION AND POLE HEIGHT ABOVE GRADE

FLASHING BEACON

NEW	EXISTING	
R	R	FLASHING BEACON (ONE VEHICLE SIGNAL HEAD WITH BACKPLATE AND VISOR) "R" INDICATES RED INDICATION, "Y" INDICATES YELLOW INDICATION
Y Y	Y Y	FLASHING BEACON WITH TYPE 15-FBS STANDARD AND A SIGN.
R R	R R	FLASHING BEACON WITH TYPES 9, 9A OR 9B SIGN UNLESS OTHERWISE SPECIFIED OR INDICATED

SIGNAL EQUIPMENT

NEW	EXISTING	
		PEDESTRIAN SIGNAL HEAD
		PUSH BUTTON ASSEMBLY POST
		PEDESTRIAN BARRICADE
		VEHICLE SIGNAL HEAD (WITH BACKPLATE AND 3-SECTIONS: RED, YELLOW AND GREEN)
		VEHICLE SIGNAL HEAD WITH ANGLE VISOR
PV	PV	MODIFICATIONS OF BASIC SYMBOL: "L" INDICATES ALL NON-ARROW SECTIONS LOUVERED "LG" INDICATES LOUVERED GREEN SECTION ONLY "PV" INDICATES ALL 12" SECTIONS PROGRAMMED VISIBILITY "8" INDICATES ALL 8" SECTIONS (ONLY WHEN SPECIFIED)
		VEHICLE SIGNAL HEAD CONSISTING OF RED, YELLOW AND GREEN LEFT ARROW SECTIONS
		VEHICLE SIGNAL HEAD CONSISTING OF RED AND YELLOW SECTIONS WITH AN UP GREEN ARROW SECTION
		VEHICLE SIGNAL HEAD (5 SECTION) CONSISTING OF RED, YELLOW AND GREEN SECTIONS WITH YELLOW AND GREEN RIGHT ARROW SECTIONS
		TYPE 15TS STANDARD WITH VEHICLE SIGNAL HEAD AND LUMINAIRE
		TYPE 21TS STANDARD WITH VEHICLE SIGNAL HEAD AND LUMINAIRE
		STANDARD WITH LUMINAIRE AND SIGNAL MAST ARMS AND ATTACHED VEHICLE SIGNAL HEADS
		TYPE 1 STANDARD WITH ATTACHED VEHICLE SIGNAL HEADS
		STANDARD WITH A SIGNAL MAST ARM, ATTACHED VEHICLE SIGNAL HEADS AND INTERNALLY ILLUMINATED STREET NAME SIGN
		CONTROLLER ASSEMBLY. DOOR INDICATES FRONT OF CABINET

SIGNAL EQUIPMENT Cont

NEW	EXISTING	
		GUARD POST
		TYPE 1 STANDARD WITH RAMP METERING SIGN
		OPTICAL DETECTOR FOR THE EMERGENCY VEHICLE DETECTION

NOTES:

1. All signal sections shall be 12" unless shown otherwise.
2. Signal heads shall be provided with backplates unless shown otherwise.

ILLUMINATED OVERHEAD SIGN

NEW	EXISTING	
		SINGLE POST, SINGLE ILLUMINATED SIGN, BALANCED BUTTERFLY
		SINGLE POST, DOUBLE ILLUMINATED SIGN, BALANCED BUTTERFLY
		SINGLE POST, SINGLE ILLUMINATED SIGN, FULL CANTILEVER
		DOUBLE POST, SINGLE ILLUMINATED SIGN
		SINGLE ILLUMINATED SIGN MOUNTED ON STRUCTURE
		DOUBLE POST, SINGLE ILLUMINATED SIGN WITH ELECTROLIER

STATE OF CALIFORNIA
DEPARTMENT OF TRANSPORTATION

ELECTRICAL SYSTEMS (LEGEND AND ABBREVIATIONS)

NO SCALE

RSP ES-1B DATED OCTOBER 30, 2015 SUPERSEDES RSP ES-1B DATED JULY 19, 2013 AND STANDARD PLAN ES-1B DATED MAY 20, 2011 - PAGE 426 OF THE STANDARD PLANS BOOK DATED 2010.

REVISED STANDARD PLAN RSP ES-1B

2010 REVISED STANDARD PLAN RSP ES-1B

DATE PLOTTED => 04-AUG-2016
TIME PLOTTED => 12:15