Dist	COUNTY	ROUTE	POST MILES TOTAL PROJECT	SHEET No.	TOTAL SHEETS
02	Plu	70	50.6/51.7	13	181

Thomas Penick 06-12-16
REGISTERED CIVIL ENGINEER DATE

06-15-16
PLANS APPROVAL DATE

REGISTERED PROFESSIONAL ENGINEER TOM PENICK No. C61068 Exp. 12-31-16 CIVIL STATE OF CALIFORNIA

THE STATE OF CALIFORNIA OR ITS OFFICERS OR AGENTS SHALL NOT BE RESPONSIBLE FOR THE ACCURACY OR COMPLETENESS OF SCANNED COPIES OF THIS PLAN SHEET.

NOTES:

1. GRIND EXISTING SURFACES TO ACCOMODATE A MINIMUM TAPER THICKNESS OF 0.10' WHEN EITHER:
   A. HMA MATERIAL SUCH AS RUBBERIZED, POLYMER MODIFIED OR OPEN GRADED IS UNSUITABLE FOR RAKING TO A MAXIMUM 0.02' THICKNESS AT THE CONFORM.
   B. TEMPORARY TAPER WILL BE IN PLACE FOR MORE THAN 14 DAYS.
2. PERMANENT SURFACE MAY BE EXISTING OR NEW PAVEMENT.
3. ROADWAY SURFACE IS THE TOP OF EXISTING SURFACE OR THE TOP OF THE PLANED SURFACE.

LEGEND:

HMA OR POLYESTER CONCRETE

IF NECESSARY, GRIND EXISTING PAVEMENT AND PLACE HMA MATERIAL (SEE NOTE 1)

ABBREVIATIONS:

CPACP COLD PLANE ASPHALT CONCRETE PAVEMENT

1

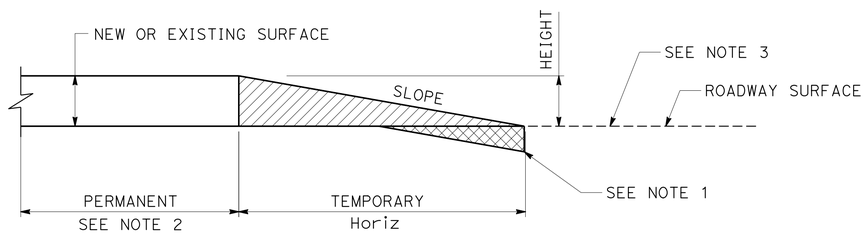

ELEVATION

TEMPORARY TAPERS

HEIGHT DIFFERENTIAL (FOOT)	SLOPE (HORIZONTAL:VERTICAL)	
	TAPER USE OF 14 DAYS OR LESS	TAPER USE OF MORE THAN 14 DAYS
GREATER THAN 0.08	100:1 OR FLATTER	200:1 OR FLATTER
0.04-0.08	70:1 OR FLATTER	70:1 OR FLATTER

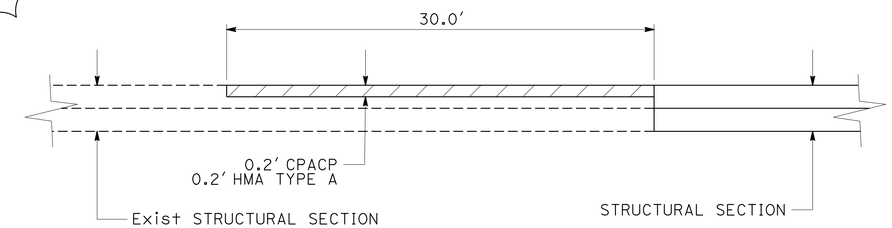

CONFORM DETAIL

"X1" 39+70 TO 40+00
"X1" 63+20 TO 63+50

1

1 REPLACED PER ADDENDUM No. 1 DATED OCTOBER 6, 2016

CONSTRUCTION DETAILS

NO SCALE

C-7

REVISED BY | DATE REVISED
TOM PENICK | DAN BROWN
CALCULATED-DESIGNED BY | CHECKED BY
FUNCTIONAL SUPERVISOR
AL TRUJILLO

STATE OF CALIFORNIA - DEPARTMENT OF TRANSPORTATION
Caltrans DESIGN

P:\proj1\02\2c090_plans\pse\Addenda 10-06-16\22c090ga007.dgn

LAST REVISION 06-12-16 | DATE PLOTTED => 06-OCT-2016 TIME PLOTTED => 06:40

Dist	COUNTY	ROUTE	POST MILES TOTAL PROJECT	SHEET No.	TOTAL SHEETS
02	Plu	70	50.6/51.7	16	181

Thomas Penick 06-12-16
REGISTERED CIVIL ENGINEER DATE

06-15-16
PLANS APPROVAL DATE

REGISTERED PROFESSIONAL ENGINEER TOM PENICK No. C61068 Exp. 12-31-16 CIVIL STATE OF CALIFORNIA

THE STATE OF CALIFORNIA OR ITS OFFICERS OR AGENTS SHALL NOT BE RESPONSIBLE FOR THE ACCURACY OR COMPLETENESS OF SCANNED COPIES OF THIS PLAN SHEET.

NOTES:

1. (N) - NOT A SEPARATE PAY ITEM, FOR INFORMATION ONLY
2. ALL PIPE JOINT CLASSIFICATIONS ARE STANDARD JOINT TYPE.

CULVERT MARKERS

DRAINAGE SYSTEM No.	STATION	POSTMILE	L	R	MARKER (CULVERT) EA	REMARKS
1	"X1" 48+04.1	51.13	X	X	2	CROSS CULVERT
2	"X1" 57+05.1	51.30	X	X	2	CROSS CULVERT
TOTAL					4	

DRAINAGE QUANTITIES

SHEET No.	DRAINAGE SYSTEM No.	DRAINAGE UNIT No.	REMOVE CULVERT LF	STRUCTURAL CONCRETE, DRAINAGE INLET CY	24" CORRUGATED STEEL PIPE (.109" THICK) LF	24" STEEL FLARED END SECTION EA	Misc IRON AND STEEL LB	ROCK SLOPE PROTECTION (No. 2, METHOD B) CY	RSP FABRIC (CLASS 8) SQYD	STATION "X1" LINE	DESCRIPTION
L-1	1	a	63							48+04.46	Exist 18" CMP CULVERT
		b		1.24			326			48+05.02	DI TYPE GO, H=3.47, GRATE TYPE 24-12
		c			64.5					48+04.46	24" CSP
		d				1				47+93.42	24" STEEL FES
		e						7.4	22.2	47+93.42	RSP BACKING No. 2
L-2	2	a	48							57+05.3	Exist 18" CMP CULVERT
		b		0.95			326			57+04.20	DI TYPE G1, H=2.90, GRATE TYPE 24-12
		c			41.0					57+04.20	24" CSP
		d		1.67			326			57+04.20	DI TYPE G1, H=6.27, GRATE TYPE 24-12
		e			73.2					57+04.20	24" CSP
		f				1				57+02.68	24" STEEL FES
		g						3.0	10.2	57+02.68	RSP BACKING No. 2
TOTAL			111	3.86	178.7	2	978	10.4	32.4		

1 REPLACED PER ADDENDUM No. 1 DATED OCTOBER 6, 2016

DRAINAGE QUANTITIES

DQ-1

REVISED BY | DATE REVISED
TOM PENICK | DAN BROWN
CALCULATED-DESIGNED BY | CHECKED BY
FUNCTIONAL SUPERVISOR
AL TRUJILLO

STATE OF CALIFORNIA - DEPARTMENT OF TRANSPORTATION
Caltrans DESIGN

P:\proj1\02\2c090_plans\pse\Addenda 10-06-16\22c090id001.dgn

LAST REVISION 06-12-16 | DATE PLOTTED => 06-OCT-2016 | TIME PLOTTED => 06:40

Dist	COUNTY	ROUTE	POST MILES TOTAL PROJECT	SHEET No.	TOTAL SHEETS
02	Plu	70	50.6/51.7	47	181

Thomas Penick 06-12-16
REGISTERED CIVIL ENGINEER DATE

06-15-16
PLANS APPROVAL DATE

REGISTERED PROFESSIONAL ENGINEER TOM PENICK No. C61068 Exp. 12-31-16 CIVIL STATE OF CALIFORNIA

THE STATE OF CALIFORNIA OR ITS OFFICERS OR AGENTS SHALL NOT BE RESPONSIBLE FOR THE ACCURACY OR COMPLETENESS OF SCANNED COPIES OF THIS PLAN SHEET.

NOTE:

1. (N) - NOT A SEPARATE PAY ITEM, FOR INFORMATION ONLY

GUARDRAIL QUANTITIES

SYSTEM No.	STATION "X1" LINE Beg	END	L†	R†	REMOVE GUARDRAIL	TREATED WOOD WASTE	MIDWEST GUARDRAIL SYSTEM (STEEL POST)	END ANCHOR ASSEMBLY (TYPE SFT)	TRANSITION RAILING (TYPE WB-31)	(N) BURIED POST END ANCHOR ASSEMBLY
					LF	LB	LF	EA	EA	EA
1	42+74	48+95	X		65	1072	575	1	1	
2	50+92	51+92		X	65	804	75		1	1
3	55+95	57+20	X		100	1273	100		1	1
4	56+42	57+77		X	65	1072	113		1	1
FROM SIGN QUANTITIES						150				
TOTAL					295	4371	863	1	4	3

EROSION CONTROL QUANTITIES

	TEMPORARY COVER	TEMPORARY DRAINAGE INLET PROTECTION	TEMPORARY CONSTRUCTION ENTRANCE	TEMPORARY HYDRAULIC MULCH (TEMPORARY EROSION CONTROL)
	SQYD	EA	EA	SQYD
TOTAL	100	3	2	6410

1

HIGH FRICTION SURFACE TREATMENT

STATION "X1" LINE Beg	END	HIGH FRICTION SURFACE TREATMENT	DESCRIPTION
		SQYD	
39+70	51+79 (BB)	5383	WEST BRIDGE APPROACH, EP TO EP
51+79 (BB)	56+05 (EB)	2009	BRIDGE DECK, EP TO EP
56+05 (EB)	63+50	3440	EAST BRIDGE APPROACH, EP TO EP
		10,832	

ROADWAY QUANTITIES

STATION "X1" LINE Beg	END	ROADWAY EXCAVATION	(N) EMBANKMENT	COLD PLANE AC PAVEMENT	SHOULDER BACKING	CLASS 2 AGGREGATE BASE (CY)	HOT MIX ASPHALT (TYPE A)	TACK COAT	PLACE HOT MIX ASPHALT (MISCELANEOUS AREA)	ROLLED EROSION CONTROL PRODUCT (NETTING)	GEOSYNTHETIC PAVEMENT INTERLAYER (PAVING FABRIC)
		CY	CY	SQYD	TON	CY	TON	TON	SQYD	SQFT	SQYD
39+70	40+00			106							
39+70	51+67				285						
39+70	51+79 (BB)	1239	740			1407.1	1597.1	1.12			
52+05 (EB)	63+50	2204	2703			888.3	1013.6	0.72			
48+95	51+79 (BB)										165
56+30	63+50				164						
63+20	63+50		1	108							
HMA APRONS AND DIKE							15.8		20.4	6840	
FROM SHEET THQ-1							242				
TOTAL		3443	3443	214	449	2295.4	2868.5	1.84	20.4	6840	165

1

HMA DIKE QUANTITIES

STATION "X1" LINE Beg	END	L†	R†	PLACE HOT MIX ASPHALT DIKE (TYPE A)	PLACE HOT MIX ASPHALT DIKE (TYPE C)	PLACE HOT MIX ASPHALT DIKE (TYPE E)
				LF	LF	LF
48+01	48+17		X	12		
57+06	57+75		X		69	
56+96	57+12	X			12	
57+75	61+90		X			415
			TOTAL	12	81	415

1 REPLACED PER ADDENDUM No. 1 DATED OCTOBER 6, 2016

SUMMARY OF QUANTITIES

Q-1

STATE OF CALIFORNIA - DEPARTMENT OF TRANSPORTATION
Caltrans DESIGN

FUNCTIONAL SUPERVISOR: AL TRUJILLO
CALCULATED-DESIGNED BY: DAN BROWN
CHECKED BY: TOM PENICK
REVISED BY
DATE REVISED

P:\proj1\02\2c090_plans\pse\Addenda 10-06-16\22c090pa001.dgn

LAST REVISION 06-12-16
DATE PLOTTED => 06-OCT-2016
TIME PLOTTED => 06:40

Dist	COUNTY	ROUTE	POST MILES TOTAL PROJECT	SHEET No.	TOTAL SHEETS
02	Plu	70	50.6/51.7	51	181

ART 06-12-16
REGISTERED ELECTRICAL ENGINEER DATE

06-15-16
PLANS APPROVAL DATE

REGISTERED PROFESSIONAL ENGINEER A.P. ROBLES No. E15293 Exp. 3-31-17 ELECTRICAL STATE OF CALIFORNIA

THE STATE OF CALIFORNIA OR ITS OFFICERS OR AGENTS SHALL NOT BE RESPONSIBLE FOR THE ACCURACY OR COMPLETENESS OF SCANNED COPIES OF THIS PLAN SHEET.

NOTE:

1. FOR ACCURATE RIGHT OF WAY DATA, CONTACT RIGHT OF WAY ENGINEERING AT THE DISTRICT OFFICE.
2. FOR TEMPORARY POLE DETAILS SEE TRAFFIC HANDLING PLANS.
3. SEE CONSTRUCTION AREA SIGNS PLAN.

LEGEND:

- ITS — ITS NODE PULL BOX
- BBS BATTERY CABINET
- GENERATOR SYSTEM AND SERVICE
- ● PPA ON WOOD POST

ABBREVIATIONS:

SLI	SENSOR LEAD-IN CABLE
SMFO	SINGLE MODE FIBER OPTIC
smfo	Exist SINGLE MODE FIBER OPTIC
ATS	AUTOMATIC TRANSFER SWITCH

LEGEND (THIS SHEET):

1. MESSENGER WIRE, 2#12 (FB), 1#12 G, 1 DLC.
2. MESSENGER WIRE, 2#12 (FB), 1#12 G, 2 DLC.
3. 1½"C, 1 DLC.
4. 1½"C, 3 DLC, 1-3CSC, 1#12 G.
5. 1"C, 1-3CSC, 1#12 G.
6. 2"C, 1-3CSC, 1#12.
7. 4#12 (EB SIGNAL), 2#12 (L+g), 1#12 G. (1)
8. MESSENGER WIRE, 2#12 (FB), 1#12 G, 5 DLC, 1-3CSC.
9. MESSENGER WIRE, 4#12 (WB SIGNAL) 2#12 (FB), 2#12 (L+g), 5 DLC, 1-3CSC, 1#12 G.
10. SPAN MOUNTED SIGNAL FACE.
11. LUMINAIRE MAST ARM WITH 12' LMA AND TYPE IV PEC
12. MESSENGER WIRE, 2#12 (FB), 1#12 G.
13. 1½"C, 2#12, 1#12 G.

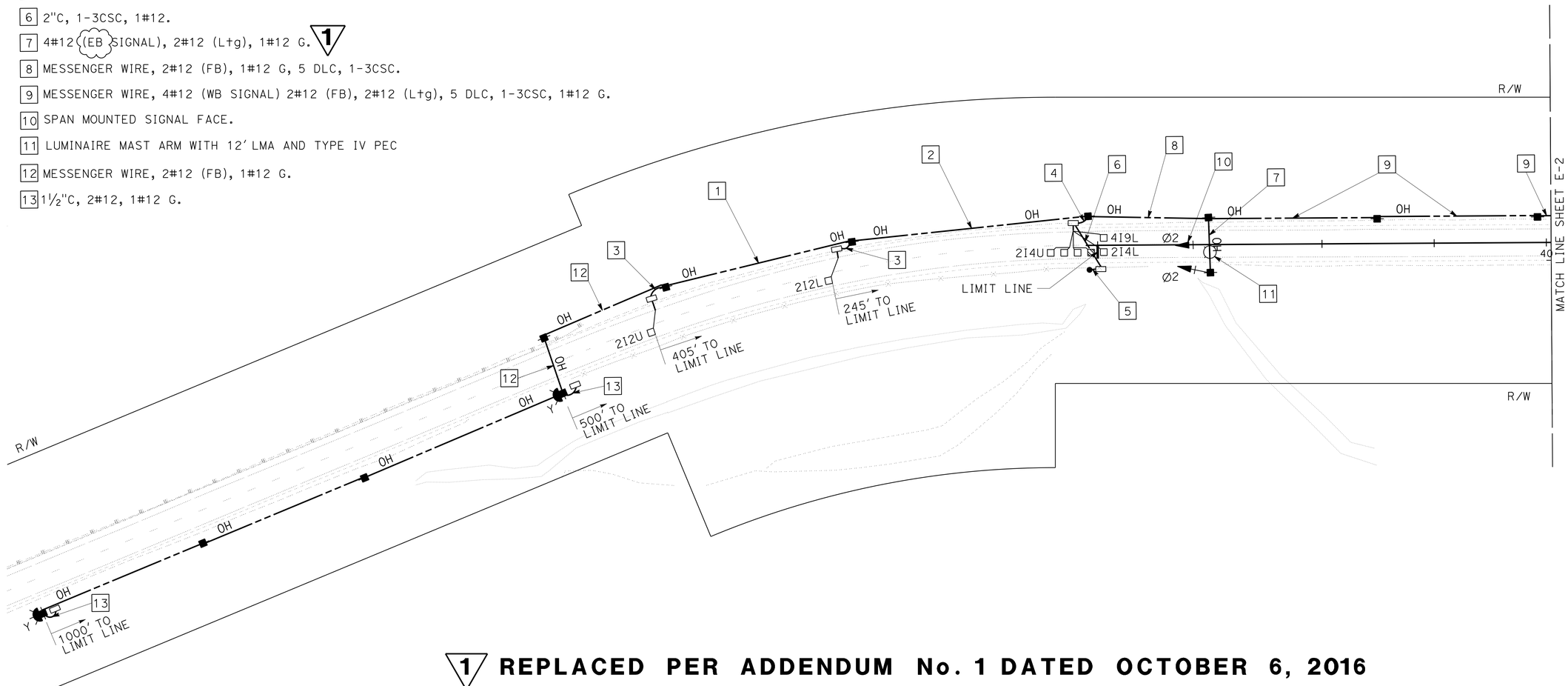

(1) REPLACED PER ADDENDUM No. 1 DATED OCTOBER 6, 2016

APPROVED FOR ELECTRICAL WORK ONLY

TEMPORARY SIGNAL SYSTEM

SCALE: 1" = 50'

E-1

STATE OF CALIFORNIA - DEPARTMENT OF TRANSPORTATION
Caltrans® ELECTRICAL DESIGN

FUNCTIONAL SUPERVISOR: ROB STINGER
CALCULATED-DESIGNED BY: ARTURO P. ROBLES
CHECKED BY: JIM HANNIGAN
REVISED BY / DATE REVISED

P:\proj\02\2c090_plans\pse\Addenda 10-06-16\22c090ua001.dgn

LAST REVISION 06-12-16 | DATE PLOTTED => 06-OCT-2016 | TIME PLOTTED => 06:40

BORDER LAST REVISED 7/2/2010 | USERNAME => s115152 | DGN FILE => 22c090ua001.dgn | RELATIVE BORDER SCALE IS IN INCHES 0 1 2 3 | UNIT 0147 | PROJECT NUMBER & PHASE 02 0000 0161 1

Dist	COUNTY	ROUTE	POST MILES TOTAL PROJECT	SHEET No.	TOTAL SHEETS
02	Plu	70	50.6/51.7	53	181

ART 06-12-16
REGISTERED ELECTRICAL ENGINEER DATE

06-15-16
PLANS APPROVAL DATE

REGISTERED PROFESSIONAL ENGINEER A.P. ROBLES No. E15293 Exp. 3-31-17 ELECTRICAL STATE OF CALIFORNIA

THE STATE OF CALIFORNIA OR ITS OFFICERS OR AGENTS SHALL NOT BE RESPONSIBLE FOR THE ACCURACY OR COMPLETENESS OF SCANNED COPIES OF THIS PLAN SHEET.

NOTE:

1. FOR ACCURATE RIGHT OF WAY DATA, CONTACT RIGHT OF WAY ENGINEERING AT THE DISTRICT OFFICE.
2. FOR TEMPORARY WOOD POLE DETAILS SEE TRAFFIC HANDLING PLANS.
3. SEE CONSTRUCTION AREA SIGNS PLAN.

LEGEND (THIS SHEET):

1

1. SURFACE MOUNTED 2"C, 4#12 (WB SIGNAL), 2#12 (FB), 1#12 G, 2#10 (Ltg), 1#10 G, 5 DLC, 1-3CSC,
2. MESSENGER WIRE, 4#12 (WB SIGNAL), 2#12 (FB), 1#12 G, 2#10 (Ltg), 1#10 G, 5 DLC, 1-3CSC, 1
3. LUMINAIRE WITH 12' LMA AND TYPE IV PEC.
4. SPAN MOUNTED SIGNAL FACE.
5. 1"C, 1-3CSC, 1#10 G.
6. MESSENGER WIRE, 2#12 (FB), 1#12 G, 2 DLC.
7. MESSENGER WIRE, 2#12 (FB), 1#12 G, 1 DLC.
8. 1½"C, 3 DLC, 1-3CSC, 1#10 G.
9. 2"C, 4#12 (WB SIGNAL), 2#10 (Ltg), 2#12 (FB), 1#10 G, 5 DLC, 1-3CSC, 1
10. MESSENGER WIRE, 4#12 (WB SIGNAL), 2#10 (Ltg), 1#10 G,
11. 1½"C, 1 DLC.
12. MESSENGER WIRE, 2#12 (FB), 1#12 G, 1
13. 1½"C, 2#12, 1#12 G.

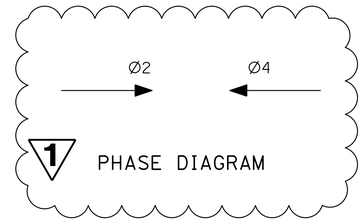

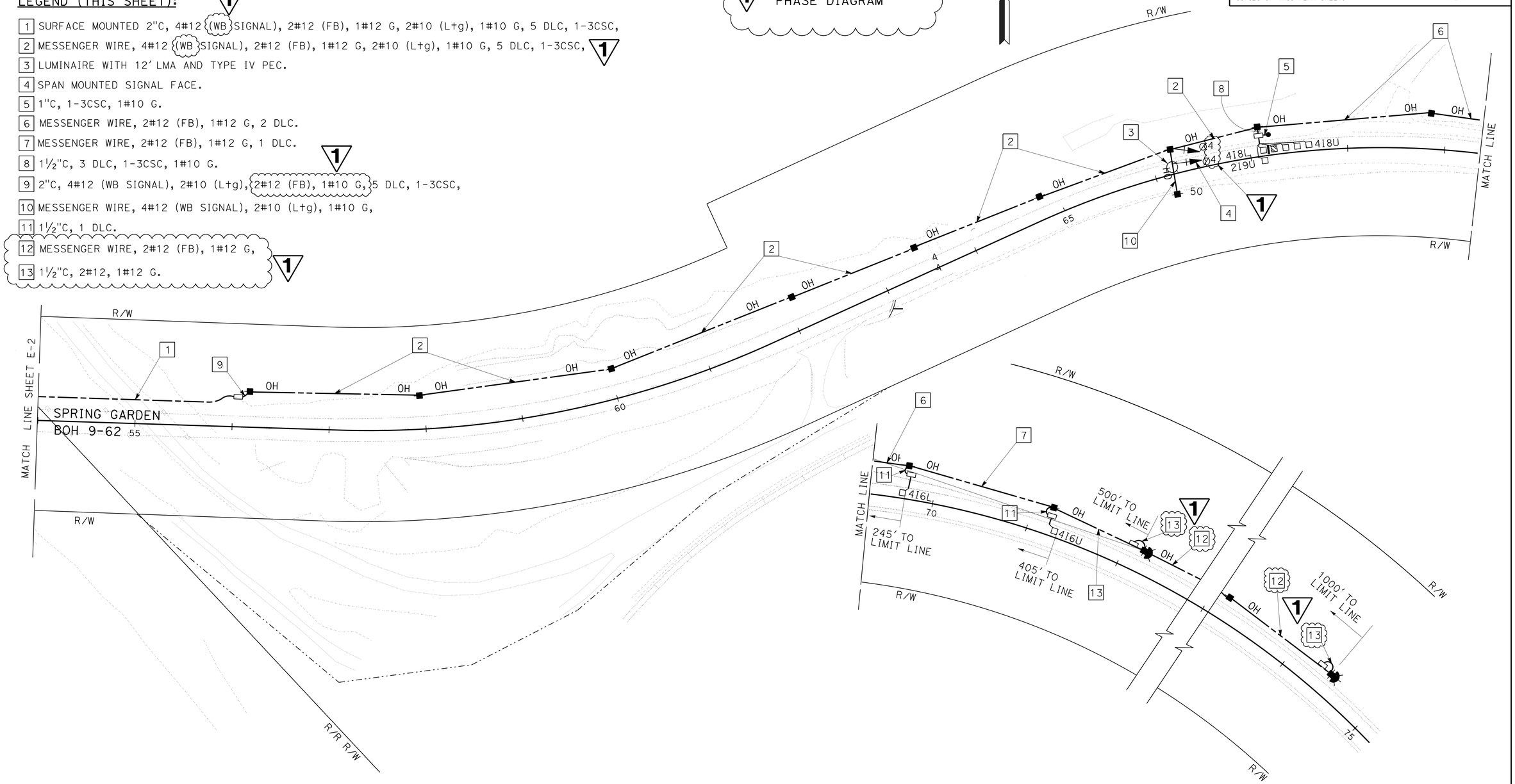

1 **REPLACED PER ADDENDUM No. 1 DATED OCTOBER 6, 2016**

APPROVED FOR ELECTRICAL WORK ONLY

TEMPORARY SIGNAL SYSTEM

SCALE: 1" = 50'

E-3

REVISED BY	DATE REVISED
ARTURO P. ROBLES	JIM HANNIGAN
CALCULATED-DESIGNED BY	CHECKED BY
FUNCTIONAL SUPERVISOR	ROB STINGER

STATE OF CALIFORNIA - DEPARTMENT OF TRANSPORTATION
Caltrans® ELECTRICAL DESIGN

P:\proj1\02\2c090_plans\pse\Addenda 10-06-16\22c090ua003.dgn

LAST REVISION 06-12-16 | DATE PLOTTED => 06-OCT-2016 | TIME PLOTTED => 06:40

Dist	COUNTY	ROUTE	POST MILES TOTAL PROJECT	SHEET No.	TOTAL SHEETS
02	Plu	70	50.6/51.7	57	181

REGISTERED ENGINEER 06-10-16 DATE

KEITH KOEPPEN No. E19870 Exp. 3-31-18 ELECTRICAL REGISTERED PROFESSIONAL ENGINEER STATE OF CALIFORNIA

06-15-16
PLANS APPROVAL DATE

THE STATE OF CALIFORNIA OR ITS OFFICERS OR AGENTS SHALL NOT BE RESPONSIBLE FOR THE ACCURACY OR COMPLETENESS OF SCANNED COPIES OF THIS PLAN SHEET.

NOTE:

(N) - NOT A SEPARATE PAY ITEM. FOR INFORMATION ONLY.

TEMPORARY SIGNAL SYSTEM

SHEET No.	1½" TYPE 3 CONDUIT (N)	2" TYPE 3 CONDUIT (N)	2" TYPE 1 CONDUIT SURFACE-MOUNTED (N)	TRENCHING IN PAVEMENT (N)	3" TYPE 3 CONDUIT (N)	MESSENGER CABLE (N)	WOOD POLE (N)	SIGNAL FACE WITH 3 INDICATIONS (N)	No. 5 PULL BOX (N)	No. 5(T) PULL BOX (N)	No. 6 PULL BOX (N)	No. 12 CONDUCTOR (N)	No. 12 G (N)	No. 10 CONDUCTOR (N)	No. 10 G (N)	No. 6 CONDUCTOR (N)	No. 6 G (N)	DLC (N)	3CSC (N)	TYPE A LOOP (N)	TYPE D LOOP (N)	FLASHING BEACON (N) 1	GENERATOR (N)	BATTERIES (BBS) (N)
	LF	LF	LF	LF	LF	LF	EA	EA	EA	EA	EA	LF	LF	LF	LF	LF	LF	LF	LF	EA	EA	EA	EA	EA
E-1	60			60		900	12	2	6			5500	2000					2800	500	7	1	2		
E-2		300	400	300	20	750	4			1	1	9900	1400	1400	700	50	25	7400	1500				2	4
E-3	60		200	80		1600	5	2	6			9800	2500	2450	1400			7200	1350	7	1	2		

1 1

MODIFYING EXISTING ELECTRICAL SYSTEMS

	SHEET No.	2" TYPE 1 CONDUIT (N)	#2/0 CONDUCTOR (N)	#8 CONDUCTOR (N)	No. 5 PULL BOX (N)	ITS NODE PULL BOX (N)
		LF	LF	EA	EA	EA
1 MODIFY FO	E-4	1900	1900	900	2	2

MAINTAINING EXISTING TRAFFFIC MANAGEMENT SYSTEM ELEMENTS DURING CONSTRUCTION

TYPE	LOCATION	DESCRIPTION
RWIS	Plu-70-50.86	SPRING GARDEN ICWS
CCTV	Plu-70-50.85	SPRING GARDEN CCTV
CMS	Plu-70-51.64	ICY CURVE WARNING SYSTEM CMS
FO CABLE	Plu-70-50.86/51.64	SPRING GARDEN ICWS (*)

* THE ICY CURVE WARNING SYSTEM (ICWS) MUST BE OPERATIONAL BETWEEN OCTOBER 15 AND APRIL 15. FOR MORE INFORMATION, CONTACT ITS ENGINEERING AND SUPPORT AT THE DISTRICT OFFICE. 1

1 REPLACED PER ADDENDUM No. 1 DATED OCTOBER 6, 2016

ELECTRICAL QUANTITIES

E-7

REVISED BY | DATE REVISED
KEITH KOEPPEN | JIM HANNIGAN
CALCULATED-DESIGNED BY | CHECKED BY
FUNCTIONAL SUPERVISOR
IAN TURNBULL

STATE OF CALIFORNIA - DEPARTMENT OF TRANSPORTATION
Caltrans
ITS ENGINEERING AND SUPPORT

P:\proj1\02\2c090_plans\pse\Addenda 10-06-16\22c090ua007.dgn

LAST REVISION 05-02-16 | DATE PLOTTED => 06-OCT-2016 | TIME PLOTTED => 06:40

DIST	COUNTY	ROUTE	POST MILES TOTAL PROJECT	SHEET No.	TOTAL SHEETS
02	Plu	70	50.6/51.7	131	181

Manode Kodsuntie 6/2/16
REGISTERED CIVIL ENGINEER DATE

06-15-16
PLANS APPROVAL DATE

REGISTERED PROFESSIONAL ENGINEER
Manode Kodsuntie
No. 56671
Exp. 6/30/17
CIVIL
STATE OF CALIFORNIA

The State of California or its officers or agents shall not be responsible for the accuracy or completeness of scanned copies of this plan sheet.

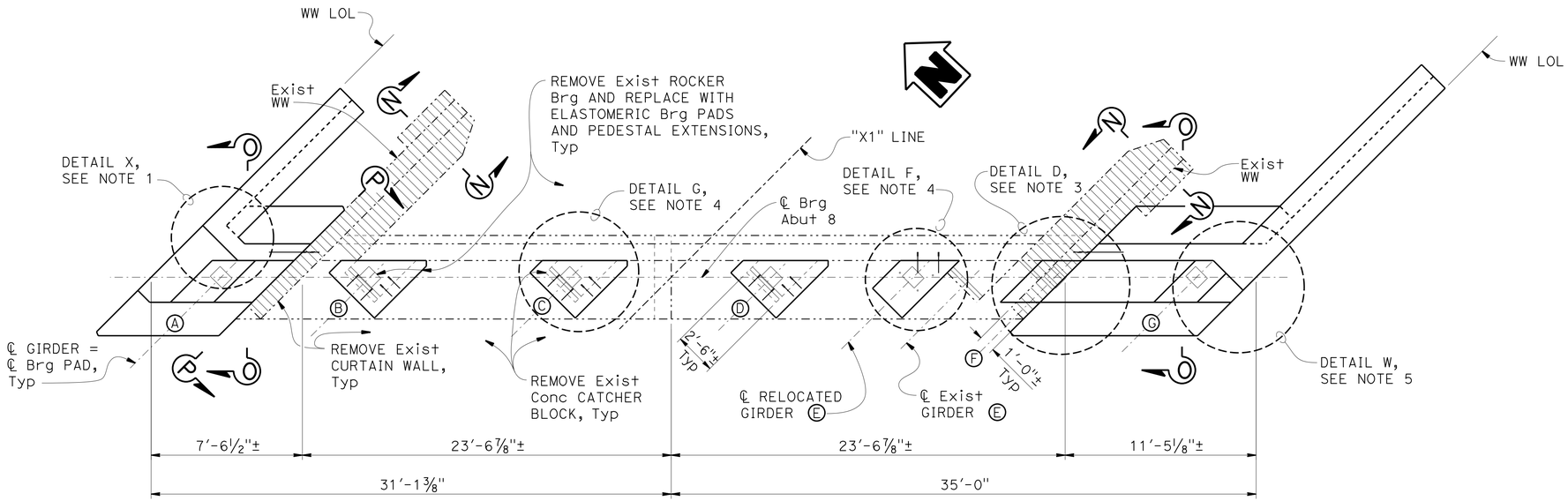

PLAN
¼" = 1'-0"

NOTES:

1. For SECTIONS A-A & D-D and "DETAIL X", see "ABUTMENT DETAILS NO. 2" sheet.
2. For SECTIONS P-P & U-U, see "ABUTMENT DETAILS NO. 5" sheet.
3. For "DETAIL D", see "ABUTMENT DETAILS NO. 5" sheet.
4. For DETAILS F & G, see "ABUTMENT DETAILS NO. 6" sheet.
5. For "DETAIL W", see "ABUTMENT DETAILS NO. 7" sheet.
6. For WEEP HOLE AND GEOCOMPOSITE DRAIN ALTERNATIVE, see "ABUTMENT DETAILS NO. 7" sheet.
7. Existing girders not shown.

LEGEND:

- Indicates Bridge Removal (portion)
- Indicates existing structure
- (X) Girder designation
- * Indicates epoxy coated reinforcement

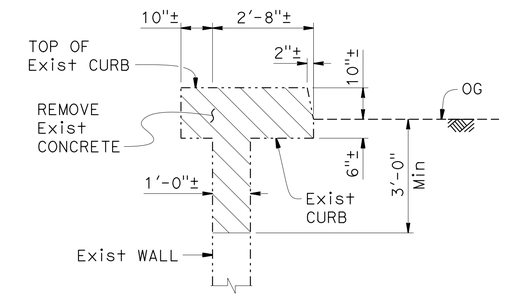

NOTE: Existing railing not shown.

SECTION N-N
½" = 1'-0"

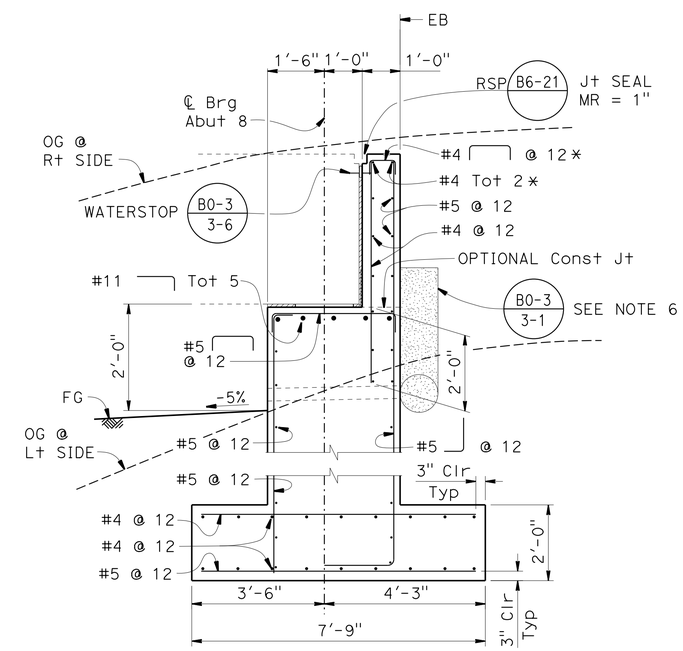

SECTION O-O
½" = 1'-0"

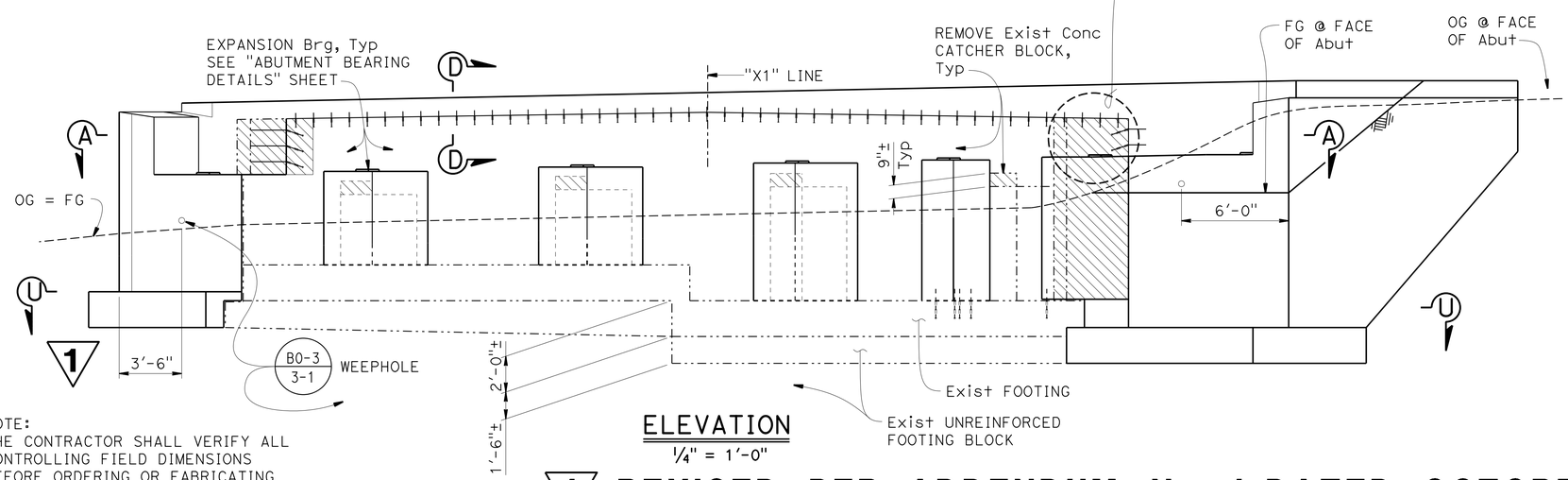

ELEVATION
¼" = 1'-0"

NOTE:
THE CONTRACTOR SHALL VERIFY ALL CONTROLLING FIELD DIMENSIONS BEFORE ORDERING OR FABRICATING ANY MATERIAL.

1 REVISED PER ADDENDUM No. 1 DATED OCTOBER 06, 2016

	BY	CHECKED
DESIGN	Manode Kodsuntie	Kevin Harper
DETAILS	Bob Huddleston / Jin Zhou	Kevin Harper
QUANTITIES	Gerald Dickerson	Eric Chaffee

STATE OF CALIFORNIA
DEPARTMENT OF TRANSPORTATION

DIVISION OF ENGINEERING SERVICES
STRUCTURE DESIGN
DESIGN BRANCH 1

BRIDGE NO. 09-0062
POST MILE 51.21

SPRING GARDEN BRIDGE & OVERHEAD (WIDEN)
ABUTMENT 8 LAYOUT

STRUCTURES DESIGN DETAIL SHEET (ENGLISH) (REV. 09-01-10)

ORIGINAL SCALE IN INCHES FOR REDUCED PLANS 0 1 2 3

UNIT: 3576
PROJECT NUMBER & PHASE: 02000001611
CONTRACT NO.: 02-2C0904

DISREGARD PRINTS BEARING EARLIER REVISION DATES

REVISION DATES: 03-24-15 11-18-15 12-01-15

SHEET 6 OF 41

FILE => 09-0062-f-a0108_1o8.dgn

USERNAME => s115152 DATE PLOTTED => 06-OCT-2016 TIME PLOTTED => 06:40

DIST	COUNTY	ROUTE	POST MILES TOTAL PROJECT	SHEET No.	TOTAL SHEETS
02	Plu	70	50.6/51.7	139	181

Manode Kodsuntie 6/2/16
REGISTERED CIVIL ENGINEER DATE

06-15-16
PLANS APPROVAL DATE

REGISTERED PROFESSIONAL ENGINEER
Manode Kodsuntie
No. 56671
Exp. 6/30/17
CIVIL
STATE OF CALIFORNIA

The State of California or its officers or agents shall not be responsible for the accuracy or completeness of scanned copies of this plan sheet.

NOTES:

1. Abutment 1 fixed bearing shown, Abutment 8 similar except with expansion bearing.
2. For sole plate details, see "BENT BEARING DETAILS NO. 2" sheet.
3. Anchor rods may be cast in place without formed hole.
4. For "SECTION B-B", see "BENT BEARING DETAILS NO. 1" sheet.

LEGEND:

Indicates Bridge Removal (portion)

Indicates existing structure

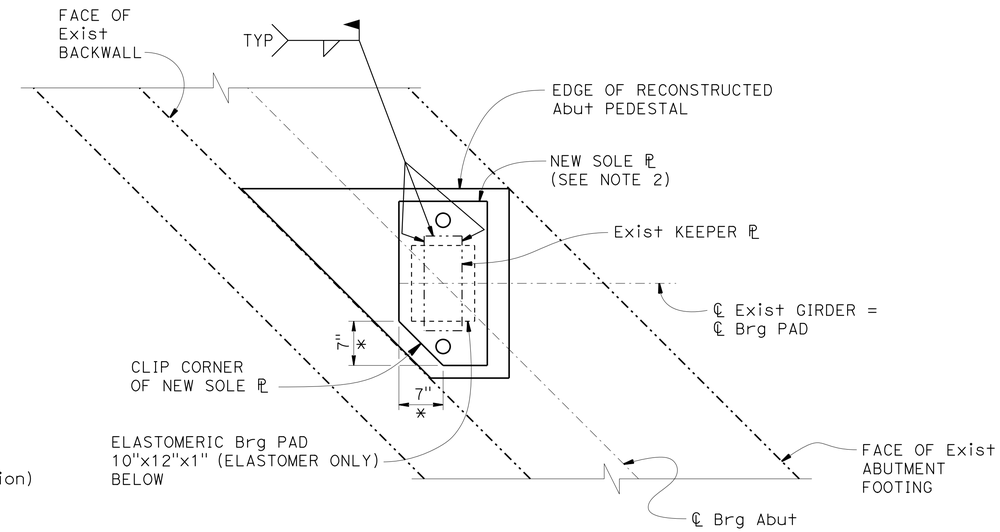

SECTION D-D

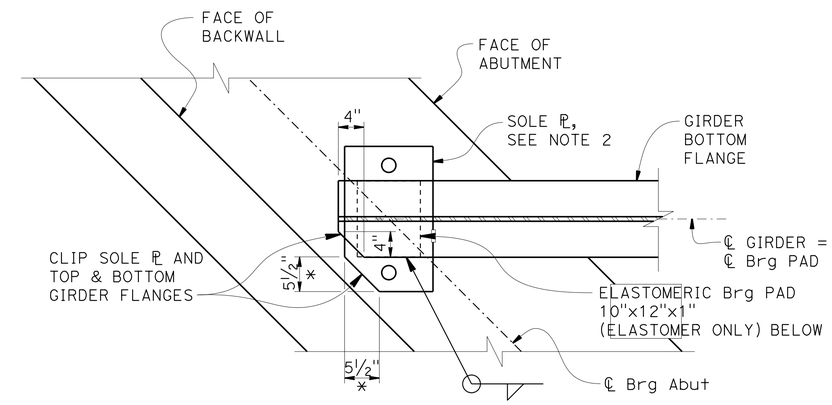

* Clip dimension for Expansion Bearing Sole Plate at Abutment 8 is 3".

SECTION C-C

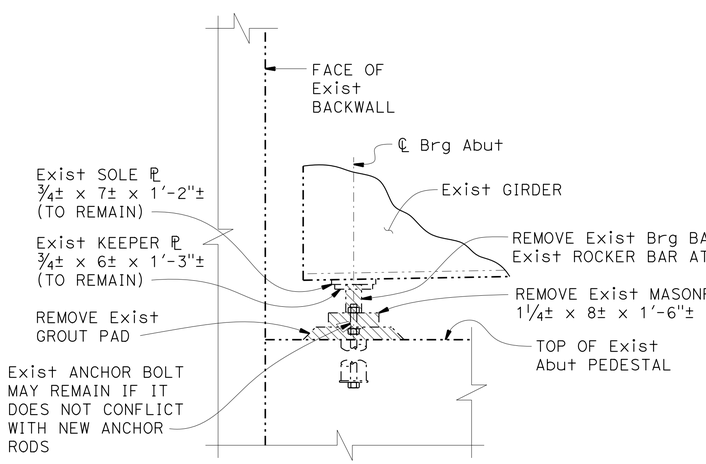

EXISTING ELEVATION

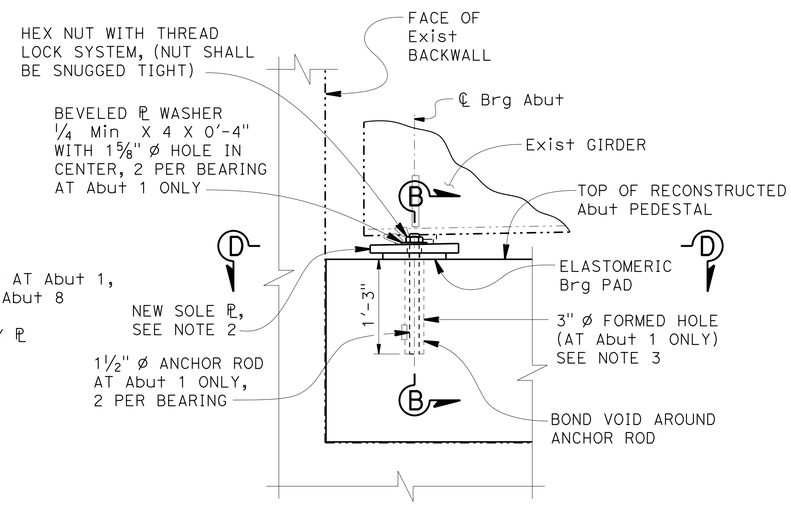

NEW ELEVATION

BEARING REPLACEMENT DETAILS

1" = 1'-0"

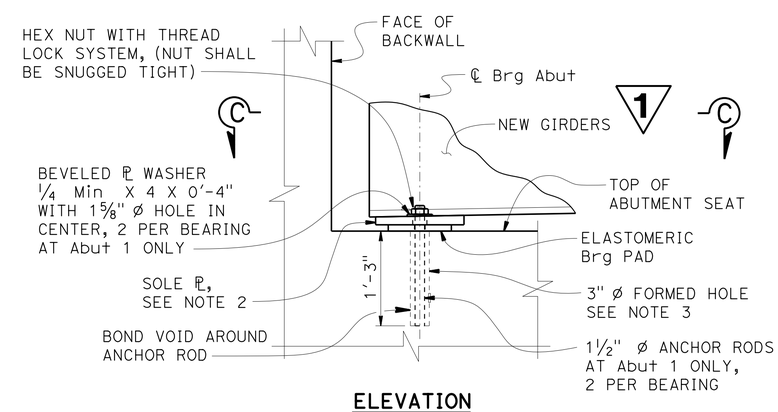

ELEVATION

NEW GIRDER BEARING DETAILS

1" = 1'-0"

NOTE:
THE CONTRACTOR SHALL VERIFY ALL CONTROLLING FIELD DIMENSIONS BEFORE ORDERING OR FABRICATING ANY MATERIAL.

1 REVISED PER ADDENDUM No. 1 DATED OCTOBER 06, 2016

	BY	CHECKED
DESIGN	Manode Kodsuntie	Kevin Harper
DETAILS	B. Huddleston/G. Dickerson	Kevin Harper
QUANTITIES	Gerald Dickerson	Eric Watson

STATE OF CALIFORNIA
DEPARTMENT OF TRANSPORTATION

DIVISION OF ENGINEERING SERVICES
STRUCTURE DESIGN
DESIGN BRANCH 1

BRIDGE NO. 09-0062
POST MILE 51.21

SPRING GARDEN BRIDGE & OVERHEAD (WIDEN)
ABUTMENT BEARING DETAILS

STRUCTURES DESIGN DETAIL SHEET (ENGLISH) (REV. 09-01-10)

ORIGINAL SCALE IN INCHES FOR REDUCED PLANS 0 1 2 3

UNIT: 3576
PROJECT NUMBER & PHASE: 02000001611
CONTRACT NO.: 02-2C0904

DISREGARD PRINTS BEARING EARLIER REVISION DATES

REVISION DATES: 08-18-15 08-31-15 11-24-15 12-01-15

SHEET 14 OF 41

FILE => 09-0062-f-a01d108.dgn

USERNAME => s115152 DATE PLOTTED => 06-OCT-2016 TIME PLOTTED => 06:40

DIST	COUNTY	ROUTE	POST MILES TOTAL PROJECT	SHEET No.	TOTAL SHEETS
02	Plu	70	50.6/51.7	140	181

Manode Kodsuntie 6/2/16
REGISTERED CIVIL ENGINEER DATE

06-15-16
PLANS APPROVAL DATE

REGISTERED PROFESSIONAL ENGINEER Manode Kodsuntie No. 56671 Exp. 6/30/17 CIVIL STATE OF CALIFORNIA

The State of California or its officers or agents shall not be responsible for the accuracy or completeness of scanned copies of this plan sheet.

1 REVISED PER ADDENDUM No. 1 DATED OCTOBER 06, 2016

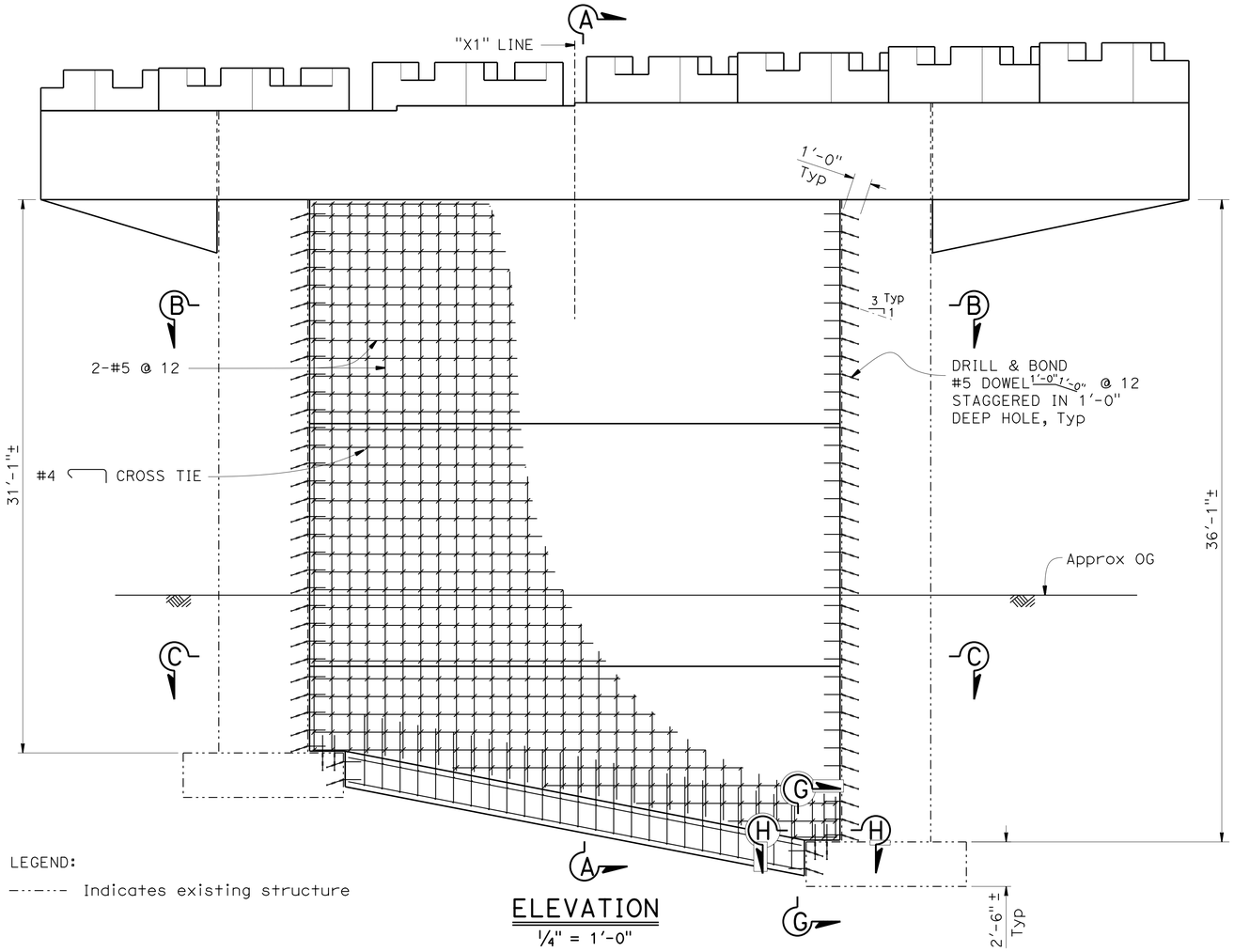

LEGEND:

-·-·-·- Indicates existing structure

ELEVATION
1/4" = 1'-0"

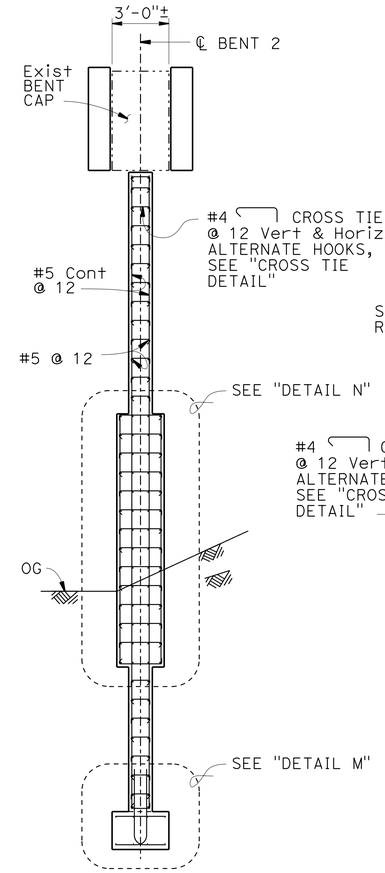

SECTION A-A
1/4" = 1'-0"

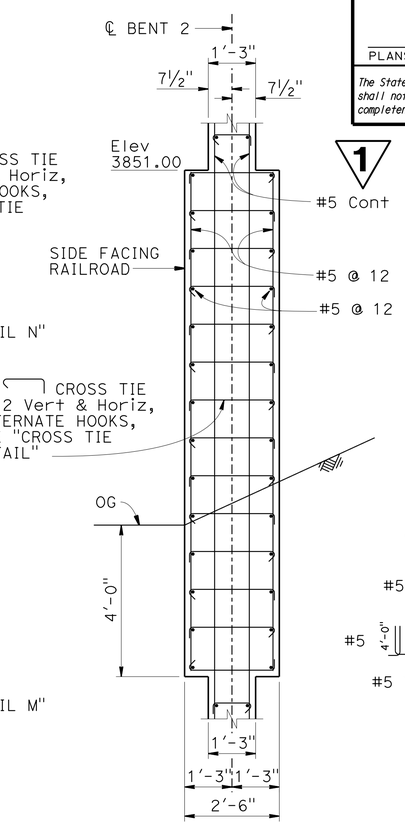

DETAIL N
1/2" = 1'-0"

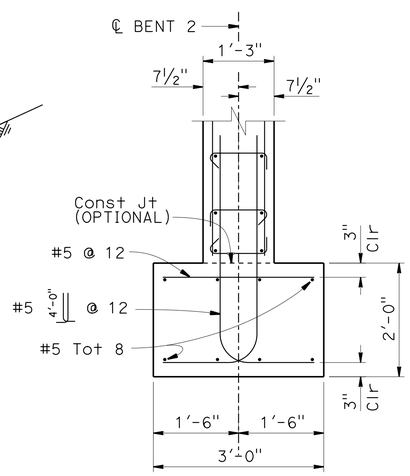

DETAIL M
3/4" = 1'-0"

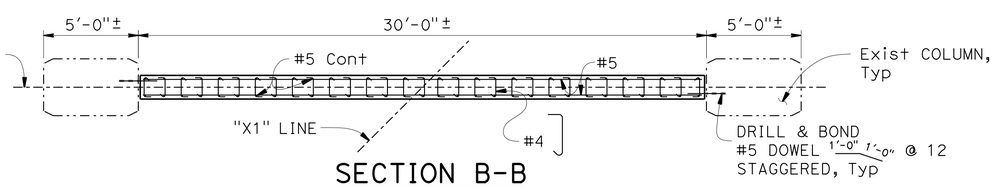

SECTION B-B
1/4" = 1'-0"

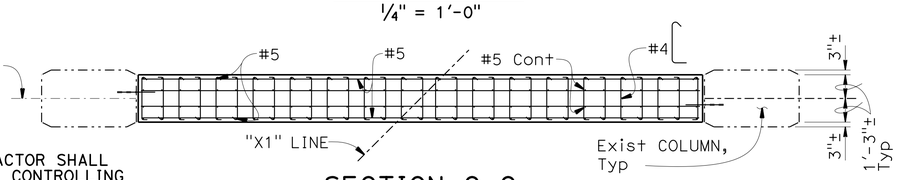

SECTION C-C
1/4" = 1'-0"

NOTE:
THE CONTRACTOR SHALL VERIFY ALL CONTROLLING FIELD DIMENSIONS BEFORE ORDERING OR FABRICATING ANY MATERIAL.

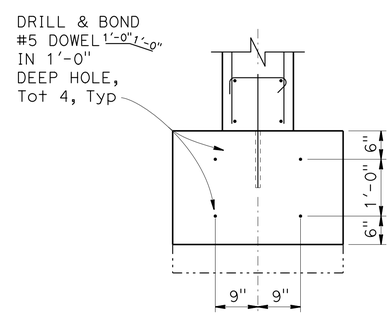

SECTION G-G
3/4" = 1'-0"

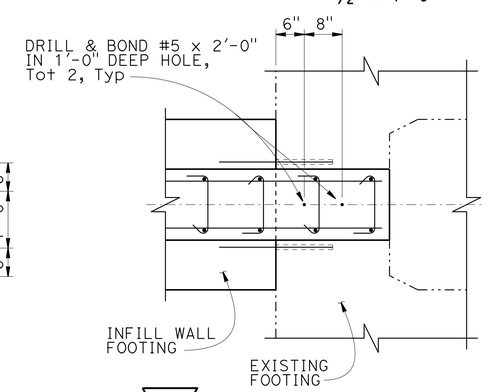

1 SECTION H-H
3/4" = 1'-0"

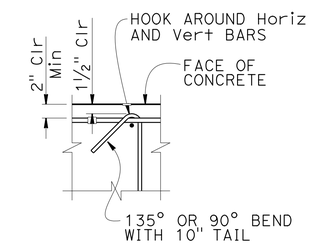

CROSS TIE DETAIL
NO SCALE

DESIGN	BY Manode Kodsuntie	CHECKED Kevin Harper	
DETAILS	BY Jie Tang/G. Dickerson	CHECKED Kevin Harper	
QUANTITIES	BY Gerald Dickerson	CHECKED Eric Chaffee	

STATE OF CALIFORNIA
DEPARTMENT OF TRANSPORTATION

DIVISION OF ENGINEERING SERVICES
STRUCTURE DESIGN
DESIGN BRANCH 1

BRIDGE NO. 09-0062
POST MILE 51.2

SPRING GARDEN BRIDGE & OVERHEAD (WIDEN)
INFILL WALL BENT 2

STRUCTURES DESIGN DETAIL SHEET (ENGLISH) (REV. 09-01-10)

ORIGINAL SCALE IN INCHES FOR REDUCED PLANS 0 1 2 3

UNIT: 3576
PROJECT NUMBER & PHASE: 02000001611
CONTRACT NO.: 02-2C0904

DISREGARD PRINTS BEARING EARLIER REVISION DATES

REVISION DATES: 10-08-15 10-15-15 10-23-15 12-01-15

SHEET 15 OF 41

FILE => 09-0062-g-b02dt.dgn

USERNAME => s115152 DATE PLOTTED => 06-OCT-2016 TIME PLOTTED => 06:40

DIST	COUNTY	ROUTE	POST MILES TOTAL PROJECT	SHEET No.	TOTAL SHEETS
02	Plu	70	50.6/51.7	144	181

Manode Kodsuntie 6/2/16
REGISTERED CIVIL ENGINEER DATE

06-15-16
PLANS APPROVAL DATE

REGISTERED PROFESSIONAL ENGINEER
Manode Kodsuntie
No. 56671
Exp. 6/30/17
CIVIL
STATE OF CALIFORNIA

The State of California or its officers or agents shall not be responsible for the accuracy or completeness of scanned copies of this plan sheet.

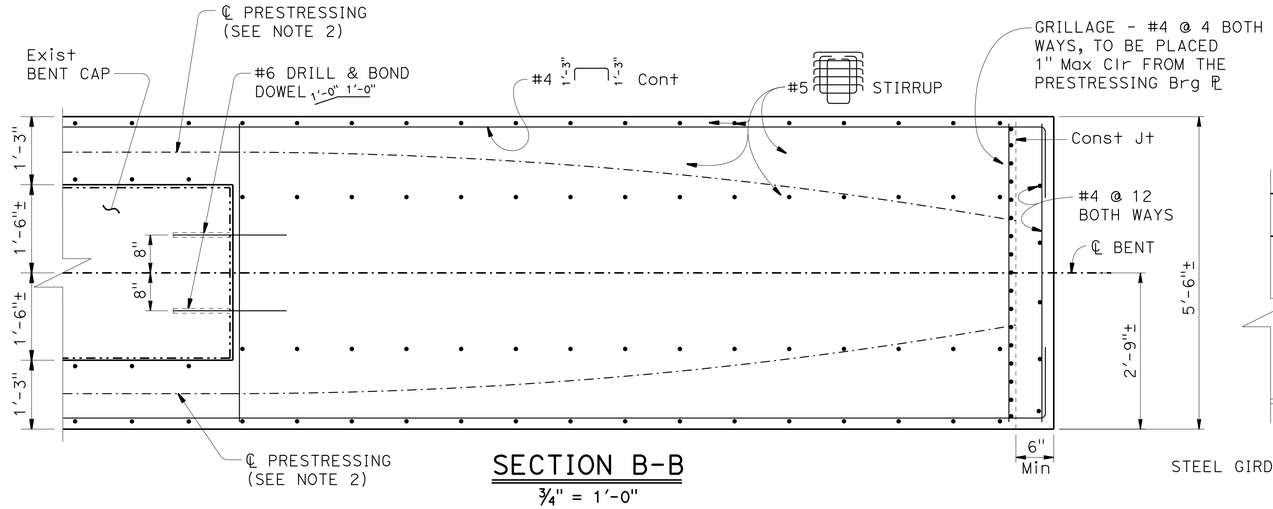

SECTION B-B
¾" = 1'-0"

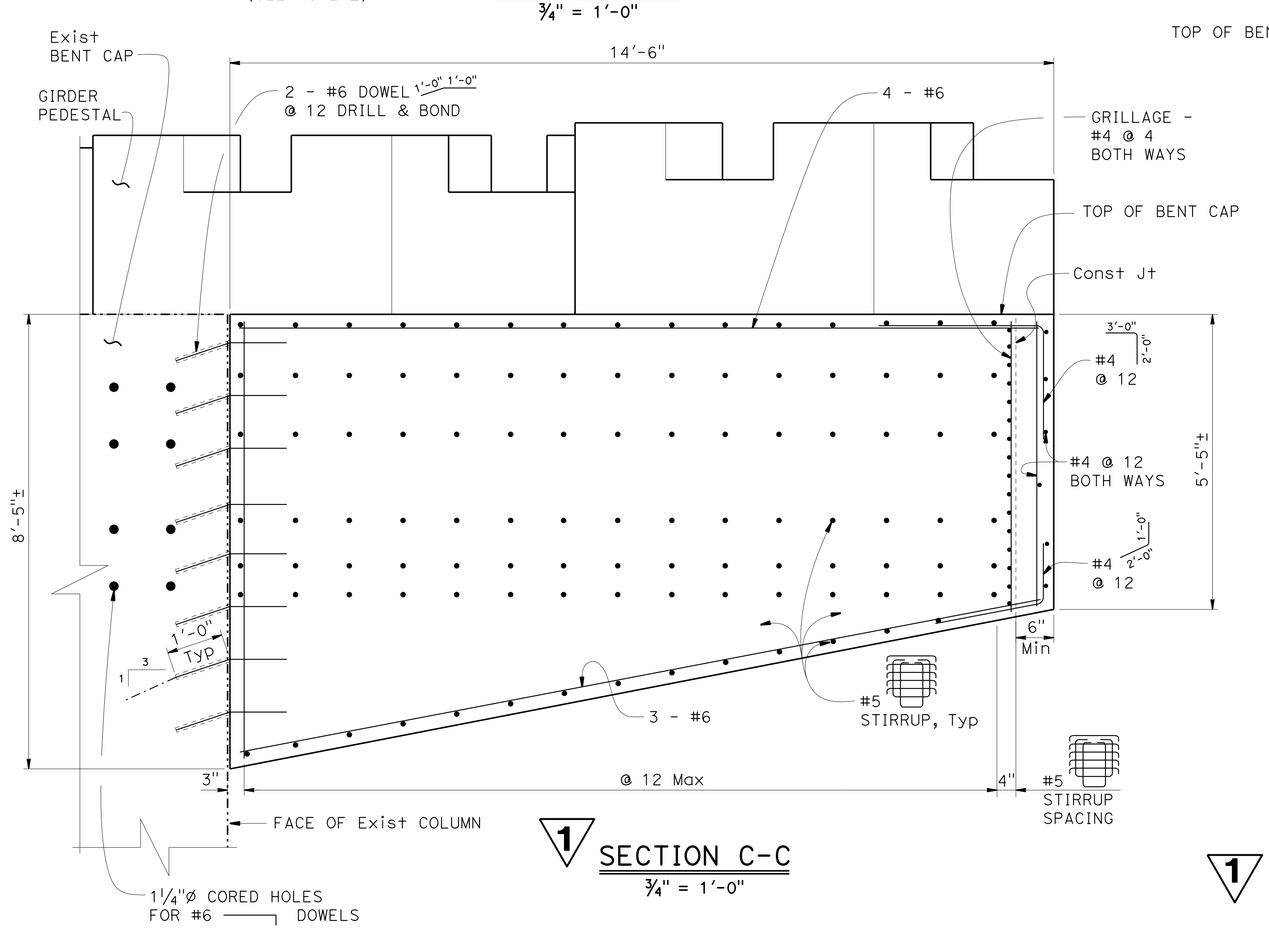

1 SECTION C-C
¾" = 1'-0"

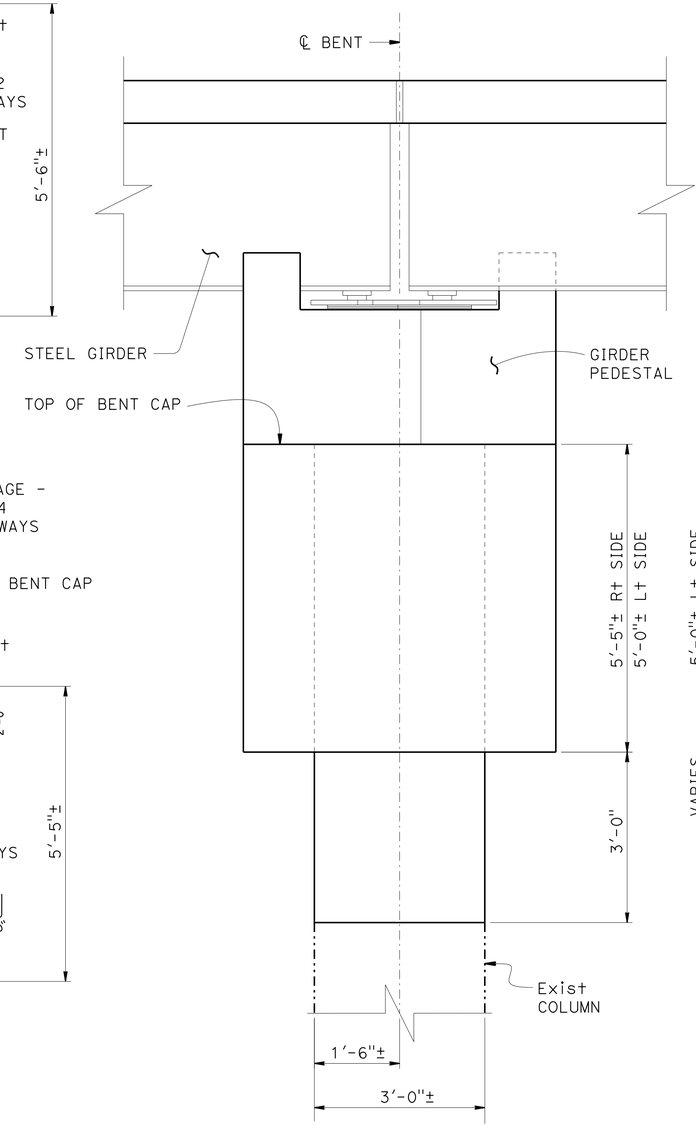

VIEW A-A
¾" = 1'-0"

NOTES:

1. For location of all sections & views, see "BENT DETAILS NO. 1" sheet.
2. For Prestress Tendon CG, see "PATH OF CENTER OF GRAVITY OF PRESTRESSING FORCE AT BENTS" on "BENT DETAILS NO. 3" sheet.

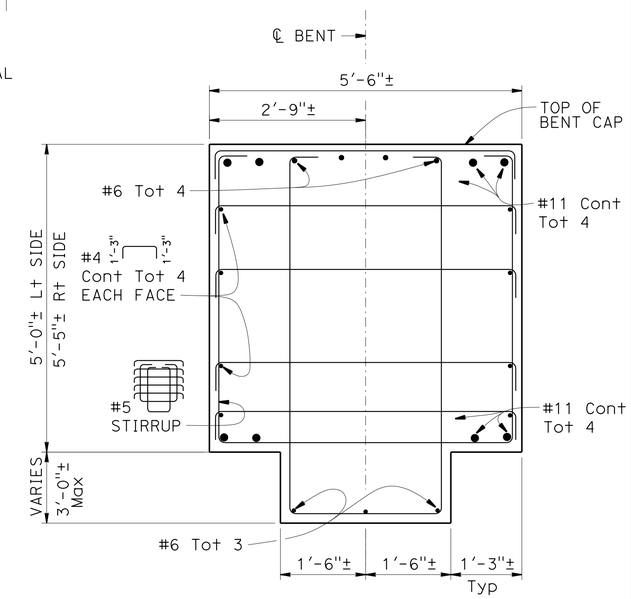

NOTE: Prestress Tendons not shown, see NOTE 2

SECTION E-E
¾" = 1'-0"

LEGEND:

-·-·-·- Indicates existing structure

1 **REVISED PER ADDENDUM No. 1 DATED OCTOBER 06, 2016**

NOTE:
THE CONTRACTOR SHALL VERIFY ALL CONTROLLING FIELD DIMENSIONS BEFORE ORDERING OR FABRICATING ANY MATERIAL.

	BY	CHECKED
DESIGN	Manode Kodsuntie	Kevin Harper
DETAILS	Bob Huddleston	Kevin Harper
QUANTITIES	Gerald Dickerson	Eric Chaffee

STATE OF CALIFORNIA
DEPARTMENT OF TRANSPORTATION

DIVISION OF ENGINEERING SERVICES
STRUCTURE DESIGN
DESIGN BRANCH 1

BRIDGE NO. 09-0062
POST MILE 51.21

SPRING GARDEN BRIDGE & OVERHEAD (WIDEN)
BENT DETAILS NO. 2

STRUCTURES DESIGN DETAIL SHEET (ENGLISH) (REV. 09-01-10)

ORIGINAL SCALE IN INCHES FOR REDUCED PLANS 0 1 2 3

UNIT: 3576
PROJECT NUMBER & PHASE: 02000001611
CONTRACT NO.: 02-2C0904

DISREGARD PRINTS BEARING EARLIER REVISION DATES
REVISION DATES: 02-19-15 12/01/15 11-23-15

SHEET 19 OF 41

FILE => 09-0062-h-bdt02.dgn

USERNAME => s115152 DATE PLOTTED => 06-OCT-2016 TIME PLOTTED => 06:41

DIST	COUNTY	ROUTE	POST MILES TOTAL PROJECT	SHEET No.	TOTAL SHEETS
02	Plu	70	50.6/51.7	145	181

Manode Kodsuntie 6/2/16
REGISTERED CIVIL ENGINEER DATE

06-15-16
PLANS APPROVAL DATE

REGISTERED PROFESSIONAL ENGINEER Manode Kodsuntie No. 56671 Exp. 6/30/17 CIVIL STATE OF CALIFORNIA

The State of California or its officers or agents shall not be responsible for the accuracy or completeness of scanned copies of this plan sheet.

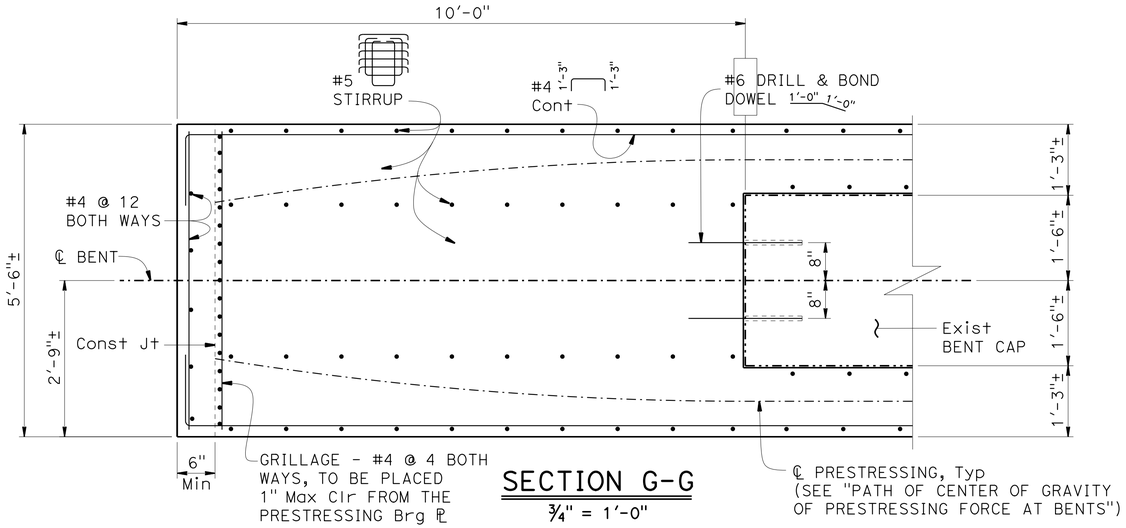

SECTION G-G

¾" = 1'-0"

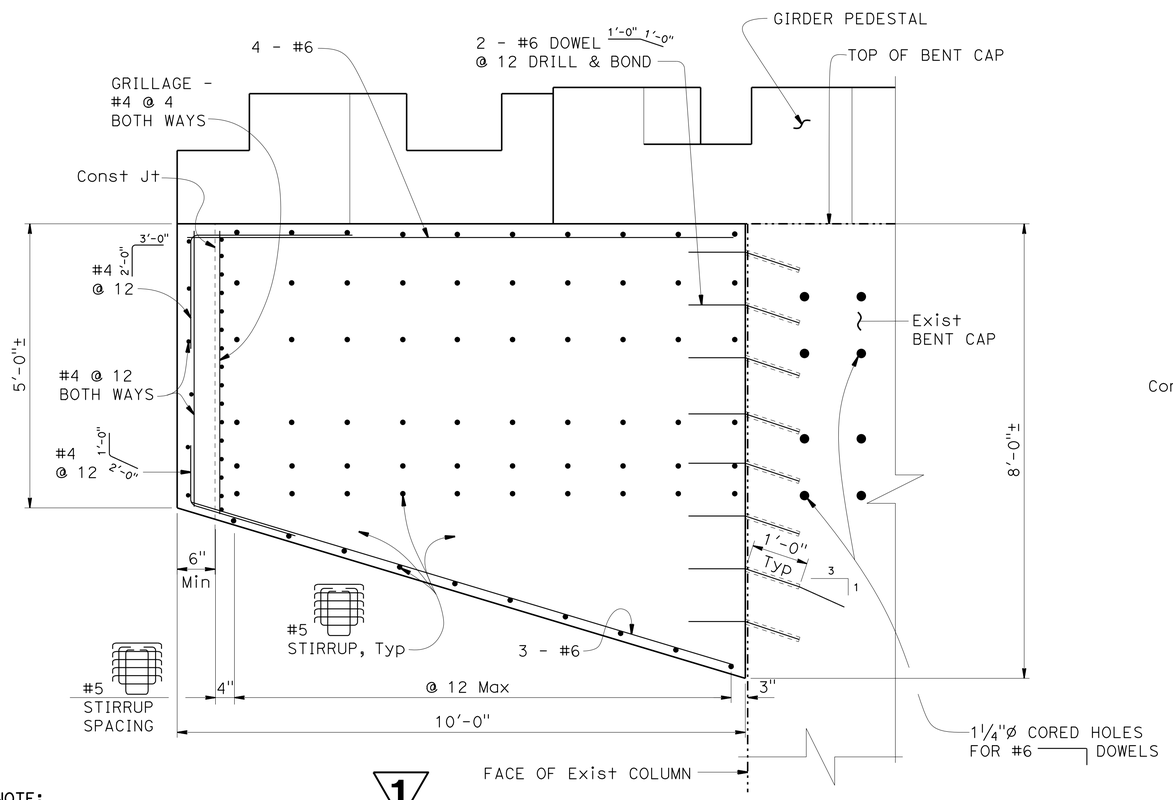

NOTE:
THE CONTRACTOR SHALL VERIFY ALL CONTROLLING FIELD DIMENSIONS BEFORE ORDERING OR FABRICATING ANY MATERIAL.

1

SECTION H-H

¾" = 1'-0"

PRESTRESSING NOTES

270 ksi Low Relaxation Strand or 150 ksi Bar

WORKING FORCE P_f:

P_f = 890 kips total force per bent cap after losses

The total losses due to creep, shrinkage and elastic shortening of concrete and relaxing of prestressing steel assumed to be 21.0 ksi.

CONCRETE:

f'_c = 4 ksi @ 28 days
f'_{ci} = 3.5 ksi @ time of stressing

STRESSING SEQUENCE:

Tendons on each side of the ℄ Bent shall be stressed simultaneously (no eccentricity about the vertical axis is allowed). Stressing sequence about the horizontal axis shall minimize eccentricity.

Stressing shall be performed from the right side.

Girder pedestals and girders shall not be placed on the lengthened bent caps until the bent cap prestressing has been stressed and grouted.

NOTES:

For location of Sections, see "BENT DETAILS NO. 1" sheet.

-·-·-·- Indicates existing structure

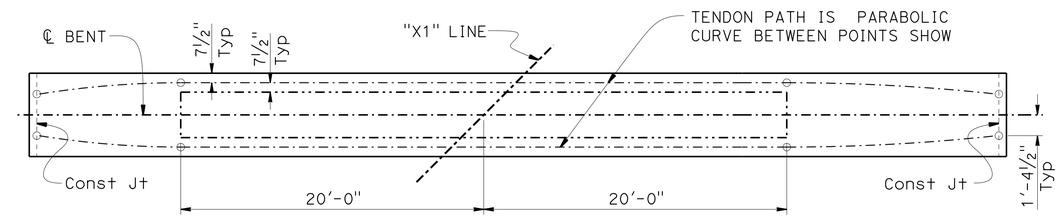

PLAN

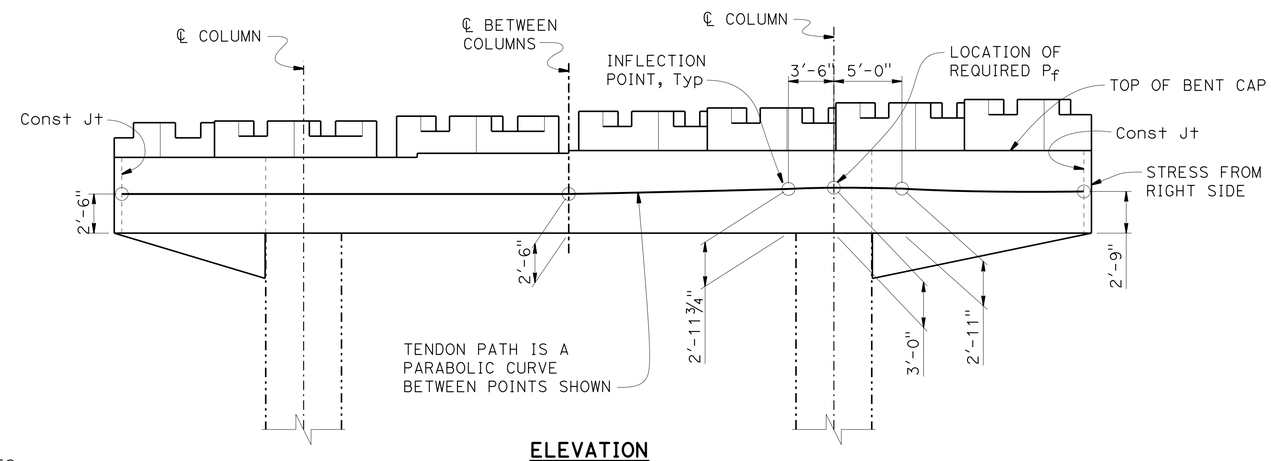

ELEVATION

PATH OF CENTER OF GRAVITY OF PRESTRESSING FORCE AT BENTS

NO SCALE

1 **REVISED PER ADDENDUM No. 1 DATED OCTOBER 06, 2016**

DESIGN	BY Manode Kodsuntie	CHECKED Kevin Harper	
DETAILS	BY Bob Huddleston	CHECKED Kevin Harper	
QUANTITIES	BY Gerald Dickerson	CHECKED Eric Chaffee	

STATE OF CALIFORNIA
DEPARTMENT OF TRANSPORTATION

DIVISION OF ENGINEERING SERVICES
STRUCTURE DESIGN
DESIGN BRANCH 1

BRIDGE NO. 09-0062
POST MILE 51.21

SPRING GARDEN BRIDGE & OVERHEAD (WIDEN)

BENT DETAILS NO. 3

STRUCTURES DESIGN DETAIL SHEET (ENGLISH) (REV. 09-01-10)

ORIGINAL SCALE IN INCHES FOR REDUCED PLANS 0 1 2 3

UNIT: 3576
PROJECT NUMBER & PHASE: 02000001611
CONTRACT NO.: 02-2C0904

DISREGARD PRINTS BEARING EARLIER REVISION DATES

REVISION DATES 02-19-15 12/01/15 11-24-15

SHEET 20 OF 41

FILE => 09-0062-h-bdt03.dgn

USERNAME => s115152 DATE PLOTTED => 06-OCT-2016 TIME PLOTTED => 06:41

DIST	COUNTY	ROUTE	POST MILES TOTAL PROJECT	SHEET No.	TOTAL SHEETS
02	Plu	70	50.6/51.7	147	181

Manode Kodsuntie 6/2/16
REGISTERED CIVIL ENGINEER DATE

06-15-16
PLANS APPROVAL DATE

REGISTERED PROFESSIONAL ENGINEER Manode Kodsuntie No. 56671 Exp. 6/30/17 CIVIL STATE OF CALIFORNIA

The State of California or its officers or agents shall not be responsible for the accuracy or completeness of scanned copies of this plan sheet.

1 REVISED PER ADDENDUM No. 1 DATED OCTOBER 06, 2016

LEGEND:
Indicates bridge removal (portion)
Indicates existing structure

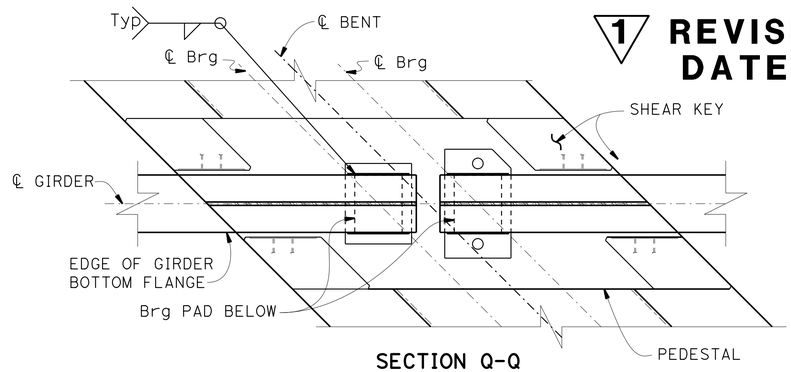

SECTION Q-Q
3/4" = 1'-0"

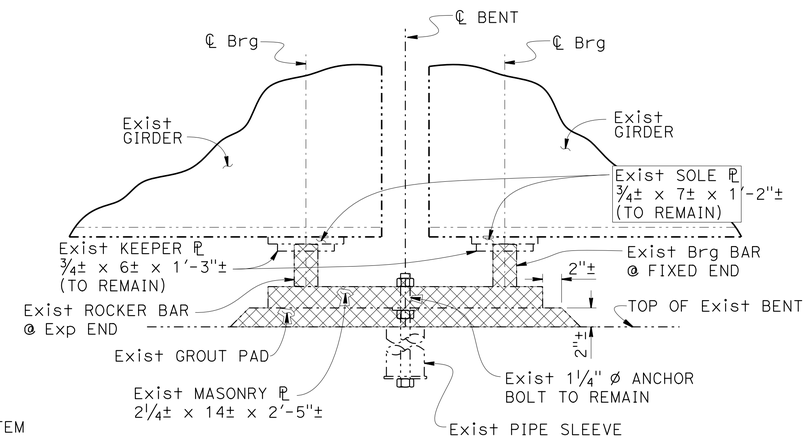

EXISTING ELEVATION

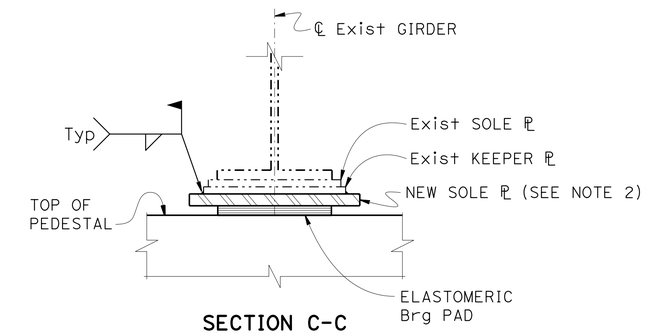

SECTION C-C
NO SCALE

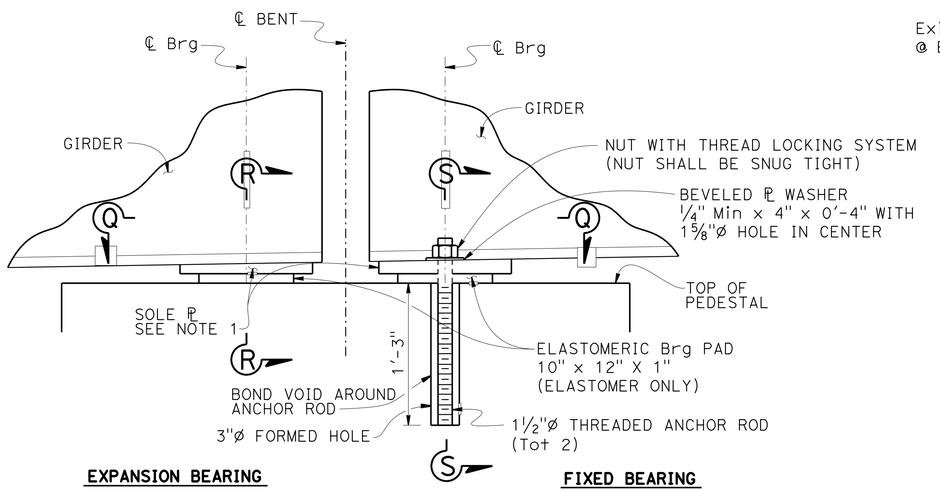

EXPANSION BEARING FIXED BEARING

ELEVATION

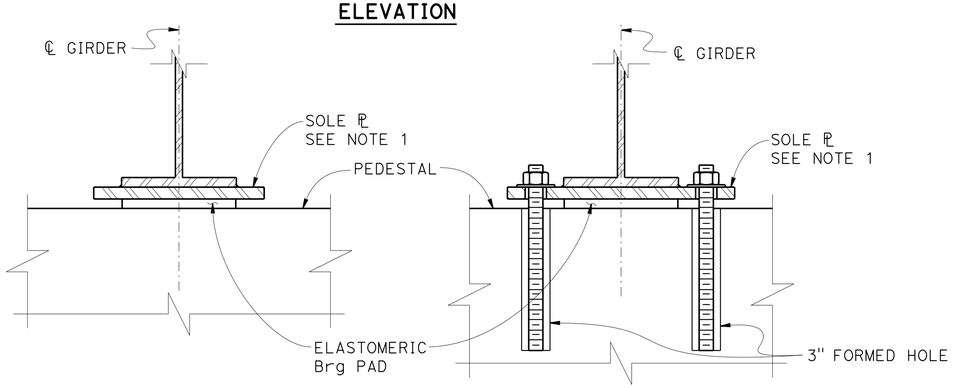

SECTION R-R SECTION S-S

NEW GIRDER BEARING DETAILS
1 1/2" = 1'-0" UNLESS OTHERWISE SHOWN

NOTE:
THE CONTRACTOR SHALL VERIFY ALL CONTROLLING FIELD DIMENSIONS BEFORE ORDERING OR FABRICATING ANY MATERIAL.

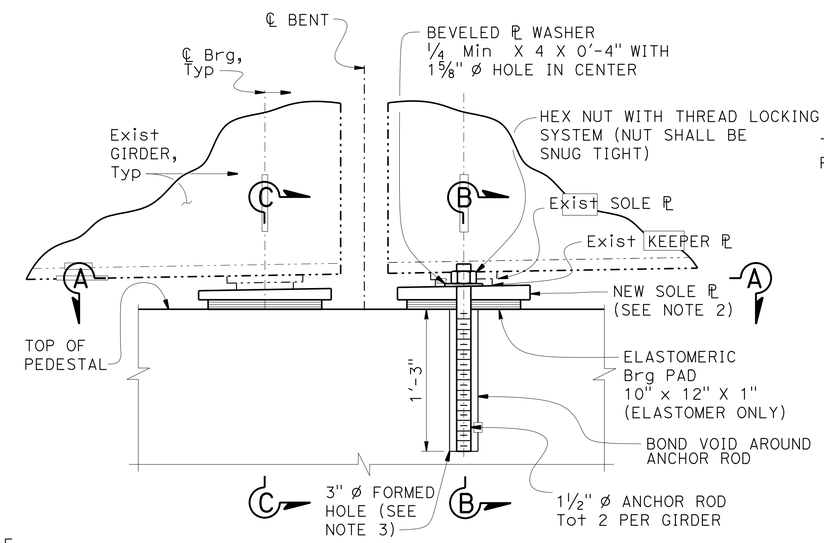

EXPANSION BEARING FIXED BEARING

NEW ELEVATION

BEARING REPLACEMENT DETAILS
1 1/2" = 1'-0" UNLESS OTHERWISE SHOW

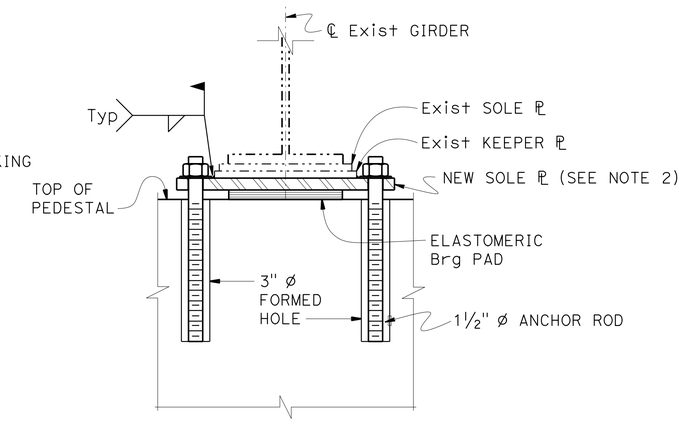

SECTION B-B
NO SCALE

NOTES:
1. For "NEW GIRDER SOLE PLATE DETAILS", see "BENT BEARING DETAILS NO. 2" sheet. 1
2. For "EXISTING GIRDER SOLE PLATE DETAILS", see "BENT BEARING DETAILS NO. 2" sheet.
3. Anchor rod may be cast in place without formed hole.
4. For "SECTION A-A", see "BENT BEARING DETAILS NO. 2" sheet.

	BY	CHECKED
DESIGN	Manode Kodsuntie	Kevin Harper
DETAILS	Gerald Dickerson	Kevin Harper
QUANTITIES	Gerald Dickerson	Eric Watson

STATE OF CALIFORNIA
DEPARTMENT OF TRANSPORTATION

DIVISION OF ENGINEERING SERVICES
STRUCTURE DESIGN
DESIGN BRANCH 1

BRIDGE NO. 09-0062
POST MILE 51.2

SPRING GARDEN BRIDGE & OVERHEAD (WIDEN)
BENT BEARING DETAILS NO. 1

STRUCTURES DESIGN DETAIL SHEET (ENGLISH) (REV. 09-01-10)

ORIGINAL SCALE IN INCHES FOR REDUCED PLANS 0 1 2 3

UNIT: 3576
PROJECT NUMBER & PHASE: 02000001611
CONTRACT NO.: 02-2C0904

DISREGARD PRINTS BEARING EARLIER REVISION DATES 02-23-15 10-06-15 11-24-15

SHEET 22 OF 41

FILE => 09-0062-1-brgdt01.dgn

USERNAME => s113152 DATE PLOTTED => 06-OCT-2016 TIME PLOTTED => 06:41

DIST	COUNTY	ROUTE	POST MILES TOTAL PROJECT	SHEET No.	TOTAL SHEETS
02	Plu	70	50.6/51.7	149	181

Manode Kodsuntie 6/2/16
REGISTERED CIVIL ENGINEER DATE

06-15-16
PLANS APPROVAL DATE

REGISTERED PROFESSIONAL ENGINEER Manode Kodsuntie No. 56671 Exp. 6/30/17 CIVIL STATE OF CALIFORNIA

The State of California or its officers or agents shall not be responsible for the accuracy or completeness of scanned copies of this plan sheet.

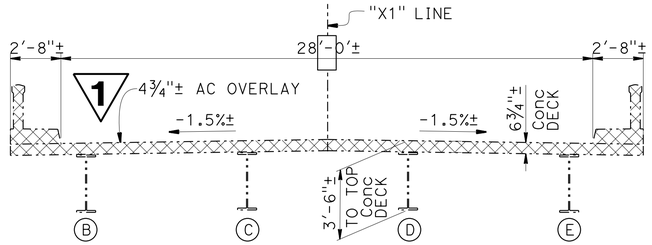

EXISTING

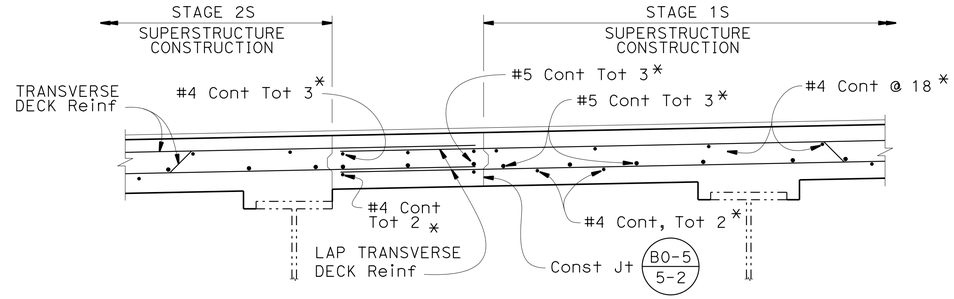

DETAIL A
1" = 1'-0"

1 REVISED PER ADDENDUM No. 1 DATED OCTOBER 06, 2016

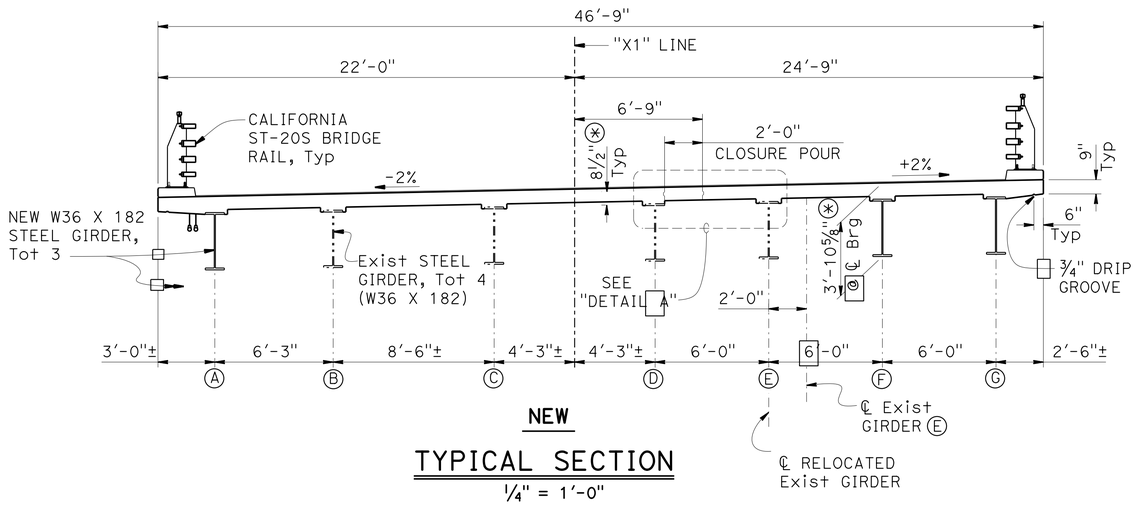

NEW

TYPICAL SECTION
¼" = 1'-0"

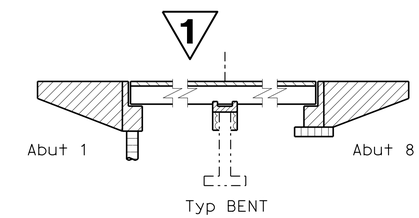

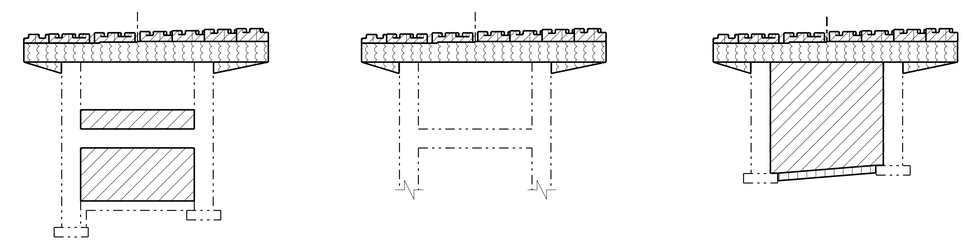

BENT 3 BENTS 4, 5 & 6 BENTS 2 & 7

CONCRETE STRENGTH AND TYPE LIMITS
NO SCALE

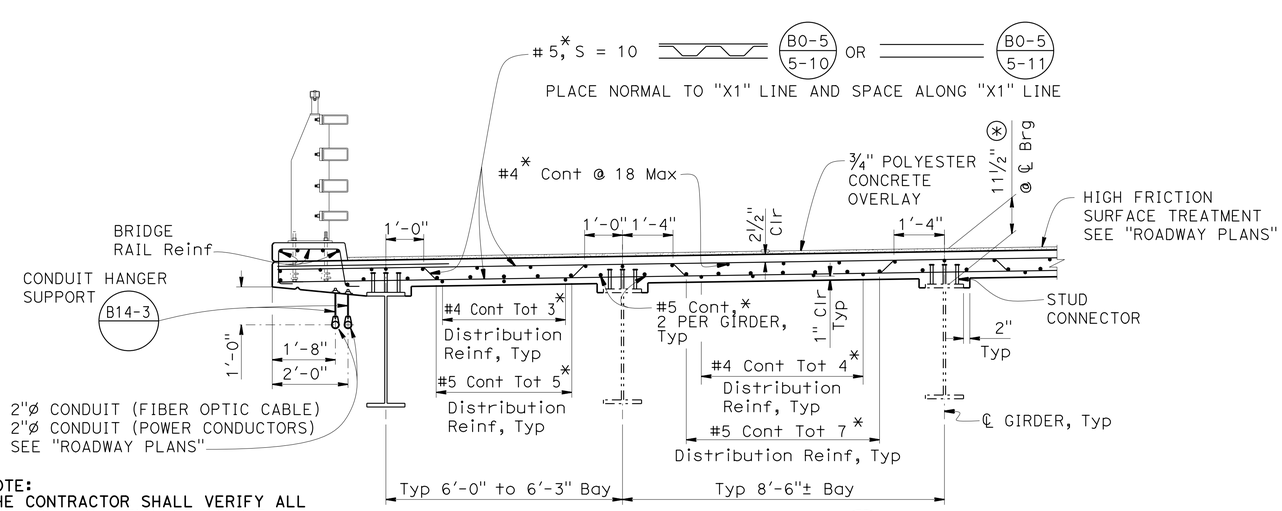

NOTE:
THE CONTRACTOR SHALL VERIFY ALL CONTROLLING FIELD DIMENSIONS BEFORE ORDERING OR FABRICATING ANY MATERIAL.

PART TYPICAL SECTION B0-5
½" = 1'-0"

LEGEND:

- Structural Concrete, Bridge
- Structural Concrete, Bridge (Polymer Fiber)
- Structural Concrete, Bridge (f'c = 4000 psi)
- Structural Concrete, Bridge Footing
- CIDH Concrete Pile
- Indicates existing structure
- (*) Dimension does not include ¾" polyester concrete overlay
- * Indicates epoxy coated reinforcement
- Indicates existing deck and railing removal limits
- (B) Girder designation

	BY	CHECKED
DESIGN	Manode Kodsuntie	Kevin Harper
DETAILS	Bob Huddleston	Kevin Harper
QUANTITIES	Gerald Dickerson	E. Watson/J. Tang

STATE OF CALIFORNIA
DEPARTMENT OF TRANSPORTATION

DIVISION OF ENGINEERING SERVICES
STRUCTURE DESIGN
DESIGN BRANCH 1

BRIDGE NO. 09-0062
POST MILE 51.2

SPRING GARDEN BRIDGE & OVERHEAD (WIDEN)
TYPICAL SECTION

STRUCTURES DESIGN DETAIL SHEET (ENGLISH) (REV. 09-01-10)

ORIGINAL SCALE IN INCHES FOR REDUCED PLANS 0 1 2 3

UNIT: 3576
PROJECT NUMBER & PHASE: 02000001611
CONTRACT NO.: 02-2C0904

DISREGARD PRINTS BEARING EARLIER REVISION DATES

REVISION DATES: 01-29-15 11/13/15 10-19-15

SHEET 24 OF 41

FILE => 09-0062-k-ts01.dgn

USERNAME => s115152 DATE PLOTTED => 06-OCT-2016 TIME PLOTTED => 06:41

DIST	COUNTY	ROUTE	POST MILES TOTAL PROJECT	SHEET No.	TOTAL SHEETS
02	Plu	70	50.6/51.7	151	181

Manode Kodsuntie 6/2/16
REGISTERED CIVIL ENGINEER DATE

06-15-16
PLANS APPROVAL DATE

REGISTERED PROFESSIONAL ENGINEER Manode Kodsuntie No. 56671 Exp. 6/30/17 CIVIL STATE OF CALIFORNIA

The State of California or its officers or agents shall not be responsible for the accuracy or completeness of scanned copies of this plan sheet.

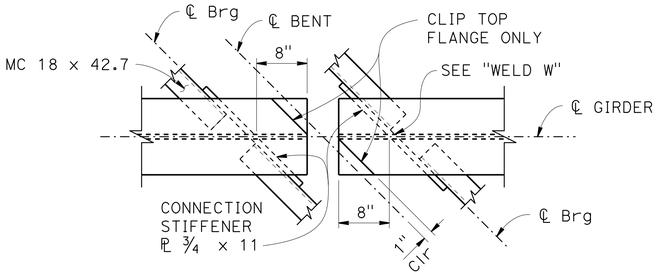

DETAIL X
1" = 1'-0"

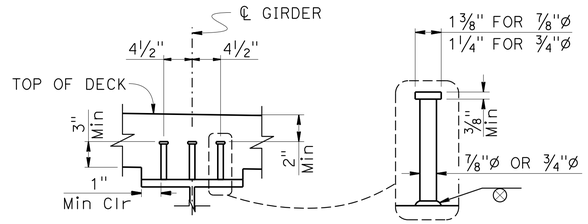

NOTE: Length to be determined by contractor.
Minimum length = 6"

STUD CONNECTORS
NO SCALE

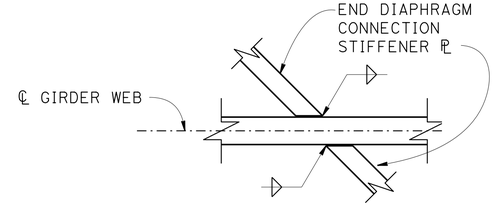

WELD W
6" = 1'-0"

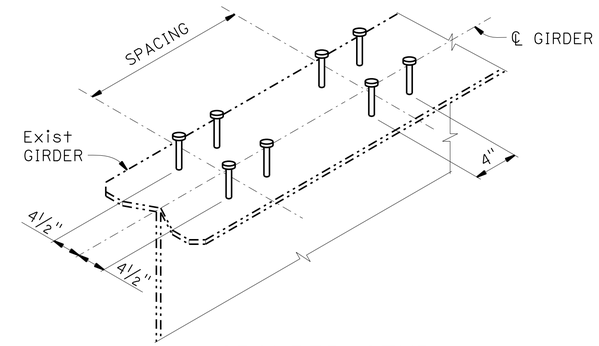

GROUPED STUD CONNECTOR DETAIL
NO SCALE

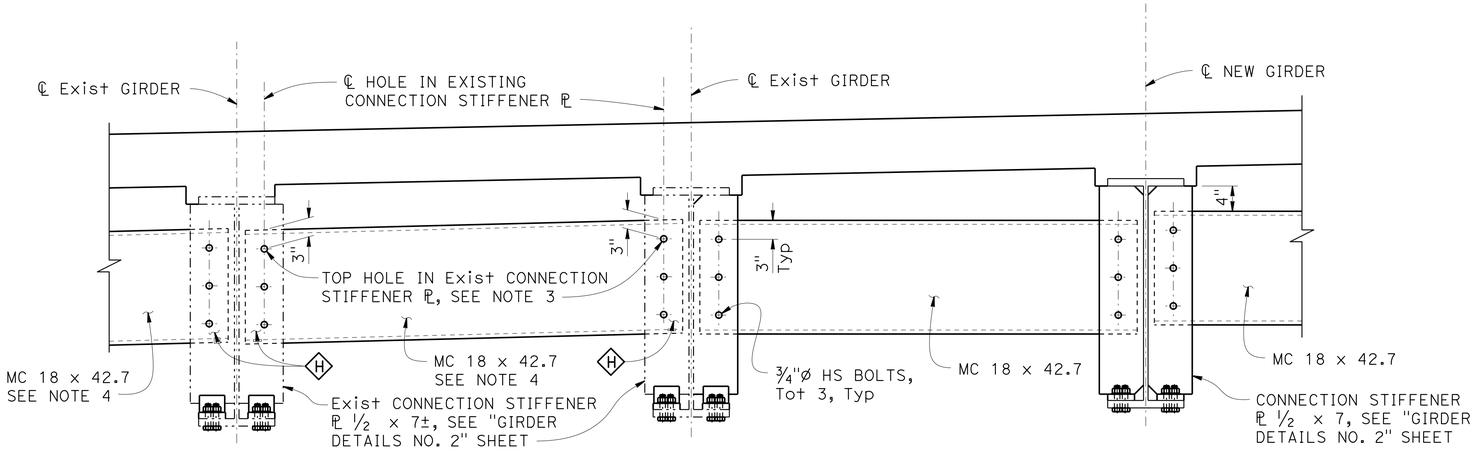

SECTION B-B (INTERMEDIATE DIAPHRAGM)
1" = 1'-0"

1 REVISED PER ADDENDUM No. 1 DATED OCTOBER 06, 2016

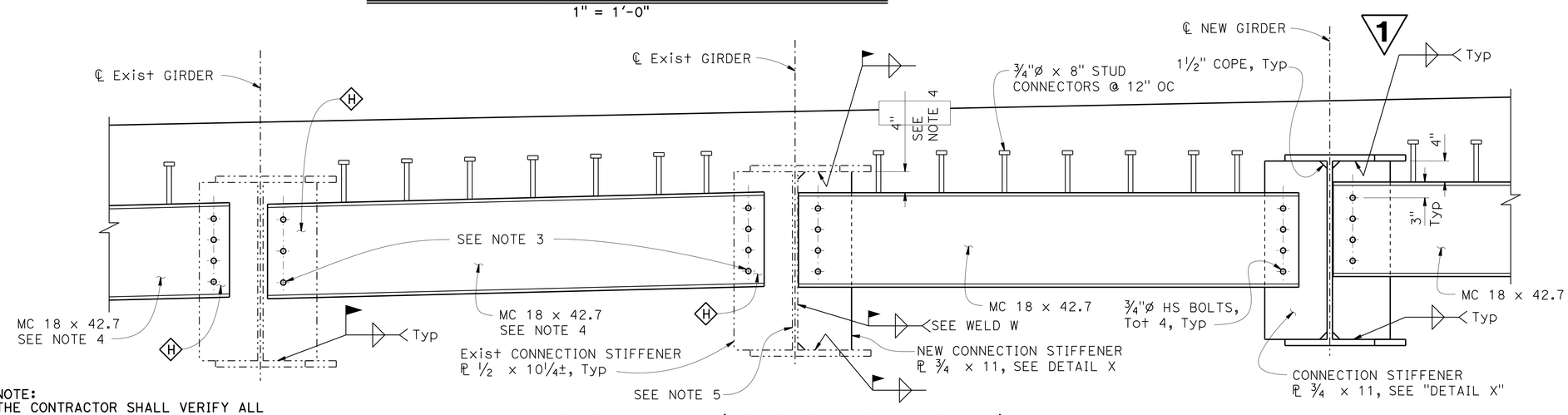

SECTION A-A (BENT END DIAPHRAGM)
1" = 1'-0"

NOTE:
THE CONTRACTOR SHALL VERIFY ALL CONTROLLING FIELD DIMENSIONS BEFORE ORDERING OR FABRICATING ANY MATERIAL.

NOTES:

1. For location of "SECTION A-A", "SECTION B-B"' and "DETAIL X", see "GIRDER LAYOUT" SHEET.
2. For Connection Stiffener details, see "GIRDER DETAILS NO. 2" sheet.
3. Holes in new MC 18 x 42.7 to match holes in existing connection stiffener ℙ.
4. New MC 18 x 42.7 diaphragm need not be horizontal when connected to existing connection stiffener ℙs.
5. Clean and spot blast clean and paint undercoat both sides of girder web 4" beyond both sides of new connection stiffener plates.

LEGEND:

—·—·— Indicates existing structure

Ⓗ Clean faying areas between new diaphragms and existing connection stiffener plates

	BY	CHECKED
DESIGN	Manode Kodsuntie	Kevin Harper
DETAILS	G. Dickerson / J.Tang	Kevin Harper
QUANTITIES	Gerald Dickerson	Eric Watson

STATE OF CALIFORNIA
DEPARTMENT OF TRANSPORTATION

DIVISION OF ENGINEERING SERVICES
STRUCTURE DESIGN
DESIGN BRANCH 1

BRIDGE NO. 09-0062
POST MILE 51.21

SPRING GARDEN BRIDGE & OVERHEAD (WIDEN)
GIRDER DETAILS NO. 1

STRUCTURES DESIGN DETAIL SHEET (ENGLISH) (REV. 09-01-10)

ORIGINAL SCALE IN INCHES FOR REDUCED PLANS 0 1 2 3

UNIT: 3576
PROJECT NUMBER & PHASE: 02000001611
CONTRACT NO.: 02-2C0904

DISREGARD PRINTS BEARING EARLIER REVISION DATES

REVISION DATES: 07-24-15 11/25/15 10-14-15

SHEET 26 OF 41

FILE => 09-0062-m-gdt01.add

USERNAME => s115152 DATE PLOTTED => 06-OCT-2016 TIME PLOTTED => 06:41

DIST	COUNTY	ROUTE	POST MILES TOTAL PROJECT	SHEET No.	TOTAL SHEETS
02	Plu	70	50.6/51.7	152	181

Manode Kodsuntie 6/2/16
REGISTERED CIVIL ENGINEER DATE

06-15-16
PLANS APPROVAL DATE

REGISTERED PROFESSIONAL ENGINEER Manode Kodsuntie No. 56671 Exp. 6/30/17 CIVIL STATE OF CALIFORNIA

The State of California or its officers or agents shall not be responsible for the accuracy or completeness of scanned copies of this plan sheet.

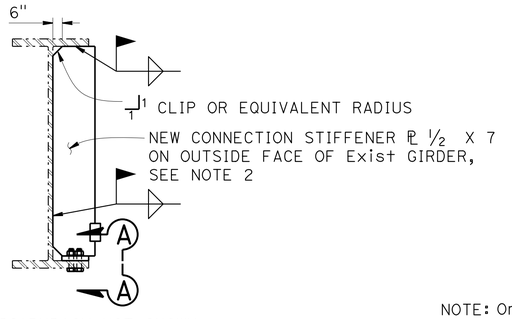

NOTE: DIAPHRAGM NOT SHOWN

EXISTING GIRDERS (B) AND (E)

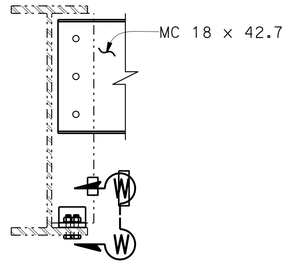

NOTE: One side stiffener shown, other side similar

EXISTING GIRDERS

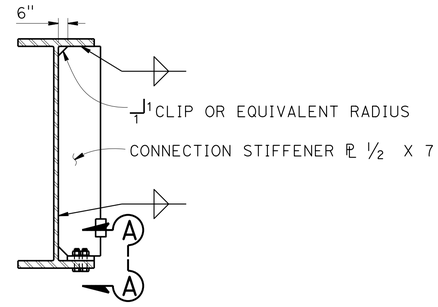

NOTE: Diaphragm not shown. One side stiffener shown, other side similar.

NEW GIRDERS

INTERMEDIATE DIAPHRAGM CONNECTION STIFFENER

1" = 1'-0"

1 REVISED PER ADDENDUM No. 1 DATED OCTOBER 06, 2016

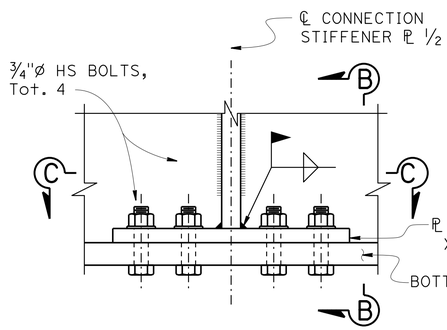

ELEVATION A-A

3" = 1'-0"

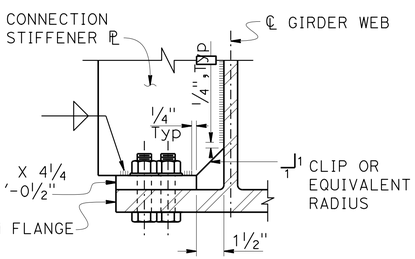

SECTION B-B

3" = 1'-0"

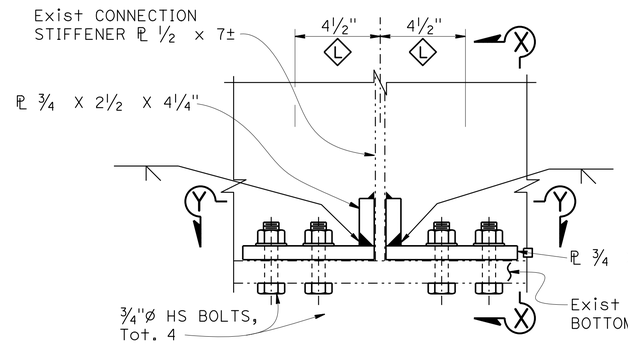

ELEVATION W-W

3" = 1'-0"

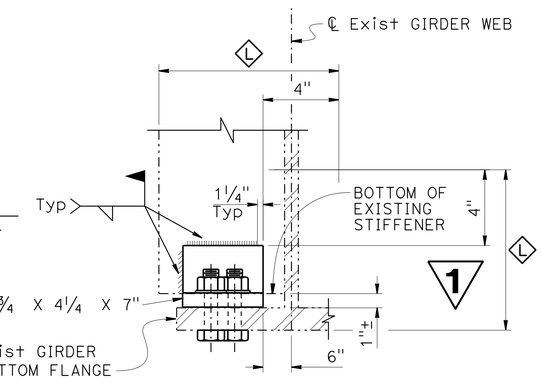

SECTION X-X

3" = 1'-0"

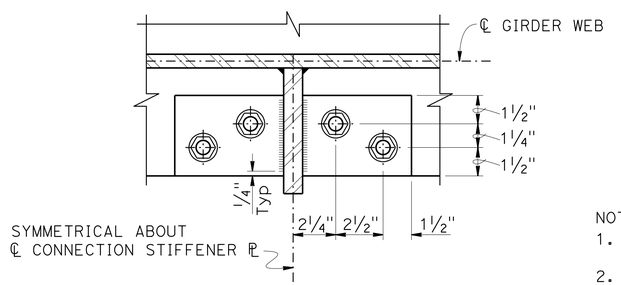

SECTION C-C

3" = 1'-0"

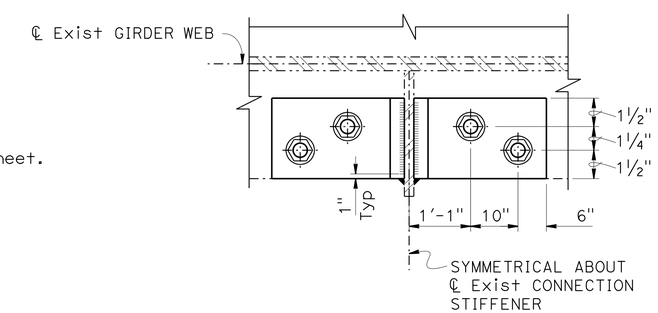

SECTION Y-Y

3" = 1'-0"

NOTE:
1. For location of diaphragms, see "GIRDER LAYOUT" sheet.
2. Clean and spot blast clean and paint undercoat both sides of existing girder webs and top and bottom surfaces of bottom flange 4" beyond both sides of new connection stiffener plates.

LEGEND:

—·—· Indicates existing structure

(L) Limits of clean and spot blast clean and paint undercoat on existing connection stiffener plates, girder webs and bottom flanges

NOTE:
THE CONTRACTOR SHALL VERIFY ALL CONTROLLING FIELD DIMENSIONS BEFORE ORDERING OR FABRICATING ANY MATERIAL.

	BY	CHECKED
DESIGN	Manode Kodsuntie	Kevin Harper
DETAILS	Gerald Dickerson	Kevin Harper
QUANTITIES	Gerald Dickerson	Eric Watson

STATE OF CALIFORNIA
DEPARTMENT OF TRANSPORTATION

DIVISION OF ENGINEERING SERVICES
STRUCTURE DESIGN
DESIGN BRANCH 1

BRIDGE NO. 09-0062
POST MILE 51.2

SPRING GARDEN BRIDGE & OVERHEAD (WIDEN)
GIRDER DETAILS NO. 2

STRUCTURES DESIGN DETAIL SHEET (ENGLISH) (REV. 09-01-10)

ORIGINAL SCALE IN INCHES FOR REDUCED PLANS 0 1 2 3

UNIT: 3576
PROJECT NUMBER & PHASE: 02000001611
CONTRACT NO.: 02-2C0904

DISREGARD PRINTS BEARING EARLIER REVISION DATES

REVISION DATES: 03-12-15 | 11/17/15 | 06-23-15

SHEET 27 OF 41

FILE => 09-0062-m-gdt02.add

USERNAME => s113152 DATE PLOTTED => 06-OCT-2016 TIME PLOTTED => 06:41

DIST	COUNTY	ROUTE	POST MILES TOTAL PROJECT	SHEET No.	TOTAL SHEETS
02	Plu	70	50.6/51.7	171	181

Manode Kodsuntie 6/2/16
REGISTERED CIVIL ENGINEER DATE

06-15-16
PLANS APPROVAL DATE

REGISTERED PROFESSIONAL ENGINEER
Manode Kodsuntie
No. 56671
Exp. 6/30/17
CIVIL
STATE OF CALIFORNIA

The State of California or its officers or agents shall not be responsible for the accuracy or completeness of electronic copies of this plan sheet.

N

CURVE DATA

No. ⊕	R	Δ	T	L
①	1050.00′	45°00′47″	435.06′	824.91′
②	1027.25′	07°12′09″	64.65′	129.13′

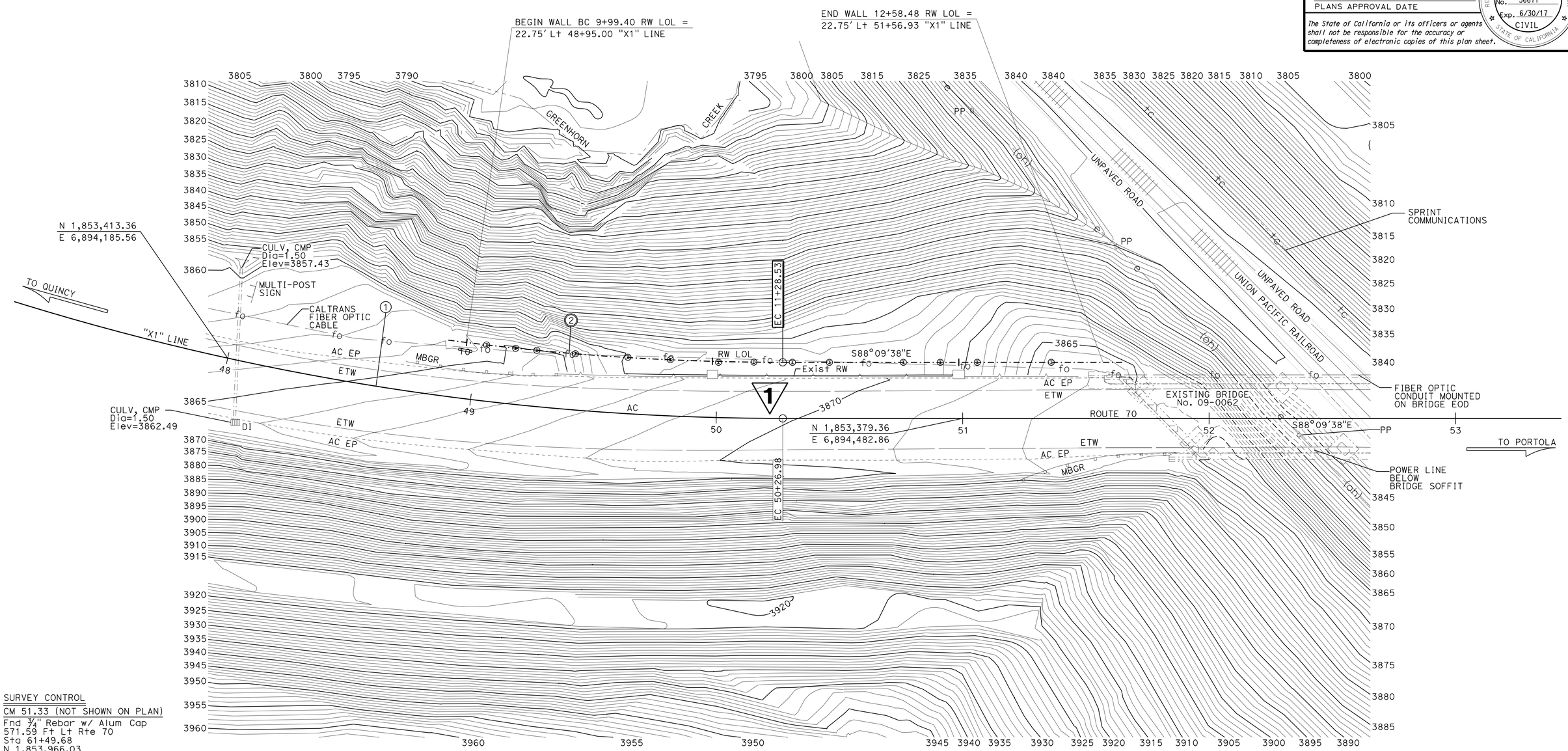

SURVEY CONTROL

CM 51.33 (NOT SHOWN ON PLAN)
Fnd ¾" Rebar w/ Alum Cap
571.59 Ft Lt Rte 70
Sta 61+49.68
N 1,853,966.03
E 6,895,294.19
Elev = 4063.44

Cal-Trans 6 (NOT SHOWN ON PLAN)
Fnd ¾" Rebar w/ Alum Cap
96.18 Ft S75°40′17″E Rte 70
Sta 64+73.72
N 1,853,551.45
E 6,895,909.27
Elev = 3902.61

1 REVISED PER ADDENDUM No. 1 DATED OCTOBER 06, 2016

LEGEND:
⊕ - Indicates Soldier Pile, not all soldier piles shown.

PRELIMINARY INVESTIGATION SECTION						
SCALE 1"=20′	VERT.DATUM NGVD29	PHOTOGRAMMETRY AS OF: X				
	HORZ.DATUM NAD83 (1991.35)	SURVEYED	BY DISTRICT	CHECKED	BY J. BORDEN	5/2015
ALIGNMENT TIES Dist TRAVERSE SHEET		DRAFTED	BY L. YOUNG 5/2015	CHECKED	BY S. SOU	5/2015

DESIGN	BY Manode Kodsuntie	CHECKED Keith Stillmunkes
DETAILS	BY Gerald Dickerson	CHECKED Keith Stillmunkes
QUANTITIES	BY Eric Watson	CHECKED Bob Huddleston

STATE OF CALIFORNIA
DEPARTMENT OF TRANSPORTATION

DIVISION OF ENGINEERING SERVICES
STRUCTURE DESIGN
DESIGN BRANCH 1

BRIDGE NO. 09E0006
POST MILE 51.21

RETAINING WALL NO. 50
FOUNDATION PLAN

STRUCTURES FOUNDATION PLAN SHEET (ENGLISH) (REV. 09-01-10)

ORIGINAL SCALE IN INCHES FOR REDUCED PLANS 0 1 2 3

UNIT: 3646
PROJECT NUMBER & PHASE: 0200000161
CONTRACT NO.: 02-2c0904

SUBMITTAL DATE	REVISION DATES				SHEET	OF
5/14/2015	12/04/15	04/04/16			5	15

FILE => 09e0006-e-fp101.dgn

USERNAME => s115152 DATE PLOTTED => 06-OCT-2016 TIME PLOTTED => 06:41

DIST	COUNTY	ROUTE	POST MILES TOTAL PROJECT	SHEET No.	TOTAL SHEETS
02	Plu	70	50.6/51.7	172	181

Manode Kodsuntie 6/2/16
REGISTERED CIVIL ENGINEER DATE

06-15-16
PLANS APPROVAL DATE

REGISTERED PROFESSIONAL ENGINEER Manode Kodsuntie No. 56671 Exp. 6/30/17 CIVIL STATE OF CALIFORNIA

The State of California or its officers or agents shall not be responsible for the accuracy or completeness of scanned copies of this plan sheet.

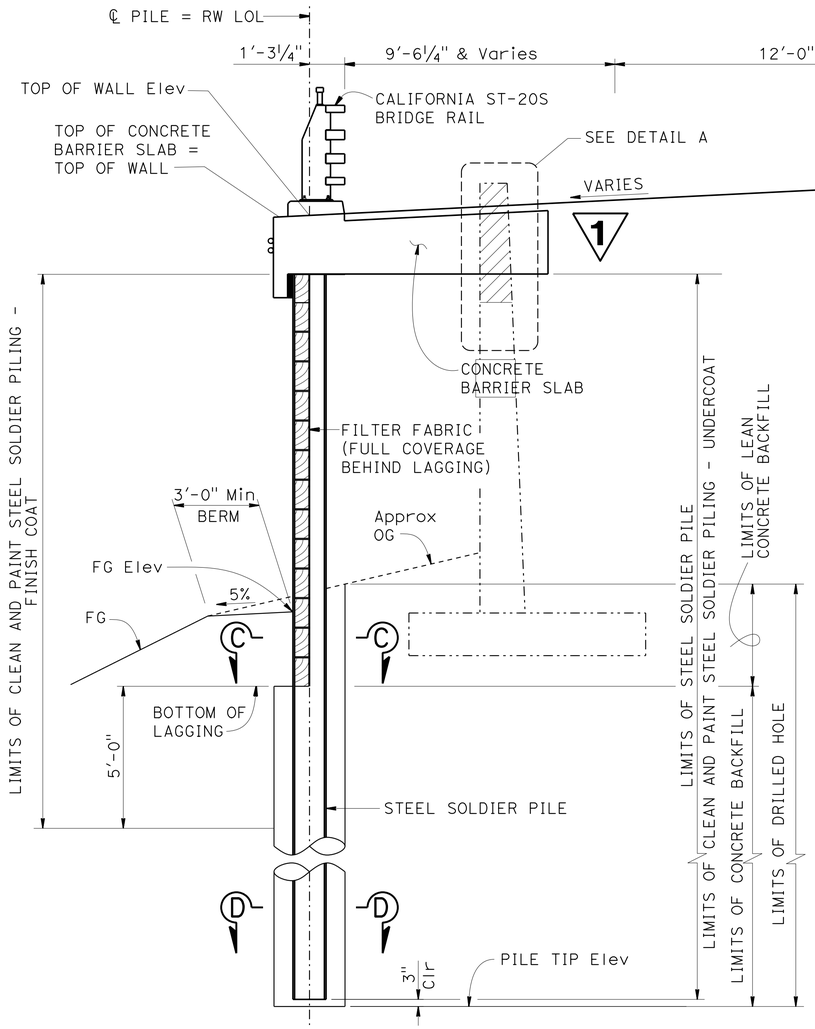

TYPICAL SECTION
⅜" = 1'-0"

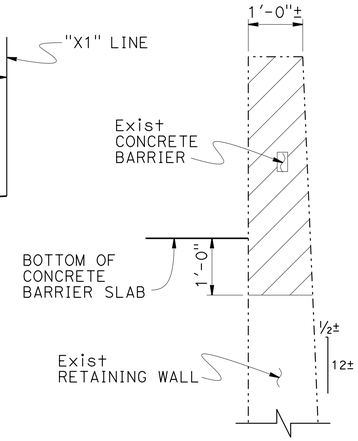

DETAIL A
¾" = 1'-0"

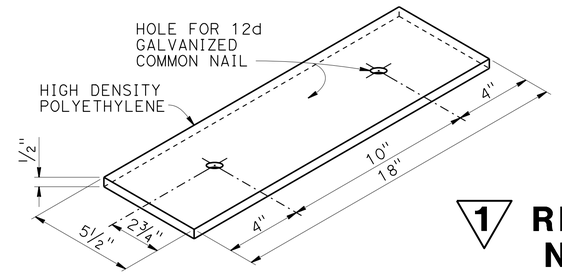

SHIM DETAIL
3" = 1'-0"

1 **REVISED PER ADDENDUM No. 1 DATED OCTOBER 06, 2016**

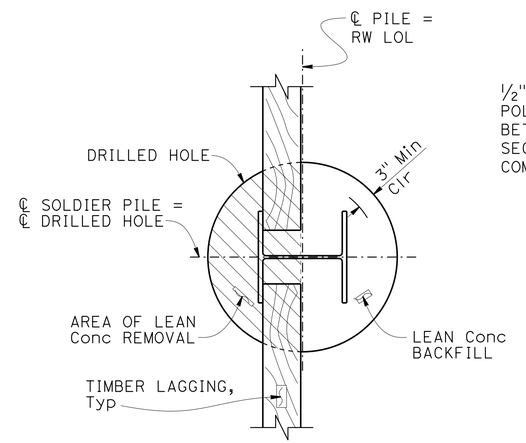

SECTION C-C
1" = 1'-0"

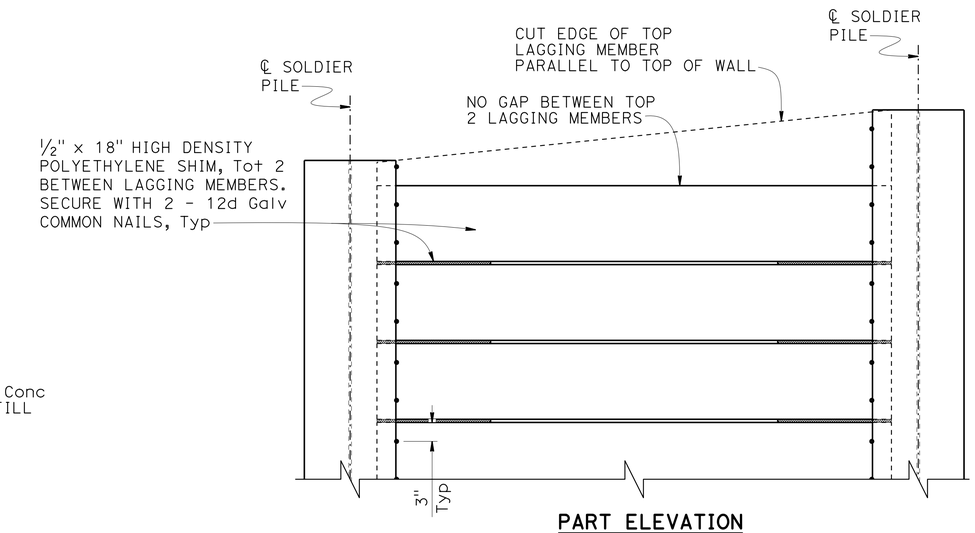

PART ELEVATION

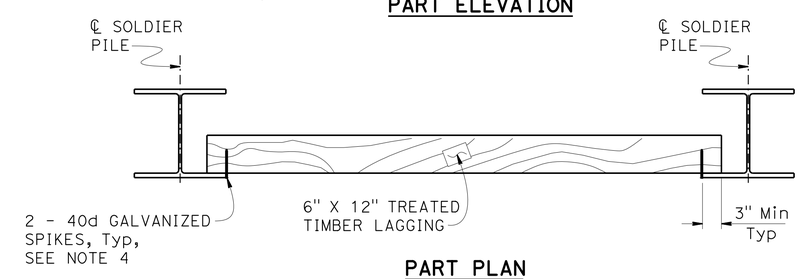

PART PLAN

LAGGING DETAILS
1" = 1'-0"

NOTES:
1. For Top of Wall and Pile Tip Elevations, see "STRUCTURE PLAN NO. 1 and NO. 2" sheets
2. For California ST-20S Bridge Rail details, see "CALIFORNIA ST-20S BRIDGE RAIL DETAILS NO.1 through NO. 4" sheets.
3. No clipping of timber lagging corners allowed.
4. Spikes shall not be bent.

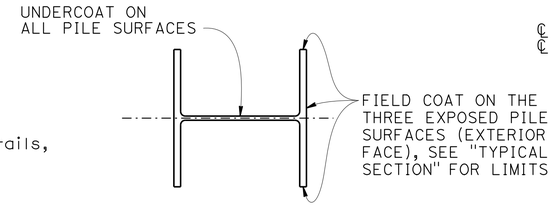

LIMITS OF CLEAN & PAINT STEEL SOLDIER PILE
1½" = 1'-0"

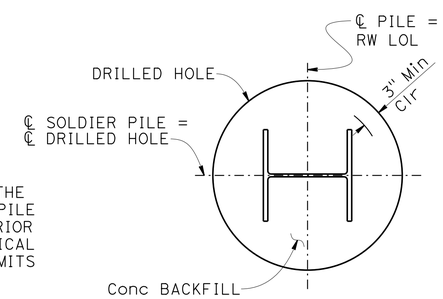

SECTION D-D
1" = 1'-0"

LEGEND:
- Indicates Bridge Removal (portion)
- Indicates lean concrete removal

	BY	CHECKED
DESIGN	Manode Kodsuntie	Keith Stillmunkes
DETAILS	Gerald Dickerson	Keith Stillmunkes
QUANTITIES	Eric Watson	Bob Huddleston

STATE OF CALIFORNIA
DEPARTMENT OF TRANSPORTATION

DIVISION OF ENGINEERING SERVICES
STRUCTURE DESIGN
DESIGN BRANCH 1

BRIDGE NO. 09E0006
POST MILE 51.2

RETAINING WALL NO. 50
WALL DETAILS

STRUCTURES DESIGN DETAIL SHEET (ENGLISH) (REV. 09-01-10)

ORIGINAL SCALE IN INCHES FOR REDUCED PLANS 0 1 2 3

UNIT: 3576
PROJECT NUMBER & PHASE: 02000001611
CONTRACT NO.: 02-2C0904

DISREGARD PRINTS BEARING EARLIER REVISION DATES

REVISION DATES: 04-08-15 11-09-15 08-31-16

SHEET 6 OF 15

FILE => 09e0006-k-wdet01.add

USERNAME => s115152 DATE PLOTTED => 06-OCT-2016 TIME PLOTTED => 06:41

DIST	COUNTY	ROUTE	POST MILES TOTAL PROJECT	SHEET No.	TOTAL SHEETS
02	Plu	70	50.6/51.7	173	181

Manode Kodsuntie 6/2/16
REGISTERED CIVIL ENGINEER DATE

06-15-16
PLANS APPROVAL DATE

REGISTERED PROFESSIONAL ENGINEER Manode Kodsuntie No. 56671 Exp. 6/30/17 CIVIL STATE OF CALIFORNIA

The State of California or its officers or agents shall not be responsible for the accuracy or completeness of scanned copies of this plan sheet.

LEGEND:

- Indicates bundled bars
- Indicates expanded polysyrene
- Indicates hardboard

NOTES:

(1) 2"ø conduit (fiber optic cable), see "ROADWAY PLANS".

(2) 2"ø conduit (power conductors), see "ROADWAY PLANS".

1. No expansion joints in barrier slab within wall limits.
2. For California ST-20S Bridge Rail details, see "CALIFORNIA ST-20S BRIDGE RAIL DETAILS NO. 1 through NO. 4" sheets

* See Bridge Plans (Br. No. 09-0062)

⊛ Indicates epoxy coated reinforcement

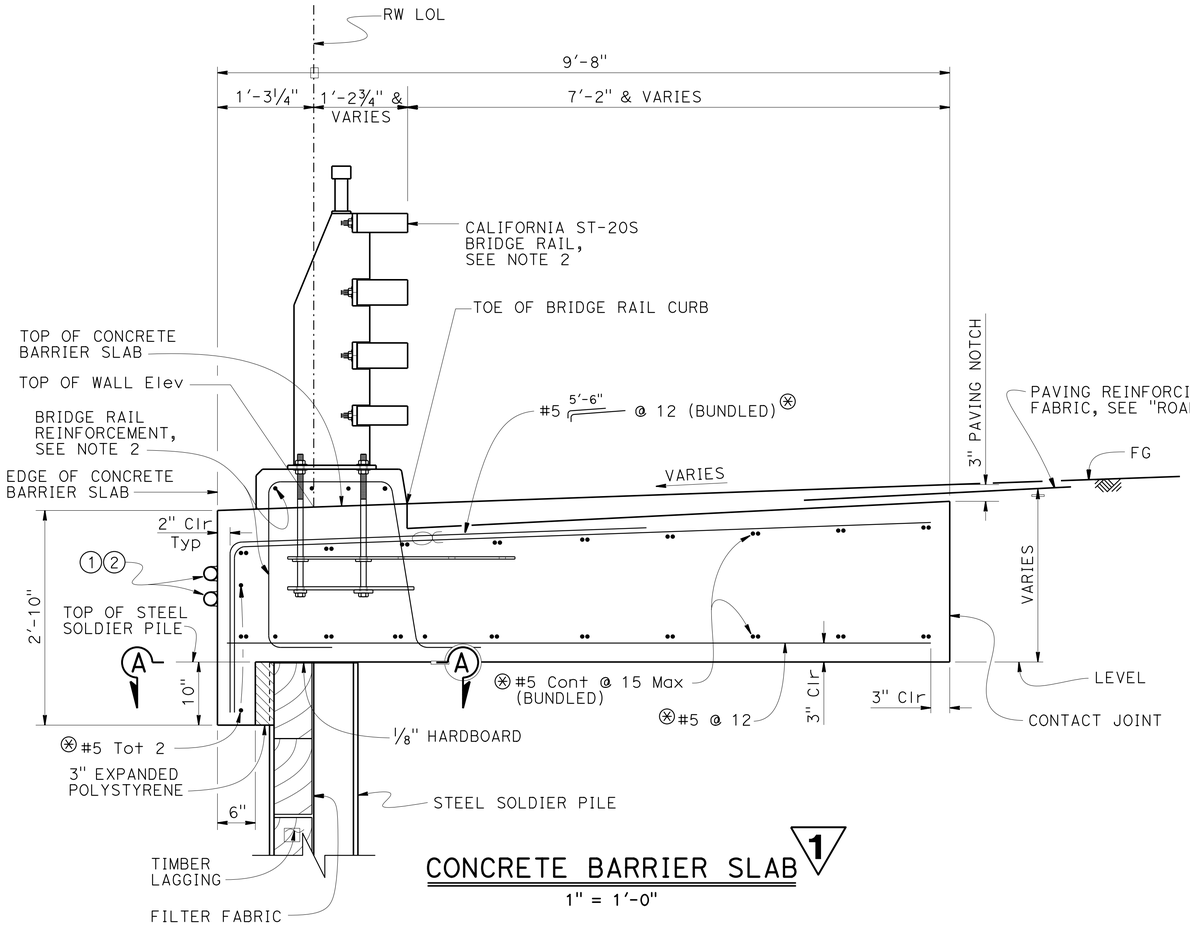

CONCRETE BARRIER SLAB (1)

1" = 1'-0"

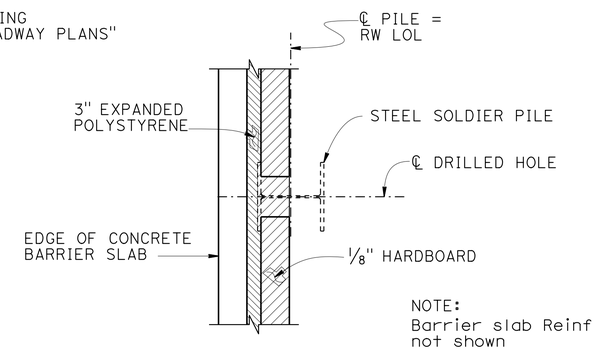

NOTE:
Barrier slab Reinf not shown

SECTION A-A

¾" = 1'-0"

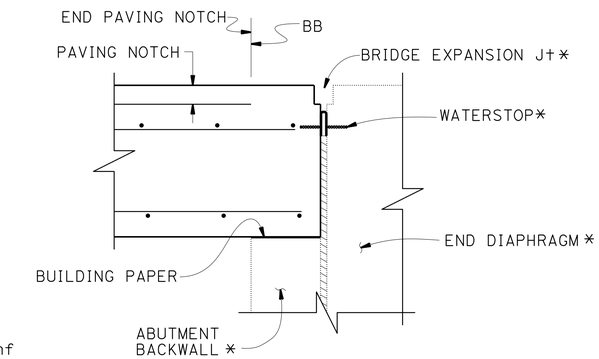

SECTION Y-Y

1" = 1'-0"

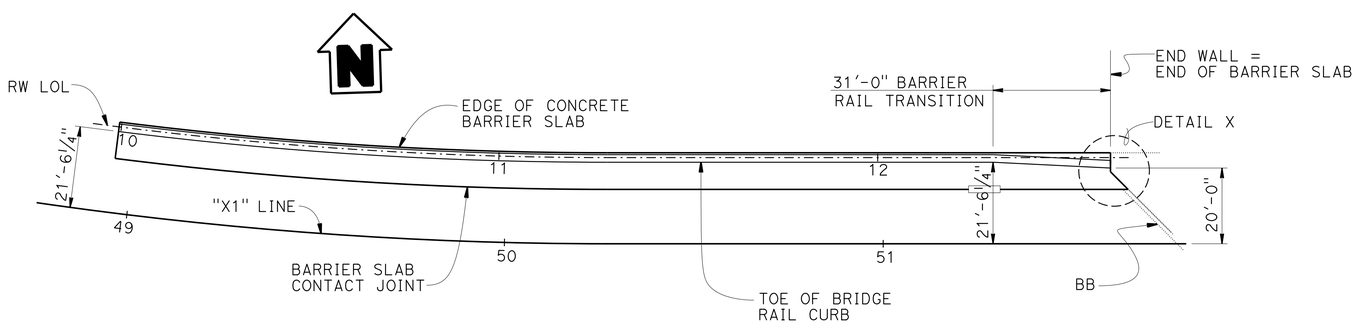

CONCRETE BARRIER SLAB PLAN VIEW

1" = 20'

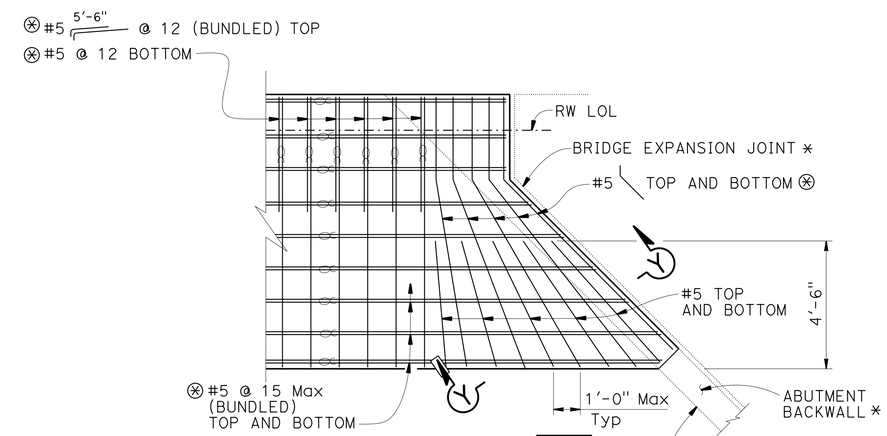

DETAIL X (1)

⅜" = 1'-0"

(1) REVISED PER ADDENDUM No. 1 DATED OCTOBER 06, 2016

DESIGN	BY Manode Kodsuntie	CHECKED Keith Stillmunkes	
DETAILS	BY Gerald Dickerson	CHECKED Keith Stillmunkes	
QUANTITIES	BY Eric Watson	CHECKED Bob Huddleston	

STATE OF CALIFORNIA
DEPARTMENT OF TRANSPORTATION

DIVISION OF ENGINEERING SERVICES
STRUCTURE DESIGN
DESIGN BRANCH 1

BRIDGE NO. 09E0006
POST MILE 51.2

RETAINING WALL NO. 50
CONCRETE BARRIER SLAB DETAILS

STRUCTURES DESIGN DETAIL SHEET (ENGLISH) (REV. 09-01-10)

ORIGINAL SCALE IN INCHES FOR REDUCED PLANS 0 1 2 3

UNIT: 3576
PROJECT NUMBER & PHASE: 02000001611
CONTRACT NO.: 02-2C0904

DISREGARD PRINTS BEARING EARLIER REVISION DATES

REVISION DATES: 04-08-15 11-10-15 08-31-16

SHEET 7 OF 15

FILE => 09e0006-n-bsde+01.dgn

USERNAME => s115152 DATE PLOTTED => 06-OCT-2016 TIME PLOTTED => 06:41

DIST	COUNTY	ROUTE	POST MILES TOTAL PROJECT	SHEET No.	TOTAL SHEETS
02	Plu	70	50.6/51.7	174	181

Manode Kodsuntie 6/2/16
REGISTERED CIVIL ENGINEER DATE

06-15-16
PLANS APPROVAL DATE

REGISTERED PROFESSIONAL ENGINEER Manode Kodsuntie No. 56671 Exp. 6/30/17 CIVIL STATE OF CALIFORNIA

The State of California or its officers or agents shall not be responsible for the accuracy or completeness of electronic copies of this plan sheet.

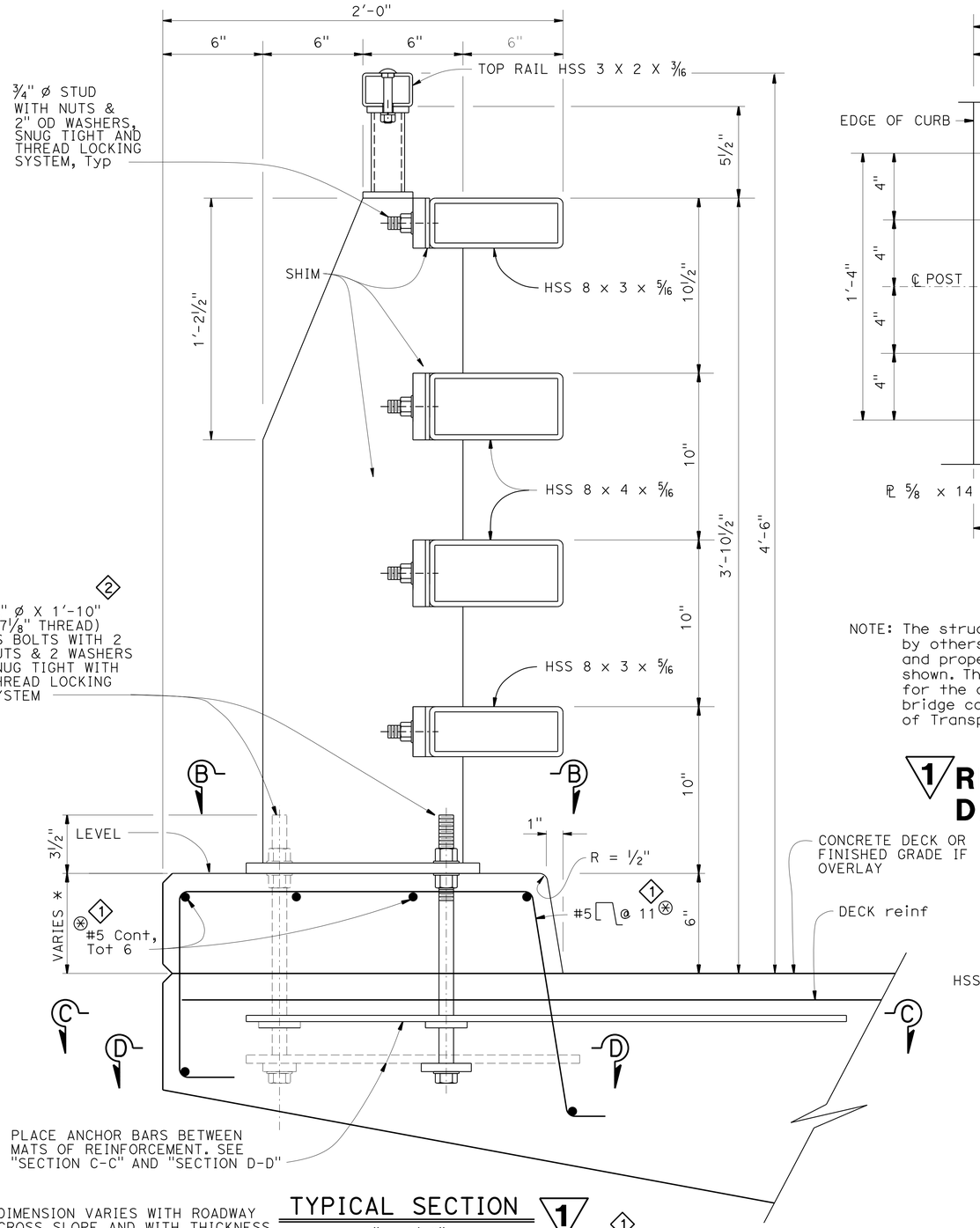

* DIMENSION VARIES WITH ROADWAY CROSS SLOPE AND WITH THICKNESS OF OVERLAY IF APPLICABLE.

TYPICAL SECTION

3" = 1'-0"

1

1 Indicates epoxy coated reinforcement

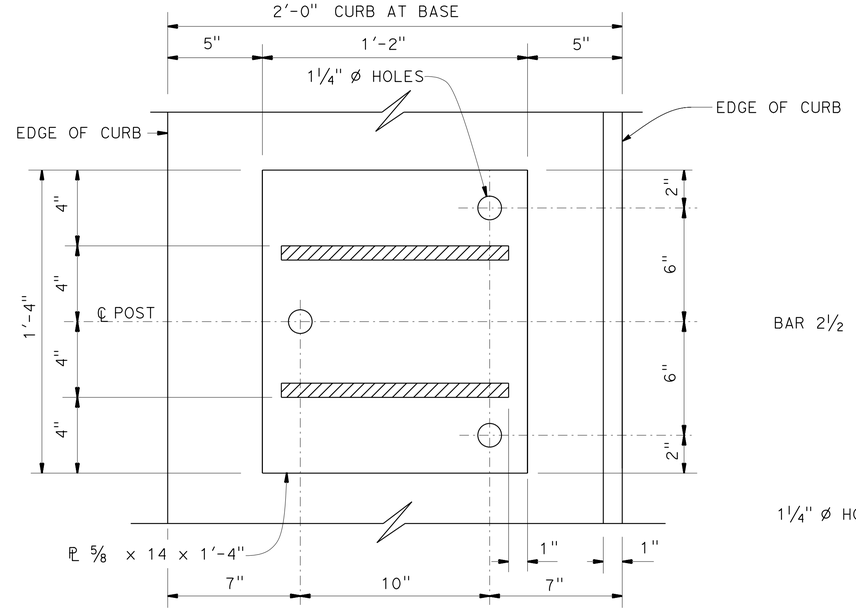

SECTION B-B

3' = 1'-0"

NOTE: The structural components on this drawing have been designed by others. The Engineer of Record is responsible for the selection and proper application of the component design and any changes shown. The seal and signature of the Engineer in responsible charge for the component design and the supporting documentations of these bridge components are available by contacting California Department of Transportation, Division of Engineering Services at 916-227-8704.

1 **REVISED PER ADDENDUM No. 1 DATED OCTOBER 06, 2016**

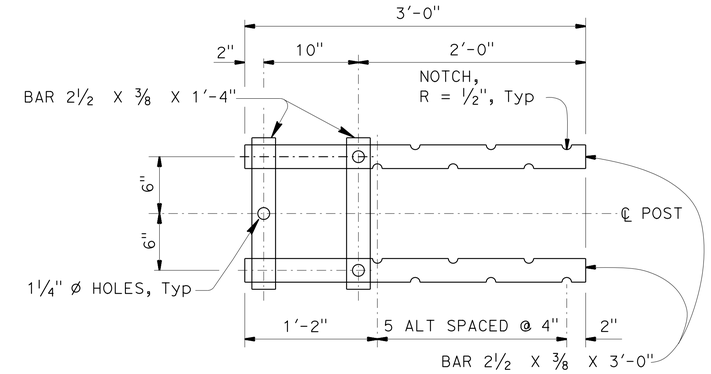

SECTION C-C

1 1/2" = 1'-0"

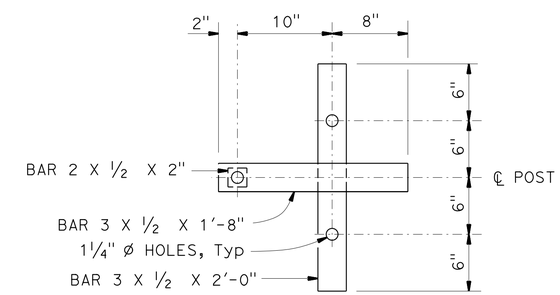

SECTION D-D

1 1/2" = 1'-0"

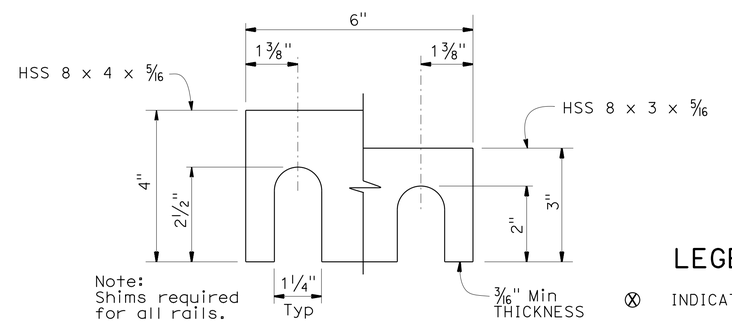

Note: Shims required for all rails.

SHIM DETAIL

6" = 1'-0"

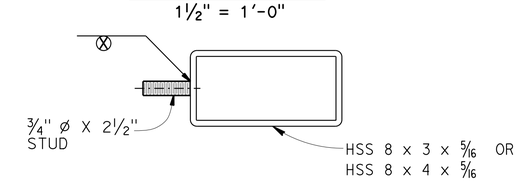

RAIL SECTION AT POST

3" = 1'-0"

LEGEND:

⊗ INDICATES STUD WELD

STANDARD DRAWING		
FILE NO. xs16-120-1	APPROVAL DATE January 2015	1 Added note 2 Changed bolt length

STATE OF CALIFORNIA DEPARTMENT OF TRANSPORTATION

BRIDGE NO. 09E0006
POST MILE 51.2

RETAINING WALL NO. 50
CALIFORNIA ST-20S BRIDGE RAIL
DETAILS NO. 1

DS OSD 2147A (ENGLISH STANDARD DRAWING "XS" BORDER REV. (02-02-11)

ORIGINAL SCALE IN INCHES FOR REDUCED PLANS 0 1 2 3

UNIT: 3576
PROJECT NUMBER & PHASE: 02000001611
CONTRACT NO.: 02-2C0904

DISREGARD PRINTS BEARING EARLIER REVISION DATES

REVISION DATES: 6-14-14 10-22-14 12-16-14 1-14-15

SHEET 8 OF 15

FILE => 09e0006-t-brdt01.add

USERNAME => s115152 DATE PLOTTED => 06-OCT-2016 TIME PLOTTED => 06:41