FOR CONTRACT NO.: 02-1H010**4**

INFORMATION HANDOUT

MATERIALS INFORMATION

FP 2000 ROAD SENSOR
(Installation Manual)

ROUTE: 02-Plu-70-PM 46.2/53.5

Pavement Sensor and Sub-Surface Temperature Probe Installation Manual

VAISALA
194 South Taylor Avenue
Louisville, Colorado 80027
Phone: (303)499-1701

Part Number: 00000003
Rev. B
November 3, 2010

REV	CHANGE	DRAWN BY	DATE	ISSUE DATE
B	Converted Vaisala Format, Removed Active Sensor Pages	TS	11/02/2010	11/02/2010
1	Active Sensor Installation Drawings	JJK	11/01/02	11/11/02
0	Initial Release	DMC	6/25/01	6/25/01

REVISIONS

NOTICE:
THIS DRAWING AND THE INFORMATION IT DISCLOSES IS THE EXCLUSIVE PROPERTY OF VAISALA. ANY REPRODUCTION OR USE OF THIS DRAWING IN WHOLE OR IN PART, WITHOUT THE EXPRESS CONSENT OF VAISALA IS PROHIBITED.

UNLESS OTHERWISE SPECIFIED, DIMENSIONS ARE IN INCHES, WITH THE FOLLOWING TOLERANCES:

FILE NAME: SS_CP.dwg

VAISALA

PART / ITEM: COVER PAGE

SHEET CP OF CP

SCALE: None

DWG. NO. DOC220141

TABLE OF CONTENTS

Drawing Title	Sheet
Road/Runway Pavement sensor installation instructions	1
Overview Drawing	2
FP2000 Highway/Roadway sensor placement	3
FP2000 Pavement sensor & temperature probe core & kerf detail	4
FP2000 Pavement sensor & temperature probe installation detail	5
Roadway Pavement sensor bridge deck core & drill detail	6
Road/Runway Pavement sensor bridge deck installation detail	7
Bridge deck pavement sensor cable installation detail	8
Alternate bridge deck installation	9
Sensor cable - kerf installation detail	10
Sensor cable - pavement edge installation detail	11
Roadway pavement sensor head installation detail	12
Encapsulating compound mixing instructions	13
Embedding temperature probe	14
Encapsulating compound pouring preparation	15
Pouring encapsulating compound	16
Encapsulating compound top coat application	17
FP2000 Surface Sensor Splicing Instructions	18

REV	CHANGE	DRAWN BY	DATE	ISSUE DATE
B	Converted Vaisala Format, Removed Active Sensor Pages	TS	11/02/2010	11/02/2010
1	Active Sensor Installation Drawings	JJK	11/01/02	11/11/02
0	Initial Release	DMC	6/25/01	6/25/01

REVISIONS

NOTICE:

THIS DRAWING AND THE INFORMATION IT DISCLOSES IS THE EXCLUSIVE PROPERTY OF VAISALA. ANY REPRODUCTION OR USE OF THIS DRAWING IN WHOLE OR IN PART, WITHOUT THE EXPRESS CONSENT OF VAISALA IS PROHIBITED.

UNLESS OTHERWISE SPECIFIED, DIMENSIONS ARE IN INCHES, WITH THE FOLLOWING TOLERANCES:

FILE NAME: SS_TC.DXF

VAISALA

PART / ITEM: Table of Contents

SHEET TC OF TC

SCALE: None

DWG. NO. DOC220141

Pavement Sensor & Temperature Probe
INSTALLATION INSTRUCTIONS

PAVEMENT SENSORS AND TEMPERATURE PROBES INSTALLED AS DETAILED IN THE ATTACHED DRAWINGS WILL BE COVERED BY THE VAISALA WARRANTY.

INSTALLATION SHOULD BE PERFORMED ON A WARM, DRY DAY WITH AIR TEMPERATURE ABOVE 40 DEGREES F. AN EPOXY ENCAPSULATING COMPOUND IS USED TO INSTALL THE PAVEMENT SENSOR HEAD, AND INSTALLATION ON COLDER DAYS MAY RESULT IN THE EPOXY NOT CURING OR SETTING.

THE FOLLOWING WARNINGS AND PRECAUTIONS APPLY TO THE EPOXY ENCAPSULATING COMPOUND IN INJECTOR CARTRIDGES AND THE SETTING COMPOUND (Steel Putty).

MANUFACTURER'S WARNING:

HARMFUL IF SWALLOWED. CAUSES EYE AND SKIN IRRITATION. USE SUITABLE EYE PROTECTION. AVOID BREATHING VAPOR. AVOID CONTACT WITH EYES, SKIN AND CLOTHING. WASH THOROUGHLY AFTER HANDLING.

IN CASE OF CONTACT:

IMMEDIATELY FLUSH EYES AND SKIN WITH PLENTY OF WATER FOR AT LEAST 15 MINUTES. FOR EYES, SEE A PHYSICIAN. WASH CLOTHING BEFORE RE-USE.

STORAGE:

ALL EPOXY MATERIAL MUST BE STORED BETWEEN 40 AND 90 DEGREES F. ALLOWING MATERIAL TO FREEZE WILL VOID EPOXY MATERIAL WARRANTY. MAXIMUM SHELF LIFE IS 6 MONTHS.

MANUFACTURER AND/OR SELLER ARE NOT RESPONSIBLE FOR THE RESULTS OBTAINED WHEN THE PRODUCT IS USED UNDER CONDITIONS BEYOND OUR CONTROL.

REFER TO MATERIAL SAFETY DATA SHEETS SUPPLIED WITH SENSOR INSTALL KIT FOR COMPLETE DETAILS.

REV	CHANGE	DRAWN BY	DATE	ISSUE DATE
B	Converted Vaisala Format, Removed Active Sensor Pages	TS	11/02/2010	11/02/2010
1	Active Sensor Installation Drawings	JJK	11/01/02	11/11/02
0	Initial Release	DMC	6/25/01	6/25/01

REVISIONS

NOTICE:
THIS DRAWING AND THE INFORMATION IT DISCLOSES IS THE EXCLUSIVE PROPERTY OF VAISALA. ANY REPRODUCTION OR USE OF THIS DRAWING IN WHOLE OR IN PART, WITHOUT THE EXPRESS CONSENT OF VAISALA IS PROHIBITED.

UNLESS OTHERWISE SPECIFIED, DIMENSIONS ARE IN INCHES, WITH THE FOLLOWING TOLERANCES:

FILE NAME: 01 Sensor Installation Instructions

VAISALA

PART / ITEM: Sensor Installation Instructions

SHEET 1 OF 18

SCALE: None

DWG. NO. DOC220141

MAXIMUM CABLE LENGTH FROM SENSOR HEAD TO THE LX-RPU
UTILIZING A SPLICE KIT ANDTYPE V EXTENSION CABLE IS 5000 FEET

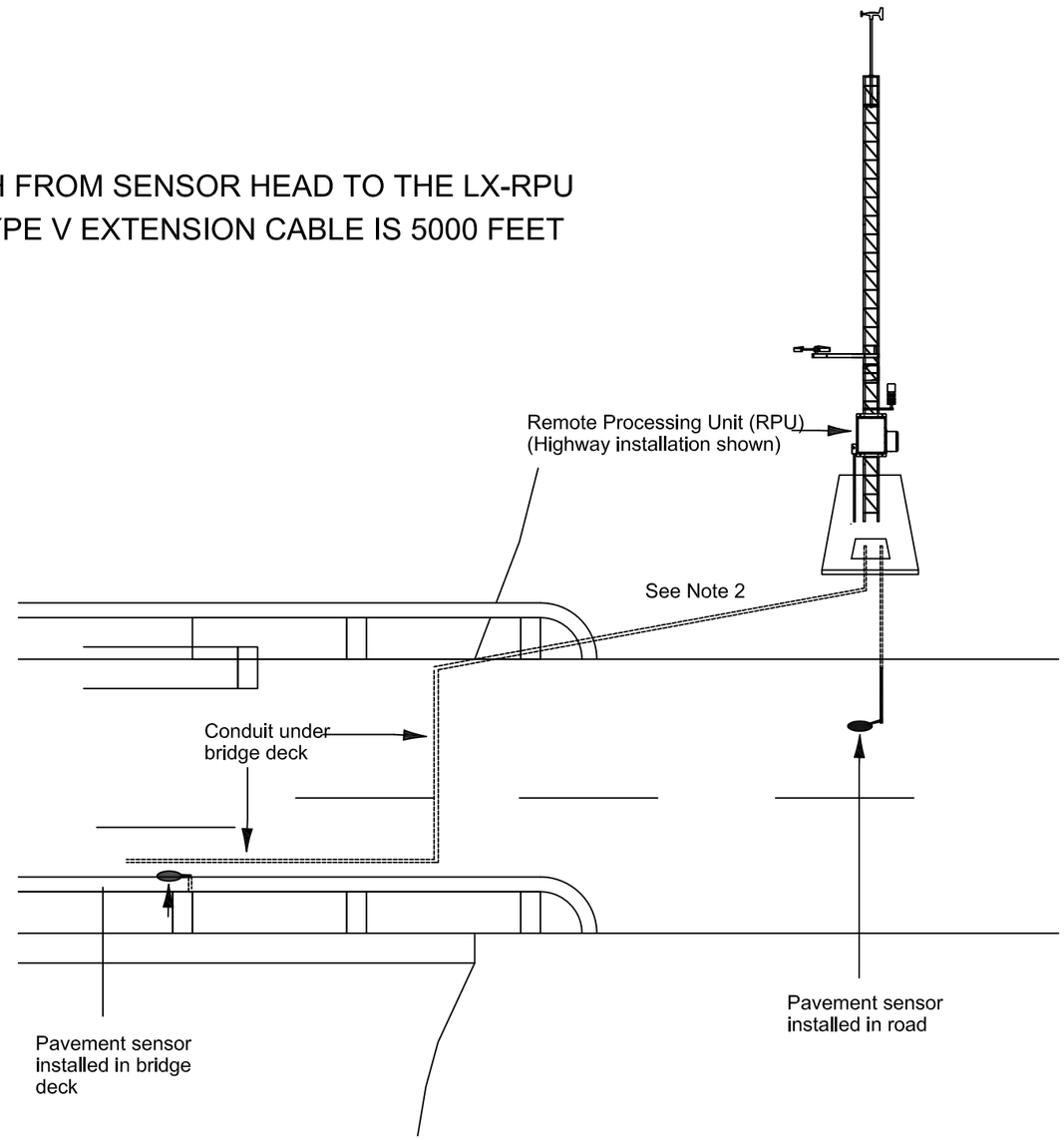

Notes:

1. Pavement sensors and sub-surface temperature probes are supplied standard with 150, 300, and 500 feet of Type IIA Sensor cable attached.

2. THE MAXIMUM CABLE DISTANCE BETWEEN PAVEMENT AND SUB-SURFACE TEMPERATURE SENSORS AND THE RPU IS 5000 FEET.

REV	CHANGE	DRAWN BY	DATE	ISSUE DATE
B	Converted Vaisala Format, Removed Active Sensor Pages	TS	11/02/2010	11/02/2010
1	Active Sensor Installation Drawings	JJK	11/01/02	11/11/02
0	Initial Release	DMC	6/25/01	6/25/01

REVISIONS

NOTICE:
THIS DRAWING AND THE INFORMATION IT DISCLOSES IS THE EXCLUSIVE PROPERTY OF VAISALA. ANY REPRODUCTION OR USE OF THIS DRAWING IN WHOLE OR IN PART, WITHOUT THE EXPRESS CONSENT OF VAISALA IS PROHIBITED.

UNLESS OTHERWISE SPECIFIED, DIMENSIONS ARE IN INCHES, WITH THE FOLLOWING TOLERANCES:

FILE NAME: 02 Overview Drawing

VAISALA

PART / ITEM: Overview Drawing

SHEET 2 OF 18

SCALE: None

DWG. NO. DOC220141

VAISALA's
Recommended Location of Pavement Sensors *

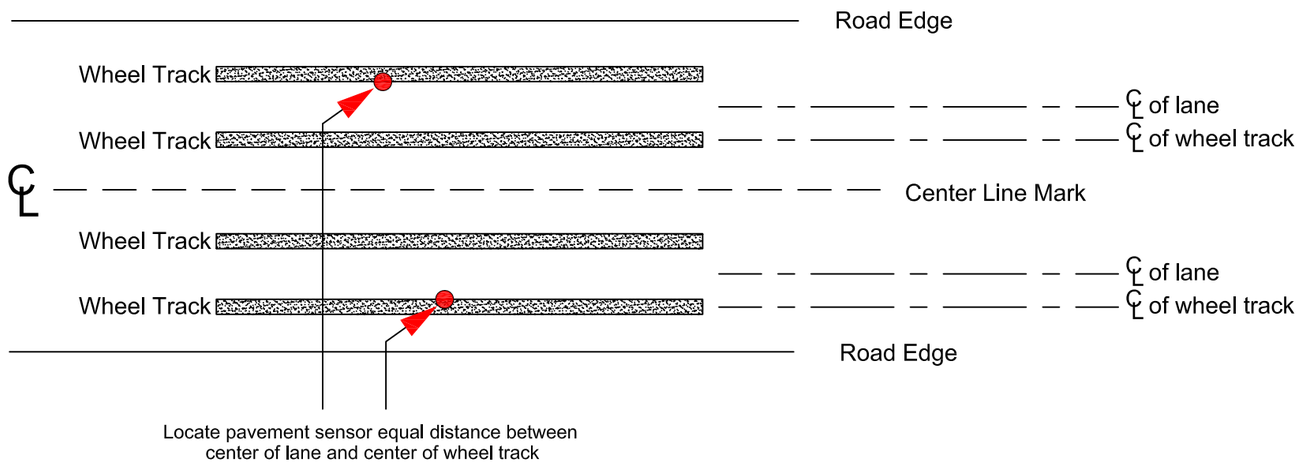

Note:

1. Conditions may exist requiring alternative pavement sensor placement from those shown.
2. For bridge deck installations, pavement sensor location may need to be adjusted from that shown due to the under structure of the bridge.

SHRP's
Recommended Location of Pavement Sensors *

Note:

* Obtained from the Strategic Highway Research Program, SHRP-H-351, Road Weather Information Systems, Volume 2: Implementation Guide. Refer to this Volume for more information.

Location of Pavement Sensors within Lanes

Primary Use of Sensors	Urban (Commuter Route)		Rural (Non-commuter Route)	
	Multi-lane Road	Two-lane Road	Multi-lane Road	Two-lane Road
Prediction	Just outside of outside wheel track of outbound passing lane	Just outside of outside wheel track of outbound lane	Just outside of a wheel track of a passing lane	Just outside of a wheel track of either lane
Detection	Just inside of outside wheel track of inbound through lane	Just inside of outside wheel track of inbound lane	Just outside of a wheel track of a through lane	Just outside of a wheel track of either lane
Monitoring	Use prediction placement whenever possible			

Sensor Placement in a Lane

Sensor placement in a lane

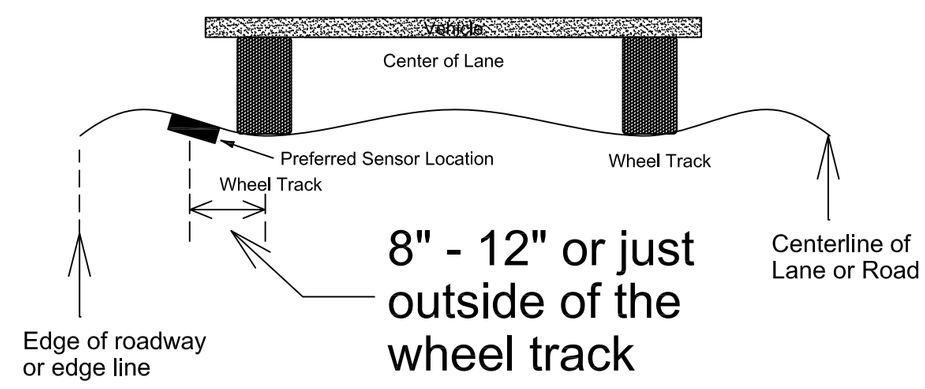

REV	CHANGE	DRAWN BY	DATE	ISSUE DATE
B	Converted Vaisala Format, Removed Active Sensor Pages	TS	11/02/2010	11/02/2010
1	Active Sensor Installation Drawings	JJK	11/01/02	11/11/02
0	Initial Release	DMC	6/25/01	6/25/01

REVISIONS

NOTICE:
THIS DRAWING AND THE INFORMATION IT DISCLOSES IS THE EXCLUSIVE PROPERTY OF VAISALA. ANY REPRODUCTION OR USE OF THIS DRAWING IN WHOLE OR IN PART, WITHOUT THE EXPRESS CONSENT OF VAISALA IS PROHIBITED.

UNLESS OTHERWISE SPECIFIED, DIMENSIONS ARE IN INCHES, WITH THE FOLLOWING TOLERANCES:

FILE NAME: 02 Roadway Highway Sensor Placement

VAISALA

PART / ITEM: Highway/Roadway Sensor Placement

SHEET 3 OF 18

SCALE: None

DWG. NO. DOC220141

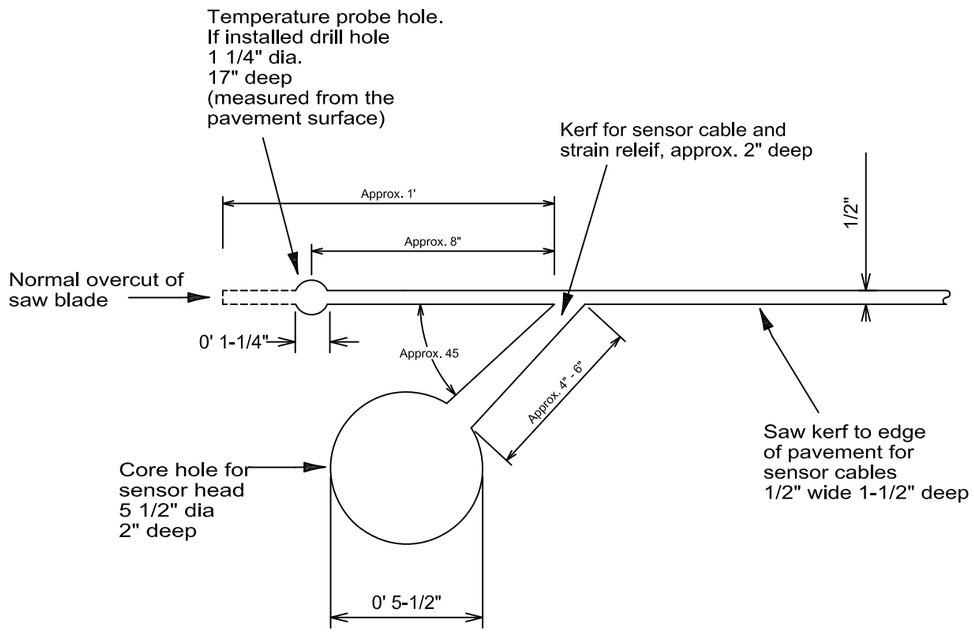

Top View

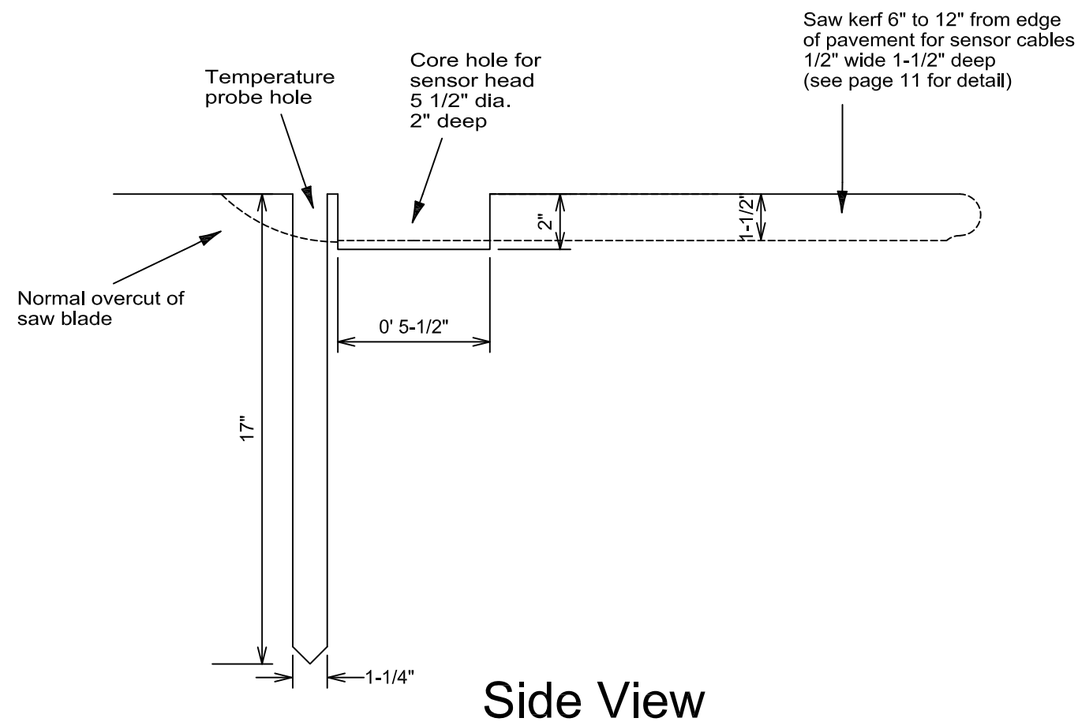

Side View

Notes:

1. Cut saw kerf using a single 1/2" wide blade.
2. Clean and dry core hole and saw kerf with compressed air prior to performing any sensor installation.
3. Core hole for pavement sensor 5 1/2" diameter, absolute maximum core hole diameter is 5 3/4".

REV	CHANGE	DRAWN BY	DATE	ISSUE DATE
B	Converted Vaisala Format, Removed Active Sensor Pages	TS	11/02/2010	11/02/2010
1	Active Sensor Installation Drawings	JJK	11/01/02	11/11/02
0	Initial Release	DMC	6/25/01	6/25/01

REVISIONS

NOTICE:
THIS DRAWING AND THE INFORMATION IT DISCLOSES IS THE EXCLUSIVE PROPERTY OF VAISALA. ANY REPRODUCTION OR USE OF THIS DRAWING IN WHOLE OR IN PART, WITHOUT THE EXPRESS CONSENT OF VAISALA IS PROHIBITED.

UNLESS OTHERWISE SPECIFIED, DIMENSIONS ARE IN INCHES, WITH THE FOLLOWING TOLERANCES:

FILE NAME: 04 Sensor and Probe Core and Kerf Detail

VAISALA

PART / ITEM: Roadway Pavement Sensor & Temperature Probe Core & Kerf Detail

SHEET 4 OF 18

SCALE: None

DWG. NO. DOC220141

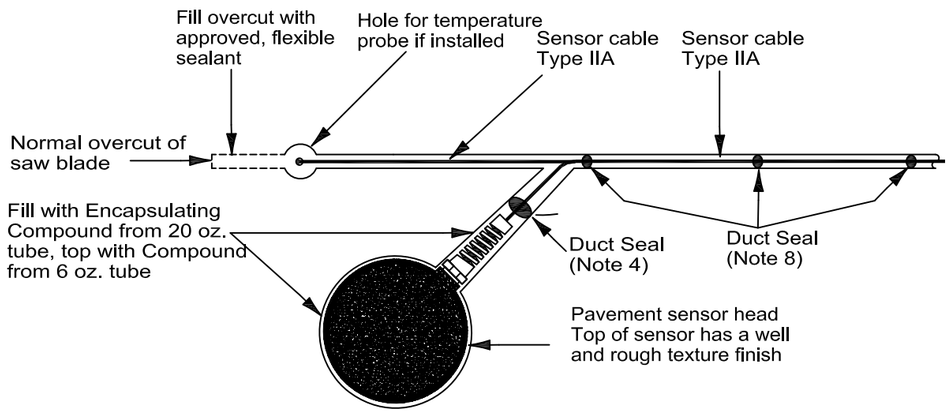

Top View

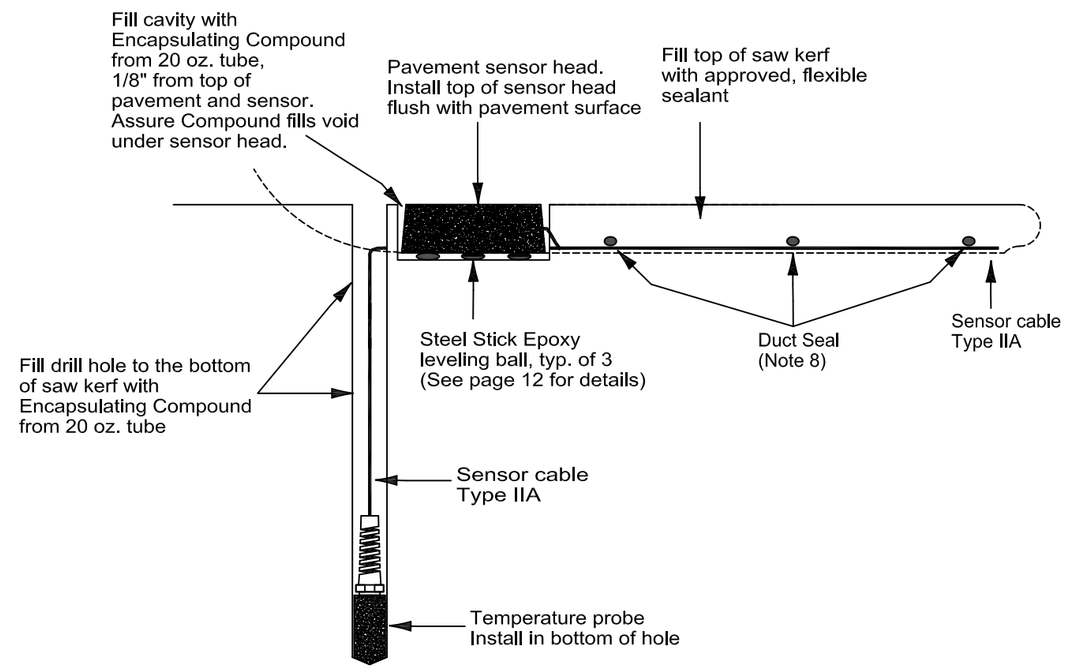

Side View

Notes: Sequence of Installation Procedures:

1. After coring and drilling per specifications as shown on page 4 of installation manual, clean and dry core hole and saw kerfs with dry compressed air prior to installation of sensor head, temperature probe or cables.

2. Prepare and install Steel Stick Epoxy (refer to page 12 for details).

3. Place sensor head in core and level to surface of pavement (refer to page 12 for details)

4. Place duct seal outside of surface sensor strain relief above and below Type IIA cable as a dam to keep encapsulating epoxy from running down saw kerf. (refer to page 16 for details)

5. Mix 20 oz. tube of Encapsulation Epoxy (see page 13 for details)
   NOTE: Epoxy should be used within 5 minutes after the mixing process.

6. Pour epoxy around sensor head (refer to page 16 for details)

7. Wait until epoxy hardens (approximately 30 minutes @ 70 degrees F).
   Mix 6 oz. Topcoat Epoxy (refer to page 13 for details)
   and pour around sensor head (refer to page 17 for details)
   NOTE: Do not allow traffic over sensor head until Topcoat Epoxy is dry to the touch.

8. Place a small amount duct seal in saw kerf on top of cable approximately every 2 feet to prevent cable from floating when kerf is filled with sealant. (refer to drawing above)

9. Fill kerf with 3M DSL 5000 Detector Loop Sealant,

REV	CHANGE	DRAWN BY	DATE	ISSUE DATE
B	Converted Valsala Format, Removed Active Sensor Pages	TS	11/02/2010	11/02/2010
1	Active Sensor Installation Drawings	JJK	11/01/02	11/11/02
0	Initial Release	DMC	6/25/01	6/25/01

REVISIONS

NOTICE:
THIS DRAWING AND THE INFORMATION IT DISCLOSES IS THE EXCLUSIVE PROPERTY OF VAISALA. ANY REPRODUCTION OR USE OF THIS DRAWING IN WHOLE OR IN PART, WITHOUT THE EXPRESS CONSENT OF VAISALA IS PROHIBITED.

UNLESS OTHERWISE SPECIFIED, DIMENSIONS ARE IN INCHES, WITH THE FOLLOWING TOLERANCES:

FILE NAME: 05 Sensor and Probe Installation

VAISALA

PART / ITEM: Roadway Pavement Sensor & Temperature Probe Installation Detail

SHEET 5 OF 18

SCALE: None

DWG. NO. DOC220141

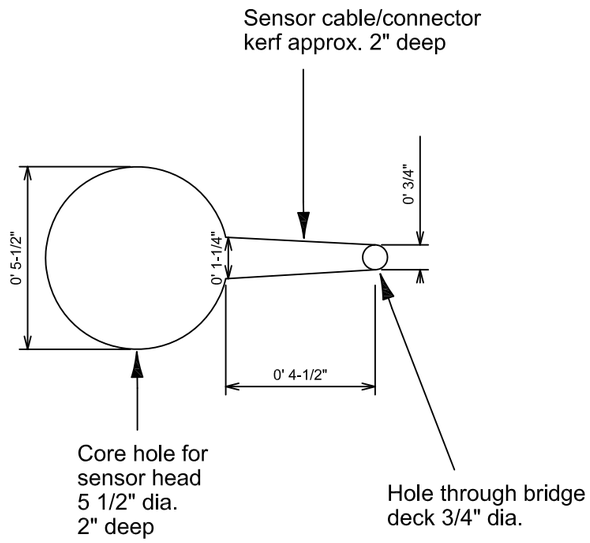

Top View

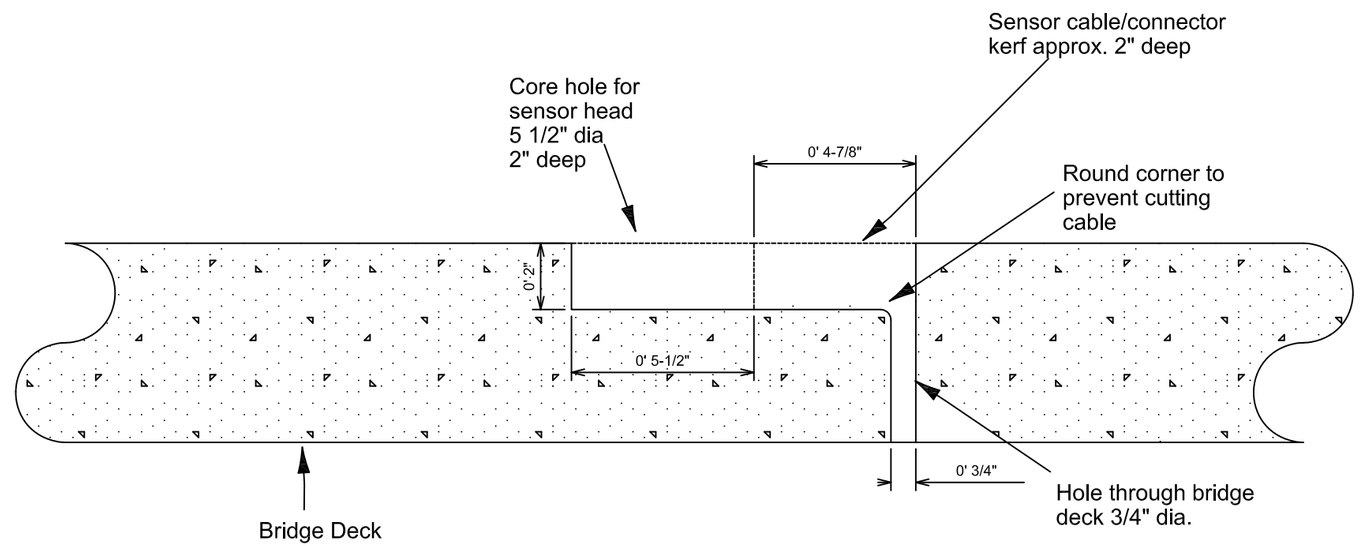

Side View

Notes:

1. Obtain approval of bridge owner's engineer prior to drilling/cutting bridge deck.
2. Pavement sensor location may need to be adjusted due to the under structure of the bridge.

REV	CHANGE	DRAWN BY	DATE	ISSUE DATE
B	Converted Vaisala Format, Removed Active Sensor Pages	TS	11/02/2010	11/02/2010
1	Active Sensor Installation Drawings	JJK	11/01/02	11/11/02
0	Initial Release	DMC	6/25/01	6/25/01

REVISIONS

NOTICE:

THIS DRAWING AND THE INFORMATION IT DISCLOSES IS THE EXCLUSIVE PROPERTY OF VAISALA. ANY REPRODUCTION OR USE OF THIS DRAWING IN WHOLE OR IN PART, WITHOUT THE EXPRESS CONSENT OF VAISALA IS PROHIBITED.

UNLESS OTHERWISE SPECIFIED, DIMENSIONS ARE IN INCHES, WITH THE FOLLOWING TOLERANCES:

FILE NAME: 06 Sensor Bridge Deck Core and Drill

VAISALA

PART / ITEM: Roadway Pavement Sensor Bridge Deck Core & Drill Detail

SHEET 6 OF 18

SCALE: None

DWG. NO. DOC220141

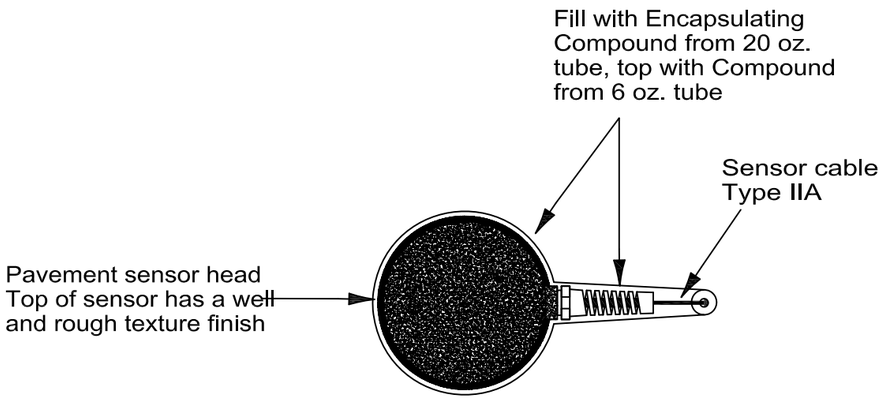

Top View

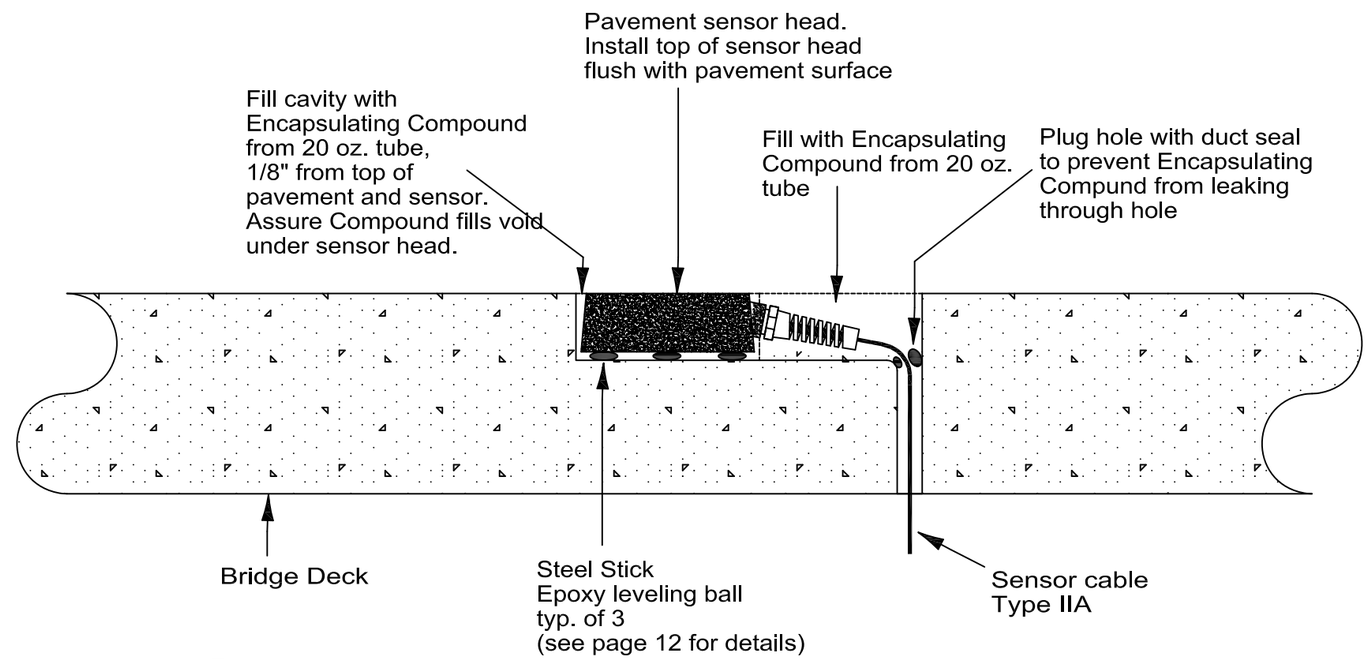

Side View

Notes:

1. Clean and dry core hole and cable kerfs with compressed air prior to installation of sensor head or cables.

REV	CHANGE	DRAWN BY	DATE	ISSUE DATE
B	Converted Vaisala Format, Removed Active Sensor Pages	TS	11/02/2010	11/02/2010
1	Active Sensor Installation Drawings	JJK	11/01/02	11/11/02
0	Initial Release	DMC	6/25/01	6/25/01

REVISIONS

NOTICE:

THIS DRAWING AND THE INFORMATION IT DISCLOSES IS THE EXCLUSIVE PROPERTY OF VAISALA. ANY REPRODUCTION OR USE OF THIS DRAWING IN WHOLE OR IN PART, WITHOUT THE EXPRESS CONSENT OF VAISALA IS PROHIBITED.

UNLESS OTHERWISE SPECIFIED, DIMENSIONS ARE IN INCHES, WITH THE FOLLOWING TOLERANCES:

FILE NAME: 07 Sensor Bridge Deck Installation

VAISALA

PART / ITEM: Roadway Pavement Sensor BRIDGE DECK Installation Detail

SHEET 7 OF 18

SCALE: None

DWG. NO. DOC220141

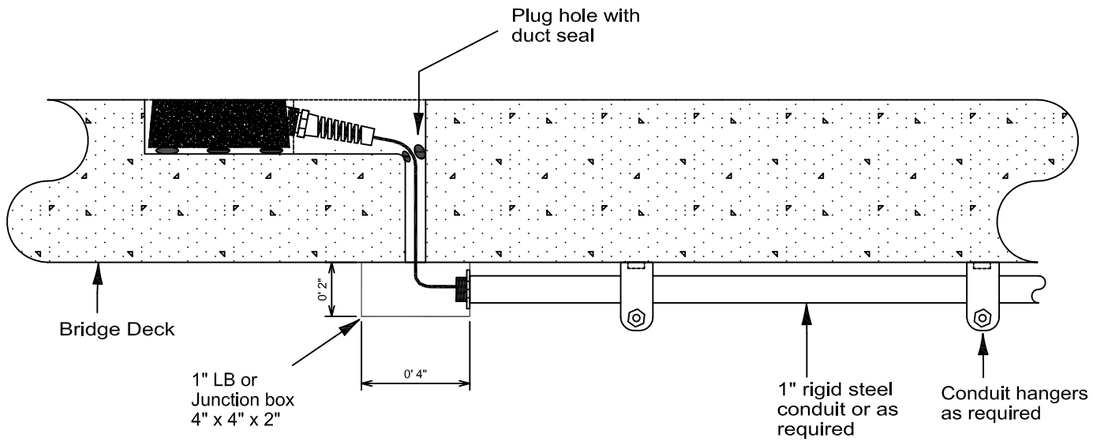

Cable Installation under Bridge Deck

Notes:

1. Leave, as much as possible, extra Type IIA sensor cable, Type V sensor extension cable in junction box to enable splicing outside of junction box and replacing splices

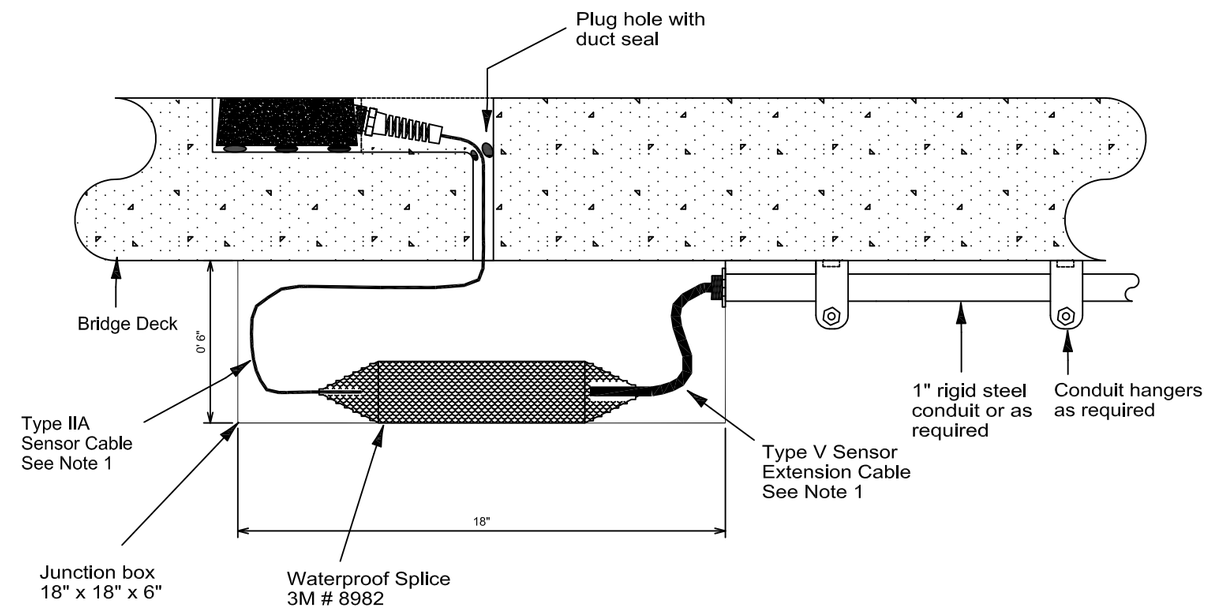

Sensor Cable Splice under Bridge Deck

REV	CHANGE	DRAWN BY	DATE	ISSUE DATE
B	Converted Vaisala Format, Removed Active Sensor Pages	TS	11/02/2010	11/02/2010
1	Active Sensor Installation Drawings	JJK	11/01/02	11/11/02
0	Initial Release	DMC	6/25/01	6/25/01

REVISIONS

NOTICE:

THIS DRAWING AND THE INFORMATION IT DISCLOSES IS THE EXCLUSIVE PROPERTY OF VAISALA. ANY REPRODUCTION OR USE OF THIS DRAWING IN WHOLE OR IN PART, WITHOUT THE EXPRESS CONSENT OF VAISALA IS PROHIBITED.

UNLESS OTHERWISE SPECIFIED, DIMENSIONS ARE IN INCHES, WITH THE FOLLOWING TOLERANCES:

FILE NAME: 08 Bridge Deck Sensor Cable Installation

VAISALA

PART / ITEM: BRIDGE DECK Pavement Sensor Cable Installation Detail

SHEET 8 OF 18

SCALE: None

DWG. NO. DOC220141

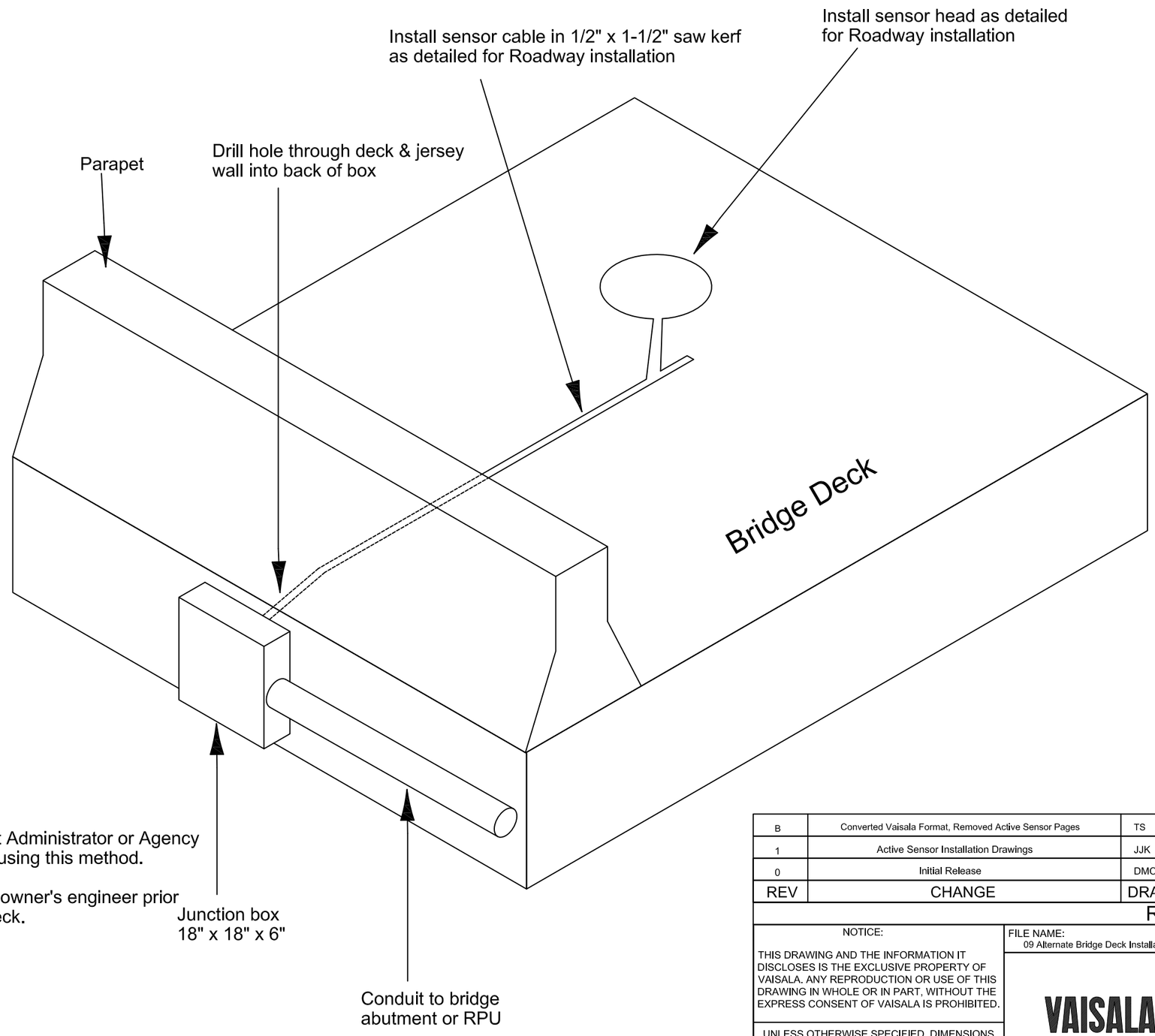

Note:

1. Obtain approval of Project Administrator or Agency prior to installing sensors using this method.
2. Obtain approval of bridge owner's engineer prior to drilling/cutting bridge deck.

REV	CHANGE	DRAWN BY	DATE	ISSUE DATE
B	Converted Vaisala Format, Removed Active Sensor Pages	TS	11/02/2010	11/02/2010
1	Active Sensor Installation Drawings	JJK	11/01/02	11/11/02
0	Initial Release	DMC	6/25/01	6/25/01

REVISIONS

NOTICE:

THIS DRAWING AND THE INFORMATION IT DISCLOSES IS THE EXCLUSIVE PROPERTY OF VAISALA. ANY REPRODUCTION OR USE OF THIS DRAWING IN WHOLE OR IN PART, WITHOUT THE EXPRESS CONSENT OF VAISALA IS PROHIBITED.

UNLESS OTHERWISE SPECIFIED, DIMENSIONS ARE IN INCHES, WITH THE FOLLOWING TOLERANCES:

FILE NAME: 09 Alternate Bridge Deck Installation

VAISALA

PART / ITEM

Alternate Bridge Deck Installation

SHEET 9 OF 18

SCALE: None

DWG. NO. DOC220141

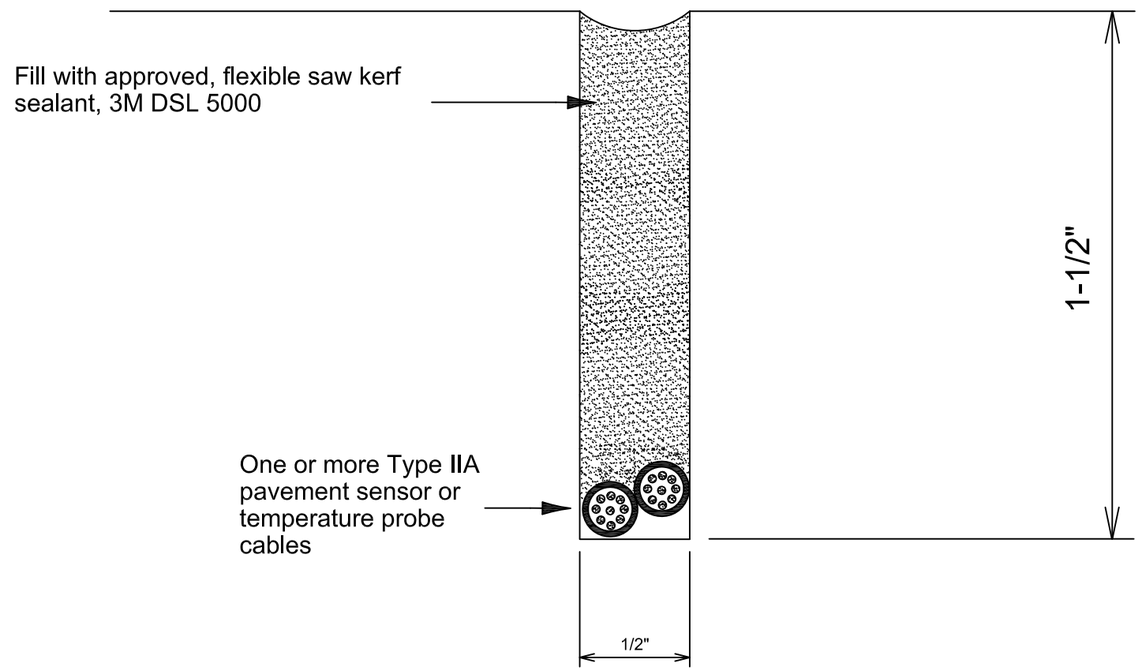

Saw Kerf
Cross Section View

REV	CHANGE	DRAWN BY	DATE	ISSUE DATE
B	Converted Vaisala Format, Removed Active Sensor Pages	TS	11/02/2010	11/02/2010
1	Active Sensor Installation Drawings	JJK	11/01/02	11/11/02
0	Initial Release	DMC	6/25/01	6/25/01

REVISIONS

NOTICE:

THIS DRAWING AND THE INFORMATION IT DISCLOSES IS THE EXCLUSIVE PROPERTY OF VAISALA. ANY REPRODUCTION OR USE OF THIS DRAWING IN WHOLE OR IN PART, WITHOUT THE EXPRESS CONSENT OF VAISALA IS PROHIBITED.

UNLESS OTHERWISE SPECIFIED, DIMENSIONS ARE IN INCHES, WITH THE FOLLOWING TOLERANCES:

FILE NAME: 10 Sensor Cable Kerf Installation

VAISALA

PART / ITEM

Sensor Cable-Kerf Installation Detail

SHEET 10 OF 18

SCALE: None

DWG. NO. DOC220141

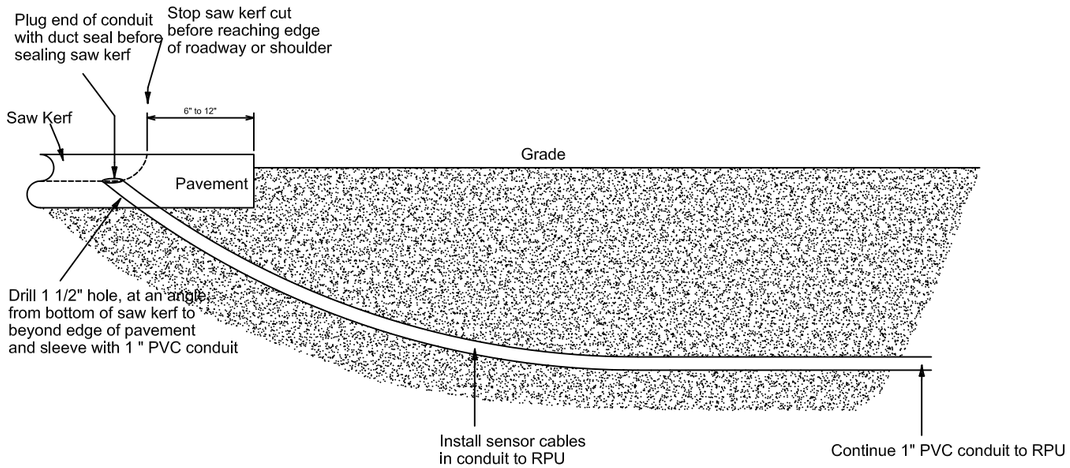

Use this installation method for pavement sensor to RPU when splicing is not required
(When sensor run to RPU is less than supplied sensor cable length provided with project)

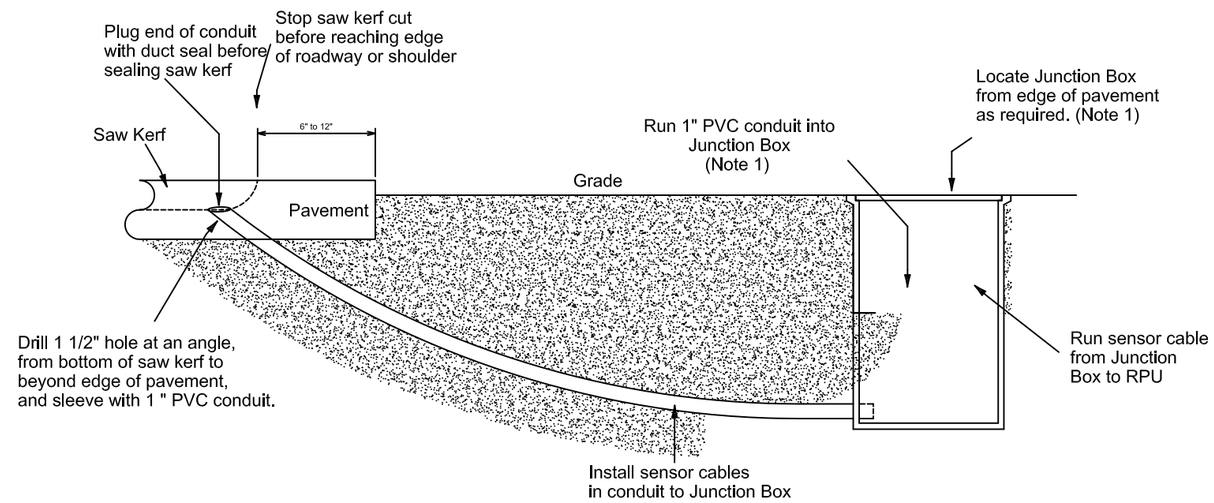

Use this installation method for pavement sensor to RPU when splicing is required
(When sensor run to RPU is more than supplied sensor cable lenght provided with project)

Notes:

1. Junction Box and conduit shall be supplied by installation contractor.

REV	CHANGE	DRAWN BY	DATE	ISSUE DATE
B	Converted Vaisala Format, Removed Active Sensor Pages	TS	11/02/2010	11/02/2010
1	Active Sensor Installation Drawings	JJK	11/01/02	11/11/02
0	Initial Release	DMC	6/25/01	6/25/01

REVISIONS

NOTICE:
THIS DRAWING AND THE INFORMATION IT DISCLOSES IS THE EXCLUSIVE PROPERTY OF VAISALA. ANY REPRODUCTION OR USE OF THIS DRAWING IN WHOLE OR IN PART, WITHOUT THE EXPRESS CONSENT OF VAISALA IS PROHIBITED.

UNLESS OTHERWISE SPECIFIED, DIMENSIONS ARE IN INCHES, WITH THE FOLLOWING TOLERANCES:

FILE NAME: 11 Sensor Cable Pavement Edge Installation

VAISALA

PART / ITEM: Sensor Cable-Pavement Edge Installation Detail

SHEET 11 OF 18

SCALE: None

DWG. NO. DOC220141

Sensor Head Supports

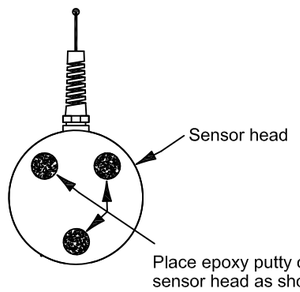

Notes:

1. Assure BOTTOM of sensor head and cavity are clean and dry
2. Locate Flexmaster Steel-Stick (epoxy putty) supplied with sensor head.
   WEAR RUBBER GLOVES WHEN HANDLING.
3. THE MIXED EPOXY PUTTY IS ONLY WORKABLE FOR 4 MINUTES.
4. Mix material by kneeding and pinching with hands about 2 minutes or until warm (indicating chemical curing has started).
5. Divide putty into 3 equal size balls.
6. Push epoxy putty balls on to the BOTTOM of sensor head as shown.
7. Proceed to install sensor head as detailed below.

Positioning the Sensor Head

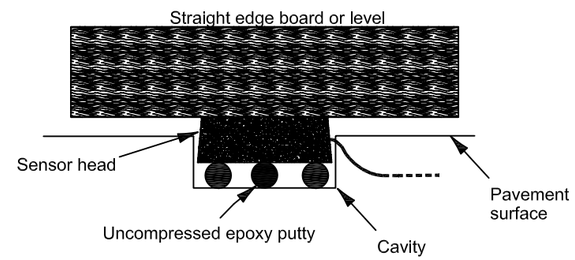

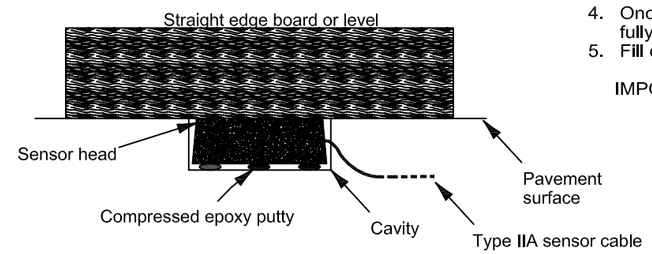

Notes:

1. Position sensor head in center of cavity.
2. Using straight edge board or level, push down on top of sensor head making top of sensor FLUSH with surrounding pavement.
3. Rotate straight edge board or level, pushing down to assure sensor head is FLUSH with surrounding pavement.

IMPORTANT NOTE: THE EPOXY PUTTY IS ONLY WORKABLE FOR 4 MINUTES. THE SENSOR MUST BE SET FLUSH WITHIN THIS TIME PERIOD.

4. Once sensor head is set allow 10 minutes for epoxy putty to fully cure, securing sensor head into cavity.
5. Fill cavity with escapsulating compound.

IMPORTANT NOTE: THE SENSOR HEAD MUST BE FLUSH WITH THE SURROUNDING PAVEMENT SURFACE. DO NOT PUSH SENSOR HEAD BELOW FLUSH OR LEAVE HIGHER THAN SURROUNDING PAVEMENT !

MANUFACTURER'S WARNING:
COMPOUNDS ARE HARMFUL IF SWALLOWED. CAUSES EYE AND SKIN IRRITATION. USE SUITABLE EYE PROTECTION. AVOID BREATHING VAPOR. AVOID CONTACT WITH EYES, SKIN AND CLOTHING. WASH THOROUGHLY AFTER HANDLING.
IN CASE OF CONTACT:
IMMEDIATELY FLUSH EYES AND SKIN WITH PLENTY OF WATER FOR AT LEAST 15 MINUTES. FOR EYES, SEE A PHYSICIAN. WASH CLOTHING BEFORE RE-USE.

REV	CHANGE	DRAWN BY	DATE	ISSUE DATE
B	Converted Vaisala Format, Removed Active Sensor Pages	TS	11/02/2010	11/02/2010
1	Active Sensor Installation Drawings	JJK	11/01/02	11/11/02
0	Initial Release	DMC	6/25/01	6/25/01

REVISIONS

NOTICE:
THIS DRAWING AND THE INFORMATION IT DISCLOSES IS THE EXCLUSIVE PROPERTY OF VAISALA. ANY REPRODUCTION OR USE OF THIS DRAWING IN WHOLE OR IN PART, WITHOUT THE EXPRESS CONSENT OF VAISALA IS PROHIBITED.

UNLESS OTHERWISE SPECIFIED, DIMENSIONS ARE IN INCHES, WITH THE FOLLOWING TOLERANCES:

FILE NAME: 12 Pavement Sensor Head Installation

VAISALA

PART / ITEM: Roadway Pavement Sensor Head Installation

SHEET 12 OF 18

SCALE: None

DWG. NO. DOC220141

Sensor Head Embedding Compounds

20 oz. tube
Encapsulating Compound
with dasher rod

For embedding pavement
sensor head and
temperature probe

Supplied with pavemen
sensor in light gray
color only

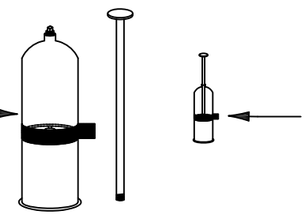

6 oz. tube
Top Coat Compound
with dasher rod pre-installed

For filling in level
between pavement sensor
head and pavement surface

Supplied with pavement sensor
Available in two (2) colors
- Light Gray
- Dark Gray

MANUFACTURER'S WARNING:
COMPOUNDS ARE HARMFUL IF SWALLOWED.
CAUSES EYE AND SKIN IRRITATION. USE
SUITABLE EYE PROTECTION. AVOID BREATHING
VAPOR. AVOID CONTACT WITH EYES, SKIN AND
CLOTHING. WASH THOROUGHLY AFTER HANDLING.
IN CASE OF CONTACT:
IMMEDIATELY FLUSH EYES AND SKIN WITH PLENTY
OF WATER FOR AT LEAST 15 MINUTES. FOR EYES,
SEE A PHYSICIAN. WASH CLOTHING BEFORE
RE-USE.

Mixing Instructions
Do NOT mix until ready to use

1

Unscrew and
remove red
plug

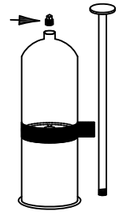

20 oz. tube only

2

Insert dasher rod
and screw into
dasher (approx.
3 turns)

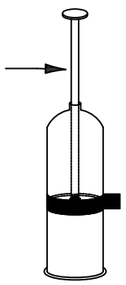

20 oz. tube only

3

Pull dasher rod all the way UP

Remove tape and squeeze
cartridge slightly to tear
aluminum foil barrier

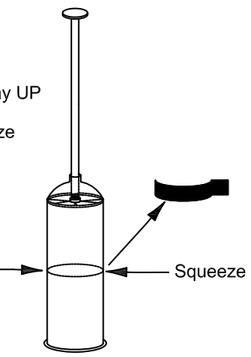

4

Mix Compound by
pumping dasher
rod up & down.
Rotate dasher rod
1/4 turn clockwise
with each pumping
stroke.

Pump:
20 oz. tube 80 strokes
6 oz. tube 60 strokes

(One stroke is one
complete in and
out cycle)

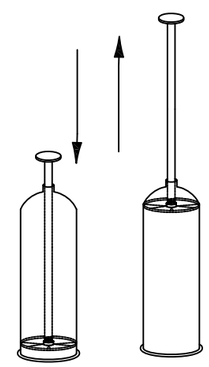

5

With mixing complete,
push dasher rod all the way
DOWN.

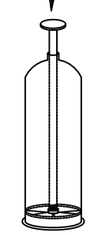

6

Remove dasher rod by
unscrewing counter
clockwise

Embedding Compound is
now ready for use

Invert and pour. Gently
squeezing tube will
increase pouring rate.

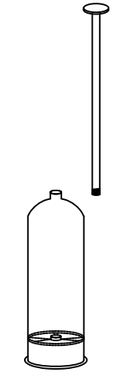

REV	CHANGE	DRAWN BY	DATE	ISSUE DATE
B	Converted Vaisala Format, Removed Active Sensor Pages	TS	11/02/2010	11/02/2010
1	Active Sensor Installation Drawings	JJK	11/01/02	11/11/02
0	Initial Release	DMC	6/25/01	6/25/01

REVISIONS

NOTICE:
THIS DRAWING AND THE INFORMATION IT DISCLOSES IS THE EXCLUSIVE PROPERTY OF VAISALA. ANY REPRODUCTION OR USE OF THIS DRAWING IN WHOLE OR IN PART, WITHOUT THE EXPRESS CONSENT OF VAISALA IS PROHIBITED.

UNLESS OTHERWISE SPECIFIED, DIMENSIONS ARE IN INCHES, WITH THE FOLLOWING TOLERANCES:

FILE NAME: 13 Epoxy Mixing Instructions

VAISALA

PART / ITEM
Encapsulating Compound
MIXING INSTRUCTIONS

SHEET 13 OF 18

SCALE: None

DWG. NO. DOC220141

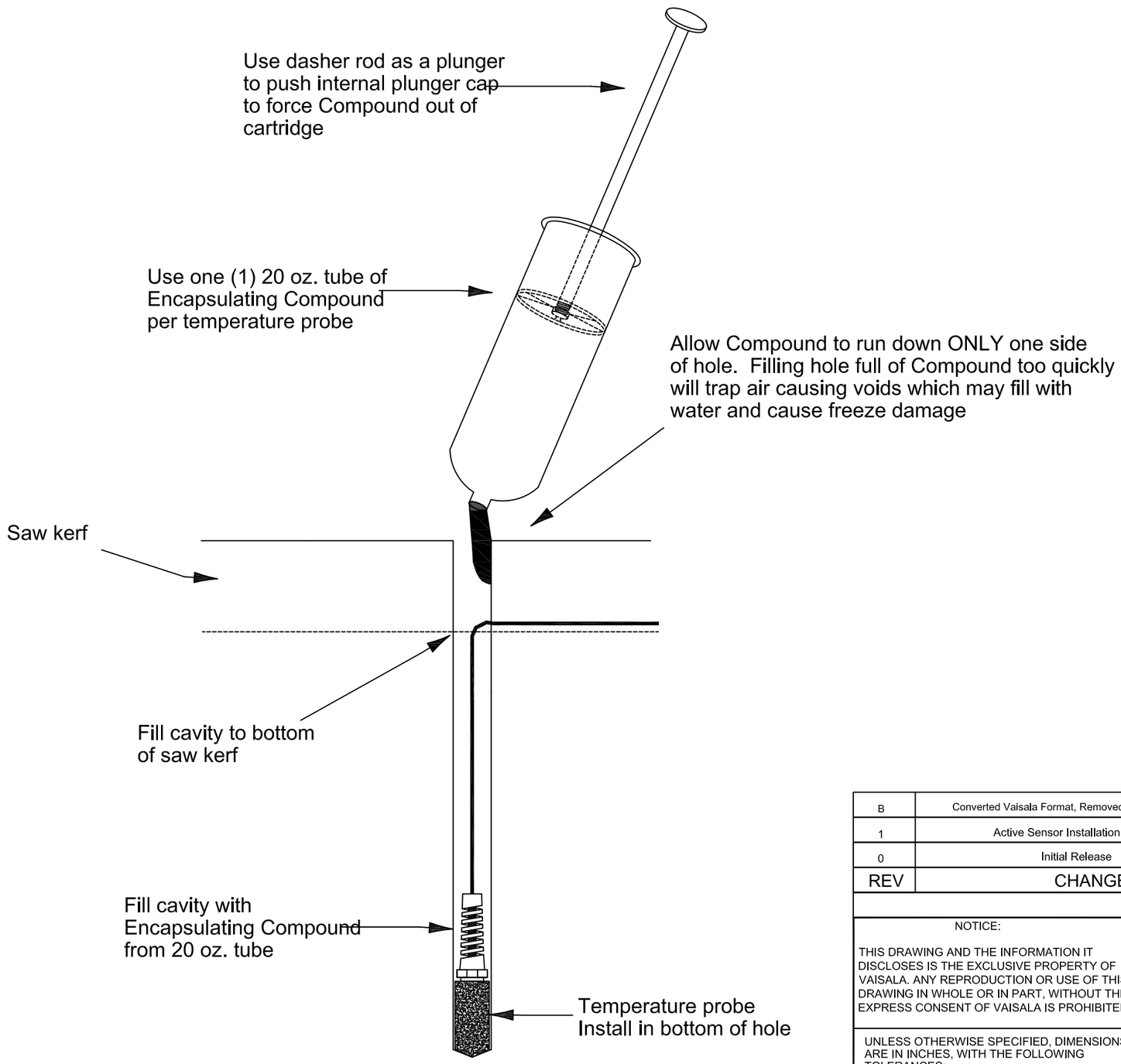

REV	CHANGE	DRAWN BY	DATE	ISSUE DATE
B	Converted Vaisala Format, Removed Active Sensor Pages	TS	11/02/2010	11/02/2010
1	Active Sensor Installation Drawings	JJK	11/01/02	11/11/02
0	Initial Release	DMC	6/25/01	6/25/01

REVISIONS

NOTICE:

THIS DRAWING AND THE INFORMATION IT DISCLOSES IS THE EXCLUSIVE PROPERTY OF VAISALA. ANY REPRODUCTION OR USE OF THIS DRAWING IN WHOLE OR IN PART, WITHOUT THE EXPRESS CONSENT OF VAISALA IS PROHIBITED.

UNLESS OTHERWISE SPECIFIED, DIMENSIONS ARE IN INCHES, WITH THE FOLLOWING TOLERANCES:

FILE NAME: 14 Embedding Temp Probe

VAISALA

PART / ITEM

Embedding Temperature Probe

SHEET 14 OF 18

SCALE: None

DWG. NO. DOC220141

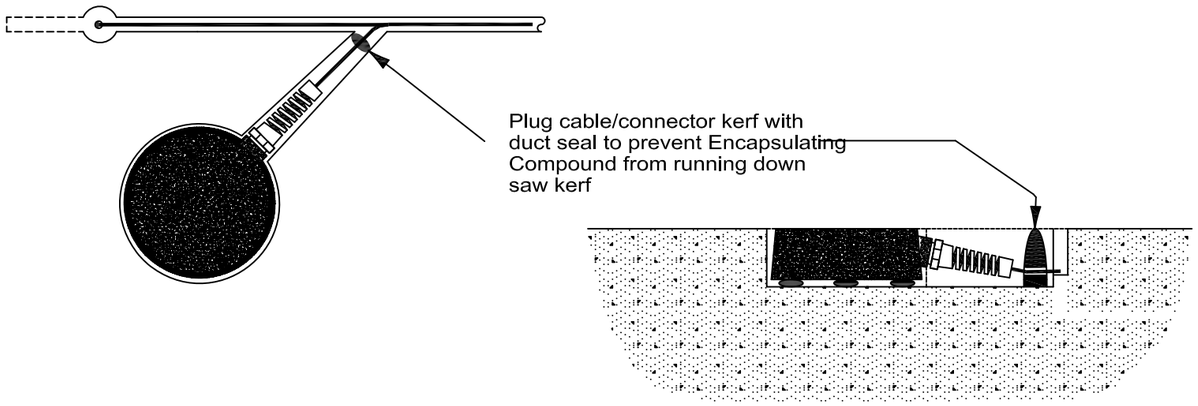

Roadway Installation

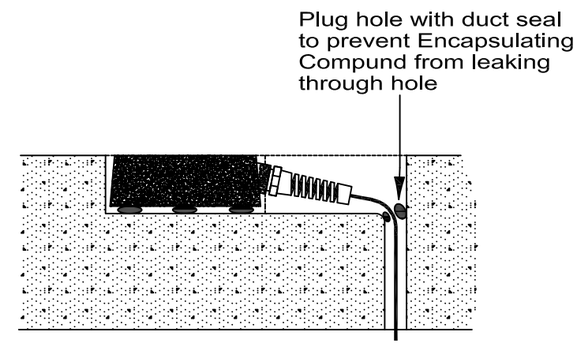

Bridge Deck Installation

REV	CHANGE	DRAWN BY	DATE	ISSUE DATE
B	Converted Vaisala Format, Removed Active Sensor Pages	TS	11/02/2010	11/02/2010
1	Active Sensor Installation Drawings	JJK	11/01/02	11/11/02
0	Initial Release	DMC	6/25/01	6/25/01

REVISIONS

NOTICE:

THIS DRAWING AND THE INFORMATION IT DISCLOSES IS THE EXCLUSIVE PROPERTY OF VAISALA. ANY REPRODUCTION OR USE OF THIS DRAWING IN WHOLE OR IN PART, WITHOUT THE EXPRESS CONSENT OF VAISALA IS PROHIBITED.

UNLESS OTHERWISE SPECIFIED, DIMENSIONS ARE IN INCHES, WITH THE FOLLOWING TOLERANCES:

FILE NAME: 15 Epoxy Pouring Preparation

VAISALA

PART / ITEM: Encapsulating Compound Pouring Preparation

SHEET 15 OF 18

SCALE: None

DWG. NO. DOC220141

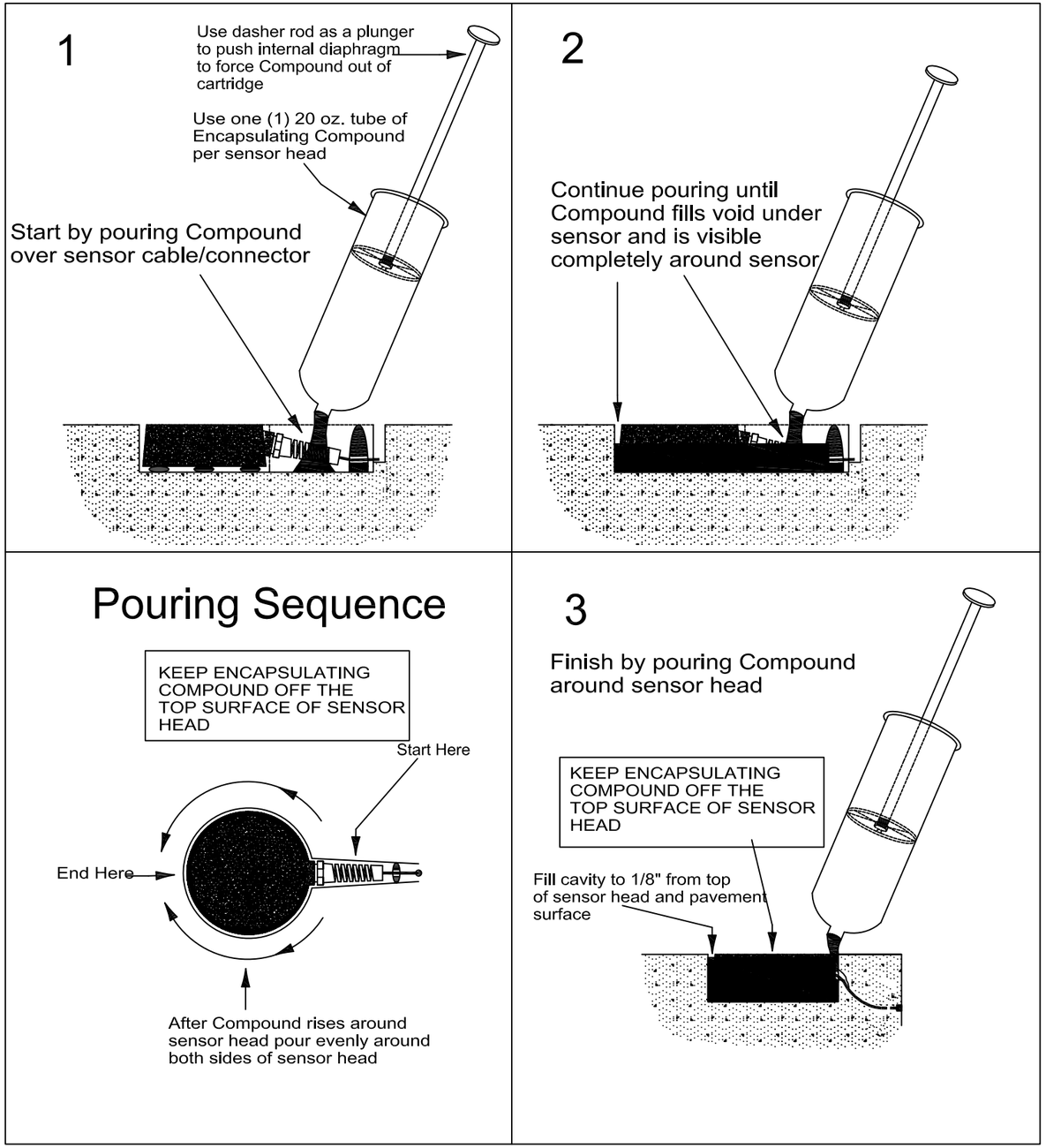

Note:

Installation of sensor head in roadway is shown. Use same procedure for sensor head installed in bridge deck.

REV	CHANGE	DRAWN BY	DATE	ISSUE DATE
B	Converted Vaisala Format, Removed Active Sensor Pages	TS	11/02/2010	11/02/2010
1	Active Sensor Installation Drawings	JJK	11/01/02	11/11/02
0	Initial Release	DMC	6/25/01	6/25/01

REVISIONS

NOTICE:

THIS DRAWING AND THE INFORMATION IT DISCLOSES IS THE EXCLUSIVE PROPERTY OF VAISALA. ANY REPRODUCTION OR USE OF THIS DRAWING IN WHOLE OR IN PART, WITHOUT THE EXPRESS CONSENT OF VAISALA IS PROHIBITED.

UNLESS OTHERWISE SPECIFIED, DIMENSIONS ARE IN INCHES, WITH THE FOLLOWING TOLERANCES:

FILE NAME: 16 Pouring Encapsulating Epoxy

VAISALA

PART / ITEM: Pouring Encapsulating Compound

SHEET 16 OF 18

SCALE: None

DWG. NO. DOC220141

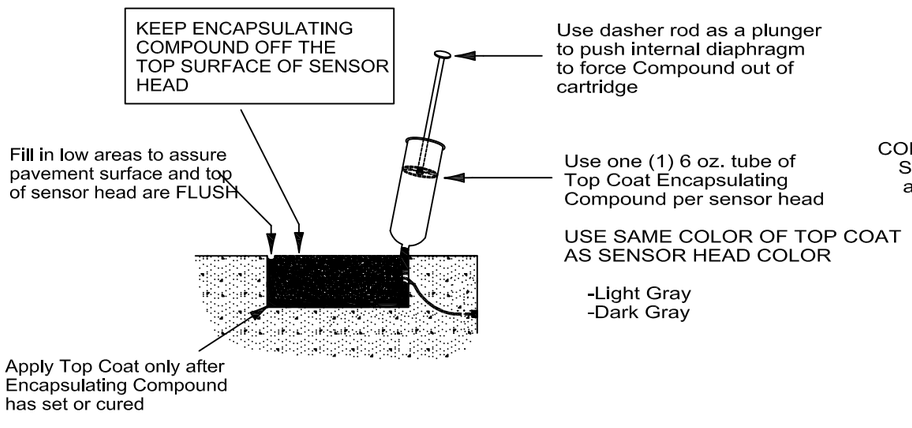

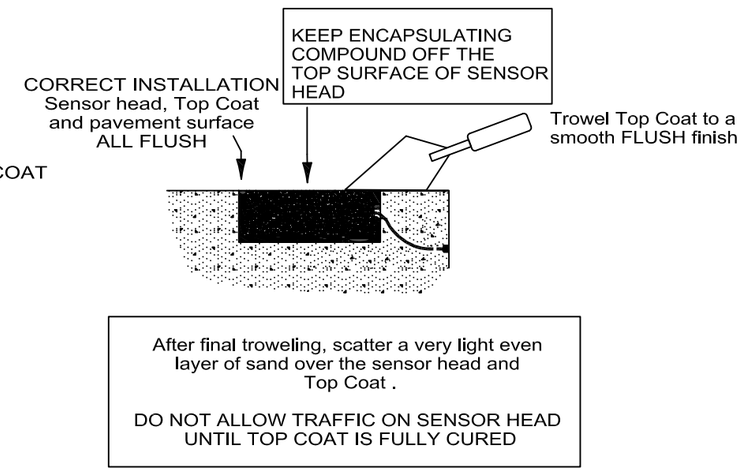

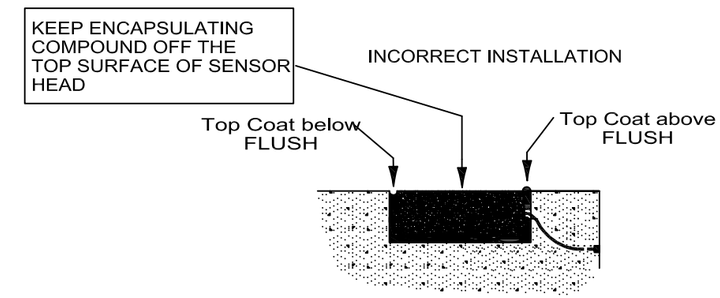

REV	CHANGE	DRAWN BY	DATE	ISSUE DATE
B	Converted Vaisala Format, Removed Active Sensor Pages	TS	11/02/2010	11/02/2010
1	Active Sensor Installation Drawings	JJK	11/01/02	11/11/02
0	Initial Release	DMC	6/25/01	6/25/01

REVISIONS

NOTICE:
THIS DRAWING AND THE INFORMATION IT DISCLOSES IS THE EXCLUSIVE PROPERTY OF VAISALA. ANY REPRODUCTION OR USE OF THIS DRAWING IN WHOLE OR IN PART, WITHOUT THE EXPRESS CONSENT OF VAISALA IS PROHIBITED.

UNLESS OTHERWISE SPECIFIED, DIMENSIONS ARE IN INCHES, WITH THE FOLLOWING TOLERANCES:

FILE NAME: 17 Topcoat Application

VAISALA

PART / ITEM: Encapsulating Compound Top Coat Application

SHEET 17 OF 18

SCALE: None

DWG. NO. DOC220141

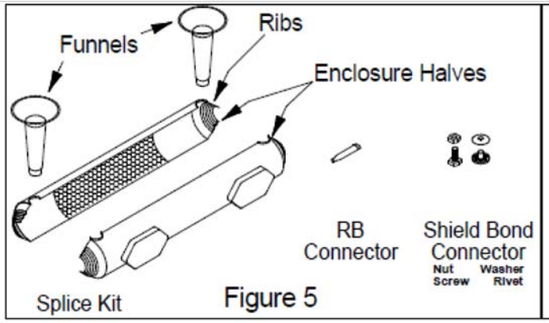

Figure 5

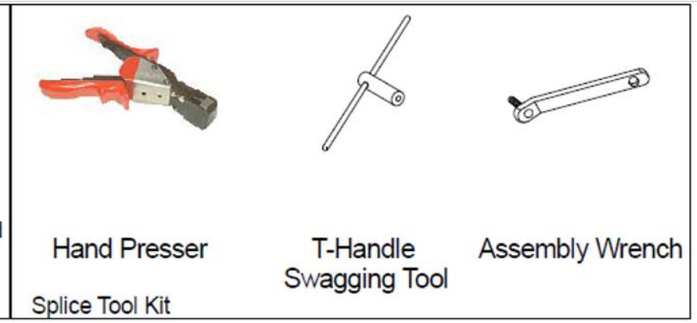

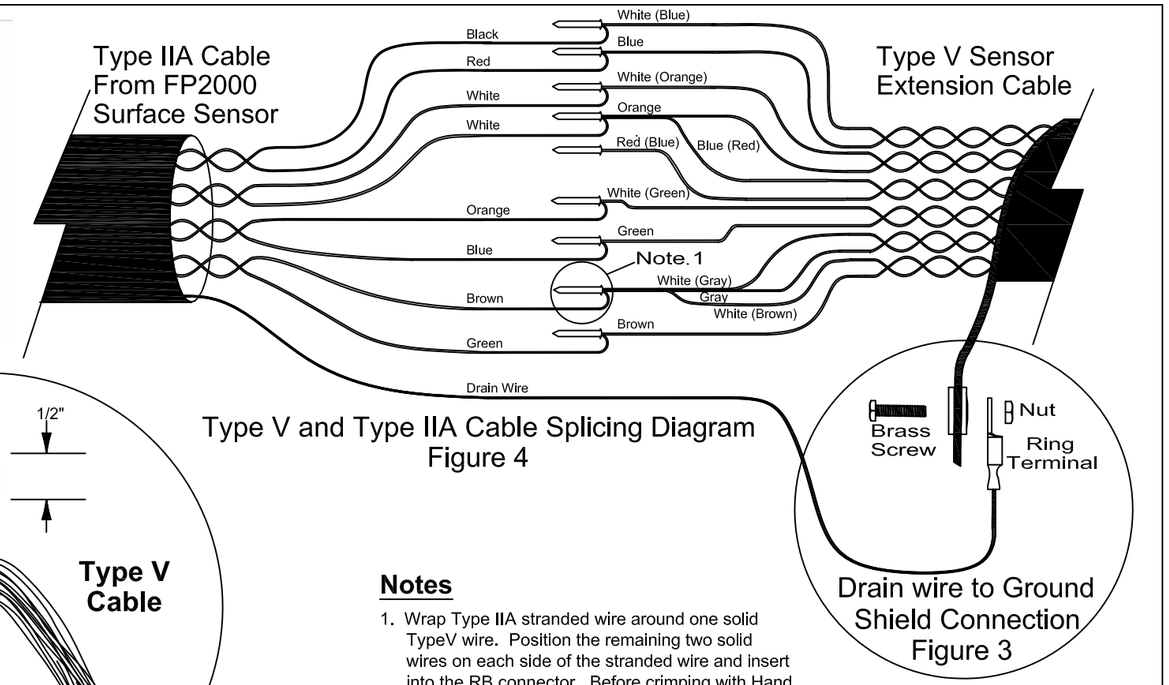

Type V and Type IIA Cable Splicing Diagram
Figure 4

Drain wire to Ground Shield Connection
Figure 3

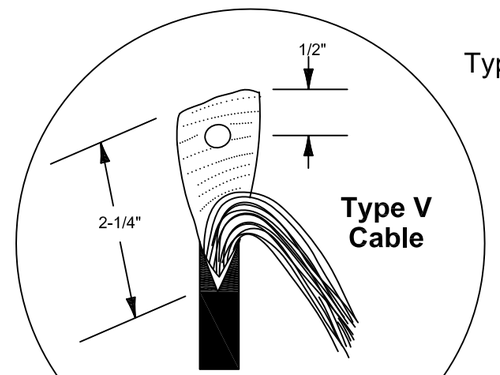

Type V Cable Shield Bond Connector Preparation
Figure 1

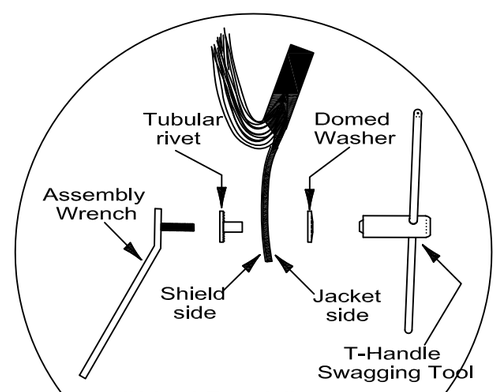

Shield Bond Connector Installation
Figure 2

PREPARING TYPE V CABLE FOR SPLICING

1. Leaving 5' to 10' of cable coiled inside the splice can or junction box, cut the excess Type V cable off and discard it.
2. Examine the end of the cable and note the location of the shield overlap. Along this shield overlap, make a 9" lateral (length-wise) cut through the Type V cable outer jacket. Spread the outer jacket and shield apart by pulling out the wire pairs.
3. Remove the core wrap and clean the jelly filling compound from the wires. Re-twist the wire pairs to maintain their pair identification.
4. Cut the 6 wire pairs to a lenght of 5" from end of lateral cut. **DO NOT CUT DRAIN WIRE (See Figure 4)** Remove 5/8" of the insulation from each conductor, being careful not to nick the solid conductor.

INSTALL SHIELD BOND CONNECTOR

1. Flatten the outer jacket and shield. Cut the flattened part off leaving a tab 2-1/4" from the end of the lateral cut. Punch a 1/4" diameter hole thrugh the jacket and shield. This hole should be 1/2" from the end and centered on the tab. (Figure 1)
2. Insert tubular rivet / serrated washer sleve throught hole on the shield side and position the special domed washer (Figure 2) over the tubular rivet on the jacket side. **The domed washer must be positioned with the concave surface against the cable jacket. Printed surface should be out, away from jacket surface.**
3. Insert threaded portion of assembly wrence through tubular rivet.
4. Thread T-handle swaging tool onto threaded portion of assembly wrench and tighten to finger-tight position.
5. Hold assembly wrench and domed washer firmly in one hand and tighten with T-handle swaging tool until domed washer appears flattened. **After washer becomes flattened, do not overtighten.** Remove assembly tools.

PREPARING TYPE IIA CABLE FOR SPLICING

1. Leaving 5" to 10' of cable coiled inside the splice can or junction box, cut the excess Type IIA cable off and discard it. From this end remove 9" of the Type IIA cable outer jacket and aluminum foild shield, being careful not to cut the individual wires.
2. Remove the mylar wrap and clean the jelly filling compound from the wires. Re-twist the wire pairs to maintain the pair identification.
3. cut all the wire pairs to a length of 5" from the end of the outer jacket.
4. Remove ¾" of the insulation from each conductor, being careful not to nick the stranded conductors.

SPLICE TYPE V AND TYPE IIA CABLES AS SHOWN IN FIGURE 4 (See Notes for additional instructions)

1. Insert the 10-24 brass machine screw through the Shield Bond Connector eyelet. Position provided ring terminal with drain wire and nut and tighten. (Figure 3)

ENCAPSULATING WIRES USING THE 2 ENCLOSURE HALVES (Figure 5)

1. Trim off the first set of ribs (See Figure 5) only on the Type V entry end of the enclosure halves, thus allowing a large enough hole for Type V cable entry.
2. Center the spliced cables into the ½ of the enclosure along the length of the splice area so the diameter of the bundle is as small as possible. Carefully align the tongue and grove on them so as not to pinch any wires. Snap the halves together firmly. Use pliers if necessary.
3. Wrap the enclosure ends tightly with the supplied rubber tape. Be careful not to cover the funnel holes.
4. Place the funnels into the two holes and position the enclosure assembly on a slight incline of about 1./2".
5 Break the seal and thoroughly mix the encapsulating compound. Follow the instructions on the Unipak container guard bag.
6. Cut the corner off one end of the bag and slowly pour the encapsulating compound into the funnel on the high end only. Pour until the compound reaches the tops of the funnels.
7. Leave the poured splice undisturbed to solidify. This should take 1 to 4 hours depending on the temperature.

Notes

1. Wrap Type IIA stranded wire around one solid TypeV wire. Position the remaining two solid wires on each side of the stranded wire and insert into the RB connector. Before crimping with Hand Presser, verify all four wires are fully inserted into the RB Connector.
2. All materials to complete the splicing procedure included in SSI Splice Kit with Tools, P/N 24051016. Tool Kit includes Hand Presser, T-Handle Swagging Tool and Assembly Wrench. (Only one Hand Presser and one T-Handle Swagging Tool is needed to make all splices)

The following tools are needed to perform a splice but are not supplied by VAISALA:
Knife
Scissors
Rags or paper towels
1/4" round hole punch
Wire cutters
Insulation strippers
Ruler or tape measure
Small adjustable wrench

REV	CHANGE	DRAWN BY	DATE	ISSUE DATE
B	Converted Vaisala Format, Removed Active Sensor Pages	TS	11/02/2010	11/02/2010
1	Active Sensor Installation Drawings	JJK	11/01/02	11/11/02
0	Initial Release	DMC	6/25/01	6/25/01

REVISIONS

NOTICE:
THIS DRAWING AND THE INFORMATION IT DISCLOSES IS THE EXCLUSIVE PROPERTY OF VAISALA. ANY REPRODUCTION OR USE OF THIS DRAWING IN WHOLE OR IN PART, WITHOUT THE EXPRESS CONSENT OF VAISALA IS PROHIBITED.

UNLESS OTHERWISE SPECIFIED, DIMENSIONS ARE IN INCHES, WITH THE FOLLOWING TOLERANCES:

FILE NAME: 18 FP2000 Splicing Details

VAISALA

PART / ITEM: FP2000 Surface Sensor Splicing Instructions

SHEET 18 OF 18

SCALE: None

DWG. NO. DOC220141