ACSTP-X093(006)E

Dist	COUNTY	ROUTE	POST MILES TOTAL PROJECT	SHEET No.	TOTAL SHEETS
02	Sis	3,5, 96,97	Var	1	29

STATE OF CALIFORNIA
DEPARTMENT OF TRANSPORTATION

PROJECT PLANS FOR CONSTRUCTION ON
STATE HIGHWAY
IN SISKIYOU COUNTY
AT VARIOUS LOCATIONS

TO BE SUPPLEMENTED BY STANDARD PLANS DATED MAY 2006

INDEX OF PLANS

SHEET No.	DESCRIPTION
1	TITLE AND LOCATION MAP
2	CONSTRUCTION DETAILS
3	CONSTRUCTION AREA SIGNS
4-6	STAGE CONSTRUCTION PLANS
7	TRAFFIC HANDLING PLAN
8	SUMMARY OF QUANTITIES
9-15	REVISED STANDARD PLANS

STRUCTURE PLANS

16-29	ROUTE 3, 5, 96 AND 97 BRIDGES

THE STANDARD PLANS LIST APPLICABLE TO THIS CONTRACT IS INCLUDED IN THE NOTICE TO BIDDERS AND SPECIAL PROVISIONS BOOK.

LOCATION MAP

LOCATIONS OF CONSTRUCTION

No.	COUNTY	ROUTE	PM	BRIDGE No.	BRIDGE NAME
1	Sis	03	24.26	02-0038	PATTERSON CREEK
2	Sis	03	27.09	02-0052	KIDDER CREEK
3	Sis	03	31.23	02-0056	KIDDER CREEK
4	Sis	05	R9.20	02-0036L	PIONEER OVERHEAD
5	Sis	05	R9.20	02-0036R	PIONEER OVERHEAD
6	Sis	05	R23.00	02-0136R	EDGEWOOD UC
7	Sis	05	R39.27	02-0145L	GUYS GULCH
8	Sis	05	R39.27	02-0145R	GUYS GULCH
9	Sis	05	R40.12	02-0146L	JULIEN CREEK
10	Sis	05	R40.12	02-0146R	JULIEN CREEK
11	Sis	05	R42.51	02-0153R	KILLGORE HILLS ROAD UC
12	Sis	05	R42.51	02-0153L	KILLGORE HILLS ROAD UC
13	Sis	05	R44.31	02-0149	WALTERS ROAD OC
14	Sis	05	R45.62	02-0159L	MOONLIT OAKS UC
15	Sis	05	R45.62	02-0159R	MOONLIT OAKS UC
16	Sis	05	R46.49	02-0138L	OBERLIN ROAD UC
17	Sis	05	R46.49	02-0138R	OBERLIN ROAD UC
18	Sis	05	R47.56	02-0158L	MINER STREET UC
19	Sis	05	R47.56	02-0158R	MINER STREET UC
20	Sis	05	R48.23	02-0150R	N YREKA SEPARATION
21	Sis	05	R48.23	02-0150L	N YREKA SEPARATION
22	Sis	05	R61.55	02-0174R	HENLEY WAY UC
23	Sis	05	R64.82	02-0176R	HUTTON CREEK
24	Sis	96	71.23	02-0079	SCOTT RIVER
25	Sis	97	R14.65	02-0048	SHEEP ROCK CATLEPASS

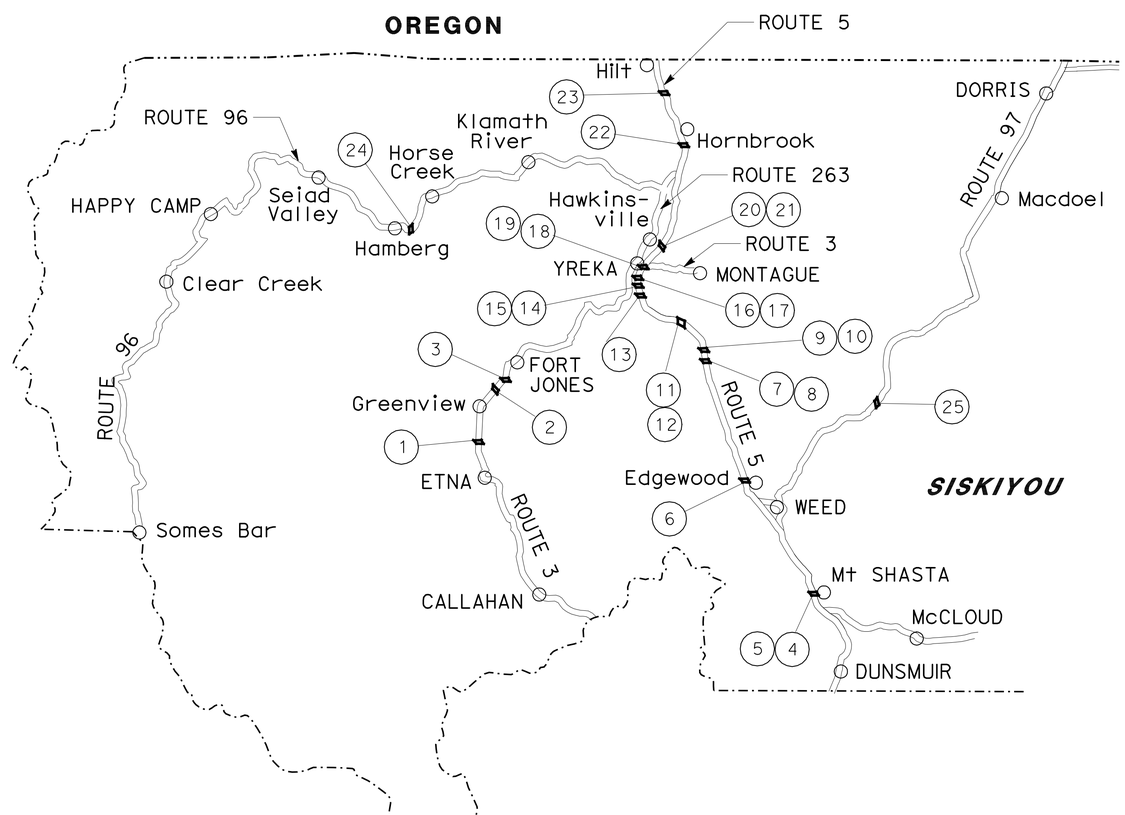

NO SCALE

THE CONTRACTOR SHALL POSSESS THE CLASS (OR CLASSES) OF OF LICENSE AS SPECIFIED IN THE "NOTICE TO BIDDERS."

Thomas Penick 02-03-10
PROJECT ENGINEER DATE
REGISTERED CIVIL ENGINEER

March 22, 2010
PLANS APPROVAL DATE

REGISTERED PROFESSIONAL ENGINEER THOMAS PENICK No. C61068 Exp. 12-31-10 CIVIL STATE OF CALIFORNIA

THE STATE OF CALIFORNIA OR ITS OFFICERS OR AGENTS SHALL NOT BE RESPONSIBLE FOR THE ACCURACY OR COMPLETENESS OF SCANNED COPIES OF THIS PLAN SHEET.

PROJECT MANAGER ERIC AKANA
DESIGN ENGINEER ROB BURNETT

P:\proj2\02\1E630_plans\pse\21e630ab001.dgn

DATE PLOTTED => 18-MAY-2010
TIME PLOTTED => 09:59
LAST REVISION 02-03-10

CONTRACT No. 02-1E6304

Dist	COUNTY	ROUTE	POST MILES TOTAL PROJECT	SHEET No.	TOTAL SHEETS
02	Sis	3,5, 96,97	Var	2	29

Thomas Penick 02-03-10
REGISTERED CIVIL ENGINEER DATE

3-22-10
PLANS APPROVAL DATE

REGISTERED PROFESSIONAL ENGINEER THOMAS PENICK No. C61068 Exp. 12-31-10 CIVIL STATE OF CALIFORNIA

THE STATE OF CALIFORNIA OR ITS OFFICERS OR AGENTS SHALL NOT BE RESPONSIBLE FOR THE ACCURACY OR COMPLETENESS OF SCANNED COPIES OF THIS PLAN SHEET.

NOTES:

1. DIMENSIONS OF THE PAVEMENT STRUCTURES (STRUCTURAL SECTIONS) ARE SUBJECT TO TOLERANCES SPECIFIED IN THE STANDARD SPECIFICATIONS.
2. SUPERELEVATIONS AS SHOWN OR AS DIRECTED BY THE ENGINEER.
3. SEE GENERAL PLANS FOR DETAILS NOT SHOWN.

LEGEND

SHOULDER RUMBLE STRIP (AC, GROUND-IN INDENTATION)

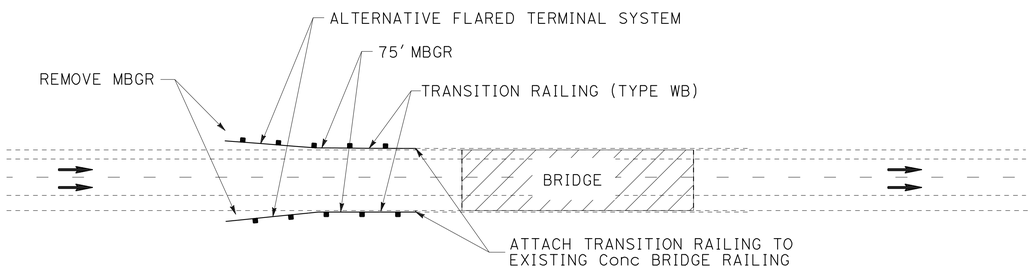

PLAN
METAL BEAM GUARD RAIL
LOCATION 23
(NB HUTTON CREEK)

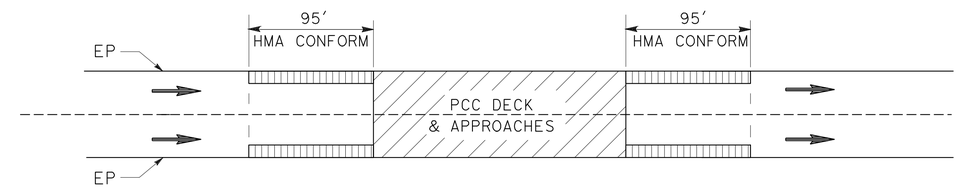

PLAN
SHOULDER RUMBLE STRIP (AC, GROUND-IN INDENTATION)
LOCATION 23
(NB HUTTON CREEK)

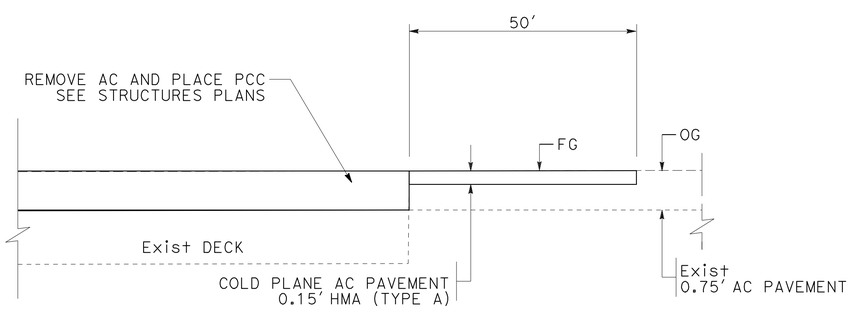

PROFILE
PAVEMENT CONFORM DETAIL
LOCATION 25
(SHEEP ROCK CATTLEPASS)

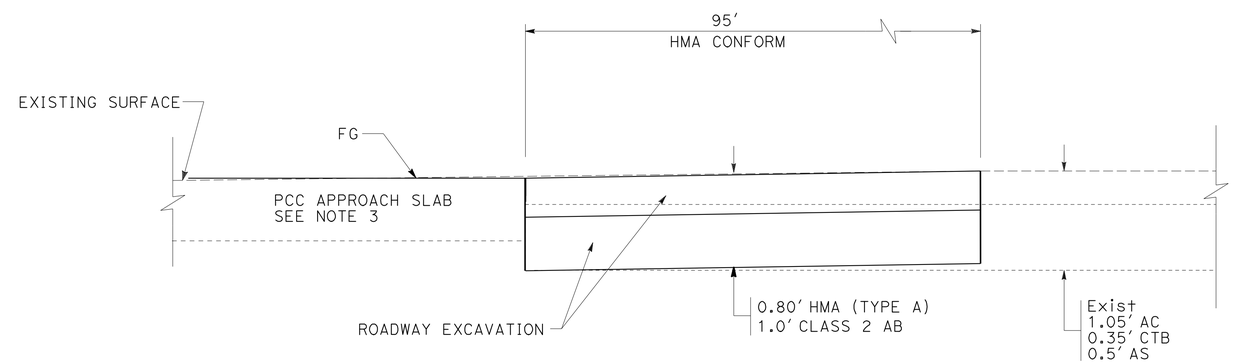

PROFILE
PAVEMENT CONFORM DETAIL
LOCATION 23
(NB HUTTON CREEK)

THIS PLAN ACCURATE FOR STAGE CONSTRUCTION WORK ONLY.

CONSTRUCTION DETAILS
NO SCALE

C-1

REVISED BY | DATE REVISED
TOM PENICK | STEVE ALAWAR
CALCULATED-DESIGNED BY | CHECKED BY
FUNCTIONAL SUPERVISOR
ROB BURNETT

STATE OF CALIFORNIA - DEPARTMENT OF TRANSPORTATION
Caltrans
DESIGN

P:\proj2\02\1E630_plans\pse\21e630ga001.dgn

LAST REVISION 02-03-10 | DATE PLOTTED => 25-MAR-2010 | TIME PLOTTED => 06:53

Dist	COUNTY	ROUTE	POST MILES TOTAL PROJECT	SHEET No.	TOTAL SHEETS
02	Sis	3,5, 96,97	Var	3	29

Thomas Penick 02-03-10
REGISTERED CIVIL ENGINEER DATE

3-22-10
PLANS APPROVAL DATE

REGISTERED PROFESSIONAL ENGINEER THOMAS PENICK No. C61068 Exp. 12-31-10 CIVIL STATE OF CALIFORNIA

THE STATE OF CALIFORNIA OR ITS OFFICERS OR AGENTS SHALL NOT BE RESPONSIBLE FOR THE ACCURACY OR COMPLETENESS OF SCANNED COPIES OF THIS PLAN SHEET.

NOTES:

1. EXACT SIGN LOCATIONS TO BE DETERMINED BY THE ENGINEER.
2. EXISTING UTILITY FACILITIES HAVE NOT BEEN PLOTTED ON THESE PLANS.
3. SIGNS SHOWN WITH (CA) INDICATE CALIFORNIA MUTCD SIGN CODE, OTHERWISE FEDERAL CODES ARE SHOWN.
4. USE STATIONARY MOUNTED SIGNS AT LOCATIONS 23 AND 25. USE PORTABLE SIGNS AT ALL OTHER LOCATIONS.

LEGEND

SIGN (SEE NOTE 5)

DIRECTION OF TRAVEL

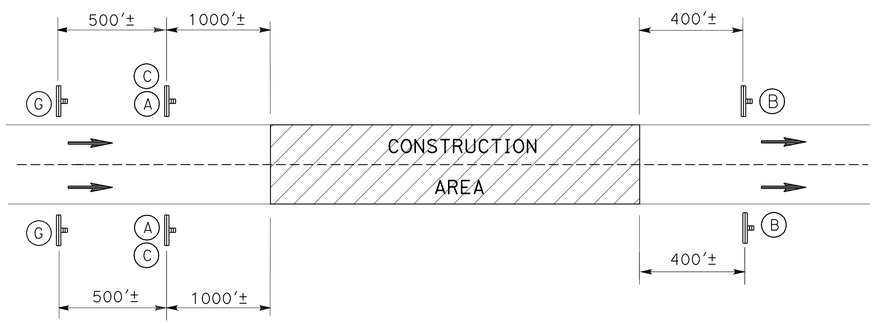

CONSTRUCTION AREA SIGNS
MULTI-LANE LOCATIONS

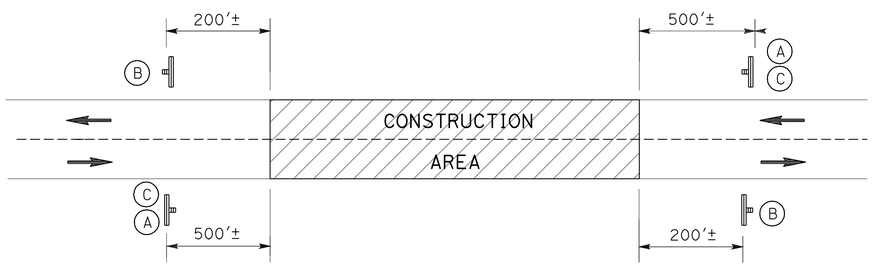

CONSTRUCTION AREA SIGNS
2-LANE HIGHWAY LOCATIONS

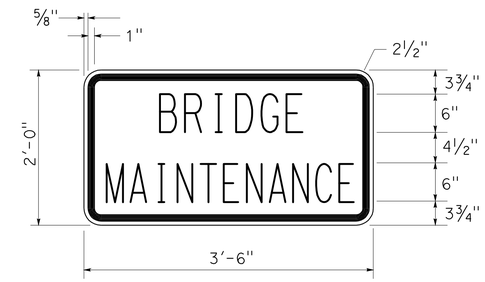

C23B (CA) SIGN PANEL DETAIL

LOCATION 23 & 25
CONSTRUCTION AREA SIGNS
(STATIONARY MOUNTED)

SIGN No.	CODE	PANEL SIZE	SIGN MESSAGE	No. AND SIZE OF POST	No. OF SIGNS LOCATION 23	No. OF SIGNS LOCATION 25
A	W20-1	48" x 48"	ROAD WORK AHEAD	1 - 4" x 6"	4	2
B	G20-2	36" x 18"	END ROAD WORK	1 - 4" x 6"	2	2
C	C23B(CA)	42" x 24"	BRIDGE MAINTENANCE		2	2
D	R2-1	36" x 48"	SPEED LIMIT 55	1 - 4" x 6"	2	
E	R2-4	36" x 48"	55 ZONE AHEAD	1 - 4" x 6"	2	
F	R-3	36" x 45"	END 55 SPEED LIMIT	1 - 4" x 6"	1	
G	C40A(CA)	48" x 48"	TRAFFIC FINES DOUBLED IN WORK ZONES	1 - 4" x 6"	2	

SEE TRAFFIC HANDLING PLAN FOR SPEED REDUCTION DETAILS.

THIS PLAN ACCURATE FOR CONSTRUCTION AREA SIGNS WORK ONLY.

CONSTRUCTION AREA SIGNS
NO SCALE
CS-1

REVISED BY | DATE REVISED
TOM PENICK | STEVE ALAWAR
CALCULATED-DESIGNED BY | CHECKED BY
FUNCTIONAL SUPERVISOR
ROB BURNETT

STATE OF CALIFORNIA - DEPARTMENT OF TRANSPORTATION
Caltrans
DESIGN

P:\proj2\02\1E630_plans\pse\21e6301a001.dgn

LAST REVISION 02-03-10 | DATE PLOTTED => 25-MAR-2010 | TIME PLOTTED => 06:56

Dist	COUNTY	ROUTE	POST MILES TOTAL PROJECT	SHEET No.	TOTAL SHEETS
02	Sis	3,5, 96,97	Var	4	29

Thomas Penick 02-03-10
REGISTERED CIVIL ENGINEER DATE

3-22-10
PLANS APPROVAL DATE

REGISTERED PROFESSIONAL ENGINEER THOMAS PENICK No. C61068 Exp. 12-31-10 CIVIL STATE OF CALIFORNIA

THE STATE OF CALIFORNIA OR ITS OFFICERS OR AGENTS SHALL NOT BE RESPONSIBLE FOR THE ACCURACY OR COMPLETENESS OF SCANNED COPIES OF THIS PLAN SHEET.

LEGEND

- WORK AREA
- Temp RAILING (TYPE K)
- Temp RAILING (TYPE K)
- DIRECTION OF TRAFFIC
- CHANNELIZER (SURFACE MOUNTED)
- TYPE VI ARROW
- OBJECT MARKER (TYPE P) (ORANGE/BLACK)

LOOKING IN DIRECTION OF TRAFFIC

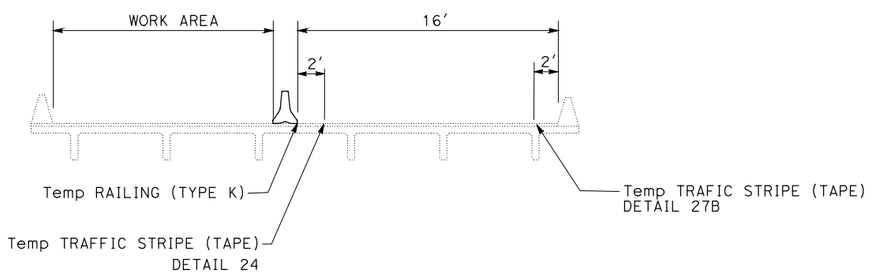

STAGE 1

LOCATIONS 23
(NB HUTTON CREEK)

LOOKING IN DIRECTION OF TRAFFIC

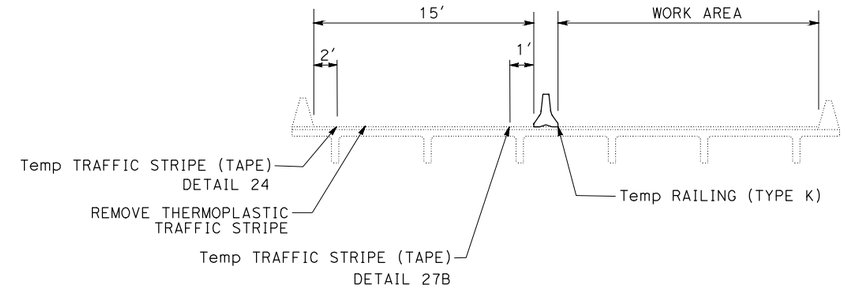

STAGE 2

LOCATIONS 23
(NB HUTTON CREEK)

STAGE CONSTRUCTION QUANTITIES

LOCATION NO.	STAGE	Temp RAILING (TYPE K)	Temp TRAFFIC STRIPE (TAPE)	REMOVE THERMOPLASTIC TRAFFIC STRIPE	REMOVE YELLOW THERMOPLASTIC TRAFFIC STRIPE (HAZARDOUS WASTE)	TEMPORARY PAVEMENT MARKING (TAPE)	CHANNELIZERS (SURFACE MOUNTED)	FLASHING ARROW SIGN
		LF	LF	LF	LF	SQFT	EA	EA
23	1	700	4650	4150		126	50	2
23	2	700	4200		1600	126	47	2
25	2	815	6045	1515	1515	126	47	2
	TOTAL	2215	14,895	5665	3115	378	144	6

THIS PLAN ACCURATE FOR STAGE CONSTRUCTION WORK ONLY.

STAGE CONSTRUCTION DETAILS

NO SCALE

SCD-1

REVISED BY	DATE REVISED

CALCULATED-DESIGNED BY	CHECKED BY
TOM PENICK	STEVE ALAWAR

FUNCTIONAL SUPERVISOR: ROB BURNETT

STATE OF CALIFORNIA - DEPARTMENT OF TRANSPORTATION
Caltrans
DESIGN

P:\proj2\02\1E630_plans\pse\21e630mb001.dgn

LAST REVISION 02-03-10 | DATE PLOTTED => 24-MAR-2010 | TIME PLOTTED => 13:22

Dist	COUNTY	ROUTE	POST MILES TOTAL PROJECT	SHEET No.	TOTAL SHEETS
02	Sis	3,5, 96,97	Var	5	29

Thomas Penick 02-03-10
REGISTERED CIVIL ENGINEER DATE

3-22-10
PLANS APPROVAL DATE

REGISTERED PROFESSIONAL ENGINEER THOMAS PENICK No. C61068 Exp. 12-31-10 CIVIL STATE OF CALIFORNIA

THE STATE OF CALIFORNIA OR ITS OFFICERS OR AGENTS SHALL NOT BE RESPONSIBLE FOR THE ACCURACY OR COMPLETENESS OF SCANNED COPIES OF THIS PLAN SHEET.

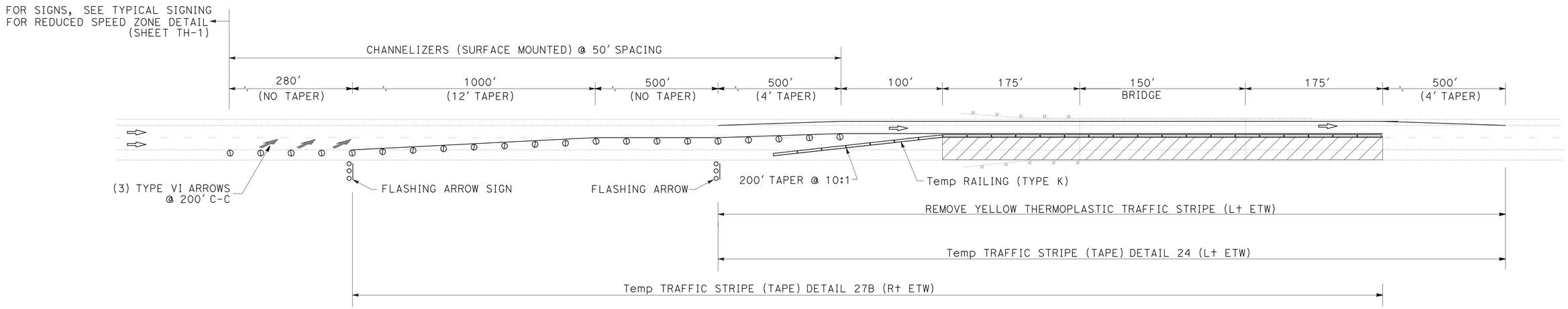

STAGE 2
LOCATION 23
(NB HUTTON CREEK)

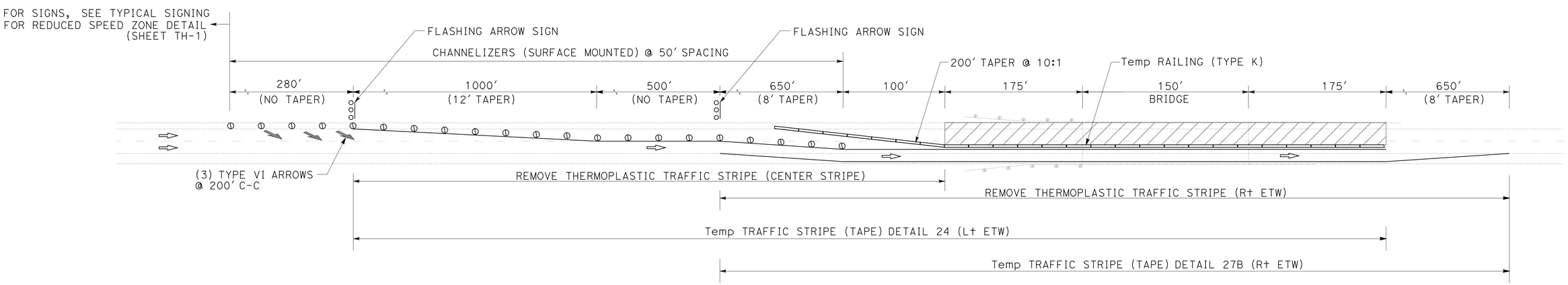

STAGE 1
LOCATION 23
(NB HUTTON CREEK)

STAGE CONSTRUCTION DETAILS
NO SCALE

THIS PLAN ACCURATE FOR STAGE CONSTRUCTION WORK ONLY.

SCD-2

REVISED BY | DATE REVISED
TOM PENICK | STEVE ALAWAR
CALCULATED-DESIGNED BY | CHECKED BY
FUNCTIONAL SUPERVISOR: ROB BURNETT

STATE OF CALIFORNIA - DEPARTMENT OF TRANSPORTATION
Caltrans® DESIGN

P:\proj2\02\1E630_plans\pse\21e630mb002.dgn

LAST REVISION 02-03-10 | DATE PLOTTED => 25-MAR-2010 | TIME PLOTTED => 06:59

BORDER LAST REVISED 4/11/2008 | RELATIVE BORDER SCALE IS IN INCHES 0 1 2 3 | USERNAME => trmikesl | DGN FILE => 21e630mb002.dgn | CU 03 243 | EA 1E6301

Dist	COUNTY	ROUTE	POST MILES TOTAL PROJECT	SHEET No.	TOTAL SHEETS
02	Sis	3,5, 96,97	Var	6	29

Thomas Penick 02-03-10
REGISTERED CIVIL ENGINEER DATE

3-22-10
PLANS APPROVAL DATE

REGISTERED PROFESSIONAL ENGINEER THOMAS PENICK No. C61068 Exp. 12-31-10 CIVIL STATE OF CALIFORNIA

THE STATE OF CALIFORNIA OR ITS OFFICERS OR AGENTS SHALL NOT BE RESPONSIBLE FOR THE ACCURACY OR COMPLETENESS OF SCANNED COPIES OF THIS PLAN SHEET.

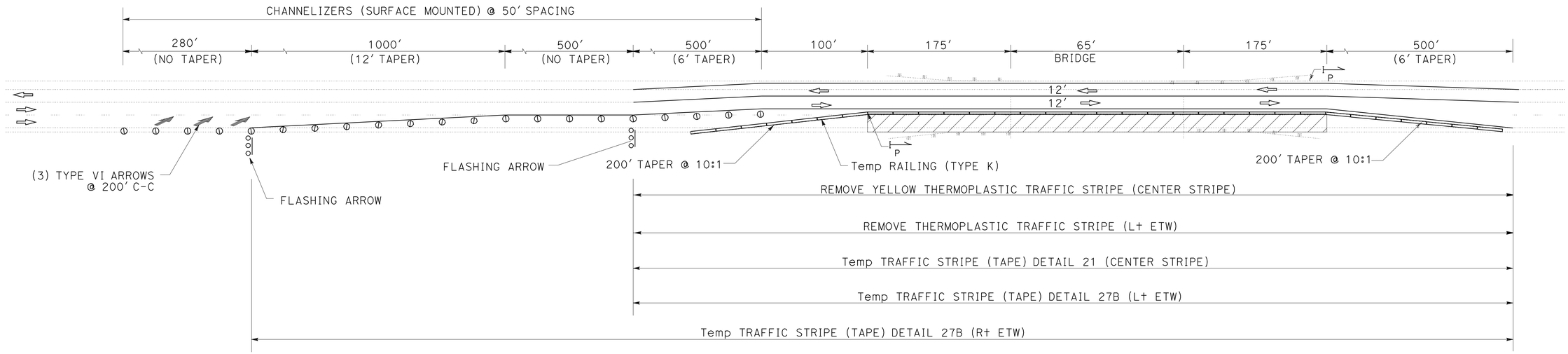

STAGE 2
LOCATION 25
(SHEEP ROCK CATTLEPASS)

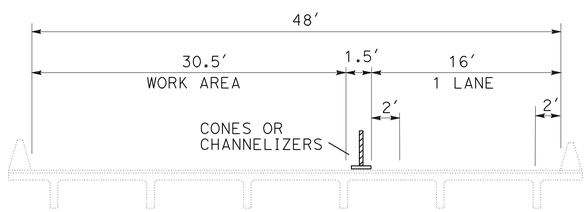

STAGE 1
LOCATION 25
(SHEEP ROCK CATTLEPASS)

NOTES:
1. ONE WAY TRAFFIC CONTROL, 24 HR FLAGGERS
2. SEE STANDARD PLAN T-13

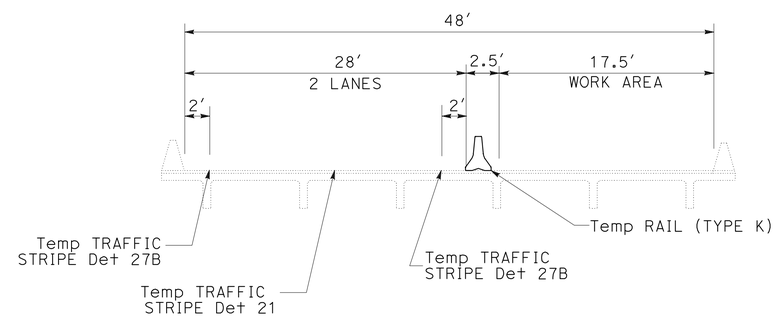

STAGE 2
LOCATION 25
(SHEEP ROCK CATTLEPASS)

NOTES:
1. TWO WAY TRAFFIC CONTROL
2. SEE LAYOUT VIEW THIS SHEET

STAGE CONSTRUCTION DETAILS
NO SCALE

SCD-3

THIS PLAN ACCURATE FOR STAGE CONSTRUCTION WORK ONLY.

REVISED BY | DATE REVISED
TOM PENICK | STEVE ALAWAR
CALCULATED-DESIGNED BY | CHECKED BY
FUNCTIONAL SUPERVISOR: ROB BURNETT
STATE OF CALIFORNIA - DEPARTMENT OF TRANSPORTATION
Caltrans DESIGN
P:\proj2\02\1E630_plans\pse\21e630mb003.dgn

LAST REVISION 02-03-10 | DATE PLOTTED => 24-MAR-2010 | TIME PLOTTED => 13:10

Dist	COUNTY	ROUTE	POST MILES TOTAL PROJECT	SHEET No.	TOTAL SHEETS
02	Sis	3,5, 96,97	Var	7	29

Thomas Penick 02-03-10
REGISTERED CIVIL ENGINEER DATE

3-22-10
PLANS APPROVAL DATE

REGISTERED PROFESSIONAL ENGINEER
THOMAS PENICK
No. C61068
Exp. 12-31-10
CIVIL
STATE OF CALIFORNIA

THE STATE OF CALIFORNIA OR ITS OFFICERS OR AGENTS SHALL NOT BE RESPONSIBLE FOR THE ACCURACY OR COMPLETENESS OF SCANNED COPIES OF THIS PLAN SHEET.

NOTES:

1. EXACT SIGN AND PCMS LOCATIONS TO BE DETERMINED BY THE ENGINEER.
2. EXACT PCMS WORDING TO BE DETERMINED BY THE ENGINEER.
3. USE THE "ROAD WORK AHEAD" SIGN FRAMES WHEN COZEEP OFFICERS ARE NOT REQUIRED TO BE PRESENT DURING THE ENTIRE DURATION OF THE SPEED ZONE REDUCTION.
4. USE STATIONARY MOUNTED SIGNS AT LOCATIONS 23 AND 25. USE PORTABLE SIGNS AT ALL OTHER LOCATIONS.

LEGEND

SIGN (SEE NOTE 4)

DIRECTION OF TRAVEL

PORTABLE CHANGEABLE MESSAGE SIGN (PCMS)

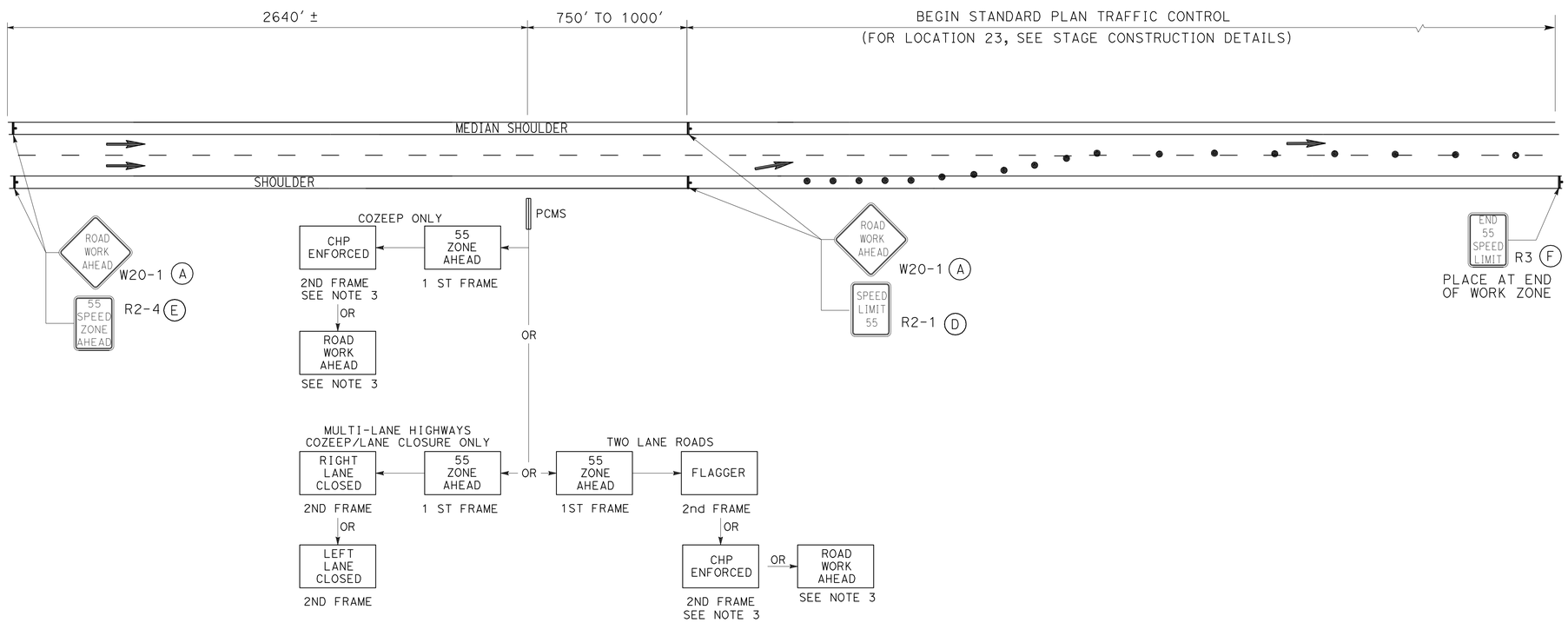

TYPICAL SIGNING FOR REDUCED SPEED ZONE

ALL ROUTE 5 LOCATIONS

THIS PLAN ACCURATE FOR TRAFFIC HANDLING WORK ONLY.

TRAFFIC HANDLING PLAN

NO SCALE

TH-1

REVISED BY | DATE REVISED

TOM PENICK | STEVE ALAWAR

CALCULATED-DESIGNED BY | CHECKED BY

FUNCTIONAL SUPERVISOR: ROB BURNETT

STATE OF CALIFORNIA - DEPARTMENT OF TRANSPORTATION

Caltrans® DESIGN

P:\proj2\02\1E630_plans\pse\21e630md001.dgn

LAST REVISION 02-03-10 | DATE PLOTTED => 24-MAR-2010 | TIME PLOTTED => 13:10

Dist	COUNTY	ROUTE	POST MILES TOTAL PROJECT	SHEET No.	TOTAL SHEETS
02	Sis	3,5, 96,97	Var	8	29

Thomas Penick 02-03-10
REGISTERED CIVIL ENGINEER DATE

3-22-10
PLANS APPROVAL DATE

REGISTERED PROFESSIONAL ENGINEER THOMAS PENICK No. C61068 Exp. 12-31-10 CIVIL STATE OF CALIFORNIA

THE STATE OF CALIFORNIA OR ITS OFFICERS OR AGENTS SHALL NOT BE RESPONSIBLE FOR THE ACCURACY OR COMPLETENESS OF SCANNED COPIES OF THIS PLAN SHEET.

NOTES:

1. REPLACE STRIPING TO MATCH EXISTING STRIPING PATTERN AND LOCATION.
2. PLACE 4" OF MULCH ON SOIL DISTURBED BY ACTIVITIES ASSOCIATED WITH MBGR WORK, AS DIRECTED BY THE ENGINEER.

TEMPORARY WATER POLLUTION CONTROL

TEMPORARY FIBER ROLL
LF
300

MULCH

Loc	Rte	PM	BRIDGE No.	LOCATION	SIDE	MULCH
						CY
23	5	64.82	02-0176R	HUTTON CREEK	Lt	6.0
					Rt	6.0
					TOTAL	12.0

SEE NOTE 2

EXISTING TRAFFIC MANAGEMENT SYSTEM ELEMENTS TO BE MAINTAINED

LOCATION	TYPE	PM	NOTES
1-3	NO ELEMENTS AT THESE LOCATIONS		
4-5	CMS	Sis-05-PM 9.65	MOUNTED ON REAM RD OC FOR NB TRAFFIC
6-12	NO ELEMENTS AT THESE LOCATIONS		
13	CMS	Sis-05-PM 44.30	MOUNTED ON WALTER RD OC FOR NB TRAFFIC
	CMS		MOUNTED ON WALTER RD OC FOR SB TRAFFIC
	HAR		JUST SOUTH OF OC ON NB SHOULDER
14-17	NO ELEMENTS AT THESE LOCATIONS		
18-19	CCTV	Sis-05-PM 47.82	AT MINER STREET UC
20-21	NO ELEMENTS AT THESE LOCATIONS		
22	RWIS	Sis-05-PM 61.93	NORTH OF HENLEY RD UC
23-25	NO ELEMENTS AT THESE LOCATIONS		

MBGR QUANTITIES

Loc	Rte	PM	BRIDGE No.	LOCATION	SIDE	REMOVE MBGR	TRANSITION RAILING (TYPE WB)	ALTERNATIVE FLARED TERMINAL SYSTEM	MBGR
						LF	EA	EA	LF
23	5	64.82	02-0176R	HUTTON CREEK	Lt	60	1	1	75
					Rt	60	1	1	75
					TOTAL	120	2	2	150

BRIDGE APPROACH AND DEPARTURE ROADWAY QUANTITIES

Loc	Rte	PM	BRIDGE No.	BRIDGE NAME	BRIDGE END	HMA (TYPE A)	CLASS 2 AGGREGATE BASE	SHOULDER RUMBLE STRIP (AC, GROUND-IN INDENTATIONS)	COLD PLANE AC PAVEMENT	ROADWAY EXCAVATION
						TON	CY	LF	SQYD	CY
23	5	64.82	02-0176R	HUTTON CREEK	APPROACH	225.2	141	190		255
					DEPARTURE	225.2	141	190		255
25	97	14.65	02-0048	SHEEP ROCK CATTLEPASS	SOUTH END	54.0			267	
					NORTH END	54.0			267	
					TOTAL	558.4	282	380	534	510

TRAFFIC STRIPE QUANTITIES

Loc	Rte	PM	BRIDGE No.	LOCATION	THERMOPLASTIC STRIPE (SPRAYABLE)						PAVEMENT MARKER (RETROEFLECTIVE -RECESSED)	
					DETAIL 6	DETAIL 24	DETAIL 27B	DETAIL 12	DETAIL 22	DETAIL 21	TYPE-G	TYPE-D
					LF	LF	LF	LF	LF		EA	EA
2	3	27.09	02-0052	KIDDER CREEK			310	155	155			8
3	3	32.23	02-0056	KIDDER CREEK	154		308	154				5
4	5	9.20	02-0036L	PIONEER OVERHEAD		242	242	242			12	
5	5	9.20	02-0036R	PIONEER OVERHEAD		242	242	242			12	
13	5	44.31	02-0149	WALTERS ROAD OC	202		405					5
23	5	64.82	02-0176R	HUTTON CREEK		1600	1250	2750			58	
24	96	71.23	02-0079	SCOTT RIVER			440			220		
25	97	14.65	02-0048	SHEEP ROCK CATTLEPASS			3030	1515	1515		33	64
				SUBTOTAL	356	2084	6227	5058	1670	220	115	82
				TOTAL	15,615						197	

SUMMARY OF QUANTITIES
Q-1

REVISED BY | DATE REVISED
TOM PENICK | STEVE ALAWAR
CALCULATED-DESIGNED BY | CHECKED BY
FUNCTIONAL SUPERVISOR: ROB BURNETT
STATE OF CALIFORNIA - DEPARTMENT OF TRANSPORTATION
Caltrans® DESIGN
P:\proj2\02\1E630_plans\pse\21e630pa001.dgn

LAST REVISION 02-03-10 | DATE PLOTTED => 24-MAR-2010 | TIME PLOTTED => 13:08

DIST	COUNTY	ROUTE	POST MILES TOTAL PROJECT	SHEET NO.	TOTAL SHEETS
02	Sis	3,5, 96,97	Var	9	29

Randell D. Hiatt
REGISTERED CIVIL ENGINEER

June 5, 2009
PLANS APPROVAL DATE

REGISTERED PROFESSIONAL ENGINEER
Randell D. Hiatt
No. C50200
Exp. 6-30-09
CIVIL
STATE OF CALIFORNIA

The State of California or its officers or agents shall not be responsible for the accuracy or completeness of electronic copies of this plan sheet.

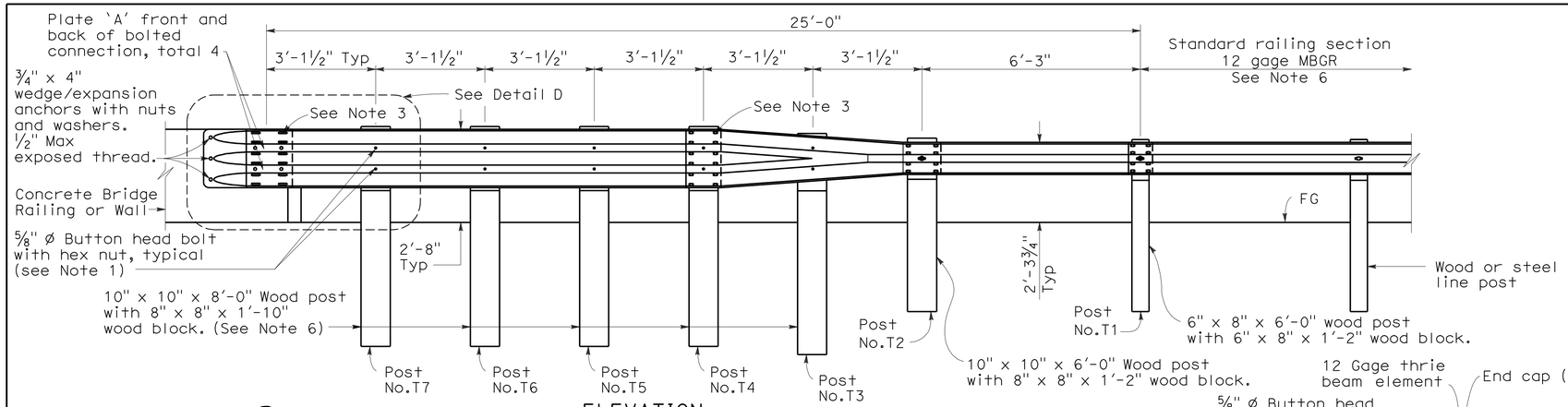

ELEVATION

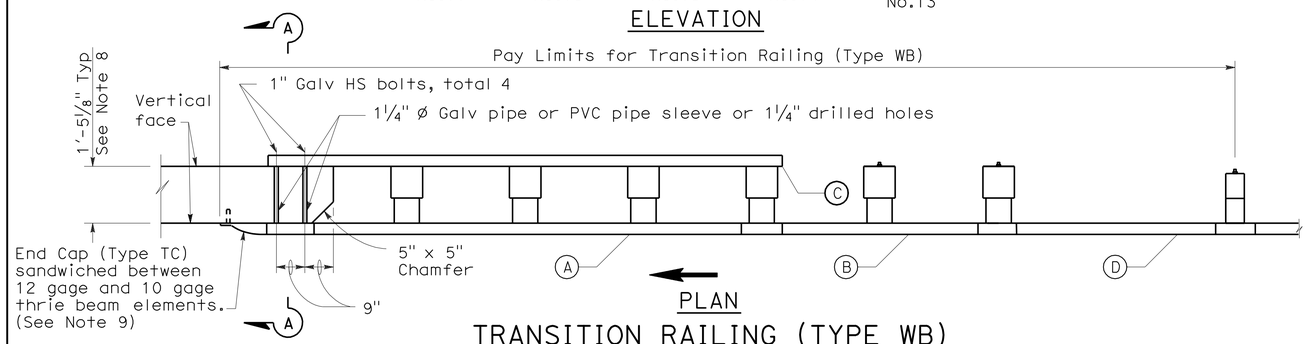

PLAN

TRANSITION RAILING (TYPE WB)

(No Blockout Attachment)

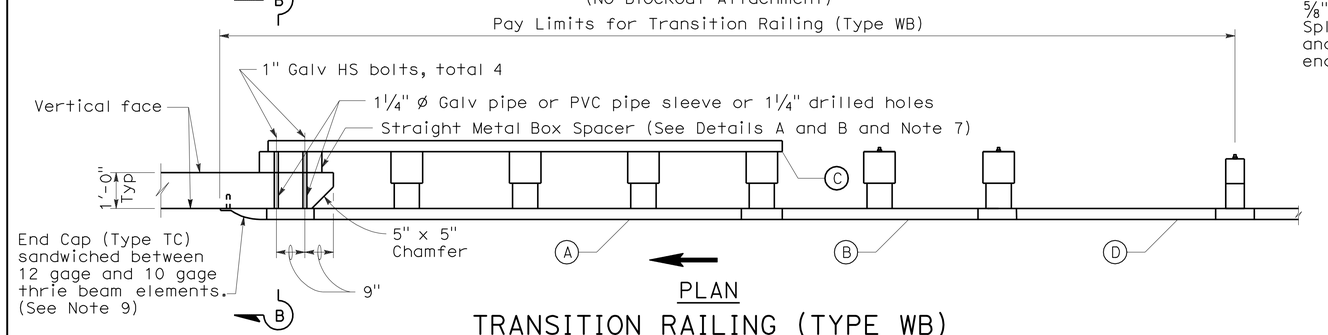

PLAN

TRANSITION RAILING (TYPE WB)

(Blockout Attachment)

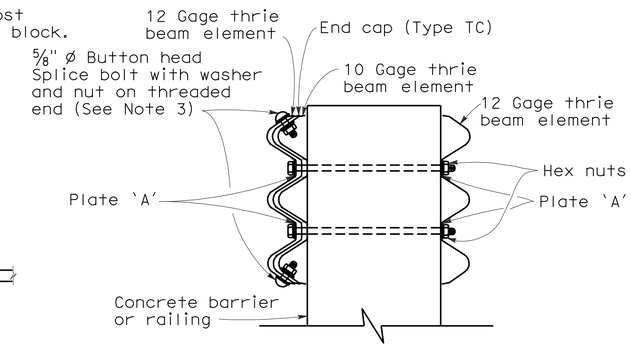

SECTION A-A

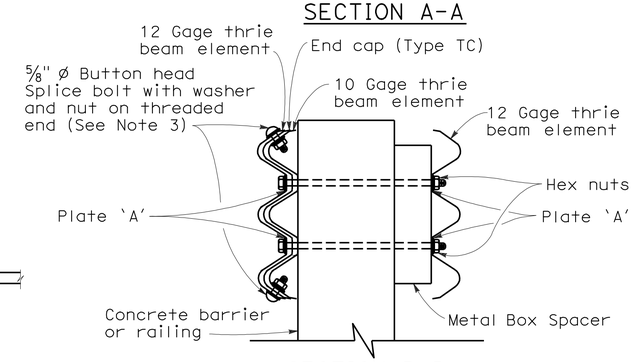

SECTION B-B

LEGEND

(A) Nested thrie beam elements (one 12 gage element nested over one 10 gage element).

(B) One 10 gage "W" beam to thrie beam element.

(C) One 12 gage thrie beam element.

(D) One 10 gage "W" beam rail element (7'-3½" length)

10 gage = 0.135" thick

12 gage = 0.108" thick

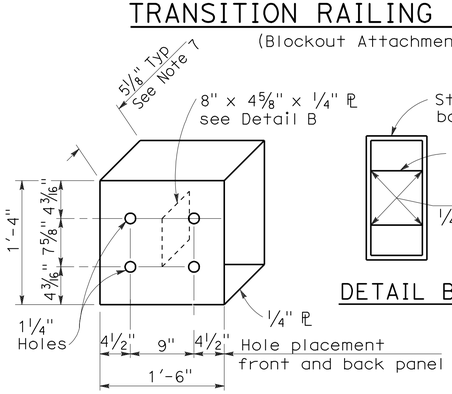

DETAIL A

STRAIGHT METAL BOX SPACER

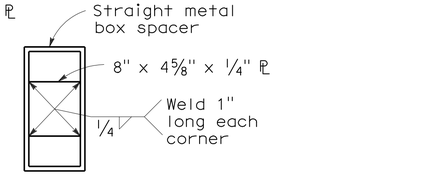

DETAIL B

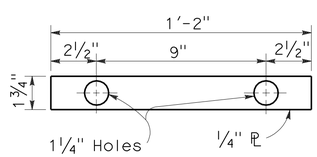

DETAIL C

PLATE 'A'

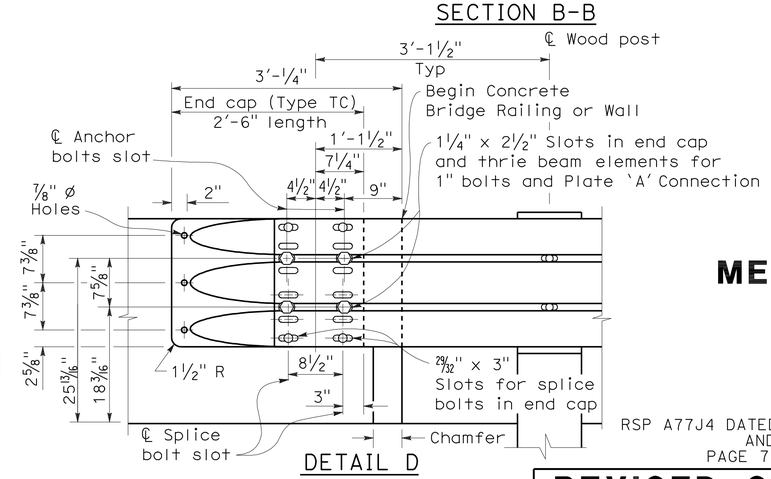

DETAIL D

NOTES:

To accompany plans dated 3-22-10

1. Use 5/8 " Ø Button head bolts and hex nuts for connections to posts. No washer on rail face for bolted connections to post.
2. The nested rail elements, end cap, and 'W' beam to thrie beam element may be spliced together prior to bolting the elements to the wood post and concrete barrier or railing.
3. Exterior splice bolt holes for rail element splices at Post No.T4 and the connection to the concrete barrier or railing shall be the standard 29/32 " x 1 1/8 " slot size. Interior splice bolt holes at these locations may be increased up to 1 1/4 " Ø. Only the top 2 and the bottom 2 splice bolts with washers and nuts are required for rail splices at Post No.T4 and the connection to the concrete barrier or railing.
4. Direction of adjacent traffic indicated by ⟶.
5. The top elevation of Post Nos.T2 through T7 shall not project more than 1" above the top elevation of the rail element.
6. Typically, the railing connected to Transition Railing (Type WB) will be either standard railing section of metal beam guard railing or an approved Caltrans end treatment attached to Post No.T1.
7. The depth of the metal box spacer varies from the 5 1/8 " to 1 1/2 " and is dependent on the width of the concrete railing or wall. The combined dimension for the depth of the metal box spacer plus the width of railing or wall is typically 17 1/8 ". Where the space between the backside of the concrete railing or wall and the rear thrie beam element is less than 1 1/2 ", metal plates similar to Plate 'A' are to be used as spacers.
8. Where the width of the concrete railing or wall is greater than 17 1/8 ", wood blocks are to be used to fill the space created between the backside of Posts No.4 through No.7 and the rear thrie beam element. These wood blocks shall be 8" in width and 1'-2" in length. The dimension between the front thrie beam element and the rear thrie beam element is to match the width of the concrete railing or wall.
9. End cap may be installed over 12 gage and 10 gage thrie beam elements where transition railing is installed on the departure end of bridge railing.

STATE OF CALIFORNIA
DEPARTMENT OF TRANSPORTATION

METAL BEAM GUARD RAILING TRANSITION RAILING (TYPE WB)

NO SCALE

RSP A77J4 DATED JUNE 5, 2009 SUPERSEDES RSP A77J4 DATED JUNE 6, 2008 AND STANDARD PLAN A77J4 DATED MAY 1, 2006 - PAGE 75 OF THE STANDARD PLANS BOOK DATED MAY 2006.

REVISED STANDARD PLAN RSP A77J4

2006 REVISED STANDARD PLAN RSP A77J4

5-14-09

DIST	COUNTY	ROUTE	POST MILES TOTAL PROJECT	SHEET NO.	TOTAL SHEETS
02	Sis	3,5, 96,97	Var	10	29

REGISTERED CIVIL ENGINEER

May 15, 2009
PLANS APPROVAL DATE

The State of California or its officers or agents shall not be responsible for the accuracy or completeness of electronic copies of this plan sheet.

REGISTERED PROFESSIONAL ENGINEER — William K. Farnbach — No. C49042 — Exp. 9-30-10 — CIVIL — STATE OF CALIFORNIA

To accompany plans dated 3-22-10

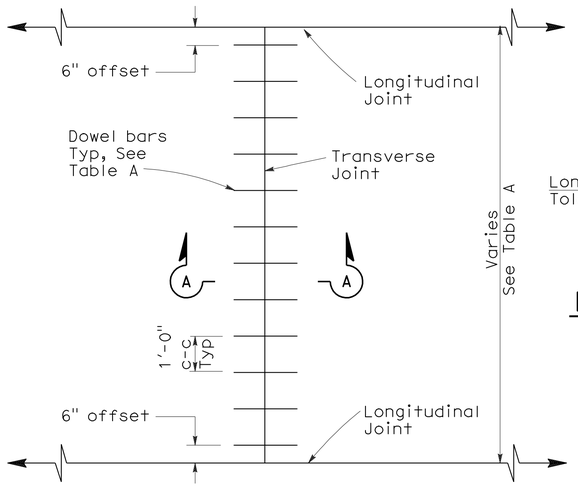

TRANSVERSE JOINT DOWEL BAR LAYOUT

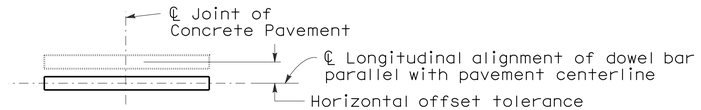

PLAN

HORIZONTAL OFFSET TOLERANCE

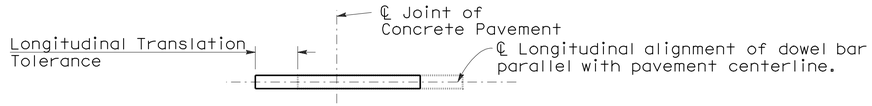

PLAN

LONGITUDINAL TRANSLATION TOLERANCE

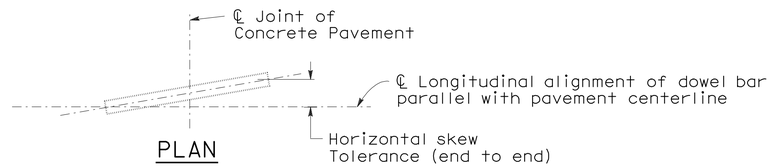

PLAN

HORIZONTAL SKEW TOLERANCE

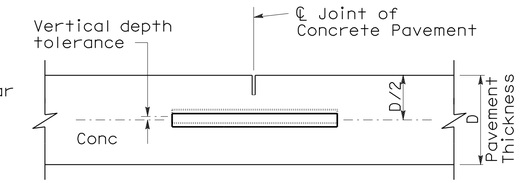

ELEVATION

VERTICAL DEPTH TOLERANCE

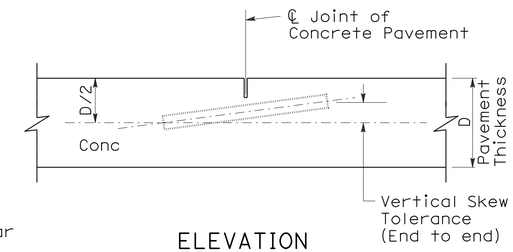

ELEVATION

VERTICAL SKEW TOLERANCE

NOTES:

1. See Revised Standard Plan RSP P1 for typical dowel bar placement and locations.
2. 1½" Dia smooth dowel bars are to be used with a pavement thickness, D, equal to or greater than 0.70 feet. For pavement thickness, D, less than 0.70 feet, use 1¼" Dia smooth dowel bars.
3. For widths not shown, see Project Plans.
4. If fresh concrete pavement is placed adjacent to existing concrete pavement, the top corner of the existing concrete pavement does not need to be rounded to the ¼" radius, as shown.

TABLE A (See Note 3)

Dowel Bar Transverse Spacing Table	
Width between Longitudinal Joints	Number of Dowels between Longitudinal Joints
14'-0"	14
13'-0"	13
12'-0"	12
11'-0"	11
10'-0"	10
8'-0"	8
5'-0"	5
4'-0"	4

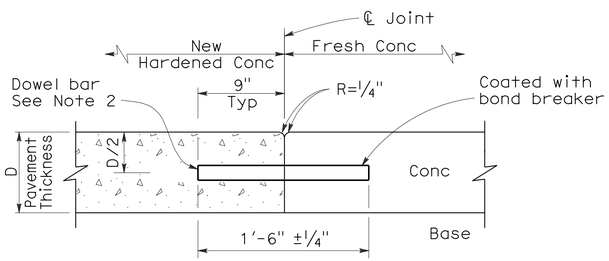

SECTION A-A

TRANSVERSE CONSTRUCTION JOINT DETAIL

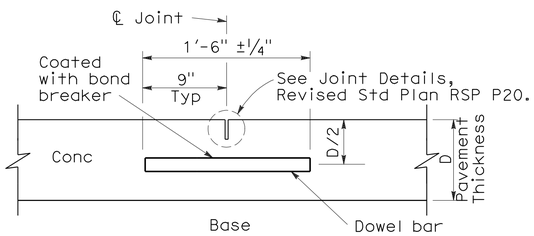

TRANSVERSE CONTRACTION JOINT

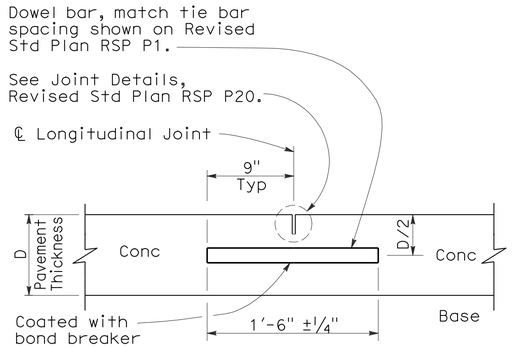

LONGITUDINAL CONTRACTION JOINT WITH DOWEL BARS

(See Revised Std Plan RSP P18)

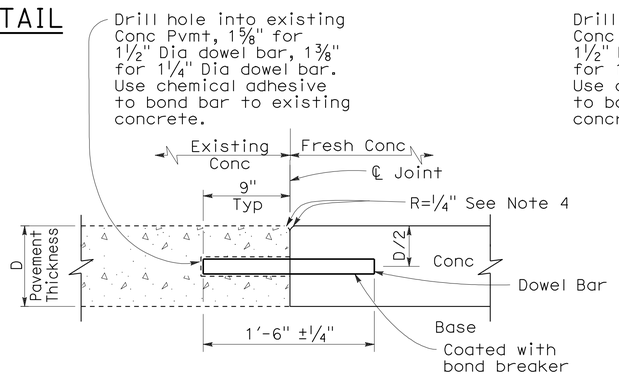

TRANSVERSE CONSTRUCTION JOINT FOR EXISTING CONCRETE PAVEMENT

(Drill and bond locations)

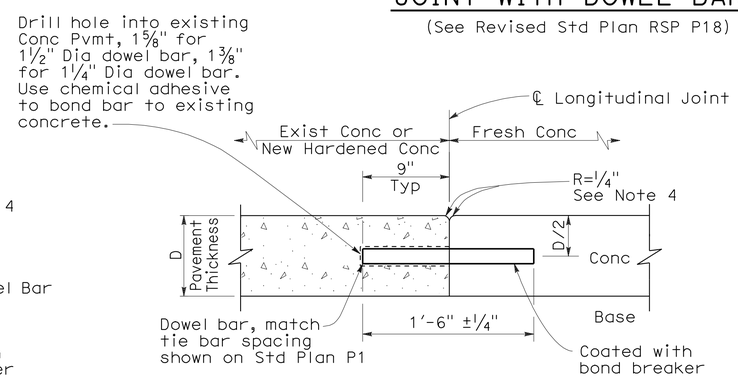

LONGITUDINAL CONSTRUCTION JOINT WITH DOWEL BARS

(See Revised Std Plan RSP P18)

STATE OF CALIFORNIA
DEPARTMENT OF TRANSPORTATION

CONCRETE PAVEMENT-DOWEL BAR DETAILS

NO SCALE

RSP P10 DATED MAY 15, 2009 SUPERSEDES STANDARD PLAN P10 DATED MAY 1, 2006 - PAGE 124 OF THE STANDARD PLANS BOOK DATED MAY 2006.

REVISED STANDARD PLAN RSP P10

2006 REVISED STANDARD PLAN RSP P10

5-8-09

DIST	COUNTY	ROUTE	POST MILES TOTAL PROJECT	SHEET NO.	TOTAL SHEETS
02	Sis	3,5, 96,97	Var	11	29

Randell D. Hiatt
REGISTERED CIVIL ENGINEER

June 6, 2008
PLANS APPROVAL DATE

REGISTERED PROFESSIONAL ENGINEER
Randell D. Hiatt
No. C50200
Exp. 6-30-09
CIVIL
STATE OF CALIFORNIA

The State of California or its officers or agents shall not be responsible for the accuracy or completeness of electronic copies of this plan sheet.

To accompany plans dated 3-22-10

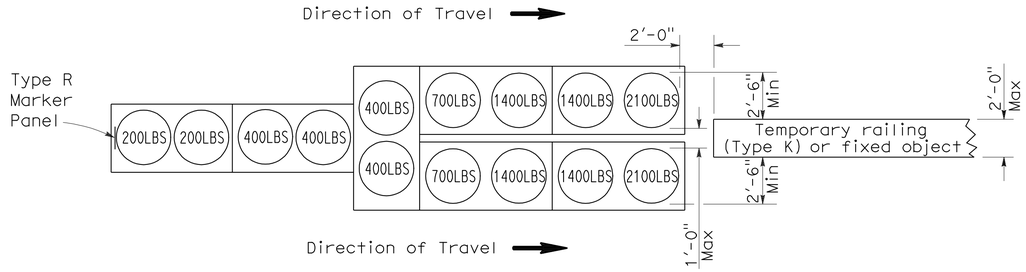

ARRAY 'TU14'

Approach speed 45 mph or more

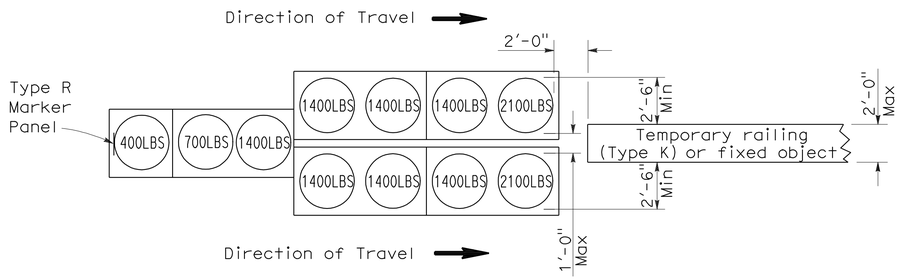

ARRAY 'TU11'

Approach speed less than 45 mph

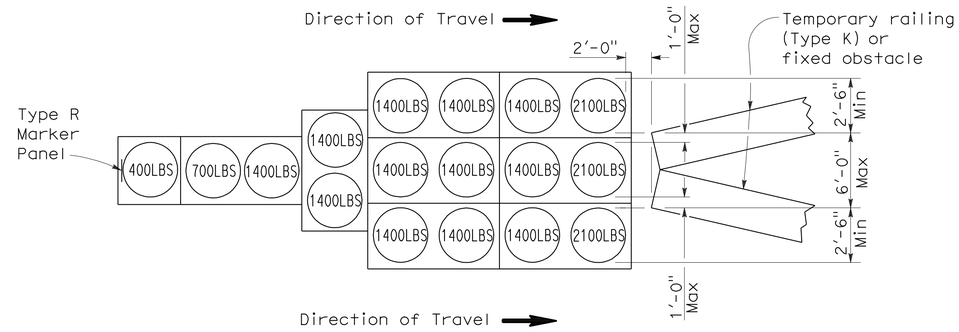

ARRAY 'TU17'

Approach speed less than 45 mph

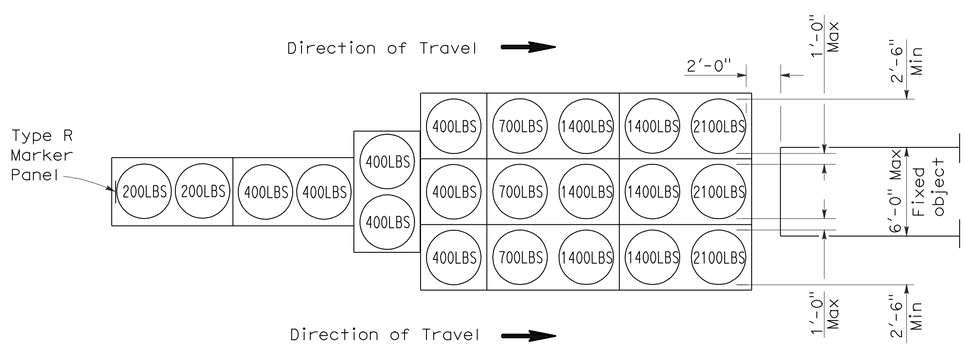

ARRAY 'TU21'

Approach speed 45 mph or more

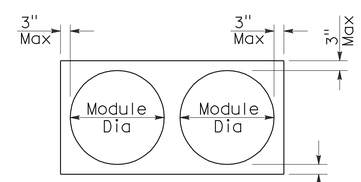

PLAN

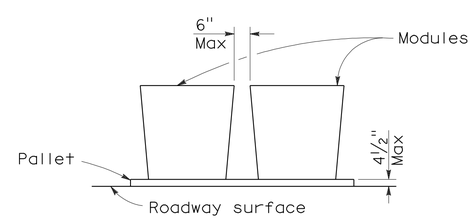

ELEVATION

CRASH CUSHION PALLET DETAIL

See Note 7

NOTES:

1. (XXX) Indicates sand filled module location and weight of sand in pounds for each module. Module spacing is based on the greater diameter of the module.
2. All sand weights are nominal.
3. Temporary crash cushion arrays shall not encroach on the traveled way.
4. Place the top of Type R marker panel 1" below the module lid.
5. Refer to Standard Plan A73B for marker details.
6. Approach speeds indicated conform to NCHRP 350 Report criteria.
7. Use of pallets is optional.

STATE OF CALIFORNIA
DEPARTMENT OF TRANSPORTATION

TEMPORARY CRASH CUSHION, SAND FILLED (UNIDIRECTIONAL)

NO SCALE

RSP T1A DATED JUNE 6, 2008 SUPERSEDES STANDARD PLAN T1A
DATED MAY 1, 2006 - PAGE 211 OF THE STANDARD PLANS BOOK DATED MAY 2006.

REVISED STANDARD PLAN RSP T1A

2006 REVISED STANDARD PLAN RSP T1A

DIST	COUNTY	ROUTE	POST MILES TOTAL PROJECT	SHEET NO.	TOTAL SHEETS
02	Sis	3,5, 96,97	Var	12	29

Randell D. Hiatt
REGISTERED CIVIL ENGINEER

June 6, 2008
PLANS APPROVAL DATE

REGISTERED PROFESSIONAL ENGINEER
Randell D. Hiatt
No. C50200
Exp. 6-30-09
CIVIL
STATE OF CALIFORNIA

The State of California or its officers or agents shall not be responsible for the accuracy or completeness of electronic copies of this plan sheet.

To accompany plans dated 3-22-10

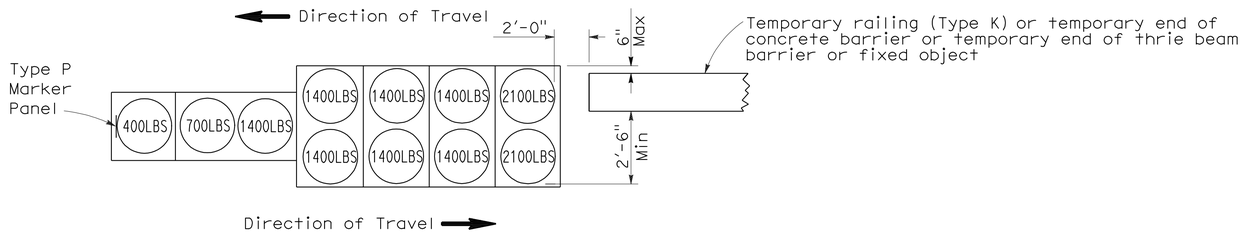

ARRAY 'TB11'

Approach speed less than 45 mph

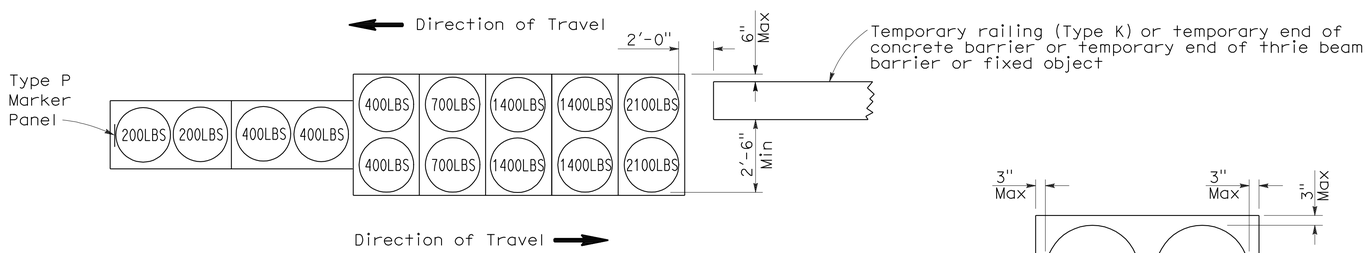

ARRAY 'TB14'

Approach speed 45 mph or more

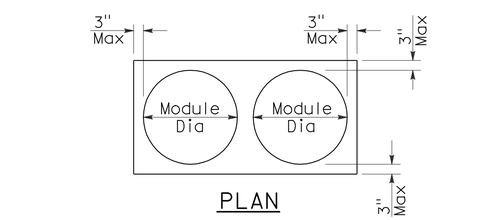

PLAN

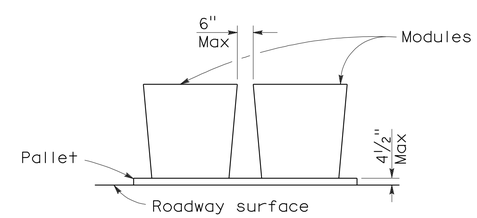

ELEVATION

CRASH CUSHION PALLET DETAIL

See Note 7

NOTES:

1. (XXX) Indicates sand filled module location and weight of sand in pounds for each module. Module spacing is based on the greater diameter of the module.
2. All sand weights are nominal.
3. Temporary crash cushion arrays shall not encroach on the traveled way.
4. Place the Type P marker panel so that the bottom of the panel rests upon the pallet.
5. Refer to Standard Plan A73B for marker details.
6. Approach speeds indicated conform to NCHRP 350 Report criteria.
7. Use of pallets is optional.

STATE OF CALIFORNIA
DEPARTMENT OF TRANSPORTATION

TEMPORARY CRASH CUSHION, SAND FILLED (BIDIRECTIONAL)

NO SCALE

RSP T1B DATED JUNE 6, 2008 SUPERSEDES STANDARD PLAN T1B
DATED MAY 1, 2006 - PAGE 212 OF THE STANDARD PLANS BOOK DATED MAY 2006.

REVISED STANDARD PLAN RSP T1B

2006 REVISED STANDARD PLAN RSP T1B

5-15-08

DIST	COUNTY	ROUTE	POST MILES TOTAL PROJECT	SHEET NO.	TOTAL SHEETS
02	Sis	3,5, 96,97	Var	13	29

Randell D. Hiatt
REGISTERED CIVIL ENGINEER

June 6, 2008
PLANS APPROVAL DATE

REGISTERED PROFESSIONAL ENGINEER
Randell D. Hiatt
No. C50200
Exp. 6-30-09
CIVIL
STATE OF CALIFORNIA

The State of California or its officers or agents shall not be responsible for the accuracy or completeness of electronic copies of this plan sheet.

To accompany plans dated 3-22-10

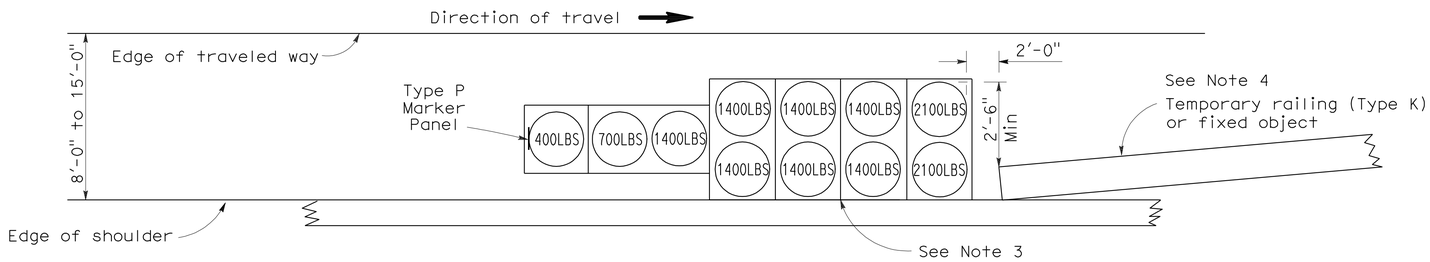

ARRAY 'TS11'

Approach speed less than 45 mph
See Note 9

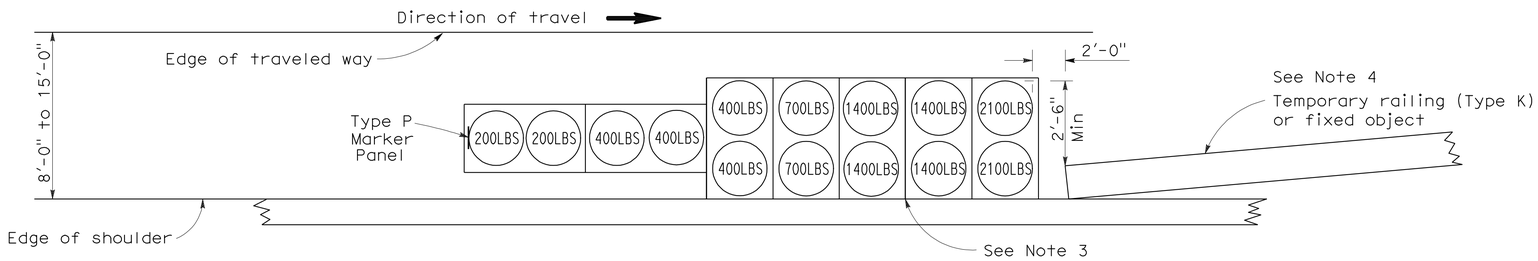

ARRAY 'TS14'

Approach speed 45 mph or more
See Note 9

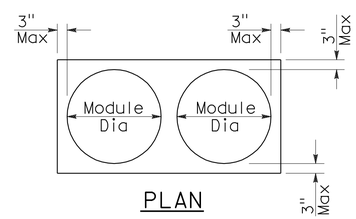

PLAN

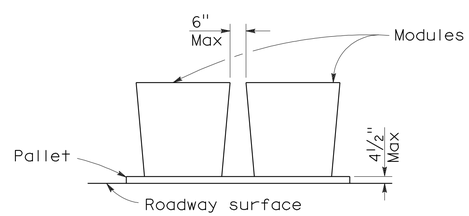

ELEVATION

CRASH CUSHION PALLET DETAIL

See Note 11

NOTES:

1. (XXX) Indicates sand filled module location and weight of sand in pounds for each module. Module spacing is based on the greater diameter of the module.
2. All sand weights are nominal.
3. The temporary crash cushion arrays shown on this plan shall be used only in locations where there will be traffic on one side of the temporary crash cushion array.
4. If the fixed object or approach end of the temporary railing is less than 15'-0" from the edge of traveled way, a temporary crash cushion is required in a construction or work zone.
5. Temporary crash cushion arrays shall not encroach on the traveled way.
6. Arrays for median shoulders shall conform to details shown on this plan for outside shoulders.
7. Place the Type P marker panel so that the bottom of the panel rests upon the pallet and faces traffic.
8. Refer to Standard Plan A73B for marker details.
9. For shoulder widths less than 8'-0", appropriate approved crash cushion protection, other than sand filled modules, shall be provided at fixed objects and at approach ends of temporary railing. The specific type of crash cushion shall be as shown on the project plans or as specified in the Special Provisions, or if not shown on the project plans or specified in the Special Provisions, shall be as approved by the Engineer.
10. Approach speeds indicated conform to NCHRP 350 Report criteria.
11. Use of pallets is optional.

STATE OF CALIFORNIA
DEPARTMENT OF TRANSPORTATION

TEMPORARY CRASH CUSHION, SAND FILLED (SHOULDER INSTALLATIONS)

NO SCALE

RSP T2 DATED JUNE 6, 2008 SUPERSEDES STANDARD PLAN T2
DATED MAY 1, 2006 - PAGE 213 OF THE STANDARD PLANS BOOK DATED MAY 2006.

REVISED STANDARD PLAN RSP T2

2006 REVISED STANDARD PLAN RSP T2

5-15-08

DIST	COUNTY	ROUTE	POST MILES TOTAL PROJECT	SHEET NO.	TOTAL SHEETS
02	Sis	3,5, 96,97	Var	14	29

LICENSED LANDSCAPE ARCHITECT

April 3, 2009
PLANS APPROVAL DATE

The State of California or its officers or agents shall not be responsible for the accuracy or completeness of electronic copies of this plan sheet.

LICENSED LANDSCAPE ARCHITECT — Robert B. Schott — Signature — 11-30-10 Renewal Date — 2-25-09 Date — STATE OF CALIFORNIA

To accompany plans dated 3-22-10

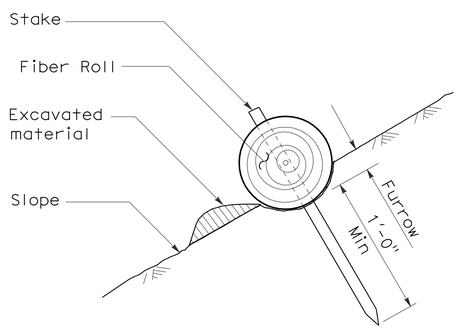

SECTION

TEMPORARY FIBER ROLL (TYPE 1)

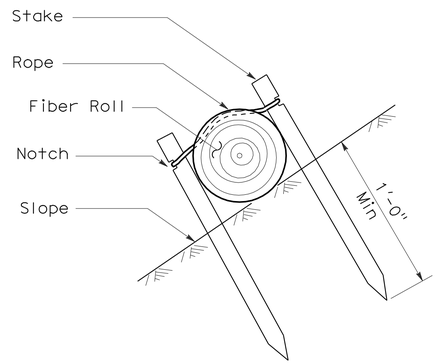

SECTION

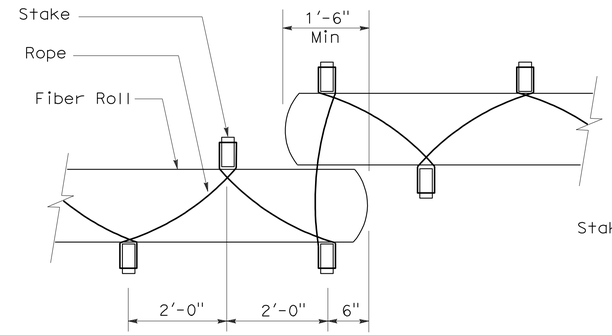

PLAN

TEMPORARY FIBER ROLL (TYPE 2)

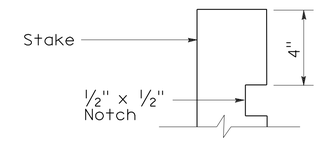

ELEVATION

STAKE NOTCH DETAIL

NOTES:

1. Temporary fiber roll spacing varies depending upon slope inclination.
2. Installations shown in the perspectives are for slope inclination of 10:1 and steeper.

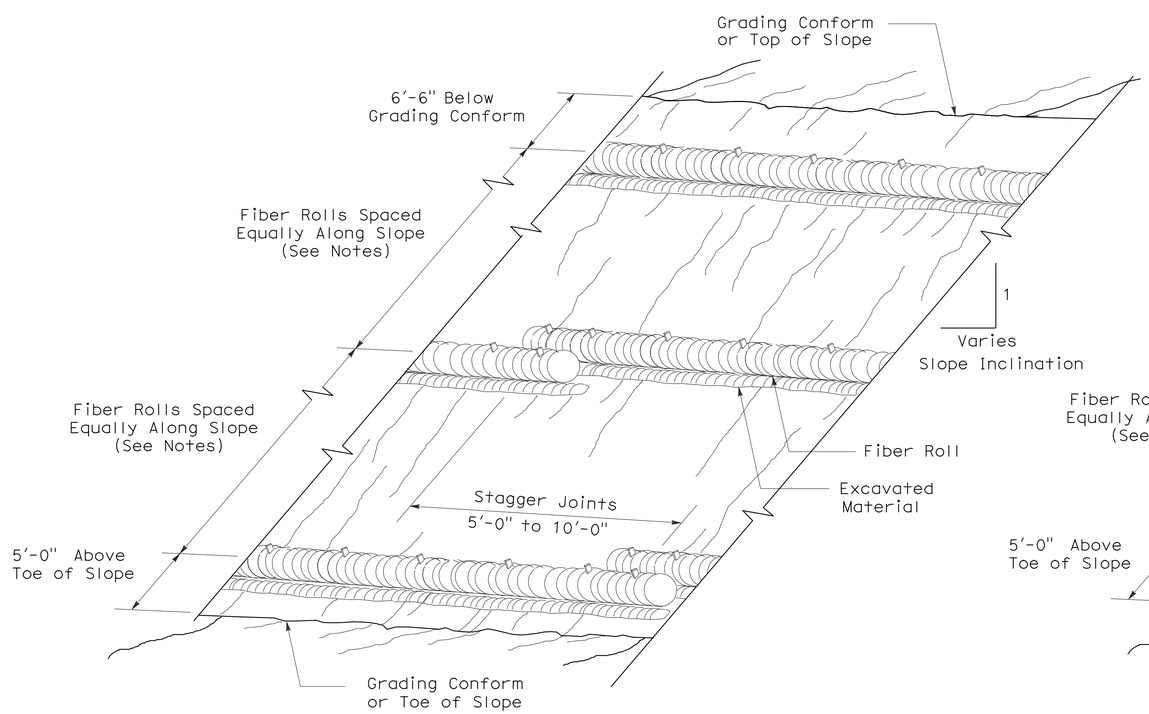

PERSPECTIVE

TEMPORARY FIBER ROLL (TYPE 1)

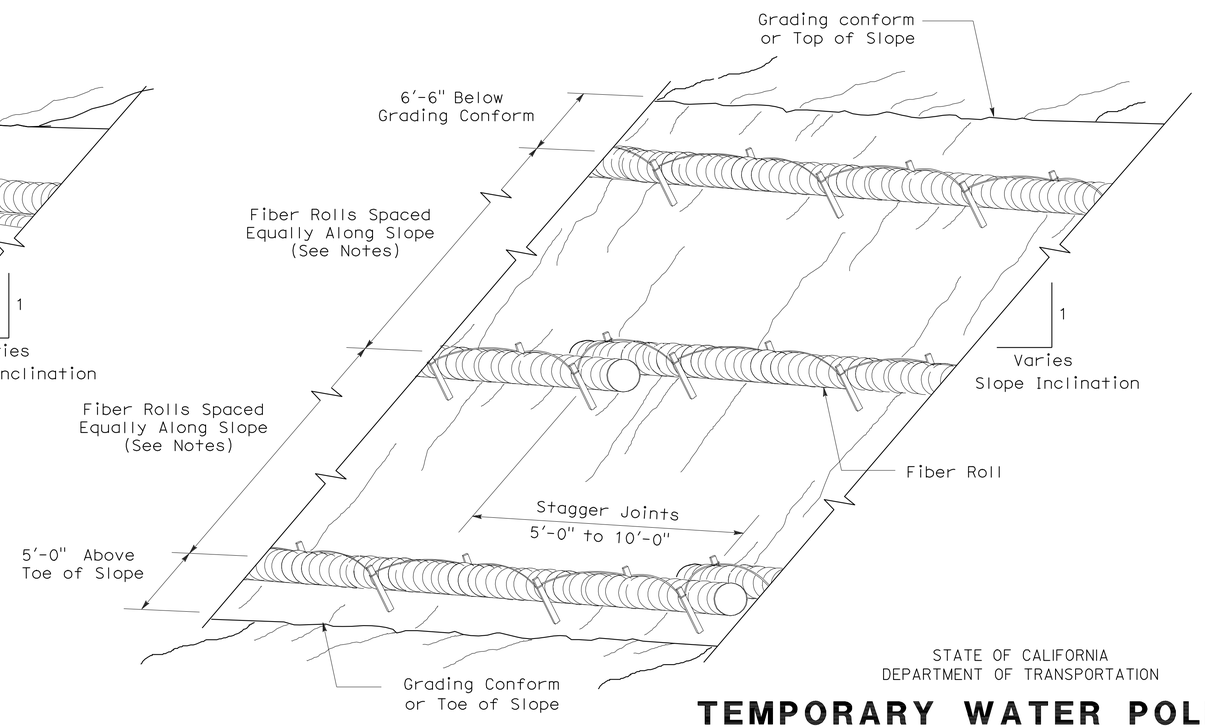

PERSPECTIVE

TEMPORARY FIBER ROLL (TYPE 2)

STATE OF CALIFORNIA
DEPARTMENT OF TRANSPORTATION

TEMPORARY WATER POLLUTION CONTROL DETAILS (TEMPORARY FIBER ROLL)

NO SCALE

RSP T56 DATED APRIL 3, 2009 SUPERSEDES STANDARD PLAN T56
DATED MAY 1, 2006 - PAGE 232 OF THE STANDARD PLANS BOOK DATED MAY 2006.

REVISED STANDARD PLAN RSP T56

2006 REVISED STANDARD PLAN RSP T56

2-23-09

DIST	COUNTY	ROUTE	POST MILES TOTAL PROJECT	SHEET NO.	TOTAL SHEETS
02	Sis	3,5, 96,97	Var	15	29

REGISTERED CIVIL ENGINEER

October 5, 2007
PLANS APPROVAL DATE

REGISTERED PROFESSIONAL ENGINEER Efthymios Delis No. C51434 Exp. 6-30-08 CIVIL STATE OF CALIFORNIA

The State of California or its officers or agents shall not be responsible for the accuracy or completeness of electronic copies of this plan sheet.

To accompany plans dated 3-22-10

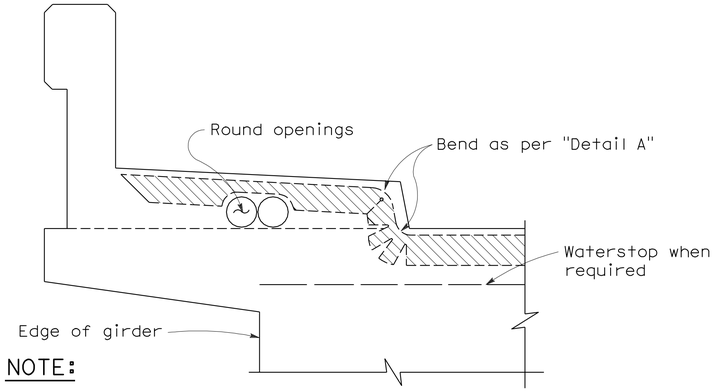

NOTE:

Type "B" seal shown. Type "A" seals to comform to the general path of seal shown, cuts for bending not required. Bend Type "A" seals 3" up into curb or barrier rail on only the low end of the seal.

CONCRETE BARRIER AND SIDEWALK

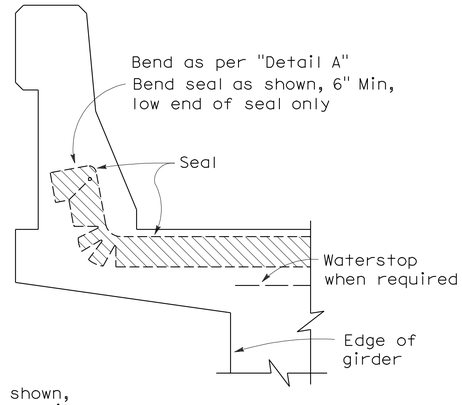

CONCRETE BARRIER

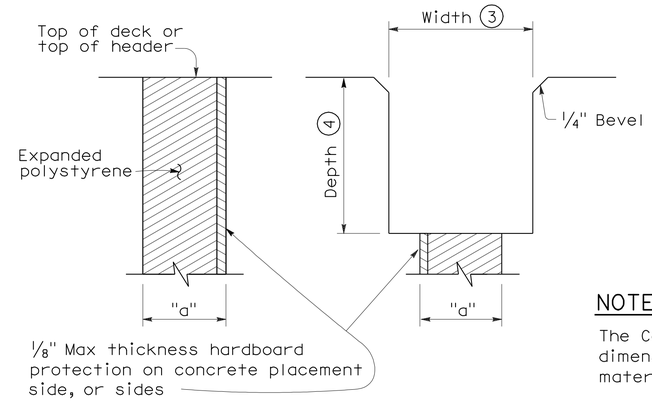

FORMING DETAIL SAWCUT DETAIL

NOTE:

The Contractor shall verify all controlling field dimensions before ordering or fabricatiing any material.

JOINT SEALS DETAILS

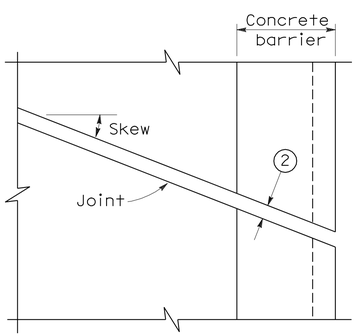

PLAN OF JOINT (SKEW ≤ 20°)

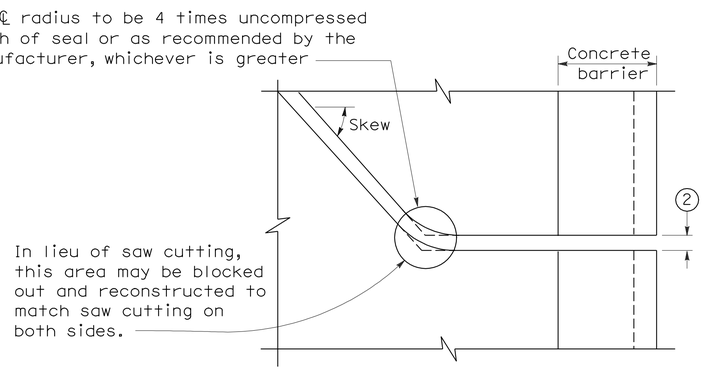

PLAN OF JOINT (SKEW > 20°)

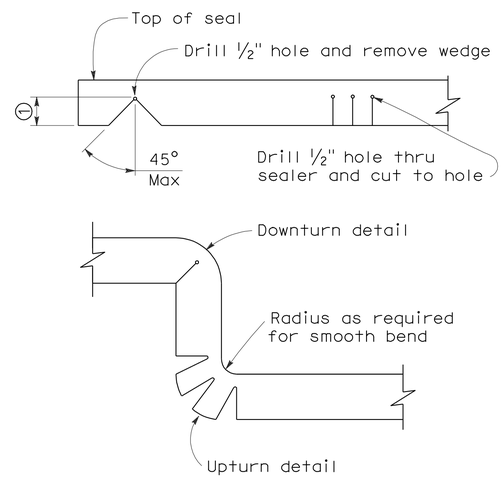

DETAIL A

NOTES:

1. Make smooth cuts from the bottom of seal to 1½" clear of top leaving at least one complete cell between the top of the cut and top of the seal. When necessary cut back of seal to clear conduit and round openings.
2. Opening in barrier to match width of sawn deck joint.
3. Sawcut groove widths shall be as ordered by the Engineer.
4. Depth of sawcut: Type A - Depth to be 2" minimum.
   Type B - Depth to be equal to or greater than the depth of seal measured along the contact surface, when compressed to minimum width position (W_2) plus dimensions shown.
5. MR (movement rating) as shown on other plan sheets.
6. Other depths must be approved by the Engineer.

DIMENSIONS "a" OF JOINT REQUIRED

Movement Rating (MR) (5)	Bridge Type	"a" Dimension Deck Concrete Placed		
		Winter	Fall-Spring	Summer
2"	All except CIP/PS	1½"	1¼"	¾"
	CIP/PS	1¼"	1"	½"
1½"	All except CIP/PS	1¼"	1"	½"
	CIP/PS	1"	¾"	½"
1"	All except CIP/PS	1"	¾"	½"
	CIP/PS	¾"	½"	½"
½"	All except CIP/PS	¾"	¾"	½"
	CIP/PS	½"	½"	½"

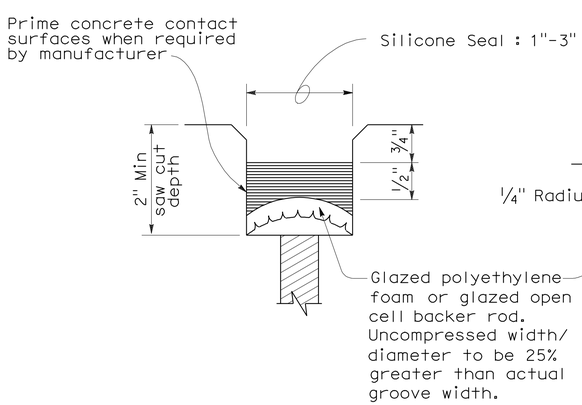

TYPE A SEAL

Movement rating : Silicone = 1" Max

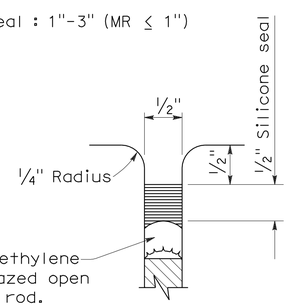

TYPE AL SEAL

Longitudinal joints only

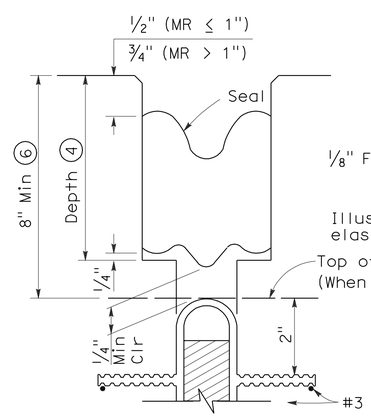

TYPE B JOINT SEAL
IN MINIMUM WIDTH POSITION (W_2)

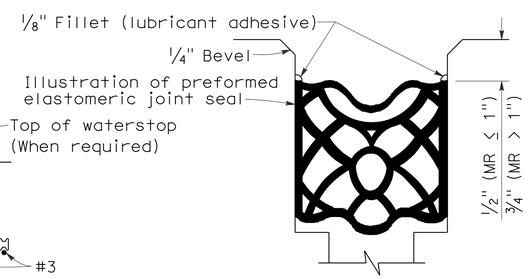

TYPE B SEAL

Movement Rating ≤ 2"

STATE OF CALIFORNIA
DEPARTMENT OF TRANSPORTATION

JOINT SEALS (MAXIMUM MOVEMENT RATING = 2")

NO SCALE

RSP B6-21 DATED OCTOBER 5, 2007 SUPERSEDES STANDARD PLAN B6-21 DATED MAY 1, 2006 - PAGE 258 OF THE STANDARD PLANS BOOK DATED MAY 2006.

REVISED STANDARD PLAN RSP B6-21

2006 REVISED STANDARD PLAN RSP B6-21

5-8-07

DIST	COUNTY	ROUTE	POST MILES TOTAL PROJECT	SHEET NO.	TOTAL SHEETS
02	Sis	3,5, 96,97	Var	16	29

REGISTERED CIVIL ENGINEER 12-28-09 DATE

3-22-10
PLANS APPROVAL DATE

REGISTERED PROFESSIONAL ENGINEER DIOSDADO ACOBA No. 52003 Exp. 12-31-10 CIVIL STATE OF CALIFORNIA

THE STATE OF CALIFORNIA OR ITS OFFICERS OR AGENTS SHALL NOT BE RESPONSIBLE FOR THE ACCURACY OR COMPLETENESS OF ELECTRONIC COPIES OF THIS PLAN SHEET.

(APPLY TO THIS SHEET ONLY)

NOTES:

-·-·-·-·- Indicates existing.

Indicates limits of remove concrete and grout and place concrete as shown on the BARRIER RAILING REPAIR DETAIL.

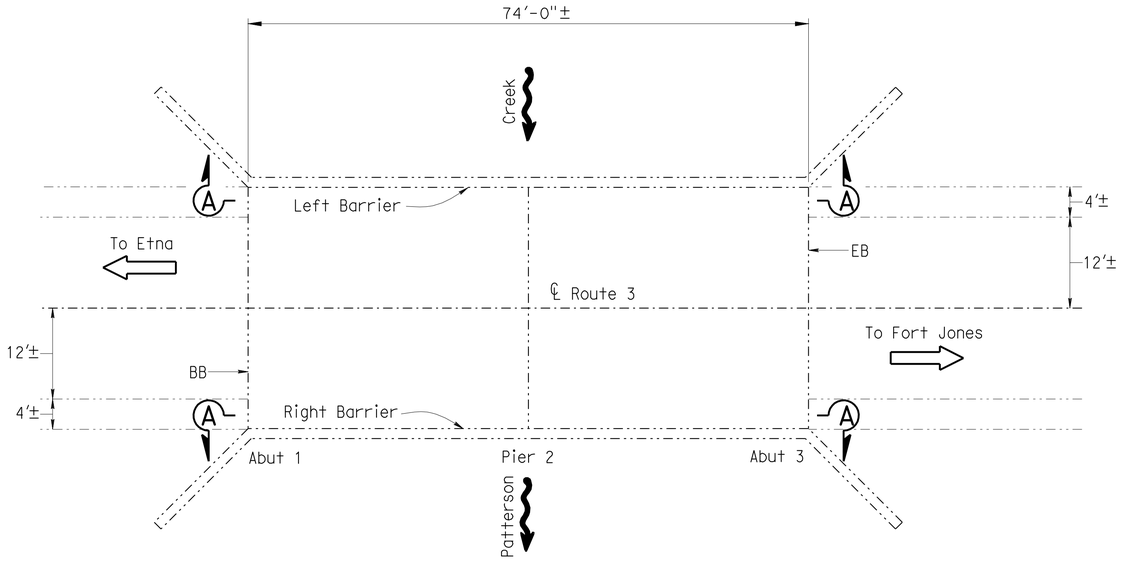

PATTERSON CREEK

Br No. 02-0038, SIS, Route 3, PM 24.26
1"=10'

GENERAL NOTES
LOAD FACTOR DESIGN

DESIGN:	BRIDGE DESIGN SPECIFICATIONS (1996 AASHTO with Interims and Revisions by CALTRANS)
LIVE LOADING:	HS20-44 and alternative and permit design load.
REINFORCED CONCRETE:	fy = 60,000 PSI f'c = 3,600 PSI

INDEX TO PLANS

SHEET NO.	TITLE
1	GENERAL PLAN NO.1
2	GENERAL PLAN NO.2
3	GENERAL PLAN NO.3
4	GENERAL PLAN NO.4
5	GENERAL PLAN NO.5
6	GENERAL PLAN NO.6
7	GENERAL PLAN NO.7
8	GENERAL PLAN NO.8
9	GENERAL PLAN NO.9
10	JOINT SEAL DETAILS NO. 1
11	JOINT SEAL DETAILS NO. 2
12	TYPICAL SECTION
13	DETAILS
14	STRUCTURE APPROACH TYPE R(30D)

STANDARD PLANS DATED MAY 2006

SHEET NO.	TITLE
A10A	ACRONYMS AND ABBREVIATIONS (SHEET 1 OF 2)
A10B	ACRONYMS AND ABBREVIATIONS (SHEET 2 OF 2)
RSP B6-21	JOINT SEALS (MAXIMUM MOVEMENT RATING = 2")
RSP P10	CONCRETE PAVEMENT - DOWEL BAR DETAILS

PATTERSON CREEK BRIDGE NO. 02-0038

QUANTITIES

BRIDGE REMOVAL (PORTION)	LUMP SUM
BARRIER RAILING TYPE 1 (MODIFIED)	148 LF

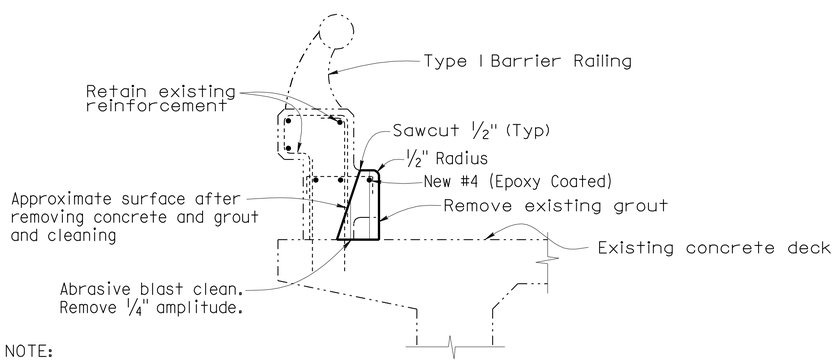

NOTE:
Reinforcement will be encountered during concrete removal

BARRIER RAILING REPAIR DETAIL

1" = 1'

NOTE:
THE CONTRACTOR SHALL VERIFY ALL CONTROLLING FIELD DIMENSIONS BEFORE ORDERING OR FABRICATING ANY MATERIAL.

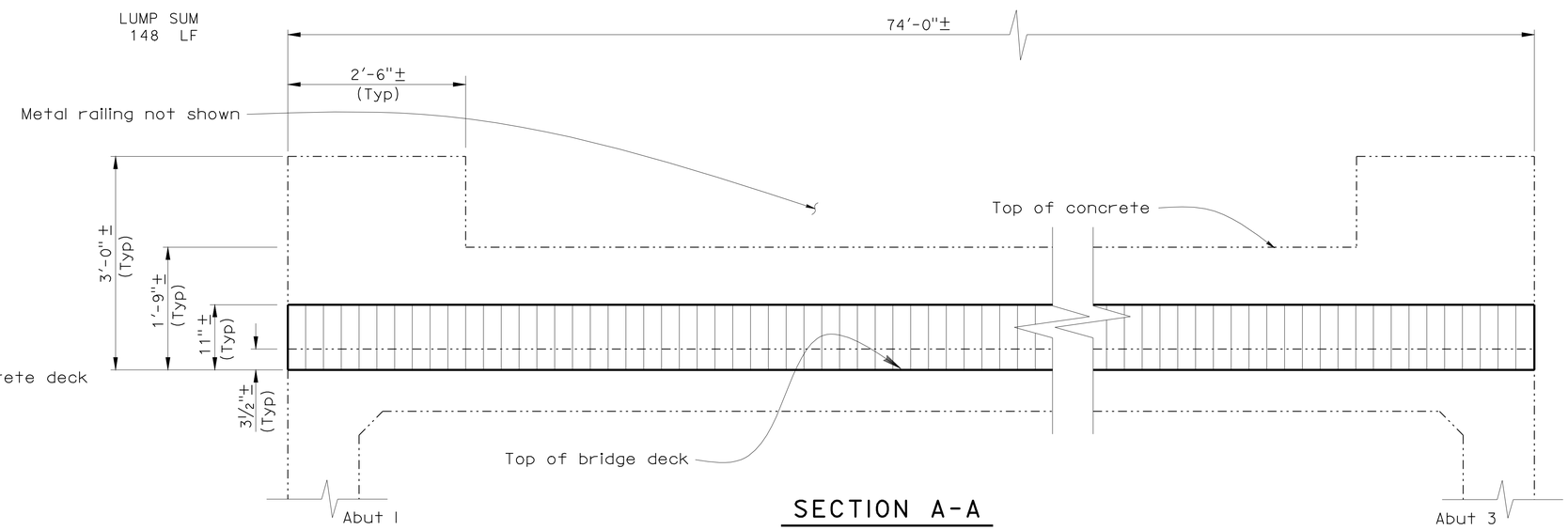

SECTION A-A

1" = 1'

NOTE:
Left barrier railing shown right barrier railing similar

DESIGN ENGINEER 12-28-09	DESIGN	BY M. Furlong	CHECKED J. Louie	LAYOUT	BY N. Kelley	CHECKED M. Furlong	STATE OF CALIFORNIA DEPARTMENT OF TRANSPORTATION	DIVISION OF MAINTENANCE STRUCTURE MAINTENANCE DESIGN
	DETAILS	BY N. Kelley	CHECKED J. Louie	SPECIFICATIONS	BY Mary Kopsa	PLANS AND SPECIFICATIONS COMPARED Mary Kopsa		
	QUANTITIES	BY M. Furlong	CHECKED J. Louie					

BRIDGE NO. Varies
POST MILE Various

ROUTE 3,5,96 AND 97 BRIDGES
GENERAL PLAN NO. 1

STRUCTURES MAINTENANCE GENERAL PLAN & DETAIL SHEET (ENGLISH) (REV. 10/17/07)

ORIGINAL SCALE IN INCHES FOR REDUCED PLANS 0 1 2 3

CU 02601
EA 1E6301

DISREGARD PRINTS BEARING EARLIER REVISION DATES

REVISION DATES: 3-9-09 3-25-09 6-15-09 6-17-09 6-23-09 10-14-09 12-17-09 12-24-09 1-25-10

SHEET 1 OF 14

FILE => 02_1e6301_agp.dgn

USERNAME => frstrk DATE PLOTTED => 24-MAR-2010 TIME PLOTTED => 13:11

DIST	COUNTY	ROUTE	POST MILES TOTAL PROJECT	SHEET NO.	TOTAL SHEETS
02	Sis	3,5, 96,97	Var	17	29

REGISTERED CIVIL ENGINEER 12-28-09 DATE

3-22-10
PLANS APPROVAL DATE

REGISTERED PROFESSIONAL ENGINEER MARTIN B. FURLONG No. C70764 Exp. 06-30-11 CIVIL STATE OF CALIFORNIA

THE STATE OF CALIFORNIA OR ITS OFFICERS OR AGENTS SHALL NOT BE RESPONSIBLE FOR THE ACCURACY OR COMPLETENESS OF ELECTRONIC COPIES OF THIS PLAN SHEET.

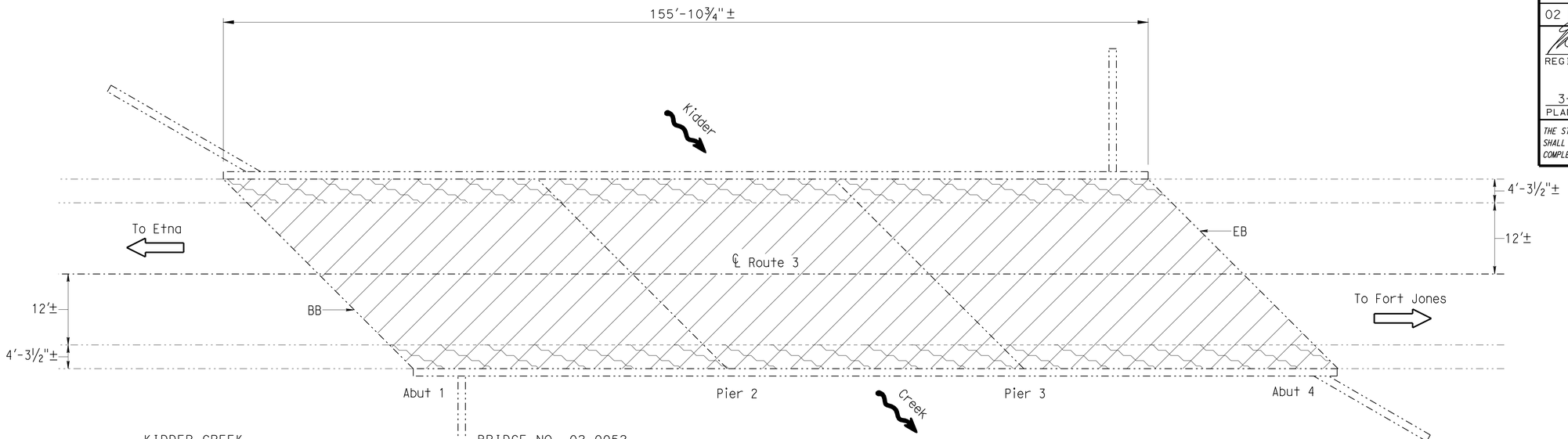

KIDDER CREEK

BRIDGE NO. 02-0052

QUANTITIES

REMOVE CONTRAST TREATMENT	1,345	SQFT
REMOVE UNSOUND CONCRETE	128	CF
CLEAN BRIDGE DECK	5,100	SQFT
RAPID SETTING CONCRETE (PATCH)	128	CF
TREAT BRIDGE DECK	5,100	SQFT
FURNISH BRIDGE DECK TREATMENT MATERIAL	57	GAL

KIDDER CREEK

Br No. 02-0052, SIS, Route 3, PM 27.09
1"=10'

(APPLY TO THIS SHEET ONLY)

NOTES:

-·-·-·- Indicates existing.

Indicates limits of clean and treat bridge deck with resin. Prior to bridge deck treatment remove unsound concrete and patch with rapid setting concrete.

Indicates limits of remove contrast treatment.

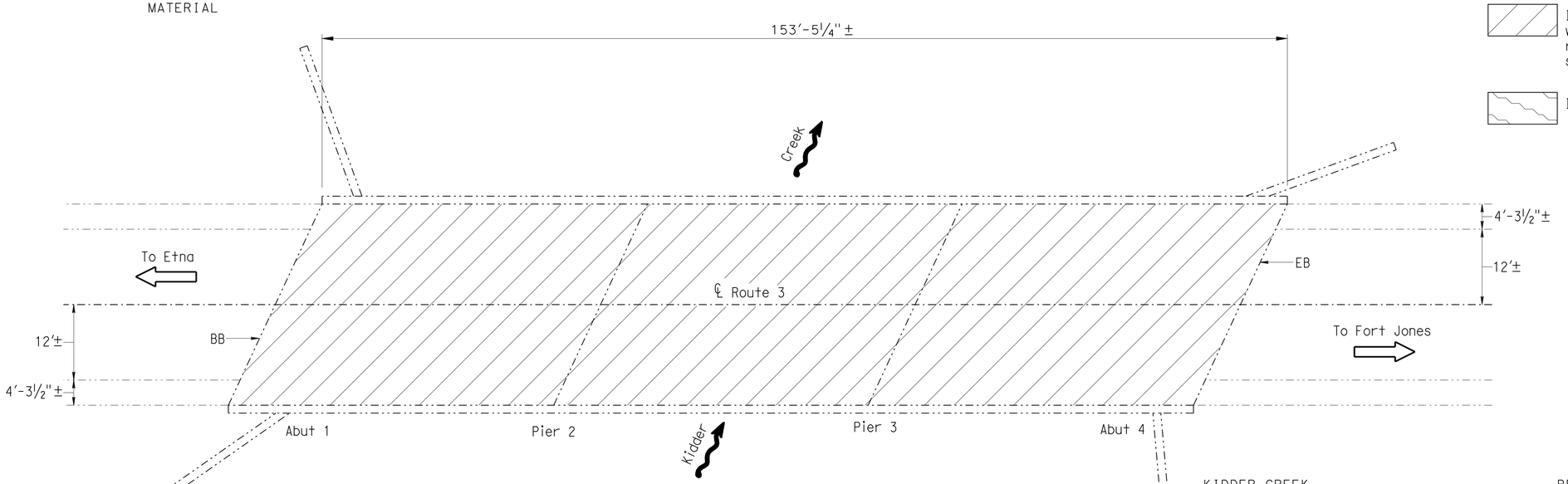

NOTE:
THE CONTRACTOR SHALL VERIFY ALL CONTROLLING FIELD DIMENSIONS BEFORE ORDERING OR FABRICATING ANY MATERIAL.

KIDDER CREEK

Br No. 02-0056, SIS, Route 3, PM 31.23
1"=10'

KIDDER CREEK

BRIDGE NO. 02-0056

QUANTITIES

REMOVE UNSOUND CONCRETE	125	CF
CLEAN BRIDGE DECK	5,019	SQFT
RAPID SETTING CONCRETE (PATCH)	125	CF
TREAT BRIDGE DECK	5,019	SQFT
FURNISH BRIDGE DECK TREATMENT MATERIAL	56	GAL

DESIGN ENGINEER 12-28-09	DESIGN	BY M. Furlong	CHECKED J. Louie	LAYOUT	BY N. Kelley	CHECKED M. Furlong	
	DETAILS	BY N. Kelley	CHECKED J. Louie	SPECIFICATIONS	BY Mary Kopsa	PLANS AND SPECIFICATIONS COMPARED Mary Kopsa	
	QUANTITIES	BY M. Furlong	CHECKED J. Louie				

STATE OF CALIFORNIA
DEPARTMENT OF TRANSPORTATION

DIVISION OF MAINTENANCE
STRUCTURE MAINTENANCE DESIGN

CU 02601
EA 1E6301

BRIDGE NO. Varies
POST MILE Various

ROUTE 3,5,96 AND 97 BRIDGES

GENERAL PLAN NO. 2

STRUCTURES MAINTENANCE GENERAL PLAN & DETAIL SHEET (ENGLISH) (REV. 10/17/07)

ORIGINAL SCALE IN INCHES FOR REDUCED PLANS 0 1 2 3

DISREGARD PRINTS BEARING EARLIER REVISION DATES

REVISION DATES: 1-16-09 3-25-09 6-15-09 6-17-09 6-23-09 10-14-09 12-17-09 1-25-10 2-24-10

SHEET 2 OF 14

FILE => 02_1e6301_bgp.dgn

USERNAME => trestrk DATE PLOTTED => 24-MAR-2010 TIME PLOTTED => 13:11

DIST	COUNTY	ROUTE	POST MILES TOTAL PROJECT	SHEET NO.	TOTAL SHEETS
02	Sis	3,5, 96,97	Var	18	29

REGISTERED CIVIL ENGINEER 12-28-09 DATE

3-22-10
PLANS APPROVAL DATE

REGISTERED PROFESSIONAL ENGINEER MARTIN B. FURLONG No. C70764 Exp. 06-30-11 CIVIL STATE OF CALIFORNIA

THE STATE OF CALIFORNIA OR ITS OFFICERS OR AGENTS SHALL NOT BE RESPONSIBLE FOR THE ACCURACY OR COMPLETENESS OF ELECTRONIC COPIES OF THIS PLAN SHEET.

(APPLY TO THIS SHEET ONLY)

NOTES:

-·-·-·- Indicates existing.

——— Indicates location of existing joint seal removal and placement of new joint seal.

▨ Indicates limits of clean and treat bridge deck with resin. Prior to bridge deck treatment remove unsound concrete and patch with rapid setting concrete.

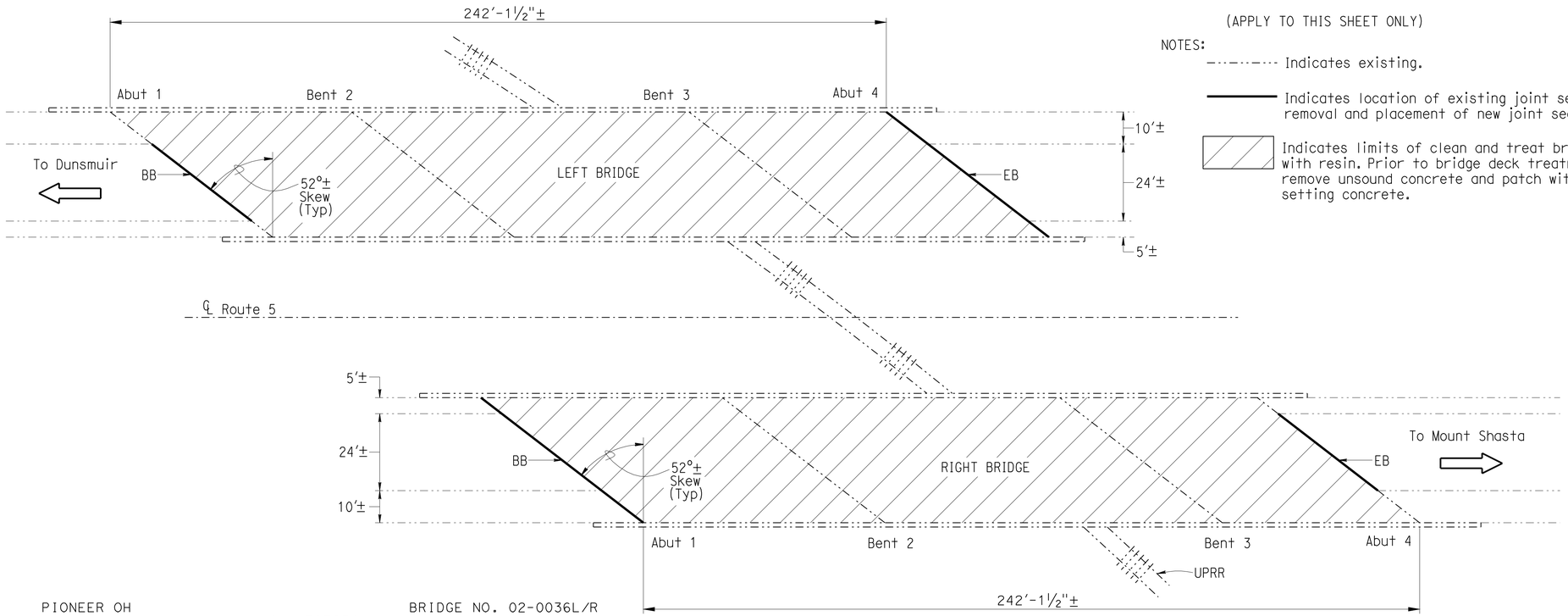

PIONEER OH BRIDGE NO. 02-0036L/R

QUANTITIES

REMOVE UNSOUND CONCRETE	95	CF
CLEAN BRIDGE DECK	18,955	SQFT
CLEAN EXPANSION JOINT	206	LF
RAPID SETTING CONCRETE (PATCH)	95	CF
JOINT SEAL (MR 1½")	206	LF
TREAT BRIDGE DECK	18,955	SQFT
FURNISH BRIDGE DECK TREATMENT MATERIAL	211	GAL

PIONEER OVERHEAD

Br No. 02-0036 L/R, SIS, Route 5, PM R9.20
1"=20'

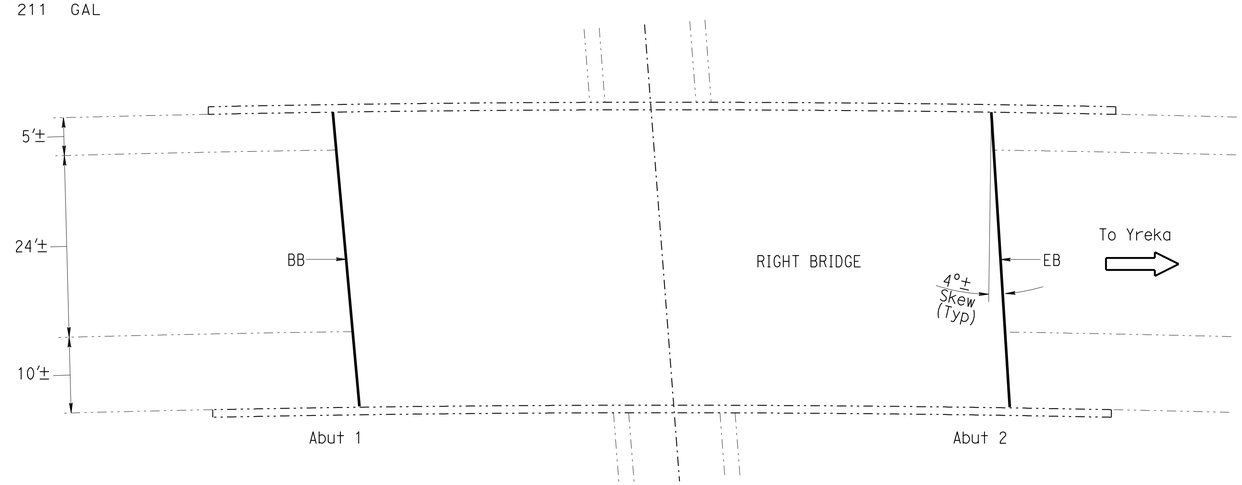

NOTE:
THE CONTRACTOR SHALL VERIFY ALL CONTROLLING FIELD DIMENSIONS BEFORE ORDERING OR FABRICATING ANY MATERIAL.

EDGEWOOD UNDERCROSSING

Br No. 02-0136R, SIS, Route 5, PM R23.00
1"=10'

EDGEWOOD UC BRIDGE NO. 02-0136R

QUANTITIES

CLEAN EXPANSION JOINT	80	LF
JOINT SEAL (MR 1")	80	LF

12-28-09 DESIGN ENGINEER	DESIGN	BY M. Furlong	CHECKED J. Louie	LAYOUT	BY N. Kelley	CHECKED M. Furlong	STATE OF CALIFORNIA DEPARTMENT OF TRANSPORTATION	DIVISION OF MAINTENANCE STRUCTURE MAINTENANCE DESIGN
	DETAILS	BY N. Kelley	CHECKED J. Louie	SPECIFICATIONS	BY Mary Kopsa	PLANS AND SPECIFICATIONS COMPARED Mary Kopsa		
	QUANTITIES	BY M. Furlong	CHECKED J. Louie					

BRIDGE NO. Varies
POST MILE Various

ROUTE 3,5,96 AND 97 BRIDGES
GENERAL PLAN NO. 3

STRUCTURES MAINTENANCE GENERAL PLAN & DETAIL SHEET (ENGLISH) (REV. 10/17/07)

ORIGINAL SCALE IN INCHES FOR REDUCED PLANS 0 1 2 3

CU 02601
EA 1E6301

DISREGARD PRINTS BEARING EARLIER REVISION DATES

REVISION DATES: 1-28-09 3-25-09 6-15-09 6-17-09 6-23-09 10-14-09 1-25-10 2-24-10

SHEET 3 OF 14

FILE => 02_1e6301_cgp.dgn

USERNAME => trstrk DATE PLOTTED => 24-MAR-2010 TIME PLOTTED => 13:11

DIST	COUNTY	ROUTE	POST MILES TOTAL PROJECT	SHEET NO.	TOTAL SHEETS
02	SIS	3,5, 96,97	Var	19	29

REGISTERED CIVIL ENGINEER 12-28-09 DATE

3-22-10
PLANS APPROVAL DATE

REGISTERED PROFESSIONAL ENGINEER MARTIN B. FURLONG No. C70764 Exp. 06-30-11 CIVIL STATE OF CALIFORNIA

THE STATE OF CALIFORNIA OR ITS OFFICERS OR AGENTS SHALL NOT BE RESPONSIBLE FOR THE ACCURACY OR COMPLETENESS OF ELECTRONIC COPIES OF THIS PLAN SHEET.

(APPLY TO THIS SHEET ONLY)

NOTES:

-·-·-·- Indicates existing.

——— Indicates location of existing joint seal removal and placement of new joint seal.

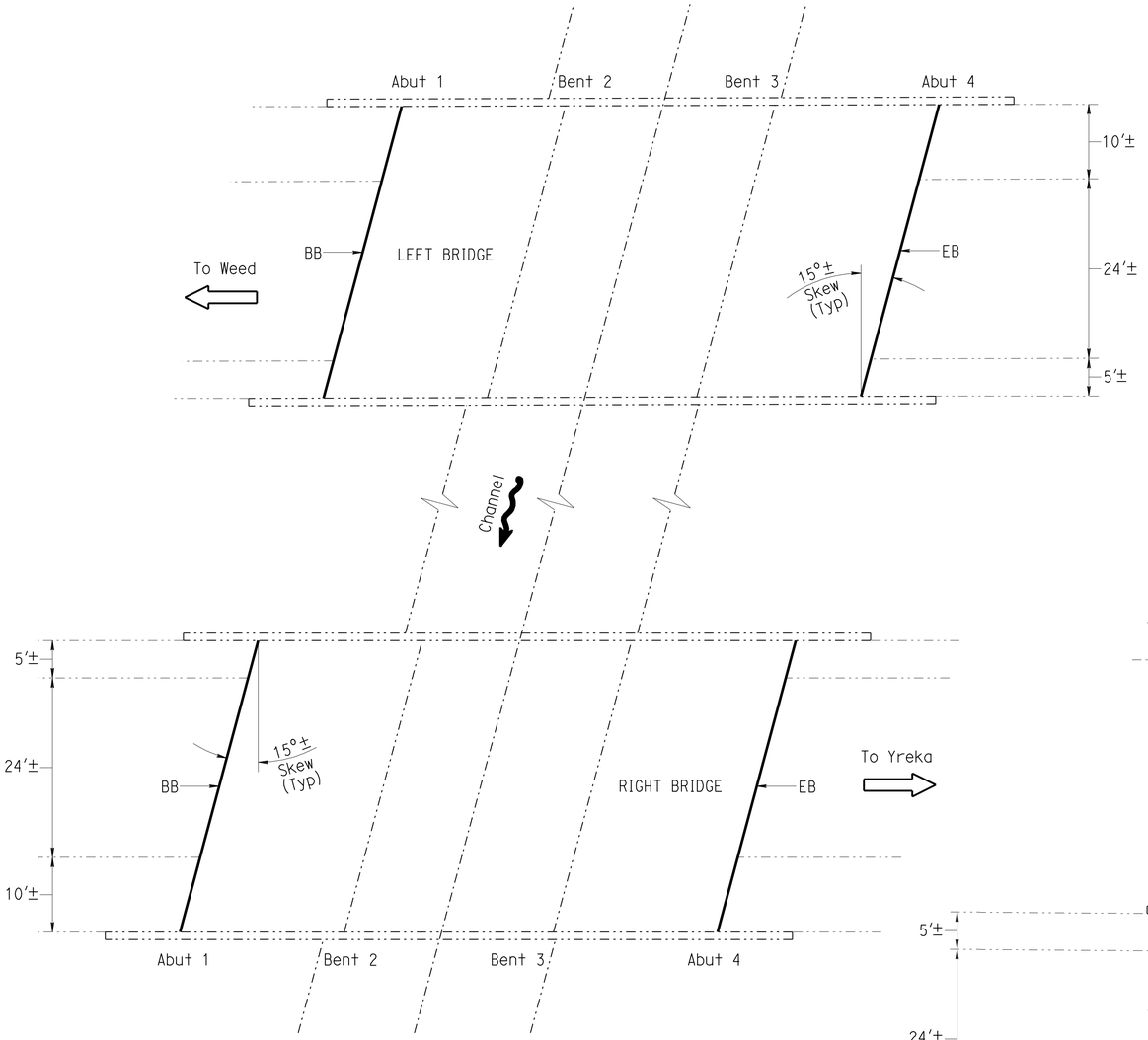

GUYS GULCH

Br No. 02-0145 L/R, SIS, Route 5, PM R39.27
1"=10'

GUYS GULCH — BRIDGE NO. 02-0145L/R

QUANTITIES

CLEAN EXPANSION JOINT	168 LF
JOINT SEAL (MR 1")	168 LF

NOTE:
THE CONTRACTOR SHALL VERIFY ALL CONTROLLING FIELD DIMENSIONS BEFORE ORDERING OR FABRICATING ANY MATERIAL.

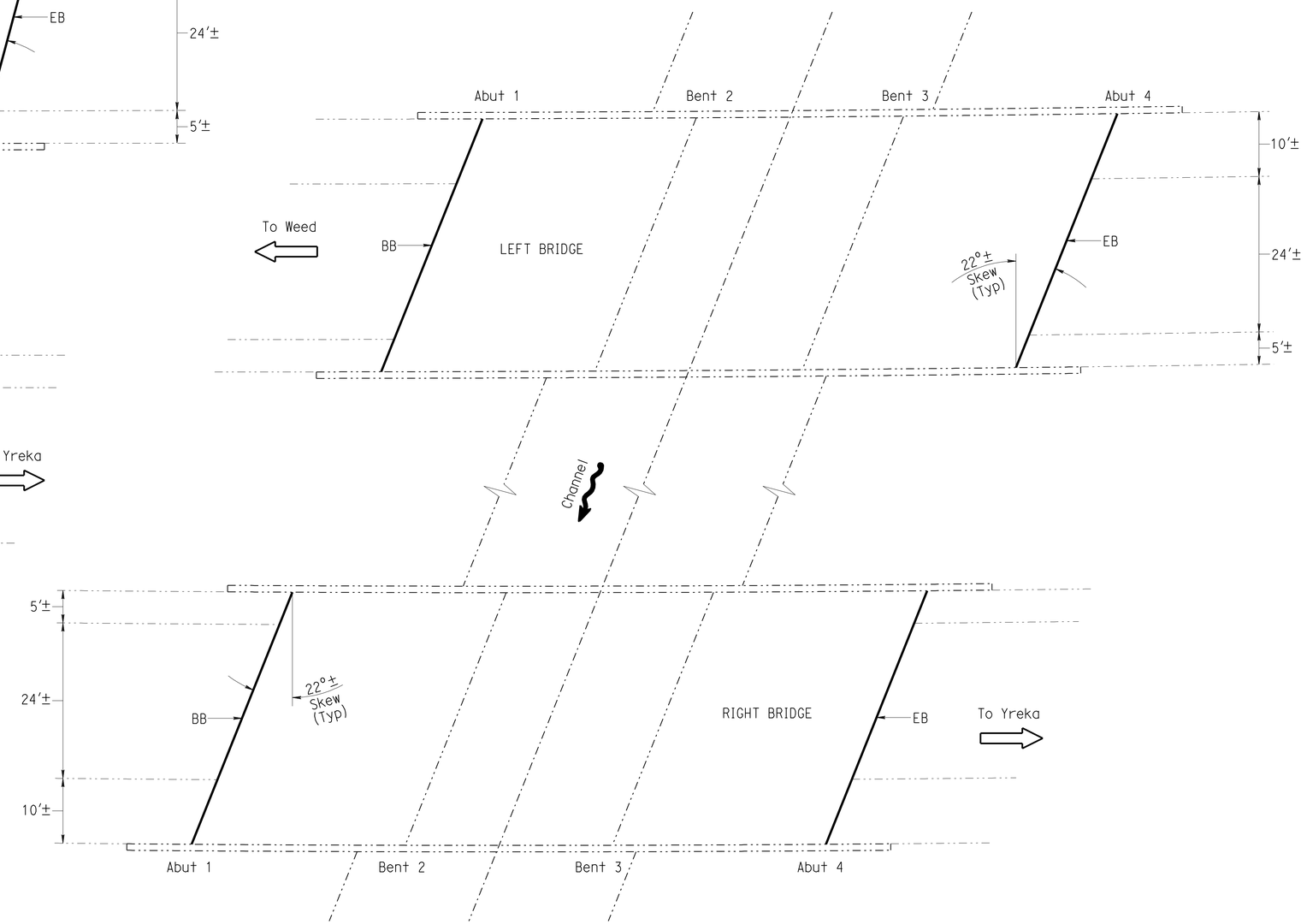

JULIEN CREEK

Br No. 02-0146 L/R, SIS, Route 5, PM R40.12
1"=10'

JULIEN CREEK — BRIDGE NO. 02-0146L/R

QUANTITIES

CLEAN EXPANSION JOINT	172 LF
JOINT SEAL (MR 1")	172 LF

12-28-09 DESIGN ENGINEER	DESIGN	BY M. Furlong	CHECKED J. Louie	LAYOUT	BY N. Kelley	CHECKED M. Furlong	STATE OF CALIFORNIA DEPARTMENT OF TRANSPORTATION	DIVISION OF MAINTENANCE STRUCTURE MAINTENANCE DESIGN
	DETAILS	BY N. Kelley	CHECKED J. Louie	SPECIFICATIONS	BY Mary Kopsa	PLANS AND SPECIFICATIONS COMPARED Mary Kopsa		
	QUANTITIES	BY M. Furlong	CHECKED J. Louie					

BRIDGE NO. Varies — POST MILE Various

ROUTE 3,5,96 AND 97 BRIDGES

GENERAL PLAN NO. 4

STRUCTURES MAINTENANCE GENERAL PLAN & DETAIL SHEET (ENGLISH) (REV. 10/17/07)

ORIGINAL SCALE IN INCHES FOR REDUCED PLANS 0 1 2 3

CU 02601
EA 1E6301

DISREGARD PRINTS BEARING EARLIER REVISION DATES

REVISION DATES: 1-21-09 | 3-25-09 | 6-15-09 | 6-17-09 | 6-23-09 | 10-14-09 | 11-17-09 | 1-25-10

SHEET 4 OF 14

FILE => 02_1e6301_dgp.dgn

USERNAME => trrene DATE PLOTTED => 24-MAR-2010 TIME PLOTTED => 13:23

DIST	COUNTY	ROUTE	POST MILES TOTAL PROJECT	SHEET NO.	TOTAL SHEETS
02	SIS	3, 5, 96, 97	Var	20	29

REGISTERED CIVIL ENGINEER 12-28-09 DATE

3-22-10
PLANS APPROVAL DATE

REGISTERED PROFESSIONAL ENGINEER MARTIN B. FURLONG No. C70764 Exp. 06-30-11 CIVIL STATE OF CALIFORNIA

THE STATE OF CALIFORNIA OR ITS OFFICERS OR AGENTS SHALL NOT BE RESPONSIBLE FOR THE ACCURACY OR COMPLETENESS OF ELECTRONIC COPIES OF THIS PLAN SHEET.

(APPLY TO THIS SHEET ONLY)

NOTES:

-·-·-·- Indicates existing.

——— Indicates location of existing joint seal removal and placement of new joint seal.

Indicates limits of clean and treat bridge deck with resin. Prior to bridge deck treatment remove unsound concrete and patch with rapid setting concrete.

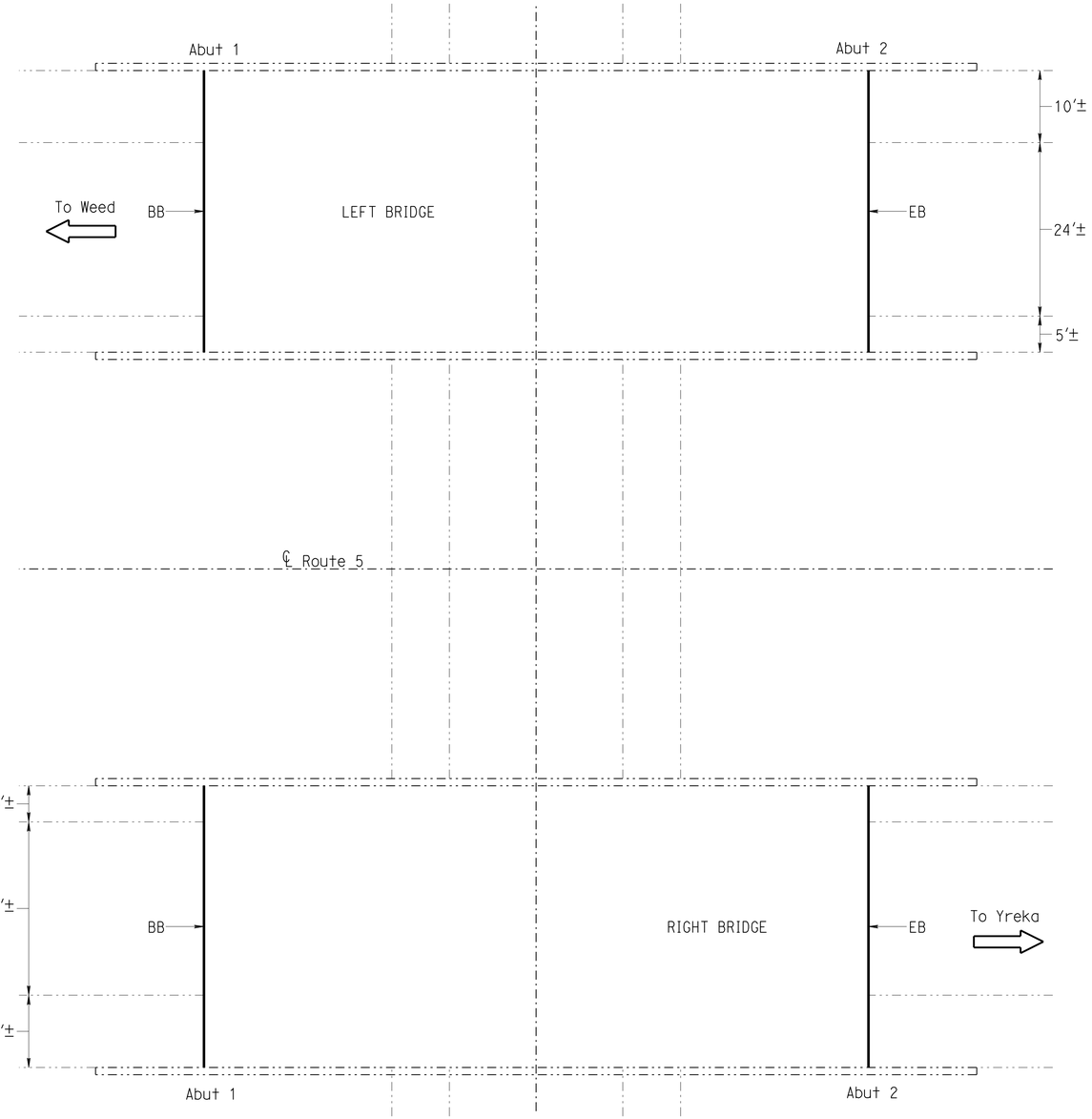

KILLGORE HILLS ROAD UNDERCROSSING

Br No. 02-0153 L/R, SIS, Route 5, PM R42.51
1"=10'

NOTE:
THE CONTRACTOR SHALL VERIFY ALL CONTROLLING FIELD DIMENSIONS BEFORE ORDERING OR FABRICATING ANY MATERIAL.

KILLGORE HILLS — BRIDGE NO. 02-0153L/R

QUANTITIES

CLEAN EXPANSION JOINT	160	LF
JOINT SEAL (MR 1")	160	LF

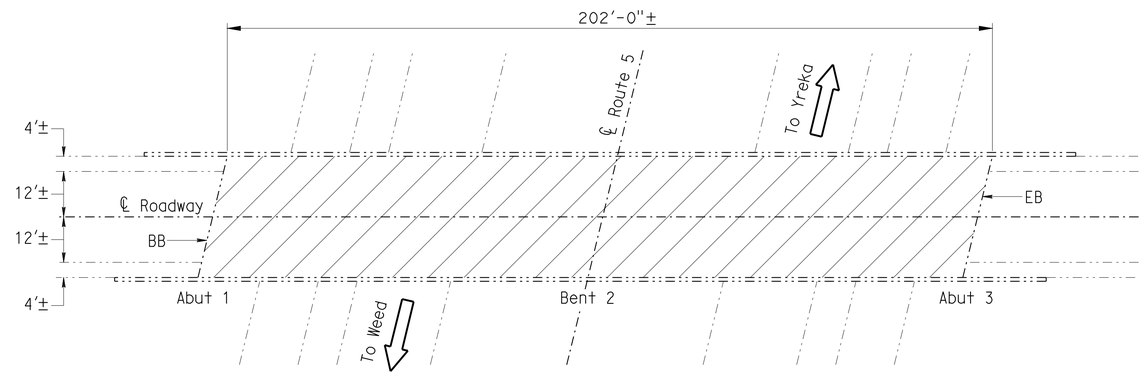

WALTERS ROAD OVERCROSSING

Br No. 02-0149, SIS, Route 5, PM R44.31
1"=20'

WALTERS RD OC — BRIDGE NO. 02-0149

QUANTITIES

REMOVE UNSOUND CONCRETE	81	CF
CLEAN BRIDGE DECK	6,465	SQFT
RAPID SETTING CONCRETE (PATCH)	81	CF
TREAT BRIDGE DECK	6,465	SQFT
FURNISH BRIDGE DECK TREATMENT MATERIAL	72	GAL

DESIGN ENGINEER 12-28-09

	BY	CHECKED		BY	CHECKED
DESIGN	M. Furlong	J. Louie	LAYOUT	N. Kelley	M. Furlong
DETAILS	N. Kelley	J. Louie	SPECIFICATIONS	Mary Kopsa	PLANS AND SPECIFICATIONS COMPARED: Mary Kopsa
QUANTITIES	M. Furlong	J. Louie			

STATE OF CALIFORNIA
DEPARTMENT OF TRANSPORTATION

DIVISION OF MAINTENANCE
STRUCTURE MAINTENANCE DESIGN

BRIDGE NO. Varies
POST MILE Various

ROUTE 3,5,96 AND 97 BRIDGES
GENERAL PLAN NO. 5

STRUCTURES MAINTENANCE GENERAL PLAN & DETAIL SHEET (ENGLISH) (REV. 10/17/07)

ORIGINAL SCALE IN INCHES FOR REDUCED PLANS 0 1 2 3

CU 02601
EA 1E6301

DISREGARD PRINTS BEARING EARLIER REVISION DATES

REVISION DATES: 1-21-09 3-26-09 6-15-09 6-17-09 6-23-09 10-14-09 12-17-09 1-25-10 2-24-10

SHEET 5 OF 14

FILE => 02_1e6301_egp.dgn

USERNAME => trrene DATE PLOTTED => 24-MAR-2010 TIME PLOTTED => 13:23

DIST	COUNTY	ROUTE	POST MILES TOTAL PROJECT	SHEET NO.	TOTAL SHEETS
02	SIS	3,5, 96,97	Var	21	29

REGISTERED CIVIL ENGINEER 12-28-09 DATE

3-22-10
PLANS APPROVAL DATE

REGISTERED PROFESSIONAL ENGINEER MARTIN B. FURLONG No. C70764 Exp. 06-30-11 CIVIL STATE OF CALIFORNIA

THE STATE OF CALIFORNIA OR ITS OFFICERS OR AGENTS SHALL NOT BE RESPONSIBLE FOR THE ACCURACY OR COMPLETENESS OF ELECTRONIC COPIES OF THIS PLAN SHEET.

(APPLY TO THIS SHEET ONLY)

NOTES:

-·-·-·- Indicates existing.

——— Indicates location of existing joint seal removal and placement of new joint seal.

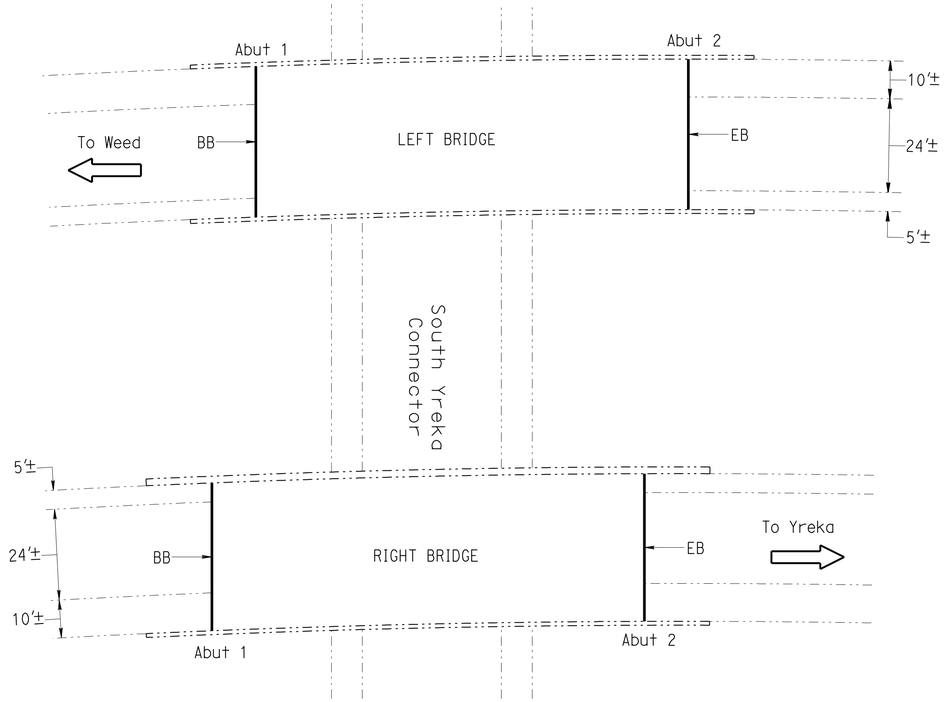

MOONLIT OAKS AVE UNDERCROSSING

Br No. 02-0159 L/R, SIS, Route 5, PM R45.62
1"=20'

MOONLIT OAKS AVE UC — BRIDGE NO. 02-0159L/R

QUANTITIES

CLEAN EXPANSION JOINT	160	LF
JOINT SEAL (MR 1")	160	LF

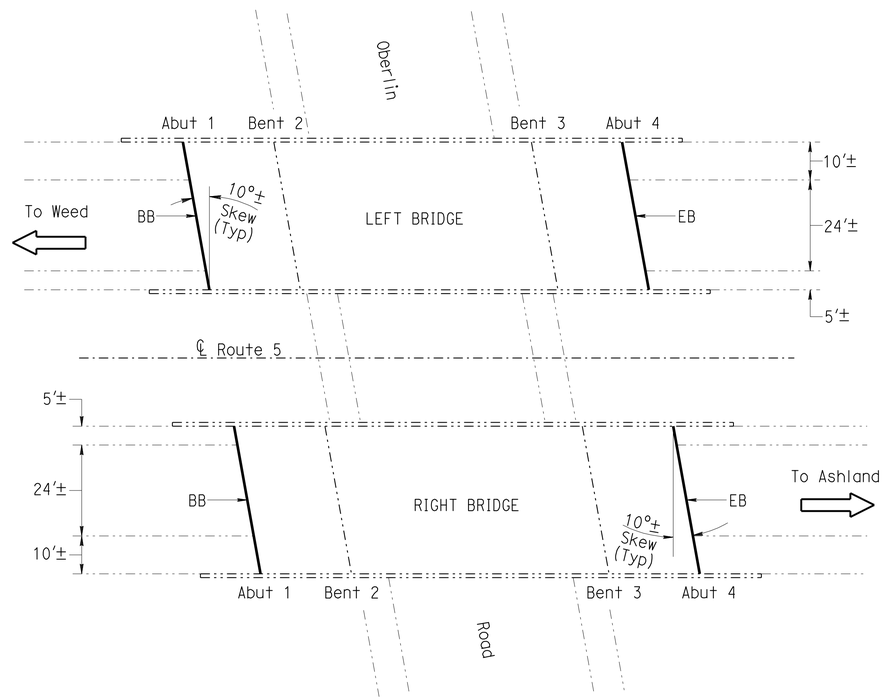

OBERLIN ROAD UNDERCROSSING

Br No. 02-0138 L/R, SIS, Route 5, PM R46.49
1"=20'

OBERLIN ROAD UC — BRIDGE NO. 02-0138L/R

QUANTITIES

CLEAN EXPANSION JOINT	164	LF
JOINT SEAL (MR 1")	164	LF

NOTE:
THE CONTRACTOR SHALL VERIFY ALL CONTROLLING FIELD DIMENSIONS BEFORE ORDERING OR FABRICATING ANY MATERIAL.

12-28-09 DESIGN ENGINEER	DESIGN	BY M. Furlong	CHECKED J. Louie	LAYOUT	BY N. Kelley
	DETAILS	BY N. Kelley	CHECKED J. Louie	SPECIFICATIONS	BY Mary Kopsa
	QUANTITIES	BY M. Furlong	CHECKED J. Louie		

CHECKED M. Furlong
PLANS AND SPECIFICATIONS COMPARED Mary Kopsa

STATE OF CALIFORNIA DEPARTMENT OF TRANSPORTATION

DIVISION OF MAINTENANCE STRUCTURE MAINTENANCE DESIGN

BRIDGE NO. Varies
POST MILE Various

ROUTE 3,5,96 AND 97 BRIDGES
GENERAL PLAN NO. 6

STRUCTURES MAINTENANCE GENERAL PLAN & DETAIL SHEET (ENGLISH) (REV. 10/17/07)

ORIGINAL SCALE IN INCHES FOR REDUCED PLANS 0 1 2 3

CU 02601
EA 1E6301

DISREGARD PRINTS BEARING EARLIER REVISION DATES

REVISION DATES: 1-22-09 3-25-09 6-15-09 6-17-09 6-23-09 10-14-09 11-17-09 1-25-10

SHEET 6 OF 14

FILE => 02_1e6301_fgp.dgn

USERNAME => trrene DATE PLOTTED => 24-MAR-2010 TIME PLOTTED => 13:23

DIST	COUNTY	ROUTE	POST MILES TOTAL PROJECT	SHEET NO.	TOTAL SHEETS
02	SIS	3,5, 96,97	Var	22	29

REGISTERED CIVIL ENGINEER 12-28-09 DATE

3-22-10
PLANS APPROVAL DATE

REGISTERED PROFESSIONAL ENGINEER MARTIN B. FURLONG No. C70764 Exp. 06-30-11 CIVIL STATE OF CALIFORNIA

THE STATE OF CALIFORNIA OR ITS OFFICERS OR AGENTS SHALL NOT BE RESPONSIBLE FOR THE ACCURACY OR COMPLETENESS OF ELECTRONIC COPIES OF THIS PLAN SHEET.

(APPLY TO THIS SHEET ONLY)

NOTES:

-·-·-·-·- Indicates existing.

——— Indicates location of existing joint seal removal and placement of new joint seal.

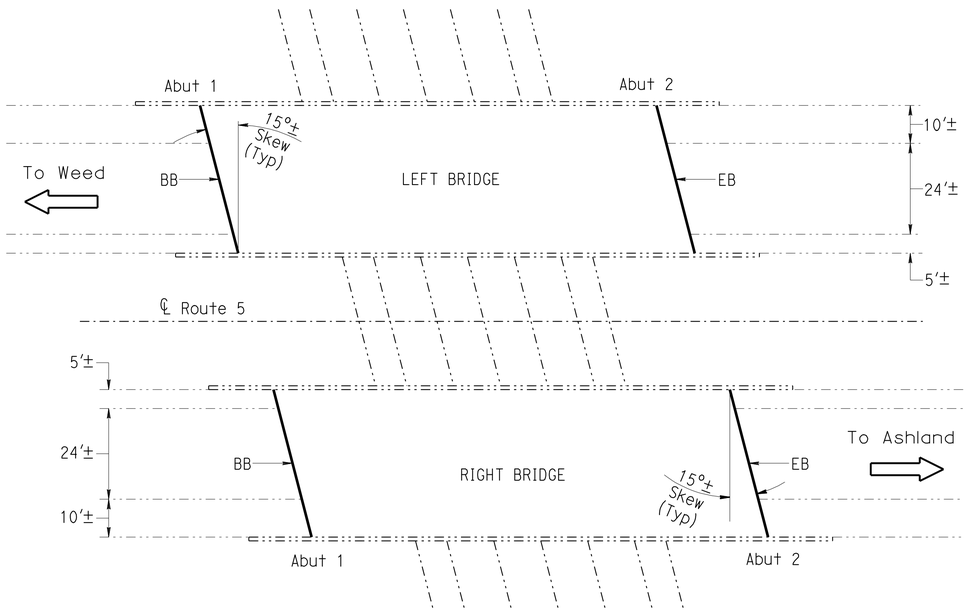

MINER STREET UNDERCROSSING

Br No. 02-0158 L/R, SIS, Route 5, PM R47.56
1"=20'

MINER ST UC — BRIDGE NO. 02-0158L/R

QUANTITIES

CLEAN EXPANSION JOINT	164	LF
JOINT SEAL (MR 1")	164	LF

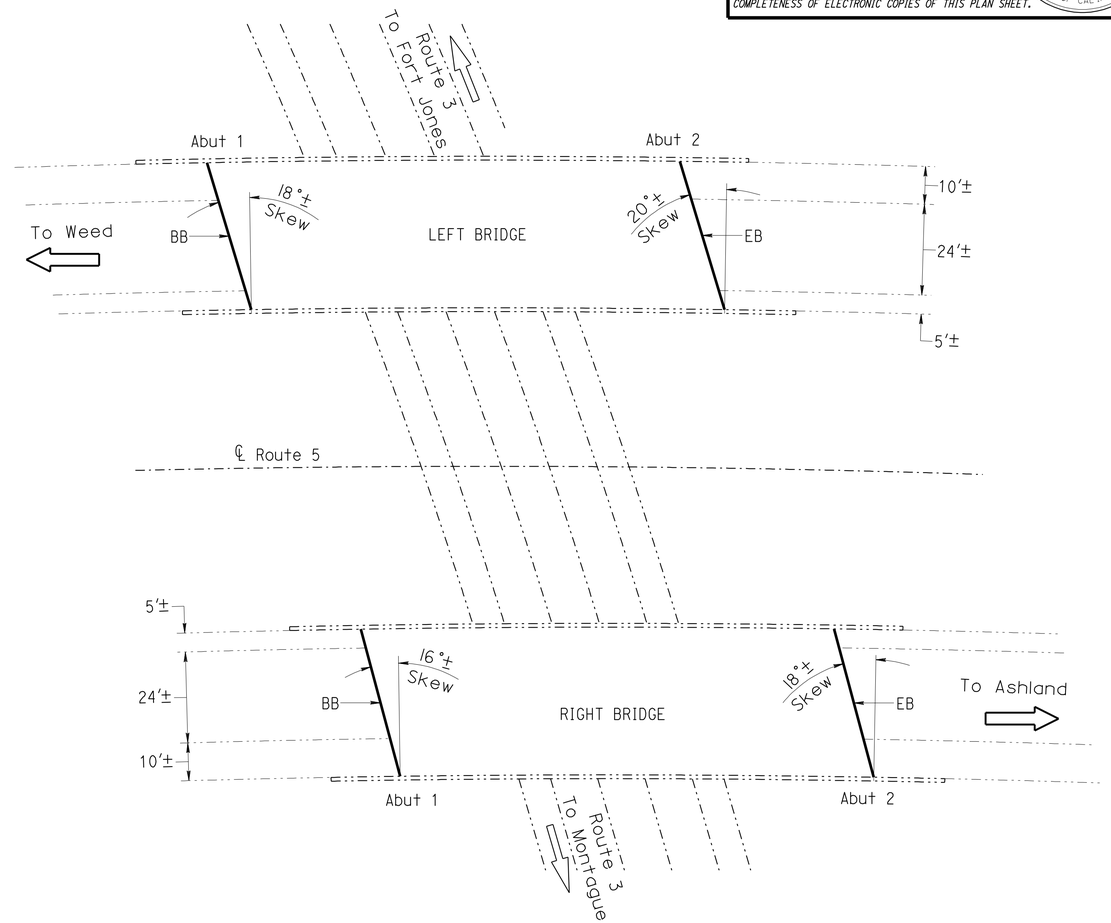

NORTH YREKA SEPARATION

Br No. 02-0150 L/R, SIS, Route 5, PM R48.23
1"=20'

NORTH YREKA SEP — BRIDGE NO. 02-0150L/R

QUANTITIES

CLEAN EXPANSION JOINT	168	LF
JOINT SEAL (MR 1")	168	LF

NOTE:
THE CONTRACTOR SHALL VERIFY ALL CONTROLLING FIELD DIMENSIONS BEFORE ORDERING OR FABRICATING ANY MATERIAL.

DESIGN ENGINEER 12-28-09	DESIGN	BY M. Furlong	CHECKED J. Louie	LAYOUT	BY N. Kelley
	DETAILS	BY N. Kelley	CHECKED J. Louie	SPECIFICATIONS	BY Mary Kopsa
	QUANTITIES	BY M. Furlong	CHECKED J. Louie		

CHECKED M. Furlong
PLANS AND SPECIFICATIONS COMPARED Mary Kopsa

STATE OF CALIFORNIA
DEPARTMENT OF TRANSPORTATION

DIVISION OF MAINTENANCE
STRUCTURE MAINTENANCE DESIGN

CU 02601
EA 1E6301

BRIDGE NO. Varies
POST MILE Various

ROUTE 3,5,96 AND 97 BRIDGES
GENERAL PLAN NO. 7

STRUCTURES MAINTENANCE GENERAL PLAN & DETAIL SHEET (ENGLISH) (REV. 10/17/07)

ORIGINAL SCALE IN INCHES FOR REDUCED PLANS 0 1 2 3

DISREGARD PRINTS BEARING EARLIER REVISION DATES

REVISION DATES: 1-22-09 3-25-09 6-15-09 6-17-09 6-23-09 10-14-09 11-17-09 1-25-10

SHEET 7 OF 14

FILE => 02_1e6301_ggp.dgn

USERNAME => trrene DATE PLOTTED => 24-MAR-2010 TIME PLOTTED => 13:23

DIST	COUNTY	ROUTE	POST MILES TOTAL PROJECT	SHEET NO.	TOTAL SHEETS
02	SIS	3, 5, 96, 97	Var	23	29

REGISTERED CIVIL ENGINEER 12-28-09 DATE

3-22-10
PLANS APPROVAL DATE

REGISTERED PROFESSIONAL ENGINEER MARTIN B. FURLONG No. C70764 Exp. 06-30-11 CIVIL STATE OF CALIFORNIA

THE STATE OF CALIFORNIA OR ITS OFFICERS OR AGENTS SHALL NOT BE RESPONSIBLE FOR THE ACCURACY OR COMPLETENESS OF ELECTRONIC COPIES OF THIS PLAN SHEET.

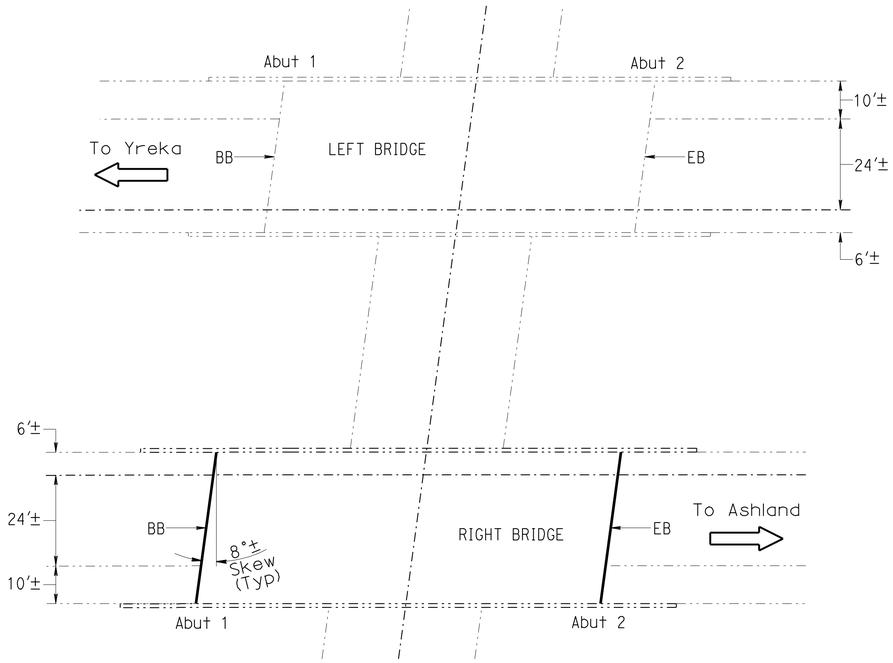

HENLEY WAY UNDERCROSSING

Br No. 02-0174 L/R, SIS, Route 5, PM R61.55
1"=20'

HENLEY WAY UC — BRIDGE NO. 02-0174R

QUANTITIES

CLEAN EXPANSION JOINT	82	LF
JOINT SEAL (MR 1")	82	LF

NOTE:
THE CONTRACTOR SHALL VERIFY ALL CONTROLLING FIELD DIMENSIONS BEFORE ORDERING OR FABRICATING ANY MATERIAL.

NOTES: (APPLY TO THIS SHEET ONLY)

Indicates existing.

Indicates location of existing joint seal removal and placement of new joint seal.

Indicates limits of prepare concrete bridge deck surface, furnish and place new 3/4" minimum and varies depth polyester concrete overlay. Prior to placing new polyester concrete overlay, remove unsound concrete and patch with rapid setting concrete as shown on the "DECK OVERLAY DETAILS". For details see SECTION C-C on TYPICAL SECTION sheet.

Indicates limits of remove 3"± thick AC overlay and membrane seal.

Indicates limits of remove existing approach and place new structure approach type R(30D). For details see "STRUCTURE APPROACH TYPE R(30D) sheet.

(1) See "ROAD PLANS" for modification of existing AC or PCC surface to conform to new deck grade.

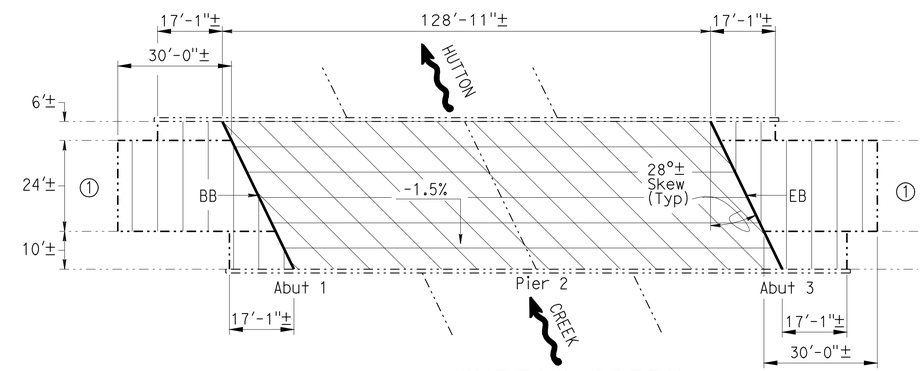

HUTTON CREEK

Br No. 02-0176R, SIS, Route 5, PM R64.82
1"=20'

HUTTON CREEK — BRIDGE NO. 02-0176R

QUANTITIES

REMOVE ASPHALT CONCRETE SURFACING	5,080	SQFT
REMOVE UNSOUND CONCRETE	127	CF
PREPARE CONCRETE BRIDGE DECK SURFACE	5,080	SQFT
AGGREGATE BASE (APPROACH SLAB)	8	CY
STRUCTURAL CONCRETE, APPROACH SLAB (TYPE R)	85	CY
RAPID SETTING CONCRETE (PATCH)	127	CF
FURNISH POLYESTER CONCRETE OVERLAY	381	CF
PLACE POLYESTER CONCRETE OVERLAY	5,080	SQFT
JOINT SEAL (MR 1")	90	LF

DESIGN ENGINEER 12-28-09

	BY	CHECKED
DESIGN	M. Furlong	J. Louie
DETAILS	N. Kelley	J. Louie
QUANTITIES	M. Furlong	J. Louie
LAYOUT	N. Kelley	M. Furlong
SPECIFICATIONS	Mary Kopsa	Mary Kopsa (PLANS AND SPECIFICATIONS COMPARED)

STATE OF CALIFORNIA
DEPARTMENT OF TRANSPORTATION

DIVISION OF MAINTENANCE
STRUCTURE MAINTENANCE DESIGN

BRIDGE NO. Varies
POST MILE Various

ROUTE 3,5,96 AND 97 BRIDGES
GENERAL PLAN NO. 8

STRUCTURES MAINTENANCE GENERAL PLAN & DETAIL SHEET (ENGLISH) (REV. 10/17/07)

ORIGINAL SCALE IN INCHES FOR REDUCED PLANS 0 1 2 3

CU 02601
EA 1E6301

DISREGARD PRINTS BEARING EARLIER REVISION DATES → 1-27-09 | 3-25-09 | 6-15-09 | 6-17-09 | 6-23-09 | 10-14-09 | 11-17-09 | 1-1-10 | 1-25-10

SHEET 8 OF 14

FILE => 02_1e6301_hgp.dgn

USERNAME => trrene DATE PLOTTED => 24-MAR-2010 TIME PLOTTED => 13:24

DIST	COUNTY	ROUTE	POST MILES TOTAL PROJECT	SHEET NO.	TOTAL SHEETS
02	Sis	3,5, 96,97	Var	24	29

REGISTERED CIVIL ENGINEER 12-28-09 DATE

3-22-10
PLANS APPROVAL DATE

REGISTERED PROFESSIONAL ENGINEER DIOSDADO ACOBA No. 52003 Exp. 12-31-10 CIVIL STATE OF CALIFORNIA

THE STATE OF CALIFORNIA OR ITS OFFICERS OR AGENTS SHALL NOT BE RESPONSIBLE FOR THE ACCURACY OR COMPLETENESS OF ELECTRONIC COPIES OF THIS PLAN SHEET.

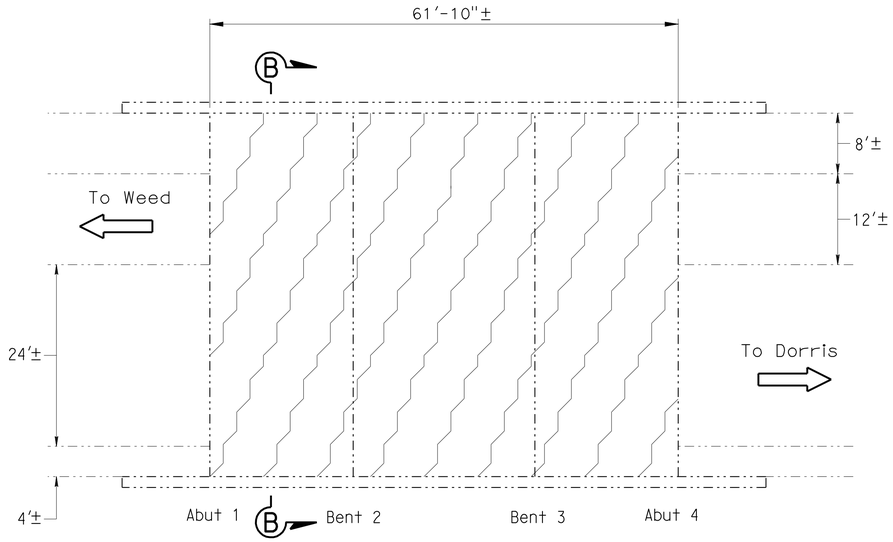

NOTES: (APPLY TO THIS SHEET ONLY)

-·-·-·-·- Indicates existing.

——— Indicates location of existing joint seal removal and placement of new joint seal.

Indicates limits of prepare concrete bridge deck surface, furnish and place new ¾" minimum and varies depth polyester concrete overlay. Prior to placing new polyester concrete overlay, remove unsound concrete and patch with rapid setting concrete as shown on the "DECK OVERLAY DETAILS". For details see SECTION C-C on TYPICAL SECTION sheet.

Indicates limits of remove 6½"± thick AC overlay and membrane seal, prepare concrete bridge deck surface and place 6½" thick concrete overlay. Prior to placing new concrete overlay, remove unsound concrete and patch with rapid setting concrete as shown on the "DECK OVERLAY DETAILS". For details see SECTION B-B on TYPICAL SECTION sheet.
Structure concrete bridge, PCC overlay
f'c @ 7 days = 3600 PSI
f'c @ 28 days = 4500 PSI

Indicates limits of remove 3"± thick AC overlay, polyester concrete expansion dam and membrane seal.

SHEEP ROCK CATTLEPASS

Br No. 02-0048, SIS, Route 97, PM R14.65
1"=10'

SHEEP ROCK CATTLEPASS BRIDGE NO. 02-0048

QUANTITIES		
REMOVE ASPHALT CONCRETE SURFACING	2,968	SQFT
REMOVE UNSOUND CONCRETE	74	CF
PREPARE CONCRETE BRIDGE DECK SURFACE	2,968	SQFT
STRUCTURAL CONCRETE, BRIDGE	60	CY
DRILL AND BOND DOWEL	176	LF
RAPID SETTING CONCRETE (PATCH)	74	CF
BAR REINFORCING STEEL (EPOXY COATED) (BRIDGE)	10,556	LB

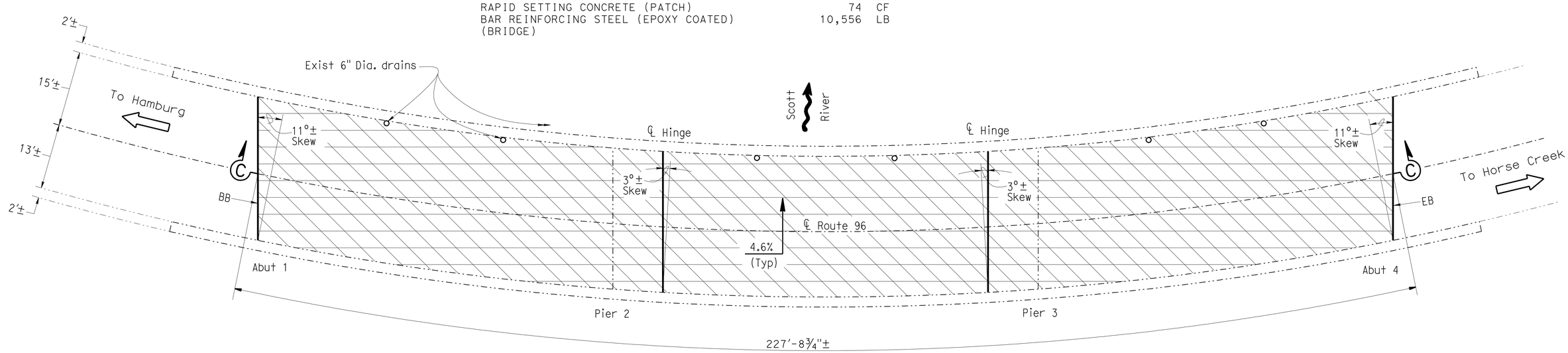

SCOTT RIVER

Br No. 02-0079, SIS, Route 96, PM 71.23
1"=10'

SCOTT RIVER BRIDGE NO. 02-0079

QUANTITIES		
REMOVE ASPHALT CONCRETE SURFACING	6,832	SQFT
REMOVE UNSOUND CONCRETE	171	CF
PREPARE CONCRETE BRIDGE DECK SURFACE	6,832	SQFT
CLEAN EXPANSION JOINT	133	LF
RAPID SETTING CONCRETE (PATCH)	171	CF
FURNISH POLYESTER CONCRETE OVERLAY	1,019	CF
PLACE POLYESTER CONCRETE OVERLAY	6,832	SQFT
JOINT SEAL (MR 1")	100	LF
JOINT SEAL (MR 1½")	34	LF

NOTE:
THE CONTRACTOR SHALL VERIFY ALL CONTROLLING FIELD DIMENSIONS BEFORE ORDERING OR FABRICATING ANY MATERIAL.

DESIGN ENGINEER 12-28-09	DESIGN	BY M. Furlong / D. Acoba	CHECKED J. Louie	LAYOUT	BY N. Kelley
	DETAILS	BY N. Kelley	CHECKED J. Louie	SPECIFICATIONS	BY Mary Kopsa
	QUANTITIES	BY M. Furlong	CHECKED J. Louie		

CHECKED M. Furlong
PLANS AND SPECIFICATIONS COMPARED Mary Kopsa

STATE OF CALIFORNIA
DEPARTMENT OF TRANSPORTATION

DIVISION OF MAINTENANCE
STRUCTURE MAINTENANCE DESIGN

BRIDGE NO. Varies
POST MILE Various

ROUTE 3,5,96 AND 97 BRIDGES
GENERAL PLAN NO. 9

STRUCTURES MAINTENANCE GENERAL PLAN & DETAIL SHEET (ENGLISH) (REV. 10/17/07)

ORIGINAL SCALE IN INCHES FOR REDUCED PLANS 0 1 2 3

CU 02601
EA 1E6301

DISREGARD PRINTS BEARING EARLIER REVISION DATES

REVISION DATES: ~~3-9-09~~ ~~1-7-10~~ 1-25-10 ~~6-23-09~~ ~~10-14-09~~ ~~12-17-09~~ ~~12-22-09~~ ~~12-24-09~~ ~~12-30-09~~

SHEET 9 OF 14

FILE => 02_1e6301_igp.dgn

USERNAME => trstrk DATE PLOTTED => 24-MAR-2010 TIME PLOTTED => 13:20

DIST	COUNTY	ROUTE	POST MILES TOTAL PROJECT	SHEET NO.	TOTAL SHEETS
02	Sis	3,5, 96,97	Var	25	29

REGISTERED CIVIL ENGINEER 12-28-09 DATE

3-22-10
PLANS APPROVAL DATE

REGISTERED PROFESSIONAL ENGINEER MARTIN B. FURLONG No. C70764 Exp. 06-30-11 CIVIL STATE OF CALIFORNIA

THE STATE OF CALIFORNIA OR ITS OFFICERS OR AGENTS SHALL NOT BE RESPONSIBLE FOR THE ACCURACY OR COMPLETENESS OF ELECTRONIC COPIES OF THIS PLAN SHEET.

JOINT SEAL TABLE

BRIDGE NUMBER	BRIDGE NAME	LOCATION		MINIMUM "MR" (in)	APPROXIMATE LENGTH (ft)	EXISTING WATERSTOP	APPROX DEPTH TO CLEAN EXP JOINT (in)
02-0036L	Pioneer OH	Abut 1	PN	1½	39	No	12
		Abut 4	PN	1½	64	No	12
02-0036R	Pioneer OH	Abut 1	PN	1½	64	No	12
		Abut 4	PN	1½	39	No	12
02-0136R	Edgewood UC	Abut 1	PN	1	40	No	12
		Abut 2	PN	1	40	No	12
02-0145L	Guys Gulch	Abut 1	PN	1	42	No	12
		Abut 4	PN	1	42	No	12
02-0145R	Guys Gulch	Abut 1	PN	1	42	No	12
		Abut 4	PN	1	42	No	12
02-0146L	Julien Creek	Abut 1	PN	1	43	No	12
		Abut 4	PN	1	43	No	12
02-0146R	Julien Creek	Abut 1	PN	1	43	No	12
		Abut 4	PN	1	43	No	12
02-0153L	Killgore Hill Road UC	Abut 1	PN	1	40	No	12
		Abut 2	PN	1	40	No	12
02-0153R	Killgore Hill Road UC	Abut 1	PN	1	40	No	12
		Abut 2	PN	1	40	No	12
02-0159L	Moonlit Oaks Ave UC	Abut 1	PN	1	40	No	12
		Abut 2	PN	1	40	No	12
02-0159R	Moonlit Oaks Ave UC	Abut 1	PN	1	40	No	12
		Abut 2	PN	1	40	No	12
02-0138L	Oberlin Road UC	Abut 1	PN	1	41	No	12
		Abut 4	PN	1	41	No	12
02-0138R	Oberlin Road UC	Abut 1	PN	1	41	No	12
		Abut 4	PN	1	41	No	12
02-0158L	Miner Street UC	Abut 1	PN	1	41	No	12
		Abut 2	PN	1	41	No	12
02-0158R	Miner Street UC	Abut 1	PN	1	41	No	12
		Abut 2	PN	1	41	No	12

LEGEND:

PN - Paving Notch at beginning or end of bridge
BW - Backwall
EJ - Expansion Joint
H - Hinge

NOTE:
All joint seals to be Type B

NOTE:
THE CONTRACTOR SHALL VERIFY ALL CONTROLLING FIELD DIMENSIONS BEFORE ORDERING OR FABRICATING ANY MATERIAL.

DECK REPAIR TABLE

REMOVE UNSOUND CONCRETE AND RAPID SETTING CONCRETE (PATCH)

BRIDGE NUMBER	BRIDGE NAME	APPROXIMATE AREA DAMAGED (PERCENT)	APPROXIMATE DEPTH (INCHES)
02-0052	Kidder Creek	10	3
02-0056	Kidder Creek	10	3
02-0036L	Pioneer OH	2	3
02-0036R	Pioneer OH	2	3
02-0149	Walters Road OC	5	3
02-0176R	Hutton Creek	10	3
02-0048	Sheep Rock Cattlepass	10	3
02-0079	Scott River	10	3

JOINT SEAL TABLE

BRIDGE NUMBER	BRIDGE NAME	LOCATION		MINIMUM "MR" (in)	APPROXIMATE LENGTH (ft)	EXISTING WATERSTOP	APPROX DEPTH TO CLEAN EXP JOINT (in)
02-0150L	North Yreka Separation	Abut 1	PN	1	42	No	12
		Abut 2	PN	1	42	No	12
02-0150R	North Yreka Separation	Abut 1	PN	1	42	No	12
		Abut 2	PN	1	42	No	12
02-0174R	Henley Way UC	Abut 1	PN	1	41	No	12
		Abut 2	PN	1	41	No	12
02-0176R	Hutton Creek	Abut 1	PN	1	45	No	12
		Abut 3	PN	1	45	No	12
02-0079	Scott River	Abut 1	BW	1½	33	Yes	8
		Span 2	H	1	33	Yes	8
		Span 2	EJ	1	33	No	12
		Abut 4	BW	1	33	Yes	8

DESIGN	BY M. Furlong	CHECKED D. Acoba	
DETAILS	BY N. Kelley	CHECKED D. Acoba	
QUANTITIES	BY M. Furlong	CHECKED D. Acoba	

STATE OF CALIFORNIA
DEPARTMENT OF TRANSPORTATION

DIVISION OF MAINTENANCE
STRUCTURE MAINTENANCE DESIGN

CU 02601
EA 1E6301

BRIDGE NO. Varies
POST MILE Various

ROUTE 3,5,96 AND 97 BRIDGES
JOINT SEAL DETAILS NO. 1

STRUCTURES MAINTENANCE GENERAL PLAN & DETAIL SHEET (ENGLISH) (REV. 10/17/07)

ORIGINAL SCALE IN INCHES FOR REDUCED PLANS 0 1 2 3

DISREGARD PRINTS BEARING EARLIER REVISION DATES

REVISION DATES: 3-9-09 3-26-09 6-15-09 6-23-09 12-11-09 12-22-09 12-24-09 12-30-09 1-7-10 1-25-10

SHEET 10 OF 14

FILE => 02_1e6301_jjs_det1.dgn

USERNAME => ttrstrk DATE PLOTTED => 24-MAR-2010 TIME PLOTTED => 13:20

DIST	COUNTY	ROUTE	POST MILES TOTAL PROJECT	SHEET NO.	TOTAL SHEETS
02	Sis	3,5, 96,97	Var	26	29

REGISTERED CIVIL ENGINEER 12-28-09 DATE

3-22-10
PLANS APPROVAL DATE

REGISTERED PROFESSIONAL ENGINEER MARTIN B. FURLONG No. C70764 Exp. 06-30-11 CIVIL STATE OF CALIFORNIA

THE STATE OF CALIFORNIA OR ITS OFFICERS OR AGENTS SHALL NOT BE RESPONSIBLE FOR THE ACCURACY OR COMPLETENESS OF ELECTRONIC COPIES OF THIS PLAN SHEET.

NOTES: (APPLY TO THIS SHEET ONLY)
—·—·—·— Indicates existing.

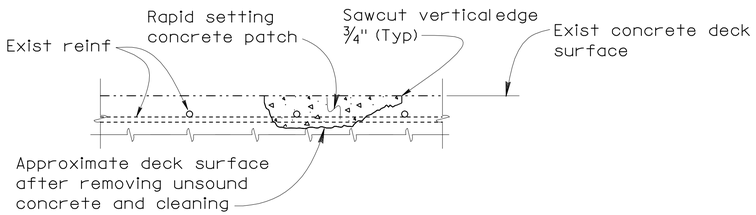

DECK REPAIR DETAIL

Note: Reinforcement may be encountered during deck concrete removal.

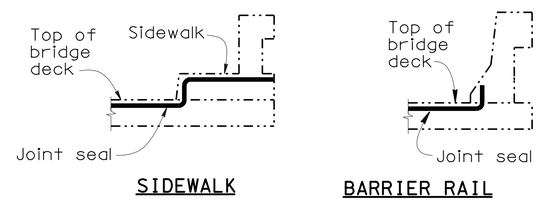

JOINT SEAL AT LOW SIDE OF DECK

Notes: Details shown for illustration purposes only.

For use only where deck joint matches the sidewalk, curb or barrier rail joint.

The following notes apply to JOINT SEAL TYPE B:

1) Seal must satisfy both minimum Movement Rating (MR) and minimum W1 requirements.
2) Minimum W1 is the calculated maximum width of the joint based on field measurements. After the joints have been cleaned, minimum W1 is to be calculated by the Engineer.
3) W1 shall be the smaller of the values determined as follows:
   A) 0.85 times the manufacturer's designed minimum uncompressed width of the seal.
   B) The width of the seal on the third successive test cycle of the pressure deflection test, when compressed to an average pressure of 3 psi.
4) Bend Type B joint seal 6" up into curb or rail on the low side of the deck where deck joint matches curb or rail joint.
5) For details not shown, see RSP B6-21

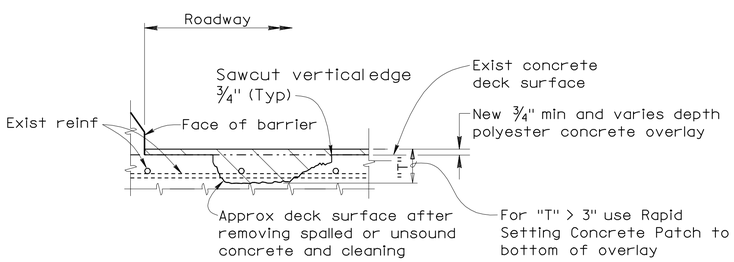

DECK OVERLAY DETAIL

Note: Reinforcement may be encountered during deck concrete removal.

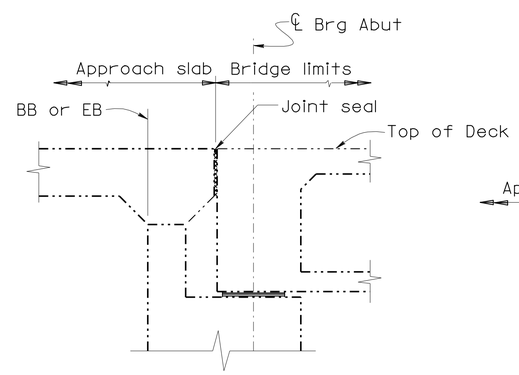

BACK WALL ABUTMENT

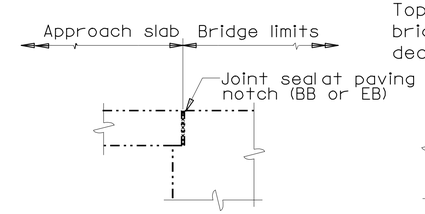

DIAPHRAGM ABUTMENT

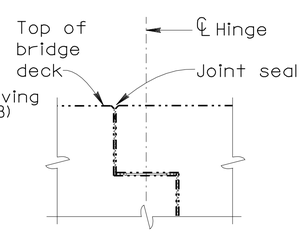

HINGE

NOTE:
THE CONTRACTOR SHALL VERIFY ALL CONTROLLING FIELD DIMENSIONS BEFORE ORDERING OR FABRICATING ANY MATERIAL.

DESIGN	BY M. Furlong	CHECKED D. Acoba	
DETAILS	BY N. Kelley	CHECKED D. Acoba	
QUANTITIES	BY M. Furlong	CHECKED D. Acoba	

STATE OF CALIFORNIA
DEPARTMENT OF TRANSPORTATION

DIVISION OF MAINTENANCE
STRUCTURE MAINTENANCE DESIGN

BRIDGE NO. Varies
POST MILE Various

ROUTE 3,5,96 AND 97 BRIDGES
JOINT SEAL DETAILS NO. 2

STRUCTURES MAINTENANCE GENERAL PLAN & DETAIL SHEET (ENGLISH) (REV. 10/17/07)

ORIGINAL SCALE IN INCHES FOR REDUCED PLANS 0 1 2 3

CU 02601
EA 1E6301

DISREGARD PRINTS BEARING EARLIER REVISION DATES

REVISION DATES: 3-9-09 3-25-09 6-15-09 6-17-09 6-23-09 12-17-09 1-25-10

SHEET 11 OF 14

FILE => 02_1e6301_kjs_det2.dgn

USERNAME => ttstrk DATE PLOTTED => 24-MAR-2010 TIME PLOTTED => 13:20

DIST	COUNTY	ROUTE	POST MILES TOTAL PROJECT	SHEET NO.	TOTAL SHEETS
02	Sis	3,5, 96,97	Var	27	29

REGISTERED CIVIL ENGINEER 12-28-09 DATE

3-22-10
PLANS APPROVAL DATE

REGISTERED PROFESSIONAL ENGINEER DIOSDADO ACOBA No. 52003 Exp. 12-31-10 CIVIL STATE OF CALIFORNIA

THE STATE OF CALIFORNIA OR ITS OFFICERS OR AGENTS SHALL NOT BE RESPONSIBLE FOR THE ACCURACY OR COMPLETENESS OF ELECTRONIC COPIES OF THIS PLAN SHEET.

NOTES: (APPLY TO THIS SHEET ONLY)

-·-·-·-·- Indicates existing.

Indicates limits of remove existing 6½"± AC overlay.

All reinforcement to be epoxy coated.

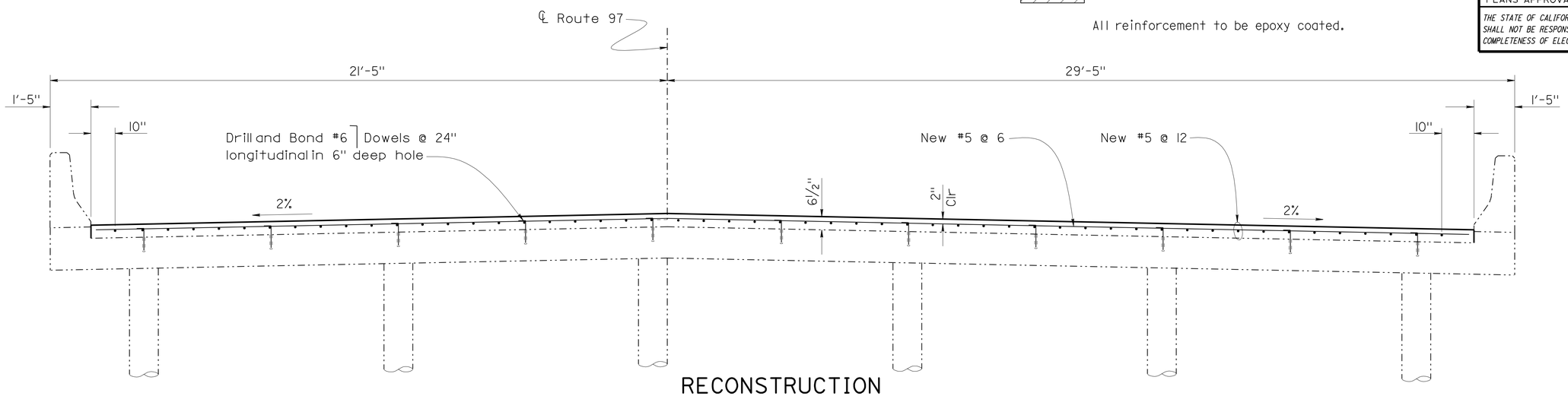

RECONSTRUCTION

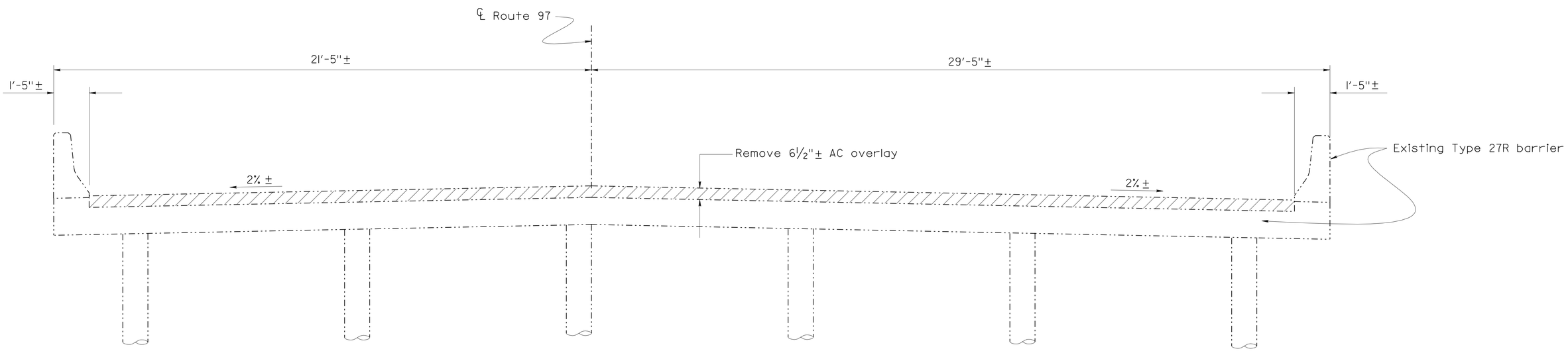

SHEEP ROCK CATTLE PASS

Br No. 02-0048

EXISTING

SECTION B-B

½" = 1'-0"

NOTE:
THE CONTRACTOR SHALL VERIFY ALL CONTROLLING FIELD DIMENSIONS BEFORE ORDERING OR FABRICATING ANY MATERIAL.

DESIGN	BY M. Furlong	CHECKED D. Acoba	
DETAILS	BY N. Kelley	CHECKED D. Acoba	
QUANTITIES	BY M. Furlong	CHECKED D. Acoba	

STATE OF CALIFORNIA DEPARTMENT OF TRANSPORTATION

DIVISION OF MAINTENANCE STRUCTURE MAINTENANCE DESIGN

BRIDGE NO. 02-0048
POST MILE R14.65

ROUTE 3,5,96 AND 97 BRIDGES

TYPICAL SECTION

STRUCTURES MAINTENANCE GENERAL PLAN & DETAIL SHEET (ENGLISH) (REV. 10/17/07)

ORIGINAL SCALE IN INCHES FOR REDUCED PLANS 0 1 2 3

CU 02601
EA 1E6301

DISREGARD PRINTS BEARING EARLIER REVISION DATES

REVISION DATES: 12-11-09 12-22-09 12-24-09 1-7-10 1-25-10

SHEET 12 OF 14

FILE => 02_1e6301_1typsec.dgn

USERNAME => trstrk DATE PLOTTED => 24-MAR-2010 TIME PLOTTED => 13:20

DIST	COUNTY	ROUTE	POST MILES TOTAL PROJECT	SHEET NO.	TOTAL SHEETS
02	Sis	3,5, 96,97	Var	28	29

REGISTERED CIVIL ENGINEER 12-28-09 DATE

3-22-10
PLANS APPROVAL DATE

REGISTERED PROFESSIONAL ENGINEER
DIOSDADO ACOBA
No. 52003
Exp. 12-31-10
CIVIL
STATE OF CALIFORNIA

THE STATE OF CALIFORNIA OR ITS OFFICERS OR AGENTS SHALL NOT BE RESPONSIBLE FOR THE ACCURACY OR COMPLETENESS OF ELECTRONIC COPIES OF THIS PLAN SHEET.

NOTES: (APPLY TO THIS SHEET ONLY)
-·-·-·-·- Indicates existing.

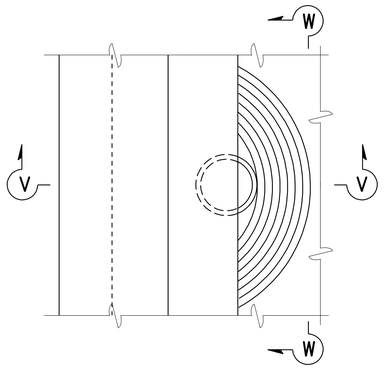

DECK DRAIN - PLAN

NO SCALE

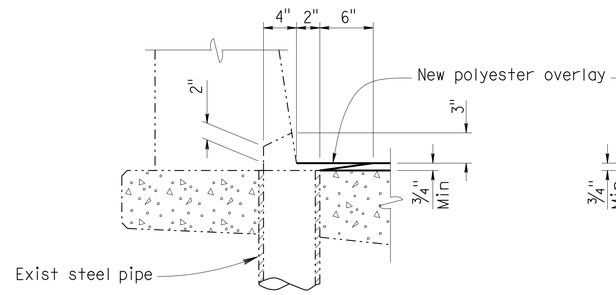

SECTION V-V

NO SCALE

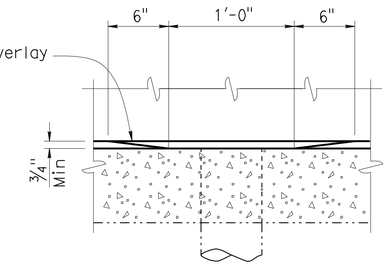

SECTION W-W

NO SCALE

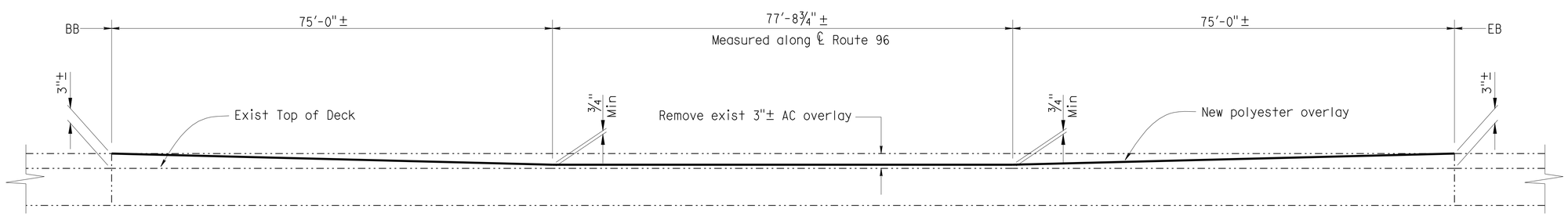

SCOTT RIVER

Br No. 02-0079

SECTION C-C

Horz 1" = 10'
Vert 1" = 1'

NOTE:
THE CONTRACTOR SHALL VERIFY ALL CONTROLLING FIELD DIMENSIONS BEFORE ORDERING OR FABRICATING ANY MATERIAL.

DESIGN	BY M. Furlong	CHECKED D. Acoba	
DETAILS	BY N. Kelley	CHECKED D. Acoba	
QUANTITIES	BY M. Furlong	CHECKED D. Acoba	

STATE OF CALIFORNIA
DEPARTMENT OF TRANSPORTATION

DIVISION OF MAINTENANCE
STRUCTURE MAINTENANCE DESIGN

BRIDGE NO. Varies
POST MILE Various

ROUTE 3,5,96 AND 97 BRIDGES
DETAILS

STRUCTURES MAINTENANCE GENERAL PLAN & DETAIL SHEET (ENGLISH) (REV. 10/17/07)

ORIGINAL SCALE IN INCHES FOR REDUCED PLANS 0 1 2 3

CU 02601
EA 1E6301

DISREGARD PRINTS BEARING EARLIER REVISION DATES

REVISION DATES: ~~12-11-09~~ ~~12-22-09~~ ~~12-24-09~~ ~~1-7-10~~ 1-25-10

SHEET 13 OF 14

FILE => 02_1e6301_mdet.dgn

USERNAME => ttstrk DATE PLOTTED => 24-MAR-2010 TIME PLOTTED => 13:20

DIST.	COUNTY	ROUTE	MILE POST TOTAL PROJECT	SHEET NO.	TOTAL SHEETS
02	Sis	3,5, 96,97	Var	29	29

REGISTERED ENGINEER - CIVIL

3-22-10
PLANS APPROVAL DATE

REGISTERED PROFESSIONAL ENGINEER MARTIN B. FURLONG No. C 70764 Exp. 06-30-11 CIVIL STATE OF CALIFORNIA

The State of California or its officers or agents shall not be responsible for the accuracy or completeness of electronic copies of this plan sheet.

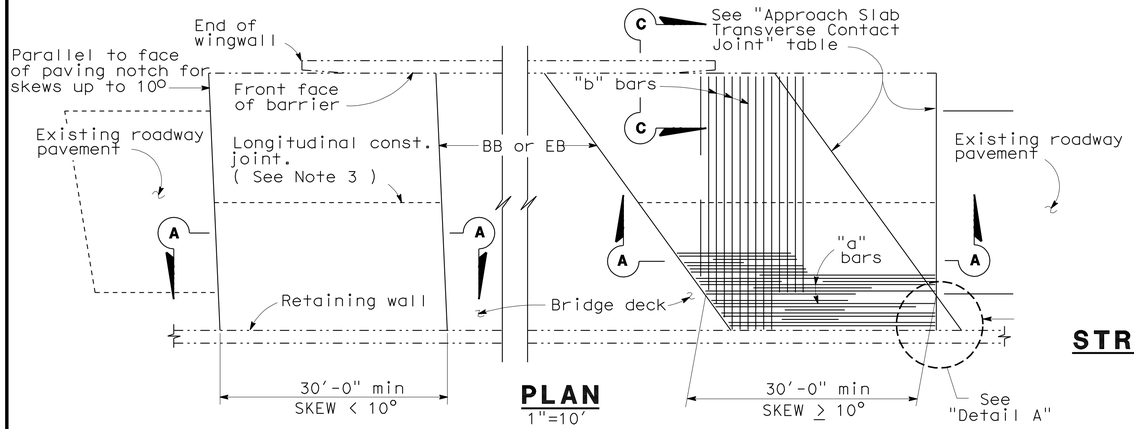

PLAN
1"=10'

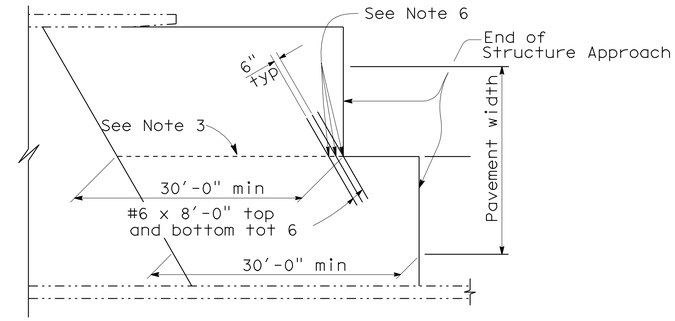

STRUCTURE APPROACH - END STAGGER DETAIL
No Scale

APPROACH SLAB TRANSVERSE CONTACT JOINT		
APPROACH SKEW	WITH AC ROADWAY PAVEMENT	WITH PCC ROADWAY PAVEMENT
< 10°	Parallel to face of paving notch	Parallel to face of paving notch
10° - 45°	Parallel to face of P N use (Detail A)	Stagger lines 24' to 36' apart
> 45°	Parallel to face of P N use (Detail A)	Stagger at each lane line

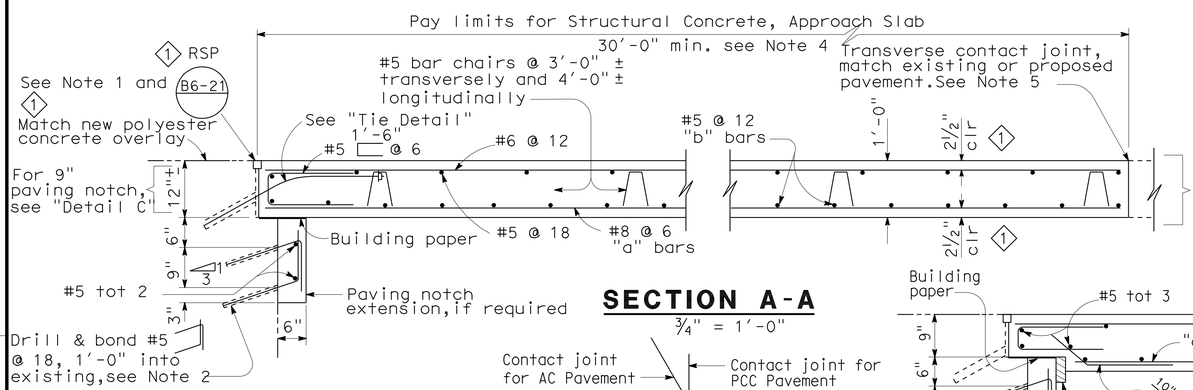

SECTION A-A
¾" = 1'-0"

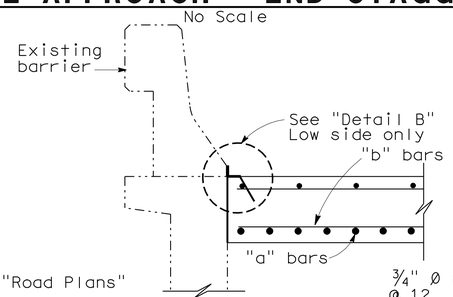

SECTION C-C
¾" = 1'-0"

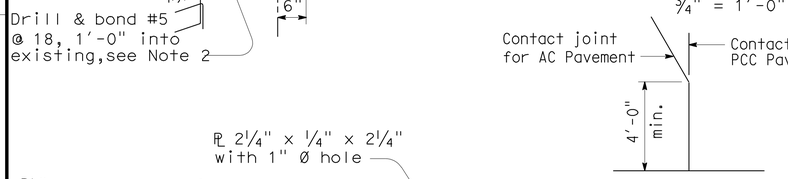

DETAIL A
No Scale

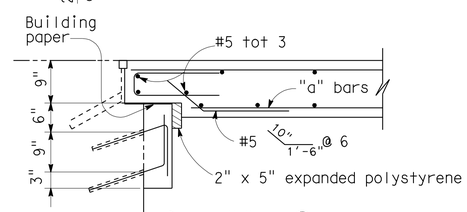

DETAIL C
¾" = 1'-0"

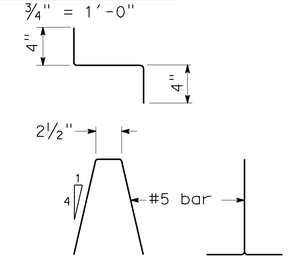

BAR CHAIR DETAIL
1½" = 1'-0"

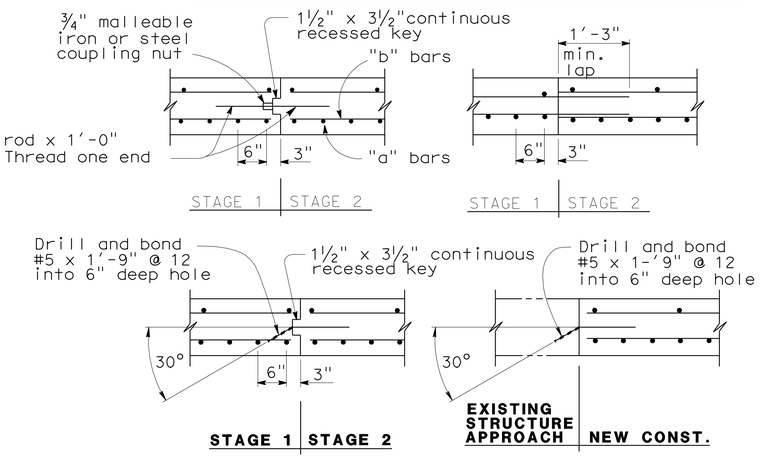

LONGITUDINAL CONSTRUCTION JOINT ALTERNATIVES
¾" = 1'-0"

NOTE: For details not shown,see "Section A-A".

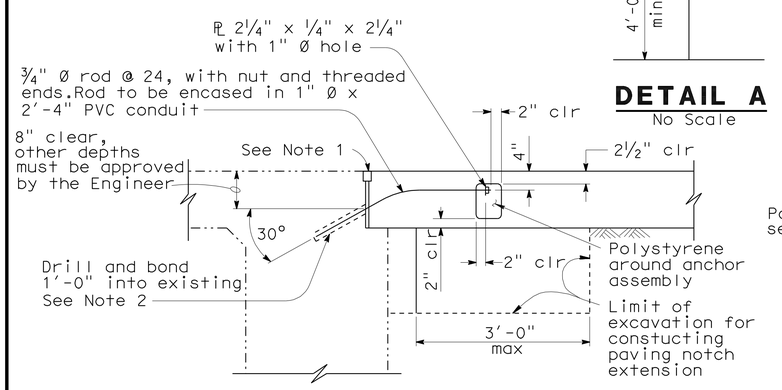

TIE DETAIL
¾" = 1'-0"

NOTE:
THE CONTRACTOR SHALL VERIFY ALL CONTROLLING FIELD DIMENSIONS BEFORE ORDERING OR FABRICATING ANY MATERIAL.

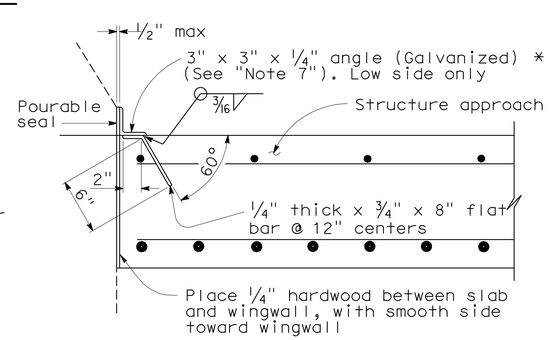

*(TO BE USED WITH TYPE 25 OR TYPE 27 CONCRETE BARRIER)

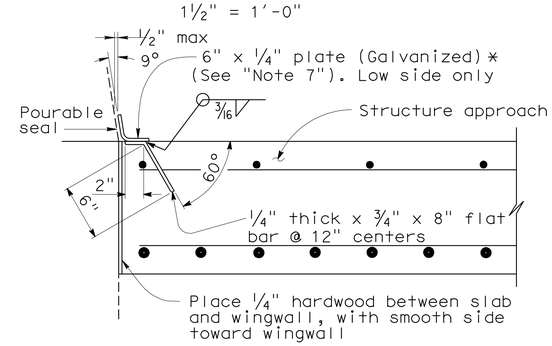

*(TO BE USED WITH TYPE 732 OR TYPE 736 CONCRETE BARRIER)

DETAIL B
1½" = 1'-0"

NOTES:

1. For details not shown or noted,see Structure Plans. Adjust bar reinforcement to clear a sawcut for sealed joint,when required.
2. Space to avoid existing prestress anchorages and main reinforcement.
3. Longitudinal construction joints,when permitted by the Engineer,shall be located on lane lines.
4. Transverse contact joint shall be a minimum of 5'-0" from an existing or constructed weakened plane joint.
5. For transverse contact joint with new PCC paving. refer to Standard Plan P10.
6. Couplers are required for stage construction.
7. End angle or plate at beginning of barrier transition, end of wingwall or end of structure approach as applicable.
8. (2) All reinforcement to be epoxy coated.

STANDARD DRAWING				
RELEASE DATE 3/14/05	DESIGN BY M.TRAFFALIS	CHECKED E.THORKILDSEN	RELEASED BY	
FILE NO. xs3-140e	DETAILS BY R.YEE	CHECKED E.THORKILDSEN		
	SUBMITTED BY M.HA	DRAWING DATE 8/92	OFFICE CHIEF	

(1) NOTE REVISED
(2) NOTE ADDED

STATE OF CALIFORNIA
DEPARTMENT OF TRANSPORTATION

DIVISION OF ENGINEERING SERVICES

BRIDGE NO. VARIOUS
MILE POST VARIES

ROUTES 3,5.96 AND 97 BRIDGES
STRUCTURE APPROACH TYPE R(30D)

DS OSD 2147A (ENGLISH) (REV. X/XX/XX)

ORIGINAL SCALE IN INCHES FOR REDUCED PLANS 0 1 2 3

CU 02601
EA 1E6301

DISREGARD PRINTS BEARING EARLIER REVISION DATES

REVISION DATES (PRELIMINARY STAGE ONLY) 6-15-09 6-23-09 12-17-09 1-25-10

SHEET 14 OF 14

USERNAME => trstrk

02_1e6301_nr30d.dgn

DATE PLOTTED => 24-MAR-2010 TIME PLOTTED => 13:20