Dist	COUNTY	ROUTE	POST MILES TOTAL PROJECT	SHEET No.	TOTAL SHEETS
02	Tri	299	38.8/39.1	1	19

ACHSNH-P299(161)E

STATE OF CALIFORNIA
DEPARTMENT OF TRANSPORTATION

PROJECT PLANS FOR CONSTRUCTION ON
STATE HIGHWAY

IN TRINITY COUNTY
NEAR JUNCTION CITY
FROM 1.4 TO 1.1 MILES
WEST OF VALDOR DRIVE

TO BE SUPPLEMENTED BY STANDARD PLANS DATED MAY 2006

INDEX OF PLANS

SHEET No.	DESCRIPTION
1	TITLE AND LOCATION MAP
2-3	TYPICAL CROSS SECTIONS
4	LAYOUT
5	PROFILE AND SUPERELEVATION DIAGRAM
6	CONSTRUCTION DETAILS
7	CONSTRUCTION AREA SIGNS
8	PAVEMENT DELINEATION AND SIGN PLAN
9-10	PAVEMENT DELINEATION DETAILS AND QUANTITIES
11-13	SIGN PLANS, DETAILS AND QUANTITIES
14	SUMMARY OF QUANTITIES
15-19	REVISED STANDARD PLANS

THE STANDARD PLANS LIST APPLICABLE TO THIS CONTRACT IS INCLUDED IN THE NOTICE TO BIDDERS AND SPECIAL PROVISIONS BOOK.

LOCATION MAP

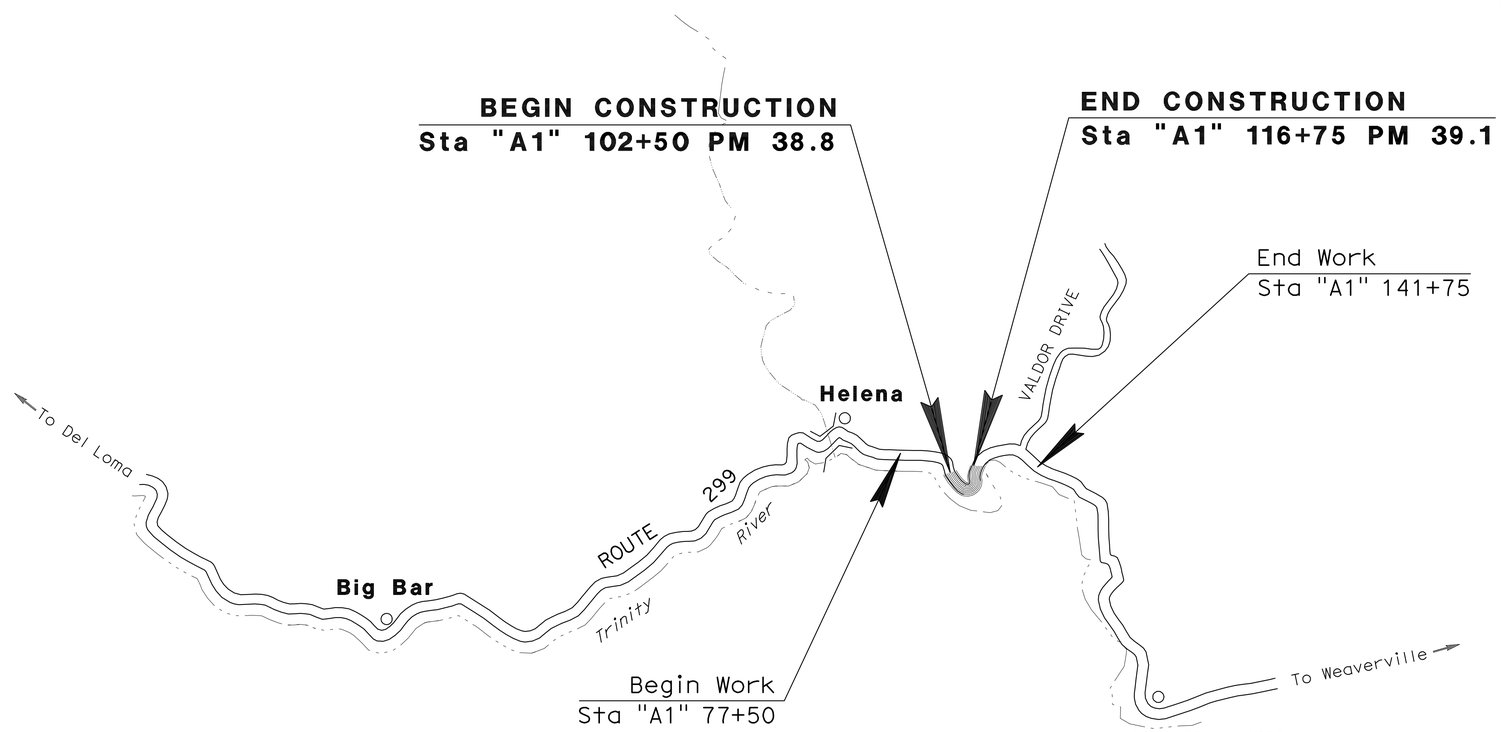

NO SCALE

THE CONTRACTOR SHALL POSSESS THE CLASS (OR CLASSES) OF LICENSE AS SPECIFIED IN THE "NOTICE TO BIDDERS."

PROJECT MANAGER: CHRIS HARVEY
DESIGN ENGINEER: AL TRUJILLO

03-03-10
PROJECT ENGINEER REGISTERED CIVIL ENGINEER — DATE

March 22, 2010
PLANS APPROVAL DATE

REGISTERED PROFESSIONAL ENGINEER — SHAUN ALEXANDER — No. C70833 — Exp. 6-30-11 — CIVIL — STATE OF CALIFORNIA

THE STATE OF CALIFORNIA OR ITS OFFICERS OR AGENTS SHALL NOT BE RESPONSIBLE FOR THE ACCURACY OR COMPLETENESS OF ELECTRONIC COPIES OF THIS PLAN SHEET.

LAST REVISION 03-03-10
DATE PLOTTED => 25-MAY-2010
TIME PLOTTED => 10:02

CONTRACT No. 02-1E2104

Dist	COUNTY	ROUTE	POST MILES TOTAL PROJECT	SHEET No.	TOTAL SHEETS
02	Tri	299	38.8/39.1	2	19

REGISTERED CIVIL ENGINEER 03-03-10 DATE

3-22-10
PLANS APPROVAL DATE

REGISTERED PROFESSIONAL ENGINEER SHAUN ALEXANDER No. C70833 Exp. 6-30-11 CIVIL STATE OF CALIFORNIA

THE STATE OF CALIFORNIA OR ITS OFFICERS OR AGENTS SHALL NOT BE RESPONSIBLE FOR THE ACCURACY OR COMPLETENESS OF SCANNED COPIES OF THIS PLAN SHEET.

NOTES:

1. DIMENSIONS OF THE PAVEMENT STRUCTURES (STRUCTURAL SECTIONS) ARE SUBJECT TO TOLERANCES SPECIFIED IN THE STANDARD SPECIFICATIONS.
2. SUPERELEVATIONS AS SHOWN OR AS DETERMINED BY THE ENGINEER.

ABBREVIATIONS

CPACP COLD PLANE ASPHALT CONCRETE PAVEMENT
CP CATCH POINT

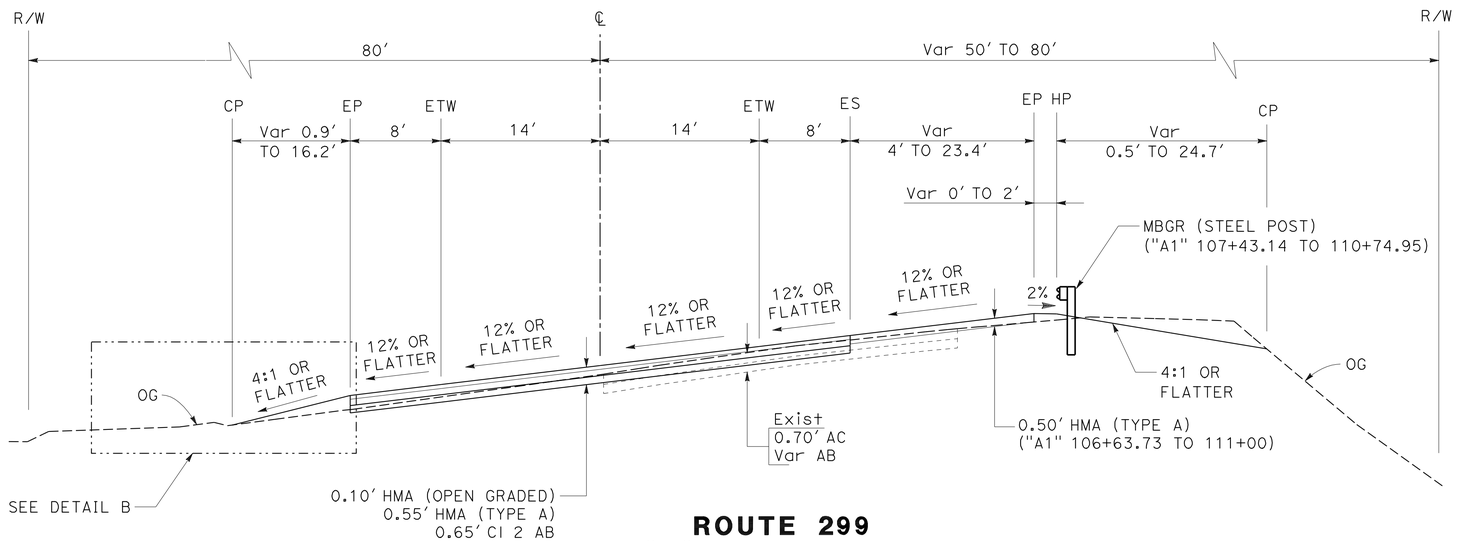

ROUTE 299
"A1" 106+00 TO 112+00

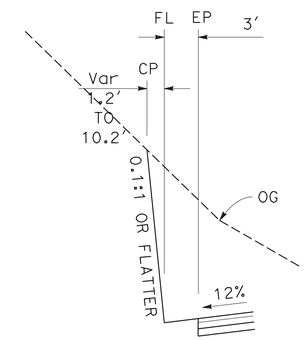

DETAIL B
"A1" 107+50 TO 107+82
"A1" 110+50 TO 112+00

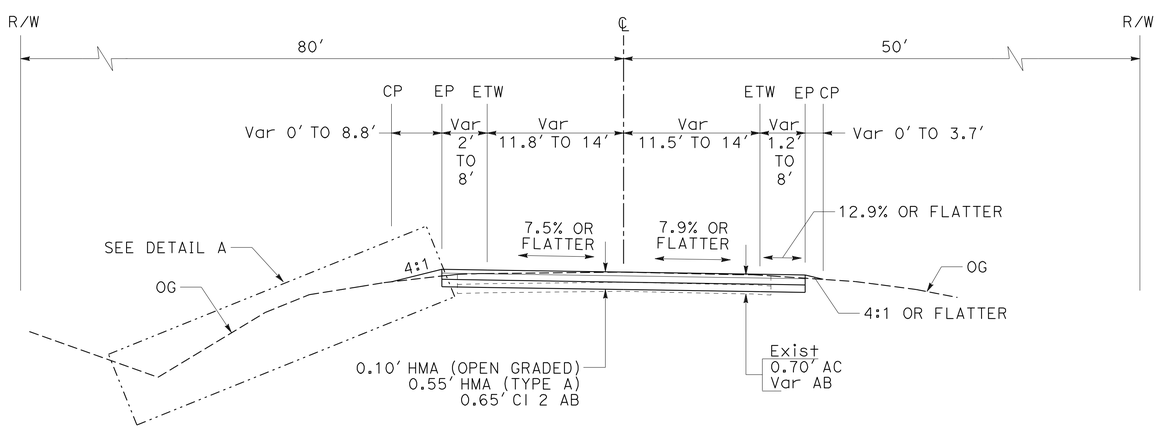

ROUTE 299
"A1" 103+00 TO 106+00

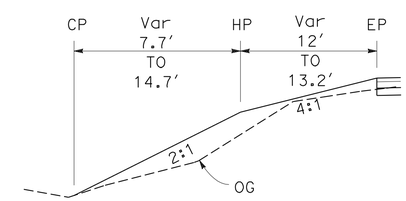

DETAIL A
"A1" 104+60 TO 105+50

TYPICAL CROSS SECTIONS

NO SCALE

X-1

REVISED BY | DATE REVISED
JEFF COON | SHAUN ALEXANDER
CALCULATED-DESIGNED BY | CHECKED BY
FUNCTIONAL SUPERVISOR
AL TRUJILLO

STATE OF CALIFORNIA - DEPARTMENT OF TRANSPORTATION
Caltrans
DESIGN

P:\proj2\02\1E210_plans\pse\21e210ca001.dgn

LAST REVISION | DATE PLOTTED => 22-MAR-2010 | TIME PLOTTED => 10:37
03-03-10

Dist	COUNTY	ROUTE	POST MILES TOTAL PROJECT	SHEET No.	TOTAL SHEETS
02	Tri	299	38.8/39.1	3	19

REGISTERED CIVIL ENGINEER 03-03-10 DATE

3-22-10
PLANS APPROVAL DATE

REGISTERED PROFESSIONAL ENGINEER SHAUN ALEXANDER No. C70833 Exp. 6-30-11 CIVIL STATE OF CALIFORNIA

THE STATE OF CALIFORNIA OR ITS OFFICERS OR AGENTS SHALL NOT BE RESPONSIBLE FOR THE ACCURACY OR COMPLETENESS OF SCANNED COPIES OF THIS PLAN SHEET.

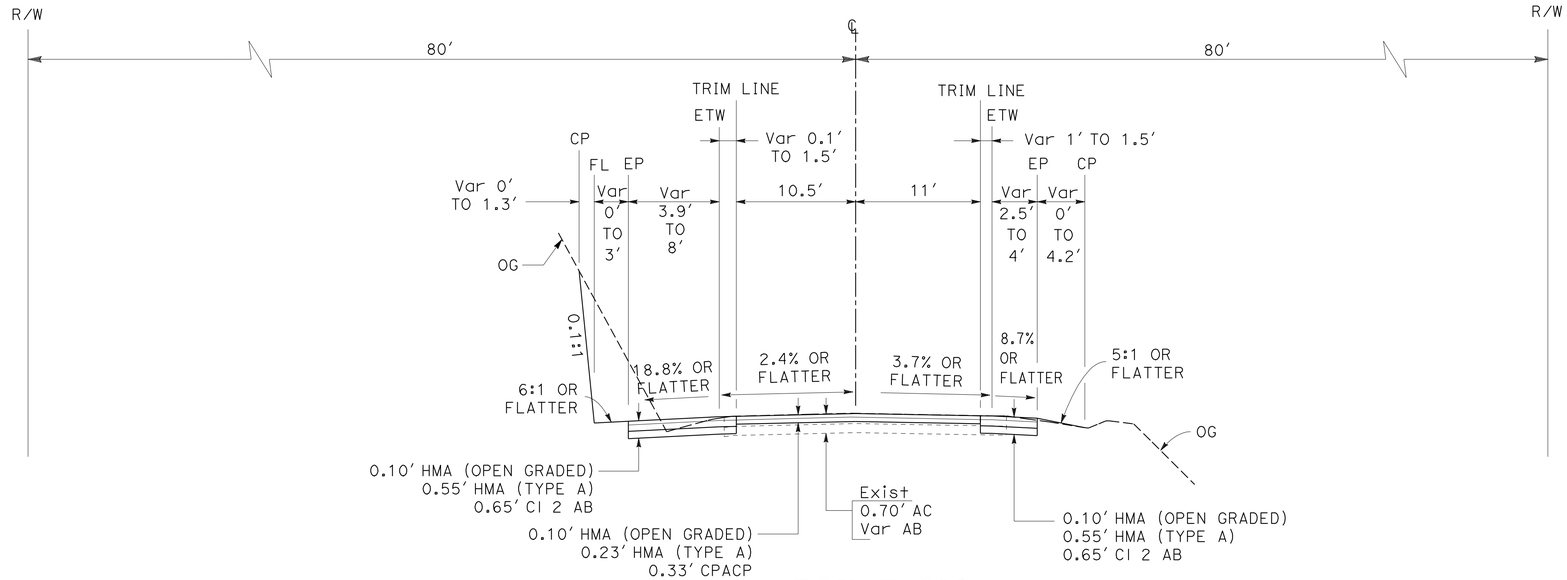

ROUTE 299
"A1" 114+55 TO 116+75

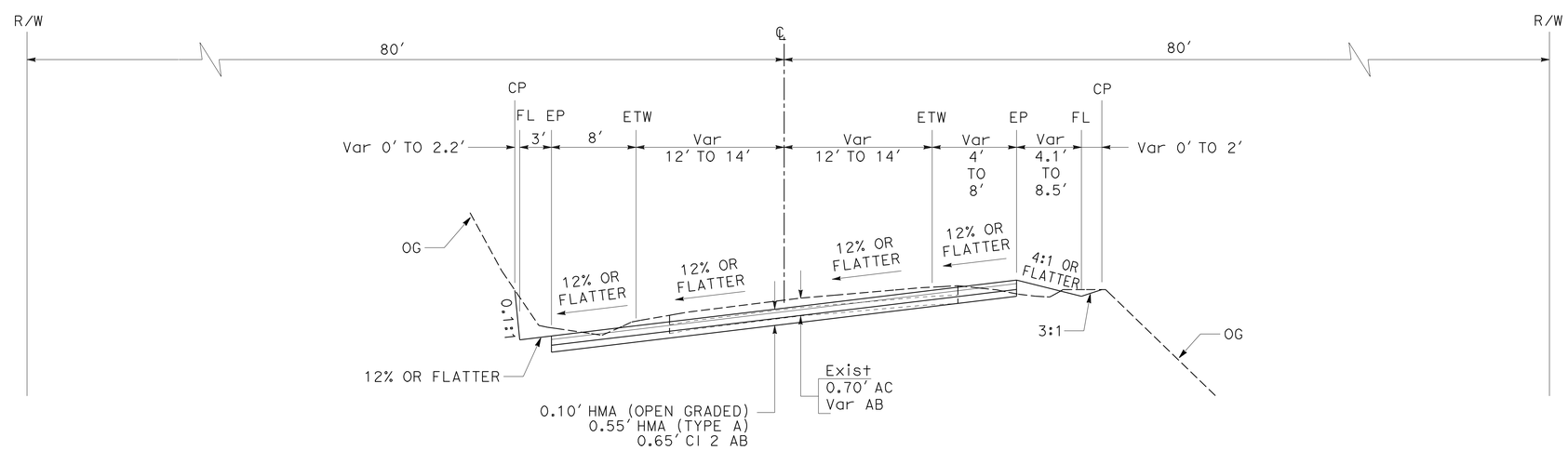

ROUTE 299
"A1" 112+00 TO 114+55

TYPICAL CROSS SECTIONS

NO SCALE

X-2

REVISED BY | DATE REVISED
JEFF COON | SHAUN ALEXANDER
CALCULATED-DESIGNED BY | CHECKED BY
FUNCTIONAL SUPERVISOR
AL TRUJILLO

STATE OF CALIFORNIA - DEPARTMENT OF TRANSPORTATION
Caltrans
DESIGN

P:\proj2\02\1E210_plans\pse\21e210ca002.dgn

LAST REVISION 03-03-10 | DATE PLOTTED => 22-MAR-2010 | TIME PLOTTED => 10:37

Dist	COUNTY	ROUTE	POST MILES TOTAL PROJECT	SHEET No.	TOTAL SHEETS
02	Tri	299	38.8/39.1	4	19

Shaun Alexander 03-03-10
REGISTERED CIVIL ENGINEER DATE

3-22-10
PLANS APPROVAL DATE

REGISTERED PROFESSIONAL ENGINEER SHAUN ALEXANDER No. C70833 Exp. 6-30-11 CIVIL STATE OF CALIFORNIA

THE STATE OF CALIFORNIA OR ITS OFFICERS OR AGENTS SHALL NOT BE RESPONSIBLE FOR THE ACCURACY OR COMPLETENESS OF SCANNED COPIES OF THIS PLAN SHEET.

NOTE:

1. FOR COMPLETE RIGHT OF WAY DATA, SEE RIGHT OF WAY RECORD MAPS AT DISTRICT OFFICE.

LEGEND

CPACP

ABBREVIATIONS

CPACP COLD PLANE ASPHALT CONCRETE PAVEMENT

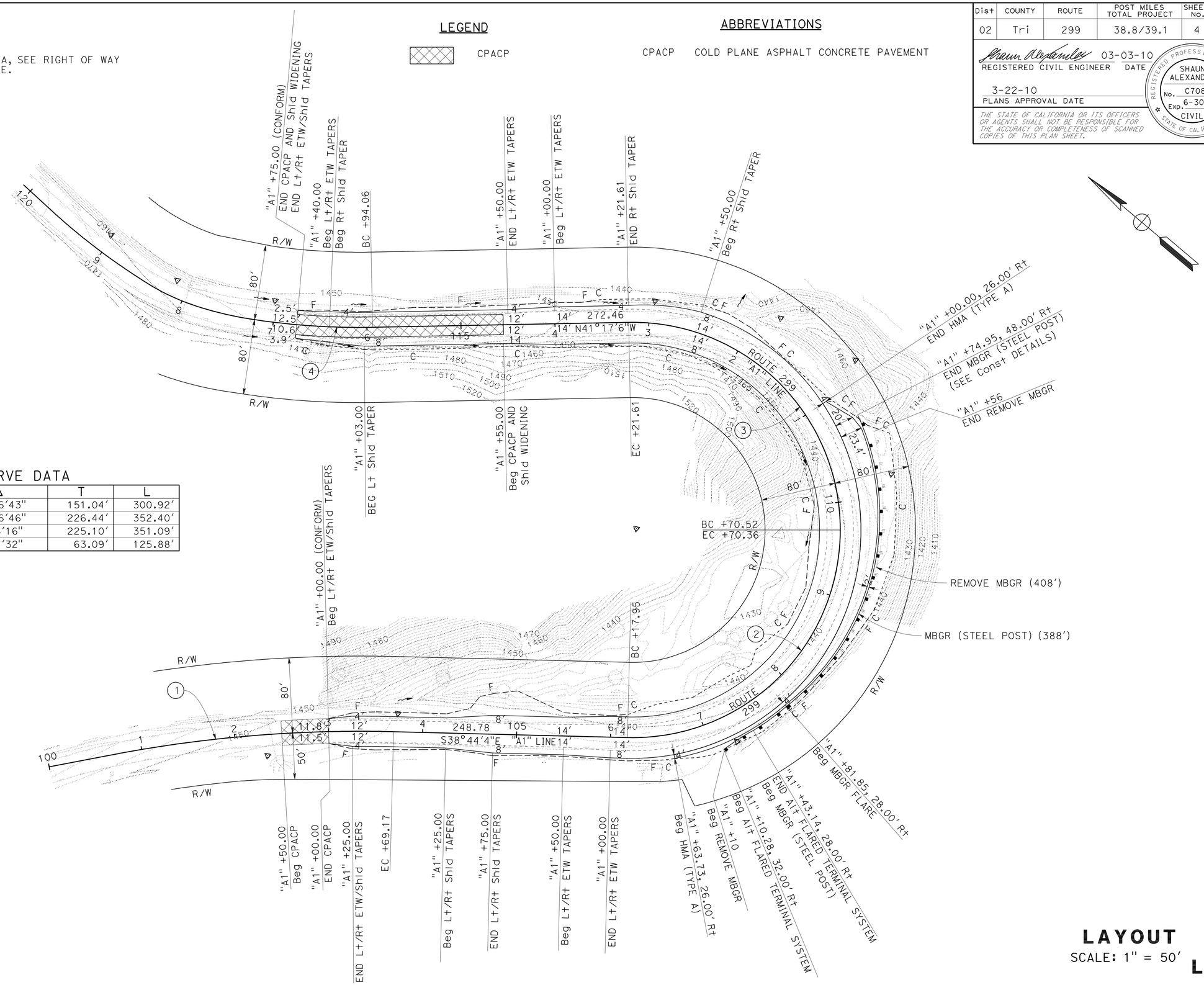

CURVE DATA

No.	R	Δ	T	L
1	1404.18'	12°16'43"	151.04'	300.92'
2	220.80'	91°26'46"	226.44'	352.40'
3	220.80'	91°6'16"	225.10'	351.09'
4	749.28'	9°37'32"	63.09'	125.88'

LAYOUT

SCALE: 1" = 50'

L-1

REVISED BY	DATE REVISED
JEFF COON	SHAUN ALEXANDER
CALCULATED-DESIGNED BY	CHECKED BY
FUNCTIONAL SUPERVISOR	AL TRUJILLO

STATE OF CALIFORNIA - DEPARTMENT OF TRANSPORTATION

Caltrans® **DESIGN**

P:\proj2\02\1E210_plans\pse\21e210ea001.dgn

LAST REVISION 03-03-10 | DATE PLOTTED => 22-MAR-2010 | TIME PLOTTED => 11:17

Dist	COUNTY	ROUTE	POST MILES TOTAL PROJECT	SHEET No.	TOTAL SHEETS
02	Tri	299	38.8/39.1	5	19

Shaun Alexander 03-03-10
REGISTERED CIVIL ENGINEER DATE

3-22-10
PLANS APPROVAL DATE

REGISTERED PROFESSIONAL ENGINEER
SHAUN ALEXANDER
No. C70833
Exp. 6-30-11
CIVIL
STATE OF CALIFORNIA

THE STATE OF CALIFORNIA OR ITS OFFICERS OR AGENTS SHALL NOT BE RESPONSIBLE FOR THE ACCURACY OR COMPLETENESS OF SCANNED COPIES OF THIS PLAN SHEET.

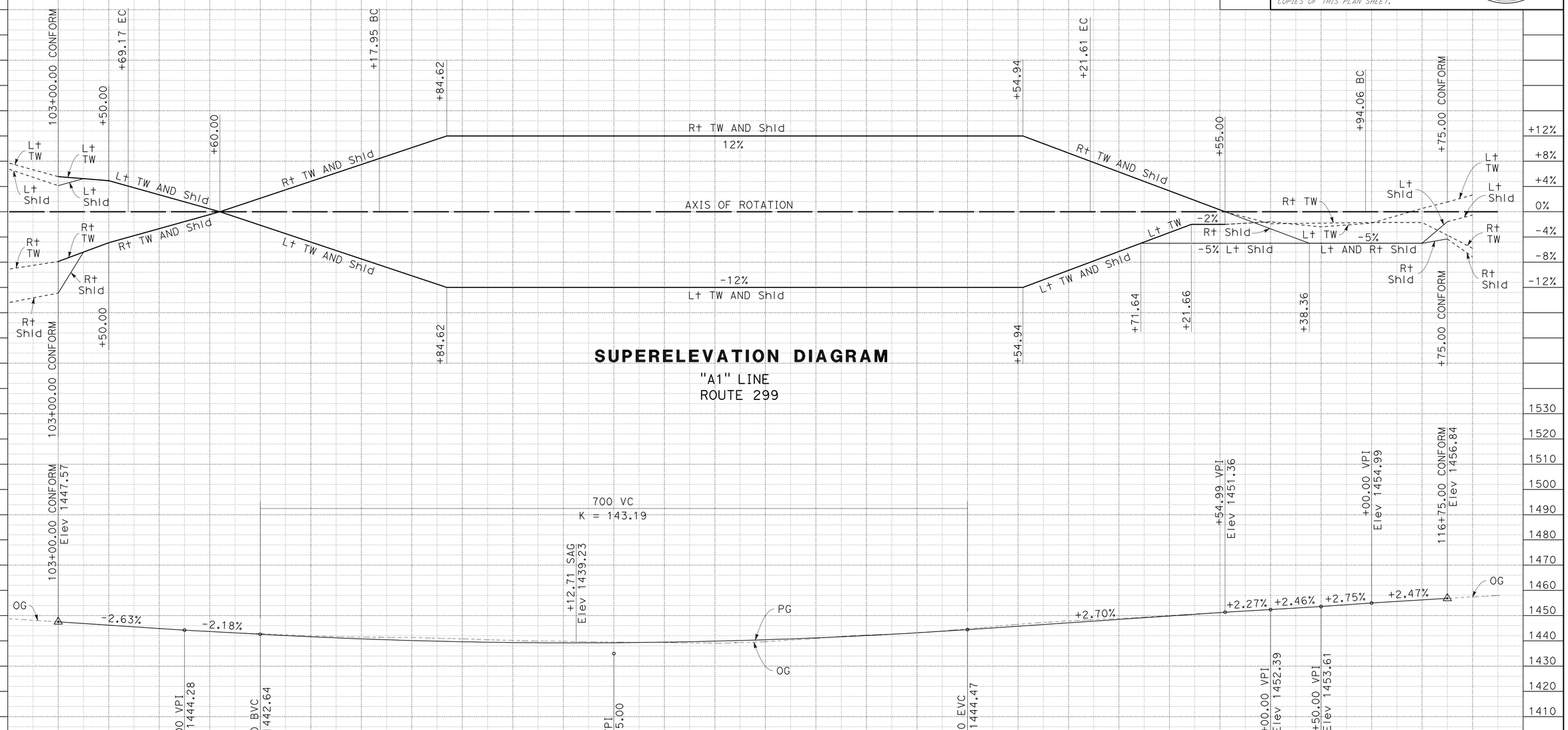

PROFILE AND SUPERELEVATION DIAGRAM

SCALE: Horiz 1" = 50'
Vert 1" = 20'

PS-1

STATION	103+00	104+00	105+00	106+00	107+00	108+00	109+00	110+00	111+00	112+00	113+00	114+00	115+00	116+00	117+00	TOTAL
CY Exc	1768								2280							4048
CY Emb	113								37							150

REVISED BY | DATE REVISED
CALCULATED-DESIGNED BY | CHECKED BY
FUNCTIONAL SUPERVISOR: AL TRUJILLO
JEFF COON | SHAUN ALEXANDER
DESIGN

STATE OF CALIFORNIA - DEPARTMENT OF TRANSPORTATION
Caltrans

P:\proj2\02\1E210_plans\pse\21e210fb001.dgn

LAST REVISION | DATE PLOTTED => 22-MAR-2010
03-03-10 | TIME PLOTTED => 10:37

Dist	COUNTY	ROUTE	POST MILES TOTAL PROJECT	SHEET No.	TOTAL SHEETS
02	Tri	299	38.8/39.1	6	19

REGISTERED CIVIL ENGINEER 03-03-10 DATE

3-22-10
PLANS APPROVAL DATE

REGISTERED PROFESSIONAL ENGINEER SHAUN ALEXANDER No. C70833 Exp. 6-30-11 CIVIL STATE OF CALIFORNIA

THE STATE OF CALIFORNIA OR ITS OFFICERS OR AGENTS SHALL NOT BE RESPONSIBLE FOR THE ACCURACY OR COMPLETENESS OF SCANNED COPIES OF THIS PLAN SHEET.

LEGEND

CPACP

ROCK

ABBREVIATIONS

CPACP COLD PLANE ASPHALT CONCRETE PAVEMENT

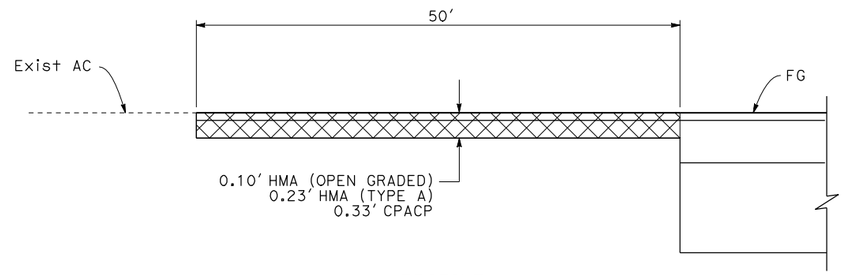

PROFILE

PAVEMENT CONFORM

"A1" 102+50 TO 103+00
"A1" 114+50 TO 116+75

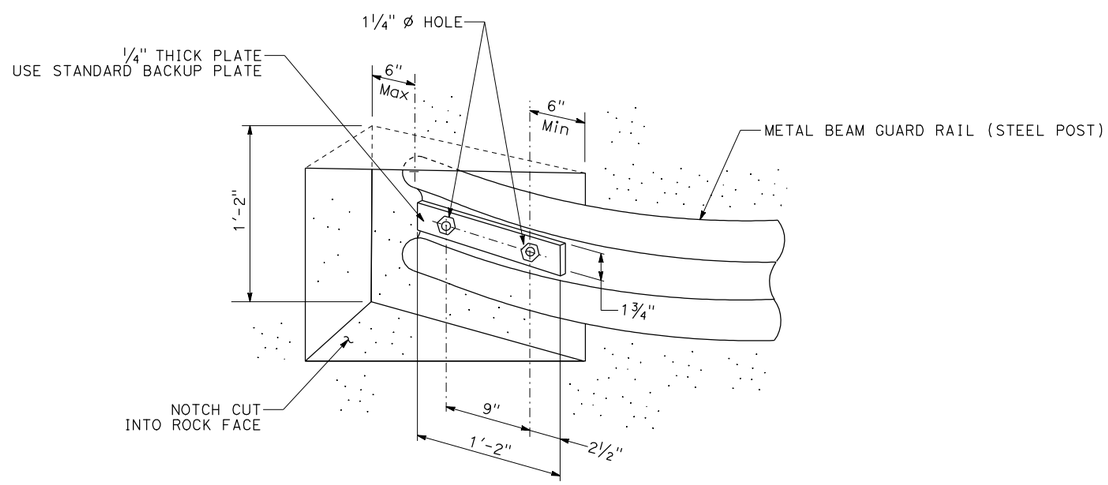

ELEVATION

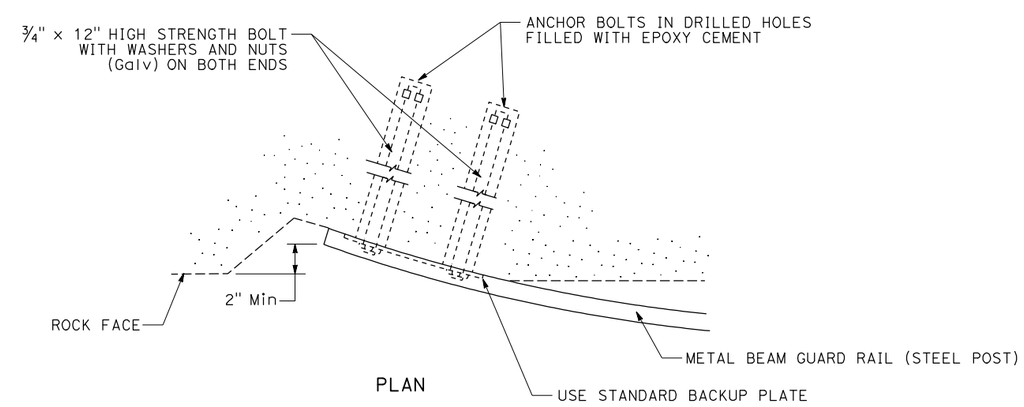

PLAN

MBGR RECESSED ROCK ANCHOR

LOCATION "A1" 110+74.95

CONSTRUCTION DETAILS

NO SCALE

C-1

REVISED BY	DATE REVISED
JEFF COON	SHAUN ALEXANDER
CALCULATED-DESIGNED BY	CHECKED BY
FUNCTIONAL SUPERVISOR	AL TRUJILLO

STATE OF CALIFORNIA - DEPARTMENT OF TRANSPORTATION
Caltrans
DESIGN

P:\proj2\02\1E210_plans\pse\21e210ga001.dgn

LAST REVISION 03-03-10 | DATE PLOTTED => 22-MAR-2010 | TIME PLOTTED => 10:38

Dist	COUNTY	ROUTE	POST MILES TOTAL PROJECT	SHEET No.	TOTAL SHEETS
02	Tri	299	38.8/39.1	7	19

REGISTERED CIVIL ENGINEER 03-03-10 DATE

3-22-10
PLANS APPROVAL DATE

REGISTERED PROFESSIONAL ENGINEER SHAUN ALEXANDER No. C70833 Exp. 6-30-11 CIVIL STATE OF CALIFORNIA

THE STATE OF CALIFORNIA OR ITS OFFICERS OR AGENTS SHALL NOT BE RESPONSIBLE FOR THE ACCURACY OR COMPLETENESS OF SCANNED COPIES OF THIS PLAN SHEET.

NOTES:

1. EXACT LOCATIONS TO BE DETERMINED BY THE ENGINEER.
2. CALIFORNIA CODES ARE DESIGNATED BY <CA>, OTHERWISE FEDERAL CODES ARE SHOWN.

LEGEND

→ DIRECTION OF TRAVEL

SIGN, STATIONARY MOUNTED, SINGLE POST

ABBREVIATIONS

(S) STATIONARY MOUNTED SIGNS

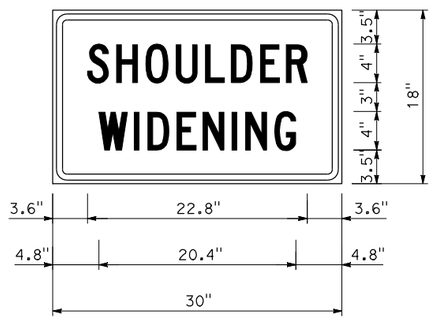

1.5" RADIUS, 0.6" BORDER, 0.4" INDENT, BLACK ON ORANGE;
[SHOULDER] C;
[WIDENING] C;

C23B SIGN DETAIL

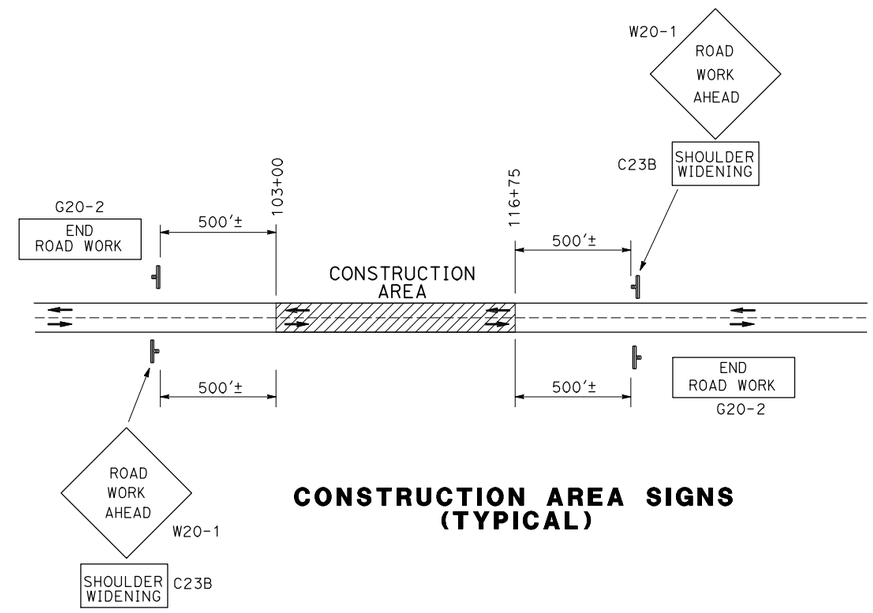

CONSTRUCTION AREA SIGNS (TYPICAL)

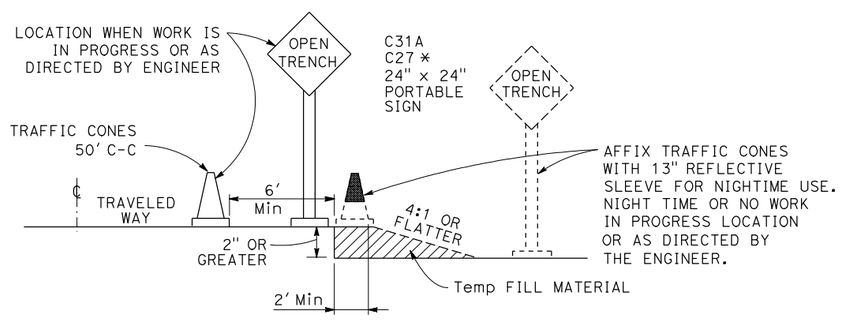

OPEN TRENCH SIGNING AND MARKING

* PLACE AT 250' INTERVALS THROUGH THE OPEN TRENCH AREA, ALTERNATE C27 (OPEN TRENCH) AND C31A (NO SHOULDER) SIGNS

CONSTRUCTION AREA SIGNS (STATIONARY MOUNTED)

CODE	PANEL SIZE	SIGN MESSAGE	No. AND SIZE OF POSTS	EACH
W20-1	48" x 48"	ROAD WORK AHEAD	1-4" x 6" (S)	2
C23B (CA)	30" x 18"	SHOULDER WIDENING		
G20-2	48" x 18"	END ROAD WORK	1-4" x 6" (S)	2
TOTAL				4

CONSTRUCTION AREA SIGNS AND SIGN DETAILS

NO SCALE

CS-1

REVISED BY | DATE REVISED

JEFF COON | SHAUN ALEXANDER

CALCULATED-DESIGNED BY | CHECKED BY

FUNCTIONAL SUPERVISOR: AL TRUJILLO

STATE OF CALIFORNIA - DEPARTMENT OF TRANSPORTATION

Caltrans DESIGN

P:\proj2\02\1E210_plans\pse\21e2101a001.dgn

LAST REVISION 03-03-10 | DATE PLOTTED => 22-MAR-2010 | TIME PLOTTED => 10:38

Dist	COUNTY	ROUTE	POST MILES TOTAL PROJECT	SHEET No.	TOTAL SHEETS
02	Tri	299	38.8/39.1	8	19

REGISTERED CIVIL ENGINEER 03-03-10 DATE

3-22-10
PLANS APPROVAL DATE

REGISTERED PROFESSIONAL ENGINEER SHAUN ALEXANDER No. C70833 Exp. 6-30-11 CIVIL STATE OF CALIFORNIA

THE STATE OF CALIFORNIA OR ITS OFFICERS OR AGENTS SHALL NOT BE RESPONSIBLE FOR THE ACCURACY OR COMPLETENESS OF SCANNED COPIES OF THIS PLAN SHEET.

NOTE:

1. EXACT SIGN LOCATION TO BE DETERMINED BY THE ENGINEER.

LEGEND

- (X-X) ROADSIDE SIGN NUMBER
- (XXX) PAVEMENT DELINEATION STRIPE DETAIL No.
- ROADSIDE SIGN (1 POST)
- ROADSIDE SIGN (1 POST)
- ROADSIDE SIGN (2 POST)
- REMOVE ROADSIDE SIGN
- MILEPOST MARKER
- REMOVE MARKER
- REMOVE DELINEATOR
- DELINEATOR (TYPE E)
- STRIPING CHANGE
- OBJECT MARKER (TYPE L-1)

ABBREVIATIONS

s SPACING

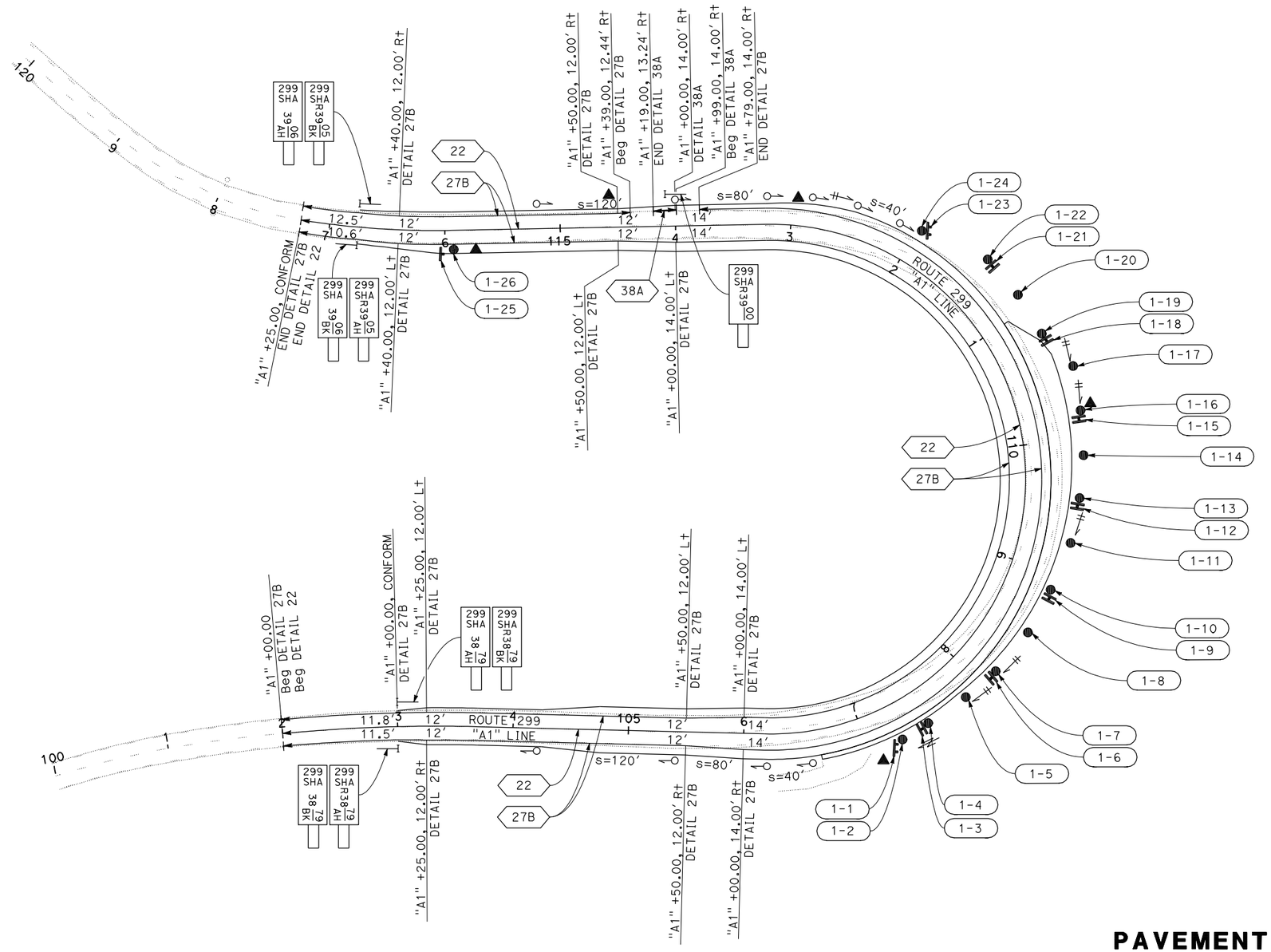

PAVEMENT DELINEATION AND SIGN PLAN

SCALE: 1" = 50'

PD-1

THIS PLAN ACCURATE FOR PAVEMENT DELINEATION AND SIGN WORK ONLY

REVISED BY	DATE REVISED
JEFF COON	SHAUN ALEXANDER
CALCULATED-DESIGNED BY	CHECKED BY
FUNCTIONAL SUPERVISOR	AL TRUJILLO

STATE OF CALIFORNIA - DEPARTMENT OF TRANSPORTATION
Caltrans
DESIGN

P:\proj2\02\1E210_plans\pse\21e210na001.dgn

LAST REVISION 03-03-10
DATE PLOTTED => 22-MAR-2010
TIME PLOTTED => 10:38

BORDER LAST REVISED 4/11/2008

RELATIVE BORDER SCALE IS IN INCHES 0 1 2 3

USERNAME => trrene
DGN FILE => 21e210na001.dgn

CU 03 242

EA 1E2101

Dist	COUNTY	ROUTE	POST MILES TOTAL PROJECT	SHEET No.	TOTAL SHEETS
02	Tri	299	38.8/39.1	9	19

REGISTERED CIVIL ENGINEER 03-03-10 DATE

3-22-10
PLANS APPROVAL DATE

REGISTERED PROFESSIONAL ENGINEER SHAUN ALEXANDER No. C70833 Exp. 6-30-11 CIVIL STATE OF CALIFORNIA

THE STATE OF CALIFORNIA OR ITS OFFICERS OR AGENTS SHALL NOT BE RESPONSIBLE FOR THE ACCURACY OR COMPLETENESS OF SCANNED COPIES OF THIS PLAN SHEET.

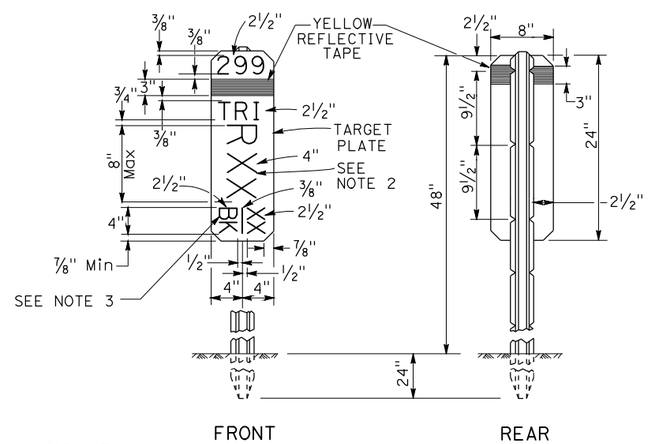

NOTES:

1. THE MARKER SHALL BE WHITE (NON-REFLECTIVE) TARGET PLATE WITH BLACK SERIES D NUMERALS AND LETTERS.
2. A POST MILE PREFIX, SUCH AS "R", SHALL APPLY ONLY WHEN DIRECTED BY THE ENGINEER.
3. "BK" (BACK), "AH" (AHEAD), OR A BLANK SPACE SHALL APPLY AS DIRECTED BY THE ENGINEER.
4. ALL INFORMATION SHALL BE IN US CUSTOMARY UNITS (MILES).

MILE POST MARKER DETAIL

PAVEMENT DELINEATION DETAILS

NO SCALE

PDD-1

REVISED BY	JEFF COON
DATE REVISED	SHAUN ALEXANDER
CALCULATED-DESIGNED BY	SHAUN ALEXANDER
CHECKED BY	
FUNCTIONAL SUPERVISOR	AL TRUJILLO

STATE OF CALIFORNIA - DEPARTMENT OF TRANSPORTATION
Caltrans DESIGN

P:\proj2\02\1E210_plans\pse\21e210nb001.dgn

LAST REVISION 03-03-10
DATE PLOTTED => 22-MAR-2010
TIME PLOTTED => 10:38

Dist	COUNTY	ROUTE	POST MILES TOTAL PROJECT	SHEET No.	TOTAL SHEETS
02	Tri	299	38.8/39.1	10	19

REGISTERED CIVIL ENGINEER 03-03-10 DATE

3-22-10
PLANS APPROVAL DATE

REGISTERED PROFESSIONAL ENGINEER SHAUN ALEXANDER No. C70833 Exp. 6-30-11 CIVIL STATE OF CALIFORNIA

THE STATE OF CALIFORNIA OR ITS OFFICERS OR AGENTS SHALL NOT BE RESPONSIBLE FOR THE ACCURACY OR COMPLETENESS OF SCANNED COPIES OF THIS PLAN SHEET.

NOTE:

1. (N) - NOT A SEPARATE PAY ITEM, FOR INFORMATION ONLY.

MARKERS AND DELINEATORS

SHEET No.	MILEPOST MARKER	OBJECT MARKER (TYPE L-1)	REMOVE MARKER	REMOVE DELINEATOR	DELINEATOR (CLASS 2) TYPE E	(N) POST MILE
	EA	EA	EA	EA	EA	
PD-1	2					38.79
PD-1	2					R38.79
PD-1	1					R39.00
PD-1	2					R39.05
PD-1	2					39.06
PD-1		1	5	6	10	
TOTAL	9	1	5	6	10	

PAVEMENT DELINEATION QUANTITIES

STATION	THERMOPLASTIC TRAFFIC STRIPE (SPRAYABLE) DETAIL No. 22	DETAIL No. 27B	DETAIL No. 38A	PAVEMENT MARKER (RETROREFLECTIVE-RECESSED) TYPE D
	LF	LF	LF	EA
"A1" 102+00 TO 117+25 ℄	1525			120
"A1" 102+00 TO 113+79 R†		1223		
"A1" 113+99 TO 114+19 R†			20	
"A1" 114+39 TO 117+25 R†		285		
"A1" 102+00 TO 117+25 L†		1482		
SUBTOTAL	1525	2990	20	
TOTAL	4535			120

PAVEMENT DELINEATION QUANTITIES

PDQ-1

REVISED BY | DATE REVISED

JEFF COON | SHAUN ALEXANDER

CALCULATED-DESIGNED BY | CHECKED BY

FUNCTIONAL SUPERVISOR: AL TRUJILLO

STATE OF CALIFORNIA - DEPARTMENT OF TRANSPORTATION

Caltrans® DESIGN

P:\proj2\02\1E210_plans\pse\21e210nc001.dgn

LAST REVISION 03-03-10 | DATE PLOTTED => 22-MAR-2010 | TIME PLOTTED => 10:56

Dist	COUNTY	ROUTE	POST MILES TOTAL PROJECT	SHEET No.	TOTAL SHEETS
02	Tri	299	38.8/39.1	11	19

REGISTERED CIVIL ENGINEER 03-03-10 DATE

3-22-10
PLANS APPROVAL DATE

REGISTERED PROFESSIONAL ENGINEER
SHAUN ALEXANDER
No. C70833
Exp. 6-30-11
CIVIL
STATE OF CALIFORNIA

THE STATE OF CALIFORNIA OR ITS OFFICERS OR AGENTS SHALL NOT BE RESPONSIBLE FOR THE ACCURACY OR COMPLETENESS OF SCANNED COPIES OF THIS PLAN SHEET.

NOTES:

1. USE A 2¼" SQUARE TUBE x 30" LONG, 3/16" THICK ANCHOR FOR 2" POSTS.
   USE A 3" SQUARE TUBE x 3′ LONG, 3/16" THICK ANCHOR FOR 2-1/2 " POSTS.
2. USE A 5/16" CORNER BOLT OR TWO DRIVE RIVETS TO FASTEN ASSEMBLED SIGN AND POST INTO ANCHOR. INSTALL CORNER BOLT OR DRIVE RIVETS INTO THE SIDES FACING TRAFFIC.
3. REMOVE EXISTING AC OR PCC, DRIVE ANCHOR SLEEVE INTO SOIL AND RECAP WITH LIKE MATERIAL, MATCHING EXISTING THICKNESS.
4. 2" POSTS ARE TO BE 1/8" THICK, PERFORATIONS OF 7/16" IN DIAMETER ARE 1" ON CENTER ON ALL SIDES, LENGTHS ARE 10′ AND 12′.
5. 2-1/2" POSTS ARE TO BE 1/8" THICK, PERFORATIONS OF 7/16" IN DIAMETER ARE 1" ON CENTER ON ALL SIDES, 2-1/2" POSTS ARE 12′ AND 14′ IN LENGTH.
6. FOR DETAILS NOT SHOWN, REFER TO THE STANDARD PLANS.
7. ALL ANCHOR SLEEVES SHALL BE EMBEDDED IN MINOR CONCRETE.

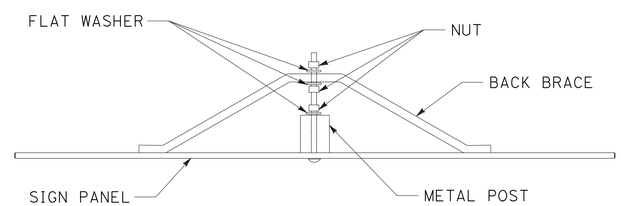

BACK BRACE MOUNTING DETAIL

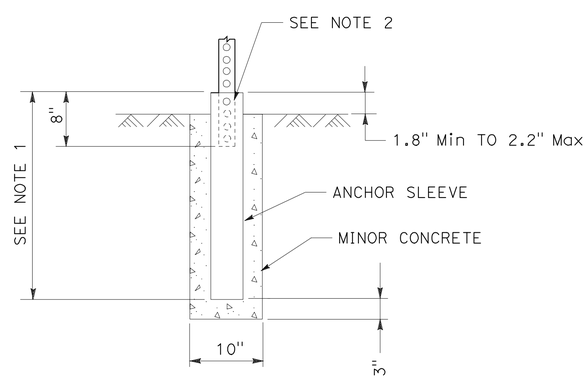

INSTALLATION IN SOIL (PCC)
(SEE NOTE 7)

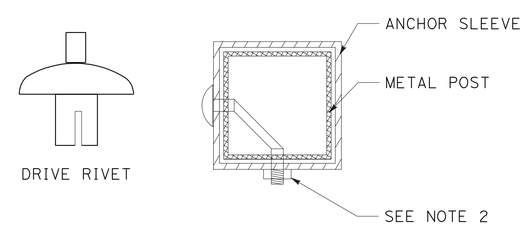

FASTENER DETAILS

METAL SIGN POST INSTALLATION DETAILS

SIGN DETAILS
NO SCALE

SD-1

REVISED BY | DATE REVISED
JEFF COON | SHAUN ALEXANDER
CALCULATED-DESIGNED BY | CHECKED BY
FUNCTIONAL SUPERVISOR
AL TRUJILLO

STATE OF CALIFORNIA - DEPARTMENT OF TRANSPORTATION
Caltrans®
DESIGN

P:\proj2\02\1E210_plans\pse\21e210ob001.dgn

LAST REVISION 03-03-10 | DATE PLOTTED => 22-MAR-2010 | TIME PLOTTED => 10:56

Dist	COUNTY	ROUTE	POST MILES TOTAL PROJECT	SHEET No.	TOTAL SHEETS
02	Tri	299	38.8/39.1	12	19

REGISTERED CIVIL ENGINEER 03-03-10 DATE

3-22-10
PLANS APPROVAL DATE

REGISTERED PROFESSIONAL ENGINEER SHAUN ALEXANDER No. C70833 Exp. 6-30-11 CIVIL STATE OF CALIFORNIA

THE STATE OF CALIFORNIA OR ITS OFFICERS OR AGENTS SHALL NOT BE RESPONSIBLE FOR THE ACCURACY OR COMPLETENESS OF SCANNED COPIES OF THIS PLAN SHEET.

NOTES:

1. EXACT LOCATION AND POSITION OF ROADSIDE SIGN TO BE DETERMINED BY THE ENGINEER.
2. POST LENGTHS GIVEN ARE APPROXIMATE, POST LENGTH AND SIZE TO BE DETERMINED BY ENGINEER.
3. (N) - NOT A SEPARATE PAY ITEM, FOR INFORMATION ONLY.

ROADSIDE SIGNS

SHEET No.	SIGN No.	SIGN CODE	PANEL SIZE	(N) POST LENGTH	(N) POST EMBED	ROADSIDE SIGN ONE POST 2" METAL	ROADSIDE SIGN ONE POST 2.5" METAL	ROADSIDE SIGN TWO POST 6" x 8"	REMOVE ROADSIDE SIGN	FURNISH SINGLE SHEET ALUMINUM SIGN (0.063" UNFRAMED)	FURNISH SINGLE SHEET ALUMINUM SIGN (0.080" FRAMED)	REMARKS
				LF	LF	EA	EA	EA	EA	SQFT	SQFT	
PD-1	1-1	W4-10L (CA)	96" x 96"	21	6			1			64	25 MPH CURVE (L†) SQUARE SHAPE
	1-2	W4-10L (CA)	96" x 96"						1			25 MPH CURVE (L†)
	1-3	W1-8L	30" x 36"	10	0.7	1				7.5		CHEVRON ARROW (L†)
		W1-8R	30" x 36"							7.5		CHEVRON ARROW (R†)
	1-4	W1-8L	30" x 36"						1			CHEVRON ARROW (L†)
		W1-8R	30" x 36"									CHEVRON ARROW (R†)
	1-5	W1-8L	30" x 36"						1			CHEVRON ARROW (L†)
		W1-8R	30" x 36"									CHEVRON ARROW (R†)
	1-6	W1-8L	30" x 36"	10	0.7	1				7.5		CHEVRON ARROW (L†)
		W1-8R	30" x 36"							7.5		CHEVRON ARROW (R†)
	1-7	W1-8L	30" x 36"						1			CHEVRON ARROW (L†)
		W1-8R	30" x 36"									CHEVRON ARROW (R†)
	1-8	W1-8L	30" x 36"						1			CHEVRON ARROW (L†)
		W1-8R	30" x 36"									CHEVRON ARROW (R†)
	1-9	W1-8L	30" x 36"	10	0.7	1				7.5		CHEVRON ARROW (L†)
		W1-8R	30" x 36"							7.5		CHEVRON ARROW (R†)
	1-10	W1-8L	30" x 36"						1			CHEVRON ARROW (L†)
		W1-8R	30" x 36"									CHEVRON ARROW (R†)
	1-11	W1-8L	30" x 36"						1			CHEVRON ARROW (L†)
		W1-8R	30" x 36"									CHEVRON ARROW (R†)
	1-12	W1-8L	30" x 36"	10	0.7	1				7.5		CHEVRON ARROW (L†)
		W1-8R	30" x 36"							7.5		CHEVRON ARROW (R†)
	1-13	W1-8L	30" x 36"						1			CHEVRON ARROW (L†)
		W1-8R	30" x 36"									CHEVRON ARROW (R†)
	1-14	W1-8L	30" x 36"						1			CHEVRON ARROW (L†)
		W1-8R	30" x 36"									CHEVRON ARROW (R†)
	1-15	W1-8L	30" x 36"	10	0.7	1				7.5		CHEVRON ARROW (L†)
		W1-8R	30" x 36"							7.5		CHEVRON ARROW (R†)
	1-16	W1-8L	30" x 36"						1			CHEVRON ARROW (L†)
		W1-8R	30" x 36"									CHEVRON ARROW (R†)
	1-17	W1-8L	30" x 36"						1			CHEVRON ARROW (L†)
		W1-8R	30" x 36"									CHEVRON ARROW (R†)
	1-18	W1-8L	30" x 36"	10	0.7	1				7.5		CHEVRON ARROW (L†)
		W1-8R	30" x 36"							7.5		CHEVRON ARROW (R†)
	1-19	W1-8L	30" x 36"						1			CHEVRON ARROW (L†)
		W1-8R	30" x 36"									CHEVRON ARROW (R†)
	1-20	W1-8L	30" x 36"						1			CHEVRON ARROW (L†)
		W1-8R	30" x 36"									CHEVRON ARROW (R†)
	1-21	W1-8L	30" x 36"	10	0.7	1				7.5		CHEVRON ARROW (L†)
		W1-8R	30" x 36"							7.5		CHEVRON ARROW (R†)
	1-22	W1-8L	30" x 36"						1			CHEVRON ARROW (L†)
		W1-8R	30" x 36"									CHEVRON ARROW (R†)
	1-23	W4-10R (CA)	96" x 96"	21	6			1			64	25 MPH CURVE (R†) SQUARE SHAPE
	1-24	W1-2a R	96" x 96"						1			25 MPH CURVE (R†)
	1-25	W4-10R (CA)	48" x 48"	12	0.7		1			16		25 MPH CURVE (R†)
	1-26	W1-2a R	48" x 48"						1			25 MPH CURVE (R†)
					TOTAL	7	1	2	16	121	128	

SIGN QUANTITIES

SQ-1

REVISED BY | DATE REVISED

JEFF COON | SHAUN ALEXANDER

CALCULATED-DESIGNED BY | CHECKED BY

FUNCTIONAL SUPERVISOR

AL TRUJILLO

STATE OF CALIFORNIA - DEPARTMENT OF TRANSPORTATION

Caltrans® DESIGN

P:\proj2\02\1E210_plans\pse\21e210oc001.dgn

LAST REVISION 03-03-10 | DATE PLOTTED => 22-MAR-2010 | TIME PLOTTED => 10:56

Dist	COUNTY	ROUTE	POST MILES TOTAL PROJECT	SHEET No.	TOTAL SHEETS
02	Tri	299	38.8/39.1	13	19

REGISTERED CIVIL ENGINEER 03-03-10 DATE

3-22-10
PLANS APPROVAL DATE

REGISTERED PROFESSIONAL ENGINEER SHAUN ALEXANDER No. C70833 Exp. 6-30-11 CIVIL STATE OF CALIFORNIA

THE STATE OF CALIFORNIA OR ITS OFFICERS OR AGENTS SHALL NOT BE RESPONSIBLE FOR THE ACCURACY OR COMPLETENESS OF SCANNED COPIES OF THIS PLAN SHEET.

MATERIAL SUMMARY CONTRACTOR FURNISHED SIGNS

SIGN No.	SIGN CODE	SIGN SIZE (L x D)	SINGLE FACED	BACKGROUND		LEGEND		ROADSIDE SINGLE-SHEET ALUMINUM		DESCRIPTION (REMARKS)
				SHEETING COLOR	RETROREFLECTIVE ASTM TYPE	SHEETING COLOR	RETROREFLECTIVE ASTM TYPE	UNFRAMED 0.063"	FRAMED 0.080"	
1-1	W4-10L (CA)	96" x 96"	×	YELLOW	III	BLACK	II		×	25 MPH CURVE (L+) SQUARE SHAPE
1-3	W1-8L	30" x 36"	×	YELLOW	III	BLACK	II	×		CHEVRON ARROW (L+)
	W1-8R	30" x 36"	×	YELLOW	III	BLACK	II	×		CHEVRON ARROW (R+)
1-6	W1-8L	30" x 36"	×	YELLOW	III	BLACK	II	×		CHEVRON ARROW (L+)
	W1-8R	30" x 36"	×	YELLOW	III	BLACK	II	×		CHEVRON ARROW (R+)
1-9	W1-8L	30" x 36"	×	YELLOW	III	BLACK	II	×		CHEVRON ARROW (L+)
	W1-8R	30" x 36"	×	YELLOW	III	BLACK	II	×		CHEVRON ARROW (R+)
1-12	W1-8L	30" x 36"	×	YELLOW	III	BLACK	II	×		CHEVRON ARROW (L+)
	W1-8R	30" x 36"	×	YELLOW	III	BLACK	II	×		CHEVRON ARROW (R+)
1-15	W1-8L	30" x 36"	×	YELLOW	III	BLACK	II	×		CHEVRON ARROW (L+)
	W1-8R	30" x 36"	×	YELLOW	III	BLACK	II	×		CHEVRON ARROW (R+)
1-18	W1-8L	30" x 36"	×	YELLOW	III	BLACK	II	×		CHEVRON ARROW (L+)
	W1-8R	30" x 36"	×	YELLOW	III	BLACK	II	×		CHEVRON ARROW (R+)
1-21	W1-8L	30" x 36"	×	YELLOW	III	BLACK	II	×		CHEVRON ARROW (L+)
	W1-8R	30" x 36"	×	YELLOW	III	BLACK	II	×		CHEVRON ARROW (R+)
1-23	W4-10R (CA)	96" x 96"	×	YELLOW	III	BLACK	II		×	25 MPH CURVE (R+) SQUARE SHAPE
1-25	W4-10R (CA)	48" x 48"	×	YELLOW	III	BLACK	II	×		25 MPH CURVE (R+)

SIGN QUANTITIES

SQ-2

REVISED BY | DATE REVISED
JEFF COON | SHAUN ALEXANDER
CALCULATED-DESIGNED BY | CHECKED BY
FUNCTIONAL SUPERVISOR
AL TRUJILLO

STATE OF CALIFORNIA - DEPARTMENT OF TRANSPORTATION
Caltrans
DESIGN

P:\proj2\02\1E210_plans\pse\21e210oc002.dgn

LAST REVISION 03-03-10 | DATE PLOTTED => 22-MAR-2010 | TIME PLOTTED => 10:56

Dist	COUNTY	ROUTE	POST MILES TOTAL PROJECT	SHEET No.	TOTAL SHEETS
02	Tri	299	38.8/39.1	14	19

REGISTERED CIVIL ENGINEER 03-03-10 DATE

3-22-10
PLANS APPROVAL DATE

REGISTERED PROFESSIONAL ENGINEER
SHAUN ALEXANDER
No. C70833
Exp. 6-30-11
CIVIL
STATE OF CALIFORNIA

THE STATE OF CALIFORNIA OR ITS OFFICERS OR AGENTS SHALL NOT BE RESPONSIBLE FOR THE ACCURACY OR COMPLETENESS OF SCANNED COPIES OF THIS PLAN SHEET.

TEMPORARY WATER POLLUTION CONTROL

TEMPORARY FIBER ROLL	TEMPORARY CHECK DAM
LF	LF
500	50

ROADWAY QUANTITIES

LOCATION	REMOVE METAL BEAM GUARD RAILING	COLD PLANE ASPHALT CONCRETE PAVEMENT	ROADWAY EXCAVATION	(N) EMBANKMENT	CLASS 2 AGGREGATE BASE	HOT MIX ASPHALT (TYPE A)	HOT MIX ASPHALT (OPEN GRADED)	TACK COAT	METAL BEAM GUARD RAILING (STEEL POST)	ALTERNATIVE FLARED TERMINAL SYSTEM	EROSION CONTROL (HYDROSEED)
	LF	SQYD	CY	CY	CY	TON	TON	TON	LF	EA	SQFT
"A1" 107+10 TO 110+56	408										
"A1" 102+50 TO 103+00		146				23	10	0.03			
"A1" 103+00 TO 114+55					1147	1965	357				
"A1" 114+55 TO 116+75		526			71	203	58	0.09			
"A1" 103+00 TO 116+75			4048	150							14,400
"A1" 106+63.73 TO 111+00						211					
"A1" 102+50 TO 116+75								0.80			
"A1" 107+43.14 TO 110+74.95									388		
"A1" 107+10.28 TO 107+43.14										1	
TOTAL	408	672	4048	150	1218	2402	425	0.92	388	1	14,400

(N) - NOT A SEPARATE PAY ITEM, FOR INFORMATION ONLY.

SUMMARY OF QUANTITIES
Q-1

REVISED BY | DATE REVISED
JEFF COON | SHAUN ALEXANDER
CALCULATED-DESIGNED BY | CHECKED BY
FUNCTIONAL SUPERVISOR
AL TRUJILLO

STATE OF CALIFORNIA - DEPARTMENT OF TRANSPORTATION
Caltrans
DESIGN

P:\proj2\02\1E210_plans\pse\21e210pa001.dgn

LAST REVISION | DATE PLOTTED => 22-MAR-2010
03-03-10 | TIME PLOTTED => 10:39

DIST	COUNTY	ROUTE	POST MILES TOTAL PROJECT	SHEET NO.	TOTAL SHEETS
02	Tri	299	38.8/39.1	15	19

Randell D. Hiatt
REGISTERED CIVIL ENGINEER

June 6, 2008
PLANS APPROVAL DATE

REGISTERED PROFESSIONAL ENGINEER Randell D. Hiatt No. C50200 Exp. 6-30-09 CIVIL STATE OF CALIFORNIA

The State of California or its officers or agents shall not be responsible for the accuracy or completeness of electronic copies of this plan sheet.

To accompany plans dated 3-22-10

2006 REVISED STANDARD PLAN RSP A77E3

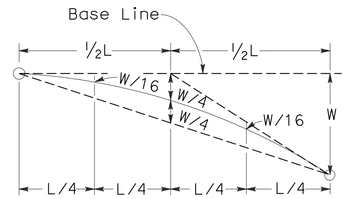

TYPICAL PARABOLIC LAYOUT

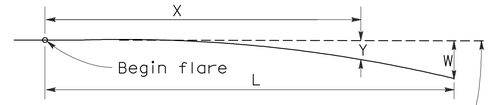

Base Line (Edge of paved shoulder or offset line of edge of traveled way)

$$Y = \frac{WX^2}{L^2}$$

Y = Offset from base line
W = Maximum offset
X = Distance along base line
L = Length of flare

PARABOLIC FLARE OFFSETS

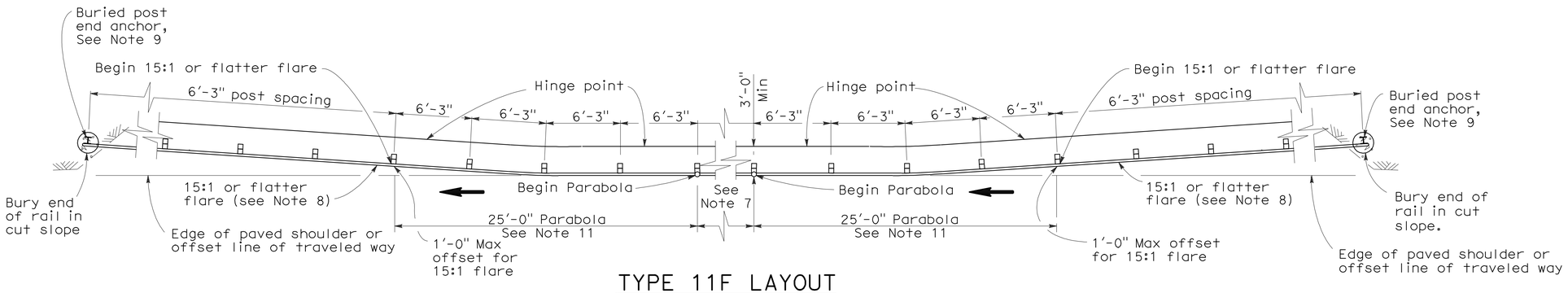

TYPE 11F LAYOUT

(EMBANKMENT GUARD RAILING INSTALLATION WITH A BURIED END ANCHOR TREATMENT AT EACH END OF RAILING)
See Notes 5 and 10

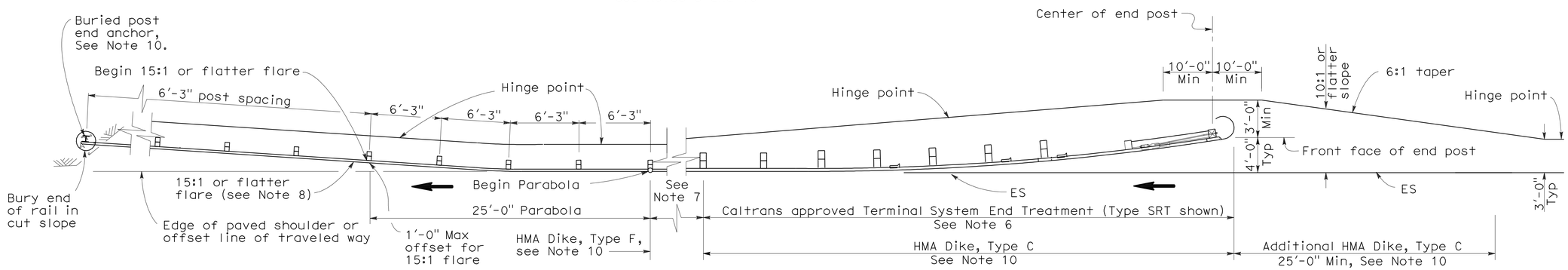

TYPE 11G LAYOUT

(EMBANKMENT GUARD RAILING INSTALLATION WITH FLARED END TREATMENT AND A BURIED END ANCHOR TREATMENT AT THE ENDS OF RAILING)
See Notes 5 and 10

NOTES:

1. Line post, blocks and hardware to be used are shown on Standard Plans A77A1, A77A2, A77B1, A77C1 and A77C2.
2. Guard rail post spacing to be 6'-3" center to center, except as otherwise noted.
3. Except as noted, line posts are 6" x 8" x 6'-0" wood with 6" x 8" x 1'-2" wood blocks. W6 x 9 steel posts, 6'-0" in length, with 6" x 8" x 1'-2" notched wood blocks or plastic blocks may be used for 6" x 8" x 6'-0" wood post with 6" x 8" x 1'-2" wood blocks where applicable and when specified.
4. Direction of adjacent traffic indicated by ⟶.
5. Layout Types 11D through 11L, shown on the A77E Series of Revised Standard Plans, are typically used where guard railing is recommended to shield embankment slopes and a crashworthy end treatment is required for both directions of traffic.
6. The type of terminal system end treatment to be used will be shown on the Project Plans.
7. Dependent on site conditions (embankment height and side slope), construction of additional guard railing (length equal to multiples of 12'-6" with 6'-3" post spacing) may be advisable.
8. The 15:1 or flatter flare used with buried end anchors is based on the edge of the paved shoulder or offset line of edge of the traveled way. The length of guard railing within the 15:1 or flatter flare is based on site conditions and should be a length equal to multiples of 12'-6".
9. For details of the buried post end anchor used with Type 11F and 11G Layouts, see Standard Plan A77I2.
10. Where placement of dike is required with guard railing installations, see Revised Standard Plan RSP A77C4 for dike positioning details.
11. For typical flare offsets for 25'-0" length parabola with maximum offset of 1'-0", see Revised Standard Plan RSP A77E1.

STATE OF CALIFORNIA
DEPARTMENT OF TRANSPORTATION

METAL BEAM GUARD RAILING TYPICAL LAYOUTS FOR EMBANKMENTS

NO SCALE

RSP A77E3 DATED JUNE 6, 2008 SUPERSEDES STANDARD PLAN A77E3 DATED MAY 1, 2006 - PAGE 50 OF THE STANDARD PLANS BOOK DATED MAY 2006.

REVISED STANDARD PLAN RSP A77E3

12-10-07

DIST	COUNTY	ROUTE	POST MILES TOTAL PROJECT	SHEET NO.	TOTAL SHEETS
02	Tri	299	38.8/39.1	16	19

Randell D. Hiatt
REGISTERED CIVIL ENGINEER

June 6, 2008
PLANS APPROVAL DATE

REGISTERED PROFESSIONAL ENGINEER
Randell D. Hiatt
No. C50200
Exp. 6-30-09
CIVIL
STATE OF CALIFORNIA

The State of California or its officers or agents shall not be responsible for the accuracy or completeness of electronic copies of this plan sheet.

To accompany plans dated 3-22-10

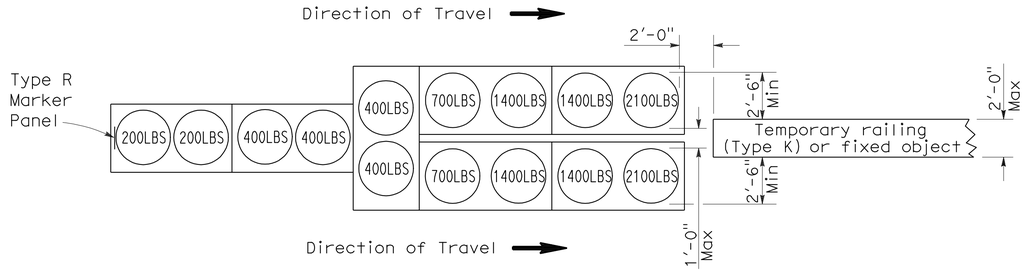

ARRAY 'TU14'

Approach speed 45 mph or more

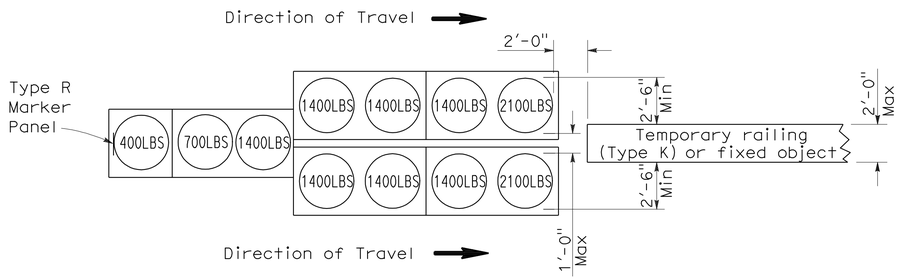

ARRAY 'TU11'

Approach speed less than 45 mph

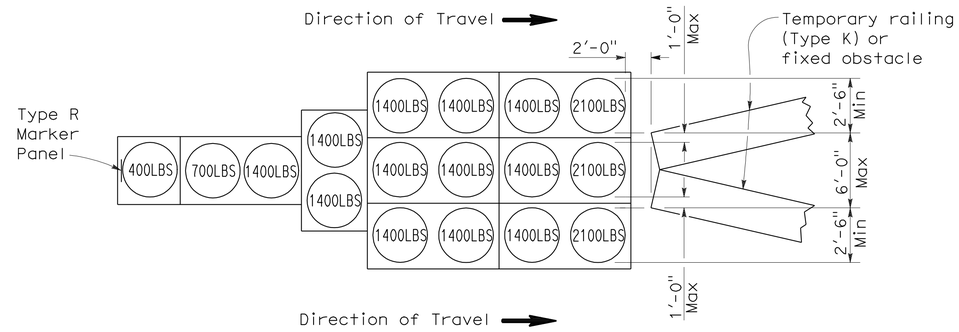

ARRAY 'TU17'

Approach speed less than 45 mph

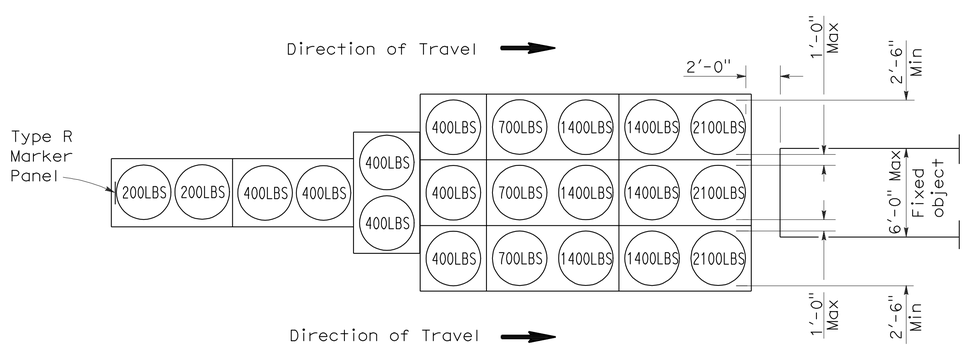

ARRAY 'TU21'

Approach speed 45 mph or more

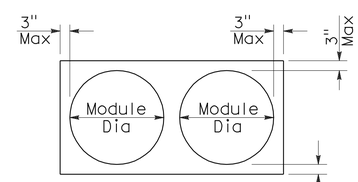

PLAN

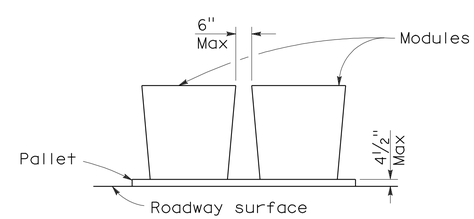

ELEVATION

CRASH CUSHION PALLET DETAIL

See Note 7

NOTES:

1. (XXX) Indicates sand filled module location and weight of sand in pounds for each module. Module spacing is based on the greater diameter of the module.
2. All sand weights are nominal.
3. Temporary crash cushion arrays shall not encroach on the traveled way.
4. Place the top of Type R marker panel 1" below the module lid.
5. Refer to Standard Plan A73B for marker details.
6. Approach speeds indicated conform to NCHRP 350 Report criteria.
7. Use of pallets is optional.

STATE OF CALIFORNIA
DEPARTMENT OF TRANSPORTATION

TEMPORARY CRASH CUSHION, SAND FILLED (UNIDIRECTIONAL)

NO SCALE

RSP T1A DATED JUNE 6, 2008 SUPERSEDES STANDARD PLAN T1A
DATED MAY 1, 2006 - PAGE 211 OF THE STANDARD PLANS BOOK DATED MAY 2006.

REVISED STANDARD PLAN RSP T1A

2006 REVISED STANDARD PLAN RSP T1A

DIST	COUNTY	ROUTE	POST MILES TOTAL PROJECT	SHEET NO.	TOTAL SHEETS
02	Tri	299	38.8/39.1	17	19

Randell D. Hiatt
REGISTERED CIVIL ENGINEER

June 6, 2008
PLANS APPROVAL DATE

REGISTERED PROFESSIONAL ENGINEER
Randell D. Hiatt
No. C50200
Exp. 6-30-09
CIVIL
STATE OF CALIFORNIA

The State of California or its officers or agents shall not be responsible for the accuracy or completeness of electronic copies of this plan sheet.

To accompany plans dated 3-22-10

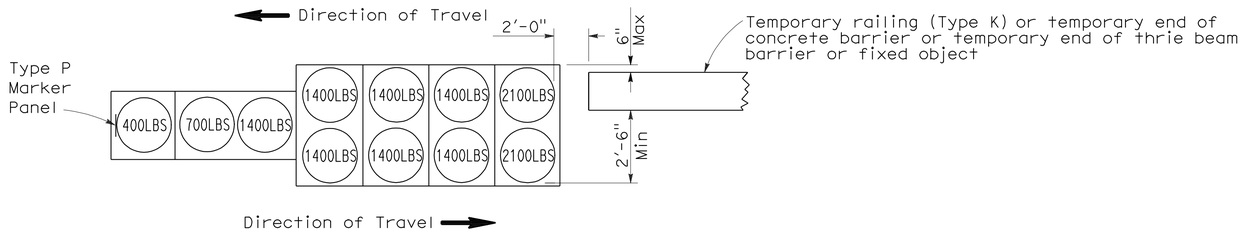

ARRAY 'TB11'

Approach speed less than 45 mph

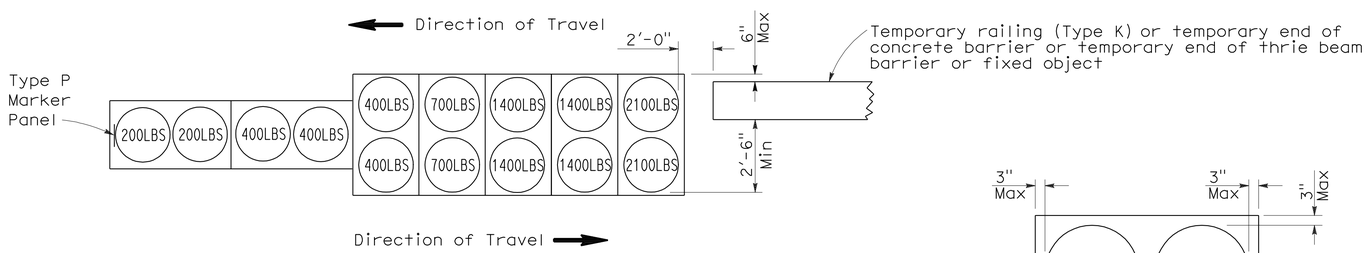

ARRAY 'TB14'

Approach speed 45 mph or more

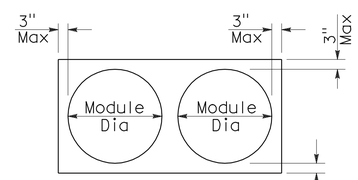

PLAN

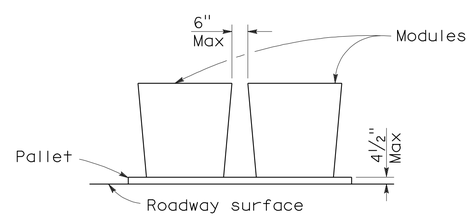

ELEVATION

CRASH CUSHION PALLET DETAIL

See Note 7

NOTES:

1. (XXX) Indicates sand filled module location and weight of sand in pounds for each module. Module spacing is based on the greater diameter of the module.
2. All sand weights are nominal.
3. Temporary crash cushion arrays shall not encroach on the traveled way.
4. Place the Type P marker panel so that the bottom of the panel rests upon the pallet.
5. Refer to Standard Plan A73B for marker details.
6. Approach speeds indicated conform to NCHRP 350 Report criteria.
7. Use of pallets is optional.

STATE OF CALIFORNIA
DEPARTMENT OF TRANSPORTATION

TEMPORARY CRASH CUSHION, SAND FILLED (BIDIRECTIONAL)

NO SCALE

RSP T1B DATED JUNE 6, 2008 SUPERSEDES STANDARD PLAN T1B
DATED MAY 1, 2006 - PAGE 212 OF THE STANDARD PLANS BOOK DATED MAY 2006.

REVISED STANDARD PLAN RSP T1B

2006 REVISED STANDARD PLAN RSP T1B

5-15-08

DIST	COUNTY	ROUTE	POST MILES TOTAL PROJECT	SHEET NO.	TOTAL SHEETS
02	Tri	299	38.8/39.1	18	19

Randell D. Hiatt
REGISTERED CIVIL ENGINEER

June 6, 2008
PLANS APPROVAL DATE

REGISTERED PROFESSIONAL ENGINEER
Randell D. Hiatt
No. C50200
Exp. 6-30-09
CIVIL
STATE OF CALIFORNIA

The State of California or its officers or agents shall not be responsible for the accuracy or completeness of electronic copies of this plan sheet.

To accompany plans dated 3-22-10

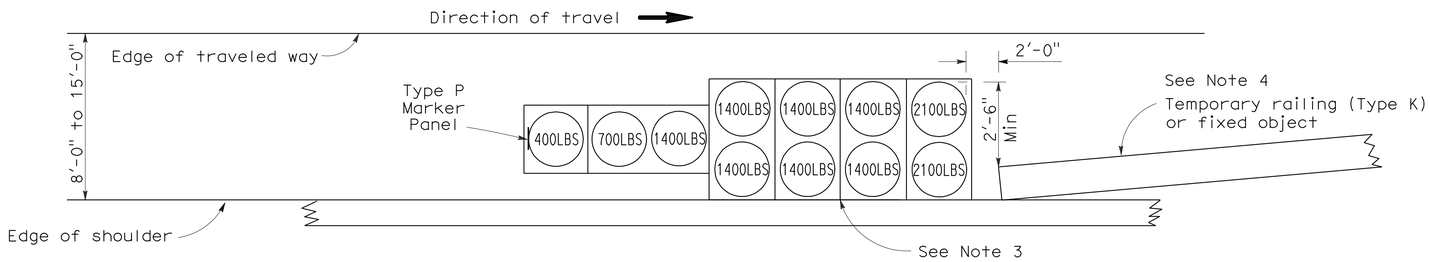

ARRAY 'TS11'

Approach speed less than 45 mph
See Note 9

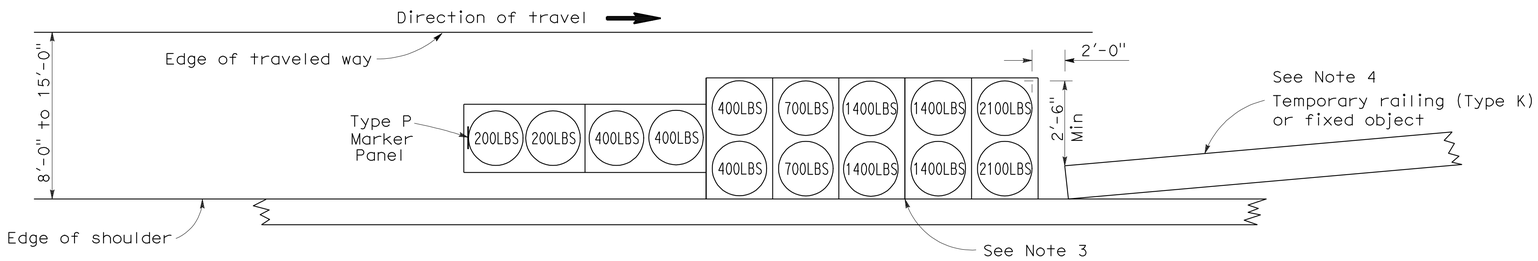

ARRAY 'TS14'

Approach speed 45 mph or more
See Note 9

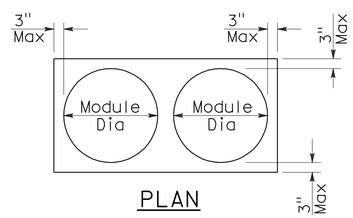

PLAN

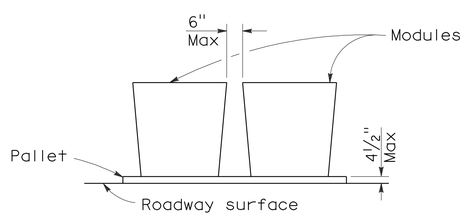

ELEVATION

CRASH CUSHION PALLET DETAIL

See Note 11

NOTES:

1. (XXX) Indicates sand filled module location and weight of sand in pounds for each module. Module spacing is based on the greater diameter of the module.
2. All sand weights are nominal.
3. The temporary crash cushion arrays shown on this plan shall be used only in locations where there will be traffic on one side of the temporary crash cushion array.
4. If the fixed object or approach end of the temporary railing is less than 15'-0" from the edge of traveled way, a temporary crash cushion is required in a construction or work zone.
5. Temporary crash cushion arrays shall not encroach on the traveled way.
6. Arrays for median shoulders shall conform to details shown on this plan for outside shoulders.
7. Place the Type P marker panel so that the bottom of the panel rests upon the pallet and faces traffic.
8. Refer to Standard Plan A73B for marker details.
9. For shoulder widths less than 8'-0", appropriate approved crash cushion protection, other than sand filled modules, shall be provided at fixed objects and at approach ends of temporary railing. The specific type of crash cushion shall be as shown on the project plans or as specified in the Special Provisions, or if not shown on the project plans or specified in the Special Provisions, shall be as approved by the Engineer.
10. Approach speeds indicated conform to NCHRP 350 Report criteria.
11. Use of pallets is optional.

STATE OF CALIFORNIA
DEPARTMENT OF TRANSPORTATION

TEMPORARY CRASH CUSHION, SAND FILLED (SHOULDER INSTALLATIONS)

NO SCALE

RSP T2 DATED JUNE 6, 2008 SUPERSEDES STANDARD PLAN T2
DATED MAY 1, 2006 - PAGE 213 OF THE STANDARD PLANS BOOK DATED MAY 2006.

REVISED STANDARD PLAN RSP T2

2006 REVISED STANDARD PLAN RSP T2

5-15-08

DIST	COUNTY	ROUTE	POST MILES TOTAL PROJECT	SHEET NO.	TOTAL SHEETS
02	Tri	299	38.8/39.1	19	19

Robert B Schott
LICENSED LANDSCAPE ARCHITECT

April 3, 2009
PLANS APPROVAL DATE

LICENSED LANDSCAPE ARCHITECT
Robert B. Schott 3695
Signature
11-30-10
Renewal Date
2-25-09
Date
STATE OF CALIFORNIA

The State of California or its officers or agents shall not be responsible for the accuracy or completeness of electronic copies of this plan sheet.

To accompany plans dated 3-22-10

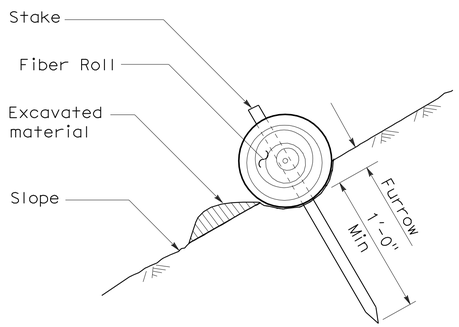

SECTION

TEMPORARY FIBER ROLL (TYPE 1)

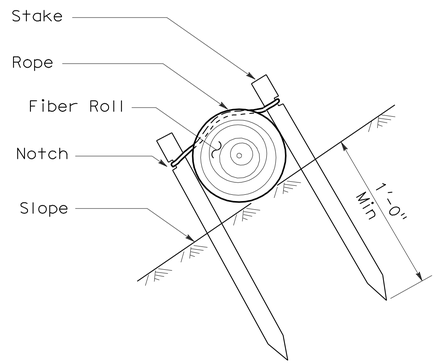

SECTION

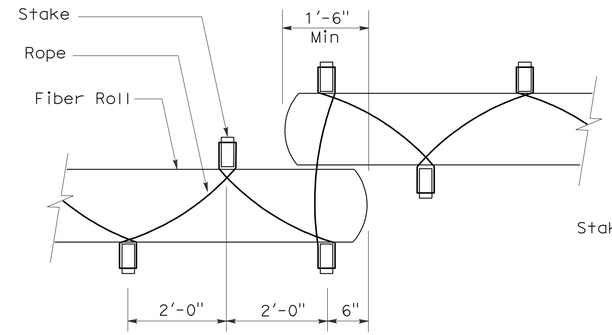

PLAN

TEMPORARY FIBER ROLL (TYPE 2)

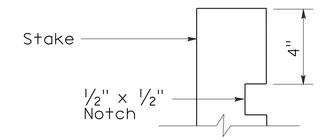

ELEVATION

STAKE NOTCH DETAIL

NOTES:

1. Temporary fiber roll spacing varies depending upon slope inclination.
2. Installations shown in the perspectives are for slope inclination of 10:1 and steeper.

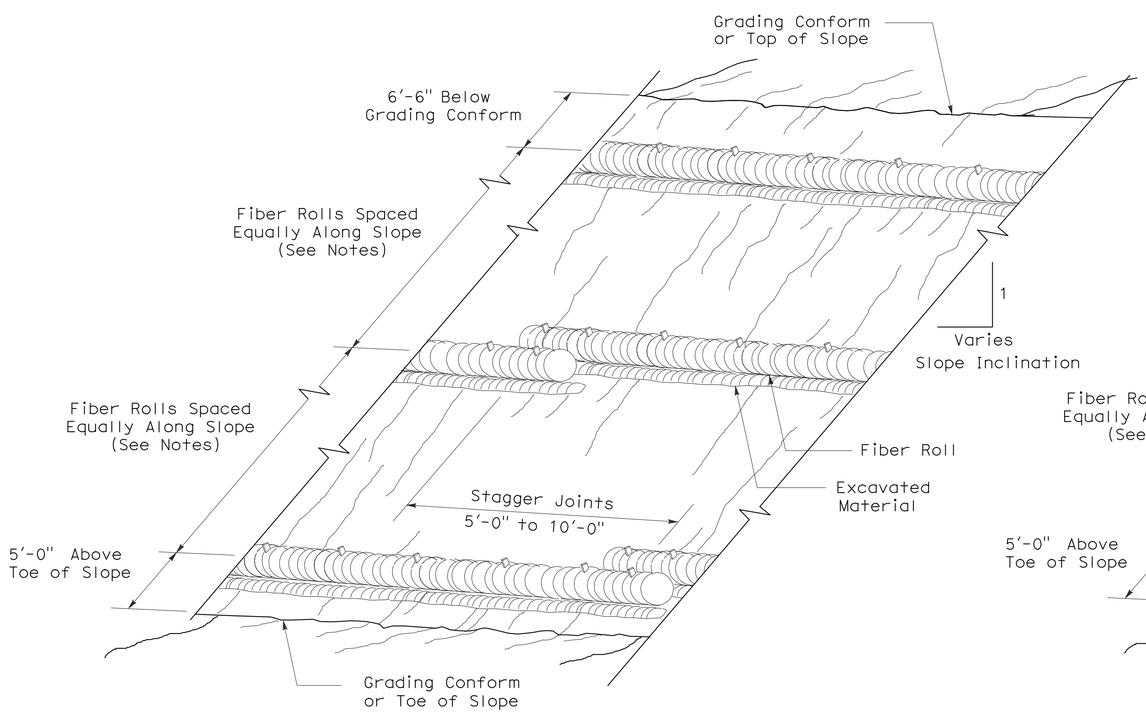

PERSPECTIVE

TEMPORARY FIBER ROLL (TYPE 1)

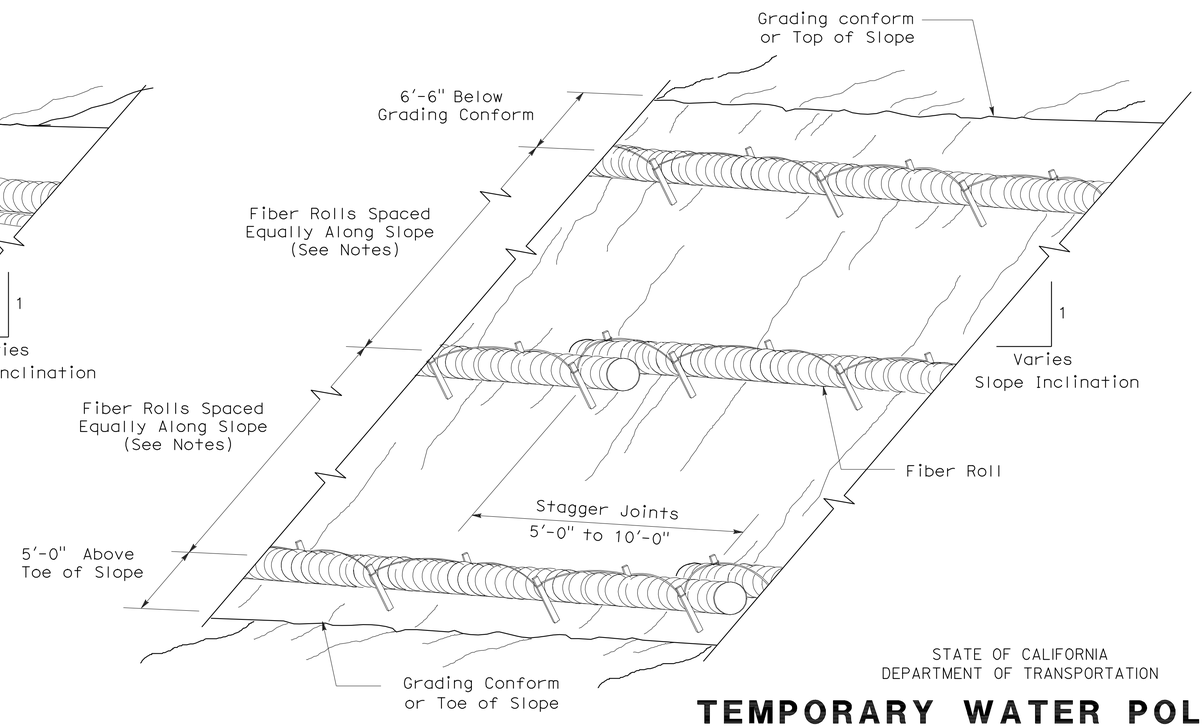

PERSPECTIVE

TEMPORARY FIBER ROLL (TYPE 2)

STATE OF CALIFORNIA
DEPARTMENT OF TRANSPORTATION

TEMPORARY WATER POLLUTION CONTROL DETAILS (TEMPORARY FIBER ROLL)

NO SCALE

RSP T56 DATED APRIL 3, 2009 SUPERSEDES STANDARD PLAN T56 DATED MAY 1, 2006 - PAGE 232 OF THE STANDARD PLANS BOOK DATED MAY 2006.

REVISED STANDARD PLAN RSP T56

2006 REVISED STANDARD PLAN RSP T56

2-23-09