Dist	COUNTY	ROUTE	POST MILES TOTAL PROJECT	SHEET No.	TOTAL SHEETS
02	Sis	96,97	77.2/92.0 2.0/2.6	1	15

STATE OF CALIFORNIA

DEPARTMENT OF TRANSPORTATION

ACSTP-X093(008)E

PROJECT PLANS FOR CONSTRUCTION ON

STATE HIGHWAY

IN SISKIYOU COUNTY ON ROUTE 96 FROM 0.2 MILE WEST OF KLAMATH RIVER BRIDGE TO 1.0 MILE WEST OF LUMGREY CREEK AND ON ROUTE 97 FROM 0.1 MILE SOUTH OF ANGEL VALLEY ROAD TO BROOKSIDE AVENUE

TO BE SUPPLEMENTED BY STANDARD PLANS DATED 2010

INDEX OF PLANS

SHEET No.	DESCRIPTION
1	TITLE AND LOCATION MAP
2	TYPICAL CROSS SECTIONS
3	CONSTRUCTION DETAILS
4	CONSTRUCTION AREA SIGNS
5-7	PAVEMENT DELINEATION PLAN
8	PAVEMENT DELINEATION DETAILS
9	PAVEMENT DELINEATION QUANTITIES
10	SUMMARY OF QUANTITIES
11-15	REVISED STANDARD PLANS

THE STANDARD PLANS LIST APPLICABLE TO THIS CONTRACT IS INCLUDED IN THE NOTICE TO BIDDERS AND SPECIAL PROVISIONS BOOK.

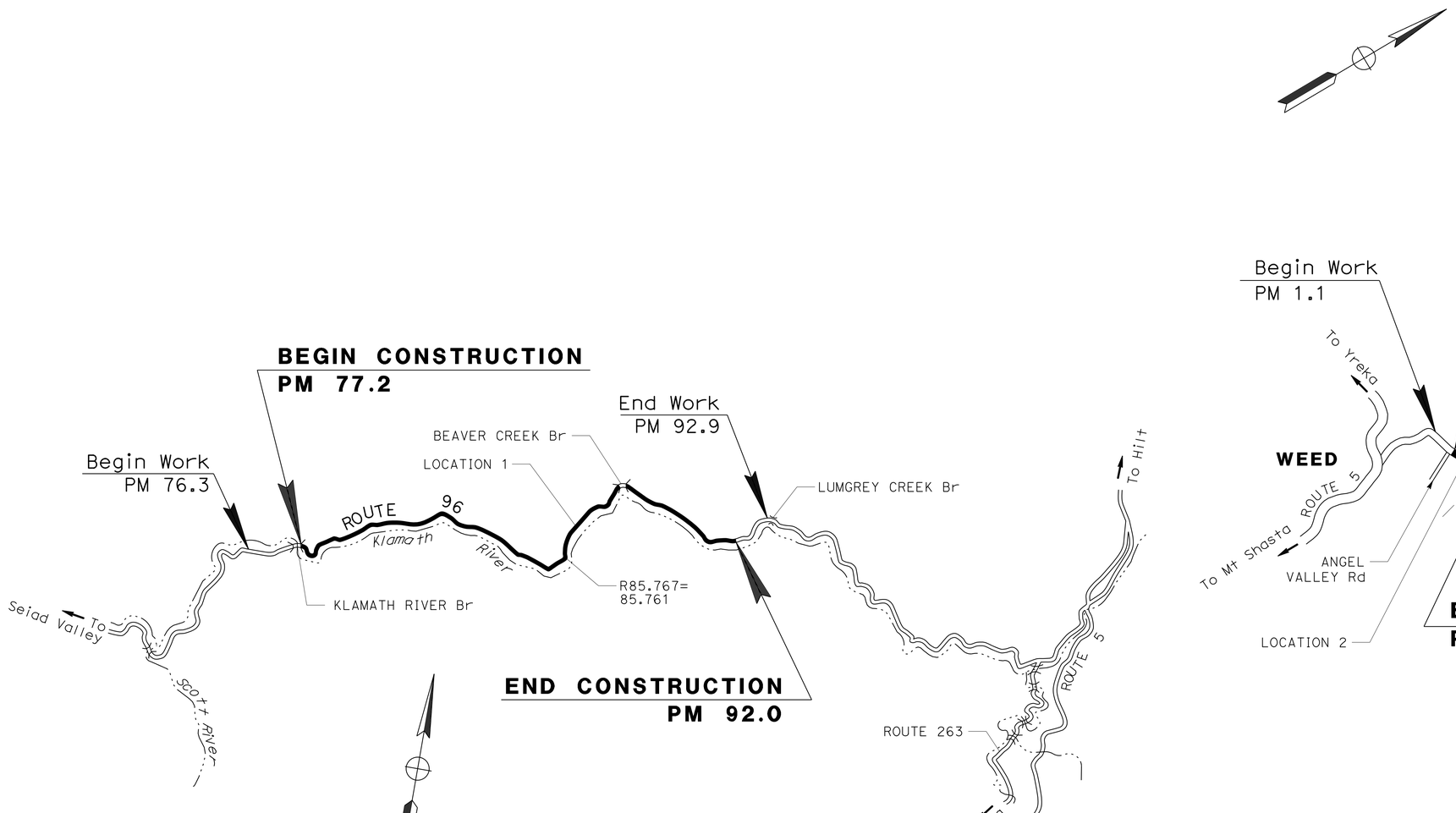

THE CONTRACTOR SHALL POSSESS THE CLASS (OR CLASSES) OF LICENSE AS SPECIFIED IN THE "NOTICE TO BIDDERS."

NO SCALE

09-22-15
PROJECT ENGINEER DATE
REGISTERED CIVIL ENGINEER

September 22, 2015
PLANS APPROVAL DATE

REGISTERED PROFESSIONAL ENGINEER MICHAEL A. CONNER No. C73123 Exp. 12-31-16 CIVIL STATE OF CALIFORNIA

THE STATE OF CALIFORNIA OR ITS OFFICERS OR AGENTS SHALL NOT BE RESPONSIBLE FOR THE ACCURACY OR COMPLETENESS OF SCANNED COPIES OF THIS PLAN SHEET.

CONTRACT No.	02-0H9504
PROJECT ID	0215000095

PROJECT MANAGER: MICHAEL CONNER
DESIGN ENGINEER: MICHAEL CONNER

P:\proj3\02\0h950_plans\pse\20h950ab001.dgn

LAST REVISION 09-22-15 | DATE PLOTTED => 03-NOV-2015 | TIME PLOTTED => 11:24

Dist	COUNTY	ROUTE	POST MILES TOTAL PROJECT	SHEET No.	TOTAL SHEETS
02	Sis	96,97	77.2/92.0 2.0/2.6	2	15

REGISTERED CIVIL ENGINEER 09-22-15 DATE

09-22-15
PLANS APPROVAL DATE

REGISTERED PROFESSIONAL ENGINEER MICHAEL A. CONNER No. C73123 Exp. 12-31-16 CIVIL STATE OF CALIFORNIA

THE STATE OF CALIFORNIA OR ITS OFFICERS OR AGENTS SHALL NOT BE RESPONSIBLE FOR THE ACCURACY OR COMPLETENESS OF SCANNED COPIES OF THIS PLAN SHEET.

NOTES:

1. DIMENSIONS OF THE PAVEMENT STRUCTURES (STRUCTURAL SECTIONS) ARE SUBJECT TO TOLERANCES SPECIFIED IN THE STANDARD SPECIFICATIONS.
2. FOR ACCURATE RIGHT OF WAY DATA, CONTACT R/W ENGINEERING AT THE DISTRICT OFFICE.
3. EXISTING UTILITY FACILITIES HAVE NOT BEEN PLOTTED ON THESE PLANS.

PAVEMENT CLIMATE ZONE:

HIGH MOUNTAIN

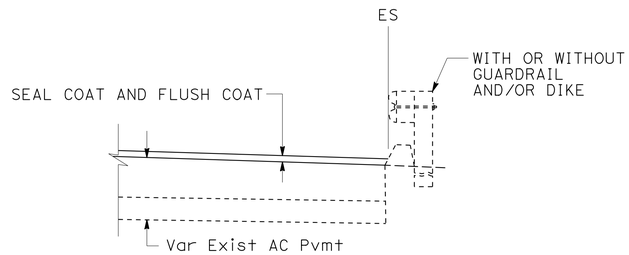

DIKE DETAILS
(TYPICAL BOTH DIRECTIONS)
ROUTE 96 PM 77.23 TO 92.00

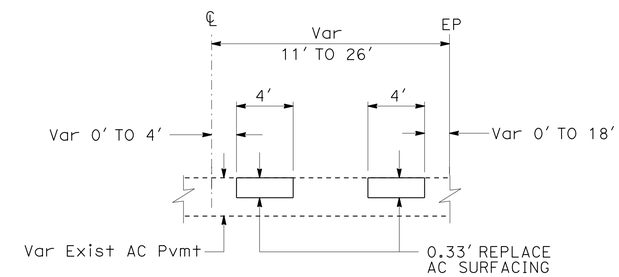

REPLACE AC SURFACING
(TYPICAL BOTH DIRECTIONS)
ROUTE 96 PM 77.23 TO 92.00

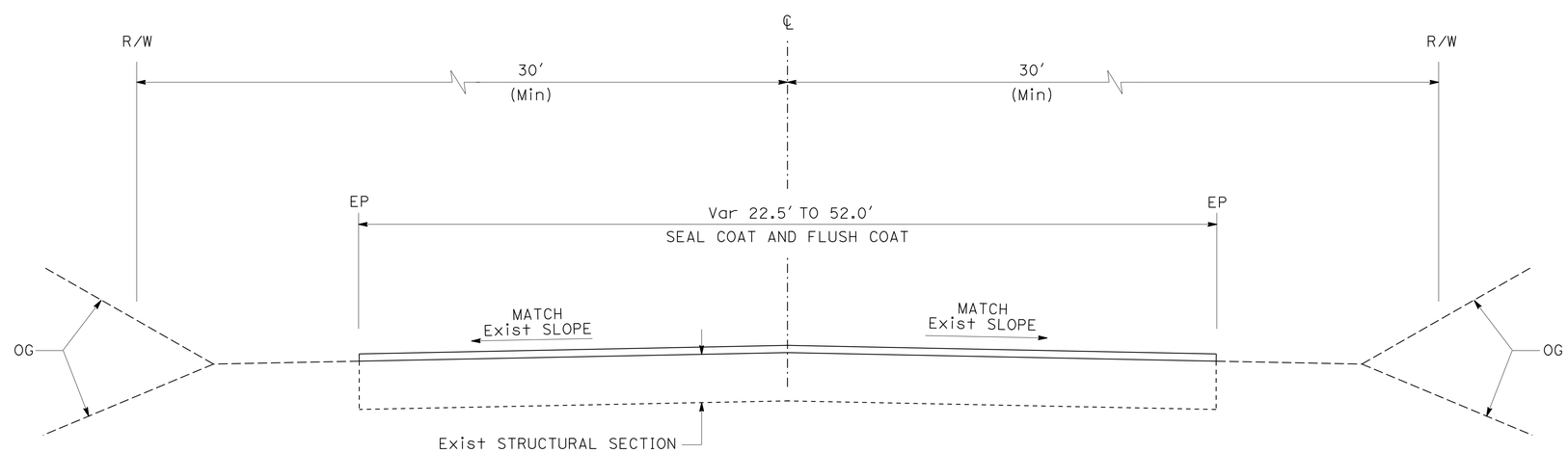

TYPICAL CROSS SECTION
ROUTE 96 PM 77.23 TO 92.00
ROUTE 97 PM 2.08 TO 2.56

TYPICAL CROSS SECTIONS

NO SCALE

X-1

REVISED BY	DATE REVISED

CALCULATED-DESIGNED BY	CHECKED BY
MICHAEL CONNER	KARLIE SMITH

FUNCTIONAL SUPERVISOR: MICHAEL CONNER

STATE OF CALIFORNIA - DEPARTMENT OF TRANSPORTATION
Caltrans® MAINTENANCE

P:\proj3\02\0h950_plans\pse\20h950ca001.dgn

LAST REVISION 09-22-15 | DATE PLOTTED => 03-NOV-2015 | TIME PLOTTED => 11:24

Dist	COUNTY	ROUTE	POST MILES TOTAL PROJECT	SHEET No.	TOTAL SHEETS
02	Sis	96,97	77.2/92.0 2.0/2.6	3	15

REGISTERED CIVIL ENGINEER 09-22-15 DATE

09-22-15
PLANS APPROVAL DATE

REGISTERED PROFESSIONAL ENGINEER MICHAEL A. CONNER No. C73123 Exp. 12-31-16 CIVIL STATE OF CALIFORNIA

THE STATE OF CALIFORNIA OR ITS OFFICERS OR AGENTS SHALL NOT BE RESPONSIBLE FOR THE ACCURACY OR COMPLETENESS OF SCANNED COPIES OF THIS PLAN SHEET.

NOTES:

1. EXISTING UTILITY FACILITIES HAVE NOT BEEN PLOTTED ON THESE PLANS.
2. DO NOT PLACE SEAL COAT ON BRIDGE DECKS.

ABBREVIATIONS:

SEAL COAT SEAL COAT AND FLUSH COAT

LEGEND:

ASPHALTIC EMULSION (FOG SEAL COAT)

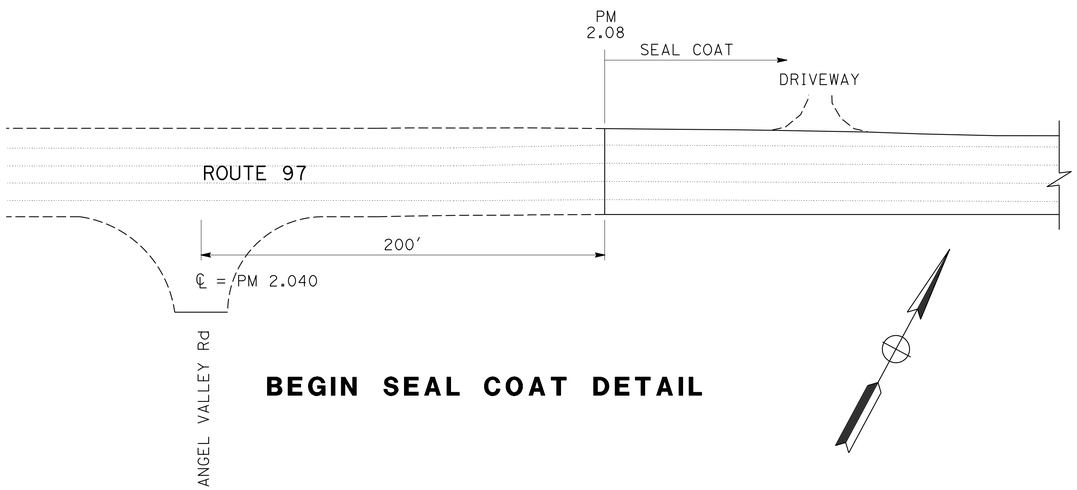

BEGIN SEAL COAT DETAIL

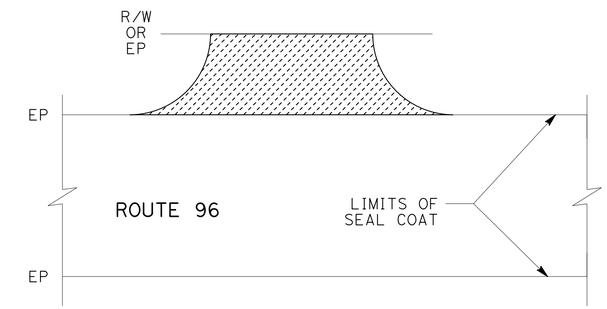

ASPHALTIC EMULSION (FOG SEAL COAT) DETAIL

TYPICAL DRIVEWAYS, PULLOUTS AND ROAD CONNECTIONS
SEE Q-1 FOR QUANTITIES
(TYPICAL BOTH DIRECTIONS)

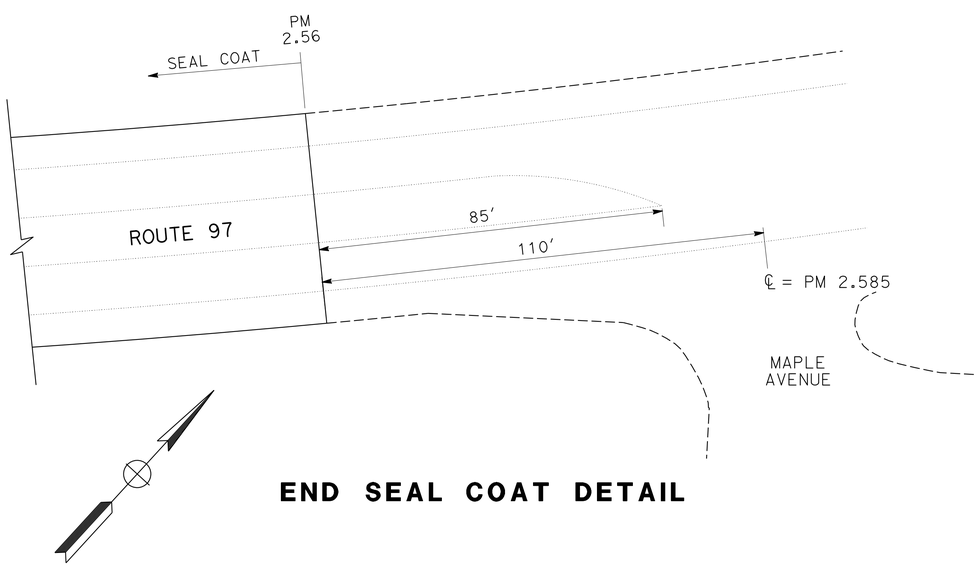

END SEAL COAT DETAIL

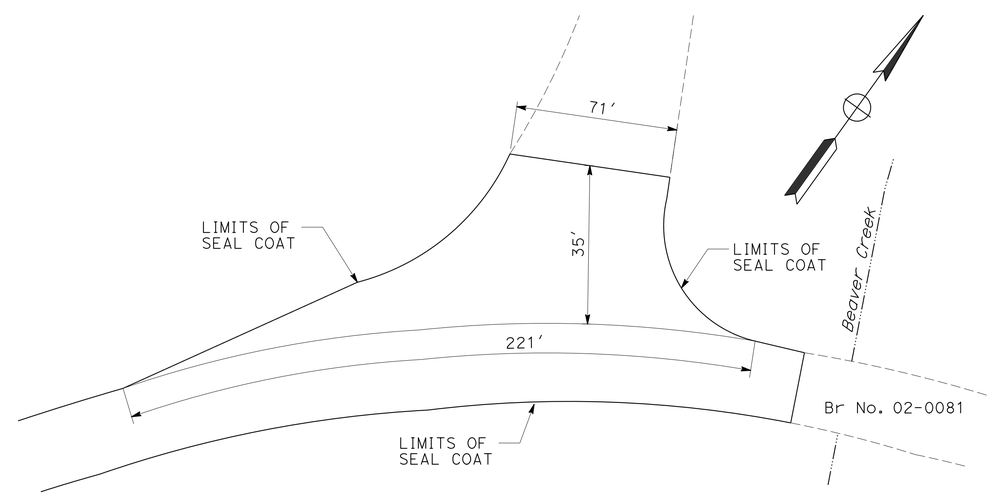

BEAVER CREEK CAMPGROUND DETAIL

ROUTE 96 PM 88.25

CONSTRUCTION DETAILS

NO SCALE

C-1

REVISED BY | DATE REVISED
MICHAEL CONNER | KARLIE SMITH
CALCULATED-DESIGNED BY | CHECKED BY
FUNCTIONAL SUPERVISOR
MICHAEL CONNER

STATE OF CALIFORNIA - DEPARTMENT OF TRANSPORTATION
Caltrans® MAINTENANCE

P:\proj3\02\0h950_plans\pse\20h950ga001.dgn

LAST REVISION 09-22-15 | DATE PLOTTED => 03-NOV-2015 TIME PLOTTED => 11:24

Dist	COUNTY	ROUTE	POST MILES TOTAL PROJECT	SHEET No.	TOTAL SHEETS
02	Sis	96,97	77.2/92.0 2.0/2.6	4	15

09-22-15
REGISTERED CIVIL ENGINEER DATE

09-22-15
PLANS APPROVAL DATE

REGISTERED PROFESSIONAL ENGINEER MICHAEL A. CONNER No. C73123 Exp. 12-31-16 CIVIL STATE OF CALIFORNIA

THE STATE OF CALIFORNIA OR ITS OFFICERS OR AGENTS SHALL NOT BE RESPONSIBLE FOR THE ACCURACY OR COMPLETENESS OF SCANNED COPIES OF THIS PLAN SHEET.

NOTES:

1. EXACT LOCATION OF ALL SIGNS TO BE DETERMINED BY THE ENGINEER.
2. CALIFORNIA CODES ARE DESIGNATED BY (CA), OTHERWISE FEDERAL CODES ARE SHOWN.
3. EXISTING UTILITY FACILITIES HAVE NOT BEEN PLOTTED ON THESE PLANS.
4. INTERMEDIATE C11(CA) SIGNS SHOULD BE PLACED EVERY 3 TO 5 MILES AS NECESSARY.

ROAD CONNECTIONS

Loc	PM	DESCRIPTION	Ⓑ	Ⓓ
1	83.71	USFS 47N58 Rd	L+	L+
	84.06	WALKER BRIDGE Rd	R+	R+
	84.88	SPECIAL SEVICE ROAD 40	L+	L+
	88.25	BEAVER CREEK CAMPGROUND	L+	L+
2	2.04	ANGEL VALLEY Rd	R+	R+
	2.26	EVERGREEN Rd	R+	R+
	2.59	MAPLE Ave	R+	R+
	2.64	BROOKSIDE Ave	R+	R+

CONSTRUCTION AREA SIGNS (STATIONARY MOUNTED)

○	TYPE	PANEL SIZE INCHES	SIGN MESSAGE	NO. OF POSTS AND SIZE	NO OF SIGNS
Ⓐ	C11(CA) C23B(CA)	60" x 36" 36" x 18"	ROAD CONSTRUCTION NEXT XX MILES PAVEMENT MAINTENANCE	2- 4" x 6"	4
Ⓑ	W20-1 C23B(CA)	48" x 48" 36" x 18"	ROAD WORK AHEAD PAVEMENT MAINTENANCE	1- 4" x 6"	8
Ⓒ	C11(CA)	60" x 36"	ROAD CONSTRUCTION NEXT XX MILES	2- 4" x 6"	6
Ⓓ	G20-2	36" x 18"	END ROAD WORK	1- 4" x 4"	12

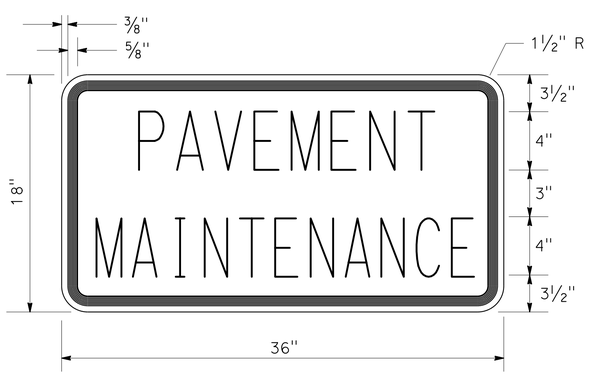

C23B(CA) SIGN PANEL DETAIL

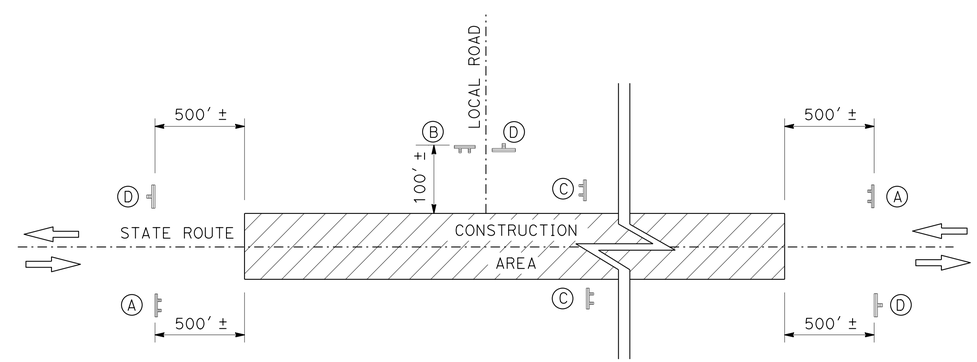

CONSTRUCTION AREA SIGNS (STATIONARY MOUNTED)

CONSTRUCTION AREA SIGNS

NO SCALE

CS-1

MICHAEL CONNER — KARLIE SMITH — REVISED BY — DATE REVISED — CALCULATED-DESIGNED BY — CHECKED BY — FUNCTIONAL SUPERVISOR: MICHAEL CONNER

Caltrans® STATE OF CALIFORNIA - DEPARTMENT OF TRANSPORTATION **MAINTENANCE**

P:\proj3\02\0h950_plans\pse\20h9501a001.dgn

LAST REVISION 09-22-15 — DATE PLOTTED => 03-NOV-2015 — TIME PLOTTED => 11:24

Dist	COUNTY	ROUTE	POST MILES TOTAL PROJECT	SHEET No.	TOTAL SHEETS
02	Sis	96,97	77.2/92.0 2.0/2.6	5	15

Russell Flood 09-22-15
REGISTERED CIVIL ENGINEER DATE

09-22-15
PLANS APPROVAL DATE

REGISTERED PROFESSIONAL ENGINEER
RUSSELL FLOOD
No. C72261
Exp. 06-30-16
CIVIL
STATE OF CALIFORNIA

THE STATE OF CALIFORNIA OR ITS OFFICERS OR AGENTS SHALL NOT BE RESPONSIBLE FOR THE ACCURACY OR COMPLETENESS OF SCANNED COPIES OF THIS PLAN SHEET.

NOTE:

1. EXISTING UTILITY FACILITIES HAVE NOT BEEN PLOTTED ON THESE PLANS.

LEGEND:

TYPE III ARROW

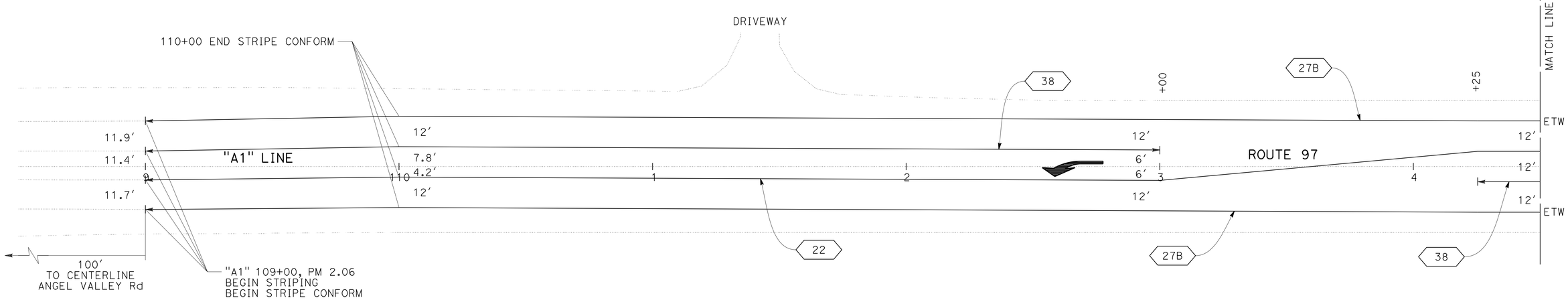

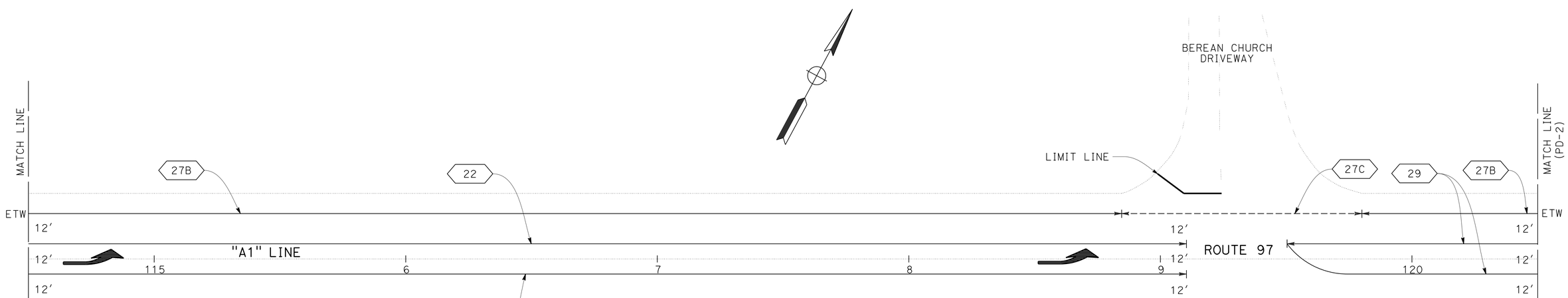

APPROVED FOR PAVEMENT DELINEATION WORK ONLY

PAVEMENT DELINEATION PLAN

SCALE: 1" = 20′

PD-1

REVISED BY | DATE REVISED
RUSSELL FLOOD | GINNY SEIBERT
CALCULATED-DESIGNED BY | CHECKED BY
FUNCTIONAL SUPERVISOR | STEVE TOPAL
STATE OF CALIFORNIA - DEPARTMENT OF TRANSPORTATION
Caltrans
DESIGN

P:\proj3\02\0h950_plans\pse\20h950na001.dgn

LAST REVISION 08-20-15 | DATE PLOTTED => 03-NOV-2015 | TIME PLOTTED => 11:24

Dist	COUNTY	ROUTE	POST MILES TOTAL PROJECT	SHEET No.	TOTAL SHEETS
02	Sis	96,97	77.2/92.0 2.0/2.6	6	15

Russell Flood 09-22-15
REGISTERED CIVIL ENGINEER DATE

09-22-15
PLANS APPROVAL DATE

REGISTERED PROFESSIONAL ENGINEER
RUSSELL FLOOD
No. C72261
Exp. 06-30-16
CIVIL
STATE OF CALIFORNIA

THE STATE OF CALIFORNIA OR ITS OFFICERS OR AGENTS SHALL NOT BE RESPONSIBLE FOR THE ACCURACY OR COMPLETENESS OF SCANNED COPIES OF THIS PLAN SHEET.

NOTE:

1. EXISTING UTILITY FACILITIES HAVE NOT BEEN PLOTTED ON THESE PLANS.

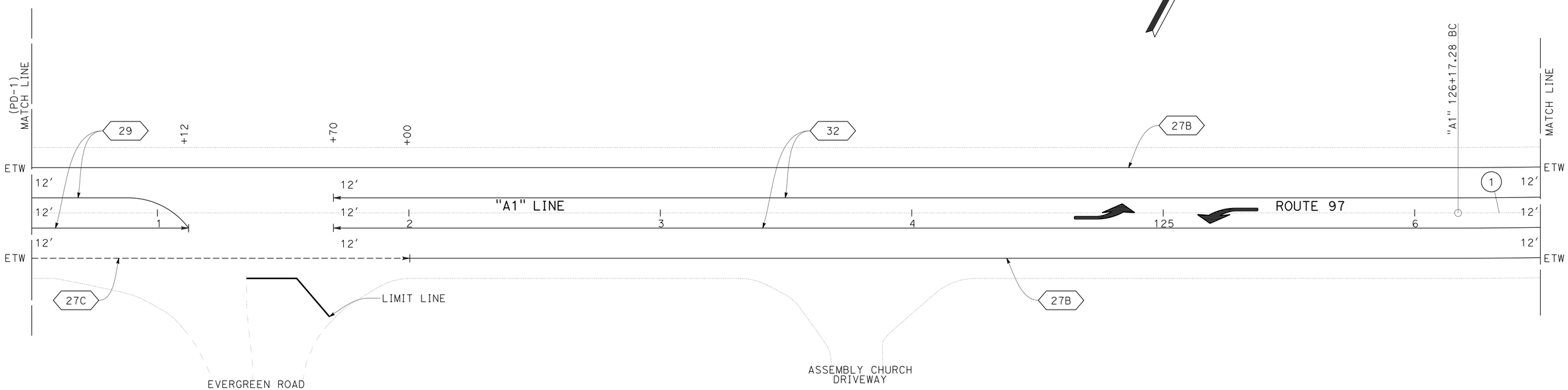

CURVE DATA

No. ⊕	R	Δ	T	L
1	2000′	08°53′06"	155.39′	310.15′
2	3000′	24°37′54"	654.99′	1289.74′

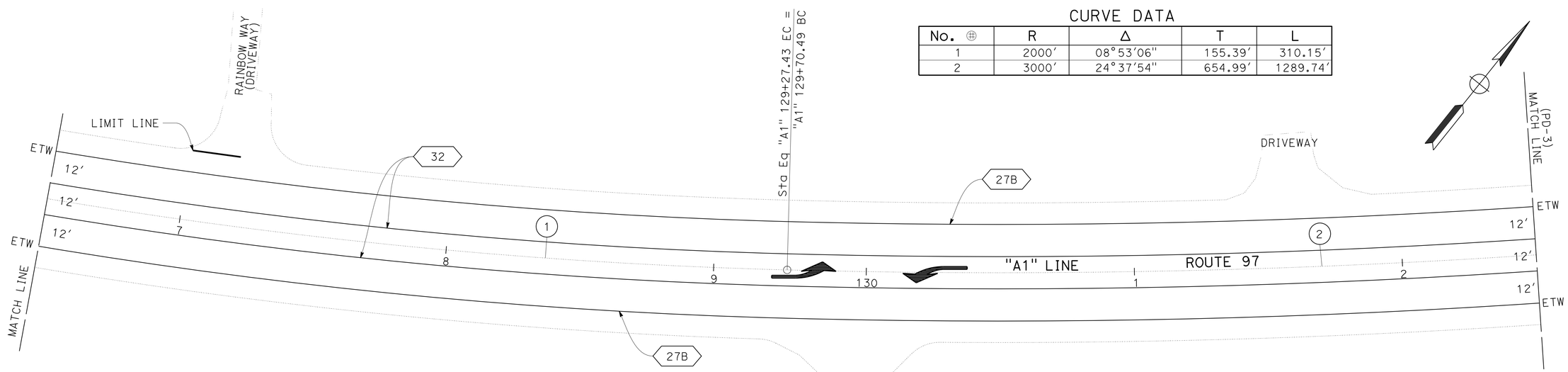

PAVEMENT DELINEATION PLAN

SCALE: 1" = 20′

PD-2

APPROVED FOR PAVEMENT DELINEATION WORK ONLY

REVISED BY | DATE REVISED
RUSSELL FLOOD | GINNY SEIBERT
CALCULATED-DESIGNED BY | CHECKED BY
FUNCTIONAL SUPERVISOR: STEVE TOPAL

STATE OF CALIFORNIA - DEPARTMENT OF TRANSPORTATION
Caltrans® **DESIGN**

P:\proj3\02\0h950_plans\pse\20h950na002.dgn

LAST REVISION 08-20-15 | DATE PLOTTED => 03-NOV-2015 | TIME PLOTTED => 11:24

Dist	COUNTY	ROUTE	POST MILES TOTAL PROJECT	SHEET No.	TOTAL SHEETS
02	Sis	96,97	77.2/92.0 2.0/2.6	7	15

Russell Flood 09-22-15
REGISTERED CIVIL ENGINEER DATE

09-22-15
PLANS APPROVAL DATE

REGISTERED PROFESSIONAL ENGINEER
RUSSELL FLOOD
No. C72261
Exp. 06-30-16
CIVIL
STATE OF CALIFORNIA

THE STATE OF CALIFORNIA OR ITS OFFICERS OR AGENTS SHALL NOT BE RESPONSIBLE FOR THE ACCURACY OR COMPLETENESS OF SCANNED COPIES OF THIS PLAN SHEET.

NOTE:

1. EXISTING UTILITY FACILITIES HAVE NOT BEEN PLOTTED ON THESE PLANS.

CURVE DATA

No. ⊕	R	Δ	T	L
2	3000′	24°37′54″	654.99′	1289.74′

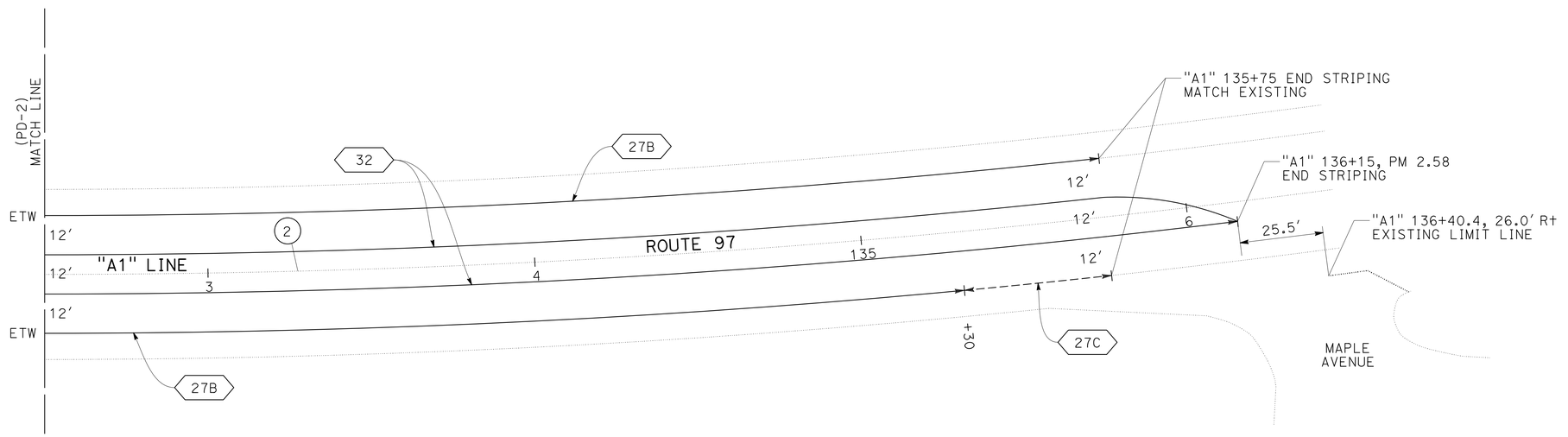

PAVEMENT DELINEATION PLAN

SCALE: 1" = 20′

PD-3

APPROVED FOR PAVEMENT DELINEATION WORK ONLY

REVISED BY	DATE REVISED

CALCULATED-DESIGNED BY: RUSSELL FLOOD
CHECKED BY: GINNY SEIBERT
FUNCTIONAL SUPERVISOR: STEVE TOPAL

STATE OF CALIFORNIA - DEPARTMENT OF TRANSPORTATION
Caltrans
DESIGN

P:\proj3\02\0h950_plans\pse\20h950na003.dgn

LAST REVISION 08-20-15
DATE PLOTTED => 03-NOV-2015
TIME PLOTTED => 11:24

Dist	COUNTY	ROUTE	POST MILES TOTAL PROJECT	SHEET No.	TOTAL SHEETS
02	Sis	96,97	77.2/92.0 2.0/2.6	8	15

REGISTERED CIVIL ENGINEER 09-22-15 DATE

09-22-15
PLANS APPROVAL DATE

REGISTERED PROFESSIONAL ENGINEER MICHAEL A. CONNER No. C73123 Exp. 12-31-16 CIVIL STATE OF CALIFORNIA

THE STATE OF CALIFORNIA OR ITS OFFICERS OR AGENTS SHALL NOT BE RESPONSIBLE FOR THE ACCURACY OR COMPLETENESS OF SCANNED COPIES OF THIS PLAN SHEET.

NOTES:

1. EXISTING UTILITY FACILITIES HAVE NOT BEEN PLOTTED ON THESE PLANS.
2. NO PAVEMENT MARKERS AT LOCATION 1.

ABBREVIATIONS:

SEAL COAT SEAL COAT AND FLUSH COAT

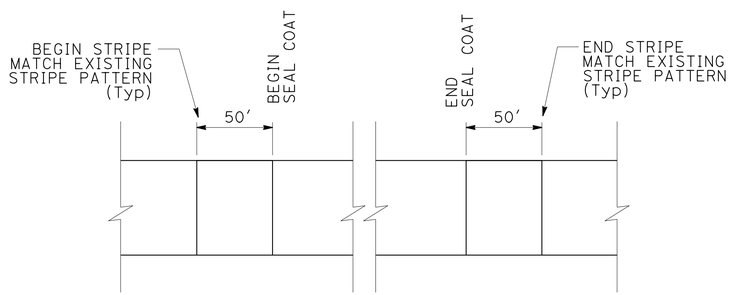

TRAFFIC STRIPE MATCH DETAIL

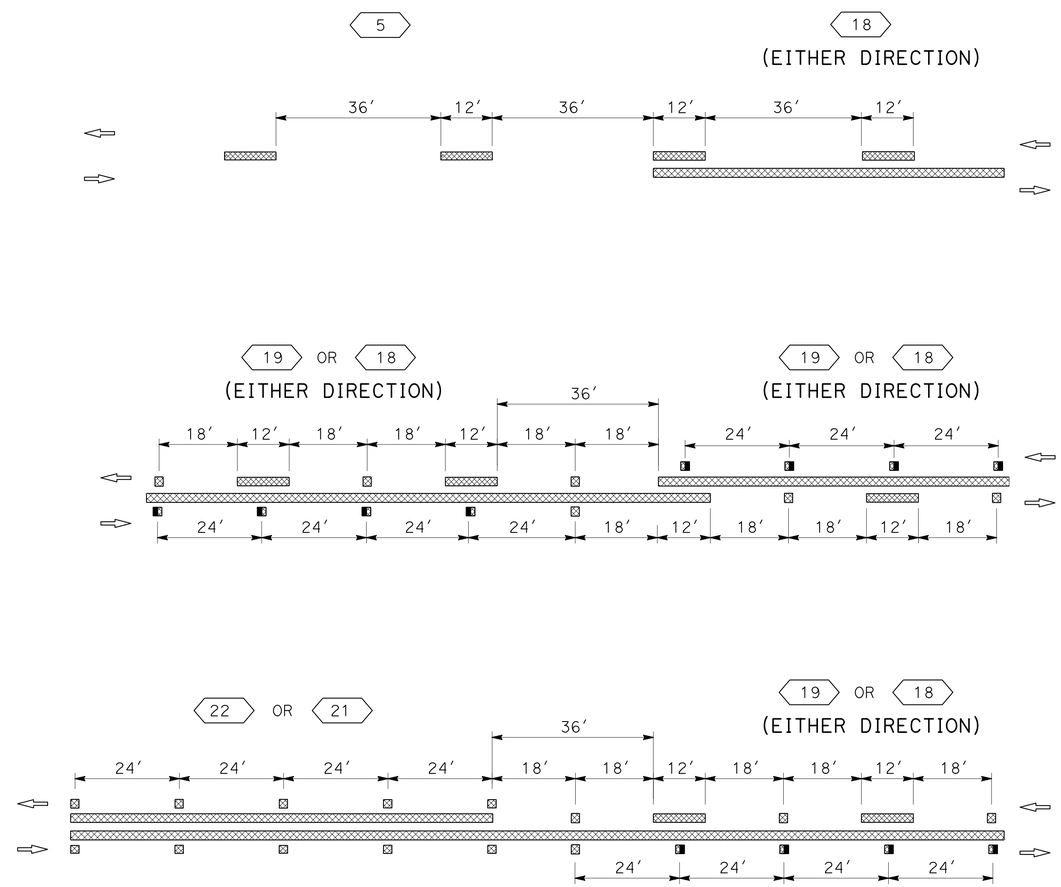

TYPICAL STRIPE TRANSITION DETAILS

PAVEMENT DELINEATION DETAILS

NO SCALE

PDD-1

REVISED BY	DATE REVISED
MICHAEL CONNER	KARLIE SMITH

CALCULATED-DESIGNED BY | CHECKED BY

FUNCTIONAL SUPERVISOR: MICHAEL CONNER

Caltrans® STATE OF CALIFORNIA - DEPARTMENT OF TRANSPORTATION **MAINTENANCE**

P:\proj13\02\0h950_plans\pse\20h950nb001.dgn

LAST REVISION 09-22-15 | DATE PLOTTED => 03-NOV-2015 | TIME PLOTTED => 11:24

Dist	COUNTY	ROUTE	POST MILES TOTAL PROJECT	SHEET No.	TOTAL SHEETS
02	Sis	96,97	77.2/92.0 2.0/2.6	9	15

REGISTERED CIVIL ENGINEER 09-22-15 DATE

09-22-15
PLANS APPROVAL DATE

REGISTERED PROFESSIONAL ENGINEER MICHAEL A. CONNER No. C73123 Exp. 12-31-16 CIVIL STATE OF CALIFORNIA

THE STATE OF CALIFORNIA OR ITS OFFICERS OR AGENTS SHALL NOT BE RESPONSIBLE FOR THE ACCURACY OR COMPLETENESS OF SCANNED COPIES OF THIS PLAN SHEET.

NOTES:

1. EXISTING UTILITY FACILITIES HAVE NOT BEEN PLOTTED ON THESE PLANS.
2. (N) - NOT A SEPARATE PAY ITEM, FOR INFORMATION ONLY.
3. STRIPING QUANTITIES INCLUDE THE LENGTH TO EXTEND APPROXIMATELY 50' BEYOND SEAL COAT TO MATCH THE EXISTING STRIPE DETAILS.

ABBREVIATIONS:

Mid MIDDLE

REMOVE PAVEMENT MARKER (N)

Loc	Rte	POST MILE LIMITS	EA
1	96	77.23-92.00	6351
2	97	2.06-2.58	252
TOTAL			6603

PAVEMENT MARKER (RETROREFLECTIVE-RECESSED)

Loc	Rte	POST MILE LIMITS	TYPE D	TYPE G
			EA	EA
2	97	2.06-2.58	255	38
TOTAL			293	

THERMOPLASTIC TRAFFIC STRIPE (SPRAYABLE)

Loc	Rte	POST MILE LIMITS	DETAIL 5	DETAIL 18	DETAIL 21	DETAIL 22	DETAIL 27B	DETAIL 27C	DETAIL 29	DETAIL 32	DETAIL 38
			LF	LF	LF	LF	LF	LF	LF	LF	LF
1	96	77.23-92.00	476	5967	71,544		155,972	820			
2	97	2.06-2.58				1010	4954	311	331	2806	885
SUBTOTAL			476	5967	71,544	1010	160,926	1131	331	2806	885
TOTAL			245,076								

THERMOPLASTIC PAVEMENT MARKING

Loc	Rte	POST MILE	Lt	Mid	Rt	(N) EA	SQFT	REMARKS
1	96	82.78	X			1	30.0	ROAD CONNECTION LIMIT LINE
		83.71	X			1	41.0	ROAD CONNECTION LIMIT LINE
		84.06			X	1	24.0	ROAD CONNECTION LIMIT LINE
		84.06			X	1	22.0	STOP
		84.74	X			1	14.0	ROAD CONNECTION LIMIT LINE
		84.78	X			1	16.5	ROAD CONNECTION LIMIT LINE
		84.88	X			1	18.0	ROAD CONNECTION LIMIT LINE
		88.25	X			1	59.0	ROAD CONNECTION LIMIT LINE
		88.25	X			1	22.0	STOP
2	97	2.13		X		1	42.0	TYPE III (L) ARROW
		2.17		X		1	42.0	TYPE III (L) ARROW
		2.25		X		1	42.0	TYPE III (L) ARROW
		2.26	X			1	28.0	ROAD CONNECTION LIMIT LINE
		2.30			X	1	40.0	ROAD CONNECTION LIMIT LINE
		2.36		X		2	84.0	TYPE III (L) ARROW
		2.41	X			1	18.0	ROAD CONNECTION LIMIT LINE
		2.46		X		2	84.0	TYPE III (L) ARROW
TOTAL							626.5	

REMOVE THERMOPLASTIC PAVEMENT MARKING

Loc	Rte	POST MILE	Lt	Mid	Rt	(N) EA	SQFT	REMARKS
1	96	82.78	X			1	30.0	ROAD CONNECTION LIMIT LINE
		83.71	X			1	41.0	ROAD CONNECTION LIMIT LINE
		84.06			X	1	24.0	ROAD CONNECTION LIMIT LINE
		84.06			X	1	22.0	STOP
		84.74	X			1	14.0	ROAD CONNECTION LIMIT LINE
		84.78	X			1	16.5	ROAD CONNECTION LIMIT LINE
		84.88	X			1	18.0	ROAD CONNECTION LIMIT LINE
		88.25	X			1	59.0	ROAD CONNECTION LIMIT LINE
		88.25	X			1	22.0	STOP
2	97	2.26	X			1	28.0	ROAD CONNECTION LIMIT LINE
		2.30			X	1	40.0	ROAD CONNECTION LIMIT LINE
		2.41	X			1	18.0	ROAD CONNECTION LIMIT LINE
TOTAL							332.5	

PAVEMENT DELINEATION QUANTITIES

PDQ-1

REVISED BY | DATE REVISED
MICHAEL CONNER | KARLIE SMITH
CALCULATED-DESIGNED BY | CHECKED BY
FUNCTIONAL SUPERVISOR: MICHAEL CONNER

STATE OF CALIFORNIA - DEPARTMENT OF TRANSPORTATION
Caltrans MAINTENANCE

P:\proj3\02\0h950_plans\pse\20h950nc001.dgn

LAST REVISION 09-22-15 | DATE PLOTTED => 03-NOV-2015 | TIME PLOTTED => 11:24

Dist	COUNTY	ROUTE	POST MILES TOTAL PROJECT	SHEET No.	TOTAL SHEETS
02	Sis	96,97	77.2/92.0 2.0/2.6	10	15

REGISTERED CIVIL ENGINEER 09-22-15 DATE

09-22-15
PLANS APPROVAL DATE

REGISTERED PROFESSIONAL ENGINEER MICHAEL A. CONNER No. C73123 Exp. 12-31-16 CIVIL STATE OF CALIFORNIA

THE STATE OF CALIFORNIA OR ITS OFFICERS OR AGENTS SHALL NOT BE RESPONSIBLE FOR THE ACCURACY OR COMPLETENESS OF SCANNED COPIES OF THIS PLAN SHEET.

NOTES:

1. EXACT LOCATIONS OF REPLACE ASPHALT CONCRETE SURFACING TO BE DETERMINED BY THE ENGINEER.
2. (N) - NOT A SEPARATE PAY ITEM, FOR INFORMATION ONLY.
3. EXISTING UTILITY FACILITIES HAVE NOT BEEN PLOTTED ON THESE PLANS.

ASPHALTIC EMULSION (FOG SEAL COAT)

Loc	Rte	POST MILE	SIDE Rt/Lt	(N) AREA	ASPHALTIC EMULSION (FOG SEAL COAT)
				SQFT	TON
1	96	77.23	Lt	1588	3.4
		77.90	Rt	7462	
		80.05	Rt	1100	
		80.47	Rt	806	
		82.68	Lt	1388	
		82.78	Lt	4515	
		83.55	Lt	1075	
		83.71	Lt	2013	
		83.89	Rt	660	
		83.89	Lt	1890	
		83.96	Rt	1900	
		84.06	Rt	3840	
		84.74	Lt	488	
		84.74	Rt	235	
		84.78	Lt	724	
		84.88	Lt	860	
		85.50	Rt	7280	
		85.53	Lt	5868	
		86.25	Lt	338	
		87.50	Rt	2142	
		87.60	Rt	2500	
		87.60	Lt	3900	
		87.82	Rt	3850	
		88.62	Rt	366	
		88.62	Lt	300	
		88.63	Rt	480	
		88.76	Rt	621	
		88.77	Rt	880	
		91.72	Rt	2871	
TOTAL					3.4

REPLACE ASPHALT CONCRETE SURFACING

Loc	Rte	POST MILE LIMITS	(N) Approx No. OF DIGOUTS	(N) LENGTH (Avg)	(N) WIDTH	(N) DEPTH	CY
				LF	LF	LF	
1	96	77.23-78.00	10	100	4	0.33	49
		78.00-79.00	10	100	4	0.33	49
		79.00-80.00	10	100	4	0.33	49
		80.00-81.00	10	100	4	0.33	49
		81.00-82.00	10	100	4	0.33	49
		82.00-83.00	10	100	4	0.33	49
		83.00-84.00	10	100	4	0.33	49
		84.00-85.00	10	100	4	0.33	49
		85.00-86.00	10	100	4	0.33	49
		86.00-87.00	10	100	4	0.33	49
		87.00-88.00	10	100	4	0.33	49
		88.00-89.00	10	100	4	0.33	49
		89.00-90.00	10	100	4	0.33	49
		90.00-91.00	10	100	4	0.33	49
		91.00-92.00	10	100	4	0.33	49
TOTAL							735

MAINTAIN EXISTING TRAFFIC MANAGEMENT SYSTEM ELEMENTS DURING CONSTRUCTION

Loc	Rte	PM	TYPE	LOCATION DESCRIPTION
2	97	2.59	HAR FLASHER	NORTH OF WEED NEAR MAPLE AVENUE (SB)
		2.60	HAR FLASHER	NORTH OF WEED NEAR MAPLE AVENUE (NB)

ROADWAY QUANTITIES SUMMARY

Loc	Rte	POST MILE LIMITS	(N) LENGTH	(N) WIDTH	SEAL COAT		FLUSH COAT	
					ASPHALT-RUBBER BINDER	PRECOATED SCREENINGS	ASPHALTIC EMULSION (FLUSH COAT)	SAND COVER (SEAL)
		PM - PM	LF	LF	TON	TON	TON	TON
1	96	77.23-77.50	1426	25.0-28.5	603	3893	55.7	445
		77.50-78.00	2640	28.5-29.0				
		78.00-78.50	2640	29.0-28.0				
		78.50-79.00	2640	28.0-26.5				
		79.00-79.50	2640	26.5-28.5				
		79.50-80.00	2640	28.5-25.5				
		80.00-80.50	2640	25.5-28.5				
		80.50-81.00	2640	28.5-27.0				
		81.00-81.50	2640	27.0-26.0				
		81.50-82.00	2640	26.0-25.5				
		82.00-82.31	1637	25.5-26.0				
		82.31-82.34	158	26.0-36.5				
		82.34-82.40	319	36.5-36.5				
		82.40-82.50	528	36.5-26.5				
		82.50-83.00	2640	26.5-29.0				
		83.00-83.50	2640	29.0-26.5				
		83.50-84.00	2640	26.5-30.0				
		84.00-84.04	211	30.0-33.0				
		84.04-84.06	106	38.0-49.0				
		84.06-84.10	211	49.0-32.5				
		84.10-84.15	264	32.5-23.5				
		84.15-84.50	1848	23.5-23.0				
		84.50-85.00	2640	23.0-23.5				
		85.00-R85.50	2640	23.5-25.5				
		R85.50-86.00	2640	25.5-22.5				
		86.00-86.50	2640	22.5-23.5				
		86.50-87.25	3960	23.5-23.0				
		87.25-87.50	1320	23.0-25.0				
		87.50-88.00	2640	25.0-24.5				
		88.00-88.26	1373	24.5-25.0				
		88.29-88.50	1109	25.0-24.0				
		88.50-89.00	2640	24.0-24.0				
		89.00-89.50	2640	24.0-23.5				
		89.50-90.50	5280	23.5-24.0				
		90.50-91.00	2640	24.0-24.5				
		91.00-91.50	2640	24.5-26.0				
		91.50-92.00	2640	26.0-23.5				
		ROAD CONNECTION PM 88.25			2	10	0.2	2
2	97	2.08-2.56	3168	52.0	40	257	3.7	30
TOTAL					645	4160	59.6	477

SUMMARY OF QUANTITIES

Q-1

REVISED BY | DATE REVISED
MICHAEL CONNER | KARLIE SMITH
CALCULATED-DESIGNED BY | CHECKED BY
FUNCTIONAL SUPERVISOR
MICHAEL CONNER

STATE OF CALIFORNIA - DEPARTMENT OF TRANSPORTATION
Caltrans MAINTENANCE

P:\proj3\02\0h950_plans\pse\20h950pa001.dgn

LAST REVISION 09-22-15 | DATE PLOTTED => 03-NOV-2015 | TIME PLOTTED => 11:24

M

Maint	MAINTENANCE
Max	MAXIMUM
MB	METAL BEAM
MBB	METAL BEAM BARRIER
MBGR	METAL BEAM GUARD RAILING
Med	MEDIAN
MGS	MIDWEST GUARDRAIL SYSTEM
MH	MANHOLE
Min	MINIMUM
Misc	MISCELLANEOUS
Misc I & S	MISCELLANEOUS IRON AND STEEL
Mkr	MARKER
Mod	MODIFIED,
	MODIFY
Mon	MONUMENT
MP	METAL PLATE
MPGR	METAL PLATE GUARD RAILING
MR	MOVEMENT RATING
MSE	MECHANICALLY STABILIZED EMBANKMENT
Mt	MOUNTAIN, MOUNT
Mtl	MATERIAL
MVP	MAINTENANCE VEHICLE PULLOUT

N

N	NORTH
NB	NORTHBOUND
No.	NUMBER (MUST HAVE PERIOD)
Nos.	NUMBERS (MUST HAVE PERIOD)
NPS	NOMINAL PIPE SIZE
NS	NEAR SIDE
NSP	NEW STANDARD PLAN
NTS	NOT TO SCALE

O

Oblr	OBLITERATE
OC	OVERCROSSING
OD	OUTSIDE DIAMETER
OF	OUTSIDE FACE
OG	ORIGINAL GROUND
OGAC	OPEN GRADED ASPHALT CONCRETE
OGFC	OPEN GRADED FRICTION COURSE
OH	OVERHEAD
OHWM	ORDINARY HIGH WATER MARK
O-O	OUT TO OUT
Opp	OPPOSITE
OSD	OVERSIDE DRAIN

P

P	PAGE
PAP	PERFORATED ALUMINUM PIPE
PB	PULL BOX
PC	POINT OF CURVATURE,
	PRECAST
PCC	POINT OF COMPOUND CURVE,
	PORTLAND CEMENT CONCRETE
PCMS	PORTABLE CHANGEABLE MESSAGE SIGN
PCP	PERFORATED CONCRETE PIPE,
	PRESTRESSED CONCRETE PIPE
PCVC	POINT OF COMPOUND VERTICAL CURVE
PEC	PERMIT TO ENTER AND CONSTRUCT
Ped	PEDESTRIAN
Ped OC	PEDESTRIAN OVERCROSSING
Ped UC	PEDESTRIAN UNDERCROSSING
Perm Mtl	PERMEABLE MATERIAL

P continued

PG	PROFILE GRADE
PI	POINT OF INTERSECTION
PJP	PARTIAL JOINT PENETRATION
Pkwy	PARKWAY
ℙ,PL	PLATE
P/L	PROPERTY LINE
PM	POST MILE,
	TIME FROM NOON TO MIDNIGHT
PN	PAVING NOTCH
POC	POINT OF HORIZONTAL CURVE
POT	POINT OF TANGENT
POVC	POINT OF VERTICAL CURVE
PP	PIPE PILE,
	PLASTIC PIPE,
	POWER POLE
PPL	PREFORMED PERMEABLE LINER
PPP	PERFORATED PLASTIC PIPE
PRC	POINT OF REVERSE CURVE
PRF	PAVEMENT REINFORCING FABRIC
PRVC	POINT OF REVERSE VERTICAL CURVE
PS&E	PLANS, SPECIFICATIONS AND ESTIMATES
PS, P/S	PRESTRESSED
PSP	PERFORATED STEEL PIPE
PT	POINT OF TANGENCY
PVC	POLYVINYL CHLORIDE
Pvmt	PAVEMENT

Q

Qty	QUANTITY

R

R	RADIUS
R & D	REMOVE AND DISPOSE
R & S	REMOVE AND SALVAGE
R/C	RATE OF CHANGE
RCA	REINFORCED CONCRETE ARCH
RCB	REINFORCED CONCRETE BOX
RCP	REINFORCED CONCRETE PIPE
RCPA	REINFORCED CONCRETE PIPE ARCH
Rd	ROAD
Reinf	REINFORCED,
	REINFORCEMENT,
	REINFORCING
Rel	RELOCATE
Repl	REPLACEMENT
Ret	RETAINING
Rev	REVISED, REVISION
Rdwy	ROADWAY
RHMA	RUBBERIZED HOT MIX ASPHALT
Riv	RIVER
RM	ROAD-MIXED
RP	RADIUS POINT,
	REFERENCE POINT
RR	RAILROAD
RSP	ROCK SLOPE PROTECTION,
	REVISED STANDARD PLAN
Rt	RIGHT
Rte	ROUTE
RW	REDWOOD,
	RETAINING WALL
R/W	RIGHT OF WAY
Rwy	RAILWAY

S

S	SOUTH,
	SUPPLEMENT
SAE	STRUCTURE APPROACH EMBANKMENT
Salv	SALVAGE
SAPP	STRUCTURAL ALUMINUM PLATE PIPE
SB	SOUTHBOUND
SC	SAND CUSHION
SCSP	SLOTTED CORRUGATED STEEL PIPE
SD	STORM DRAIN
Sec	SECOND,
	SECTION
Sep	SEPARATION
SG	SUBGRADE
Shld	SHOULDER
Sht	SHEET
Sim	SIMILAR
℄	STATION LINE
SM	SELECTED MATERIAL
Spec	SPECIAL,
	SPECIFICATIONS
SPP	SLOTTED PLASTIC PIPE
SS	SLOPE STAKE
SSBM	STRAP AND SADDLE BRACKET METHOD
SSD	STRUCTURAL SECTION DRAIN
SSPA	STRUCTURAL STEEL PLATE ARCH
SSPP	STRUCTURAL STEEL PLATE PIPE
SSPPA	STRUCTURAL STEEL PLATE PIPE ARCH
SSRP	STEEL SPIRAL RIB PIPE
St	STREET
Sta	STATION
STBB	SINGLE THRIE BEAM BARRIER
Std	STANDARD
Str	STRUCTURE
Surf	SURFACING
SW	SIDEWALK,
	SOUND WALL
Swr	SEWER
Sym	SYMMETRICAL
S4S	SURFACE 4 SIDES

T

T	SEMI-TANGENT
Tan	TANGENT
TBB	THRIE BEAM BARRIER
Tbr	TIMBER
TC	TOP OF CURB
TCB	TRAFFIC CONTROL BOX
TCE	TEMPORARY CONSTRUCTION EASEMENT
Tel	TELEPHONE
Temp	TEMPORARY
TG	TOP OF GRADE
Tot	TOTAL
TP	TELEPHONE POLE
TPB	TREATED PERMEABLE BASE
TPM	TREATED PERMEABLE MATERIAL
Trans	TRANSITION

T continued

TS	TRANSVERSE,
	TRAFFIC SIGNAL,
	TUBULAR STEEL
Typ	TYPICAL

U

UC	UNDERCROSSING
UD	UNDERDRAIN
UG	UNDERGROUND
UON	UNLESS OTHERWISE NOTED
UP	UNDERPASS

V

V	VALVE,
	DESIGN SPEED
Var	VARIABLE,
	VARIES
VC	VERTICAL CURVE
VCP	VITRIFIED CLAY PIPE
Vert	VERTICAL
Via	VIADUCT
Vol	VOLUME

W

W	WEST,
	WIDTH
WB	WESTBOUND
WH	WEEP HOLE
WM	WIRE MESH
WS	WATER SURFACE
WSP	WELDED STEEL PIPE
Wt	WEIGHT
WV	WATER VALVE
WW	WINGWALL
WWLOL	WINGWALL LAYOUT LINE

X

X Sec	CROSS SECTION
Xing	CROSSING

Y

Yr	YEAR
Yrs	YEARS

Dist	COUNTY	ROUTE	POST MILES TOTAL PROJECT	SHEET No.	TOTAL SHEETS
02	Sis	96,97	77.2/92.0 2.0/2.6	11	15

Grace M. Tsushima
REGISTERED CIVIL ENGINEER

July 19, 2013
PLANS APPROVAL DATE

REGISTERED PROFESSIONAL ENGINEER
Grace M. Tsushima
No. C49814
Exp. 9-30-14
CIVIL
STATE OF CALIFORNIA

THE STATE OF CALIFORNIA OR ITS OFFICERS OR AGENTS SHALL NOT BE RESPONSIBLE FOR THE ACCURACY OR COMPLETENESS OF SCANNED COPIES OF THIS PLAN SHEET.

TO ACCOMPANY PLANS DATED 09-22-15

UNIT OF MEASUREMENT SYMBOLS:

Some of the symbols used in the project plan quantity tables and in the Bid Item List are:

TABLE A

SYMBOL USED	DEFINITIONS
ACRE	ACRE
CF	CUBIC FOOT
CY	CUBIC YARD
EA	EACH
GAL	GALLON
LB	POUND
LF	LINEAR FOOT
SQFT	SQUARE FOOT
SQYD	SQUARE YARD
STA	100 FEET
TAB	TABLET
TON	2,000 POUNDS

Some of the symbols used in the plans other than in the project plan quantity tables are:

TABLE B

SYMBOL USED	DEFINITIONS
ksi	KIPS PER SQUARE INCH
ksf	KIPS PER SQUARE FOOT
psi	POUNDS PER SQUARE INCH
psf	POUNDS PER SQUARE FOOT
lb/ft^3, pcf	POUNDS PER CUBIC FOOT
tsf	TONS PER SQUARE FOOT
mph, MPH *	MILES PER HOUR
ø	NOMINAL DIAMETER
oz	OUNCE
lb	POUND
kip	1,000 POUNDS
cal	CALORIE
ft	FOOT OR FEET
gal	GALLON

* For use on a sign panel only

STATE OF CALIFORNIA
DEPARTMENT OF TRANSPORTATION

ABBREVIATIONS (SHEET 2 OF 2)

NO SCALE

RSP A10B DATED JULY 19, 2013 SUPERSEDES STANDARD PLAN A10B DATED MAY 20, 2011 - PAGE 2 OF THE STANDARD PLANS BOOK DATED 2010.

REVISED STANDARD PLAN RSP A10B

2010 REVISED STANDARD PLAN RSP A10B

DATE PLOTTED => 03-NOV-2015
TIME PLOTTED => 11:24

Dist	COUNTY	ROUTE	POST MILES TOTAL PROJECT	SHEET No.	TOTAL SHEETS
02	Sis	96,97	77.2/92.0 2.0/2.6	12	15

REGISTERED CIVIL ENGINEER

July 20, 2012
PLANS APPROVAL DATE

REGISTERED PROFESSIONAL ENGINEER
Roberta L. McLaughlin
No. C40375
Exp. 3-31-13
CIVIL
STATE OF CALIFORNIA

THE STATE OF CALIFORNIA OR ITS OFFICERS OR AGENTS SHALL NOT BE RESPONSIBLE FOR THE ACCURACY OR COMPLETENESS OF SCANNED COPIES OF THIS PLAN SHEET.

TO ACCOMPANY PLANS DATED 09-22-15

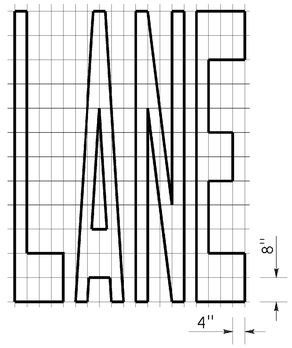

A=24 ft²

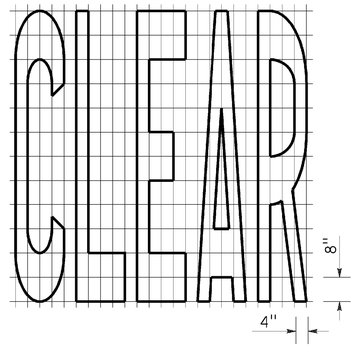

A=27 ft²

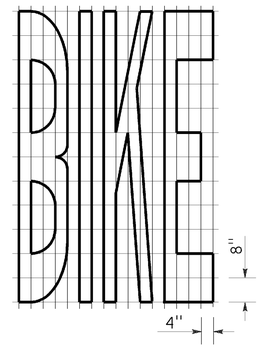

A=21 ft²

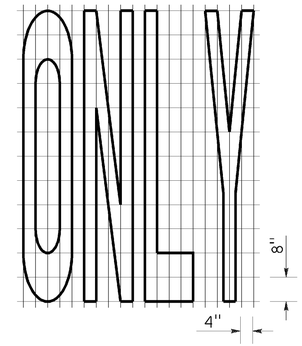

A=22 ft²

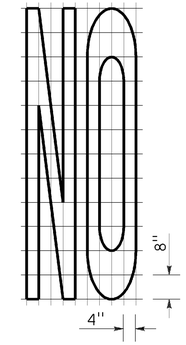

A=14 ft²

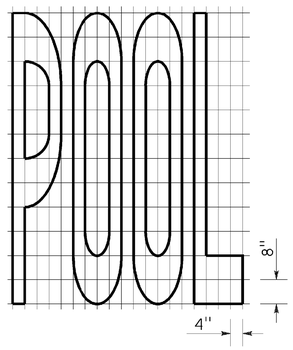

A=23 ft²

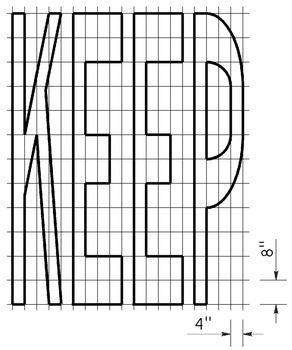

A=24 ft²

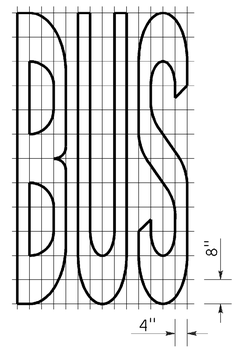

A=20 ft²

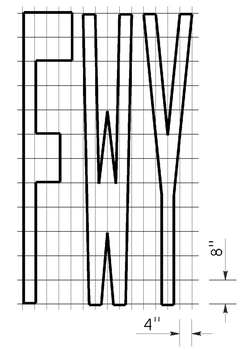

A=16 ft²

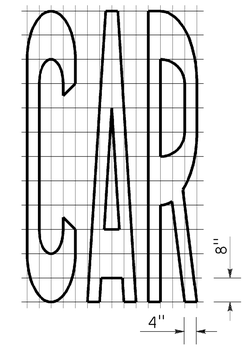

A=17 ft²

WORD MARKINGS			
ITEM	ft²	ITEM	ft²
LANE	24	NO	14
POOL	23	BIKE	21
CAR	17	BUS	20
CLEAR	27	ONLY	22
KEEP	24	FWY	16

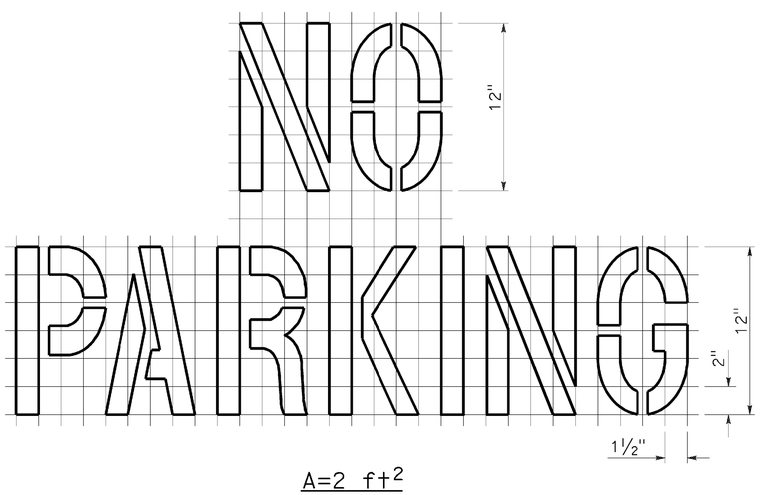

A=2 ft²
See Notes 6 and 7

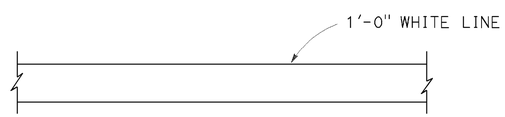

LIMIT LINE (STOP LINE)

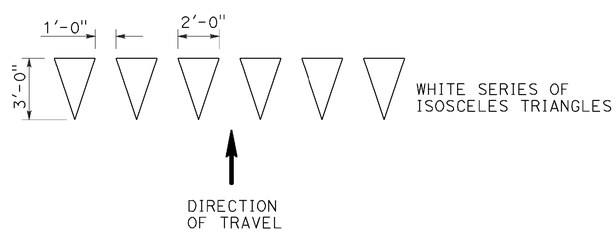

YIELD LINE

NOTES:

1. If a message consists of more than one word, it should read "UP", i.e., the first word should be nearest the driver.
2. The space between words should be at least four times the height of the characters for low speed roads, but not more than ten times the height of the characters. The space may be reduced appropriately where there is limited space because of local conditions.
3. Minor variations in dimensions may be accepted by the Engineer.
4. Portions of a letter, number or symbol may be separated by connecting segments not to exceed 2" in width.
5. The words "NO PARKING" pavement marking is to be used for parking facilities. For typical locations of markings, see Standard Plans A90A and A90B.
6. The words "NO PARKING", shall be painted in white letters no less than 1'-0" high on a contrasting background and located so that it is visible to traffic enforcement officials.

STATE OF CALIFORNIA
DEPARTMENT OF TRANSPORTATION

PAVEMENT MARKINGS WORDS, LIMIT AND YIELD LINES

NO SCALE

RSP A24E DATED JULY 20, 2012 SUPERSEDES STANDARD PLAN A24E
DATED MAY 20, 2011 - PAGE 17 OF THE STANDARD PLANS BOOK DATED 2010.

REVISED STANDARD PLAN RSP A24E

2010 REVISED STANDARD PLAN RSP A24E

DATE PLOTTED => 03-NOV-2015
TIME PLOTTED => 11:25

Dist	COUNTY	ROUTE	POST MILES TOTAL PROJECT	SHEET No.	TOTAL SHEETS
02	Sis	96,97	77.2/92.0 2.0/2.6	13	15

REGISTERED CIVIL ENGINEER

July 19, 2013
PLANS APPROVAL DATE

REGISTERED PROFESSIONAL ENGINEER
Gurinderpal Bhullar
No. C48815
Exp. 9-30-14
CIVIL
STATE OF CALIFORNIA

THE STATE OF CALIFORNIA OR ITS OFFICERS OR AGENTS SHALL NOT BE RESPONSIBLE FOR THE ACCURACY OR COMPLETENESS OF SCANNED COPIES OF THIS PLAN SHEET.

TO ACCOMPANY PLANS DATED 09-22-15

2010 REVISED STANDARD PLAN RSP T9

TABLE 1

TAPER LENGTH CRITERIA AND CHANNELIZING DEVICE SPACING

SPEED (S)	MINIMUM TAPER LENGTH * FOR WIDTH OF OFFSET 12 FEET (W)				MAXIMUM CHANNELIZING DEVICE SPACING		
					X	Y	Z **
	TANGENT 2L	MERGING L	SHIFTING L/2	SHOULDER L/3	TAPER	TANGENT	CONFLICT
mph	ft	ft	ft	ft	ft	ft	ft
20	160	80	40	27	20	40	10
25	250	125	63	42	25	50	12
30	360	180	90	60	30	60	15
35	490	245	123	82	35	70	17
40	640	320	160	107	40	80	20
45	1080	540	270	180	45	90	22
50	1200	600	300	200	50	100	25
55	1320	660	330	220	55	110	27
60	1440	720	360	240	60	120	30
65	1560	780	390	260	65	130	32
70	1680	840	420	280	70	140	35

* - For other offsets, use the following merging taper length formula for L:
For speed of 40 mph or less, $L = WS^2/60$
For speed of 45 mph or more, $L = WS$

Where: L = Taper length in feet
W = Width of offset in feet
S = Posted speed limit, off-peak 85th-percentile speed prior to work starting, or the anticipated operating speed in mph

** - Use for taper and tangent sections where there are no pavement markings or where there is a conflict between existing pavement markings and channelizers (CA).

TABLE 2

LONGITUDINAL BUFFER SPACE AND FLAGGER STATION SPACING

SPEED *	Min D **	DOWNGRADE Min D ***		
		-3%	-6%	-9%
mph	ft	ft	ft	ft
20	115	116	120	126
25	155	158	165	173
30	200	205	215	227
35	250	257	271	287
40	305	315	333	354
45	360	378	400	427
50	425	446	474	507
55	495	520	553	593
60	570	598	638	686
65	645	682	728	785
70	730	771	825	891

* - Speed is posted speed limit, off-peak 85th-percentile speed prior to work starting, or the anticipated operating speed in mph

** - Longitudinal buffer space or flagger station spacing

*** - Use on sustained downgrade steeper than -3 percent and longer than 1 mile.

TABLE 3

ADVANCE WARNING SIGN SPACING

ROAD TYPE	DISTANCE BETWEEN SIGNS *		
	A	B	C
	ft	ft	ft
URBAN - 25 mph OR LESS	100	100	100
URBAN - MORE THAN 25 mph TO 40 mph	250	250	250
URBAN - MORE THAN 40 mph	350	350	350
RURAL	500	500	500
EXPRESSWAY / FREEWAY	1000	1500	2640

* - The distances are approximate, are intended for guidance purposes only, and should be applied with engineering judgment. These distances should be adjusted by the Engineer for field conditions, if necessary, by increasing or decreasing the recommmended distances.

STATE OF CALIFORNIA
DEPARTMENT OF TRANSPORTATION

TRAFFIC CONTROL SYSTEM TABLES FOR LANE AND RAMP CLOSURES

NO SCALE

RSP T9 DATED JULY 19, 2013 SUPERSEDES RSP T9 DATED APRIL 19, 2013 THAT SUPPLEMENTS THE STANDARD PLANS BOOK DATED 2010.

REVISED STANDARD PLAN RSP T9

DATE PLOTTED => 03-NOV-2015
TIME PLOTTED => 11:25

Dist	COUNTY	ROUTE	POST MILES TOTAL PROJECT	SHEET No.	TOTAL SHEETS
02	Sis	96,97	77.2/92.0 2.0/2.6	14	15

Devinder Singh
REGISTERED CIVIL ENGINEER

October 17, 2014
PLANS APPROVAL DATE

REGISTERED PROFESSIONAL ENGINEER
Devinder Singh
No. C50470
Exp. 6-30-15
CIVIL
STATE OF CALIFORNIA

THE STATE OF CALIFORNIA OR ITS OFFICERS OR AGENTS SHALL NOT BE RESPONSIBLE FOR THE ACCURACY OR COMPLETENESS OF SCANNED COPIES OF THIS PLAN SHEET.

TO ACCOMPANY PLANS DATED 09-22-15

2010 REVISED STANDARD PLAN RSP T13

NOTES:

See Revised Standard Plan RSP T9 for tables.

Use cone spacing X for taper segment, Y for tangent segment or Z for conflict situations, as approriate, per Table 1, unless X, Y, or Z cone spacing is shown on this sheet.

Unless otherwise specified in the special provisions, all temporary warning signs shall have black legend on fluorescent orange background.

California codes are designated by (CA). Otherwise, Federal (MUTCD) codes are shown.

TYPICAL LANE CLOSURE WITH REVERSIBLE CONTROL

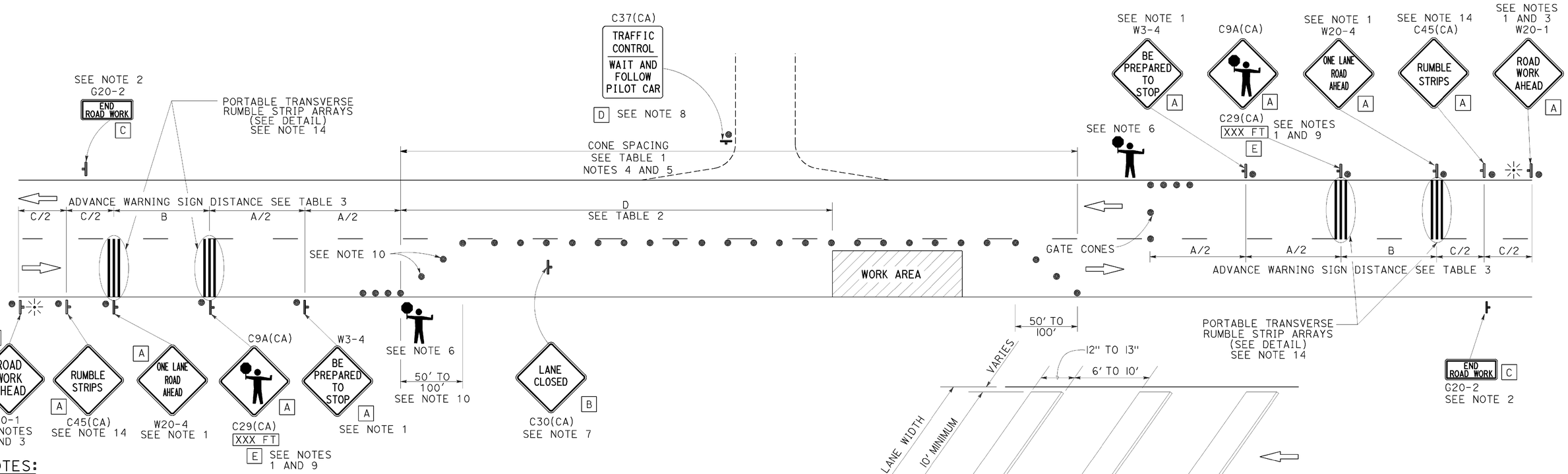

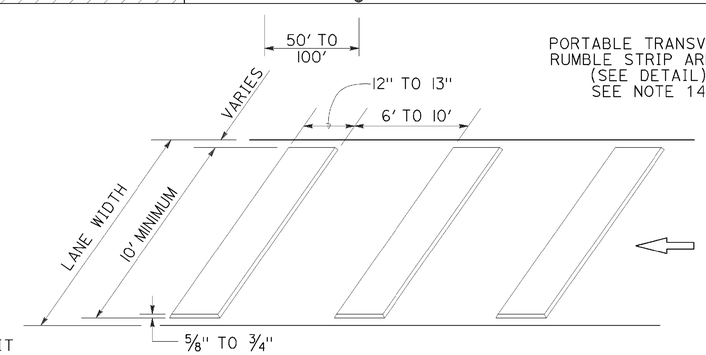

PORTABLE TRANSVERSE RUMBLE STRIP ARRAY DETAIL

LEGEND

- TRAFFIC CONE
- TEMPORARY TRAFFIC CONTROL SIGN
- PORTABLE FLASHING BEACON
- FLAGGER

NOTES:

1. Each advance warning sign in each direction of travel shall be equipped with at least two flags for daytime closure. Each flag shall be at least 16" x 16" in size and shall be orange or fluorescent red-orange in color. Flashing beacons shall be placed at the locations indicated for lane closure during hours of darkness.
2. A G20-2 "END ROAD WORK" sign, as appropriate, shall be placed at the end of the lane control unless the end of work area is obvious, or ends within a larger project's limits.
3. If the W20-1 sign would follow within 2000' of a stationary W20-1 or G20-1 "ROAD WORK NEXT _____ MILES", use a W20-4 sign for the first advance warning sign.
4. All cones used for lane closures during the hours of darkness shall be fitted with retroreflective bands (or sleeves) as specified in the specifications.
5. Portable delineators, placed at one-half the spacing indicated for traffic cones, may be used instead of cones for daytime closures only.
6. Additional advance flaggers may be required. Flagger should stand in a conspicuous place, be visible to approaching traffic as well as approaching vehicles after the first vehicle has stopped. During the hours of darkness, the flagging-station and flagger shall be illuminated and clearly visible to approaching traffic. The illumination footprint of the lighting on the ground shall be at least 20' in diameter. Place a minimum of four cones at 50' intervals in advance of flagger station as shown.
7. Place C30(CA) "LANE CLOSED" sign at 500' to 1000' intervals throughout extended work areas. They are optional if the work area is visible from the flagger station.
8. When a pilot car is used, place a C37(CA) "TRAFFIC CONTROL-WAIT AND FOLLOW PILOT CAR" sign with black legend on white background at all intersections, driveways and alleys without a flagger within traffic control area. Signs shall be clean and visible at all times. Where traffic can not be effectively self-regulated, at least one flagger shall be used at each intersection within traffic control area.
9. An optional C29(CA) sign may be placed below the C9A(CA) sign.
10. Either traffic cones or barricades shall be placed on the taper. Barricades shall be Type I, II, or III.
11. The color of the portable transverse rumble strips shall be black or orange. Use 2 arrays, each array shall consist of 3 rumble strips.
12. Portable transverse rumble strips shall not be placed on sharp horizontal or vertical curves nor shall they be placed through pedestrian crossings.
13. If the portable transverse rumble strips become out of alignment (skewed) by more than 6 inches, measured from one end to the other, they shall be readjusted to bring the placement back to the original location.
14. Portable transverse rumble strips are not required if any one of the following conditions is satisfied:
    A. Work duration occupies a location for four hours or less
    B. Posted speed limit is below 45 MPH
    C. Work is of emergency nature
    D. Work zone is in snow or icy weather conditions

SIGN PANEL SIZE (Min)

A	48" x 48"
B	30" x 30"
C	36" x 18"
D	36" x 42"
E	20" x 7"

STATE OF CALIFORNIA
DEPARTMENT OF TRANSPORTATION

TRAFFIC CONTROL SYSTEM FOR LANE CLOSURE ON TWO LANE CONVENTIONAL HIGHWAYS

NO SCALE

RSP T13 DATED OCTOBER 17, 2014 SUPERSEDES RSP T13 DATED JULY 18, 2014 AND RSP T13 DATED APRIL 19, 2013 AND STANDARD PLAN T13 DATED MAY 20, 2011 - PAGE 241 OF THE STANDARD PLANS BOOK DATED 2010.

REVISED STANDARD PLAN RSP T13

DATE PLOTTED => 03-NOV-2015
TIME PLOTTED => 11:26

Dist	COUNTY	ROUTE	POST MILES TOTAL PROJECT	SHEET No.	TOTAL SHEETS
02	Sis	96,97	77.2/92.0 2.0/2.6	15	15

REGISTERED CIVIL ENGINEER

April 19, 2013
PLANS APPROVAL DATE

REGISTERED PROFESSIONAL ENGINEER
Gurinderpal Bhullar
No. C48815
Exp. 9-30-14
CIVIL
STATE OF CALIFORNIA

THE STATE OF CALIFORNIA OR ITS OFFICERS OR AGENTS SHALL NOT BE RESPONSIBLE FOR THE ACCURACY OR COMPLETENESS OF SCANNED COPIES OF THIS PLAN SHEET.

TO ACCOMPANY PLANS DATED 09-22-15

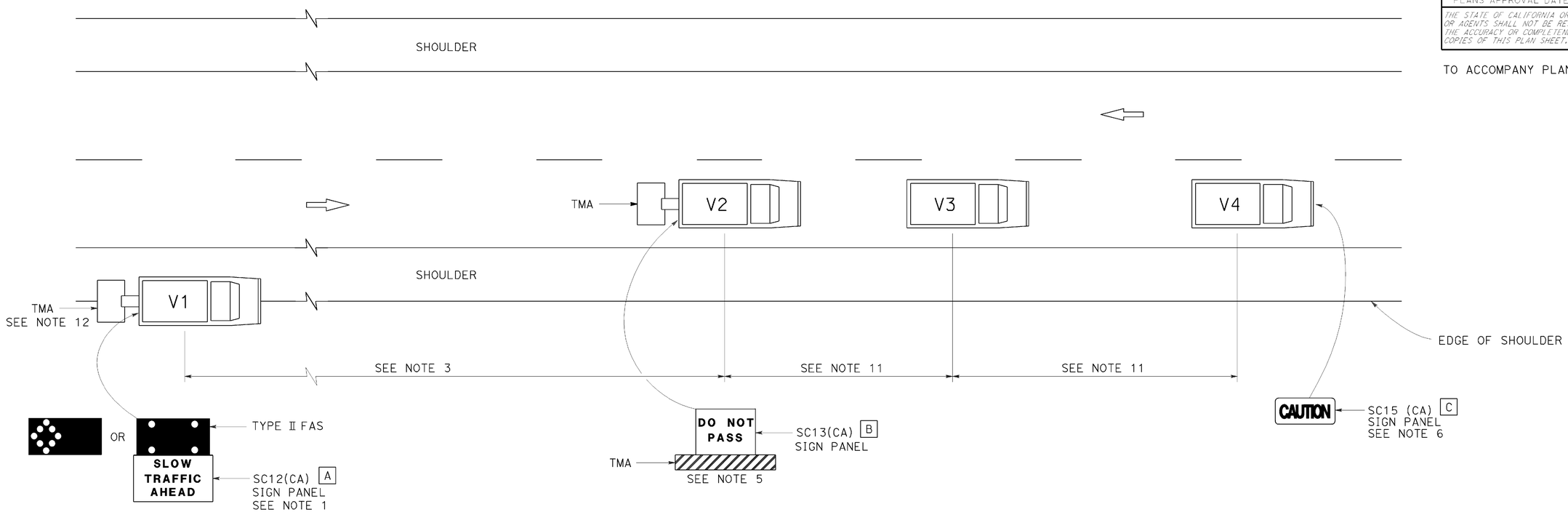

LEGEND

V1	SIGN VEHICLE
V2	SHADOW VEHICLE
V3	WORK/APPLICATION VEHICLE
V4	SIGN VEHICLE
TMA	TRUCK-MOUNTED ATTENUATOR
	FLASHING ARROW SIGN (FAS) IN FLASHING CAUTION MODE
	FLASHING ARROW SIGN (FAS) IN ALTERNATING DIAMOND CAUTION

SIGN PANEL SIZE (Min)

A	72" x 42"
B	54" x 42"
C	54" x 24"

NOTES:

1. Either a changeable message sign or a SC12(CA) "SLOW TRAFFIC AHEAD" sign shall be mounted on the rear of sign vehicle V1. The changeable message sign shall be sequenced to show the "CAUTION" message first, follow by the "SLOW TRAFFIC AHEAD" message. A Type II flashing arrow sign may be used with the SC12(CA) sign panel.
2. Sign vehicle V1 should be positioned where highly visible when shoulders are not available.
3. If traffic queues develop, sign vehicle V1 should be positioned upstream from the end of queue.
4. Vehicle-mounted sign panels shall have Type III or above retroreflective sheeting, black on white, or black on fluorescent orange, with 6" minimum series D letters per Caltrans sign specifications.
5. Shadow vehicle shall be equipped with a truck-mounted attenuator. The sign panel shown shall be mounted on the rear of shadow vehicle V2. The message "LANE CLOSED" may be used in place of the "DO NOT PASS" message.
6. The sign panel shown shall be mounted on the front of sign vehicle V4, facing opposing traffic.
7. All vehicles shall be equipped with flashing or rotating amber lights.
8. Sign vehicle V4 will not be required when the work and vehicles V2 and V3 are 2' or more from the centerline of the highway during the work or application operations.
9. All vehicles used for lane closures shall be equipped with two-way radios and the vehicle operators shall maintain communication during the work or application operation.
10. This plan shall not be used where workers would be on foot in the work area. Use a stationary type lane closure (Revised Standard Plan T13) for this condition.
11. Minimize spacing between vehicles V2 and V3 and vehicles V3 and V4 to deter road users from driving in between them.
12. If sign vehicle V1 encroaches into the traffic lane due to insufficient shoulder width, sign vehicle V1 shall be equipped with a truck-mounted attenuator. Sign vehicle V1 shall stay as close to the edge of shoulder as practicable.

STATE OF CALIFORNIA
DEPARTMENT OF TRANSPORTATION

TRAFFIC CONTROL SYSTEM FOR MOVING LANE CLOSURE ON TWO LANE HIGHWAYS

NO SCALE

RSP T17 DATED APRIL 19, 2013 SUPERSEDES STANDARD PLAN T17
DATED MAY 20, 2011 - PAGE 245 OF THE STANDARD PLANS BOOK DATED 2010.

REVISED STANDARD PLAN RSP T17

2010 REVISED STANDARD PLAN RSP T17

DATE PLOTTED => 03-NOV-2015
TIME PLOTTED => 11:26