Dist	COUNTY	ROUTE	POST MILES TOTAL PROJECT	SHEET No.	TOTAL SHEETS
02	Sis	97	2.5/2.9	1	23

INDEX OF PLANS

SHEET No.	DESCRIPTION
1	TITLE SHEET
2	TYPICAL CROSS SECTION
3-5	LAYOUT
6	SUPERELEVATION DIAGRAM
7-9	CONSTRUCTION DETAILS
10	DRAINAGE DETAILS
11	CONSTRUCTION AREA SIGNS
12-15	PAVEMENT DELINEATION PLANS
16	SUMMARY OF QUANTITIES
17-23	REVISED STANDARD PLANS

STATE OF CALIFORNIA

DEPARTMENT OF TRANSPORTATION

PROJECT PLANS FOR CONSTRUCTION ON

STATE HIGHWAY

IN SISKIYOU COUNTY NEAR WEED FROM 0.1 MILE SOUTH OF MAPLE AVENUE TO 0.1 MILE NORTH OF FIRST AVENUE

TO BE SUPPLEMENTED BY STANDARD PLANS DATED MAY 2006

LOCATION MAP

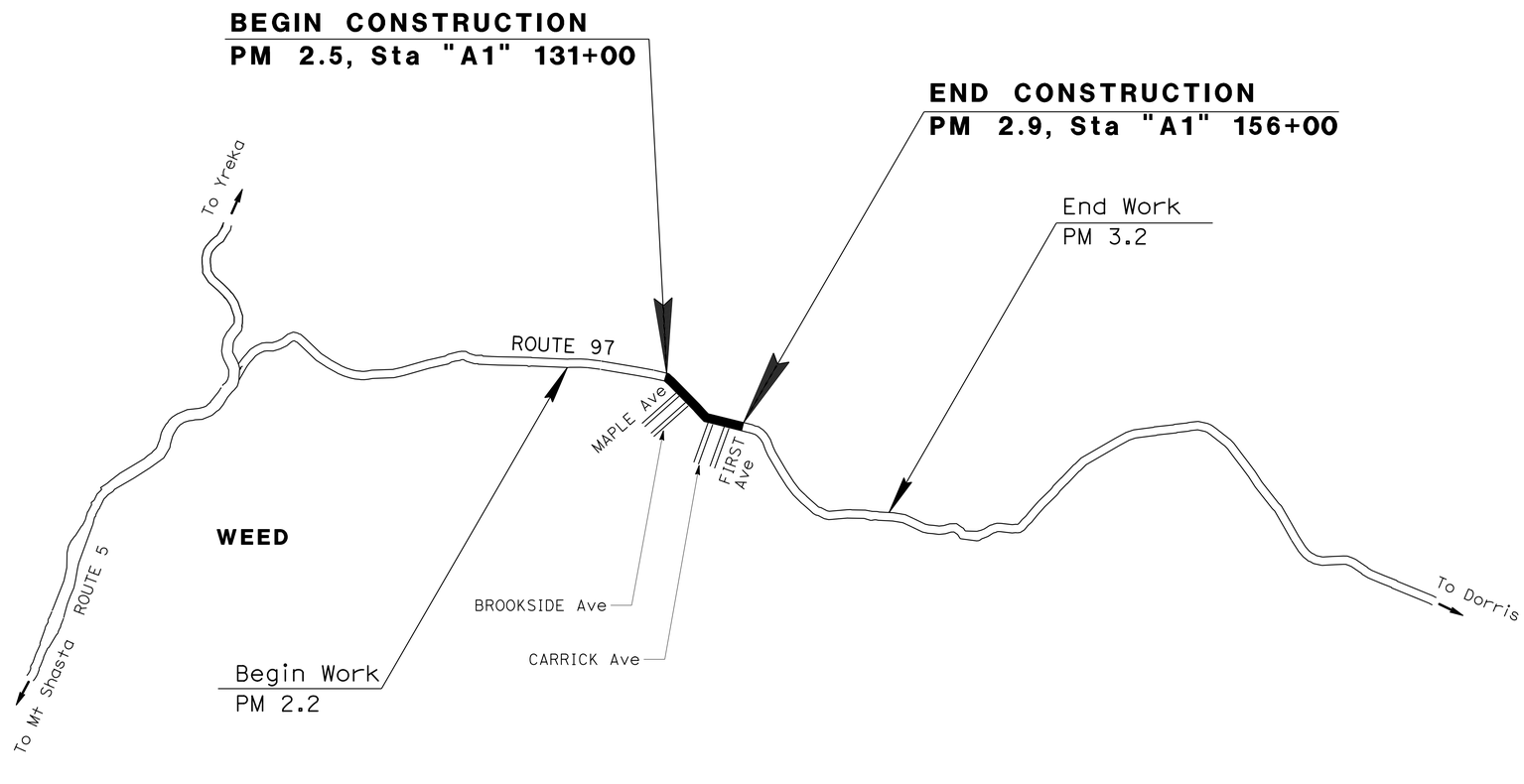

THE CONTRACTOR SHALL POSSESS THE CLASS (OR CLASSES) OF LICENSE AS SPECIFIED IN THE "NOTICE TO BIDDERS."

NO SCALE

Russell Flood 05-29-12
PROJECT ENGINEER REGISTERED CIVIL ENGINEER — DATE

REGISTERED PROFESSIONAL ENGINEER — RUSSELL FLOOD — No. C72261 — Exp. 06-30-14 — CIVIL — STATE OF CALIFORNIA

MAY 29, 2012
PLANS APPROVAL DATE

THE STATE OF CALIFORNIA OR ITS OFFICERS OR AGENTS SHALL NOT BE RESPONSIBLE FOR THE ACCURACY OR COMPLETENESS OF SCANNED COPIES OF THIS PLAN SHEET.

CONTRACT No.	02-0E4404
PROJECT ID	0200020136

LAST REVISION 05-29-12 — DATE PLOTTED => 04-SEP-2012 — TIME PLOTTED => 10:28

PROJECT MANAGER: DEREK WILLIS
DESIGN ENGINEER: STEVE TOPAL

P:\proj2\02\0E440_plans\pse\20e440ab001.dgn

Dist	COUNTY	ROUTE	POST MILES TOTAL PROJECT	SHEET No.	TOTAL SHEETS
02	Sis	97	2.5/2.9	2	23

Russell Flood 05-29-12
REGISTERED CIVIL ENGINEER DATE

05-29-12
PLANS APPROVAL DATE

REGISTERED PROFESSIONAL ENGINEER RUSSELL FLOOD No. C72261 Exp. 06-30-14 CIVIL STATE OF CALIFORNIA

THE STATE OF CALIFORNIA OR ITS OFFICERS OR AGENTS SHALL NOT BE RESPONSIBLE FOR THE ACCURACY OR COMPLETENESS OF SCANNED COPIES OF THIS PLAN SHEET.

NOTE:

1. DIMENSIONS OF THE PAVEMENT STRUCTURES (STRUCTURAL SECTIONS) ARE SUBJECT TO TOLERANCES SPECIFIED IN THE STANDARD SPECIFICATIONS.
2. SUPERELEVATIONS ARE SHOWN ON THE SUPERELEVATION DIAGRAMS.

DESIGN DESIGNATION

ADT (2013)	7000	D	55%
ADT (2033)	9300	T	19%
DHV	1050	V	55 MPH
ESAL	8,695,790	TI(20)	11.5

ABBREVIATIONS:

CPAC	COLD PLANE AC PAVEMENT
HAR	HIGHWAY ADVISORY RADIO

LEGEND:

COLD PLANE AC PAVEMENT

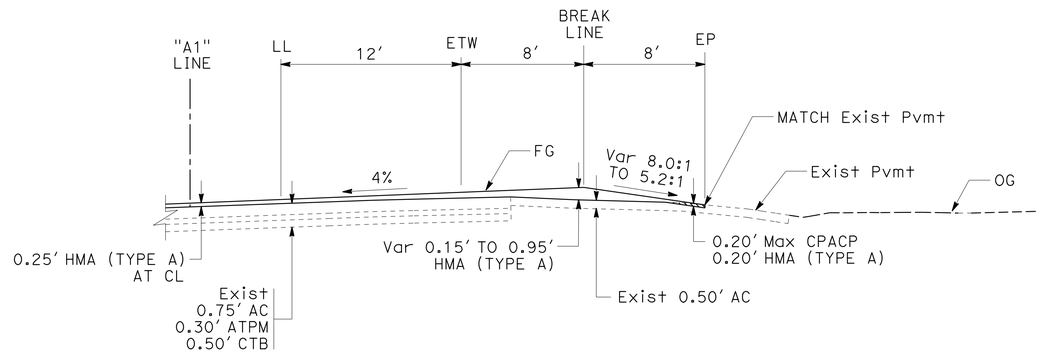

PAVED SHOULDER NEAR HAR SIGN

"A1" 136+75 TO 138+75

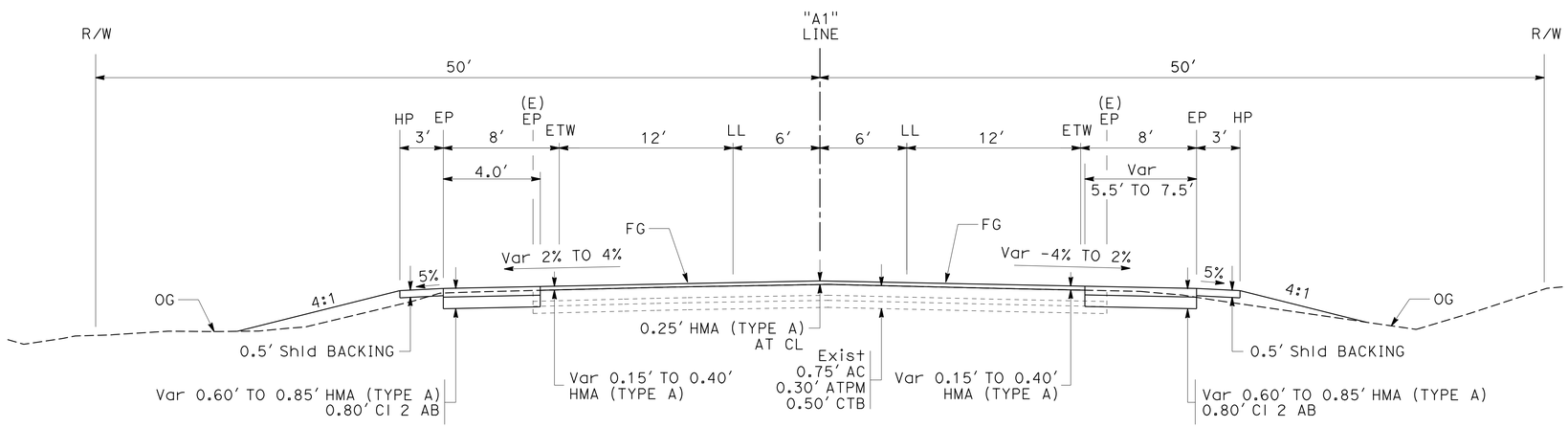

"A1" 132+50 TO 155+00

TYPICAL CROSS SECTIONS

NO SCALE

X-1

REVISED BY | DATE REVISED
GINNY SEIBERT | RUSSELL FLOOD
CALCULATED-DESIGNED BY | CHECKED BY
FUNCTIONAL SUPERVISOR: STEVE TOPAL

STATE OF CALIFORNIA - DEPARTMENT OF TRANSPORTATION
Caltrans
DESIGN

P:\proj2\02\0E440_plans\pse\20e440ca001.dgn

LAST REVISION 01-10-12 | DATE PLOTTED => 04-SEP-2012 | TIME PLOTTED => 10:28

Dist	COUNTY	ROUTE	POST MILES TOTAL PROJECT	SHEET No.	TOTAL SHEETS
02	Sis	97	2.5/2.9	3	23

Russell Flood 05-29-12
REGISTERED CIVIL ENGINEER DATE

05-29-12
PLANS APPROVAL DATE

REGISTERED PROFESSIONAL ENGINEER RUSSELL FLOOD No. C72261 Exp. 06-30-14 CIVIL STATE OF CALIFORNIA

THE STATE OF CALIFORNIA OR ITS OFFICERS OR AGENTS SHALL NOT BE RESPONSIBLE FOR THE ACCURACY OR COMPLETENESS OF SCANNED COPIES OF THIS PLAN SHEET.

NOTES:

1. FOR ACCURATE RIGHT OF WAY DATA, CONTACT RIGHT OF WAY ENGINEERING AT THE DISTRICT OFFICE.
2. FOR ROAD CONNECTION AND DRIVEWAY CONFORMS SEE CONSTRUCTION DETAILS.
3. EXISTING UTILITIES HAVE NOT BEEN POSITIVELY LOCATED.
4. TREES TO REMAIN, PROTECT IN PLACE.

ABBREVIATIONS:

TFESA	TEMPORARY FENCE (TYPE ESA)
SCEP	ENCROACHMENT PERMIT (SISKIYOU COUNTY)
HAR	HIGHWAY ADVISORY RADIO
RC	ROAD CONNECTION

LEGEND:

- CONFORM
- TFESA — TEMPORARY FENCE (TYPE ESA)
- ENCROACHMENT PERMIT (SISKIYOU COUNTY)
- DRAINAGE SYSTEM No.
- DRAINAGE UNIT
- FLOW DIRECTION

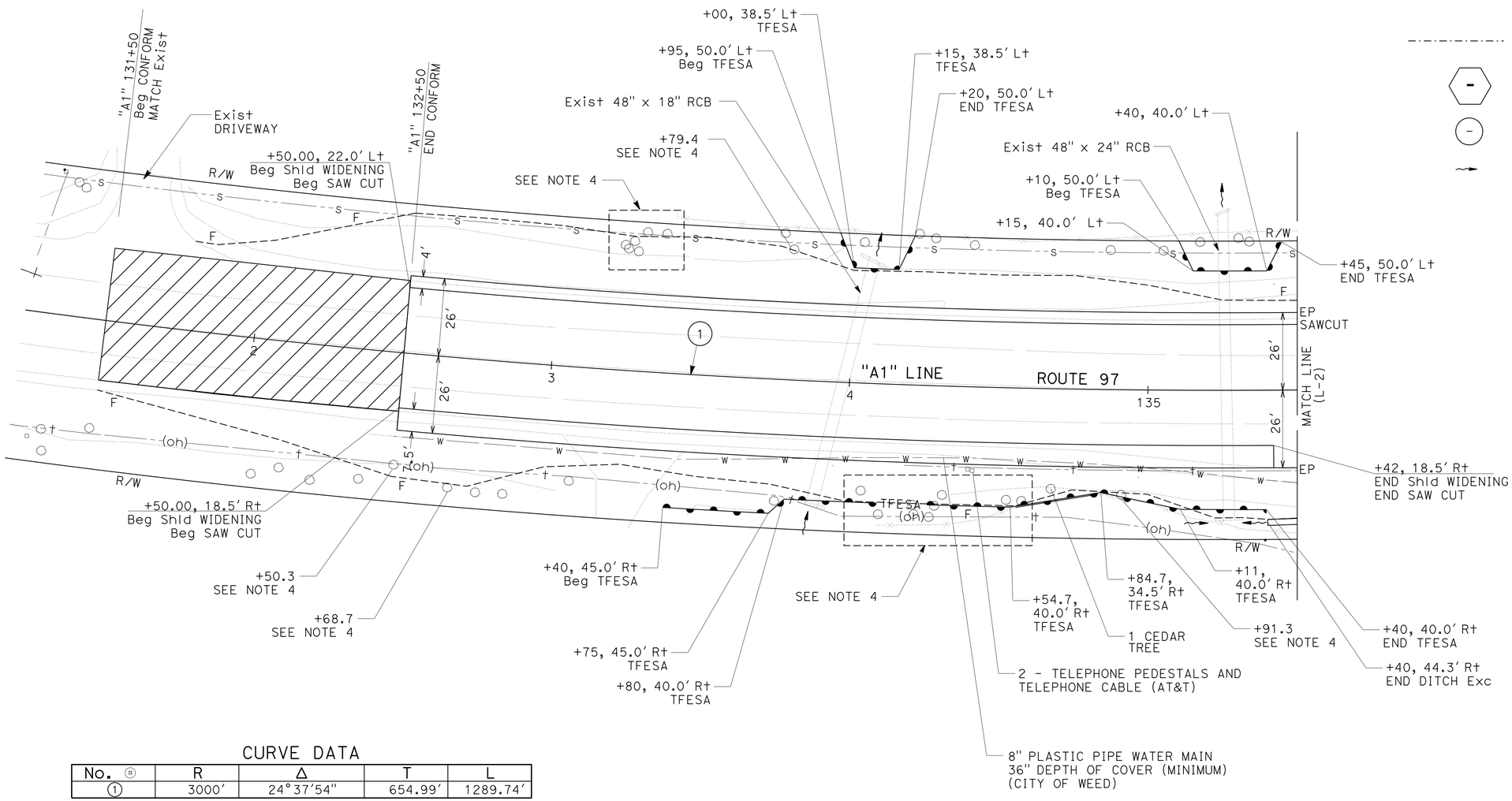

CURVE DATA

No.	R	Δ	T	L
1	3000'	24°37'54"	654.99'	1289.74'

LAYOUT

SCALE: 1" = 20'

L-1

REVISED BY	DATE REVISED
GINNY SEIBERT	RUSSELL FLOOD
CALCULATED-DESIGNED BY	CHECKED BY
FUNCTIONAL SUPERVISOR	STEVE TOPAL

STATE OF CALIFORNIA - DEPARTMENT OF TRANSPORTATION
Caltrans
DESIGN

P:\proj2\02\0E440_plans\pse\20e440ea001.dgn

LAST REVISION 12-29-11 | DATE PLOTTED => 04-SEP-2012 | TIME PLOTTED => 10:28

Dist	COUNTY	ROUTE	POST MILES TOTAL PROJECT	SHEET No.	TOTAL SHEETS
02	Sis	97	2.5/2.9	4	23

Russell Flood 05-29-12
REGISTERED CIVIL ENGINEER DATE

05-29-12
PLANS APPROVAL DATE

REGISTERED PROFESSIONAL ENGINEER RUSSELL FLOOD No. C72261 Exp. 06-30-14 CIVIL STATE OF CALIFORNIA

THE STATE OF CALIFORNIA OR ITS OFFICERS OR AGENTS SHALL NOT BE RESPONSIBLE FOR THE ACCURACY OR COMPLETENESS OF SCANNED COPIES OF THIS PLAN SHEET.

NOTES:

1. FOR ACCURATE RIGHT OF WAY DATA, CONTACT RIGHT OF WAY ENGINEERING AT THE DISTRICT OFFICE.
2. FOR ROAD CONNECTION AND DRIVEWAY CONFORMS SEE CONSTRUCTION DETAILS.
3. EXISTING UTILITIES HAVE NOT BEEN POSITIVELY LOCATED.
4. TREES TO REMAIN, PROTECT IN PLACE.
5. GRADE BREAK FOR PAVED SHOULDER NEAR HAR SIGN (SEE SHEET X-1).

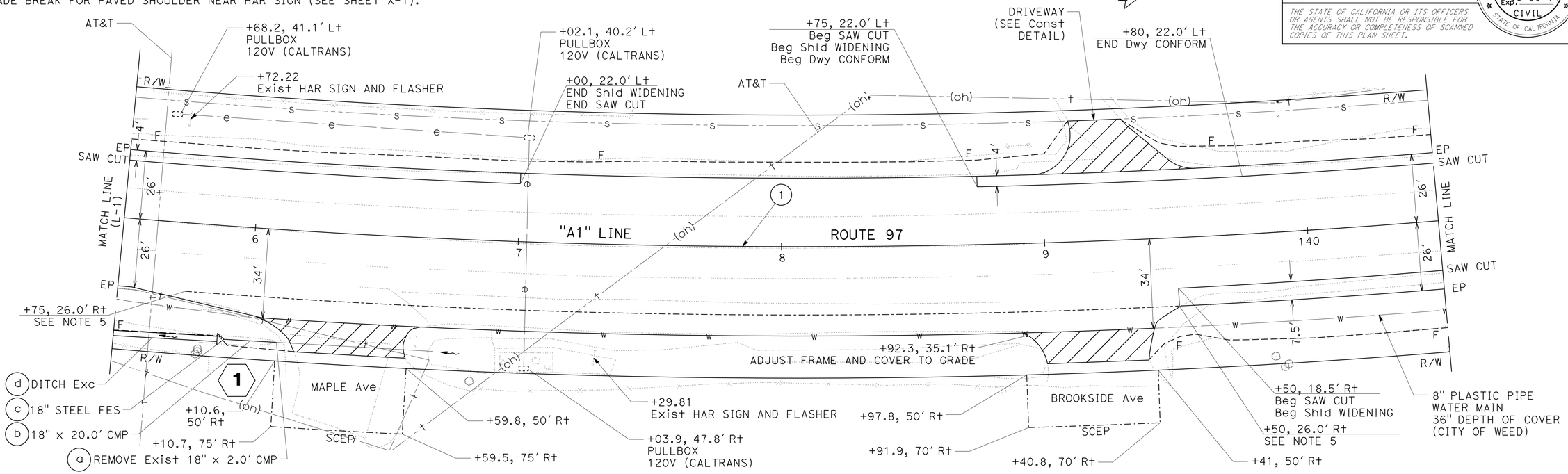

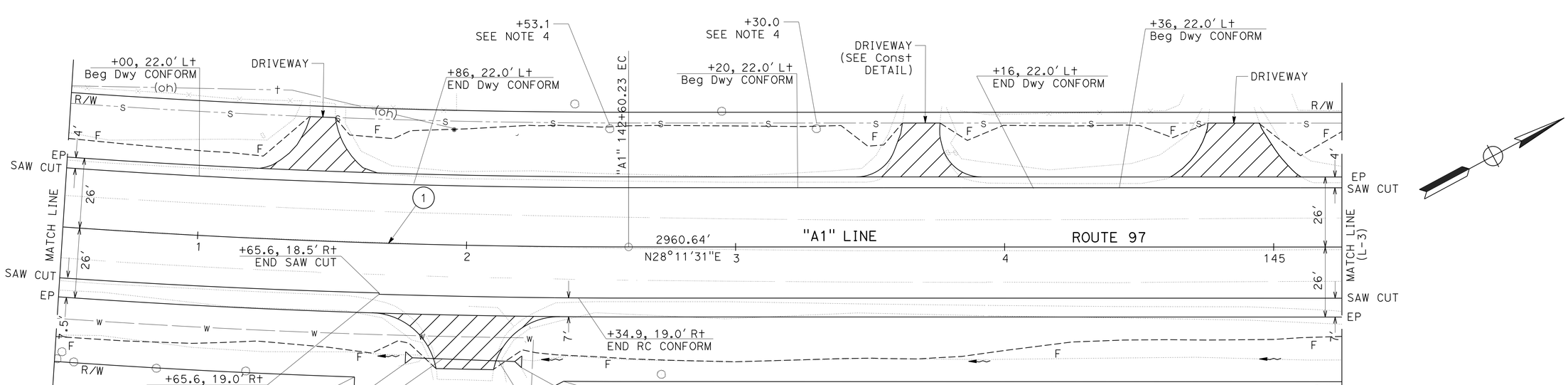

CURVE DATA

No. ⊕	R	Δ	T	L
1	3000′	24°37′53"	654.99′	1289.74′

LAYOUT

SCALE: 1" = 20′

L-2

REVISED BY	DATE REVISED
GINNY SEIBERT	RUSSELL FLOOD
CALCULATED-DESIGNED BY	CHECKED BY
FUNCTIONAL SUPERVISOR	STEVE TOPAL

STATE OF CALIFORNIA - DEPARTMENT OF TRANSPORTATION
Caltrans®
DESIGN

P:\proj2\02\0E440_plans\pse\20e440ea002.dgn

LAST REVISION DATE PLOTTED => 04-SEP-2012
12-29-11 TIME PLOTTED => 10:28

Dist	COUNTY	ROUTE	POST MILES TOTAL PROJECT	SHEET No.	TOTAL SHEETS
02	Sis	97	2.5/2.9	5	23

Russell Flood 05-29-12
REGISTERED CIVIL ENGINEER DATE

05-29-12
PLANS APPROVAL DATE

REGISTERED PROFESSIONAL ENGINEER RUSSELL FLOOD No. C72261 Exp. 06-30-14 CIVIL STATE OF CALIFORNIA

THE STATE OF CALIFORNIA OR ITS OFFICERS OR AGENTS SHALL NOT BE RESPONSIBLE FOR THE ACCURACY OR COMPLETENESS OF SCANNED COPIES OF THIS PLAN SHEET.

NOTES:

1. FOR ACCURATE RIGHT OF WAY DATA, CONTACT RIGHT OF WAY ENGINEERING AT THE DISTRICT OFFICE.
2. FOR ROAD CONNECTION AND DRIVEWAY CONFORMS SEE CONSTRUCTION DETAILS.
3. EXISTING UTILITIES HAVE NOT BEEN POSITIVELY LOCATED.
4. TREES TO REMAIN, PROTECT IN PLACE.

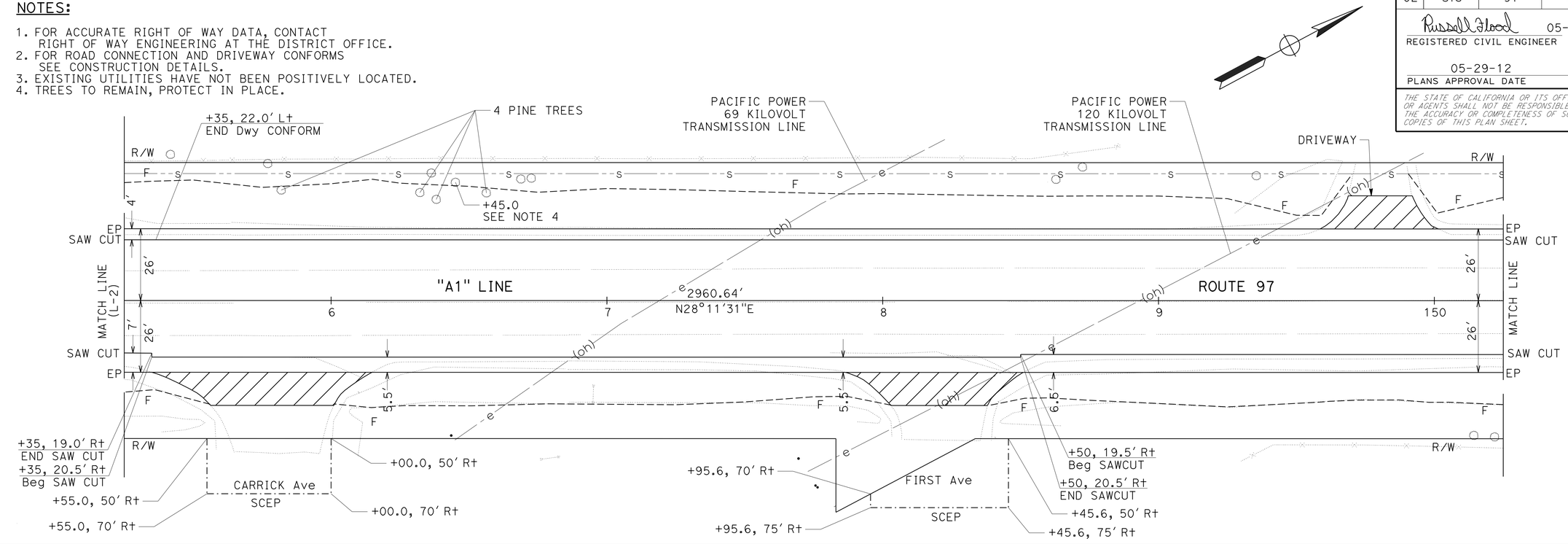

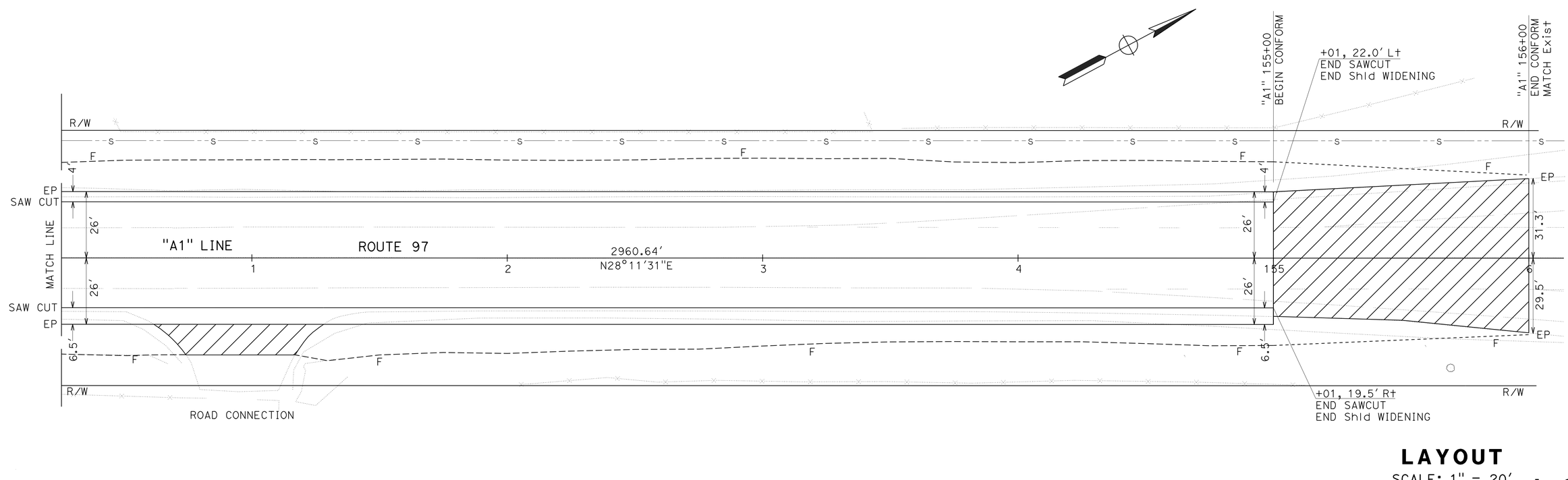

LAYOUT

SCALE: 1" = 20'

L-3

REVISED BY	DATE REVISED
GINNY SEIBERT	RUSSELL FLOOD
CALCULATED-DESIGNED BY	CHECKED BY
FUNCTIONAL SUPERVISOR	STEVE TOPAL

STATE OF CALIFORNIA - DEPARTMENT OF TRANSPORTATION
Caltrans
DESIGN

P:\proj2\02\0E440_plans\pse\20e440ea003.dgn

LAST REVISION 12-29-11 | DATE PLOTTED => 04-SEP-2012 | TIME PLOTTED => 10:28

Dist	COUNTY	ROUTE	POST MILES TOTAL PROJECT	SHEET No.	TOTAL SHEETS
02	Sis	97	2.5/2.9	6	23

Russell Flood 05-29-12
REGISTERED CIVIL ENGINEER DATE

05-29-12
PLANS APPROVAL DATE

REGISTERED PROFESSIONAL ENGINEER
RUSSELL FLOOD
No. C72261
Exp. 06-30-14
CIVIL
STATE OF CALIFORNIA

THE STATE OF CALIFORNIA OR ITS OFFICERS OR AGENTS SHALL NOT BE RESPONSIBLE FOR THE ACCURACY OR COMPLETENESS OF SCANNED COPIES OF THIS PLAN SHEET.

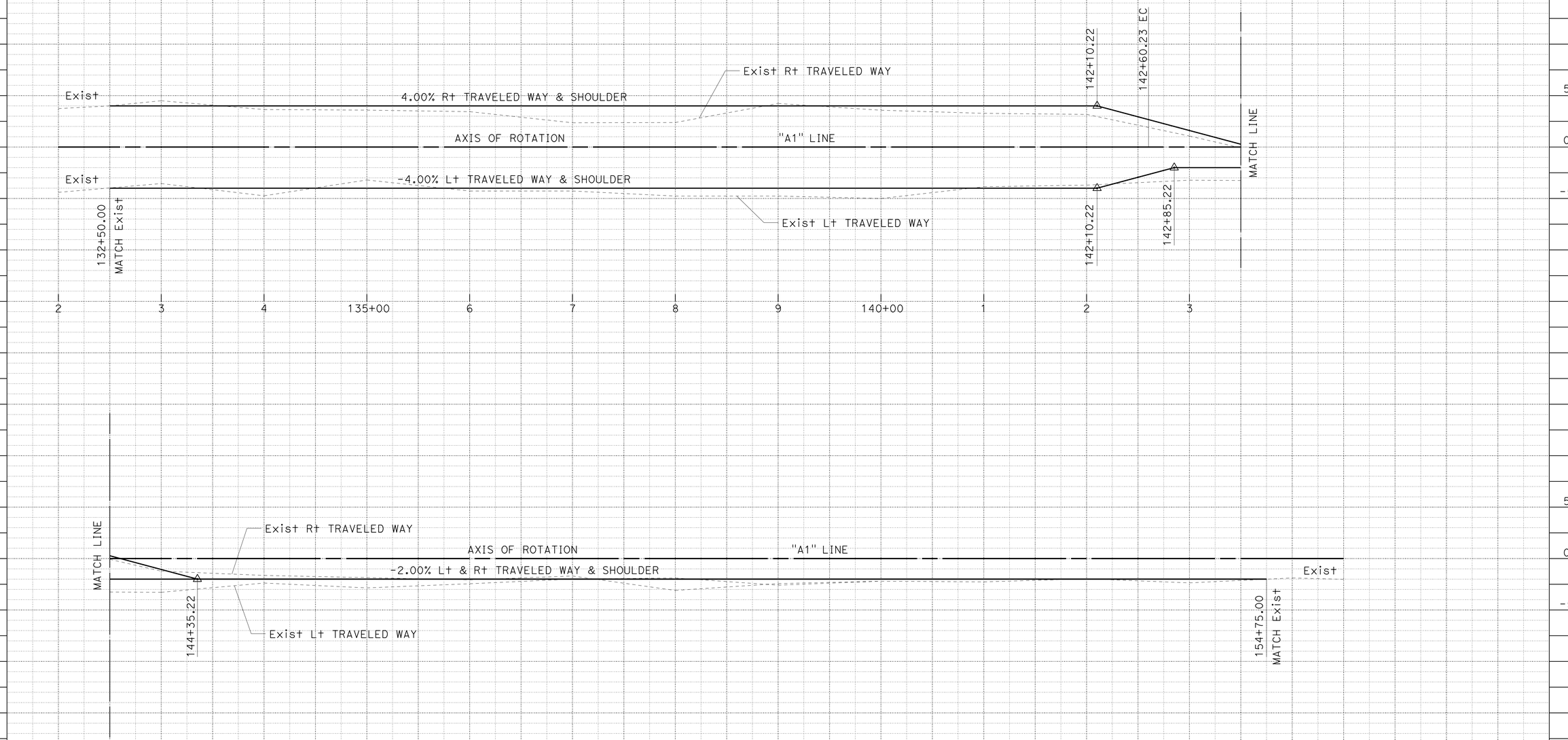

SUPERELEVATION DIAGRAM

SCALE: 1" = 10' Horiz

SE-1

REVISED BY	DATE REVISED

GINNY SEIBERT — RUSSELL FLOOD

CALCULATED-DESIGNED BY — CHECKED BY

FUNCTIONAL SUPERVISOR: STEVE TOPAL

STATE OF CALIFORNIA - DEPARTMENT OF TRANSPORTATION
Caltrans
DESIGN

P:\proj2\02\0E440_plans\pse\20e440fc001.dgn

LAST REVISION 02-17-12 DATE PLOTTED => 04-SEP-2012 TIME PLOTTED => 10:28

BORDER LAST REVISED 7/2/2010 | USERNAME => s123119 DGN FILE => 20e440fc001.dgn | RELATIVE BORDER SCALE IS IN INCHES 0 1 2 3 | UNIT 0319 | PROJECT NUMBER & PHASE 02000201361

Dist	COUNTY	ROUTE	POST MILES TOTAL PROJECT	SHEET No.	TOTAL SHEETS
02	Sis	97	2.5/2.9	7	23

Russell Flood 05-29-12
REGISTERED CIVIL ENGINEER DATE

05-29-12
PLANS APPROVAL DATE

REGISTERED PROFESSIONAL ENGINEER RUSSELL FLOOD No. C72261 Exp. 06-30-14 CIVIL STATE OF CALIFORNIA

THE STATE OF CALIFORNIA OR ITS OFFICERS OR AGENTS SHALL NOT BE RESPONSIBLE FOR THE ACCURACY OR COMPLETENESS OF SCANNED COPIES OF THIS PLAN SHEET.

NOTE:

1. EXISTING UTILITIES HAVE NOT BEEN POSITIVELY LOCATED.

ABBREVIATIONS:

CPACP COLD PLANE AC PAVEMENT
RC ROAD CONNECTION

LEGEND:

COLD PLANE AC PAVEMENT

ROADWAY EXCAVATION

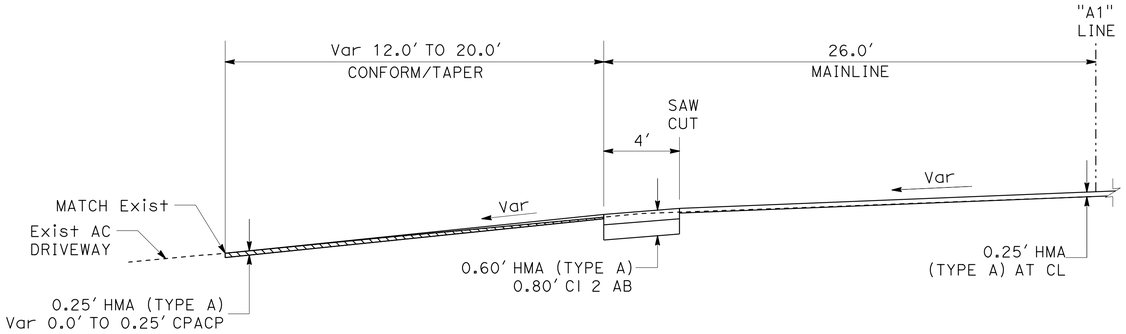

SECTION D-D
TYPICAL DRIVEWAY CONFORM TAPER

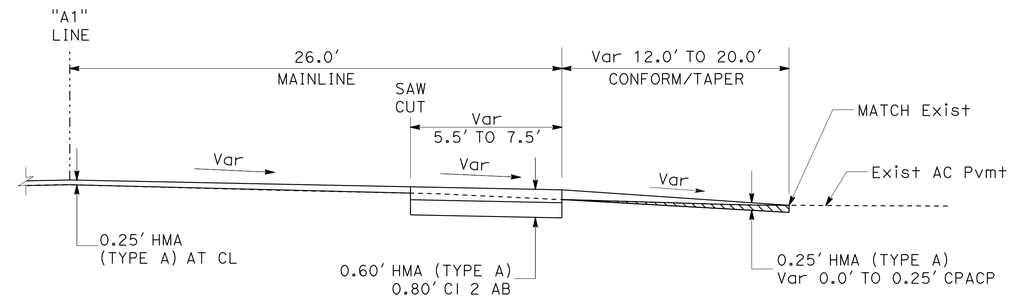

SECTION D-D
TYPICAL ROAD CONNECTION CONFORM TAPER

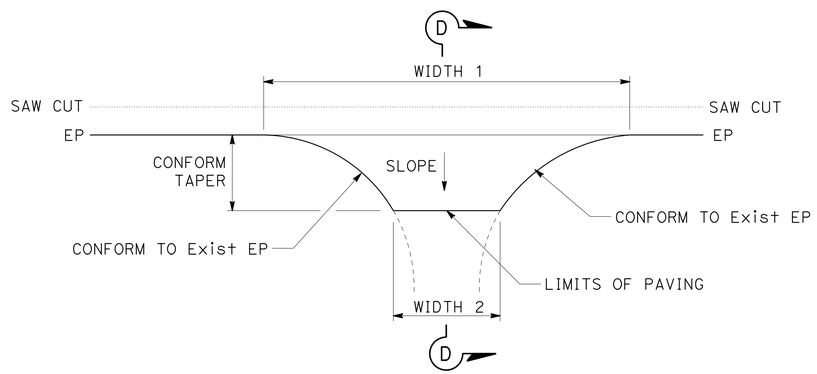

PLAN
CONFORM TAPER FOR ROAD CONNECTIONS AND DRIVEWAYS

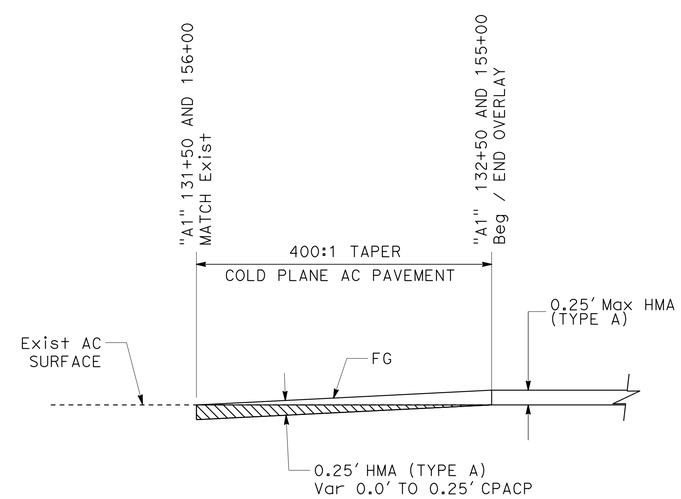

MAINLINE CONFORM TAPERS

"A1" 131+50 TO 132+50
"A1" 155+00 TO 156+00

ROAD CONNECTION CONFORM

LOCATION "A1" LINE	DESCRIPTION	APPROXIMATE SLOPE	CONFORM TAPER	WIDTH 1	WIDTH 2
			LF	LF	LF
136+35	MAPLE AVENUE	3.9%	12	59	42
139+18	BROOKSIDE AVENUE	6.1%	12	50	39
142+01	ROAD CONNECTION*	10.0%	20	70	21
145+75	CARRICK AVENUE	3.7%	12	80	45
148+19	FIRST AVENUE	1.0%	12	64	35
150+95	ROAD CONNECTION	6.8%	12	67	43

*SEE SHEET C-2

DRIVEWAY CONFORM

LOCATION "A1" LINE	APPROXIMATE SLOPE	CONFORM TAPER	WIDTH 1	WIDTH 2
		LF	LF	LF
139+32*	9.6%	20	71	21
141+44	9.6%	20	46	14
143+69*	10.0%	20	29	17
144+86	9.3%	20	47	26
149+80	6.7%	12	42	23

*SEE SHEET C-3

CONSTRUCTION DETAILS
NO SCALE

C-1

STATE OF CALIFORNIA - DEPARTMENT OF TRANSPORTATION
DESIGN
FUNCTIONAL SUPERVISOR: STEVE TOPAL
CALCULATED-DESIGNED BY: GINNY SEIBERT
CHECKED BY: RUSSELL FLOOD
REVISED BY
DATE REVISED
P:\proj2\02\0E440_plans\pse\20e440ga001.dgn

LAST REVISION 01-09-12
DATE PLOTTED => 04-SEP-2012
TIME PLOTTED => 10:28

Dist	COUNTY	ROUTE	POST MILES TOTAL PROJECT	SHEET No.	TOTAL SHEETS
02	Sis	97	2.5/2.9	8	23

Russell Flood 05-29-12
REGISTERED CIVIL ENGINEER DATE

05-29-12
PLANS APPROVAL DATE

REGISTERED PROFESSIONAL ENGINEER RUSSELL FLOOD No. C72261 Exp. 06-30-14 CIVIL STATE OF CALIFORNIA

THE STATE OF CALIFORNIA OR ITS OFFICERS OR AGENTS SHALL NOT BE RESPONSIBLE FOR THE ACCURACY OR COMPLETENESS OF SCANNED COPIES OF THIS PLAN SHEET.

NOTE:

1. EXISTING UTILITIES HAVE NOT BEEN POSITIVELY LOCATED.

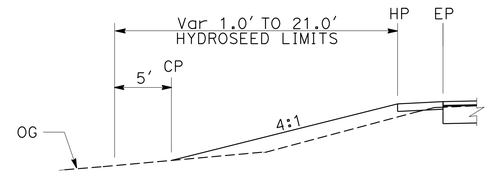

TYPICAL
EROSION CONTROL (HYDROSEED)
Sta 131+50 TO 156+00

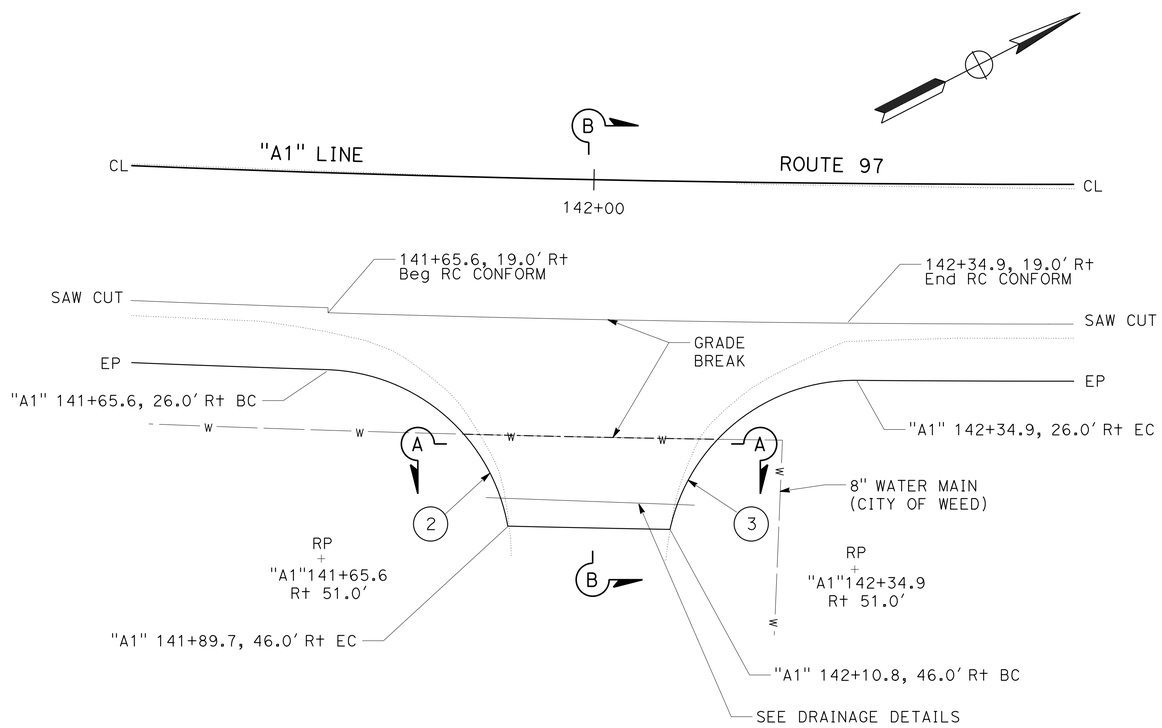

PLAN
ROAD CONNECTION (UNNAMED ROAD)

CURVE DATA

No. ⊕	R	Δ	T	L
②	25'	78°14'04"	20.33'	34.14'
③	25'	78°13'59"	20.33'	34.14'

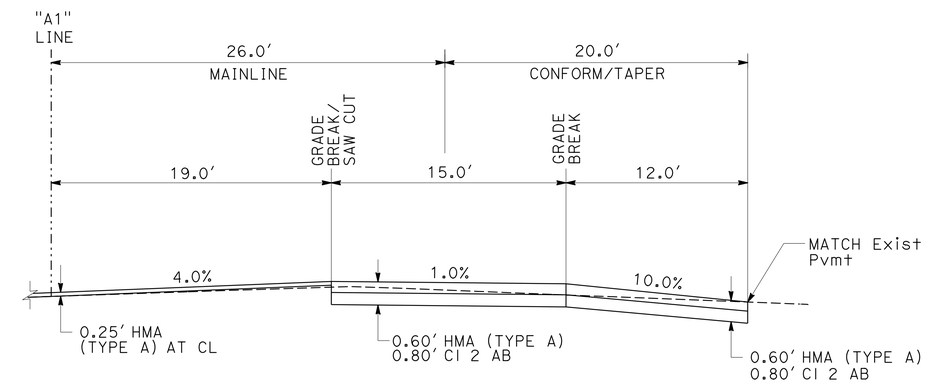

SECTION B-B

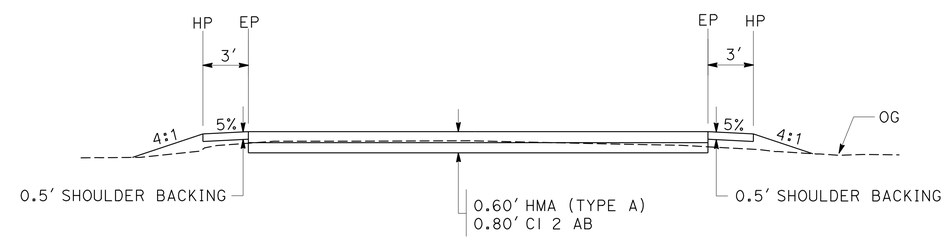

SECTION A-A

CONSTRUCTION DETAILS
NO SCALE

C-2

REVISED BY	DATE REVISED
GINNY SEIBERT	RUSSELL FLOOD
CALCULATED-DESIGNED BY	CHECKED BY
FUNCTIONAL SUPERVISOR	STEVE TOPAL

STATE OF CALIFORNIA - DEPARTMENT OF TRANSPORTATION
Caltrans
DESIGN

P:\proj2\02\0E440_plans\pse\20e440ga002.dgn

LAST REVISION 01-09-12 | DATE PLOTTED => 04-SEP-2012 | TIME PLOTTED => 10:29

Dist	COUNTY	ROUTE	POST MILES TOTAL PROJECT	SHEET No.	TOTAL SHEETS
02	Sis	97	2.5/2.9	9	23

Russell Flood 05-29-12
REGISTERED CIVIL ENGINEER DATE

05-29-12
PLANS APPROVAL DATE

REGISTERED PROFESSIONAL ENGINEER RUSSELL FLOOD No. C72261 Exp. 06-30-14 CIVIL STATE OF CALIFORNIA

THE STATE OF CALIFORNIA OR ITS OFFICERS OR AGENTS SHALL NOT BE RESPONSIBLE FOR THE ACCURACY OR COMPLETENESS OF SCANNED COPIES OF THIS PLAN SHEET.

NOTES:

1. EXISTING UTILITIES HAVE NOT BEEN POSITIVELY LOCATED.
2. EXISTING MAILBOXES TO REMAIN IN PLACE.

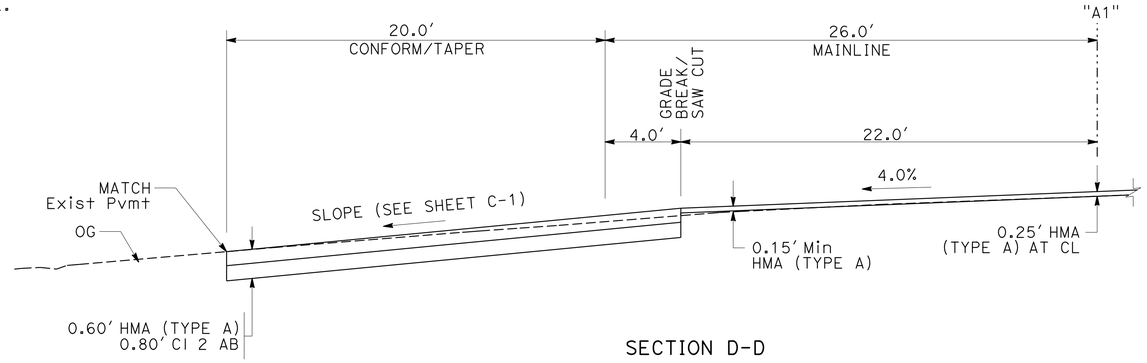

SECTION D-D

CURVE DATA

No. ⊛	R	Δ	T	L
4	15'	109°25'52"	21.20'	28.65'
5	15'	42°9'23"	5.78'	11.04'
6	15'	68°31'31"	10.22'	17.94'
7	15'	74°44'48"	11.46'	19.57'

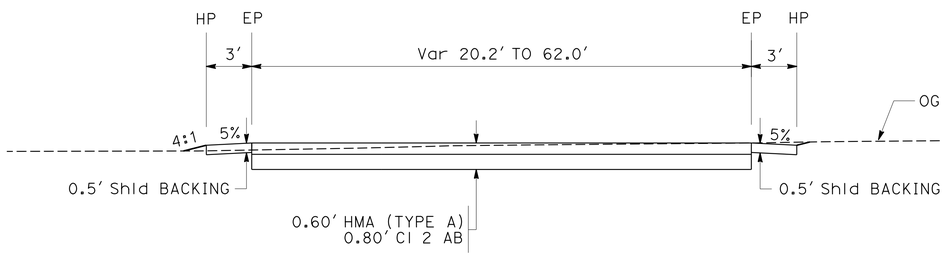

SECTION C-C

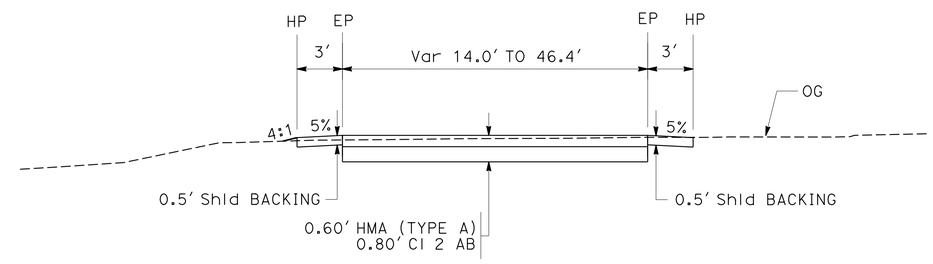

SECTION E-E

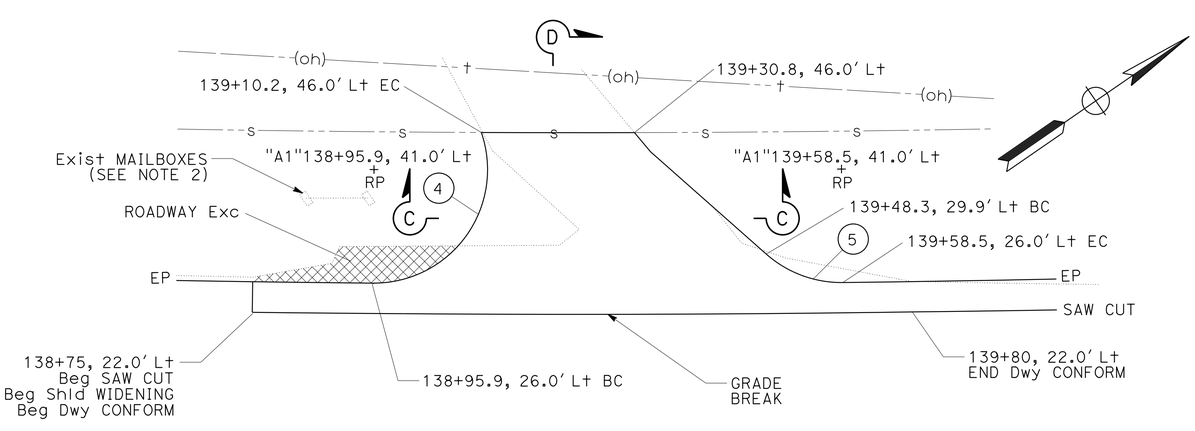

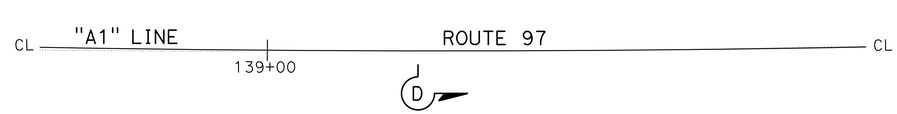

PLAN

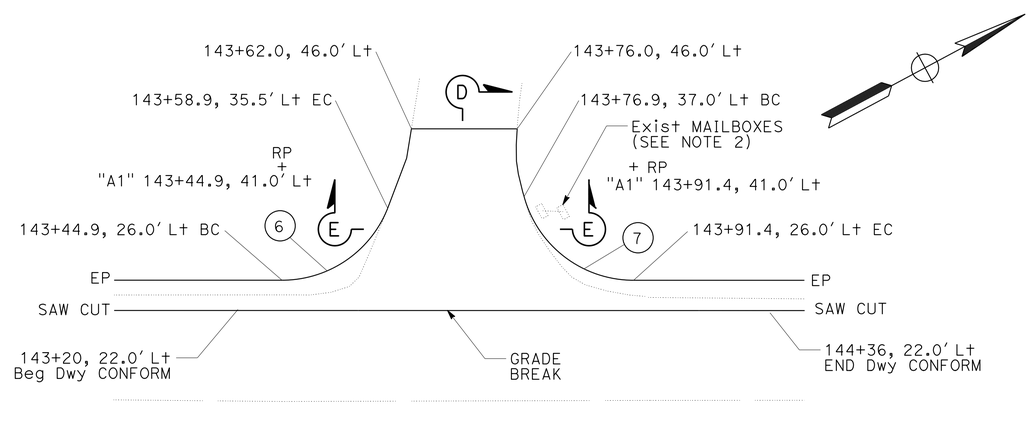

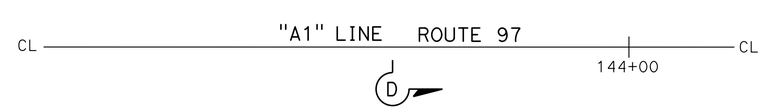

PLAN

DRIVEWAY CONNECTIONS

CONSTRUCTION DETAILS

NO SCALE

C-3

STATE OF CALIFORNIA - DEPARTMENT OF TRANSPORTATION
Caltrans DESIGN

FUNCTIONAL SUPERVISOR: STEVE TOPAL
CALCULATED-DESIGNED BY: GINNY SEIBERT
CHECKED BY: RUSSELL FLOOD
REVISED BY / DATE REVISED

P:\proj2\02\0E440_plans\pse\20e440ga003.dgn

LAST REVISION DATE PLOTTED => 04-SEP-2012
TIME PLOTTED => 10:29

Dist	COUNTY	ROUTE	POST MILES TOTAL PROJECT	SHEET No.	TOTAL SHEETS
02	Sis	97	2.5/2.9	10	23

Russell Flood 05-29-12
REGISTERED CIVIL ENGINEER DATE

05-29-12
PLANS APPROVAL DATE

REGISTERED PROFESSIONAL ENGINEER RUSSELL FLOOD No. C72261 Exp. 06-30-14 CIVIL STATE OF CALIFORNIA

THE STATE OF CALIFORNIA OR ITS OFFICERS OR AGENTS SHALL NOT BE RESPONSIBLE FOR THE ACCURACY OR COMPLETENESS OF SCANNED COPIES OF THIS PLAN SHEET.

NOTES:

1. ALL JOINT TYPES SHALL BE STANDARD.
2. LENGTH OF PIPES SHALL BE VERIFIED IN THE FIELD BY CONTRACTOR.

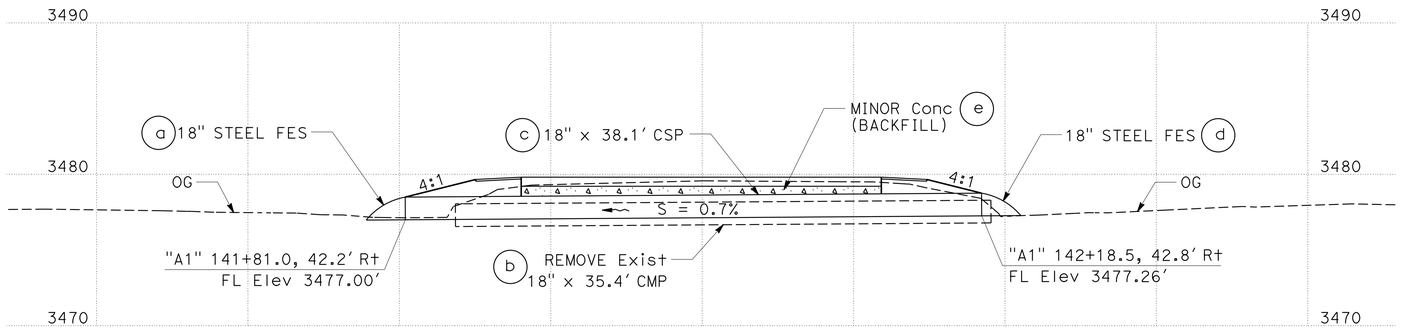

PROFILE

DRAINAGE SYSTEM No. (2)

"A1" 142+00.6
ROAD CONNECTION

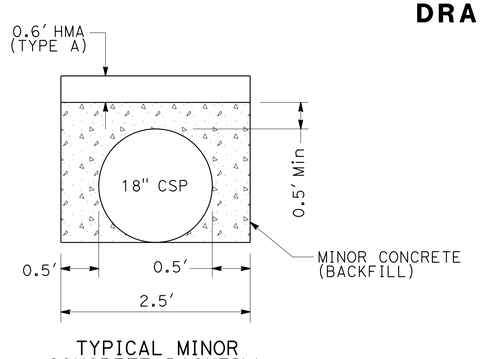

TYPICAL MINOR CONCRETE BACKFILL

EP TO EP

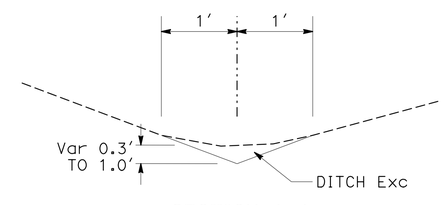

SECTION A-A

DRAINAGE QUANTITIES

DRAINAGE SYSTEM No. (hexagon)	DRAINAGE UNIT (circle)	REMOVE CULVERT LF	DITCH EXCAVATION CY	18" CORRUGATED STEEL PIPE (.109" THICK) LF	18" STEEL FLARED END SECTION EA	MINOR CONCRETE (BACKFILL) CY	DESCRIPTION	STATION "A1" LINE
1	a	2.0					REMOVE 18" x 2.0' CMP	136+37.5
	b			20.0			18" x 20.0' CSP	
	c				1		18" FES	
	d		1.4				DITCH Exc	
2	a				1		18" FES	142+00.6
	b	35.4					REMOVE 18" x 35.4' CMP	
	c			38.1			18" x 38.1' CSP	
	d				1		18" FES	
	e					3.0	MINOR Conc (BACKFILL)	
TOTAL		37.4	1.4	58.1	3	3.0		

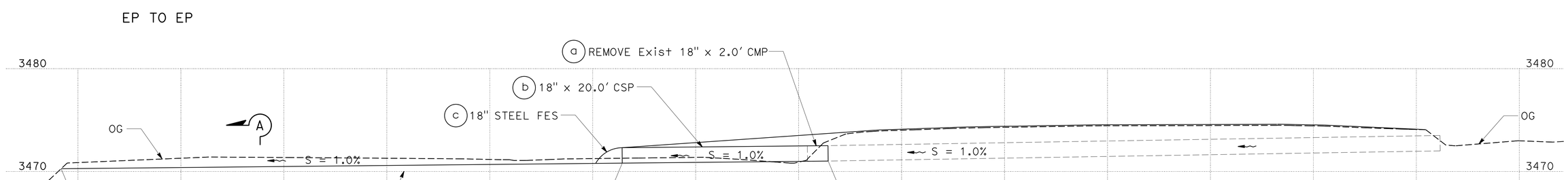

PROFILE

DRAINAGE SYSTEM No. (1)

Sta "A1" 136+37.5
MAPLE Ave

DRAINAGE DETAILS

NO SCALE

DD-1

REVISED BY | DATE REVISED
RUSSELL FLOOD | GINNY SEIBERT
CALCULATED-DESIGNED BY | CHECKED BY
FUNCTIONAL SUPERVISOR | STEVE TOPAL
STATE OF CALIFORNIA - DEPARTMENT OF TRANSPORTATION
Caltrans® DESIGN
P:\proj2\02\0E440_plans\pse\20e440ic001.dgn

LAST REVISION 02-28-12 | DATE PLOTTED => 04-SEP-2012 | TIME PLOTTED => 10:29

Dist	COUNTY	ROUTE	POST MILES TOTAL PROJECT	SHEET No.	TOTAL SHEETS
02	Sis	97	2.5/2.9	11	23

Russell Flood 05-29-12
REGISTERED CIVIL ENGINEER DATE

05-29-12
PLANS APPROVAL DATE

REGISTERED PROFESSIONAL ENGINEER RUSSELL FLOOD No. C72261 Exp. 06-30-14 CIVIL STATE OF CALIFORNIA

THE STATE OF CALIFORNIA OR ITS OFFICERS OR AGENTS SHALL NOT BE RESPONSIBLE FOR THE ACCURACY OR COMPLETENESS OF SCANNED COPIES OF THIS PLAN SHEET.

NOTES:

1. EXACT SIGN LOCATIONS TO BE DETERMINED BY THE ENGINEER.
2. EXISTING UTILITY FACILITIES HAVE NOT BEEN POSITIVELY LOCATED.
3. SIGNS SHOWN WITH (CA) INDICATE CALIFORNIA SIGN CODES, OTHERWISE FEDERAL SIGN CODES ARE SHOWN.

LEGEND

⇨ DIRECTION OF TRAVEL

SIGN (1 POST)

PCMS PORTABLE CHANGEABLE MESSAGE SIGN

ABBREVIATIONS

PCMS PORTABLE CHANGEABLE MESSAGE SIGN

CONSTRUCTION AREA SIGNS (STATIONARY MOUNTED)

TYPE	CODE	PANEL SIZE	SIGN MESSAGE	NUMBER AND SIZE OF POSTS	No. OF SIGNS
(A)	W20-1 C23B(CA)	48" x 48" 36" x 18"	ROAD WORK AHEAD INTERSECTION IMPROVEMENTS	1-4" x 6"	2
(B)	W20-1	36" x 36"	ROAD WORK AHEAD	1-4" x 4"	4
(C)	G20-2	36" x 18"	END ROAD WORK	1-4" x 4"	6

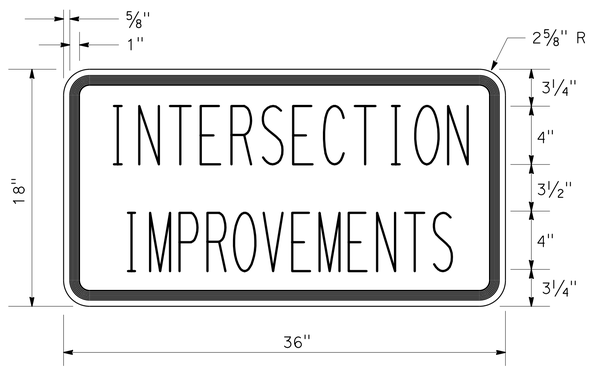

C23B(CA) SIGN PANEL DETAIL

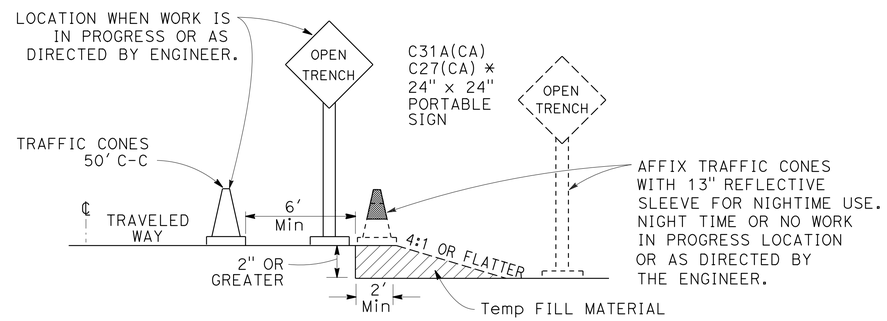

OPEN TRENCH SIGNING AND MARKING

* PLACE AT 250' INTERVALS THROUGH THE OPEN TRENCH AREA-ALTERNATE C27(CA) (OPEN TRENCH) AND C31A(CA) (NO SHOULDER) SIGNS

ROAD CONNECTIONS*

STATION	NAME
136+35	MAPLE Ave
139+18	BROOKSIDE Ave
145+75	CARRICK Ave
148+19	FIRST Ave

* ROAD CONNECTIONS REQUIRING TYPE (B) & (C) CONSTRUCTION AREA SIGNS

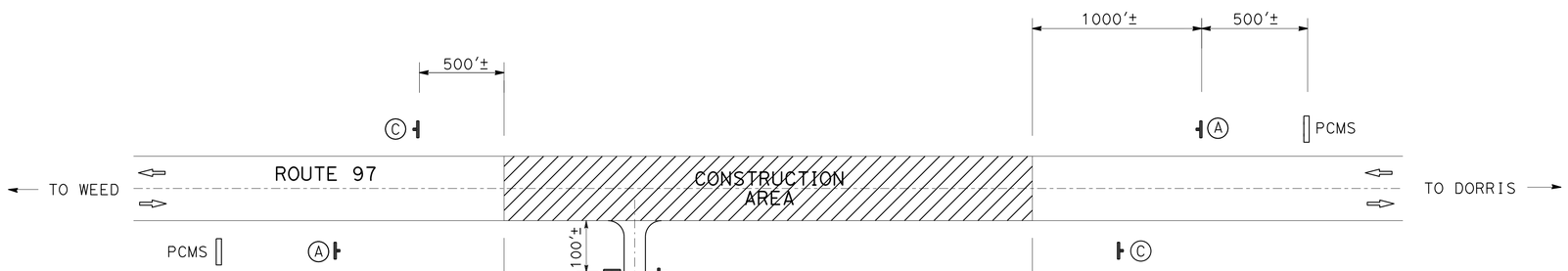

CONSTRUCTION AREA SIGNS

CONSTRUCTION AREA SIGNS

NO SCALE

CS-1

STATE OF CALIFORNIA - DEPARTMENT OF TRANSPORTATION
Caltrans DESIGN

FUNCTIONAL SUPERVISOR: STEVE TOPAL
CALCULATED-DESIGNED BY: RUSSELL FLOOD
CHECKED BY: GINNY SEIBERT
REVISED BY: R. WEBER
DATE REVISED: 08-08-11

P:\proj2\02\0E440_plans\pse\20e4401a001.dgn

LAST REVISION
DATE PLOTTED => 04-SEP-2012
TIME PLOTTED => 10:29
12-29-11

Dist	COUNTY	ROUTE	POST MILES TOTAL PROJECT	SHEET No.	TOTAL SHEETS
02	Sis	97	2.5/2.9	12	23

Russell Flood 05-29-12
REGISTERED CIVIL ENGINEER DATE

05-29-12
PLANS APPROVAL DATE

REGISTERED PROFESSIONAL ENGINEER
RUSSELL FLOOD
No. C72261
Exp. 06-30-14
CIVIL
STATE OF CALIFORNIA

THE STATE OF CALIFORNIA OR ITS OFFICERS OR AGENTS SHALL NOT BE RESPONSIBLE FOR THE ACCURACY OR COMPLETENESS OF SCANNED COPIES OF THIS PLAN SHEET.

LEGEND:

- (1-1) ROADSIDE SIGN
- (1-1) PAVEMENT DELINEATION STRIPE DETAIL No.
- TYPE III ARROW
- Beg/END STRIPE
- STRIPE CHANGE LOCATION
- DELINEATOR (TYPE E)
- DELINEATOR (TYPE F)
- L-1 OBJECT MARKER (TYPE L)
- C MARKER (CULVERT)
- WOOD SIGN (1-POST)
- MILEPOST MARKER

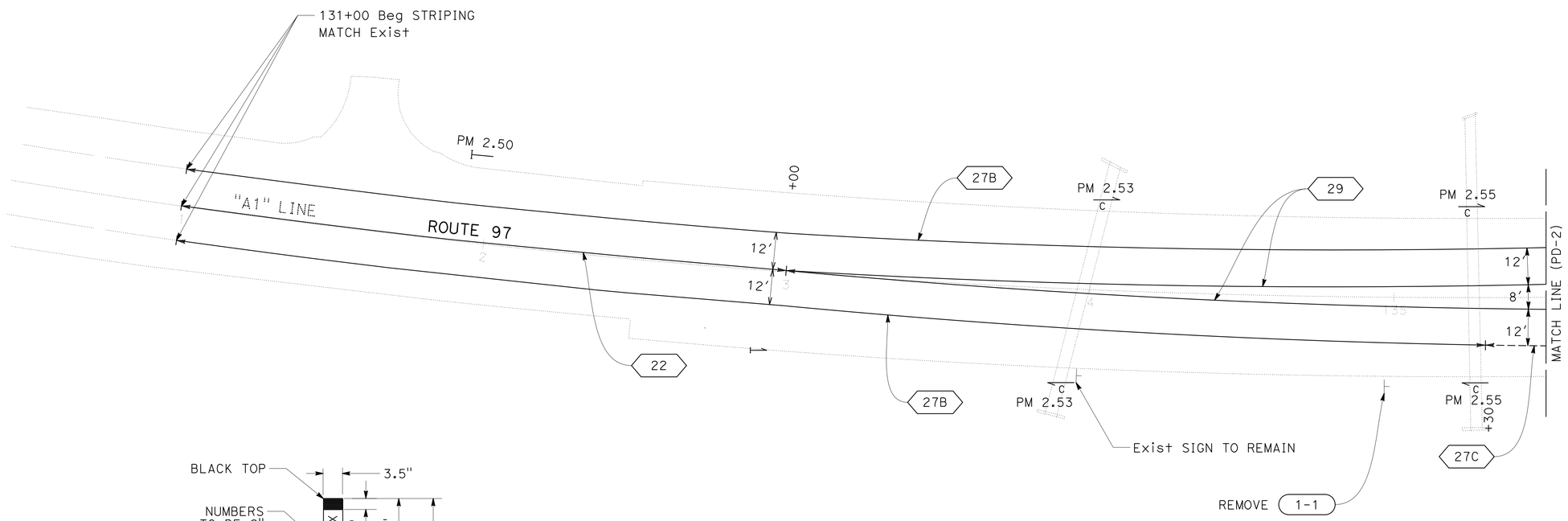

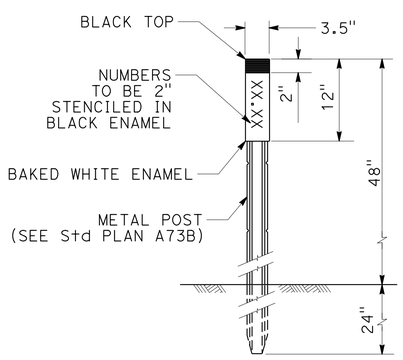

MARKER (CULVERT)

PAVEMENT DELINEATION PLAN

SCALE: 1" = 20'

PD-1

APPROVED FOR PAVEMENT DELINEATION WORK ONLY

REVISED BY	DATE REVISED

CALCULATED-DESIGNED BY: RUSSELL FLOOD
CHECKED BY: GINNY SEIBERT
FUNCTIONAL SUPERVISOR: STEVE TOPAL

STATE OF CALIFORNIA - DEPARTMENT OF TRANSPORTATION
Caltrans
DESIGN

P:\proj2\02\0E440_plans\pse\20e440na001.dgn

LAST REVISION 12-29-11 | DATE PLOTTED => 04-SEP-2012 | TIME PLOTTED => 10:29

Dist	COUNTY	ROUTE	POST MILES TOTAL PROJECT	SHEET No.	TOTAL SHEETS
02	Sis	97	2.5/2.9	13	23

Russell Flood 05-29-12
REGISTERED CIVIL ENGINEER DATE

05-29-12
PLANS APPROVAL DATE

REGISTERED PROFESSIONAL ENGINEER
RUSSELL FLOOD
No. C72261
Exp. 06-30-14
CIVIL
STATE OF CALIFORNIA

THE STATE OF CALIFORNIA OR ITS OFFICERS OR AGENTS SHALL NOT BE RESPONSIBLE FOR THE ACCURACY OR COMPLETENESS OF SCANNED COPIES OF THIS PLAN SHEET.

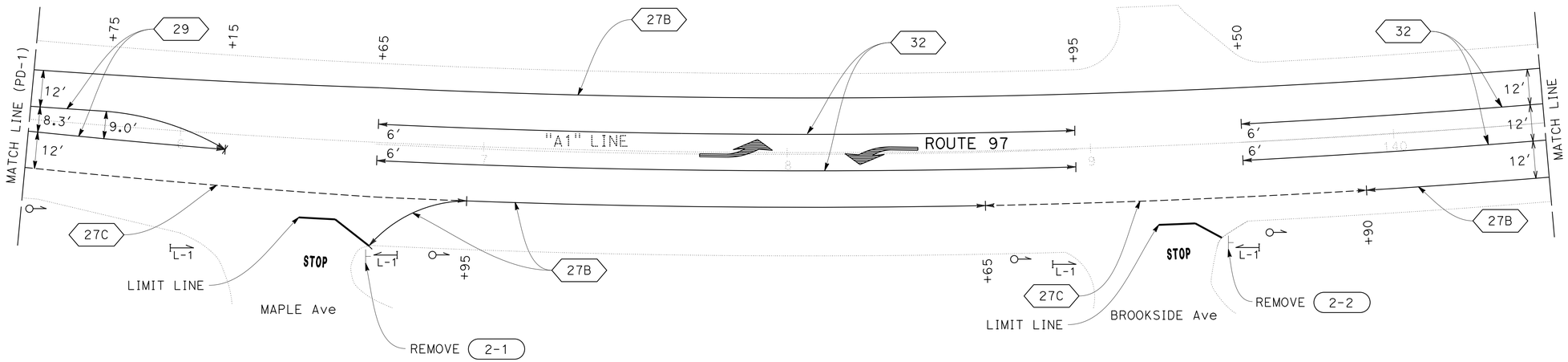

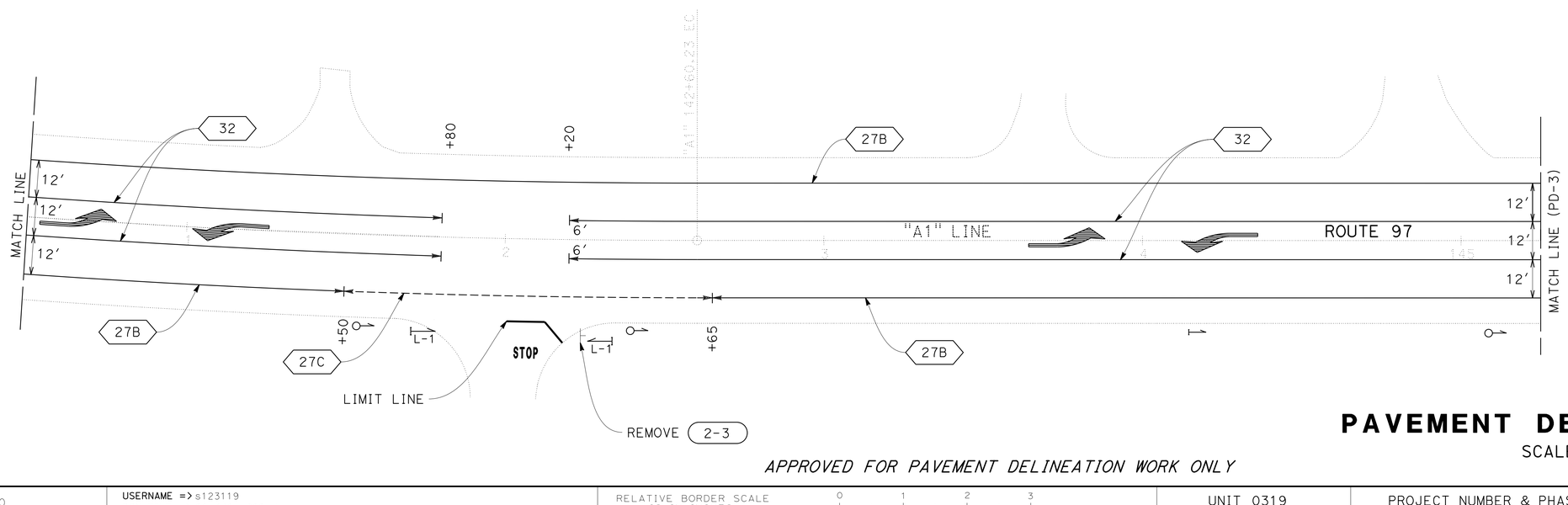

APPROVED FOR PAVEMENT DELINEATION WORK ONLY

PAVEMENT DELINEATION PLAN

SCALE: 1" = 20′

PD-2

REVISED BY	DATE REVISED

RUSSELL FLOOD — GINNY SEIBERT — CALCULATED-DESIGNED BY — CHECKED BY

FUNCTIONAL SUPERVISOR: STEVE TOPAL

STATE OF CALIFORNIA - DEPARTMENT OF TRANSPORTATION

Caltrans® **DESIGN**

P:\proj2\02\0E440_plans\pse\20e440na002.dgn

LAST REVISION 12-29-11 | DATE PLOTTED => 04-SEP-2012 | TIME PLOTTED => 10:29

Dist	COUNTY	ROUTE	POST MILES TOTAL PROJECT	SHEET No.	TOTAL SHEETS
02	Sis	97	2.5/2.9	14	23

Russell Flood 05-29-12
REGISTERED CIVIL ENGINEER DATE

05-29-12
PLANS APPROVAL DATE

REGISTERED PROFESSIONAL ENGINEER
RUSSELL FLOOD
No. C72261
Exp. 06-30-14
CIVIL
STATE OF CALIFORNIA

THE STATE OF CALIFORNIA OR ITS OFFICERS OR AGENTS SHALL NOT BE RESPONSIBLE FOR THE ACCURACY OR COMPLETENESS OF SCANNED COPIES OF THIS PLAN SHEET.

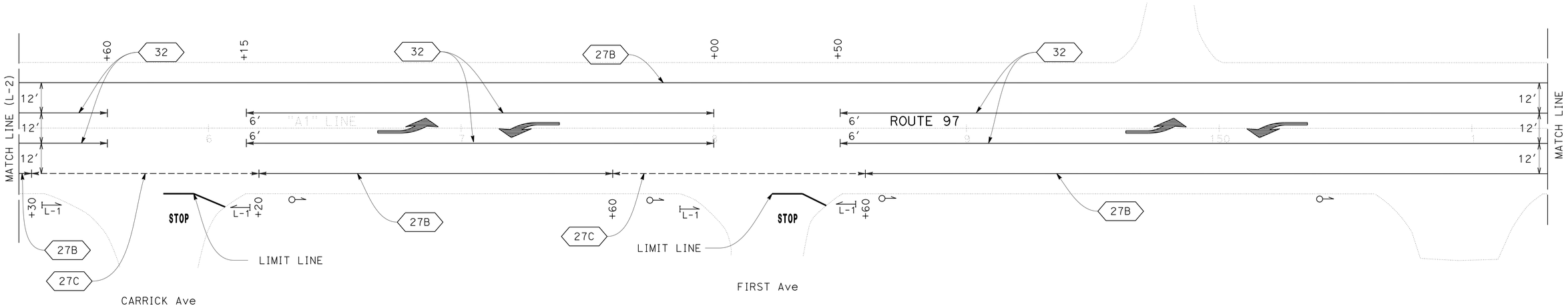

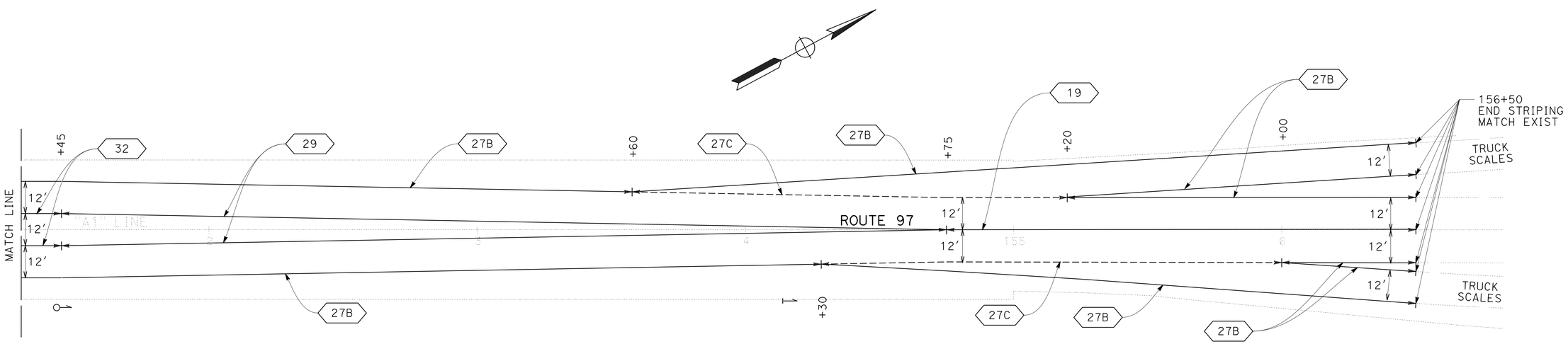

PAVEMENT DELINEATION PLAN

SCALE: 1" = 20'

PD-3

APPROVED FOR PAVEMENT DELINEATION WORK ONLY

REVISED BY | DATE REVISED
RUSSELL FLOOD | GINNY SEIBERT
CALCULATED-DESIGNED BY | CHECKED BY
FUNCTIONAL SUPERVISOR: STEVE TOPAL

STATE OF CALIFORNIA - DEPARTMENT OF TRANSPORTATION
Caltrans
DESIGN

P:\proj2\02\0E440_plans\pse\20e440na003.dgn

LAST REVISION 12-29-11 | DATE PLOTTED => 04-SEP-2012 | TIME PLOTTED => 10:29

Dist	COUNTY	ROUTE	POST MILES TOTAL PROJECT	SHEET No.	TOTAL SHEETS
02	Sis	97	2.5/2.9	15	23

Russell Flood 05-29-12
REGISTERED CIVIL ENGINEER DATE

05-29-12
PLANS APPROVAL DATE

REGISTERED PROFESSIONAL ENGINEER
RUSSELL FLOOD
No. C72261
Exp. 06-30-14
CIVIL
STATE OF CALIFORNIA

THE STATE OF CALIFORNIA OR ITS OFFICERS OR AGENTS SHALL NOT BE RESPONSIBLE FOR THE ACCURACY OR COMPLETENESS OF SCANNED COPIES OF THIS PLAN SHEET.

NOTE:

1. THE POST MILE MARKER SHALL BE WHITE (NON-REFLECTIVE) TARGET PLATE WITH BLACK SERIES D NUMERALS AND LETTERS.

LEGEND

⇦ Dir OF TRAFFIC

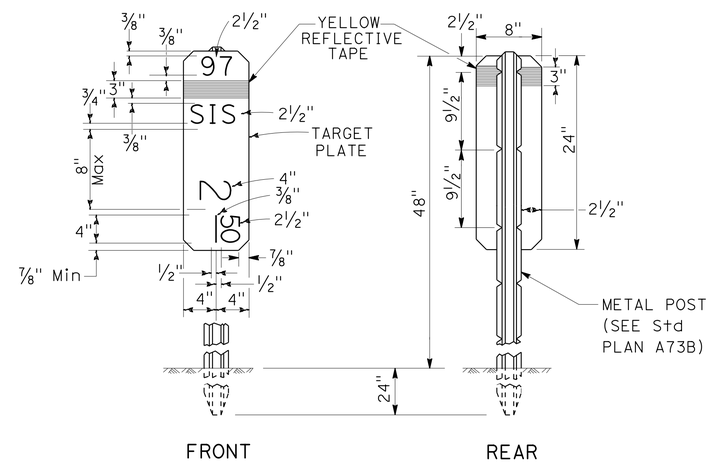

POST MILE MARKER DETAIL

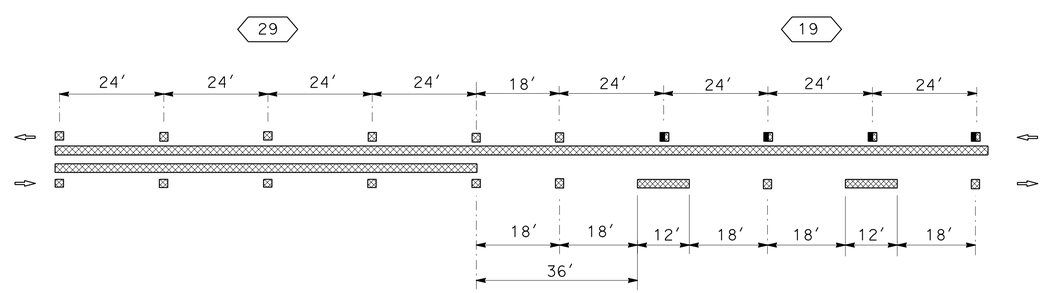

STRIPE TRANSITION DETAIL

Sta "A1" 154+75

PAVEMENT DELINEATION DETAILS (CONVENTIONAL ROADWAY)

NO SCALE

PDD-1

STATE OF CALIFORNIA - DEPARTMENT OF TRANSPORTATION
Caltrans® DESIGN

FUNCTIONAL SUPERVISOR: STEVE TOPAL
CALCULATED-DESIGNED BY: GINNY SEIBERT
CHECKED BY: RUSSELL FLOOD
REVISED BY
DATE REVISED

P:\proj2\02\0E440_plans\pse\20e440nb001.dgn

LAST REVISION 03-15-12
DATE PLOTTED => 04-SEP-2012
TIME PLOTTED => 10:29

Dist	COUNTY	ROUTE	POST MILES TOTAL PROJECT	SHEET No.	TOTAL SHEETS
02	Sis	97	2.5/2.9	16	23

Russell Flood 05-29-12
REGISTERED CIVIL ENGINEER DATE

05-29-12
PLANS APPROVAL DATE

REGISTERED PROFESSIONAL ENGINEER RUSSELL FLOOD No. C72261 Exp. 06-30-14 CIVIL STATE OF CALIFORNIA

THE STATE OF CALIFORNIA OR ITS OFFICERS OR AGENTS SHALL NOT BE RESPONSIBLE FOR THE ACCURACY OR COMPLETENESS OF SCANNED COPIES OF THIS PLAN SHEET.

NOTE:

1. (N) - NOT A SEPARATE PAY ITEM, FOR INFORMATION ONLY

CONFORMS

STATION "A1" LINE	NORTHBOUND	SOUTHBOUND	COLD PLANE ASPHALT CONCRETE PAVEMENT	ROADWAY EXCAVATION **	EMBANKMENT ** (N)	SHOULDER BACKING **	CLASS 2 AGGREGATE BASE **	HOT MIX ASPHALT (TYPE A) *	TACK COAT *	DESCRIPTION
			SQYD	CY	CY	TON	CY	TON	TON	
131+50 TO 132+50	X	X	496			4		89	0.25	MAINLINE CONFORM
136+35	X		63			1		14	0.03	MAPLE AVENUE
136+75 to 138+75	X		178							HAR AREA
139+18	X		57			1		12	0.03	BROOKSIDE AVENUE
139+32		X		34	1	4	19	31	0.02	DRIVEWAY
141+44		X	44			2		5	0.02	DRIVEWAY
142+01	X			35	4	4	20	32	0.02	ROAD CONNECTION
143+69		X		21	3	3	12	20	0.01	DRIVEWAY
144+86		X	67			1		15	0.03	DRIVEWAY
145+75	X		78			1		14	0.04	CARRICK AVENUE
148+19	X		62			1		11	0.03	FIRST AVENUE
149+80		X	41			1		9	0.02	DRIVEWAY
150+95	X		71			1		13	0.04	ROAD CONNECTION
155+00 TO 156+00	X	X	596			6		107	0.30	MAINLINE CONFORM
TOTAL			1753	90	8	30	51	373	0.84	

* TOTALS INCLUDED IN ROADWAY QUANTITIES TABLE
** RECONSTRUCTED/WIDENED AREA.
(TOTALS INCLUDED IN ROADWAY QUANTITIES TABLE)

ROADWAY QUANTITIES

STATION "A1" LINE	ROADWAY EXCAVATION	EMBANKMENT (N)	IMPORTED BORROW	SHOULDER BACKING	CLASS 2 AGGREGATE BASE	HOT MIX ASPHALT (TYPE A)	TACK COAT
	CY	CY	TON	TON	CY	TON	TON
132+50 TO 155+00	821	914	19	408	612	3195	4.1
FROM CONFORMS	90	8		30	51	373	0.8
TOTAL	911	922	19	438	663	3568	4.9

TEMPORARY FENCE

STATION "A1" LINE	NORTHBOUND	SOUTHBOUND	TEMPORARY FENCE (TYPE ESA)
			LF
133+40 TO 135+40	X		210
133+95 TO 134+20		X	40
135+10 TO 135+45		X	45
TOTAL			295

EROSION CONTROL

	EROSION CONTROL (HYDROSEED)
	ACRE
TOTAL	0.8

THERMOPLASTIC PAVEMENT MARKING

SHEET No.	DESCRIPTION	STATION "A1" LINE	REMOVE	PLACE		REMARKS
			SQFT	EA	SQFT	
PD-2	MAPLE Ave	136+40	26	1	26	LIMIT LINE
	MAPLE Ave	136+40	22	1	22	STOP
		138+00		2	84	TYPE III (L) ARROW
	BROOKSIDE Ave	139+21	22	1	22	LIMIT LINE
	BROOKSIDE Ave	139+21	22	1	22	STOP
		140+90		2	84	TYPE III (L) ARROW
	ROAD CONNECTION	142+00		1	18	LIMIT LINE
	ROAD CONNECTION	142+00		1	22	STOP
		144+00		2	84	TYPE III (L) ARROW
PD-3	CARRICK Ave	145+82	26	1	26	LIMIT LINE
	CARRICK Ave	145+82	22	1	22	STOP
		147+00		2	84	TYPE III (L) ARROW
	FIRST Ave	148+23	23	1	23	LIMIT LINE
	FIRST Ave	148+23	22	1	22	STOP
		150+00		2	84	TYPE III (L) ARROW
		TOTAL	185		645	

MAINTAIN EXISTING TRAFFIC MANAGEMENT SYSTEM ELEMENTS DURING CONSTRUCTION

HAR FLASHER	"A1" 135+72.2	FLASHER FSBT
HAR FLASHER	"A1" 137+29.8	FLASHER FNBT

ADJUST FRAME AND COVER TO GRADE

LOCATION	ADJUST FRAME AND COVER TO GRADE
	EA
"A1" 138+92.3, 35.1' Rt	1

ROADSIDE SIGNS

SIGN No. #-#	SIGN CODE	REMOVE ROADSIDE SIGN (WOOD POST)
		EA
1-1	R25(CA)	1
2-1	R25(CA)	1
2-2	R25(CA)	1
2-3	R25(CA)	1
TOTAL		4

DELINEATORS AND MARKERS

SHEET No.	STATION "A1" LINE	REMOVE MARKER	REMOVE DELINEATOR	DELINEATOR (CLASS 2) TYPE E	DELINEATOR (CLASS 2) TYPE F	MILEPOST MARKER	MARKER (CULVERT)	OBJECT MARKER (TYPE L-1)
		EA	EA	EA	EA	EA	EA	EA
PD-1	131+00 TO 135+50	4	2		1	1	4	
PD-2	135+50 TO 145+25	6	7	7	1			6
PD-3	145+25 TO 156+00	4	6	5	1			4
SUBTOTAL				12	3			
TOTAL		14	15	15		1	4	10

TRAFFIC STRIPES AND PAVEMENT MARKERS

SHEET No.	STATION "A1" LINE	THERMOPLASTIC TRAFFIC STRIPE (SPRAYABLE) DETAIL 19	DETAIL 22	DETAIL 27B	DETAIL 27C	DETAIL 29	DETAIL 32	PAVEMENT MARKER (RETROREFLECTIVE-RECESSED) TYPE D	TYPE H
		LF	LF	LF	LF	LF	LF	EA	EA
PD-1	131+00 TO 135+50		200	880	20	500		43	
PD-2	135+50 TO 145+25			1604	388	132	1530	95	
PD-3	145+25 TO 156+00	175		2421	525	660	1030	97	8
SUBTOTAL		175	200	4905	933	1292	2560	235	8
TOTAL		10,065						243	

SUMMARY OF QUANTITIES

Q-1

REVISED BY | DATE REVISED
RUSSELL FLOOD | GINNY SEIBERT
CALCULATED-DESIGNED BY | CHECKED BY
FUNCTIONAL SUPERVISOR
STEVE TOPAL

STATE OF CALIFORNIA - DEPARTMENT OF TRANSPORTATION
Caltrans® DESIGN

P:\proj2\02\0E440_plans\pse\20e440pa001.dgn

LAST REVISION 01-09-12 | DATE PLOTTED => 04-SEP-2012 | TIME PLOTTED => 10:29

DIST	COUNTY	ROUTE	POST MILES TOTAL PROJECT	SHEET NO.	TOTAL SHEETS
02	Sis	97	2.5/2.9	17	23

Raymond Don Tsztoo
REGISTERED CIVIL ENGINEER

June 6, 2008
PLANS APPROVAL DATE

REGISTERED PROFESSIONAL ENGINEER
Raymond Don Tsztoo
No. C37332
Exp. 6-30-08
CIVIL
STATE OF CALIFORNIA

The State of California or its officers or agents shall not be responsible for the accuracy or completeness of electronic copies of this plan sheet.

To accompany plans dated 05-29-12

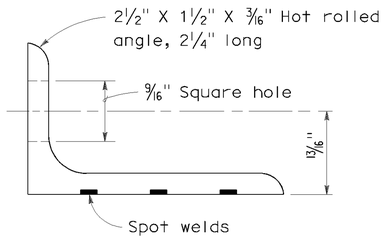

ANGLE

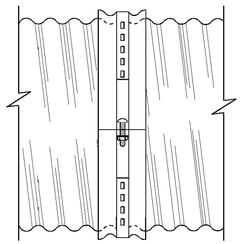

SIDE VIEW
ANGLE

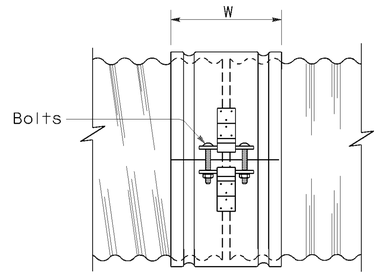

SIDE VIEW
SINGLE BAR AND STRAP

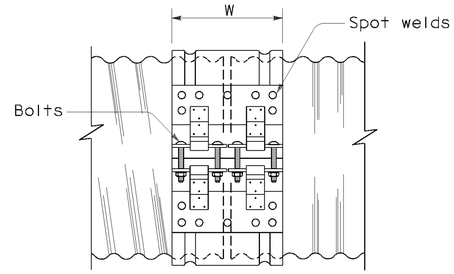

SIDE VIEW
DOUBLE BAR AND STRAP

NOTES:

1. All ferrous metal coupling band connection hardware shall be galvanized or electroplated in accordance with the Standard Specifications.
2. Dimensions and thicknesses shown are minimum.
3. Spot welds shall develop minimum required strength of strap.
4. Fillet welds of equivalent strength may be substituted for spot welds or rivets.
5. Dimension depends upon whether end condition is lips up or lips down.

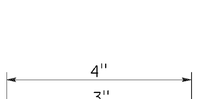

SECTION

H-4 HUGGER BAND

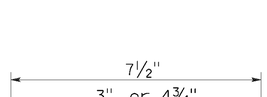

SECTION

H-7 HUGGER BAND

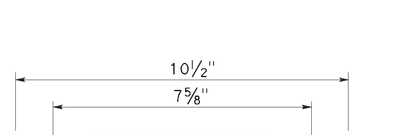

SECTION

H-10 HUGGER BAND

SECTION

H-12 HUGGER BAND

HUGGER COUPLING BANDS

STATE OF CALIFORNIA
DEPARTMENT OF TRANSPORTATION

CORRUGATED METAL PIPE COUPLING DETAILS No. 4 HUGGER COUPLING BANDS

NO SCALE

RSP D97D DATED JUNE 6, 2008 SUPERSEDES STANDARD PLAN D97D
DATED MAY 1, 2006 - PAGE 186 OF THE STANDARD PLANS BOOK DATED MAY 2006.

REVISED STANDARD PLAN RSP D97D

2006 REVISED STANDARD PLAN RSP D97D

P:\proj2\02\0E440_plans\pse\20e440va001.dgn

USERNAME => s123119
DGN FILE => 20e440va001.dgn

DATE PLOTTED => 04-SEP-2012
TIME PLOTTED => 10:29

3-24-08

DIST	COUNTY	ROUTE	PCST MILES TOTAL PROJECT	SHEET NO.	TOTAL SHEETS
02	Sis	97	2.5/2.9	18	23

Raymond Don Tsztoo
REGISTERED CIVIL ENGINEER

June 6, 2008
PLANS APPROVAL DATE

REGISTERED PROFESSIONAL ENGINEER Raymond Don Tsztoo No. C37332 Exp. 6-30-08 CIVIL STATE OF CALIFORNIA

The State of California or its officers or agents shall not be responsible for the accuracy or completeness of electronic copies of this plan sheet.

ANNULAR AND HELICAL PROFILE

COUPLING TYPE	PIPE CORRUGATION	PIPE SIZE	W OR A	PIPE WALL THICKNESS CSP	PIPE WALL THICKNESS CAP	BAND THICKNESS CSP	BAND THICKNESS CAP	BAR AND STRAP (CSP ONLY) STRAP THICKNESS	BOLTS Dia	BAR Dia	BAR YIELD STRENGTH	ANGLE DIMENSIONS CSP	ANGLE DIMENSIONS CAP	BOLTS (No.- Dia) CSP	BOLTS (No.- Dia) CAP	RIVETS ANGLE TO BAND CSP	RIVETS ANGLE TO BAND CAP	SPOT WELDS ANGLE TO BAND CSP
TWO PIECE INTEGRAL FLANGE	1½′ × ¼"	6"-10"	7"	0.052"-0.079"	0.048"-0.060"	0.052"	0.060"							2-⅜"	2-⅜"			
		12"-18"	7"	0.052"-0.079"		0.064"								2-½"				
	2⅔" × ½"	12"-24"	7"	0.052"-0.079"	0.060"-0.105"	0.064"	0.060"							2-½"	2-½"			
UNIVERSAL	2⅔" × ½"	THROUGH 36"	12"	0.052"-0.138"	0.060"-0.135"	0.052"	0.060"					2" × 2" × 3/16"	2" × 2" × 3/16"	3-½"	3-½"	3-⅜"	3-⅜"	3-½"
		42"-60"	12"	0.052"-0.168"	0.075"-0.164"	0.052"	0.060"					2" × 2" × 3/16"	2" × 2" × 3/16"	3-½"	3-½"	3-⅜"	3-⅜"	5-½"
		THROUGH 72"	12"	0.052"-0.168"	0.164"	0.052"	0.105"	0.079"	½"	⅞"	32 ksi	2" × 2" × 3/16"	2" × 2" × 3/16"	3-½"	3-½"	3-⅜"	3-⅜"	5-½"
		78"-84"	16¼"	0.168"		0.079"		DOUBLE 0.079"	½"	⅞"	32 ksi							
ANNULAR	2⅔" × ½"	THROUGH 36"	7"	0.064"-0.138"	0.060"-0.135"	0.052"	0.060"	0.079"	½"	⅞"	32 ksi	2" × 2" × 3/16"	2" × 2" × 3/16"	2-½"	2-½"	3-⅜"	3-⅜"	3-½"
		42"-72"	12"	0.064"-0.168"	0.075"-0.164"	0.052"	0.105"	0.079"	½"	⅞"	32 ksi	2" × 2" × 3/16"	2" × 2" × 3/16"	3-½"	3-½"	3-⅜"	3-⅜"	5-½"
		78"-84"	12"	0.168"		0.079"		0.109"	½"	⅞"	45 ksi	2" × 2" × 3/16"		3-½"		3-⅜"		5-½"
	3" × 1"	48"-90"	14"	0.064"-0.109"		0.052"		0.079"	½"	⅞"	32 ksi	2" × 2" × 3/16"		3-½"		3-⅜"		5-½"
		96"-120"	14"	0.079"-0.109"		0.052"		0.109"	½"	⅞"	45 ksi	2" × 2" × 3/16"		3-½"		4-⅜"		
		42"-108"	14"		0.060"-0.135"		0.060"						2" × 2" × 3/16"		3-½"		3-⅜"	
HELICAL	2⅔" × ½"	THROUGH 36"	12"	0.052"-0.138"	0.060"-0.135"	0.052"	0.060"	0.079"	½"	⅞"	32 ksi	2" × 2" × 3/16"	2" × 2" × 3/16"	3-½"	3-½"	3-⅜"	3-⅜"	3-½"
		42"-72"	12"	0.052"-0.168"	0.075"-0.164"	0.052"	0.060"	0.079"	½"	⅞"	32 ksi	2" × 2" × 3/16"	2" × 2" × 3/16"	3-½"	3-½"	3-⅜"	3-⅜"	5-½"
		78"-84"	12"	0.168"		0.079"		0.109"	½"	⅞"	45 ksi	2" × 2" × 3/16"		3-½"		3-⅜"		5-½"
	3" × 1"	48"-90"	14"	0.064"-0.109"		0.052"		0.079"	½"	⅞"	32 ksi	2" × 2" × 3/16"		3-½"		3-⅜"		5-½"
		96"-120"	14"	0.079"-0.109"		0.052"		0.109"	½"	⅞"	45 ksi	2" × 2" × 3/16"		3-½"		4-⅜"		
		42"-108"	14"		0.060"-0.135"		0.060"						2" × 2" × 3/16"		3-½"		3-⅜"	
HUGGER	2⅔" × ½" REROLLED END	12"-54"	4"	0.052"-0.109"		0.052"						2½" × 1½" × 3/16"	2½" × 1½" × 3/16"	1-½"				3-½"
		60"-66"	4"	0.109"		0.064"						2½" × 1½" × 3/16"	2½" × 1½" × 3/16"	1-½"				3-½"
		36"-48"	4"	0.138"		0.064"						2½" × 1½" × 3/16"	2½" × 1½" × 3/16"	1-½"				3-½"
		THROUGH 72"	10½"	0.052"-0.168"		0.052"		0.079"	½"	⅞"	32 ksi							
		78"-84"	10½"	0.168"		0.079"		0.109"	½"	⅞"	45 ksi							
	3" × 1" REROLLED END	48"-90"	10½"	0.064"-0.109"		0.052"		0.079"	½"	⅞"	32 ksi							
		96"-120"	10½"	0.079"-0.109"		0.052"		0.109"	½"	⅞"	45 ksi							
	5" × 1" REROLLED END	48"-66"	7½"	0.064"-0.109"		0.064"		0.079"	½"	⅞"	32 ksi	2½" × 1½" × 3/16"	2½" × 1½" × 3/16"	1-½"				3-½"
		72"-90"	7½"	0.064"-0.079"		0.064"		0.079"	½"	⅞"	32 ksi	2½" × 1½" × 3/16"	2½" × 1½" × 3/16"	1-½"				3-½"
		48"-90"	7½"	0.064"-0.138"		0.064"		0.079"	½"	⅞"	32 ksi							
		48"-120"	12" SEE	0.064"-0.109"		0.064"		0.079"	½"	⅞"	32 ksi							
		48"-84"	12" NOTE	0.138"		0.064"		0.079"	½"	⅞"	32 ksi							
		90"-120"	12" 11	0.138"		0.064"		DOUBLE 0.079"	½"	⅞"	32 ksi							

SPIRAL RIB PROFILE

COUPLING TYPE	PIPE CORRUGATION	PIPE SIZE	W	PIPE WALL THICKNESS SSRP	PIPE WALL THICKNESS ASRP	BAND THICKNESS SSRP	BAND THICKNESS ASRP	BAR AND STRAP (SSRP ONLY) STRAP THICKNESS	BOLTS Dia	BAR Dia	BAR YIELD STRENGTH	ANGLE DIMENSIONS SSRP	ANGLE DIMENSIONS ASRP	BOLTS (No.- Dia) SSRP	BOLTS (No.- Dia) ASRP	RIVETS ANGLE TO BAND SSRP	RIVETS ANGLE TO BAND ASRP	SPOT WELDS ANGLE TO BAND SSRP
ANNULAR	2⅔" × ½" * REROLLED END	24"-36"	12"	0.064"-0.109"	0.060"-0.105"	0.052"	0.060"	0.079"	½"	⅞"	32 ksi	2" × 2" × 3/16"	2" × 2" × 3/16"	3-½"	3-½"	3-⅜"	3-⅜"	5-½"
		42"-60"	12"	0.064"-0.109"	0.075"-0.105"	0.052"	0.105"	0.079"	½"	⅞"	32 ksi	2" × 2" × 3/16"	2" × 2" × 3/16"	3-½"	3-½"	3-⅜"	3-⅜"	5-½"
		66"-72"	12"	0.064"-0.109"		0.052"		0.079"	½"	⅞"	32 ksi	2" × 2" × 3/16"	2" × 2" × 3/16"	3-½"	3-½"	3-⅜"	3-⅜"	5-½"
		78"-114"	12"	0.079"-0.109"		0.079"		0.109"	½"	⅞"	45 ksi	2" × 2" × 3/16"	2" × 2" × 3/16"	3-½"	3-½"	3-⅜"	3-⅜"	5-½"
HUGGER	2⅔" × ½" * REROLLED END	24"-72"	10½"	0.064"-0.109"		0.052"		0.079"	½"	⅞"	32 ksi							
		78"-84"	10½"	0.109"		0.079"		0.109"	½"	⅞"	45 ksi							

* See Note 14.

14. All profiles of Spiral Rib Pipe (¾" × ¾" ribs at 7½" pitch and ¾" × 1" ribs at 11½" pitch in both steel and aluminum and ¾" × 1" ribs at 8½" pitch in steel only) shall be manufactured with rerolled ends. Corrugation profile of the rerolled ends shall be 2⅔" × ½" annual corrugations with a minimum of two full corrugations at each end.

NOTES:

To accompany plans dated 05-29-12

1. All ferrous metal coupling band connection hardware shall be galvanized or electroplated in accordance with the Standard Specifications.
2. For helically corrugated coupling bands, the connection angles may be oriented parallel to the pipe axis, provided connecting holes are slotted lengthwise sufficiently to allow adjustment for the helix angle.
3. Tension strap may be connected to band with either spot welds or fillet welds that develop minimum required strength of strap.
4. Use 1¼" gage line dimension on attached angle leg for rivets and spot welds.
5. Band thickness shall not be less than:
   a. 3 standard thicknesses lighter than the thickness of the pipe for Corrugated Steel Pipe.
   b. 2 standard thicknesses lighter than the thickness of the pipe and in no case lighter than 0.060" for Corrugated Aluminum Pipe.
6. Dimensions, thicknesses and strengths shown are minimum.
7. For pipe arches use same width band as for round pipe of equal periphery.
8. Fillet welds of equivalent strenght may be substituted for spot welds or rivets.
9. Spot welds shall develop minimum required strength of strap.
10. Pipe with rerolled ends having at least two 2⅔" × ½" annular corrugations at each end with or without an upturned flange may be connected with any of the annular coupling bands shown for pipe of the same diameter and wall thickness and having 2⅔" × ½" corrugations.
11. In the case of H-12 huggerbands, two piece bands are required for diameters through 96" and three piece bands are required for diameters 102" through 120".
12. Two piece bands are required for pipes greater than 42" diameter.
13. The 2¼" × 2" × 0.109" thick galvanized die-formed angle connector may be used in lieu of the 2" × 2" × 3/16" angle connector for standard joints only on pipes through 72" diameter.

STATE OF CALIFORNIA
DEPARTMENT OF TRANSPORTATION

CORRUGATED METAL PIPE COUPLING DETAILS No. 5 STANDARD JOINT

NO SCALE

RSP D97E DATED JUNE 6, 2008 SUPERSEDES STANDARD PLAN D97E
DATED MAY 1, 2006 - PAGE 187 OF THE STANDARD PLANS BOOK DATED MAY 2006.

REVISED STANDARD PLAN RSP D97E

2006 REVISED STANDARD PLAN RSP D97E

DIST	COUNTY	ROUTE	POST MILES TOTAL PROJECT	SHEET NO.	TOTAL SHEETS
02	Sis	97	2.5/2.9	19	23

Randell D. Hiatt
REGISTERED CIVIL ENGINEER

June 6, 2008
PLANS APPROVAL DATE

REGISTERED PROFESSIONAL ENGINEER
Randell D. Hiatt
No. C50200
Exp. 6-30-09
CIVIL
STATE OF CALIFORNIA

The State of California or its officers or agents shall not be responsible for the accuracy or completeness of electronic copies of this plan sheet.

To accompany plans dated 05-29-12

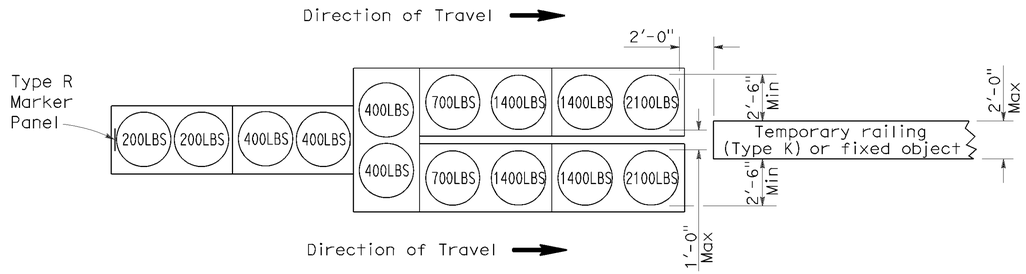

ARRAY 'TU14'

Approach speed 45 mph or more

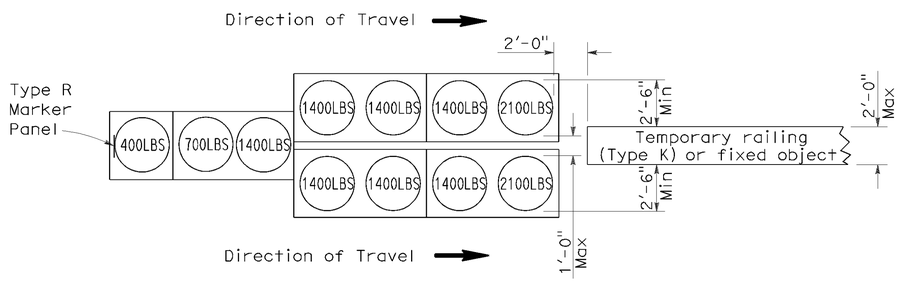

ARRAY 'TU11'

Approach speed less than 45 mph

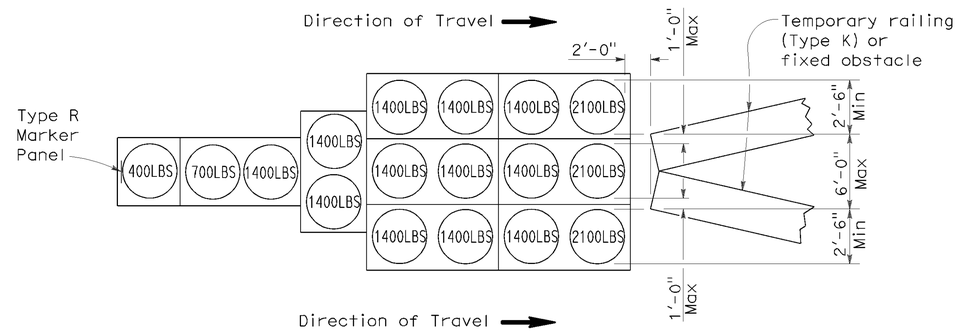

ARRAY 'TU17'

Approach speed less than 45 mph

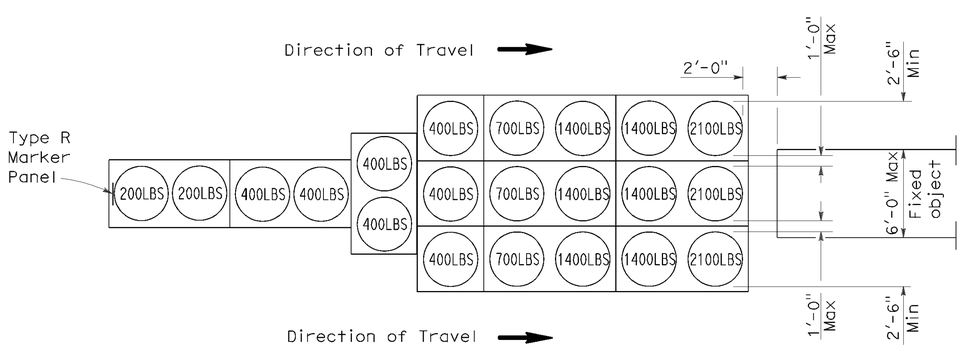

ARRAY 'TU21'

Approach speed 45 mph or more

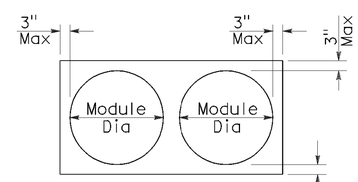

PLAN

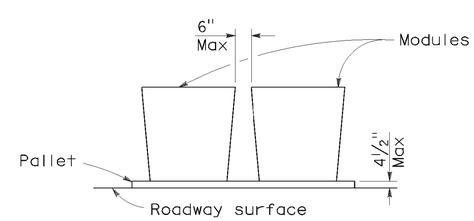

ELEVATION

CRASH CUSHION PALLET DETAIL

See Note 7

NOTES:

1. (XXX) Indicates sand filled module location and weight of sand in pounds for each module. Module spacing is based on the greater diameter of the module.
2. All sand weights are nominal.
3. Temporary crash cushion arrays shall not encroach on the traveled way.
4. Place the top of Type R marker panel 1" below the module lid.
5. Refer to Standard Plan A73B for marker details.
6. Approach speeds indicated conform to NCHRP 350 Report criteria.
7. Use of pallets is optional.

STATE OF CALIFORNIA
DEPARTMENT OF TRANSPORTATION

TEMPORARY CRASH CUSHION, SAND FILLED (UNIDIRECTIONAL)

NO SCALE

RSP T1A DATED JUNE 6, 2008 SUPERSEDES STANDARD PLAN T1A
DATED MAY 1, 2006 - PAGE 211 OF THE STANDARD PLANS BOOK DATED MAY 2006.

REVISED STANDARD PLAN RSP T1A

2006 REVISED STANDARD PLAN T1A

P:\proj2\02\0E440_plans\pse\20e440va003.dgn
USERNAME => s123119
DGN FILE => 20e440va003.dgn
DATE PLOTTED => 04-SEP-2012
TIME PLOTTED => 10:29
5-15-08

DIST	COUNTY	ROUTE	POST MILES TOTAL PROJECT	SHEET NO.	TOTAL SHEETS
02	Sis	97	2.5/2.9	20	23

Randell D. Hiatt
REGISTERED CIVIL ENGINEER

June 6, 2008
PLANS APPROVAL DATE

REGISTERED PROFESSIONAL ENGINEER
Randell D. Hiatt
No. C50200
Exp. 6-30-09
CIVIL
STATE OF CALIFORNIA

The State of California or its officers or agents shall not be responsible for the accuracy or completeness of electronic copies of this plan sheet.

To accompany plans dated 05-29-12

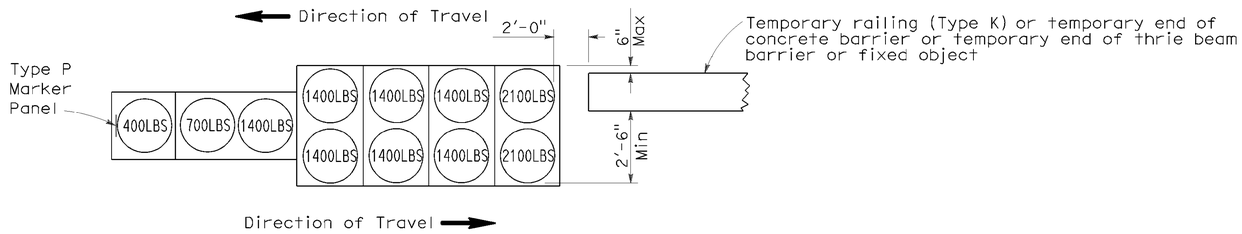

ARRAY 'TB11'

Approach speed less than 45 mph

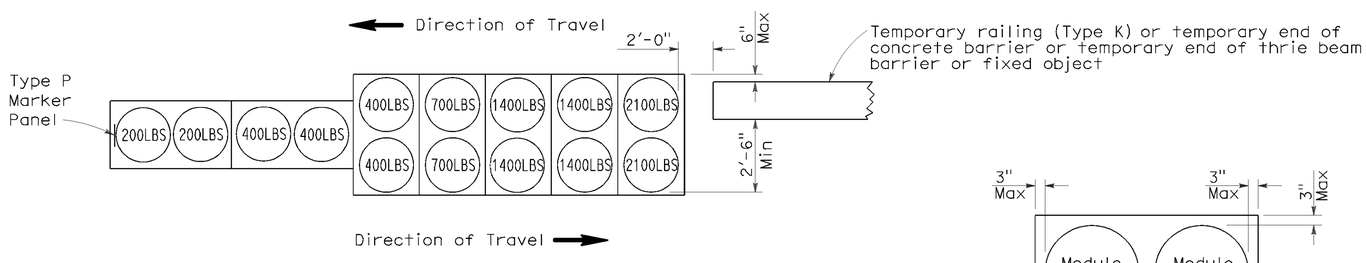

ARRAY 'TB14'

Approach speed 45 mph or more

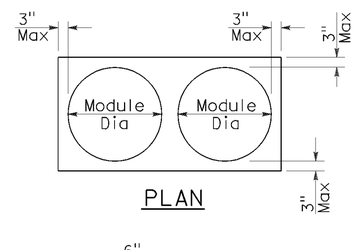

PLAN

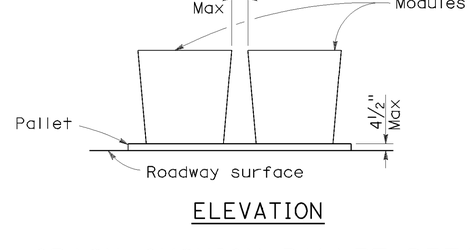

ELEVATION

CRASH CUSHION PALLET DETAIL

See Note 7

NOTES:

1. (XXX) Indicates sand filled module location and weight of sand in pounds for each module. Module spacing is based on the greater diameter of the module.
2. All sand weights are nominal.
3. Temporary crash cushion arrays shall not encroach on the traveled way.
4. Place the Type P marker panel so that the bottom of the panel rests upon the pallet.
5. Refer to Standard Plan A73B for marker details.
6. Approach speeds indicated conform to NCHRP 350 Report criteria.
7. Use of pallets is optional.

STATE OF CALIFORNIA
DEPARTMENT OF TRANSPORTATION

TEMPORARY CRASH CUSHION, SAND FILLED (BIDIRECTIONAL)

NO SCALE

RSP T1B DATED JUNE 6, 2008 SUPERSEDES STANDARD PLAN T1B
DATED MAY 1, 2006 - PAGE 212 OF THE STANDARD PLANS BOOK DATED MAY 2006.

REVISED STANDARD PLAN RSP T1B

2006 REVISED STANDARD PLAN RSP T1B

P:\proj2\02\0E440_plans\pse\20e440va004.dgn
USERNAME => s123119
DGN FILE => 20e440va004.dgn
DATE PLOTTED => 04-SEP-2012
TIME PLOTTED => 10:29
5-15-08

DIST	COUNTY	ROUTE	POST MILES TOTAL PROJECT	SHEET NO.	TOTAL SHEETS
02	Sis	97	2.5/2.9	21	23

Randell D. Hiatt
REGISTERED CIVIL ENGINEER

June 6, 2008
PLANS APPROVAL DATE

REGISTERED PROFESSIONAL ENGINEER
Randell D. Hiatt
No. C50200
Exp. 6-30-09
CIVIL
STATE OF CALIFORNIA

The State of California or its officers or agents shall not be responsible for the accuracy or completeness of electronic copies of this plan sheet.

To accompany plans dated 05-29-12

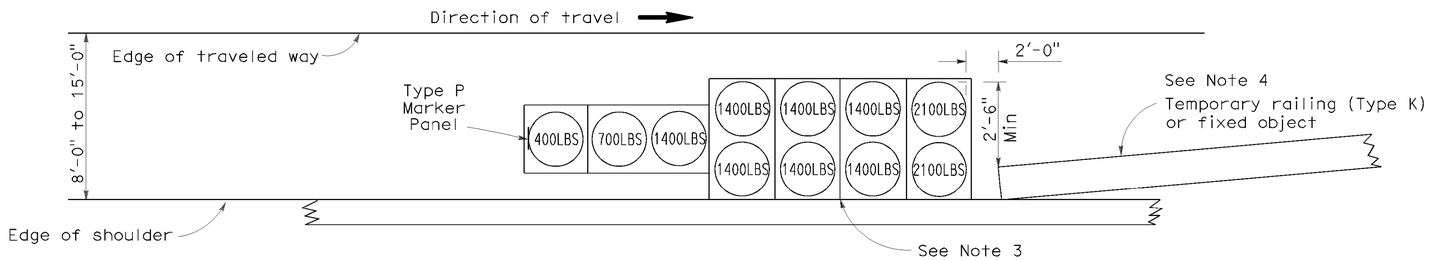

ARRAY 'TS11'

Approach speed less than 45 mph
See Note 9

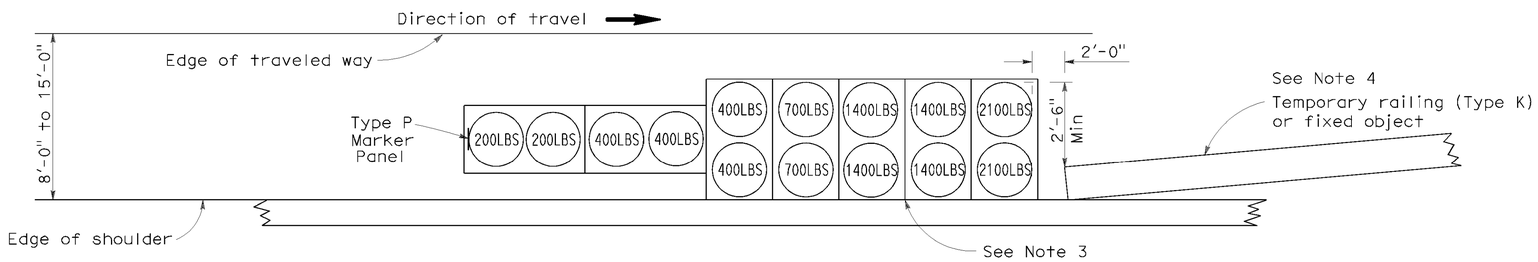

ARRAY 'TS14'

Approach speed 45 mph or more
See Note 9

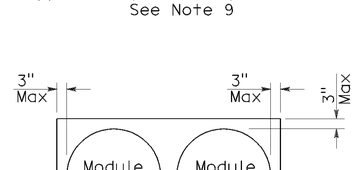

PLAN

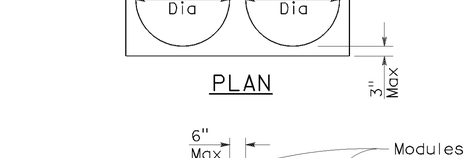

ELEVATION

CRASH CUSHION PALLET DETAIL

See Note 11

NOTES:

1. (XXX) Indicates sand filled module location and weight of sand in pounds for each module. Module spacing is based on the greater diameter of the module.
2. All sand weights are nominal.
3. The temporary crash cushion arrays shown on this plan shall be used only in locations where there will be traffic on one side of the temporary crash cushion array.
4. If the fixed object or approach end of the temporary railing is less than 15'-0" from the edge of traveled way, a temporary crash cushion is required in a construction or work zone.
5. Temporary crash cushion arrays shall not encroach on the traveled way.
6. Arrays for median shoulders shall conform to details shown on this plan for outside shoulders.
7. Place the Type P marker panel so that the bottom of the panel rests upon the pallet and faces traffic.
8. Refer to Standard Plan A73B for marker details.
9. For shoulder widths less than 8'-0", appropriate approved crash cushion protection, other than sand filled modules, shall be provided at fixed objects and at approach ends of temporary railing. The specific type of crash cushion shall be as shown on the project plans or as specified in the Special Provisions, or if not shown on the project plans or specified in the Special Provisions, shall be as approved by the Engineer.
10. Approach speeds indicated conform to NCHRP 350 Report criteria.
11. Use of pallets is optional.

STATE OF CALIFORNIA
DEPARTMENT OF TRANSPORTATION

TEMPORARY CRASH CUSHION, SAND FILLED (SHOULDER INSTALLATIONS)

NO SCALE

RSP T2 DATED JUNE 6, 2008 SUPERSEDES STANDARD PLAN T2
DATED MAY 1, 2006 - PAGE 213 OF THE STANDARD PLANS BOOK DATED MAY 2006.

REVISED STANDARD PLAN RSP T2

2006 REVISED STANDARD PLAN RSP T2

Dist	COUNTY	ROUTE	POST MILES TOTAL PROJECT	SHEET No.	TOTAL SHEETS
02	Sis	97	2.5/2.9	22	23

Randell D. Hiatt
REGISTERED CIVIL ENGINEER

May 20, 2011
PLANS APPROVAL DATE

REGISTERED PROFESSIONAL ENGINEER
Randell D. Hiatt
No. C50200
Exp. 6-30-11
CIVIL
STATE OF CALIFORNIA

The State of California or its officers or agents shall not be responsible for the accuracy or completeness of electronic copies of this plan sheet.

To accompany plans dated 05-29-12

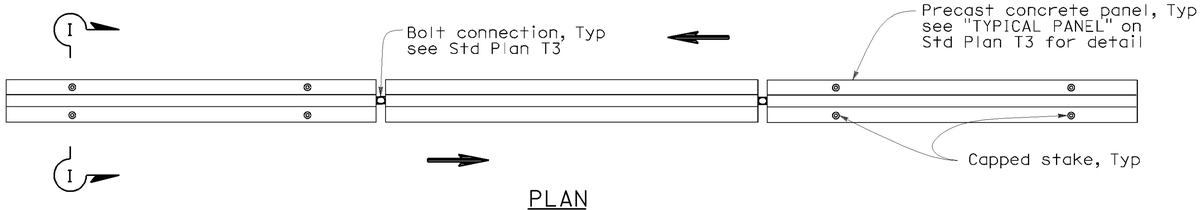

PLAN

RAILING STAKING CONFIGURATION FOR TWO-WAY TRAFFIC

See Note 1

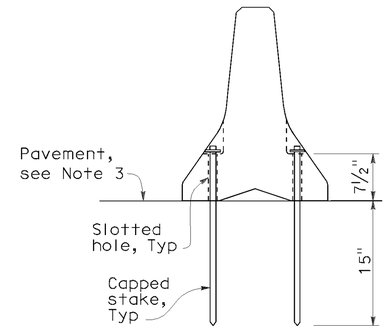

SECTION I-I

NOTES:

1. Where Type K Temporary Railing is placed as a temporary or long term barrier in two-way traffic on highways with less than 24" from the edge of traveled way, use four capped stakes per every other panel with end panels staked.
2. Where Type K Temporary Railing is placed 3" to 24" from the edge of an excavation on highways, use two capped stakes per panel along the traffic side.
3. Staked Type K Temporary Railing must be supported by at least 4" thick concrete, hot mix asphalt or existing asphalt concrete pavement.
4. The minimum yield strength for the washer must be 60,000 psi.
5. Direction of adjacent traffic indicated by ⟹.

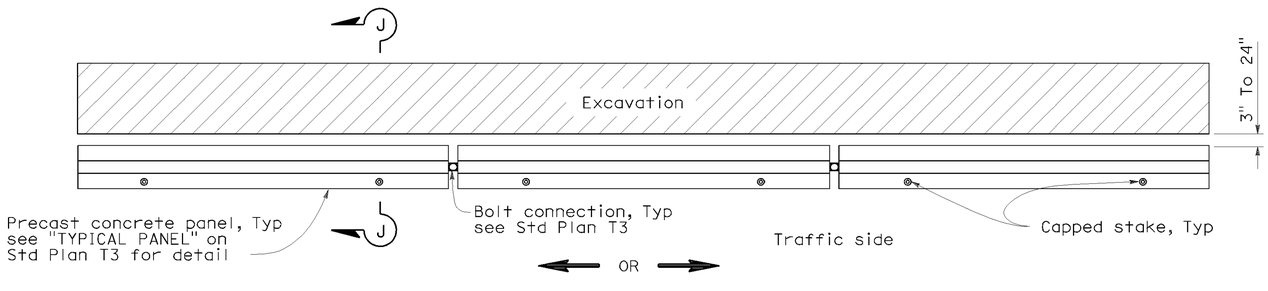

PLAN

RAILING STAKING CONFIGURATION ADJACENT TO AN EXCAVATION

See Note 2

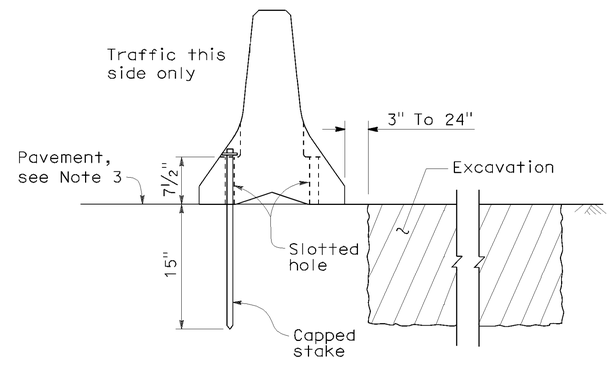

SECTION J-J

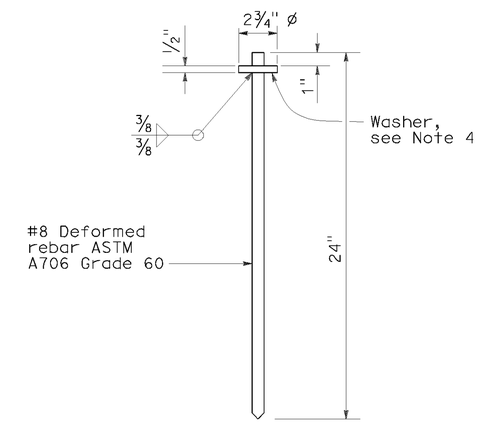

CAPPED STAKE DETAIL

STATE OF CALIFORNIA
DEPARTMENT OF TRANSPORTATION

TEMPORARY RAILING (TYPE K)

NO SCALE

NSP T3A DATED MAY 20, 2011 SUPPLEMENTS
THE STANDARD PLANS BOOK DATED MAY 2006.

NEW STANDARD PLAN NSP T3A

2006 NEW STANDARD PLAN NSP T3A

P:\proj2\02\0E440_plans\pse\20e440va006.dgn
USERNAME => s123119
DGN FILE => 20e440va006.dgn
DATE PLOTTED => 04-SEP-2012
TIME PLOTTED => 10:29
8-31-10

DIST	COUNTY	ROUTE	POST MILES TOTAL PROJECT	SHEET NO.	TOTAL SHEETS
02	Sis	97	2.5/2.9	23	23

LICENSED LANDSCAPE ARCHITECT

April 3, 2009
PLANS APPROVAL DATE

The State of California or its officers or agents shall not be responsible for the accuracy or completeness of electronic copies of this plan sheet.

LICENSED LANDSCAPE ARCHITECT
Robert B. Schott 3685
Signature
11-30-10
Renewal Date
2-25-09
Date
STATE OF CALIFORNIA

To accompany plans dated 05-29-12

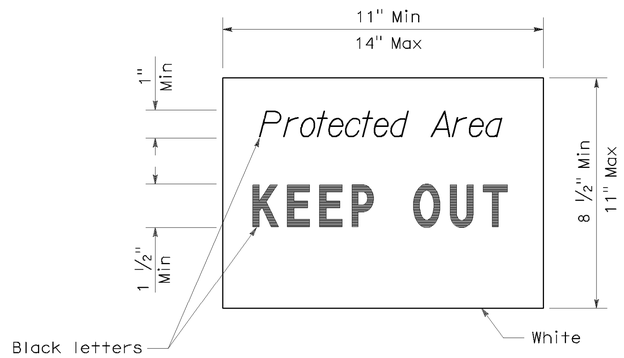

SIGN DETAIL

NOTE:

1. Temporary silt fence and temporary straw bale barrier shown for reference purposes only.

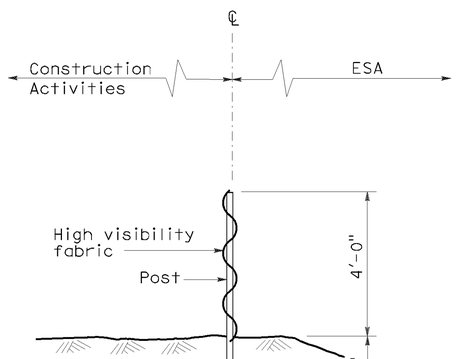

SECTION
TEMPORARY FENCE (TYPE ESA)

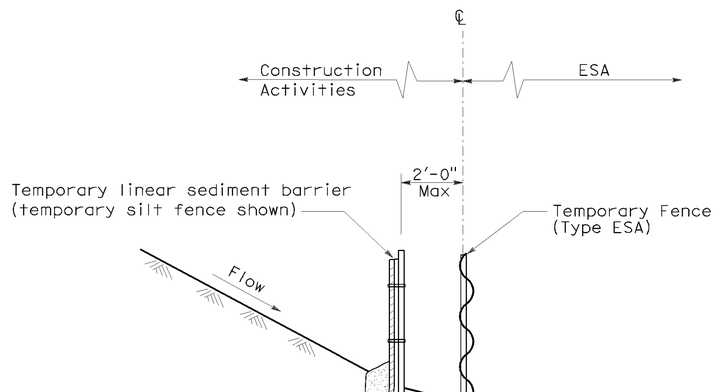

SECTION
PLACEMENT DETAIL
FOR TEMPORARY LINEAR SEDIMENT BARRIER
USED WITH TEMPORARY
FENCE (TYPE ESA)
(See Note 1)

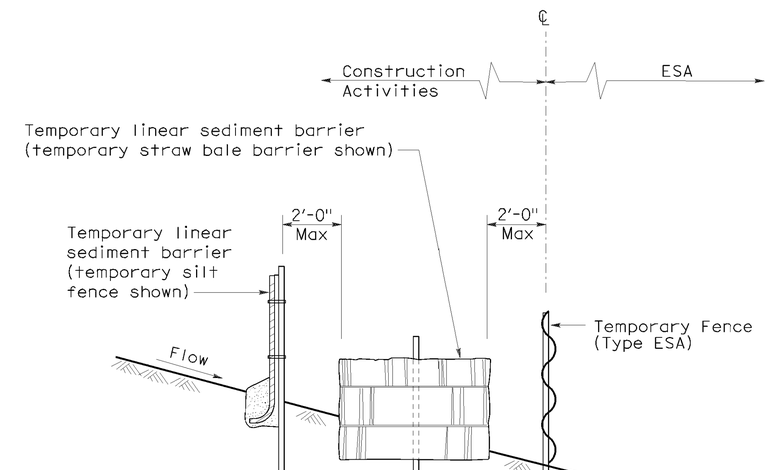

SECTION
PLACEMENT DETAIL
FOR TEMPORARY SILT FENCE
AND TEMPORARY STRAW BALE BARRIER
USED WITH TEMPORARY FENCE (TYPE ESA)
(See Note 1)

STATE OF CALIFORNIA
DEPARTMENT OF TRANSPORTATION

TEMPORARY WATER POLLUTION CONTROL DETAILS [TEMPORARY FENCE (TYPE ESA)]

NO SCALE

NSP T65 DATED APRIL 3, 2009 SUPPLEMENTS
THE STANDARD PLANS BOOK DATED MAY 2006.

NEW STANDARD PLAN NSP T65

2006 NEW STANDARD PLAN NSP T65

P:\proj2\02\0E440_plans\pse\20e440va007.dgn

USERNAME => s123119
DGN FILE => 20e440va007.dgn

DATE PLOTTED => 04-SEP-2012
TIME PLOTTED => 10:29

1-7-09