Dist	COUNTY	ROUTE	POST MILES TOTAL PROJECT	SHEET No.	TOTAL SHEETS
02	Plu	89	20.0/20.6	101	235

REGISTERED CIVIL ENGINEER 01-19-16 DATE

01-19-16
PLANS APPROVAL DATE

REGISTERED PROFESSIONAL ENGINEER SHAUN ALEXANDER No. 70833 Exp. 6-30-17 CIVIL STATE OF CALIFORNIA

THE STATE OF CALIFORNIA OR ITS OFFICERS OR AGENTS SHALL NOT BE RESPONSIBLE FOR THE ACCURACY OR COMPLETENESS OF SCANNED COPIES OF THIS PLAN SHEET.

NOTE:

1. FOR ACCURATE RIGHT OF WAY DATA, CONTACT RIGHT OF WAY ENGINEERING AT THE DISTRICT OFFICE.

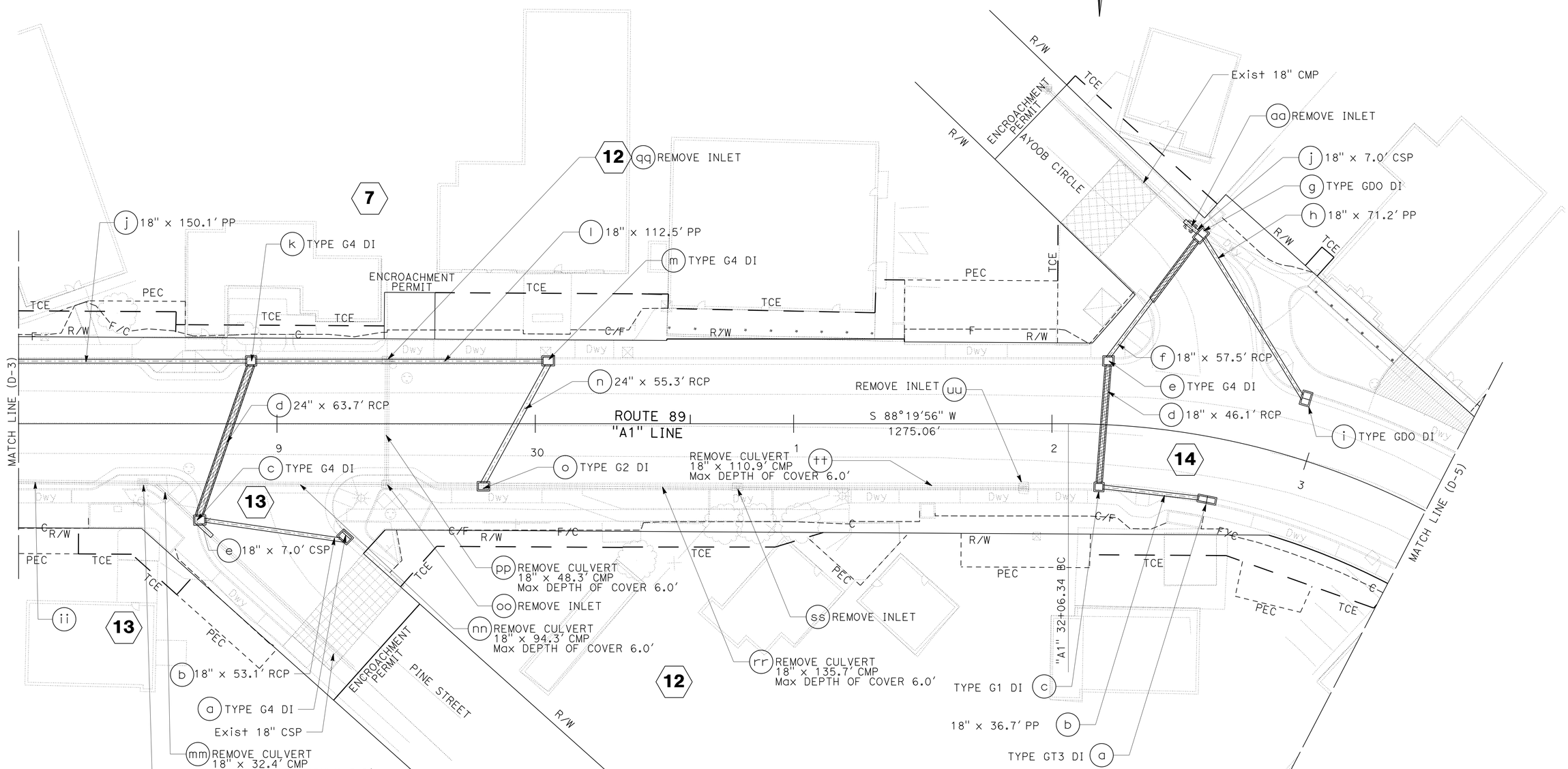

DRAINAGE PLAN

SCALE: 1" = 20'

D-4

APPROVED FOR DRAINAGE WORK ONLY

STATE OF CALIFORNIA - DEPARTMENT OF TRANSPORTATION
Caltrans DESIGN

FUNCTIONAL SUPERVISOR: ERIC ORR
CALCULATED-DESIGNED BY: JEANNIE STEFFAN
CHECKED BY: SHAUN ALEXANDER
REVISED BY / DATE REVISED

P:\proj2\02\0E240_plans\pse\20e240ia004.dgn

LAST REVISION 01-19-16 | DATE PLOTTED => 29-JAN-2016 | TIME PLOTTED => 10:21

Dist	COUNTY	ROUTE	POST MILES TOTAL PROJECT	SHEET No.	TOTAL SHEETS
02	Plu	89	20.0/20.6	102	235

REGISTERED CIVIL ENGINEER 01-19-16 DATE

01-19-16
PLANS APPROVAL DATE

REGISTERED PROFESSIONAL ENGINEER SHAUN ALEXANDER No. 70833 Exp. 6-30-17 CIVIL STATE OF CALIFORNIA

THE STATE OF CALIFORNIA OR ITS OFFICERS OR AGENTS SHALL NOT BE RESPONSIBLE FOR THE ACCURACY OR COMPLETENESS OF SCANNED COPIES OF THIS PLAN SHEET.

NOTE:

1. FOR ACCURATE RIGHT OF WAY DATA, CONTACT RIGHT OF WAY ENGINEERING AT THE DISTRICT OFFICE.

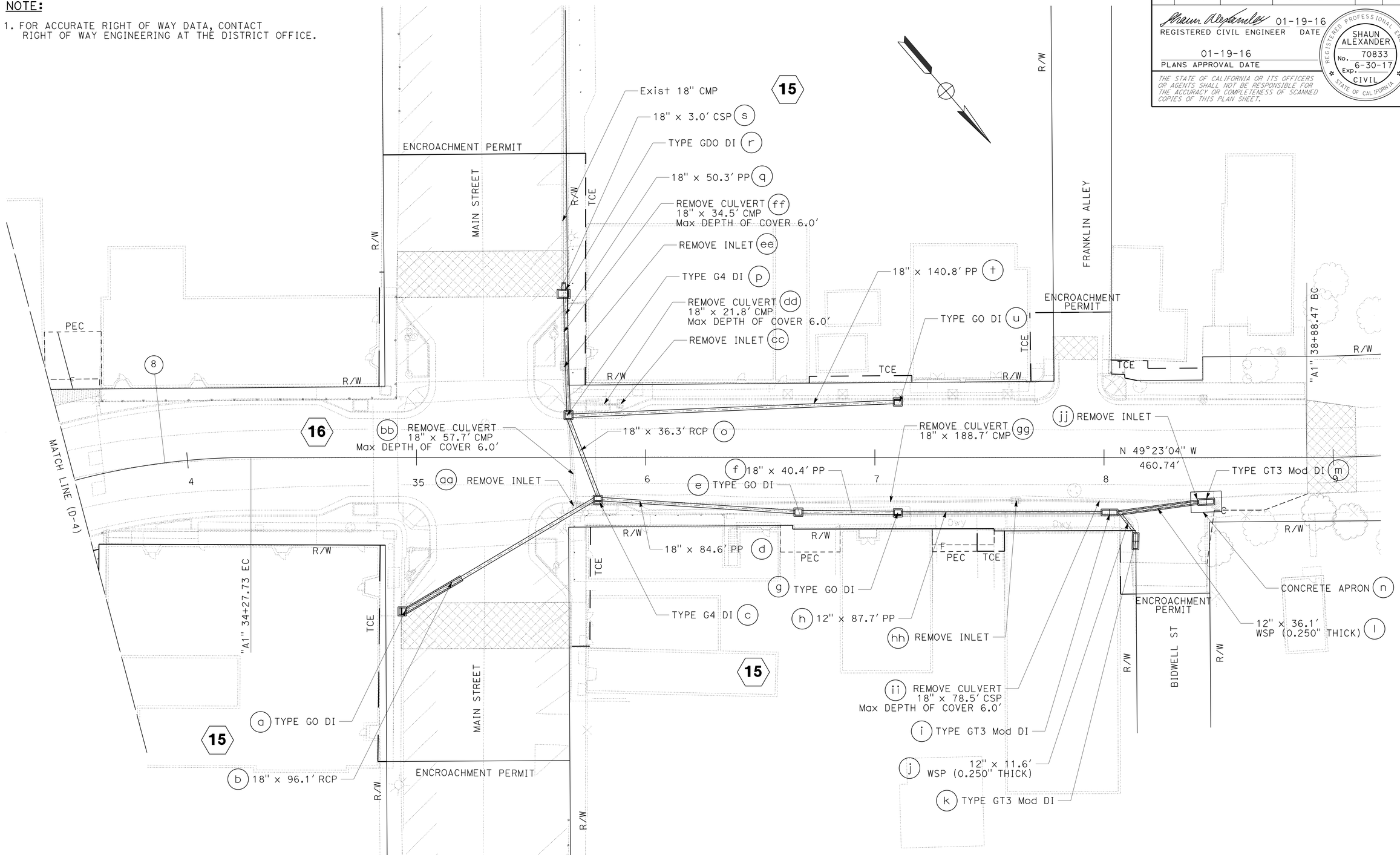

APPROVED FOR DRAINAGE WORK ONLY

DRAINAGE PLAN

SCALE: 1" = 20'

D-5

REVISED BY	DATE REVISED
JEANNIE STEFFAN	SHAUN ALEXANDER

CALCULATED-DESIGNED BY / CHECKED BY

FUNCTIONAL SUPERVISOR: ERIC ORR

STATE OF CALIFORNIA - DEPARTMENT OF TRANSPORTATION

Caltrans

DESIGN

P:\proj2\02\0E240_plans\pse\20e240ia005.dgn

LAST REVISION 01-19-16 | DATE PLOTTED => 29-JAN-2016 | TIME PLOTTED => 10:21

BORDER LAST REVISED 7/2/2010 | USERNAME => s115152 | DGN FILE => 20e240ia005.dgn | RELATIVE BORDER SCALE IS IN INCHES 0 1 2 3 | UNIT 0316 | PROJECT NUMBER & PHASE 02 1500 0146 1

Dist	COUNTY	ROUTE	POST MILES TOTAL PROJECT	SHEET No.	TOTAL SHEETS
02	Plu	89	20.0/20.6	103	235

REGISTERED CIVIL ENGINEER 01-19-16 DATE

01-19-16
PLANS APPROVAL DATE

REGISTERED PROFESSIONAL ENGINEER SHAUN ALEXANDER No. 70833 Exp. 6-30-17 CIVIL STATE OF CALIFORNIA

THE STATE OF CALIFORNIA OR ITS OFFICERS OR AGENTS SHALL NOT BE RESPONSIBLE FOR THE ACCURACY OR COMPLETENESS OF SCANNED COPIES OF THIS PLAN SHEET.

LEGEND

CONCRETE BACKFILL

SL = INLET LONGITUDINAL SLOPE

SX = INLET CROSS SLOPE

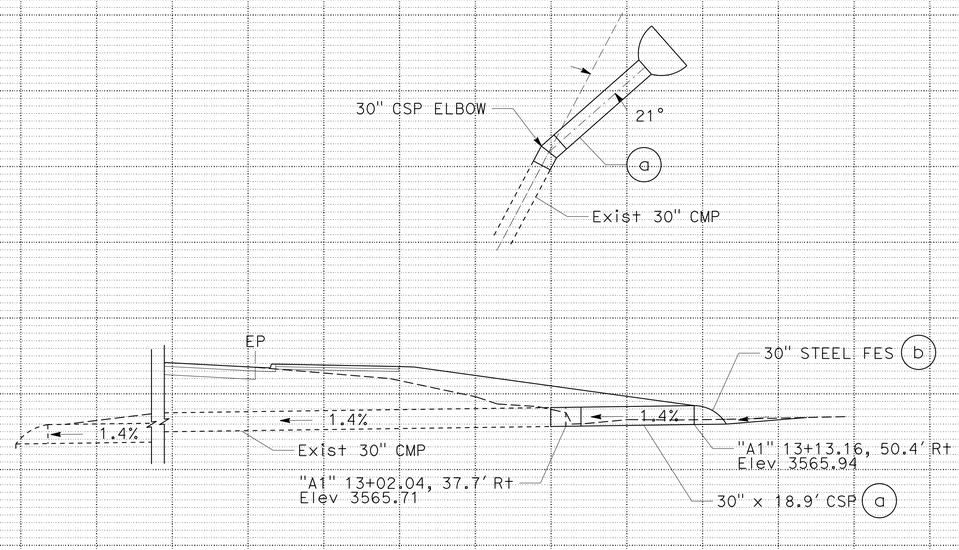

DRAINAGE SYSTEM 1

"A1" 13+02 TO 13+13

DRAINAGE PROFILES

SCALE: 1" = 10'

DP-1

REVISED BY | DATE REVISED

JEANNIE STEFFAN | SHAUN ALEXANDER

CALCULATED-DESIGNED BY | CHECKED BY

FUNCTIONAL SUPERVISOR: ERIC ORR

STATE OF CALIFORNIA - DEPARTMENT OF TRANSPORTATION

Caltrans DESIGN

P:\proj2\02\0E240_plans\pse\20e240ib001.dgn

LAST REVISION 01-19-16 | DATE PLOTTED => 29-JAN-2016 | TIME PLOTTED => 10:21

Dist	COUNTY	ROUTE	POST MILES TOTAL PROJECT	SHEET No.	TOTAL SHEETS
02	Plu	89	20.0/20.6	104	235

REGISTERED CIVIL ENGINEER 01-19-16 DATE

01-19-16
PLANS APPROVAL DATE

REGISTERED PROFESSIONAL ENGINEER SHAUN ALEXANDER No. 70833 Exp. 6-30-17 CIVIL STATE OF CALIFORNIA

THE STATE OF CALIFORNIA OR ITS OFFICERS OR AGENTS SHALL NOT BE RESPONSIBLE FOR THE ACCURACY OR COMPLETENESS OF SCANNED COPIES OF THIS PLAN SHEET.

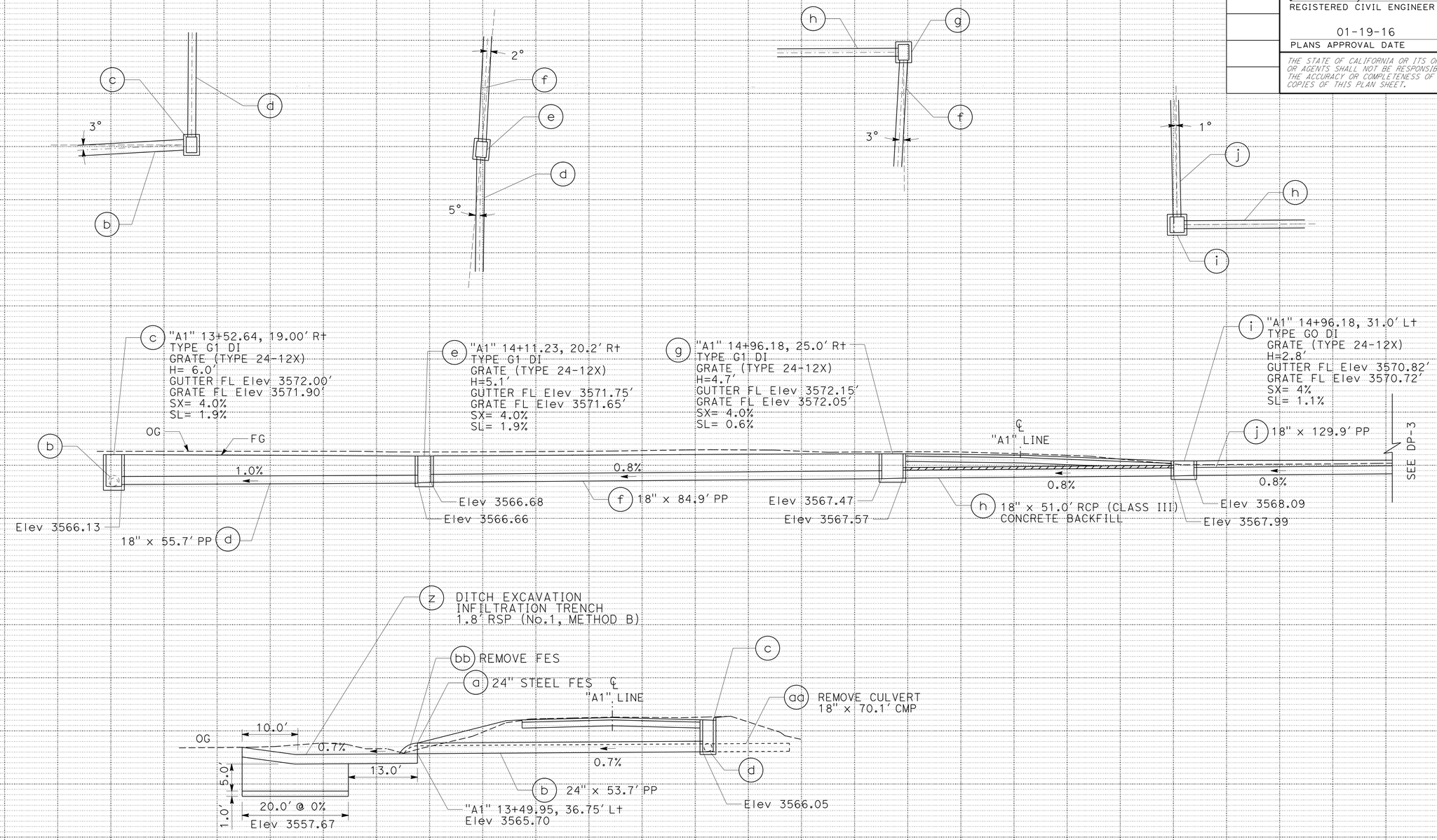

DRAINAGE SYSTEM 2
"A1" 13+52 TO 21+82

DRAINAGE PROFILES

SCALE: 1" = 10′

DP-2

REVISED BY | DATE REVISED
JEANNIE STEFFAN | SHAUN ALEXANDER
CALCULATED-DESIGNED BY | CHECKED BY
FUNCTIONAL SUPERVISOR
ERIC ORR

STATE OF CALIFORNIA - DEPARTMENT OF TRANSPORTATION
Caltrans
DESIGN

P:\proj2\02\0E240_plans\pse\20e240ib002.dgn

LAST REVISION 01-19-16 | DATE PLOTTED => 29-JAN-2016 | TIME PLOTTED => 10:21

Dist	COUNTY	ROUTE	POST MILES TOTAL PROJECT	SHEET No.	TOTAL SHEETS
02	Plu	89	20.0/20.6	105	235

REGISTERED CIVIL ENGINEER 01-19-16 DATE

01-19-16
PLANS APPROVAL DATE

REGISTERED PROFESSIONAL ENGINEER SHAUN ALEXANDER No. 70833 Exp. 6-30-17 CIVIL STATE OF CALIFORNIA

THE STATE OF CALIFORNIA OR ITS OFFICERS OR AGENTS SHALL NOT BE RESPONSIBLE FOR THE ACCURACY OR COMPLETENESS OF SCANNED COPIES OF THIS PLAN SHEET.

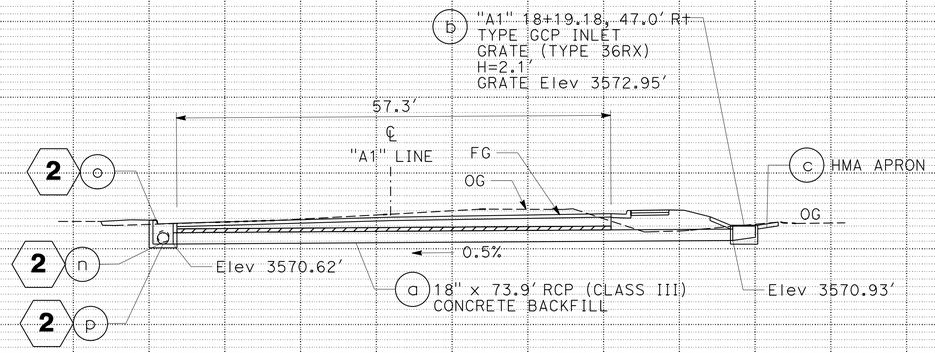

DRAINAGE SYSTEM 5
"A1" 18+20

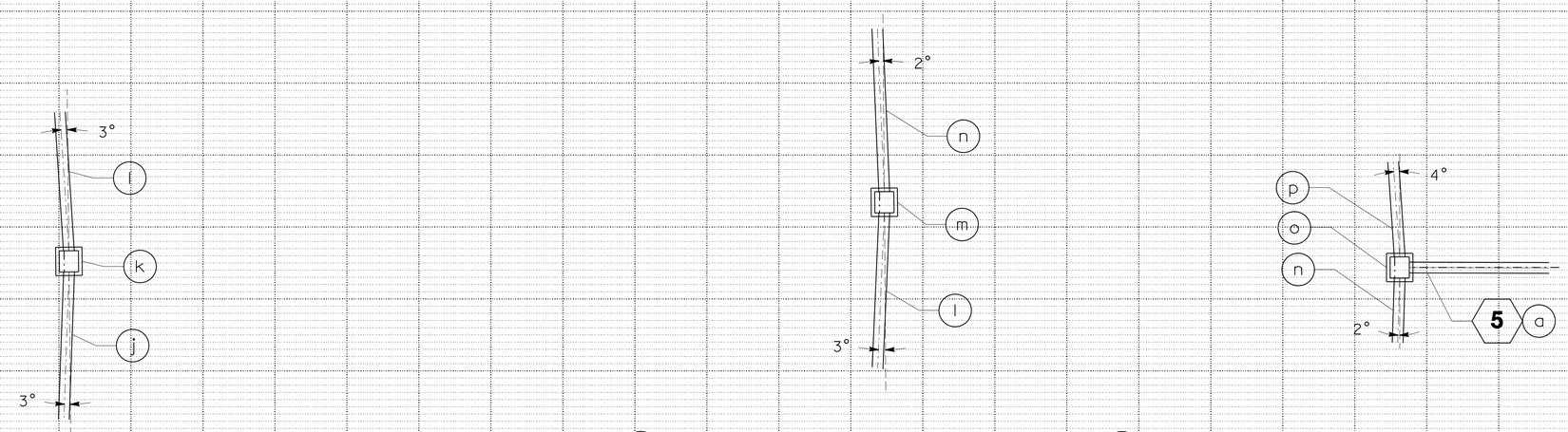

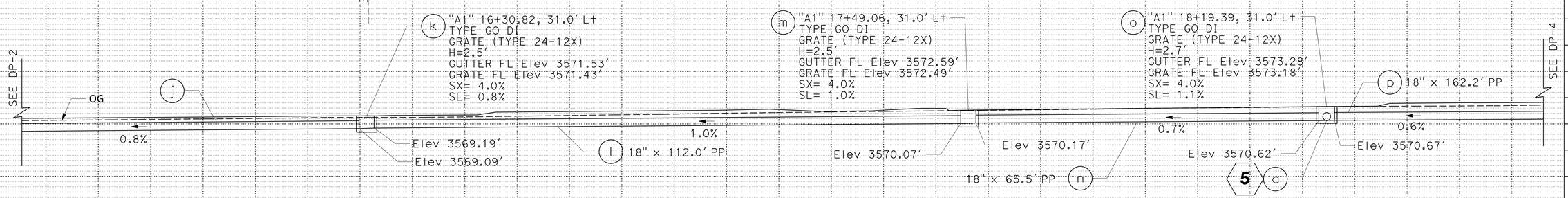

DRAINAGE SYSTEM 2
"A1" 13+53 TO 21+82

DRAINAGE PROFILES
SCALE: 1" = 10'

DP-3

REVISED BY	DATE REVISED

JEANNIE STEFFAN — SHAUN ALEXANDER

CALCULATED-DESIGNED BY — CHECKED BY

FUNCTIONAL SUPERVISOR: ERIC ORR

STATE OF CALIFORNIA - DEPARTMENT OF TRANSPORTATION
Caltrans®
DESIGN

P:\proj2\02\0E240_plans\pse\20e240ib003.dgn

LAST REVISION 03-29-16 | DATE PLOTTED => 29-JAN-2016 | TIME PLOTTED => 10:21

Dist	COUNTY	ROUTE	POST MILES TOTAL PROJECT	SHEET No.	TOTAL SHEETS
02	Plu	89	20.0/20.6	106	235

REGISTERED CIVIL ENGINEER 01-19-16 DATE

01-19-16
PLANS APPROVAL DATE

REGISTERED PROFESSIONAL ENGINEER SHAUN ALEXANDER No. 70833 Exp. 6-30-17 CIVIL STATE OF CALIFORNIA

THE STATE OF CALIFORNIA OR ITS OFFICERS OR AGENTS SHALL NOT BE RESPONSIBLE FOR THE ACCURACY OR COMPLETENESS OF SCANNED COPIES OF THIS PLAN SHEET.

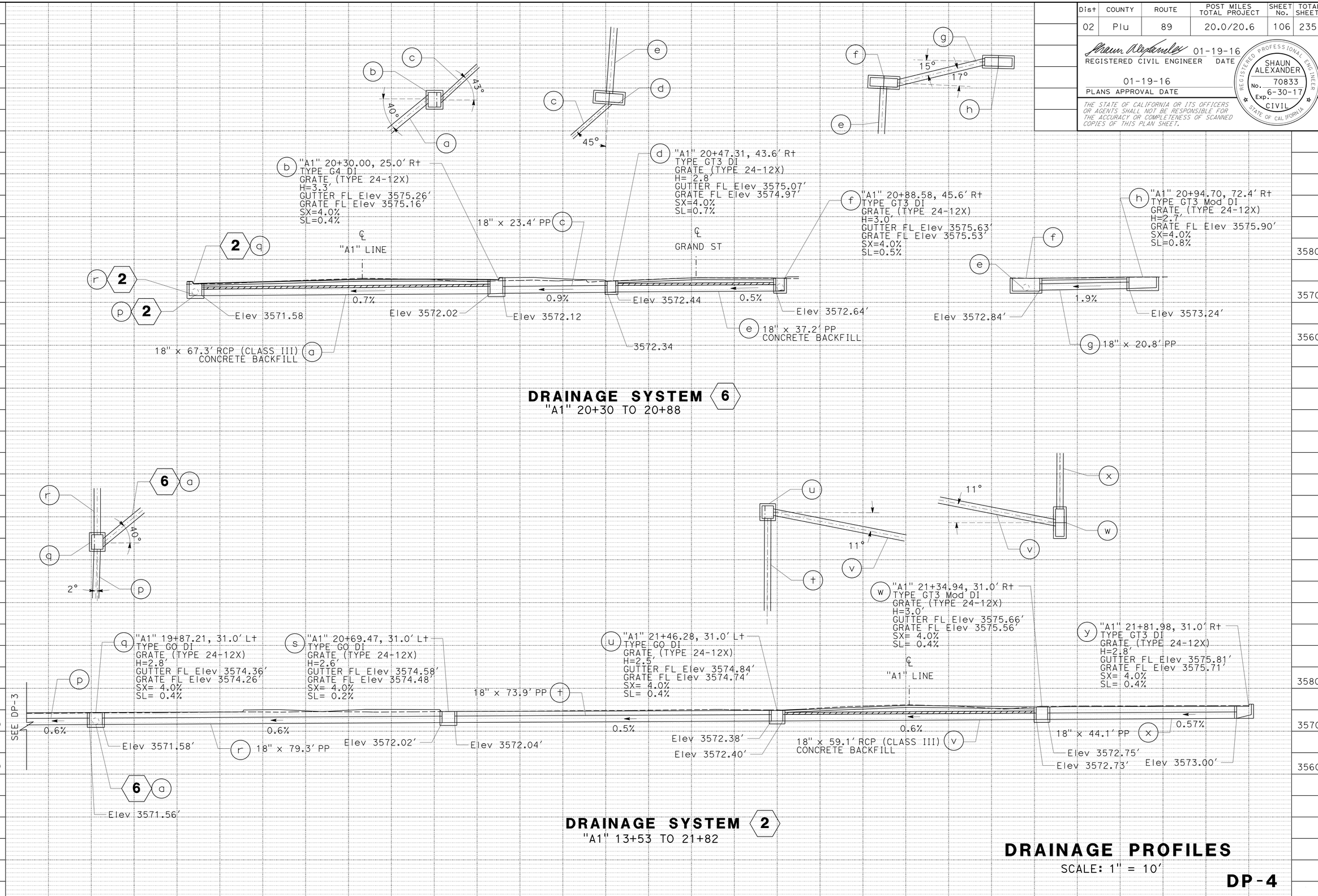

REVISED BY	DATE REVISED

CALCULATED-DESIGNED BY	CHECKED BY

FUNCTIONAL SUPERVISOR: ERIC ORR

JEANNIE STEFFAN — SHAUN ALEXANDER

STATE OF CALIFORNIA - DEPARTMENT OF TRANSPORTATION

Caltrans DESIGN

P:\proj2\02\0E240_plans\pse\20e240ib004.dgn

LAST REVISION 01-19-16 | DATE PLOTTED => 29-JAN-2016 | TIME PLOTTED => 10:21

Dist	COUNTY	ROUTE	POST MILES TOTAL PROJECT	SHEET No.	TOTAL SHEETS
02	Plu	89	20.0/20.6	107	235

REGISTERED CIVIL ENGINEER 01-19-16 DATE

01-19-16
PLANS APPROVAL DATE

REGISTERED PROFESSIONAL ENGINEER SHAUN ALEXANDER No. 70833 Exp. 6-30-17 CIVIL STATE OF CALIFORNIA

THE STATE OF CALIFORNIA OR ITS OFFICERS OR AGENTS SHALL NOT BE RESPONSIBLE FOR THE ACCURACY OR COMPLETENESS OF SCANNED COPIES OF THIS PLAN SHEET.

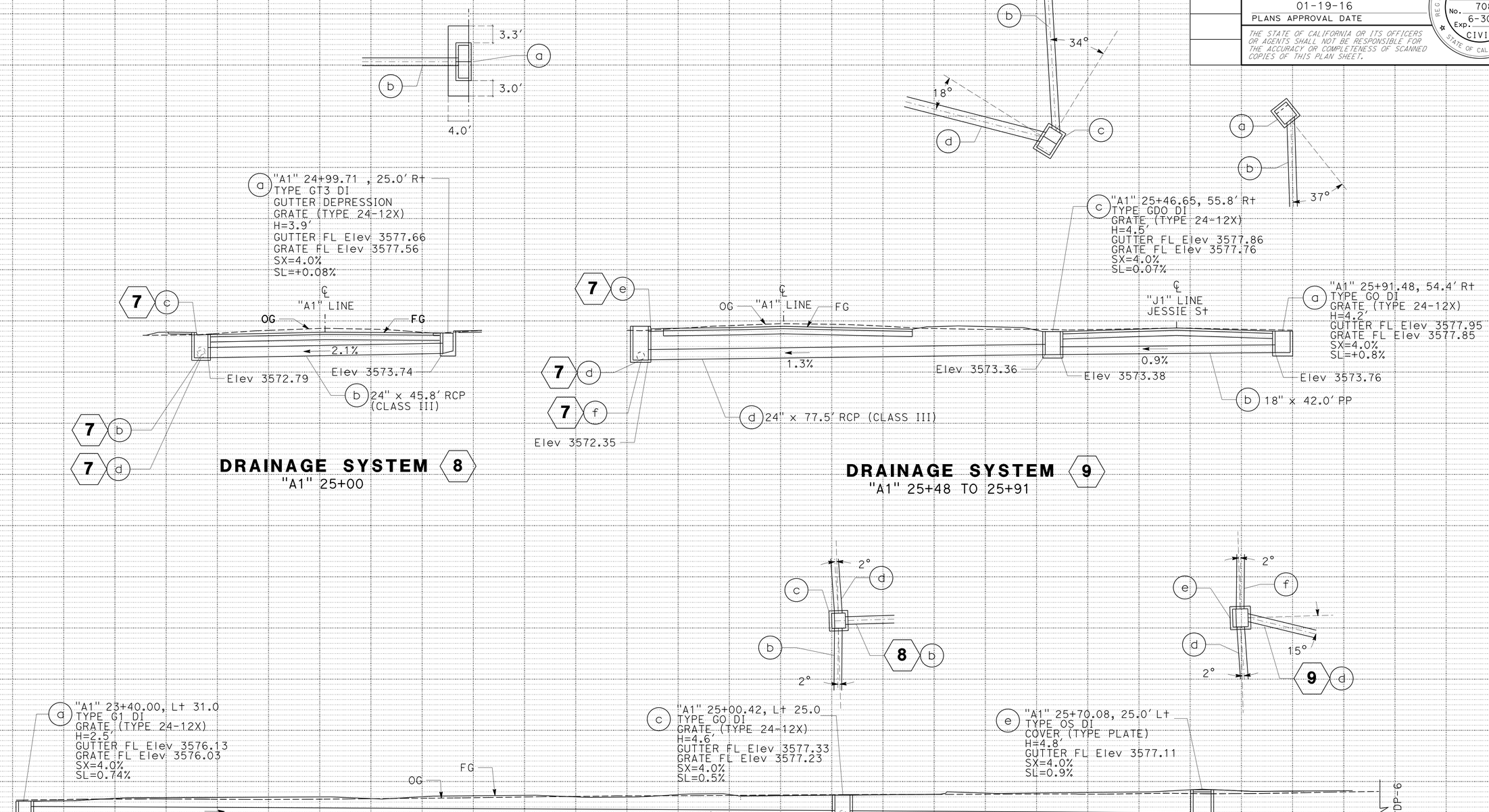

DRAINAGE PROFILES

SCALE: 1" = 10'

DP-5

REVISED BY | DATE REVISED
JEANNIE STEFFAN | SHAUN ALEXANDER
CALCULATED-DESIGNED BY | CHECKED BY
FUNCTIONAL SUPERVISOR: ERIC ORR

STATE OF CALIFORNIA - DEPARTMENT OF TRANSPORTATION
Caltrans
DESIGN

P:\proj2\02\0E240_plans\pse\20e240ib005.dgn

LAST REVISION 03-29-16 | DATE PLOTTED => 29-JAN-2016 | TIME PLOTTED => 10:22

Dist	COUNTY	ROUTE	POST MILES TOTAL PROJECT	SHEET No.	TOTAL SHEETS
02	Plu	89	20.0/20.6	108	235

REGISTERED CIVIL ENGINEER 01-19-16 DATE

01-19-16
PLANS APPROVAL DATE

REGISTERED PROFESSIONAL ENGINEER SHAUN ALEXANDER No. 70833 Exp. 6-30-17 CIVIL STATE OF CALIFORNIA

THE STATE OF CALIFORNIA OR ITS OFFICERS OR AGENTS SHALL NOT BE RESPONSIBLE FOR THE ACCURACY OR COMPLETENESS OF SCANNED COPIES OF THIS PLAN SHEET.

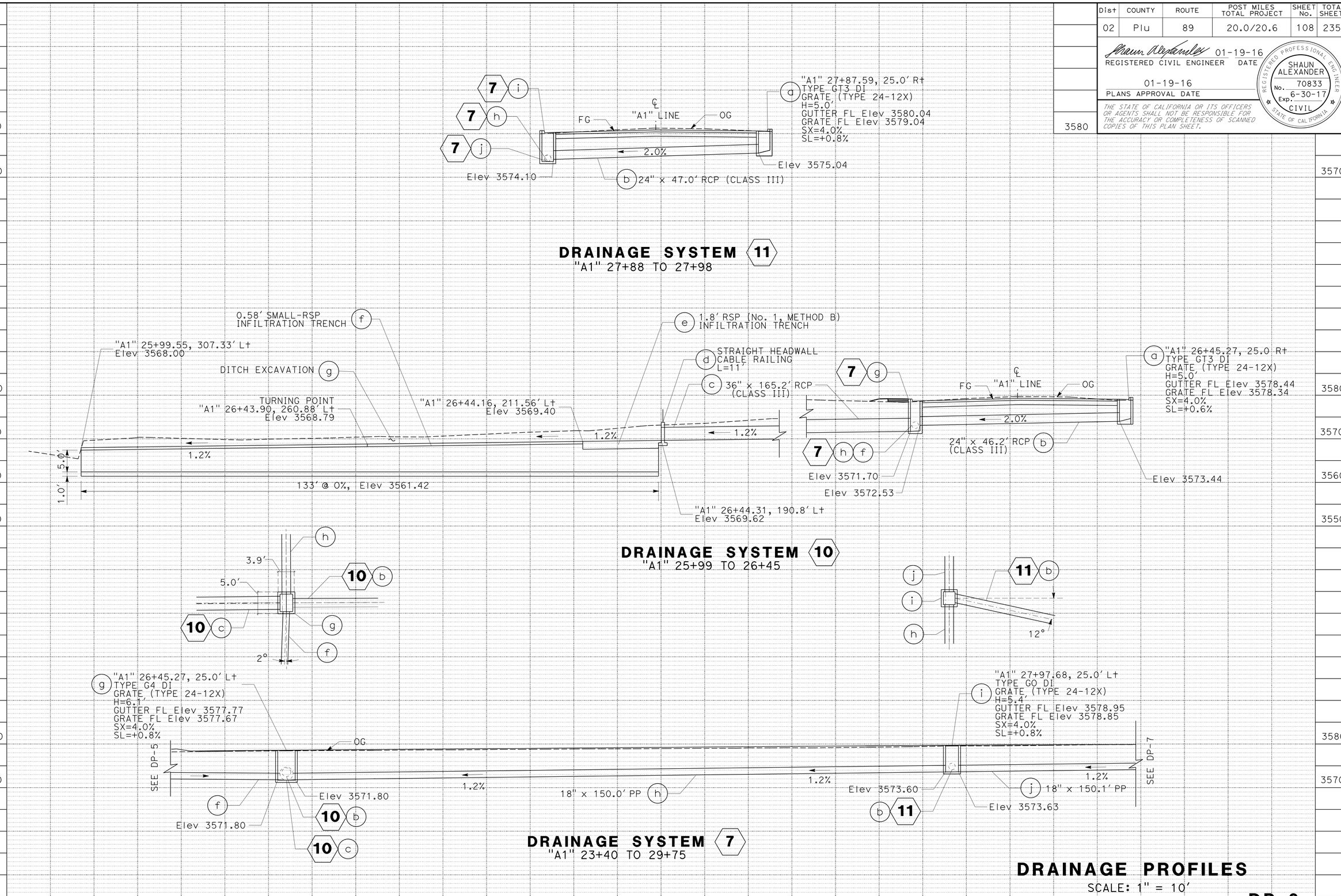

DRAINAGE PROFILES

SCALE: 1" = 10'

DP-6

REVISED BY | DATE REVISED
JEANNIE STEFFAN | SHAUN ALEXANDER
CALCULATED-DESIGNED BY | CHECKED BY
FUNCTIONAL SUPERVISOR: ERIC ORR

STATE OF CALIFORNIA - DEPARTMENT OF TRANSPORTATION
Caltrans
DESIGN

P:\proj2\02\0E240_plans\pse\20e240ib006.dgn

LAST REVISION 03-29-16 | DATE PLOTTED => 29-JAN-2016 | TIME PLOTTED => 10:22

Dist	COUNTY	ROUTE	POST MILES TOTAL PROJECT	SHEET No.	TOTAL SHEETS
02	Plu	89	20.0/20.6	109	235

REGISTERED CIVIL ENGINEER 01-19-16 DATE

01-19-16
PLANS APPROVAL DATE

REGISTERED PROFESSIONAL ENGINEER SHAUN ALEXANDER No. 70833 Exp. 6-30-17 CIVIL STATE OF CALIFORNIA

THE STATE OF CALIFORNIA OR ITS OFFICERS OR AGENTS SHALL NOT BE RESPONSIBLE FOR THE ACCURACY OR COMPLETENESS OF SCANNED COPIES OF THIS PLAN SHEET.

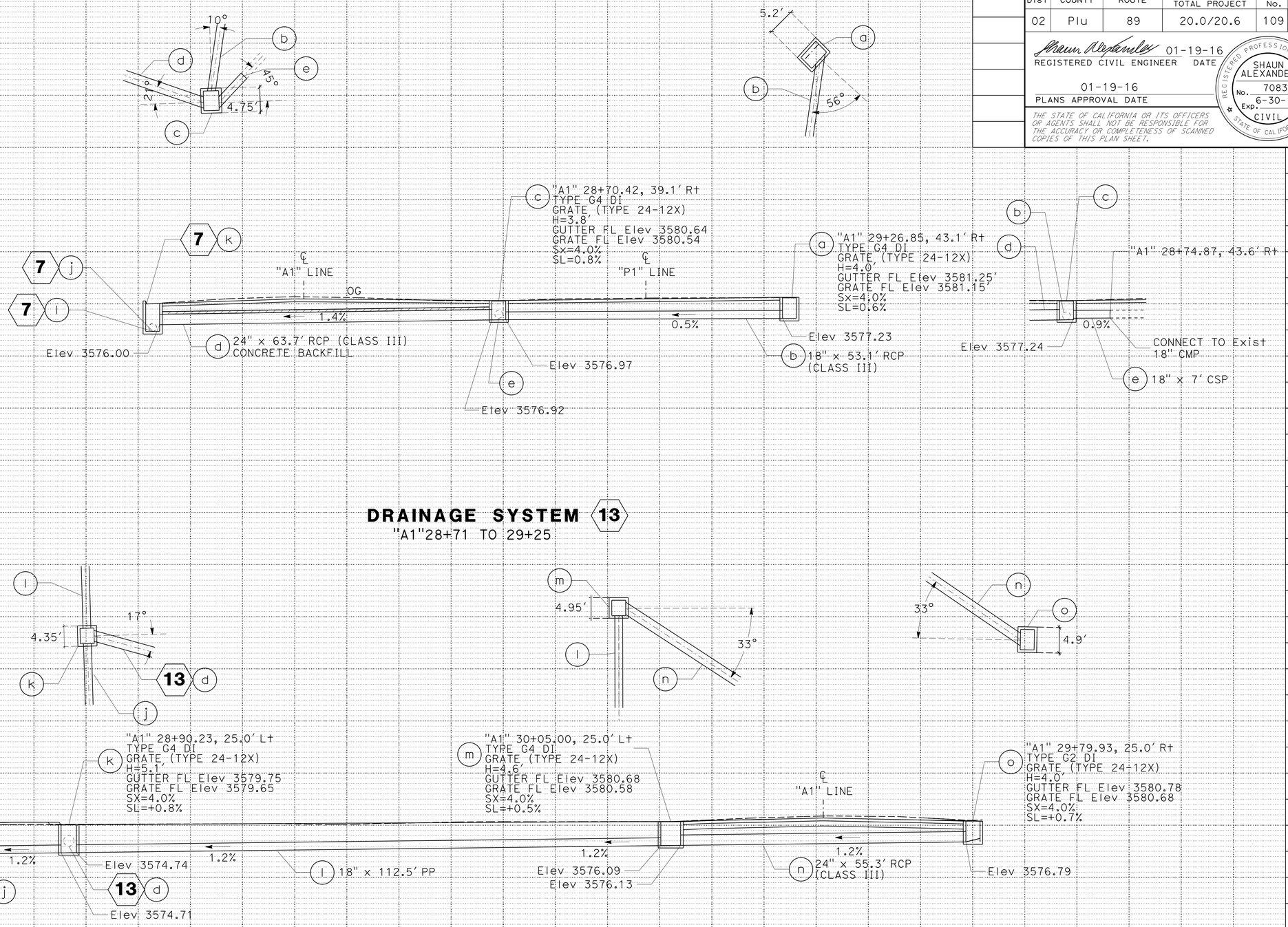

DRAINAGE SYSTEM 13
"A1"28+71 TO 29+25

DRAINAGE SYSTEM 7
"A1" 23+40 TO 29+75

DRAINAGE PROFILES

SCALE: 1" = 10'

DP-7

STATE OF CALIFORNIA - DEPARTMENT OF TRANSPORTATION
Caltrans
DESIGN
FUNCTIONAL SUPERVISOR: ERIC ORR
CALCULATED-DESIGNED BY: JEANNIE STEFFAN
CHECKED BY: SHAUN ALEXANDER
REVISED BY
DATE REVISED

P:\proj2\02\0E240_plans\pse\20e240ib007.dgn

LAST REVISION DATE PLOTTED => 29-JAN-2016
03-29-16 TIME PLOTTED => 10:22

BORDER LAST REVISED 7/2/2010
USERNAME => s115152
DGN FILE => 20e240ib007.dgn
RELATIVE BORDER SCALE IS IN INCHES 0 1 2 3
UNIT 0316
PROJECT NUMBER & PHASE 02 1500 0146 1

Dist	COUNTY	ROUTE	POST MILES TOTAL PROJECT	SHEET No.	TOTAL SHEETS
02	Plu	89	20.0/20.6	110	235

REGISTERED CIVIL ENGINEER 01-19-16 DATE

01-19-16
PLANS APPROVAL DATE

REGISTERED PROFESSIONAL ENGINEER SHAUN ALEXANDER No. 70833 Exp. 6-30-17 CIVIL STATE OF CALIFORNIA

THE STATE OF CALIFORNIA OR ITS OFFICERS OR AGENTS SHALL NOT BE RESPONSIBLE FOR THE ACCURACY OR COMPLETENESS OF SCANNED COPIES OF THIS PLAN SHEET.

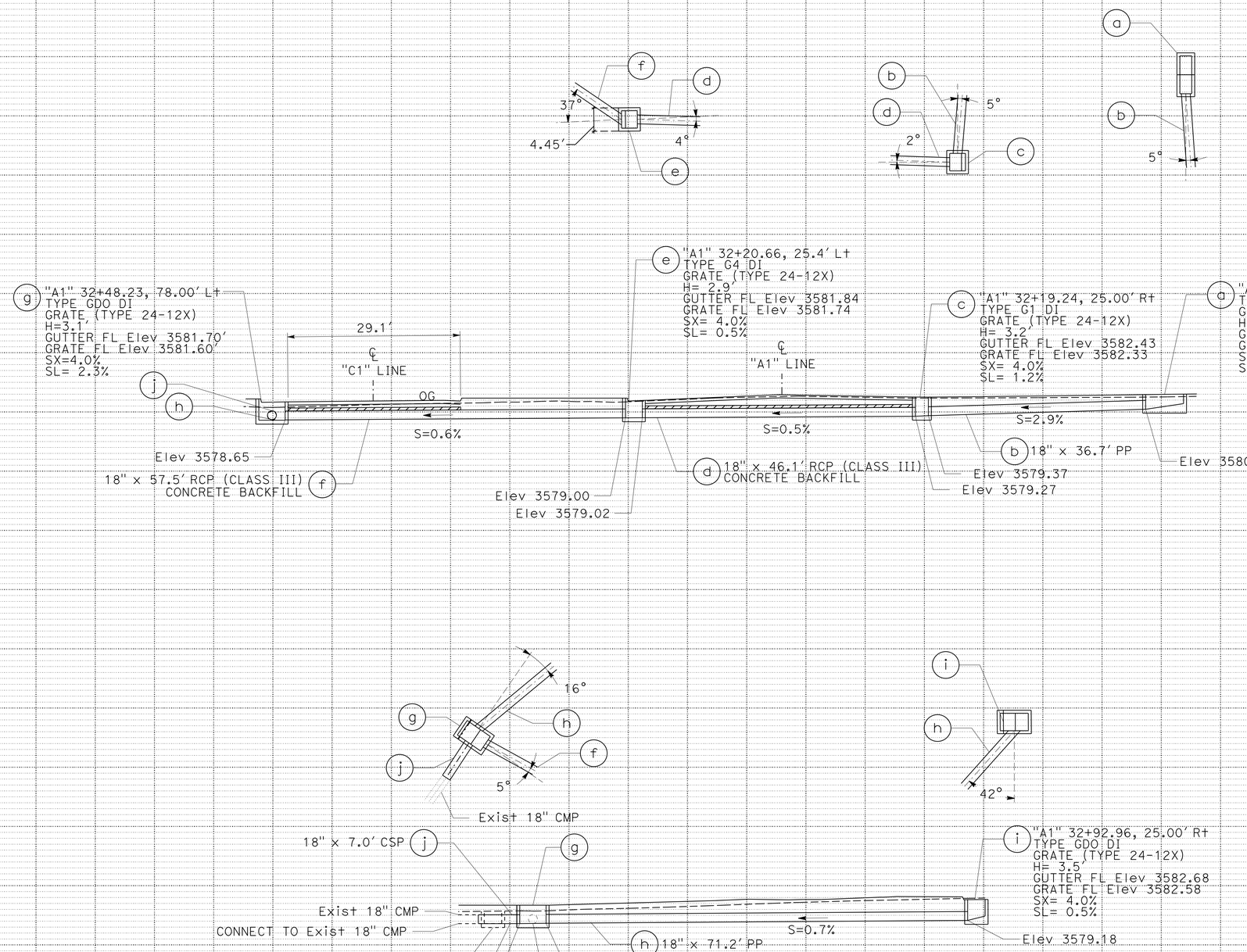

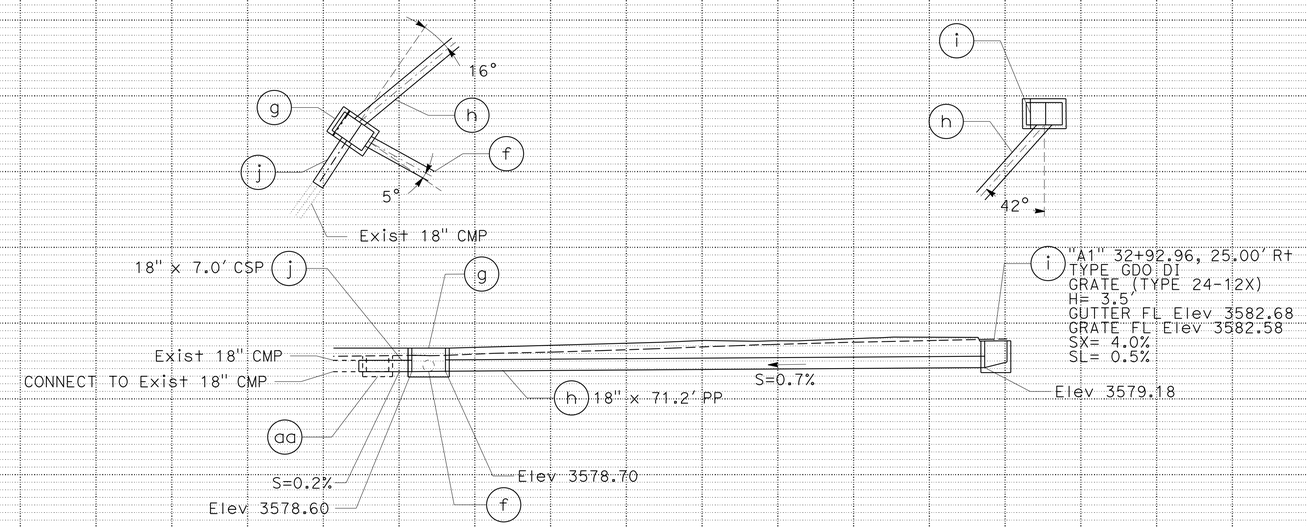

DRAINAGE SYSTEM 14
"A1" 32+19 TO 32+93

DRAINAGE PROFILES
SCALE: 1" = 10'

DP-8

REVISED BY | DATE REVISED
JEANNIE STEFFAN | SHAUN ALEXANDER
CALCULATED-DESIGNED BY | CHECKED BY
FUNCTIONAL SUPERVISOR: ERIC ORR

STATE OF CALIFORNIA - DEPARTMENT OF TRANSPORTATION
Caltrans
DESIGN

P:\proj2\02\0E240_plans\pse\20e240ib008.dgn

LAST REVISION 01-19-16 | DATE PLOTTED => 29-JAN-2016 | TIME PLOTTED => 10:22

Dist	COUNTY	ROUTE	POST MILES TOTAL PROJECT	SHEET No.	TOTAL SHEETS
02	Plu	89	20.0/20.6	111	235

REGISTERED CIVIL ENGINEER 01-19-16 DATE

01-19-16
PLANS APPROVAL DATE

REGISTERED PROFESSIONAL ENGINEER SHAUN ALEXANDER No. 70833 Exp. 6-30-17 CIVIL STATE OF CALIFORNIA

THE STATE OF CALIFORNIA OR ITS OFFICERS OR AGENTS SHALL NOT BE RESPONSIBLE FOR THE ACCURACY OR COMPLETENESS OF SCANNED COPIES OF THIS PLAN SHEET.

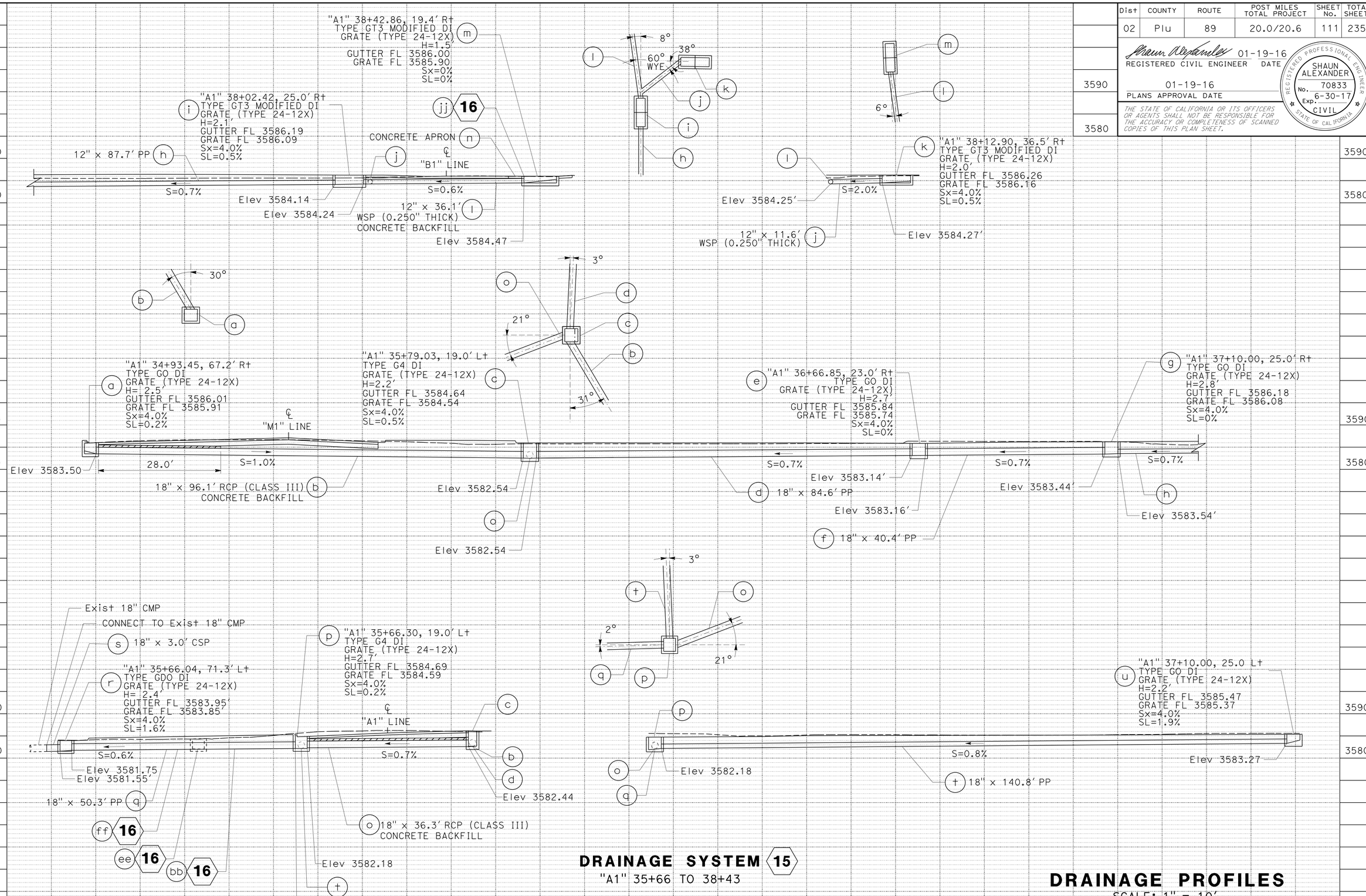

DRAINAGE SYSTEM 15

"A1" 35+66 TO 38+43

DRAINAGE PROFILES

SCALE: 1" = 10'

DP-9

REVISED BY | DATE REVISED
JEANNIE STEFFAN | SHAUN ALEXANDER
CALCULATED-DESIGNED BY | CHECKED BY
FUNCTIONAL SUPERVISOR: ERIC ORR

STATE OF CALIFORNIA - DEPARTMENT OF TRANSPORTATION
Caltrans
DESIGN

P:\proj2\02\0E240_plans\pse\20e240ib009.dgn

LAST REVISION 01-19-16 | DATE PLOTTED => 29-JAN-2016 | TIME PLOTTED => 10:22

BORDER LAST REVISED 7/2/2010 | USERNAME => s115152 | DGN FILE => 20e240ib009.dgn | RELATIVE BORDER SCALE IS IN INCHES 0 1 2 3 | UNIT 0316 | PROJECT NUMBER & PHASE 02 1500 0146 1

Dist	COUNTY	ROUTE	POST MILES TOTAL PROJECT	SHEET No.	TOTAL SHEETS
02	Plu	89	20.0/20.6	112	235

REGISTERED CIVIL ENGINEER 01-19-16 DATE

01-19-16
PLANS APPROVAL DATE

REGISTERED PROFESSIONAL ENGINEER SHAUN ALEXANDER No. 70833 Exp. 6-30-17 CIVIL STATE OF CALIFORNIA

THE STATE OF CALIFORNIA OR ITS OFFICERS OR AGENTS SHALL NOT BE RESPONSIBLE FOR THE ACCURACY OR COMPLETENESS OF SCANNED COPIES OF THIS PLAN SHEET.

LEGEND:

SAND BEDDING

RSP

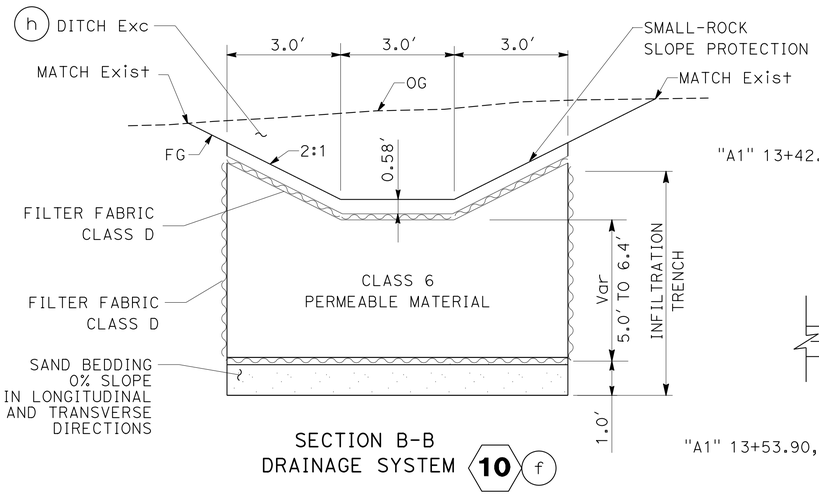

SECTION B-B
DRAINAGE SYSTEM 10 f

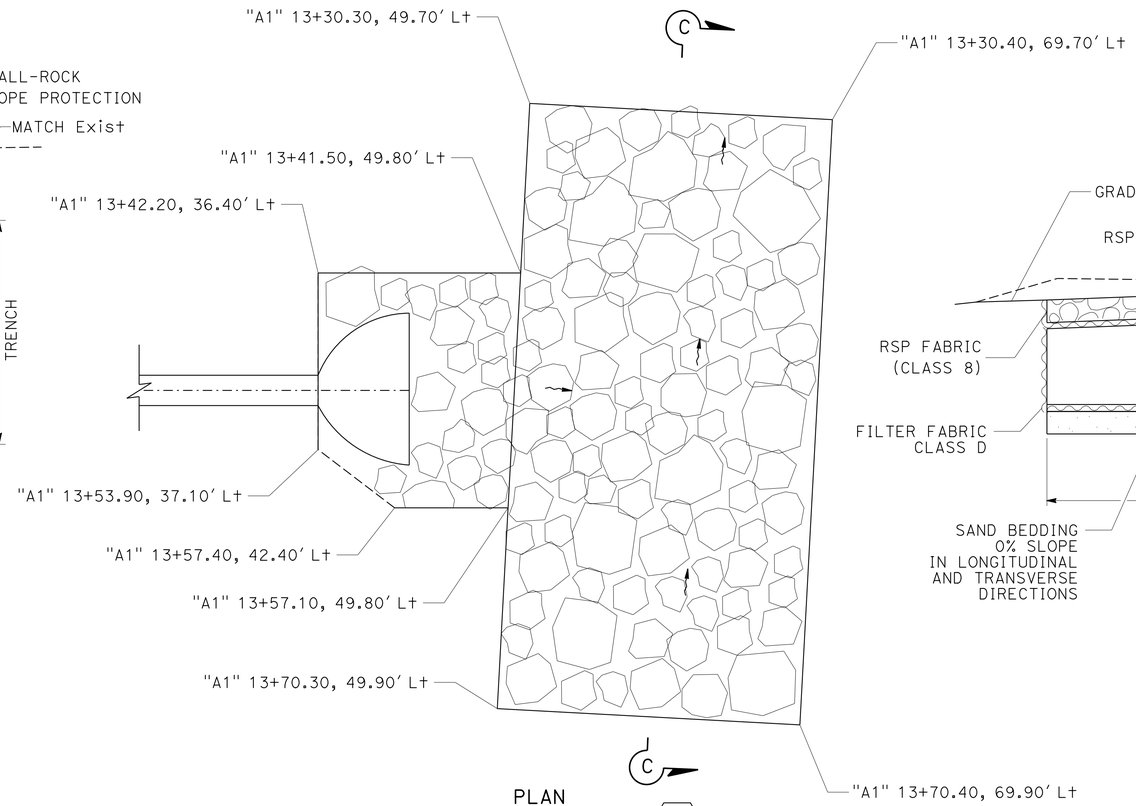

PLAN
DRAINAGE SYSTEM 2 z

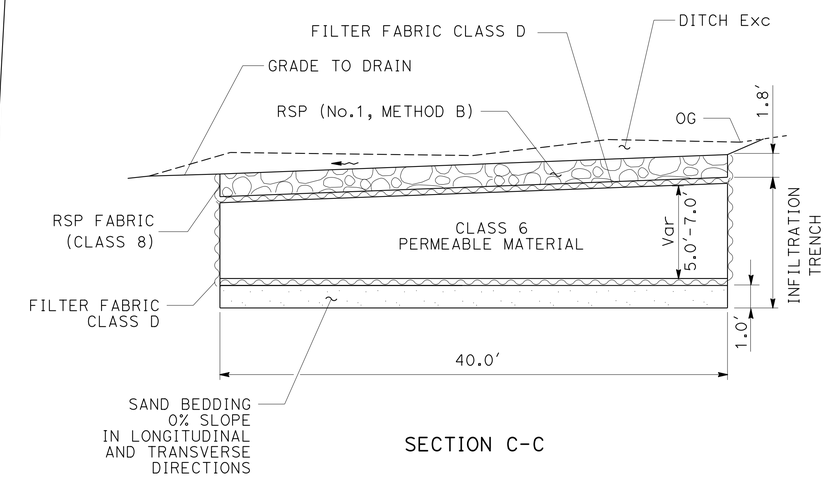

SECTION C-C

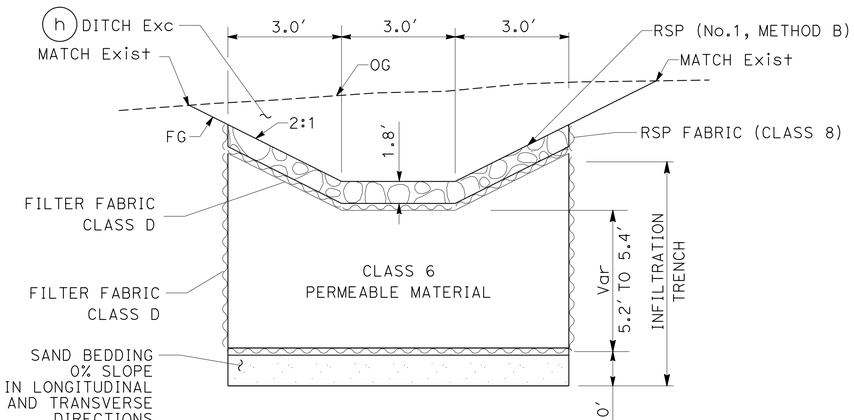

SECTION A-A
DRAINAGE SYSTEM 10 e

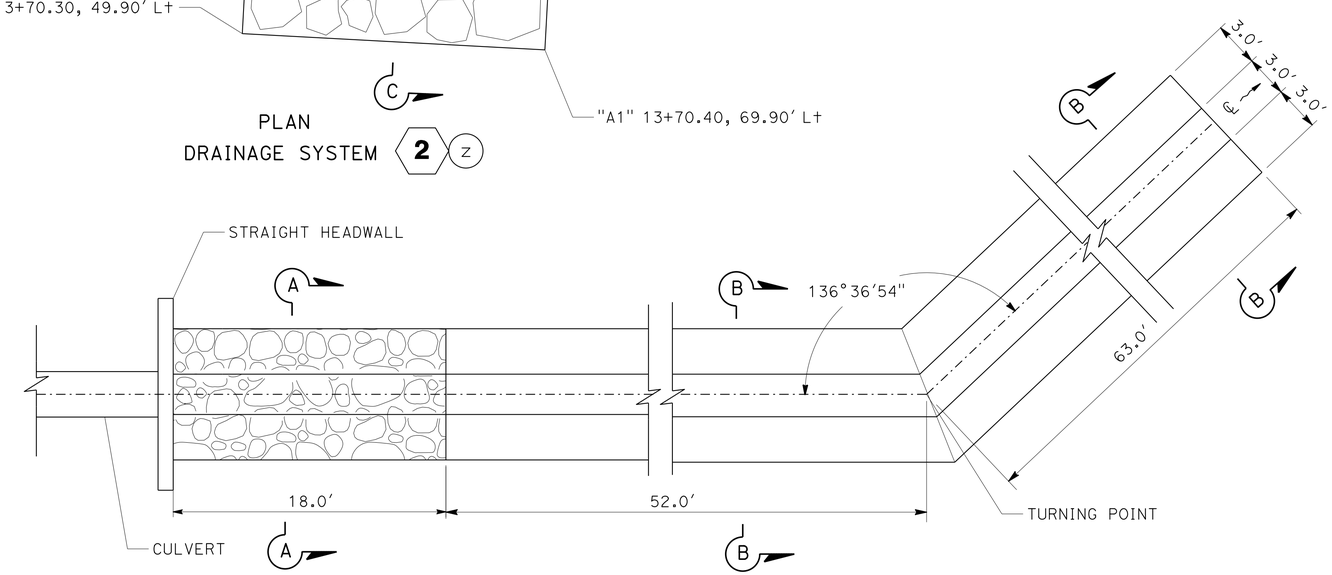

PLAN
DRAINAGE SYSTEM 10

DRAINAGE DETAILS
ROCK SLOPE PROTECTION
NO SCALE

DD-1

REVISED BY	DATE REVISED

JEANNIE STEFFAN	SHAUN ALEXANDER
CALCULATED-DESIGNED BY	CHECKED BY

FUNCTIONAL SUPERVISOR: ERIC ORR

STATE OF CALIFORNIA - DEPARTMENT OF TRANSPORTATION
Caltrans DESIGN

P:\proj2\02\0E240_plans\pse\20e240ic001.dgn

LAST REVISION 01-19-16 | DATE PLOTTED => 29-JAN-2016 | TIME PLOTTED => 10:22

Dist	COUNTY	ROUTE	POST MILES TOTAL PROJECT	SHEET No.	TOTAL SHEETS
02	Plu	89	20.0/20.6	113	235

REGISTERED CIVIL ENGINEER 01-19-16 DATE

01-19-16
PLANS APPROVAL DATE

REGISTERED PROFESSIONAL ENGINEER SHAUN ALEXANDER No. 70833 Exp. 6-30-17 CIVIL STATE OF CALIFORNIA

THE STATE OF CALIFORNIA OR ITS OFFICERS OR AGENTS SHALL NOT BE RESPONSIBLE FOR THE ACCURACY OR COMPLETENESS OF SCANNED COPIES OF THIS PLAN SHEET.

LEGEND:

- CONCRETE BACKFILL
- HMA
- CONCRETE

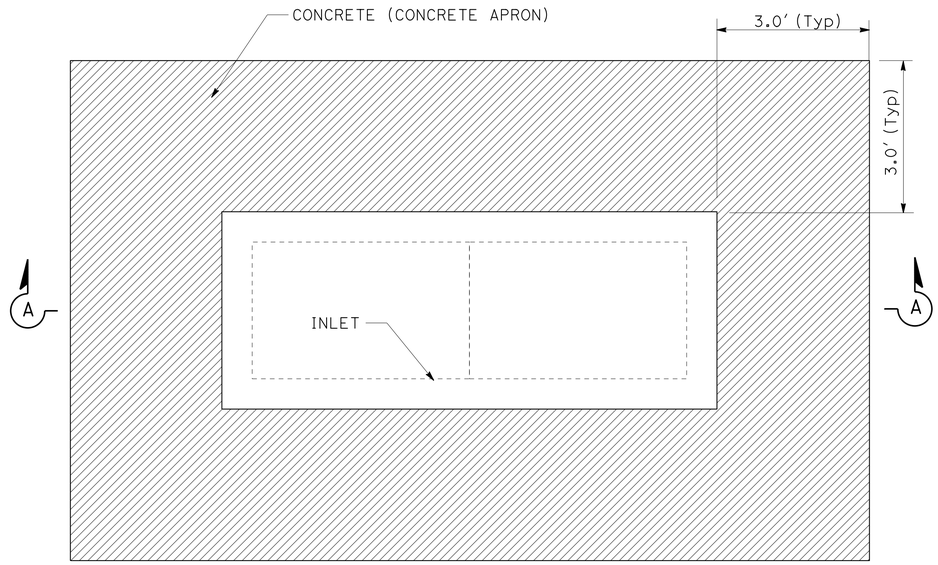

PLAN

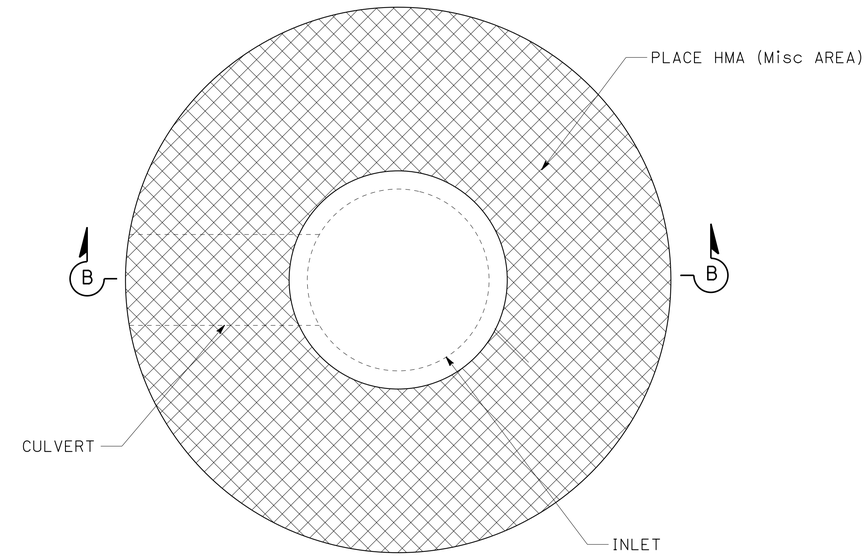

PLAN

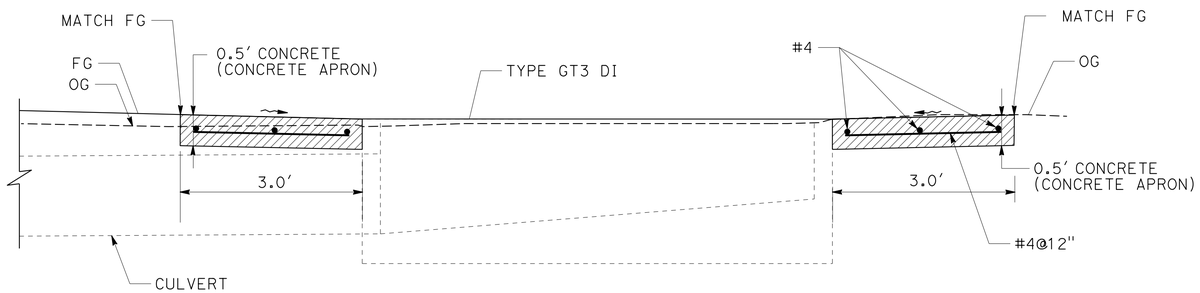

SECTION A-A
CONCRETE APRON
DRAINAGE SYSTEM 15 n

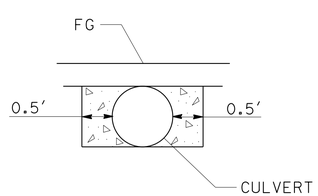

CONCRETE BACKFILL (PIPE TRENCH)
DRAINAGE SYSTEM 15 l

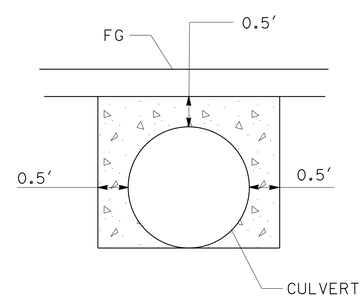

CONCRETE BACKFILL (PIPE TRENCH)

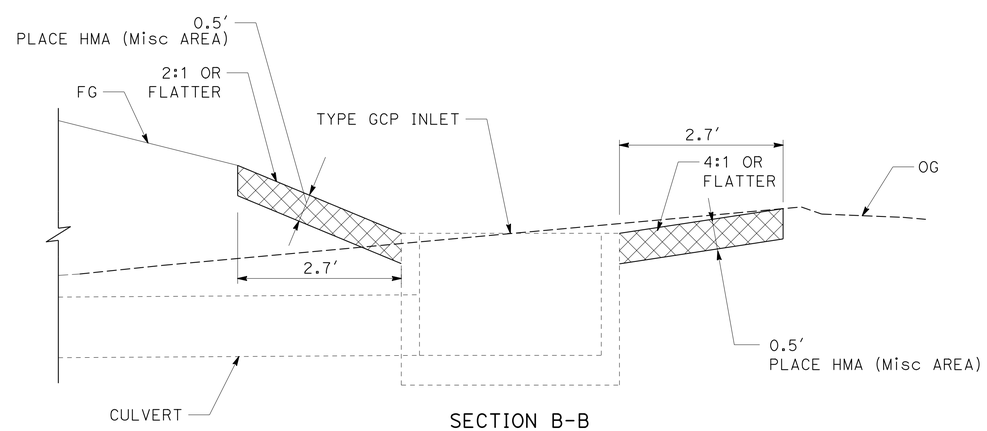

SECTION B-B
HMA APRON
DRAINAGE SYSTEM 5 c

DRAINAGE SYSTEM 2 h v 5 a 6 a e 13 d 14 d f 15 b o

DRAINAGE DETAILS

NO SCALE

DD-2

STATE OF CALIFORNIA - DEPARTMENT OF TRANSPORTATION
Caltrans® DESIGN

FUNCTIONAL SUPERVISOR: ERIC ORR
CALCULATED-DESIGNED BY: JEANNIE STEFFAN
CHECKED BY: SHAUN ALEXANDER
REVISED BY / DATE REVISED

P:\proj2\02\0E240_plans\pse\20e240ic002.dgn

LAST REVISION 01-19-16 | DATE PLOTTED => 29-JAN-2016 | TIME PLOTTED => 10:22

Dist	COUNTY	ROUTE	POST MILES TOTAL PROJECT	SHEET No.	TOTAL SHEETS
02	Plu	89	20.0/20.6	114	235

REGISTERED CIVIL ENGINEER 01-19-16 DATE

01-19-16
PLANS APPROVAL DATE

REGISTERED PROFESSIONAL ENGINEER SHAUN ALEXANDER No. 70833 Exp. 6-30-17 CIVIL STATE OF CALIFORNIA

THE STATE OF CALIFORNIA OR ITS OFFICERS OR AGENTS SHALL NOT BE RESPONSIBLE FOR THE ACCURACY OR COMPLETENESS OF SCANNED COPIES OF THIS PLAN SHEET.

NOTES:

1. SECTION A-A AND ADDITIONAL DETAILS SEE STANDARD PLAN D74A.
2. INLET TOPS SHALL MATCH ROADWAY CROSS SECTION AND PROFILE.

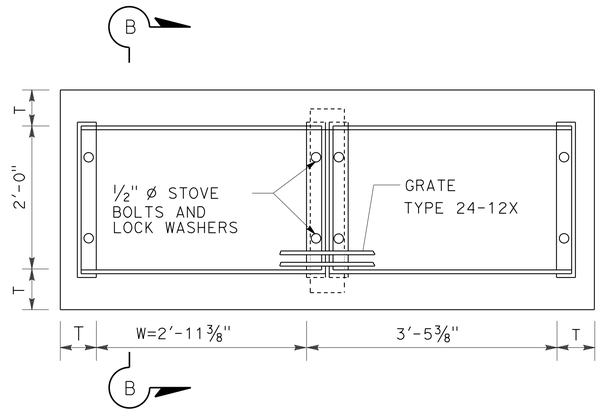

PLAN
GT3 Mod
DRAINAGE SYSTEM 2 w 6 h 15 i k m

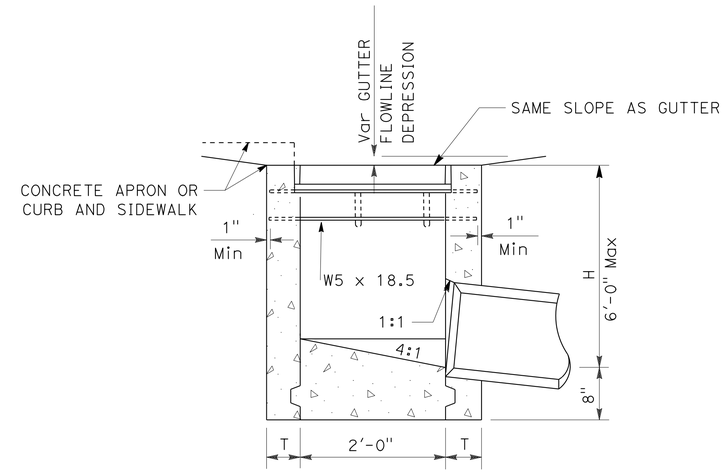

SECTION B-B

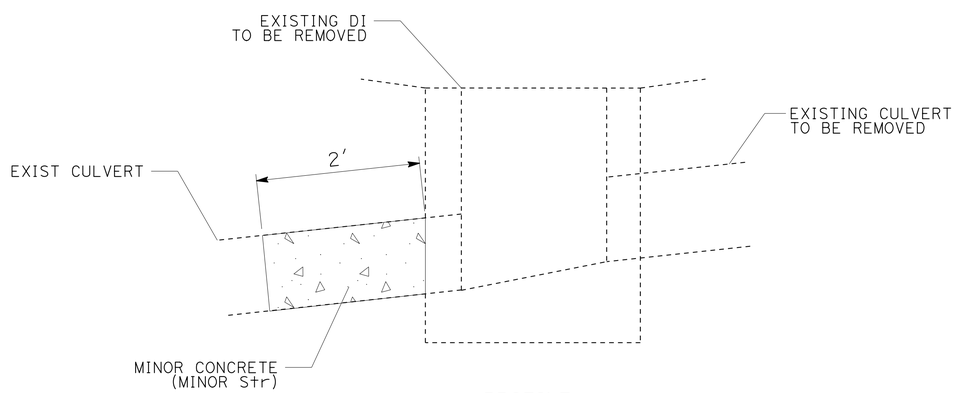

PROFILE
CONCRETE CAP
DRAINAGE SYSTEM 12 ff

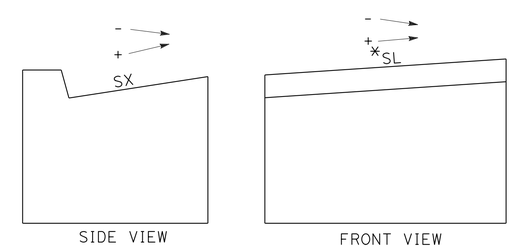

INLET SLOPE FIGURE
* THE SLOPE SL REFERENCES UP-STATION

DRAINAGE DETAILS
NO SCALE

DD-3

STATE OF CALIFORNIA - DEPARTMENT OF TRANSPORTATION
Caltrans® **DESIGN**
FUNCTIONAL SUPERVISOR: ERIC ORR
CALCULATED-DESIGNED BY: JEANNIE STEFFAN
CHECKED BY: SHAUN ALEXANDER
REVISED BY / DATE REVISED

P:\proj2\02\0E240_plans\pse\20e240ic003.dgn

LAST REVISION 01-19-16 | DATE PLOTTED => 29-JAN-2016 | TIME PLOTTED => 10:22

Dist	COUNTY	ROUTE	POST MILES TOTAL PROJECT	SHEET No.	TOTAL SHEETS
02	Plu	89	20.0/20.6	115	235

REGISTERED CIVIL ENGINEER 01-19-16 DATE

01-19-16
PLANS APPROVAL DATE

REGISTERED PROFESSIONAL ENGINEER SHAUN ALEXANDER No. 70833 Exp. 6-30-17 CIVIL STATE OF CALIFORNIA

THE STATE OF CALIFORNIA OR ITS OFFICERS OR AGENTS SHALL NOT BE RESPONSIBLE FOR THE ACCURACY OR COMPLETENESS OF SCANNED COPIES OF THIS PLAN SHEET.

DRAINAGE QUANTITIES

SHEET No.	DRAINAGE SYSTEM No.	DRAINAGE UNIT No.	REMOVE FLARED END SECTION	REMOVE CULVERT (LF)	REMOVE INLET	REMOVE HEADWALL	SAND BEDDING	CONCRETE BACKFILL (PIPE TRENCH)	DITCH EXCAVATION	HOT MIX ASPHALT (TYPE A)	PLACE HMA (Misc AREA)	MINOR CONCRETE (MINOR STRUCTURE)	(N) HEIGHT, H	18" PLASTIC PIPE	24" PLASTIC PIPE	18" REINFORCED CONCRETE PIPE (CLASS III)	24" REINFORCED CONCRETE PIPE (CLASS III)	36" REINFORCED CONCRETE PIPE (CLASS III)	"A1" STA	COMMENTS	SHEET No.	DRAINAGE SYSTEM No.	DRAINAGE UNIT No.
			EA	LF	EA	EA	CY	CY	CY	TON	SQYD	CY	LF	LF	LF	LF	LF	LF					
D-1	1	a																			D-1	1	a
D-1		b																			D-1		b
D-1	2	aa		70.1																Exist 18" CMP	D-1	2	aa
D-1		bb	1																		D-1		bb
D-1		a																	13+49.95		D-1		a
D-1		b													53.7						D-1		b
D-1		c										1.61	6.0						13+52.64	TYPE G1 DI, GRATE 24-12X	D-1		c
D-1		d												55.7							D-1		d
D-1		e										1.41	5.1						14+11.23	TYPE G1 DI, GRATE 24-12X	D-1		e
D-1		f												84.9							D-1		f
D-1		g										1.32	4.7						14+96.18	TYPE G1 DI, GRATE 24-12X	D-1		g
D-1		h						6.1								51.0					D-1		h
D-1		i										1.19	2.8						14+96.18	TYPE GO DI, GRATE 24-12X	D-1		i
D-1		j												129.9							D-1		j
D-1		k										1.12	2.5						16+30.82	TYPE GO DI, GRATE 24-12X	D-1		k
D-1,2		l												112.0							D-1,2		l
D-2		m										1.12	2.5						17+49.06	TYPE GO DI, GRATE 24-12X	D-2		m
D-2		n												65.5							D-2		n
D-2		o										1.17	2.7						18+19.39	TYPE GO DI, GRATE 24-12X	D-2		o
D-2		p												162.2							D-2		p
D-2		q										1.19	2.8						19+87.21	TYPE GO DI, GRATE 24-12X	D-2		q
D-2		r												79.3							D-2		r
D-2		s										1.14	2.6						20+69.47	TYPE GO DI, GRATE 24-12X	D-2		s
D-2		t												73.9							D-2		t
D-2		u										1.12	2.5						21+46.28	TYPE GO DI, GRATE 24-12X	D-2		u
D-2		v						7.0								59.1					D-2		v
D-2		w										1.73	3.0						21+34.94	TYPE GT3 DI, GRATE 24-12X	D-2		w
D-2		x												44.1							D-2		x
D-2		y										1.66	2.8						21+81.98	TYPE GT3 DI, GRATE 24-12X	D-2		y
D-1		z					30		41											INFILTRATION TRENCH	D-1		z
D-1	3	aa				1														Exist HEADWALL	D-1	3	aa
D-1,2		bb		40.5																Exist 18" CMP	D-1,2		bb
D-2		cc				1														Exist HEADWALL	D-2		cc
D-2	4	aa				1														Exist HEADWALL	D-2	4	aa
D-2		bb		33.8																Exist 18" CMP	D-2		bb
D-2		cc				1														Exist HEADWALL	D-2		cc
D-2	5	a						6.9								73.9					D-2	5	a
D-2		b										0.40	2.1						18+19.18	TYPE GCP DI, GRATE 36RX	D-2		b
D-2		c								3	7								18+19.18	HMA APRON	D-2		c
D-2	6	a						7.9								67.3					D-2	6	a
D-2		b										1.35	3.3						20+30.00	TYPE G4 DI, GRATE 24-12X	D-2		b
D-2		c												23.4							D-2		c
D-2		d										1.66	2.8						20+47.31	TYPE GT3 DI, GRATE 24-12X	D-2		d
SUBTOTAL			1	144.4	0	4	30	27.9	41	3	7	19.19		830.9	53.7	251.3	0	0					

NOTES:

1. ALL PIPE JOINT CLASSIFICATIONS ARE STANDARD WATERTIGHT JOINT TYPE.
2. (N) - NOT A SEPARATE PAY ITEM, FOR INFORMATION ONLY.
3. ALL REINFORCED CONCRETE PIPE JOINTS SHALL BE FLUSH BELL DESIGN OR TONGUE & GROOVE DESIGN.
4. ALL CORRUGATED STEEL PIPE COUPLING TYPE SHALL BE HUGGER.
5. ALL PLASTIC PIPES MUST HAVE A SMOOTH INTERIOR.

DRAINAGE QUANTITIES

DQ-1

REVISED BY | DATE REVISED
JEANNIE STEFFAN | SHAUN ALEXANDER
CALCULATED-DESIGNED BY | CHECKED BY
FUNCTIONAL SUPERVISOR: ERIC ORR

STATE OF CALIFORNIA - DEPARTMENT OF TRANSPORTATION
Caltrans
DESIGN

P:\proj2\02\0E240_plans\pse\20e240id001.dgn

LAST REVISION 01-19-16 | DATE PLOTTED => 29-JAN-2016 | TIME PLOTTED => 10:22

Dist	COUNTY	ROUTE	POST MILES TOTAL PROJECT	SHEET No.	TOTAL SHEETS
02	Plu	89	20.0/20.6	116	235

REGISTERED CIVIL ENGINEER 01-19-16 DATE

01-19-16
PLANS APPROVAL DATE

REGISTERED PROFESSIONAL ENGINEER SHAUN ALEXANDER No. 70833 Exp. 6-30-17 CIVIL STATE OF CALIFORNIA

THE STATE OF CALIFORNIA OR ITS OFFICERS OR AGENTS SHALL NOT BE RESPONSIBLE FOR THE ACCURACY OR COMPLETENESS OF SCANNED COPIES OF THIS PLAN SHEET.

DRAINAGE QUANTITIES

SHEET No.	DRAINAGE SYSTEM No.	DRAINAGE UNIT No.	18" CORRUGATED STEEL PIPE (0.109" THICK) LF	30" CORRUGATED STEEL PIPE (0.109" THICK) LF	CLASS 6 PERMEABLE MATERIAL CY	CLASS D FILTER FABRIC SQYD	12" WELDED STEEL PIPE (.250" THICK) LF	24" STEEL FLARED END SECTION EA	30" STEEL FLARED END SECTION EA	36" PRECAST CONCRETE PIPE INLET LF	SMALL-ROCK SLOPE PROTECTION CY	ROCK SLOPE PROTECTION (No. 1, METHOD B) CY	CONCRETE (CONCRETE APRON) CY	ROCK SLOPE PROTECTION FABRIC (CLASS 8) SQYD	MINOR CONCRETE (GUTTER DEPRESSION) CY	Misc IRON AND STEEL LB	CABLE RAILING LF	"A1" STA	COMMENTS	SHEET No.	DRAINAGE SYSTEM No.	DRAINAGE UNIT No.
D-1	1	a		18.9																D-1	1	a
D-1		b							1											D-1		b
D-1	2	aa																	Exist 18" CMP	D-1	2	aa
D-1		bb																		D-1		bb
D-1		a						1										13+49.95		D-1		a
D-1		b																		D-1		b
D-1		c														239		13+52.64	TYPE G1 DI, GRATE 24-12X	D-1		c
D-1		d																		D-1		d
D-1		e														239		14+11.23	TYPE G1 DI, GRATE 24-12X	D-1		e
D-1		f																		D-1		f
D-1		g														239		14+96.18	TYPE G1 DI, GRATE 24-12X	D-1		g
D-1		h																		D-1		h
D-1		i														239		14+96.18	TYPE GO DI, GRATE 24-12X	D-1		i
D-1		j																		D-1		j
D-1		k														239		16+30.82	TYPE GO DI, GRATE 24-12X	D-1		k
D-1,2		l																		D-1,2		l
D-2		m														239		17+49.06	TYPE GO DI, GRATE 24-12X	D-2		m
D-2		n																		D-2		n
D-2		o														239		18+19.39	TYPE GO DI, GRATE 24-12X	D-2		o
D-2		p																		D-2		p
D-2		q														239		19+87.21	TYPE GO DI, GRATE 24-12X	D-2		q
D-2		r																		D-2		r
D-2		s														239		20+69.47	TYPE GO DI, GRATE 24-12X	D-2		s
D-2		t																		D-2		t
D-2		u														239		21+46.28	TYPE GO DI, GRATE 24-12X	D-2		u
D-2		v																		D-2		v
D-2		w														478		21+34.94	TYPE GT3 DI, GRATE 24-12X	D-2		w
D-2		x																		D-2		x
D-2		y														478		21+81.98	TYPE GT3 DI, GRATE 24-12X	D-2		y
D-1		z			185	256						66		50					INFILTRATION TRENCH	D-1		z
D-1	3	aa																	Exist HEADWALL	D-1	3	aa
D-1,2		bb																	Exist 18" CMP	D-1,2		bb
D-2		cc																	Exist HEADWALL	D-2		cc
D-2	4	aa																	Exist HEADWALL	D-2	4	aa
D-2		bb																	Exist 18" CMP	D-2		bb
D-2		cc																	Exist HEADWALL	D-2		cc
D-2	5	a																		D-2	5	a
D-2		b								2.6						215		18+19.18	TYPE GCP DI, GRATE 36RX	D-2		b
D-2		c																18+19.18	HMA APRON	D-2		c
D-2	6	a																		D-2	6	a
D-2		b														239		20+30.00	TYPE G4 DI, GRATE 24-12X	D-2		b
D-2		c																		D-2		c
D-2		d														478		20+47.31	TYPE GT3 DI, GRATE 24-12X	D-2		d
SUBTOTAL			0	18.9	185	256	0	1	1	2.6	0	66	0	50	0	4278	0					

DRAINAGE QUANTITIES
DQ-2

REVISED BY | DATE REVISED
JEANNIE STEFFAN | SHAUN ALEXANDER
CALCULATED-DESIGNED BY | CHECKED BY
FUNCTIONAL SUPERVISOR: ERIC ORR

STATE OF CALIFORNIA - DEPARTMENT OF TRANSPORTATION
Caltrans
DESIGN

P:\proj2\02\0E240_plans\pse\20e240id002.dgn

LAST REVISION 01-19-16 | DATE PLOTTED => 29-JAN-2016 | TIME PLOTTED => 10:22

Dist	COUNTY	ROUTE	POST MILES TOTAL PROJECT	SHEET No.	TOTAL SHEETS
02	Plu	89	20.0/20.6	117	235

REGISTERED CIVIL ENGINEER 01-19-16 DATE

01-19-16
PLANS APPROVAL DATE

REGISTERED PROFESSIONAL ENGINEER SHAUN ALEXANDER No. 70833 Exp. 6-30-17 CIVIL STATE OF CALIFORNIA

THE STATE OF CALIFORNIA OR ITS OFFICERS OR AGENTS SHALL NOT BE RESPONSIBLE FOR THE ACCURACY OR COMPLETENESS OF SCANNED COPIES OF THIS PLAN SHEET.

DRAINAGE QUANTITIES

SHEET No.	DRAINAGE SYSTEM No.	DRAINAGE UNIT No.	REMOVE FLARED END SECTION	REMOVE CULVERT (LF)	REMOVE INLET	REMOVE HEADWALL	SAND BEDDING	CONCRETE BACKFILL (PIPE TRENCH)	DITCH EXCAVATION	HOT MIX ASPHALT (TYPE A)	PLACE HMA (Misc AREA)	MINOR CONCRETE (MINOR STRUCTURE)	(N) HEIGHT, H	18" PLASTIC PIPE	24" PLASTIC PIPE	18" REINFORCED CONCRETE PIPE (CLASS III)	24" REINFORCED CONCRETE PIPE (CLASS III)	36" REINFORCED CONCRETE PIPE (CLASS III)	"A1" STA	COMMENTS	SHEET No.	DRAINAGE SYSTEM No.	DRAINAGE UNIT No.
			EA	LF	EA	EA	CY	CY	CY	TON	SQYD	CY	LF	LF	LF	LF	LF	LF					
D-2	6	e						4.3						37.2							D-2	6	e
D-2		f										1.73	3.0						20+88.58	TYPE GT3 DI, GRATE 24-12X	D-2		f
D-2		g												20.8							D-2		g
D-2		h										1.63	2.7						20+94.70	TYPE GT3 Mod DI, GRATE 24-12X	D-2		h
D-3	7	a										0.84	2.5						23+40.00	TYPE G1 DI, GRATE 24-12X	D-3	7	a
D-3		b												157.5							D-3		b
D-3		c										1.63	4.6						25+00.42	TYPE GO DI, GRATE 24-12X	D-3		c
D-3		d												67.5							D-3		d
D-3		e										1.91	4.8						25+70.08	TYPE OS DI, PLATE	D-3		e
D-3		f												72.5							D-3		f
D-3		g										2.30	6.1						26+45.27	TYPE G4 DI, GRATE 24-12X	D-3		g
D-3		h												150.0							D-3		h
D-3		i										1.83	5.4						27+97.68	TYPE GO DI, GRATE 24-12X	D-3		i
D-4		j												150.1							D-4		j
D-4		k										1.96	5.1						28+89.75	TYPE G4 DI, GRATE 24-12X	D-4		k
D-4		l												112.5							D-4		l
D-4		m										2.05	4.6						30+05.00	TYPE G4 DI, GRATE 24-12X	D-4		m
D-4		n															55.3				D-4		n
D-4		o										1.50	4.0						29+79.93	TYPE G2 DI, GRATE 24-12X	D-4		o
D-3	8	a										2.04	3.9						24+99.71	TYPE GT3 DI, GRATE 24-12X, GUTTER DEPRESSION	D-3	8	a
D-3		b															45.8				D-3		b
D-3	9	a										1.53	4.2						25+91.48	TYPE GO DI, GRATE 24-12X	D-3	9	a
D-3		b												42.0							D-3		b
D-3		c										2.10	4.5						25+46.65	TYPE GDO DI, GRATE 24-12X	D-3		c
D-3		d															77.5				D-3		d
D-3	10	a										2.43	5.0						26+45.27	TYPE GT3 DI, GRATE 24-12X	D-3	10	a
D-3		b															46.2				D-3		b
D-3		c																165.2			D-3		c
D-3		d										1.95							26+44.31	STRAIGHT HEADWALL	D-3		d
D-3		e					6													RSP, INFILTRATION TRENCH	D-3		e
D-3		f					39													0.58′ SMALL-RSP, INFILTRATION TRENCH	D-3		f
D-3		g							70												D-3		g
D-3	11	a										2.43	5.0						27+87.59	TYPE GT3 DI, GRATE 24-12X	D-3	11	a
D-3		b															47.0				D-3		b
D-3	12	aa			1																D-3	12	aa
D-3		bb		50.0																Exist 18" CMP	D-3		bb
D-3		cc			1																D-3		cc
D-3		dd		66.8																Exist 36" CMP	D-3		dd
D-3		ee			1																D-3		ee
D-3		ff										0.40								Exist 3′ x 2′ Conc ARCH CULVERT, Conc CAP	D-3		ff
D-3		gg		162.7																Exist 18" CMP	D-3		gg
D-3		hh			1																D-3		hh
SUBTOTAL			0	279.5	4	0	45	4.3	70	0	0	30.26		810.1	0	0	271.8	165.2	SUBTOTAL				

STATE OF CALIFORNIA - DEPARTMENT OF TRANSPORTATION
Caltrans® DESIGN

FUNCTIONAL SUPERVISOR: ERIC ORR
CALCULATED-DESIGNED BY: JEANNIE STEFFAN
CHECKED BY: SHAUN ALEXANDER
REVISED BY
DATE REVISED

P:\proj2\02\0E240_plans\pse\20e240id003.dgn

DRAINAGE QUANTITIES
DQ-3

LAST REVISION 01-19-16
DATE PLOTTED => 29-JAN-2016
TIME PLOTTED => 10:22

Dist	COUNTY	ROUTE	POST MILES TOTAL PROJECT	SHEET No.	TOTAL SHEETS
02	Plu	89	20.0/20.6	118	235

REGISTERED CIVIL ENGINEER 01-19-16 DATE

01-19-16
PLANS APPROVAL DATE

REGISTERED PROFESSIONAL ENGINEER SHAUN ALEXANDER No. 70833 Exp. 6-30-17 CIVIL STATE OF CALIFORNIA

THE STATE OF CALIFORNIA OR ITS OFFICERS OR AGENTS SHALL NOT BE RESPONSIBLE FOR THE ACCURACY OR COMPLETENESS OF SCANNED COPIES OF THIS PLAN SHEET.

DRAINAGE QUANTITIES

SHEET No.	DRAINAGE SYSTEM No.	DRAINAGE UNIT No.	18" CORRUGATED STEEL PIPE (0.109" THICK) LF	30" CORRUGATED STEEL PIPE (0.109" THICK) LF	CLASS 6 PERMEABLE MATERIAL CY	CLASS D FILTER FABRIC SQYD	12" WELDED STEEL PIPE (.250" THICK) LF	24" STEEL FLARED END SECTION EA	30" STEEL FLARED END SECTION EA	36" PRECAST CONCRETE PIPE INLET LF	SMALL-ROCK SLOPE PROTECTION CY	ROCK SLOPE PROTECTION (No. 1, METHOD B) CY	CONCRETE (CONCRETE APRON) CY	ROCK SLOPE PROTECTION FABRIC (CLASS 8) SQYD	MINOR CONCRETE (GUTTER DEPRESSION) CY	Misc IRON AND STEEL LB	CABLE RAILING LF	"A1" STA	COMMENTS	SHEET No.	DRAINAGE SYSTEM No.	DRAINAGE UNIT No.
D-2	6	e																		D-2	6	e
D-2		f														478		20+88.58	TYPE GT3 DI, GRATE 24-12X	D-2		f
D-2		g																		D-2		g
D-2		h														478		20+94.70	TYPE GT3 Mod DI, GRATE 24-12X	D-2		h
D-3	7	a														239		23+40.00	TYPE G1 DI, GRATE 24-12X	D-3	7	a
D-3		b																		D-3		b
D-3		c														239		25+00.42	TYPE GO DI, GRATE 24-12X	D-3		c
D-3		d																		D-3		d
D-3		e														174		25+70.08	TYPE OS DI, PLATE	D-3		e
D-3		f																		D-3		f
D-3		g														239		26+45.27	TYPE G4 DI, GRATE 24-12X	D-3		g
D-3		h																		D-3		h
D-3		i														239		27+97.68	TYPE GO DI, GRATE 24-12X	D-3		i
D-4		j																		D-4		j
D-4		k														239		28+89.75	TYPE G4 DI, GRATE 24-12X	D-4		k
D-4		l																		D-4		l
D-4		m														239		30+05.00	TYPE G4 DI, GRATE 24-12X	D-4		m
D-4		n																		D-4		n
D-4		o														239		29+79.93	TYPE G2 DI, GRATE 24-12X	D-4		o
D-3	8	a													0.6	478		24+99.71	TYPE GT3 DI, GRATE 24-12X, GUTTER DEPRESSION	D-3	8	a
D-3		b																		D-3		b
D-3	9	a														239		25+91.48	TYPE GO DI, GRATE 24-12X	D-3	9	a
D-3		b																		D-3		b
D-3		c														473		25+46.65	TYPE GDO DI, GRATE 24-12X	D-3		c
D-3		d																		D-3		d
D-3	10	a														478		26+45.27	TYPE GT3 DI, GRATE 24-12X	D-3	10	a
D-3		b																		D-3		b
D-3		c																		D-3		c
D-3		d															11	26+44.31	STRAIGHT HEADWALL	D-3		d
D-3		e			37	68						11		7					RSP, INFILTRATION TRENCH	D-3		e
D-3		f			234	434					26								0.58' SMALL-RSP, INFILTRATION TRENCH	D-3		f
D-3		g																		D-3		g
D-3	11	a														478		27+87.59	TYPE GT3 DI, GRATE 24-12X	D-3	11	a
D-3		b																		D-3		b
D-3	12	aa																		D-3	12	aa
D-3		bb																	Exist 18" CMP	D-3		bb
D-3		cc																		D-3		cc
D-3		dd																	Exist 36" CMP	D-3		dd
D-3		ee																		D-3		ee
D-3		ff																	Exist 3' x 2' Conc ARCH CULVERT, Conc CAP	D-3		ff
D-3		gg																	Exist 18" CMP	D-3		gg
D-3		hh																		D-3		hh
SUBTOTAL			0	0	271	502	0	0	0	0	26	11	0	7	0.6	4949	11	SUBTOTAL				

DRAINAGE QUANTITIES

DQ-4

JEANNIE STEFFAN — REVISED BY
SHAUN ALEXANDER — DATE REVISED
CALCULATED-DESIGNED BY
CHECKED BY
FUNCTIONAL SUPERVISOR: ERIC ORR

STATE OF CALIFORNIA - DEPARTMENT OF TRANSPORTATION
Caltrans® DESIGN

P:\proj2\02\0E240_plans\pse\20e240id004.dgn

LAST REVISION 01-19-16 | DATE PLOTTED => 29-JAN-2016 | TIME PLOTTED => 10:22

Dist	COUNTY	ROUTE	POST MILES TOTAL PROJECT	SHEET No.	TOTAL SHEETS
02	Plu	89	20.0/20.6	119	235

Shaun Alexander 01-19-16
REGISTERED CIVIL ENGINEER DATE

01-19-16
PLANS APPROVAL DATE

REGISTERED PROFESSIONAL ENGINEER SHAUN ALEXANDER No. 70833 Exp. 6-30-17 CIVIL STATE OF CALIFORNIA

THE STATE OF CALIFORNIA OR ITS OFFICERS OR AGENTS SHALL NOT BE RESPONSIBLE FOR THE ACCURACY OR COMPLETENESS OF SCANNED COPIES OF THIS PLAN SHEET.

DRAINAGE QUANTITIES

SHEET No.	DRAINAGE SYSTEM No.	DRAINAGE UNIT No.	REMOVE FLARED END SECTION	REMOVE CULVERT (LF)	REMOVE INLET	REMOVE HEADWALL	SAND BEDDING	CONCRETE BACKFILL (PIPE TRENCH)	DITCH EXCAVATION	HOT MIX ASPHALT (TYPE A)	PLACE HMA (Misc AREA)	MINOR CONCRETE (MINOR STRUCTURE)	(N) HEIGHT, H	18" PLASTIC PIPE	24" PLASTIC PIPE	18" REINFORCED CONCRETE PIPE (CLASS III)	24" REINFORCED CONCRETE PIPE (CLASS III)	36" REINFORCED CONCRETE PIPE (CLASS III)	"A1" STA	COMMENTS	SHEET No.	DRAINAGE SYSTEM No.	DRAINAGE UNIT No.
			EA	LF	EA	EA	CY	CY	CY	TON	SQYD	CY	LF	LF	LF	LF	LF	LF					
D-3	12	ii		91.5																Exist 18" CMP	D-3	12	ii
D-3		jj		47.5																Exist 24" CMP	D-3		jj
D-3		kk			1																D-3		kk
D-4		ll			1																D-4		ll
D-4		mm		32.4																Exist 18" CMP	D-4		mm
D-4		nn		94.3																Exist 18" CMP	D-4		nn
D-4		oo			1																D-4		oo
D-4		pp		48.3																Exist 18" CMP	D-4		pp
D-4		qq			1																D-4		qq
D-4		rr		135.7																Exist 18" CMP	D-4		rr
D-4		ss			1																D-4		ss
D-4		tt		110.9																Exist 18" CSP	D-4		tt
D-4		uu			1																D-4		uu
D-4	13	a										1.96	4.0						29+26.85	TYPE G4 DI, GRATE 24-12X	D-4	13	a
D-4		b															53.1				D-4		b
D-4		c										1.62	3.8						28+70.42	TYPE G4 DI, GRATE 24-12X	D-4		c
D-4		d						10.1									63.7				D-4		d
D-4		e																			D-4		e
D-4	14	a										1.56	2.5						32+65.04	TYPE GT3 DI, GRATE 24-12X	D-4	14	a
D-4		b												36.7							D-4		b
D-4		c										0.99	3.2						32+19.24	TYPE G1 DI, GRATE 24-12X	D-4		c
D-4		d						5.4								46.1					D-4		d
D-4		e										1.39	2.9						32+20.66	TYPE G4 DI, GRATE 24-12X	D-4		e
D-4		f						3.5								57.5					D-4		f
D-4		g										1.65	3.1						32+48.23	TYPE GDO DI, GRATE 24-12X	D-4		g
D-4		h												71.2							D-4		h
D-4		i										1.78	3.5						32+92.96	TYPE GDO DI, GRATE 24-12X	D-4		i
D-4		j																			D-4		j
D-4		aa			1																D-4		aa
D-5	15	a										1.12	2.5						34+93.45	TYPE GO DI, GRATE 24-12X	D-5	15	a
D-5		b						3.4								96.1					D-5		b
D-5		c										1.07	2.2						35+79.03	TYPE G4 DI, GRATE 24-12X	D-5		c
D-5		d												84.6							D-5		d
D-5		e										1.17	2.7						36+66.85	TYPE GO DI, GRATE 24-12X	D-5		e
D-5		f												40.4							D-5		f
D-5		g										1.19	2.8						37+10.00	TYPE GO DI, GRATE 24-12X	D-5		g
D-5		h												87.7							D-5		h
D-5		i										1.42	2.1						38+02.42	TYPE GT3 Mod DI, GRATE 24-12X	D-5		i
D-5		j																			D-5		j
D-5		k										1.38	2.0						38+12.90	TYPE GT3 Mod DI, GRATE 24-12X	D-5		k
D-5		l						1.6													D-5		l
D-5		m										1.21	1.5						38+42.86	TYPE GT3 Mod DI, GRATE 24-12X	D-5		m
D-5		n																		CONCRETE APRON	D-5		n
SUBTOTAL			0	560.6	7	0	0	24	0	0	0	19.51		320.6	0	199.7	116.8	0	SUBTOTAL				

REVISED BY | DATE REVISED

JEANNIE STEFFAN | SHAUN ALEXANDER

CALCULATED-DESIGNED BY | CHECKED BY

FUNCTIONAL SUPERVISOR: ERIC ORR

STATE OF CALIFORNIA - DEPARTMENT OF TRANSPORTATION

Caltrans®

DESIGN

P:\proj2\02\0E240_plans\pse\20e240id005.dgn

DRAINAGE QUANTITIES
DQ-5

LAST REVISION 01-19-16 | DATE PLOTTED => 29-JAN-2016 | TIME PLOTTED => 10:22

Dist	COUNTY	ROUTE	POST MILES TOTAL PROJECT	SHEET No.	TOTAL SHEETS
02	Plu	89	20.0/20.6	120	235

REGISTERED CIVIL ENGINEER 01-19-16 DATE

01-19-16
PLANS APPROVAL DATE

REGISTERED PROFESSIONAL ENGINEER SHAUN ALEXANDER No. 70833 Exp. 6-30-17 CIVIL STATE OF CALIFORNIA

THE STATE OF CALIFORNIA OR ITS OFFICERS OR AGENTS SHALL NOT BE RESPONSIBLE FOR THE ACCURACY OR COMPLETENESS OF SCANNED COPIES OF THIS PLAN SHEET.

DRAINAGE QUANTITIES

SHEET No.	DRAINAGE SYSTEM No.	DRAINAGE UNIT No.	18" CORRUGATED STEEL PIPE (0.109" THICK)	30" CORRUGATED STEEL PIPE (0.109" THICK)	CLASS 6 PERMEABLE MATERIAL	CLASS D FILTER FABRIC	12" WELDED STEEL PIPE (.250" THICK)	24" STEEL FLARED END SECTION	30" STEEL FLARED END SECTION	36" PRECAST CONCRETE PIPE INLET	SMALL-ROCK SLOPE PROTECTION	ROCK SLOPE PROTECTION (No. 1, METHOD B)	CONCRETE (CONCRETE APRON)	ROCK SLOPE PROTECTION FABRIC (CLASS 8)	MINOR CONCRETE (GUTTER DEPRESSION)	Misc IRON AND STEEL	CABLE RAILING	"A1" STA	COMMENTS	SHEET No.	DRAINAGE SYSTEM No.	DRAINAGE UNIT No.
			LF	LF	CY	SQYD	LF	EA	EA	LF	CY	CY	CY	SQYD	CY	LB	LF					
D-3	12	ii																	Exist 18" CMP	D-3	12	ii
D-3		jj																	Exist 24" CMP	D-3		jj
D-3		kk																		D-3		kk
D-4		ll																		D-4		ll
D-4		mm																	Exist 18" CMP	D-4		mm
D-4		nn																	Exist 18" CMP	D-4		nn
D-4		oo																		D-4		oo
D-4		pp																	Exist 18" CMP	D-4		pp
D-4		qq																		D-4		qq
D-4		rr																	Exist 18" CMP	D-4		rr
D-4		ss																		D-4		ss
D-4		tt																	Exist 18" CSP	D-4		tt
D-4		uu																		D-4		uu
D-4	13	a														239		29+26.85	TYPE G4 DI, GRATE 24-12X	D-4	13	a
D-4		b																		D-4		b
D-4		c														239		28+70.42	TYPE G4 DI, GRATE 24-12X	D-4		c
D-4		d																		D-4		d
D-4		e	7.0																	D-4		e
D-4	14	a														478		32+65.04	TYPE GT3 DI, GRATE 24-12X	D-4	14	a
D-4		b																		D-4		b
D-4		c														239		32+19.24	TYPE G1 DI, GRATE 24-12X	D-4		c
D-4		d																		D-4		d
D-4		e														239		32+20.66	TYPE G4 DI, GRATE 24-12X	D-4		e
D-4		f																		D-4		f
D-4		g														473		32+48.23	TYPE GDO DI, GRATE 24-12X	D-4		g
D-4		h																		D-4		h
D-4		i														473		32+92.96	TYPE GDO DI, GRATE 24-12X	D-4		i
D-4		j	7.0																	D-4		j
D-4		aa																		D-4		aa
D-5	15	a														239		34+93.45	TYPE GO DI, GRATE 24-12X	D-5	15	a
D-5		b																		D-5		b
D-5		c														239		35+79.03	TYPE G4 DI, GRATE 24-12X	D-5		c
D-5		d																		D-5		d
D-5		e														239		36+66.85	TYPE GO DI, GRATE 24-12X	D-5		e
D-5		f																		D-5		f
D-5		g														239		37+10.00	TYPE GO DI, GRATE 24-12X	D-5		g
D-5		h																		D-5		h
D-5		i														478		38+02.42	TYPE GT3 Mod DI, GRATE 24-12X	D-5		i
D-5		j					11.6													D-5		j
D-5		k														478		38+12.90	TYPE GT3 Mod DI, GRATE 24-12X	D-5		k
D-5		l					36.1													D-5		l
D-5		m														478		38+42.86	TYPE GT3 Mod DI, GRATE 24-12X	D-5		m
D-5		n											1.9						CONCRETE APRON	D-5		n
SUBTOTAL			14.0	0	0	0	47.7	0	0	0	0	0	1.9	0	0	4770	0	SUBTOTAL				

DRAINAGE QUANTITIES

DQ-6

JEANNIE STEFFAN — REVISED BY
SHAUN ALEXANDER — DATE REVISED
CALCULATED-DESIGNED BY
CHECKED BY
FUNCTIONAL SUPERVISOR
ERIC ORR

STATE OF CALIFORNIA - DEPARTMENT OF TRANSPORTATION
Caltrans
DESIGN

P:\proj2\02\0E240_plans\pse\20e240id006.dgn

LAST REVISION | DATE PLOTTED => 29-JAN-2016
01-19-16 | TIME PLOTTED => 10:22

Dist	COUNTY	ROUTE	POST MILES TOTAL PROJECT	SHEET No.	TOTAL SHEETS
02	Plu	89	20.0/20.6	121	235

REGISTERED CIVIL ENGINEER 01-19-16 DATE

01-19-16
PLANS APPROVAL DATE

REGISTERED PROFESSIONAL ENGINEER SHAUN ALEXANDER No. 70833 Exp. 6-30-17 CIVIL STATE OF CALIFORNIA

THE STATE OF CALIFORNIA OR ITS OFFICERS OR AGENTS SHALL NOT BE RESPONSIBLE FOR THE ACCURACY OR COMPLETENESS OF SCANNED COPIES OF THIS PLAN SHEET.

DRAINAGE QUANTITIES

SHEET No.	DRAINAGE SYSTEM No.	DRAINAGE UNIT No.	REMOVE FLARED END SECTION	REMOVE CULVERT (LF)	REMOVE INLET	REMOVE HEADWALL	SAND BEDDING	CONCRETE BACKFILL (PIPE TRENCH)	DITCH EXCAVATION	HOT MIX ASPHALT (TYPE A)	PLACE HMA (Misc AREA)	MINOR CONCRETE (MINOR STRUCTURE)	(N) HEIGHT, H	18" PLASTIC PIPE	24" PLASTIC PIPE	18" REINFORCED CONCRETE PIPE (CLASS III)	24" REINFORCED CONCRETE PIPE (CLASS III)	36" REINFORCED CONCRETE PIPE (CLASS III)	"A1" STA	COMMENTS	SHEET No.	DRAINAGE SYSTEM No.	DRAINAGE UNIT No.
			EA	LF	EA	EA	CY	CY	CY	TON	SQYD	CY	LF	LF	LF	LF	LF	LF					
D-5		o						2.7								36.3					D-5		o
D-5		p										1.19	2.7						35+66.30	TYPE G4 DI, GRATE 24-12X	D-5		p
D-5		q												50.3							D-5		q
D-5		r										1.43	2.4						35+66.04	TYPE GDO DI, GRATE 24-12X	D-5		r
D-5		s																			D-5		s
D-5		t												140.8							D-5		t
D-5		u										1.04	2.2						37+10.00	TYPE GO DI, GRATE 24-12X	D-5		u
D-5	16	aa			1																D-5	16	aa
D-5		bb		57.7																Exist 18" CSP	D-5		bb
D-5		cc			1																D-5		cc
D-5		dd		21.8																Exist 18" CMP	D-5		dd
D-5		ee			1																D-5		ee
D-5		ff		34.5																Exist 18" CMP	D-5		ff
D-5		gg		188.7																Exist 18" CMP	D-5		gg
D-5		hh			1																D-5		hh
D-5		ii		78.5																Exist 18" CMP	D-5		ii
D-5		jj			1																D-5		jj
SUBTOTAL			0	381.2	5	0	0	2.7	0	0	0	3.66		191.1	0	36.3	0	0	SUBTOTAL				
TOTAL			1	1365.7	16	4	75	58.9	111	* 3	* 7	72.62		2152.7	53.7	487.3	388.6	165.2	TOTAL				

* ADDITIONAL QUANTITIES SHOWN ON SUMMARY OF QUANTITIY SHEETS

CALCULATED-DESIGNED BY JEANNIE STEFFAN
CHECKED BY SHAUN ALEXANDER
REVISED BY
DATE REVISED
FUNCTIONAL SUPERVISOR ERIC ORR

STATE OF CALIFORNIA - DEPARTMENT OF TRANSPORTATION
Caltrans
DESIGN

P:\proj2\02\0E240_plans\pse\20e240id007.dgn

DRAINAGE QUANTITIES

DQ-7

LAST REVISION 01-19-16 DATE PLOTTED => 29-JAN-2016 TIME PLOTTED => 10:22

Dist	COUNTY	ROUTE	POST MILES TOTAL PROJECT	SHEET No.	TOTAL SHEETS
02	Plu	89	20.0/20.6	122	235

REGISTERED CIVIL ENGINEER 01-19-16 DATE

01-19-16
PLANS APPROVAL DATE

REGISTERED PROFESSIONAL ENGINEER SHAUN ALEXANDER No. 70833 Exp. 6-30-17 CIVIL STATE OF CALIFORNIA

THE STATE OF CALIFORNIA OR ITS OFFICERS OR AGENTS SHALL NOT BE RESPONSIBLE FOR THE ACCURACY OR COMPLETENESS OF SCANNED COPIES OF THIS PLAN SHEET.

DRAINAGE QUANTITIES

SHEET No.	DRAINAGE SYSTEM No.	DRAINAGE UNIT No.	18" CORRUGATED STEEL PIPE (0.109" THICK)	30" CORRUGATED STEEL PIPE (0.109" THICK)	CLASS 6 PERMEABLE MATERIAL	CLASS D FILTER FABRIC	12" WELDED STEEL PIPE (.250" THICK)	24" STEEL FLARED END SECTION	30" STEEL FLARED END SECTION	36" PRECAST CONCRETE PIPE INLET	SMALL-ROCK SLOPE PROTECTION	ROCK SLOPE PROTECTION (No. 1, METHOD B)	CONCRETE (CONCRETE APRON)	ROCK SLOPE PROTECTION FABRIC (CLASS 8)	MINOR CONCRETE (GUTTER DEPRESSION)	Misc IRON AND STEEL	CABLE RAILING	"A1" STA	COMMENTS	SHEET No.	DRAINAGE SYSTEM No.	DRAINAGE UNIT No.
			LF	LF	CY	SQYD	LF	EA	EA	LF	CY	CY	CY	SQYD	CY	LB	LF					
D-5		o																		D-5		o
D-5		p														239		35+66.30	TYPE G4 DI, GRATE 24-12X	D-5		p
D-5		q																		D-5		q
D-5		r														473		35+66.04	TYPE GDO DI, GRATE 24-12X	D-5		r
D-5		s	3.0																	D-5		s
D-5		t																		D-5		t
D-5		u														239		37+10.00	TYPE GO DI, GRATE 24-12X	D-5		u
D-5	16	aa																		D-5	16	aa
D-5		bb																	Exist 18" CSP	D-5		bb
D-5		cc																		D-5		cc
D-5		dd																	Exist 18" CMP	D-5		dd
D-5		ee																		D-5		ee
D-5		ff																	Exist 18" CMP	D-5		ff
D-5		gg																	Exist 18" CMP	D-5		gg
D-5		hh																		D-5		hh
D-5		ii																	Exist 18" CMP	D-5		ii
D-5		jj																		D-5		jj
SUBTOTAL			3.0	0	0	0	0	0	0	0	0	0	0	0	0	951	0	SUBTOTAL				
TOTAL			17.0	18.9	456	758	47.7	1	1	2.6	26	77	1.9	57	0.6	14948	11	TOTAL				

CALCULATED-DESIGNED BY JEANNIE STEFFAN REVISED BY
CHECKED BY SHAUN ALEXANDER DATE REVISED
FUNCTIONAL SUPERVISOR ERIC ORR

STATE OF CALIFORNIA - DEPARTMENT OF TRANSPORTATION
Caltrans DESIGN

P:\proj2\02\0E240_plans\pse\20e240id008.dgn

DRAINAGE QUANTITIES
DQ-8

LAST REVISION 01-19-16 DATE PLOTTED => 29-JAN-2016 TIME PLOTTED => 10:22

Dist	COUNTY	ROUTE	POST MILES TOTAL PROJECT	SHEET No.	TOTAL SHEETS
02	Plu	89	20.0/20.6	123	235

Daniel Rechs 01-15-16
REGISTERED CIVIL ENGINEER DATE

01-19-16
PLANS APPROVAL DATE

REGISTERED PROFESSIONAL ENGINEER
DANIEL RECHS
No. 70911
Exp. 6-30-17
CIVIL
STATE OF CALIFORNIA

THE STATE OF CALIFORNIA OR ITS OFFICERS OR AGENTS SHALL NOT BE RESPONSIBLE FOR THE ACCURACY OR COMPLETENESS OF SCANNED COPIES OF THIS PLAN SHEET.

NOTES:

1. FOR ACCURATE RIGHT OF WAY DATA, CONTACT RIGHT OF WAY ENGINEERING AT THE DISTRICT OFFICE.
2. NOT ALL UTILITIES OUTSIDE THE STATE RIGHT OF WAY ARE SHOWN.
3. DEPTHS LISTED IN POSITIVE LOCATION INFORMAITON TABLES ARE FROM ORIGINAL GRADE TO THE TOP OF THE UTILITY.

ABBREVIATIONS:

PTC - PRIOR TO CONSTRUCTION
STL - STEEL
S - SEWER
W - WATER
KV - KILOVOLT

LEGEND:

POTHOLE LOCATION
POTHOLING SYMBOL MARKING THE EXACT LOCATION
ABANDONED WATER LINE

UTILITY - OWNERSHIP

ELECTRICAL - PACIFIC GAS & ELECTRIC (PG&E)
TELEPHONE - FRONTIER COMMUNICATIONS
GAS - SOUTHWEST GAS
WATER - INDIAN VALLEY COMMUNITY SERVICES DISTRICT
SEWER - INDIAN VALLEY COMMUNITY SERVICES DISTRICT

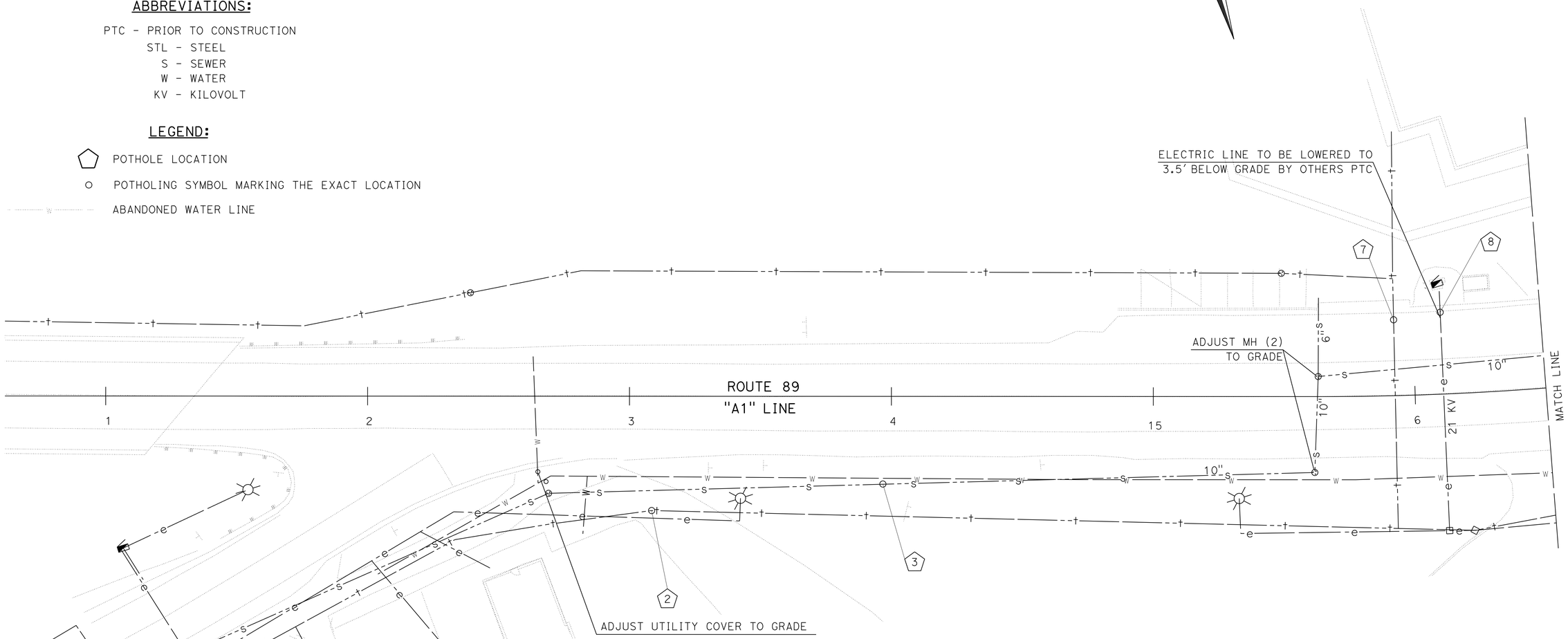

POSITIVE LOCATION INFORMATION

No.	LOCATION	DEPTH	UTILITY	METHOD
2	47.2' Rt "A1" 13+11.0	3'3"	TELEPHONE	ELECTRONIC DETECTION
3	33.4' Rt "A1" 13+96.8	9'	SEWER	ELECTRONIC DETECTION
7	29.0' Lt "A1" 15+92.4	3'3"	TELEPHONE	ELECTRONIC DETECTION
8	29.0' Lt "A1" 16+05.8	2'6"	ELECTRIC	POTHOLING

* MISSING NUMBERS WERE CANCELLED IN THE FIELD

UTILITY PLAN

SCALE: 1" = 20'

U-1

APPROVED FOR UTILITY WORK ONLY

REVISED BY | DATE REVISED
DANIEL R. RECHS | SUMAN SUDINI
CALCULATED-DESIGNED BY | CHECKED BY
FUNCTIONAL SUPERVISOR | JALWAT AHMAD
STATE OF CALIFORNIA - DEPARTMENT OF TRANSPORTATION
Caltrans
DESIGN

P:\proj2\02\0E240_plans\pse\20e240ka001.dgn

LAST REVISION 01-15-16 | DATE PLOTTED => 29-JAN-2016 | TIME PLOTTED => 10:22

Dist	COUNTY	ROUTE	POST MILES TOTAL PROJECT	SHEET No.	TOTAL SHEETS
02	Plu	89	20.0/20.6	124	235

Daniel Rechs 01-15-16
REGISTERED CIVIL ENGINEER DATE

01-19-16
PLANS APPROVAL DATE

REGISTERED PROFESSIONAL ENGINEER
DANIEL RECHS
No. 70911
Exp. 6-30-17
CIVIL
STATE OF CALIFORNIA

THE STATE OF CALIFORNIA OR ITS OFFICERS OR AGENTS SHALL NOT BE RESPONSIBLE FOR THE ACCURACY OR COMPLETENESS OF SCANNED COPIES OF THIS PLAN SHEET.

NOTE:

FOR ACCURATE RIGHT OF WAY DATA, CONTACT RIGHT OF WAY ENGINEERING AT THE DISTRICT OFFICE.

POSITIVE LOCATION INFORMATION

No. ⬠	LOCATION	DEPTH	UTILITY	METHOD
10	30.1′ Lt "A1" 18+77.2	2′3″	ELECTRIC	POTHOLING
11	33.5′ Rt "A1" 20+33.5	1′9″	WATER	POTHOLING
13	46.4′ Rt "A1" 20+46.4	2′6″	ELECTRIC	POTHOLING
14	22.8′ Rt "A1" 20+56.2	3′0″	WATER	POTHOLING
15	35.2′ Rt "A1" 21+35.1	3′7″	TELEPHONE	POTHOLING
16	35.5′ Rt "A1" 21+35.5	3′5″	ELECTRIC	POTHOLING
20	36.3′ Rt "A1" 21+84.9	3′4″	TELEPHONE	ELECTRONIC DETECTION

* MISSING NUMBERS WERE CANCELLED IN THE FIELD

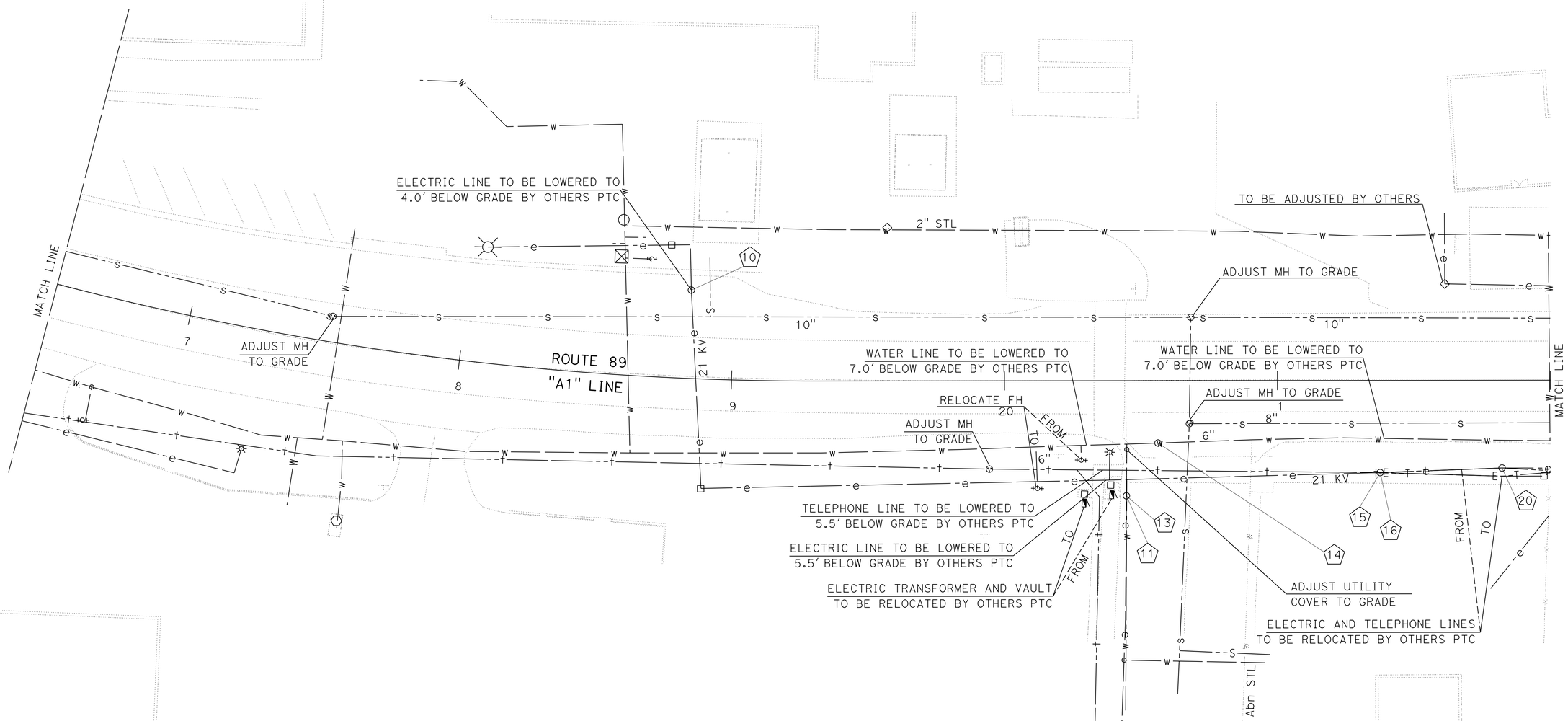

UTILITY PLAN

SCALE: 1" = 20′

U-2

APPROVED FOR UTILITY WORK ONLY

REVISED BY | DATE REVISED

DANIEL R. RECHS | SUMAN SUDINI

CALCULATED-DESIGNED BY | CHECKED BY

FUNCTIONAL SUPERVISOR

JALWAT AHMAD

STATE OF CALIFORNIA - DEPARTMENT OF TRANSPORTATION

Caltrans

DESIGN

P:\proj2\02\0E240_plans\pse\20e240ka002.dgn

LAST REVISION 01-15-16 | DATE PLOTTED => 29-JAN-2016 | TIME PLOTTED => 10:22

Dist	COUNTY	ROUTE	POST MILES TOTAL PROJECT	SHEET No.	TOTAL SHEETS
02	Plu	89	20.0/20.6	125	235

Daniel Rechs 01-15-16
REGISTERED CIVIL ENGINEER DATE

01-19-16
PLANS APPROVAL DATE

REGISTERED PROFESSIONAL ENGINEER
DANIEL RECHS
No. 70911
Exp. 6-30-17
CIVIL
STATE OF CALIFORNIA

THE STATE OF CALIFORNIA OR ITS OFFICERS OR AGENTS SHALL NOT BE RESPONSIBLE FOR THE ACCURACY OR COMPLETENESS OF SCANNED COPIES OF THIS PLAN SHEET.

NOTE:

FOR ACCURATE RIGHT OF WAY DATA, CONTACT
RIGHT OF WAY ENGINEERING AT THE DISTRICT OFFICE.

POSITIVE LOCATION INFORMATION

No. ⬠	LOCATION	DEPTH	UTILITY	METHOD
22	32.7′ Lt "A1" 23+41.6	3′6″	ELECTRIC	POTHOLING
23	29.5 Lt "A1" 23+41.6	5′1″	TELEPHONE	POTHOLING (SAME AS 22)
25	35.2′ Rt "A1" 24+56.6	3′8″	TELEPHONE	ELECTRONIC DETECTION
26	35.9′ Rt "A1" 24+60.5	3′7″	ELECTRIC	ELECTRONIC DETECTION
29	24.0′ Lt "A1" 25+1.5	2′3″	WATER	POTHOLING
30	58.0′ Rt "A1" 25+47.1	3′0″	TELEPHONE	POTHOLING
36	21.7′ Lt "A1" 27+52.9	2′9″	TELEPHONE	POTHOLING

* MISSING NUMBERS WERE CANCELLED IN THE FIELD

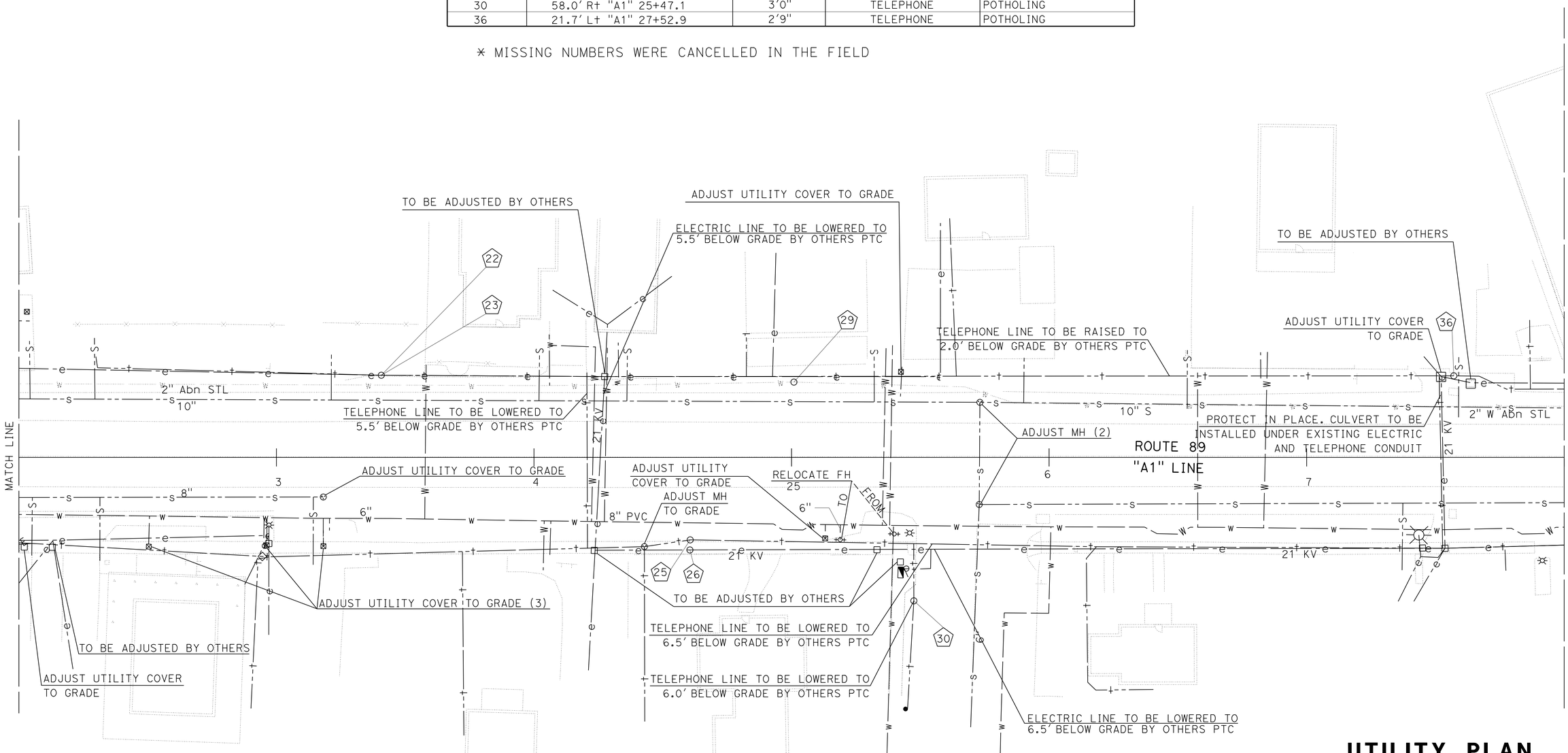

UTILITY PLAN

SCALE: 1" = 20′

U-3

APPROVED FOR UTILITY WORK ONLY

REVISED BY | DATE REVISED
DANIEL R. RECHS | SUMAN SUDINI
CALCULATED-DESIGNED BY | CHECKED BY
FUNCTIONAL SUPERVISOR | JALWAT AHMAD

STATE OF CALIFORNIA - DEPARTMENT OF TRANSPORTATION
Caltrans® DESIGN

P:\proj2\02\0E240_plans\pse\20e240ka003.dgn

LAST REVISION 01-15-16 | DATE PLOTTED => 29-JAN-2016 | TIME PLOTTED => 10:22

Dist	COUNTY	ROUTE	POST MILES TOTAL PROJECT	SHEET No.	TOTAL SHEETS
02	Plu	89	20.0/20.6	126	235

Daniel Rechs 01-15-16
REGISTERED CIVIL ENGINEER DATE

01-19-16
PLANS APPROVAL DATE

REGISTERED PROFESSIONAL ENGINEER DANIEL RECHS No. 70911 Exp. 6-30-17 CIVIL STATE OF CALIFORNIA

THE STATE OF CALIFORNIA OR ITS OFFICERS OR AGENTS SHALL NOT BE RESPONSIBLE FOR THE ACCURACY OR COMPLETENESS OF SCANNED COPIES OF THIS PLAN SHEET.

NOTE:

FOR ACCURATE RIGHT OF WAY DATA, CONTACT RIGHT OF WAY ENGINEERING AT THE DISTRICT OFFICE.

POSITIVE LOCATION INFORMATION

No. ⬠	LOCATION	DEPTH	UTILITY	METHOD
41	33.7′ R+ "A1" 28+74.8	3′1"	ELECTRIC	POTHOLING
42	42.4′ R+ "A1" 28+83.9	5′0"	ELECTRIC	POTHOLING
43	28.6′ R+ "A1" 29+76.3	2′5"	ELECTRIC	POTHOLING
46	22.0′ L+ "A1" 30+06.5	3′3"	WATER	POTHOLING
50	20.1′ L+ "A1" 32+22.2	3′7"	WATER	POTHOLING
51	45.7′ L+ "A1" 32+33.6	5′1"	WATER	POTHOLING
52	34.0′ R+ "A1" 32+52.0	2′3"	TELEPHONE	ELECTRONIC DETECTION
53	24.8′ R+ "A1" 32+67.1	2′0"	ELECTRIC	POTHOLING

* MISSING NUMBERS WERE CANCELLED IN THE FIELD

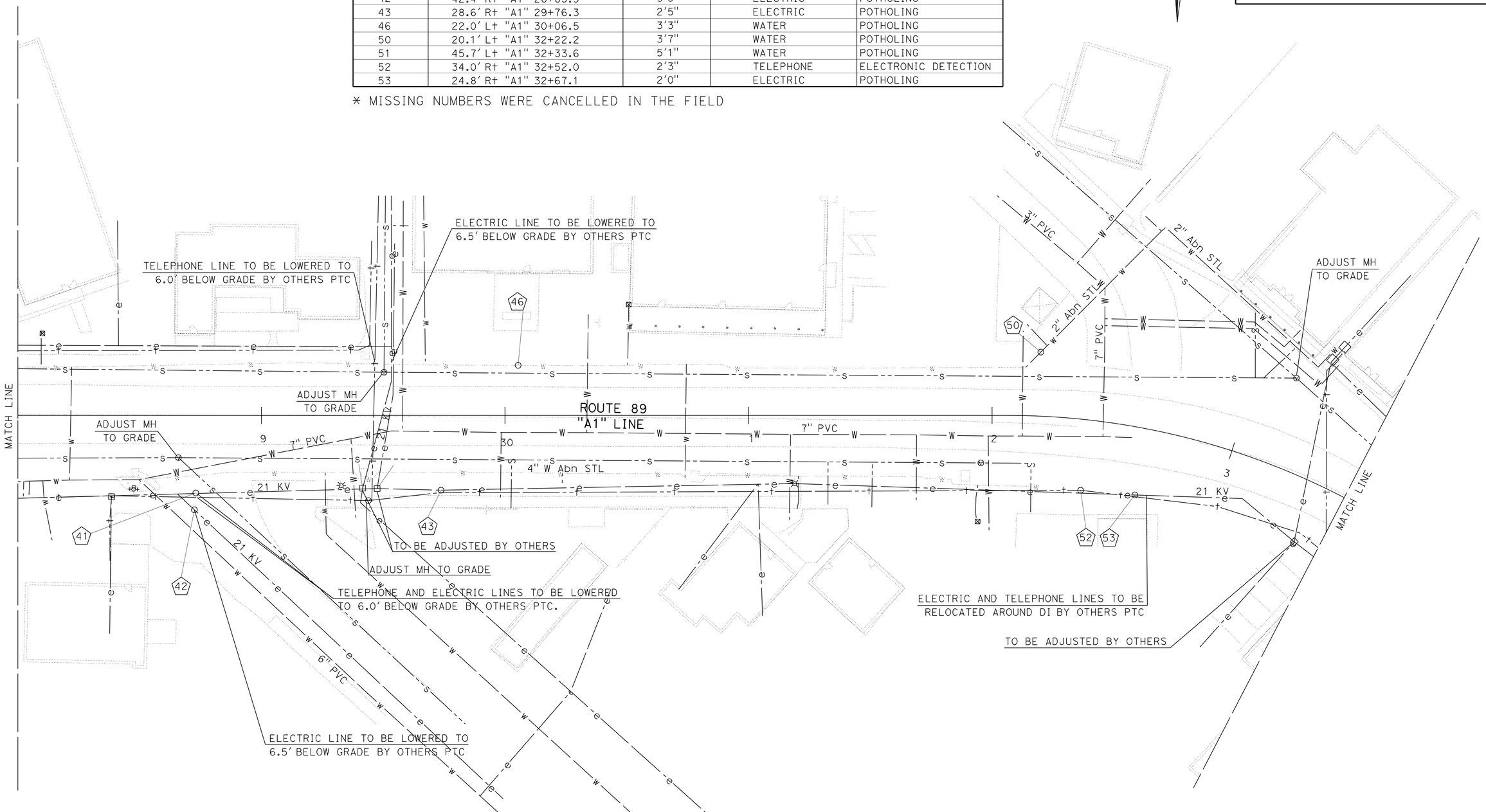

UTILITY PLAN

SCALE: 1" = 20′

U-4

APPROVED FOR UTILITY WORK ONLY

STATE OF CALIFORNIA - DEPARTMENT OF TRANSPORTATION
Caltrans DESIGN

FUNCTIONAL SUPERVISOR: JALWAT AHMAD
CALCULATED-DESIGNED BY: DANIEL R. RECHS
CHECKED BY: SUMAN SUDINI
REVISED BY
DATE REVISED

P:\proj2\02\0E240_plans\pse\20e240ka004.dgn

LAST REVISION 01-15-16 | DATE PLOTTED => 29-JAN-2016 | TIME PLOTTED => 10:22

Dist	COUNTY	ROUTE	POST MILES TOTAL PROJECT	SHEET No.	TOTAL SHEETS
02	Plu	89	20.0/20.6	127	235

Daniel Rechs 01-15-16
REGISTERED CIVIL ENGINEER DATE

01-19-16
PLANS APPROVAL DATE

REGISTERED PROFESSIONAL ENGINEER DANIEL RECHS No. 70911 Exp. 6-30-17 CIVIL STATE OF CALIFORNIA

THE STATE OF CALIFORNIA OR ITS OFFICERS OR AGENTS SHALL NOT BE RESPONSIBLE FOR THE ACCURACY OR COMPLETENESS OF SCANNED COPIES OF THIS PLAN SHEET.

POSITIVE LOCATION INFORMATION

NOTE:
FOR ACCURATE RIGHT OF WAY DATA, CONTACT RIGHT OF WAY ENGINEERING AT THE DISTRICT OFFICE.

No. ⬠	LOCATION	DEPTH	UTILITY	METHOD
56	26.7′ R+ "A1" 35+67.6	1′10"	ELECTRIC	ELECTRONIC DETECTION
57	29.4′ L+ "A1" 35+68.8	2′0"	ELECTRIC	ELECTRONIC DETECTION
58	19.9′ L+ "A1" 35+69.0	5′0"	ELECTRIC	POTHOLING
59	74.8′ L+ "A1" 35+69.9	1′10"	TELEPHONE	POTHOLING
60	80.8′ L+ "A1" 35+70.7	2′2"	ELECTRIC	POTHOLING
61	15.1′ R+ "A1" 35+81.0	5′6"	WATER	POTHOLING
63	24.8′ R+ "A1" 37+12.9	2′10"	ELECTRIC	ELECTRONIC DETECTION

* MISSING NUMBERS WERE CANCELLED IN THE FIELD

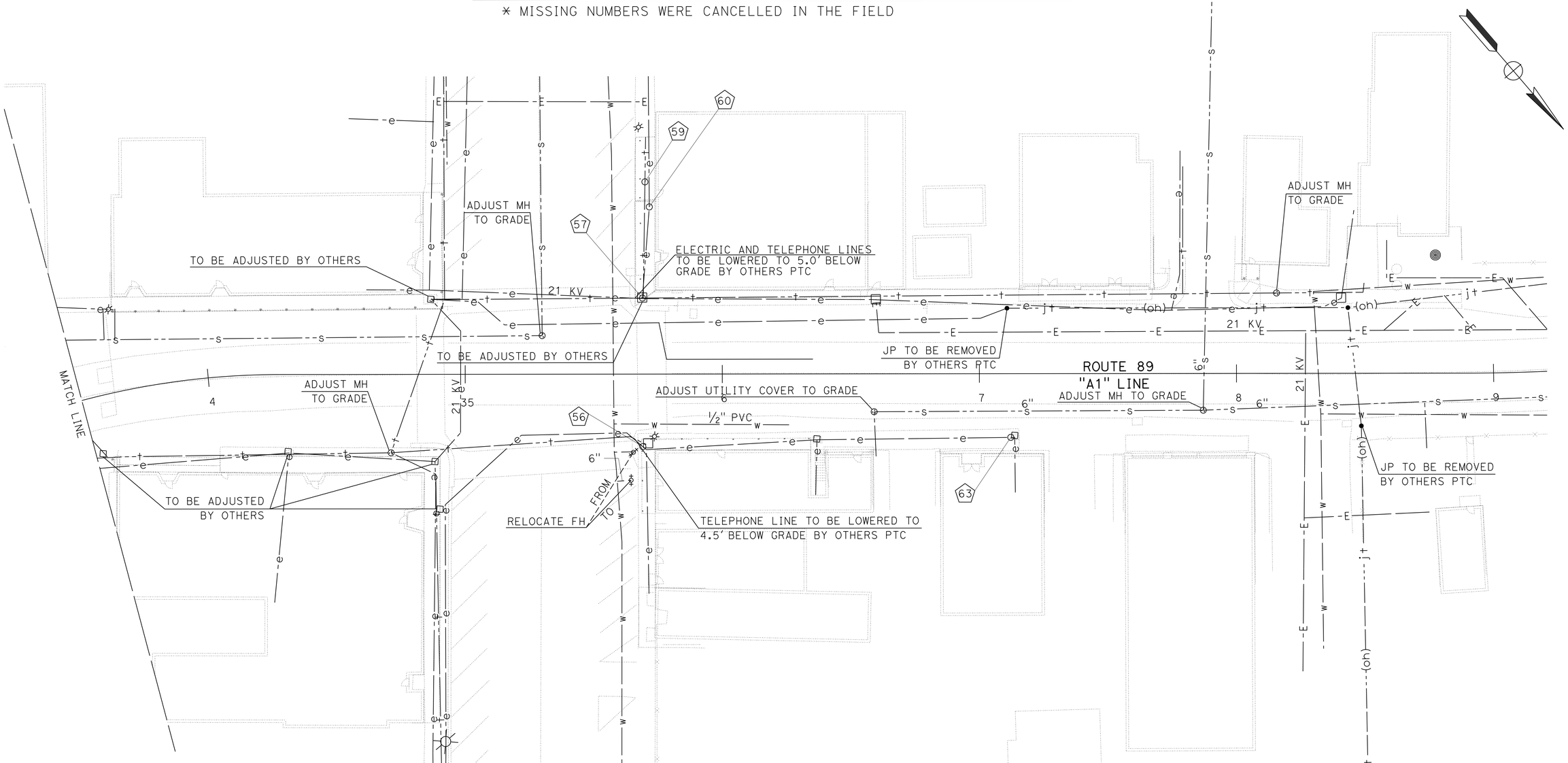

UTILITY PLAN

SCALE: 1" = 20′

U-5

APPROVED FOR UTILITY WORK ONLY

REVISED BY	DATE REVISED
DANIEL R. RECHS	SUMAN SUDINI

CALCULATED-DESIGNED BY | CHECKED BY

FUNCTIONAL SUPERVISOR: JALWAT AHMAD

STATE OF CALIFORNIA - DEPARTMENT OF TRANSPORTATION
Caltrans® DESIGN

P:\proj2\02\0E240_plans\pse\20e240ka005.dgn

LAST REVISION 01-15-16 | DATE PLOTTED => 29-JAN-2016 | TIME PLOTTED => 10:22

Dist	COUNTY	ROUTE	POST MILES TOTAL PROJECT	SHEET No.	TOTAL SHEETS
02	Plu	89	20.0/20.6	128	235

REGISTERED CIVIL ENGINEER 01-12-16 DATE

01-19-16
PLANS APPROVAL DATE

REGISTERED PROFESSIONAL ENGINEER SHAUN ALEXANDER No. 70833 Exp. 6-30-17 CIVIL STATE OF CALIFORNIA

THE STATE OF CALIFORNIA OR ITS OFFICERS OR AGENTS SHALL NOT BE RESPONSIBLE FOR THE ACCURACY OR COMPLETENESS OF SCANNED COPIES OF THIS PLAN SHEET.

UTILITY QUANTITIES

	ADJUST UTILITY COVER TO GRADE	ADJUST MANHOLE TO GRADE	RELOCATE FIRE HYDRANT
	EA	EA	EA
TOTAL	11	15	3

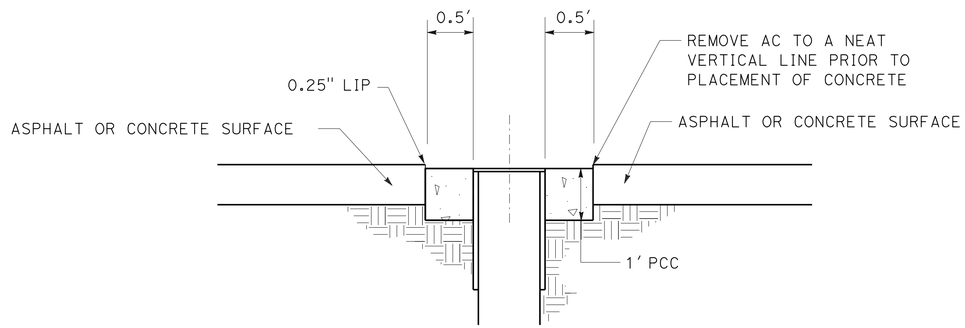

ADJUST UTILITY COVER TO GRADE

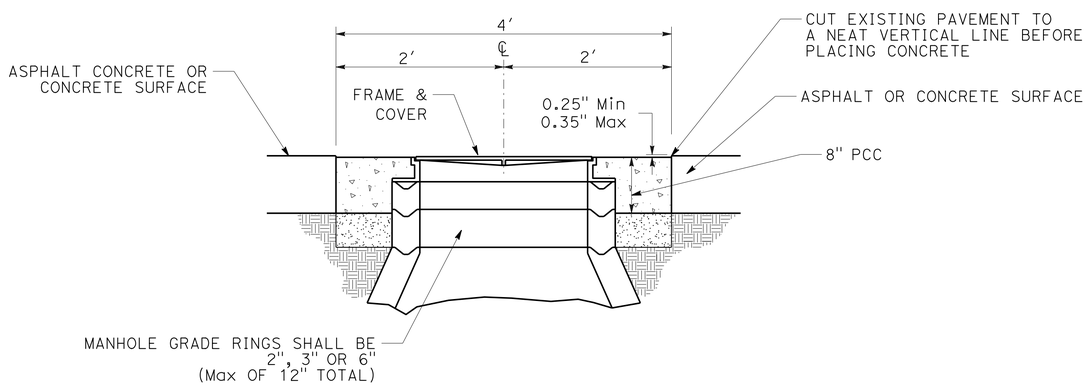

ADJUST MANHOLE TO GRADE

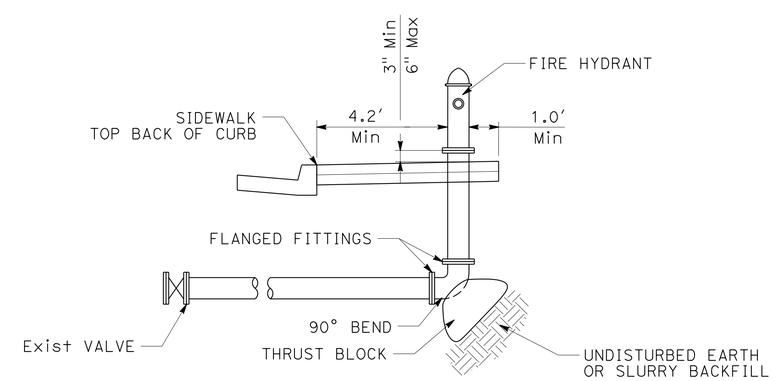

NOTES:

1. THRUST BLOCK SHALL BE CONSTRUCTED SO THE MAJOR BEARING SURFACE IS IN DIRECT LINE WITH THE MAJOR FORCE CREATED BY THE PIPE.
2. THRUST BLOCK BEARING SURFACE SHALL BE A MINIMUM OF 2′ x 3′ AND A MINIMUM OF 0.7 CY OF CONCRETE SHALL BE USED. IT SHALL BE PLACED AGAINST UNDISTURBED EARTH OR SLURRY BACKFILL.
3. FITTINGS SHALL NOT BE RENDERED INACCESSIBLE BY THE CONCRETE. CLEARANCE SHALL BE PROVIDED FOR BOLT REMOVAL.

RELOCATE FIRE HYDRANT

UTILITY DETAILS AND QUANTITIES

NO SCALE

UD-1

REVISED BY | DATE REVISED
JEANNIE STEFFAN | SHAUN ALEXANDER
CALCULATED-DESIGNED BY | CHECKED BY
FUNCTIONAL SUPERVISOR: ERIC ORR

STATE OF CALIFORNIA - DEPARTMENT OF TRANSPORTATION
Caltrans
DESIGN

P:\proj2\02\0E240_plans\pse\20e240kb001.dgn

LAST REVISION 01-12-16 | DATE PLOTTED => 29-JAN-2016 | TIME PLOTTED => 10:22

Dist	COUNTY	ROUTE	POST MILES TOTAL PROJECT	SHEET No.	TOTAL SHEETS
02	Plu	89	20.0/20.6	129	235

REGISTERED CIVIL ENGINEER 01-19-16 DATE

01-19-16
PLANS APPROVAL DATE

REGISTERED PROFESSIONAL ENGINEER SHAUN ALEXANDER No. 70833 Exp. 6-30-17 CIVIL STATE OF CALIFORNIA

THE STATE OF CALIFORNIA OR ITS OFFICERS OR AGENTS SHALL NOT BE RESPONSIBLE FOR THE ACCURACY OR COMPLETENESS OF SCANNED COPIES OF THIS PLAN SHEET.

NOTES:

1. EXACT SIGN LOCATION TO BE DETERMINED BY THE ENGINEER.
2. EXISTING UTILITY FACILITIES HAVE NOT BEEN PLOTTED ON THESE PLANS.

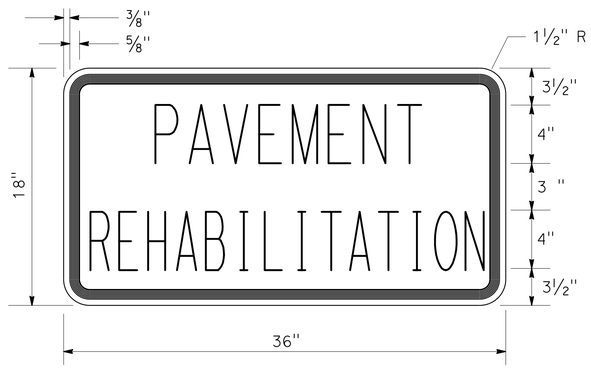

C23B(CA) SIGN PANEL DETAIL

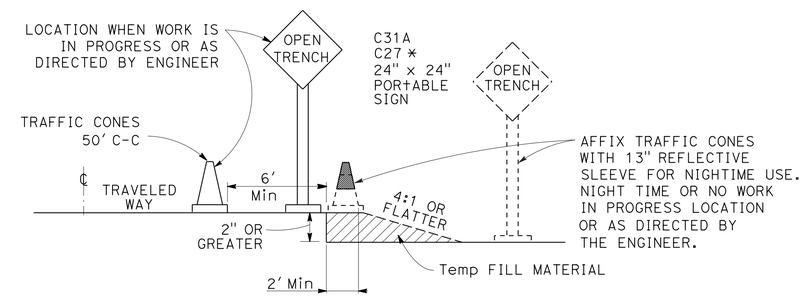

OPEN TRENCH SIGNING AND MARKING

CONSTRUCTION AREA SIGNS (STATIONARY MOUNTED)

TYPE	CODE	PANEL SIZE	SIGN MESSAGE	NUMBER AND SIZE OF POST	No. OF SIGNS
(A)	W20-1 C23B (CA)	48" x 48" 36" x 18"	ROAD WORK AHEAD PAVEMENT REHABILITION	1-6" x 6"	10
(B)	G20-2	36" x 18"	END ROAD WORK	1-4" x 4"	10
(C)	C40 (CA)	108" x 42"	TRAFFIC FINES DOUBLED IN CONSTRUCTION ZONES	2-6" x 6"	2

ROAD CONNECTIONS

Co	Rte	LOCATION
Plu	89	HOT SPRINGS Rd
		GRAND St
		JESSE St
		PINE St
		AYOOB Cir
		MAIN St
		FRANKLIN ALLEY
		BIDWELL St

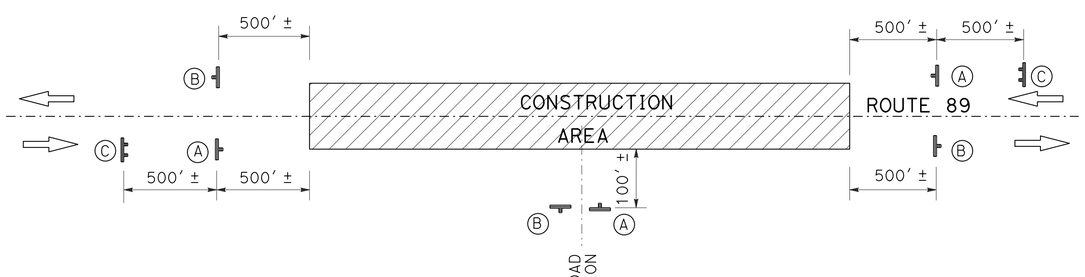

CONSTRUCTION AREA SIGNS (STATIONARY MOUNTED)

CONSTRUCTION AREA SIGNS

NO SCALE

CS-1

REVISED BY	DATE REVISED
JEANNIE STEFFAN	SHAUN ALEXANDER

CALCULATED-DESIGNED BY / CHECKED BY

FUNCTIONAL SUPERVISOR: ERIC ORR

STATE OF CALIFORNIA - DEPARTMENT OF TRANSPORTATION

Caltrans® **DESIGN**

P:\proj2\02\0E240_plans\pse\20e2401a001.dgn

LAST REVISION 01-19-16 | DATE PLOTTED => 29-JAN-2016 | TIME PLOTTED => 10:22

Dist	COUNTY	ROUTE	POST MILES TOTAL PROJECT	SHEET No.	TOTAL SHEETS
02	Plu	89	20.0/20.6	130	235

REGISTERED CIVIL ENGINEER 01-19-16 DATE

01-19-16
PLANS APPROVAL DATE

REGISTERED PROFESSIONAL ENGINEER SHAUN ALEXANDER No. 70833 Exp. 6-30-17 CIVIL STATE OF CALIFORNIA

THE STATE OF CALIFORNIA OR ITS OFFICERS OR AGENTS SHALL NOT BE RESPONSIBLE FOR THE ACCURACY OR COMPLETENESS OF SCANNED COPIES OF THIS PLAN SHEET.

NOTE:

1. FOR ACCURATE RIGHT OF WAY DATA, CONTACT RIGHT OF WAY ENGINEERING AT THE DISTRICT OFFICE.

LEGEND:

- No. — PAVEMENT DELINEATION STRIPE DETAIL No.
- XW — CROSSWALK 12" STRIPE
- LL — LIMIT LINE
- BIKE LANE SYMBOL WITH PERSON
- TYPE IV ARROW
- STRIPE CHANGE LOCATION
- REMOVE ROADSIDE SIGN
- EXISTING SIGN TO REMAIN
- RELOCATE ROADSIDE SIGN
- BIKE LANE ARROW
- MARKER (CULVERT)
- INSTALL SIGN (STRAP AND SADDLE BRACKET METHOD)
- ROADSIDE SIGN (1-POST)
- ROADSIDE SIGN (2-POST)

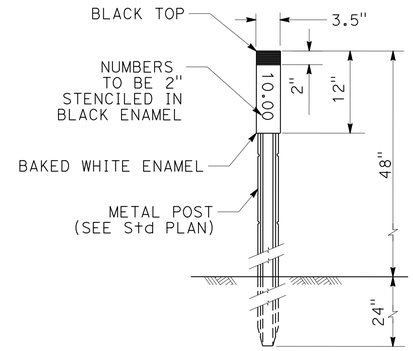

MARKER (CULVERT)

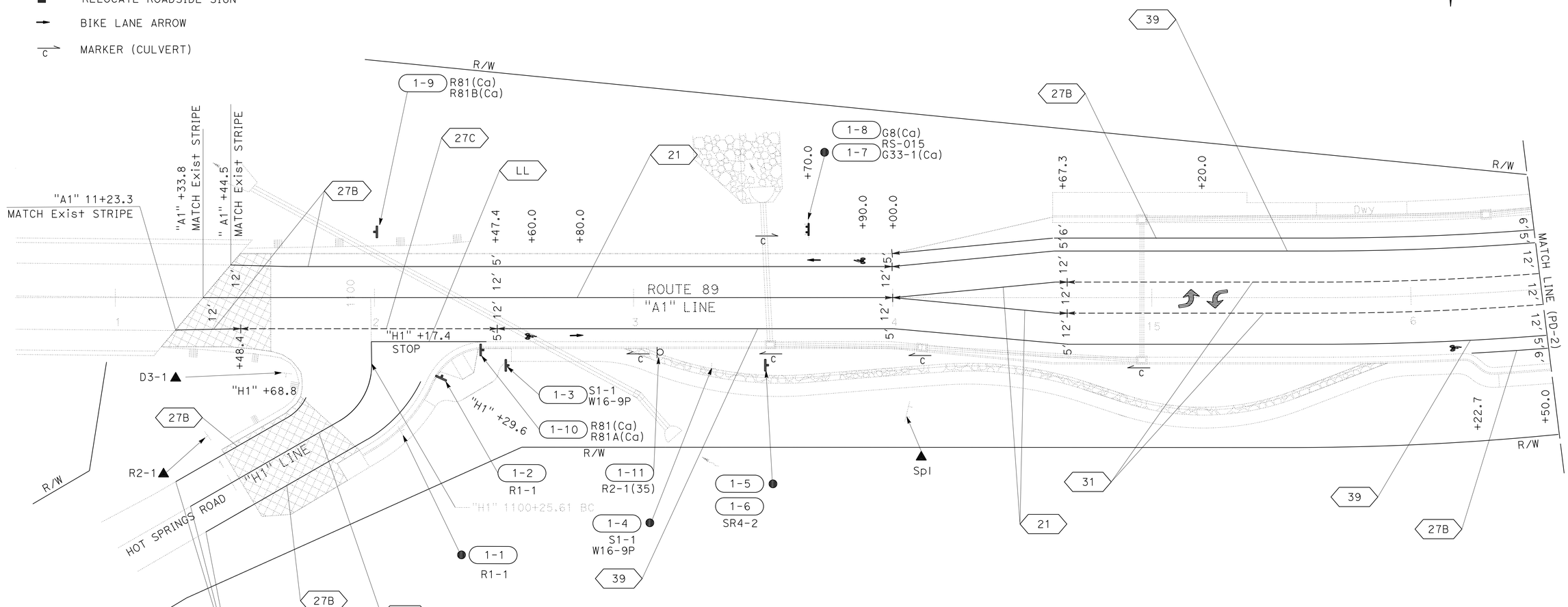

PAVEMENT DELINEATION AND SIGN PLAN

SCALE: 1" = 20'

PD-1

APPROVED FOR PAVEMENT DELINEATION AND SIGN WORK ONLY

REVISED BY | DATE REVISED
JEANNIE STEFFAN | SHAUN ALEXANDER
CALCULATED-DESIGNED BY | CHECKED BY
FUNCTIONAL SUPERVISOR: ERIC ORR

STATE OF CALIFORNIA - DEPARTMENT OF TRANSPORTATION
Caltrans DESIGN

P:\proj2\02\0E240_plans\pse\20e240na001.dgn

LAST REVISION 01-19-16 | DATE PLOTTED => 29-JAN-2016 | TIME PLOTTED => 10:22

Dist	COUNTY	ROUTE	POST MILES TOTAL PROJECT	SHEET No.	TOTAL SHEETS
02	Plu	89	20.0/20.6	131	235

REGISTERED CIVIL ENGINEER 01-19-16 DATE

01-19-16
PLANS APPROVAL DATE

REGISTERED PROFESSIONAL ENGINEER SHAUN ALEXANDER No. 70833 Exp. 6-30-17 CIVIL STATE OF CALIFORNIA

THE STATE OF CALIFORNIA OR ITS OFFICERS OR AGENTS SHALL NOT BE RESPONSIBLE FOR THE ACCURACY OR COMPLETENESS OF SCANNED COPIES OF THIS PLAN SHEET.

NOTE:

1. FOR ACCURATE RIGHT OF WAY DATA, CONTACT RIGHT OF WAY ENGINEERING AT THE DISTRICT OFFICE.

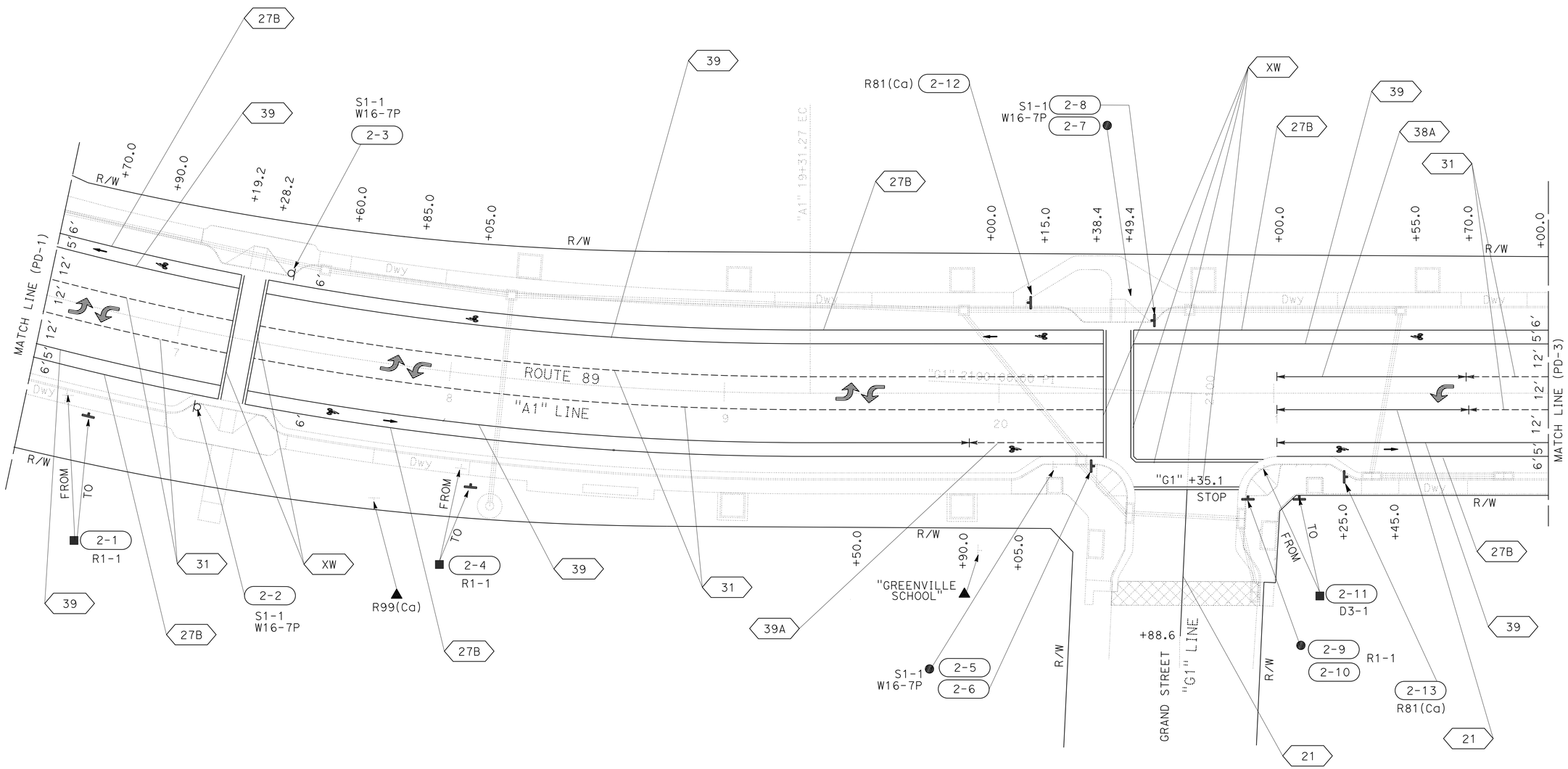

PAVEMENT DELINEATION AND SIGN PLAN

SCALE: 1" = 20'

PD-2

APPROVED FOR PAVEMENT DELINEATION AND SIGN WORK ONLY

REVISED BY	DATE REVISED
JEANNIE STEFFAN	SHAUN ALEXANDER
CALCULATED-DESIGNED BY	CHECKED BY
FUNCTIONAL SUPERVISOR	ERIC ORR

STATE OF CALIFORNIA - DEPARTMENT OF TRANSPORTATION

Caltrans

DESIGN

P:\proj2\02\0E240_plans\pse\20e240na002.dgn

LAST REVISION 01-19-16 | DATE PLOTTED => 29-JAN-2016 | TIME PLOTTED => 10:22

Dist	COUNTY	ROUTE	POST MILES TOTAL PROJECT	SHEET No.	TOTAL SHEETS
02	Plu	89	20.0/20.6	132	235

REGISTERED CIVIL ENGINEER 01-19-16 DATE

01-19-16
PLANS APPROVAL DATE

REGISTERED PROFESSIONAL ENGINEER SHAUN ALEXANDER No. 70833 Exp. 6-30-17 CIVIL STATE OF CALIFORNIA

THE STATE OF CALIFORNIA OR ITS OFFICERS OR AGENTS SHALL NOT BE RESPONSIBLE FOR THE ACCURACY OR COMPLETENESS OF SCANNED COPIES OF THIS PLAN SHEET.

NOTE:

1. FOR ACCURATE RIGHT OF WAY DATA, CONTACT RIGHT OF WAY ENGINEERING AT THE DISTRICT OFFICE.

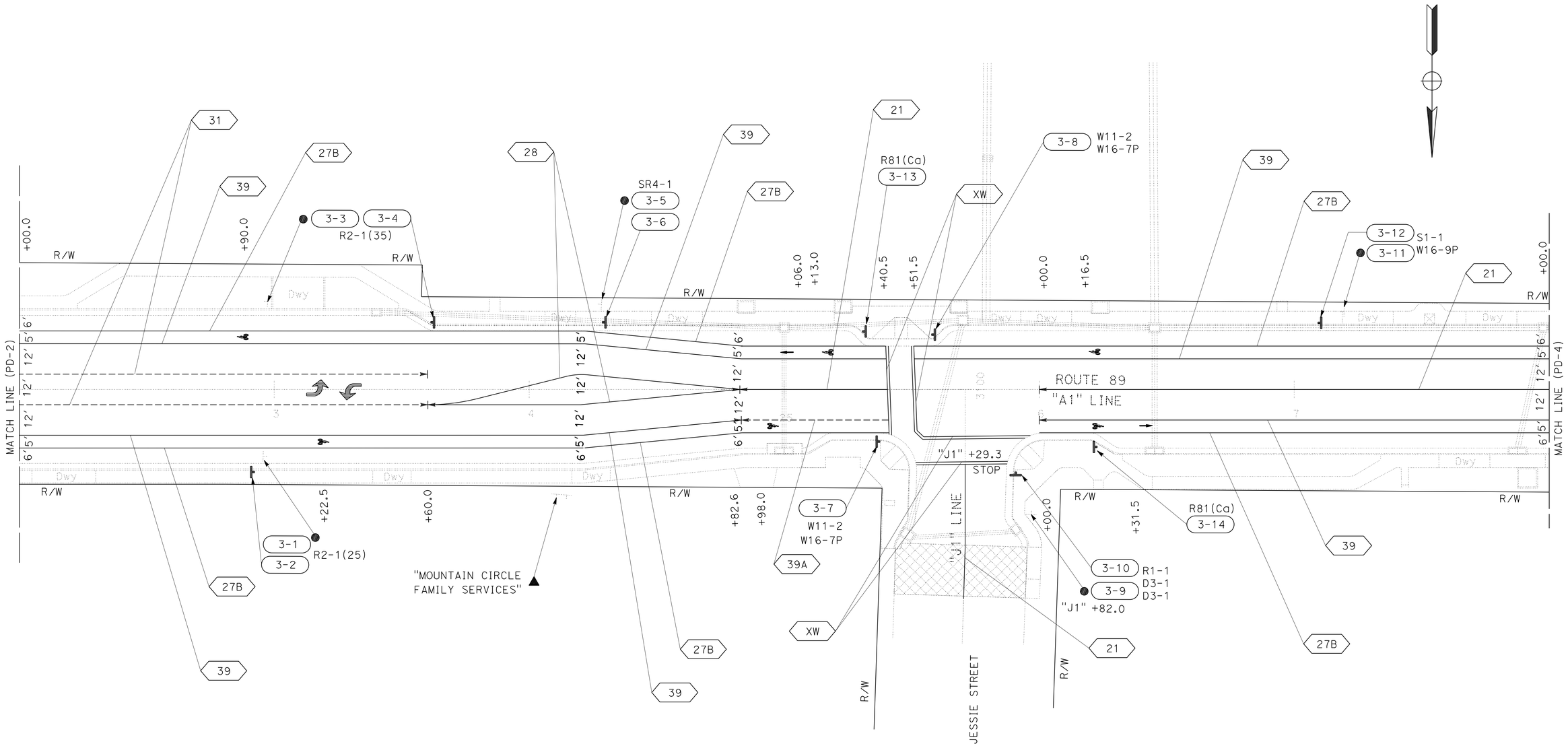

PAVEMENT DELINEATION AND SIGN PLAN

SCALE: 1" = 20'

PD-3

APPROVED FOR PAVEMENT DELINEATION AND SIGN WORK ONLY

REVISED BY	DATE REVISED
JEANNIE STEFFAN	SHAUN ALEXANDER
CALCULATED-DESIGNED BY	CHECKED BY
FUNCTIONAL SUPERVISOR	ERIC ORR

STATE OF CALIFORNIA - DEPARTMENT OF TRANSPORTATION
Caltrans
DESIGN

P:\proj2\02\0E240_plans\pse\20e240na003.dgn

LAST REVISION 01-19-16 | DATE PLOTTED => 29-JAN-2016 | TIME PLOTTED => 10:22

Dist	COUNTY	ROUTE	POST MILES TOTAL PROJECT	SHEET No.	TOTAL SHEETS
02	Plu	89	20.0/20.6	133	235

REGISTERED CIVIL ENGINEER 01-19-16 DATE

01-19-16
PLANS APPROVAL DATE

REGISTERED PROFESSIONAL ENGINEER SHAUN ALEXANDER No. 70833 Exp. 6-30-17 CIVIL STATE OF CALIFORNIA

THE STATE OF CALIFORNIA OR ITS OFFICERS OR AGENTS SHALL NOT BE RESPONSIBLE FOR THE ACCURACY OR COMPLETENESS OF SCANNED COPIES OF THIS PLAN SHEET.

NOTE:

1. FOR ACCURATE RIGHT OF WAY DATA, CONTACT RIGHT OF WAY ENGINEERING AT THE DISTRICT OFFICE.

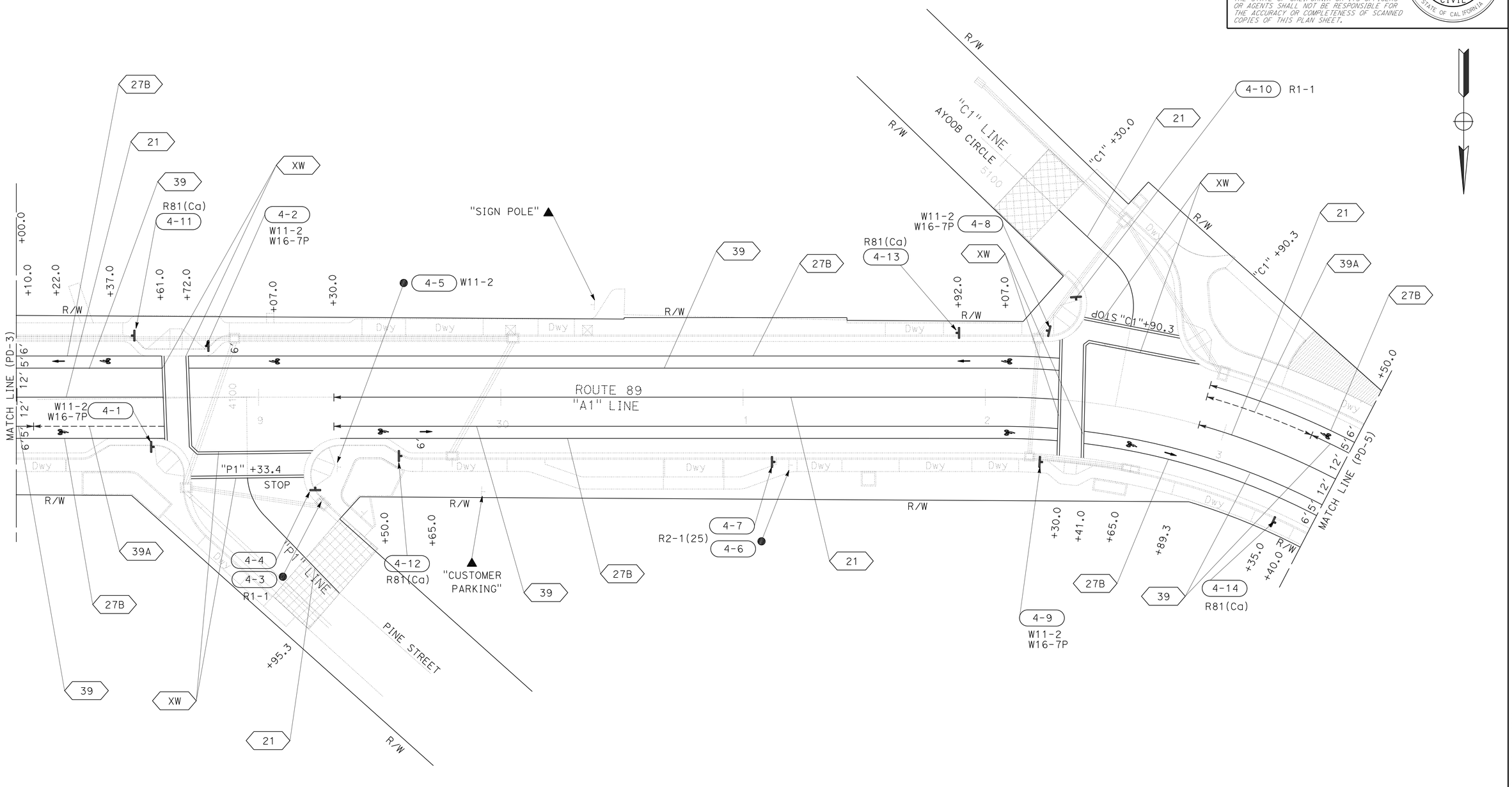

PAVEMENT DELINEATION AND SIGN PLAN

SCALE: 1" = 20'

PD-4

APPROVED FOR PAVEMENT DELINEATION AND SIGN WORK ONLY

STATE OF CALIFORNIA - DEPARTMENT OF TRANSPORTATION

DESIGN

Caltrans

FUNCTIONAL SUPERVISOR: ERIC ORR

CALCULATED-DESIGNED BY: JEANNIE STEFFAN

CHECKED BY: SHAUN ALEXANDER

REVISED BY

DATE REVISED

P:\proj2\02\0E240_plans\pse\20e240na004.dgn

LAST REVISION 01-19-16

DATE PLOTTED => 29-JAN-2016

TIME PLOTTED => 10:22

Dist	COUNTY	ROUTE	POST MILES TOTAL PROJECT	SHEET No.	TOTAL SHEETS
02	Plu	89	20.0/20.6	134	235

REGISTERED CIVIL ENGINEER 01-19-16 DATE

01-19-16
PLANS APPROVAL DATE

REGISTERED PROFESSIONAL ENGINEER SHAUN ALEXANDER No. 70833 Exp. 6-30-17 CIVIL STATE OF CALIFORNIA

THE STATE OF CALIFORNIA OR ITS OFFICERS OR AGENTS SHALL NOT BE RESPONSIBLE FOR THE ACCURACY OR COMPLETENESS OF SCANNED COPIES OF THIS PLAN SHEET.

NOTE:

1. FOR ACCURATE RIGHT OF WAY DATA, CONTACT RIGHT OF WAY ENGINEERING AT THE DISTRICT OFFICE.

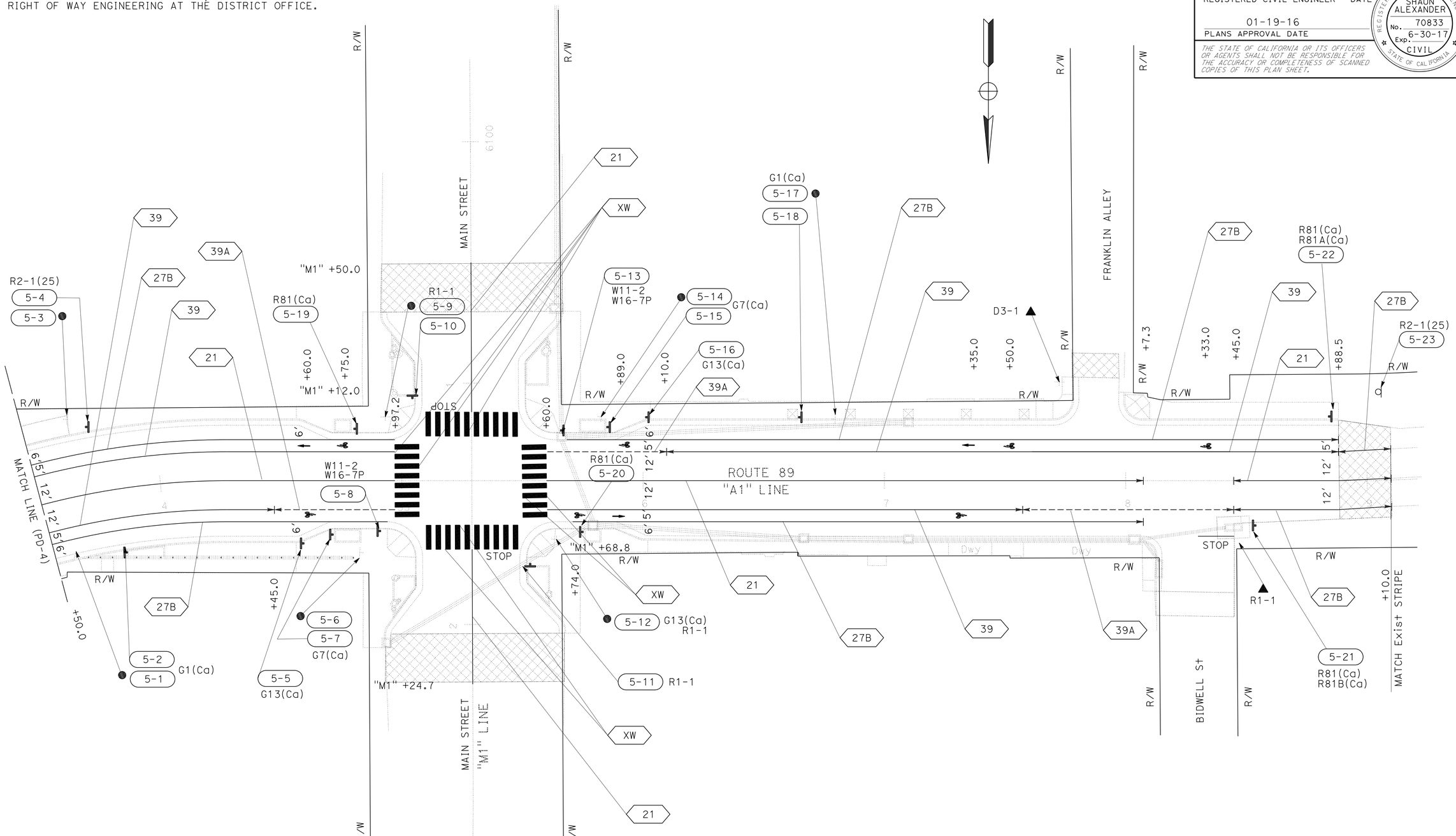

PAVEMENT DELINEATION AND SIGN PLAN

SCALE: 1" = 20'

PD-5

APPROVED FOR PAVEMENT DELINEATION AND SIGN WORK ONLY

STATE OF CALIFORNIA - DEPARTMENT OF TRANSPORTATION
Caltrans® **DESIGN**

FUNCTIONAL SUPERVISOR: ERIC ORR
CALCULATED-DESIGNED BY: JEANNIE STEFFAN
CHECKED BY: SHAUN ALEXANDER
REVISED BY / DATE REVISED

P:\proj2\02\0E240_plans\pse\20e240na005.dgn

LAST REVISION 01-19-16 | DATE PLOTTED => 29-JAN-2016 | TIME PLOTTED => 10:22

BORDER LAST REVISED 7/2/2010 | USERNAME => s115152 | DGN FILE => 20e240na005.dgn | RELATIVE BORDER SCALE IS IN INCHES 0 1 2 3 | UNIT 0316 | PROJECT NUMBER & PHASE 02 1500 0146 1

Dist	COUNTY	ROUTE	POST MILES TOTAL PROJECT	SHEET No.	TOTAL SHEETS
02	Plu	89	20.0/20.6	135	235

REGISTERED CIVIL ENGINEER 01-19-16 DATE

01-19-16
PLANS APPROVAL DATE

REGISTERED PROFESSIONAL ENGINEER SHAUN ALEXANDER No. 70833 Exp. 6-30-17 CIVIL STATE OF CALIFORNIA

THE STATE OF CALIFORNIA OR ITS OFFICERS OR AGENTS SHALL NOT BE RESPONSIBLE FOR THE ACCURACY OR COMPLETENESS OF SCANNED COPIES OF THIS PLAN SHEET.

THERMOPLASTIC STRIPE

SHEET	LOCATION		THERMOPLASTIC TRAFFIC STRIPE (SPRAYABLE)							
			4" WHITE		6" WHITE		8" WHITE	4" YELLOW		
			DETAIL	DETAIL	DETAIL	DETAIL	DETAIL	DETAIL	DETAIL	DETAIL
			27B	27C	39	39A	38A	21	28	31
PD-1	"A1"	11+23.3 TO 14+00.0	302	99	153			277		
	"H1"	1100+17.4 TO 1101+18.4	139					101		
	"A1"	14+00.0 TO 16+50.0	278		500			135		366
PD-2	"A1"	16+50.0 TO 20+38.4	759		711	49				759
	"A1"	20+49.4 TO 22+00.0	251		251		70	70		60
	"G1"	2100+35.1 TO 2100+88.6						54		
PD-3	"A1"	22+00.0 TO 23+60.0	320		320					320
	"A1"	23+60.0 TO 25+40.5	361		304	58		58	246	
	"A1"	25+51.5 TO 28+00.0	449		449			200		
	"J1"	3100+29.3 TO 3100+82.0						53		
PD-4	"A1"	28+00.0 TO 28+61.0	122		71	51		61		
	"A1"	28+72.0 TO 32+30.0	658		658			300		
	"A1"	32+41.0 TO 33+50.0	170		119	51		61		
	"P1"	4100+33.4 TO 4100+95.3						62		
	"C1"	5100+30.0 TO 5100+90.3						61		
PD-5	"A1"	33+50.0 TO 34+97.2	295		243	53		148		
	"A1"	35+60.0 TO 39+10.0	663		469	145		313		
	"M1"	6100+50.0 TO 6102+24.7						118		
SUBTOTAL			4767	99	4248	407	70	2072	246	1505
TOTAL										13,414

THERMOPLASTIC PAVEMENT MARKING

SHEET	ALIGNMENT	STATION	SQFT	TYPE PAVEMENT MARKING	COMMENTS
PD-1	"H1"	1100+17.0	44.4	LIMIT LINE (STOP LINE)	LIMIT LINE AT HOT SPRINGS ROAD
	"H1"	1100+17.0	22	STOP	AT HOT SPRINGS ROAD
	"A1" R†	12+60.0	7	BIKE LANE SYMBOL WITH PERSON	WB BIKE LANE SYMBOL
	"A1" R†	12+80.0	3.5	BIKE LANE ARROW	WB BIKE LANE ARROW
	"A1" L†	13+70.0	3.5	BIKE LANE ARROW	EB BIKE LANE ARROW
	"A1" L†	13+90.0	7	BIKE LANE SYMBOL WITH PERSON	EB BIKE LANE SYMBOL
	"A1"	15+20.0	15	TYPE IV (L) ARROW	WB, LEFT TURN LANE
	"A1"	15+20.0	15	TYPE IV (L) ARROW	EB, LEFT TURN LANE
	"A1" R†	16+22.7	7	BIKE LANE SYMBOL WITH PERSON	WB BIKE LANE SYMBOL
PD-2	"A1"	16+70.0	15	TYPE IV (L) ARROW	WB, LEFT TURN LANE
	"A1"	16+70.0	15	TYPE IV (L) ARROW	EB, LEFT TURN LANE
	"A1" L†	16+70.0	3.5	BIKE LANE ARROW	EB BIKE LANE ARROW
	"A1" L†	16+90.0	7	BIKE LANE SYMBOL WITH PERSON	EB BIKE LANE SYMBOL
	"A1"	17+19.2	46	CROSSWALK	YELLOW
	"A1"	17+28.2	46	CROSSWALK	YELLOW
	"A1" R†	17+60.0	7	BIKE LANE SYMBOL WITH PERSON	WB BIKE LANE SYMBOL
	"A1" R†	17+85.0	3.5	BIKE LANE ARROW	WB BIKE LANE ARROW
	"A1" L†	18+05.0	7	BIKE LANE SYMBOL WITH PERSON	EB BIKE LANE SYMBOL
	"A1"	17+85.0	15	TYPE IV (L) ARROW	WB, LEFT TURN LANE
	"A1"	17+85.0	15	TYPE IV (L) ARROW	EB, LEFT TURN LANE
	"A1" L†	18+05.0	7	BIKE LANE SYMBOL WITH PERSON	EB BIKE LANE SYMBOL
	"A1"	19+50.0	15	TYPE IV (L) ARROW	WB, LEFT TURN LANE
	"A1"	19+50.0	15	TYPE IV (L) ARROW	EB, LEFT TURN LANE
	"A1" L†	20+00.0	3.5	BIKE LANE ARROW	EB BIKE LANE ARROW
	"A1" R†	20+05.0	7	BIKE LANE SYMBOL WITH PERSON	WB BIKE LANE SYMBOL
	"A1" L†	20+15.0	7	BIKE LANE SYMBOL WITH PERSON	EB BIKE LANE SYMBOL
	"A1"	20+38.4	46.7	CROSSWALK	CROSSWALK TO GRANT STREET
	"A1"	20+49.4	48.8	CROSSWALK	CROSSWALK TO GRANT STREET
	"G1"	2100+24.6	46.2	CROSSWALK	CROSSWALK ACROSS GRANT STREET
	"G1"	2100+32.6	39.8	CROSSWALK	CROSSWALK ACROSS GRANT STREET
	"G1"	2100+33.4	22	STOP	AT GRANT STREET
	"A1" R†	21+25.0	7	BIKE LANE SYMBOL WITH PERSON	WB BIKE LANE SYMBOL
	"A1" R†	21+45.0	3.5	BIKE LANE ARROW	WB BIKE LANE ARROW
	"A1" L†	21+55.0	7	BIKE LANE SYMBOL WITH PERSON	EB BIKE LANE SYMBOL
	"A1"	21+70.0	15	TYPE IV (L) ARROW	EB, LEFT TURN LANE
PD-3	"A1" L†	22+90.0	7	BIKE LANE SYMBOL WITH PERSON	EB BIKE LANE SYMBOL
	"A1" R†	23+22.5	7	BIKE LANE SYMBOL WITH PERSON	WB BIKE LANE SYMBOL
	"A1"	23+22.5	15	TYPE IV (L) ARROW	WB, LEFT TURN LANE
	"A1"	23+22.5	15	TYPE IV (L) ARROW	EB, LEFT TURN LANE
	"A1" R†	24+98.0	7	BIKE LANE SYMBOL WITH PERSON	WB BIKE LANE SYMBOL
	"A1" L†	25+06.0	3.5	BIKE LANE ARROW	EB BIKE LANE ARROW

MARKER (CULVERT)

SHEET	EA
PD-1	5
TOTAL	5

THERMOPLASTIC PAVEMENT MARKING (CONTINUED)

SHEET	ALIGNMENT	STATION	SQFT	TYPE PAVEMENT MARKING	COMMENTS
PD-3	"A1" L†	25+13.0	7	BIKE LANE SYMBOL WITH PERSON	EB BIKE LANE SYMBOL
	"A1"	25+40.5	34.8	CROSSWALK	CROSSWALK TO JESSIE STREET
	"A1"	25+51.5	38	CROSSWALK	CROSSWALK TO JESSIE STREET
	"J1	3100+18.8	41.8	CROSSWALK	CROSSWALK ACROSS JESSIE STREET
	"J1	3100+28.8	36	CROSSWALK	CROSSWALK ACROSS JESSIE STREET
	"J1	3100+29.3	22	STOP	AT JESSIE STREET
	"A1" R†	26+16.5	7	BIKE LANE SYMBOL WITH PERSON	WB BIKE LANE SYMBOL
	"A1" L†	26+16.5	7	BIKE LANE SYMBOL WITH PERSON	EB BIKE LANE SYMBOL
	"A1" R†	26+31.5	3.5	BIKE LANE ARROW	WB BIKE LANE ARROW
PD-4	"A1" L†	28+22.0	3.5	BIKE LANE ARROW	EB BIKE LANE ARROW
	"A1" R†	28+22.0	7	BIKE LANE SYMBOL WITH PERSON	WB BIKE LANE SYMBOL
	"A1" L†	28+37.0	7	BIKE LANE SYMBOL WITH PERSON	EB BIKE LANE SYMBOL
	"A1"	28+61.0	35	CROSSWALK	CROSSWALK TO PINE STREET
	"A1"	28+72.0	42	CROSSWALK	CROSSWALK TO PINE STREET
	"P1"	4100+22.9	47.5	CROSSWALK	CROSSWALK ACROSS PINE STREET
	"P1"	4100+32.9	46.5	CROSSWALK	CROSSWALK ACROSS PINE STREET
	"P1"	4100+33.4	22	STOP	AT PINE STREET
	"A1" L†	29+07.0	7	BIKE LANE SYMBOL WITH PERSON	EB BIKE LANE SYMBOL
	"A1" R†	29+50.0	7	BIKE LANE SYMBOL WITH PERSON	WB BIKE LANE SYMBOL
	"A1" R†	29+65.0	3.5	BIKE LANE ARROW	WB BIKE LANE ARROW
	"A1" L†	31+92.0	3.5	BIKE LANE ARROW	EB BIKE LANE ARROW
	"A1" R†	32+07.0	7	BIKE LANE SYMBOL WITH PERSON	WB BIKE LANE SYMBOL
	"A1" L†	32+07.0	7	BIKE LANE SYMBOL WITH PERSON	EB BIKE LANE SYMBOL
	"A1"	32+30.0	48	CROSSWALK	CROSSWALK TO AYOOB CIRCLE
	"A1"	32+41.0	49.5	CROSSWALK	CROSSWALK TO AYOOB CIRCLE
	"C1"	5100+90.8	40.3	CROSSWALK	CROSSWALK ACROSS AYOOB CIRCLE
	"C1"	5101+00.0	46.2	CROSSWALK	CROSSWALK ACROSS AYOOB CIRCLE
	"C1"	5101+95.0	22	STOP	AT AYOOB CIRCLE
	"A1" R†	32+65.0	7	BIKE LANE SYMBOL WITH PERSON	WB BIKE LANE SYMBOL
	"A1" R†	32+80.0	3.5	BIKE LANE ARROW	WB BIKE LANE ARROW
	"A1" L†	33+40.0	7	BIKE LANE SYMBOL WITH PERSON	EB BIKE LANE SYMBOL
PD-5	"A1" L†	34+60.0	3.5	BIKE LANE ARROW	EB BIKE LANE ARROW
	"A1" R†	34+60.0	7	BIKE LANE SYMBOL WITH PERSON	WB BIKE LANE SYMBOL
	"A1" L†	34+75.0	7	BIKE LANE SYMBOL WITH PERSON	EB BIKE LANE SYMBOL
	"A1"	34+97.2	160	CROSSWALK (CONTINENTAL)	CROSSWALK TO MAIN STREET
	"A1"	35+50.0	160	CROSSWALK (CONTINENTAL)	CROSSWALK TO MAIN STREET
	"M1"	6101+12.0	200	CROSSWALK (CONTINENTAL)	CROSSWALK ACROSS MAIN STREET
	"M1"	6101+58.8	200	CROSSWALK (CONTINENTAL)	CROSSWALK ACROSS MAIN STREET
	"M1" R†	6100+12.5	22	STOP	AT MAIN ST
	"M1" L†	6100+69.3	22	STOP	AT MAIN ST
	"A1" R†	35+74.0	7	BIKE LANE SYMBOL WITH PERSON	WB BIKE LANE SYMBOL
	"A1" R†	35+89.0	3.5	BIKE LANE ARROW	WB BIKE LANE ARROW
	"A1" L†	35+89.0	7	BIKE LANE SYMBOL WITH PERSON	EB BIKE LANE SYMBOL
	"A1" L†	37+35.0	3.5	BIKE LANE ARROW	EB BIKE LANE ARROW
	"A1" R†	37+35.0	7	BIKE LANE SYMBOL WITH PERSON	WB BIKE LANE SYMBOL
	"A1" L†	37+50.0	7	BIKE LANE SYMBOL WITH PERSON	EB BIKE LANE SYMBOL
	"A1" L†	38+33.0	7	BIKE LANE SYMBOL WITH PERSON	EB BIKE LANE SYMBOL
	"A1" R†	38+35.0	15	LIMIT LINE (STOP LINE)	LIMIT LINE AT BIDWELL ST
	"A1" R†	38+35.0	22	STOP	AT BIDWELL ST
TOTAL			2176		

PAVEMENT DELINEATION QUANTITIES

PDQ-1

REVISED BY | DATE REVISED
JEANNIE STEFFAN | SHAUN ALEXANDER
CALCULATED-DESIGNED BY | CHECKED BY
FUNCTIONAL SUPERVISOR: ERIC ORR

STATE OF CALIFORNIA - DEPARTMENT OF TRANSPORTATION
Caltrans® DESIGN

P:\proj2\02\0E240_plans\pse\20e240nc001.dgn

LAST REVISION | DATE PLOTTED => 29-JAN-2016 | TIME PLOTTED => 10:23
01-19-16

Dist	COUNTY	ROUTE	POST MILES TOTAL PROJECT	SHEET No.	TOTAL SHEETS
02	Plu	89	20.0/20.6	136	235

REGISTERED CIVIL ENGINEER 01-19-16 DATE

01-19-16
PLANS APPROVAL DATE

REGISTERED PROFESSIONAL ENGINEER FRANK RIVAS No. C53592 Exp. 6/30/17 CIVIL STATE OF CALIFORNIA

THE STATE OF CALIFORNIA OR ITS OFFICERS OR AGENTS SHALL NOT BE RESPONSIBLE FOR THE ACCURACY OR COMPLETENESS OF SCANNED COPIES OF THIS PLAN SHEET.

NOTES:

1. USE A 2¼" Sq TUBE x 30" LONG, 3/16" THICK ANCHOR FOR 2" POSTS.
   USE A 3" Sq TUBE x 3′ LONG, 3/16" THICK ANCHOR FOR 2-1/2 " POSTS.
2. USE A 5/16" CORNER BOLT OR TWO DRIVE RIVETS TO FASTEN ASSEMBLED SIGN AND POST INTO ANCHOR. INSTALL CORNER BOLT OR DRIVE RIVETS INTO THE SIDES FACING TRAFFIC.
3. REMOVE EXISTING AC OR PCC, DRIVE ANCHOR SLEEVE INTO SOIL AND RECAP WITH LIKE MATERIAL, MATCHING EXISTING THICKNESS.
4. 2" POSTS ARE TO BE 1/8" THICK, PERFORATIONS OF 7/16" IN DIAMETER ARE 1" ON CENTER ON ALL SIDES, LENGTHS ARE 10′ AND 12′.
5. 2-1/2" POSTS ARE TO BE 1/8" THICK, PERFORATIONS OF 7/16" IN DIAMETER ARE 1" ON CENTER ON ALL SIDES, 2-1/2" POSTS ARE 12′ AND 14′ IN LENGTH.
6. FOR DETAILS NOT SHOWN, REFER TO THE STANDARD PLANS.
7. 2-1/2" POSTS SHALL BE USED IN SIDEWALK AND HIGH PEDESTRIAN USE PLACEMENTS.
8. ALL ANCHOR SLEEVES SHALL BE EMBEDDED IN PCC, EXCEPT FOR INSTALLATIONS IN PAVEMENTS OR SIDEWALKS.

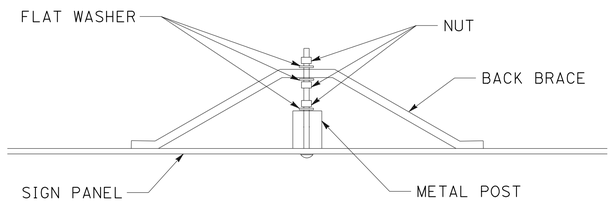

BACK BRACE MOUNTING DETAIL

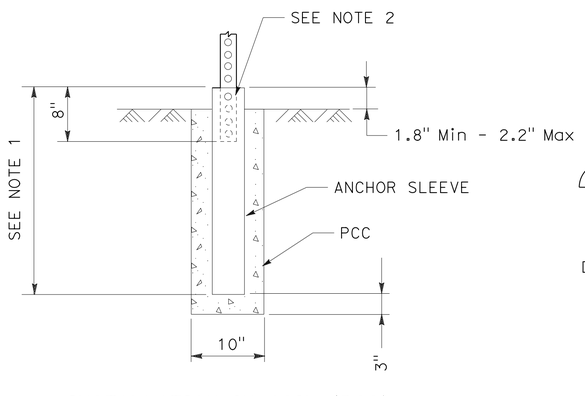

INSTALLATION IN SOIL (PCC)
(SEE NOTE 8)

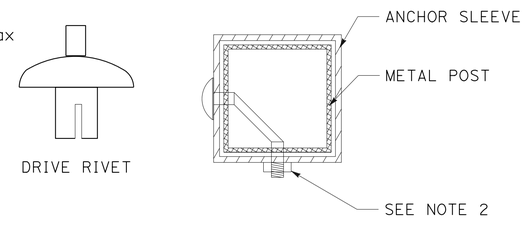

FASTENER DETAILS

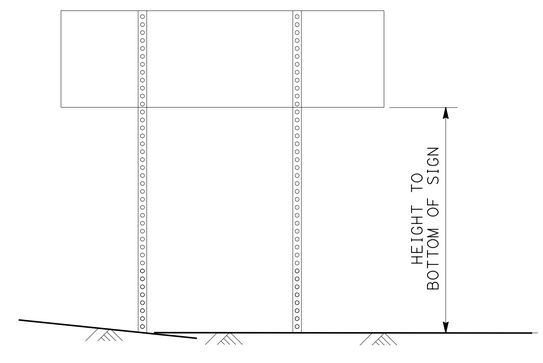

TWO POSTS INSTALLATION
(POST SIZE, SEE CHART BELOW)

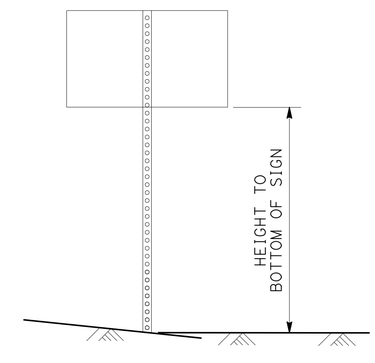

SINGLE POST INSTALLATION
(POST SIZE, SEE CHART BELOW)

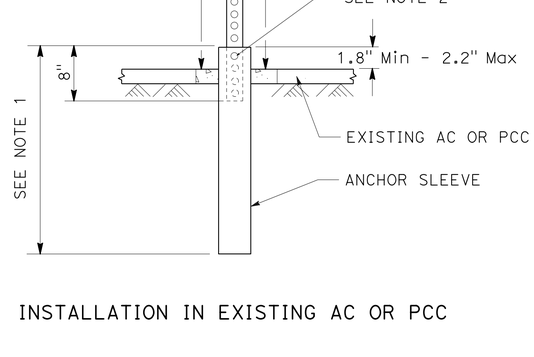

INSTALLATION IN EXISTING AC OR PCC

Max Sq Ft OF SIGN

POST SIZE	60"	72"	84"	96"	108"	120"
2"	18	16	14	12	10	8
2.5"	35	32	28	24	21	21

HEIGHT TO BOTTOM OF SIGN
DOUBLE POST GROUND SIGNS
70 MPH WIND SPEED

Max Sq Ft OF SIGN

POST SIZE	60"	72"	84"	96"	108"	120"
2"	10.5	10	8.7	7.4	6.2	5
2.5"	16	16	16	16	12	12

HEIGHT TO BOTTOM OF SIGN
SINGLE POST GROUND SIGNS
70 MPH WIND SPEED

METAL SIGN POST DETAIL

METAL SIGN POST INSTALLATION DETAILS

SIGN DETAILS
NO SCALE

SD-1

FRANK RIVAS — REVISED BY — DATE REVISED
DAN FISHER — CALCULATED-DESIGNED BY — CHECKED BY
ROB STINGER — FUNCTIONAL SUPERVISOR

STATE OF CALIFORNIA - DEPARTMENT OF TRANSPORTATION
Caltrans® TRAFFIC OPS

P:\proj2\02\0E240_plans\pse\20e240ob001.dgn

LAST REVISION 01-19-16 | DATE PLOTTED => 29-JAN-2016 | TIME PLOTTED => 10:23

BORDER LAST REVISED 7/2/2010 | USERNAME => s115152 | DGN FILE => 20e240ob001.dgn | RELATIVE BORDER SCALE IS IN INCHES 0 1 2 3 | UNIT 0147 | PROJECT NUMBER & PHASE 02 1500 0146 1

Dist	COUNTY	ROUTE	POST MILES TOTAL PROJECT	SHEET No.	TOTAL SHEETS
02	Plu	89	20.0/20.6	137	235

REGISTERED CIVIL ENGINEER 01-19-16 DATE

01-19-16
PLANS APPROVAL DATE

REGISTERED PROFESSIONAL ENGINEER FRANK RIVAS No. C53592 Exp. 6/30/17 CIVIL STATE OF CALIFORNIA

THE STATE OF CALIFORNIA OR ITS OFFICERS OR AGENTS SHALL NOT BE RESPONSIBLE FOR THE ACCURACY OR COMPLETENESS OF SCANNED COPIES OF THIS PLAN SHEET.

NOTES:

1. ALL DIMENSIONS SHOWN ARE IN INCHES

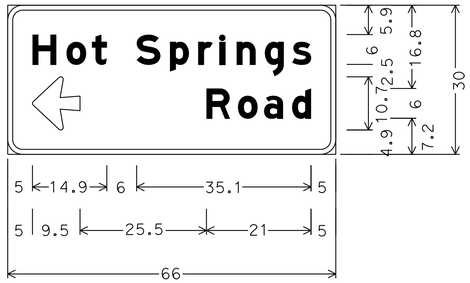

3.0" Radius, 1.0" Border, White on Green;
[Hot Springs] E Mod;
Arrow 6UC-2LH - 9.6" 180°;
[Road] E Mod;

1-8

G8-22(Ca)

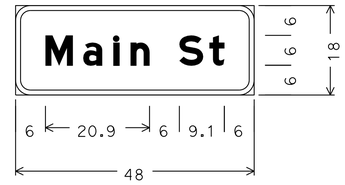

3.0" Radius, 1.0" Border, White on Green;
[Main St] E Mod;

5-7 5-15

G7(Ca)

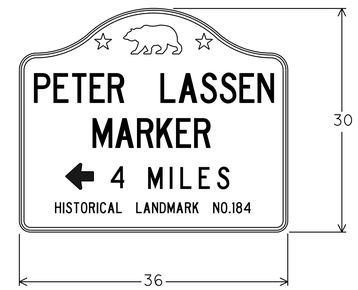

1.5" Radius, 0.8" Border, 0.5" Indent;
Brown on Cream;
[PETER LASSEN] C;
[MARKER] C;
Arrow 3UC&CAP-1LH - 3.8" 180°;
[HISTORIC LANDMARK NO.184] C;

5-16

G13-1(Ca)

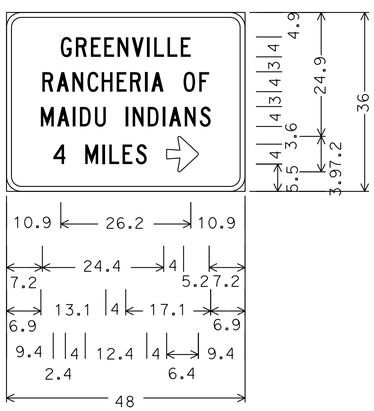

3.0" Radius, 1.0" Border, White on Green;
[GREENVILLE] C;
[RANCHERIA OF] C;
[MAIDU INDIANS] C;
[4 MILES] C;
Arrow 4UC&CAP-2LH - 6.4" 0°;

5-2

G1(Ca)

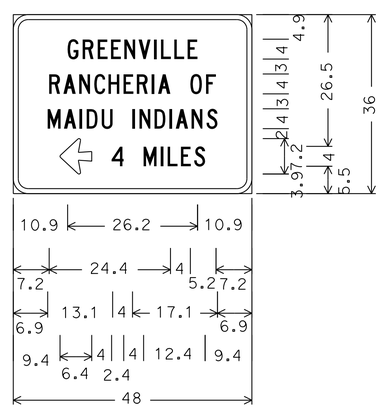

3.0" Radius, 1.0" Border, White on Green;
[GREENVILLE] C;
[RANCHERIA OF] C;
[MAIDU INDIANS] C;
Arrow 4UC&CAP-2LH - 6.4" 180°;
[4 MILES] C;

5-18

G1(Ca)

1.5" Radius, 0.8" Border, 0.5" Indent;
Brown on Cream;
[PETER LASSEN] C;
[MARKER] C;
Arrow 3UC&CAP-1LH - 3.8" 0°;
[HISTORIC LANDMARK NO.184] C;

5-5

G13-1(Ca)

SIGN DETAILS

NO SCALE

SD-2

REVISED BY | DATE REVISED
FRANK RIVAS | DAN FISHER
CALCULATED-DESIGNED BY | CHECKED BY
FUNCTIONAL SUPERVISOR: ROB STINGER
STATE OF CALIFORNIA - DEPARTMENT OF TRANSPORTATION
Caltrans® TRAFFIC OPS
P:\proj2\02\0E240_plans\pse\20e240ob002.dgn

LAST REVISION 01-19-16 | DATE PLOTTED => 29-JAN-2016 | TIME PLOTTED => 10:23

Dist	COUNTY	ROUTE	POST MILES TOTAL PROJECT	SHEET No.	TOTAL SHEETS
02	Plu	89	20.0/20.6	138	235

REGISTERED CIVIL ENGINEER 01-19-16 DATE

01-19-16
PLANS APPROVAL DATE

REGISTERED PROFESSIONAL ENGINEER FRANK RIVAS No. C53592 Exp. 6/30/17 CIVIL STATE OF CALIFORNIA

THE STATE OF CALIFORNIA OR ITS OFFICERS OR AGENTS SHALL NOT BE RESPONSIBLE FOR THE ACCURACY OR COMPLETENESS OF SCANNED COPIES OF THIS PLAN SHEET.

NOTES:

1. (N) - NOT A SEPARATE PAY ITEM, FOR INFORMATION ONLY
2. EXACT LOCATION AND POSITION OF ROADSIDE SIGN TO BE DETERMINED BY THE ENGINEER
3. CALIFORNIA CODES ARE DESIGNATED BY (Ca), OTHERWISE FEDERAL MUTCD CODES ARE SHOWN
4. "H" Dim = VERTICAL CLEARANCE FROM EP TO BOTTOM OF SIGN PANEL

LEGEND:

NUMBER
In INCH

ROADSIDE SIGNS

SIGN #	SIGN CODE	WIDTH	HEIGHT	MESSAGE	REMOVE ROADSIDE SIGN (WOOD POST)	REMOVE ROADSIDE SIGN (STEEL POST)	REMOVE ROADSIDE SIGN (SSBM)	RELOCATE ROADSIDE SIGN	TREATED WOOD WASTE	ROADSIDE SIGN - ONE POST	ROADSIDE SIGN - TWO POST	INSTALL SIGN (SSBM)	"H" DIMENSION	(N) POST SIZE AND LENGTH (FT) METAL 2-1/2" X 2-1/2"	WOOD 4" X 6"	WOOD 6" X 6"	COMMENTS
		In	In		EA	EA	EA	EA	LB	EA	EA	EA	FT				
1-1	R1-1	30	30	STOP	1				200								
1-2	R1-1	30	30	STOP						1			7	9.7			
1-3	S1-1	36	36	SCHOOL CROSSING						1			7	13.0			"H" TO BOTTOM OF W16-7P
	W16-9P	24	12	AHEAD													
1-4	S1-1	36	36	SCHOOL CROSSING	1				200								"H" TO BOTTOM OF W16-7P
	W16-9P	24	12	AHEAD													
1-5	SR4-1(Ca)	36	72	SCHOOL SPEED LIMIT	1				250								
1-6	SR4-1(Ca)	36	72	SCHOOL SPEED LIMIT						1			7			18.0	
1-7	G8(Ca)	66	30	HOT SPRINGS RD	1				300								
	RS-015	24	24	RANGER STATION													
	G33-1(Ca)	24	6	ARROW													
1-8	G8(Ca)	66	30	HOT SPRINGS RD							1		7		14.0,14.0		"H" TO BOTTOM OF G8(Ca)
	RS-015	24	24	RANGER STATION													
	G33-1(Ca)	24	6	ARROW													
1-9	R81(Ca)	12	8	BIKE LANE						1			7	8.8			"H" TO BOTTOM OF R81B(Ca)
	R81B(Ca)	8	5	END													
1-10	R81(Ca)	12	8	BIKE LANE						1			7	8.8			"H" TO BOTTOM OF R81A(Ca)
	R81A(Ca)	12	5	BEGIN													
1-11	R2-1(35)	24	30	SPEED LIMIT 35 MPH								1					INSTALL ON RADAR SPEED FEEDBACK POST. SEE ELECTRICAL PLANS.
2-1	R1-1	24	24	STOP				1					5				
2-2	S1-1	36	36	SCHOOL CROSSING								1	7				INSTALL ON RECTANGULAR RAPID FLASHING BEACON POST. SEE ELECTRICAL PLANS.
	W16-7P	24	12	DIAGONAL ARROW													
2-3	S1-1	36	36	SCHOOL CROSSING								1	7				INSTALL ON RECTANGULAR RAPID FLASHING BEACON POST. SEE ELECTRICAL PLANS.
	W16-7P	24	12	DIAGONAL ARROW													
2-4	R1-1	24	24	STOP				1					5				
2-5	S1-1	36	36	SCHOOL CROSSING		1											
	W16-7P	24	12	DIAGONAL ARROW													
2-6	S1-1	36	36	SCHOOL CROSSING						1			7	13.0			
	W16-7P	24	12	DIAGONAL ARROW													"H" TO BOTTOM OF W16-7P
2-7	S1-1	36	36	SCHOOL CROSSING		1											
	W16-7P	24	12	DIAGONAL ARROW													
				SHEET TOTAL	4	2		2	950	6	1	3				

SIGN QUANTITIES

SQ-1

REVISED BY | DATE REVISED
FRANK RIVAS | DAN FISHER
CALCULATED-DESIGNED BY | CHECKED BY
FUNCTIONAL SUPERVISOR: ROB STINGER

STATE OF CALIFORNIA - DEPARTMENT OF TRANSPORTATION
Caltrans® TRAFFIC OPS

P:\proj2\02\0E240_plans\pse\20e240od001.dgn

LAST REVISION 01-19-16 | DATE PLOTTED => 29-JAN-2016 | TIME PLOTTED => 10:23

Dist	COUNTY	ROUTE	POST MILES TOTAL PROJECT	SHEET No.	TOTAL SHEETS
02	Plu	89	20.0/20.6	139	235

REGISTERED CIVIL ENGINEER 01-19-16 DATE

01-19-16
PLANS APPROVAL DATE

REGISTERED PROFESSIONAL ENGINEER FRANK RIVAS No. C53592 Exp. 6/30/17 CIVIL STATE OF CALIFORNIA

THE STATE OF CALIFORNIA OR ITS OFFICERS OR AGENTS SHALL NOT BE RESPONSIBLE FOR THE ACCURACY OR COMPLETENESS OF SCANNED COPIES OF THIS PLAN SHEET.

NOTES:

1. (N) - NOT A SEPARATE PAY ITEM, FOR INFORMATION ONLY
2. EXACT LOCATION AND POSITION OF ROADSIDE SIGN TO BE DETERMINED BY THE ENGINEER
3. CALIFORNIA CODES ARE DESIGNATED BY (Ca), OTHERWISE FEDERAL MUTCD CODES ARE SHOWN
4. "H" Dim = VERTICAL CLEARANCE FROM EP TO BOTTOM OF SIGN PANEL

LEGEND:

NUMBER
In INCH

ROADSIDE SIGNS

SIGN #	SIGN CODE	WIDTH	HEIGHT	MESSAGE	REMOVE ROADSIDE SIGN (WOOD POST)	REMOVE ROADSIDE SIGN (STEEL POST)	REMOVE ROADSIDE SIGN (SSBM)	RELOCATE ROADSIDE SIGN	TREATED WOOD WASTE	ROADSIDE SIGN - ONE POST	ROADSIDE SIGN - TWO POST	INSTALL SIGN (SSBM)	"H" DIMENSION	(N) POST SIZE AND LENGTH (FT) METAL 2-1/2" X 2-1/2"	WOOD 4" X 6"	WOOD 6" X 6"	COMMENTS
		In	In		EA	EA	EA	EA	LB	EA	EA	EA	FT				
2-8	S1-1	36	36	SCHOOL CROSSING						1			7	13.0			"H" TO BOTTOM OF W16-7P
	W16-7P	24	12	DIAGONAL ARROW													
2-9	R1-1	30	30	STOP		1											
2-10	R1-1	30	30	STOP						1			7	9.7			
2-11	D3-1	12	4	CRESCENT ST				1					7				
	D3-1	12	4	GRAND ST													
2-12	R81(Ca)	12	8	BIKE LANE						1			7	8.9			
2-13	R81(Ca)	12	8	BIKE LANE						1			7	8.9			
3-1	R2-1(25)	48	60	SPEED LIMIT 25 MPH			1										
3-2	R2-1(25)	24	30	SPEED LIMIT 25 MPH						1			7	9.7			
3-3	R2-1(35)	24	30	SPEED LIMIT 35 MPH	1				250								
3-4	R2-1(35)	24	30	SPEED LIMIT 35 MPH						1			7	9.7			
3-5	SR4-1(Ca)	36	72	SCHOOL SPEED LIMIT	1												
3-6	SR4-1(Ca)	36	72	SCHOOL SPEED LIMIT						1			7			18	
3-7	W11-2	36	36	PEDESTRIAN CROSSING						1			7	13.0			
	W16-7P	24	12	DIAGONAL ARROW													
3-8	W11-2	36	36	PEDESTRIAN CROSSING						1			7	13.0			
	W16-7P	24	12	DIAGONAL ARROW													
3-9	R1-1	30	30	STOP													
	D3-1	12	4	CRESCENT ST		1											SAVE SIGN PANEL FOR RESUSE ON 3-10
	D3-1	12	4	JESSIE ST													SAVE SIGN PANEL FOR RESUSE ON 3-10
3-10	R1-1	30	30	STOP													
	D3-1	12	4	CRESCENT ST						1			7	9.7			USE SAVED PANEL FROM 3-9
	D3-1	12	4	JESSIE ST													USE SAVED PANEL FROM 3-9
3-11	S1-1	36	36	SCHOOL CROSSING	1				300								
	W16-9P	24	12	AHEAD													
3-12	S1-1	36	36	SCHOOL CROSSING						1			7	13.0			"H" TO BOTTOM OF W16-9P
	W16-9P	24	12	AHEAD													
3-13	R81(Ca)	12	8	BIKE LANE						1			7	8.9			
3-14	R81(Ca)	12	8	BIKE LANE						1			7	8.9			
				SHEET TOTAL	3	2	1	1	550	13							

SIGN QUANTITIES
SQ-2

REVISED BY | DATE REVISED
FRANK RIVAS | DAN FISHER
CALCULATED-DESIGNED BY | CHECKED BY
FUNCTIONAL SUPERVISOR: ROB STINGER
STATE OF CALIFORNIA - DEPARTMENT OF TRANSPORTATION
Caltrans® TRAFFIC OPS

P:\proj2\02\0E240_plans\pse\20e240od002.dgn

LAST REVISION 01-19-16 | DATE PLOTTED => 29-JAN-2016 | TIME PLOTTED => 10:23

Dist	COUNTY	ROUTE	POST MILES TOTAL PROJECT	SHEET No.	TOTAL SHEETS
02	Plu	89	20.0/20.6	140	235

REGISTERED CIVIL ENGINEER 01-19-16 DATE

01-19-16
PLANS APPROVAL DATE

REGISTERED PROFESSIONAL ENGINEER FRANK RIVAS No. C53592 Exp. 6/30/17 CIVIL STATE OF CALIFORNIA

THE STATE OF CALIFORNIA OR ITS OFFICERS OR AGENTS SHALL NOT BE RESPONSIBLE FOR THE ACCURACY OR COMPLETENESS OF SCANNED COPIES OF THIS PLAN SHEET.

NOTES:

1. (N) - NOT A SEPARATE PAY ITEM, FOR INFORMATION ONLY
2. EXACT LOCATION AND POSITION OF ROADSIDE SIGN TO BE DETERMINED BY THE ENGINEER
3. CALIFORNIA CODES ARE DESIGNATED BY (Ca), OTHERWISE FEDERAL MUTCD CODES ARE SHOWN
4. "H" Dim = VERTICAL CLEARANCE FROM EP TO BOTTOM OF SIGN PANEL

LEGEND:

NUMBER
In INCH

ROADSIDE SIGNS

SIGN #	SIGN CODE	WIDTH	HEIGHT	MESSAGE	REMOVE ROADSIDE SIGN (WOOD POST)	REMOVE ROADSIDE SIGN (STEEL POST)	REMOVE ROADSIDE SIGN (SSBM)	RELOCATE ROADSIDE SIGN	TREATED WOOD WASTE	ROADSIDE SIGN - ONE POST	ROADSIDE SIGN - TWO POST	INSTALL SIGN (SSBM)	"H" DIMENSION	(N) POST SIZE AND LENGTH (FT) METAL 2-1/2" X 2-1/2"	WOOD 4" X 6"	WOOD 6" X 6"	COMMENTS
		In	In		EA	EA	EA	EA	LB	EA	EA	EA	FT				
4-1	S1-1	36	36	SCHOOL CROSSING						1			7	13.0			"H" TO BOTTOM OF W16-7P
	W16-7P	24	12	DIAGONAL ARROW													
4-2	S1-1	36	36	SCHOOL CROSSING						1			7	13.0			"H" TO BOTTOM OF W16-7P
	W16-7P	24	12	DIAGONAL ARROW													
4-3	R1-1	30	30	STOP		1											
	D3-1	12	4	CRESCENT ST													SAVE SIGN PANEL FOR RESUSE ON 4-4
	D3-1	8	4	PINE ST													SAVE SIGN PANEL FOR RESUSE ON 4-4
4-4	R1-1	30	30	STOP						1			7	9.7			
	D3-1	12	4	CRESCENT ST													USE SAVED PANEL FROM 4-3
	D3-1	8	4	PINE ST													USE SAVED PANEL FROM 4-3
4-5	W11-2	36	36	PEDESTRIAN CROSSING			1										
4-6	R2-1(25)	24	30	SPEED LIMIT 25 MPH			1										
4-7	R2-1(25)	24	30	SPEED LIMIT 25 MPH						1			7	9.7			
4-8	W11-2	36	36	PEDESTRIAN CROSSING						1			7	13.0			
	W16-7P	24	12	DIAGONAL CROSSING													
4-9	W11-2	36	36	PEDESTRIAN CROSSING						1			7	13.0			
	W16-7P	24	12	DIAGONAL CROSSING													
4-10	R1-1	30	30	STOP						1			7	9.7			
4-11	R81(Ca)	12	8	BIKE LANE						1			7	8.9			
4-12	R81(Ca)	12	8	BIKE LANE						1			7	8.9			
4-13	R81(Ca)	12	8	BIKE LANE						1			7	8.9			
4-14	R81(Ca)	12	8	BIKE LANE						1			7	8.9			
5-1	G1(Ca)	48	36	GREENVILLE RANCHERIA		1											
5-2	G1(Ca)	48	36	GREENVILLE RANCHERIA						1			7	10.7			
5-3	R2-1(25)	24	30	SPEED LIMIT 25 MPH			1										
5-4	R2-1(25)	24	30	SPEED LIMIT 25 MPH						1			7	9.7			
5-5	G13(Ca)	36	30	HISTORIC MARKER						1			7	10.2			
5-6	G7(Ca)	48	18	MAIN ST	1				200								
5-7	G7(Ca)	48	18	MAIN ST						1			7	9.2			
5-8	W11-2	36	36	PEDESTRIAN CROSSING						1			7	13.0			"H" TO BOTTOM OF W16-7P
	W16-7P	24	12	DIAGONAL ARROW													
				SHEET TOTAL	1	2	3		200	16							

SIGN QUANTITIES
SQ-3

REVISED BY | DATE REVISED
FRANK RIVAS | DAN FISHER
CALCULATED-DESIGNED BY | CHECKED BY
FUNCTIONAL SUPERVISOR: ROB STINGER

STATE OF CALIFORNIA - DEPARTMENT OF TRANSPORTATION
Caltrans® TRAFFIC OPS

P:\proj2\02\0E240_plans\pse\20e240od003.dgn

LAST REVISION 01-19-16 | DATE PLOTTED => 29-JAN-2016 | TIME PLOTTED => 10:23

Dist	COUNTY	ROUTE	POST MILES TOTAL PROJECT	SHEET No.	TOTAL SHEETS
02	Plu	89	20.0/20.6	141	235

REGISTERED CIVIL ENGINEER 01-19-16 DATE

01-19-16
PLANS APPROVAL DATE

REGISTERED PROFESSIONAL ENGINEER FRANK RIVAS No. C53592 Exp. 6/30/17 CIVIL STATE OF CALIFORNIA

THE STATE OF CALIFORNIA OR ITS OFFICERS OR AGENTS SHALL NOT BE RESPONSIBLE FOR THE ACCURACY OR COMPLETENESS OF SCANNED COPIES OF THIS PLAN SHEET.

NOTES:

1. (N) - NOT A SEPARATE PAY ITEM, FOR INFORMATION ONLY
2. EXACT LOCATION AND POSITION OF ROADSIDE SIGN TO BE DETERMINED BY THE ENGINEER
3. CALIFORNIA CODES ARE DESIGNATED BY (Ca), OTHERWISE FEDERAL MUTCD CODES ARE SHOWN
4. "H" Dim = VERTICAL CLEARANCE FROM EP TO BOTTOM OF SIGN PANEL

LEGEND:

NUMBER
In INCH

ROADSIDE SIGNS

SIGN #	SIGN CODE	WIDTH	HEIGHT	MESSAGE	REMOVE ROADSIDE SIGN (WOOD POST)	REMOVE ROADSIDE SIGN (STEEL POST)	REMOVE ROADSIDE SIGN (SSBM)	RELOCATE ROADSIDE SIGN	TREATED WOOD WASTE *	ROADSIDE SIGN - ONE POST	ROADSIDE SIGN - TWO POST	INSTALL SIGN (SSBM)	"H" DIMENSION	(N) POST SIZE AND LENGTH (FT) METAL 2-1/2" X 2-1/2"	WOOD 4" X 6"	WOOD 6" X 6"	COMMENTS
		In	In		EA	EA	EA	EA	LB	EA	EA	EA	FT				
5-9	R1-1	30	30	STOP		1											
5-10	R1-1	30	30	STOP						1			7	9.7			
5-11	R1-1	30	30	STOP						1			7	9.7			
5-12	G13(Ca)	36	30	HISTORIC MARKER	1				250								
	R1-1	30	30	STOP													
5-13	W11-2	36	36	PEDESTRIAN CROSSING						1			7	13.0			"H" TO BOTTOM OF W16-7P
	W16-7P	24	12	DIAGONAL CROSSING													
5-14	G7(Ca)	48	18	MAIN ST		1											
5-15	G7(Ca)	48	18	MAIN ST						1			7	9.2			
5-16	G13(Ca)	36	30	HISTORIC MARKER						1			7	10.2			
5-17	G1(Ca)	48	36	GREENVILLE RANCHERIA		1											
5-18	G1(Ca)	48	36	GREENVILLE RANCHERIA						1			7	10.7			
5-19	R81(Ca)	12	8	BIKE LANE						1			7	8.9			
5-20	R81(Ca)	12	8	BIKE LANE						1			7	8.9			
5-21	R81(Ca)	12	8	BIKE LANE						1			7	8.9			"H" TO BOTTOM OF R81B(Ca)
	R81B(Ca)	8	5	END													
5-22	R81(Ca)	12	8	BIKE LANE						1			7	9.4			"H" TO BOTTOM OF R81A(Ca)
	R81A(Ca)	12	5	BEGIN													
5-23	R2-1(25)	24	30	SPEED LIMIT 25 MPH								1					INSTALL ON RADAR SPEED FEEDBACK POST. SEE ELECTRICAL PLANS.
				SHEET TOTAL	1	3			250	10		1					
				GRAND TOTAL	9	9	4	3	1950	45	1	4					

* ADDITIONAL QUANTITY SHOWN ON SUMMARY OF QUANTITY SHEETS

REVISED BY | DATE REVISED
FRANK RIVAS | DAN FISHER
CALCULATED-DESIGNED BY | CHECKED BY
FUNCTIONAL SUPERVISOR: ROB STINGER

STATE OF CALIFORNIA - DEPARTMENT OF TRANSPORTATION
Caltrans® TRAFFIC OPS

P:\proj2\02\0E240_plans\pse\20e240od004.dgn

SIGN QUANTITIES
SQ-4

LAST REVISION 01-19-16 | DATE PLOTTED => 29-JAN-2016 | TIME PLOTTED => 10:23

Dist	COUNTY	ROUTE	POST MILES TOTAL PROJECT	SHEET No.	TOTAL SHEETS
02	Plu	89	20.0/20.6	142	235

REGISTERED CIVIL ENGINEER 01-19-16 DATE

01-19-16
PLANS APPROVAL DATE

REGISTERED PROFESSIONAL ENGINEER FRANK RIVAS No. C53592 Exp. 6/30/17 CIVIL STATE OF CALIFORNIA

THE STATE OF CALIFORNIA OR ITS OFFICERS OR AGENTS SHALL NOT BE RESPONSIBLE FOR THE ACCURACY OR COMPLETENESS OF SCANNED COPIES OF THIS PLAN SHEET.

NOTES:

1. CALIFORNIA SIGN CODES DESIGNATED BY (Ca), OTHERWISE FEDERAL MUTCD SIGN CODES SHOWN

LEGEND:

FYG FLUORESCENT YELLOW GREEN

ROADSIDE SIGN PANEL QUANTITIES

SIGN #	SIGN CODE	WIDTH	HEIGHT	MESSAGE	SINGLE FACED	SIGN FACING MATERIAL				PREMIUM PROTECTIVE FILM	FURNISH SINGLE SHEET ALUMINUM SIGN FOR TYPE XI SHEETING			RETROREFLECTIVE SHEETING (TYPE XI)	FURNISH SINGLE SHEET ALUMINUM SIGN (0.063" - UNFRAMED)
						BACKGROUND		LEGEND			UNFRAMED		FRAMED		
						COLOR	RETROREFLECTIVE ASTM TYPE	COLOR	RETROREFLECTIVE ASTM TYPE		0.063"	0.080"	0.063"		
		In	In								SQFT	SQFT	SQFT	SQFT	SQFT
1-2	R1-1	30	30	STOP	X	RED	XI	WHITE	XI		6.3			6.3	
1-3	S1-1	36	36	SCHOOL CROSSING	X	FYG	XI	BLACK			9.0			9.0	
1-3	W16-9P	24	12	AHEAD	X	FYG	XI	BLACK			2.0			2.0	
1-6	SR4-1(Ca)	36	72	SCHOOL SPEED LIMIT 25 MPH	X	WHITE/FYG	IX	BLACK							18.0
1-8	G8(Ca)	66	30	HOT SPRINGS RD	X	GREEN	XI	WHITE	XI	X			13.8	13.8	
1-8	RS-015	24	24	RANGER STATION	X	BROWN	XI	WHITE	XI		4.0			4.0	
1-8	G33-1(Ca)	24	6	ARROW	X	BROWN	XI	WHITE	XI		1.0			1.0	
1-9	R81(Ca)	12	8	BIKE LANE	X	WHITE	IX	BLACK							0.7
1-9	R81B(Ca)	8	5	END	X	WHITE	IX	BLACK							0.3
1-10	R81(Ca)	12	8	BIKE LANE	X	WHITE	IX	BLACK							0.7
1-10	R81A(Ca)	12	5	BEGIN	X	WHITE	IX	BLACK							0.4
1-11	R2-1(35)	24	30	SPEED LIMIT 35 MPH	X	WHITE	IX	BLACK							5.0
2-2	S1-1	36	36	SCHOOL CROSSING	X	FYG	XI	BLACK			9.0			9.0	
2-2	W16-7P	24	12	DIAGONAL ARROW	X	FYG	XI	BLACK			2.0			2.0	
2-3	S1-1	36	36	SCHOOL CROSSING	X	FYG	XI	BLACK			9.0			9.0	
2-3	W16-7P	24	12	DIAGONAL ARROW	X	FYG	XI	BLACK			2.0			2.0	
2-6	S1-1	36	36	SCHOOL CROSSING	X	FYG	XI	BLACK			9.0			9.0	
2-6	W16-7P	24	12	DIAGONAL ARROW	X	FYG	XI	BLACK			2.0			2.0	
2-8	S1-1	36	36	SCHOOL CROSSING	X	FYG	XI	BLACK			9.0			9.0	
2-8	W16-7P	24	12	DIAGONAL ARROW	X	FYG	XI	BLACK			2.0			2.0	
2-10	R1-1	30	30	STOP	X	RED	XI	WHITE	XI		6.3			6.3	
2-12	R81(Ca)	12	8	BIKE LANE	X	WHITE	IX	BLACK							0.7
2-13	R81(Ca)	12	8	BIKE LANE	X	WHITE	IX	BLACK							0.7
3-2	R2-1(25)	24	30	SPEED LIMIT 25 MPH	X	WHITE	IX	BLACK							5.0
3-4	R2-1(35)	24	30	SPEED LIMIT 35 MPH	X	WHITE	IX	BLACK							5.0
3-6	SR4-1(Ca)	36	72	SCHOOL SPEED LIMIT 25 MPH	X	WHITE/FYG	IX	BLACK							18.0
3-7	W11-2	36	36	PEDESTRIAN CROSSING	X	FYG	XI	BLACK			9.0			9.0	
3-7	W16-7P	24	12	DIAGONAL ARROW	X	FYG	XI	BLACK			2.0			2.0	
3-8	W11-2	36	36	PEDESTRIAN CROSSING	X	FYG	XI	BLACK			9.0			9.0	
3-8	W16-7P	24	12	DIAGONAL ARROW	X	FYG	XI	BLACK			2.0			2.0	
3-10	R1-1	30	30	STOP	X	RED	XI	WHITE	XI		6.3			6.3	
										SHEET TOTAL	100.9		13.8	114.7	54.5

SIGN QUANTITIES

SQ-5

REVISED BY | DATE REVISED
FRANK RIVAS | DAN FISHER
CALCULATED-DESIGNED BY | CHECKED BY
FUNCTIONAL SUPERVISOR
ROB STINGER

STATE OF CALIFORNIA - DEPARTMENT OF TRANSPORTATION
Caltrans® TRAFFIC OPS

P:\proj2\02\0E240_plans\pse\20e240od005.dgn

LAST REVISION 01-19-16 | DATE PLOTTED => 29-JAN-2016 | TIME PLOTTED => 10:23

Dist	COUNTY	ROUTE	POST MILES TOTAL PROJECT	SHEET No.	TOTAL SHEETS
02	Plu	89	20.0/20.6	143	235

Frank J. Rivas 01-19-16
REGISTERED CIVIL ENGINEER DATE

01-19-16
PLANS APPROVAL DATE

REGISTERED PROFESSIONAL ENGINEER FRANK RIVAS No. C53592 Exp. 6/30/17 CIVIL STATE OF CALIFORNIA

THE STATE OF CALIFORNIA OR ITS OFFICERS OR AGENTS SHALL NOT BE RESPONSIBLE FOR THE ACCURACY OR COMPLETENESS OF SCANNED COPIES OF THIS PLAN SHEET.

NOTES:

1. CALIFORNIA SIGN CODES DESIGNATED BY (Ca), OTHERWISE FEDERAL MUTCD SIGN CODES SHOWN

LEGEND:

FYG FLUORESCENT YELLOW GREEN

ROADSIDE SIGN PANEL QUANTITIES

SIGN #	SIGN CODE	WIDTH	HEIGHT	MESSAGE	SINGLE FACED	SIGN FACING MATERIAL				PREMIUM PROTECTIVE FILM	FURNISH SINGLE SHEET ALUMINUM SIGN FOR TYPE XI SHEETING			RETROREFLECTIVE SHEETING (TYPE XI)	FURNISH SINGLE SHEET ALUMINUM SIGN (0.063" - UNFRAMED)
						BACKGROUND		LEGEND			UNFRAMED		FRAMED		
						COLOR	RETROREFLECTIVE ASTM TYPE	COLOR	RETROREFLECTIVE ASTM TYPE		0.063"	0.080"	0.063"		
		In	In								SQFT	SQFT	SQFT	SQFT	SQFT
3-12	S1-1	36	36	SCHOOL CROSSING	X	FYG	XI	BLACK			9.0			9.0	
3-12	W16-9P	24	12	AHEAD	X	FYG	XI	BLACK			2.0			2.0	
3-13	R81(Ca)	12	8	BIKE LANE	X	WHITE	IX	BLACK							0.7
3-14	R81(Ca)	12	8	BIKE LANE	X	WHITE	IX	BLACK							0.7
4-1	S1-1	36	36	SCHOOL CROSSING	X	FYG	XI	BLACK			9.0			9.0	
4-1	W16-7P	24	12	DIAGONAL ARROW	X	FYG	XI	BLACK			2.0			2.0	
4-2	S1-1	36	36	SCHOOL CROSSING	X	FYG	XI	BLACK			9.0			9.0	
4-2	W16-7P	24	12	DIAGONAL ARROW	X	FYG	XI	BLACK			2.0			2.0	
4-4	R1-1	30	30	STOP	X	RED	XI	WHITE	XI		6.3			6.3	
4-7	R2-1(25)	24	30	SPEED LIMIT 25 MPH	X	WHITE	IX	BLACK							5.0
4-8	W11-2	36	36	PEDESTRIAN CROSSING	X	FYG	XI	BLACK			9.0			9.0	
4-8	W16-7P	24	12	DIAGONAL ARROW	X	FYG	XI	BLACK			2.0			2.0	
4-9	W11-2	36	36	PEDESTRIAN CROSSING	X	FYG	XI	BLACK			9.0			9.0	
4-9	W16-7P	24	12	DIAGONAL ARROW	X	FYG	XI	BLACK			2.0			2.0	
4-10	R1-1	30	30	STOP	X	RED	XI	WHITE	XI		6.3			6.3	
4-11	R81(Ca)	12	8	BIKE LANE	X	WHITE	IX	BLACK							0.7
4-12	R81(Ca)	12	8	BIKE LANE	X	WHITE	IX	BLACK							0.7
4-13	R81(Ca)	12	8	BIKE LANE	X	WHITE	IX	BLACK							0.7
4-14	R81(Ca)	12	8	BIKE LANE	X	WHITE	IX	BLACK							0.7
5-2	G1(Ca)	48	36	GREENVILLE RANCHERIA	X	GREEN	XI	WHITE	XI	X		12.0		12.0	
5-4	R2-1(25)	24	30	SPEED LIMIT 25 MPH	X	WHITE	IX	BLACK							5.0
5-5	G13(Ca)	36	30	HISTORIC MARKER	X	CREAM	XI	BROWN			7.5				
5-7	G7(Ca)	48	18	MAIN ST	X	GREEN	XI	WHITE	XI			6.0		6.0	
5-8	W11-2	36	36	PEDESTRIAN CROSSING	X	FYG	XI	BLACK			9.0			9.0	
5-8	W16-7P	24	12	DIAGONAL ARROW	X	FYG	XI	BLACK			2.0			2.0	
5-10	R1-1	30	30	STOP	X	RED	XI	WHITE	XI		6.3			6.3	
5-11	R1-1	30	30	STOP	X	RED	XI	WHITE	XI		6.3			6.3	
									SHEET TOTAL		98.7	18.0		109.2	77.2

SIGN QUANTITIES

SQ-6

REVISED BY | DATE REVISED
FRANK RIVAS | DAN FISHER
CALCULATED-DESIGNED BY | CHECKED BY
FUNCTIONAL SUPERVISOR
ROB STINGER

STATE OF CALIFORNIA - DEPARTMENT OF TRANSPORTATION
Caltrans® TRAFFIC OPS

P:\proj2\02\0E240_plans\pse\20e240od006.dgn

LAST REVISION 01-19-16 | DATE PLOTTED => 29-JAN-2016 | TIME PLOTTED => 10:23

Dist	COUNTY	ROUTE	POST MILES TOTAL PROJECT	SHEET No.	TOTAL SHEETS
02	Plu	89	20.0/20.6	144	235

REGISTERED CIVIL ENGINEER 01-19-16 DATE

01-19-16
PLANS APPROVAL DATE

REGISTERED PROFESSIONAL ENGINEER FRANK RIVAS No. C53592 Exp. 6/30/17 CIVIL STATE OF CALIFORNIA

THE STATE OF CALIFORNIA OR ITS OFFICERS OR AGENTS SHALL NOT BE RESPONSIBLE FOR THE ACCURACY OR COMPLETENESS OF SCANNED COPIES OF THIS PLAN SHEET.

NOTES:

1. CALIFORNIA SIGN CODES DESIGNATED BY (Ca), OTHERWISE FEDERAL MUTCD SIGN CODES SHOWN

LEGEND:

FYG FLUORESCENT YELLOW GREEN

ROADSIDE SIGN PANEL QUANTITIES

SIGN #	SIGN CODE	WIDTH	HEIGHT	MESSAGE	SINGLE FACED	SIGN FACING MATERIAL: BACKGROUND COLOR	BACKGROUND RETROREFLECTIVE ASTM TYPE	LEGEND COLOR	LEGEND RETROREFLECTIVE ASTM TYPE	PREMIUM PROTECTIVE FILM	FURNISH SINGLE SHEET ALUMINUM SIGN FOR TYPE XI SHEETING: UNFRAMED 0.063"	UNFRAMED 0.080"	FRAMED 0.063"	RETROREFLECTIVE SHEETING (TYPE XI)	FURNISH SINGLE SHEET ALUMINUM SIGN (0.063" - UNFRAMED)
		In	In								SQFT	SQFT	SQFT	SQFT	SQFT
5-13	W11-2	36	36	PEDESTRIAN CROSSING	X	FYG	XI	BLACK			9.0			9.0	
5-13	W16-7P	24	12	DIAGONAL ARROW	X	FYG	XI	BLACK			2.0			2.0	
5-15	G7(Ca)	48	18	MAIN ST	X	GREEN	XI	WHITE	XI			6.0		6.0	
5-16	G13(Ca)	36	30	HISTORIC MARKER	X	CREAM	XI	BROWN			7.5				
5-18	G1(Ca)	48	36	GREENVILLE RANCHERIA	X	GREEN	XI	WHITE	XI	X		12.0		12.0	
5-19	R81(Ca)	12	8	BIKE LANE	X	WHITE	IX	BLACK							0.7
5-20	R81(Ca)	12	8	BIKE LANE	X	WHITE	IX	BLACK							0.7
5-21	R81(Ca)	12	8	BIKE LANE	X	WHITE	IX	BLACK							0.7
5-21	R81B(Ca)	8	5	END	X	WHITE	IX	BLACK							0.3
5-22	R81(Ca)	12	8	BIKE LANE	X	WHITE	IX	BLACK							0.7
5-22	R81A(Ca)	12	5	BEGIN	X	WHITE	IX	BLACK							0.4
5-23	R2-1(25)	24	30	SPEED LIMIT 25 MPH	X	WHITE	IX	BLACK							5.0
										SHEET TOTAL	18.5	18.0		29.0	8.5
										GRAND TOTAL	218.1	36.0	13.8	252.9	77.2

FRANK RIVAS — REVISED BY
DAN FISHER — DATE REVISED
ROB STINGER — FUNCTIONAL SUPERVISOR
CALCULATED-DESIGNED BY
CHECKED BY

STATE OF CALIFORNIA - DEPARTMENT OF TRANSPORTATION
Caltrans® TRAFFIC OPS

P:\proj2\02\0E240_plans\pse\20e240od007.dgn

SIGN QUANTITIES

SQ-7

LAST REVISION 01-19-16 | DATE PLOTTED => 29-JAN-2016 | TIME PLOTTED => 10:23

Dist	COUNTY	ROUTE	POST MILES TOTAL PROJECT	SHEET No.	TOTAL SHEETS
02	Plu	89	20.0/20.6	145	235

REGISTERED CIVIL ENGINEER 01-19-16 DATE

01-19-16
PLANS APPROVAL DATE

REGISTERED PROFESSIONAL ENGINEER SHAUN ALEXANDER No. 70833 Exp. 6-30-17 CIVIL STATE OF CALIFORNIA

THE STATE OF CALIFORNIA OR ITS OFFICERS OR AGENTS SHALL NOT BE RESPONSIBLE FOR THE ACCURACY OR COMPLETENESS OF SCANNED COPIES OF THIS PLAN SHEET.

NOTE:

1. (N) - NOT A SEPARATE PAY ITEM, FOR INFORMATION ONLY

COLD PLANE AC PAVEMENT

LOCATION	STATION	(N) LENGTH (LF)	(N) DEPTH (LF)	SQYD	DESCRIPTION
ROUTE 89	"A1" 11+18.00 TO 11+60.00	42	0.2	109.7	MAINLINE CONFORM
ROUTE 89	"A1" 38+88.47 TO 39+10.00	21.5	0.2	93.4	MAINLINE CONFORM
HOT SPRINGS Rd	"H1" 1100+55.7 TO 1101+03.00	59	0.2	161.4	MINOR ROAD CONNECTION CONFORM
GRAND St	"G1" 2100+68.55 TO 2100+88.55	20	0.2	52.1	MINOR ROAD CONNECTION CONFORM
JESSIE St	"J1" 3100+61.00 TO 3100+81.00	20	0.2	114.2	MINOR ROAD CONNECTION CONFORM
PINE St	"P1" 4100+77.35 TO 4100+97.35	20	0.2	96.7	MINOR ROAD CONNECTION CONFORM
AYOOB Cir	"C1" 5100+10.00 TO 5100+30.00	20	0.2	73.6	MINOR ROAD CONNECTION CONFORM
MAIN St	"M1" 6100+48.81 TO 6100+68.81	20	0.2	161.4	MINOR ROAD CONNECTION CONFORM
MAIN St	"M1" 6102+03.80 TO 6102+23.80	20	0.2	161.8	MINOR ROAD CONNECTION CONFORM
FRANKLIN ALLEY		10	0.2	21.5	MINOR ROAD CONNECTION CONFORM
BIDWELL St		10	0.2	36.3	MINOR ROAD CONNECTION CONFORM
CURB RAMP #3	"EP5" 506+47.01 TO 506+53.71	8	0.33	6.2	BACK OF WALKWAY CONFORM
			0.5	6.2	HMA TRANSITION RAMPS
			0.5	801.3	SIDEWALK AND DRIVEWAY CONFORMS
			TOTAL	1895.8	

ROADWAY ITEMS

STATION					LOCATION	SHOULDER BACKING	ROADWAY EXCAVATION	CLASS 2 AGGREGATE BASE	HOT MIX ASPHALT (TYPE A)	TACK COAT	PLACE HMA (Misc AREA)	(N) Emb
					L+/CI/R+	TON	CY	CY	TON	TON	SQYD	CY
"A1"	11+48.29	TO	"A1"	14+61.75	L+	34.5						
"A1"	11+18.00	TO	"H1"	1101+03.00	R+	10.9						
"A1"	38+45.00	TO	"A1"	39+10.00	R+	7.2						
"A1	11+60.00	TO	"A1	38+88.47	CI		8370	4738	4318	2.95		748
"H1"	1100+19.00	TO	"H1"	1100+44.00	CI		120	58	53	0.04		23
"G1"	2100+21.00	TO	"G1"	2100+68.55	CI		98	70	64	0.04		4
"J1"	3100+17.00	TO	"J1"	3100+61.00	CI		100	63	58	0.04		
"P1"	4100+17.00	TO	"P1"	4100+77.35	CI		152	97	89	0.06		
"C1"	5100+30.00	TO	"C1"	5101+00.59	CI		102	96	88	0.06		
"M1"	6100+68.81	TO	"M1"	6101+23.43	CI		173	95	87	0.06		8
"M1"	6101+57.43	TO	"M1"	6102+03.80	CI		131	84	77	0.05		4
FRANKLIN ALLEY							20	14	13	0.01		
BIDWELL STREET							43	30	28	0.02		
PAVEMENT EDGE TREATMENT (TAPERED EDGE)								10	4			
CURB RAMP #3 AT BACK OF WALKWAY									2		6.2	
SIDEWALK AND DRIVEWAY CONFORMS									428		1266.4	
HMA TRANSITION RAMPS									2		6.2	
FROM DRAINAGE QUANTITIES									2		7.0	
UNDER SIDEWALKS								417				
					TOTAL	52.6	9309	5772	5313	3.3	1285.8	787

ROADSIDE CLEARING (TREE REMOVAL)

STATION/OFFSET	EA
"A1" 14+60, R+	1
"A1" 14+90, R+	1
"A1" 15+95, R+	1
"A1" 16+00, R+	1
"A1" 16+05, R+	1
"A1" 23+63, L+	1
"A1" 28+87, L+	1
TOTAL	7

PAVEMENT EDGE TREATMENT (TAPERED EDGE)

STATION		HMA (TYPE A)	CLASS 2 AB
	LF	TON	CY
"A1" 11+92.30 TO 14+61.80 L+	269.5	4.0	10.0
	TOTAL	* 4.0	* 10.0

* ADDITIONAL QUANTITIES SHOWN IN ROADWAY ITEMS TABLE

REMOVE ASPHALT CONCRETE DIKE

STATION		LF
BEGIN	END	
"A1" 17+16.7, 59.2' R+	"A1" 17+30.9, 59.6' R+	14.2
	TOTAL	14.2

WATER POLLUTION CONTROL

LOCATION	Temp FIBER ROLL	Temp SILT FENCE	Temp GRAVEL BAG BERM	Temp DRAINAGE INLET PROTECTION	Temp COVER	MOVE-IN/MOVE-OUT (TEMPORARY EROSION CONTROL)	STORM WATER ANNUAL REPORT
	LF	LF	LF	EA	SQYD	EA	EA
"A1" 11+18 TO "A1" 39+10	150	1100	100	47	8000	2	2
TOTAL	150	1100	100	47	8000	2	2

SUMMARY OF QUANTITIES

Q-1

REVISED BY | DATE REVISED
JEANNIE STEFFAN | SHAUN ALEXANDER
CALCULATED-DESIGNED BY | CHECKED BY
FUNCTIONAL SUPERVISOR: ERIC ORR

STATE OF CALIFORNIA - DEPARTMENT OF TRANSPORTATION
Caltrans DESIGN

P:\proj2\02\0E240_plans\pse\20e240pa001.dgn

LAST REVISION 01-19-16 | DATE PLOTTED => 29-JAN-2016 | TIME PLOTTED => 10:23

Dist	COUNTY	ROUTE	POST MILES TOTAL PROJECT	SHEET No.	TOTAL SHEETS
02	Plu	89	20.0/20.6	146	235

REGISTERED CIVIL ENGINEER 01-19-16 DATE

01-19-16
PLANS APPROVAL DATE

REGISTERED PROFESSIONAL ENGINEER SHAUN ALEXANDER No. 70833 Exp. 6-30-17 CIVIL STATE OF CALIFORNIA

THE STATE OF CALIFORNIA OR ITS OFFICERS OR AGENTS SHALL NOT BE RESPONSIBLE FOR THE ACCURACY OR COMPLETENESS OF SCANNED COPIES OF THIS PLAN SHEET.

NOTES:

1. (N) - NOT A SEPARATE PAY ITEM, FOR INFORMATION ONLY
2. FOR ADDITIONAL CURB RAMP DETAILs AND INFORMATION, SEE STANDARD PLANS.

MINOR CONCRETE (CURB AND GUTTER)

STATION		MINOR CONCRETE (CURB AND GUTTER)					
		TYPE A2-6	MODIFIED TYPE A2-6	MODIFIED TYPE A2-6 AT RAMP	MODIFIED TYPE E	MODIFIED TYPE E AT RAMP	TRANSITION CURB
BEGIN	END	CY	CY	CY	CY	CY	CY
"EP1" 104+62.7 Lt	"EP1" 106+98.4 Lt	13.9					
"EP1" 106+98.4 Lt	"EP1" 107+02.1 Lt						0.2
"EP1" 107+02.1 Lt	"EP1" 107+19.9 Lt				1.1		
"EP1" 107+19.9 Lt	"EP1" 107+24.9 Lt					0.3	
"EP1" 107+24.9 Lt	"EP1" 107+42.2 Lt				1.1		
"EP1" 107+42.2 Lt	"EP1" 107+46.5 Lt						0.3
"EP1" 107+46.5 Lt	"EP1" 110+17.2 Lt	16.0					
"EP1" 110+17.2 Lt	"EP1" 110+21.2 Lt						0.2
"EP1" 110+21.2 Lt	"EP1" 110+38.3 Lt				1.1		
"EP1" 110+38.3 Lt	"EP1" 110+43.3 Lt					0.3	
"EP1" 110+43.3 Lt	"EP1" 110+57.3 Lt				0.9		
"EP1" 110+57.3 Lt	"EP1" 110+65.3 Lt						0.5
"EP1" 110+65.3 Lt	"EP1" 115+25.2 Lt	27.1					
"EP1" 115+25.2 Lt	"EP1" 115+29.3 Lt						0.3
"EP1" 115+29.3 Lt	"EP1" 115+46.8 Lt				1.1		
"EP1" 115+46.8 Lt	"EP1" 115+51.8 Lt					0.3	
"EP1" 115+51.8 Lt	"EP1" 115+69.4 Lt				1.1		
"EP1" 115+69.4 Lt	"EP1" 115+73.4 Lt						0.2
"EP1" 115+73.4 Lt	"EP1" 118+49.5 Lt	16.3					
"EP1" 118+49.5 Lt	"EP1" 118+53.6 Lt						0.3
"EP1" 118+53.6 Lt	"EP1" 118+71.1 Lt				1.1		
"EP1" 118+71.1 Lt	"EP1" 118+76.1 Lt					0.3	
"EP1" 118+76.1 Lt	"EP1" 118+93.7 Lt				1.1		
"EP1" 118+93.7 Lt	"EP1" 118+97.7 Lt						0.2
"EP1" 118+97.7 Lt	"EP1" 120+99.8 Lt	11.9					
"EP1" 120+99.8 Lt	"EP1" 121+49.8 Lt		3.0				
"EP1" 121+49.8 Lt	"EP1" 122+47.3 Lt	5.8					
"EP1" 122+47.3 Lt	"EP1" 122+53.4 Lt			0.3			
"EP1" 122+53.4 Lt	"EP1" 122+76.4 Lt	1.4					
"EP2" 200+60.9 Lt	"EP2" 201+25.3 Lt	3.8					
"EP2" 201+25.3 Lt	"EP2" 201+31.1 Lt			0.3			
"EP2" 201+31.1 Lt	"EP2" 203+23.7 Lt	11.4					
"EP2" 203+23.7 Lt	"EP2" 203+35.7 Lt						0.7
"EP2" 203+35.7 Lt	"EP2" 203+68.6 Lt				2.1		
"EP2" 203+68.6 Lt	"EP2" 203+74.9 Lt					0.4	
"EP2" 203+74.9 Lt	"EP2" 204+03.3 Lt				1.8		
"EP2" 204+03.3 Lt	"EP2" 204+21.7 Lt						1.1
"EP2" 204+21.7 Lt	"EP2" 204+26.2 Lt	0.3					
"EP3" 301+49.7 Lt	"EP3" 301+57.4 Lt	0.5					
"EP3" 301+57.4 Lt	"EP3" 301+76.4 Lt						1.2
"EP3" 301+76.4 Lt	"EP3" 302+05.5 Lt				1.9		
"EP3" 302+05.5 Lt	"EP3" 302+11.8 Lt					0.4	
"EP3" 302+11.8 Lt	"EP3" 302+46.5 Lt				2.2		

MINOR CONCRETE (CURB AND GUTTER) CONTINUED

STATION		MINOR CONCRETE (CURB AND GUTTER)					
		TYPE A2-6	MODIFIED TYPE A2-6	MODIFIED TYPE A2-6 AT RAMP	MODIFIED TYPE E	MODIFIED TYPE E AT RAMP	TRANSITION CURB
BEGIN	END	CY	CY	CY	CY	CY	CY
"EP3" 302+46.5 Lt	"EP3" 302+59.1 Lt						0.8
"EP3" 302+59.1 Lt	"EP3" 304+27.9 Lt	10.0					
"EP3" 304+27.9 Lt	"EP3" 304+47.4 Lt			1.0			
"EP3" 304+47.4 Lt	"EP3" 304+60.0 Lt	0.7					
"EP5" 500+95.4 Rt	"EP5" 501+46.2 Rt	3.0					
"EP5" 501+46.2 Rt	"EP5" 501+51.8 Rt			0.3			
"EP5" 501+51.8 Rt	"EP5" 506+26.8 Rt	28.0					
"EP5" 506+26.8 Rt	"EP5" 506+30.7 Rt						0.2
"EP5" 506+30.7 Rt	"EP5" 506+48.5 Rt				1.1		
"EP5" 506+48.5 Rt	"EP5" 506+53.5 Rt					0.3	
"EP5" 506+53.5 Rt	"EP5" 506+71.4 Rt				1.1		
"EP5" 506+71.4 Rt	"EP5" 506+75.2 Rt						0.2
"EP5" 506+75.2 Rt	"EP5" 509+42.2 Rt	15.8					
"EP5" 509+42.2 Rt	"EP5" 509+49.9 Rt						0.5
"EP5" 509+49.9 Rt	"EP5" 509+79.9 Rt				1.9		
"EP5" 509+79.9 Rt	"EP5" 509+85.9 Rt					0.3	
"EP5" 509+85.9 Rt	"EP5" 510+15.6 Rt				1.9		
"EP5" 510+15.6 Rt	"EP5" 510+23.5 Rt						0.5
"EP5" 510+23.5 Rt	"EP5" 510+26.0 Rt	0.1					
"EP6" 600+21.6 Rt	"EP6" 600+26.2 Rt	0.3					
"EP6" 600+26.2 Rt	"EP6" 600+33.4 Rt						0.4
"EP6" 600+33.4 Rt	"EP6" 600+63.2 Rt				1.9		
"EP6" 600+63.2 Rt	"EP6" 600+69.5 Rt					0.4	
"EP6" 600+69.5 Rt	"EP6" 600+98.7 Rt				1.9		
"EP6" 600+98.7 Rt	"EP6" 601+06.5 Rt						0.5
"EP6" 601+06.5 Rt	"EP6" 604+87.7 Rt	22.5					
"EP6" 604+87.7 Rt	"EP6" 604+95.4 Rt						0.5
"EP6" 604+95.4 Rt	"EP6" 605+25.3 Rt				1.9		
"EP6" 605+25.3 Rt	"EP6" 605+31.6 Rt					0.4	
"EP6" 605+31.6 Rt	"EP6" 605+58.6 Rt				1.7		
"EP6" 605+58.6 Rt	"EP6" 605+63.0 Rt						0.3
"EP6" 605+63.0 Rt	"EP6" 605+71.9 Rt	0.5					
"EP7" 7+18.0 Rt	"EP7" 7+27.2 Rt	0.5					
"EP7" 7+27.2 Rt	"EP7" 7+32.3 Rt						0.3
"EP7" 7+32.3 Rt	"EP7" 7+58.7 Rt				1.7		
	SUBTOTAL	189.8	3.0	1.9	31.7	3.4	9.4

SUMMARY OF QUANTITIES

Q-2

STATE OF CALIFORNIA - DEPARTMENT OF TRANSPORTATION
Caltrans® DESIGN

FUNCTIONAL SUPERVISOR: ERIC ORR
CALCULATED-DESIGNED BY: JEANNIE STEFFAN
CHECKED BY: SHAUN ALEXANDER
REVISED BY / DATE REVISED

P:\proj2\02\0E240_plans\pse\20e240pa002.dgn

LAST REVISION 01-19-16 | DATE PLOTTED => 29-JAN-2016 | TIME PLOTTED => 10:23

Dist	COUNTY	ROUTE	POST MILES TOTAL PROJECT	SHEET No.	TOTAL SHEETS
02	Plu	89	20.0/20.6	147	235

REGISTERED CIVIL ENGINEER 01-19-16 DATE

01-19-16
PLANS APPROVAL DATE

REGISTERED PROFESSIONAL ENGINEER SHAUN ALEXANDER No. 70833 Exp. 6-30-17 CIVIL STATE OF CALIFORNIA

THE STATE OF CALIFORNIA OR ITS OFFICERS OR AGENTS SHALL NOT BE RESPONSIBLE FOR THE ACCURACY OR COMPLETENESS OF SCANNED COPIES OF THIS PLAN SHEET.

NOTES:

1. (N) - NOT A SEPARATE PAY ITEM, FOR INFORMATION ONLY
2. FOR ADDITIONAL CURB RAMP DETAILS AND INFORMATION, SEE STANDARD PLANS.

MINOR CONCRETE (CURB AND GUTTER) CONTINUED

STATION		MINOR CONCRETE (CURB AND GUTTER)							
		TYPE A2-6	MODIFIED TYPE A2-6	MODIFIED TYPE A2-6 AT RAMP	MODIFIED TYPE E	MODIFIED TYPE E AT RAMP	TRANSITION CURB	TYPE A1-6	MODIFIED TYPE A1-6
BEGIN	END	CY	CY	CY	CY	CY	CY	CY	
"EP7" 7+58.7 R†	"EP7" 7+64.9 R†					0.3			
"EP7" 7+64.9 R†	"EP7" 7+94.5 R†				1.9				
"EP7" 7+94.5 R†	"EP7" 8+02.1 R†						0.5		
"EP7" 8+02.1 R†	"EP7" 10+03.0 R†	11.9							
"EP7" 10+03.0 R†	"EP7" 10+10.8 R†						0.5		
"EP7" 10+10.8 R†	"EP7" 10+40.7 R†				1.9				
"EP7" 10+40.7 R†	"EP7" 10+46.9 R†					0.3			
"EP7" 10+46.9 R†	"EP7" 10+62.7 R†				1.0				
"EP7" 10+62.7 R†	"EP7" 10+74.8 R†						0.7		
"EP7" 10+74.8 R†	"EP7" 11+18.2 R†	2.6							
"EP8" 800+13.9 R†	"EP8" 800+41.6 R†				1.8				
"EP8" 800+41.6 R†	"EP8" 800+47.9 R†					0.4			
"EP8" 800+47.9 R†	"EP8" 800+80.1 R†				2.1				
"EP8" 800+80.1 R†	"EP8" 800+90.8 R†						0.7		
"EP8" 800+90.8 R†	"EP8" 803+63.0 R†	16.1							
"EP8" 803+63.0 R†	"EP8" 803+68.0 R†			0.2					
"EP8" 803+68.0 R†	"EP8" 805+71.6 R†	12.0							
"EP8" 805+71.6 R†	"EP8" 805+83.6 R†						0.7		
"EP8" 805+83.6 R†	"EP8" 806+16.7 R†				2.1				
"EP8" 806+16.7 R†	"EP8" 806+22.9 R†					0.3			
"EP8" 806+22.9 R†	"EP8" 806+47.0 R†				1.5				
"EP8" 806+47.0 R†	"EP8" 806+65.4 R†						1.1		
"EP8" 806+65.4 R†	"EP8" 806+73.8 R†	0.5							
"EP9" 900+42.1 R†	"EP9" 900+46.9 R†	0.3							
"EP9" 900+46.9 R†	"EP9" 900+66.3 R†						1.2		
"EP9" 900+66.3 R†	"EP9" 900+89.1 R†				1.5				
"EP9" 900+89.1 R†	"EP9" 900+94.3 R†					0.3			
"EP9" 900+94.3 R†	"EP9" 901+29.3 R†				2.2				
"EP9" 901+29.3 R†	"EP9" 901+41.3 R†						0.7		
"EP9" 901+41.3 R†	"EP9" 902+44.9 R†		6.1						
"EP9" 902+44.9 R†	"EP9" 903+47.4 R†	6.1							
"EP9" 903+47.4 R†	"EP9" 903+61.5 R†			0.7					
"EP9" 903+61.5 R†	"EP9" 903+75.0 R†	0.8							
"EP10" 1004+45.6 L†	"EP10" 1004+54.7 L†	0.5							
"EP10" 1004+54.7 L†	"EP10" 1004+60.9 L†			0.3					
"EP10" 1004+60.9 L†	"EP10" 1005+46.0 L†	5.0							
SUBTOTAL		55.8	6.1	1.2	16.0	1.6	6.1	0	0
SUBTOTAL (PREVIOUS TABLES)		189.8	3.0	1.9	31.7	3.4	9.4	0	0
PLANTER QUANTITY								30.1	2.8
TOTAL		245.6	9.1	3.1	47.7	5.0	15.5	32.9	
GRAND TOTAL		358.9							

SUMMARY OF QUANTITIES

Q-3

REVISED BY | DATE REVISED
JEANNIE STEFFAN | SHAUN ALEXANDER
CALCULATED-DESIGNED BY | CHECKED BY
FUNCTIONAL SUPERVISOR: ERIC ORR

STATE OF CALIFORNIA - DEPARTMENT OF TRANSPORTATION
Caltrans® DESIGN

P:\proj2\02\0E240_plans\pse\20e240pa003.dgn

LAST REVISION 01-19-16 | DATE PLOTTED => 29-JAN-2016 | TIME PLOTTED => 10:23

Dist	COUNTY	ROUTE	POST MILES TOTAL PROJECT	SHEET No.	TOTAL SHEETS
02	Plu	89	20.0/20.6	148	235

REGISTERED CIVIL ENGINEER 01-19-16 DATE

01-19-16
PLANS APPROVAL DATE

REGISTERED PROFESSIONAL ENGINEER SHAUN ALEXANDER No. 70833 Exp. 6-30-17 CIVIL STATE OF CALIFORNIA

THE STATE OF CALIFORNIA OR ITS OFFICERS OR AGENTS SHALL NOT BE RESPONSIBLE FOR THE ACCURACY OR COMPLETENESS OF SCANNED COPIES OF THIS PLAN SHEET.

NOTE:

1. (N) - NOT A SEPARATE PAY ITEM, FOR INFORMATION ONLY

RECONSTRUCT FENCE

LINE	BEGIN STATION, OFFSET	END STATION, OFFSET	LF	DESCRIPTION
A1	21+99.40, 38.6′ R+	21+99.40, 48.6′ R+	10	WIRE MESH
A1	22+21.06, 51.7′ L+	23+03.10, 51.3′ L+	82	WIRE MESH
A1	23+17.98, 52.3′ L+	23+58.41, 51.6′ L+	40	WIRE MESH
A1	23+58.41, 51.6′ L+	23+57.72, 36.7′ L+	15	WOOD
A1	23+57.72, 36.7′ L+	23+85.22, 36.1′ L+	27	CHAIN LINK
A1	23+88.61, 36.1′ L+	24+05.11, 36.1′ L+	17	CHAIN LINK
A1	30+64.39, 42.1′ R+	30+68.10, 37.9′ R+	6	WOOD
A1	30+91.22, 38.0′ R+	30+91.71, 42.0′ R+	4	WOOD
A1	36+56.30, 32.8′ L+	37+16.04, 32.8′ L+	59	WOOD
		TOTAL	260	

RECONSTRUCT GUARDRAIL

LINE	BEGIN STATION, OFFSET	END STATION, OFFSET	LF
A1	11+21.00, 20.2′ R+	11+43.54, 54.6′ R+	94.3
		TOTAL	94.3

TUBULAR HANDRAILING (MODIFIED)

LINE	BEGIN STATION, OFFSET	END STATION, OFFSET	LF
A1	33+70.6, 26.8′ R+	34+80.1, 31.9′ R+	104
		TOTAL	104

RESET GATE

LINE	STATION/OFFSET	EA
A1	23+03.10, 51.3′ L+	1
A1	23+85.22, 36.1′ L+	1
A1	30+68.10, 37.9′ R+	1
	TOTAL	3

HANDRAILING

LINE	STATION/OFFSET	LF
A1	37+98.64 to 38+00.54, 42.6 L+	1.9
	TOTAL	1.9

TREATED WOOD WASTE

STATION/LOCATION	LB
"A1" 11+21 TO 11+43.54	1220
FROM ROADSIDE SIGNS	1950
TOTAL	3170

REMOVE BOLLARD

LINE	STATION/OFFSET	EA
A1	20+42.06, 39.00 R+	1
A1	20+42.06, 40.43 R+	1
A1	20+42.06, 42.00 R+	1
A1	28+45.17, 27.70 R+	1
A1	28+47.57, 31.93 R+	1
A1	28+50.08, 27.84 R+	1
	TOTAL	6

REMOVE CONCRETE

LINE	BEGIN STATION, OFFSET	END STATION, OFFSET	REMOVE CONCRETE (SIDEWALK)	REMOVE CONCRETE (Conc ISLAND)	REMOVE CONCRETE (CURB AND GUTTER)	REMOVE CONCRETE (CURB)
			SQYD	SQYD	LF	LF
A1	14+80, 30′ L+	19+00, 38′ L+			420.0	
A1	20+89, 41′ R+	25+44, 44′ R+	466.7			
A1	23+57, 36′ L+	24+05, 35′ L+	18.7			
A1	25+97, 37′ R+	27+89, 37′ R+	93.8			
A1	28+44, 25′ R+			9.5		
A1	28+54, 47′ R+			2.6		
A1	29+27, 33′ R+	29+46, 56′ R+			66.3	
A1	29+27, 33′ R+	31+24, 33′ R+	100.0			
A1	29+80, 38′ R+	30+06, 38′ R+				26.0
A1	30+42, 38′ R+	30+64, 38′ R+				22.0
A1	32+39, 78′ L+	32+80, 72′ L+	22.1			
A1	33+17, 45′ L+	34+91, 71′ L+	137.8			
A1	33+57, 24′ R+	34+93, 69′ R+	157.1			
A1	34+79, 26′ R+	35+00, 44′ R+			34.5	
A1	35+63, 38′ R+	35+76, 21′ R+			22.9	
A1	35+63, 38′ L+	35+80, 22′ L+			26.5	
A1	35+66, 73′ L+	37+78, 45′ L+	183.5			
A1	35+67, 63′ R+	37+15, 31′ R+	154.5			
A1	37+57, 33′ R+	38+15, 46′ R+	61.4			
A1	37+60, 25′ L+	37+78, 45′ L+			38.6	
A1	37+99, 36′ L+	38+88, 33′ L+	56.3			
A1	37+99, 36′ L+	38+09, 25′ L+			23.4	
A1	38+44, 25′ L+	38+88, 25′ L+			44.0	
		TOTAL	1451.9	12.1	676.2	48.0

SUMMARY OF QUANTITIES

Q-4

REVISED BY | DATE REVISED
JEANNIE STEFFAN | SHAUN ALEXANDER
CALCULATED-DESIGNED BY | CHECKED BY
FUNCTIONAL SUPERVISOR
ERIC ORR

Caltrans® STATE OF CALIFORNIA - DEPARTMENT OF TRANSPORTATION
DESIGN

P:\proj2\02\0E240_plans\pse\20e240pa004.dgn

LAST REVISION 01-19-16 | DATE PLOTTED => 29-JAN-2016 | TIME PLOTTED => 10:23

Dist	COUNTY	ROUTE	POST MILES TOTAL PROJECT	SHEET No.	TOTAL SHEETS
02	Plu	89	20.0/20.6	149	235

REGISTERED CIVIL ENGINEER 01-19-16 DATE

01-19-16
PLANS APPROVAL DATE

REGISTERED PROFESSIONAL ENGINEER SHAUN ALEXANDER No. 70833 Exp. 6-30-17 CIVIL STATE OF CALIFORNIA

THE STATE OF CALIFORNIA OR ITS OFFICERS OR AGENTS SHALL NOT BE RESPONSIBLE FOR THE ACCURACY OR COMPLETENESS OF SCANNED COPIES OF THIS PLAN SHEET.

NOTE:

1. (N) - NOT A SEPARATE PAY ITEM, FOR INFORMATION ONLY

PLANTER QUANTITIES

"X" CENTER POINT		DESCRIPTION	*** MINOR CONCRETE (CURB AND GUTTER)			
			MODIFIED TYPE A1-6	TYPE A1-6	TYPE A1-6	MODIFIED TYPE A1-6
STATION	OFFSET		LF		CY	
"EP1" 108+23.44	12.5' L+	PLANTER		36.0	0.9	
"EP1" 109+00.68	12.3' L+	PLANTER		36.0	0.9	
"EP1" 109+82.25	12.2' L+	PLANTER		36.0	0.9	
"EP1" 110+74.26	12.2' L+	PLANTER		36.0	0.9	
"EP1" 111+55.89	12.2' L+	PLANTER		36.0	0.9	
"EP1" 114+86.49	9.4' L+	PLANTER		23.8	0.6	
"EP1" 115+24.52	9.4' L+	PLANTER		23.8	0.6	
"EP1" 115+74.12	9.4' L+	PLANTER		23.8	0.6	
"EP1" 116+29.52	9.3' L+	PLANTER		23.8	0.6	
"EP2" 200+65.60	10.1' L+	PLANTER		19.4	0.5	
"EP2" 203+42.01	5.8' L+	PLANTER		25.0	0.6	
"EP3" 302+36.11	5.8' L+	PLANTER		33.0	0.9	
"EP5" 508+37.99	12.1' R+	PLANTER	27.0	9.0	0.2	1.4
"EP5" 509+21.26	12.2' R+	PLANTER	27.0	9.0	0.2	1.4
"EP5" 509+56.59	10.7' R+	PLANTER		23.6	0.6	
"EP5" 510+12.02	13.5' R+	PLANTER		33.0	0.9	
"EP6" 600+41.06	11.9' L+	PLANTER		33.0	0.9	
"EP6" 600+90.72	10.7' R+	PLANTER		24.0	0.6	
"EP6" 605+05.19	10.7' R+	PLANTER		24.0	0.6	
"EP7" 9+64.39	11.7' L+	PLANTER		32.0	0.8	
"EP8" 802+81.85	10.7' L+	PLANTER		24.0	0.6	
"EP8" 803+83.36	10.2' L+	PLANTER		37.4	1.0	
"EP8" 805+91.94	5.8' L+	PLANTER		33.0	0.9	
"EP9" 901+18.27	5.8' L+	PLANTER		24.0	0.6	
CURB RAMP #11	-	PLANTER		95.9	2.5	
CURB RAMP #12	-	PLANTER		102.0	2.6	
CURB RAMP #14	-	PLANTER		125.2	3.2	
CURB RAMP #16	-	PLANTER		58.0	1.5	
CURB RAMP #17	-	PLANTER		47.0	1.2	
CURB RAMP #18	-	PLANTER		38.1	1.0	
CURB RAMP #19	-	PLANTER		49.0	1.3	
				TOTAL	30.1	2.8

NOTES: FOR NON RECTANGULAR PLANTER LOCATIONS AT CURB RAMPS, SEE CURB RAMP CONSTRUCTION DETAILS.

*** ADDITIONAL QUANTITIES SHOWN IN MINOR CONCRETE (CURB AND GUTTER) QUANTITY TABLE

CURB RAMP QUANTITIES

CURB RAMP #	STATION		** MINOR CONCRETE (SIDEWALK)	* DETECTABLE WARNING SURFACE
	TO	FROM	CY	SQFT
1	501+39.21	501+58.84	1.2	15.5
2	107+10.48	107+34.48	1.4	15.0
3	506+41.01	506+61.01	1.3	15.0
4	509+72.47	509+93.49	1.1	15.9
5	110+38.34	110+53.24	1.0	15.0
6	600+54.96	600+77.79	1.2	15.9
7	115+37.32	115+61.32	1.4	15.0
8	605+17.17	605+39.63	1.1	15.9
9	7+50.28	7+73.38	1.1	15.9
10	118+61.61	118+85.61	1.5	15.0
11	10+31.70	10+55.91	1.2	15.9
12	800+31.98	800+56.25	1.2	15.9
13	122+38.39	122+62.49	1.3	15.8
14	201+15.90	201+37.91	1.4	15.6
15	803+56.04	803+75.04	0.7	15.5
16	203+61.00	203+82.56	0.8	15.9
17	301+97.15	302+20.15	1.4	15.9
18	806+08.47	806+31.56	1.2	15.8
19	900+79.64	901+03.13	1.1	15.9
20	804+69.18	804+87.45	1.8	-
21	304+20.98	304+60.00	1.8	36.7
22	1004+48.03	1004+66.00	0.5	15.5
23	903+47.38	903+71.50	1.0	31.1
		TOTAL	27.7	379.6

NOTES: LIMITS OF CURB RAMP, MINOR CONCRETE, DO NOT INCLUDE LANDING AREAS AT THE TOP OF THE RAMPS. CURB RAMP CONCRETE DEPTH IS 0.33'.

* DETECTABLE WARNING SURFACE MUST MEET FEDERAL Std 595C21105

** QUANTITIES ALSO SHOWN IN MINOR CONCRETE QUANTITIES TABLE

SUMMARY OF QUANTITIES

Q-5

REVISED BY | DATE REVISED
JEANNIE STEFFAN | SHAUN ALEXANDER
CALCULATED-DESIGNED BY | CHECKED BY
FUNCTIONAL SUPERVISOR: ERIC ORR
STATE OF CALIFORNIA - DEPARTMENT OF TRANSPORTATION
Caltrans DESIGN

P:\proj2\02\0E240_plans\pse\20e240pa005.dgn

LAST REVISION 01-19-16 | DATE PLOTTED => 29-JAN-2016 | TIME PLOTTED => 10:23

Dist	COUNTY	ROUTE	POST MILES TOTAL PROJECT	SHEET No.	TOTAL SHEETS
02	Plu	89	20.0/20.6	150	235

REGISTERED CIVIL ENGINEER 01-19-16 DATE

01-19-16
PLANS APPROVAL DATE

REGISTERED PROFESSIONAL ENGINEER SHAUN ALEXANDER No. 70833 Exp. 6-30-17 CIVIL STATE OF CALIFORNIA

THE STATE OF CALIFORNIA OR ITS OFFICERS OR AGENTS SHALL NOT BE RESPONSIBLE FOR THE ACCURACY OR COMPLETENESS OF SCANNED COPIES OF THIS PLAN SHEET.

NOTE:

1. (N) - NOT A SEPARATE PAY ITEM, FOR INFORMATION ONLY

ROCK BLANKET (MODIFIED)

STATION	ROCK BLANKET (MODIFIED)
	SQFT
"A1" 12+96.64, 19.7' Rt TO 15+90.19, 25.7' Rt	905

MINOR CONCRETE (RETAINING CURB)

STATION			DESCRIPTION	(N) LENGTH (LF)	(N) WIDTH (LF)	CY
BEGIN	END					
"A1" 20+40.50	"A1" 20+41.00	Lt	CURB RAMP #5	8.2	0.5	0.07
"A1" 22+98.93	"A1" 22+99.43	Lt	DRIVEWAY	12.2	0.5	0.14
"A1" 23+19.43	"A1" 23+19.93	Lt	DRIVEWAY	12.2	0.5	0.14
"A1" 30+67.10	"A1" 30+67.60	Lt	DRIVEWAY	7.3	0.5	0.07
"A1" 30+91.60	"A1" 30+92.00	Lt	DRIVEWAY	7.3	0.5	0.07
					TOTAL	0.49

MINOR CONCRETE (RETAINING WALL)

STATION		(N) WIDTH (LF)	CY
BEGIN	END		
"A1" 33+50.06, 25.6' Rt	"A1" 33+64.04, 25.6' Rt	0.5	0.8
"A1" 33+64.04, 25.6' Rt	"A1" 34+80.60, 31.9' Rt	1.1	13.3
		TOTAL	14.1

INSTALL CELLAR DOOR

STATION	EA
"A1" 35+96.5 Lt	1.0

2" PLASTIC PIPE (SCHEDULE 40) (SUPPLY LINE)

STATION	LF
"A1" 35+98.21, 27.55' Lt TO 35+98.21, 23.76' Lt	4

ANIMAL TRACKS

LOCATION	TRACK ALIGNMENT	STAMP TYPE	LF	(N) No. OF INDIVIDUAL PRINTS
1	BLACK BEAR 1	BLACK BEAR	12.9	4
	BOBCAT 1	BOBCAT	36.5	72
	BOBCAT 2	BOBCAT	17.8	39
	MULE DEER 1	MULE DEER	12.3	28
		SUBTOTAL	79.5	143
2	BLACK BEAR 2	BLACK BEAR	18.2	6
	BLACK BEAR 3	BLACK BEAR	45.2	14
	WILD TURKEY 1	WILD TURKEY	40.9	41
		SUBTOTAL	104.3	61
3	BLACK BEAR 4	BLACK BEAR	26.0	9
	BOBCAT 3	BOBCAT	21.3	47
	WILD TURKEY 2	WILD TURKEY	40.0	40
		SUBTOTAL	87.3	96
4	MOUNTAIN LION 1	MOUNTAIN LION	62.8	37
	MULE DEER 2	MULE DEER	31.1	76
	MULE DEER 3	MULE DEER	33.2	76
	WILD TURKEY 3	WILD TURKEY	12.7	14
		SUBTOTAL	139.8	203
		TOTAL	410.9	503

SUMMARY OF QUANTITIES

Q-6

REVISED BY | DATE REVISED
JEANNIE STEFFAN | SHAUN ALEXANDER
CALCULATED-DESIGNED BY | CHECKED BY
FUNCTIONAL SUPERVISOR: ERIC ORR

STATE OF CALIFORNIA - DEPARTMENT OF TRANSPORTATION
Caltrans
DESIGN

P:\proj2\02\0E240_plans\pse\20e240pa006.dgn

LAST REVISION 01-19-16 | DATE PLOTTED => 29-JAN-2016 | TIME PLOTTED => 10:23

Dist	COUNTY	ROUTE	POST MILES TOTAL PROJECT	SHEET No.	TOTAL SHEETS
02	Plu	89	20.0/20.6	151	235

REGISTERED CIVIL ENGINEER 01-19-16 DATE

01-19-16
PLANS APPROVAL DATE

REGISTERED PROFESSIONAL ENGINEER SHAUN ALEXANDER No. 70833 Exp. 6-30-17 CIVIL STATE OF CALIFORNIA

THE STATE OF CALIFORNIA OR ITS OFFICERS OR AGENTS SHALL NOT BE RESPONSIBLE FOR THE ACCURACY OR COMPLETENESS OF SCANNED COPIES OF THIS PLAN SHEET.

NOTES:

1. (N) - NOT A SEPARATE PAY ITEM, FOR INFORMATION ONLY

MINOR CONCRETE QUANTITIES

STATION				MINOR CONCRETE (SIDEWALK)	MINOR CONCRETE (COLORED CONCRETE)	MINOR CONCRETE (TEXTURED PAVING)	MINOR CONCRETE (DRIVEWAY)
LINE	R†/L†	BEGIN	END	CY	CY	CY	CY
"EP1"	L†	104+62.43	105+64.21	9.9			
"EP1"	L†	105+64.21	105+99.21				3.3
"EP1"	L†	105+99.21	106+98.47	6.1			
"EP1"	L†	106+98.47	107+46.58		4.4		
"EP1"	L†	107+46.58	107+58.30	0.7			
"EP1"	L†	107+58.30	107+93.38				3.3
"EP1"	L†	107+93.38	109+14.33	7.4			
"EP1"	L†	109+14.33	109+49.33				3.3
"EP1"	L†	109+49.33	110+00.90	3.2			
"EP1"	L†	100+00.90	110+69.76	1.1			
"EP1"	L†	110+69.76	110+88.07		6.9		
"EP1"	L†	110+88.07	111+23.07				3.3
"EP1"	L†	111+23.07	111+68.09	2.8			
"EP1"	L†	111+68.09	111+92.09				2.2
"EP1"	L†	111+92.09	112+98.78	7.5			
"EP1"	L†	112+98.78	113+18.78				7.6
"EP1"	L†	113+18.78	114+07.60	6.5			
"EP1"	L†	114+07.60	114+19.60				1.4
"EP1"	L†	114+19.60	114+49.31	1.8			
"EP1"	L†	114+49.31	114+69.31				1.9
"EP1"	L†	114+69.31	115+21.02	3.1			
"EP1"	L†	115+21.02	115+77.62		4.8		
"EP1"	L†	115+77.62	115+83.31	0.4			
"EP1"	L†	115+83.31	116+18.31				1.9
"EP1"	L†	116+18.31	117+24.42	6.7			
"EP1"	L†	117+24.42	117+44.72				1.9
"EP1"	L†	117+44.72	117+72.91	2.0			
"EP1"	L†	117+72.91	117+92.91				2.2
"EP1"	L†	117+92.91	118+49.51	4.4			
"EP1"	L†	118+49.51	118+97.71		4.8		
"EP1"	L†	119+97.71	119+52.46	3.6			
"EP1"	L†	119+52.46	120+02.46				4.0
"EP1"	L†	120+02.46	120+25.14	1.7			
"EP1"	L†	120+25.14	120+40.14				1.9
"EP1"	L†	120+40.14	121+68.50	12.0			
"EP1"	L†	121+68.50	121+92.50				2.2
"EP1"	L†	121+92.50	122+24.85	2.0			
"EP1"	L†	122+24.85	122+76.40		3.2		
"EP2"	L†	200+63.00	200+67.77	0.3			
"EP2"	L†	200+67.77	200+87.77				1.9
"EP2"	L†	200+87.77	201+73.09		14.7		

MINOR CONCRETE QUANTITIES (CONTINUED)

STATION				MINOR CONCRETE (SIDEWALK)	MINOR CONCRETE (COLORED CONCRETE)	MINOR CONCRETE (TEXTURED PAVING)	MINOR CONCRETE (DRIVEWAY)
LINE	R†/L†	BEGIN	END	CY	CY	CY	CY
"EP2"	L†	201+73.09	202+27.28				8.1
"EP2"	L†	202+27.28	203+21.49	7.2			
"EP2"	L†	203+21.49	204+26.23			10.3	
"EP3"	L†	301+49.65	302+61.23			11.4	
"EP3"	L†	302+61.23	304+55.03	13.6			
"EP10"	L†	1004+37.78	1005+46.04	7.4			
"EP5"	R†	500+95.42	501+26.67	2.1			
"EP5"	R†	501+26.67	501+72.18		3.9		
"EP5"	R†	501+72.18	505+54.88	24.1			
"EP5"	R†	505+54.88	505+89.88				3.3
"EP5"	R†	505+89.88	506+26.87	4.3			
"EP5"	R†	506+26.87	506+75.19		5.1		
"EP5"	R†	506+75.19	507+07.14	1.9			
"EP5"	R†	507+07.14	507+42.14				3.2
"EP5"	R†	507+42.14	509+39.25	14.1			
"EP5"	R†	509+39.25	510+26.22		7.6		
"EP5"	R†	510+26.22	510+74.71	0.6			
"EP6"	R†	600+21.62	601+09.43		6.5		
"EP6"	R†	601+09.43	601+23.03	1.3			
"EP6"	R†	601+23.03	601+48.03				2.3
"EP6"	R†	601+48.03	601+82.48	2.1			
"EP6"	R†	601+82.48	602+07.48				2.3
"EP6"	R†	602+07.48	603+16.12	8.8			
"EP6"	R†	603+16.12	603+31.12				1.4
"EP6"	R†	603+31.12	603+94.21	3.9			
"EP6"	R†	603+94.21	604+09.21				1.4
"EP6"	R†	604+09.21	604+84.73	4.6			
"EP6"	R†	604+84.73	605+71.90		7.0		
"EP7"	R†	7+18.00	8+17.24		8.0		
"EP7"	R†	8+17.24	9+29.64	7.6			
"EP7"	R†	9+29.64	9+49.64				1.9
"EP7"	R†	9+49.64	9+71.38	1.3			
"EP7"	R†	9+71.38	9+93.38				2.1
"EP7"	R†	9+93.38	10+80.85		7.5		
"EP7"	R†	10+80.85	11+04.94				2.2
"EP7"	R†	11+04.94	11+18.18	0.8			
"EP8"	R†	800+13.91	800+97.67		4.7		
"EP8"	R†	800+97.67	801+32.67				3.2
"EP8"	R†	801+32.67	801+98.17	4.1			
"EP8"	R†	801+98.17	802+22.17				3.2
			SUBTOTAL	193.0	89.1	21.7	76.9

SUMMARY OF QUANTITIES

Q-7

REVISED BY | DATE REVISED
JEANNIE STEFFAN | SHAUN ALEXANDER
CALCULATED-DESIGNED BY | CHECKED BY
FUNCTIONAL SUPERVISOR: ERIC ORR

STATE OF CALIFORNIA - DEPARTMENT OF TRANSPORTATION
Caltrans® DESIGN

P:\proj2\02\0E240_plans\pse\20e240pa007.dgn

LAST REVISION 01-19-16 | DATE PLOTTED => 29-JAN-2016 | TIME PLOTTED => 10:23

Dist	COUNTY	ROUTE	POST MILES TOTAL PROJECT	SHEET No.	TOTAL SHEETS
02	Plu	89	20.0/20.6	152	235

REGISTERED CIVIL ENGINEER 01-19-16 DATE

01-19-16
PLANS APPROVAL DATE

REGISTERED PROFESSIONAL ENGINEER SHAUN ALEXANDER No. 70833 Exp. 6-30-17 CIVIL STATE OF CALIFORNIA

THE STATE OF CALIFORNIA OR ITS OFFICERS OR AGENTS SHALL NOT BE RESPONSIBLE FOR THE ACCURACY OR COMPLETENESS OF SCANNED COPIES OF THIS PLAN SHEET.

NOTES:

1. (N) - NOT A SEPARATE PAY ITEM, FOR INFORMATION ONLY

MINOR CONCRETE QUANTITIES (CONTINUED)

STATION				MINOR CONCRETE (SIDEWALK)	MINOR CONCRETE (COLORED CONCRETE)	MINOR CONCRETE (TEXTURED PAVING)	MINOR CONCRETE (DRIVEWAY)
LINE	R†/L†	BEGIN	END	CY	CY	CY	CY
"EP8"	R†	802+22.17	802+52.34	3.5			
"EP8"	R†	802+52.34	802+70.84				1.7
"EP8"	R†	802+70.84	802+94.51	1.5			
"EP8"	R†	802+94.51	803+44.51				4.6
"EP8"	R†	803+44.51	804+09.83	4.0			
"EP8"	R†	804+09.83	804+44.83				3.3
"EP8"	R†	804+44.83	805+69.44	10.2			
"EP8"	R†	805+69.44	806+73.78			12.2	
"EP9"	R†	900+42.05	901+42.35			8.7	
"EP9"	R†	901+42.35	902+66.95	8.4			
"EP9"	R†	902+66.95	902+84.95				1.8
"EP9"	R†	902+84.95	902+97.25	0.3			
"EP9"	R†	902+97.25	903+47.25				5.8
"EP9"	R†	903+47.25	903+75.00	0.9			
SUBTOTAL				28.8		20.9	17.2
SUBTOTAL (PREVIOUS TABLE)				193.0	89.1	21.7	76.9
CURB RAMPS QUANTITY				27.7			
TOTAL				249.5	89.1	42.6	94.1

SUMMARY OF QUANTITIES

Q-8

REVISED BY | DATE REVISED
JEANNIE STEFFAN | SHAUN ALEXANDER
CALCULATED-DESIGNED BY | CHECKED BY
FUNCTIONAL SUPERVISOR: ERIC ORR

STATE OF CALIFORNIA - DEPARTMENT OF TRANSPORTATION
Caltrans DESIGN

P:\proj2\02\0E240_plans\pse\20e240pa008.dgn

LAST REVISION 01-19-16 | DATE PLOTTED => 29-JAN-2016 | TIME PLOTTED => 10:23

Dist	COUNTY	ROUTE	POST MILES TOTAL PROJECT	SHEET No.	TOTAL SHEETS
02	Plu	89	20.0/20.6	153	235

REGISTERED CIVIL ENGINEER 01-19-16 DATE

01-19-16
PLANS APPROVAL DATE

REGISTERED PROFESSIONAL ENGINEER SHAUN ALEXANDER No. 70833 Exp. 6-30-17 CIVIL STATE OF CALIFORNIA

THE STATE OF CALIFORNIA OR ITS OFFICERS OR AGENTS SHALL NOT BE RESPONSIBLE FOR THE ACCURACY OR COMPLETENESS OF SCANNED COPIES OF THIS PLAN SHEET.

NOTE:

1. (N) - NOT A SEPARATE PAY ITEM, FOR INFORMATION ONLY

SIDEWALK AND DRIVEWAY CONFORM (Lt OF A1 LINE)

STATION	LT/RT	(N) LENGTH (LF)	(N) WIDTH (LF)	PLACE HMA (Misc AREA) (SQYD)	COLD PLANE ASPHALT CONCRETE PAVEMENT (SQYD)	DESCRIPTION
"A1" 14+61.75 TO 15+36.70	Lt	75.0	12	100.0	26.0	SIDEWALK CONFORM
"A1" 15+36.70 TO 15+63.53	Lt	26.8	12	35.7	8.9	SIDEWALK CONFORM
"A1" 15+63.53 TO 15+98.53	Lt	35.0	6	23.3	19.4	DRIVEWAY CONFORM
"A1" 15+98.53 TO 16+02.00	Lt	3.5	6	2.3	1.2	SIDEWALK CONFORM
"A1" 16+02.00 TO 16+19.90	Lt	17.9	3	6.0	6.0	SIDEWALK CONFORM
"A1" 16+19.90 TO 16+30.60	Lt	10.7	8	9.5	3.6	SIDEWALK CONFORM
"A1" 16+30.60 TO 17+01.20	Lt	70.6	6	47.1	23.5	SIDEWALK CONFORM
"A1" 17+01.20 TO 17+58.12	Lt	35.0	3.2	12.4	11.7	SIDEWALK CONFORM
"A1" 17+58.12 TO 17+93.12	Lt	35.0	5.4	21.2	19.4	DRIVEWAY CONFORM
"A1" 17+94.23 TO 18+20.44	Lt	26.2	5.4	15.7	8.7	SIDEWALK CONFORM
"A1" 18+29.75 TO 18+99.64	Lt	69.9	4	31.1	23.3	SIDEWALK CONFORM
"A1" 19+08.98 TO 19+18.00	Lt	9.0	4	4.0	3.0	SIDEWALK CONFORM
"A1" 19+18.00 TO 19+53.70	Lt	35.0	4	15.6	19.4	DRIVEWAY CONFORM
"A1" 19+53.70 TO 19+82.10	Lt	28.4	4	12.6	9.5	SIDEWALK CONFORM
"A1" 19+91.09 TO 20+05.27	Lt	14.2	3	4.7	4.7	SIDEWALK CONFORM
"A1" 20+05.27 TO 20+69.90	Lt	64.5	3	21.5	21.5	SIDEWALK CONFORM
"A1" 20+78.90 TO 20+88.22	Lt	9.3	9	9.3	3.1	SIDEWALK CONFORM
"A1" 20+88.22 TO 21+23.22	Lt	35.0	9	35.0	19.4	DRIVEWAY CONFORM
"A1" 21+23.22 TO 21+51.54	Lt	28.3	9	28.3	9.4	SIDEWALK CONFORM
"A1" 21+60.60 TO 21+68.24	Lt	7.6	9	7.6	2.5	SIDEWALK CONFORM
"A1" 21+68.24 TO 21+92.24	Lt	24.0	9	24.0	13.3	DRIVEWAY CONFORM
"A1" 21+92.24 TO 22+07.63	Lt	15.4	9	15.4	5.1	SIDEWALK CONFORM
"A1" 24+47.96 TO 24+67.96	Lt	20.0	4.2	9.3	11.1	DRIVEWAY CONFORM
"A1" 24+67.96 TO 24+81.60	Lt	13.6	4.2	6.3	4.5	SIDEWALK CONFORM
"A1" 24+88.60 TO 25+19.63	Lt	31.0	4.2	14.5	10.3	SIDEWALK CONFORM
"A1" 25+26.63 TO 25+65.03	Lt	38.4	3	12.8	12.8	SIDEWALK CONFORM
"A1" 25+72.03 TO 25+77.73	Lt	5.7	5	3.2	1.9	SIDEWALK CONFORM

SIDEWALK AND DRIVEWAY CONFORM (Lt OF A1 LINE)

STATION	LT/RT	(N) LENGTH (LF)	(N) WIDTH (LF)	PLACE HMA (Misc AREA) (SQYD)	COLD PLANE ASPHALT CONCRETE PAVEMENT (SQYD)	DESCRIPTION
"A1" 25+77.73 TO 26+12.73	Lt	35.0	5	19.4	19.4	DRIVEWAY CONFORM
"A1" 26+12.73 TO 26+20.43	Lt	7.7	5	4.3	2.6	SIDEWALK CONFORM
"A1" 26+27.43 TO 26+54.83	Lt	27.4	4	12.2	9.1	SIDEWALK CONFORM
"A1" 27+18.87 TO 27+38.87	Lt	20.0	4.5	10.0	11.1	DRIVEWAY CONFORM
"A1" 27+38.87 TO 27+60.32	Lt	21.5	5.8	13.9	7.2	SIDEWALK CONFORM
"A1" 27+60.31 TO 27+67.32	Lt	7.0	4.5	3.5	2.3	SIDEWALK CONFORM
"A1" 27+67.32 TO 27+87.32	Lt	20.0	4.5	10.0	11.1	DRIVEWAY CONFORM
"A1" 29+43.09 TO 29+61.09	Lt	25.0	4	11.1	13.9	DRIVEWAY CONFORM
"A1" 29+61.09 TO 29+93.09	Lt	25.0	4	11.1	8.3	DRIVEWAY CONFORM
"A1" 29+93.09 TO 29+95.37	Lt	2.2	4	1.0	0.7	SIDEWALK CONFORM
"A1" 29+95.37 TO 30+13.67	Lt	18.3	2.4	4.8	6.1	SIDEWALK CONFORM
"A1" 30+13.67 TO 30+15.36	Lt	1.7	4	.8	0.6	SIDEWALK CONFORM
"A1" 30+15.36 TO 30+30.36	Lt	15.0	4	6.7	8.3	DRIVEWAY CONFORM
"A1" 30+30.36 TO 30+46.41	Lt	16.1	4	7.2	5.4	SIDEWALK CONFORM
"A1" 31+42.91 TO 31+58.73	Lt	15.6	6	10.4	5.2	SIDEWALK CONFORM
"A1" 31+58.73 TO 31+82.73	Lt	24.0	6	16.0	13.3	DRIVEWAY CONFORM
"A1" 31+82.73 TO 32+02.12	Lt	19.4	6	12.9	6.5	SIDEWALK CONFORM
"A1" 33+18.42 TO 33+67.04	Lt	48.6	13.2	71.2	27.0	DRIVEWAY CONFORM
"C1" 5100+54.39 TO 5100+61.81	Lt	20.0	3	6.7	11.1	DRIVEWAY CONFORM
"C1" 5100+61.81 TO 5100+66.98	Lt	22.7	3	7.6	7.6	SIDEWALK CONFORM
TOTAL (Lt OF A1 LINE)				769.2	480.0	

SUMMARY OF QUANTITIES

Q-9

REVISED BY	DATE REVISED

CALCULATED-DESIGNED BY	CHECKED BY
JEANNIE STEFFAN	SHAUN ALEXANDER

FUNCTIONAL SUPERVISOR: ERIC ORR

STATE OF CALIFORNIA - DEPARTMENT OF TRANSPORTATION

Caltrans® DESIGN

P:\proj2\02\0E240_plans\pse\20e240pa009.dgn

LAST REVISION 01-19-16 | DATE PLOTTED => 29-JAN-2016 | TIME PLOTTED => 10:23

Dist	COUNTY	ROUTE	POST MILES TOTAL PROJECT	SHEET No.	TOTAL SHEETS
02	Plu	89	20.0/20.6	154	235

REGISTERED CIVIL ENGINEER 01-19-16 DATE

01-19-16
PLANS APPROVAL DATE

REGISTERED PROFESSIONAL ENGINEER SHAUN ALEXANDER No. 70833 Exp. 6-30-17 CIVIL STATE OF CALIFORNIA

THE STATE OF CALIFORNIA OR ITS OFFICERS OR AGENTS SHALL NOT BE RESPONSIBLE FOR THE ACCURACY OR COMPLETENESS OF SCANNED COPIES OF THIS PLAN SHEET.

NOTE:

1. (N) - NOT A SEPARATE PAY ITEM, FOR INFORMATION ONLY

SIDEWALK AND DRIVEWAY CONFORM (Rt OF A1 LINE)

STATION	LT/RT	(N) LENGTH (LF)	(N) WIDTH (LF)	* PLACE HMA (Misc AREA) (SQYD)	** COLD PLANE ASPHALT CONCRETE PAVEMENT (SQYD)	DESCRIPTION
"A1" 16+31.93 TO 16+66.93	Rt	35.0	3.4	13.2	19.4	DRIVEWAY CONFORM
"A1" 17+76.55 TO 18+11.55	Rt	35.0	6.5	25.3	19.4	DRIVEWAY CONFORM
"G1" 2100+40.96 TO 2100+72.50	Lt	31.5	4.5	15.7	10.5	SIDEWALK CONFORM
"A1" 21+00.70 TO 21+43.90	Rt	43.9	6	29.3	14.6	SIDEWALK CONFORM
"A1" 21+45.56 TO 21+70.56	Rt	25.0	6	16.7	13.9	DRIVEWAY CONFORM
"A1" 21+70.56 TO 21+99.40	Rt	28.8	6	19.2	9.6	SIDEWALK CONFORM
"A1" 22+03.40 TO 22+05.01	Rt	1.6	7.5	1.3	0.5	SIDEWALK CONFORM
"A1" 22+05.01 TO 22+30.01	Rt	25.0	7.5	20.8	13.9	DRIVEWAY CONFORM
"A1" 22+30.01 TO 22+31.36	Rt	1.4	7.5	1.2	0.5	SIDEWALK CONFORM
"A1" 23+38.72 TO 23+53.72	Rt	15.0	6.3	10.5	8.3	DRIVEWAY CONFORM
"A1" 23+53.72 TO 23+89.71	Rt	36.0	6.3	25.2	12.0	SIDEWALK CONFORM
"A1" 27+44.79 TO 27+56.71	Rt	11.9	8	10.6	4.0	SIDEWALK CONFORM
"A1" 27+56.71 TO 27+76.71	Rt	20.0	8	17.8	11.1	DRIVEWAY CONFORM
"A1" 27+76.71 TO 27+87.47	Rt	10.8	8	9.6	3.6	SIDEWALK CONFORM
"A1" 27+95.47 TO 27+98.47	Rt	3.0	9	3.0	1.0	SIDEWALK CONFORM
"A1" 27+98.47 TO 28+20.47	Rt	22.0	9	22.0	12.2	DRIVEWAY CONFORM
"P1" 4100+38.34 TO 4100+45.14	Rt	18.5	2.8	5.8	6.2	SIDEWALK CONFORM
"P1" 4100+45.14 TO 4100+63.15	Rt	24.0	2.8	7.5	13.3	DRIVEWAY CONFORM
"P1" 4100+63.15 TO 4100+89.10	Rt	26.0	2.8	8.1	8.7	SIDEWALK CONFORM
"A1" 29+54.89 TO 29+67.60	Rt	12.7	10.8	15.2	4.2	SIDEWALK CONFORM
"A1" 29+67.60 TO 30+02.60	Rt	35.0	10.8	42.0	19.4	DRIVEWAY CONFORM
"A1" 30+02.60 TO 30+11.61	Rt	9.0	10.8	10.8	3.0	SIDEWALK CONFORM
"A1" 30+11.61 TO 30+32.49	Rt	20.9	7.1	16.5	7.0	SIDEWALK CONFORM
"A1" 30+32.49 TO 30+40.88	Rt	8.4	3.3	3.1	2.8	SIDEWALK CONFORM
"A1" 31+22.30 TO 31+40.80	Rt	18.5	7.2	14.8	10.3	DRIVEWAY CONFORM
"A1" 31+40.80 TO 31+48.80	Rt	8.0	7.2	6.4	2.7	SIDEWALK CONFORM
"A1' 31+54.80 TO 31+64.44	Rt	9.6	5	5.3	3.2	SIDEWALK CONFORM
"A1" 31+64.44 TO 32+13.76	Rt	50.0	5	27.8	27.8	DRIVEWAY CONFORM
"A1" 32+13.76 TO 32+49.48	Rt	35.7	5	19.8	11.9	SIDEWALK CONFORM
"A1" 32+65.09 TO 32+85.86	Rt	20.8	5	11.6	6.9	SIDEWALK CONFORM
"A1" 32+85.86 TO 33+24.33	Rt	35.0	5	19.4	19.4	DRIVEWAY CONFORM
"A1" 33+24.33 TO 33+53.08	Rt	28.8	5	28.8	9.6	SIDEWALK CONFORM
"A1" 37+25.25 TO 37+26.48	Rt	1.2	7	0.9	0.4	SIDEWALK CONFORM
"A1" 37+26.48 TO 37+44.48	Rt	18.0	7	14	10.0	DRIVEWAY CONFORM
			TOTAL (Rt OF A1 LINE)	499.2	321.3	
			TOTAL (Lt OF A1 LINE)	769.2	480.0	
			GRAND TOTAL	1268.4	801.3	

* ADDITIONAL QUANTITIES SHOWN IN PLACE HMA (Misc AREA) SUMMARY OF QUANTITES TABLE
** ADDITIONAL QUANTITIES SHOWN IN COLD PLACE AC PAVEMENT SUMMARY OF QUANTITIES TABLE

SUMMARY OF QUANTITES

Q-10

REVISED BY | DATE REVISED
JEANNIE STEFFAN | SHAUN ALEXANDER
CALCULATED-DESIGNED BY | CHECKED BY
FUNCTIONAL SUPERVISOR: ERIC ORR
STATE OF CALIFORNIA - DEPARTMENT OF TRANSPORTATION
Caltrans DESIGN
P:\proj2\02\0E240_plans\pse\20e240pa010.dgn

LAST REVISION 01-19-16 | DATE PLOTTED => 29-JAN-2016 | TIME PLOTTED => 10:23

Dist	COUNTY	ROUTE	POST MILES TOTAL PROJECT	SHEET No.	TOTAL SHEETS
02	Plu	89	20.0/20.6	155	235

LICENSED LANDSCAPE ARCHITECT

01-19-16
PLANS APPROVAL DATE

LICENSED LANDSCAPE ARCHITECT
RONALD MARTIN FLORY
#4981
Signature
09-30-16
Renewal Date
01-19-16
Date
STATE OF CALIFORNIA

THE STATE OF CALIFORNIA OR ITS OFFICERS OR AGENTS SHALL NOT BE RESPONSIBLE FOR THE ACCURACY OR COMPLETENESS OF SCANNED COPIES OF THIS PLAN SHEET.

NOTE:

1. FOR ACCURATE RIGHT OF WAY DATA, CONTACT RIGHT OF WAY ENGINEERING AT THE DISTRICT OFFICE.

LEGEND:

- EROSION CONTROL (TYPE 1)
- EROSION CONTROL (TYPE 2)
- WOOD MULCH
- MASONRY UNIT PAVERS
- PLACE BOULDER
- IMPORTED TOPSOIL

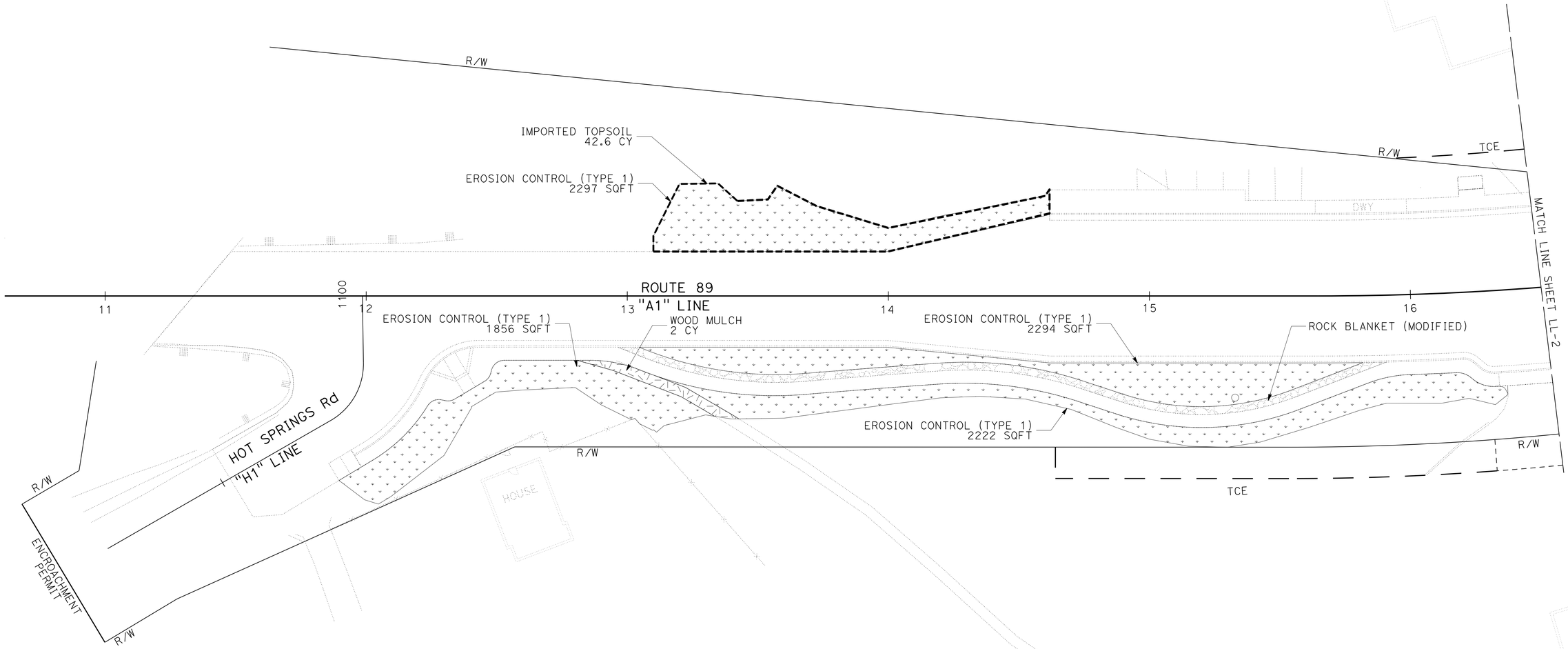

LANDSCAPE LAYOUT AND EROSION CONTROL PLAN

SCALE: 1" = 20'

LL-1

APPROVED FOR LANDSCAPE AND EROSION CONTROL WORK ONLY

REVISED BY	DATE REVISED
ROBIN SOLARI	LOGAN MOORE
CALCULATED-DESIGNED BY	CHECKED BY
SENIOR LANDSCAPE ARCHITECT	RON FLORY

STATE OF CALIFORNIA - DEPARTMENT OF TRANSPORTATION
Caltrans® LANDSCAPE ARCHITECTURE

P:\proj2\02\0E240_plans\pse\20e240sk001.dgn

LAST REVISION 01-19-16 | DATE PLOTTED => 29-JAN-2016 | TIME PLOTTED => 10:23

Dist	COUNTY	ROUTE	POST MILES TOTAL PROJECT	SHEET No.	TOTAL SHEETS
02	Plu	89	20.0/20.6	156	235

LICENSED LANDSCAPE ARCHITECT

01-19-16
PLANS APPROVAL DATE

LICENSED LANDSCAPE ARCHITECT
RONALD MARTIN FLORY
#4981
Signature
09-30-16
Renewal Date
01-19-16
Date
STATE OF CALIFORNIA

THE STATE OF CALIFORNIA OR ITS OFFICERS OR AGENTS SHALL NOT BE RESPONSIBLE FOR THE ACCURACY OR COMPLETENESS OF SCANNED COPIES OF THIS PLAN SHEET.

NOTE:

1. FOR ACCURATE RIGHT OF WAY DATA, CONTACT RIGHT OF WAY ENGINEERING AT THE DISTRICT OFFICE.

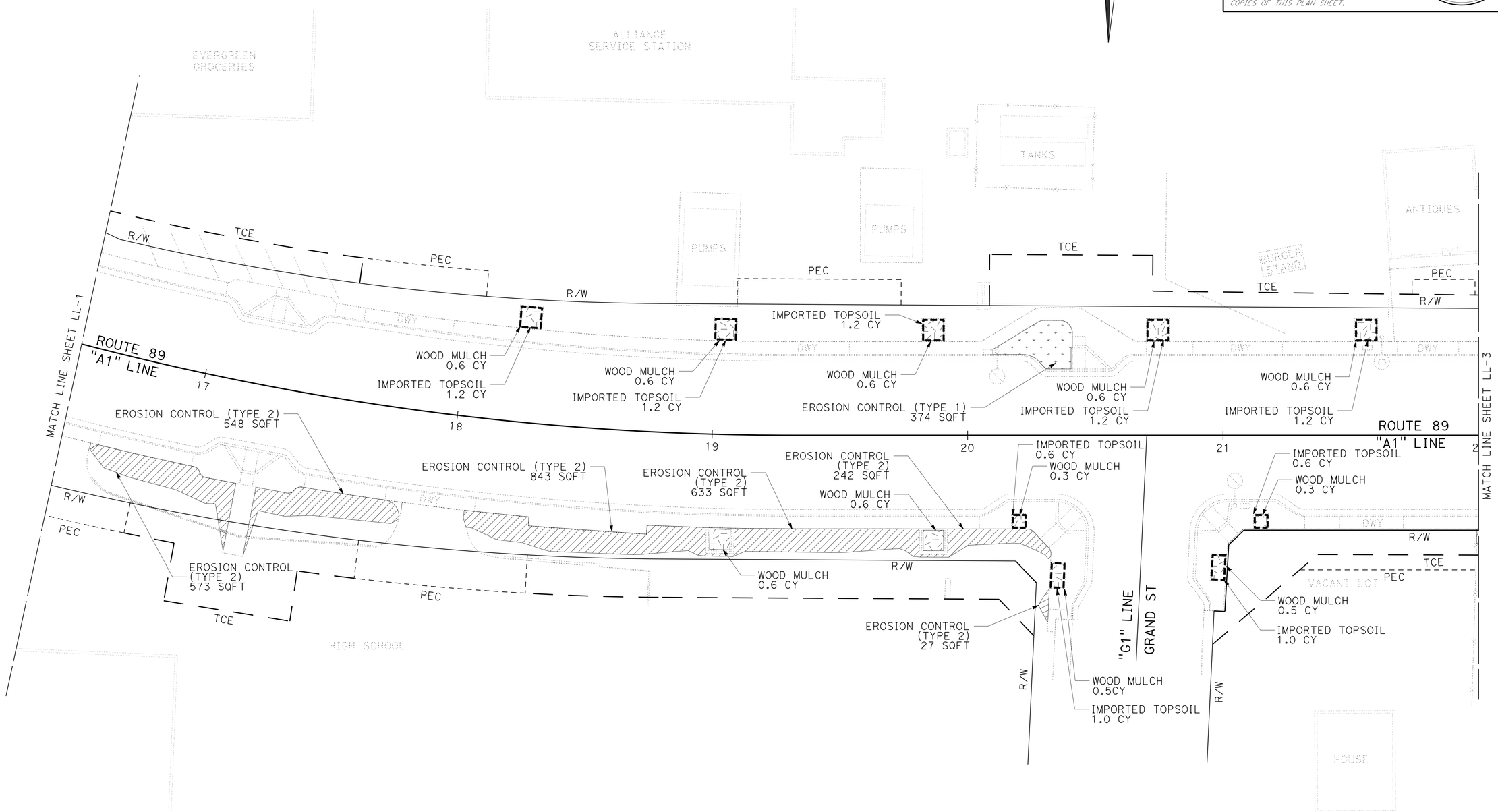

LANDSCAPE LAYOUT AND EROSION CONTROL PLAN

SCALE: 1" = 20'

LL-2

APPROVED FOR LANDSCAPE AND EROSION CONTROL WORK ONLY

REVISED BY	DATE REVISED
ROBIN SOLARI	LOGAN MOORE

CALCULATED-DESIGNED BY | CHECKED BY

SENIOR LANDSCAPE ARCHITECT: RON FLORY

STATE OF CALIFORNIA - DEPARTMENT OF TRANSPORTATION
Caltrans® LANDSCAPE ARCHITECTURE

P:\proj2\02\0E240_plans\pse\20e240sk002.dgn

LAST REVISION 01-19-16 | DATE PLOTTED => 29-JAN-2016 | TIME PLOTTED => 10:23

Dist	COUNTY	ROUTE	POST MILES TOTAL PROJECT	SHEET No.	TOTAL SHEETS
02	Plu	89	20.0/20.6	157	235

LICENSED LANDSCAPE ARCHITECT

01-19-16
PLANS APPROVAL DATE

LICENSED LANDSCAPE ARCHITECT
RONALD MARTIN FLORY
#4981
Signature
09-30-16
Renewal date
01-19-16
Date
STATE OF CALIFORNIA

THE STATE OF CALIFORNIA OR ITS OFFICERS OR AGENTS SHALL NOT BE RESPONSIBLE FOR THE ACCURACY OR COMPLETENESS OF SCANNED COPIES OF THIS PLAN SHEET.

NOTE:

1. FOR ACCURATE RIGHT OF WAY DATA, CONTACT RIGHT OF WAY ENGINEERING AT THE DISTRICT OFFICE.

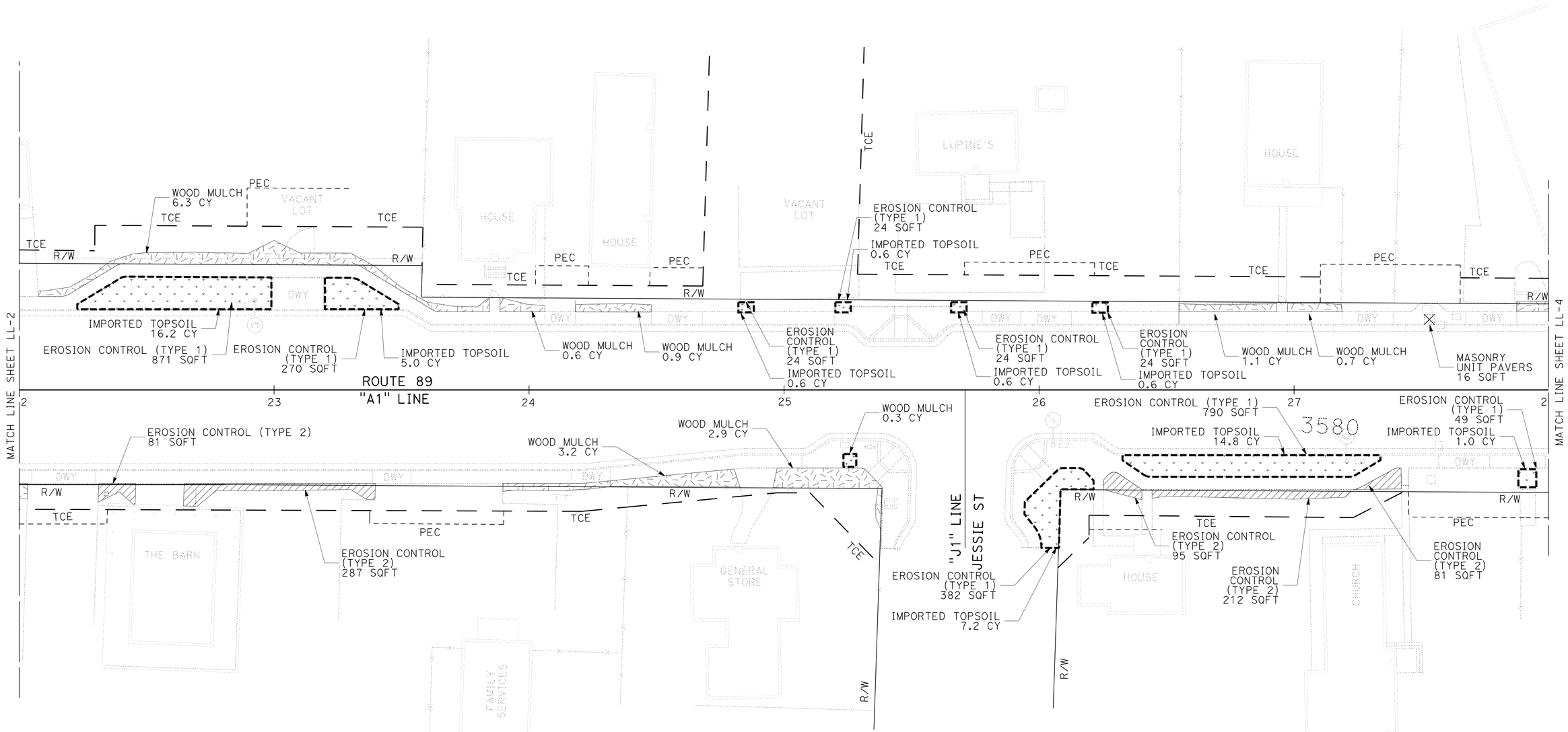

LANDSCAPE LAYOUT AND EROSION CONTROL PLAN

SCALE: 1" = 20'

LL-3

APPROVED FOR LANDSCAPE AND EROSION CONTROL WORK ONLY

REVISED BY	DATE REVISED
ROBIN SOLARI	LOGAN MOORE

CALCULATED-DESIGNED BY | CHECKED BY

SENIOR LANDSCAPE ARCHITECT: RON FLORY

STATE OF CALIFORNIA - DEPARTMENT OF TRANSPORTATION
Caltrans® LANDSCAPE ARCHITECTURE

P:\proj2\02\0E240_plans\pse\20e240sk003.dgn

LAST REVISION 01-19-16 | DATE PLOTTED => 29-JAN-2016 | TIME PLOTTED => 10:23

Dist	COUNTY	ROUTE	POST MILES TOTAL PROJECT	SHEET No.	TOTAL SHEETS
02	Plu	89	20.0/20.6	158	235

LICENSED LANDSCAPE ARCHITECT

01-19-16
PLANS APPROVAL DATE

LICENSED LANDSCAPE ARCHITECT RONALD MARTIN FLORY #4981 Signature 09-30-16 Renewal Date 01-19-16 Date STATE OF CALIFORNIA

THE STATE OF CALIFORNIA OR ITS OFFICERS OR AGENTS SHALL NOT BE RESPONSIBLE FOR THE ACCURACY OR COMPLETENESS OF SCANNED COPIES OF THIS PLAN SHEET.

NOTE:

1. FOR ACCURATE RIGHT OF WAY DATA, CONTACT RIGHT OF WAY ENGINEERING AT THE DISTRICT OFFICE.

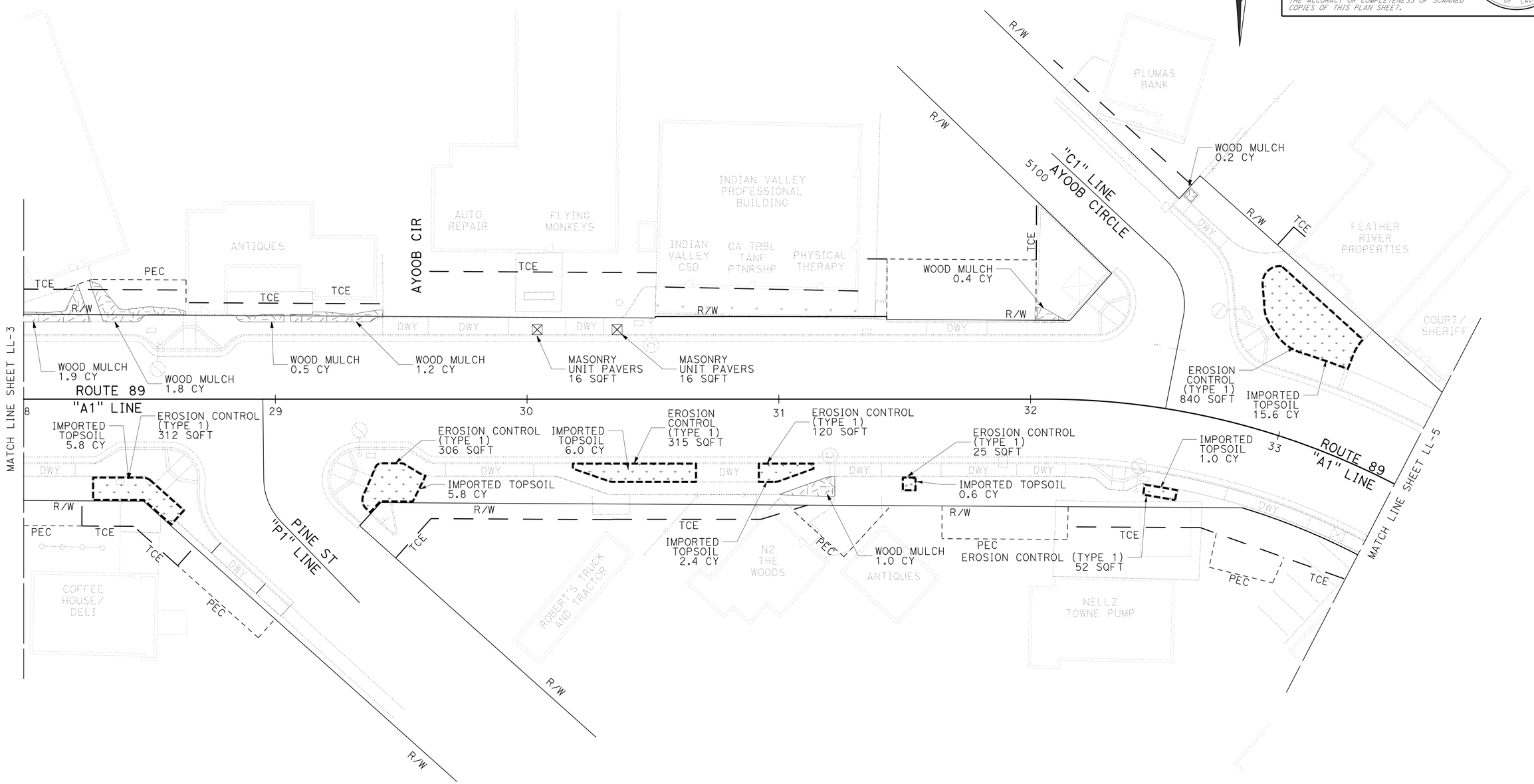

LANDSCAPE LAYOUT AND EROSION CONTROL PLAN

SCALE: 1" = 20'

LL-4

APPROVED FOR LANDSCAPE AND EROSION CONTROL WORK ONLY

STATE OF CALIFORNIA - DEPARTMENT OF TRANSPORTATION
Caltrans® LANDSCAPE ARCHITECTURE

SENIOR LANDSCAPE ARCHITECT: RON FLORY
CALCULATED-DESIGNED BY: LOGAN MOORE
CHECKED BY: ROBIN SOLARI
REVISED BY
DATE REVISED

P:\proj2\02\0E240_plans\pse\20e240sk004.dgn

LAST REVISION 01-19-16
DATE PLOTTED => 29-JAN-2016
TIME PLOTTED => 10:23

Dist	COUNTY	ROUTE	POST MILES TOTAL PROJECT	SHEET No.	TOTAL SHEETS
02	Plu	89	20.0/20.6	159	235

LICENSED LANDSCAPE ARCHITECT

01-19-16
PLANS APPROVAL DATE

LICENSED LANDSCAPE ARCHITECT
RONALD MARTIN FLORY
#4981
Signature
09-30-16
Renewal date
01-19-16
Date
STATE OF CALIFORNIA

THE STATE OF CALIFORNIA OR ITS OFFICERS OR AGENTS SHALL NOT BE RESPONSIBLE FOR THE ACCURACY OR COMPLETENESS OF SCANNED COPIES OF THIS PLAN SHEET.

NOTE:

1. FOR ACCURATE RIGHT OF WAY DATA, CONTACT RIGHT OF WAY ENGINEERING AT THE DISTRICT OFFICE.

LEGEND:

1. PLANTER 1 (SEE PLACE BOULDER DETAILS)
2. PLANTER 2 (SEE PLACE BOULDER DETAILS)
3. PLANTER 3 (SEE PLACE BOULDER DETAILS)
4. PLANTER 4 (SEE PLACE BOULDER DETAILS)

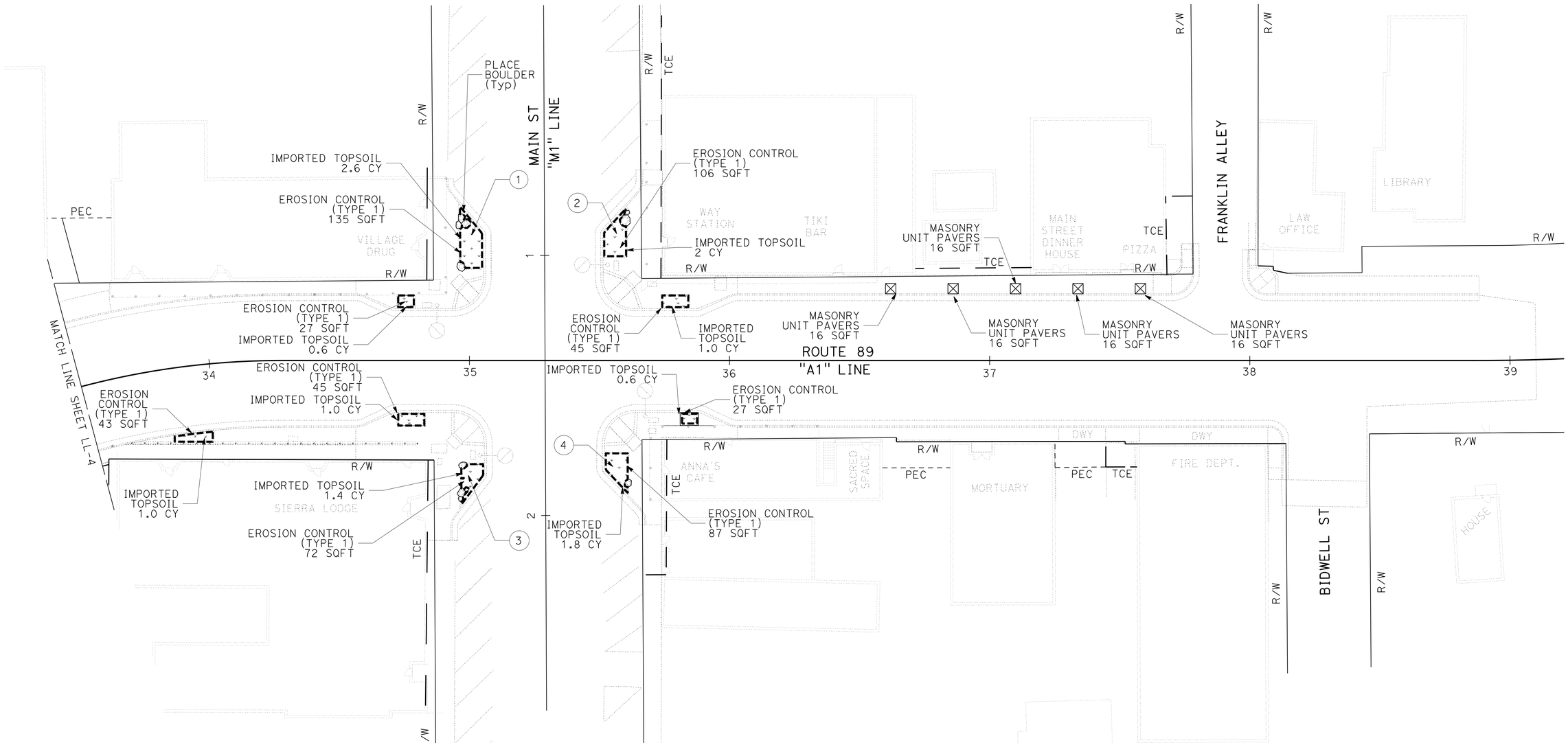

LANDSCAPE LAYOUT AND EROSION CONTROL PLAN

SCALE: 1" = 20'

LL-5

APPROVED FOR LANDSCAPE AND EROSION CONTROL WORK ONLY

REVISED BY | DATE REVISED
ROBIN SOLARI | LOGAN MOORE
CALCULATED-DESIGNED BY | CHECKED BY
SENIOR LANDSCAPE ARCHITECT | RON FLORY

STATE OF CALIFORNIA - DEPARTMENT OF TRANSPORTATION
Caltrans® LANDSCAPE ARCHITECTURE

P:\proj2\02\0E240_plans\pse\20e240sk005.dgn

LAST REVISION 01-19-16 | DATE PLOTTED => 29-JAN-2016 | TIME PLOTTED => 10:23

Dist	COUNTY	ROUTE	POST MILES TOTAL PROJECT	SHEET No.	TOTAL SHEETS
02	Plu	89	20.0/20.6	160	235

LICENSED LANDSCAPE ARCHITECT

01-19-16
PLANS APPROVAL DATE

LICENSED LANDSCAPE ARCHITECT
RONALD MARTIN FLORY
#4981
Signature
09-30-16
Renewal date
01-19-16
Date
STATE OF CALIFORNIA

THE STATE OF CALIFORNIA OR ITS OFFICERS OR AGENTS SHALL NOT BE RESPONSIBLE FOR THE ACCURACY OR COMPLETENESS OF SCANNED COPIES OF THIS PLAN SHEET.

NOTES:

1. FOR ACCURATE RIGHT OF WAY DATA, CONTACT RIGHT OF WAY ENGINEERING AT THE DISTRICT OFFICE.
2. EXISTING UTILITIES SHOWN FOR REFERENCE ONLY. ACTUAL DEPTHS AND POTENTIAL CONFLICTS MUST BE VERIFIED IN THE FIELD PRIOR TO INSTALLATION.
3. ALL WATER SUPPLY LINES MUST BE INSTALLED AT A MINIMUM OF 30" BELOW FG.
4. INSTALL PAVEMENT MARKERS (TYPE A) ON TOP OF CURBS.
5. INSTALL PULL WIRE IN ALL SPRINKLER CONTROL CONDUIT.

LEGEND:

IRRIGATION CONDUIT: CORRUGATED HIGH DENSITY POLYETHYLENE PIPE

IRRIGATION CONDUIT: PLASTIC PIPE CONDUIT (SCHEDULE 80)

(1) IRRIGATION CONDUIT NUMBER

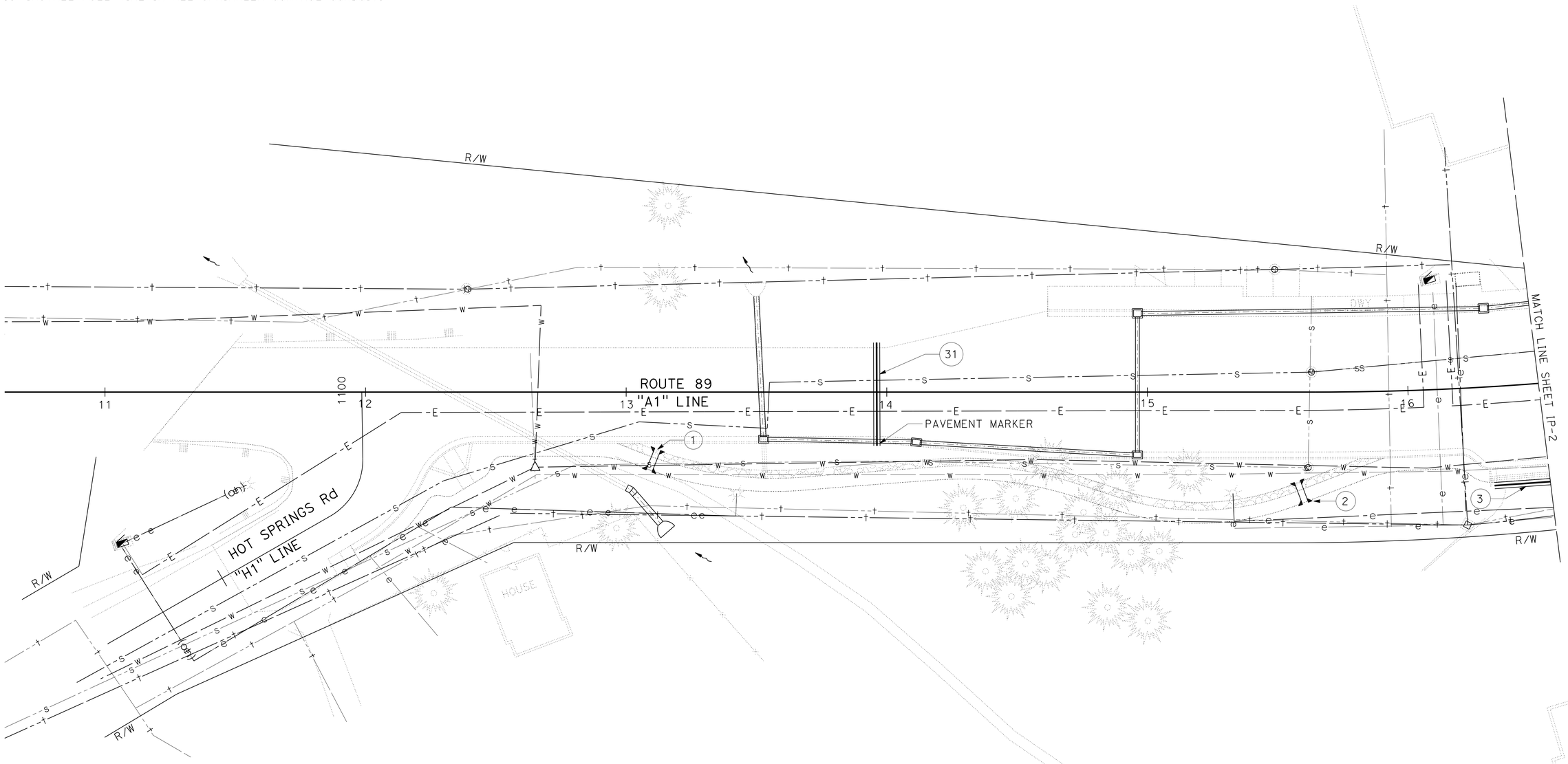

IRRIGATION PLAN

SCALE: 1" = 20'

IP-1

APPROVED FOR IRRIGATION WORK ONLY

REVISED BY	DATE REVISED

CALCULATED-DESIGNED BY: ROBIN SOLARI
CHECKED BY: LOGAN MOORE
SENIOR LANDSCAPE ARCHITECT: RON FLORY

STATE OF CALIFORNIA - DEPARTMENT OF TRANSPORTATION
Caltrans® LANDSCAPE ARCHITECTURE

P:\proj2\02\0E240_plans\pse\20e240sp001.dgn

LAST REVISION 01-19-16
DATE PLOTTED => 29-JAN-2016
TIME PLOTTED => 10:23

Dist	COUNTY	ROUTE	POST MILES TOTAL PROJECT	SHEET No.	TOTAL SHEETS
02	Plu	89	20.0/20.6	161	235

LICENSED LANDSCAPE ARCHITECT

01-19-16
PLANS APPROVAL DATE

LICENSED LANDSCAPE ARCHITECT
RONALD MARTIN FLORY
#4981
Signature
09-30-16
Renewal date
01-19-16
Date
STATE OF CALIFORNIA

THE STATE OF CALIFORNIA OR ITS OFFICERS OR AGENTS SHALL NOT BE RESPONSIBLE FOR THE ACCURACY OR COMPLETENESS OF SCANNED COPIES OF THIS PLAN SHEET.

NOTES:

1. FOR ACCURATE RIGHT OF WAY DATA, CONTACT RIGHT OF WAY ENGINEERING AT THE DISTRICT OFFICE.
2. EXISTING UTILITIES SHOWN FOR REFERENCE ONLY. ACTUAL DEPTHS AND POTENTIAL CONFLICTS MUST BE VERIFIED IN THE FIELD PRIOR TO INSTALLATION.
3. ALL WATER SUPPLY LINES MUST BE INSTALLED AT A MINIMUM OF 30" BELOW FG.
4. INSTALL PAVEMENT MARKERS (TYPE A) ON TOP OF CURBS.
5. INSTALL PULL WIRE IN ALL SPRINKLER CONTROL CONDUIT.

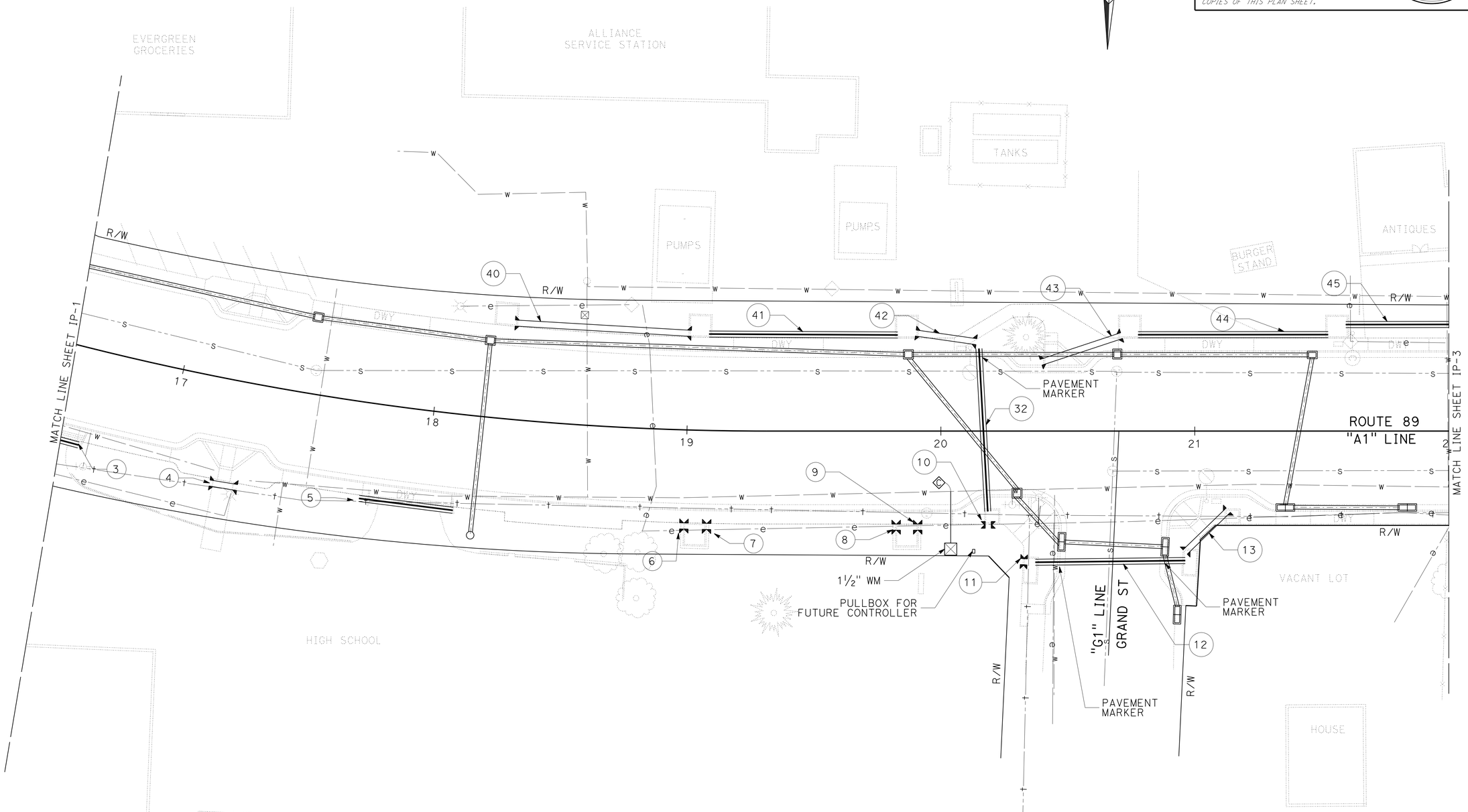

IRRIGATION PLAN

SCALE: 1" = 20'

IP-2

APPROVED FOR IRRIGATION WORK ONLY

STATE OF CALIFORNIA - DEPARTMENT OF TRANSPORTATION
Caltrans® LANDSCAPE ARCHITECTURE

SENIOR LANDSCAPE ARCHITECT: RON FLORY
CALCULATED-DESIGNED BY: ROBIN SOLARI
CHECKED BY: LOGAN MOORE
REVISED BY
DATE REVISED

P:\proj2\02\0E240_plans\pse\20e240sp002.dgn

LAST REVISION 01-19-16
DATE PLOTTED => 29-JAN-2016
TIME PLOTTED => 10:23

BORDER LAST REVISED 7/2/2010
USERNAME => s115152
DGN FILE => 20e240sp002.dgn
RELATIVE BORDER SCALE IS IN INCHES 0 1 2 3
UNIT 0382
PROJECT NUMBER & PHASE 02 1500 0146 1

Dist	COUNTY	ROUTE	POST MILES TOTAL PROJECT	SHEET No.	TOTAL SHEETS
02	Plu	89	20.0/20.6	162	235

LICENSED LANDSCAPE ARCHITECT

01-19-16
PLANS APPROVAL DATE

LICENSED LANDSCAPE ARCHITECT
RONALD MARTIN FLORY
#4981
Signature
09-30-16
Renewal date
01-19-16
Date
STATE OF CALIFORNIA

THE STATE OF CALIFORNIA OR ITS OFFICERS OR AGENTS SHALL NOT BE RESPONSIBLE FOR THE ACCURACY OR COMPLETENESS OF SCANNED COPIES OF THIS PLAN SHEET.

NOTES:

1. FOR ACCURATE RIGHT OF WAY DATA, CONTACT RIGHT OF WAY ENGINEERING AT THE DISTRICT OFFICE.
2. EXISTING UTILITIES SHOWN FOR REFERENCE ONLY. ACTUAL DEPTHS AND POTENTIAL CONFLICTS MUST BE VERIFIED IN THE FIELD PRIOR TO INSTALLATION.
3. ALL WATER SUPPLY LINES MUST BE INSTALLED AT A MINIMUM OF 30" BELOW FG.
4. INSTALL PAVEMENT MARKERS (TYPE A) ON TOP OF CURBS.
5. INSTALL PULL WIRE IN ALL SPRINKLER CONTROL CONDUIT.

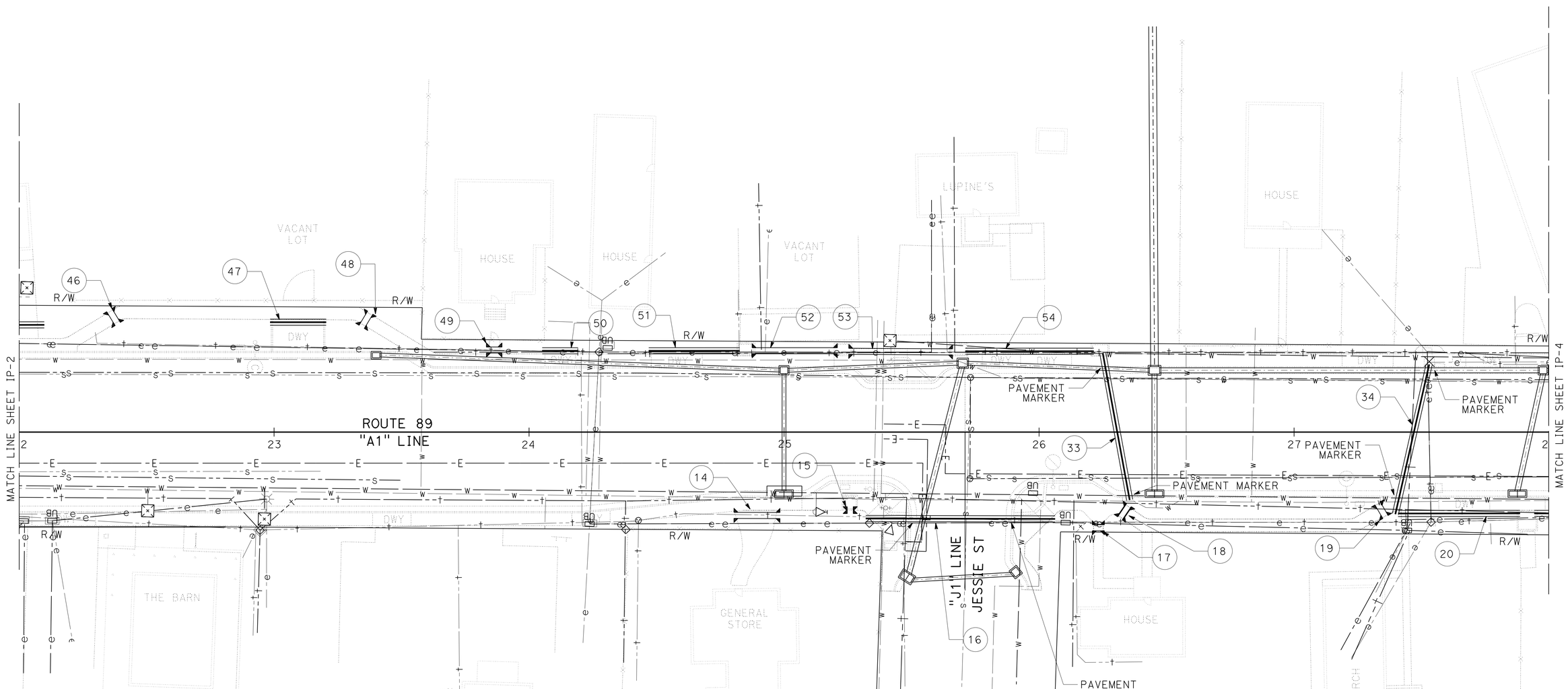

IRRIGATION PLAN

SCALE: 1" = 20'

IP-3

APPROVED FOR IRRIGATION WORK ONLY

REVISED BY	DATE REVISED
ROBIN SOLARI	LOGAN MOORE

CALCULATED- DESIGNED BY / CHECKED BY

SENIOR LANDSCAPE ARCHITECT: RON FLORY

STATE OF CALIFORNIA - DEPARTMENT OF TRANSPORTATION
Caltrans® LANDSCAPE ARCHITECTURE

P:\proj2\02\0E240_plans\pse\20e240sp003.dgn

LAST REVISION 01-19-16 | DATE PLOTTED => 29-JAN-2016 | TIME PLOTTED => 10:24

Dist	COUNTY	ROUTE	POST MILES TOTAL PROJECT	SHEET No.	TOTAL SHEETS
02	Plu	89	20.0/20.6	163	235

LICENSED LANDSCAPE ARCHITECT

01-19-16
PLANS APPROVAL DATE

LICENSED LANDSCAPE ARCHITECT
RONALD MARTIN FLORY
#4981
Signature
09-30-16
Renewal Date
01-19-16
Date
STATE OF CALIFORNIA

THE STATE OF CALIFORNIA OR ITS OFFICERS OR AGENTS SHALL NOT BE RESPONSIBLE FOR THE ACCURACY OR COMPLETENESS OF SCANNED COPIES OF THIS PLAN SHEET.

NOTES:

1. FOR ACCURATE RIGHT OF WAY DATA, CONTACT RIGHT OF WAY ENGINEERING AT THE DISTRICT OFFICE.
2. EXISTING UTILITIES SHOWN FOR REFERENCE ONLY. ACTUAL DEPTHS OF POTENTIAL CONFLICTS MUST BE VERIFIED IN THE FIELD PRIOR TO INSTALLATION.
3. ALL WATER SUPPLY LINES MUST BE INSTALLED AT A MINIMUM OF 30" BELOW FG.
4. INSTALL PAVEMENT MARKERS (TYPE A) ON TOP OF CURBS.
5. INSTALL PULL WIRE IN ALL SPRINKLER CONTROL CONDUIT.

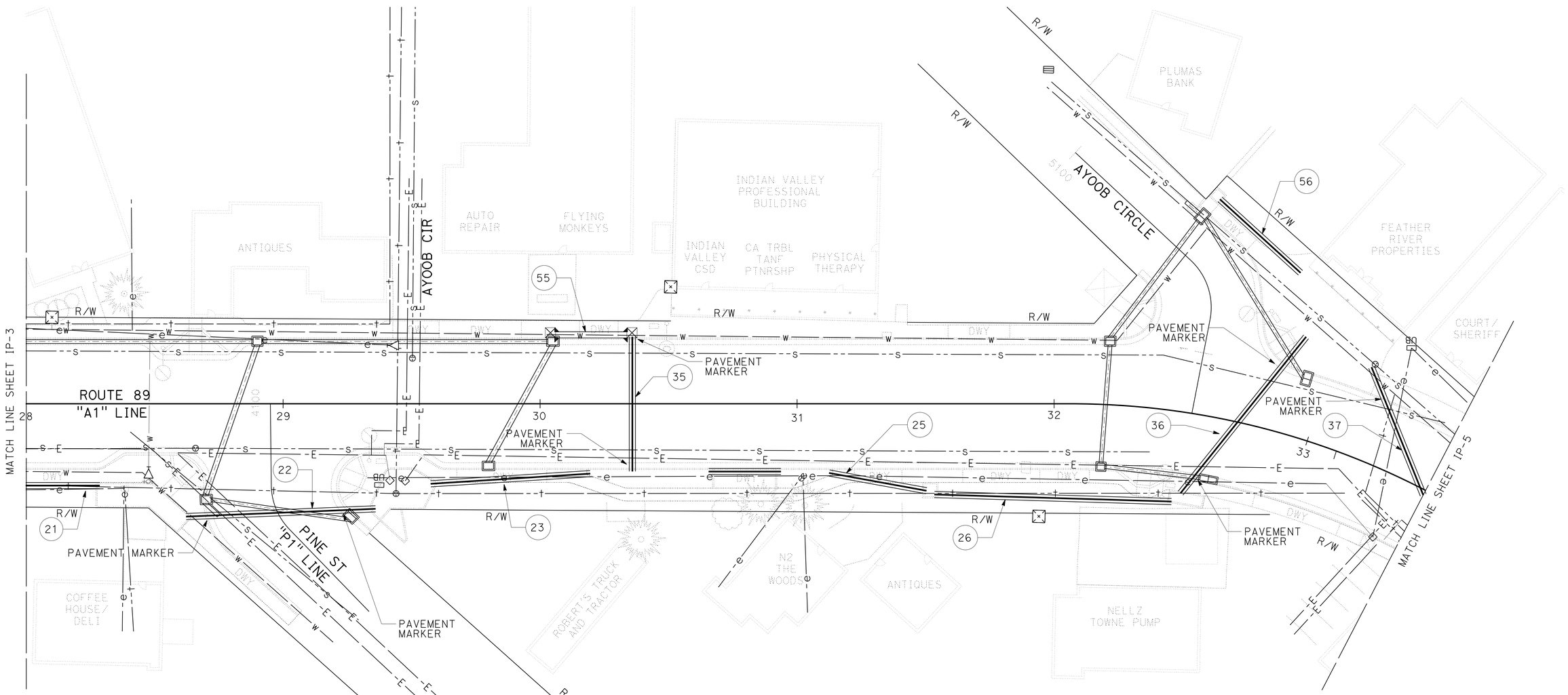

APPROVED FOR IRRIGATION WORK ONLY

IRRIGATION PLAN

SCALE: 1" = 20'

IP-4

REVISED BY	DATE REVISED
ROBIN SOLARI	LOGAN MOORE

CALCULATED-DESIGNED BY | CHECKED BY

SENIOR LANDSCAPE ARCHITECT: RON FLORY

STATE OF CALIFORNIA - DEPARTMENT OF TRANSPORTATION
Caltrans® LANDSCAPE ARCHITECTURE

P:\proj2\02\0E240_plans\pse\20e240sp004.dgn

LAST REVISION 01-19-16 | DATE PLOTTED => 29-JAN-2016 | TIME PLOTTED => 10:24

BORDER LAST REVISED 7/2/2010 | USERNAME => s115152 | DGN FILE => 20e240sp004.dgn | RELATIVE BORDER SCALE IS IN INCHES 0 1 2 3 | UNIT 0382 | PROJECT NUMBER & PHASE 02 1500 0146 1

Dist	COUNTY	ROUTE	POST MILES TOTAL PROJECT	SHEET No.	TOTAL SHEETS
02	Plu	89	20.0/20.6	164	235

LICENSED LANDSCAPE ARCHITECT

01-19-16
PLANS APPROVAL DATE

LICENSED LANDSCAPE ARCHITECT
RONALD MARTIN FLORY
#4981
Signature
09-30-16
Renewal date
01-19-16
Date
STATE OF CALIFORNIA

THE STATE OF CALIFORNIA OR ITS OFFICERS OR AGENTS SHALL NOT BE RESPONSIBLE FOR THE ACCURACY OR COMPLETENESS OF SCANNED COPIES OF THIS PLAN SHEET.

NOTES:

1. FOR ACCURATE RIGHT OF WAY DATA, CONTACT RIGHT OF WAY ENGINEERING AT THE DISTRICT OFFICE.
2. EXISTING UTILITIES SHOWN FOR REFERENCE ONLY. ACTUAL DEPTHS AND POTENTIAL CONFLICTS MUST BE VERIFIED IN THE FIELD PRIOR TO INSTALLATION.
3. ALL WATER SUPPLY LINES MUST BE INSTALLED AT A MINIMUM OF 30" BELOW FG.
4. INSTALL PAVEMENT MARKERS (TYPE A) ON TOP OF CURBS.
5. INSTALL PULL WIRE IN ALL SPRINKLER CONTROL CONDUIT.

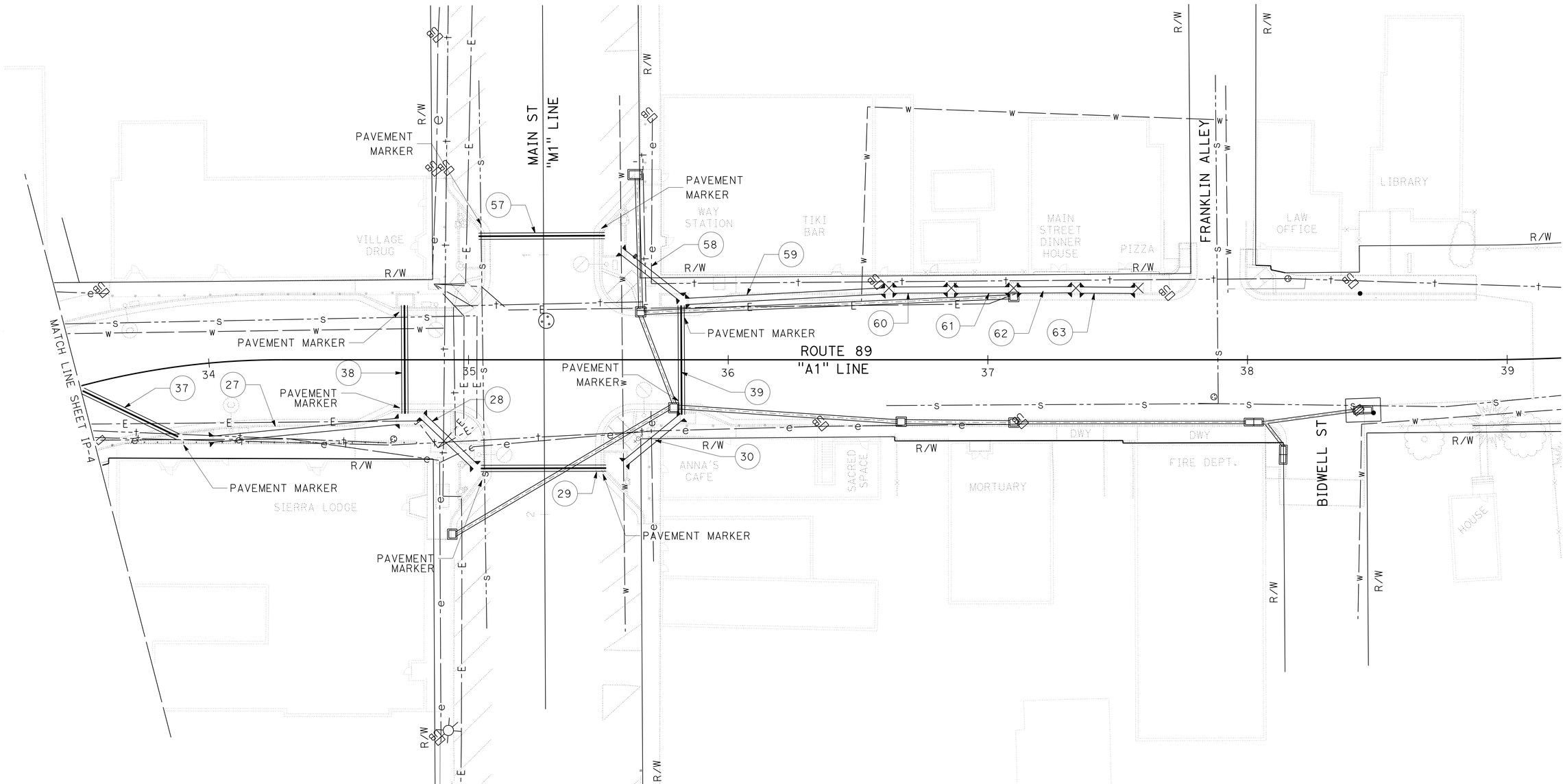

IRRIGATION PLAN

SCALE: 1" = 20'

IP-5

APPROVED FOR IRRIGATION WORK ONLY

REVISED BY | DATE REVISED
ROBIN SOLARI | LOGAN MOORE
CALCULATED-DESIGNED BY | CHECKED BY
SENIOR LANDSCAPE ARCHITECT | RON FLORY

STATE OF CALIFORNIA - DEPARTMENT OF TRANSPORTATION
Caltrans® LANDSCAPE ARCHITECTURE

P:\proj2\02\0E240_plans\pse\20e240sp005.dgn

LAST REVISION 01-19-16 | DATE PLOTTED => 29-JAN-2016 | TIME PLOTTED => 10:24

Dist	COUNTY	ROUTE	POST MILES TOTAL PROJECT	SHEET No.	TOTAL SHEETS
02	Plu	89	20.0/20.6	165	235

LICENSED LANDSCAPE ARCHITECT

01-19-16
PLANS APPROVAL DATE

LICENSED LANDSCAPE ARCHITECT
RONALD MARTIN FLORY
#4981
Signature
09-30-16
Renewal Date
01-19-16
Date
STATE OF CALIFORNIA

THE STATE OF CALIFORNIA OR ITS OFFICERS OR AGENTS SHALL NOT BE RESPONSIBLE FOR THE ACCURACY OR COMPLETENESS OF SCANNED COPIES OF THIS PLAN SHEET.

NOTE:

1. WHERE PLANTERS ARE COVERED WITH MASONRY UNIT PAVERS, INSTALL TOP OF PULL BOX FLUSH WITH TOP OF AGGREGATE BASE

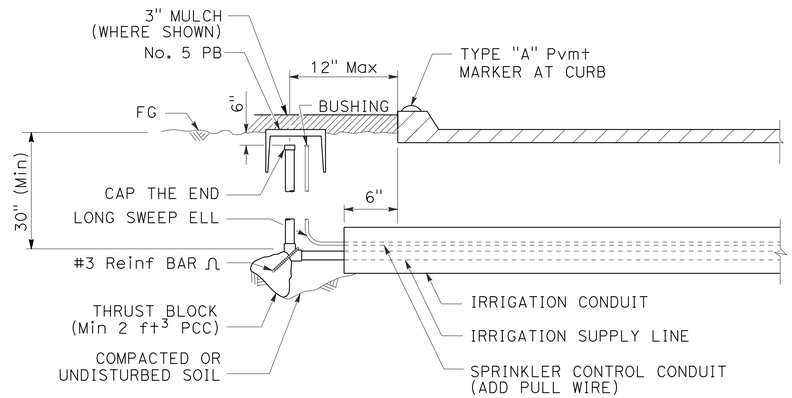

SECTION

IRRIGATION CONDUIT

UNDER TRAVELED WAY

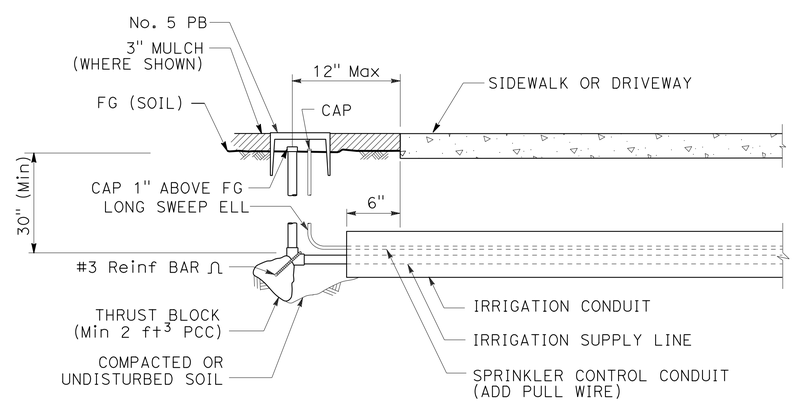

SECTION

IRRIGATION CONDUIT

UNDER SIDEWALKS AND DRIVEWAYS

IRRIGATION DETAILS

NO SCALE

ID-1

REVISED BY	DATE REVISED
ROBIN SOLARI	LOGAN MOORE

CALCULATED-DESIGNED BY	CHECKED BY

SENIOR LANDSCAPE ARCHITECT: RON FLORY

STATE OF CALIFORNIA - DEPARTMENT OF TRANSPORTATION
Caltrans® LANDSCAPE ARCHITECTURE

P:\proj2\02\0E240_plans\pse\20e240sq001.dgn

LAST REVISION 01-19-16 | DATE PLOTTED => 29-JAN-2016 | TIME PLOTTED => 10:24

Dist	COUNTY	ROUTE	POST MILES TOTAL PROJECT	SHEET No.	TOTAL SHEETS
02	Plu	89	20.0/20.6	166	235

LICENSED LANDSCAPE ARCHITECT

01-19-16
PLANS APPROVAL DATE

LICENSED LANDSCAPE ARCHITECT
RONALD MARTIN FLORY
#4981
Signature
09-30-16
Renewal Date
01-19-16
Date
STATE OF CALIFORNIA

THE STATE OF CALIFORNIA OR ITS OFFICERS OR AGENTS SHALL NOT BE RESPONSIBLE FOR THE ACCURACY OR COMPLETENESS OF SCANNED COPIES OF THIS PLAN SHEET.

NOTE:

1. PLASTIC PIPE (SUPPLY LINE) AND SPRINKLER CONTROL CONDUIT PIPE LENGTHS WILL VARY BASED ON BURIAL DEPTHS NEEDED TO AVOID UTILITY AND DRAINAGE CONFICTS.

IRRIGATION CONDUIT AND PIPE QUANTITIES

SHEET No.	IRRIGATION CONDUIT No.	LOCATION			PLASTIC PIPE (SCHEDULE 40) (SUPPLY LINE)				PLASTIC PIPE (CLASS 315) (SUPPLY LINE)		SPRINKLER CONTROL CONDUIT			CORRUGATED HIGH DENSITY POLYETHYLENE PIPE	PLASTIC PIPE CONDUIT (SCHEDULE 80)			PAVEMENT MARKER (N)
					PIPE SIZE (IN)						CONDUIT SIZE (IN)							
		LINE	Beg STATION/OFFSET	END STATION/OFFSET	3/4	1	1 1/4	1 1/2	1 1/2	2	1 1/4	1 1/2	2	8	8	6	4	
					LENGTH (LF)				LENGTH (LF)		LENGTH (LF)			LENGTH (LF)	LENGTH (LF)			
IP 1	1	"A1"	13+08.76, 30.31′ R+	13+12.12, 21.96′ R+		19.0	19.0										9.0	
IP 1	2	"A1"	15+57.53, 34.29′ R+	15+60.66, 42.73′ R+			19.0	19.0								9.0		
IP 1,2	3	"A1"	16+30.99, 37.99′ R+	16+66.91, 38.21′ R+		47.2			47.2		47.2			37.2				
IP 2	4	"A1"	17+18.64, 41.72′ R+	17+29.64, 41.25′ R+		21.0			21.0		21.0				11.0			
IP 2	5	"A1"	17+75.63, 37.91′ R+	18+11.63, 37.94′ R+			47.2		47.2		47.2			37.2				
IP 2	6	"A1"	18+98.20, 37.88′ R+	19+01.49, 37.85′ R+			13.4		13.4		13.4				3.4			
IP 2	7	"A1"	19+06.85, 37.82′ R+	19+10.14, 37.83′ R+	13.4		13.4			13.4	13.4				3.4			
IP 2	8	"A1"	19+80.68, 37.86′ R+	19+84.08, 37.87′ R+	13.4		13.4		13.4		13.4				3.4			
IP 2	9	"A1"	19+89.17, 37.86′ R+	19+92.57, 37.87′ R+	13.4		13.4		13.4		13.4				3.4			
IP 2	10	"A1"	20+18.65, 35.62′ R+	20+18.65, 38.31′ R+		7.7	7.7			7.7			7.7		2.7			
IP 2	11	"A1"	20+31.33, 50.33′ R+	20+34.01, 50.39′ R+		7.7											2.7	
IP 2	12	"A1"	20+37.20, 51.37′ R+	20+96.25, 51.03′ R+		69.0								59.0				1
IP 2	13	"A1"	20+96.21, 47.65′ R+	21+13.19, 31.17′ R+		33.7											23.7	
IP 3	14	"A1"	24+80.35, 32.65′ R+	24+98.39, 32.70′ R+	28.0	28.0											18.0	
IP 3	15	"A1"	25+25.94, 29.25′ R+	25+25.94, 31.93′ R+		7.7											2.7	
IP 3	16	"A1"	25+32.02, 33.88′R+	26+02.33, 33.91′ R+	84.3	84.3								74.3				2
IP 3	17	"A1"	26+20.86, 37.50′ R+	26+25.62, 37.50′ R+			14.8	14.8		14.8			14.8		4.8			
IP 3	18	"A1"	26+31.71, 33.83′ R+	26+35.25, 28.61′ R+			16.3	16.3		16.3			16.3		6.3			
IP 3	19	"A1"	27+32.74, 27.95′R+	27+35.85, 33.28′ R+		16.2	16.2			16.2		16.2			6.2			
IP 3	20	"A1"	27+40.78, 31.91′ R+	27+88.61, 31.87′ R+		57.8	57.8			57.8		57.8		47.8				
IP 3-4	21	"A1"	27+94.19, 31.87′ R+	28+28.64, 31.87′ R+		89.0				44.5			44.5	34.5				
IP 4	22	"A1"	28+62.23, 43.94′ R+	29+36.00, 40.91′ R+						83.8			83.8	73.8				2
IP 4	23	"A1"	29+57.43, 31.16′ R+	30+19.53, 27.21′ R+		144.4				72.2			72.2	62.2				
IP 4	24	"A1"	30+65.58, 26.39′ R+	30+93.72, 26.39′ R+		38.1	38.1			38.1			38.1	28.1				
IP 4	25	"A1"	31+12.45, 26.95′ R+	31+50.36, 33.66′ R+		48.5	48.5		48.5		48.5			38.5				
IP 4	26	"A1"	31+53.44, 32.33′ R+	32+51.05, 35.13′ R+		204.6			102.3		102.3			92.3				
IP 5	27	"A1"	33+98.04, 26.82′ R+	34+73.15, 23.68′ R+			82.5	82.5								72.5		
IP 5	28	"A1"	34+81.96, 21.45′ R+	35+02.62, 41.11′ R+		38.5	38.5									28.5		
IP 5	29	"A1"	35+04.75, 41.85′ R+	35+53.00, 41.73′ R+		58.3	58.3							48.3				2
IP 5	30	"A1"	35+60.00, 40.00′ R+	35+82.25, 21.76′ R+		38.8	38.8										28.8	
IP 1	31	"A1"	13+96.15, 20.63′ R+	13+96.15, 20.63′ R+			50.0							40.0				2
IP 2	32	"A1"	20+14.98, 32.51′ R+	20+18.65, 38.31′ L+		74.3	74.3			74.3			74.3	64.3				2
IP 3	33	"A1"	26+35.53, 26.63′ R+	26+25.00, 30.88′ L+			68.5	68.5		68.5		68.5		58.5				2
IP 3	34	"A1"	27+39.71, 32.16′ R+	27+52.98, 26.51′ L+	70.1									60.1				2
				SUBTOTAL	222.6	1133.8	749.1	201.1	306.4	507.6	319.8	142.5	351.7	856.1	44.6	110.0	84.9	15

(N) NOT A SEPARATE PAY ITEM, FOR INFORMATION ONLY

IRRIGATION QUANTITIES
IQ-1

REVISED BY | DATE REVISED
ROBIN SOLARI | LOGAN MOORE
CALCULATED-DESIGNED BY | CHECKED BY
SENIOR LANDSCAPE ARCHITECT | RON FLORY

STATE OF CALIFORNIA - DEPARTMENT OF TRANSPORTATION
Caltrans® LANDSCAPE ARCHITECTURE

P:\proj2\02\0E240_plans\pse\20e240sr001.dgn

LAST REVISION 01-19-16 | DATE PLOTTED => 29-JAN-2016 | TIME PLOTTED => 10:24

Dist	COUNTY	ROUTE	POST MILES TOTAL PROJECT	SHEET No.	TOTAL SHEETS
02	Plu	89	20.0/20.6	167	235

LICENSED LANDSCAPE ARCHITECT

01-19-16
PLANS APPROVAL DATE

LICENSED LANDSCAPE ARCHITECT
RONALD MARTIN FLORY
#4981
Signature
09-30-16
Renewal date
01-19-16
Date
STATE OF CALIFORNIA

THE STATE OF CALIFORNIA OR ITS OFFICERS OR AGENTS SHALL NOT BE RESPONSIBLE FOR THE ACCURACY OR COMPLETENESS OF SCANNED COPIES OF THIS PLAN SHEET.

NOTE:

1. PLASTIC PIPE (SUPPLY LINE) AND SPRINKLER CONTROL CONDUIT PIPE LENGTHS WILL VARY BASED ON BURIAL DEPTHS NEEDED TO AVOID UTILITY AND DRAINAGE CONFICTS.

IRRIGATION CONDUIT & PIPE QUANITIES

SHEET No.	IRRIGATION CONDUIT No.	LOCATION			PLASTIC PIPE (SCHEDULE 40) (SUPPLY LINE)				PLASTIC PIPE (CLASS 315) (SUPPLY LINE)		SPRINKLER CONTROL CONDUIT			CORRUGATED HIGH DENSITY POLYETHYLENE PIPE	PLASTIC PIPE CONDUIT (SCHEDULE 80)			PAVEMENT MARKER (N)
					PIPE SIZE (IN)						CONDUIT SIZE (IN)							
		LINE	Beg STATION/OFFSET	END STATION/OFFSET	3/4	1	1 1/4	1 1/2	1 1/2	2	1 1/4	1 1/2	2	8	8	6	4	
					LENGTH (LF)				LENGTH (LF)		LENGTH (LF)			LENGTH (LF)	LENGTH (LF)			
IP 4	35	"A1"	30+35.89, 26.34′ R+	30+35.89, 26.10′ L+			62.5							52.5				2
IP 4	36	"A1"	32+54.44, 31.40′ R+	32+88.60, 38.70′L+					88.1		88.1			78.1				2
IP 4-5	37	"A1"	33+13.43, 35.37′ L+	33+84.10, 26.78′ R+			104.5	104.5						94.5				2
IP 5	38	"A1"	35+75.40, 20.77′ R+	35+75.40, 21.00′ L+		51.8								41.8				2
IP 5	39	"A1"	35+81.96, 21.16 R+	35+81.96, 20.95′ L+		52.1	52.1							42.1				2
IP 2	40	"A1"	18+28.67, 37.95′ L+	19+00.62, 38.09′ L+	159.0												69.5	
IP 2	41	"A1"	19+07.95, 38.79′ L+	19+83.09, 38.52′ L+	84.3	84.3								74.3				
IP 2	42	"A1"	19+90.09, 38.63′ L+	20+13.99, 35.22′ L+	34.1	34.1											24.1	
IP 2	43	"A1"	20+39.93, 31.38′ L+	20+71.17, 37.61′ L+	41.9	41.9				41.9		41.9			31.9			
IP 2	44	"A1"	20+77.65, 37.96′ L+	21+52.54, 38.00′ L+	84.9	84.9				84.9			84.9	74.9				
IP 2-3	45	"A1"	21+59.47, 42.00′ L+	22+09.89, 42.00′ L+						60.4			60.4	50.4				
IP 3	46	"A1"	22+35.38, 47.81 L+	22+38.70, 42.37′ L+		29.6				14.8			14.8				6.4	
IP 3	47	"A1"	22+98.43, 43.06′ L+	23+20.43, 43.06′ L+		64.0				32.0			32.0	22.0				
IP 3	48	"A1"	23+34.36, 41.25′ L+	23+37.72, 46.81′ L+			15.0			7.5			7.5		6.5			
IP 3	49	"A1"	23+83.26, 32.16′ L+	23+89.38, 32.16′ L+			14.2			7.1			7.1		6.1			
IP 3	50	"A1"	24+05.15, 31.87′ L+	24+19.21, 31.86′ L+			30.2			15.1			15.1	14.1				
IP 3	51	"A1"	24+46.93, 31.85′ L+	24+82.59, 31.86′ L+			45.7	45.7		45.7			45.7	35.7				
IP 3	52	"A1"	24+87.46, 31.88′ L+	25+20.89, 31.88′ L+			43.4	43.4		43.4			43.4		33.4			
IP 3	53	"A1"	25+25.36, 31.62′ L+	25+66.08, 31.43′ L+			50.7	50.7		50.7			50.7		40.7			
IP 3	54	"A1"	25+71.05, 31.67′ L+	26+21.43, 31.69′ L+			60.3	60.3		60.3			60.3	50.3				
IP 4	55	"A1"	30+05.71, 26.83′ L+	30+33.97, 26.80′ L+		38.5											28.3	
IP 4	56	"A1"	32+52.00, 84.03′ L+	32+81.29, 62.23′ L+	52.4									42.4				
IP 5	57	"A1"	35+03.86, 47.58′ L+	35+52.49, 47.82′ L+		58.7								48.7				2
IP 5	58	"A1"	35+58.30, 41.75′ L+	35+74.93, 23.70′ L+		39.7											29.7	
IP 5	59	"A1"	35+83.60, 22.45′ L+	36+60.36, 26.53′ L+			86.9										76.9	
IP 5	60	"A1"	36+63.43, 26.81′ L+	36+84.38, 26.97′ L+		31.0											21.0	
IP 5	61	"A1"	36+87.12, 26.80′ L+	37.08.20, 26.92′ L+		31.0											21.0	
IP 5	62	"A1"	37+11.34, 26.83′ L+	37+32.25, 27.00′ L+		31.0											21.0	
IP 5	63	"A1"	37+34.55, 26.84′ L+	37+56.56, 26.73′ L+	31.0												21.0	
SUBTOTAL (THIS SHEET)					487.6	673.3	566.2	304.6	88.1	463.8	88.1	41.9	421.9	722.5	118.6		318.9	12
SUBTOTAL (FROM IQ 1)					222.6	1133.8	749.1	201.1	306.4	507.6	319.8	142.5	351.7	856.1	44.6	110.0	84.9	15
TOTAL					710.2	1807.1	1315.3	505.7	394.5	971.4	407.9	184.4	773.6	1578.6	163.2	110.0	403.8	27

(N) NOT A SEPARATE PAY ITEM, FOR INFORMATION ONLY

REVISED BY | DATE REVISED
ROBIN SOLARI | LOGAN MOORE
CALCULATED-DESIGNED BY | CHECKED BY
SENIOR LANDSCAPE ARCHITECT
RON FLORY

STATE OF CALIFORNIA - DEPARTMENT OF TRANSPORTATION
Caltrans® LANDSCAPE ARCHITECTURE

P:\proj2\02\0E240_plans\pse\20e240sr002.dgn

IRRIGATION QUANTITIES

IQ-2

LAST REVISION 01-19-16 | DATE PLOTTED => 29-JAN-2016 | TIME PLOTTED => 10:24

Dist	COUNTY	ROUTE	POST MILES TOTAL PROJECT	SHEET No.	TOTAL SHEETS
02	Plu	89	20.0/20.6	168	235

LICENSED LANDSCAPE ARCHITECT

01-19-16
PLANS APPROVAL DATE

LICENSED LANDSCAPE ARCHITECT
RONALD MARTIN FLORY
#4981
Signature
09-30-16
Renewal Date
01-19-16
Date
STATE OF CALIFORNIA

THE STATE OF CALIFORNIA OR ITS OFFICERS OR AGENTS SHALL NOT BE RESPONSIBLE FOR THE ACCURACY OR COMPLETENESS OF SCANNED COPIES OF THIS PLAN SHEET.

NOTES:

1. BOULDERS SIZES MAY VARY UP TO 20% LARGER, BUT MUST NOT BE SMALLER THAN THE SIZES IDENTIFIED.
2. (N) - NOT A SEPARATE PAY ITEM, FOR INFORMATION ONLY

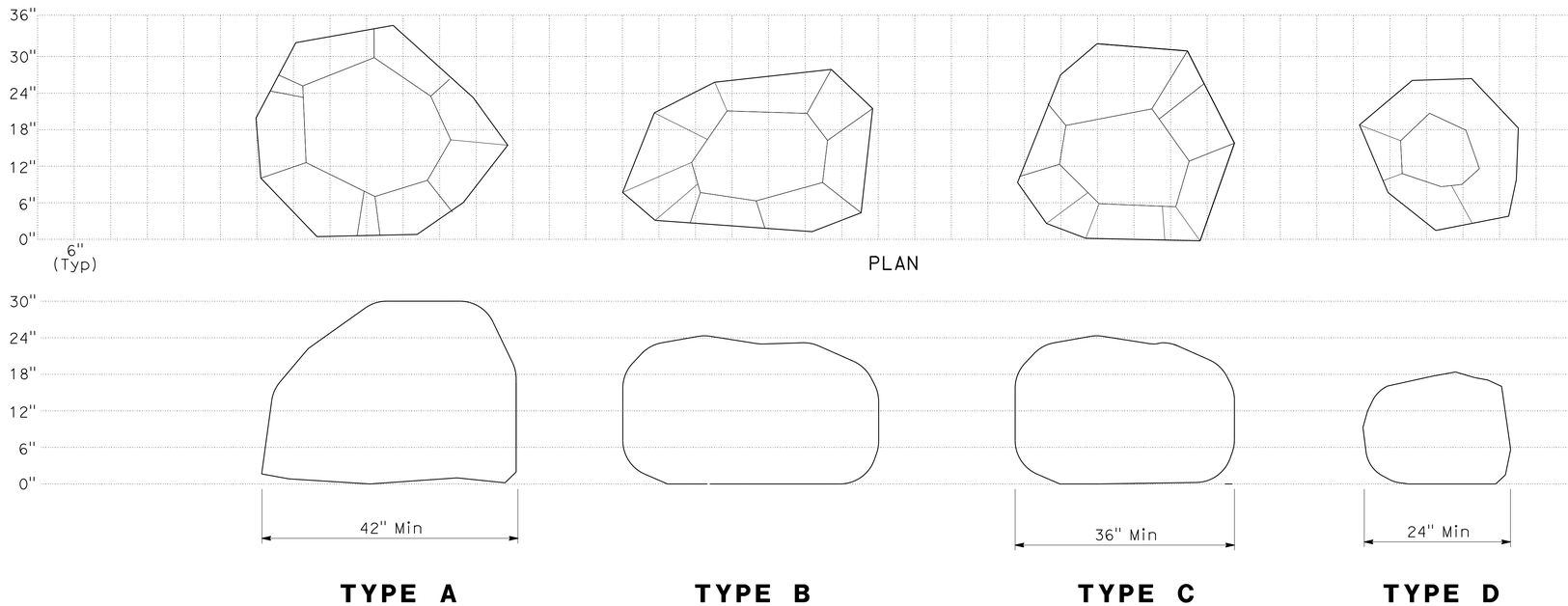

ELEVATION
BOULDERS

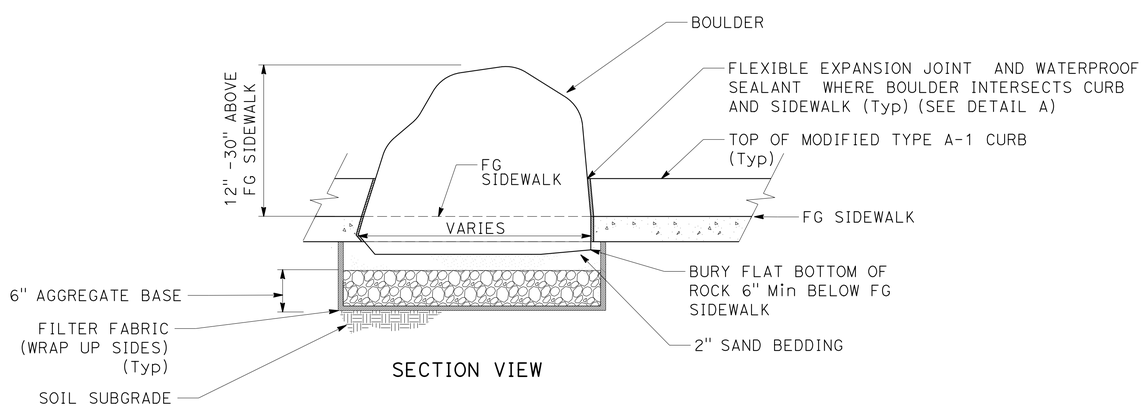

SECTION VIEW

BOULDER PLACEMENT (Typ)

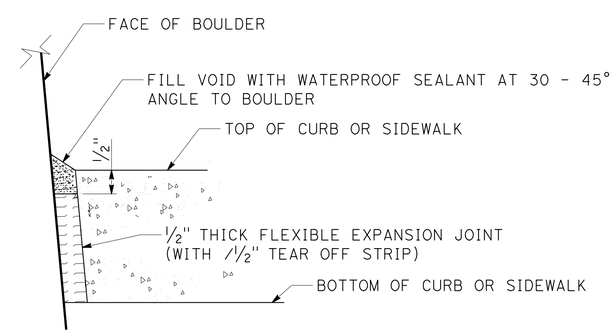

SECTION VIEW
DETAIL A

LANDSCAPE DETAILS
PLACE BOULDERS

NO SCALE

LD-1

REVISED BY | DATE REVISED
ROBIN SOLARI | LOGAN MOORE
CALCULATED-DESIGNED BY | CHECKED BY
SENIOR LANDSCAPE ARCHITECT | RON FLORY
STATE OF CALIFORNIA - DEPARTMENT OF TRANSPORTATION
Caltrans® LANDSCAPE ARCHITECTURE
P:\proj2\02\0E240_plans\pse\20e240sy001.dgn

LAST REVISION 01-19-16 | DATE PLOTTED => 29-JAN-2016 | TIME PLOTTED => 10:24

Dist	COUNTY	ROUTE	POST MILES TOTAL PROJECT	SHEET No.	TOTAL SHEETS
02	Plu	89	20.0/20.6	169	235

LICENSED LANDSCAPE ARCHITECT

01-19-16
PLANS APPROVAL DATE

LICENSED LANDSCAPE ARCHITECT
RONALD MARTIN FLORY
#4981
Signature
09-30-16
Renewal Date
01-19-16
Date
STATE OF CALIFORNIA

THE STATE OF CALIFORNIA OR ITS OFFICERS OR AGENTS SHALL NOT BE RESPONSIBLE FOR THE ACCURACY OR COMPLETENESS OF SCANNED COPIES OF THIS PLAN SHEET.

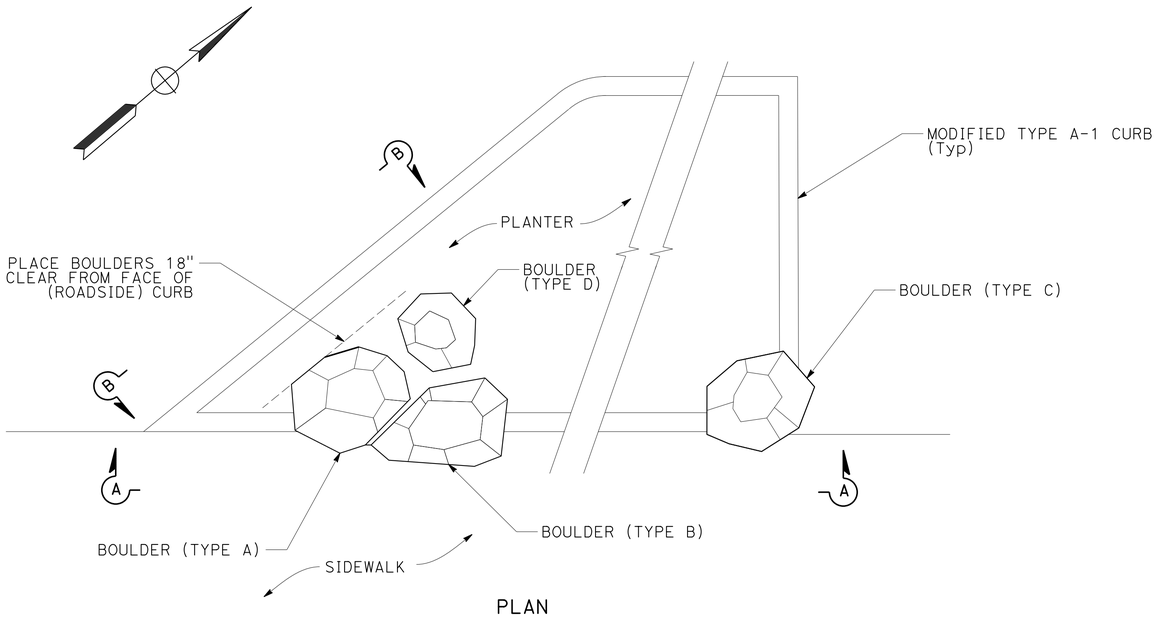

PLAN

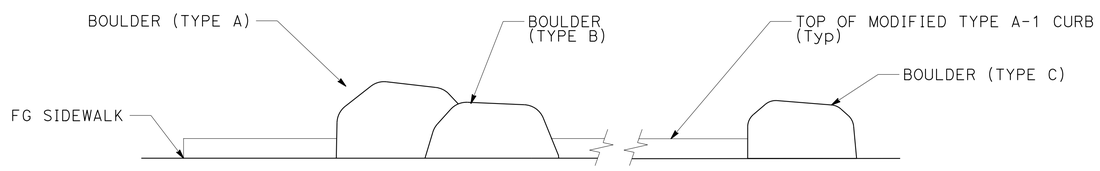

ELEVATION A-A

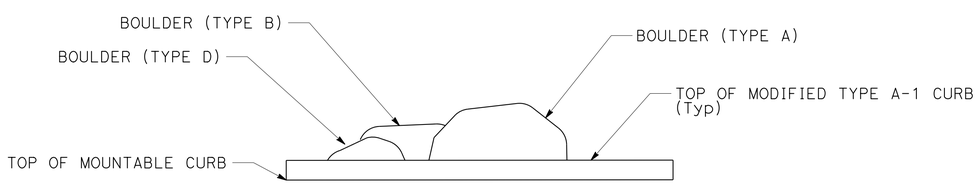

ELEVATION B-B

PLANTER 1
ADJACENT TO CURB RAMP 16

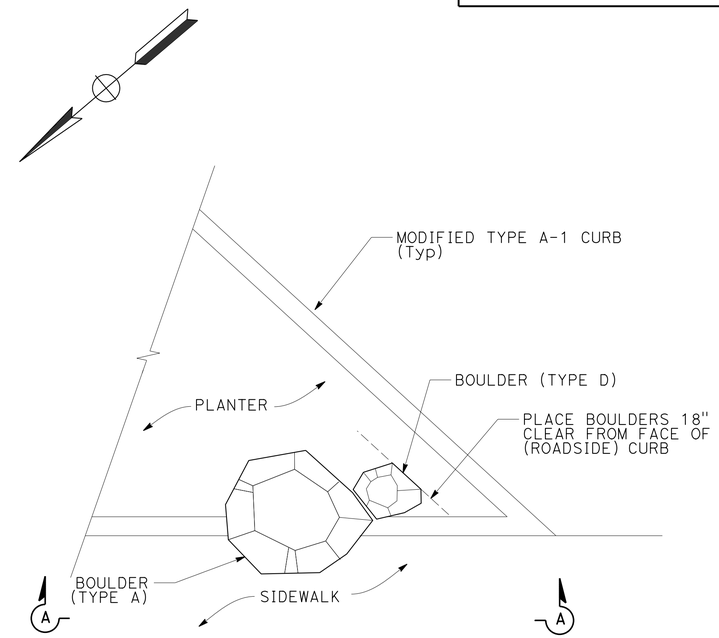

PLAN

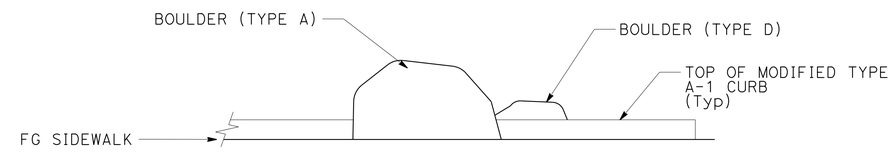

ELEVATION A-A

PLANTER 2
ADJACENT TO CURB RAMP 17

LANDSCAPE DETAILS
PLACE BOULDERS

NO SCALE

LD-2

REVISED BY | DATE REVISED
ROBIN SOLARI | LOGAN MOORE
CALCULATED-DESIGNED BY | CHECKED BY
SENIOR LANDSCAPE ARCHITECT | RON FLORY

STATE OF CALIFORNIA - DEPARTMENT OF TRANSPORTATION
Caltrans® LANDSCAPE ARCHITECTURE

P:\proj2\02\0E240_plans\pse\20e240sy002.dgn

LAST REVISION 01-19-16 | DATE PLOTTED => 29-JAN-2016 | TIME PLOTTED => 10:24

Dist	COUNTY	ROUTE	POST MILES TOTAL PROJECT	SHEET No.	TOTAL SHEETS
02	Plu	89	20.0/20.6	170	235

LICENSED LANDSCAPE ARCHITECT

01-19-16
PLANS APPROVAL DATE

LICENSED LANDSCAPE ARCHITECT
RONALD MARTIN FLORY
#4981
Signature
09-30-16
Renewal Date
01-19-16
Date
STATE OF CALIFORNIA

THE STATE OF CALIFORNIA OR ITS OFFICERS OR AGENTS SHALL NOT BE RESPONSIBLE FOR THE ACCURACY OR COMPLETENESS OF SCANNED COPIES OF THIS PLAN SHEET.

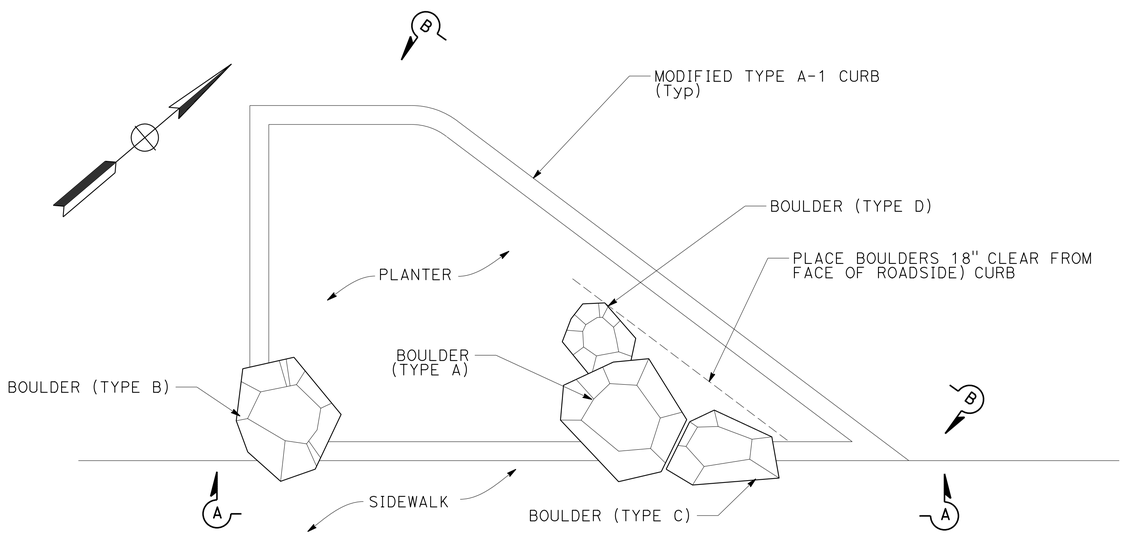

PLAN

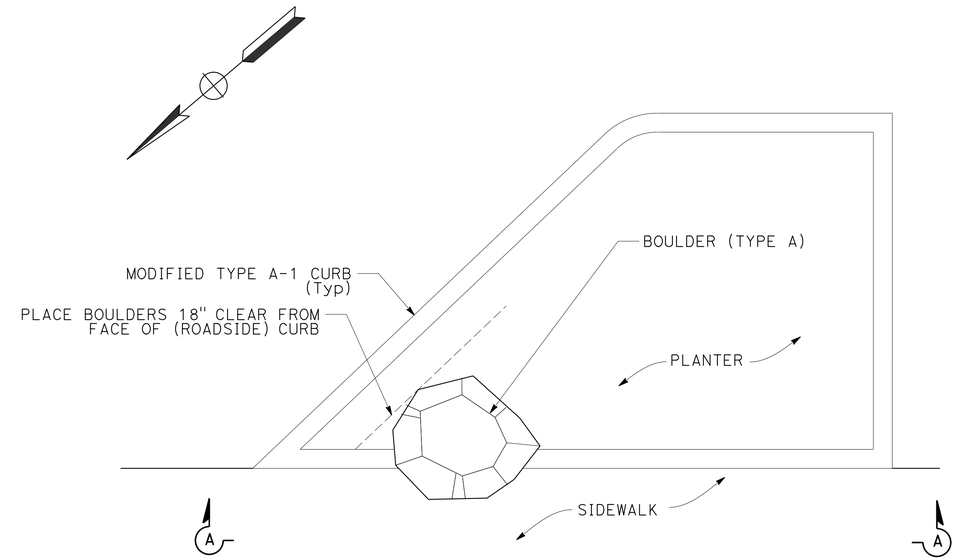

PLAN

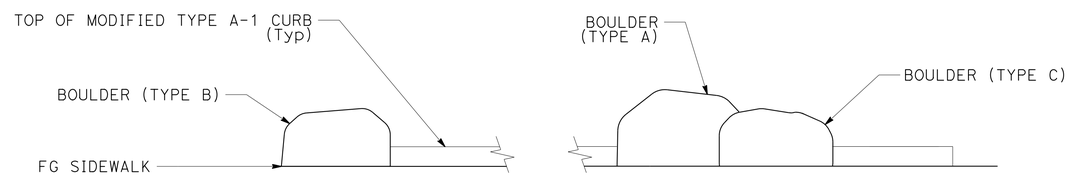

ELEVATION A-A

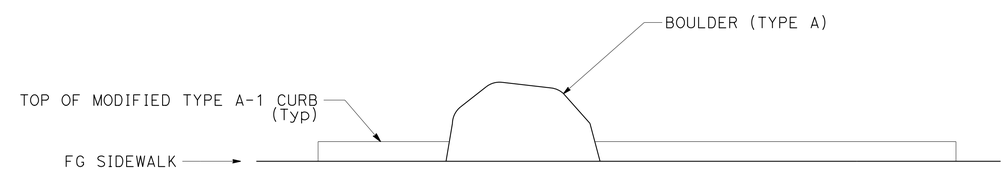

ELEVATION A-A

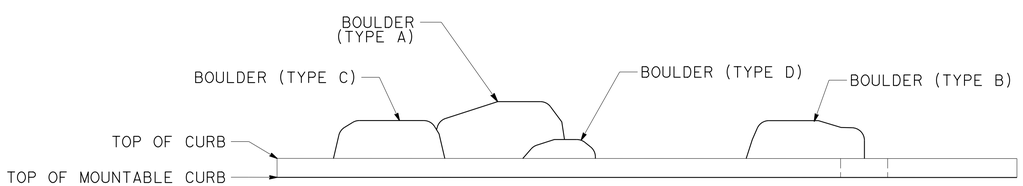

ELEVATION B-B

PLANTER 3
ADJACENT TO CURB RAMP 18

PLANTER 4
ADJACENT TO CURB RAMP 19

LANDSCAPE DETAILS
PLACE BOULDERS

NO SCALE

LD-3

REVISED BY | DATE REVISED
ROBIN SOLARI | LOGAN MOORE
CALCULATED-DESIGNED BY | CHECKED BY
SENIOR LANDSCAPE ARCHITECT | RON FLORY

STATE OF CALIFORNIA - DEPARTMENT OF TRANSPORTATION
Caltrans® LANDSCAPE ARCHITECTURE

P:\proj2\02\0E240_plans\pse\20e240sy003.dgn

LAST REVISION 01-19-16 | DATE PLOTTED => 29-JAN-2016 | TIME PLOTTED => 10:24

Dist	COUNTY	ROUTE	POST MILES TOTAL PROJECT	SHEET No.	TOTAL SHEETS
02	Plu	89	20.0/20.6	171	235

LICENSED LANDSCAPE ARCHITECT

01-19-16
PLANS APPROVAL DATE

LICENSED LANDSCAPE ARCHITECT
RONALD MARTIN FLORY
#4981
Signature
09-30-16
Renewal Date
01-19-16
Date
STATE OF CALIFORNIA

THE STATE OF CALIFORNIA OR ITS OFFICERS OR AGENTS SHALL NOT BE RESPONSIBLE FOR THE ACCURACY OR COMPLETENESS OF SCANNED COPIES OF THIS PLAN SHEET.

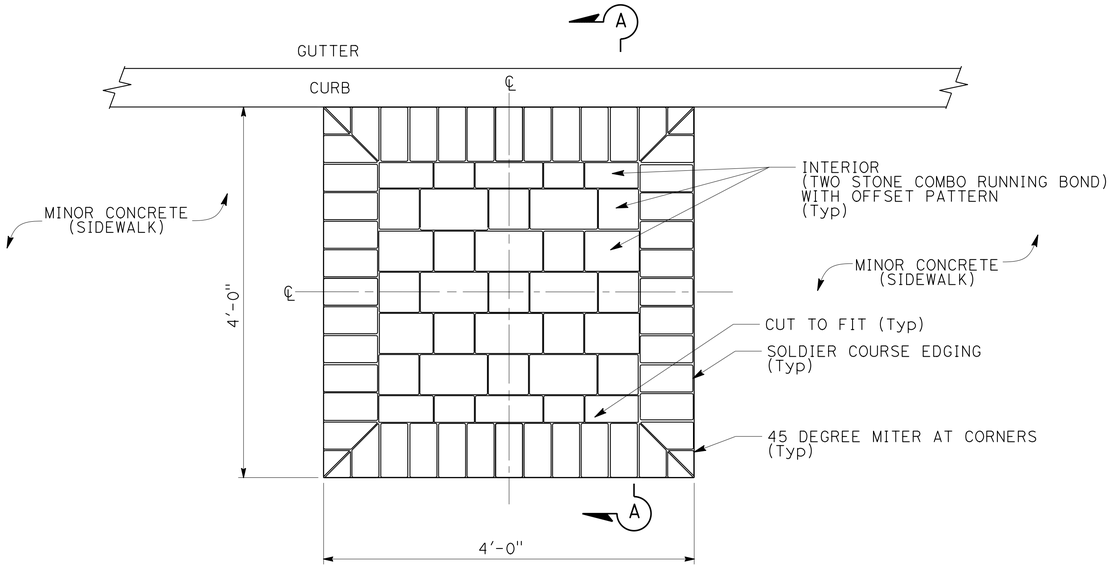

PLAN

MASONRY UNIT PAVERS PATTERN LAYOUT

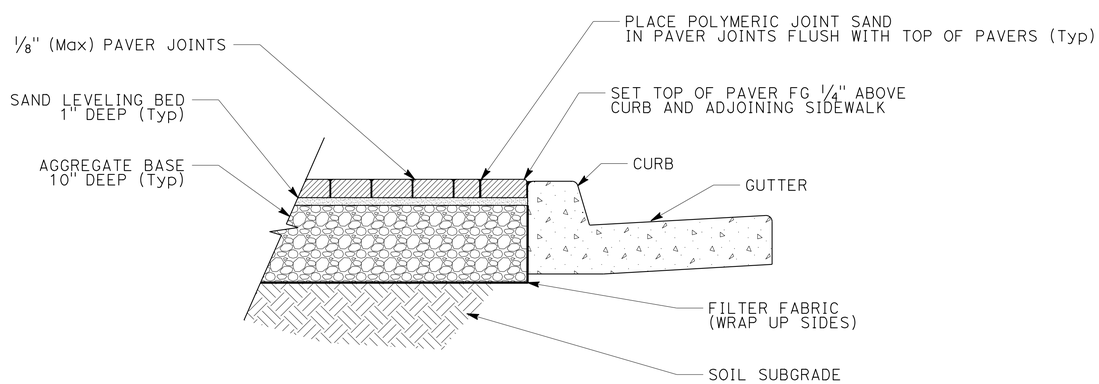

SECTION A-A

MASONRY UNIT PAVERS

MASONRY UNIT PAVER SHAPES*

DESCRIPTION		
INTERIOR (TWO STONE COMBO RUNNING BOND)		SOLDIER COURSE EDGING
RECTANGULAR PAVER	SQUARE PAVER	
5.25" x 8.75" x 2.375"	5.25" x 5.25" x 2.375"	4" x 8" x 2.375"

* SIZES ARE APPROXIMATE- MINOR VARIATIONS MAY OCCUR BETWEEN PRODUCT LINES

LANDSCAPE DETAILS

NO SCALE

LD-4

REVISED BY | DATE REVISED
ROBIN SOLARI | LOGAN MOORE
CALCULATED-DESIGNED BY | CHECKED BY
SENIOR LANDSCAPE ARCHITECT | RON FLORY

STATE OF CALIFORNIA - DEPARTMENT OF TRANSPORTATION
Caltrans® LANDSCAPE ARCHITECTURE

P:\proj2\02\0E240_plans\pse\20e240sy004.dgn

LAST REVISION 01-19-16 | DATE PLOTTED => 29-JAN-2016 | TIME PLOTTED => 10:24

Dist	COUNTY	ROUTE	POST MILES TOTAL PROJECT	SHEET No.	TOTAL SHEETS
02	Plu	89	20.0/20.6	172	235

LICENSED LANDSCAPE ARCHITECT

01-19-16
PLANS APPROVAL DATE

LICENSED LANDSCAPE ARCHITECT
RONALD MARTIN FLORY
#4981
Signature
09-30-16
Renewal Date
01-19-16
Date
STATE OF CALIFORNIA

THE STATE OF CALIFORNIA OR ITS OFFICERS OR AGENTS SHALL NOT BE RESPONSIBLE FOR THE ACCURACY OR COMPLETENESS OF SCANNED COPIES OF THIS PLAN SHEET.

NOTE:

1. (N) - NOT A SEPARATE PAY ITEM, FOR INFORMATION ONLY

EROSION CONTROL QUANTITIES

SHEET	DESCRIPTION	COMPOST	INCORPORATE MATERIALS	WEED GERMINATION	GRASS FERTILIZER	EROSION CONTROL (DRYSEED)(GRASS)	EROSION CONTROL (DRYSEED) (WILDFLOWER)	WOOD MULCH	FILTER FABRIC (N)	COMMENTS
		SQFT	SQFT	SQYD	LB	SQFT	SQFT	CY	SQFT	
LL-1	EROSION CONTROL (TYPE 1)	8739	8739	971	--	--	8739	2	210	27 CY COMPOST
	EROSION CONTROL (TYPE 2)	--	--	--	--	--	--	--	--	
	WOOD MULCH	--	--	--	--	--	--	--	--	
LL-2	EROSION CONTROL (TYPE 1)	371	371	41	--	--	371	--	--	1.2 CY COMPOST
	EROSION CONTROL (TYPE 2)	2866	2866	319	12.3	2866	--	--	--	28.9 CY COMPOST
	WOOD MULCH				--	--	--	5.8	594	
LL-3	EROSION CONTROL (TYPE 1)	2458	2458	273	--	--	2458	--	--	7.6 CY COMPOST
	EROSION CONTROL (TYPE 2)	756	756	84	3.2	756	--	--	--	8.3 CY COMPOST
	WOOD MULCH	--	--	--	--	--	--	15.0	1710	
LL-4	EROSION CONTROL (TYPE 1)	1970	1970	219	--	--	1970	--	--	6.1 CY COMPOST
	EROSION CONTROL (TYPE 2)	--	--	--	--	--	--	--	--	
	WOOD MULCH	--	--	--	--	--	--	7	715	
LL-5	EROSION CONTROL (TYPE 1)	587	587	65	--	--	587	--	--	1.9 CY COMPOST
	EROSION CONTROL (TYPE 2)	--	--	--	--	--	--	--	--	
	WOOD MULCH	--	--	--	--	--	--	--	--	
	TOTAL	17,747	17,747	1972	15.5	3622	14,125	29.8	3229	81.0 CY COMPOST

* EROSION CONTROL (TYPE 2) HAS 2 APPLICATIONS OF COMPOST TOTALING 438 CY PER ACRE.

MASONRY UNIT PAVERS

SHEET	DESCRIPTION	SQFT
LL-1	MASONRY UNIT PAVERS	--
LL-2	MASONRY UNIT PAVERS	--
LL-3	MASONRY UNIT PAVERS	16
LL-4	MASONRY UNIT PAVERS	32
LL-5	MASONRY UNIT PAVERS	80
	TOTAL	128

IMPORTED TOPSOIL

SHEET	DESCRIPTION	CY
LL-1	IMPORTED TOPSOIL	42.6
LL-2	IMPORTED TOPSOIL	9.2
LL-3	IMPORTED TOPSOIL	46.6
LL-4	IMPORTED TOPSOIL	37.2
LL-5	IMPORTED TOPSOIL	10.6
	TOTAL	146.2

PLACE BOULDER

PLANTER LOCATION	BOULDER TYPE			
	A	B	C	D
PLANTER 1	1	1	1	1
PLANTER 2	1	--	--	1
PLANTER 3	1	1	1	1
PLANTER 4	1	--	--	--
SUBTOTAL	4	2	2	3
TOTAL	11			

LANDSCAPE AND EROSION CONTROL QUANTITIES

LQ-1

REVISED BY | DATE REVISED
ROBIN SOLARI | LOGAN MOORE
CALCULATED-DESIGNED BY | CHECKED BY
SENIOR LANDSCAPE ARCHITECT
RON FLORY

STATE OF CALIFORNIA - DEPARTMENT OF TRANSPORTATION
Caltrans® LANDSCAPE ARCHITECTURE

P:\proj2\02\0E240_plans\pse\20e240sz001.dgn

LAST REVISION 01-19-16 | DATE PLOTTED => 29-JAN-2016 | TIME PLOTTED => 10:24

Dist	COUNTY	ROUTE	POST MILES TOTAL PROJECT	SHEET No.	TOTAL SHEETS
02	Plu	89	20.0/20.6	173	235

LICENSED LANDSCAPE ARCHITECT

01-19-16
PLANS APPROVAL DATE

LICENSED LANDSCAPE ARCHITECT
RONALD MARTIN FLORY
#4981
Signature
09-30-16
Renewal Date
01-19-16
Date
STATE OF CALIFORNIA

THE STATE OF CALIFORNIA OR ITS OFFICERS OR AGENTS SHALL NOT BE RESPONSIBLE FOR THE ACCURACY OR COMPLETENESS OF SCANNED COPIES OF THIS PLAN SHEET.

WOOD MULCH

SEQUENCE	ITEM	MATERIAL		APPLICATION RATE
		DESCRIPTION	TYPE	
STEP 1	WOOD MULCH	WOOD MULCH	WOOD CHIP	405 CY/ACRE

EROSION CONTROL (TYPE 1)

SEQUENCE	ITEM	MATERIAL		APPLICATION RATE	COMMENTS
		DESCRIPTION	TYPE		
STEP 1	COMPOST	COMPOST	MEDIUM	135 CY/ACRE	1" DEEP
STEP 2	INCORPORATE MATERIALS	COMPOST INTO SOIL	--	2" DEEP	--
STEP 3	WEED GERMINATION	--	--	--	--
STEP 4	EROSION CONTROL (DRYSEED) (WILDFOWER)	PURE LIVE SEED	SEED MIX "WILDFLOWER"	32 LB/ACRE	THOUGHOUGHLY MIX SAND AND SEED, THEN BROADCAST EVENLY IN (2) PERPENDICULAR PASSES
		SAND	MASONRY	4 PARTS SAND /1 PART SEED	
		ORGANIC FERTILIZER	SLOW RELEASE	800 LB/ACRE	
STEP 5	EROSION CONTROL (DRYSEED) (WILDFOWER)	ROLL IN (N)	--	--	USE WEIGHTED SEED ROLLER TO PRESS SEEDS INTO SOIL

EROSION CONTROL (TYPE 2)

SEQUENCE	ITEM	MATERIAL		APPLICATION RATE	COMMENTS
		DESCRIPTION	TYPE		
STEP 1	COMPOST	COMPOST	FINE	405 CY/ACRE	3" DEEP
STEP 2	INCORPORATE MATERIALS	COMPOST INTO SOIL	--	--	6" DEEP
STEP 3	WEED GERMINATION	--	--	--	--
STEP 4	EROSION CONTROL (DRYSEED) (GRASS)	PURE LIVE SEED	SEED MIX "GRASS"	190 LB/ACRE	USE SPREADER AND APPLY EVENLY IN (2) PERPENDICULAR PASSES
STEP 5	EROSION CONTROL (DRYSEED) (GRASS)	RAKE IN (N)	--	--	RAKE EVENLY INTO TOP 2-4" OF SOIL, THEN SMOOTH SOIL SURFACE
STEP 6	EROSION CONTROL (DRYSEED) (GRASS)	ROLL IN (N)	--	--	USE WEIGHTED SEED ROLLER TO PRESS SEEDS INTO SOIL
STEP 7	GRASS FERTILIZER	21-22-4 WITH WEED CONTROL	GRANULAR	4.3 LB/1000 SQFT	USE SPREADER AND APPLY EVENLY IN (2) PERPENDICULAR PASSES
STEP 8	COMPOST	--	FINE	33 CY/ACRE	1/4" DEEP

SEED MIX "WILDFLOWER"

SEED	BOTANICAL NAME (COMMON NAME)	PERCENT GERMINATION (MINIMUM)	POUNDS PURE LIVE SEED PER ACRE (SLOPE MEASUREMENT)
MIX	ACHILLEA MILLEFOLIUM (WHITE YARROW)	80	1
	DELPHINIUM NUDICAULE (CANYON LARKSPUR)	80	8
	EPILOBIUM CANUM SPP LATIFOLIUM (CALIFORNIA FUSCHIA)	80	3
	ERIOGONUM UMBELLATUM (SULPHER-FLOWERED BUCKWHEAT)	80	3
	ESCHSCHOLZIA CALIFORNICA (CALIFORNIA POPPY)	80	5
	LUPINUS FORMOSUS (WESTERN LUPINE)	80	7
	PENSTEMON NEWBERRYI (MOUNTAIN PRIDE)	80	1
	WYETHIA MOLLIS (WOOLLY MULE'S EARS)	80	4
		TOTAL	32

SEED MIX "GRASS"

SEED	BOTANICAL NAME (COMMON NAME)	PERCENT GERMINATION (MINIMUM)	POUNDS PURE LIVE SEED PER ACRE (SLOPE MEASUREMENT)
MIX	FESTUCA RUBRA (CREEPING RED FESCUE)	85	100
	LOLIUM PERENNE (PERENNIAL RYE GRASS)	85	90
		TOTAL	190

EROSION CONTROL LEGEND

ECL-1

REVISED BY | DATE REVISED
ROBIN SOLARI | LOGAN MOORE
CALCULATED-DESIGNED BY | CHECKED BY
SENIOR LANDSCAPE ARCHITECT | RON FLORY

STATE OF CALIFORNIA - DEPARTMENT OF TRANSPORTATION
Caltrans® LANDSCAPE ARCHITECTURE

P:\proj2\02\0E240_plans\pse\20e240tc001.dgn

LAST REVISION 01-19-16 | DATE PLOTTED => 29-JAN-2016 | TIME PLOTTED => 10:24

Dist	COUNTY	ROUTE	POST MILES TOTAL PROJECT	SHEET No.	TOTAL SHEETS
02	Plu	89	20.0/20.6	174	235

REGISTERED ELECTRICAL ENGINEER 01-19-16 DATE

01-19-16
PLANS APPROVAL DATE

REGISTERED PROFESSIONAL ENGINEER A.P. ROBLES No. E15293 Exp. 3-31-17 ELECTRICAL STATE OF CALIFORNIA

THE STATE OF CALIFORNIA OR ITS OFFICERS OR AGENTS SHALL NOT BE RESPONSIBLE FOR THE ACCURACY OR COMPLETENESS OF SCANNED COPIES OF THIS PLAN SHEET.

NOTES:

1. FOR ACCURATE RIGHT OF WAY AND ACCESS DATA, CONTACT RIGHT OF WAY ENGINEERING AT THE DISTRICT OFFICE.
2. COORDINATE CONDUIT INSTALLATION INTO EXISTING PULL BOX WITH PG & E.
3. SERVICE POINT LOCATIONS ARE APPROXIMATE.

LEGEND (THIS SHEET):

[1] 1½", 2#10, 1#10 G.

LEGEND:

- RADAR SPEED FEEDBACK SIGN
- RECTANGULAR RAPID FLASHING BEACON
- DECORATIVE LIGHTING POLE (INTERSECTION)
- RELOCATED ELECTROLIER
- ELECTROLIER TO BE REMOVED UNLESS OTHERWISE SHOWN

ABBREVIATIONS;

PG & E	PACIFIC GAS AND ELECTRIC
DB 120	DIRECT BURIAL SCHEDULE 120 UTILITY DUCT
RRFB	RECTANGULAR RAPID FLASHING BEACON
RSFS	RADAR SPEED FEEDBACK SIGN

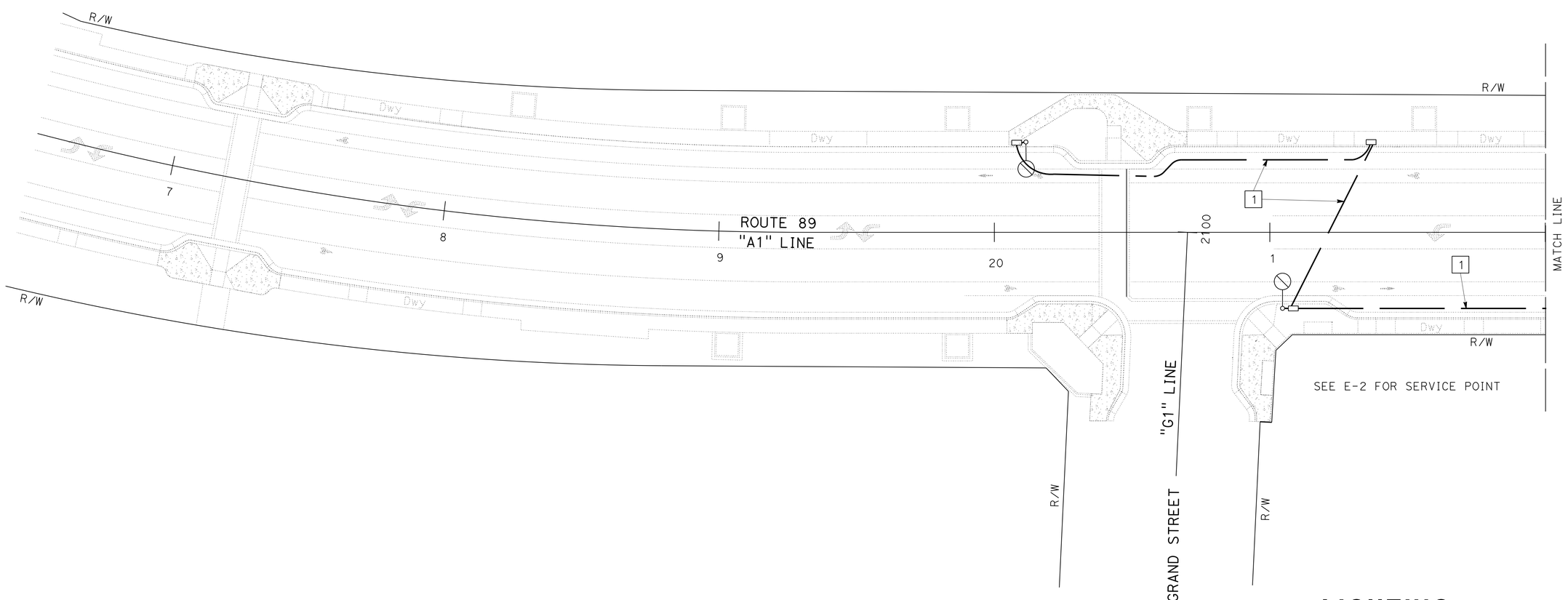

LIGHTING (INTERSECTION-DECORATIVE)

SCALE: 1" = 20'

E-1

APPROVED FOR ELECTRICAL WORK ONLY

REVISED BY | DATE REVISED
ARTURO P. ROBLES | JIM HANNIGAN
CALCULATED-DESIGNED BY | CHECKED BY
FUNCTIONAL SUPERVISOR: ROB STINGER

STATE OF CALIFORNIA - DEPARTMENT OF TRANSPORTATION
Caltrans® ELECTRICAL DESIGN

P:\proj2\02\0E240_plans\pse\20e240ua001.dgn

LAST REVISION 01-19-16 | DATE PLOTTED => 24-MAR-2016 | TIME PLOTTED => 14:04

Dist	COUNTY	ROUTE	POST MILES TOTAL PROJECT	SHEET No.	TOTAL SHEETS
02	Plu	89	20.0/20.6	175	235

REGISTERED ELECTRICAL ENGINEER 01-19-16 DATE

01-19-16
PLANS APPROVAL DATE

REGISTERED PROFESSIONAL ENGINEER A.P. ROBLES No. E15293 Exp. 3-31-17 ELECTRICAL STATE OF CALIFORNIA

THE STATE OF CALIFORNIA OR ITS OFFICERS OR AGENTS SHALL NOT BE RESPONSIBLE FOR THE ACCURACY OR COMPLETENESS OF SCANNED COPIES OF THIS PLAN SHEET.

NOTES:

1. FOR ACCURATE RIGHT OF WAY AND ACCESS DATA, CONTACT RIGHT OF WAY ENGINEERING AT THE DISTRICT OFFICE.
2. COORDINATE CONDUIT INSTALLATION INTO EXISTING PULL BOX WITH PG & E.
3. SERVICE POINT LOCATIONS ARE APPROXIMATE.

LEGEND (THIS SHEET):

1. 2" DB 120, PT.
2. 2"C, 2#10, 1#10 G.
3. TYPE III-AF SERVICE EQUIPMENT ENCLOSURE. SEE WIRING DIAGRAM, SHEET E-19.
4. 1½"C, 2#10, 1#10 G.

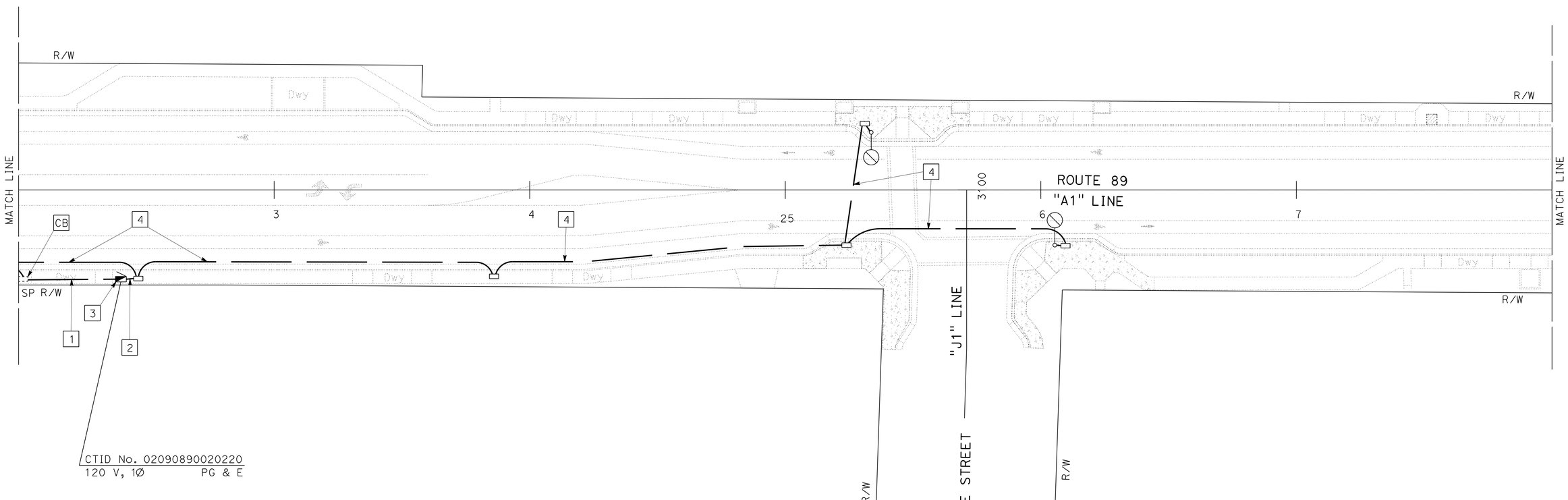

LIGHTING (INTERSECTION-DECORATIVE)

SCALE: 1" = 20'

E-2

APPROVED FOR ELECTRICAL WORK ONLY

REVISED BY | DATE REVISED
ARTURO P. ROBLES | JIM HANNIGAN
CALCULATED-DESIGNED BY | CHECKED BY
FUNCTIONAL SUPERVISOR: ROB STINGER

STATE OF CALIFORNIA - DEPARTMENT OF TRANSPORTATION
Caltrans® ELECTRICAL DESIGN

P:\proj2\02\0E240_plans\pse\20e240ua002.dgn

LAST REVISION 01-19-16 | DATE PLOTTED => 24-MAR-2016 | TIME PLOTTED => 14:04

Dist	COUNTY	ROUTE	POST MILES TOTAL PROJECT	SHEET No.	TOTAL SHEETS
02	Plu	89	20.0/20.6	176	235

REGISTERED ELECTRICAL ENGINEER 01-19-16 DATE

PLANS APPROVAL DATE 01-19-16

REGISTERED PROFESSIONAL ENGINEER A.P. ROBLES No. E15293 Exp. 3-31-17 ELECTRICAL STATE OF CALIFORNIA

THE STATE OF CALIFORNIA OR ITS OFFICERS OR AGENTS SHALL NOT BE RESPONSIBLE FOR THE ACCURACY OR COMPLETENESS OF SCANNED COPIES OF THIS PLAN SHEET.

NOTES:

1. FOR ACCURATE RIGHT OF WAY AND ACCESS DATA, CONTACT RIGHT OF WAY ENGINEERING AT THE DISTRICT OFFICE.
2. COORDINATE CONDUIT INSTALLATION INTO EXISTING PULL BOX WITH PG & E.
3. SERVICE POINT LOCATIONS ARE APPROXIMATE.

LEGEND (THIS SHEET):

1. 2" DB 120, PT.
2. 2"C, 2#10, 1#10 G.
3. TYPE III-AF SERVICE EQUIPMENT ENCLOSURE. SEE WIRING DIAGRAM, SHEET E-19.
4. 1½"C, 2#10, 1#10 G.

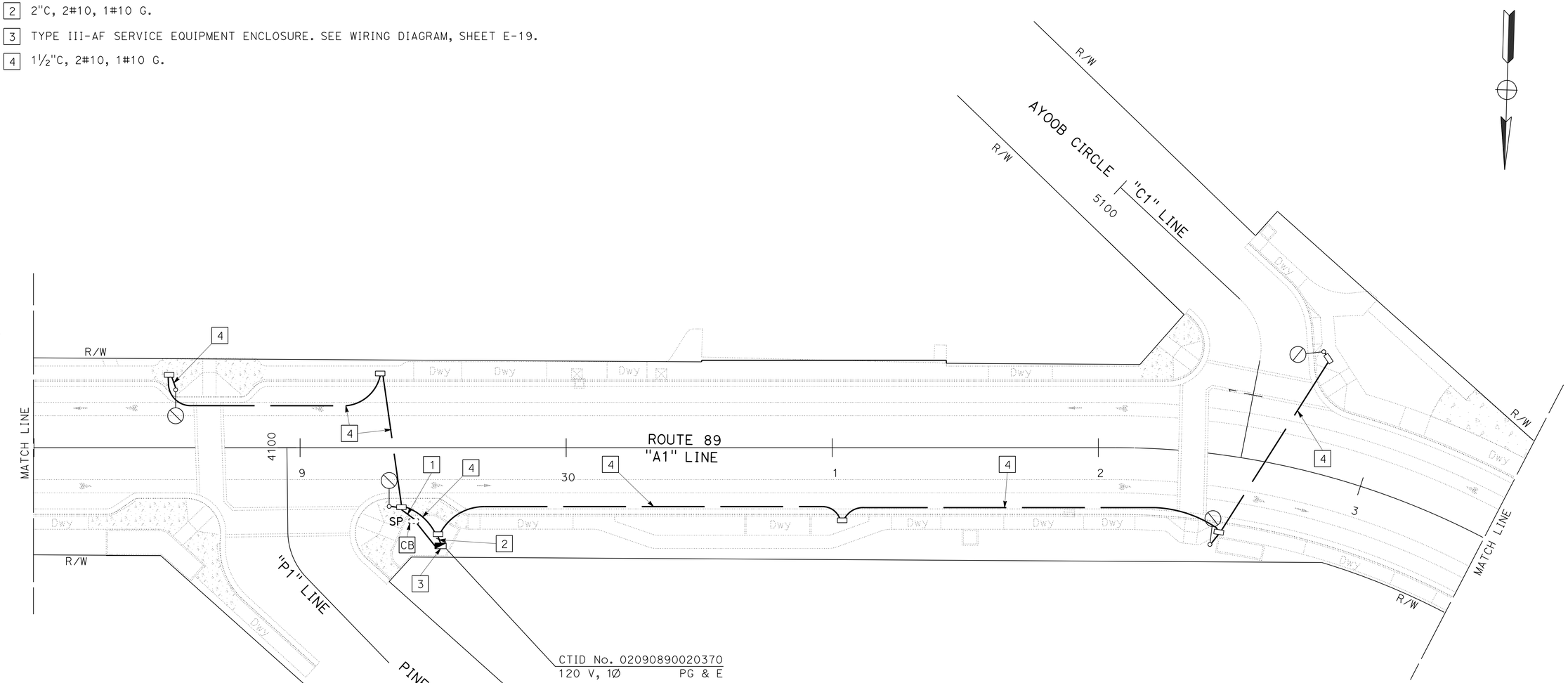

APPROVED FOR ELECTRICAL WORK ONLY

LIGHTING (INTERSECTION-DECORATIVE)

SCALE: 1" = 20'

E-3

ARTURO P. ROBLES — JIM HANNIGAN — ROB STINGER

STATE OF CALIFORNIA - DEPARTMENT OF TRANSPORTATION — Caltrans — ELECTRICAL DESIGN

P:\proj2\02\0E240_plans\pse\20e240ua003.dgn

LAST REVISION 01-19-16 — DATE PLOTTED => 24-MAR-2016 — TIME PLOTTED => 14:04

BORDER LAST REVISED 7/2/2010 — USERNAME => s115152 — DGN FILE => 20e240ua003.dgn — RELATIVE BORDER SCALE IS IN INCHES 0 1 2 3 — UNIT 0147 — PROJECT NUMBER & PHASE 02 1500 0146 1

Dist	COUNTY	ROUTE	POST MILES TOTAL PROJECT	SHEET No.	TOTAL SHEETS
02	Plu	89	20.0/20.6	177	235

REGISTERED ELECTRICAL ENGINEER 01-19-16 DATE

01-19-16
PLANS APPROVAL DATE

REGISTERED PROFESSIONAL ENGINEER A.P. ROBLES No. E15293 Exp. 3-31-17 ELECTRICAL STATE OF CALIFORNIA

THE STATE OF CALIFORNIA OR ITS OFFICERS OR AGENTS SHALL NOT BE RESPONSIBLE FOR THE ACCURACY OR COMPLETENESS OF SCANNED COPIES OF THIS PLAN SHEET.

NOTES:

1. FOR ACCURATE RIGHT OF WAY AND ACCESS DATA, CONTACT RIGHT OF WAY ENGINEERING AT THE DISTRICT OFFICE.
2. COORDINATE CONDUIT INSTALLATION INTO EXISTING PULL BOX WITH PG & E.
3. SERVICE POINT LOCATIONS ARE APPROXIMATE.

LEGEND (THIS SHEET):

1. 2" DB 120, PT.
2. 2"C, 2#10, 1#10 G.
3. TYPE III-AF SERVICE EQUIPMENT ENCLOSURE. SEE WIRING DIAGRAM, SHEET E-19.
4. 1½"C, 2#10, 1#10 G.

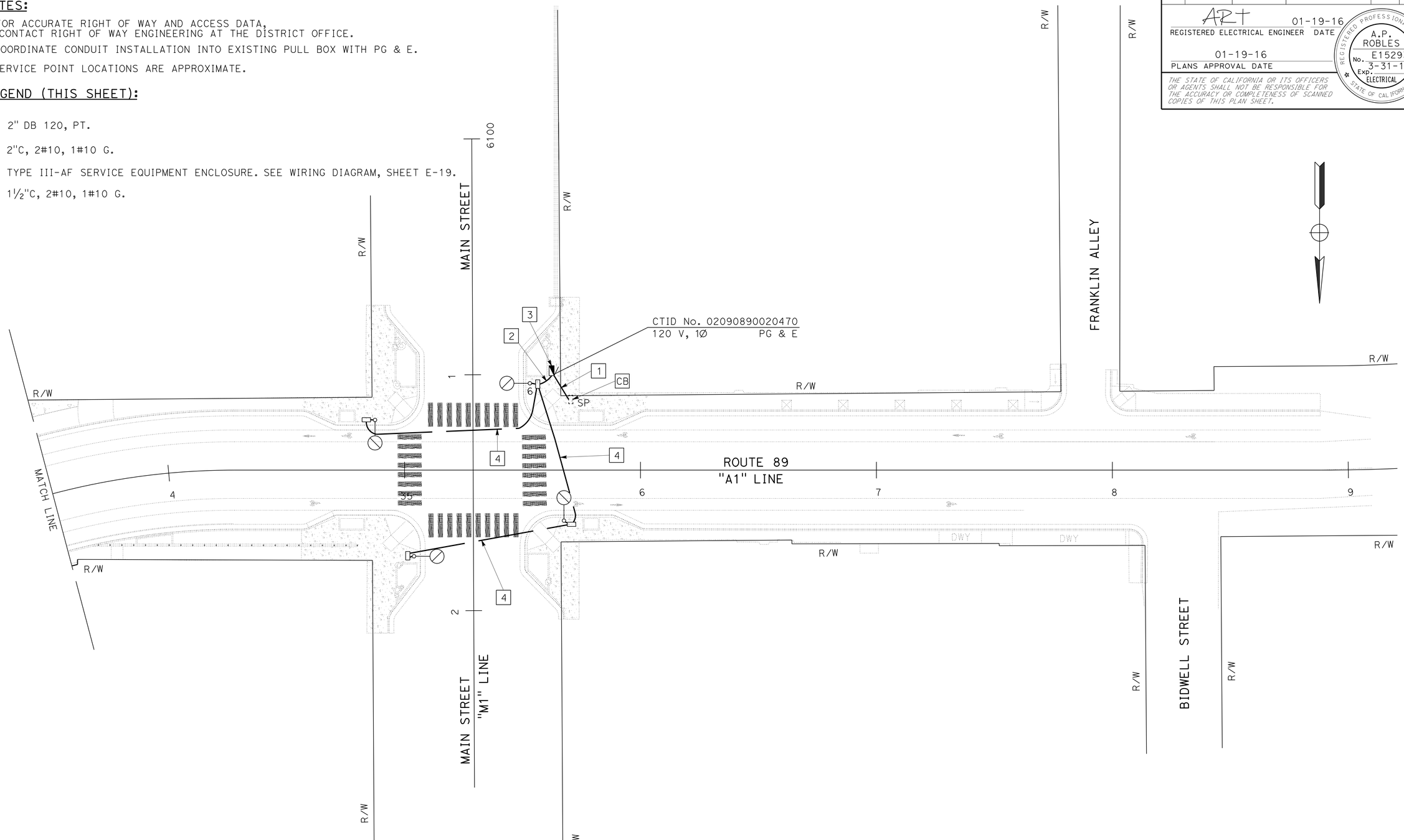

LIGHTING (INTERSECTION-DECORATIVE)

SCALE: 1" = 20'

APPROVED FOR ELECTRICAL WORK ONLY

E-4

REVISED BY | DATE REVISED
ARTURO P. ROBLES | JIM HANNIGAN
CALCULATED-DESIGNED BY | CHECKED BY
FUNCTIONAL SUPERVISOR: ROB STINGER

STATE OF CALIFORNIA - DEPARTMENT OF TRANSPORTATION
Caltrans® **ELECTRICAL DESIGN**

P:\proj2\02\0E240_plans\pse\20e240ua004.dgn

LAST REVISION | DATE PLOTTED => 24-MAR-2016
01-19-16 | TIME PLOTTED => 14:04

Dist	COUNTY	ROUTE	POST MILES TOTAL PROJECT	SHEET No.	TOTAL SHEETS
02	Plu	89	20.0/20.6	178	235

REGISTERED ELECTRICAL ENGINEER 01-19-16 DATE

01-19-16
PLANS APPROVAL DATE

REGISTERED PROFESSIONAL ENGINEER A.P. ROBLES No. E15293 Exp. 3-31-17 ELECTRICAL STATE OF CALIFORNIA

THE STATE OF CALIFORNIA OR ITS OFFICERS OR AGENTS SHALL NOT BE RESPONSIBLE FOR THE ACCURACY OR COMPLETENESS OF SCANNED COPIES OF THIS PLAN SHEET.

NOTES:

1. FOR ACCURATE RIGHT OF WAY AND ACCESS DATA, CONTACT RIGHT OF WAY ENGINEERING AT THE DISTRICT OFFICE.
2. COORDINATE CONDUIT INSTALLATION INTO EXISTING PULL BOX WITH PG & E.
3. SERVICE POINT LOCATIONS ARE APPROXIMATE.

LEGEND (THIS SHEET):

[1] 1½"C, 2#10, 1#10 G.

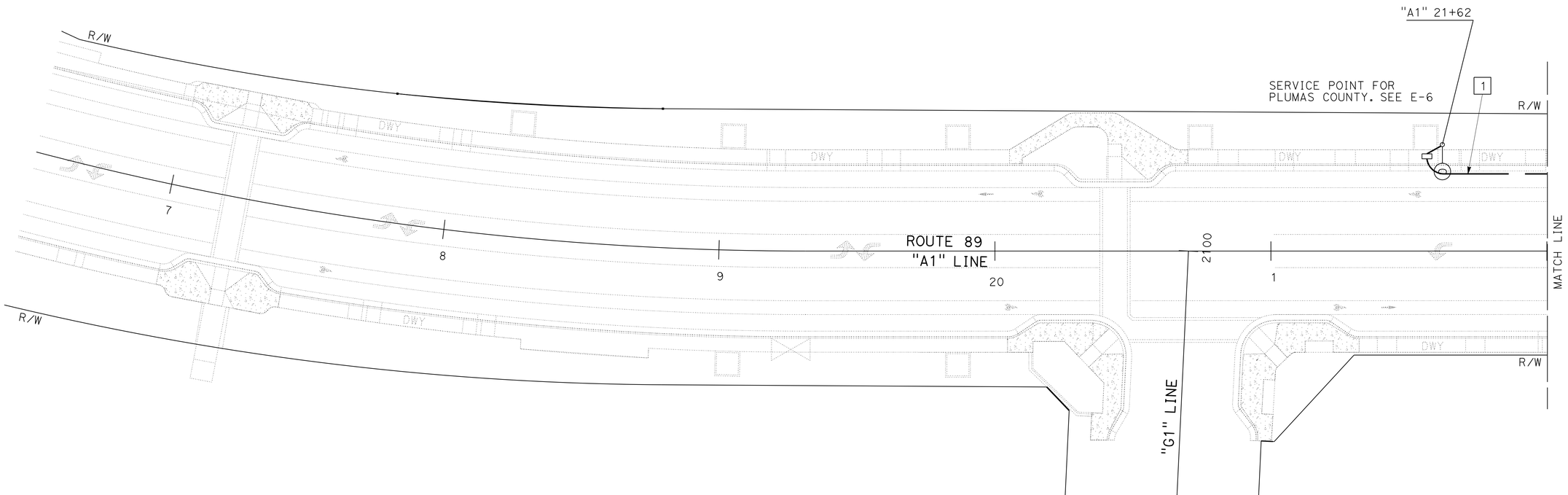

LIGHTING (CITY STREET-DECORATIVE)

SCALE: 1" = 20'

E-5

APPROVED FOR ELECTRICAL WORK ONLY

ARTURO P. ROBLES — JIM HANNIGAN — ROB STINGER

CALCULATED-DESIGNED BY — CHECKED BY — FUNCTIONAL SUPERVISOR — REVISED BY — DATE REVISED

STATE OF CALIFORNIA - DEPARTMENT OF TRANSPORTATION
Caltrans® ELECTRICAL DESIGN

P:\proj2\02\0E240_plans\pse\20e240ua005.dgn

LAST REVISION 01-19-16 — DATE PLOTTED => 24-MAR-2016 — TIME PLOTTED => 14:04

Dist	COUNTY	ROUTE	POST MILES TOTAL PROJECT	SHEET No.	TOTAL SHEETS
02	Plu	89	20.0/20.6	179	235

REGISTERED ELECTRICAL ENGINEER 01-19-16 DATE

01-19-16
PLANS APPROVAL DATE

REGISTERED PROFESSIONAL ENGINEER A.P. ROBLES No. E15293 Exp. 3-31-17 ELECTRICAL STATE OF CALIFORNIA

THE STATE OF CALIFORNIA OR ITS OFFICERS OR AGENTS SHALL NOT BE RESPONSIBLE FOR THE ACCURACY OR COMPLETENESS OF SCANNED COPIES OF THIS PLAN SHEET.

NOTES:

1. FOR ACCURATE RIGHT OF WAY AND ACCESS DATA, CONTACT RIGHT OF WAY ENGINEERING AT THE DISTRICT OFFICE.
2. COORDINATE CONDUIT INSTALLATION INTO EXISTING PULL BOX WITH PG & E.
3. SERVICE POINT LOCATIONS ARE APPROXIMATE.

LEGEND (THIS SHEET):

1. 2" DB 120, PT.
2. 2"C, 2#10, 1#10 G.
3. TYPE III-AF SERVICE EQUIPMENT ENCLOSURE. SEE WIRING DIAGRAM, SHEET E-19.
4. 1½"C, 2#10, 1#10 G.

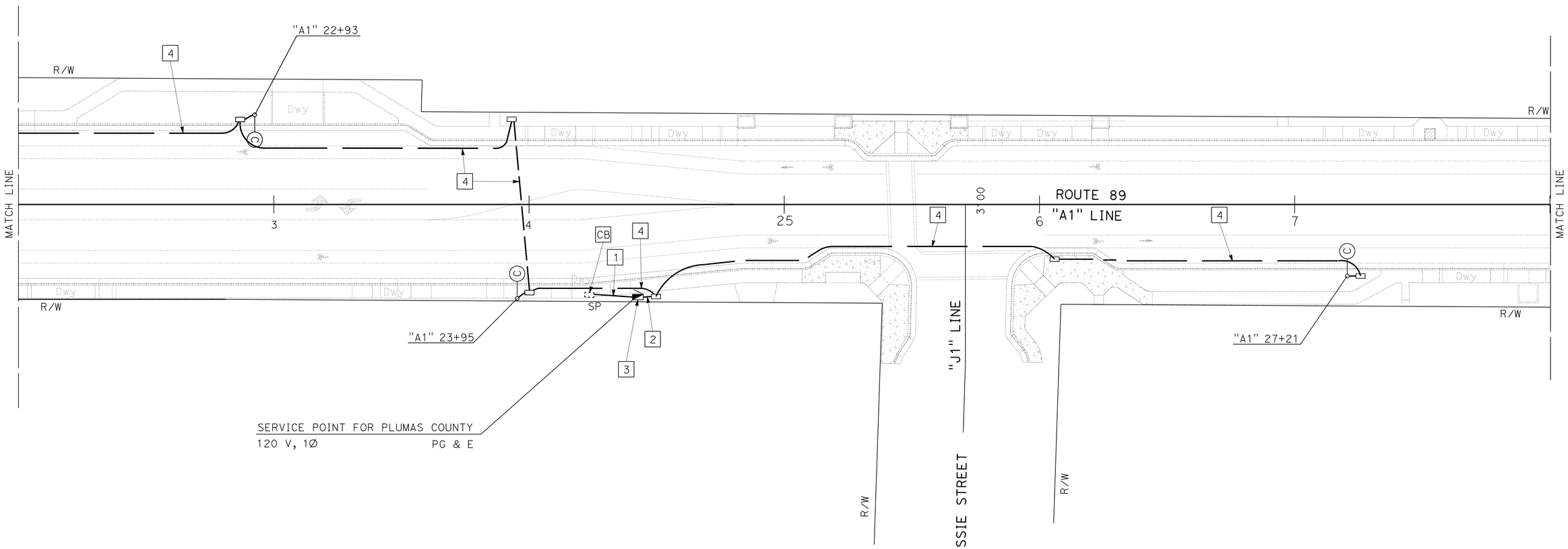

LIGHTING (CITY STREET-DECORATIVE)

SCALE: 1" = 20'

E-6

APPROVED FOR ELECTRICAL WORK ONLY

ARTURO P. ROBLES — JIM HANNIGAN — ROB STINGER

STATE OF CALIFORNIA - DEPARTMENT OF TRANSPORTATION — Caltrans® ELECTRICAL DESIGN

REVISED BY | DATE REVISED | CALCULATED-DESIGNED BY | CHECKED BY | FUNCTIONAL SUPERVISOR

P:\proj2\02\0E240_plans\pse\20e240ua006.dgn

LAST REVISION 01-19-16 | DATE PLOTTED => 24-MAR-2016 | TIME PLOTTED => 14:04

Dist	COUNTY	ROUTE	POST MILES TOTAL PROJECT	SHEET No.	TOTAL SHEETS
02	Plu	89	20.0/20.6	180	235

REGISTERED ELECTRICAL ENGINEER 01-19-16 DATE

01-19-16
PLANS APPROVAL DATE

REGISTERED PROFESSIONAL ENGINEER A.P. ROBLES No. E15293 Exp. 3-31-17 ELECTRICAL STATE OF CALIFORNIA

THE STATE OF CALIFORNIA OR ITS OFFICERS OR AGENTS SHALL NOT BE RESPONSIBLE FOR THE ACCURACY OR COMPLETENESS OF SCANNED COPIES OF THIS PLAN SHEET.

NOTES:

1. FOR ACCURATE RIGHT OF WAY AND ACCESS DATA, CONTACT RIGHT OF WAY ENGINEERING AT THE DISTRICT OFFICE.
2. COORDINATE CONDUIT INSTALLATION INTO EXISTING PULL BOX WITH PG & E.
3. SERVICE POINT LOCATIONS ARE APPROXIMATE.

LEGEND (THIS SHEET):

[1] 1½"C, 2#10, 1#10 G.

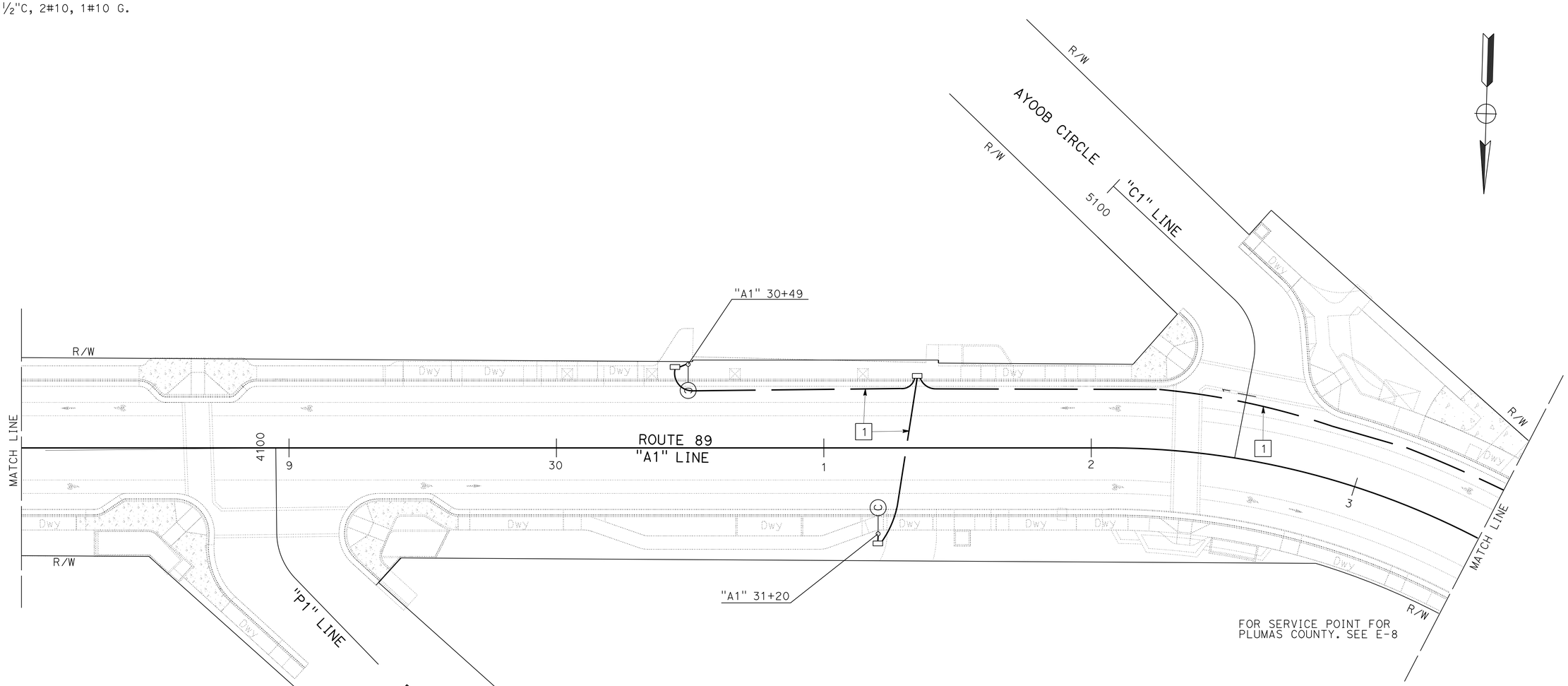

LIGHTING (CITY STREET-DECORATIVE)

SCALE: 1" = 20'

E-7

APPROVED FOR ELECTRICAL WORK ONLY

STATE OF CALIFORNIA - DEPARTMENT OF TRANSPORTATION
Caltrans® ELECTRICAL DESIGN

FUNCTIONAL SUPERVISOR: ROB STINGER
CALCULATED-DESIGNED BY: ARTURO P. ROBLES
CHECKED BY: JIM HANNIGAN
REVISED BY / DATE REVISED

P:\proj2\02\0E240_plans\pse\20e240ua007.dgn

LAST REVISION 01-19-16 | DATE PLOTTED => 24-MAR-2016 | TIME PLOTTED => 14:04

BORDER LAST REVISED 7/2/2010 | USERNAME => s115152 | DGN FILE => 20e240ua007.dgn | RELATIVE BORDER SCALE IS IN INCHES 0 1 2 3 | UNIT 0147 | PROJECT NUMBER & PHASE 02 1500 0146 1

Dist	COUNTY	ROUTE	POST MILES TOTAL PROJECT	SHEET No.	TOTAL SHEETS
02	Plu	89	20.0/20.6	181	235

REGISTERED ELECTRICAL ENGINEER — DATE: 01-19-16

PLANS APPROVAL DATE: 01-19-16

REGISTERED PROFESSIONAL ENGINEER — A.P. ROBLES — No. E15293 — Exp. 3-31-17 — ELECTRICAL — STATE OF CALIFORNIA

THE STATE OF CALIFORNIA OR ITS OFFICERS OR AGENTS SHALL NOT BE RESPONSIBLE FOR THE ACCURACY OR COMPLETENESS OF SCANNED COPIES OF THIS PLAN SHEET.

NOTES:

1. FOR ACCURATE RIGHT OF WAY AND ACCESS DATA, CONTACT RIGHT OF WAY ENGINEERING AT THE DISTRICT OFFICE.
2. COORDINATE CONDUIT INSTALLATION INTO EXISTING PULL BOX WITH PG & E.
3. SERVICE POINT LOCATIONS ARE APPROXIMATE.

LEGEND (THIS SHEET):

1. 2" DB 120, PT.
2. 2"C, 2#10, 1#10 G.
3. TYPE III-AF SERVICE EQUIPMENT ENCLOSURE. SEE WIRING DIAGRAM, SHEET E-19.
4. 1½"C, 2#10, 1#10 G.

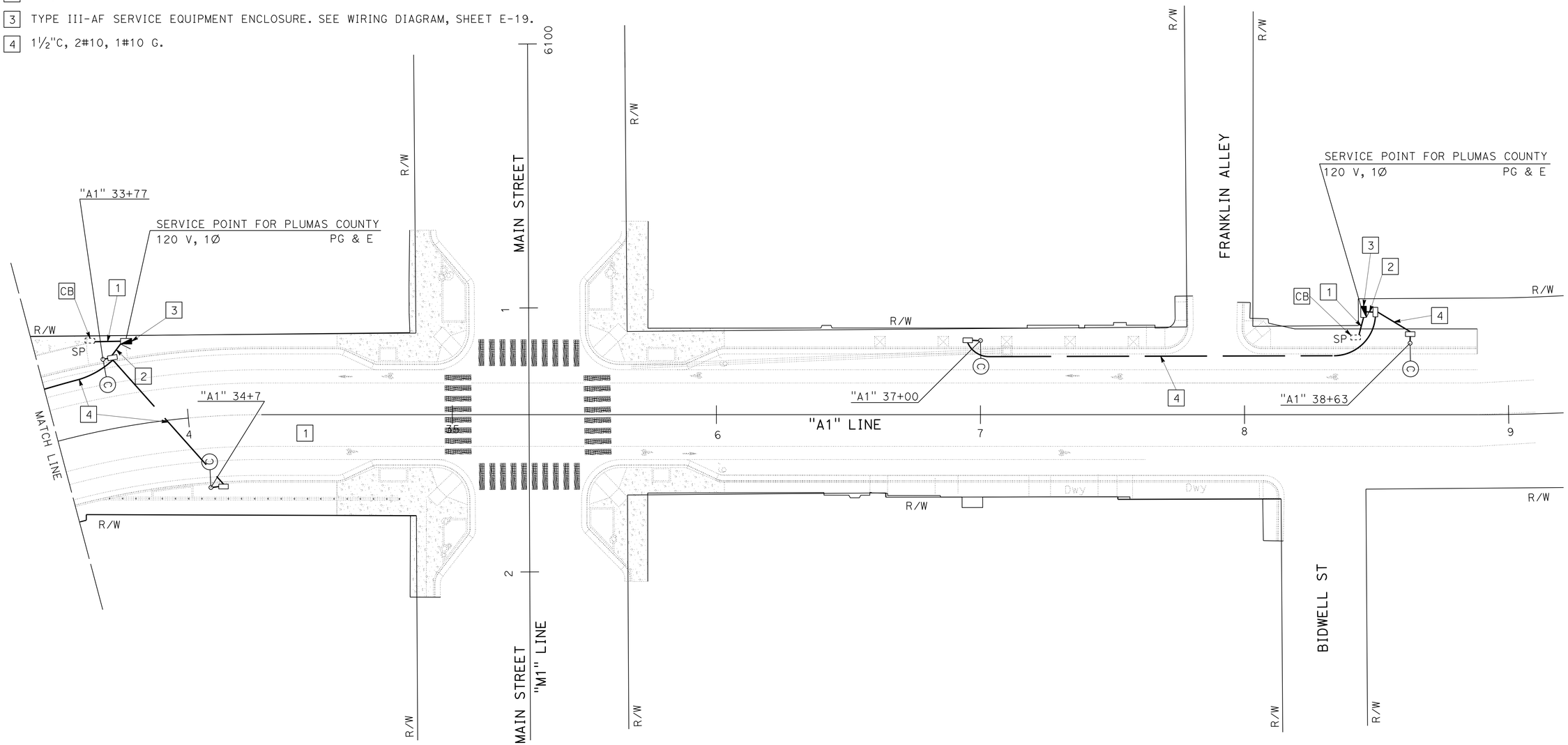

APPROVED FOR ELECTRICAL WORK ONLY

LIGHTING (CITY STREET-DECORATIVE)

SCALE: 1" = 20'

E-8

REVISED BY	DATE REVISED

CALCULATED-DESIGNED BY	CHECKED BY
ARTURO P. ROBLES	JIM HANNIGAN

FUNCTIONAL SUPERVISOR: ROB STINGER

STATE OF CALIFORNIA - DEPARTMENT OF TRANSPORTATION

Caltrans® **ELECTRICAL DESIGN**

P:\proj2\02\0E240_plans\pse\20e240ua008.dgn

LAST REVISION 01-19-16 | DATE PLOTTED => 24-MAR-2016 | TIME PLOTTED => 14:04

Dist	COUNTY	ROUTE	POST MILES TOTAL PROJECT	SHEET No.	TOTAL SHEETS
02	Plu	89	20.0/20.6	182	235

ART 01-19-16
REGISTERED ELECTRICAL ENGINEER DATE

01-19-16
PLANS APPROVAL DATE

REGISTERED PROFESSIONAL ENGINEER A.P. ROBLES No. E15293 Exp. 3-31-17 ELECTRICAL STATE OF CALIFORNIA

THE STATE OF CALIFORNIA OR ITS OFFICERS OR AGENTS SHALL NOT BE RESPONSIBLE FOR THE ACCURACY OR COMPLETENESS OF SCANNED COPIES OF THIS PLAN SHEET.

NOTES:

1. FOR ACCURATE RIGHT OF WAY AND ACCESS DATA, CONTACT RIGHT OF WAY ENGINEERING AT THE DISTRICT OFFICE.
2. FOR INFORMATION ONLY. PG & E TO REMOVE/RELOCATE ELECTROLIERS.

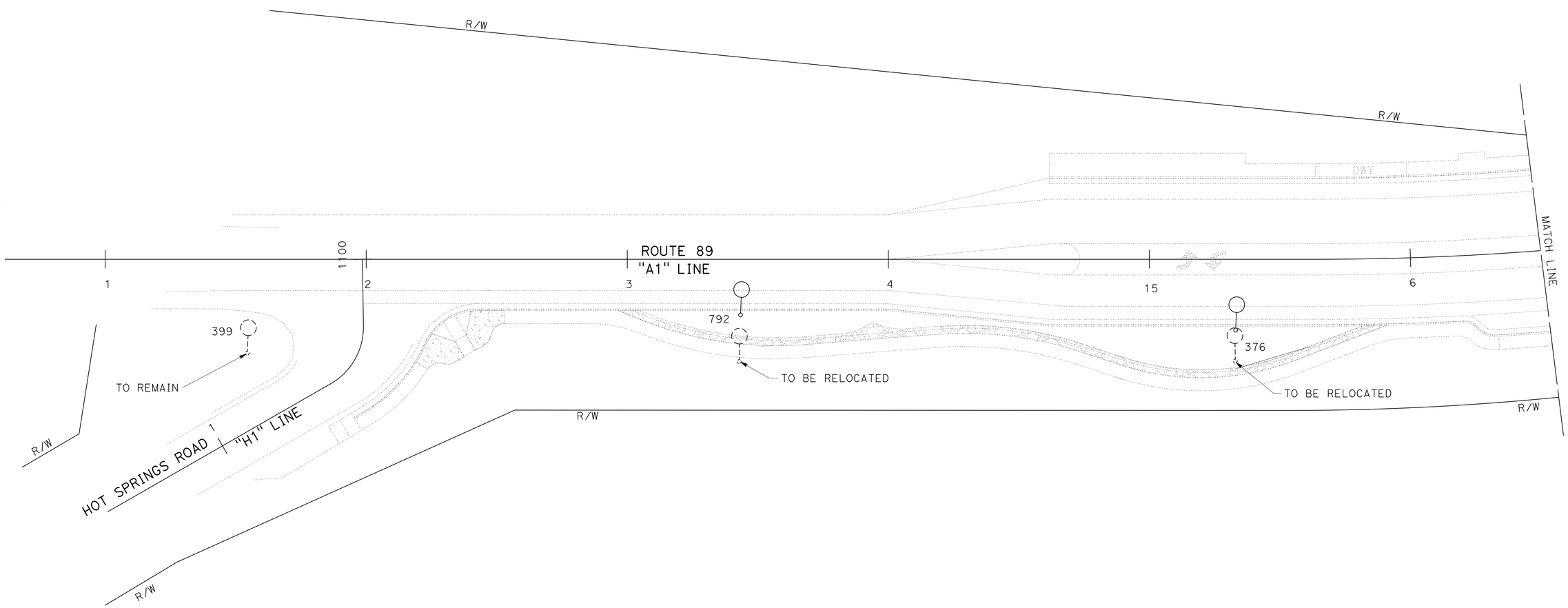

MODIFY LIGHTING

SCALE: 1" = 20'

E-9

APPROVED FOR ELECTRICAL WORK ONLY

ARTURO P. ROBLES — REVISED BY — DATE REVISED
JIM HANNIGAN — CALCULATED-DESIGNED BY — CHECKED BY
ROB STINGER — FUNCTIONAL SUPERVISOR

STATE OF CALIFORNIA - DEPARTMENT OF TRANSPORTATION
Caltrans® ELECTRICAL DESIGN

P:\proj2\02\0E240_plans\pse\20e240ua009.dgn

LAST REVISION 01-19-16 | DATE PLOTTED => 24-MAR-2016 | TIME PLOTTED => 14:04

Dist	COUNTY	ROUTE	POST MILES TOTAL PROJECT	SHEET No.	TOTAL SHEETS
02	Plu	89	20.0/20.6	183	235

REGISTERED ELECTRICAL ENGINEER 01-19-16 DATE

01-19-16
PLANS APPROVAL DATE

REGISTERED PROFESSIONAL ENGINEER A.P. ROBLES No. E15293 Exp. 3-31-17 ELECTRICAL STATE OF CALIFORNIA

THE STATE OF CALIFORNIA OR ITS OFFICERS OR AGENTS SHALL NOT BE RESPONSIBLE FOR THE ACCURACY OR COMPLETENESS OF SCANNED COPIES OF THIS PLAN SHEET.

NOTES:

1. FOR ACCURATE RIGHT OF WAY AND ACCESS DATA, CONTACT RIGHT OF WAY ENGINEERING AT THE DISTRICT OFFICE.
2. FOR INFORMATION ONLY. PG & E TO REMOVE/RELOCATE ELECTROLIERS.

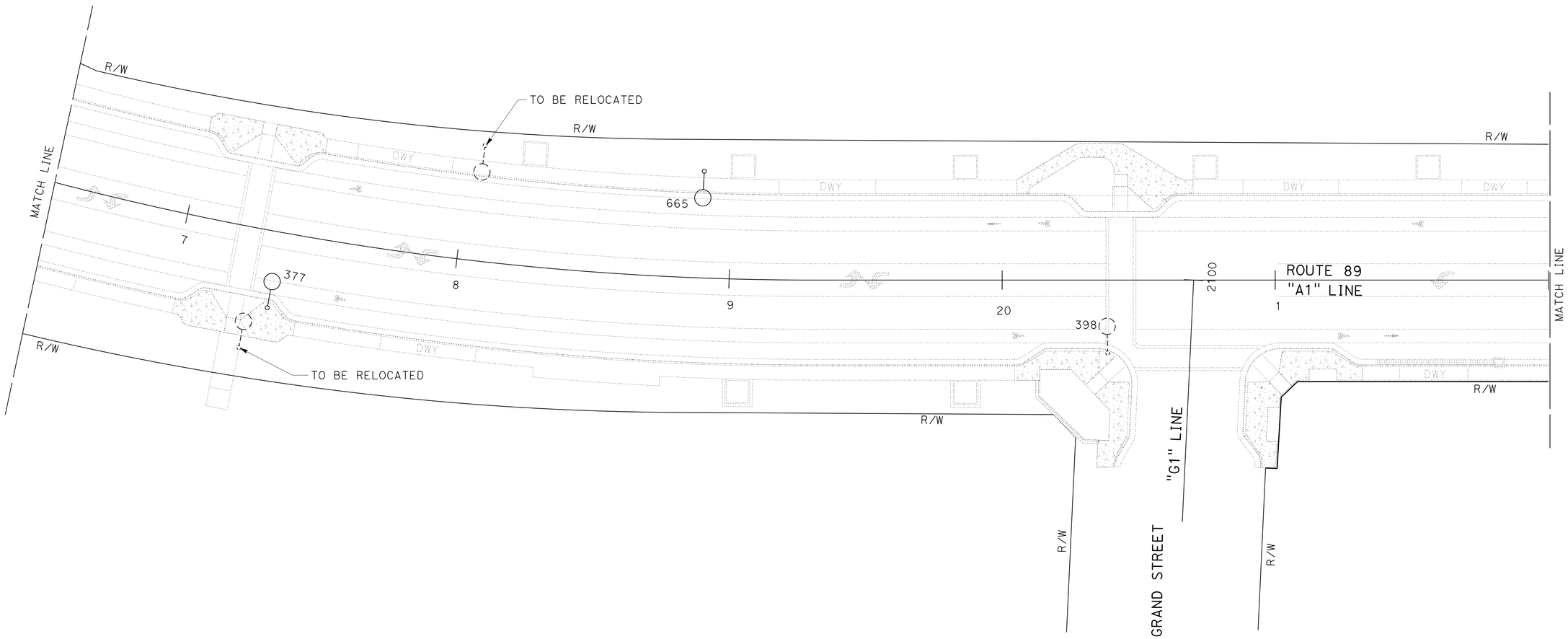

MODIFY LIGHTING

SCALE: 1" = 20'

E-10

APPROVED FOR ELECTRICAL WORK ONLY

REVISED BY	DATE REVISED

CALCULATED-DESIGNED BY	CHECKED BY
ARTURO P. ROBLES	JIM HANNIGAN

FUNCTIONAL SUPERVISOR: ROB STINGER

STATE OF CALIFORNIA - DEPARTMENT OF TRANSPORTATION
Caltrans® ELECTRICAL DESIGN

P:\proj2\02\0E240_plans\pse\20e240ua010.dgn

LAST REVISION 01-19-16 | DATE PLOTTED => 24-MAR-2016 | TIME PLOTTED => 14:04

Dist	COUNTY	ROUTE	POST MILES TOTAL PROJECT	SHEET No.	TOTAL SHEETS
02	Plu	89	20.0/20.6	184	235

ART 01-19-16
REGISTERED ELECTRICAL ENGINEER DATE

01-19-16
PLANS APPROVAL DATE

REGISTERED PROFESSIONAL ENGINEER A.P. ROBLES No. E15293 Exp. 3-31-17 ELECTRICAL STATE OF CALIFORNIA

THE STATE OF CALIFORNIA OR ITS OFFICERS OR AGENTS SHALL NOT BE RESPONSIBLE FOR THE ACCURACY OR COMPLETENESS OF SCANNED COPIES OF THIS PLAN SHEET.

NOTES:

1. FOR ACCURATE RIGHT OF WAY AND ACCESS DATA, CONTACT RIGHT OF WAY ENGINEERING AT THE DISTRICT OFFICE.
2. FOR INFORMATION ONLY. PG & E TO REMOVE/RELOCATE ELECTROLIERS.

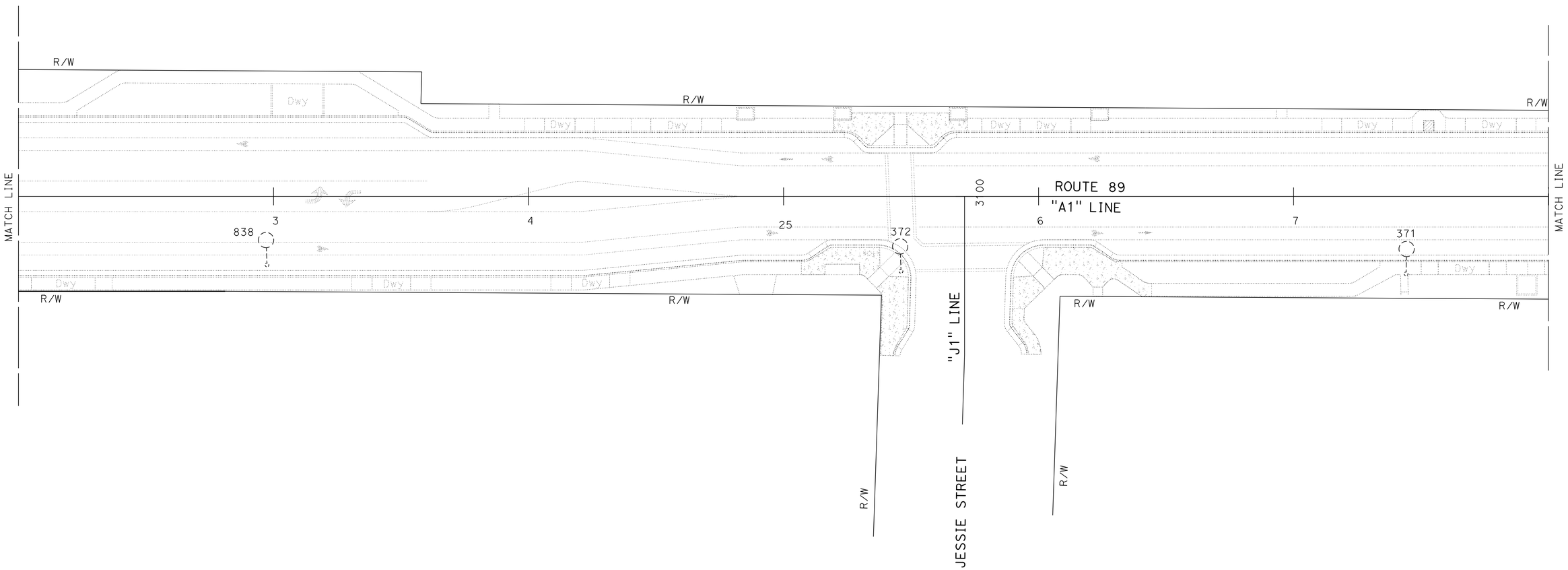

MODIFY LIGHTING

SCALE: 1" = 20'

E-11

APPROVED FOR ELECTRICAL WORK ONLY

ARTURO P. ROBLES — JIM HANNIGAN — ROB STINGER

REVISED BY | DATE REVISED | CALCULATED-DESIGNED BY | CHECKED BY | FUNCTIONAL SUPERVISOR

STATE OF CALIFORNIA - DEPARTMENT OF TRANSPORTATION
Caltrans ELECTRICAL DESIGN

P:\proj2\02\0E240_plans\pse\20e240ua011.dgn

LAST REVISION 01-19-16 | DATE PLOTTED => 24-MAR-2016 | TIME PLOTTED => 14:04

Dist	COUNTY	ROUTE	POST MILES TOTAL PROJECT	SHEET No.	TOTAL SHEETS
02	Plu	89	20.0/20.6	185	235

REGISTERED ELECTRICAL ENGINEER — DATE: 01-19-16

PLANS APPROVAL DATE: 01-19-16

REGISTERED PROFESSIONAL ENGINEER — A.P. ROBLES — No. E15293 — Exp. 3-31-17 — ELECTRICAL — STATE OF CALIFORNIA

THE STATE OF CALIFORNIA OR ITS OFFICERS OR AGENTS SHALL NOT BE RESPONSIBLE FOR THE ACCURACY OR COMPLETENESS OF SCANNED COPIES OF THIS PLAN SHEET.

NOTES:

1. FOR ACCURATE RIGHT OF WAY AND ACCESS DATA, CONTACT RIGHT OF WAY ENGINEERING AT THE DISTRICT OFFICE.
2. FOR INFORMATION ONLY. PG & E TO REMOVE ELECTROLIERS.

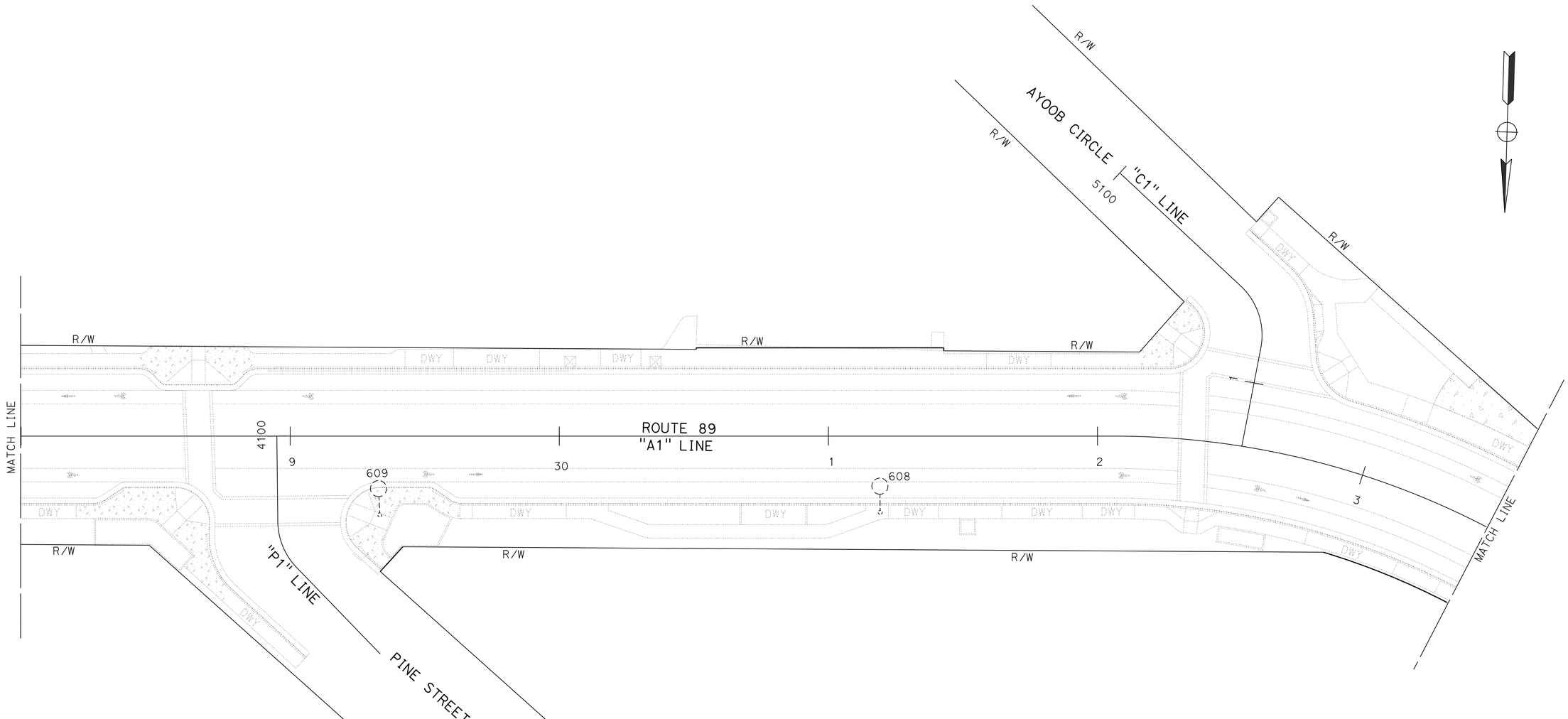

MODIFY LIGHTING

SCALE: 1" = 20'

E-12

APPROVED FOR ELECTRICAL WORK ONLY

REVISED BY	
DATE REVISED	
CALCULATED-DESIGNED BY	ARTURO P. ROBLES
CHECKED BY	JIM HANNIGAN
FUNCTIONAL SUPERVISOR	ROB STINGER

STATE OF CALIFORNIA - DEPARTMENT OF TRANSPORTATION

Caltrans® **ELECTRICAL DESIGN**

P:\proj2\02\0E240_plans\pse\20e240ua012.dgn

LAST REVISION 01-19-16 | DATE PLOTTED => 24-MAR-2016 | TIME PLOTTED => 14:04

Dist	COUNTY	ROUTE	POST MILES TOTAL PROJECT	SHEET No.	TOTAL SHEETS
02	Plu	89	20.0/20.6	186	235

REGISTERED ELECTRICAL ENGINEER 01-19-16 DATE

PLANS APPROVAL DATE 01-19-16

REGISTERED PROFESSIONAL ENGINEER A.P. ROBLES No. E15293 Exp. 3-31-17 ELECTRICAL STATE OF CALIFORNIA

THE STATE OF CALIFORNIA OR ITS OFFICERS OR AGENTS SHALL NOT BE RESPONSIBLE FOR THE ACCURACY OR COMPLETENESS OF SCANNED COPIES OF THIS PLAN SHEET.

NOTES:

1. FOR ACCURATE RIGHT OF WAY AND ACCESS DATA, CONTACT RIGHT OF WAY ENGINEERING AT THE DISTRICT OFFICE.
2. FOR INFORMATION ONLY. PG & E TO REMOVE ELECTROLIERS.

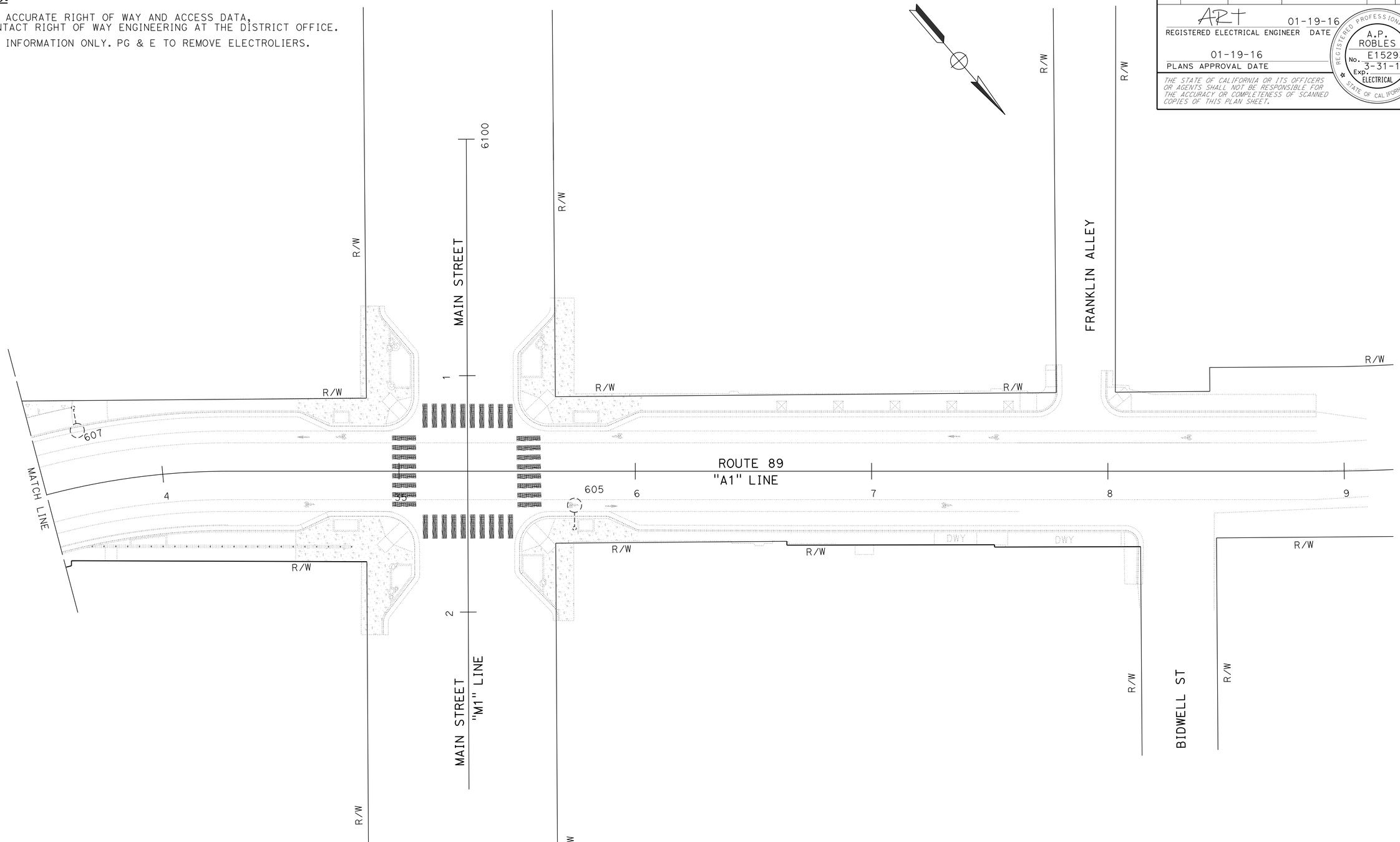

MODIFY LIGHTING

SCALE: 1" = 20'

E-13

APPROVED FOR ELECTRICAL WORK ONLY

REVISED BY	ARTURO P. ROBLES
DATE REVISED	JIM HANNIGAN
CALCULATED-DESIGNED BY	FUNCTIONAL SUPERVISOR
CHECKED BY	ROB STINGER

STATE OF CALIFORNIA - DEPARTMENT OF TRANSPORTATION

Caltrans® **ELECTRICAL DESIGN**

P:\proj2\02\0E240_plans\pse\20e240ua013.dgn

LAST REVISION 01-19-16 | DATE PLOTTED => 24-MAR-2016 TIME PLOTTED => 14:04

Dist	COUNTY	ROUTE	POST MILES TOTAL PROJECT	SHEET No.	TOTAL SHEETS
02	Plu	89	20.0/20.6	187	235

REGISTERED ELECTRICAL ENGINEER 01-19-16 DATE

PLANS APPROVAL DATE 01-19-16

REGISTERED PROFESSIONAL ENGINEER A.P. ROBLES No. E15293 Exp. 3-31-17 ELECTRICAL STATE OF CALIFORNIA

THE STATE OF CALIFORNIA OR ITS OFFICERS OR AGENTS SHALL NOT BE RESPONSIBLE FOR THE ACCURACY OR COMPLETENESS OF SCANNED COPIES OF THIS PLAN SHEET.

NOTE:

1. FOR ACCURATE RIGHT OF WAY DATA, CONTACT RIGHT OF WAY ENGINEERING AT THE DISTRICT OFFICE.

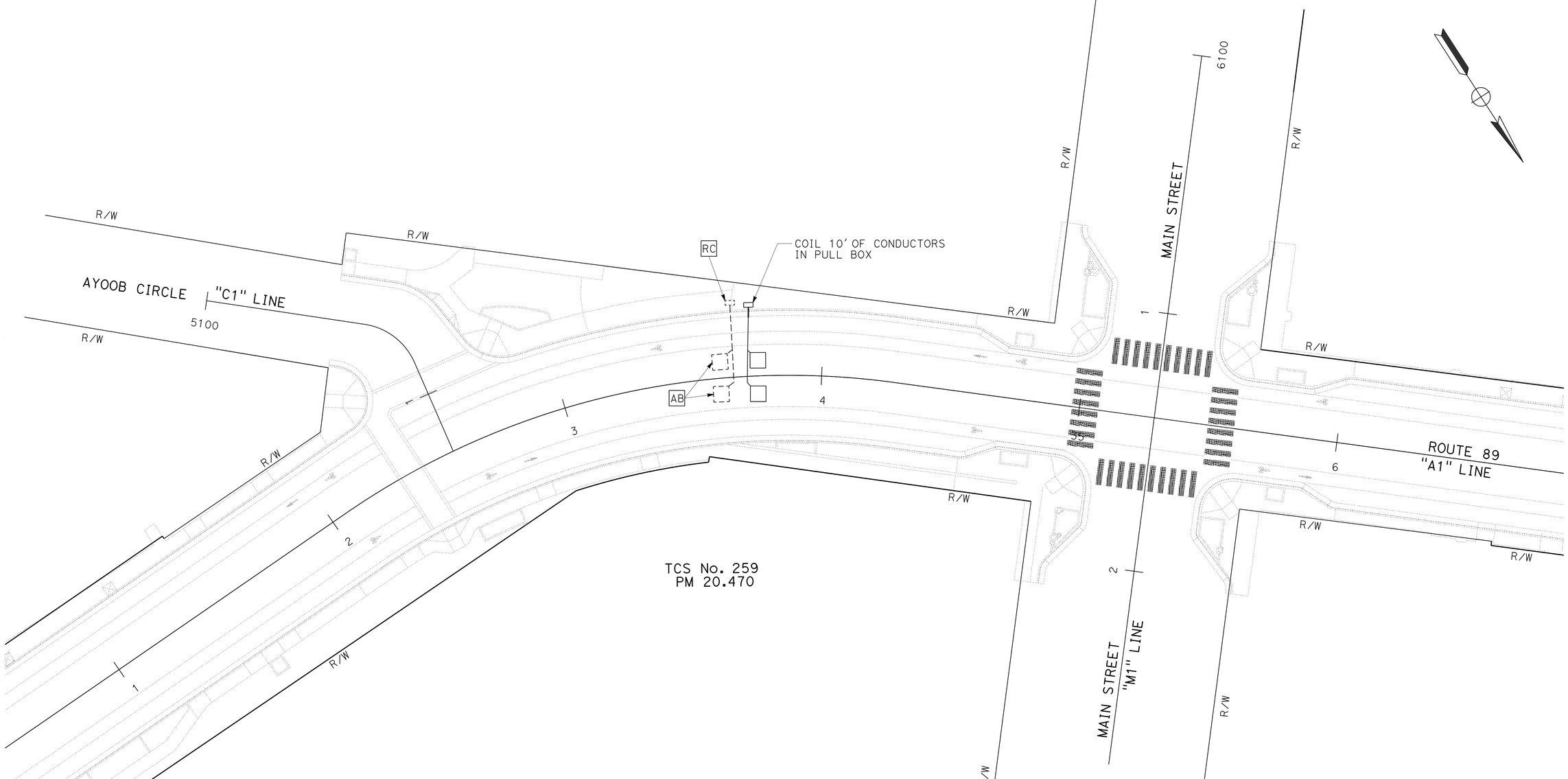

MODIFY TRAFFIC COUNT STATION

SCALE: 1" = 20'

E-14

APPROVED FOR ELECTRICAL WORK ONLY

REVISED BY	DATE REVISED

ARTURO P. ROBLES — CALCULATED-DESIGNED BY

JIM HANNIGAN — CHECKED BY

FUNCTIONAL SUPERVISOR: ROB STINGER

STATE OF CALIFORNIA - DEPARTMENT OF TRANSPORTATION

Caltrans® **ELECTRICAL DESIGN**

P:\proj2\02\0E240_plans\pse\20e240ua014.dgn

LAST REVISION 01-19-16 | DATE PLOTTED => 24-MAR-2016 | TIME PLOTTED => 14:04

BORDER LAST REVISED 7/2/2010 | USERNAME => s115152 | DGN FILE => 20e240ua014.dgn | RELATIVE BORDER SCALE IS IN INCHES 0 1 2 3 | UNIT 0147 | PROJECT NUMBER & PHASE 02 1500 0146 1

Dist	COUNTY	ROUTE	POST MILES TOTAL PROJECT	SHEET No.	TOTAL SHEETS
02	Plu	89	20.0/20.6	188	235

REGISTERED ELECTRICAL ENGINEER 01-19-16 DATE

PLANS APPROVAL DATE 01-19-16

REGISTERED PROFESSIONAL ENGINEER A.P. ROBLES No. E15293 Exp. 3-31-17 ELECTRICAL STATE OF CALIFORNIA

THE STATE OF CALIFORNIA OR ITS OFFICERS OR AGENTS SHALL NOT BE RESPONSIBLE FOR THE ACCURACY OR COMPLETENESS OF SCANNED COPIES OF THIS PLAN SHEET.

NOTE:

1. FOR ACCURATE RIGHT OF WAY DATA, CONTACT RIGHT OF WAY ENGINEERING AT THE DISTRICT OFFICE.

LEGEND (THIS SHEET):

1. 1½"C, 2#8, 1#8 G.
2. TAPE AND WATERPROOF CONDUCTORS. COIL 10' OF CONDUCTORS IN PB.
3. 2" DB 120, PT.
4. 2"C, PT.
5. TYPE III-AF SERVICE EQUIPMENT ENCLOSURE. SEE WIRING DIAGRAM, SHEET E-19.

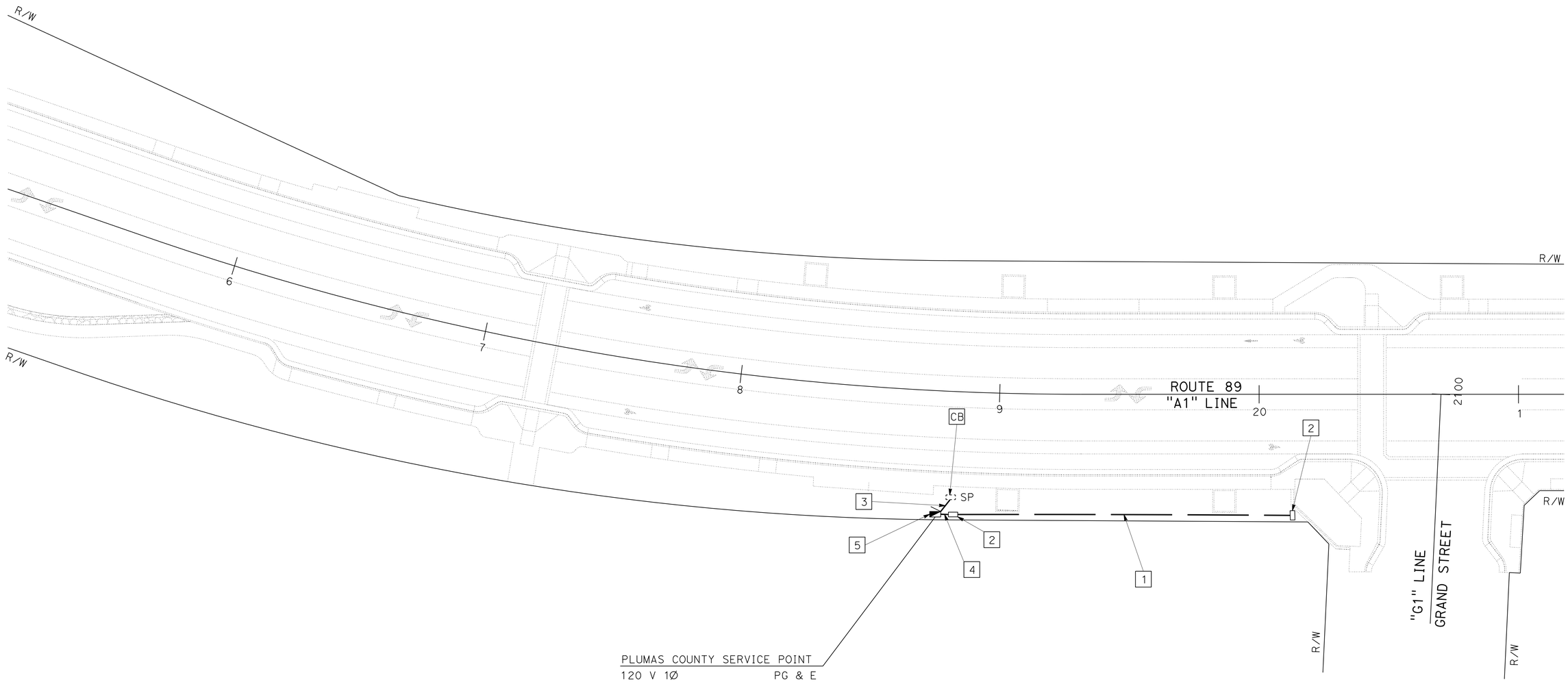

APPROVED FOR ELECTRICAL WORK ONLY

ELECTRIC SERVICE (IRRIGATION)

SCALE: 1" = 20'

E-15

REVISED BY | DATE REVISED

ARTURO P. ROBLES | JIM HANNIGAN

CALCULATED-DESIGNED BY | CHECKED BY

FUNCTIONAL SUPERVISOR: ROB STINGER

STATE OF CALIFORNIA - DEPARTMENT OF TRANSPORTATION

Caltrans® ELECTRICAL DESIGN

P:\proj\02\0E240_plans\pse\20e240ua015.dgn

LAST REVISION 01-19-16 | DATE PLOTTED => 24-MAR-2016 | TIME PLOTTED => 14:04

Dist	COUNTY	ROUTE	POST MILES TOTAL PROJECT	SHEET No.	TOTAL SHEETS
02	Plu	89	20.0/20.6	189	235

ART 01-19-16
REGISTERED ELECTRICAL ENGINEER DATE

01-19-16
PLANS APPROVAL DATE

REGISTERED PROFESSIONAL ENGINEER A.P. ROBLES No. E15293 Exp. 3-31-17 ELECTRICAL STATE OF CALIFORNIA

THE STATE OF CALIFORNIA OR ITS OFFICERS OR AGENTS SHALL NOT BE RESPONSIBLE FOR THE ACCURACY OR COMPLETENESS OF SCANNED COPIES OF THIS PLAN SHEET.

NOTES:

1. FOR ACCURATE RIGHT OF WAY DATA, CONTACT RIGHT OF WAY ENGINEERING AT THE DISTRICT OFFICE.
2. COORDINATE CONDUIT INSTALLATION INTO EXISTING PULL BOX WITH PG&E.

LEGEND (THIS SHEET):

1 1½"C, 2#8,1#8 G.

2 2"C, 2#8,1#8 G.

3 TYPE III-AF SERVICE EQUIPMENT ENCLOSURE. SEE WIRING DIAGRAM, SHEET E-19.

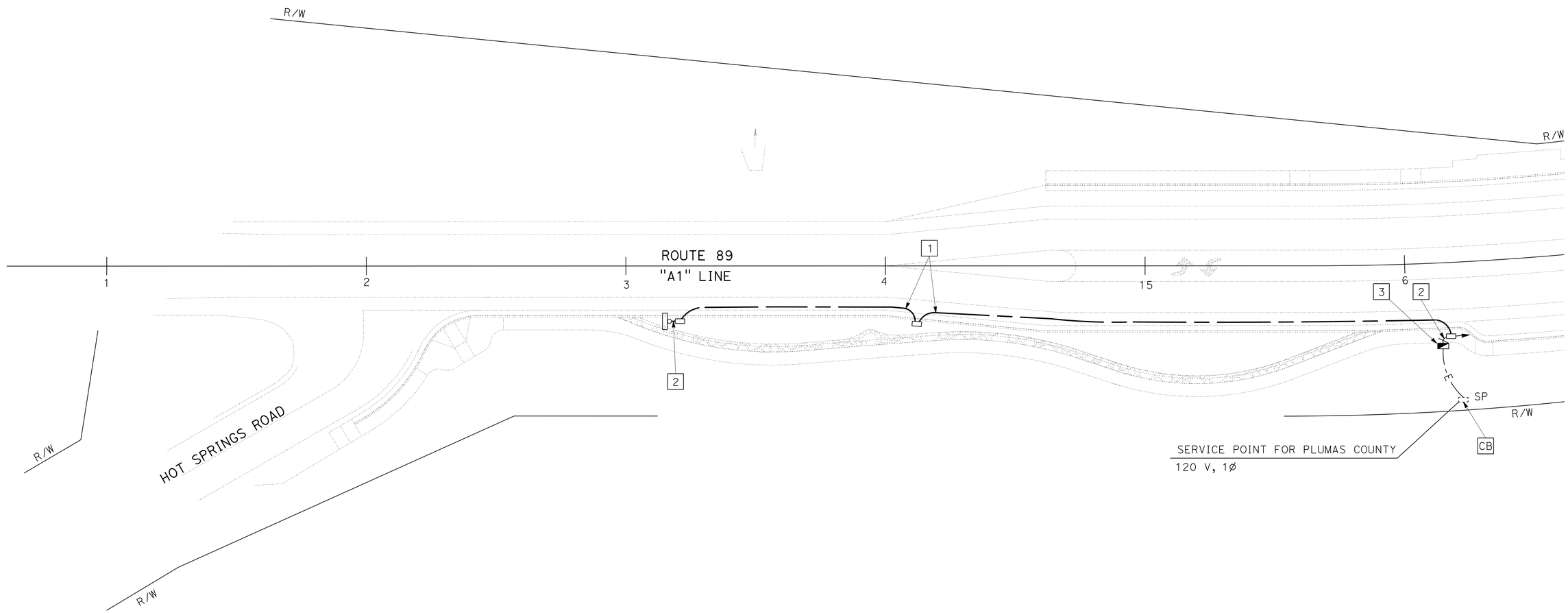

RADAR SPEED FEEDBACK SIGN

SCALE: 1" = 20'

E-16

APPROVED FOR ELECTRICAL WORK ONLY

STATE OF CALIFORNIA - DEPARTMENT OF TRANSPORTATION
Caltrans® ELECTRICAL DESIGN

FUNCTIONAL SUPERVISOR: ROB STINGER
CALCULATED-DESIGNED BY: ARTURO P. ROBLES
CHECKED BY: JIM HANNIGAN
REVISED BY / DATE REVISED

P:\proj2\02\0E240_plans\pse\20e240ua016.dgn

LAST REVISION 01-19-16
DATE PLOTTED => 24-MAR-2016
TIME PLOTTED => 14:04

Dist	COUNTY	ROUTE	POST MILES TOTAL PROJECT	SHEET No.	TOTAL SHEETS
02	Plu	89	20.0/20.6	190	235

REGISTERED ELECTRICAL ENGINEER 01-19-16 DATE

01-19-16
PLANS APPROVAL DATE

REGISTERED PROFESSIONAL ENGINEER A.P. ROBLES No. E15293 Exp. 3-31-17 ELECTRICAL STATE OF CALIFORNIA

THE STATE OF CALIFORNIA OR ITS OFFICERS OR AGENTS SHALL NOT BE RESPONSIBLE FOR THE ACCURACY OR COMPLETENESS OF SCANNED COPIES OF THIS PLAN SHEET.

NOTES:

1. FOR ACCURATE RIGHT OF WAY DATA, CONTACT RIGHT OF WAY ENGINEERING AT THE DISTRICT OFFICE.
2. COORDINATE CONDUIT INSTALLATION INTO EXISTING PULL BOX WITH PG & E.

LEGEND (THIS SHEET):

1. 2" DB 120, PT.
2. TYPE III-AF SERVICE EQUIPMENT ENCLOSURE. SEE WIRING DIAGRAM, SHEET E-19.
3. 2"C, 2#8, 1#8 G.

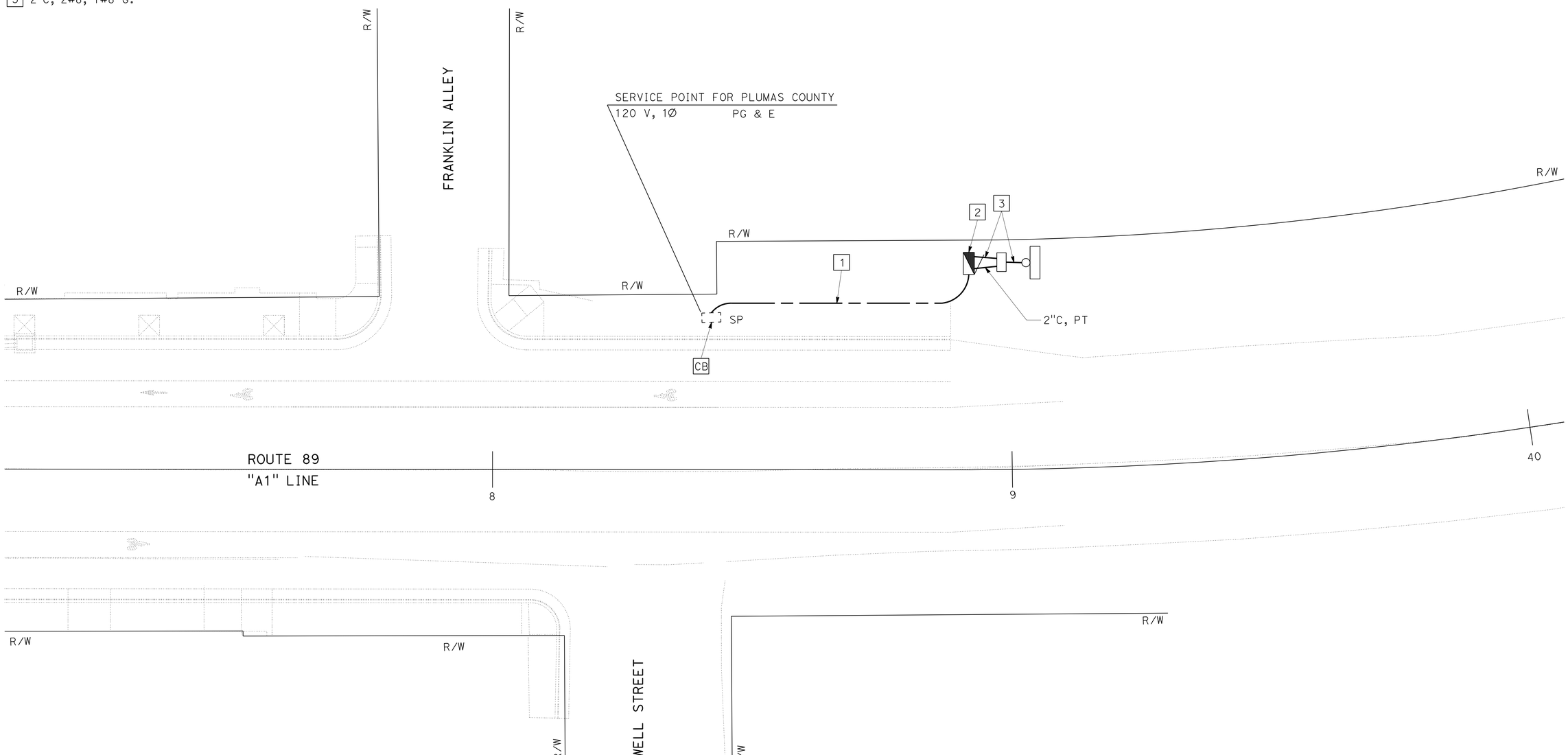

APPROVED FOR ELECTRICAL WORK ONLY

RADAR SPEED FEEDBACK SIGN

SCALE: 1" = 10'

E-17

REVISED BY | DATE REVISED
ARTURO P. ROBLES | JIM HANNIGAN
CALCULATED-DESIGNED BY | CHECKED BY
FUNCTIONAL SUPERVISOR: ROB STINGER

STATE OF CALIFORNIA - DEPARTMENT OF TRANSPORTATION
Caltrans® ELECTRICAL DESIGN

P:\proj\02\0E240_plans\pse\20e240ua017.dgn

LAST REVISION 01-19-16 | DATE PLOTTED => 24-MAR-2016 | TIME PLOTTED => 14:04

BORDER LAST REVISED 7/2/2010 | USERNAME => s115152 | DGN FILE => 20e240ua017.dgn | RELATIVE BORDER SCALE IS IN INCHES 0 1 2 3 | UNIT 0147 | PROJECT NUMBER & PHASE 02 1500 0146 1

Dist	COUNTY	ROUTE	POST MILES TOTAL PROJECT	SHEET No.	TOTAL SHEETS
02	Plu	89	20.0/20.6	191	235

REGISTERED ELECTRICAL ENGINEER 01-19-16 DATE

01-19-16
PLANS APPROVAL DATE

REGISTERED PROFESSIONAL ENGINEER A.P. ROBLES No. E15293 Exp. 3-31-17 ELECTRICAL STATE OF CALIFORNIA

THE STATE OF CALIFORNIA OR ITS OFFICERS OR AGENTS SHALL NOT BE RESPONSIBLE FOR THE ACCURACY OR COMPLETENESS OF SCANNED COPIES OF THIS PLAN SHEET.

NOTES:

1. FOR ACCURATE RIGHT OF WAY DATA, CONTACT RIGHT OF WAY ENGINEERING AT THE DISTRICT OFFICE.
2. COORDINATE CONDUIT INSTALLATION INTO EXISTING PULL BOX WITH PG & E.

LEGEND (THIS SHEET):

1. TYPE III-AF SERVICE EQUIPMENT ENCLOSURE. SEE WIRING DIAGRAM, SHEET E-19.
2. 1½"C, 2#8,1#8 G.
3. 2"C, 2#14 (RED AND BLACK-RRFB), 2#14 (WHITE AND BLUE-APS), 1#10 G.
4. 2" DB 120, PT.
5. 2"C, 2#8 (RRFB), 1#8 G.
6. SEE SHEET E-16.
7. 2"C, 2#8, 2#14 (RED AND BLACK-RRFB), 2#14 (WHITE AND BLUE-APS), 1#10 G.
8. INSTALL RRFB CONTROLLER.

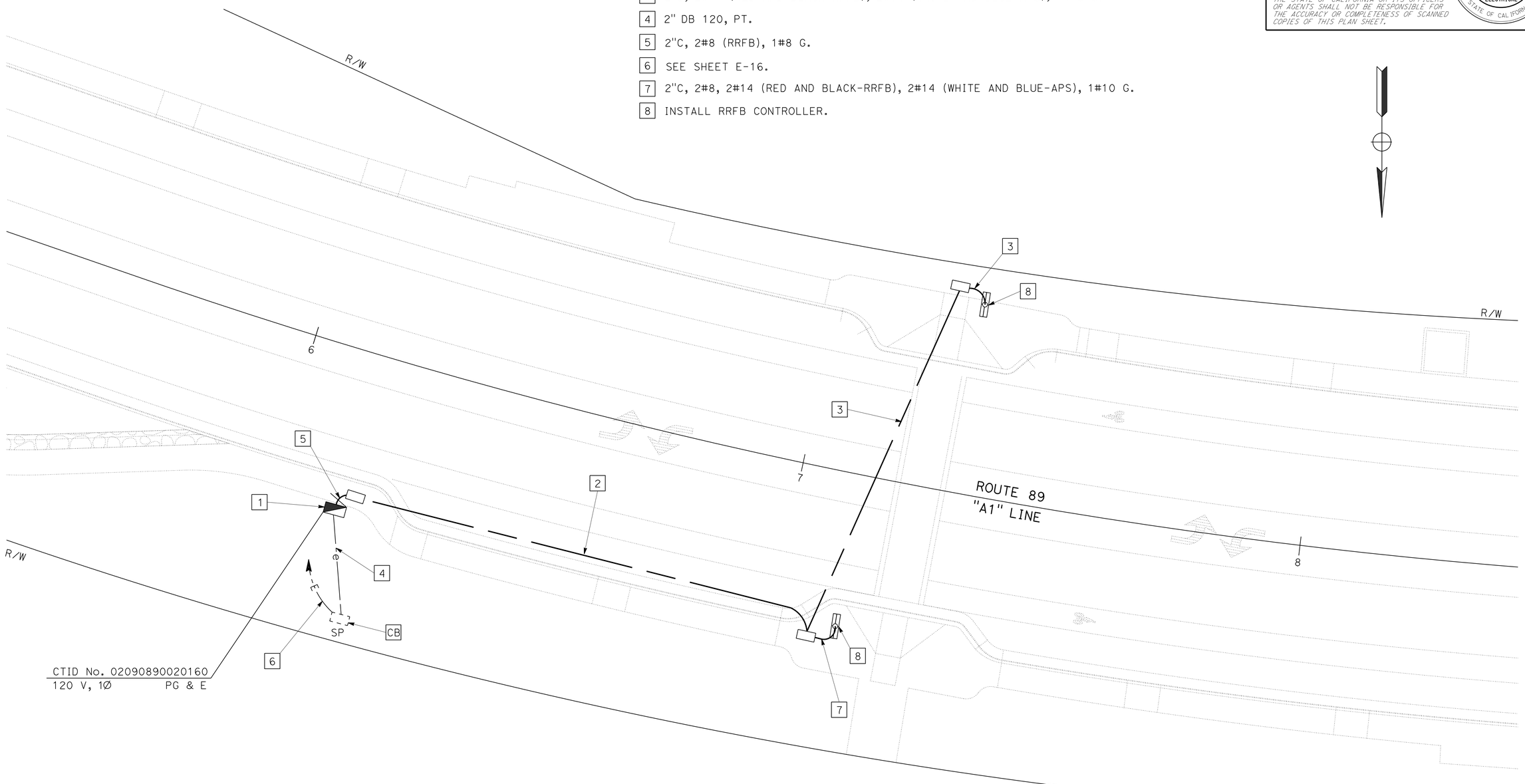

RECTANGULAR RAPID FLASHING BEACON SYSTEM

SCALE: 1" = 10'

E-18

APPROVED FOR ELECTRICAL WORK ONLY

STATE OF CALIFORNIA - DEPARTMENT OF TRANSPORTATION
Caltrans® **ELECTRICAL DESIGN**

FUNCTIONAL SUPERVISOR: ROB STINGER
CALCULATED-DESIGNED BY: ARTURO P. ROBLES
CHECKED BY: JIM HANNIGAN
REVISED BY / DATE REVISED

P:\proj2\02\0E240_plans\pse\20e240ua018.dgn

LAST REVISION 01-19-16 | DATE PLOTTED => 24-MAR-2016 | TIME PLOTTED => 14:04

BORDER LAST REVISED 7/2/2010 | USERNAME => s115152 | DGN FILE => 20e240ua018.dgn | RELATIVE BORDER SCALE IS IN INCHES 0 1 2 3 | UNIT 0147 | PROJECT NUMBER & PHASE 02 1500 0146 1

Dist	COUNTY	ROUTE	POST MILES TOTAL PROJECT	SHEET No.	TOTAL SHEETS
02	Plu	89	20.0/20.6	192	235

REGISTERED ELECTRICAL ENGINEER 01-19-16 DATE

01-19-16
PLANS APPROVAL DATE

REGISTERED PROFESSIONAL ENGINEER A.P. ROBLES No. E15293 Exp. 3-31-17 ELECTRICAL STATE OF CALIFORNIA

THE STATE OF CALIFORNIA OR ITS OFFICERS OR AGENTS SHALL NOT BE RESPONSIBLE FOR THE ACCURACY OR COMPLETENESS OF SCANNED COPIES OF THIS PLAN SHEET.

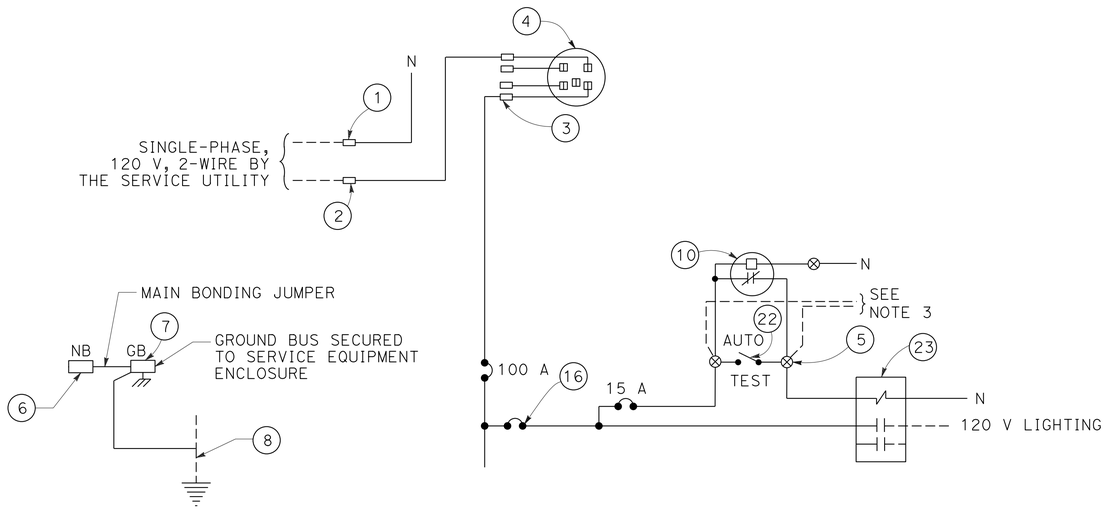

120 V LIGHTING SERVICE (WIRING DIAGRAM)

SEE RSP ES-2D FOR DETAILS NOT SHOWN

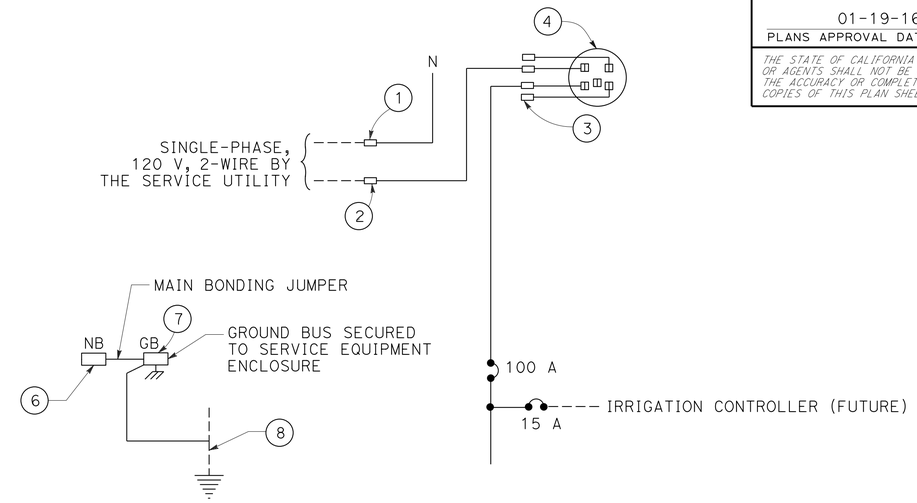

120 V SERVICE (WIRING DIAGRAM)

PLUMAS COUNTY SERVICE POINT, SHEET E-15

SEE RSP ES-2D FOR DETAILS NOT SHOWN

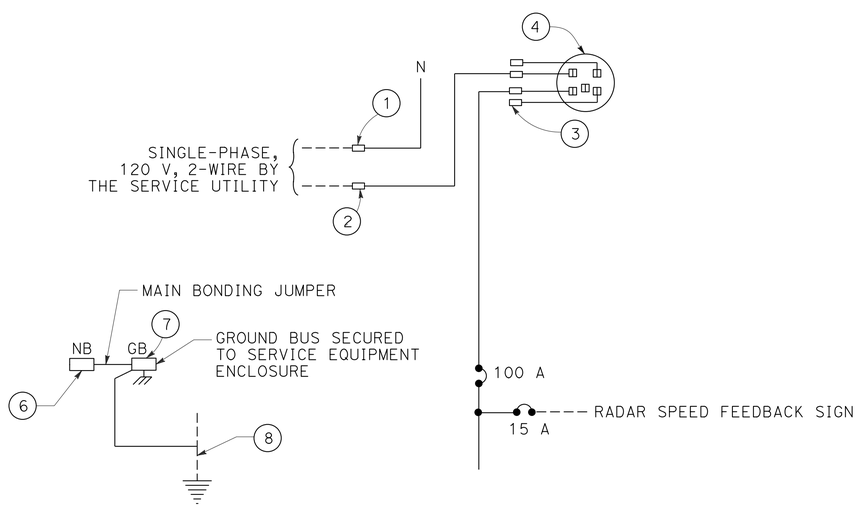

120 V SERVICE (WIRING DIAGRAM)

SEE RSP ES-2D FOR DETAILS NOT SHOWN

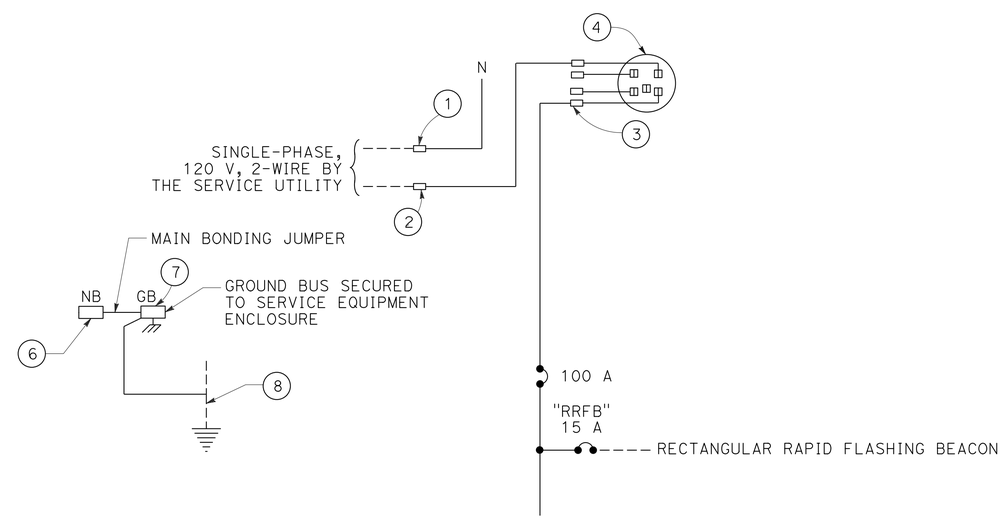

120 V SERVICE (WIRING DIAGRAM)

CTID No. 02090890020160

SEE RSP ES-2D FOR DETAILS NOT SHOWN

ELECTRICAL DETAILS

NO SCALE

E-19

STATE OF CALIFORNIA - DEPARTMENT OF TRANSPORTATION
Caltrans® ELECTRICAL DESIGN

FUNCTIONAL SUPERVISOR: ROB STINGER
CALCULATED-DESIGNED BY: ARTURO P. ROBLES
CHECKED BY: JIM HANNIGAN
REVISED BY / DATE REVISED

P:\proj2\02\0E240_plans\pse\20e240ua019.dgn

LAST REVISION 01-19-16
DATE PLOTTED => 24-MAR-2016
TIME PLOTTED => 14:04

Dist	COUNTY	ROUTE	POST MILES TOTAL PROJECT	SHEET No.	TOTAL SHEETS
02	Plu	89	20.0/20.6	193	235

ART 01-19-16
REGISTERED ELECTRICAL ENGINEER DATE

01-19-16
PLANS APPROVAL DATE

REGISTERED PROFESSIONAL ENGINEER A.P. ROBLES No. E15293 Exp. 3-31-17 ELECTRICAL STATE OF CALIFORNIA

THE STATE OF CALIFORNIA OR ITS OFFICERS OR AGENTS SHALL NOT BE RESPONSIBLE FOR THE ACCURACY OR COMPLETENESS OF SCANNED COPIES OF THIS PLAN SHEET.

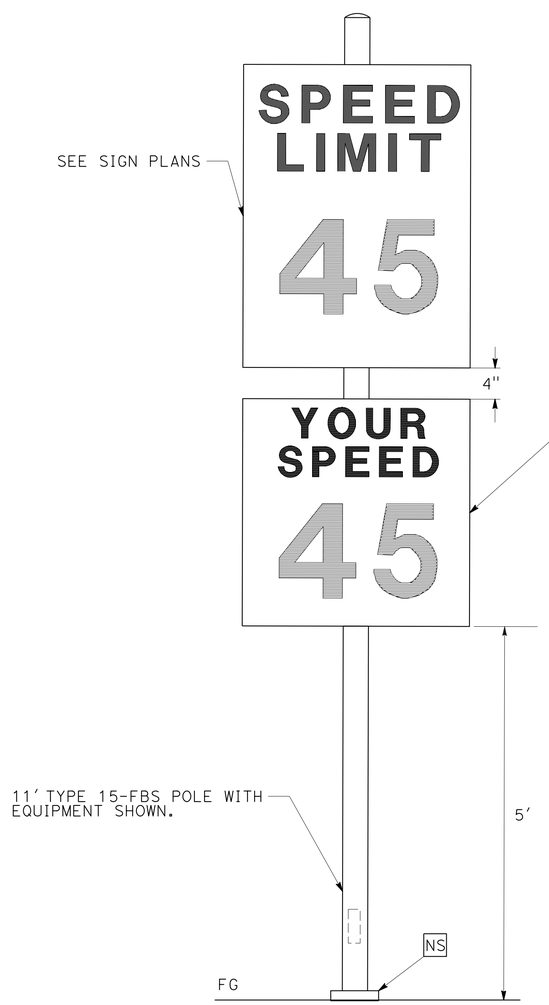

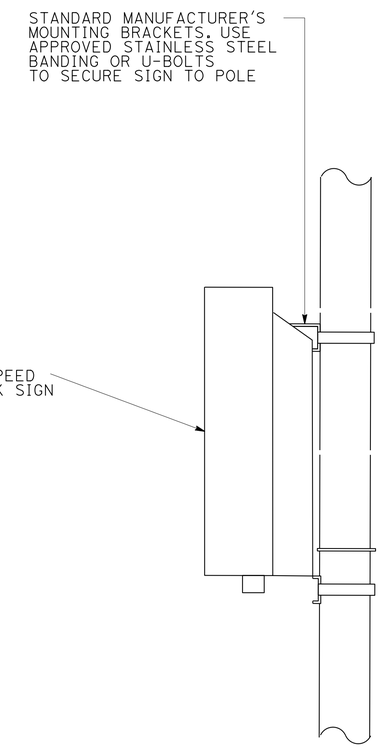

SIDE VIEW

ES-7N
DET A

RADAR SPEED FEEDBACK SIGN

ELECTRICAL DETAILS

NO SCALE

E-20

REVISED BY	DATE REVISED

CALCULATED-DESIGNED BY	ARTURO P. ROBLES
CHECKED BY	JIM HANNIGAN
FUNCTIONAL SUPERVISOR	ROB STINGER

STATE OF CALIFORNIA - DEPARTMENT OF TRANSPORTATION
Caltrans® ELECTRICAL DESIGN

P:\proj2\02\0E240_plans\pse\20e240ua020.dgn

LAST REVISION 01-19-16 | DATE PLOTTED => 24-MAR-2016 | TIME PLOTTED => 14:04

Dist	COUNTY	ROUTE	POST MILES TOTAL PROJECT	SHEET No.	TOTAL SHEETS
02	Plu	89	20.0/20.6	194	235

REGISTERED ELECTRICAL ENGINEER 01-19-16 DATE

01-19-16
PLANS APPROVAL DATE

REGISTERED PROFESSIONAL ENGINEER A.P. ROBLES No. E15293 Exp. 3-31-17 ELECTRICAL STATE OF CALIFORNIA

THE STATE OF CALIFORNIA OR ITS OFFICERS OR AGENTS SHALL NOT BE RESPONSIBLE FOR THE ACCURACY OR COMPLETENESS OF SCANNED COPIES OF THIS PLAN SHEET.

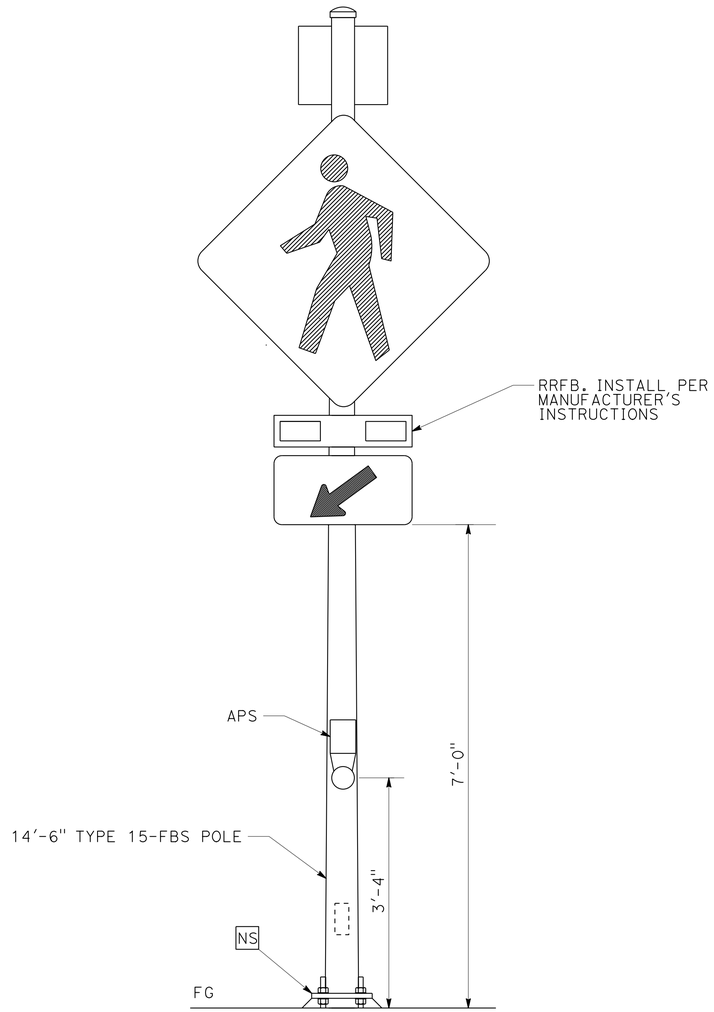

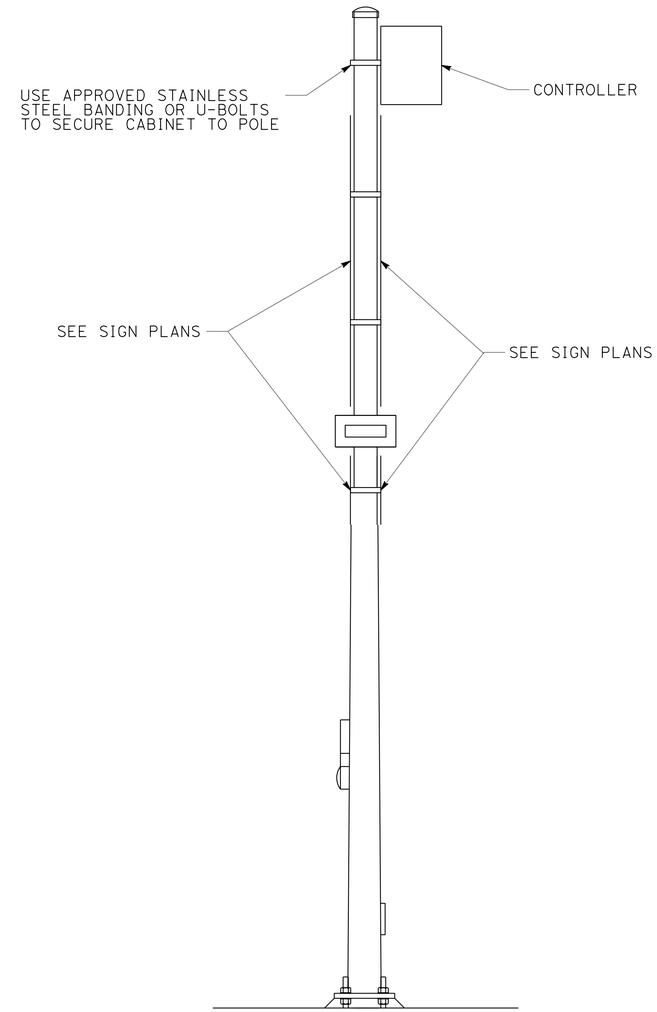

RECTANGULAR RAPID FLASHING BEACON

ELECTRICAL DETAILS

NO SCALE

E-21

REVISED BY	DATE REVISED

CALCULATED-DESIGNED BY	CHECKED BY
ARTURO P. ROBLES	JIM HANNIGAN

FUNCTIONAL SUPERVISOR: ROB STINGER

STATE OF CALIFORNIA - DEPARTMENT OF TRANSPORTATION

Caltrans® ELECTRICAL DESIGN

P:\proj2\02\0E240_plans\pse\20e240ua021.dgn

LAST REVISION 01-19-16 | DATE PLOTTED => 24-MAR-2016 | TIME PLOTTED => 14:04

Dist	COUNTY	ROUTE	POST MILES TOTAL PROJECT	SHEET No.	TOTAL SHEETS
02	Plu	89	20.0/20.6	195	235

REGISTERED ELECTRICAL ENGINEER 01-19-16 DATE

01-19-16
PLANS APPROVAL DATE

REGISTERED PROFESSIONAL ENGINEER A.P. ROBLES No. E15293 Exp. 3-31-17 ELECTRICAL STATE OF CALIFORNIA

THE STATE OF CALIFORNIA OR ITS OFFICERS OR AGENTS SHALL NOT BE RESPONSIBLE FOR THE ACCURACY OR COMPLETENESS OF SCANNED COPIES OF THIS PLAN SHEET.

NOTE:

1. (N) - NOT A SEPARATE PAY ITEM, FOR INFORMATION ONLY

LIGHTING (INTERSECTION-DECORATIVE)

SHEET No.	(N) INSTALL CONDUIT INTO EXISTING PULL BOX	(N) 2" DB 120	(N) 1½" C	(N) No. 10 CONDUCTOR	(N) No. 10 GROUND	(N) PULL TAPE	(N) No. 5 PULL BOX	(N) TYPE III-AF SERVICE EQUIPMENT ENCLOSURE	(N) LIGHT POLE	(N) SUPPORT ARM	(N) LED LUMINAIRE	(N) PHOTOCELL
	EA	LF	LF	LF	LF	LF	EA	EA	EA	EA	EA	EA
E-1			300	600	300		3		2	2	2	2
E-2	1	50	525	1050	525	50	5	1	2	2	2	2
E-3	1	15	550	1100	550	15	4	1	4	4	4	4
E-4		15	225	550	225	15	5	1	4	4	4	4

LIGHTING (CITY STREET-DECORATIVE)

SHEET No.	(N) INSTALL CONDUIT INTO EXISTING PULL BOX	(N) 2"DB 120	(N) 1½" C	(N) No. 10 CONDUCTOR	(N) No. GROUND	(N) PULL TAPE	(N) No. 5 PULL BOX	(N) TYPE III-AF SERVICE EQUIPMENT ENCLOSURE	(N) LIGHT POLE	(N) SUPPORT ARM	(N) LED LUMINAIRE	(N) PHOTOCELL
	EA	LF	LF	LF	LF	LF	EA	EA	EA	EA	EA	EA
E-5			50	100	50		1		1	1	1	1
E-6	1	15	600	1200	600	15	6		3	3	3	3
E-7			300	600	300		3		2	2	2	2
E-8	2	30	240	480	240	30	5		4	4	4	4

MODIFY TRAFFIC COUNT STATION

SHEET No.	(N) TYPE A LOOP DETECTOR	(N) No. 5 PULL BOX	(N) CURB TERMINATION
	EA	EA	EA
E-14	2	1	1

ELECTRIC SERVICE (IRRIGATION)

SHEET No.	(N) 1½" C	(N) No. 8 CONDUCTORS	(N) No. 8 G	(N) No. 5 PULL BOX
	LF	LF	LF	EA
E-15	150	300	150	2

RADAR SPEED FEEDBACK SIGN

SHEET No.	(N) INSTALL CONDUIT INTO EXISTING PULL BOX	(N) 1½" C	(N) 2" C	(N) PULL TAPE	(N) No. 8 CONDUCTORS	(N) No. 8 G	(N) No. 5 PULL BOX	(N) TYPE 15-FBS STANDARD	(N) TYPE III-AF SERVICE EQUIPMENT ENCLOSURE	(N) RADAR SPEED FEEDBACK SIGN
	EA	LF	LF	LF	LF	LF	EA	EA	EA	EA
E-16	1	350			700	350	2	1		1
E-17	1	20	100	100	40	20	1	1	1	1

RECTANGULAR RAPID FLASHING BEACON SYSTEM

SHEET No.	(N) INSTALL CONDUIT IN EXISTING PULL BOX	(N) 1½" C	(N) 2" C	(N) No. 8 CONDUCTORS	(N) PULL TAPE	(N) No. 8 G	(N) No. 5 PULL BOX	(N) No. 6 PULL BOX	(N) TYPE 15-FBS STANDARD	(N) TYPE III-AF SERVICE EQUIPMENT ENCLOSURE	(N) RECTANGULAR RAPID FLASHING BEACON	(N) APS
	EA	LF	LF	EA	LF	EA	EA	EA	EA	EA	EA	EA
E-18	1	120	130	450	30	225	2	1	2	1	2	2

ELECTRICAL QUANTITIES

E-22

ARTURO P. ROBLES — REVISED BY
JIM HANNIGAN — DATE REVISED
CALCULATED-DESIGNED BY
CHECKED BY
FUNCTIONAL SUPERVISOR
ROB STINGER

STATE OF CALIFORNIA - DEPARTMENT OF TRANSPORTATION
Caltrans® ELECTRICAL DESIGN

P:\proj2\02\0E240_plans\pse\20e240ua022.dgn

LAST REVISION 01-19-16
DATE PLOTTED => 24-MAR-2016
TIME PLOTTED => 14:05

M

Maint	MAINTENANCE
Max	MAXIMUM
MB	METAL BEAM
MBB	METAL BEAM BARRIER
MBGR	METAL BEAM GUARD RAILING
Med	MEDIAN
MGS	MIDWEST GUARDRAIL SYSTEM
MH	MANHOLE
Min	MINIMUM
Misc	MISCELLANEOUS
Misc I & S	MISCELLANEOUS IRON AND STEEL
Mkr	MARKER
Mod	MODIFIED,
	MODIFY
Mon	MONUMENT
MP	METAL PLATE
MPGR	METAL PLATE GUARD RAILING
MR	MOVEMENT RATING
MSE	MECHANICALLY STABILIZED EMBANKMENT
Mt	MOUNTAIN, MOUNT
Mtl	MATERIAL
MVP	MAINTENANCE VEHICLE PULLOUT

N

N	NORTH
NB	NORTHBOUND
No.	NUMBER (MUST HAVE PERIOD)
Nos.	NUMBERS (MUST HAVE PERIOD)
NPS	NOMINAL PIPE SIZE
NS	NEAR SIDE
NSP	NEW STANDARD PLAN
NTS	NOT TO SCALE

O

Oblr	OBLITERATE
OC	OVERCROSSING
OD	OUTSIDE DIAMETER
OF	OUTSIDE FACE
OG	ORIGINAL GROUND
OGAC	OPEN GRADED ASPHALT CONCRETE
OGFC	OPEN GRADED FRICTION COURSE
OH	OVERHEAD
OHWM	ORDINARY HIGH WATER MARK
O-O	OUT TO OUT
Opp	OPPOSITE
OSD	OVERSIDE DRAIN

P

P	PAGE
PAP	PERFORATED ALUMINUM PIPE
PB	PULL BOX
PC	POINT OF CURVATURE,
	PRECAST
PCC	POINT OF COMPOUND CURVE,
	PORTLAND CEMENT CONCRETE
PCMS	PORTABLE CHANGEABLE MESSAGE SIGN
PCP	PERFORATED CONCRETE PIPE,
	PRESTRESSED CONCRETE PIPE
PCVC	POINT OF COMPOUND VERTICAL CURVE
PEC	PERMIT TO ENTER AND CONSTRUCT
Ped	PEDESTRIAN
Ped OC	PEDESTRIAN OVERCROSSING
Ped UC	PEDESTRIAN UNDERCROSSING
Perm Mtl	PERMEABLE MATERIAL

P continued

PG	PROFILE GRADE
PI	POINT OF INTERSECTION
PJP	PARTIAL JOINT PENETRATION
Pkwy	PARKWAY
ℙ,PL	PLATE
P/L	PROPERTY LINE
PM	POST MILE,
	TIME FROM NOON TO MIDNIGHT
PN	PAVING NOTCH
POC	POINT OF HORIZONTAL CURVE
POT	POINT OF TANGENT
POVC	POINT OF VERTICAL CURVE
PP	PIPE PILE,
	PLASTIC PIPE,
	POWER POLE
PPL	PREFORMED PERMEABLE LINER
PPP	PERFORATED PLASTIC PIPE
PRC	POINT OF REVERSE CURVE
PRF	PAVEMENT REINFORCING FABRIC
PRVC	POINT OF REVERSE VERTICAL CURVE
PS&E	PLANS, SPECIFICATIONS AND ESTIMATES
PS, P/S	PRESTRESSED
PSP	PERFORATED STEEL PIPE
PT	POINT OF TANGENCY
PVC	POLYVINYL CHLORIDE
Pvmt	PAVEMENT

Q

Qty	QUANTITY

R

R	RADIUS
R & D	REMOVE AND DISPOSE
R & S	REMOVE AND SALVAGE
R/C	RATE OF CHANGE
RCA	REINFORCED CONCRETE ARCH
RCB	REINFORCED CONCRETE BOX
RCP	REINFORCED CONCRETE PIPE
RCPA	REINFORCED CONCRETE PIPE ARCH
Rd	ROAD
Reinf	REINFORCED,
	REINFORCEMENT,
	REINFORCING
Rel	RELOCATE
Repl	REPLACEMENT
Ret	RETAINING
Rev	REVISED, REVISION
Rdwy	ROADWAY
RHMA	RUBBERIZED HOT MIX ASPHALT
Riv	RIVER
RM	ROAD-MIXED
RP	RADIUS POINT,
	REFERENCE POINT
RR	RAILROAD
RSP	ROCK SLOPE PROTECTION,
	REVISED STANDARD PLAN
Rt	RIGHT
Rte	ROUTE
RW	REDWOOD,
	RETAINING WALL
R/W	RIGHT OF WAY
Rwy	RAILWAY

S

S	SOUTH,
	SUPPLEMENT
SAE	STRUCTURE APPROACH EMBANKMENT
Salv	SALVAGE
SAPP	STRUCTURAL ALUMINUM PLATE PIPE
SB	SOUTHBOUND
SC	SAND CUSHION
SCSP	SLOTTED CORRUGATED STEEL PIPE
SD	STORM DRAIN
Sec	SECOND,
	SECTION
Sep	SEPARATION
SG	SUBGRADE
Shld	SHOULDER
Sht	SHEET
Sim	SIMILAR
℄	STATION LINE
SM	SELECTED MATERIAL
Spec	SPECIAL,
	SPECIFICATIONS
SPP	SLOTTED PLASTIC PIPE
SS	SLOPE STAKE
SSBM	STRAP AND SADDLE BRACKET METHOD
SSD	STRUCTURAL SECTION DRAIN
SSPA	STRUCTURAL STEEL PLATE ARCH
SSPP	STRUCTURAL STEEL PLATE PIPE
SSPPA	STRUCTURAL STEEL PLATE PIPE ARCH
SSRP	STEEL SPIRAL RIB PIPE
St	STREET
Sta	STATION
STBB	SINGLE THRIE BEAM BARRIER
Std	STANDARD
Str	STRUCTURE
Surf	SURFACING
SW	SIDEWALK,
	SOUND WALL
Swr	SEWER
Sym	SYMMETRICAL
S4S	SURFACE 4 SIDES

T

T	SEMI-TANGENT
Tan	TANGENT
TBB	THRIE BEAM BARRIER
Tbr	TIMBER
TC	TOP OF CURB
TCB	TRAFFIC CONTROL BOX
TCE	TEMPORARY CONSTRUCTION EASEMENT
Tel	TELEPHONE
Temp	TEMPORARY
TG	TOP OF GRADE
Tot	TOTAL
TP	TELEPHONE POLE
TPB	TREATED PERMEABLE BASE
TPM	TREATED PERMEABLE MATERIAL
Trans	TRANSITION

T continued

TS	TRANSVERSE,
	TRAFFIC SIGNAL,
	TUBULAR STEEL
Typ	TYPICAL

U

UC	UNDERCROSSING
UD	UNDERDRAIN
UG	UNDERGROUND
UON	UNLESS OTHERWISE NOTED
UP	UNDERPASS

V

V	VALVE,
	DESIGN SPEED
Var	VARIABLE,
	VARIES
VC	VERTICAL CURVE
VCP	VITRIFIED CLAY PIPE
Vert	VERTICAL
Via	VIADUCT
Vol	VOLUME

W

W	WEST,
	WIDTH
WB	WESTBOUND
WH	WEEP HOLE
WM	WIRE MESH
WS	WATER SURFACE
WSP	WELDED STEEL PIPE
Wt	WEIGHT
WV	WATER VALVE
WW	WINGWALL
WWLOL	WINGWALL LAYOUT LINE

X

X Sec	CROSS SECTION
Xing	CROSSING

Y

Yr	YEAR
Yrs	YEARS

Dist	COUNTY	ROUTE	POST MILES TOTAL PROJECT	SHEET No.	TOTAL SHEETS
02	Plu	89	20.0/20.6	196	235

Grace M. Tsushima
REGISTERED CIVIL ENGINEER

July 19, 2013
PLANS APPROVAL DATE

REGISTERED PROFESSIONAL ENGINEER Grace M. Tsushima No. C49814 Exp. 9-30-14 CIVIL STATE OF CALIFORNIA

THE STATE OF CALIFORNIA OR ITS OFFICERS OR AGENTS SHALL NOT BE RESPONSIBLE FOR THE ACCURACY OR COMPLETENESS OF SCANNED COPIES OF THIS PLAN SHEET.

TO ACCOMPANY PLANS DATED 01-19-16

UNIT OF MEASUREMENT SYMBOLS:

Some of the symbols used in the project plan quantity tables and in the Bid Item List are:

TABLE A

SYMBOL USED	DEFINITIONS
ACRE	ACRE
CF	CUBIC FOOT
CY	CUBIC YARD
EA	EACH
GAL	GALLON
LB	POUND
LF	LINEAR FOOT
SQFT	SQUARE FOOT
SQYD	SQUARE YARD
STA	100 FEET
TAB	TABLET
TON	2,000 POUNDS

Some of the symbols used in the plans other than in the project plan quantity tables are:

TABLE B

SYMBOL USED	DEFINITIONS
ksi	KIPS PER SQUARE INCH
ksf	KIPS PER SQUARE FOOT
psi	POUNDS PER SQUARE INCH
psf	POUNDS PER SQUARE FOOT
lb/ft^3, pcf	POUNDS PER CUBIC FOOT
tsf	TONS PER SQUARE FOOT
mph, MPH *	MILES PER HOUR
ø	NOMINAL DIAMETER
oz	OUNCE
lb	POUND
kip	1,000 POUNDS
cal	CALORIE
ft	FOOT OR FEET
gal	GALLON

* For use on a sign panel only

STATE OF CALIFORNIA
DEPARTMENT OF TRANSPORTATION

ABBREVIATIONS (SHEET 2 OF 2)

NO SCALE

RSP A10B DATED JULY 19, 2013 SUPERSEDES STANDARD PLAN A10B DATED MAY 20, 2011 - PAGE 2 OF THE STANDARD PLANS BOOK DATED 2010.

REVISED STANDARD PLAN RSP A10B

2010 REVISED STANDARD PLAN RSP A10B

DATE PLOTTED => 29-JAN-2016
TIME PLOTTED => 10:25

Dist	COUNTY	ROUTE	POST MILES TOTAL PROJECT	SHEET No.	TOTAL SHEETS
02	Plu	89	20.0/20.6	197	235

REGISTERED CIVIL ENGINEER

April 20, 2012
PLANS APPROVAL DATE

REGISTERED PROFESSIONAL ENGINEER
Roberta L. McLaughlin
No. C40375
Exp. 3-31-13
CIVIL
STATE OF CALIFORNIA

THE STATE OF CALIFORNIA OR ITS OFFICERS OR AGENTS SHALL NOT BE RESPONSIBLE FOR THE ACCURACY OR COMPLETENESS OF SCANNED COPIES OF THIS PLAN SHEET.

TO ACCOMPANY PLANS DATED 01-19-16

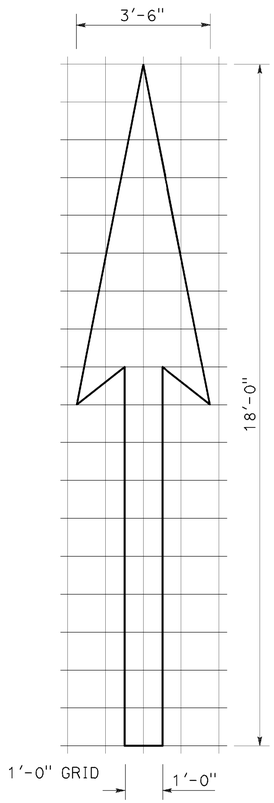

A=25 ft^2

TYPE I 18'-0" ARROW

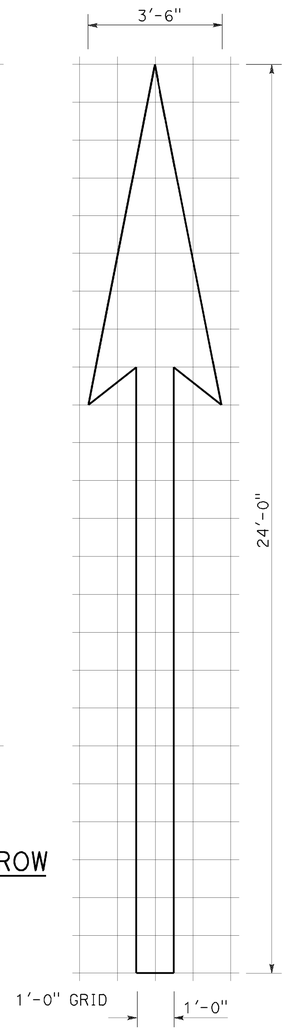

A=31 ft^2

TYPE I 24'-0" ARROW

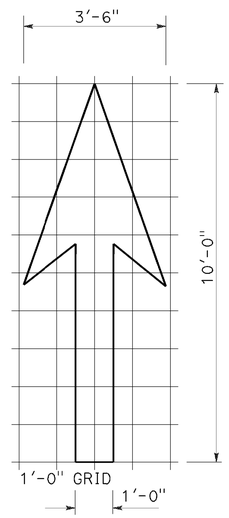

A=14 ft^2

TYPE I 10'-0" ARROW

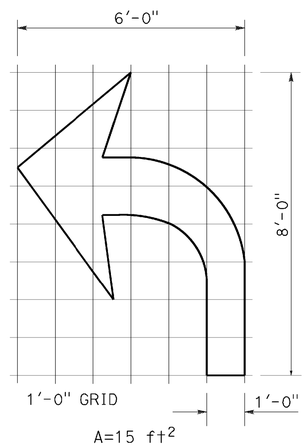

A=15 ft^2

TYPE IV (L) ARROW

(For Type IV (R) arrow, use mirror image)

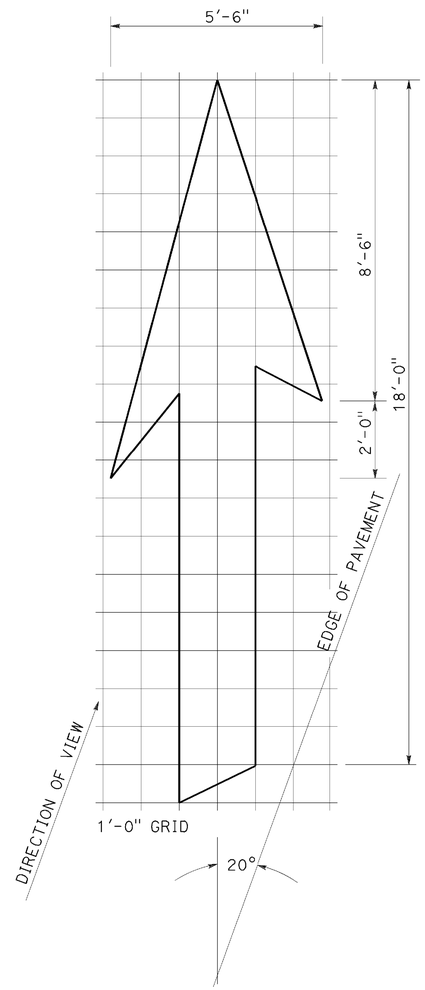

A=42 ft^2

TYPE VI ARROW

Right lane drop arrow
(For left lane, use mirror image)

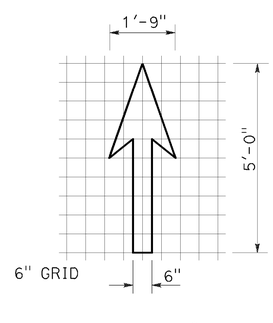

A=3.5 ft^2

BIKE LANE ARROW

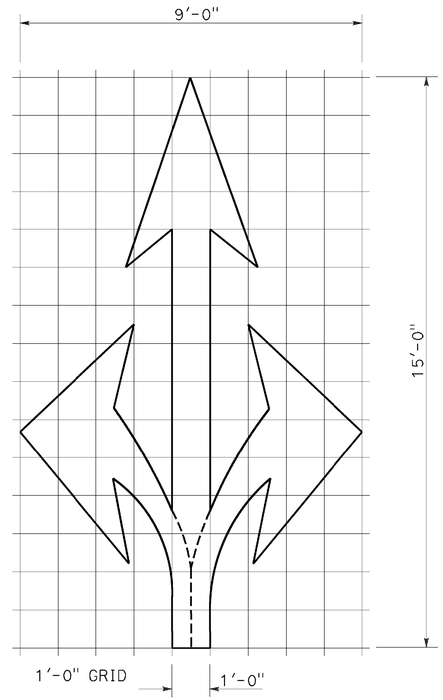

A=36 ft^2

TYPE VIII ARROW

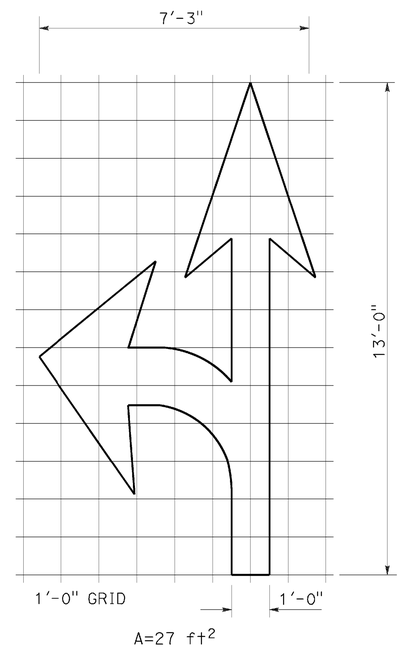

A=27 ft^2

TYPE VII (L) ARROW

(For Type VII (R) arrow, use mirror image)

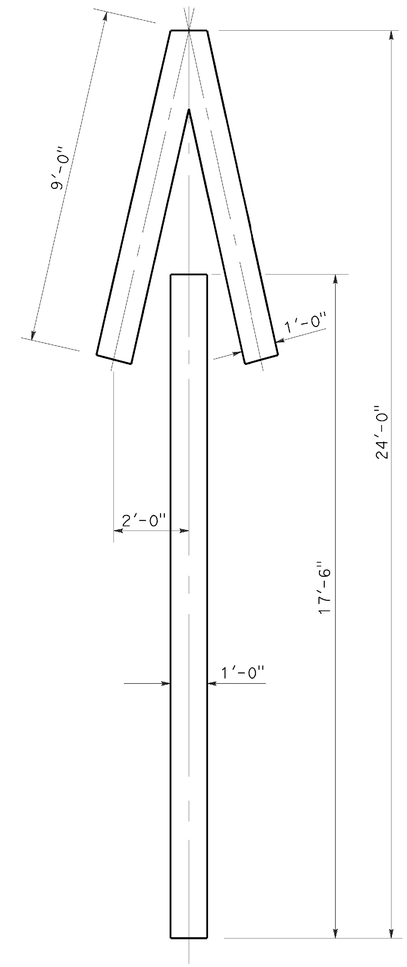

A=33 ft^2

TYPE V ARROW

NOTE:
Minor variations in dimensions may be accepted by the Engineer.

STATE OF CALIFORNIA
DEPARTMENT OF TRANSPORTATION

PAVEMENT MARKINGS ARROWS

NO SCALE

RSP A24A DATED APRIL 20, 2012 SUPERSEDES STANDARD PLAN A24A DATED MAY 20, 2011 - PAGE 13 OF THE STANDARD PLANS BOOK DATED 2010.

REVISED STANDARD PLAN RSP A24A

2010 REVISED STANDARD PLAN RSP A24A

DATE PLOTTED => 29-JAN-2016
TIME PLOTTED => 10:25

Dist	COUNTY	ROUTE	POST MILES TOTAL PROJECT	SHEET No.	TOTAL SHEETS
02	Plu	89	20.0/20.6	198	235

REGISTERED CIVIL ENGINEER

October 19, 2012
PLANS APPROVAL DATE

REGISTERED PROFESSIONAL ENGINEER
Roberta L. McLaughlin
No. C40375
Exp. 3-31-13
CIVIL
STATE OF CALIFORNIA

THE STATE OF CALIFORNIA OR ITS OFFICERS OR AGENTS SHALL NOT BE RESPONSIBLE FOR THE ACCURACY OR COMPLETENESS OF SCANNED COPIES OF THIS PLAN SHEET.

NOTE: TO ACCOMPANY PLANS DATED 01-19-16

Minor variations in dimensions may be accepted by the Engineer.

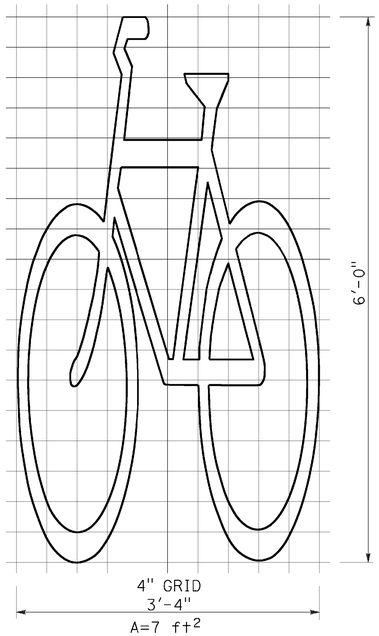

BIKE LANE SYMBOL WITHOUT PERSON

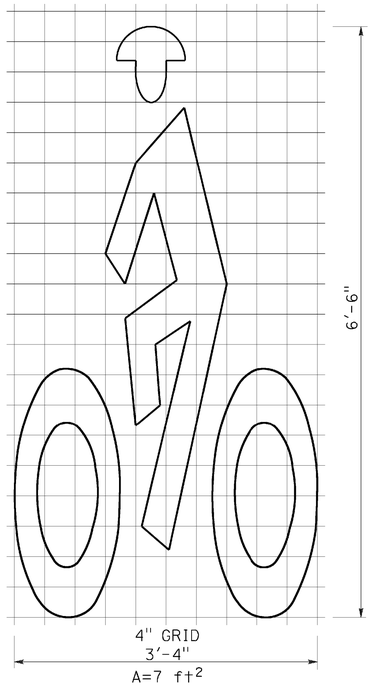

BIKE LANE SYMBOL WITH PERSON

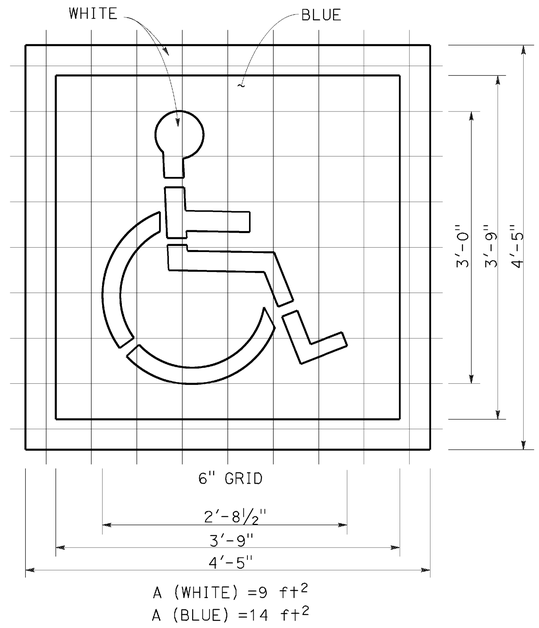

INTERNATIONAL SYMBOL OF ACCESSIBILITY (ISA) MARKING

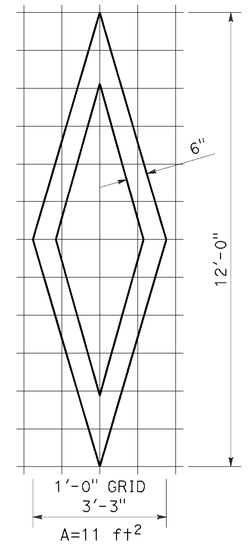

DIAMOND SYMBOL

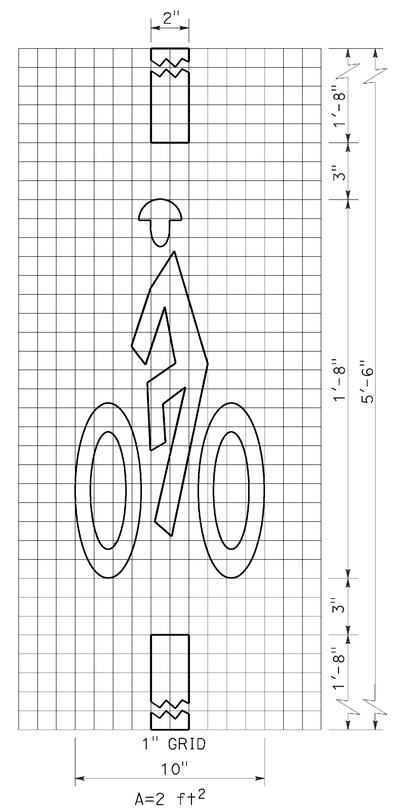

BICYCLE LOOP DETECTOR SYMBOL

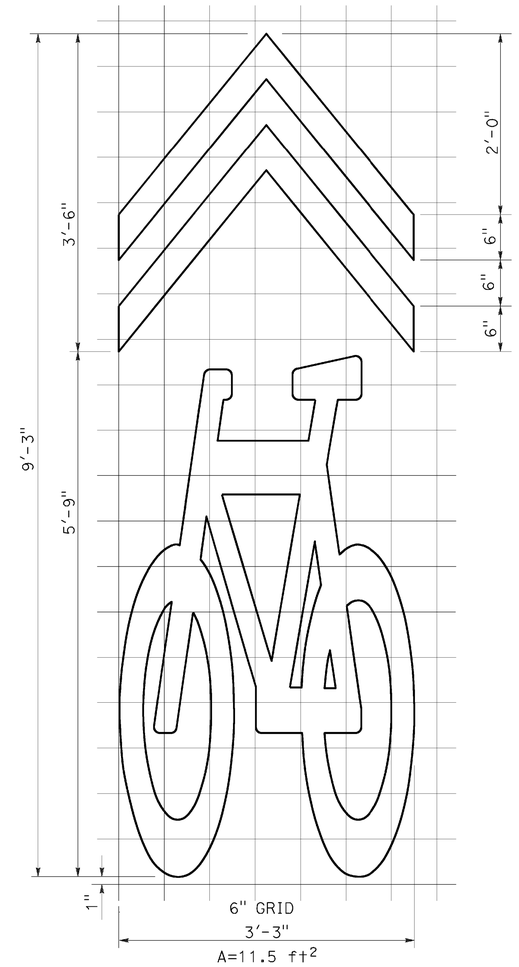

SHARED ROADWAY BICYCLE MARKING

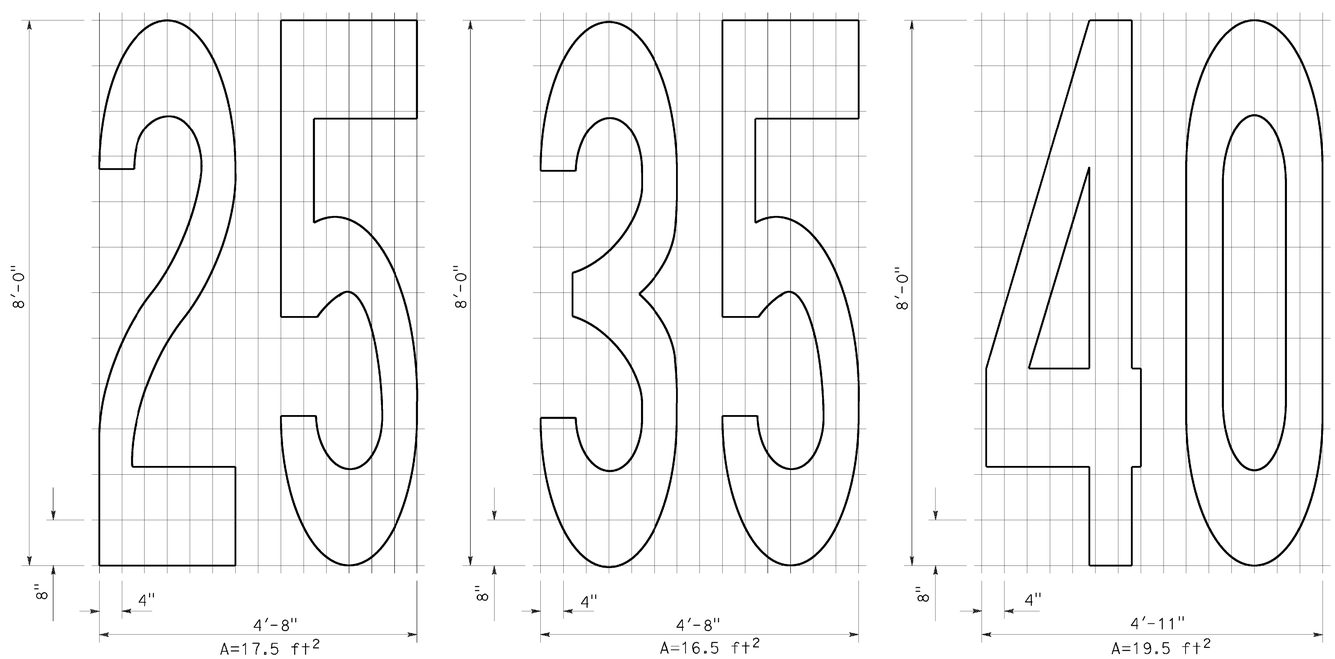

NUMERALS

STATE OF CALIFORNIA
DEPARTMENT OF TRANSPORTATION

PAVEMENT MARKINGS SYMBOLS AND NUMERALS

NO SCALE

RSP A24C DATED OCTOBER 19, 2012 SUPERSEDES STANDARD PLAN A24C DATED MAY 20, 2011 - PAGE 15 OF THE STANDARD PLANS BOOK DATED 2010.

REVISED STANDARD PLAN RSP A24C

2010 REVISED STANDARD PLAN RSP A24C

DATE PLOTTED => 29-JAN-2016
TIME PLOTTED => 10:26

Dist	COUNTY	ROUTE	POST MILES TOTAL PROJECT	SHEET No.	TOTAL SHEETS
02	Plu	89	20.0/20.6	199	235

REGISTERED CIVIL ENGINEER

July 20, 2012
PLANS APPROVAL DATE

REGISTERED PROFESSIONAL ENGINEER
Roberta L. McLaughlin
No. C40375
Exp. 3-31-13
CIVIL
STATE OF CALIFORNIA

THE STATE OF CALIFORNIA OR ITS OFFICERS OR AGENTS SHALL NOT BE RESPONSIBLE FOR THE ACCURACY OR COMPLETENESS OF SCANNED COPIES OF THIS PLAN SHEET.

TO ACCOMPANY PLANS DATED 01-19-16

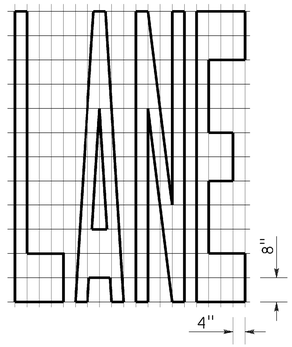

A=24 ft^2

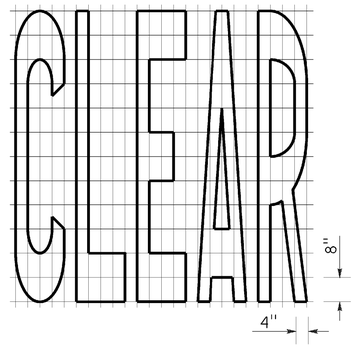

A=27 ft^2

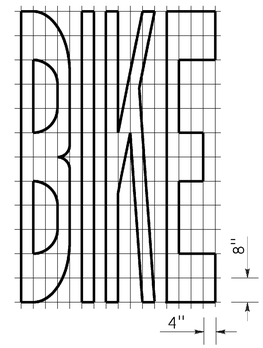

A=21 ft^2

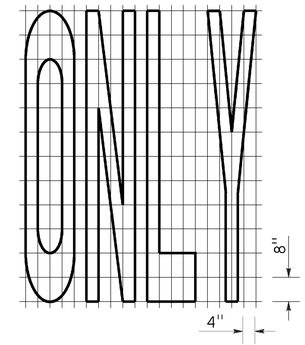

A=22 ft^2

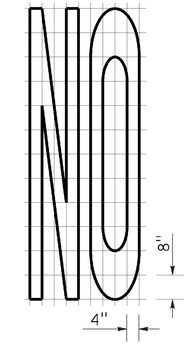

A=14 ft^2

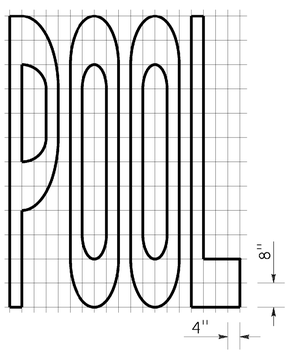

A=23 ft^2

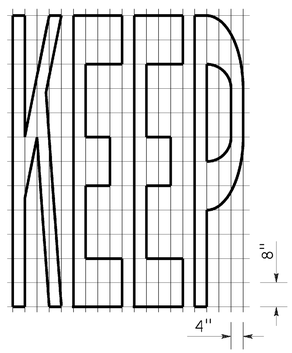

A=24 ft^2

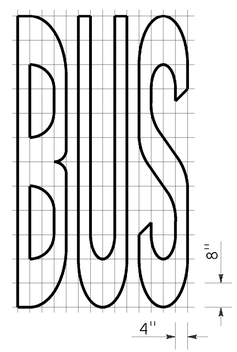

A=20 ft^2

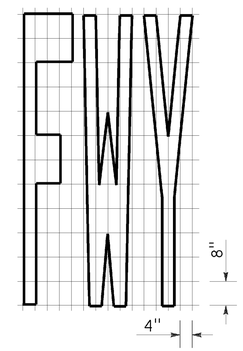

A=16 ft^2

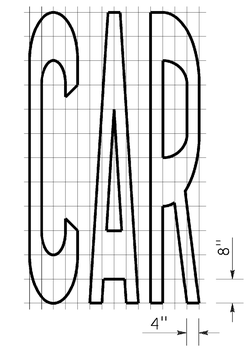

A=17 ft^2

WORD MARKINGS			
ITEM	ft^2	ITEM	ft^2
LANE	24	NO	14
POOL	23	BIKE	21
CAR	17	BUS	20
CLEAR	27	ONLY	22
KEEP	24	FWY	16

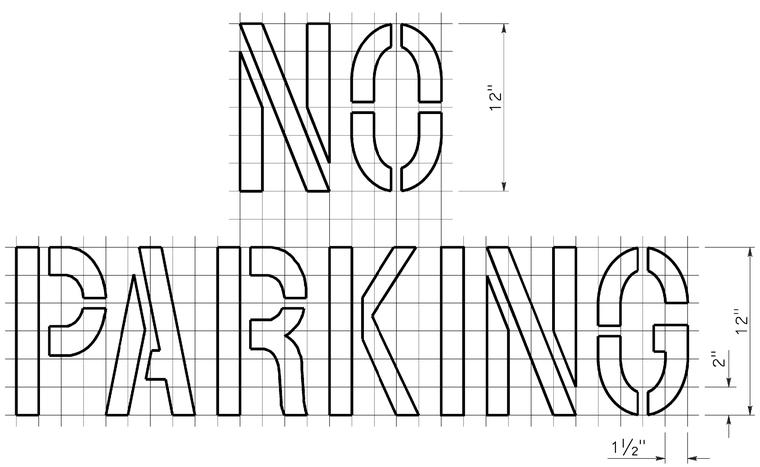

A=2 ft^2

See Notes 6 and 7

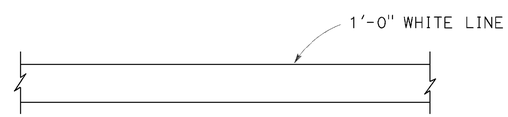

LIMIT LINE (STOP LINE)

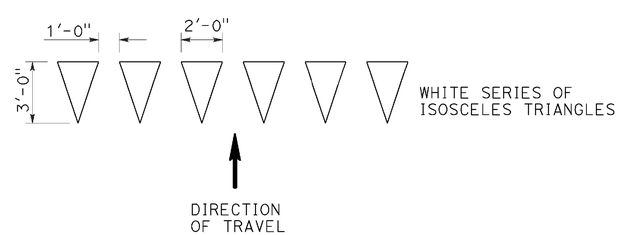

YIELD LINE

NOTES:

1. If a message consists of more than one word, it should read "UP", i.e., the first word should be nearest the driver.
2. The space between words should be at least four times the height of the characters for low speed roads, but not more than ten times the height of the characters. The space may be reduced appropriately where there is limited space because of local conditions.
3. Minor variations in dimensions may be accepted by the Engineer.
4. Portions of a letter, number or symbol may be separated by connecting segments not to exceed 2" in width.
5. The words "NO PARKING" pavement marking is to be used for parking facilities. For typical locations of markings, see Standard Plans A90A and A90B.
6. The words "NO PARKING", shall be painted in white letters no less than 1'-0" high on a contrasting background and located so that it is visible to traffic enforcement officials.

STATE OF CALIFORNIA
DEPARTMENT OF TRANSPORTATION

PAVEMENT MARKINGS WORDS, LIMIT AND YIELD LINES

NO SCALE

RSP A24E DATED JULY 20, 2012 SUPERSEDES STANDARD PLAN A24E
DATED MAY 20, 2011 - PAGE 17 OF THE STANDARD PLANS BOOK DATED 2010.

REVISED STANDARD PLAN RSP A24E

2010 REVISED STANDARD PLAN RSP A24E

DATE PLOTTED => 29-JAN-2016
TIME PLOTTED => 10:26

Dist	COUNTY	ROUTE	POST MILES TOTAL PROJECT	SHEET No.	TOTAL SHEETS
02	Plu	89	20.0/20.6	200	235

REGISTERED CIVIL ENGINEER

July 20, 2012
PLANS APPROVAL DATE

REGISTERED PROFESSIONAL ENGINEER
Roberta L. McLaughlin
No. C40375
Exp. 3-31-13
CIVIL
STATE OF CALIFORNIA

THE STATE OF CALIFORNIA OR ITS OFFICERS OR AGENTS SHALL NOT BE RESPONSIBLE FOR THE ACCURACY OR COMPLETENESS OF SCANNED COPIES OF THIS PLAN SHEET.

TO ACCOMPANY PLANS DATED 01-19-16

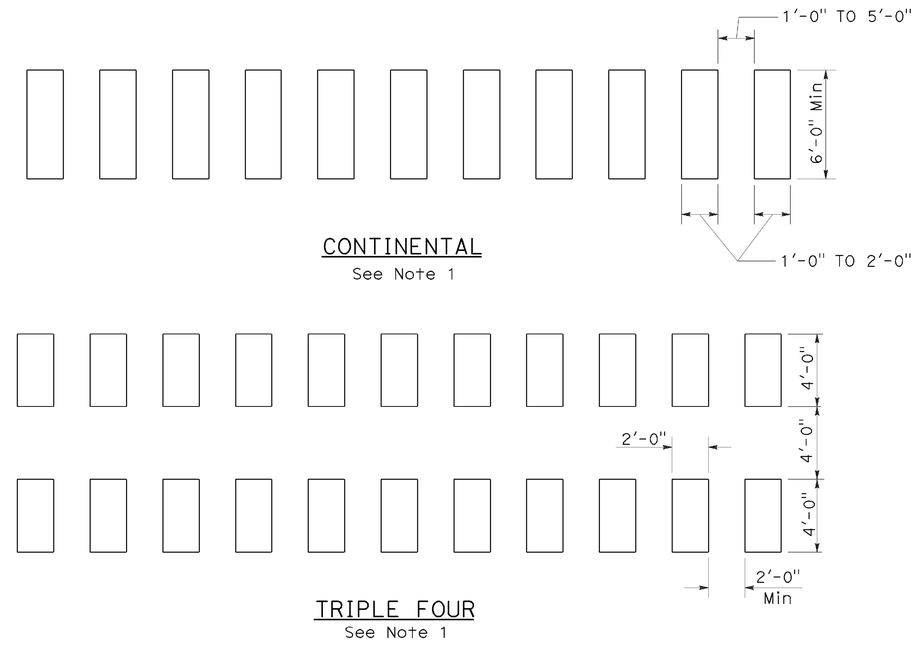

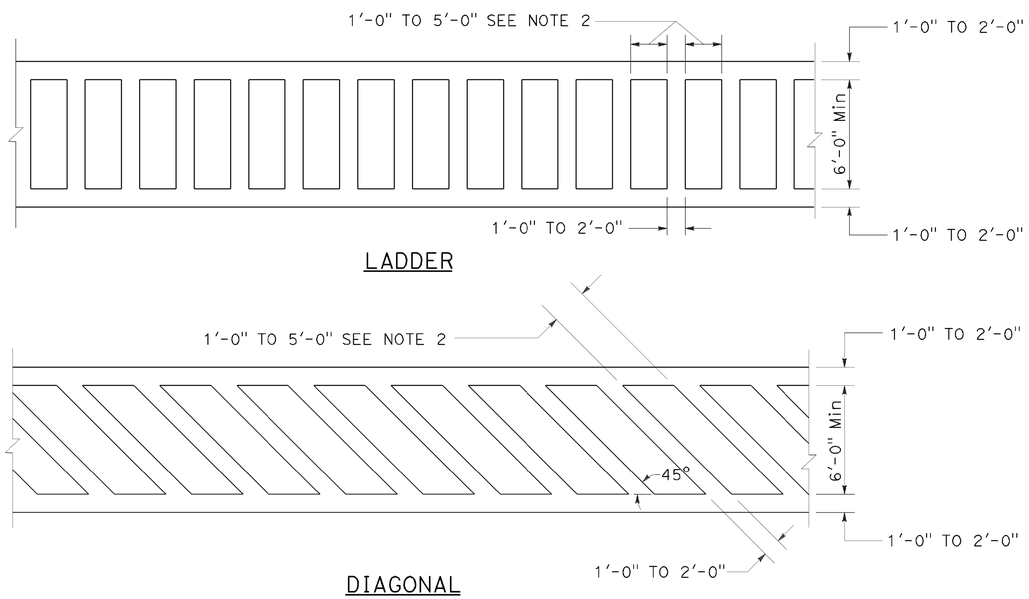

HIGHER VISIBILITY CROSSWALKS

NOTES:

1. Spaces between markings should be placed in wheel tracks of each lane.
2. Spacings not to exceed 2.5 times width of longitudinal line.
3. All crosswalk markings must be white except for those near schools must be yellow.

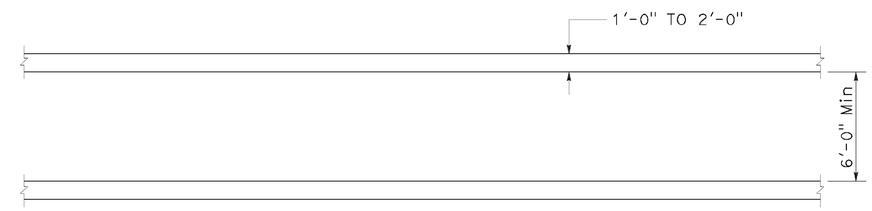

BASIC

STATE OF CALIFORNIA
DEPARTMENT OF TRANSPORTATION

PAVEMENT MARKINGS CROSSWALKS

NO SCALE

RSP A24F DATED JULY 20, 2012 SUPPLEMENTS THE STANDARD PLANS BOOK DATED 2010.

REVISED STANDARD PLAN RSP A24F

2010 REVISED STANDARD PLAN RSP A24F

DATE PLOTTED => 29-JAN-2016
TIME PLOTTED => 10:26