Dist	COUNTY	ROUTE	POST MILES TOTAL PROJECT	SHEET No.	TOTAL SHEETS
01	DN	101	15.4/20.5	1	18

HSNH-Q101(213)E

STATE OF CALIFORNIA
DEPARTMENT OF TRANSPORTATION

PROJECT PLANS FOR CONSTRUCTION ON
STATE HIGHWAY

IN DEL NORTE COUNTY NEAR CRESCENT CITY
FROM 2.9 MILES NORTH OF WILSON CREEK ROAD
TO 0.2 MILES NORTH OF MILL CREEK PARK ENTRANCE

TO BE SUPPLEMENTED BY STANDARD PLANS DATED MAY 2006

INDEX OF PLANS

SHEET No	DESCRIPTION
1	TITLE AND LOCATION MAP
2	TYPICAL CROSS SECTION
3-4	CONSTRUCTION DETAILS
5	CONSTRUCTION AREA SIGNS
6	TRAFFIC HANDLING DETAILS AND QUANTITIES
7	PAVEMENT DELINEATION QUANTITIES
8	SIGN QUANTITIES
9	SUMMARY OF QUANTITIES
10-18	NEW OR REVISED STANDARD PLANS

THE STANDARD PLANS LIST APPLICABLE TO THIS CONTRACT IS INCLUDED IN THE NOTICE TO BIDDERS AND SPECIAL PROVISIONS BOOK.

LOCATION MAP

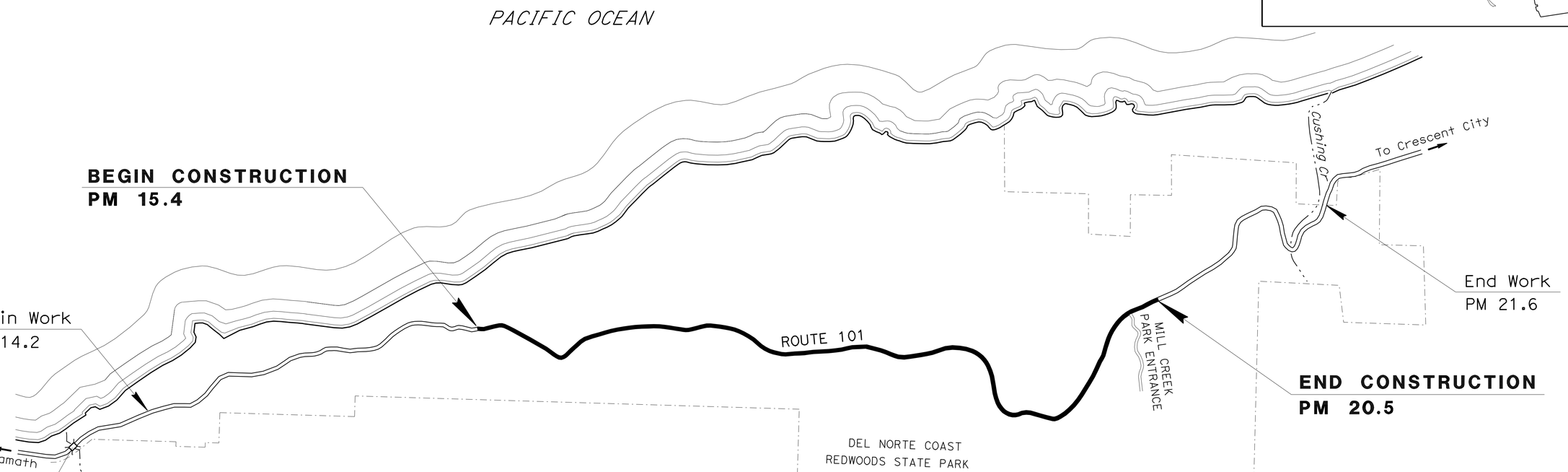

THE CONTRACTOR SHALL POSSESS THE CLASS (OR CLASSES) OF LICENSE AS SPECIFIED IN THE "NOTICE TO BIDDERS."

NO SCALE

David A. Morgan 8/18/11
PROJECT ENGINEER DATE
REGISTERED CIVIL ENGINEER

August 29, 2011
PLANS APPROVAL DATE

REGISTERED PROFESSIONAL ENGINEER
DAVID A. MORGAN
No. 72321
Exp. 6/30/12
CIVIL
STATE OF CALIFORNIA

THE STATE OF CALIFORNIA OR ITS OFFICERS OR AGENTS SHALL NOT BE RESPONSIBLE FOR THE ACCURACY OR COMPLETENESS OF SCANNED COPIES OF THIS PLAN SHEET.

PROJECT MANAGER KEVIN CHURCH
DESIGN ENGINEER STEVEN HUGHES

CONTRACT No.	01-498704
PROJECT ID	0100000696

LAST REVISION 00-00-00 DATE PLOTTED => 14-SEP-2011 TIME PLOTTED => 14:19

Dist	COUNTY	ROUTE	POST MILES TOTAL PROJECT	SHEET No.	TOTAL SHEETS
01	DN	101	15.4/20.5	2	18

REGISTERED CIVIL ENGINEER — DATE 8/18/11

August 29, 2011
PLANS APPROVAL DATE

REGISTERED PROFESSIONAL ENGINEER — DAVID A. MORGAN — No. 72321 — Exp. 6/30/12 — CIVIL — STATE OF CALIFORNIA

THE STATE OF CALIFORNIA OR ITS OFFICERS OR AGENTS SHALL NOT BE RESPONSIBLE FOR THE ACCURACY OR COMPLETENESS OF SCANNED COPIES OF THIS PLAN SHEET.

NOTES

1. DIMENSIONS OF THE STRUCTURAL SECTIONS ARE SUBJECT TO TOLERANCES SPECIFIED IN THE STANDARD SPECIFICATIONS.
2. SUPERELEVATION AS SHOWN OR AS DIRECTED BY THE ENGINEER.
3. IN AREAS WHERE THE WIDTH OF THE EXISTING SURFACING VARIES FROM THAT SHOWN, THE CONTRACTOR SHALL VARY THE WIDTH OF THE PAVING OPERATIONS AS DIRECTED BY THE ENGINEER.
4. EXISTING UTILITY FACILITIES HAVE NOT BEEN PLOTTED ON THESE PLANS.
5. FOR HMA DIKE TO BE REMOVED AND TYPE OF DIKE PLACED, SEE SHEET Q-1.
6. FOR MBGR TO BE REMOVED OR RECONSTRUCTED, SEE SHEETS C-2 AND Q-1.
7. COLD PLANE AC PRIOR TO AC DIG-OUTS AND PLACING BWC. SEE SHEET Q-1 FOR SPECIFIC LOCATIONS OF GRIND AND REPLACE vs OVERLAY.
8. FOR ACCURATE RIGHT OF WAY DATA, CONTACT RIGHT OF WAY ENGINEERING AT THE DISTRICT OFFICE.

LEGEND

SR = MATCH EXISTING SUPPERELEVATION RATE
BWC-O = BONDED WEARING COURSE - OPEN GRADED
DGAC = DENSE GRADED ASPHALT CONCRETE
OGAC = OPEN GRADED ASPHALT CONCRETE
CTB = CEMENT TREATED BASE

DESIGN DESIGNATION

2011 ADT = 5,215
2031 ADT = 6,270
DHV (2011) = 760
D = 60%, T = 8%
TI_{20} = 10

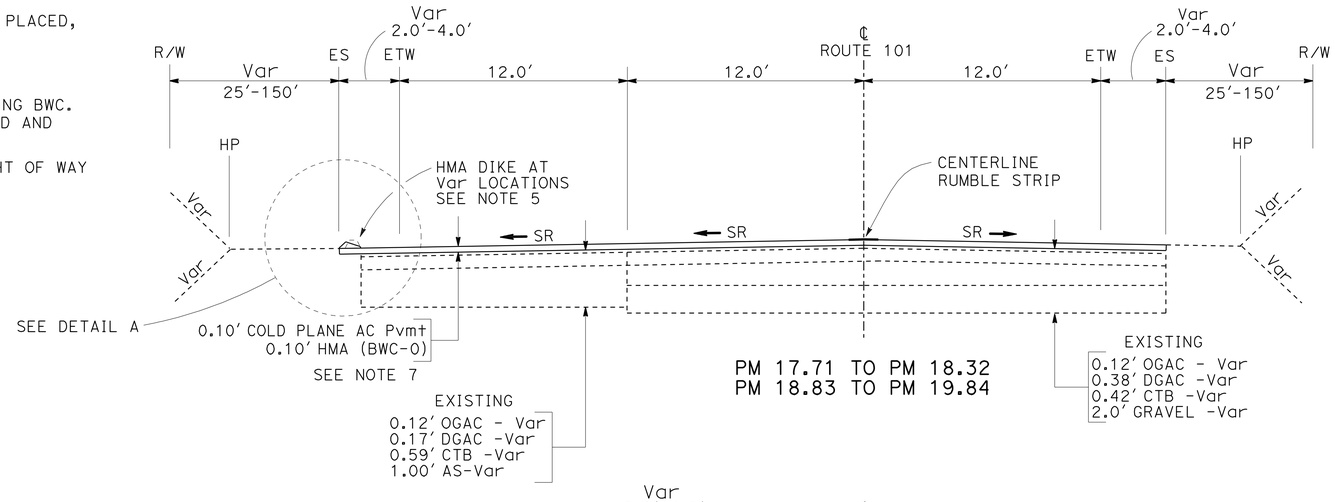

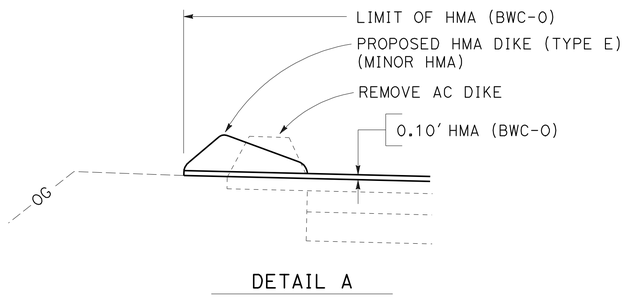

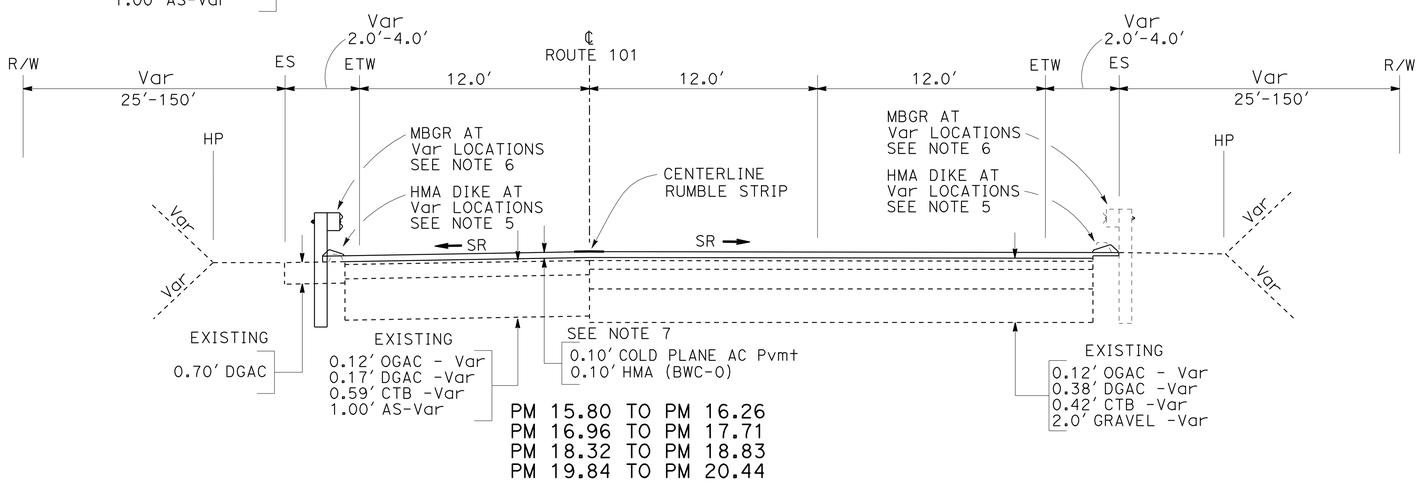

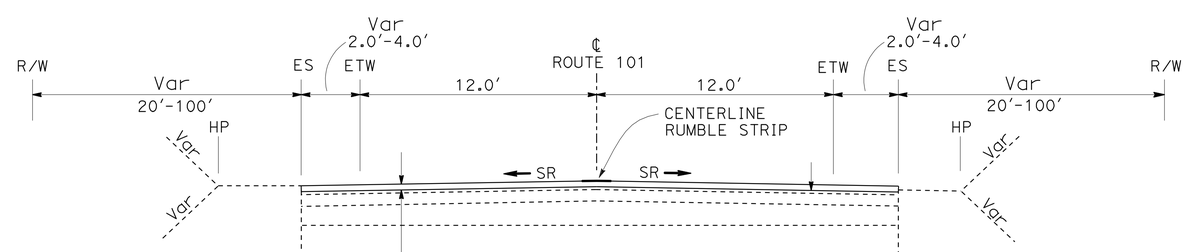

TYPICAL CROSS SECTIONS X-1

NO SCALE

STATE OF CALIFORNIA - DEPARTMENT OF TRANSPORTATION
Caltrans DESIGN

FUNCTIONAL SUPERVISOR: STEVEN HUGHES
CALCULATED-DESIGNED BY: David A. Morgan
CHECKED BY: Elisa Meyer
REVISED BY / DATE REVISED

LAST REVISION 00-00-00 | DATE PLOTTED => 14-SEP-2011 | TIME PLOTTED => 14:19

Dist	COUNTY	ROUTE	POST MILES TOTAL PROJECT	SHEET No.	TOTAL SHEETS
01	DN	101	15.4/20.5	3	18

REGISTERED CIVIL ENGINEER — DATE 8/18/11

August 29, 2011
PLANS APPROVAL DATE

REGISTERED PROFESSIONAL ENGINEER — DAVID A. MORGAN No. 72321 Exp. 6/30/12 CIVIL — STATE OF CALIFORNIA

THE STATE OF CALIFORNIA OR ITS OFFICERS OR AGENTS SHALL NOT BE RESPONSIBLE FOR THE ACCURACY OR COMPLETENESS OF SCANNED COPIES OF THIS PLAN SHEET.

NOTES

1. FOR ACCURATE RIGHT OF WAY DATA, CONTACT RIGHT OF WAY ENGINEERING AT THE DISTRICT OFFICE.

LEGEND

BWC-O = BONDED WEARING COURSE - OPEN GRADED

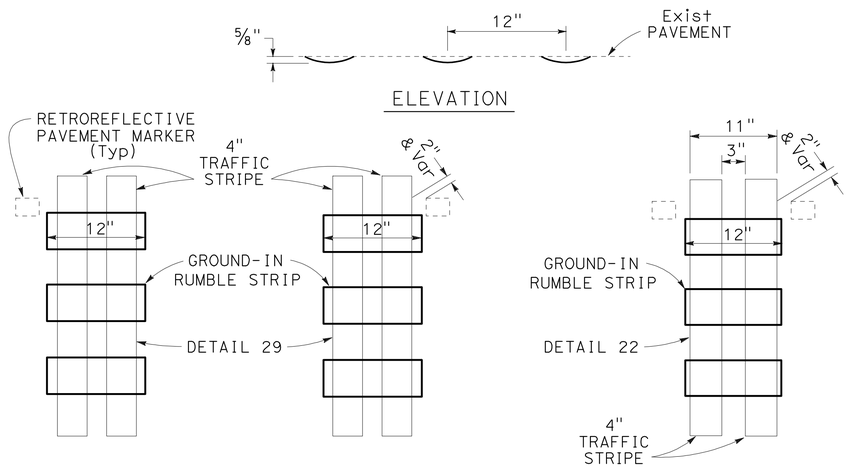

PLAN
PM 20.23/20.27
PM 20.31/20.37

PLAN
PM 15.49/20.23
PM 20.37/20.44

CENTERLINE RUMBLE STRIP (GROUND-IN INDENTATIONS)

SEE SHEET Q-1 FOR LOCATIONS

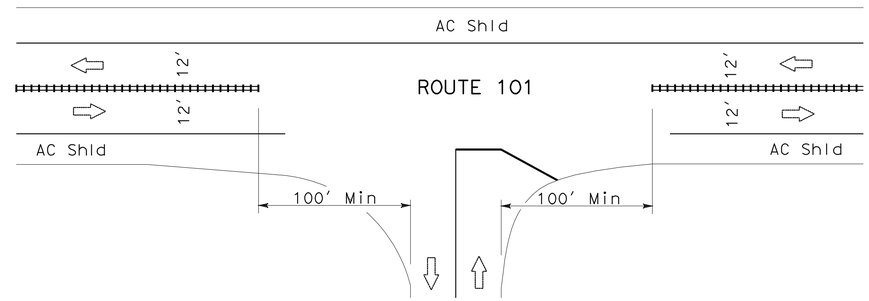

CENTERLINE RUMBLE STRIP LIMITS

MILL CREEK PARK ENTRANCE ROAD

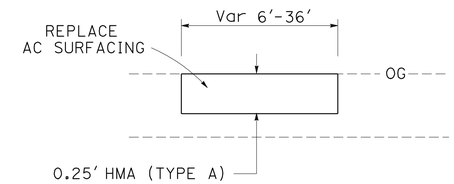

REPLACE AC SURFACING

SEE SHEET Q-1 FOR LOCATIONS

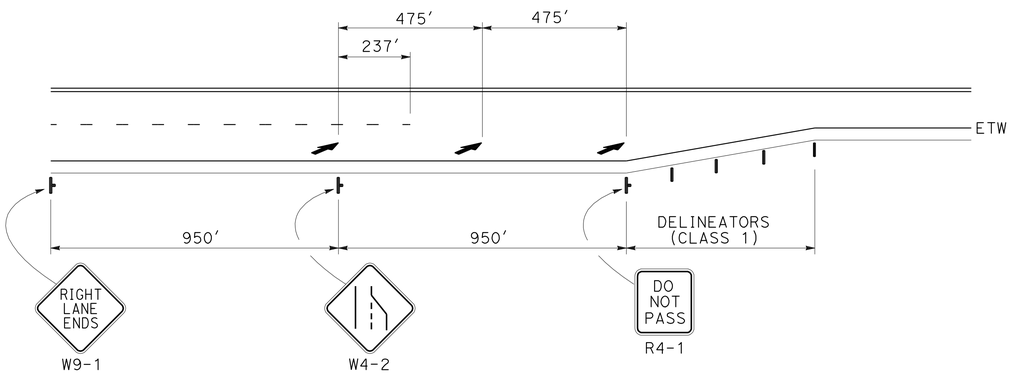

TYPICAL LANE REDUCTION MARKINGS

SEE SHEETS PDQ-1 & SQ-1 FOR LOCATIONS

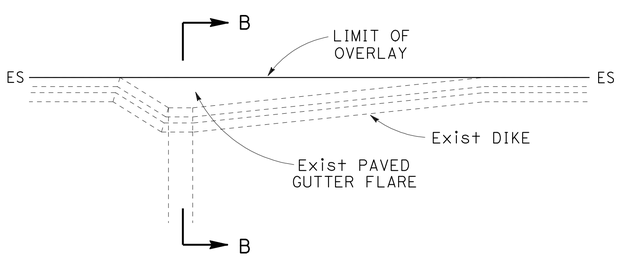

OVERLAY LIMITS AT OVERSIDE DRAIN

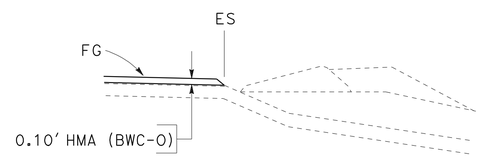

SECTION B-B

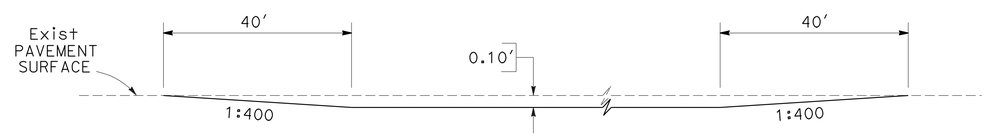

COLD PLANE AC PAVEMENT CONFORM DETAIL

SEE SHEET Q-1 FOR LOCATIONS

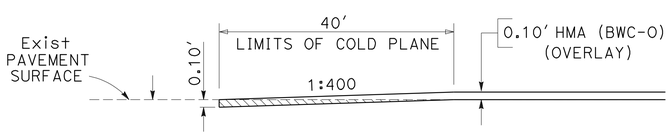

BEGIN Const PM 15.4
END Const PM 20.5
MILL Cr PARK ENTRANCE PM 20.3

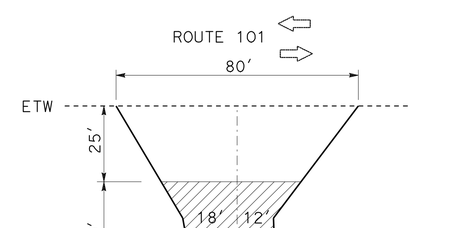

MILL Cr PARK ENTRANCE PM 20.3

PERMANENT OVERLAY CONFORM DETAILS

CONSTRUCTION DETAILS

NO SCALE

C-1

STATE OF CALIFORNIA - DEPARTMENT OF TRANSPORTATION
DESIGN
Caltrans

FUNCTIONAL SUPERVISOR: STEVEN HUGHES
CALCULATED-DESIGNED BY: Elisa Meyer
CHECKED BY: David A. Morgan
REVISED BY
DATE REVISED

LAST REVISION 00-00-00
DATE PLOTTED => 14-SEP-2011
TIME PLOTTED => 14:19

Dist	COUNTY	ROUTE	POST MILES TOTAL PROJECT	SHEET No.	TOTAL SHEETS
01	DN	101	15.4/20.5	4	18

REGISTERED CIVIL ENGINEER — DATE 8/18/11

August 29, 2011
PLANS APPROVAL DATE

REGISTERED PROFESSIONAL ENGINEER — DAVID A. MORGAN — No. 72321 — Exp. 6/30/12 — CIVIL — STATE OF CALIFORNIA

THE STATE OF CALIFORNIA OR ITS OFFICERS OR AGENTS SHALL NOT BE RESPONSIBLE FOR THE ACCURACY OR COMPLETENESS OF SCANNED COPIES OF THIS PLAN SHEET.

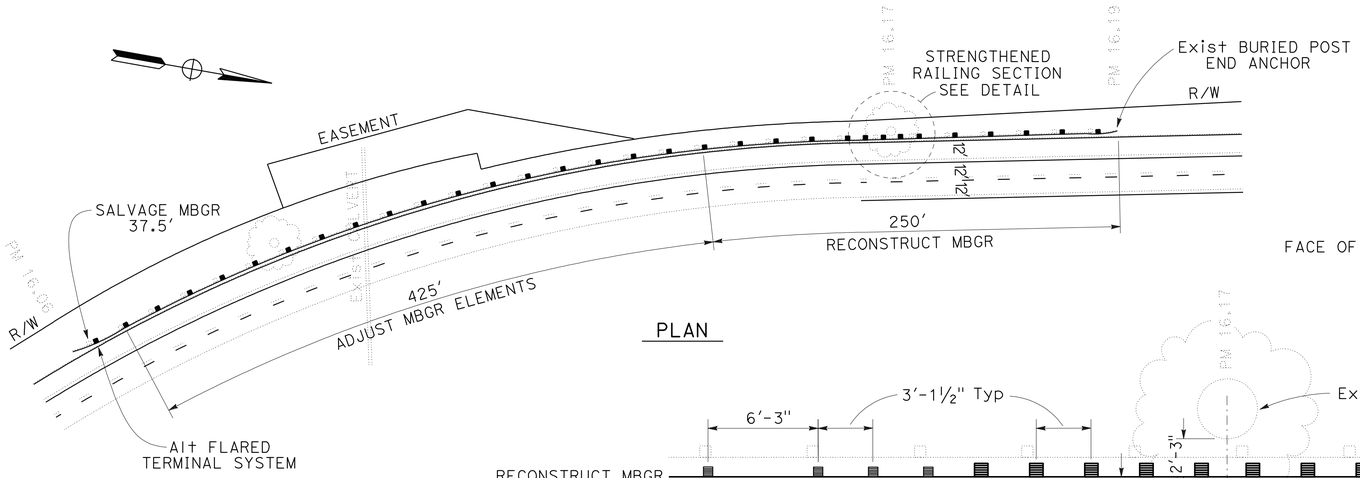

PLAN

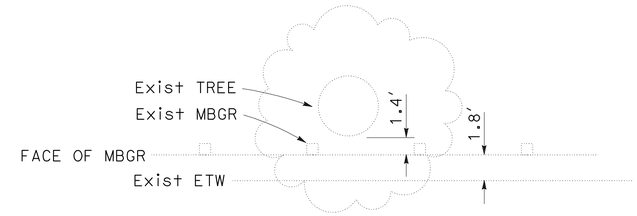

EXISTING MBGR LOCATION

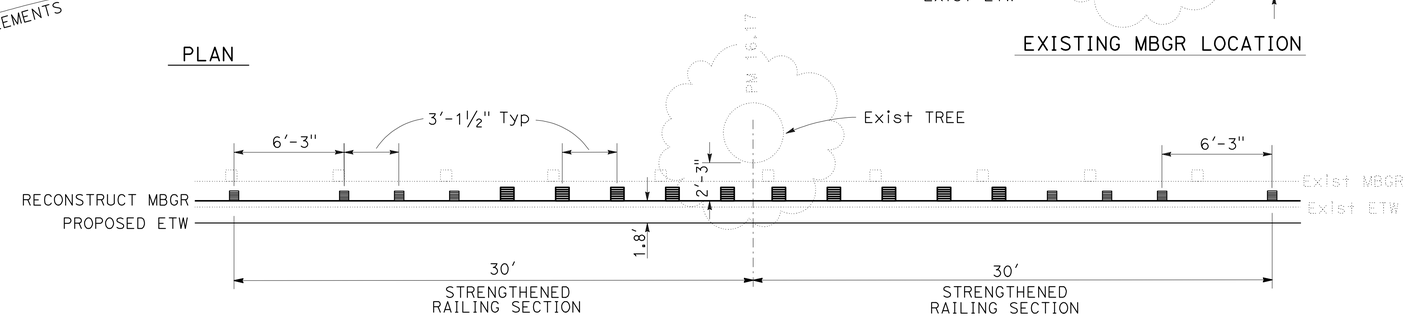

STRENGTHENED RAILING SECTIONS

NOTES:

1. FOR DETAILS NOT SHOWN SEE Std PLAN A77G8.
2. HAND DIG MBGR POST HOLES THAT ARE WITHIN 6 FEET OF A TREE, AS DIRECTED BY THE ENGINEER.

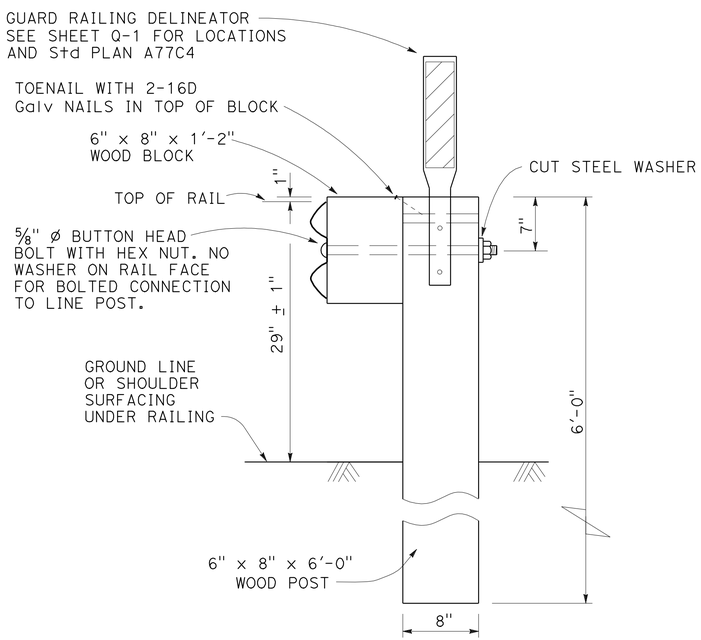

TYPICAL WOOD POST INSTALLATION

NOTE: FOR DETAILS OF WOOD POSTS AND WOOD BLOCKS USED TO CONSTRUCT GUARD RAILING, SEE STANDARD PLAN A77C1 AND A77C3.

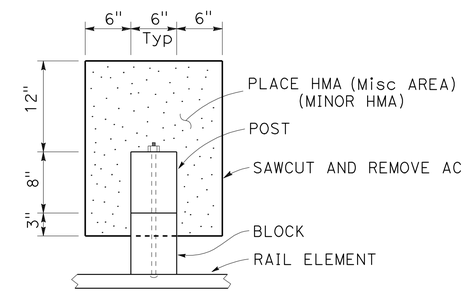

PLAN

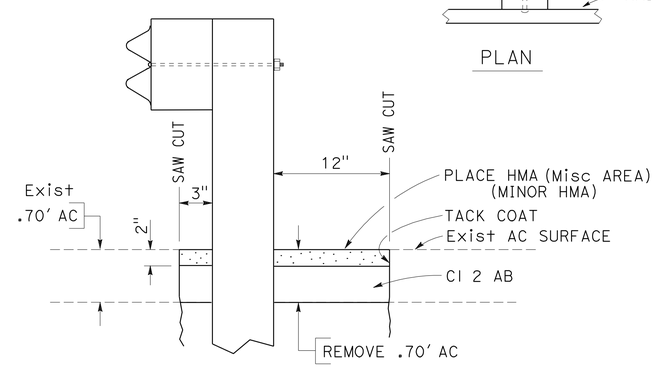

RECONSTRUCT MBGR IN EXISTING AC PAVEMENT

CONSTRUCTION DETAILS

NO SCALE

C-2

STATE OF CALIFORNIA - DEPARTMENT OF TRANSPORTATION
DESIGN
FUNCTIONAL SUPERVISOR: STEVEN HUGHES
CALCULATED-DESIGNED BY: Elisa Meyer
CHECKED BY: David A. Morgan
REVISED BY
DATE REVISED

LAST REVISION 00-00-00 | DATE PLOTTED => 14-SEP-2011 | TIME PLOTTED => 14:19

Dist	COUNTY	ROUTE	POST MILES TOTAL PROJECT	SHEET No.	TOTAL SHEETS
01	DN	101	15.4/20.5	5	18

REGISTERED CIVIL ENGINEER — DATE 8/18/11

August 29, 2011
PLANS APPROVAL DATE

REGISTERED PROFESSIONAL ENGINEER — DAVID A. MORGAN — No. 72321 — Exp. 6/30/12 — CIVIL — STATE OF CALIFORNIA

THE STATE OF CALIFORNIA OR ITS OFFICERS OR AGENTS SHALL NOT BE RESPONSIBLE FOR THE ACCURACY OR COMPLETENESS OF SCANNED COPIES OF THIS PLAN SHEET.

STATIONARY MOUNTED CONSTRUCTION AREA SIGNS

◯	SIGN TYPE	PANEL SIZE (INCHES)	SIGN MESSAGE	No. OF POSTS AND SIZE (INCHES)	EACH
A	G20-1	60 x 36	ROAD WORK NEXT 7 MILES	2 - 4x6	2
	C23B (CA)	42 x 12	RESURFACING		
B	W11-1	36 x 36	BICYCLE SYMBOL	1 - 4x6	2
	W16-1	24 x 30	SHARE THE ROAD		
C	C40 (CA)	72 x 36	TRAFFIC FINES DOUBLED IN CONSTRUCTION ZONES	2 - 4x6	2
D	G20-2	36 x 18	END ROAD WORK	1 - 4x4	2
E	W20-1	36 x 36	ROAD WORK AHEAD	1 - 4x6	1

NOTES 1. EXACT SIGN LOCATION TO BE DETERMINED BY THE ENGINEER.
2. EXISTING UTILITY FACILITIES HAVE NOT BEEN PLOTTED ON THIS PLAN.

42" x 12"
4" CAPS
BLACK/ORANGE

RESURFACING

C23B (CA)

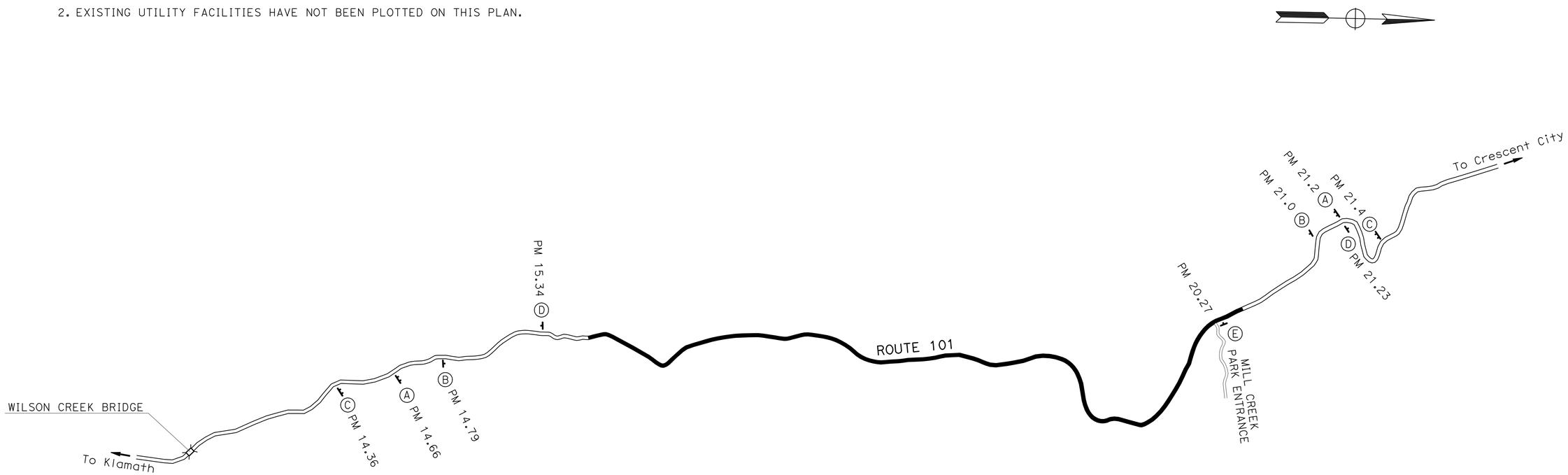

CONSTRUCTION AREA SIGNS
CS-1

NO SCALE

STATE OF CALIFORNIA - DEPARTMENT OF TRANSPORTATION
Caltrans
DESIGN

FUNCTIONAL SUPERVISOR: STEVEN HUGHES
CALCULATED-DESIGNED BY: Elisa Meyer
CHECKED BY: David A. Morgan
REVISED BY
DATE REVISED

LAST REVISION 00-00-00
DATE PLOTTED => 14-SEP-2011
TIME PLOTTED => 14:19

Dist	COUNTY	ROUTE	POST MILES TOTAL PROJECT	SHEET No.	TOTAL SHEETS
01	DN	101	15.4/20.5	6	18

REGISTERED CIVIL ENGINEER — DATE 8/18/11

August 29, 2011
PLANS APPROVAL DATE

REGISTERED PROFESSIONAL ENGINEER — DAVID A. MORGAN — No. 72321 — Exp. 6/30/12 — CIVIL — STATE OF CALIFORNIA

THE STATE OF CALIFORNIA OR ITS OFFICERS OR AGENTS SHALL NOT BE RESPONSIBLE FOR THE ACCURACY OR COMPLETENESS OF SCANNED COPIES OF THIS PLAN SHEET.

NOTES

1. EXACT LOCATION OF K-RAILING, CHANNELIZERS AND SIGNS TO BE DETERMINED BY THE ENGINEER.

LEGEND

● = CHANNELIZER (SURFACE MOUNTED)

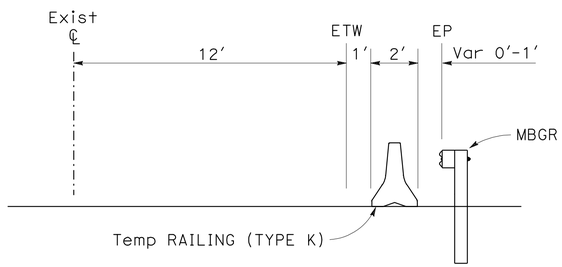

SECTION A-A

TRAFFIC HANDLING QUANTITIES

LOCATION	ROUTE	DIRECTION	CHANNELIZER (SURFACE MOUNTED)	TEMPORARY RAILING (TYPE K)	ALTERNATIVE TEMPORARY CRASH CUSHION
			EA	LF	EA
PM 16.17	101	SB	7	60	2

NOTE: TEMPORARY RAILING TO BE USED IF THERE IS NO TRAFFIC CONTROL AND THE MBGR IS NOT FUNCTIONABLE.

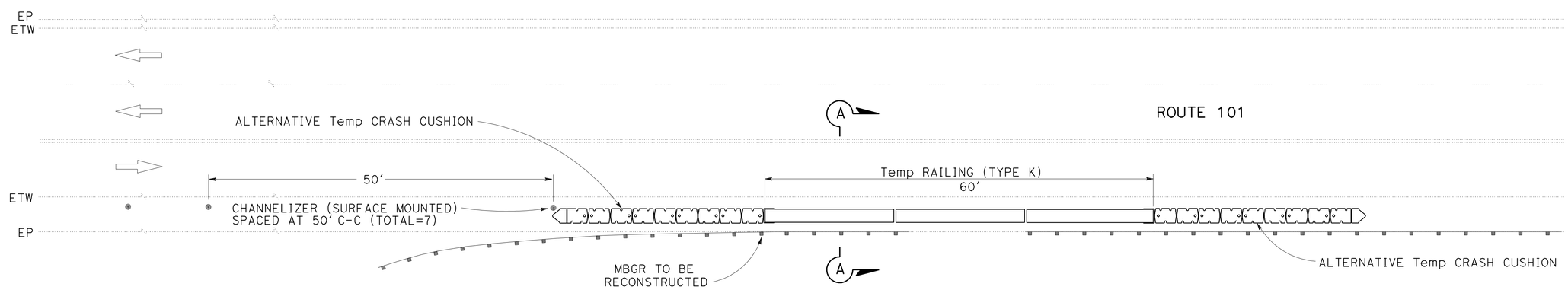

PLAN

TEMPORARY RAILING (TYPE K) PLACEMENT

RECONSTRUCT MBGR PM 16.15/16.19

TRAFFIC HANDLING DETAILS AND QUANTITIES

NO SCALE

THD-1

STATE OF CALIFORNIA - DEPARTMENT OF TRANSPORTATION
Caltrans®
DESIGN

FUNCTIONAL SUPERVISOR: STEVEN HUGHES
CALCULATED-DESIGNED BY: Elisa Meyer
CHECKED BY: David A. Morgan
REVISED BY
DATE REVISED

LAST REVISION 00-00-00
DATE PLOTTED => 14-SEP-2011
TIME PLOTTED => 14:19

Dist	COUNTY	ROUTE	POST MILES TOTAL PROJECT	SHEET No.	TOTAL SHEETS
01	DN	101	15.4/20.5	7	18

REGISTERED CIVIL ENGINEER — DATE 8/18/11

August 29, 2011
PLANS APPROVAL DATE

REGISTERED PROFESSIONAL ENGINEER — DAVID A. MORGAN No. 72321 Exp. 6/30/12 CIVIL — STATE OF CALIFORNIA

THE STATE OF CALIFORNIA OR ITS OFFICERS OR AGENTS SHALL NOT BE RESPONSIBLE FOR THE ACCURACY OR COMPLETENESS OF SCANNED COPIES OF THIS PLAN SHEET.

REMOVE THERMOPLASTIC PAVEMENT MARKING

LOCATION POSTMILE	LOCATION L+/R+	DESCRIPTION	SQFT	COMMENT
16.18	R+	TYPE IV ARROW		REMOVE VIA COLD PLANE
16.22	R+	TYPE IV ARROW		REMOVE VIA COLD PLANE
16.26	R+	TYPE IV ARROW	42	
17.52	R+	TYPE IV ARROW		REMOVE VIA DIGOUT
17.56	R+	TYPE IV ARROW	42	
17.60	R+	TYPE IV ARROW	42	
17.74	L+	TYPE IV ARROW	42	
17.79	L+	TYPE IV ARROW	42	
17.81	L+	TYPE IV ARROW	42	
18.76	R+	TYPE IV ARROW		REMOVE VIA DIGOUT
18.79	R+	TYPE IV ARROW		REMOVE VIA DIGOUT
18.84	R+	TYPE IV ARROW	42	
18.85	L+	TYPE IV ARROW		REMOVE VIA COLD PLANE
18.88	L+	TYPE IV ARROW		REMOVE VIA COLD PLANE
18.91	L+	TYPE IV ARROW		REMOVE VIA COLD PLANE
20.25	R+	"STOP"	22	MILL CREEK PARK ENTRANCE ROAD
20.25	R+	STOP LIMIT LINE	40	MILL CREEK PARK ENTRANCE ROAD
20.25	L+	CHANNELIZING LINE (DETAIL 38)	97	SB LEFT TURN POCKET PM 20.25 TO PM 20.29
20.27	L+	TYPE III (L) ARROW	42	SB LEFT TURN POCKET
20.40	R+	TYPE IV ARROW		REMOVE VIA COLD PLANE
20.44	R+	TYPE IV ARROW		REMOVE VIA COLD PLANE
		TOTAL	495	

THERMOPLASTIC PAVEMENT MARKING

LOCATION POSTMILE	LOCATION L+/R+	DESCRIPTION	SQFT	COMMENT
16.10	R+	TYPE IV ARROW	42	
16.17	R+	TYPE IV ARROW	42	
16.26	R+	TYPE IV ARROW	42	
17.44	R+	TYPE IV ARROW	42	
17.52	R+	TYPE IV ARROW	42	
17.60	R+	TYPE IV ARROW	42	
17.74	L+	TYPE IV ARROW	42	
17.83	L+	TYPE IV ARROW	42	
17.92	L+	TYPE IV ARROW	42	
18.66	R+	TYPE IV ARROW	42	
18.76	R+	TYPE IV ARROW	42	
18.84	R+	TYPE IV ARROW	42	
18.85	L+	TYPE IV ARROW	42	
18.94	L+	TYPE IV ARROW	42	
19.03	L+	TYPE IV ARROW	42	
20.25	R+	"STOP"	22	MILL CREEK PARK ENTRANCE ROAD
20.25	R+	STOP LIMIT LINE	40	MILL CREEK PARK ENTRANCE ROAD
20.27	L+	TYPE III (L) ARROW	42	SB LEFT TURN POCKET
20.35	R+	TYPE IV ARROW	42	
20.37	R+	TYPE IV ARROW	42	
		TOTAL	818	

TRAFFIC STRIPE AND PAVEMENT MARKERS

POSTMILE FROM	POSTMILE TO	L+/R+/℄	DETAIL NUMBER	DETAIL LENGTH	THERMOPLASTIC TRAFFIC STRIPE: 4 INCH YELLOW (BROKEN 36-12)	4 INCH WHITE (BROKEN 36-12)	4 INCH WHITE (SOLID)	4 INCH YELLOW (SOLID)	8 INCH WHITE (SOLID)	PAVEMENT MARKER (RETROREFLECTIVE-RECESSED): TYPE D YELLOW (TWO-WAY)	TYPE G CLEAR (ONE WAY)
				LF	LF					EA	
15.49	20.44	L+/R+	27B	26100			52200				
15.49	20.44	℄	22	25536				51072		2130	
15.78	15.83	R+	5	264	264						
15.83	16.30	R+	12	2482		2482					52
16.96	16.98	R+	5	106	106						
16.98	17.64	R+	12	3485		3485					73
17.75	18.17	L+	12	2218		2218					47
18.17	18.19	L+	5	106	106						
18.30	18.35	R+	5	264	264						
18.35	18.84	R+	12	2587		2587					54
18.85	19.88	L+	12	5438		5438					114
19.88	19.91	L+	5	158	158						
20.21	20.25	℄	29	182				728		18	
20.23	20.25	R+	5	106	106						
20.25	20.44	R+	12	1003		1003					21
20.30	20.37	℄	29	382				1528		34	
20.25	20.29	L+	38	145					145	9	6
				SUBTOTAL	1004	17213	52200	53328	145	2191	367
				TOTAL	18217		105528		145	2558	

DELINEATOR (CLASS 1)

LOCATION POSTMILE	LOCATION L+/R+	TYPE F EA
16.28	R+	1
16.30	R+	1
16.32	R+	1
17.62	R+	1
17.64	R+	1
17.66	R+	1
17.70	L+	1
17.71	L+	1
17.72	L+	1
17.73	L+	1
	TOTAL	10

PAVEMENT DELINEATION QUANTITIES
PDQ-1

STATE OF CALIFORNIA - DEPARTMENT OF TRANSPORTATION
Caltrans® DESIGN

FUNCTIONAL SUPERVISOR: STEVEN HUGHES
CALCULATED-DESIGNED BY: Elisa Meyer
CHECKED BY: David A. Morgan
REVISED BY
DATE REVISED

LAST REVISION 00-00-00
DATE PLOTTED => 14-SEP-2011
TIME PLOTTED => 14:19

Dist	COUNTY	ROUTE	POST MILES TOTAL PROJECT	SHEET No.	TOTAL SHEETS
01	DN	101	15.4/20.5	8	18

REGISTERED CIVIL ENGINEER — DATE 8/18/11

August 29, 2011
PLANS APPROVAL DATE

REGISTERED PROFESSIONAL ENGINEER — DAVID A. MORGAN — No. 72321 — Exp. 6/30/12 — CIVIL — STATE OF CALIFORNIA

THE STATE OF CALIFORNIA OR ITS OFFICERS OR AGENTS SHALL NOT BE RESPONSIBLE FOR THE ACCURACY OR COMPLETENESS OF SCANNED COPIES OF THIS PLAN SHEET.

ROADSIDE SIGN SUMMARY

LOCATION			SIGN CODE	PANEL SIZE	LEGEND	NUMBER OF POSTS (N)	POST SIZE	ROADSIDE SIGN -ONE POST	REMOVE ROADSIDE SIGN	RELOCATE ROADSIDE SIGN -ONE POST	REMOVE ROADSIDE SIGN PANEL	COMMENTS
SITE #	PM	ORIENTATION		in x in		EA	INCHES	EA	EA	EA	EA	
1	16.14	R†	W9-2	60 X 60	LANE ENDS MERGE LEFT	2	4x4		1			
2	16.22	R†/L†	W4-2	36 X 36	MERGE LEFT SYMBOL	1	4x4				2	KEEP SIGN (2) R4-1 AND POSTS, REMOVE W4-2 SIGN PANEL ONLY
3	17.29	R†	W9-2	60 X 60	LANE ENDS MERGE LEFT	2	4x4		1			
4	17.52	R†	R4-1	24 X 30	DO NOT PASS	1	4x4		1			
			W4-2	36 X 36	MERGE LEFT SYMBOL							
		L†	R4-1	24 X 30	DO NOT PASS	1	4x4		1			
			W4-2	36 X 36	MERGE LEFT SYMBOL							
5	17.81	R†	R4-1	24 X 30	DO NOT PASS	1	4x4		1			
			W4-2	36 X 36	MERGE LEFT SYMBOL							
		L†	R4-1	24 X 30	DO NOT PASS	1	4x4		1			
			W4-2	36 X 36	MERGE LEFT SYMBOL							
6	17.92	L†	W9-2	60 X 60	LANE ENDS MERGE LEFT	2	4x4		1			
7	18.49	R†	W43 (CA)	36 X 36	ICY	1				1		RELOCATE 200 FEET SOUTH TO PM 18.45 R†, STEEL POST
8	18.69	R†	W9-2	60 X 60	LANE ENDS MERGE LEFT	2	4x4		1			
9	18.80	R†/L†	W4-2	36 X 36	MERGE LEFT SYMBOL	1	4x4		2			
10	18.95	R†/L†	W4-2	36 X 36	MERGE LEFT SYMBOL	1	4x4				2	KEEP SIGN (2) R4-1 AND POSTS, REMOVE W4-2 SIGN PANEL ONLY
11	19.07	L†	W9-2	60 X 60	LANE ENDS MERGE LEFT	2	4x4		1			
12	20.32	R†	W9-2	60 X 60	LANE ENDS MERGE LEFT	2	4x4		1			
13	20.44	R†/L†	W4-2	36 X 36	MERGE LEFT SYMBOL	1	4x4				2	KEEP SIGN (2) R4-1 AND POSTS, REMOVE W4-2 SIGN PANEL ONLY
14	15.90	R†	W9-1	36 X 36	RIGHT LAND ENDS	1	4x6	1				NEW SIGN
15	16.10	L†/R†	W4-2	36 X 36	MERGE LEFT SYMBOL	1	4x6	2				NEW SIGN
16	17.29	R†	W9-1	36 X 36	RIGHT LAND ENDS	1	4x6	1				NEW SIGN
17	17.44	L†/R†	W4-2	36 X 36	MERGE LEFT SYMBOL	1	4x6	2				NEW SIGN
18	17.60	L†/R†	R4-1	24 X 30	DO NOT PASS	1	4x4	2				NEW SIGN
19	17.74	L†/R†	R4-1	24 X 30	DO NOT PASS	1	4x4	2				NEW SIGN
20	17.92	L†	W4-2	36 x 36	MERGE LEFT SYMBOL	1	4x6	1				NEW SIGN
21	18.04	L†	W9-1	36 x 36	RIGHT LAND ENDS	1	4x6	1				NEW SIGN
22	18.49	L†/R†	W9-1	36 X 36	RIGHT LAND ENDS	1	4x6	2				NEW SIGN
23	18.66	R†	W4-2	36 X 36	MERGE LEFT SYMBOL	1	4x6	1				NEW SIGN
24	19.03	L†/R†	W4-2	36 X 36	MERGE LEFT SYMBOL	1	4x6	2				NEW SIGN
25	19.11	L†/R†	W9-1	36 X 36	RIGHT LAND ENDS	1	4x6	2				NEW SIGN
26	20.31	R†	W9-1	36 X 36	RIGHT LAND ENDS	1	4x6	1				NEW SIGN
27	20.35	L†/R†	W4-2	36 X 36	MERGE LEFT SYMBOL	1	4x6	2				NEW SIGN
							TOTAL	22	12	1	6	

SIGN QUANTITIES
SQ-1

REVISED BY | DATE REVISED
Elisa Meyer | David A. Morgan
CALCULATED-DESIGNED BY | CHECKED BY
FUNCTIONAL SUPERVISOR: STEVEN HUGHES

STATE OF CALIFORNIA - DEPARTMENT OF TRANSPORTATION
Caltrans
DESIGN

LAST REVISION 00-00-00 | DATE PLOTTED => 14-SEP-2011 | TIME PLOTTED => 14:19

Dist	COUNTY	ROUTE	POST MILES TOTAL PROJECT	SHEET No.	TOTAL SHEETS
01	DN	101	15.4/20.5	9	18

REGISTERED CIVIL ENGINEER — DATE 8/18/11

August 29, 2011
PLANS APPROVAL DATE

REGISTERED PROFESSIONAL ENGINEER — DAVID A. MORGAN — No. 72321 — Exp. 6/30/12 — CIVIL — STATE OF CALIFORNIA

THE STATE OF CALIFORNIA OR ITS OFFICERS OR AGENTS SHALL NOT BE RESPONSIBLE FOR THE ACCURACY OR COMPLETENESS OF SCANNED COPIES OF THIS PLAN SHEET.

LEGEND

(N) - NOT A SEPARATE PAY ITEM. FOR INFORMATION ONLY.
BPA - BURIED POST END ANCHOR
NC - NO CHANGE
SRT - TERMINAL SYSTEM (TYPE SRT)

HMA DIKE

POSTMILE FROM	POSTMILE TO	L+/R+	REMOVE AC DIKE (LF)	PLACE HMA DIKE (TYPE E) (LF)	MINOR HMA (TON)
16.00	16.26	R+	1336	1336	34
16.62	16.68	L+	313	313	8
17.19	17.36	R+	900	900	23
19.05	19.11	L+	321	321	8
		TOTAL	2870	2870	73 ✳

✳ THIS ITEM ADDED TO ROADWAY AND MBGR QUANTITIES

CENTERLINE RUMBLE STRIP (GROUND-IN INDENTATIONS)

POSTMILE FROM	POSTMILE TO	DETAIL	RUMBLE STRIP STA
15.49	20.23	22	251.00
20.23	20.27	29	4.22
20.31	20.37	29	6.33
20.37	20.44	22	3.70
		TOTAL	265.25

COLD PLANE AC PAVEMENT

POSTMILE FROM	POSTMILE TO	L+/R+	LENGTH (LF)	WIDTH (LF)	AREA SQYD	REMARKS
15.49	15.50	L+/R+	30	40	133.3	CONFORM 40' TAPER
15.50	15.54	L+/R+	216	30	720.0	EP - EP
15.98	16.05	L+/R+	383	40	1702.2	EP - EP
16.10	16.22	L+/R+	587	40	2608.9	EP - EP
16.91	17.10	L+/R+	983	40	4368.9	EP - EP
17.26	17.49	L+/R+	1210	40	5377.8	EP - EP
18.82	18.97	L+/R+	763	40	3391.1	EP - EP
18.96	19.23	L+/R+	1433	40	6368.9	EP - EP
19.30	19.35	L+/R+	242	40	1075.6	EP - EP
19.64	19.85	L+/R+	1128	40	5013.3	EP - EP
20.25		R+			138.1	MILL CREEK Rd 40' TAPER
20.37	20.43	R+	295	40	1311.1	EP - EP
20.43	20.44	L+/R+	40	40	177.8	CONFORM 40' TAPER
				TOTAL	32387.0	

NOTE: EXACT LOCATION AND LIMITS FOR COLD PLANE AC PAVEMENT WILL BE DETERMINED BY THE ENGINEER.

REPLACE AC SURFACING

POSTMILE FROM	POSTMILE TO	L+/R+	LENGTH (LF)	WIDTH (LF)	VOLUME CY	REMARKS
15.49	15.51	L+	94	6	5.2	SB
15.55	15.59	R+	217	12	24.1	NB
15.61	15.64	R+	144	12	16.0	NB
15.66	15.67	L+/R+	76	24	16.9	SB & NB
15.76	15.78	L+	139	12	15.4	SB
15.82	15.83	L+	50	12	5.6	SB
15.83	15.84	L+	50	12	5.6	NB #2
15.85	15.91	L+	305	12	33.9	SB
15.99	16.02	R+	150	12	16.7	NB #2
16.05	16.10	L+/R+	309	36	103.0	
16.20	16.22	L+	108	12	12.0	SB
16.38	16.41	R+	149	12	16.6	NB
16.41	16.48	R+	369	12	41.0	NB
16.48	16.55	L+/R+	430	24	95.6	SB & NB
16.62	16.68	L+/R+	370	24	82.2	SB & NB
16.76	16.85	L+/R+	465	24	103.3	SB & NB
16.78	16.83	R+	274	6	15.2	NB
16.91	17.06	L+	800	12	88.9	SB
17.10	17.13	L+/R+	178	36	59.3	
17.13	17.16	R+	153	24	34.0	NB
17.21	17.23	L+/R+	85	36	28.3	SB & NB
17.27	17.53	L+	1411	12	156.8	SB
17.49	17.53	R+	226	24	50.2	NB
17.57	17.61	L+	243	6	13.5	SB
17.61	17.63	L+	104	12	11.6	SB
17.66	17.67	L+	30	12	3.3	SB
17.74	17.75	R+	56	12	6.2	NB
17.87	17.93	L+/R+	332	36	110.7	
17.96	17.99	L+	158	12	17.6	SB #1
18.52	18.59	L+/R+	393	36	131.0	
18.70	18.82	L+/R+	617	36	205.7	
19.24	19.27	L+/R+	193	36	64.3	
19.28	19.30	R+	94	6	5.2	NB
19.34	19.47	L+	694	24	154.2	SB
19.34	19.52	R+	925	12	102.8	NB
19.92	19.97	L+/R+	260	36	86.7	
20.04	20.09	L+	274	12	30.4	SB
20.19	20.22	L+/R+	167	36	55.7	SB & NB
20.30	20.32	L+	92	12	10.2	SB
20.37	20.42	L+	305	12	33.9	SB
				TOTAL	2068.8	

NOTE: EXACT LOCATION AND LIMITS FOR REPLACE AC SURFACING WILL BE DETERMINED BY THE ENGINEER.

ROADWAY AND MBGR QUANTITIES

LOCATION POST MILE FROM	LOCATION POST MILE TO	DIRECTION	EXISTING LENGTH (LF)	EXISTING LEADER	EXISTING TRAILER	PROPOSED LEADER	PROPOSED TRAILER	SALVAGE MBGR (LF)	ADJUST MBGR ELEMENTS (LF)	RECONSTRUCT MBGR (WOOD POST) (LF)	(N) STRENGTHENED RAILING SECTION (LF)	ALTERNATIVE FLARED TERMINAL SYSTEM (EA)	(N) BURIED POST END ANCHOR (EA)	GUARD RAILING DELINEATOR (EA)	MINOR HMA (TON)	PLACE HMA (Misc AREA) (SQYD)	CLASS 2 AB (CY)	ASPHALTIC EMULSION MEMBRANE (BONDED WEARING COURSE) (TON)	HOT MIX ASPHALT (BONDED WEARING COURSE-OPEN GRADED) (TON)	REMARKS	MBGR LAYOUT TYPE
16.06	16.19	SB	708	BPA	SRT	NC	NC	37.5	425	250	60	1	1	14	4	25	2			REMOVE AND REPLACE FLARED TERMINAL SYSTEM, MOVE MBGR TO 2.3' IN FRONT OF REDWOOD TREE.	16L
15.49	15.80																	4	389		
15.80	16.26																	7	660		
16.26	16.96																	11	987		
16.96	17.71																	13	1134		
17.71	18.32																	9	850		
18.32	18.83																	9	792		
18.83	19.94																	17	1499		
19.94	20.44																	9	839		
MILL CREEK ROAD APPROACH																		1	20		
FROM HMA DIKE TABLE															73						
							TOTAL	37.5	425	250	60	1	1	14	77	25	2	80	7169		

SUMMARY OF QUANTITIES
Q-1

STATE OF CALIFORNIA - DEPARTMENT OF TRANSPORTATION
Caltrans®
DESIGN

FUNCTIONAL SUPERVISOR: STEVEN HUGHES
CALCULATED-DESIGNED BY: Elisa Meyer
CHECKED BY: David A. Morgan
REVISED BY
DATE REVISED

LAST REVISION 00-00-00
DATE PLOTTED => 14-SEP-2011
TIME PLOTTED => 14:19

Dist	COUNTY	ROUTE	POST MILES TOTAL PROJECT	SHEET No.	TOTAL SHEETS
01	DN	101	15.4/20.5	10	18

Randell D. Hiatt
REGISTERED CIVIL ENGINEER

May 20, 2011
PLANS APPROVAL DATE

REGISTERED PROFESSIONAL ENGINEER Randell D. Hiatt No. C50200 Exp. 6-30-11 CIVIL STATE OF CALIFORNIA

The State of California or its officers or agents shall not be responsible for the accuracy or completeness of electronic copies of this plan sheet.

To accompany plans dated August 29, 2011

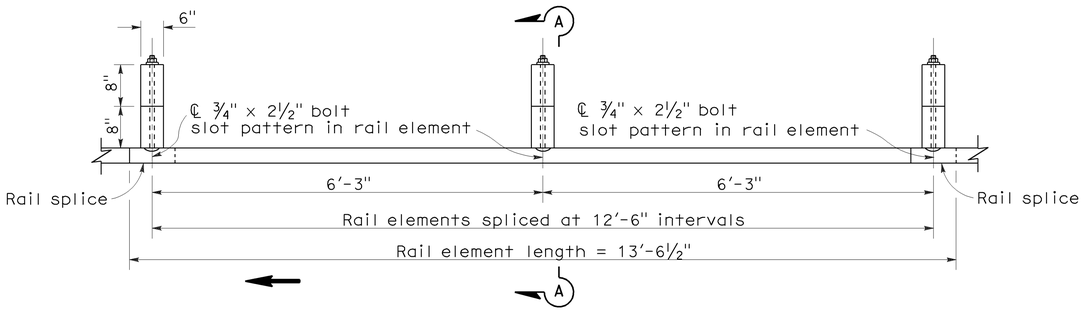

PLAN

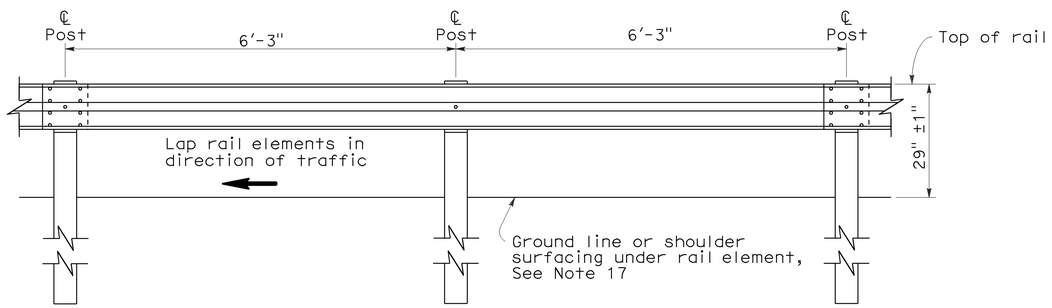

ELEVATION

METAL BEAM GUARD RAILING WITH WOOD POST AND BLOCKS

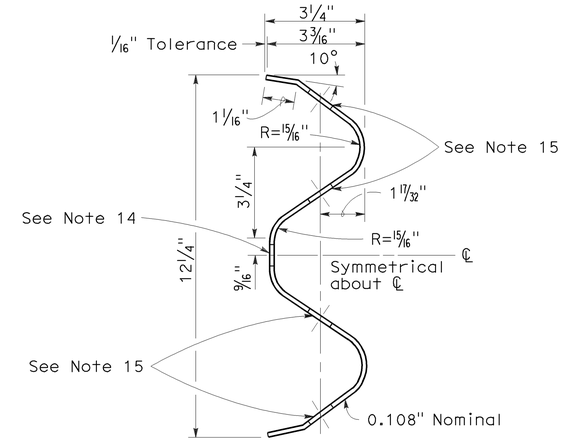

SECTION THRU RAIL ELEMENT

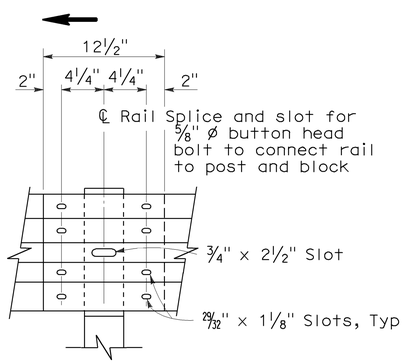

ELEVATION

RAIL ELEMENT SPLICE DETAIL

a) Connect the over lapped end of the rail elements with ⅝" ø x 1⅜" button head oval shoulder splice bolts inserted into the 29⁄32" x 1⅛" slots and bolted together with ⅝" ø recessed hex nuts. Recess of hex nut points toward rail element. A total of 8 bolts and nuts are to be used at each rail splice connection.

b) The ends of the rail elements are to be overlapped in the direction of traffic (see details).

c) Where end cap is to be attached to the end of a rail element, a total of 4 of the above described splice bolts and nuts are to be used.

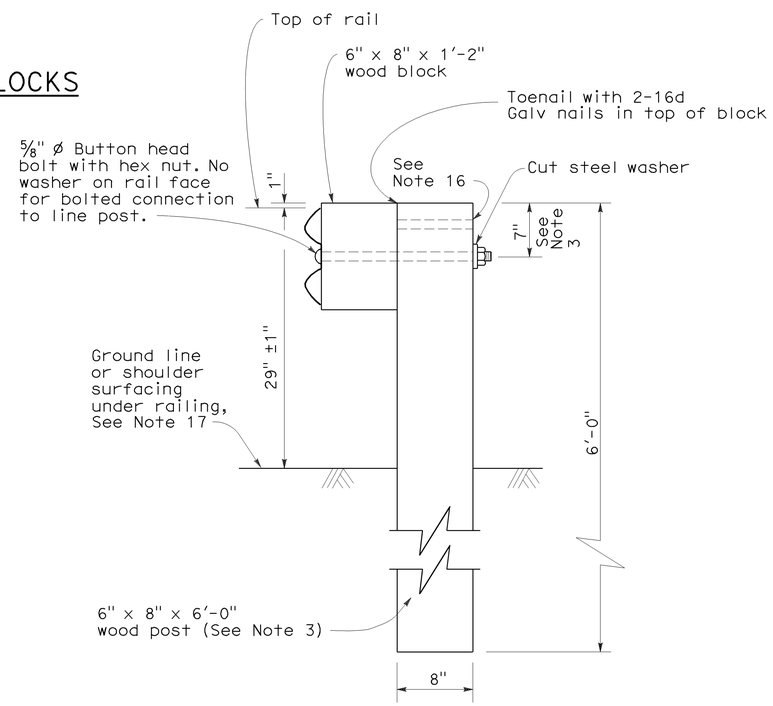

SECTION A-A

TYPICAL WOOD LINE POST INSTALLATION

See Note 4

NOTES:

1. For details of steel post installations, see Standard Plan A77A2.
2. For details of standard hardware used to construct guard railing, see Standard Plan A77B1.
3. For details of wood posts and wood blocks used to construct guard railing, see Standard Plan A77C1.
4. For additional installation details, see Standard Plan A77C3.
5. Guard railing post spacing to be 6'-3" center to center, except as otherwise noted.
6. For guard railing typical layouts, see the A77E, A77F and A77G Series of Standard Plans.
7. For terminal system end treatment details, see the A77L Series of Standard Plans. To connect railing to terminal system end treatment, transition the top of railing height at a ratio of 120:1 to terminal system end treatment height plus one 12'-6" standard railing section at the transitioned height for a horizontal connection to the end treatment.
8. For guard railing end anchor details, see Standard Plans A77H1 and A77I2.
9. For details of guard railing transition to bridge railing, see Standard Plan A77J4.
10. For additional details of guard railing connection to bridge railings, see Standard Plans A77J1, A77J2 and A77K1.
11. For guard railing connection details to abutments and walls, see Standard Plan A77J3.
12. Direction of adjacent traffic indicated by ➡.
13. For typical guard railing delineation and dike positioning details, see Standard Plan A77C4.
14. Slotted hole for bolted connection of rail element to block and post. See "Section Thru Rail Element".
15. Slotted holes for splice bolts to overlap ends of rail element. See "Section Thru Rail Element".
16. Additional hole in uppermost portion of line post is for potential future adjustments of railing height. See Standard Plan A77C1.
17. Install posts in soil.

STATE OF CALIFORNIA
DEPARTMENT OF TRANSPORTATION

METAL BEAM GUARD RAILING STANDARD RAILING SECTION (WOOD POST WITH WOOD BLOCK)

NO SCALE

RSP A77A1 DATED MAY 20, 2011 SUPERSEDES STANDARD PLAN A77A1 DATED MAY 1, 2006 - PAGE 41 OF THE STANDARD PLANS BOOK DATED MAY 2006.

REVISED STANDARD PLAN RSP A77A1

2006 REVISED STANDARD PLAN RSP A77A1

3-10-11

To accompany plans dated August 29, 2011

Dist	COUNTY	ROUTE	POST MILES TOTAL PROJECT	SHEET No.	TOTAL SHEETS
01	DN	101	15.4/20.5	11	18

Randell D. Hiatt
REGISTERED CIVIL ENGINEER

May 20, 2011
PLANS APPROVAL DATE

REGISTERED PROFESSIONAL ENGINEER
Randell D. Hiatt
No. C50200
Exp. 6-30-11
CIVIL
STATE OF CALIFORNIA

The State of California or its officers or agents shall not be responsible for the accuracy or completeness of electronic copies of this plan sheet.

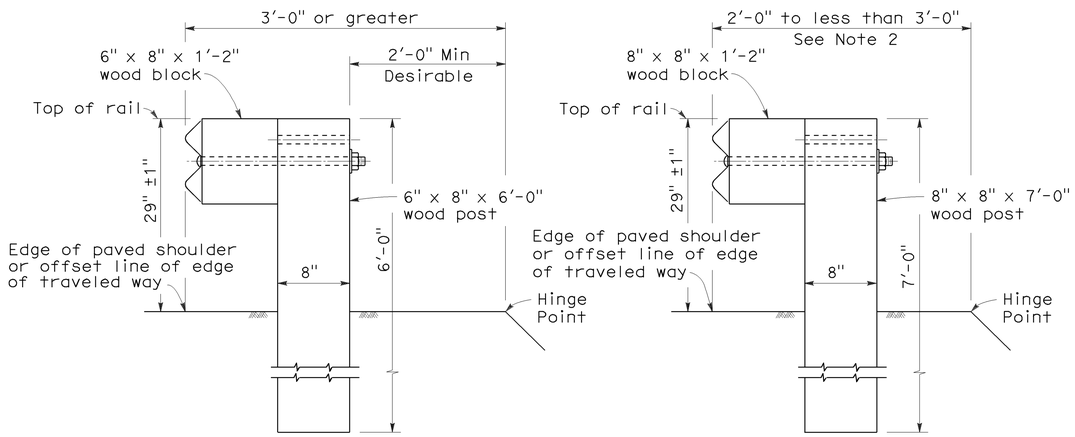

DETAIL A
TYPICAL ROADWAY INSTALLATION
See Note 1

DETAIL B
NARROW ROADWAY INSTALLATION
See Note 1

POST EMBEDMENT

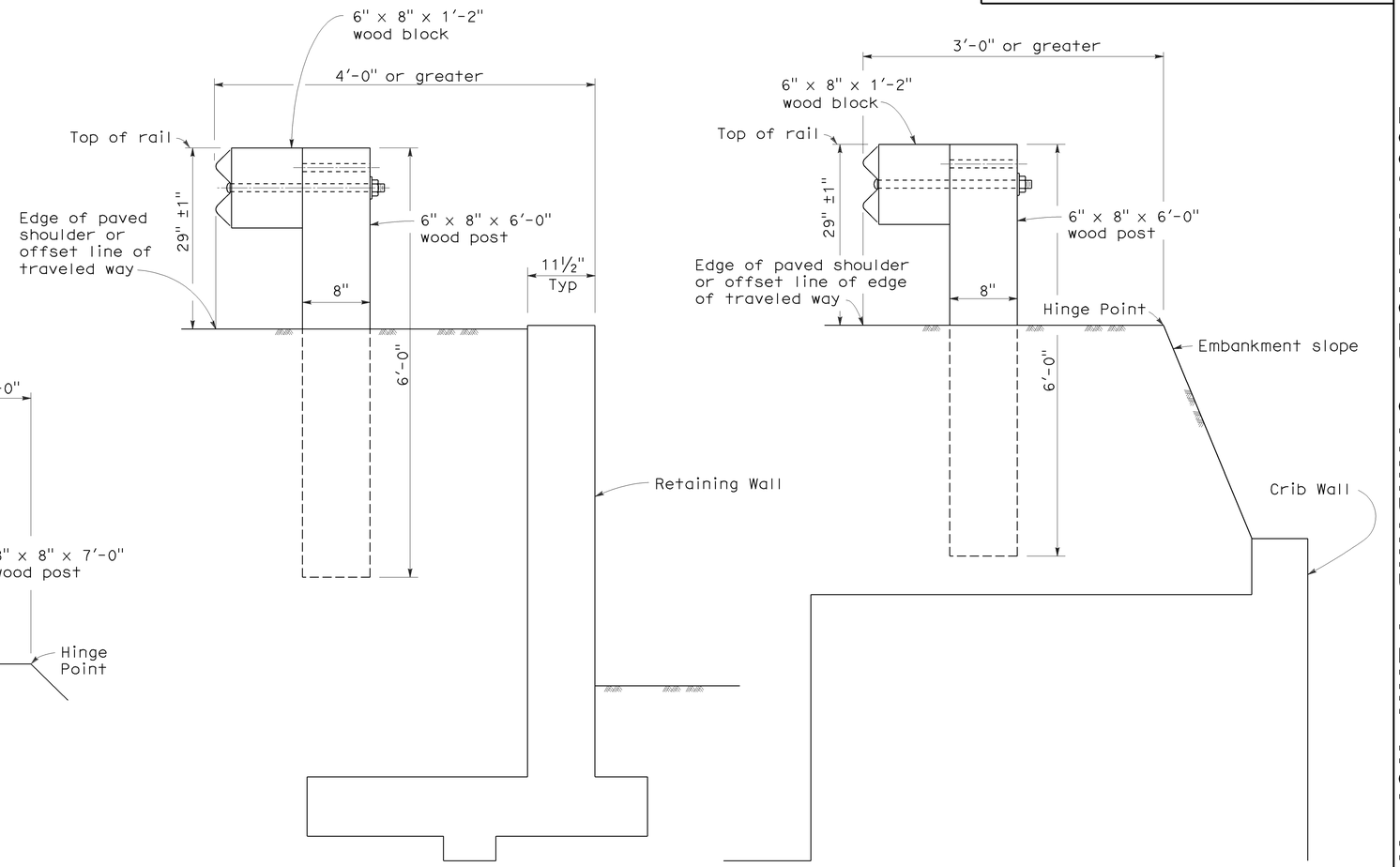

DETAIL C

DETAIL D

INSTALLATION AT EARTH RETAINING WALLS

NOTES:

1. These installation details also applicable to steel line post installations. For Detail A, C, and D, where steel line post installations are constructed, W6 x 9 steel post, 6'-0" in length, with 6" x 8" x 1'-2" notched wood blocks or notched recycled plastic blocks are to be used in place of the size of wood post and wood block shown. For Detail B, where steel line post installations are constructed, W6 x 9 steel post, 7'-0" in length, with 6" x 8" x 1'-2" notched wood blocks or notched recycled plastic blocks are to be used in place of the size of wood post and wood block shown. For additional installation details, see Standard Plans A77A1 and A77A2.
2. Where the distance between the face of the rail and the hinge point is less than 2'-0", see the Project Plans for special details.
3. For dike positioning with guard railing installations, see Standard Plan A77C4.

STATE OF CALIFORNIA
DEPARTMENT OF TRANSPORTATION

METAL BEAM GUARD RAILING TYPICAL LINE POST EMBEDMENT AND HINGE POINT OFFSET DETAILS

NO SCALE

RSP A77C3 DATED MAY 20, 2011 SUPERSEDES STANDARD PLAN A77C3
DATED MAY 1, 2006 - PAGE 46 OF THE STANDARD PLANS BOOK DATED MAY 2006.

REVISED STANDARD PLAN RSP A77C3

2006 REVISED STANDARD PLAN RSP A77C3

3-10-11

Dist	COUNTY	ROUTE	POST MILES TOTAL PROJECT	SHEET No.	TOTAL SHEETS
01	DN	101	15.4/20.5	12	18

Randell D. Hiatt
REGISTERED CIVIL ENGINEER

May 20, 2011
PLANS APPROVAL DATE

REGISTERED PROFESSIONAL ENGINEER
Randell D. Hiatt
No. C50200
Exp. 6-30-11
CIVIL
STATE OF CALIFORNIA

The State of California or its officers or agents shall not be responsible for the accuracy or completeness of electronic copies of this plan sheet.

To accompany plans dated August 29, 2011

NOTES:

1. When necessary to place dike in front of face of guard railing, only Type C dike may be used. For dike details, see Standard Plan A87B.
2. For standard railing post embedment, see Standard Plans A77C3.
3. Guard railing delineation to be used where shown on the Project Plans.
4. When dike or curb is placed under guard railing, the maximum height of the dike or curb shall be 4". Mountable dike should not be used. For dike and curb details, see Standard Plans A87A and A87B.
5. For details of typical distance between the face of rail and hinge point, see Standard Plan A77C3.
6. For steel line posts, use 1/4 - 20 self-tapping screws in 0.22" diameter holes or 1/4" bolts in 9/32" diameter holes.

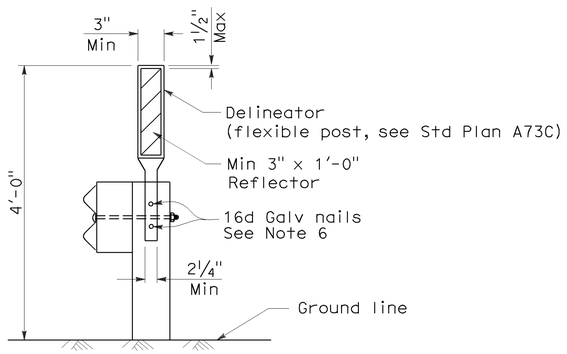

GUARD RAILING DELINEATION

See Note 3

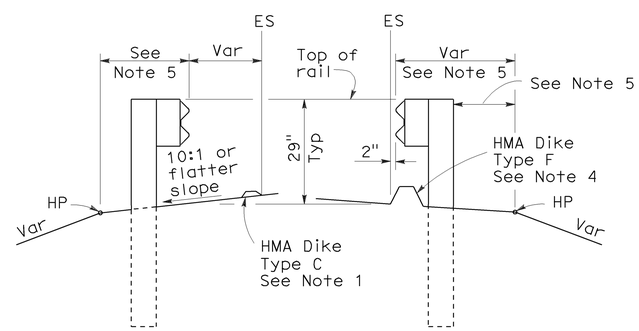

DIKE POSITIONING

See Note 1

STATE OF CALIFORNIA
DEPARTMENT OF TRANSPORTATION

METAL BEAM GUARD RAILING TYPICAL RAILING DELINEATION AND DIKE POSITIONING DETAILS

NO SCALE

RSP A77C4 DATED MAY 20, 2011 SUPERSEDES RSP A77C4 DATED JUNE 6, 2008 AND STANDARD PLAN A77C4 DATED MAY 1, 2006 - PAGE 47 OF THE STANDARD PLANS BOOK DATED MAY 2006.

REVISED STANDARD PLAN RSP A77C4

2006 REVISED STANDARD PLAN RSP A77C4

3-10-11

DIST	COUNTY	ROUTE	POST MILES TOTAL PROJECT	SHEET NO.	TOTAL SHEETS
01	DN	101	15.4/20.5	13	18

Randell D. Hiatt
REGISTERED CIVIL ENGINEER

June 6, 2008
PLANS APPROVAL DATE

REGISTERED PROFESSIONAL ENGINEER Randell D. Hiatt No. C50200 Exp. 6-30-09 CIVIL STATE OF CALIFORNIA

The State of California or its officers or agents shall not be responsible for the accuracy or completeness of electronic copies of this plan sheet.

To accompany plans dated August 29, 2011

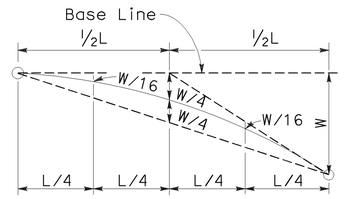

TYPICAL PARABOLIC LAYOUT

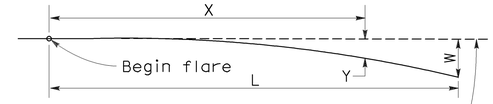

Base Line (Edge of paved shoulder or offset line of edge of traveled way)

$$Y = \frac{WX^2}{L^2}$$

Y = Offset from base line
W = Maximum offset
X = Distance along base line
L = Length of flare

PARABOLIC FLARE OFFSETS

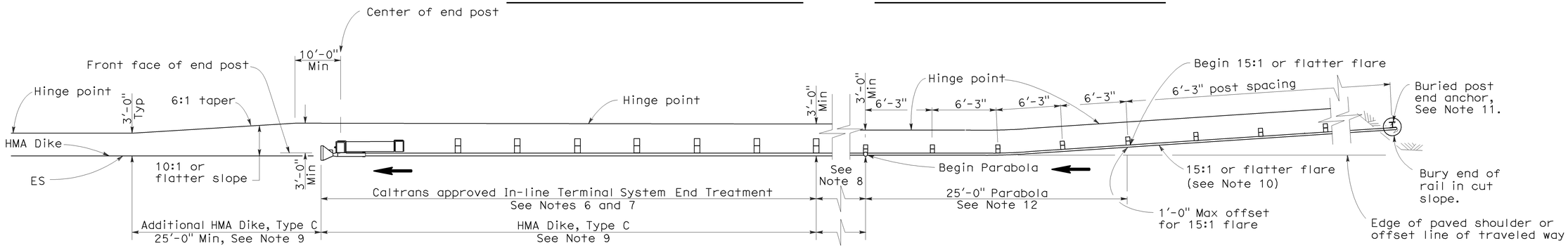

TYPE 11K LAYOUT

(EMBANKMENT GUARD RAILING INSTALLATION WITH A BURIED END ANCHOR TREATMENT AND AN IN-LINE END TREATMENT AT THE ENDS OF RAILING)
See Note 5

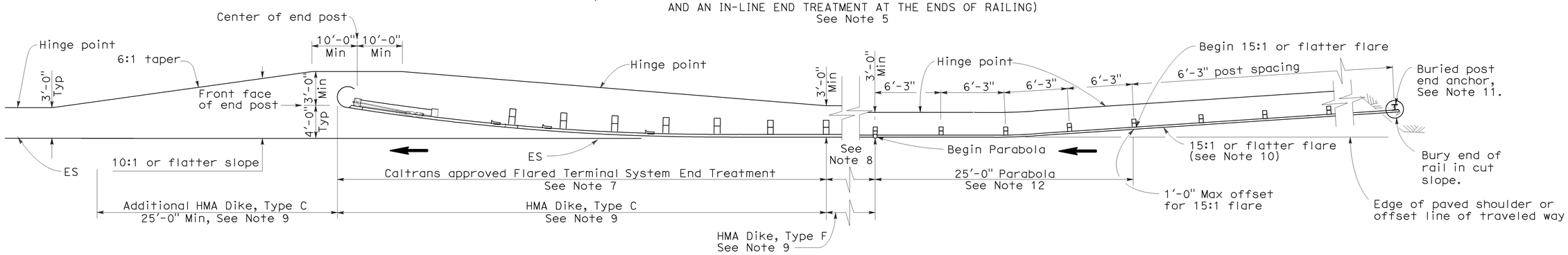

TYPE 11L LAYOUT

(EMBANKMENT GUARD RAILING INSTALLATION WITH A BURIED END ANCHOR TREATMENT AND A FLARED END TREATMENT AT THE ENDS OF RAILING)
See Note 5

NOTES:

1. Line post, blocks and hardware to be used are shown on Standard Plans A77A1, A77A2, A77B1, A77C1 and A77C2.
2. Guard rail post spacing to be 6'-3" center to center, except as otherwise noted.
3. Except as noted, line posts are 6" x 8" x 6'-0" wood with 6" x 8" x 1'-2" wood blocks. W6 x 9 steel posts, 6'-0" in length, with 6" x 8" x 1'-2" notched wood blocks or plastic blocks may be used for 6" x 8" x 6'-0" wood post with 6" x 8" x 1'-2" wood blocks where applicable and when specified.
4. Direction of adjacent traffic indicated by ⟶.
5. Layout Types 11D through 11L, shown on the A77E Series of Revised Standard Plans, are typically used where guard railing is recommended to shield embamkment slopes and a crashworthy end treatment is required for both directions of traffic.
6. In-line Terminal System End Treatments are used where site conditions will not accommodate a flared end treatment.
7. The type of terminal system end treatment to be used will be shown on the Project Plans.
8. Dependent on site conditions (embankment height and side slope), construction of additional guard railing (length equal to multiples of 12'-6" with 6'-3" post spacing) may be advisable.
9. Where placement of dike is required with guard railing installations, see Revised Standard Plan RSP A77C4 for dike positioning details.
10. The 15:1 or flatter flare used with buried end anchors is based on the edge of the paved shoulder or offset line of edge of the traveled way. The length of guard railing within the 15:1 or flatter flare is based on site conditions and should be a length equal to multiples of 12'-6".
11. For details of the buried post end anchor used with Type 11K and 11L Layouts, see Standard Plan A77I2.
12. For typical flare offsets for 25'-0" length parabola with maximum offset of 1'-0", see Revised Standard Plan RSP A77E1.

STATE OF CALIFORNIA
DEPARTMENT OF TRANSPORTATION

METAL BEAM GUARD RAILING TYPICAL LAYOUTS FOR EMBANKMENTS

NO SCALE

RSP A77E6 DATED JUNE 6, 2008 SUPERSEDES STANDARD PLAN A77E6 DATED MAY 1, 2006 - PAGE 53 OF THE STANDARD PLANS BOOK DATED MAY 2006.

REVISED STANDARD PLAN RSP A77E6

2006 REVISED STANDARD PLAN RSP A77E6

12-10-07

DIST	COUNTY	ROUTE	POST MILES TOTAL PROJECT	SHEET NO.	TOTAL SHEETS
01	DN	101	15.4/20.5	14	18

Randell D. Hiatt
REGISTERED CIVIL ENGINEER

June 6, 2008
PLANS APPROVAL DATE

REGISTERED PROFESSIONAL ENGINEER Randell D. Hiatt No. C50200 Exp. 6-30-09 CIVIL STATE OF CALIFORNIA

The State of California or its officers or agents shall not be responsible for the accuracy or completeness of electronic copies of this plan sheet.

To accompany plans dated August 29, 2011

2006 REVISED STANDARD PLAN RSP A77G8

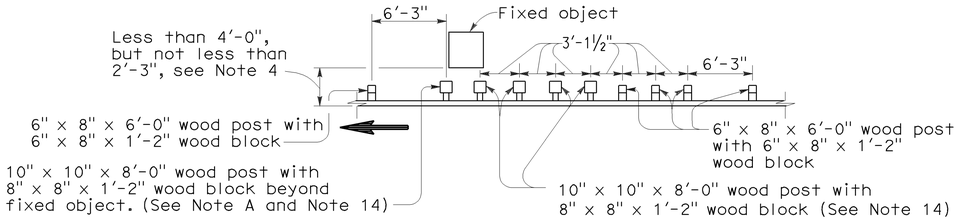

Note A. For a series of fixed objects (bridge columns, overhead sign supports, etc.) additional 10" x 10" x 8'-0" wood post with 8" x 8" x 1'-2" wood blocks at 3'-1½" center to center spacing are to be used between fixed object(s).

STRENGTHENED RAILING SECTIONS FOR FIXED OBJECT

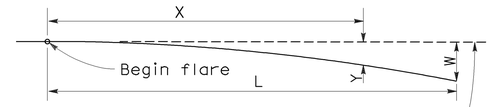

Base Line (Edge of paved shoulder or offset line of edge of traveled way)

$$Y = \frac{WX^2}{L^2}$$

Y = Offset from base line
W = Maximum offset
X = Distance along base line
L = Length of flare

PARABOLIC FLARE OFFSETS

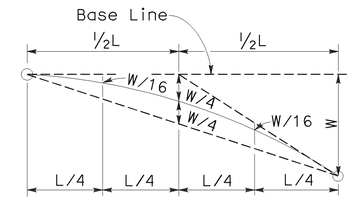

TYPICAL PARABOLIC LAYOUT

Use strengthened railing sections with Layout Types 16K or 16L Layouts where minimum clearance between the face of the guard railing and fixed object(s) is less than 4'-0", but not less than 2'-3". See Note 4.

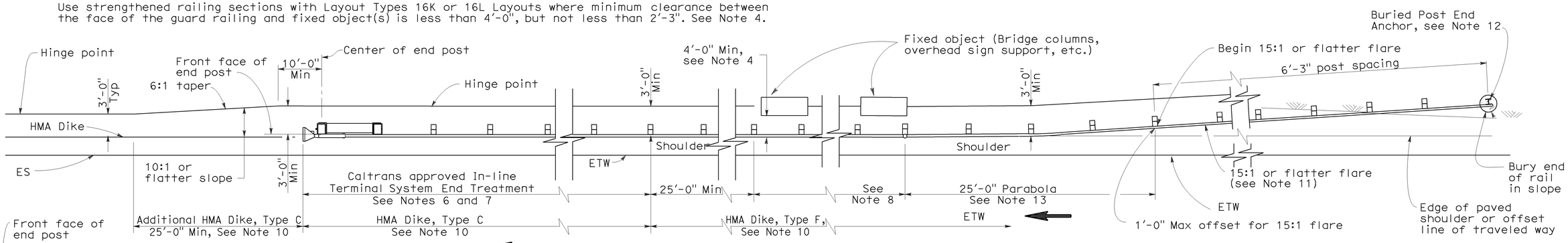

TYPE 16K LAYOUT

(GUARD RAILING INSTALLATION AT ROADSIDE FIXED OBJECT OR OBJECTS WITH A BURIED END ANCHOR TREATMENT AND AN IN-LINE END TREATMENT AT THE ENDS OF RAILING)
See Note 9

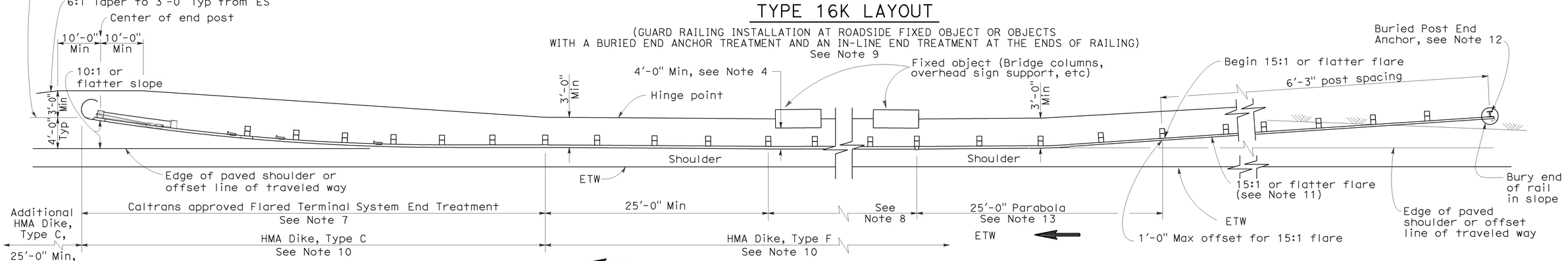

TYPE 16L LAYOUT

(GUARD RAILING INSTALLATION AT ROADSIDE FIXED OBJECT OR OBJECTS WITH A BURIED END ANCHOR TREATMENT AND A FLARED END TREATMENT AT THE ENDS OF RAILING)
See Note 9

NOTES:

1. Line post, blocks and hardware to be used are shown on Standard Plans A77A1, A77A2, A77B1, A77C1 and A77C2.
2. Guard railing post spacing to be 6'-3" center to center, except as otherwise noted.
3. Except as noted, line posts are 6" x 8" x 6'-0" wood with 6" x 8" x 1'-2" wood blocks. W6 x 9 steel posts, 6'-0" in length, with 6" x 8" x 1'-2" notched wood blocks or notched recycled plastic blocks may be used for 6" x 8" x 6'-0" wood posts with 6" x 8" x 1'-2" wood blocks where applicable and when specified.
4. A 4'-0" minimum clearance is required between the face of the railing and the face of a fixed object located directly behind standard guard railing sections with post spacing at 6'-3". Construct guard railing as shown in the detail "Strengthened Railing Sections for Fixed Objects" on this plan, where the clearance between the face of the railing and the face of a fixed object is less than 4'-0", but not less than 2'-3". Where the clearance is less than 2'-3", a concrete wall or barrier should be constructed to shield the fixed object(s).
5. Direction of adjacent traffic indicated by ⟶.
6. In-line Terminal System End Treatments are used where site conditions will not accommodate a flared end treatment.
7. The type of terminal system to be used will be shown on the Project Plans.
8. As site conditions dictate, construct additional guard railing to shield fixed object(s). Additional guard railing length equal to multiples of 12'-6". Post spacing at 6'-3", except as specified in Note 4.
9. Layout Types 16D through 16L, shown on the A77G Series of Revised Standard Plans are typically used where guard railing is recommended to shield roadside fixed object(s) and a crashworthy end treatment is required for both directions of traffic.
10. Where placement of dike is required with guard railing, see Revised Standard Plan RSP A77C4 for dike positioning details.
11. The 15:1 or flatter flare for the buried post anchor is based on the edge of the paved shoulder or offset line of edge of the traveled way. The length of guard railing within the 15:1 or flatter flare is based on site conditions and should be a length equal to multiples of 12'-6".
12. For details of Buried Post End Anchor details, see Standard Plan A77I2.
13. For typical flare offsets for 25'-0" length parabola with maximum offset of 1'-0", see Revised Standard RSP Plan A77E1.
14. W6 x 15 steel post, 8'-0" in length, with 8" x 8" x 1'-2" notched wood block or notched recycled plastic blocks may be used in place of the 10" x 10" x 8'-0" wood post with 8" x 8" x 1'-2" wood block shown in the "Strengthened Railing Sections Detail".

STATE OF CALIFORNIA
DEPARTMENT OF TRANSPORTATION

METAL BEAM GUARD RAILING TYPICAL LAYOUTS FOR ROADSIDE FIXED OBJECTS

NO SCALE

RSP A77G8 DATED JUNE 6, 2008 SUPERSEDES STANDARD PLAN A77G8 DATED MAY 1, 2006 - PAGE 66 OF THE STANDARD PLANS BOOK DATED MAY 2006.

REVISED STANDARD PLAN RSP A77G8

12-10-07

DIST	COUNTY	ROUTE	POST MILES TOTAL PROJECT	SHEET NO.	TOTAL SHEETS
01	DN	101	15.4/20.5	15	18

Randell D. Hiatt
REGISTERED CIVIL ENGINEER

June 6, 2008
PLANS APPROVAL DATE

REGISTERED PROFESSIONAL ENGINEER
Randell D. Hiatt
No. C50200
Exp. 6-30-09
CIVIL
STATE OF CALIFORNIA

The State of California or its officers or agents shall not be responsible for the accuracy or completeness of electronic copies of this plan sheet.

To accompany plans dated August 29, 2011

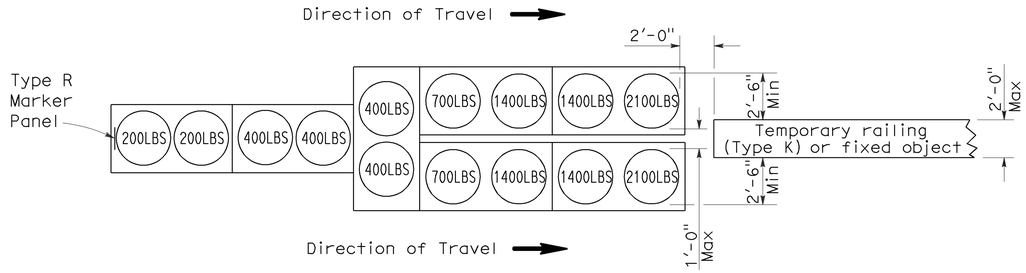

ARRAY 'TU14'

Approach speed 45 mph or more

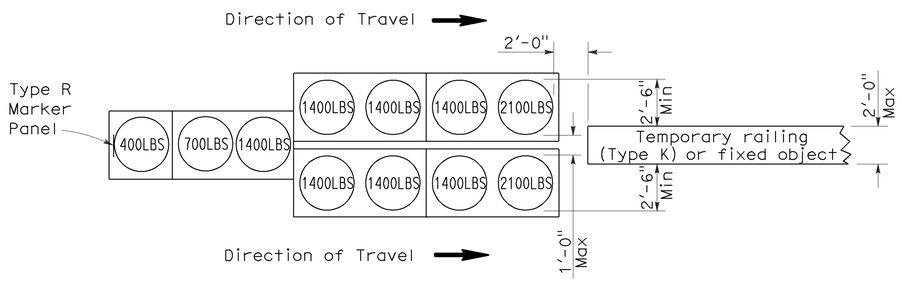

ARRAY 'TU11'

Approach speed less than 45 mph

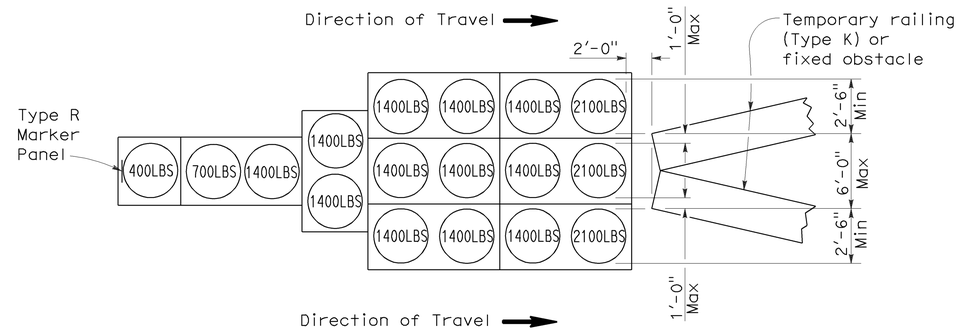

ARRAY 'TU17'

Approach speed less than 45 mph

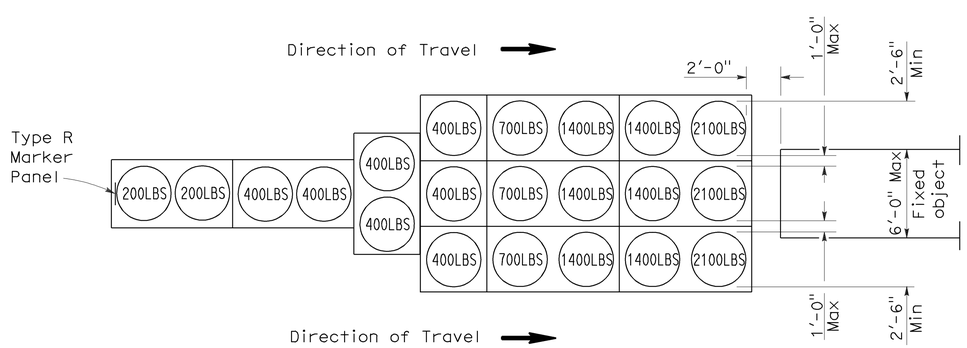

ARRAY 'TU21'

Approach speed 45 mph or more

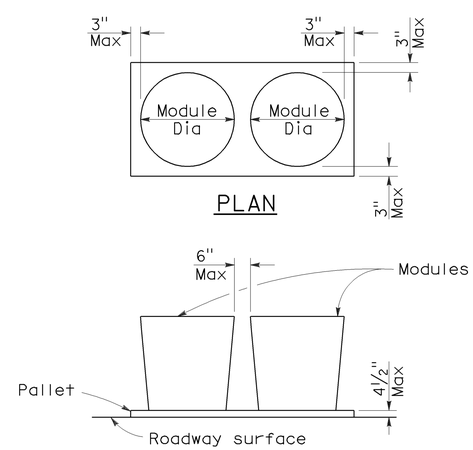

PLAN

ELEVATION

CRASH CUSHION PALLET DETAIL

See Note 7

NOTES:

1. (XXX) Indicates sand filled module location and weight of sand in pounds for each module. Module spacing is based on the greater diameter of the module.
2. All sand weights are nominal.
3. Temporary crash cushion arrays shall not encroach on the traveled way.
4. Place the top of Type R marker panel 1" below the module lid.
5. Refer to Standard Plan A73B for marker details.
6. Approach speeds indicated conform to NCHRP 350 Report criteria.
7. Use of pallets is optional.

STATE OF CALIFORNIA
DEPARTMENT OF TRANSPORTATION

TEMPORARY CRASH CUSHION, SAND FILLED (UNIDIRECTIONAL)

NO SCALE

RSP T1A DATED JUNE 6, 2008 SUPERSEDES STANDARD PLAN T1A
DATED MAY 1, 2006 - PAGE 211 OF THE STANDARD PLANS BOOK DATED MAY 2006.

REVISED STANDARD PLAN RSP T1A

2006 REVISED STANDARD PLAN RSP T1A

DIST	COUNTY	ROUTE	POST MILES TOTAL PROJECT	SHEET NO.	TOTAL SHEETS
01	DN	101	15.4/20.5	16	18

Randell D. Hiatt
REGISTERED CIVIL ENGINEER

June 6, 2008
PLANS APPROVAL DATE

REGISTERED PROFESSIONAL ENGINEER
Randell D. Hiatt
No. C50200
Exp. 6-30-09
CIVIL
STATE OF CALIFORNIA

The State of California or its officers or agents shall not be responsible for the accuracy or completeness of electronic copies of this plan sheet.

To accompany plans dated August 29, 2011

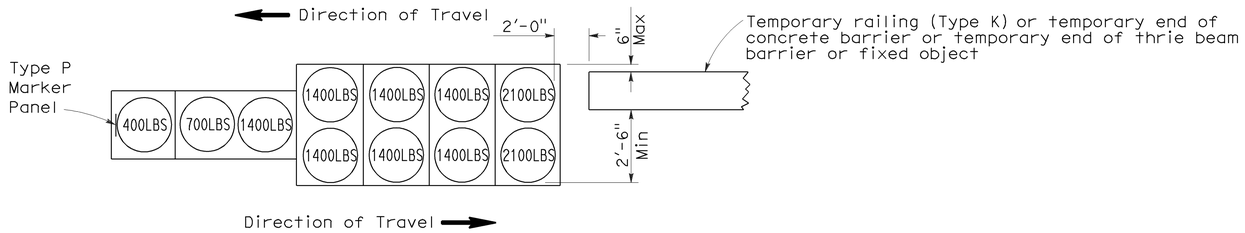

ARRAY 'TB11'

Approach speed less than 45 mph

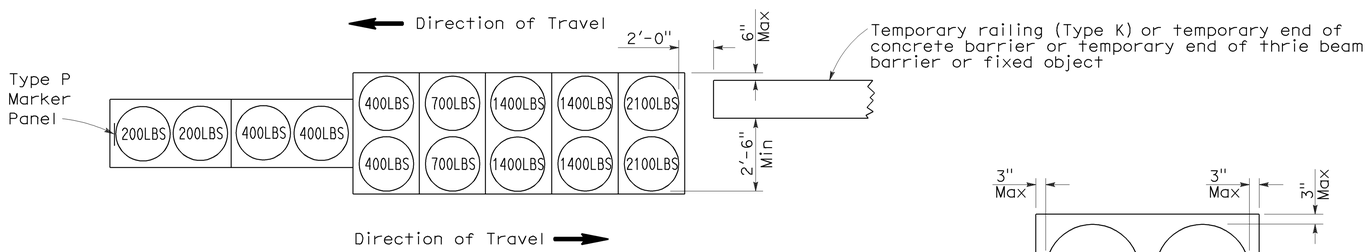

ARRAY 'TB14'

Approach speed 45 mph or more

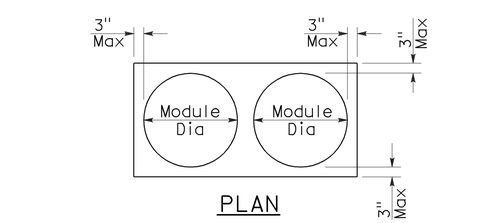

PLAN

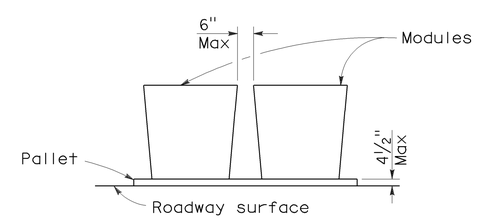

ELEVATION

CRASH CUSHION PALLET DETAIL

See Note 7

NOTES:

1. (XXX) Indicates sand filled module location and weight of sand in pounds for each module. Module spacing is based on the greater diameter of the module.
2. All sand weights are nominal.
3. Temporary crash cushion arrays shall not encroach on the traveled way.
4. Place the Type P marker panel so that the bottom of the panel rests upon the pallet.
5. Refer to Standard Plan A73B for marker details.
6. Approach speeds indicated conform to NCHRP 350 Report criteria.
7. Use of pallets is optional.

STATE OF CALIFORNIA
DEPARTMENT OF TRANSPORTATION

TEMPORARY CRASH CUSHION, SAND FILLED (BIDIRECTIONAL)

NO SCALE

RSP T1B DATED JUNE 6, 2008 SUPERSEDES STANDARD PLAN T1B
DATED MAY 1, 2006 - PAGE 212 OF THE STANDARD PLANS BOOK DATED MAY 2006.

REVISED STANDARD PLAN RSP T1B

2006 REVISED STANDARD PLAN RSP T1B

5-15-08

DIST	COUNTY	ROUTE	POST MILES TOTAL PROJECT	SHEET NO.	TOTAL SHEETS
01	DN	101	15.4/20.5	17	18

Randell D. Hiatt
REGISTERED CIVIL ENGINEER

June 6, 2008
PLANS APPROVAL DATE

REGISTERED PROFESSIONAL ENGINEER
Randell D. Hiatt
No. C50200
Exp. 6-30-09
CIVIL
STATE OF CALIFORNIA

The State of California or its officers or agents shall not be responsible for the accuracy or completeness of electronic copies of this plan sheet.

To accompany plans dated August 29, 2011

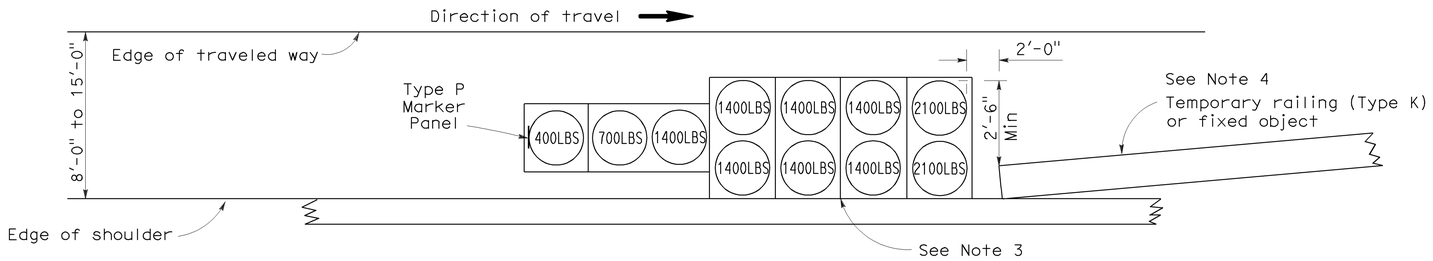

ARRAY 'TS11'

Approach speed less than 45 mph
See Note 9

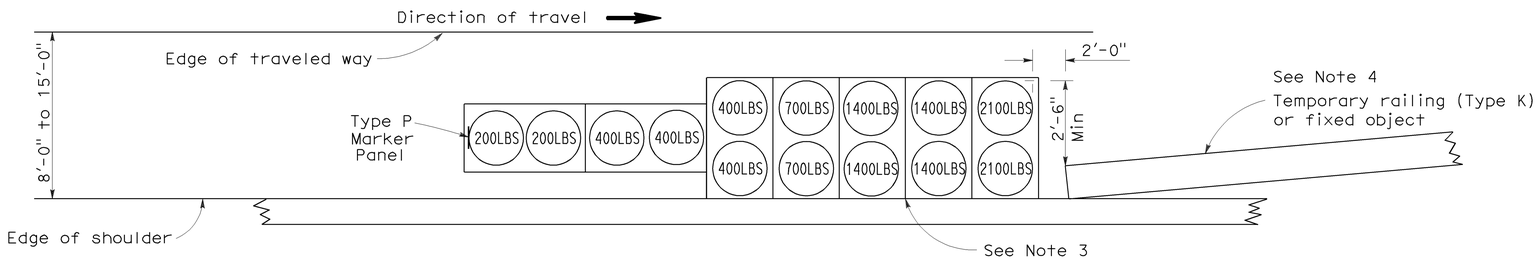

ARRAY 'TS14'

Approach speed 45 mph or more
See Note 9

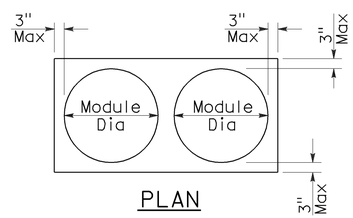

PLAN

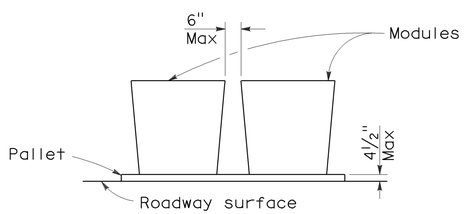

ELEVATION

CRASH CUSHION PALLET DETAIL

See Note 11

NOTES:

1. (XXX) Indicates sand filled module location and weight of sand in pounds for each module. Module spacing is based on the greater diameter of the module.
2. All sand weights are nominal.
3. The temporary crash cushion arrays shown on this plan shall be used only in locations where there will be traffic on one side of the temporary crash cushion array.
4. If the fixed object or approach end of the temporary railing is less than 15'-0" from the edge of traveled way, a temporary crash cushion is required in a construction or work zone.
5. Temporary crash cushion arrays shall not encroach on the traveled way.
6. Arrays for median shoulders shall conform to details shown on this plan for outside shoulders.
7. Place the Type P marker panel so that the bottom of the panel rests upon the pallet and faces traffic.
8. Refer to Standard Plan A73B for marker details.
9. For shoulder widths less than 8'-0", appropriate approved crash cushion protection, other than sand filled modules, shall be provided at fixed objects and at approach ends of temporary railing. The specific type of crash cushion shall be as shown on the project plans or as specified in the Special Provisions, or if not shown on the project plans or specified in the Special Provisions, shall be as approved by the Engineer.
10. Approach speeds indicated conform to NCHRP 350 Report criteria.
11. Use of pallets is optional.

STATE OF CALIFORNIA
DEPARTMENT OF TRANSPORTATION

TEMPORARY CRASH CUSHION, SAND FILLED (SHOULDER INSTALLATIONS)

NO SCALE

RSP T2 DATED JUNE 6, 2008 SUPERSEDES STANDARD PLAN T2
DATED MAY 1, 2006 - PAGE 213 OF THE STANDARD PLANS BOOK DATED MAY 2006.

REVISED STANDARD PLAN RSP T2

2006 REVISED STANDARD PLAN RSP T2

5-15-08

Dist	COUNTY	ROUTE	POST MILES TOTAL PROJECT	SHEET No.	TOTAL SHEETS
01	DN	101	15.4/20.5	18	18

Randell D. Hiatt
REGISTERED CIVIL ENGINEER

May 20, 2011
PLANS APPROVAL DATE

REGISTERED PROFESSIONAL ENGINEER
Randell D. Hiatt
No. C50200
Exp. 6-30-11
CIVIL
STATE OF CALIFORNIA

The State of California or its officers or agents shall not be responsible for the accuracy or completeness of electronic copies of this plan sheet.

To accompany plans dated August 29, 2011

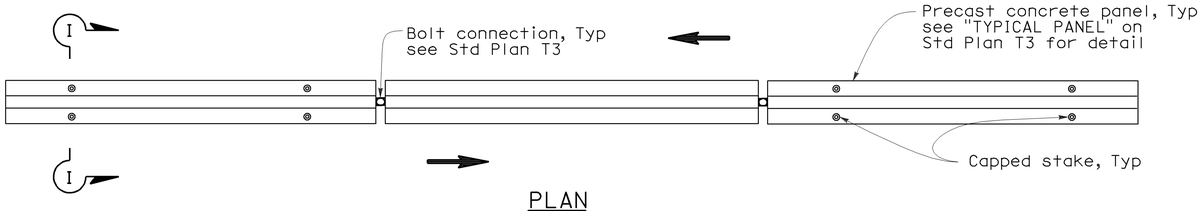

PLAN

RAILING STAKING CONFIGURATION FOR TWO-WAY TRAFFIC

See Note 1

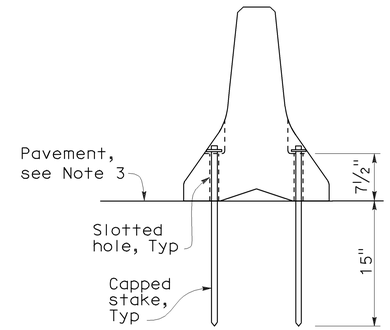

SECTION I-I

NOTES:

1. Where Type K Temporary Railing is placed as a temporary or long term barrier in two-way traffic on highways with less than 24" from the edge of traveled way, use four capped stakes per every other panel with end panels staked.
2. Where Type K Temporary Railing is placed 3" to 24" from the edge of an excavation on highways, use two capped stakes per panel along the traffic side.
3. Staked Type K Temporary Railing must be supported by at least 4" thick concrete, hot mix asphalt or existing asphalt concrete pavement.
4. The minimum yield strength for the washer must be 60,000 psi.
5. Direction of adjacent traffic indicated by ⟹.

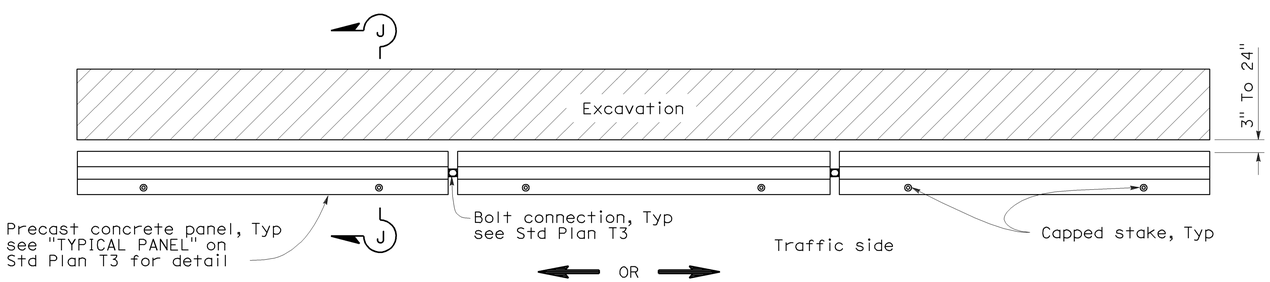

PLAN

RAILING STAKING CONFIGURATION ADJACENT TO AN EXCAVATION

See Note 2

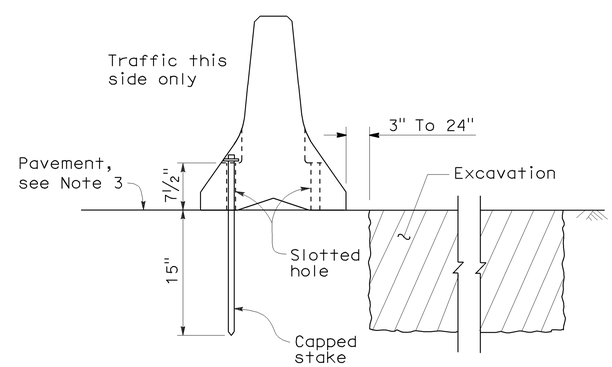

SECTION J-J

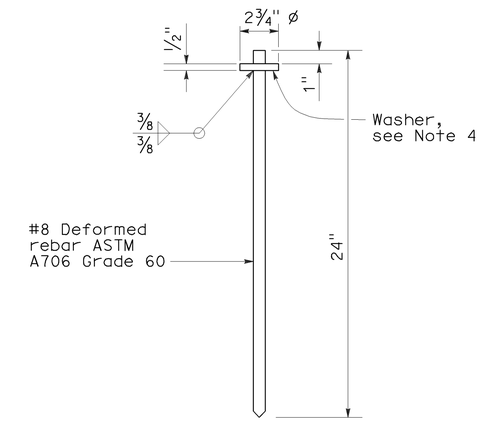

CAPPED STAKE DETAIL

STATE OF CALIFORNIA
DEPARTMENT OF TRANSPORTATION

TEMPORARY RAILING (TYPE K)

NO SCALE

NSP T3A DATED MAY 20, 2011 SUPPLEMENTS
THE STANDARD PLANS BOOK DATED MAY 2006.

NEW STANDARD PLAN NSP T3A

2006 NEW STANDARD PLAN NSP T3A