Dist	COUNTY	LOCATION CODE	POST MILES TOTAL PROJECT	SHEET No.	TOTAL SHEETS
01	Hum	5711		1	16

INDEX OF PLANS

SHEET No.	DESCRIPTION
1	TITLE AND LOCATION MAP
2-3	LAYOUTS
4-5	CONSTRUCTION DETAILS
6-7	UTILITY PLANS
8	SUMMARY OF QUANTITIES
9-16	REVISED STANDARD PLANS

THE STANDARD PLANS LIST APPLICABLE TO THIS CONTRACT IS INCLUDED IN THE NOTICE TO BIDDERS AND SPECIAL PROVISIONS BOOK.

STATE OF CALIFORNIA

DEPARTMENT OF TRANSPORTATION

PROJECT PLANS FOR CONSTRUCTION

IN HUMBOLDT COUNTY
IN FORTUNA
AT THE FORTUNA MAINTENANCE STATION
AT 1924 SMITH LANE

TO BE SUPPLEMENTED BY STANDARD PLANS DATED 2010

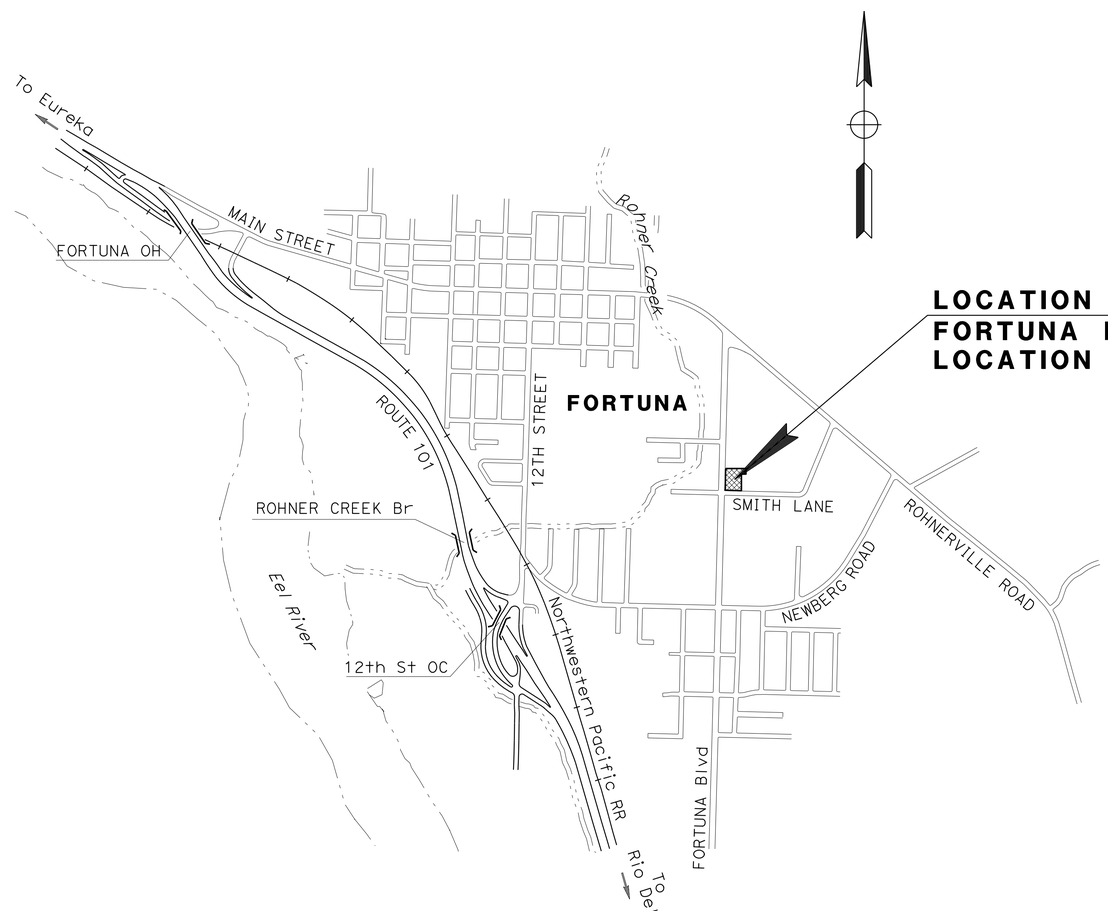

LOCATION OF CONSTRUCTION
FORTUNA MAINTENANCE STATION
LOCATION CODE No. 5711

NO SCALE

THE CONTRACTOR SHALL POSSESS THE CLASS (OR CLASSES) OF LICENSE AS SPECIFIED IN THE "NOTICE TO BIDDERS."

PROJECT MANAGER: RICHARD MULLEN

DESIGN ENGINEER: MASTRI ALVANDI

1-21-14
PROJECT ENGINEER REGISTERED CIVIL ENGINEER — DATE

REGISTERED PROFESSIONAL ENGINEER
KIDIANGA TSHIUNZA
No. 67572
Exp. 06-30-15
CIVIL
STATE OF CALIFORNIA

January 21, 2014
PLANS APPROVAL DATE

THE STATE OF CALIFORNIA OR ITS OFFICERS OR AGENTS SHALL NOT BE RESPONSIBLE FOR THE ACCURACY OR COMPLETENESS OF SCANNED COPIES OF THIS PLAN SHEET.

CONTRACT No.	01-496504
PROJECT ID	0100000680

LAST REVISION 04-19-11

DATE PLOTTED => 23-APR-2014
TIME PLOTTED => 11:31

Dist	COUNTY	LOCATION CODE	POST MILES TOTAL PROJECT	SHEET No.	TOTAL SHEETS
01	Hum	5711		2	16

REGISTERED CIVIL ENGINEER 1-21-14 DATE

1-21-14
PLANS APPROVAL DATE

REGISTERED PROFESSIONAL ENGINEER KIDIANGA TSHIUNZA No. C 67572 Exp. 6-30-15 CIVIL STATE OF CALIFORNIA

THE STATE OF CALIFORNIA OR ITS OFFICERS OR AGENTS SHALL NOT BE RESPONSIBLE FOR THE ACCURACY OR COMPLETENESS OF SCANNED COPIES OF THIS PLAN SHEET.

NOTES:

1. EXCAVATION LIMITS TO BE MARKED IN THE FIELD BY THE ENGINEER.
2. CONTRACTOR TO EXCAVATE APPROXIMATELY 5 FEET INSIDE LIMITS OF PREVIOUS EXCAVATION (SEE SHEET C-1)
3. FOR SECTION VIEWS SEE SHEET C-1.
4. EXISTING MONITORING WELLS (MW-6, PW-1, MW-10, DW-1, MW-17S/MW-17D, AND MW-18S/MW-18D) ARE NOT TO BE EXCAVATED UNLESS DIRECTED BY THE ENGINEER AND DESTROYED UNDER COUNTY PERMIT.
5. OFFICE BUILDING IS TO BE KEPT OPERATIONAL DURING CONSTRUCTION.
6. FOR ACCURATE RIGHT OF WAY DATA, CONTACT RIGHT OF WAY ENGINEERING A DISTRICT OFFICE.

LEGEND:

- WORK AREA - LOCATION 1 (STRUCTURE EXCAVATION, IMPORTED BORROW, 1' CLASS 2 AB, 0.35' HMA (TYPE A), 0.20' HMA (TYPE A))
- WORK AREA - LOCATION 2 (STRUCTURE EXCAVATION, IMPORTED BORROW, REPLANT GRASS)
- REMOVE ASPHALT CONCRETE SURFACING
- PRIOR EXCAVATION LIMITS (VISIBLE ON EXISTING ASPHALT)
- EXCAVATION LIMITS

ABBREVIATION:

MW	MONITORING WELL
DW	DEEP WELL
PW	PUMP WELL
S	SHALLOW
D	DEEP

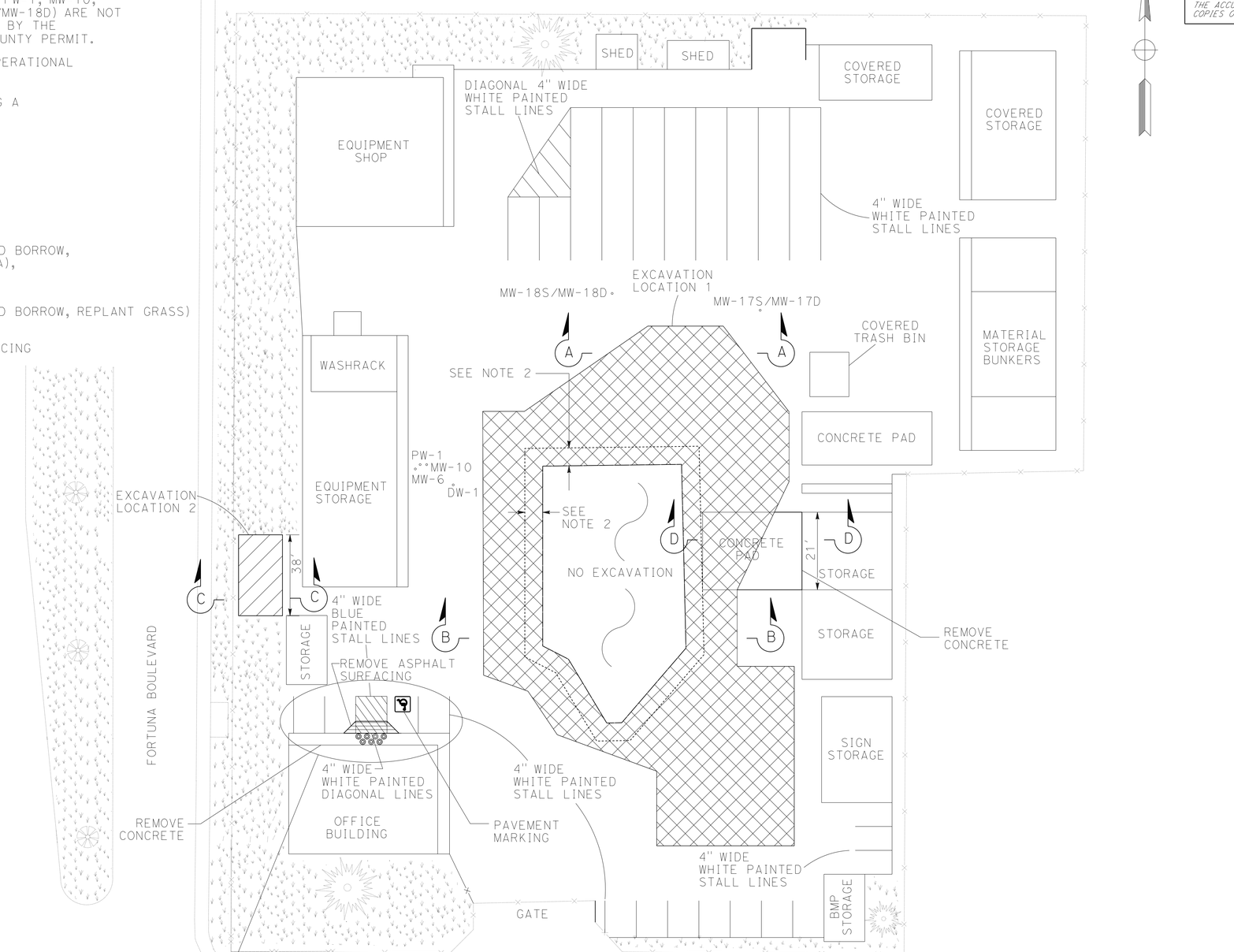

LAYOUT
NO SCALE

L-1

REVISED BY | DATE REVISED
KIDIANGA TSHIUNZA | ARRON RAMBACH
CALCULATED-DESIGNED BY | CHECKED BY
FUNCTIONAL SUPERVISOR | MASTRI ALVANDI

STATE OF CALIFORNIA - DEPARTMENT OF TRANSPORTATION
Caltrans
03-DESIGN

LAST REVISION 00-00-00 | DATE PLOTTED => 08-MAY-2014 | TIME PLOTTED => 12:27

Dist	COUNTY	LOCATION CODE	POST MILES TOTAL PROJECT	SHEET No.	TOTAL SHEETS
01	Hum	5711		3	16

REGISTERED CIVIL ENGINEER 1-21-14 DATE

1-21-14
PLANS APPROVAL DATE

REGISTERED PROFESSIONAL ENGINEER
KIDIANGA TSHIUNZA
No. C 67572
Exp. 6-30-15
CIVIL
STATE OF CALIFORNIA

THE STATE OF CALIFORNIA OR ITS OFFICERS OR AGENTS SHALL NOT BE RESPONSIBLE FOR THE ACCURACY OR COMPLETENESS OF SCANNED COPIES OF THIS PLAN SHEET.

LEGEND:

APPROXIMATE LIMITS
0.20' HMA (TYPE A) OVERLAY

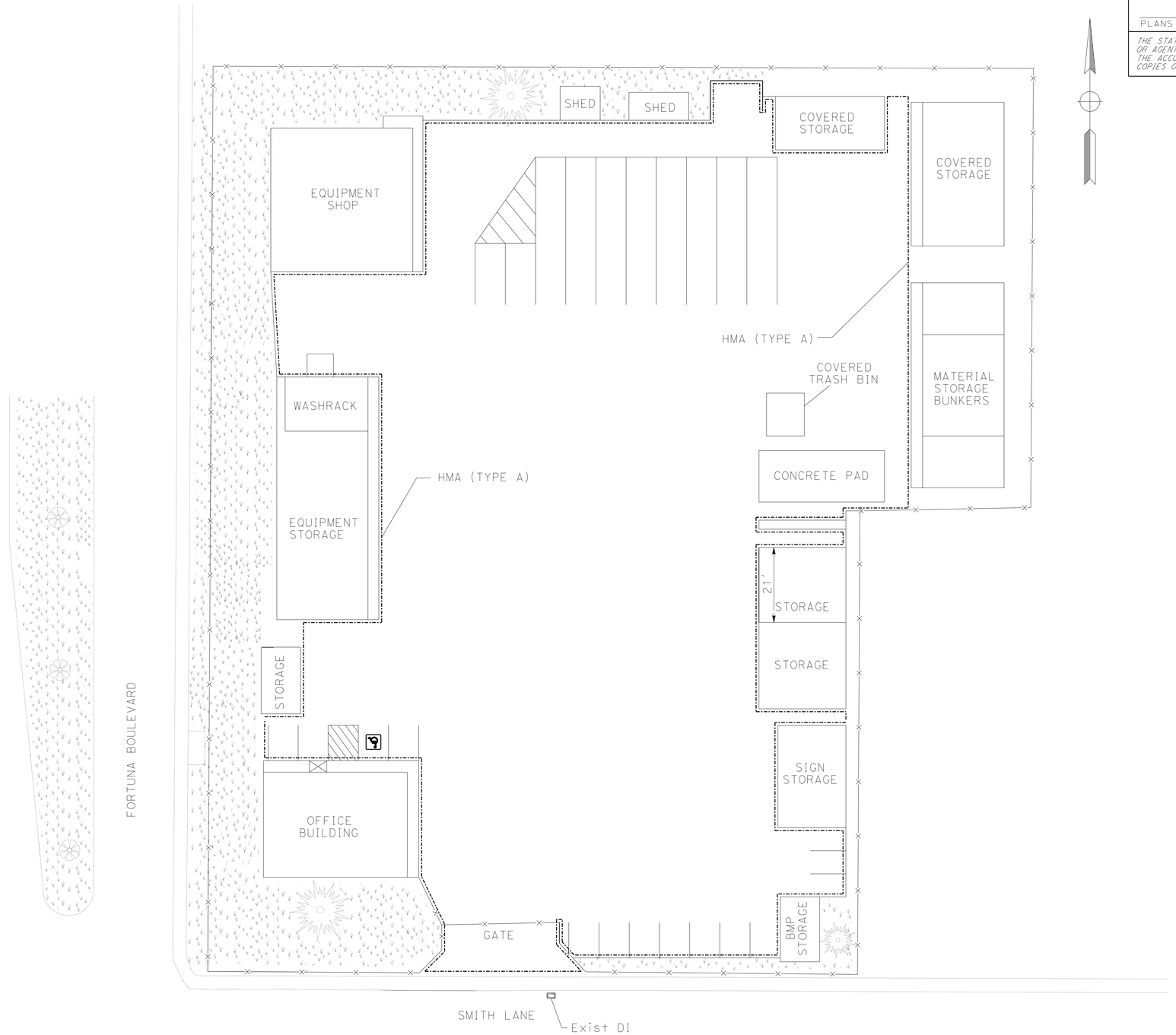

LAYOUT
NO SCALE

L-2

REVISED BY	DATE REVISED
KIDIANGA TSHIUNZA	ARRON RAMBACH

CALCULATED-DESIGNED BY	CHECKED BY

FUNCTIONAL SUPERVISOR
MASTRI ALVANDI

STATE OF CALIFORNIA - DEPARTMENT OF TRANSPORTATION
Caltrans®
03-DESIGN

LAST REVISION	DATE PLOTTED => 08-MAY-2014
00-00-00	TIME PLOTTED => 12:27

Dist	COUNTY	LOCATION CODE	POST MILES TOTAL PROJECT	SHEET No.	TOTAL SHEETS
01	Hum	5711		4	16

REGISTERED CIVIL ENGINEER 1-21-14 DATE

1-21-14
PLANS APPROVAL DATE

REGISTERED PROFESSIONAL ENGINEER
KIDIANGA TSHIUNZA
No. C 67572
Exp. 6-30-15
CIVIL
STATE OF CALIFORNIA

THE STATE OF CALIFORNIA OR ITS OFFICERS OR AGENTS SHALL NOT BE RESPONSIBLE FOR THE ACCURACY OR COMPLETENESS OF SCANNED COPIES OF THIS PLAN SHEET.

NOTE:

1. DIMENSIONS ARE ESTIMATES TO BE MARKED IN THE FIELD BY THE ENGINEER.

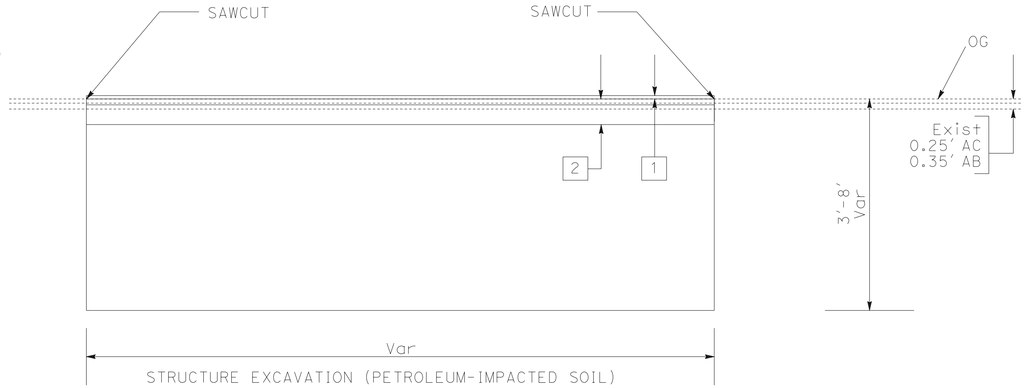

SECTION A - A

LOCATION 1

NEW STRUCTURAL SECTION

1 OVERLAY 0.20' HMA (TYPE A)

2 0.35' HMA (TYPE A)
1' CLASS 2 AB

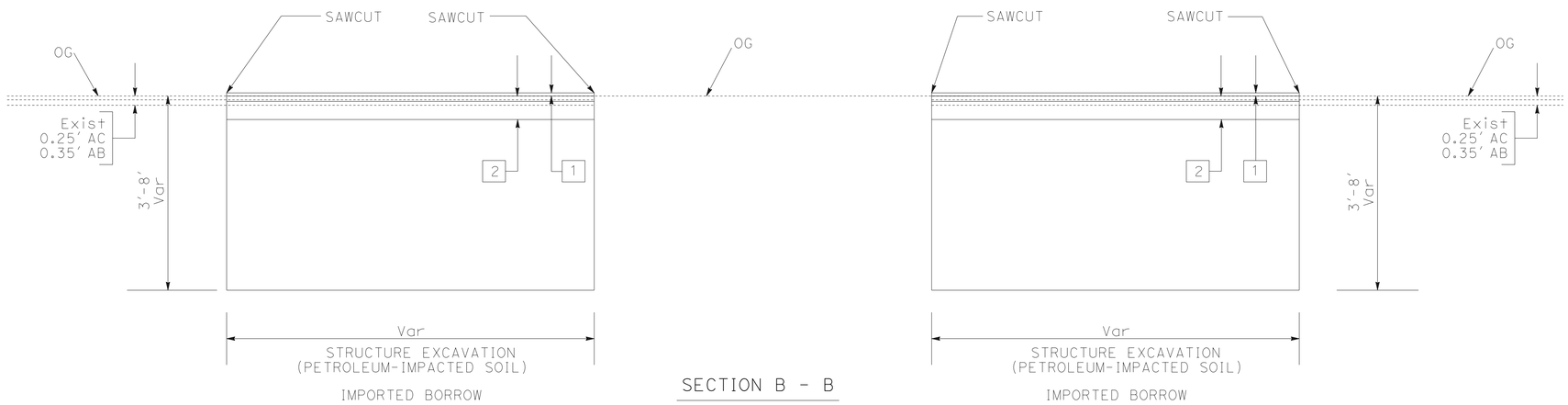

SECTION B - B

LOCATION 1

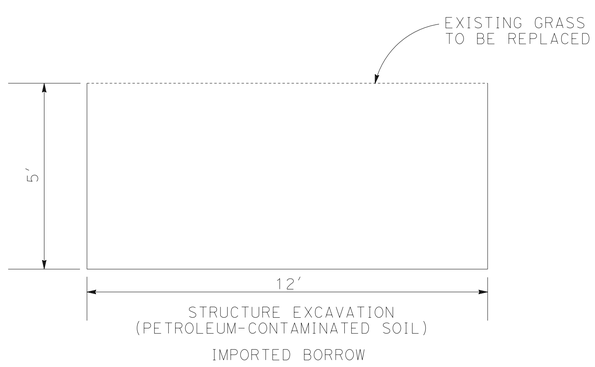

SECTION C - C

LOCATION 2

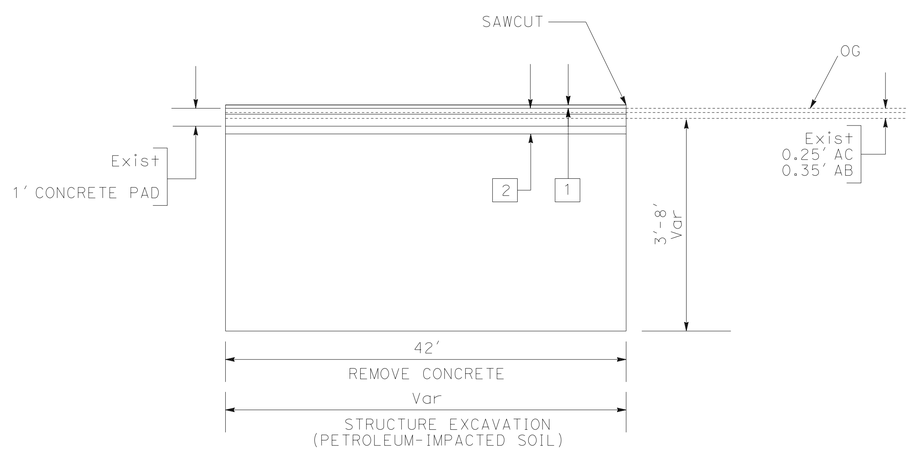

SECTION D - D

LOCATION 1

CONSTRUCTION DETAILS

NO SCALE

C-1

STATE OF CALIFORNIA - DEPARTMENT OF TRANSPORTATION
Caltrans®
03-DESIGN

FUNCTIONAL SUPERVISOR: MASTRI ALVANDI
CALCULATED-DESIGNED BY: KIDIANGA TSHIUNZA
CHECKED BY: ARRON RAMBACH
REVISED BY
DATE REVISED

LAST REVISION 00-00-00
DATE PLOTTED => 08-MAY-2014
TIME PLOTTED => 12:27

Dist	COUNTY	LOCATION CODE	POST MILES TOTAL PROJECT	SHEET No.	TOTAL SHEETS
01	Hum	5711		5	16

REGISTERED CIVIL ENGINEER 1-21-14 DATE

1-21-14
PLANS APPROVAL DATE

REGISTERED PROFESSIONAL ENGINEER KIDIANGA TSHIUNZA No. C 67572 Exp. 6-30-15 CIVIL STATE OF CALIFORNIA

THE STATE OF CALIFORNIA OR ITS OFFICERS OR AGENTS SHALL NOT BE RESPONSIBLE FOR THE ACCURACY OR COMPLETENESS OF SCANNED COPIES OF THIS PLAN SHEET.

NOTES:

1. A R100B (CA) SIGN SHALL BE POSTED IN A CONSPICUOUS PLACE AT EACH ENTRANCE TO OFF-STREET PARKING FACILITIES OR IMMEDIATELY ADJACENT TO AND VISIBLE FROM EACH STALL. THE SIGN SHALL INCLUDE THE ADDRESS WHERE THE TOWED VEHICLE MAY BE RECLAIMED AND THE TELEPHONE NUMBER OF THE LOCAL TRAFFIC LAW ENFORCEMENT AGENCY.
2. TRANSITIONS FROM RAMPS AND LANDING TO WALKS, GUTTERS OR STREETS SHALL BE FLUSH (NO LIP) AND FREE OF ABRUPT CHANGES.

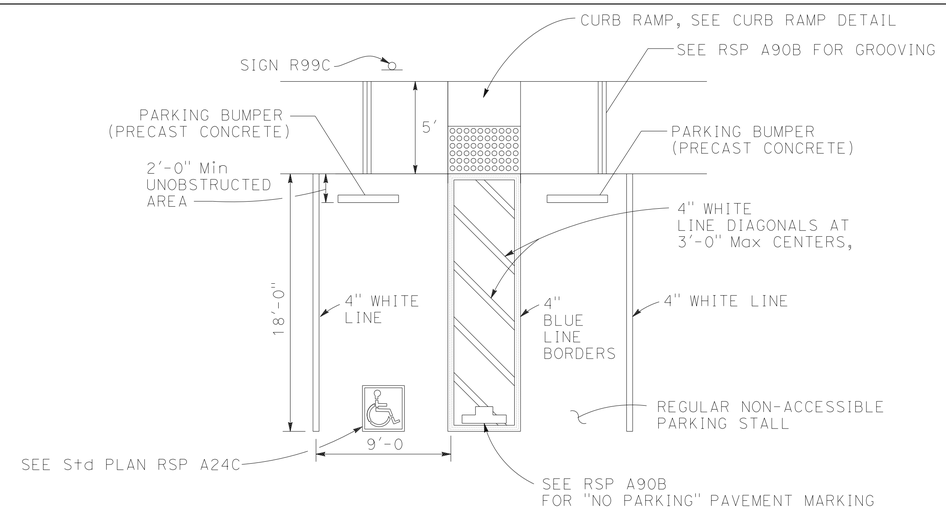

SINGLE PARKING STALL

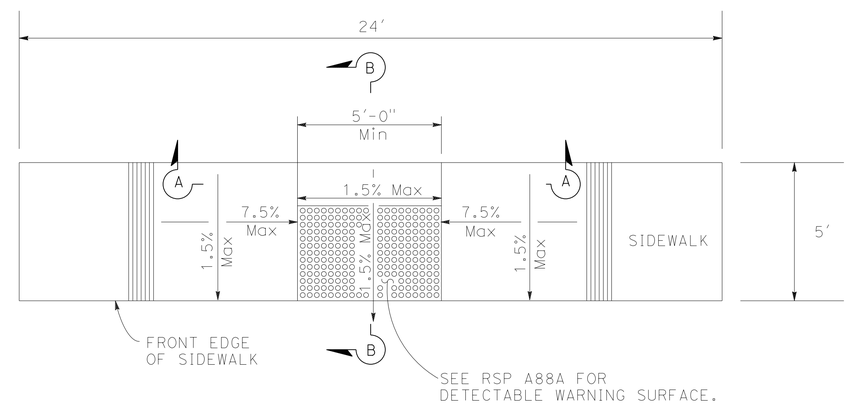

CURB RAMP

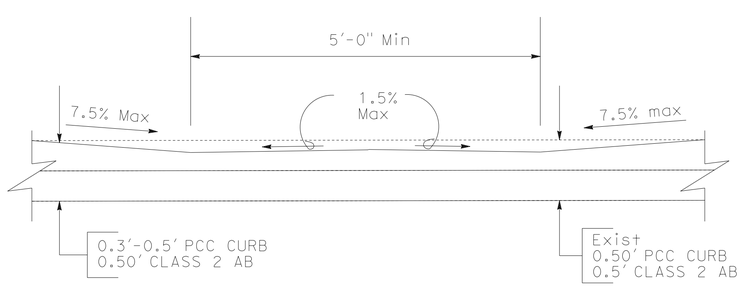

SECTION A-A

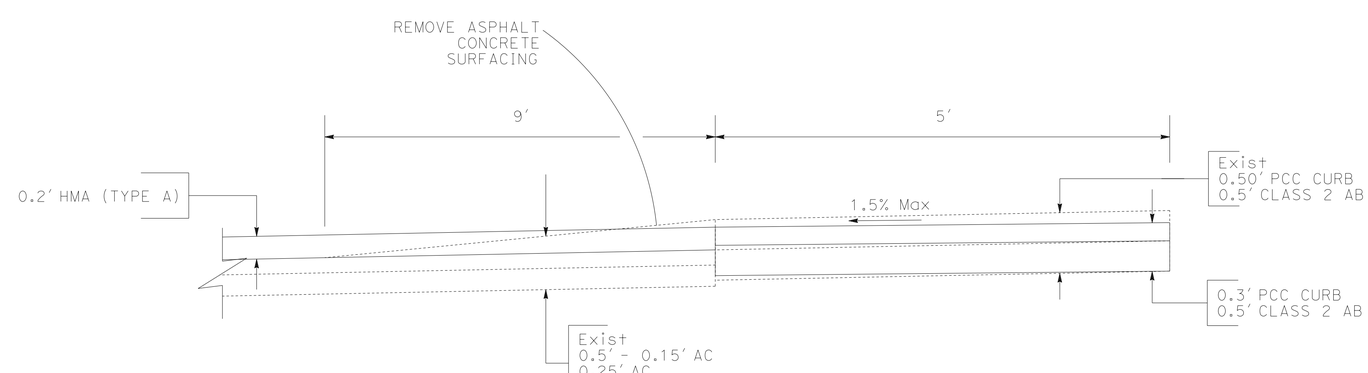

SECTION B-B

CONSTRUCTION DETAILS

NO SCALE

C-2

REVISED BY	DATE REVISED
KIDIANGA TSHIUNZA	MASTRI ALVANDI
CALCULATED-DESIGNED BY	CHECKED BY
FUNCTIONAL SUPERVISOR	MASTRI ALVANDI

STATE OF CALIFORNIA - DEPARTMENT OF TRANSPORTATION
Caltrans® 03-DESIGN

LAST REVISION 00-00-00 | DATE PLOTTED => 08-MAY-2014 | TIME PLOTTED => 12:27

Dist	COUNTY	LOCATION CODE	POST MILES TOTAL PROJECT	SHEET No.	TOTAL SHEETS
01	Hum	5711		6	18

REGISTERED CIVIL ENGINEER 1-21-14 DATE

1-21-14
PLANS APPROVAL DATE

REGISTERED PROFESSIONAL ENGINEER THIEN SLOCUM No. C77253 Exp. 06-30-15 CIVIL STATE OF CALIFORNIA

THE STATE OF CALIFORNIA OR ITS OFFICERS OR AGENTS SHALL NOT BE RESPONSIBLE FOR THE ACCURACY OR COMPLETENESS OF SCANNED COPIES OF THIS PLAN SHEET.

NOTES:

1. FOR ACCURATE RIGHT OF WAY DATA, CONTACT RIGHT OF WAY ENGINEERING AT THE DISTRICT OFFICE.
2. ELEVATIONS SHOWN REFER TO THE TOP OF PIPE OR CONDUIT, UNLESS OTHERWISE STATED.
3. UTILITY OWNERSHIP: CALTRANS
4. UTILITY SERVICE PROVIDERS:

ELECTRIC	PG&E
GAS	PG&E
SEWER	CITY FORTUNA
TELEMETER CABLE	SUDDENLINK COMMUNICATIONS
TELEPHONE	AT&T
WATER	CITY FORTUNA

ABBREVIATIONS:

KV - KILO VOLT

LEGEND:

UTILITY POLE
LIGHT POLE

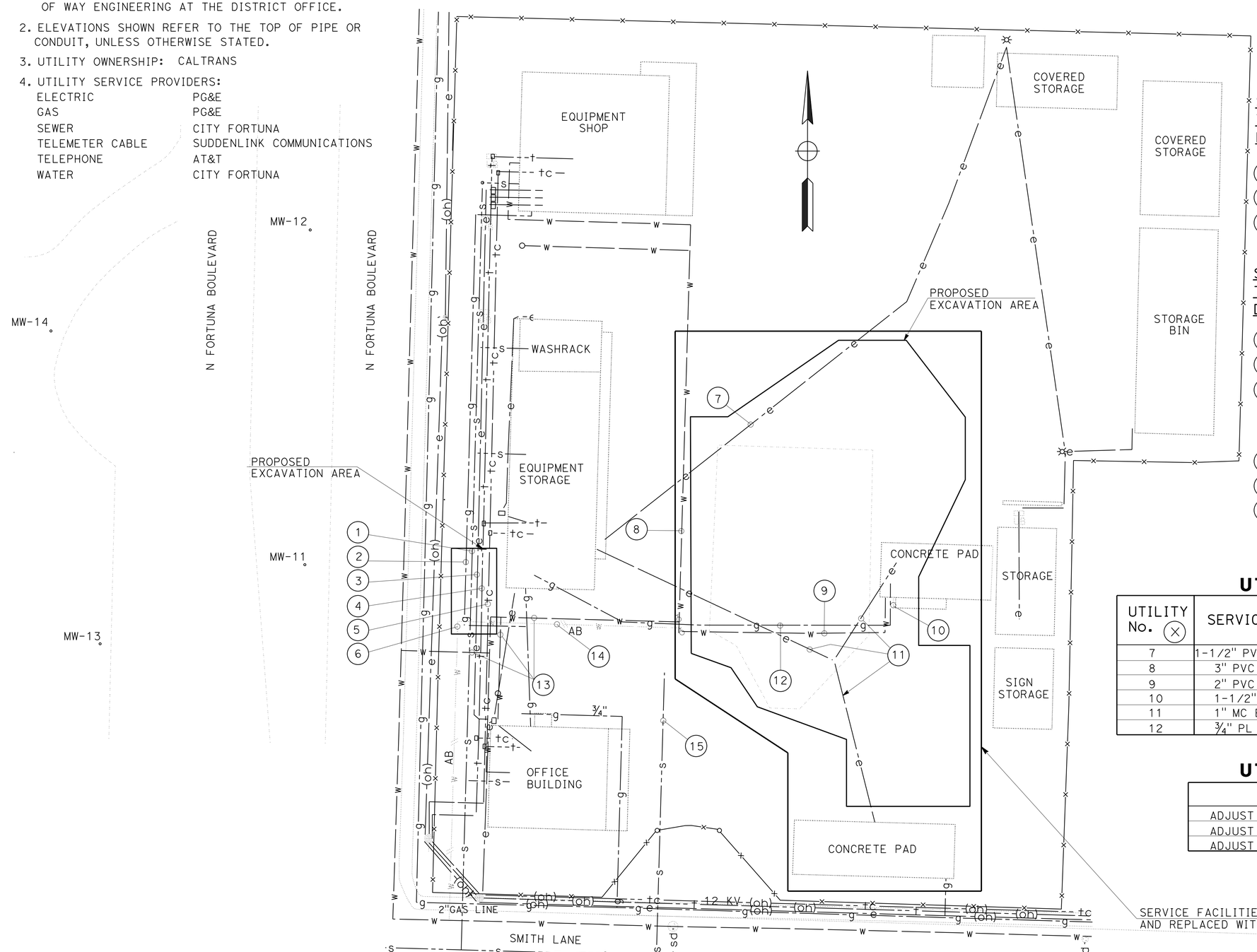

SERVICE FACILITIES IN CONFLICT TO BE PROTECTED BY CONTRACTOR DURING CONSTRUCTION:

1. 6" VIT CLAY SEWER
2. 1-1/2" PL GAS
3. 2-1/2" ELECTRICAL (3 LINES PVC, MC, PVC)
4. 2" PVC TELEPHONE
5. 1-½" PVC TELEMETER CABLE
6. 3" WATER (ABANDONED)

SERVICE FACILITIES IN CONFLICT TO BE TEMPORARILY REMOVED DURING CONSTRUCTION:

7. 1-1/2" PVC ELECTRICAL
8. 3" PVC WATER
9. 2" PVC WATER
10. 1-1/2" VENT (AB)
11. 1" MC ELECTRICAL
12. ¾" PL GAS

OTHER SERVICE FACILITIES:

13. 3" PVC WATER
14. 2" WATER (ABANDONED)
15. 4" VIT CLAY SEWER

UTILITY QUANTITIES

UTILITY No. (X)	SERVICE FACILITY	REMOVE	NEW	REMOVE
		LF	LF	EA
7	1-1/2" PVC ELECTRICAL	100	100	
8	3" PVC WATER	113	113	
9	2" PVC WATER	100	100	
10	1-1/2" VENT (AB)			1
11	1" MC ELECTRICAL	175	175	
12	¾" PL GAS	97	97	

UTILITY QUANTITIES

ITEM	EA
ADJUST WATER VALVE COVER TO GRADE	1
ADJUST GAS VALVE COVER TO GRADE	1
ADJUST SEWER MANHOLE TO GRADE	1

UTILITY PLAN AND QUANTITIES

NO SCALE

U-1

APPROVED FOR UTILITY INFORMATION ONLY

STATE OF CALIFORNIA - DEPARTMENT OF TRANSPORTATION
Caltrans
03-DESIGN
FUNCTIONAL SUPERVISOR: CHARLES W. LAUGHLIN
CALCULATED-DESIGNED BY: THIEN SLOCUM
CHECKED BY: RUSS PETTY
REVISED BY
DATE REVISED

LAST REVISION 01-23-14
DATE PLOTTED => 23-APR-2014
TIME PLOTTED => 11:31

Dist	COUNTY	LOCATION CODE	POST MILES TOTAL PROJECT	SHEET No.	TOTAL SHEETS
01	Hum	5711		7	16

REGISTERED CIVIL ENGINEER 1-21-14 DATE

1-21-14
PLANS APPROVAL DATE

REGISTERED PROFESSIONAL ENGINEER THIEN SLOCUM No. C77253 Exp. 06-30-15 CIVIL STATE OF CALIFORNIA

THE STATE OF CALIFORNIA OR ITS OFFICERS OR AGENTS SHALL NOT BE RESPONSIBLE FOR THE ACCURACY OR COMPLETENESS OF SCANNED COPIES OF THIS PLAN SHEET.

NOTE:

1. FOR ACCURATE RIGHT OF WAY DATA, CONTACT RIGHT OF WAY ENGINEERING AT THE DISTRICT OFFICE.

LEGEND

POTHOLE

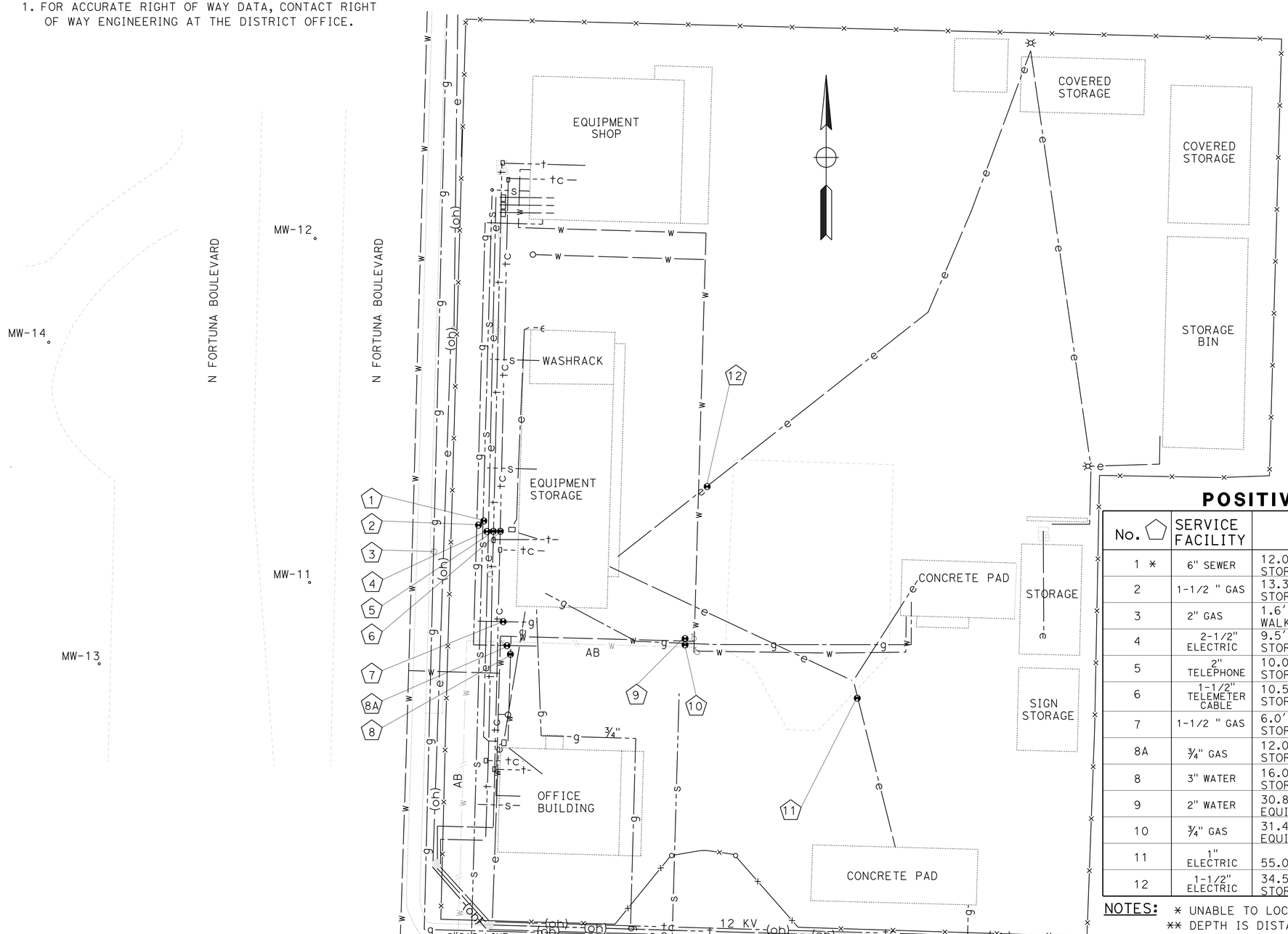

POSITIVE LOCATION INFORMATION

No. ⬠	SERVICE FACILITY	LOCATION	** DEPTH	ELEVATION	METHOD
1 *	6" SEWER	12.0' WEST OF EQUIPMENT STORAGE & OFFICE	8.0	49.9	POTHOLING
2	1-1/2 " GAS	13.3' WEST OF EQUIPMENT STORAGE & OFFFICE	2.0	56.0	POTHOLING
3	2" GAS	1.6' FROM EDGED OF SIDE WALK. 5.5' FROM FENCE.	1.7	56.2	POTHOLING
4	2-1/2" ELECTRIC	9.5' WEST OF EQUIPMENT STORAGE & OFFICE	2.3	55.3	POTHOLING
5	2" TELEPHONE	10.0' WEST OF EQUIPMENT STORAGE & OFFICE	2.6	55.5	POTHOLING
6	1-1/2" TELEMETER CABLE	10.5' WEST OF EQUIPMENT STORAGE & OFFICE	2.6	55.4	POTHOLING
7	1-1/2 " GAS	6.0' WEST OF EQUIPMENT STORAGE & OFFICE	2.6	55.6	POTHOLING
8A	¾" GAS	12.0' SOUTH OF EQUIPMENT STORAGE & OFFICE	2.2	56.0	POTHOLING
8	3" WATER	16.0' SOUTH OF EQUIPMENT STORAGE & OFFICE	3.2	54.9	POTHOLING
9	2" WATER	30.8' SOUTH EAST CORNER OF EQUIPMENT STORAGE & OFFICE	2.0	55.8	POTHOLING
10	¾" GAS	31.4' SOUTH EAST CORNER OF EQUIPMENT STORAGE & OFFICE	2.1	55.7	POTHOLING
11	1" ELECTRIC	55.0' WEST OF SIGN STORAGE	2.4	55.5	POTHOLING
12	1-1/2" ELECTRIC	34.5' EAST OF EQUIPMENT STORAGE & OFFICE	2.0	56.0	POTHOLING

NOTES: * UNABLE TO LOCATE
** DEPTH IS DISTANCE FROM ORIGINAL GROUND TO TOP OF PIPE.

UTILITY PLAN

NO SCALE

U-2

APPROVED FOR UTILITY INFORMATION ONLY

STATE OF CALIFORNIA - DEPARTMENT OF TRANSPORTATION
03-DESIGN
FUNCTIONAL SUPERVISOR: CHARLES W. LAUGHLIN
CALCULATED-DESIGNED BY: THIEN SLOCUM
CHECKED BY: RUSS PETTY
REVISED BY
DATE REVISED

LAST REVISION 01-23-14 DATE PLOTTED => 23-APR-2014 TIME PLOTTED => 11:32

Dist	COUNTY	LOCATION CODE	POST MILES TOTAL PROJECT	SHEET No.	TOTAL SHEETS
01	Hum	5711		8	16

REGISTERED CIVIL ENGINEER DATE 1-21-14

PLANS APPROVAL DATE 1-21-14

REGISTERED PROFESSIONAL ENGINEER KIDIANGA TSHIUNZA No. C 67572 Exp. 6-30-15 CIVIL STATE OF CALIFORNIA

THE STATE OF CALIFORNIA OR ITS OFFICERS OR AGENTS SHALL NOT BE RESPONSIBLE FOR THE ACCURACY OR COMPLETENESS OF SCANNED COPIES OF THIS PLAN SHEET.

CLASS 2 AGGREGATE BASE

LOCATION	CY
1	400
SIDEWALK	2.5
TOTAL	402.5

REMOVE CONCRETE

ITEM	CY
REMOVE CONCRETE (PAD)	40
REMOVE CONCRETE (SIDEWALK)	2.5
TOTAL	42.5

IMPORTED BORROW

LOCATION	CY
1	2660
2	120
TOTAL	2780

REMOVE ASPHALT CONCRETE SURFACING

ITEM	SQFT
REMOVE ASPHALT CONCRETE SURFACING	130

PARKING BUMPER (PRECAST CONCRETE)

ITEM	EA
PARKING BUMPER (PRECAST CONCRETE)	2

TACK COAT

ITEM	TON
TACK COAT	2

HOT MIX ASPHALT (TYPE A)

ITEM	TON
HOT MIX ASPHALT (TYPE A)	1500

MINOR CONCRETE (CURB RAMP)

ITEM	CY
MINOR CONCRETE (CURB RAMP)	2.5

REMOVE CONCRETE CURB

ITEM	LF
REMOVE CONCRETE CURB	8

WATER POLLUTION CONTROL

ITEM	EA
TEMPORARY DRAINAGE INLET PROTECTION	1
TEMPORARY CONSTRUCTION ENTRANCE	1

STRUCTURE EXCAVATION (PETROLEUM IMPACTED SOIL)

LOCATION	TON
1	4906
2	307
TOTAL	5213

PAINTED STALL LINES

ITEM	LF
PAINTED STALL LINES (4" WHITE)	830
PAINTED STALL LINES (4" BLUE)	50
PAINTED DIAGONAL LINES (4" BLUE)	25
TOTAL	905

SIGN QUANTITIES

SIGN CODE	POST SIZE & LENGTH	ROADSIDE SIGN-ONE POST	COMMENT
CA		EA	
R99C	METAL (2½" X 2½" X 10')	1	PLACE AS DIRECTED BY ENGINEER
R100B	N/A	1	
		2	

TWO-COMPONENT PAINT PAVEMENT MARKING

ITEM	SQFT	TYPE
TWO-COMPONENT PAINT PAVEMENT MARKINGS	23	INTERNATIONAL SYMBOL OF ACCESSIBILITY (ISA) MARKING

DETECTABLE WARNING SURFACE

ITEM	SQFT
DETECTABLE WARNING SURFACE	20

GROUND WATER (PETROLEUM IMPACTED)

LOCATION	GALLONS
1 AND 2	40,000

PRE/POST CONSTRUCTION SURVEY

ITEM	EA
PRE/POST CONSTRUCTION SURVEY	1

SUMMARY OF QUANTITIES

Q-1

REVISED BY | DATE REVISED
TOM LANGLEY | MASTRI ALVANDI
CALCULATED-DESIGNED BY | CHECKED BY
FUNCTIONAL SUPERVISOR | MASTRI ALVANDI
STATE OF CALIFORNIA - DEPARTMENT OF TRANSPORTATION
Caltrans 03-DESIGN

LAST REVISION 10-08-13 | DATE PLOTTED => 23-APR-2014 | TIME PLOTTED => 11:32

M

Maint	MAINTENANCE
Max	MAXIMUM
MB	METAL BEAM
MBB	METAL BEAM BARRIER
MBGR	METAL BEAM GUARD RAILING
Med	MEDIAN
MGS	MIDWEST GUARDRAIL SYSTEM
MH	MANHOLE
Min	MINIMUM
Misc	MISCELLANEOUS
Misc I & S	MISCELLANEOUS IRON AND STEEL
Mkr	MARKER
Mod	MODIFIED,
	MODIFY
Mon	MONUMENT
MP	METAL PLATE
MPGR	METAL PLATE GUARD RAILING
MR	MOVEMENT RATING
MSE	MECHANICALLY STABILIZED EMBANKMENT
Mt	MOUNTAIN, MOUNT
Mtl	MATERIAL
MVP	MAINTENANCE VEHICLE PULLOUT

N

N	NORTH
NB	NORTHBOUND
No.	NUMBER (MUST HAVE PERIOD)
Nos.	NUMBERS (MUST HAVE PERIOD)
NPS	NOMINAL PIPE SIZE
NS	NEAR SIDE
NSP	NEW STANDARD PLAN
NTS	NOT TO SCALE

O

Oblr	OBLITERATE
OC	OVERCROSSING
OD	OUTSIDE DIAMETER
OF	OUTSIDE FACE
OG	ORIGINAL GROUND
OGAC	OPEN GRADED ASPHALT CONCRETE
OGFC	OPEN GRADED FRICTION COURSE
OH	OVERHEAD
OHWM	ORDINARY HIGH WATER MARK
O-O	OUT TO OUT
Opp	OPPOSITE
OSD	OVERSIDE DRAIN

P

p	PAGE
PAP	PERFORATED ALUMINUM PIPE
PB	PULL BOX
PC	POINT OF CURVATURE,
	PRECAST
PCC	POINT OF COMPOUND CURVE,
	PORTLAND CEMENT CONCRETE
PCMS	PORTABLE CHANGEABLE MESSAGE SIGN
PCP	PERFORATED CONCRETE PIPE,
	PRESTRESSED CONCRETE PIPE
PCVC	POINT OF COMPOUND VERTICAL CURVE
PEC	PERMIT TO ENTER AND CONSTRUCT
Ped	PEDESTRIAN
Ped OC	PEDESTRIAN OVERCROSSING
Ped UC	PEDESTRIAN UNDERCROSSING
Perm Mtl	PERMEABLE MATERIAL

P continued

PG	PROFILE GRADE
PI	POINT OF INTERSECTION
PJP	PARTIAL JOINT PENETRATION
Pkwy	PARKWAY
₱,PL	PLATE
P/L	PROPERTY LINE
PM	POST MILE,
	TIME FROM NOON TO MIDNIGHT
PN	PAVING NOTCH
POC	POINT OF HORIZONTAL CURVE
POT	POINT OF TANGENT
POVC	POINT OF VERTICAL CURVE
PP	PIPE PILE,
	PLASTIC PIPE,
	POWER POLE
PPL	PREFORMED PERMEABLE LINER
PPP	PERFORATED PLASTIC PIPE
PRC	POINT OF REVERSE CURVE
PRF	PAVEMENT REINFORCING FABRIC
PRVC	POINT OF REVERSE VERTICAL CURVE
PS&E	PLANS, SPECIFICATIONS AND ESTIMATES
PS, P/S	PRESTRESSED
PSP	PERFORATED STEEL PIPE
PT	POINT OF TANGENCY
PVC	POLYVINYL CHLORIDE
Pvmt	PAVEMENT

Q

Qty	QUANTITY

R

R	RADIUS
R & D	REMOVE AND DISPOSE
R & S	REMOVE AND SALVAGE
R/C	RATE OF CHANGE
RCA	REINFORCED CONCRETE ARCH
RCB	REINFORCED CONCRETE BOX
RCP	REINFORCED CONCRETE PIPE
RCPA	REINFORCED CONCRETE PIPE ARCH
Rd	ROAD
Reinf	REINFORCED,
	REINFORCEMENT,
	REINFORCING
Rel	RELOCATE
Repl	REPLACEMENT
Ret	RETAINING
Rev	REVISED, REVISION
Rdwy	ROADWAY
RHMA	RUBBERIZED HOT MIX ASPHALT
Riv	RIVER
RM	ROAD-MIXED
RP	RADIUS POINT,
	REFERENCE POINT
RR	RAILROAD
RSP	ROCK SLOPE PROTECTION,
	REVISED STANDARD PLAN
Rt	RIGHT
Rte	ROUTE
RW	REDWOOD,
	RETAINING WALL
R/W	RIGHT OF WAY
Rwy	RAILWAY

S

S	SOUTH,
	SUPPLEMENT
SAE	STRUCTURE APPROACH EMBANKMENT
Salv	SALVAGE
SAPP	STRUCTURAL ALUMINUM PLATE PIPE
SB	SOUTHBOUND
SC	SAND CUSHION
SCSP	SLOTTED CORRUGATED STEEL PIPE
SD	STORM DRAIN
Sec	SECOND,
	SECTION
Sep	SEPARATION
SG	SUBGRADE
Shld	SHOULDER
Sht	SHEET
Sim	SIMILAR
℄	STATION LINE
SM	SELECTED MATERIAL
Spec	SPECIAL,
	SPECIFICATIONS
SPP	SLOTTED PLASTIC PIPE
SS	SLOPE STAKE
SSBM	STRAP AND SADDLE BRACKET METHOD
SSD	STRUCTURAL SECTION DRAIN
SSPA	STRUCTURAL STEEL PLATE ARCH
SSPP	STRUCTURAL STEEL PLATE PIPE
SSPPA	STRUCTURAL STEEL PLATE PIPE ARCH
SSRP	STEEL SPIRAL RIB PIPE
St	STREET
Sta	STATION
STBB	SINGLE THRIE BEAM BARRIER
Std	STANDARD
Str	STRUCTURE
Surf	SURFACING
SW	SIDEWALK,
	SOUND WALL
Swr	SEWER
Sym	SYMMETRICAL
S4S	SURFACE 4 SIDES

T

T	SEMI-TANGENT
Tan	TANGENT
TBB	THRIE BEAM BARRIER
Tbr	TIMBER
TC	TOP OF CURB
TCB	TRAFFIC CONTROL BOX
TCE	TEMPORARY CONSTRUCTION EASEMENT
Tel	TELEPHONE
Temp	TEMPORARY
TG	TOP OF GRADE
Tot	TOTAL
TP	TELEPHONE POLE
TPB	TREATED PERMEABLE BASE
TPM	TREATED PERMEABLE MATERIAL
Trans	TRANSITION

T continued

TS	TRANSVERSE,
	TRAFFIC SIGNAL,
	TUBULAR STEEL
Typ	TYPICAL

U

UC	UNDERCROSSING
UD	UNDERDRAIN
UG	UNDERGROUND
UON	UNLESS OTHERWISE NOTED
UP	UNDERPASS

V

V	VALVE,
	DESIGN SPEED
Var	VARIABLE,
	VARIES
VC	VERTICAL CURVE
VCP	VITRIFIED CLAY PIPE
Vert	VERTICAL
Via	VIADUCT
Vol	VOLUME

W

W	WEST,
	WIDTH
WB	WESTBOUND
WH	WEEP HOLE
WM	WIRE MESH
WS	WATER SURFACE
WSP	WELDED STEEL PIPE
Wt	WEIGHT
WV	WATER VALVE
WW	WINGWALL
WWLOL	WINGWALL LAYOUT LINE

X

X Sec	CROSS SECTION
Xing	CROSSING

Y

Yr	YEAR
Yrs	YEARS

Dist	COUNTY	ROUTE	POST MILES TOTAL PROJECT	SHEET No.	TOTAL SHEETS
01	Hum	5711		9	16

Grace M. Tsushima
REGISTERED CIVIL ENGINEER

July 19, 2013
PLANS APPROVAL DATE

REGISTERED PROFESSIONAL ENGINEER Grace M. Tsushima No. C49814 Exp. 9-30-14 CIVIL STATE OF CALIFORNIA

THE STATE OF CALIFORNIA OR ITS OFFICERS OR AGENTS SHALL NOT BE RESPONSIBLE FOR THE ACCURACY OR COMPLETENESS OF SCANNED COPIES OF THIS PLAN SHEET.

TO ACCOMPANY PLANS DATED 1-21-14

UNIT OF MEASUREMENT SYMBOLS:

Some of the symbols used in the project plan quantity tables and in the Bid Item List are:

TABLE A

SYMBOL USED	DEFINITIONS
ACRE	ACRE
CF	CUBIC FOOT
CY	CUBIC YARD
EA	EACH
GAL	GALLON
LB	POUND
LF	LINEAR FOOT
SQFT	SQUARE FOOT
SQYD	SQUARE YARD
STA	100 FEET
TAB	TABLET
TON	2,000 POUNDS

Some of the symbols used in the plans other than in the project plan quantity tables are:

TABLE B

SYMBOL USED	DEFINITIONS
ksi	KIPS PER SQUARE INCH
ksf	KIPS PER SQUARE FOOT
psi	POUNDS PER SQUARE INCH
psf	POUNDS PER SQUARE FOOT
lb/ft^3, pcf	POUNDS PER CUBIC FOOT
tsf	TONS PER SQUARE FOOT
mph, MPH *	MILES PER HOUR
ø	NOMINAL DIAMETER
oz	OUNCE
lb	POUND
kip	1,000 POUNDS
cal	CALORIE
ft	FOOT OR FEET
gal	GALLON

* For use on a sign panel only

STATE OF CALIFORNIA
DEPARTMENT OF TRANSPORTATION

ABBREVIATIONS (SHEET 2 OF 2)

NO SCALE

RSP A10B DATED JULY 19, 2013 SUPERSEDES STANDARD PLAN A10B DATED MAY 20, 2011 - PAGE 2 OF THE STANDARD PLANS BOOK DATED 2010.

REVISED STANDARD PLAN RSP A10B

2010 REVISED STANDARD PLAN RSP A10B

6-7-13

Dist	COUNTY	ROUTE	POST MILES TOTAL PROJECT	SHEET No.	TOTAL SHEETS
01	Hum	5711		10	16

REGISTERED CIVIL ENGINEER

October 19, 2012
PLANS APPROVAL DATE

REGISTERED PROFESSIONAL ENGINEER
Roberta L. McLaughlin
No. C40375
Exp. 3-31-13
CIVIL
STATE OF CALIFORNIA

THE STATE OF CALIFORNIA OR ITS OFFICERS OR AGENTS SHALL NOT BE RESPONSIBLE FOR THE ACCURACY OR COMPLETENESS OF SCANNED COPIES OF THIS PLAN SHEET.

NOTE: TO ACCOMPANY PLANS DATED 1-21-14

Minor variations in dimensions may be accepted by the Engineer.

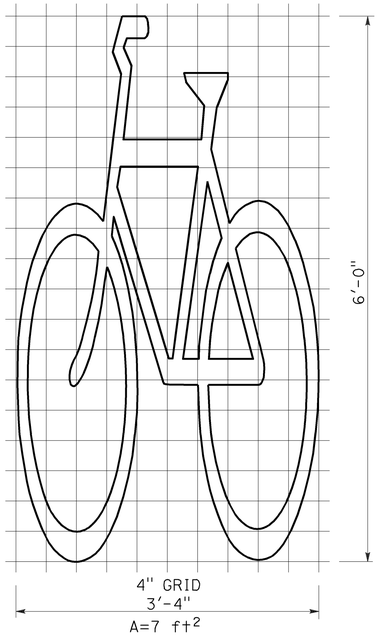

BIKE LANE SYMBOL WITHOUT PERSON

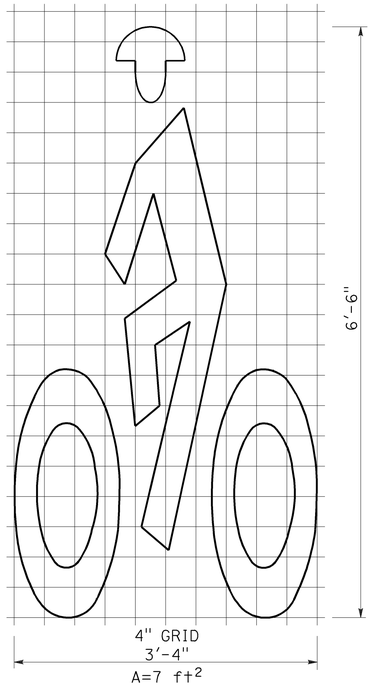

BIKE LANE SYMBOL WITH PERSON

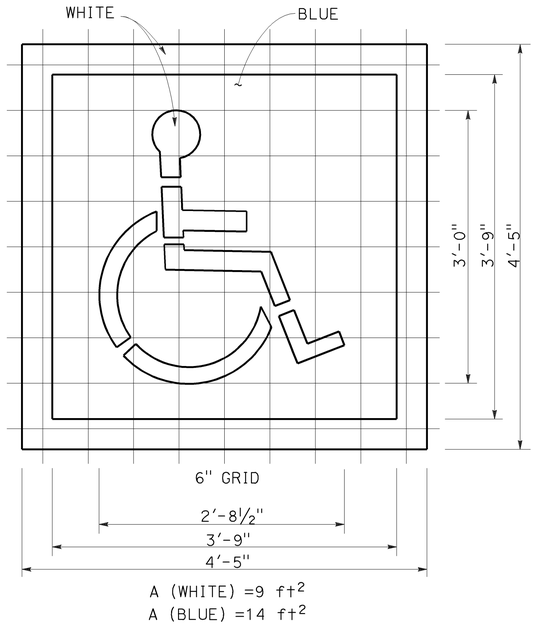

INTERNATIONAL SYMBOL OF ACCESSIBILITY (ISA) MARKING

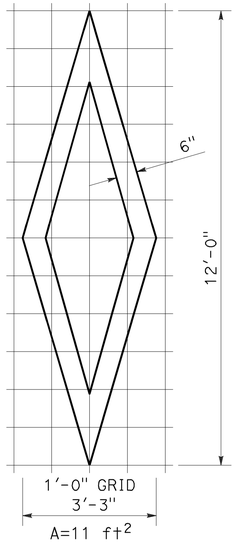

DIAMOND SYMBOL

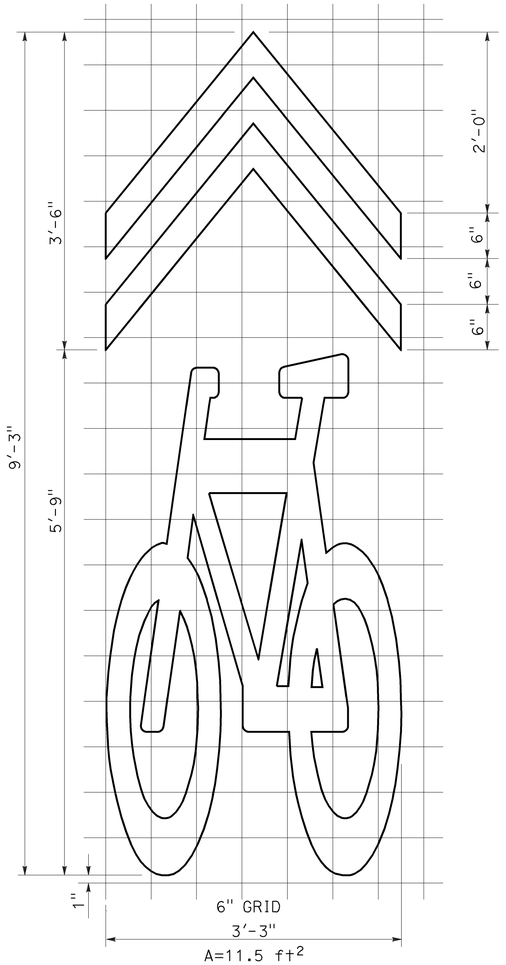

SHARED ROADWAY BICYCLE MARKING

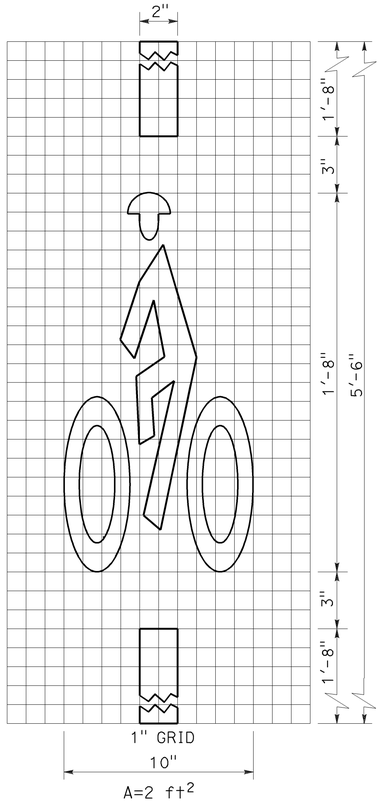

BICYCLE LOOP DETECTOR SYMBOL

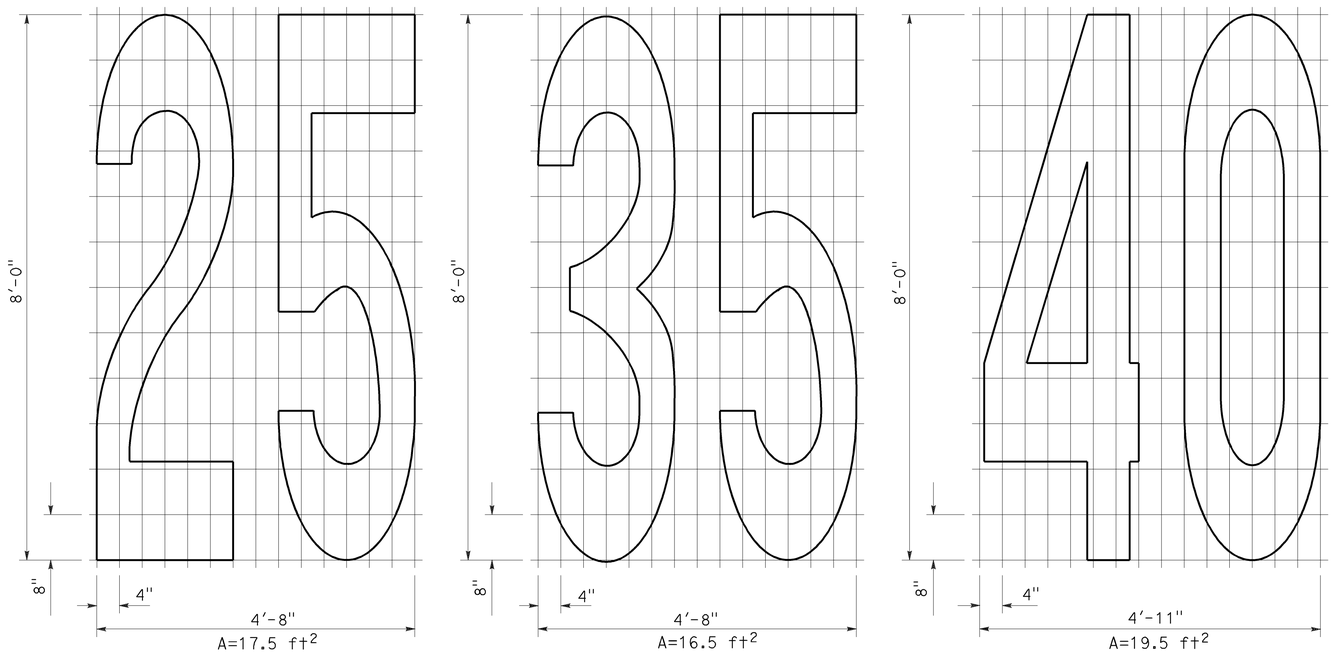

NUMERALS

STATE OF CALIFORNIA
DEPARTMENT OF TRANSPORTATION

PAVEMENT MARKINGS SYMBOLS AND NUMERALS

NO SCALE

RSP A24C DATED OCTOBER 19, 2012 SUPERSEDES STANDARD PLAN A24C DATED MAY 20, 2011 - PAGE 15 OF THE STANDARD PLANS BOOK DATED 2010.

REVISED STANDARD PLAN RSP A24C

2010 REVISED STANDARD PLAN RSP A24C

6-28-12

Dist	COUNTY	ROUTE	POST MILES TOTAL PROJECT	SHEET No.	TOTAL SHEETS
01	Hum	5711		11	16

REGISTERED CIVIL ENGINEER

July 20, 2012
PLANS APPROVAL DATE

REGISTERED PROFESSIONAL ENGINEER
Roberta L. McLaughlin
No. C40375
Exp. 3-31-13
CIVIL
STATE OF CALIFORNIA

THE STATE OF CALIFORNIA OR ITS OFFICERS OR AGENTS SHALL NOT BE RESPONSIBLE FOR THE ACCURACY OR COMPLETENESS OF SCANNED COPIES OF THIS PLAN SHEET.

TO ACCOMPANY PLANS DATED 1-21-14

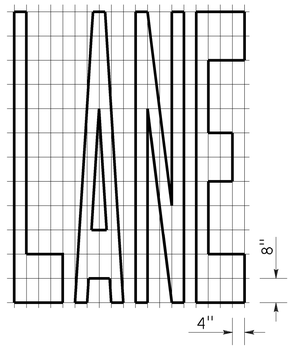

A=24 ft^2

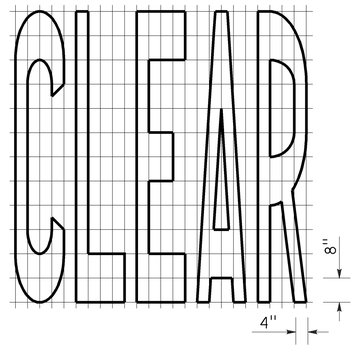

A=27 ft^2

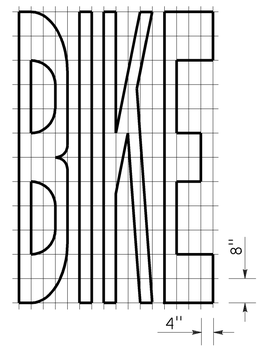

A=21 ft^2

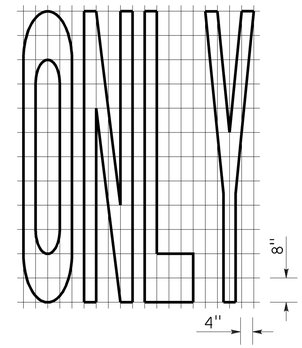

A=22 ft^2

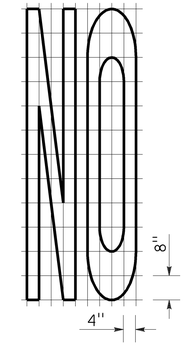

A=14 ft^2

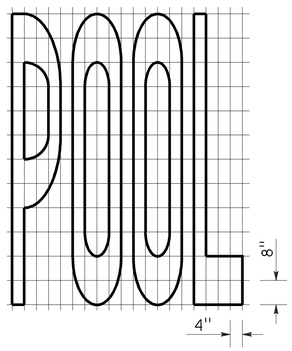

A=23 ft^2

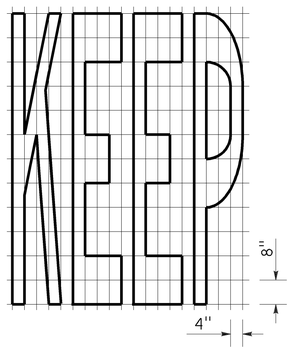

A=24 ft^2

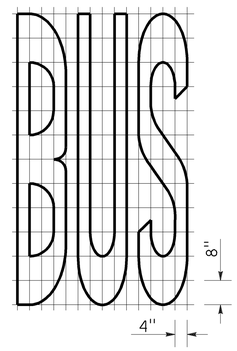

A=20 ft^2

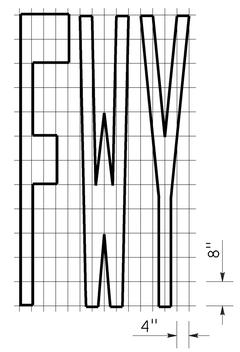

A=16 ft^2

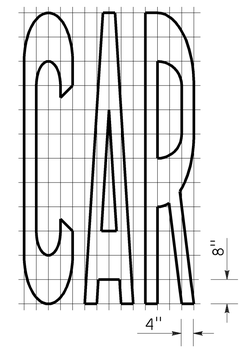

A=17 ft^2

WORD MARKINGS			
ITEM	ft^2	ITEM	ft^2
LANE	24	NO	14
POOL	23	BIKE	21
CAR	17	BUS	20
CLEAR	27	ONLY	22
KEEP	24	FWY	16

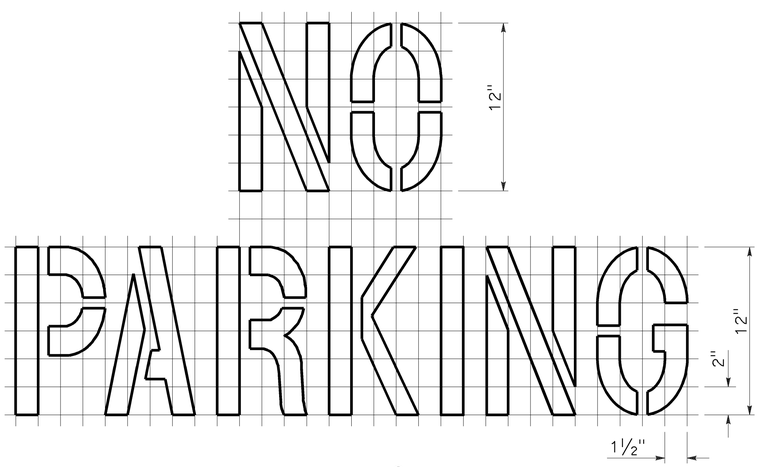

A=2 ft^2
See Notes 6 and 7

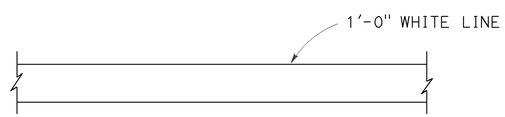

LIMIT LINE (STOP LINE)

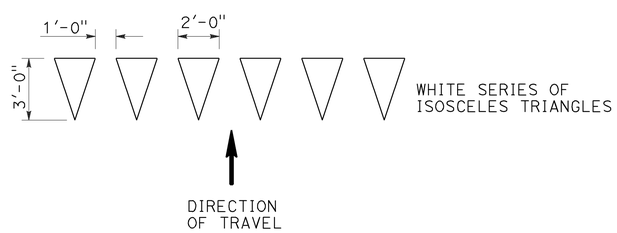

YIELD LINE

NOTES:

1. If a message consists of more than one word, it should read "UP", i.e., the first word should be nearest the driver.
2. The space between words should be at least four times the height of the characters for low speed roads, but not more than ten times the height of the characters. The space may be reduced appropriately where there is limited space because of local conditions.
3. Minor variations in dimensions may be accepted by the Engineer.
4. Portions of a letter, number or symbol may be separated by connecting segments not to exceed 2" in width.
5. The words "NO PARKING" pavement marking is to be used for parking facilities. For typical locations of markings, see Standard Plans A90A and A90B.
6. The words "NO PARKING", shall be painted in white letters no less than 1'-0" high on a contrasting background and located so that it is visible to traffic enforcement officials.

STATE OF CALIFORNIA
DEPARTMENT OF TRANSPORTATION

PAVEMENT MARKINGS
WORDS, LIMIT AND YIELD LINES

NO SCALE

RSP A24E DATED JULY 20, 2012 SUPERSEDES STANDARD PLAN A24E
DATED MAY 20, 2011 - PAGE 17 OF THE STANDARD PLANS BOOK DATED 2010.

REVISED STANDARD PLAN RSP A24E

2010 REVISED STANDARD PLAN RSP A24E

6-12-12

Dist	COUNTY	ROUTE	POST MILES TOTAL PROJECT	SHEET No.	TOTAL SHEETS
01	Hum	5711		12	16

REGISTERED CIVIL ENGINEER

March 21, 2014
PLANS APPROVAL DATE

REGISTERED PROFESSIONAL ENGINEER Hector David Cordova No. C41957 Exp. 3-31-14 CIVIL STATE OF CALIFORNIA

THE STATE OF CALIFORNIA OR ITS OFFICERS OR AGENTS SHALL NOT BE RESPONSIBLE FOR THE ACCURACY OR COMPLETENESS OF SCANNED COPIES OF THIS PLAN SHEET.

TO ACCOMPANY PLANS DATED 1-21-14

2010 REVISED STANDARD PLAN RSP A88A

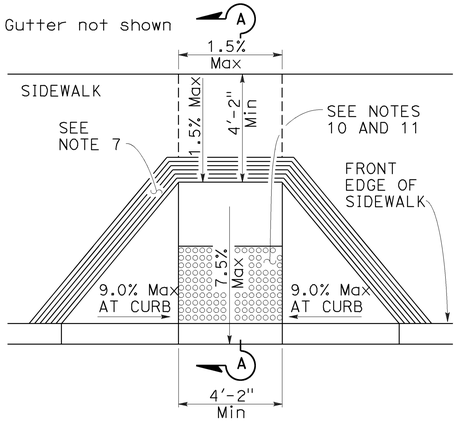

CASE A

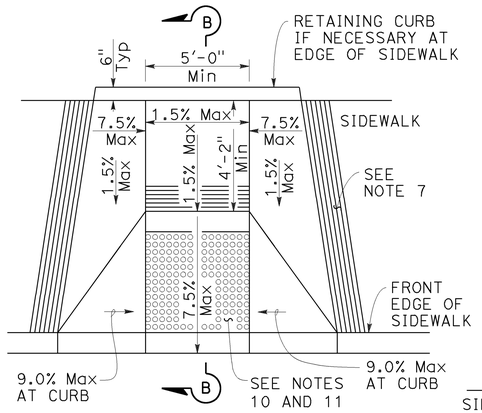

CASE B

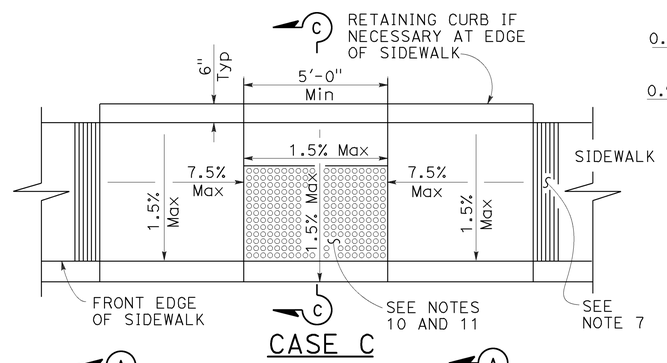

CASE C

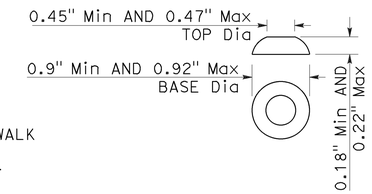

RAISED TRUNCATED DOME

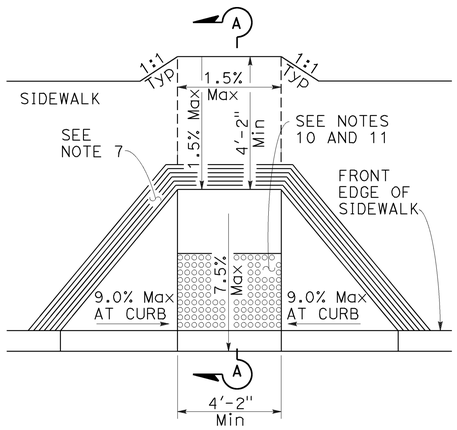

CASE D

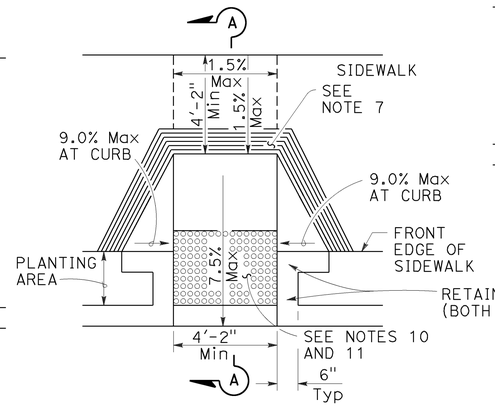

CASE E

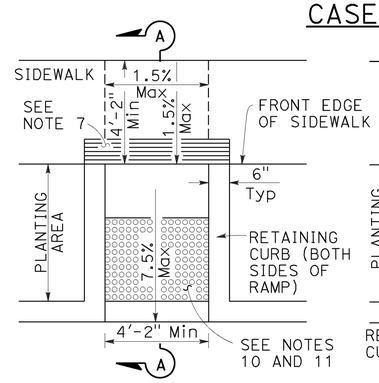

CASE F

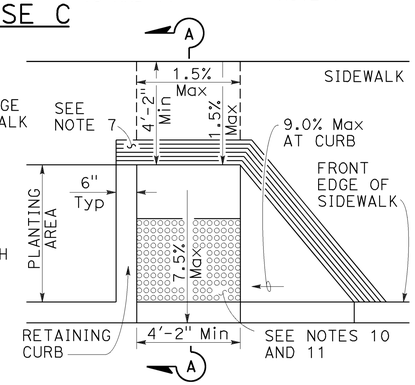

CASE G

See Note 4

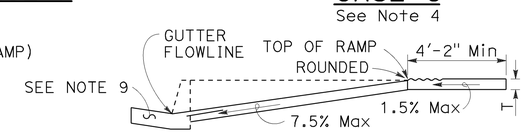

SECTION A-A

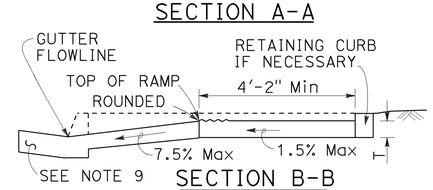

SECTION B-B

Depress entire sidewalk as required

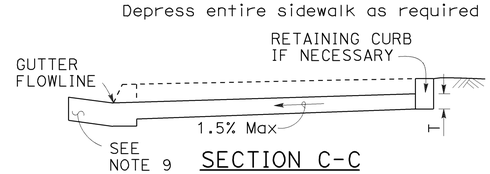

SECTION C-C

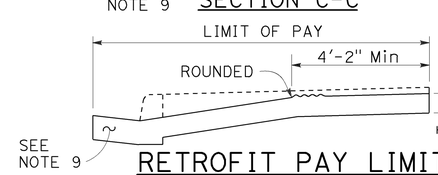

RETROFIT PAY LIMITS

Existing curb and sidewalk

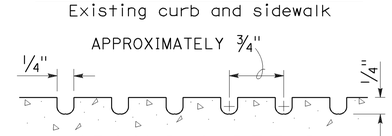

GROOVING DETAIL

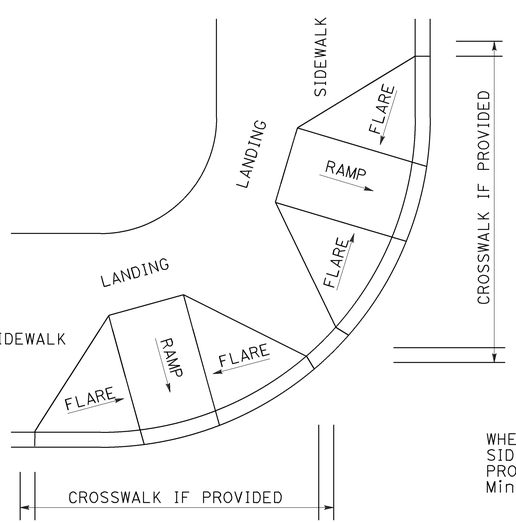

DETAIL A

TYPICAL TWO-RAMP CORNER INSTALLATION

See Note 1

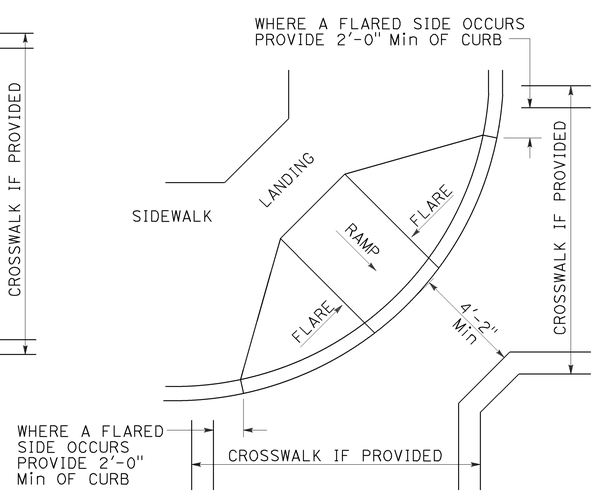

DETAIL B

TYPICAL ONE-RAMP CORNER INSTALLATION

See Notes 1 and 3

NOTES:

1. As site conditions dictate, Case A through Case G curb ramps may be used for corner installations similar to those shown in Detail A and Detail B. The case of curb ramps used in Detail A do not have to be the same. Case A through Case G curb ramps also may be used at mid block locations, as site conditions dictate.
2. If distance from curb to back of sidewalk is too short to accommodate ramp and 4'-2" platform (landing) as shown in Case A, the sidewalk may be depressed longitudinally as in Case B, or C or may be widened as in Case D.
3. When ramp is located in center of curb return, crosswalk configuration must be similar to that shown for Detail B.
4. As site conditions dictate, the retaining curb side and the flared side of the Case G ramp shall be constructed in reversed position.
5. If located on a curve, the sides of the ramp need not be parallel, but the minimum width of the ramp shall be 4'-2".
6. Side slope of ramp flares vary uniformly from a maximum of 9.0% at curb to conform with longitudinal sidewalk slope adjacent to top of the ramp, except in Case C and Case F.
7. The curb ramp shall be outlined, as shown, with a 1'-0" wide border with 1/4" grooves approximately 3/4" on center. See grooving detail.
8. Transitions from ramps and landing to walks, gutters or streets shall be flush (no lip) and free of abrupt changes.
9. Counter slopes of adjoining gutters and road surfaces immediately adjacent to and within 24 inches of the curb ramp shall not be steeper than 1:20 (5.0%). Gutter pan slope shall not exceed 1" of depth for each 2'-0" of width.
10. Curb ramps shall have a detectable warning surface that extends the full width and 3'-0" depth of the ramp. A 4'-0" wide detectable warning surface may be used on a 4'-2" wide curb ramp. Detectable Warning Surfaces shall conform to the requirements in the Standard Specifications.
11. The edge of the detectable warning surface nearest the street shall be between 6" and 8" from the gutter flowline.
12. Sidewalk and ramp thickness, "T", shall be 3½" minimum.
13. Utility pull boxes, manholes, vaults and all other utility facilities within the boundaries of the curb ramp will be relocated or adjusted to grade by the owner prior to, or in conjunction with, curb ramp construction.
14. Detectable warning surface may have to be cut to allow removal of utility covers while maintaining full detectable warning width and depth.

RAISED TRUNCATED DOME PATTERN (IN-LINE)

DETECTABLE WARNING SURFACE

See Note 10

STATE OF CALIFORNIA
DEPARTMENT OF TRANSPORTATION

CURB RAMP DETAILS

NO SCALE

RSP A88A DATED MARCH 21, 2014 SUPERSEDES RSP A88A DATED JULY 19, 2013 AND STANDARD PLAN A88A DATED MAY 20, 2011 - PAGE 121 OF THE STANDARD PLANS BOOK DATED 2010.

REVISED STANDARD PLAN RSP A88A

2-25-14

Dist	COUNTY	ROUTE	POST MILES TOTAL PROJECT	SHEET No.	TOTAL SHEETS
01	Hum	5711		13	16

REGISTERED CIVIL ENGINEER

July 19, 2013
PLANS APPROVAL DATE

REGISTERED PROFESSIONAL ENGINEER
Hector David Cordova
No. C41957
Exp. 3-31-14
CIVIL
STATE OF CALIFORNIA

THE STATE OF CALIFORNIA OR ITS OFFICERS OR AGENTS SHALL NOT BE RESPONSIBLE FOR THE ACCURACY OR COMPLETENESS OF SCANNED COPIES OF THIS PLAN SHEET.

TO ACCOMPANY PLANS DATED 1-21-14

2010 REVISED STANDARD PLAN RSP A90A

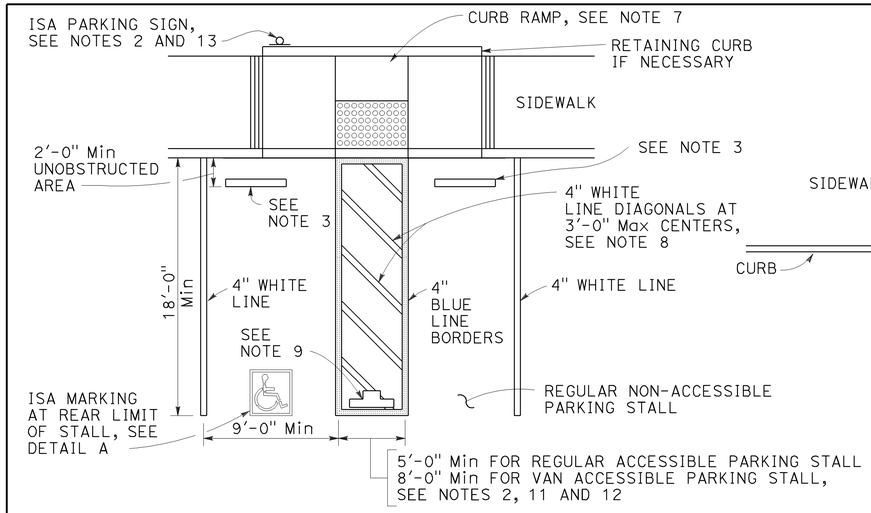

SINGLE PARKING STALL

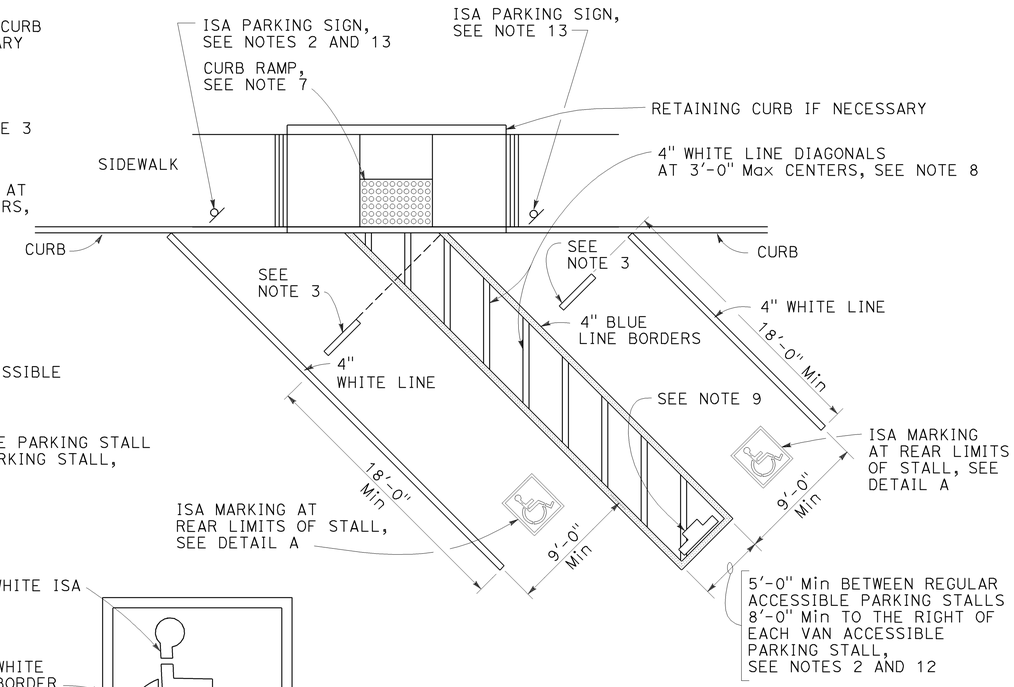

DIAGONAL DOUBLE PARKING STALLS

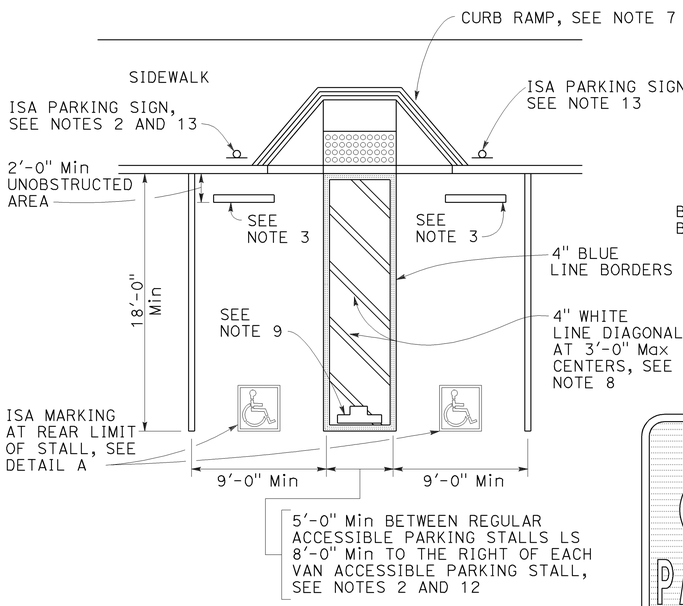

DOUBLE PARKING STALL

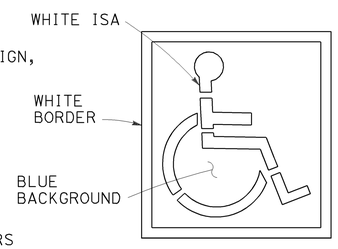

ISA MARKING
See Revised Std Plan RSP A24C

DETAIL A

TABLE A

TOTAL NUMBER OF PARKING SPACES PROVIDED IN PARKING FACILITY	MINIMUM NUMBER OF REQUIRED ACCESSIBLE PARKING SPACES
1-25	1
26-50	2
51-75	3
76-100	4
101-150	5
151-200	6
201-300	7
301-400	8
401-500	9
501-1000	2 PERCENT OF TOTAL
1001 AND OVER	20 PLUS 1 FOR EACH 100 OR FRACTION THEREOF OVER 1000

SIGN R99 (CA)

SIGN R99C (CA)
See Note 6

PLAQUE R99B (CA)

SIGN R99 (CA) with PLAQUE R99B (CA)
See Note 6

SIGN R100B (CA)
See Note 10

SIGN R7-8b
See Notes 2 and 6

OFF-STREET PARKING SIGNS
(Parking lot or garage)
See Note 6

NOTES:

1. Accessible parking spaces serving a particular building shall be located on the shortest accessible route of travel from adjacent parking to an accessible entrance. In parking facilities that do not serve a particular building, accessible parking shall be located on the shortest accessible route of travel to an accessible pedestrian entrance of the parking facility.
2. One in every six accessible off-street parking stalls, but not less than one, shall be served by an accessible aisle of 8'-0" minimum width and shall be signed van accessible. The R7-8b sign shall be mounted below the R99B (CA) plaque or the R99C (CA) sign.
3. In each parking stall, a curb or parking bumper shall be provided if required to prevent encroachment of vehicles over the required width of walkways. Parking stalls shall be so located that persons with disabilities are not compelled to wheel or walk behind parked vehicles other than their own. For more parking bumper requirements, see the Special Provisions.
4. Parking spaces and access aisles shall be level with surface slopes not exceeding 1.5% in all directions.
5. Table A shall be used to determine the required number of accessible parking stalls in each parking lot or garage.
6. Where Plaque R99B (CA), Sign R99C (CA) or Sign R7-8b are installed, the bottom of the sign or plaque panel shall be a minimum of 7'-0" above the surrounding surface.
7. Curb ramps shall conform to the details shown on Revised Standard Plan RSP A88A.
8. Blue paint, instead of white may be used for marking accessibility aisles in areas where snow may cause white markings to not be visible.
9. The words "NO PARKING", shall be painted in white letters no less than 1'-0" high and located so that it is visible to traffic enforcement officials. See Revised Standard Plan RSP A90B for details of the "NO PARKING" pavement marking.
10. A R100B (CA) sign shall be posted in a conspicuous place at each entrance to off-street parking facilities or immediately adjacent to and visible from each stall. The sign shall include the address where the towed vehicle may be reclaimed and the telephone number of the local traffic law enforcement agency.
11. Where a single (non-van) accessible parking space is provided, the loading and unloading access aisle shall be on the passenger side of the vehicle as the vehicle is going forward into the parking space.
12. Where a van accessible parking space is provided, the loading and unloading access aisle shall be 8'-0" wide minimum, and shall be on the passenger side of the vehicle as the vehicle is going forward into the parking space.
13. Accessible Parking Only Sign shall be Sign R99C (CA) or Sign R99 (CA) with Plaque R99B (CA).

LEGEND

ISA = International Symbol of Accessibility

STATE OF CALIFORNIA
DEPARTMENT OF TRANSPORTATION

ACCESSIBLE PARKING OFF-STREET

NO SCALE

RSP A90A DATED JULY 19, 2013 SUPERSEDES STANDARD PLAN A90A
DATED MAY 20, 2011 - PAGE 123 OF THE STANDARD PLANS BOOK DATED 2010.

REVISED STANDARD PLAN RSP A90A

Dist	COUNTY	ROUTE	POST MILES TOTAL PROJECT	SHEET No.	TOTAL SHEETS
01	Hum	5711		14	16

Theresa Gabriel
REGISTERED ELECTRICAL ENGINEER

July 19, 2013
PLANS APPROVAL DATE

REGISTERED PROFESSIONAL ENGINEER Theresa Aziz Gabriel No. E15129 Exp. 6-30-14 ELECTRICAL STATE OF CALIFORNIA

THE STATE OF CALIFORNIA OR ITS OFFICERS OR AGENTS SHALL NOT BE RESPONSIBLE FOR THE ACCURACY OR COMPLETENESS OF SCANNED COPIES OF THIS PLAN SHEET.

TO ACCOMPANY PLANS DATED 1-21-14

LEGEND:

AB	ABANDON. IF APPLIED TO CONDUIT, REMOVE CONDUCTORS
BC	INSTALL PULL BOX IN EXISTING CONDUIT RUN
BP	PEDESTRIAN BARRICADE, TYPE AS INDICATED ON PLAN
CB	INSTALL CONDUIT INTO EXISTING PULL BOX
CC	CONNECT NEW AND EXISTING CONDUIT. REMOVE EXISTING CONDUCTORS AND INSTALL CONDUCTORS AS INDICATED
CF	CONDUIT TO REMAIN FOR FUTURE USE. REMOVE CONDUCTORS. INSTALL PULL TAPE
DH	DETECTOR HANDHOLE
FA	FOUNDATION TO BE ABANDONED
IS	INSTALL SIGN ON SIGNAL MAST ARM
NS	NO SLIP BASE ON STANDARD
PEC	PHOTOELECTRIC CONTROL
PEU	PHOTOELECTRIC UNIT
RC	EQUIPMENT OR MATERIAL TO BE REMOVED AND BECOME THE PROPERTY OF THE CONTRACTOR
RE	REMOVE ELECTROLIER, FUSES AND BALLAST. TAPE ENDS OF CONDUCTORS
RL	RELOCATE EQUIPMENT
RR	REMOVE AND REUSE EQUIPMENT
RS	REMOVE AND SALVAGE EQUIPMENT
SC	SPLICE NEW TO EXISTING CONDUCTORS
SD	SERVICE DISCONNECT
TSP	TELEPHONE SERVICE POINT

ABBREVIATIONS

APS	ACCESSIBLE PEDESTRIAN SIGNAL
BBS	BATTERY BACKUP SYSTEM
BC	BOLT CIRCLE
BPB	BICYCLE PUSH BUTTON
C	CONDUIT
CB	CIRCUIT BREAKER
CCTV	CLOSED CIRCUIT TELEVISION
Ckt	CIRCUIT
CMS	CHANGEABLE MESSAGE SIGN
Ctid	CALTRANS IDENTIFICATION
Comm	COMMUNICATION
DLC	LOOP DETECTOR LEAD-IN CABLE
EMS	EXTINGUISHABLE MESSAGE SIGN
EVUC	EMERGENCY VEHICLE UNIT CABLE
EVUD	EMERGENCY VEHICLE UNIT DETECTOR
FB	FLASHING BEACON
FBCA	FLASHING BEACON CONTROL ASSEMBLY
FBS	FLASHING BEACON WITH SLIP BASE
FO	FIBER OPTIC
G	EQUIPMENT GROUNDING CONDUCTOR
GB	GROUND BUS
GFCI	GROUND FAULT CIRCUIT INTERRUPTER
HAR	HIGHWAY ADVISORY RADIO
Hex	HEXAGONAL
HPS	HIGH PRESSURE SODIUM
IISNS	INTERNALLY ILLUMINATED STREET NAME SIGN
ISL	INDUCTION SIGN LIGHTING
LED	LIGHT EMITTING DIODE
LMA	LUMINAIRE MAST ARM
LPS	LOW PRESSURE SODIUM
Ltg	LIGHTING
Lum	LUMINAIRE
M	METERED
MAT	MAST ARM MOUNTING TOP ATTACHMENT
MAS	MAST ARM MOUNTING SIDE ATTACHMENT
M/M	MULTIPLE TO MULTIPLE TRANSFORMER
Mtg	MOUNTING
MV	MERCURY VAPOR LIGHTING FIXTURE
MVDS	MICROWAVE VEHICLE DETECTION SYSTEM
N	NEUTRAL (GROUNDED CONDUCTOR)
NB	NEUTRAL BUS
NC	NORMALLY CLOSE
NO	NORMALLY OPEN
P	CIRCUIT BREAKER'S POLE
PB	PULL BOX
PBA	PUSH BUTTON ASSEMBLY
PEC	PHOTOELECTRIC CONTROL
Ped	PEDESTRIAN
PEU	PHOTOELECTRIC UNIT
PT	CONDUIT WITH PULL TAPE
RE	RELOCATED EQUIPMENT
RM	RAMP METERING
RWIS	ROADSIDE WEATHER INFORMATION SYSTEM
SB	SLIP BASE
SIC	SIGNAL INTERCONNECT CABLE
Sig	SIGNAL
SMA	SIGNAL MAST ARM
SNS	STREET NAME SIGN
SP	SERVICE POINT
TDC	TELEPHONE DEMARCATION CABINET
TMS	TRAFFIC MONITORING STATION
TOS	TRAFFIC OPERATIONS SYSTEM
Veh	VEHICLE
VIVDS	VIDEO IMAGE VEHICLE DETECTION SYSTEM
WIM	WEIGH-IN-MOTION
Xfmr	TRANSFORMER

SOFFIT AND WALL MOUNTED LUMINAIRES

PENDANT, 70 W HPS UNLESS OTHERWISE SPECIFIED

FLUSH, 70 W HPS UNLESS OTHERWISE SPECIFIED

WALL SURFACE, 70 W HPS UNLESS OTHERWISE SPECIFIED

EXISTING SOFFIT OR WALL LUMINAIRE TO REMAIN UNMODIFIED

EXISTING SOFFIT OR WALL LUMINAIRE TO BE MODIFIED AS SPECIFIED

NOTE:
Arrow indicates "street side" of luminaire.

COMMONLY USED SYMBOLS FOR UNITED STATES CUSTOMARY UNITS OF MEASUREMENT:

SYMBOL USED	DEFINITIONS
Ω	OHMS
min	MINUTE
s	SECOND
bps	BITS PER SECOND
Bps	BYTES PER SECOND
A	AMPERE
V	VOLT
V(dc)	VOLT (DIRECT CURRENT)
V(ac)	VOLT (ALTERNATING CURRENT)
FC	FOOT - CANDLE
W	WATTS
VA	VOLT-AMPERE
M	MEGA
k	KILO
m	MILLI
μ	MICRO
P	PICO
Hz	HERTZ

MISCELLANEOUS ELECTROLIERS

NEW	EXISTING	
		LUMINAIRE ON WOOD POLE
		NON-STANDARD ELECTROLIER (SEE PROJECT NOTES OR PROJECT PLANS)
		CITY ELECTROLIER
		ELECTROLIER FOUNDATION (FUTURE INSTALLATION)

NOTES:

1. HPS luminaires shall be 310 W HPS when installed on Type 21, 21D, 30, 31 and 32 Standards, unless otherwise specified. HPS luminaires shall be 200 W when installed on other type standards or poles, unless otherwise specified.
2. LED luminaires shall be 235 W when installed on Type 21, 21D, 30, 31 and 32 Standards, unless otherwise specified. LED luminaires shall be 165 W when installed on other type standards or poles, unless otherwise specified.
3. Luminaires shall be the cutoff type, ANSI Type III medium cutoff lighting distribution, unless otherwise specified.

STANDARD ELECTROLIER

NEW	EXISTING	STANDARD TYPE
		15
		15D
		15 STRUCTURE
		15D STRUCTURE
		21
		21D
		21 STRUCTURE
		21D STRUCTURE
		30
		31
		32

STATE OF CALIFORNIA
DEPARTMENT OF TRANSPORTATION

ELECTRICAL SYSTEMS (LEGEND AND ABBREVIATIONS)

NO SCALE

RSP ES-1A DATED JULY 19, 2013 SUPERSEDES STANDARD PLAN ES-1A DATED MAY 20, 2011 - PAGE 425 OF THE STANDARD PLANS BOOK DATED 2010.

REVISED STANDARD PLAN RSP ES-1A

2010 REVISED STANDARD PLAN RSP ES-1A

Dist	COUNTY	ROUTE	POST MILES TOTAL PROJECT	SHEET No.	TOTAL SHEETS
01	Hum	5711		15	16

Theresa Gabriel
REGISTERED ELECTRICAL ENGINEER

July 19, 2013
PLANS APPROVAL DATE

REGISTERED PROFESSIONAL ENGINEER
Theresa Aziz Gabriel
No. E15129
Exp. 6-30-14
ELECTRICAL
STATE OF CALIFORNIA

THE STATE OF CALIFORNIA OR ITS OFFICERS OR AGENTS SHALL NOT BE RESPONSIBLE FOR THE ACCURACY OR COMPLETENESS OF SCANNED COPIES OF THIS PLAN SHEET.

TO ACCOMPANY PLANS DATED 1-21-14

CONDUIT

NEW	EXISTING	
		LIGHTING CONDUIT, UNLESS OTHERWISE INDICATED OR NOTED
		TRAFFIC SIGNAL CONDUIT
C	c	COMMUNICATION CONDUIT
T	t	TELEPHONE CONDUIT
F	f	FIRE ALARM CONDUIT
FO	fo	FIBER OPTIC CONDUIT
		CONDUIT TERMINATION
R	r	CONDUIT RISER ATTACHED TO THE STRUCTURE OR SERVICE POLE

SERVICE EQUIPMENT

NEW	EXISTING	
OH	oh	OVERHEAD LINES
U	U	WOOD POLE, "U" INDICATES UTILITY OWNED
		POLE GUY WITH ANCHOR
		UTILITY TRANSFORMER - GROUND MOUNTED
III	III	SERVICE EQUIPMENT ENCLOSURE TYPE. DOOR INDICATES FRONT OF ENCLOSURE
T	t	TELEPHONE DEMARCATION CABINET

POLE-MOUNTED SERVICE DESIGNATION

TYPE H SERVICE, 28'-10" — TYPE OF INSTALLATION AND POLE HEIGHT ABOVE GRADE

FLASHING BEACON

NEW	EXISTING	
R	R	FLASHING BEACON (ONE VEHICLE SIGNAL HEAD WITH BACKPLATE AND VISOR) "R" INDICATES RED INDICATION, "Y" INDICATES YELLOW INDICATION
Y Y	Y Y	FLASHING BEACON WITH TYPE 15-FBS STANDARD AND A SIGN.
R R	R R	FLASHING BEACON WITH TYPES 9, 9A OR 9B SIGN UNLESS OTHERWISE SPECIFIED OR INDICATED

SIGNAL EQUIPMENT

NEW	EXISTING	
C	C	PEDESTRIAN SIGNAL HEAD "C" INDICATES COUNTDOWN PEDESTRIAN HEAD
		PUSH BUTTON ASSEMBLY POST
		PEDESTRIAN BARRICADE
		VEHICLE SIGNAL HEAD (WITH BACKPLATE AND 3-SECTIONS: RED, YELLOW AND GREEN)
		VEHICLE SIGNAL HEAD WITH ANGLE VISOR
PV	PV	MODIFICATIONS OF BASIC SYMBOL: "L" INDICATES ALL NON-ARROW SECTIONS LOUVERED "LG" INDICATES LOUVERED GREEN SECTION ONLY "PV" INDICATES ALL 12" SECTIONS PROGRAMMED VISIBILITY "8" INDICATES ALL 8" SECTIONS (ONLY WHEN SPECIFIED)
		VEHICLE SIGNAL HEAD CONSISTING OF RED, YELLOW AND GREEN LEFT ARROW SECTIONS
		VEHICLE SIGNAL HEAD CONSISTING OF RED AND YELLOW SECTIONS WITH AN UP GREEN ARROW SECTION
		VEHICLE SIGNAL HEAD (5 SECTION) CONSISTING OF RED, YELLOW AND GREEN SECTIONS WITH YELLOW AND GREEN RIGHT ARROW SECTIONS
		TYPE 15TS STANDARD WITH VEHICLE SIGNAL HEAD AND LUMINAIRE
		TYPE 21TS STANDARD WITH VEHICLE SIGNAL HEAD AND LUMINAIRE
		STANDARD WITH LUMINAIRE AND SIGNAL MAST ARMS AND ATTACHED VEHICLE SIGNAL HEADS
		TYPE 1 STANDARD WITH ATTACHED VEHICLE SIGNAL HEADS
		STANDARD WITH A SIGNAL MAST ARM, ATTACHED VEHICLE SIGNAL HEADS AND INTERNALLY ILLUMINATED STREET NAME SIGN
		CONTROLLER ASSEMBLY. DOOR INDICATES FRONT OF CABINET

SIGNAL EQUIPMENT Cont

NEW	EXISTING	
		GUARD POST
		TYPE 1 STANDARD WITH RAMP METERING SIGN
		OPTICAL DETECTOR FOR THE EMERGENCY VEHICLE DETECTION SYSTEM

NOTES:

1. All signal sections shall be 12" unless shown otherwise.
2. Signal heads shall be provided with backplates unless shown otherwise.

ILLUMINATED OVERHEAD SIGN

NEW	EXISTING	
		SINGLE POST, SINGLE ILLUMINATED SIGN, BALANCED BUTTERFLY
		SINGLE POST, DOUBLE ILLUMINATED SIGN, BALANCED BUTTERFLY
		SINGLE POST, SINGLE ILLUMINATED SIGN, FULL CANTILEVER
		DOUBLE POST, SINGLE ILLUMINATED SIGN
		SINGLE ILLUMINATED SIGN MOUNTED ON STRUCTURE
		DOUBLE POST, SINGLE ILLUMINATED SIGN WITH ELECTROLIER

STATE OF CALIFORNIA
DEPARTMENT OF TRANSPORTATION

ELECTRICAL SYSTEMS (LEGEND AND ABBREVIATIONS)

NO SCALE

RSP ES-1B DATED JULY 19, 2013 SUPERSEDES STANDARD PLAN ES-1B DATED MAY 20, 2011 - PAGE 426 OF THE STANDARD PLANS BOOK DATED 2010.

REVISED STANDARD PLAN RSP ES-1B

2010 REVISED STANDARD PLAN RSP ES-1B

7-15-13

Dist	COUNTY	ROUTE	POST MILES TOTAL PROJECT	SHEET No.	TOTAL SHEETS
01	Hum	5711		16	16

Theresa Gabriel
REGISTERED ELECTRICAL ENGINEER

July 19, 2013
PLANS APPROVAL DATE

REGISTERED PROFESSIONAL ENGINEER
Theresa Aziz Gabriel
No. E15129
Exp. 6-30-14
ELECTRICAL
STATE OF CALIFORNIA

THE STATE OF CALIFORNIA OR ITS OFFICERS OR AGENTS SHALL NOT BE RESPONSIBLE FOR THE ACCURACY OR COMPLETENESS OF SCANNED COPIES OF THIS PLAN SHEET.

TO ACCOMPANY PLANS DATED 1-21-14

EQUIPMENT IDENTIFICATION

ILLUMINATED SIGN IDENTIFICATION NUMBER:

SIGN No. 12345
10 ISL SCI 1.0

- SIGN NUMBER - PLACE ON POST OR STRUCTURE
- TRANSFORMER RATING (kVA)
- LIGHTING CONTROL TYPE
- NUMBER AND TYPE OF FIXTURES

DO NOT PLACE ON STANDARD OR STRUCTURE

ELECTROLIER OR EQUIPMENT IDENTIFICATION NUMBER:

12345 - 15'-0"

- MAST ARM LENGTH, IF SHOWN. DO NOT PLACE ON STANDARD OR STRUCTURE
- EQUIPMENT NUMBER - PLACE ON STANDARD OR STRUCTURE. EXISTING EQUIPMENT NUMBERS ARE SHOWN IN PARENTHESIS

CONDUIT AND CONDUCTOR IDENTIFICATION:

1½"C, 2#10, 15#14, 2 DLC, 12P#18 (PAIR)

- NUMBER AND SIZE OF CONDUCTORS AND CABLES
- SIZE OF CONDUIT IN INCHES

ø1, ø2, ø2P, etc.	TRAFFIC PHASE IDENTIFICATION FOR SIGNAL FACES, DETECTORS AND PHASE DIAGRAMS
1 2 3	LEGEND NUMBERS
A B C	EQUIPMENT, SIGNAL POLES, INSTALLATION OR ITEMS
1 2 3	CONDUIT RUN NUMBERS

SIGNAL AND LIGHTING STANDARD (TYPICAL DESIGNATION):

19A - 3 - 100

- WIND VELOCITY = 100 mph
- CASE 3 ARM LOADING
- STANDARD TYPE
- STANDARD PLAN SHEET NUMBER
- DETAIL, NUMBER, SECTION, TYPE OR ELEVATION

MISCELLANEOUS EQUIPMENT

NEW	EXISTING	
CMS	cms	CHANGEABLE MESSAGE SIGN
		CLOSED CIRCUIT TELEVISION CAMERA
		HIGHWAY ADVISORY RADIO POLE AND ANTENNA
EMS	ems	EXTINGUISHABLE MESSAGE SIGN
M V	m v	DETECTION DEVICE M = MICROWAVE SENSOR V = VIDEO IMAGE SENSOR

WIRING DIAGRAM LEGEND

----	EXTERNAL CONDUCTOR
——	CONDUCTOR OR BUS
	TIE POINT
	CONTACTOR COIL
	CONTACTOR, NO CONTACT
	TERMINAL BLOCKS
	CONTACTOR, NC CONTACT
	ENCLOSURE BOND
	GROUNDING ELECTRODE
	CIRCUIT BREAKER
	RECEPTACLE

PULL BOXES

NEW	EXISTING	
		PULL BOX, No. 5 UNLESS OTHERWISE INDICATED OR NOTED
3	9A(21)	PULL BOX, ADDITIONAL DESIGNATIONS OR DESCRIPTIONS

3 No. 3½ PULL BOX
5 No. 5 PULL BOX
6 No. 6 PULL BOX
7 No. 7 (CEILING PULL BOX)
8 No. 8 (PENDANT SOFFIT PULL BOX)
9 No. 9 PULL BOX
9A No. 9A PULL BOX

(C) COMMUNICATIONS PULL BOX
(E) PULL BOX WITH EXTENSION
(S) SPRINKLER CONTROL PULL BOX
(21) ANCHOR BOLTS AND CONDUIT FOR FUTURE INSTALLATION OF TYPE 21 STANDARD
(T) TRAFFIC PULL BOX

VEHICLE DETECTORS

5 J 9 U

- VEHICLE DETECTOR DESIGNATION
- U = UPPER
  L = LOWER
- SLOT NUMBER IN INPUT FILE
- INPUT FILE (I OR J)
- PHASE

NEW	EXISTING	
		TYPE A DETECTOR LOOP. OUTLINE OF SAWCUT SHOWN
		TYPE B DETECTOR LOOP. OUTLINE OF SAWCUT SHOWN
		TYPE C DETECTOR LOOP. OUTLINE OF SAWCUT SHOWN
		TYPE D DETECTOR LOOP. OUTLINE OF SAWCUT SHOWN
		TYPE E DETECTOR LOOP. OUTLINE OF SAWCUT SHOWN
		TYPE Q DETECTOR LOOP. OUTLINE OF SAWCUT SHOWN
		MAGNETIC DETECTOR
DH	dh	DETECTOR HANDHOLE
		MICROWAVE OR VIDEO DETECTION ZONE

STATE OF CALIFORNIA
DEPARTMENT OF TRANSPORTATION

ELECTRICAL SYSTEMS (LEGEND AND ABBREVIATIONS)

NO SCALE

RSP ES-1C DATED JULY 19, 2013 SUPERSEDES STANDARD PLAN ES-1C DATED MAY 20, 2011 - PAGE 427 OF THE STANDARD PLANS BOOK DATED 2010.

REVISED STANDARD PLAN RSP ES-1C

2010 REVISED STANDARD PLAN RSP ES-1C

7-11-13