Dist	COUNTY	ROUTE	POST MILES TOTAL PROJECT	SHEET No.	TOTAL SHEETS
01	Dn	101	39.6/43.7	1	18

NH-Q101(181)E

STATE OF CALIFORNIA
DEPARTMENT OF TRANSPORTATION

PROJECT PLANS FOR CONSTRUCTION ON
STATE HIGHWAY

IN DEL NORTE COUNTY NEAR SMITH RIVER FROM ROWDY CREEK TO 0.5 MILE SOUTH OF MARANDA LANE

TO BE SUPPLEMENTED BY STANDARD PLANS DATED MAY 2006

INDEX OF SHEETS

SHEET No.	DESCRIPTION
1	TITLE SHEET
2	TYPICAL CROSS SECTIONS
3-7	CONSTRUCTION DETAILS
8	Temp WATER POLLUTION CONTOL DETAILS
9	CONSTRUCTION AREA SIGNS
10	PAVEMENT DELINEATION QUANTITIES
11	SUMMARY OF QUANTITIES
12-18	NEW AND REVISED STANDARD PLANS

THE STANDARD PLANS LIST APPLICABLE TO THIS CONTRACT IS INCLUDED IN THE NOTICE TO BIDDERS AND SPECIAL PROVISIONS BOOK.

LOCATION MAP

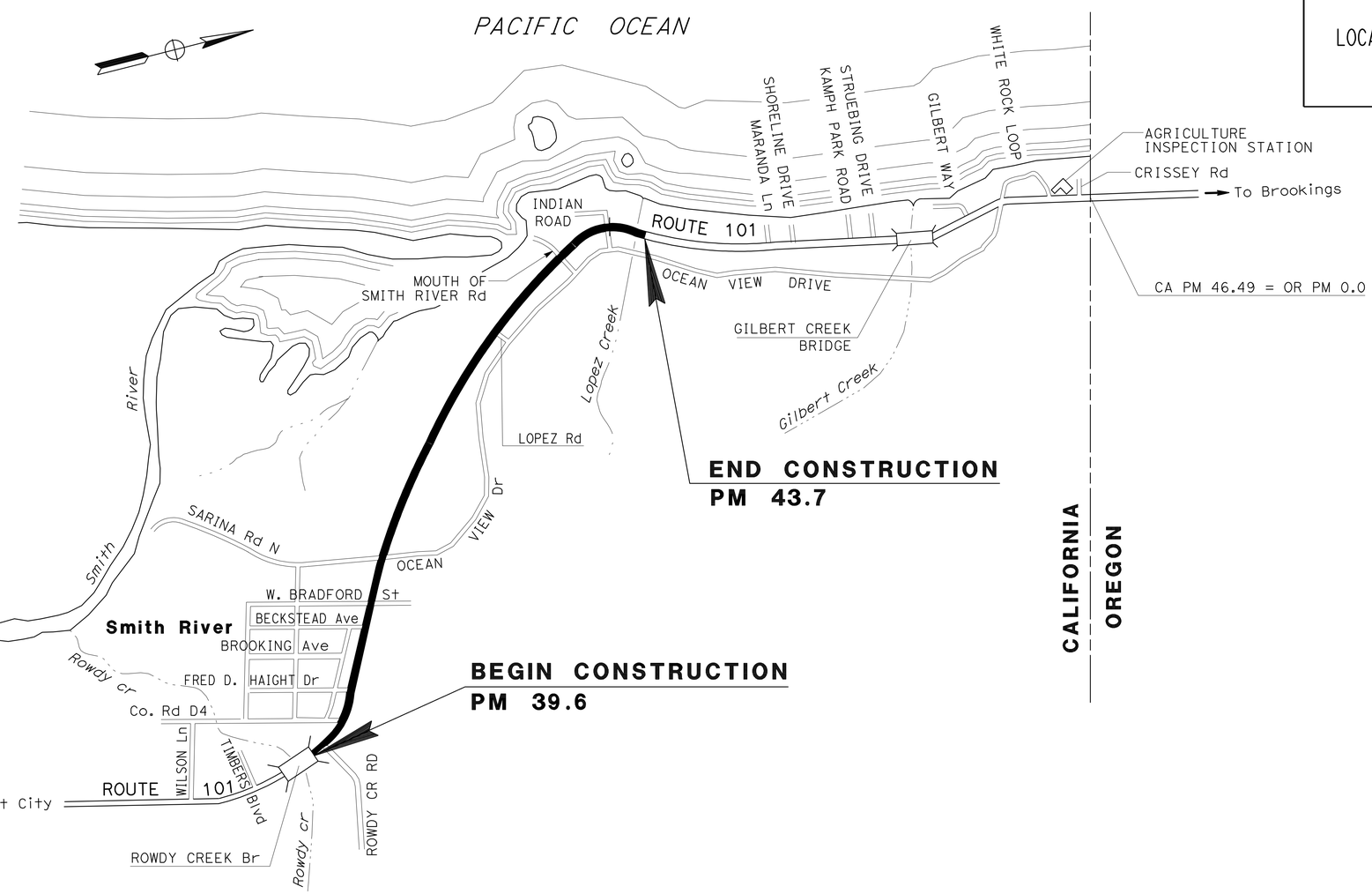

THE CONTRACTOR SHALL POSSESS THE CLASS (OR CLASSES) OF LICENSE AS SPECIFIED IN THE "NOTICE TO BIDDERS."

NO SCALE

KEN HALLIS 4-12-10
PROJECT ENGINEER DATE
REGISTERED CIVIL ENGINEER

April 12, 2010
PLANS APPROVAL DATE

REGISTERED PROFESSIONAL ENGINEER KEN HALLIS No. C 38203 Exp. 3-31-11 CIVIL STATE OF CALIFORNIA

THE STATE OF CALIFORNIA OR ITS OFFICERS OR AGENTS SHALL NOT BE RESPONSIBLE FOR THE ACCURACY OR COMPLETENESS OF SCANNED COPIES OF THIS PLAN SHEET.

CONTRACT No.	01-491404
PROJECT ID	0100000463

PROJECT MANAGER: AL TRUJILLO
DESIGN ENGINEER: AL TRUJILLO

P:\proj2\01\49140_plans\pse\149140ab001.dgn

LAST REVISION 07-29-10 | DATE PLOTTED => 02-SEP-2010 | TIME PLOTTED => 11:55

Dist	COUNTY	ROUTE	POST MILES TOTAL PROJECT	SHEET No.	TOTAL SHEETS
01	Dn	101	39.6/43.7	2	18

REGISTERED CIVIL ENGINEER 4-12-10 DATE

4-12-10
PLANS APPROVAL DATE

REGISTERED PROFESSIONAL ENGINEER KEN HALLIS No. C38203 Exp. 3-31-11 CIVIL STATE OF CALIFORNIA

THE STATE OF CALIFORNIA OR ITS OFFICERS OR AGENTS SHALL NOT BE RESPONSIBLE FOR THE ACCURACY OR COMPLETENESS OF SCANNED COPIES OF THIS PLAN SHEET.

NOTES:

1. DIMENSIONS OF THE PAVEMENT SECTIONS (STRUCTURAL SECTIONS) ARE SUBJECT TO TOLERANCES SPECIFIED IN THE STANDARD SPECIFICATIONS.
3. CATTLE CROSSINGS AT PM 41.69 AND 42.00. SEE CONSTRUCTION DETAILS.
4. CONTRACTOR STAGING AREA SHALL BE AT PM 41.72 TO 41.74 L+.

DESIGN DESIGNATION

2010	ADT	7070	D = 60%
2020	ADT	8430	T = 4%
2030	ADT	9790	V = 55 MPH

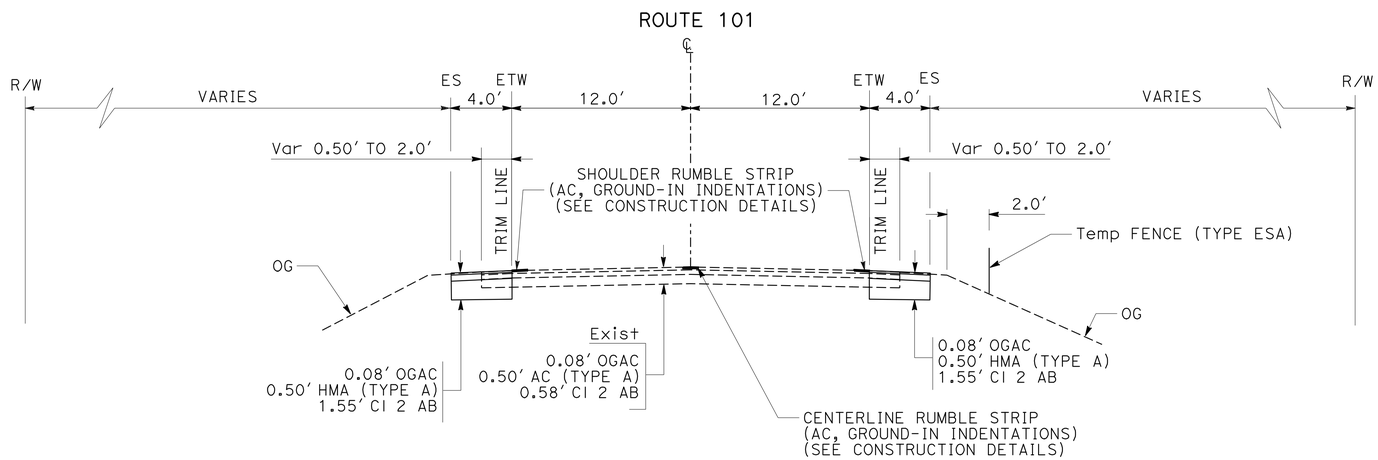

ROUTE 101
PM 41.02 TO 42.25

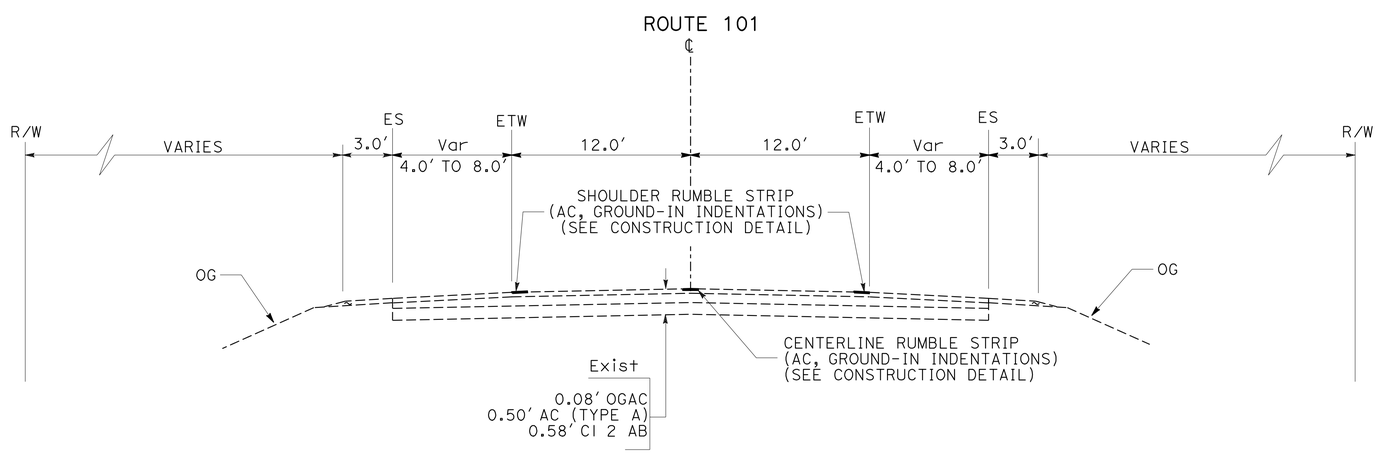

ROUTE 101
PM 39.6 TO 41.02
PM 42.25 TO 43.7

TYPICAL CROSS SECTIONS

NO SCALE **X-1**

REVISED BY	DATE REVISED
RYAN PRINS	KEN HALLIS
CALCULATED-DESIGNED BY	CHECKED BY
FUNCTIONAL SUPERVISOR	AL TRUJILLO

STATE OF CALIFORNIA - DEPARTMENT OF TRANSPORTATION
Caltrans® **DESIGN**

P:\proj2\01\49140_plans\pse\149140ca001.dgn

LAST REVISION 03-23-10 | DATE PLOTTED => 02-SEP-2010 TIME PLOTTED => 11:55

Dist	COUNTY	ROUTE	POST MILES TOTAL PROJECT	SHEET No.	TOTAL SHEETS
01	Dn	101	39.6/43.7	3	18

REGISTERED CIVIL ENGINEER 4-12-10 DATE

4-12-10
PLANS APPROVAL DATE

REGISTERED PROFESSIONAL ENGINEER KEN HALLIS No. C38203 Exp. 3-31-11 CIVIL STATE OF CALIFORNIA

THE STATE OF CALIFORNIA OR ITS OFFICERS OR AGENTS SHALL NOT BE RESPONSIBLE FOR THE ACCURACY OR COMPLETENESS OF SCANNED COPIES OF THIS PLAN SHEET.

NOTE:

1. FOR DETAILS NOT SHOWN, SEE Std PLAN A20A, A20B.

LEGEND

RETROREFLECTIVE PAVEMENT MARKER

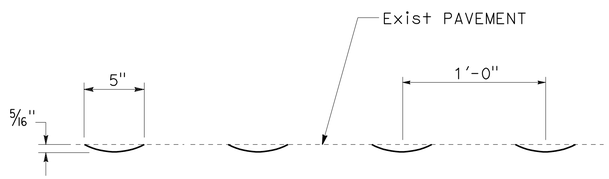

ELEVATION
APPLIES TO OUTSIDE SHOULDER GROUND IN RUMBLE STRIP

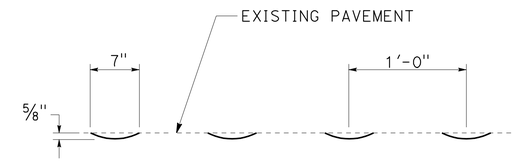

ELEVATION
CENTER MEDIAN/INSIDE SHOULDER AREA

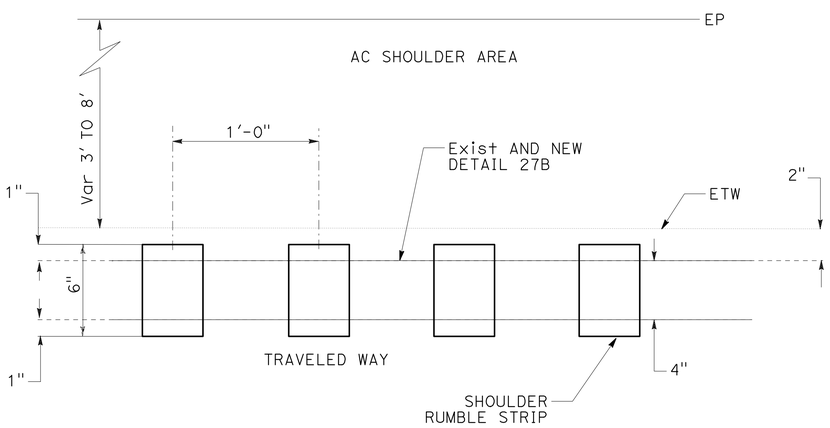

PLAN
DETAIL 27B

OUTSIDE SHOULDER GROUND-IN RUMBLE STRIP

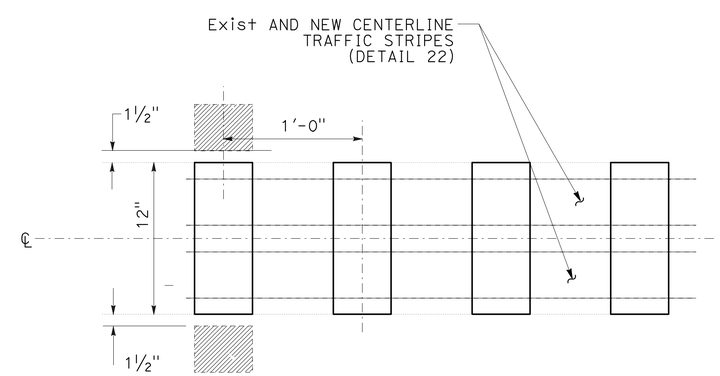

PLAN
DETAIL 22

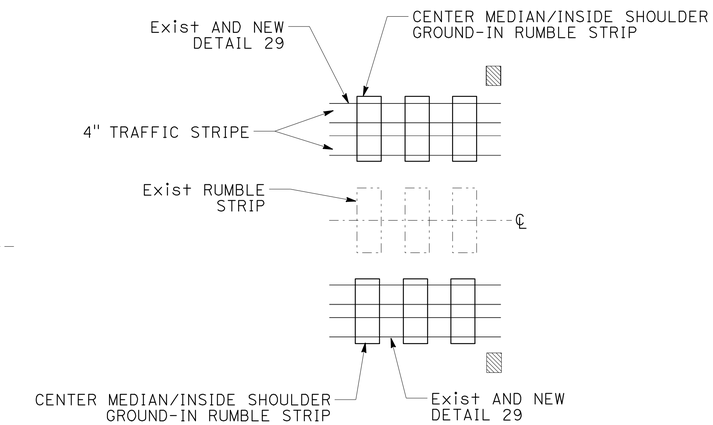

PLAN
DETAIL 29

CENTER MEDIAN/INSIDE SHOULDER AREA GROUND-IN RUMBLE STRIP

CONSTRUCTION DETAILS

NO SCALE

C-1

REVISED BY | DATE REVISED
RYAN PRINS | KEN HALLIS
CALCULATED-DESIGNED BY | CHECKED BY
FUNCTIONAL SUPERVISOR
AL TRUJILLO

STATE OF CALIFORNIA - DEPARTMENT OF TRANSPORTATION
Caltrans
DESIGN

P:\proj2\01\49140_plans\pse\149140ga001.dgn

LAST REVISION 03-23-10 | DATE PLOTTED => 02-SEP-2010 | TIME PLOTTED => 11:55

Dist	COUNTY	ROUTE	POST MILES TOTAL PROJECT	SHEET No.	TOTAL SHEETS
01	Dn	101	39.6/43.7	4	18

REGISTERED CIVIL ENGINEER 4-12-10 DATE

4-12-10
PLANS APPROVAL DATE

REGISTERED PROFESSIONAL ENGINEER
KEN HALLIS
No. C38203
Exp. 3-31-11
CIVIL
STATE OF CALIFORNIA

THE STATE OF CALIFORNIA OR ITS OFFICERS OR AGENTS SHALL NOT BE RESPONSIBLE FOR THE ACCURACY OR COMPLETENESS OF SCANNED COPIES OF THIS PLAN SHEET.

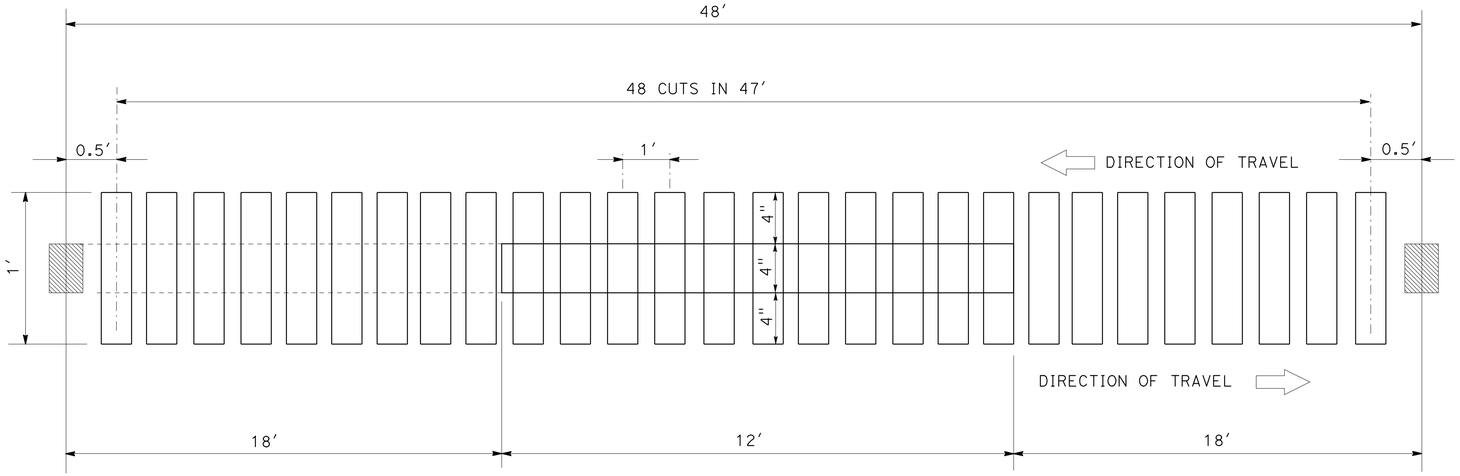

PLAN

MODIFIED GROUND-IN RUMBLE STRIP/DETAIL 6

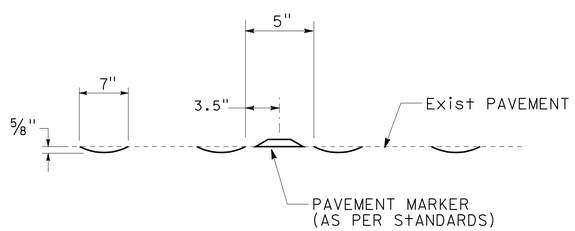

ELEVATION

GROUND-IN RUMBLE STRIP TYPICALS

CENTER MEDIAN AREA

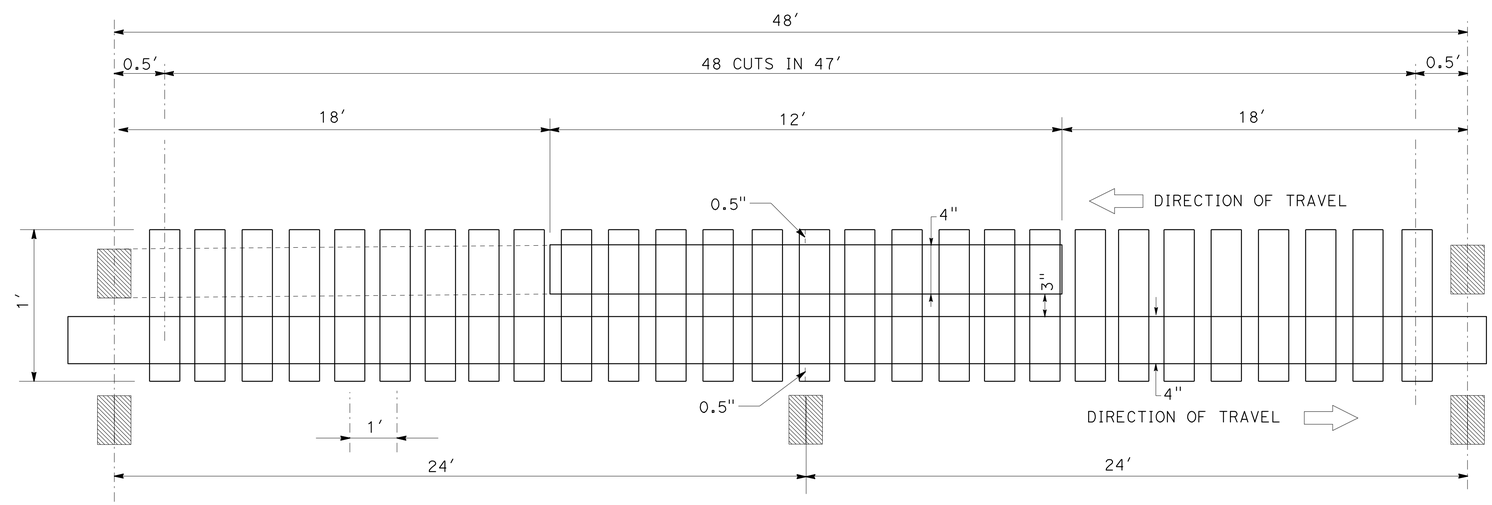

PLAN

MODIFIED GROUND-IN RUMBLE STRIP/DETAIL 19 AND 32

CONSTRUCTION DETAILS

NO SCALE

C-2

REVISED BY | DATE REVISED
RYAN PRINS | KEN HALLIS
CALCULATED-DESIGNED BY | CHECKED BY
FUNCTIONAL SUPERVISOR
AL TRUJILLO

STATE OF CALIFORNIA - DEPARTMENT OF TRANSPORTATION
Caltrans®
DESIGN

P:\proj2\01\491401_plans\pse\149140ga002.dgn

LAST REVISION 03-23-10 | DATE PLOTTED => 02-SEP-2010 | TIME PLOTTED => 11:55

Dist	COUNTY	ROUTE	POST MILES TOTAL PROJECT	SHEET No.	TOTAL SHEETS
01	Dn	101	39.6/43.7	5	18

REGISTERED CIVIL ENGINEER 4-12-10 DATE

4-12-10
PLANS APPROVAL DATE

REGISTERED PROFESSIONAL ENGINEER KEN HALLIS No. C38203 Exp. 3-31-11 CIVIL STATE OF CALIFORNIA

THE STATE OF CALIFORNIA OR ITS OFFICERS OR AGENTS SHALL NOT BE RESPONSIBLE FOR THE ACCURACY OR COMPLETENESS OF SCANNED COPIES OF THIS PLAN SHEET.

NOTE:

1. EXISTING UTILITY FACILITIES HAVE NOT BEEN PLOTTED ON THESE PLANS.

LEGEND

RUMBLE STRIP

DIRECTION OF TRAVEL

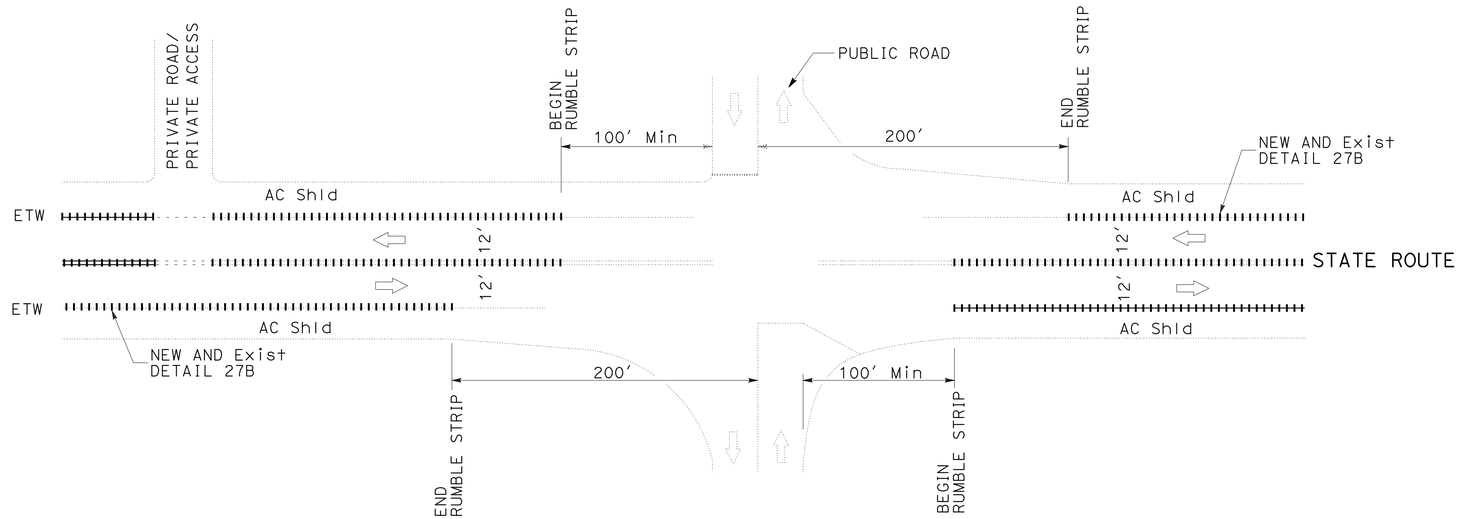

PUBLIC INTERSECTION / PRIVATE ROAD / PRIVATE ACCESS

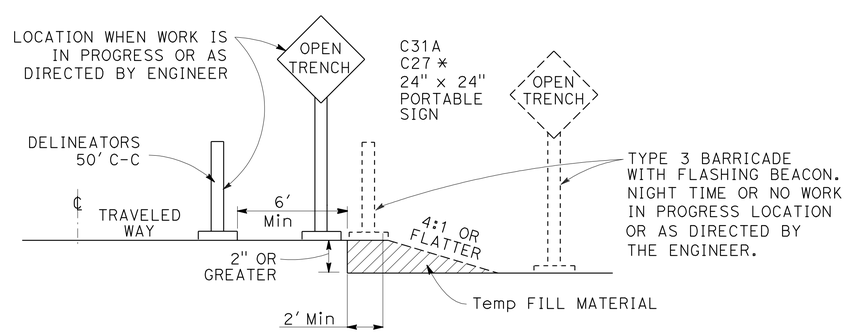

OPEN TRENCH SIGNING AND MARKING

* PLACE AT 250' INTERVALS THROUGH THE OPEN TRENCH AREA, ALTERNATE C27 (OPEN TRENCH) AND C31A (NO SHOULDER) SIGNS

CONSTRUCTION DETAILS

NO SCALE

C-3

REVISED BY | DATE REVISED

RYAN PRINS | KEN HALLIS

CALCULATED-DESIGNED BY | CHECKED BY

FUNCTIONAL SUPERVISOR: AL TRUJILLO

STATE OF CALIFORNIA - DEPARTMENT OF TRANSPORTATION

Caltrans® DESIGN

P:\proj2\01\49140_plans\pse\149140ga003.dgn

LAST REVISION 03-23-10 | DATE PLOTTED => 02-SEP-2010 | TIME PLOTTED => 11:55

Dist	COUNTY	ROUTE	POST MILES TOTAL PROJECT	SHEET No.	TOTAL SHEETS
01	Dn	101	39.6/43.7	6	18

REGISTERED CIVIL ENGINEER 4-12-10 DATE

4-12-10
PLANS APPROVAL DATE

REGISTERED PROFESSIONAL ENGINEER KEN HALLIS No. C38203 Exp. 3-31-11 CIVIL STATE OF CALIFORNIA

THE STATE OF CALIFORNIA OR ITS OFFICERS OR AGENTS SHALL NOT BE RESPONSIBLE FOR THE ACCURACY OR COMPLETENESS OF SCANNED COPIES OF THIS PLAN SHEET.

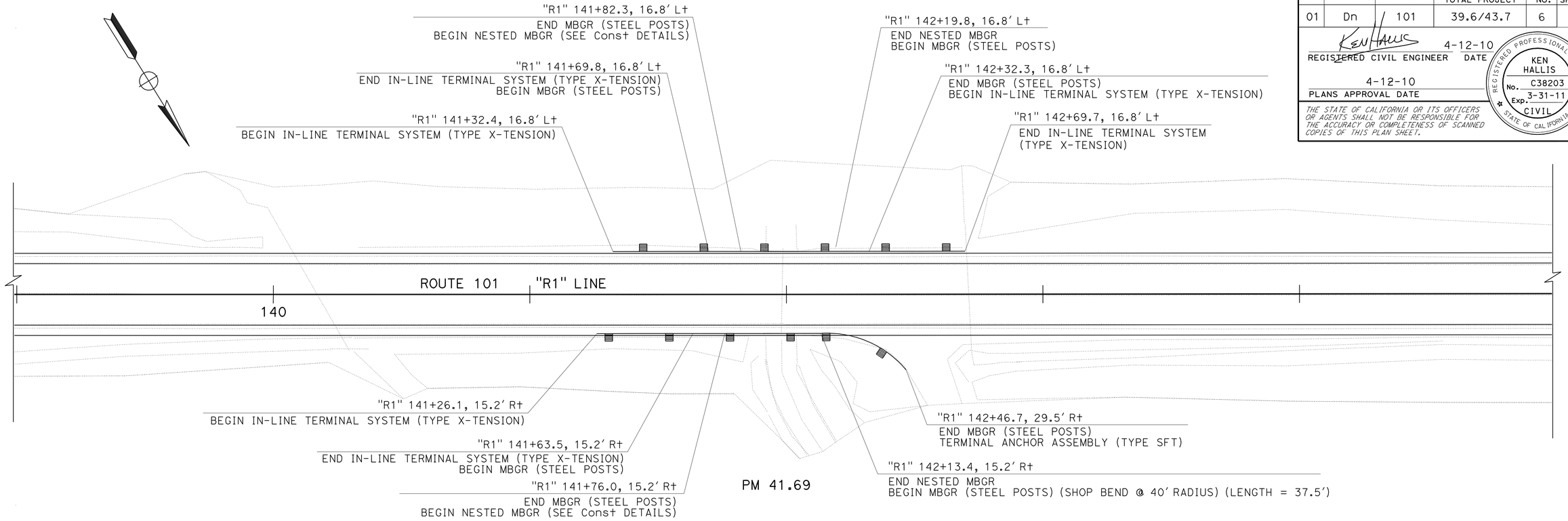

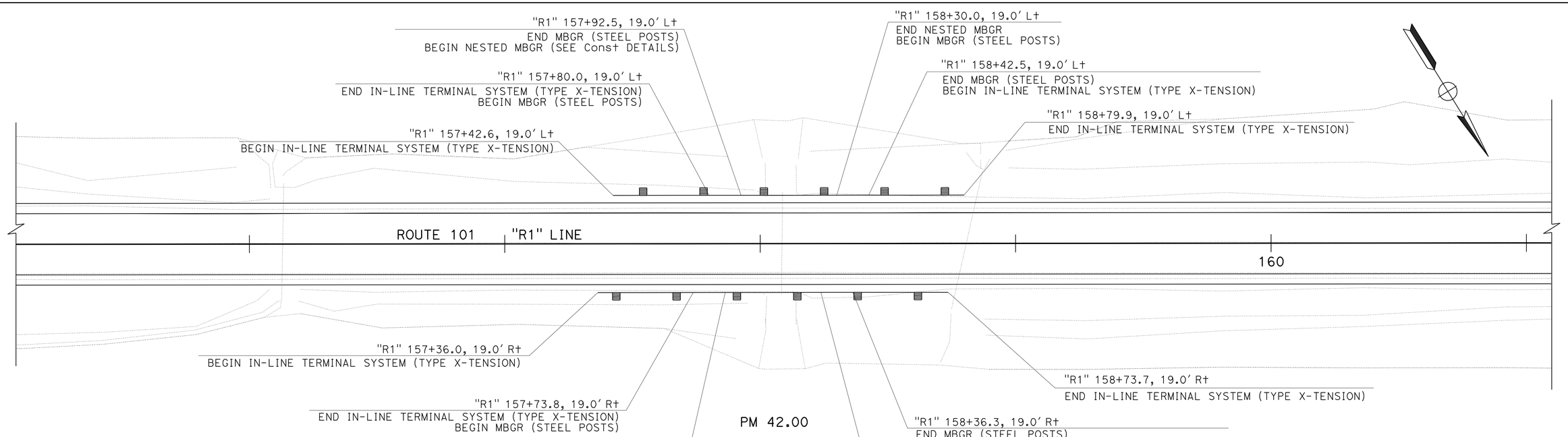

CONSTRUCTION DETAILS

SCALE: 1" = 20′

C-4

REVISED BY | DATE REVISED
RYAN PRINS | KEN HALLIS
CALCULATED-DESIGNED BY | CHECKED BY
FUNCTIONAL SUPERVISOR
AL TRUJILLO

STATE OF CALIFORNIA - DEPARTMENT OF TRANSPORTATION
Caltrans
DESIGN

P:\proj2\01\49140_plans\pse\149140ga004.dgn

LAST REVISION 03-23-10 | DATE PLOTTED => 02-SEP-2010 | TIME PLOTTED => 11:55

Dist	COUNTY	ROUTE	POST MILES TOTAL PROJECT	SHEET No.	TOTAL SHEETS
01	Dn	101	39.6/43.7	7	18

REGISTERED CIVIL ENGINEER 4-12-10 DATE

4-12-10
PLANS APPROVAL DATE

REGISTERED PROFESSIONAL ENGINEER KEN HALLIS No. C38203 Exp. 3-31-11 CIVIL STATE OF CALIFORNIA

THE STATE OF CALIFORNIA OR ITS OFFICERS OR AGENTS SHALL NOT BE RESPONSIBLE FOR THE ACCURACY OR COMPLETENESS OF SCANNED COPIES OF THIS PLAN SHEET.

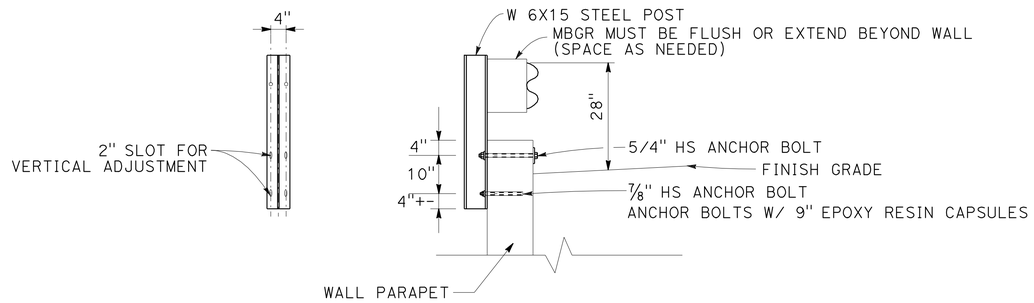

SECTION A-A
STEEL POST ATTACHMENT

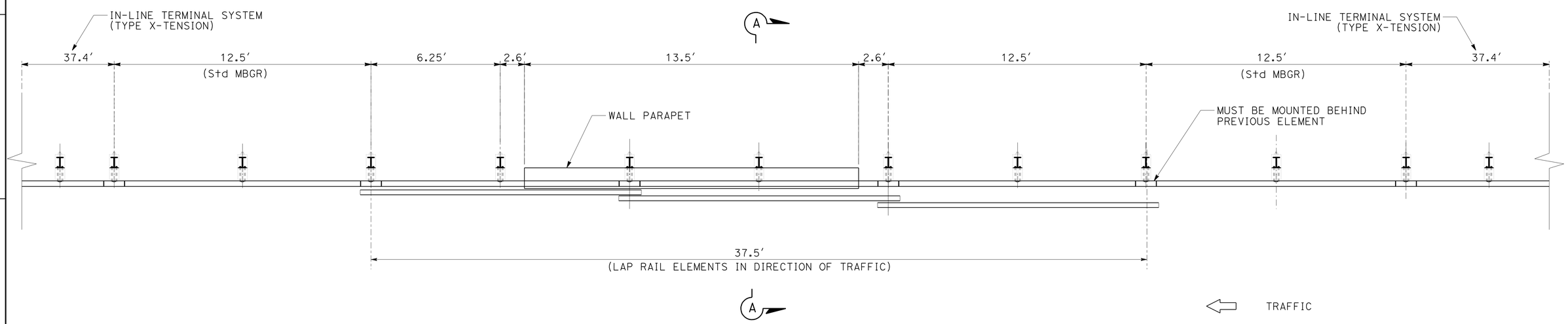

MBGR DOUBLE RAIL ELEMENT LAP DETAIL

MBGR AT CATTLE PASS PM 41.69 (WEST SIDE)
AND CATTLE PASS PM 42.0 (WEST AND EAST SIDES)
(SEE Const DETAIL SHEET C-4)

CONSTRUCTION DETAILS

NO SCALE

C-5

REVISED BY | DATE REVISED
RYAN PRINS | KEN HALLIS
CALCULATED-DESIGNED BY | CHECKED BY
FUNCTIONAL SUPERVISOR
AL TRUJILLO

STATE OF CALIFORNIA - DEPARTMENT OF TRANSPORTATION
Caltrans
DESIGN

P:\proj2\01\491401_plans\pse\149140ga005.dgn

LAST REVISION 03-23-10 | DATE PLOTTED => 02-SEP-2010 | TIME PLOTTED => 11:55

Dist	COUNTY	ROUTE	POST MILES TOTAL PROJECT	SHEET No.	TOTAL SHEETS
01	Dn	101	39.6/43.7	8	18

REGISTERED CIVIL ENGINEER 4-12-10 DATE

4-12-10
PLANS APPROVAL DATE

REGISTERED PROFESSIONAL ENGINEER KEN HALLIS No. C38203 Exp. 3-31-11 CIVIL STATE OF CALIFORNIA

THE STATE OF CALIFORNIA OR ITS OFFICERS OR AGENTS SHALL NOT BE RESPONSIBLE FOR THE ACCURACY OR COMPLETENESS OF SCANNED COPIES OF THIS PLAN SHEET.

NOTE:

1. TEMPORARY SILT FENCE AND TEMPORARY STRAW BALE BARRIER SHOWN FOR REFERENCE PURPOSES ONLY.

SIGN DETAIL

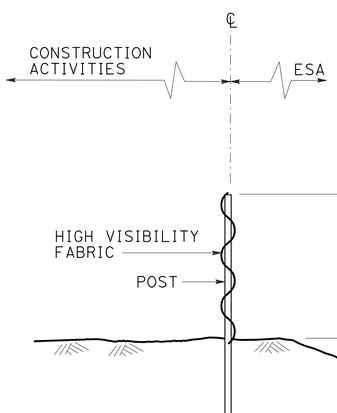

SECTION

TEMPORARY FENCE (TYPE ESA)

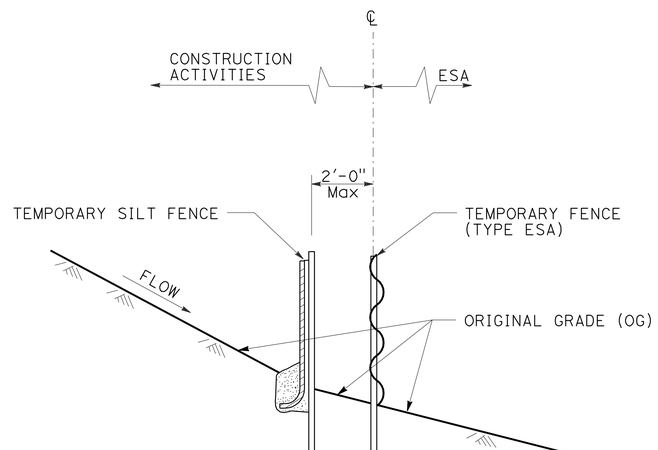

SECTION

PLACEMENT DETAIL FOR TEMPORARY SILT FENCE USED WITH TEMPORARY FENCE (TYPE ESA)

(SEE NOTE 1)

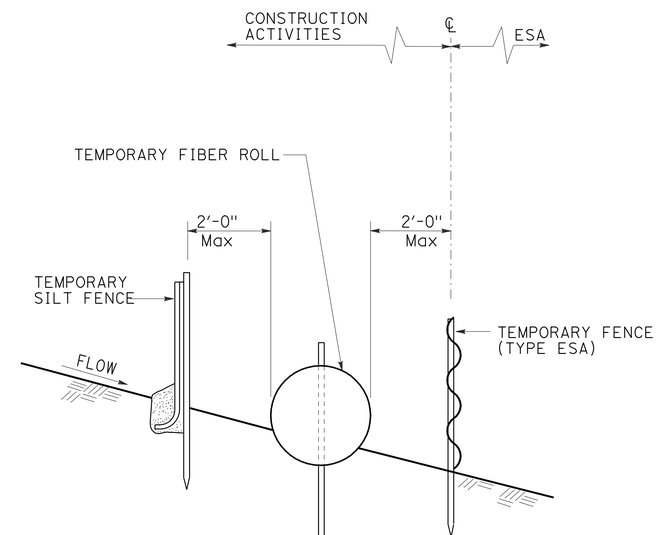

SECTION

PLACEMENT DETAIL FOR TEMPORARY SILT FENCE AND TEMPORARY STRAW BALE BARRIER USED WITH TEMPORARY FENCE (TYPE ESA)

(SEE NOTE 1)

TEMPORARY WATER POLLUTION CONTROL DETAILS [TEMPORARY FENCE (TYPE ESA)]

NO SCALE

WPC- 1

REVISED BY	DATE REVISED
RYAN PRINS	KEN HALLIS

CALCULATED-DESIGNED BY / CHECKED BY

FUNCTIONAL SUPERVISOR: AL TRUJILLO

STATE OF CALIFORNIA - DEPARTMENT OF TRANSPORTATION

Caltrans® DESIGN

P:\proj2\01\49140_plans\pse\149140gb001.dgn

LAST REVISION 03-23-10 | DATE PLOTTED => 02-SEP-2010 | TIME PLOTTED => 11:55

Dist	COUNTY	ROUTE	POST MILES TOTAL PROJECT	SHEET No.	TOTAL SHEETS
01	Dn	101	39.6/43.7	9	18

REGISTERED CIVIL ENGINEER 4-12-10 DATE

4-12-10
PLANS APPROVAL DATE

REGISTERED PROFESSIONAL ENGINEER KEN HALLIS No. C38203 Exp. 3-31-11 CIVIL STATE OF CALIFORNIA

THE STATE OF CALIFORNIA OR ITS OFFICERS OR AGENTS SHALL NOT BE RESPONSIBLE FOR THE ACCURACY OR COMPLETENESS OF SCANNED COPIES OF THIS PLAN SHEET.

NOTES:

1. LOCATION OF CONSTRUCTION AREA SIGNS ARE APPROXIMATE. EXACT LOCATION OF ALL SIGNS TO BE DETERMINED BY ENGINEER.
2. EXISTING UTILITY FACILITIES HAVE NOT BEEN PLOTTED ON THESE PLANS.

LEGEND

BARRICADE

DIRECTION OF TRAVEL

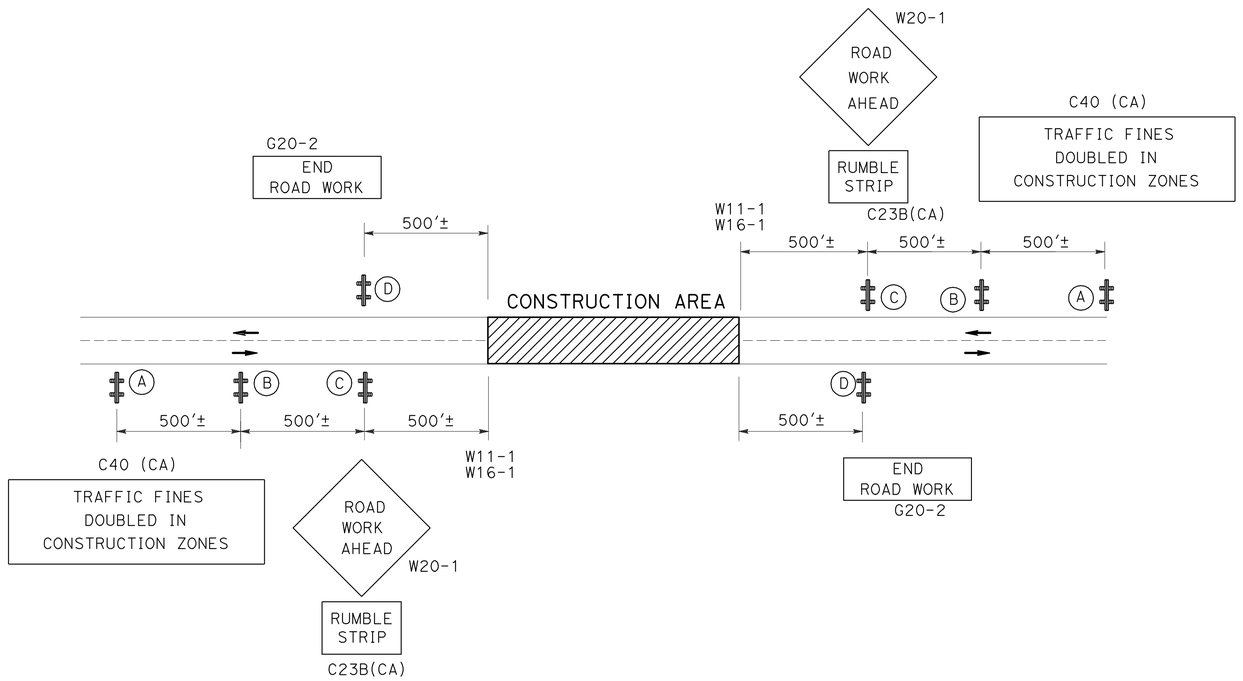

CONSTRUCTION AREA SIGNS (STATIONARY MOUNTED)

SIGN No.	SIGN CODE	PANEL SIZE	SIGN MESSAGE	No. AND SIZE OF POSTS	No. OF SIGNS
A	C40 (CA)	72" x 36"	TRAFFIC FINES DOUBLED IN CONSTRUCTION ZONES	BARRICADE MOUNTED	2
B	W20-1 C23B(CA)	48" x 48" 24" x 18"	ROAD WORK AHEAD RUMBLE STRIP	BARRICADE MOUNTED	2
C	W11-1 W16-1	36" x 36" 30" x 24"	BICYCLES SHARE THE ROAD	BARRICADE MOUNTED	4
D	G20-2	36" x 18"	END ROAD WORK	BARRICADE MOUNTED	2

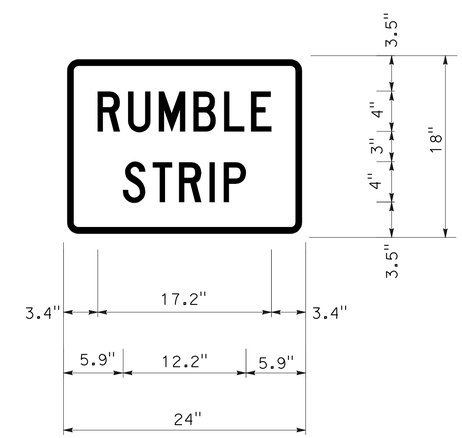

SIGN C23B (CA)

1.5" RADIUS, 0.6" BORDER, 0.4" INDENT, BLACK ON ORANGE;
[RUMBLE] C; [STRIP] C;

CONSTRUCTION AREA SIGNS

NO SCALE

CS-1

REVISED BY | DATE REVISED
RYAN PRINS | KEN HALLIS
CALCULATED-DESIGNED BY | CHECKED BY
FUNCTIONAL SUPERVISOR
AL TRUJILLO

STATE OF CALIFORNIA - DEPARTMENT OF TRANSPORTATION
Caltrans
DESIGN

P:\proj2\01\491401_plans\pse\1491401a001.dgn

LAST REVISION 03-23-10 | DATE PLOTTED => 02-SEP-2010 | TIME PLOTTED => 11:55

Dist	COUNTY	ROUTE	POST MILES TOTAL PROJECT	SHEET No.	TOTAL SHEETS
01	Dn	101	39.6/43.7	10	18

REGISTERED CIVIL ENGINEER 4-12-10 DATE

4-12-10
PLANS APPROVAL DATE

REGISTERED PROFESSIONAL ENGINEER KEN HALLIS No. C38203 Exp. 3-31-11 CIVIL STATE OF CALIFORNIA

THE STATE OF CALIFORNIA OR ITS OFFICERS OR AGENTS SHALL NOT BE RESPONSIBLE FOR THE ACCURACY OR COMPLETENESS OF SCANNED COPIES OF THIS PLAN SHEET.

NOTES:

1. (N) - NOT A SEPARATE PAY ITEM, FOR INFORMATION ONLY.
2. ANY SINGLE CENTERLINE DETAIL WAS REPORTED AS R+ SIDE CENTERLINE.

STRIPING AND PAVEMENT MARKER QUANTITIES

PM LOCATION FROM	PM LOCATION TO	DETAIL No.	DETAIL LENGTH	THERMOPLASTIC TRAFFIC STRIPE 4" WHITE	THERMOPLASTIC TRAFFIC STRIPE 4" YELLOW	THERMOPLASTIC TRAFFIC STRIPE (BROKEN 36-12)	RETROREFLECTIVE PAVEMENT MARKERS Type D	RETROREFLECTIVE PAVEMENT MARKERS Type H	REMOVE Pvm+ MARKERS	COMMENTS
			F+	F+	F+	F+	EA	EA	EA	
39.67	39.71	22	211		422		20		20	BEGIN AT NORTH END OF ROWDY CREEK BRIDGE (01-0023)
39.67 R+	39.70 R+	27B	158	158						
39.67 L+	39.81 L+	27B	739	739						
39.71	39.73	22	106		212		10		10	
39.68 R+	40.33 R+	27B	4858	4858						
39.70	39.76	29	317		1268		28		28	
39.76	39.81	22	264		528		24		24	
39.82	39.87	29	264		1056		24		24	
39.83 L+	39.94 L+	27B	581	581						
39.87	39.94	22	370		740		32		32	
39.95	39.98	22	158		316		16		16	
39.95 L+	40.08 L+	27B	686	686						
39.98	40.05	29	370		1480		32		32	
40.05	40.08	22	158		316		16		16	
40.09	40.19	29	528		2112		46		46	
40.10 L+	40.33 L+	27B	1214	1214						
40.19	40.33	22	739		1478		64		64	
40.34	40.39	19L	264		264	264	6	12	18	
40.35 R+	40.84 R+	27B	2587	2587						
40.35 L+	40.86 L+	27B	2693	2693						
40.39	40.62	6	1214			1214	26		26	
40.62	40.69	19R	370		370	370	8	16	24	
40.69	40.72	22	158		316		16		16	
40.72	40.83	29	581		2324		50		50	
40.83	40.86	22	158		316		16		16	
40.87	40.92	22	264		528		24		24	
40.88 R+	42.53 R+	27B	8712	8712						
40.88 L+	42.54 L+	27B	8765	8765						
40.92	41.02	29	528		2112		46		46	
41.02	41.14	22	634		1268		54		54	
41.14	41.22	19R	422		422	422	10	19	29	
41.22	41.84	6	3274			3274	69		69	
41.84	41.93	19L	475		475	475	11	21	32	
41.93	42.19	6	1373			1373	30		30	
42.19	42.27	19R	422		422	422	10	19	29	
42.27	42.39	29	634		2536		54		54	
42.39	42.54	32	792		1584	1584	68		68	
42.55	43.16	32	3221		6442	6442	270		270	
42.56 R+	43.14 R+	27B	3062	3062						
42.56 L+	42.66 L+	27B	528	528						
42.68 L+	42.75 L+	27B	370	370						
42.76 L+	42.80 L+	27B	211	211						
42.82 L+	42.90 L+	27B	422	422						
42.91 L+	43.16 L+	27B	1320	1320						
43.17	43.55	32	2006		4012	4012	170		170	
43.17 R+	43.54 R+	27B	1954	1954						
43.18 L+	43.55 L+	27B	1954	1954						
43.56	43.65	32	475		950	950	42		42	
43.57 R+	43.75 R+	27B	950	950						
43.57 L+	43.75 L+	27B	950	950						
43.66	43.73	29	370		1480		32		32	
43.73	43.75	22	106		212		10		10	NORTH END OF PROJECT
			SUBTOTAL	42,714	35,961	20,802	1334	87		
			TOTAL	78,675		20,802	1421		1421	

GROUND-IN RUMBLE STRIP QUANTITIES

PM LOCATION FROM	PM LOCATION TO	DETAIL No.	SHOULDER RUMBLE STRIP (AC, GROUND-IN INDENTATIONS) LENGTH	SHOULDER RUMBLE STRIP L+ Shld	SHOULDER RUMBLE STRIP R+ Shld	CENTERLINE RUMBLE STRIP (AC, GROUND-IN INDENTATIONS) L+ CL	CENTERLINE RUMBLE STRIP R+ CL
			STA	STA	STA	STA	STA
39.67	39.71	22	2.11				2.11
39.67 R+	39.70 R+	27B	1.58		1.58		
39.67 L+	39.81 L+	27B	7.39	7.39			
39.71	39.73	22	1.06				1.06
39.71 R+	40.33 R+	27B	32.74		32.74		
39.70	39.76	29	3.17			3.17	3.17
39.76	39.81	22	2.64				2.64
39.82	39.87	29	2.64			2.64	2.64
39.83 L+	39.94 L+	27B	5.81	5.81			
39.87	39.94	22	3.70				3.70
39.95	39.98	22	1.58				1.58
39.95 L+	40.08 L+	27B	6.86	6.86			
39.98	40.05	29	3.70			3.70	3.70
40.05	40.08	22	1.58				1.58
40.09	40.19	29	5.28			5.28	528
40.10 L+	40.33 L+	27B	12.14	12.14			
40.19	40.33	22	7.39				7.39
40.34	40.39	19L	2.64				2.64
40.35 R+	40.84 R+	27B	25.87		25.87		
40.35 L+	40.86 L+	27B	26.93	26.93			
40.39	40.62	6	12.14				12.14
40.62	40.69	19R	3.70				3.70
40.69	40.72	22	1.58				1.58
40.72	40.83	29	5.81			5.81	5.81
40.83	40.86	22	1.58				1.58
40.87	40.92	22	2.64				2.64
40.88 R+	42.53 R+	27B	87.12		87.12		
40.88 L+	42.54 L+	27B	87.65	87.65			
40.92	41.02	29	5.28			5.28	5.28
41.02	41.14	22	6.34				6.34
41.14	41.22	19R	4.22				4.22
41.22	41.84	6	32.74				32.74
41.84	41.93	19L	4.75				4.75
41.93	42.19	6	13.73				13.73
42.19	42.27	19R	4.22				4.22
42.27	42.39	29	6.34			6.34	6.34
42.39	42.54	32	7.92			7.92	7.92
42.55	43.16	32	32.21			32.21	32.21
42.56 R+	43.14 R+	27B	30.62		30.62		
42.56 L+	42.66 L+	27B	5.28	5.28			
42.68 L+	42.75 L+	27B	3.70	3.70			
42.76 L+	42.80 L+	27B	2.11	2.11			
42.82 L+	42.90 L+	27B	4.22	4.22			
42.91 L+	43.16 L+	27B	13.20	13.20			
43.17	43.55	32	20.06			20.06	20.06
43.17 R+	43.54 R+	27B	19.54		19.54		
43.18 L+	43.55 L+	27B	19.54	19.54			
43.56	43.65	32	4.75			4.75	4.75
43.57 R+	43.75 R+	27B	9.50		9.50		
43.57 L+	43.75 L+	27B	9.50	9.50			
43.66	43.73	29	3.70			3.70	3.70
43.73	43.75	22	1.06				1.06
			SUBTOTAL	204.33	206.97	100.86	212.26
			TOTAL	411.30		313.12	

PAVEMENT DELINEATION QUANTITIES

PDQ-1

REVISED BY | DATE REVISED
RYAN PRINS | KEN HALLIS
CALCULATED-DESIGNED BY | CHECKED BY
FUNCTIONAL SUPERVISOR: AL TRUJILLO

STATE OF CALIFORNIA - DEPARTMENT OF TRANSPORTATION
Caltrans® DESIGN

P:\proj2\01\49140_plans\pse\149140nc001.dgn

LAST REVISION 03-23-10 | DATE PLOTTED => 02-SEP-2010 | TIME PLOTTED => 11:55

Dist	COUNTY	ROUTE	POST MILES TOTAL PROJECT	SHEET No.	TOTAL SHEETS
01	Dn	101	39.6/43.7	11	18

REGISTERED CIVIL ENGINEER 4-12-10 DATE

4-12-10
PLANS APPROVAL DATE

REGISTERED PROFESSIONAL ENGINEER KEN HALLIS No. C38203 Exp. 3-31-11 CIVIL STATE OF CALIFORNIA

THE STATE OF CALIFORNIA OR ITS OFFICERS OR AGENTS SHALL NOT BE RESPONSIBLE FOR THE ACCURACY OR COMPLETENESS OF SCANNED COPIES OF THIS PLAN SHEET.

NOTE:

1. (N) - NOT A SEPARATE PAY ITEM, FOR INFORMATION ONLY

METAL BEAM GUARDRAIL

POSTMILE	STATION RANGE	METAL BEAM GUARD RAIL (STEEL POST)	(N) DOUBLE RAIL ELEMENT	IN-LINE TERMINAL SYSTEM (TYPE X-TENSION)	TERMINAL ANCHOR ASSEMBLY (TYPE SFT)
		LF	LF	EA	EA
41.69	"R1" 141+69.8 L+ TO 142+32 L+	62.5	37.5	2	
	"R1" 141+63.5 R+ TO 142+46.7 R+	87.5		1	1
42.0	"R1" 157+80 L+ TO 158+42.5 L+	62.5	37.5	2	
	"R1" 157+73.8 R+ TO 158+36.3 R+	62.5	37.5	2	
	TOTAL	275.0	112.5	7	1

ROADWAY QUANTITIES

STATION RANGE	ROADWAY EXCAVATION	CLASS 2 AGGREGATE BASE	HOT MIX ASPHAL (TYPE A)	HOT MIX ASPHALT (OPEN GRADED)	Temp FIBER ROLL	Temp SILT FENCE	Temp CHECK DAM	TACK COAT	Temp FENCE (TYPE ESA)
	CY	CY	TON	TON	LF	LF	LF	TON	LF
PM 41.02 TO 42.25	3970	2958	1940	310	6500	700	200	1	700
TOTAL	3970	2958	1940	310	6500	700	200	1	700

SUMMARY OF QUANTITIES

Q-1

REVISED BY | DATE REVISED
RYAN PRINS | KEN HALLIS
CALCULATED-DESIGNED BY | CHECKED BY
FUNCTIONAL SUPERVISOR: AL TRUJILLO

STATE OF CALIFORNIA - DEPARTMENT OF TRANSPORTATION
Caltrans
DESIGN

P:\proj2\01\49140_plans\pse\149140pa001.dgn

LAST REVISION 03-23-10 | DATE PLOTTED => 02-SEP-2010 | TIME PLOTTED => 11:55

DIST	COUNTY	ROUTE	POST MILES TOTAL PROJECT	SHEET NO.	TOTAL SHEETS
01	Dn	101	39.6/43.7	12	18

Randell D. Hiatt
REGISTERED CIVIL ENGINEER

October 20, 2006
PLANS APPROVAL DATE

REGISTERED PROFESSIONAL ENGINEER
Randell D. Hiatt
No. C50200
Exp. 6-30-07
CIVIL
STATE OF CALIFORNIA

The State of California or its officers or agents shall not be responsible for the accuracy or completeness of electronic copies of this plan sheet.

To accompany plans dated 04-12-10

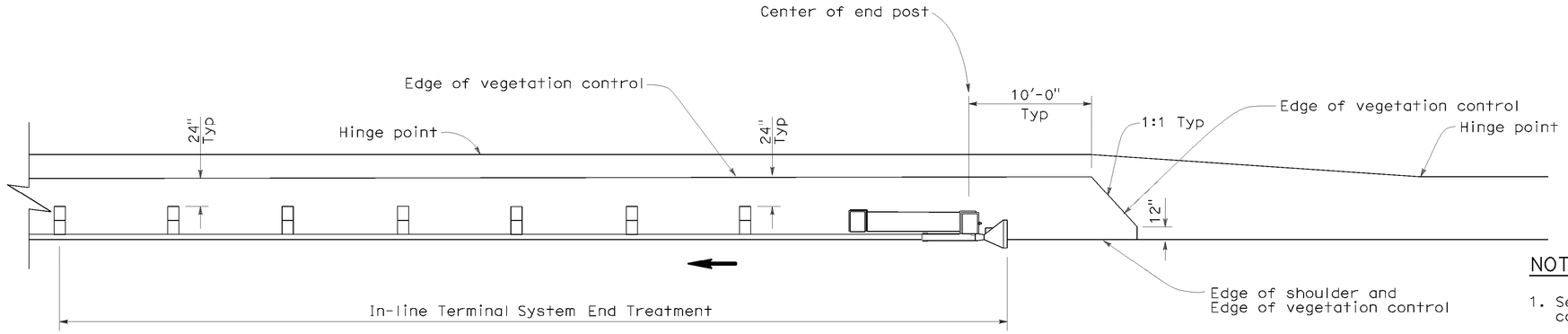

PLAN

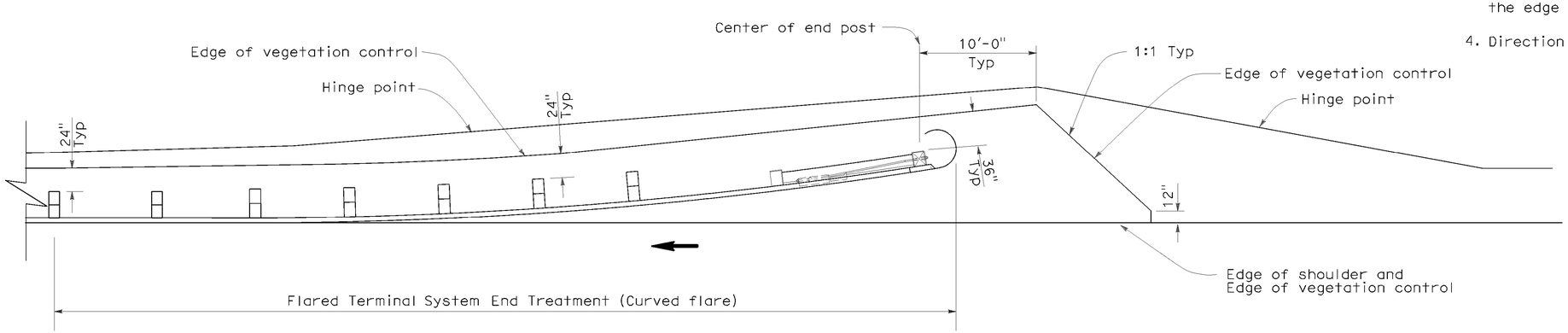

PLAN

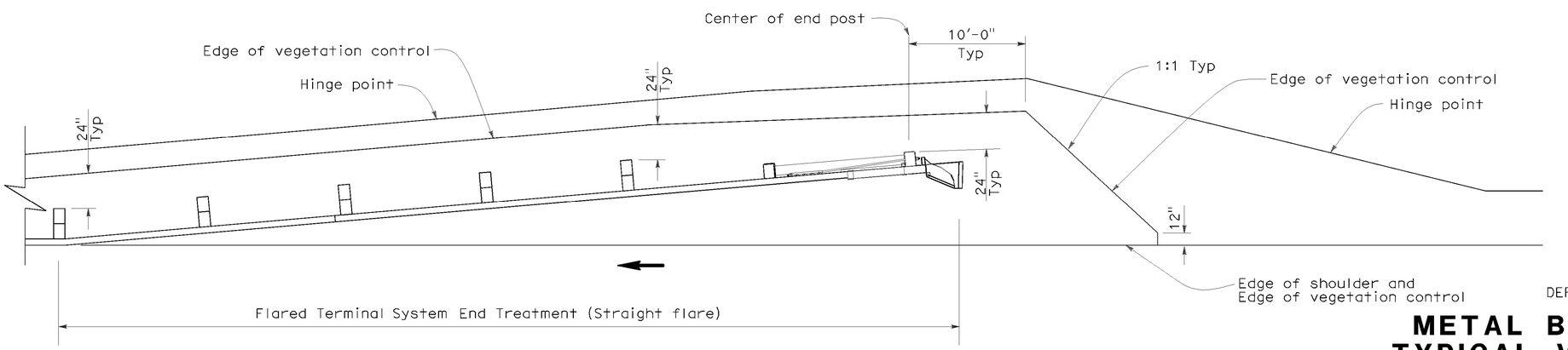

PLAN

NOTES:

1. See New Standard Plan NSP A77C5 for additional vegetation control details.
2. Where the distance between back of post and hinge point is less than 24", vegetation control to be constructed flush with the back edge of the post.
3. Where dike is constructed under railing, construct vegetation control to back edge of dike. Where paved shoulder is constructed within 24" in front of the post, construct vegetation control to the edge of paved shoulder.
4. Direction of adjacent traffic indicated by ←.

STATE OF CALIFORNIA
DEPARTMENT OF TRANSPORTATION

METAL BEAM GUARD RAILING TYPICAL VEGETATION CONTROL FOR TERMINAL SYSTEM END TREATMENTS

NO SCALE

NSP A77C6 DATED OCTOBER 20, 2006 SUPPLEMENTS THE STANDARD PLANS BOOK DATED MAY 2006.

NEW STANDARD PLAN NSP A77C6

2006 NEW STANDARD PLAN NSP A77C6

7-17-06

DIST	COUNTY	ROUTE	POST MILES TOTAL PROJECT	SHEET NO.	TOTAL SHEETS
01	Dn	101	39.6/43.7	13	18

Randell D. Hiatt
REGISTERED CIVIL ENGINEER

June 6, 2008
PLANS APPROVAL DATE

REGISTERED PROFESSIONAL ENGINEER Randell D. Hiatt No. C50200 Exp. 6-30-09 CIVIL STATE OF CALIFORNIA

The State of California or its officers or agents shall not be responsible for the accuracy or completeness of electronic copies of this plan sheet.

To accompany plans dated 04-12-10

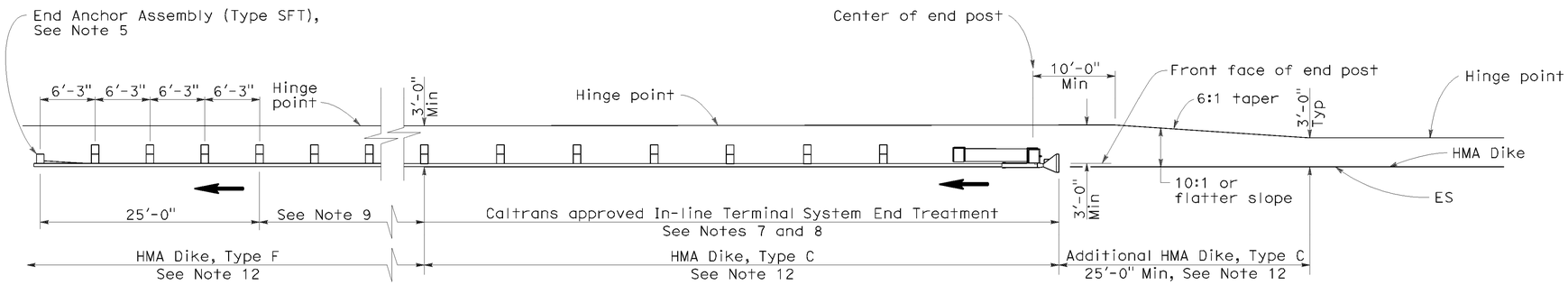

TYPE 11A LAYOUT

(EMBANKMENT GUARD INSTALLATION WITH IN-LINE END TREATMENT AT TRAFFIC APPROACH END OF RAILING)
See Note 6

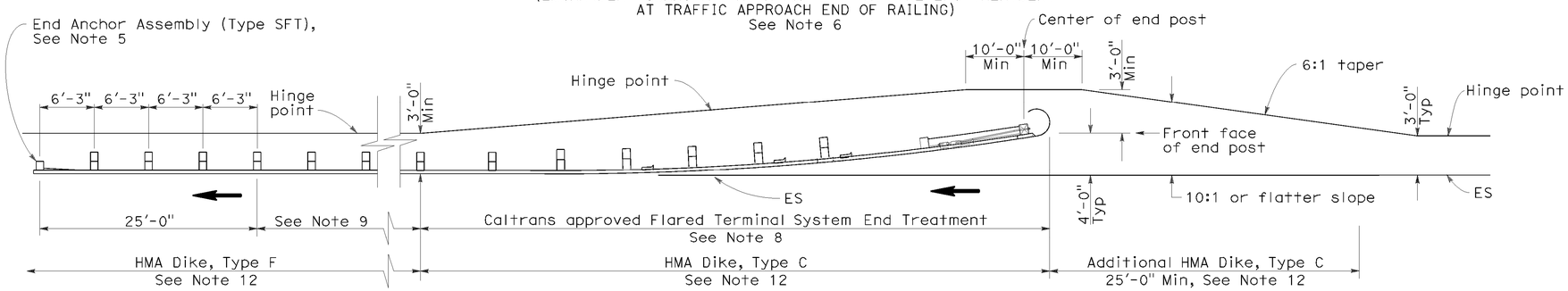

TYPE 11B LAYOUT

(EMBANKMENT GUARD RAILING INSTALLATION WITH FLARED END TREATMENT AT TRAFFIC APPROACH END OF RAILING)
See Note 6

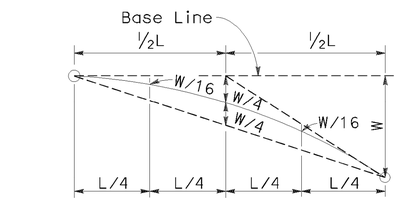

TYPICAL PARABOLIC LAYOUT

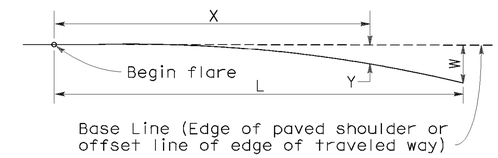

$$Y = \frac{WX^2}{L^2}$$

Y = Offset from base line
W = Maximum offset
X = Distance along base line
L = Length of flare

PARABOLIC FLARE OFFSETS

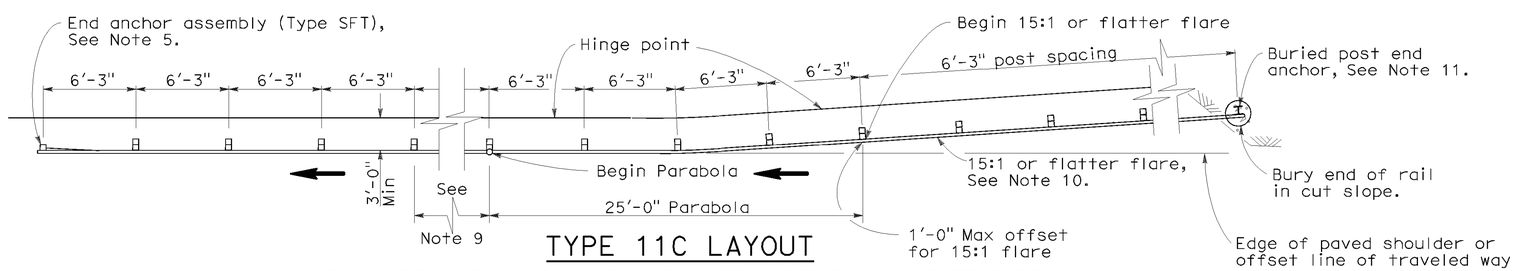

TYPE 11C LAYOUT

(EMBANKMENT GUARD RAILING INSTALLATION WITH BURIED END ANCHOR TREATMENT AT TRAFFIC APPROACH END OF RAILING)
See Notes 6 and 12

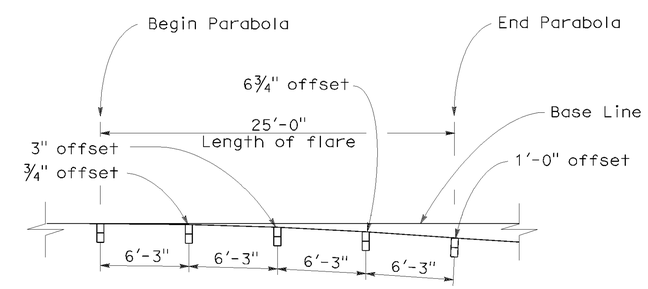

TYPICAL FLARE OFFSETS FOR 1 FOOT MAX END OFFSET

NOTES:

1. Line post, blocks and hardware to be used are shown on Standard Plans A77A1, A77A2, A77B1, A77C1, and A77C2.
2. Guard rail post spacing to be 6'-3" center to center, except as otherwise noted.
3. Except as noted, line posts are 6" x 8" x 6'-0" wood with 6" x 8" x 1'-2" wood blocks. W6 x 9 steel posts, 6'-0" in length, with 6" x 8" x 1'-2" notched wood blocks or recycled plastic blocks may be used for 6" x 8" x 6'-0" wood post with 6" x 8" x 1'-2" wood blocks where applicable and when specified.
4. Direction of adjacent traffic indicated by ➡.
5. For End Anchor Assembly (Type SFT) details, see Standard Plan A77H1.
6. Layout Types 11A, 11B or 11C are typically used where guard railing is recommended to shield embankment slopes and a crashworthy end treatment is required for only one direction of traffic.
7. In-line Terminal System End Treatments are used where site conditions will not accommodate a flared end treatment.
8. The type of terminal system end treatment to be used will be shown on the Project Plans.
9. Dependent on site conditions (embankment height and side slope), construction of additional guard railing (length equal to multiples of 12'-6" with 6'-3" post spacing) may be advisable.
10. The 15:1 or flatter flare used with buried end anchors is based on the edge of the paved shoulder or offset line of edge of the traveled way. The length of guard railing within the 15:1 or flatter flare is based on site conditions and should be a length equal to multiples of 12'-6".
11. For details of the buried post end anchor used with Type 11C Layout, see Standard Plan A77I2.
12. Where placement of dike is required with guard railing installations, see Revised Standard Plan RSP A77C4 for dike positioning details.

STATE OF CALIFORNIA
DEPARTMENT OF TRANSPORTATION

METAL BEAM GUARD RAILING TYPICAL LAYOUTS FOR EMBANKMENTS

NO SCALE

RSP A77E1 DATED JUNE 6, 2008 SUPERSEDES STANDARD PLAN A77E1 DATED MAY 1, 2006 - PAGE 48 OF THE STANDARD PLANS BOOK DATED MAY 2006.

REVISED STANDARD PLAN RSP A77E1

2006 REVISED STANDARD PLAN RSP A77E1

12-10-07

DIST	COUNTY	ROUTE	POST MILES TOTAL PROJECT	SHEET NO.	TOTAL SHEETS
01	Dn	101	39.6/43.7	14	18

Randell D. Hiatt
REGISTERED CIVIL ENGINEER

June 6, 2008
PLANS APPROVAL DATE

REGISTERED PROFESSIONAL ENGINEER
Randell D. Hiatt
No. C50200
Exp. 6-30-09
CIVIL
STATE OF CALIFORNIA

The State of California or its officers or agents shall not be responsible for the accuracy or completeness of electronic copies of this plan sheet.

To accompany plans dated 04-12-10

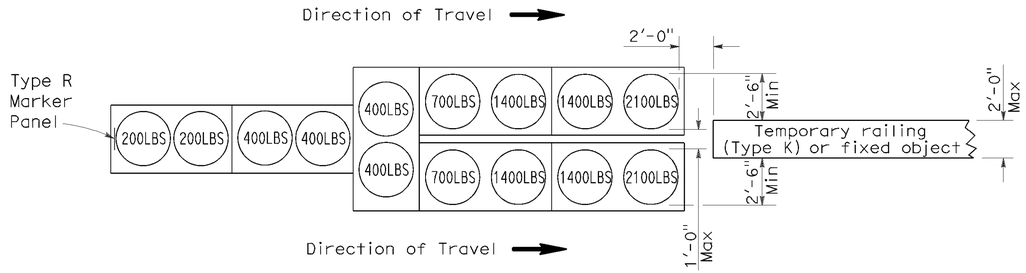

ARRAY 'TU14'

Approach speed 45 mph or more

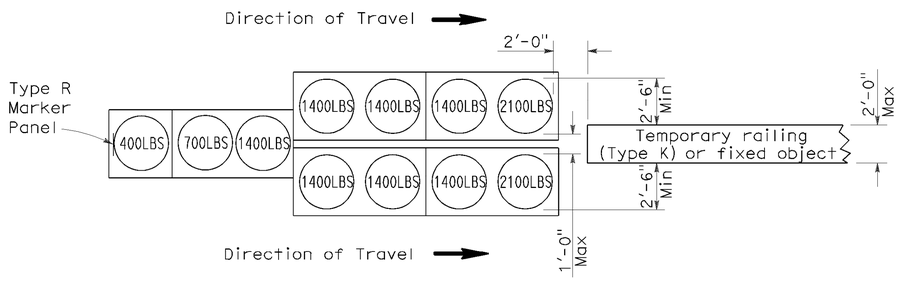

ARRAY 'TU11'

Approach speed less than 45 mph

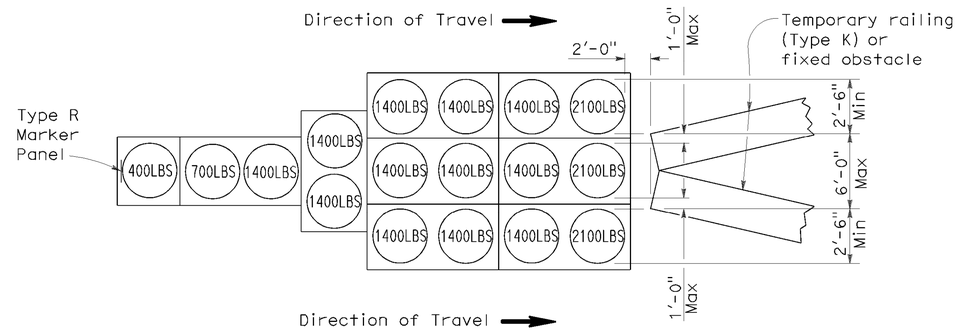

ARRAY 'TU17'

Approach speed less than 45 mph

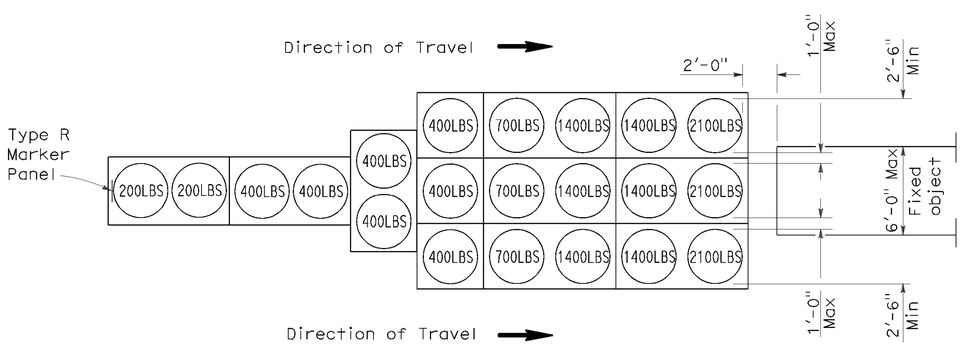

ARRAY 'TU21'

Approach speed 45 mph or more

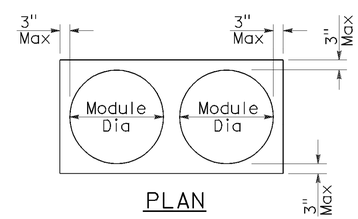

PLAN

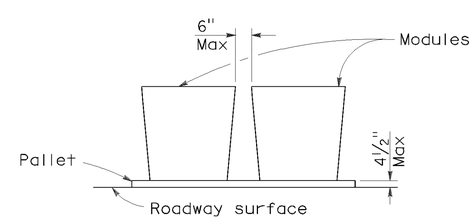

ELEVATION

CRASH CUSHION PALLET DETAIL

See Note 7

NOTES:

1. (XXX) Indicates sand filled module location and weight of sand in pounds for each module. Module spacing is based on the greater diameter of the module.
2. All sand weights are nominal.
3. Temporary crash cushion arrays shall not encroach on the traveled way.
4. Place the top of Type R marker panel 1" below the module lid.
5. Refer to Standard Plan A73B for marker details.
6. Approach speeds indicated conform to NCHRP 350 Report criteria.
7. Use of pallets is optional.

STATE OF CALIFORNIA
DEPARTMENT OF TRANSPORTATION

TEMPORARY CRASH CUSHION, SAND FILLED (UNIDIRECTIONAL)

NO SCALE

RSP T1A DATED JUNE 6, 2008 SUPERSEDES STANDARD PLAN T1A
DATED MAY 1, 2006 - PAGE 211 OF THE STANDARD PLANS BOOK DATED MAY 2006.

REVISED STANDARD PLAN RSP T1A

2006 REVISED STANDARD PLAN RSP T1A

DIST	COUNTY	ROUTE	POST MILES TOTAL PROJECT	SHEET NO.	TOTAL SHEETS
01	Dn	101	39.6/43.7	15	18

Randell D. Hiatt
REGISTERED CIVIL ENGINEER

June 6, 2008
PLANS APPROVAL DATE

REGISTERED PROFESSIONAL ENGINEER
Randell D. Hiatt
No. C50200
Exp. 6-30-09
CIVIL
STATE OF CALIFORNIA

The State of California or its officers or agents shall not be responsible for the accuracy or completeness of electronic copies of this plan sheet.

To accompany plans dated 04-12-10

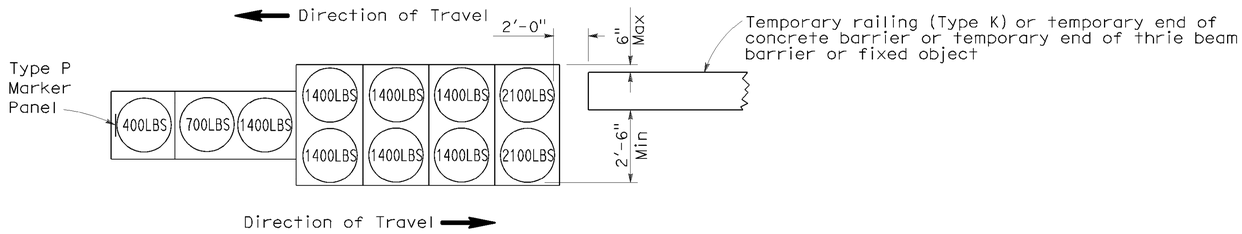

ARRAY 'TB11'

Approach speed less than 45 mph

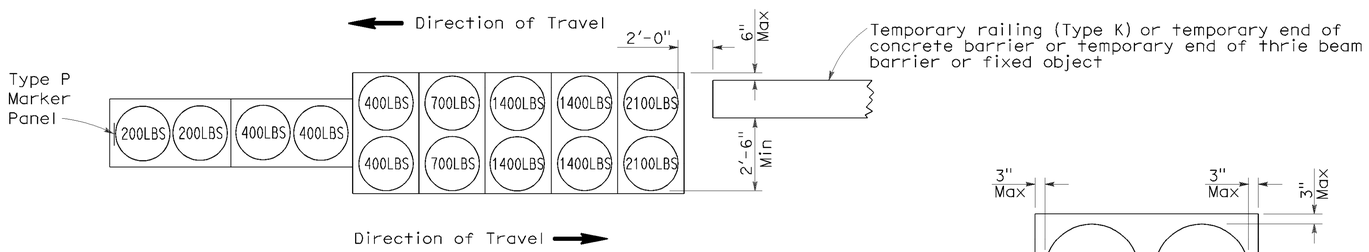

ARRAY 'TB14'

Approach speed 45 mph or more

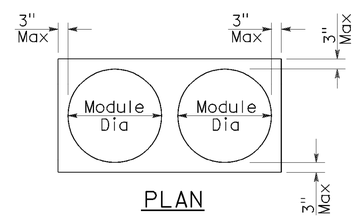

PLAN

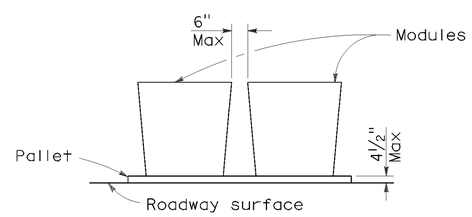

ELEVATION

CRASH CUSHION PALLET DETAIL

See Note 7

NOTES:

1. (XXX) Indicates sand filled module location and weight of sand in pounds for each module. Module spacing is based on the greater diameter of the module.
2. All sand weights are nominal.
3. Temporary crash cushion arrays shall not encroach on the traveled way.
4. Place the Type P marker panel so that the bottom of the panel rests upon the pallet.
5. Refer to Standard Plan A73B for marker details.
6. Approach speeds indicated conform to NCHRP 350 Report criteria.
7. Use of pallets is optional.

STATE OF CALIFORNIA
DEPARTMENT OF TRANSPORTATION

TEMPORARY CRASH CUSHION, SAND FILLED (BIDIRECTIONAL)

NO SCALE

RSP T1B DATED JUNE 6, 2008 SUPERSEDES STANDARD PLAN T1B
DATED MAY 1, 2006 - PAGE 212 OF THE STANDARD PLANS BOOK DATED MAY 2006.

REVISED STANDARD PLAN RSP T1B

2006 REVISED STANDARD PLAN RSP T1B

5-15-08

DIST	COUNTY	ROUTE	POST MILES TOTAL PROJECT	SHEET NO.	TOTAL SHEETS
01	Dn	101	39.6/43.7	16	18

Randell D. Hiatt
REGISTERED CIVIL ENGINEER

June 6, 2008
PLANS APPROVAL DATE

REGISTERED PROFESSIONAL ENGINEER
Randell D. Hiatt
No. C50200
Exp. 6-30-09
CIVIL
STATE OF CALIFORNIA

The State of California or its officers or agents shall not be responsible for the accuracy or completeness of electronic copies of this plan sheet.

To accompany plans dated 04-12-10

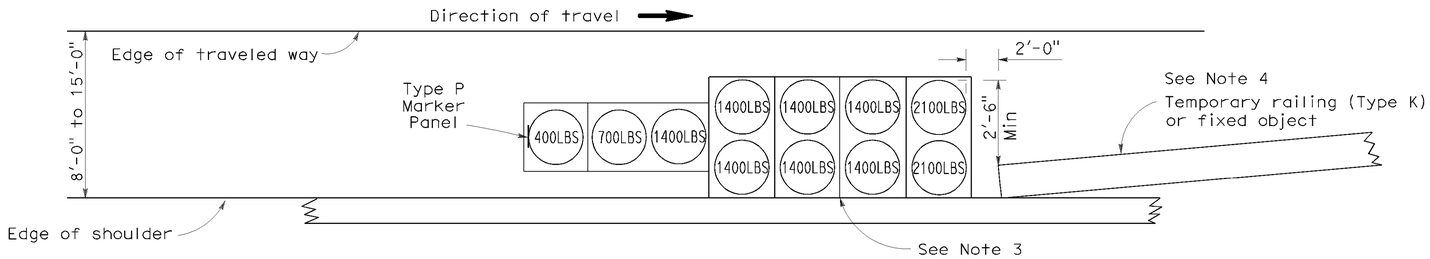

ARRAY 'TS11'

Approach speed less than 45 mph
See Note 9

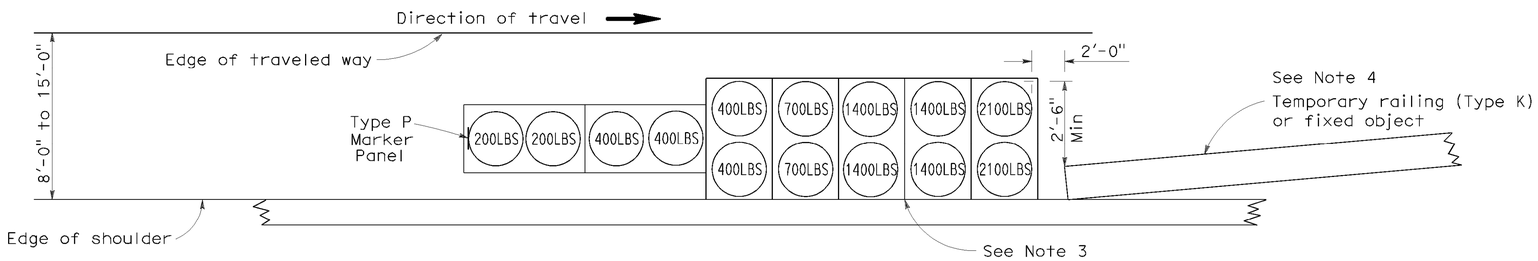

ARRAY 'TS14'

Approach speed 45 mph or more
See Note 9

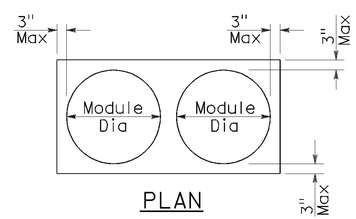

PLAN

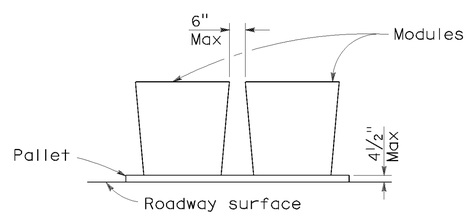

ELEVATION

CRASH CUSHION PALLET DETAIL

See Note 11

NOTES:

1. (XXX) Indicates sand filled module location and weight of sand in pounds for each module. Module spacing is based on the greater diameter of the module.
2. All sand weights are nominal.
3. The temporary crash cushion arrays shown on this plan shall be used only in locations where there will be traffic on one side of the temporary crash cushion array.
4. If the fixed object or approach end of the temporary railing is less than 15'-0" from the edge of traveled way, a temporary crash cushion is required in a construction or work zone.
5. Temporary crash cushion arrays shall not encroach on the traveled way.
6. Arrays for median shoulders shall conform to details shown on this plan for outside shoulders.
7. Place the Type P marker panel so that the bottom of the panel rests upon the pallet and faces traffic.
8. Refer to Standard Plan A73B for marker details.
9. For shoulder widths less than 8'-0", appropriate approved crash cushion protection, other than sand filled modules, shall be provided at fixed objects and at approach ends of temporary railing. The specific type of crash cushion shall be as shown on the project plans or as specified in the Special Provisions, or if not shown on the project plans or specified in the Special Provisions, shall be as approved by the Engineer.
10. Approach speeds indicated conform to NCHRP 350 Report criteria.
11. Use of pallets is optional.

STATE OF CALIFORNIA
DEPARTMENT OF TRANSPORTATION

TEMPORARY CRASH CUSHION, SAND FILLED (SHOULDER INSTALLATIONS)

NO SCALE

RSP T2 DATED JUNE 6, 2008 SUPERSEDES STANDARD PLAN T2
DATED MAY 1, 2006 - PAGE 213 OF THE STANDARD PLANS BOOK DATED MAY 2006.

REVISED STANDARD PLAN RSP T2

2006 REVISED STANDARD PLAN RSP T2

5-15-08

DIST	COUNTY	ROUTE	POST MILES TOTAL PROJECT	SHEET NO.	TOTAL SHEETS
01	Dn	101	39.6/43.7	17	18

Robert B Schott
LICENSED LANDSCAPE ARCHITECT

April 3, 2009
PLANS APPROVAL DATE

LICENSED LANDSCAPE ARCHITECT
Robert B. Schott 3625
Expiration Date 11-30-10
Renewal Date 2-25-09
Date
STATE OF CALIFORNIA

The State of California or its officers or agents shall not be responsible for the accuracy or completeness of electronic copies of this plan sheet.

To accompany plans dated 04-12-10

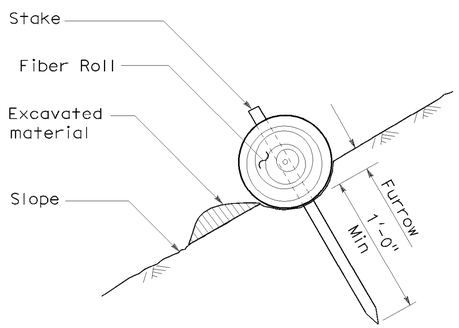

SECTION

TEMPORARY FIBER ROLL (TYPE 1)

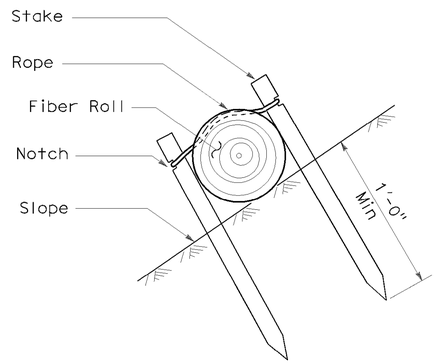

SECTION

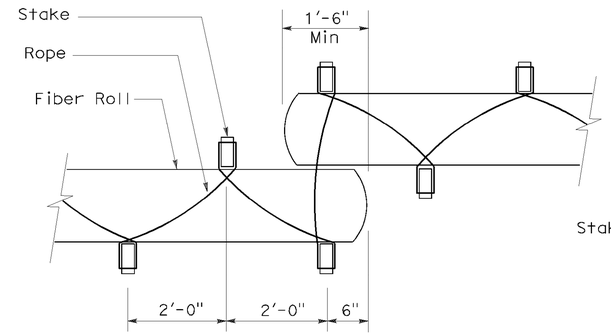

PLAN

TEMPORARY FIBER ROLL (TYPE 2)

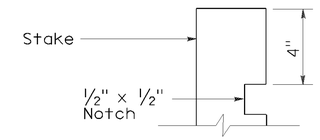

ELEVATION

STAKE NOTCH DETAIL

NOTES:

1. Temporary fiber roll spacing varies depending upon slope inclination.
2. Installations shown in the perspectives are for slope inclination of 10:1 and steeper.

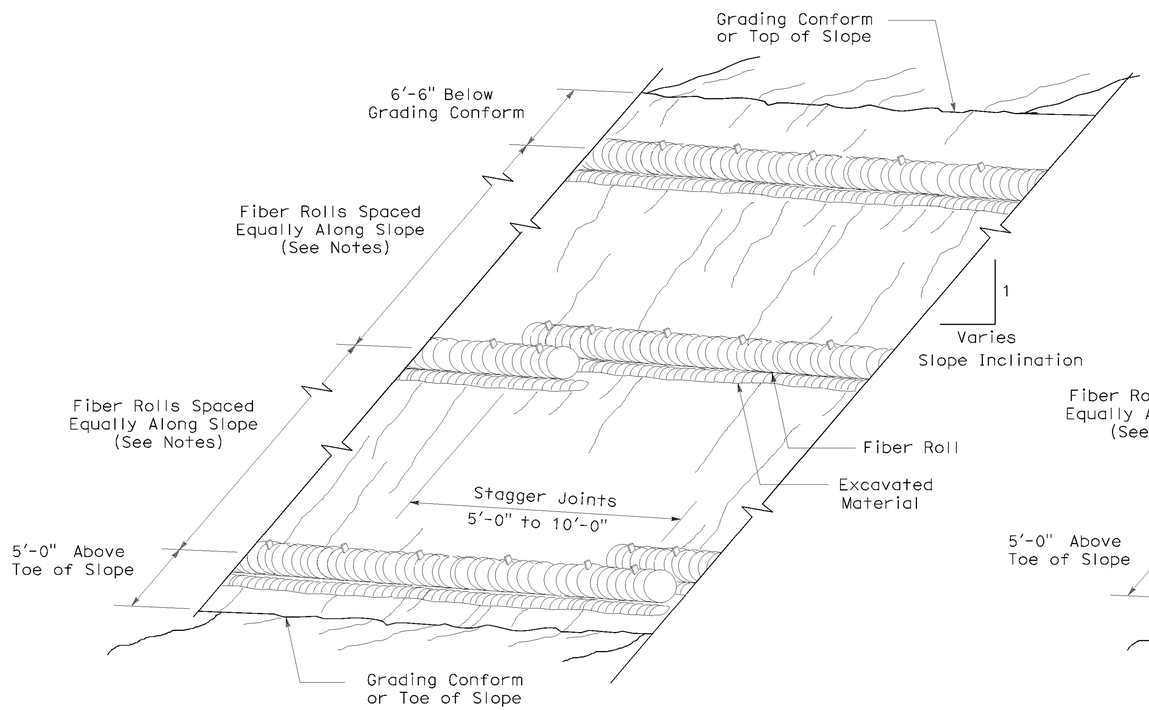

PERSPECTIVE

TEMPORARY FIBER ROLL (TYPE 1)

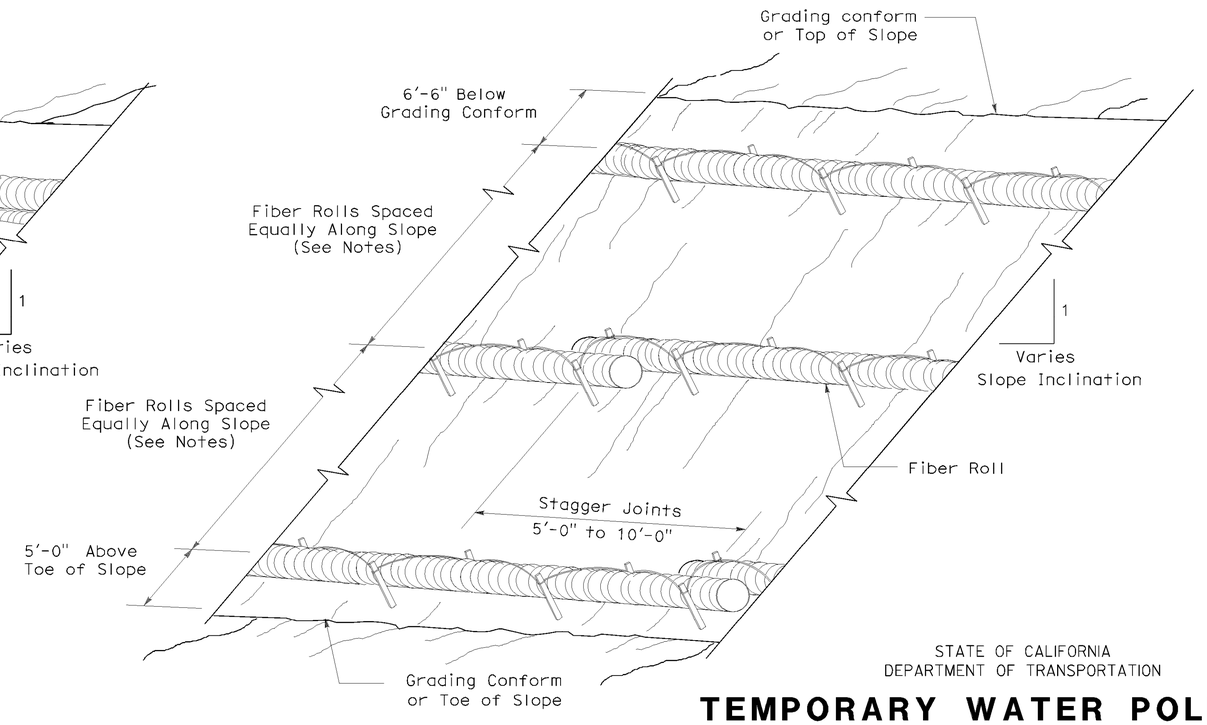

PERSPECTIVE

TEMPORARY FIBER ROLL (TYPE 2)

STATE OF CALIFORNIA
DEPARTMENT OF TRANSPORTATION

TEMPORARY WATER POLLUTION CONTROL DETAILS (TEMPORARY FIBER ROLL)

NO SCALE

RSP T56 DATED APRIL 3, 2009 SUPERSEDES STANDARD PLAN T56
DATED MAY 1, 2006 - PAGE 232 OF THE STANDARD PLANS BOOK DATED MAY 2006.

REVISED STANDARD PLAN RSP T56

2006 REVISED STANDARD PLAN RSP T56

2-23-09

DIST	COUNTY	ROUTE	POST MILES TOTAL PROJECT	SHEET NO.	TOTAL SHEETS
01	Dn	101	39.6/43.7	18	18

LICENSED LANDSCAPE ARCHITECT

April 3, 2009
PLANS APPROVAL DATE

LICENSED LANDSCAPE ARCHITECT Robert B. Schott 3625 Registration Date 11-30-10 Renewal Date 2-25-09 Date STATE OF CALIFORNIA

The State of California or its officers or agents shall not be responsible for the accuracy or completeness of electronic copies of this plan sheet.

To accompany plans dated 04-12-10

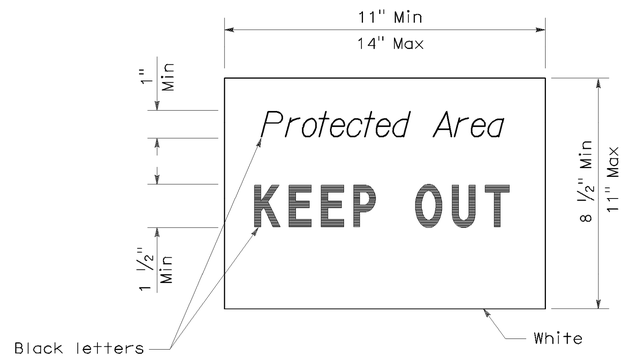

SIGN DETAIL

NOTE:

1. Temporary silt fence and temporary straw bale barrier shown for reference purposes only.

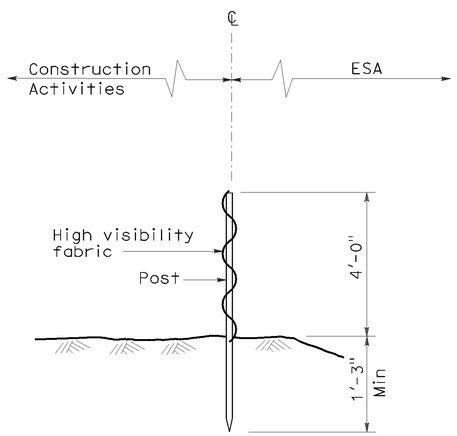

SECTION
TEMPORARY FENCE (TYPE ESA)

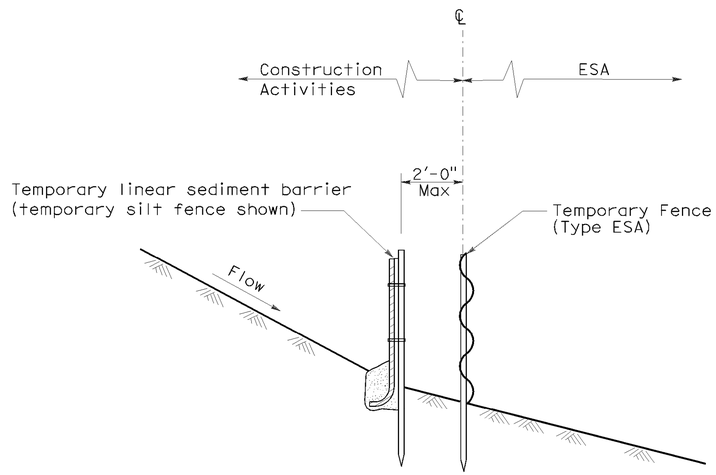

SECTION
PLACEMENT DETAIL
FOR TEMPORARY LINEAR SEDIMENT BARRIER
USED WITH TEMPORARY
FENCE (TYPE ESA)
(See Note 1)

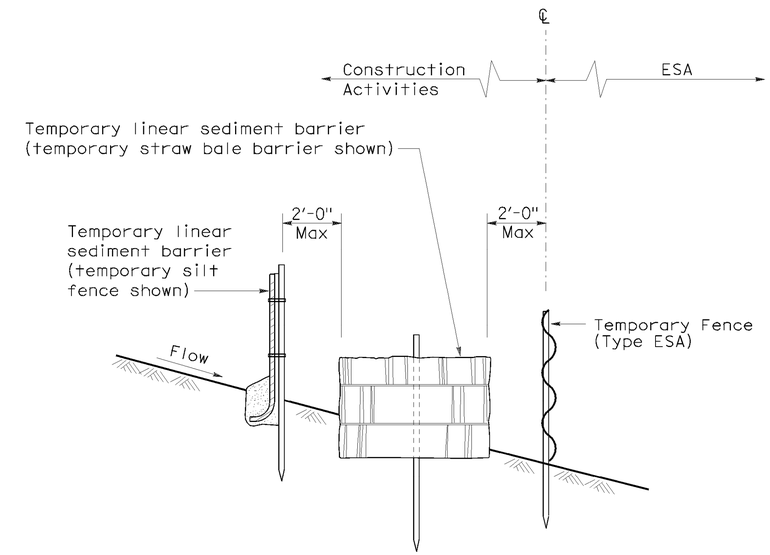

SECTION
PLACEMENT DETAIL
FOR TEMPORARY SILT FENCE
AND TEMPORARY STRAW BALE BARRIER
USED WITH TEMPORARY FENCE (TYPE ESA)
(See Note 1)

STATE OF CALIFORNIA
DEPARTMENT OF TRANSPORTATION

TEMPORARY WATER POLLUTION CONTROL DETAILS [TEMPORARY FENCE (TYPE ESA)]

NO SCALE

NSP T65 DATED APRIL 3, 2009 SUPPLEMENTS
THE STANDARD PLANS BOOK DATED MAY 2006.

NEW STANDARD PLAN NSP T65

2006 NEW STANDARD PLAN NSP T65

1-7-09