Dist	COUNTY	ROUTE	POST MILES TOTAL PROJECT	SHEET No.	TOTAL SHEETS
01	Lak	20	11.9/12.4	1	120

HSSTP-P020(164)E

STATE OF CALIFORNIA
DEPARTMENT OF TRANSPORTATION

PROJECT PLANS FOR CONSTRUCTION ON
STATE HIGHWAY
IN LAKE COUNTY
NEAR NICE
FROM 0.3 MILE WEST
TO 0.2 MILE EAST OF LUCERNE CUTOFF

TO BE SUPPLEMENTED BY STANDARD PLANS DATED MAY 2006

INDEX OF PLANS

SHEET No.	DESCRIPTION
1	TITLE AND LOCATION MAP
2-7	TYPICAL CROSS SECTIONS
8-9	LAYOUT
10-15	PROFILES AND SUPERELEVATION DIAGRAM
16-34	CONSTRUCTION DETAILS
35-39	EROSION CONTROL PLAN, DETAILS AND QUANTITIES
40	CONTOUR GRADING
41-46	DRAINAGE PLANS, PROFILES, DETAILS AND QUANTITIES
47	UTILITY PLAN
48	CONSTRUCTION AREA SIGNS
49-55	STAGE CONSTRUCTION PLANS AND DETAILS
56-62	TRAFFIC HANDLING PLANS AND QUANTITIES
63	DETOUR PLAN
64-69	PAVEMENT DELINEATION PLANS, DETAILS AND QUANTITIES
70-72	SIGN PLANS AND QUANTITIES
73-75	SUMMARY OF QUANTITIES
76	PLANT LIST
77	IRRIGATION PLAN
78-84	LANDSCAPE DETAILS
85-87	ELECTRICAL PLANS
88-120	REVISED AND NEW STANDARD PLANS

THE STANDARD PLANS LIST APPLICABLE TO THIS CONTRACT IS INCLUDED IN THE NOTICE TO BIDDERS AND SPECIAL PROVISIONS BOOK.

LOCATION MAP

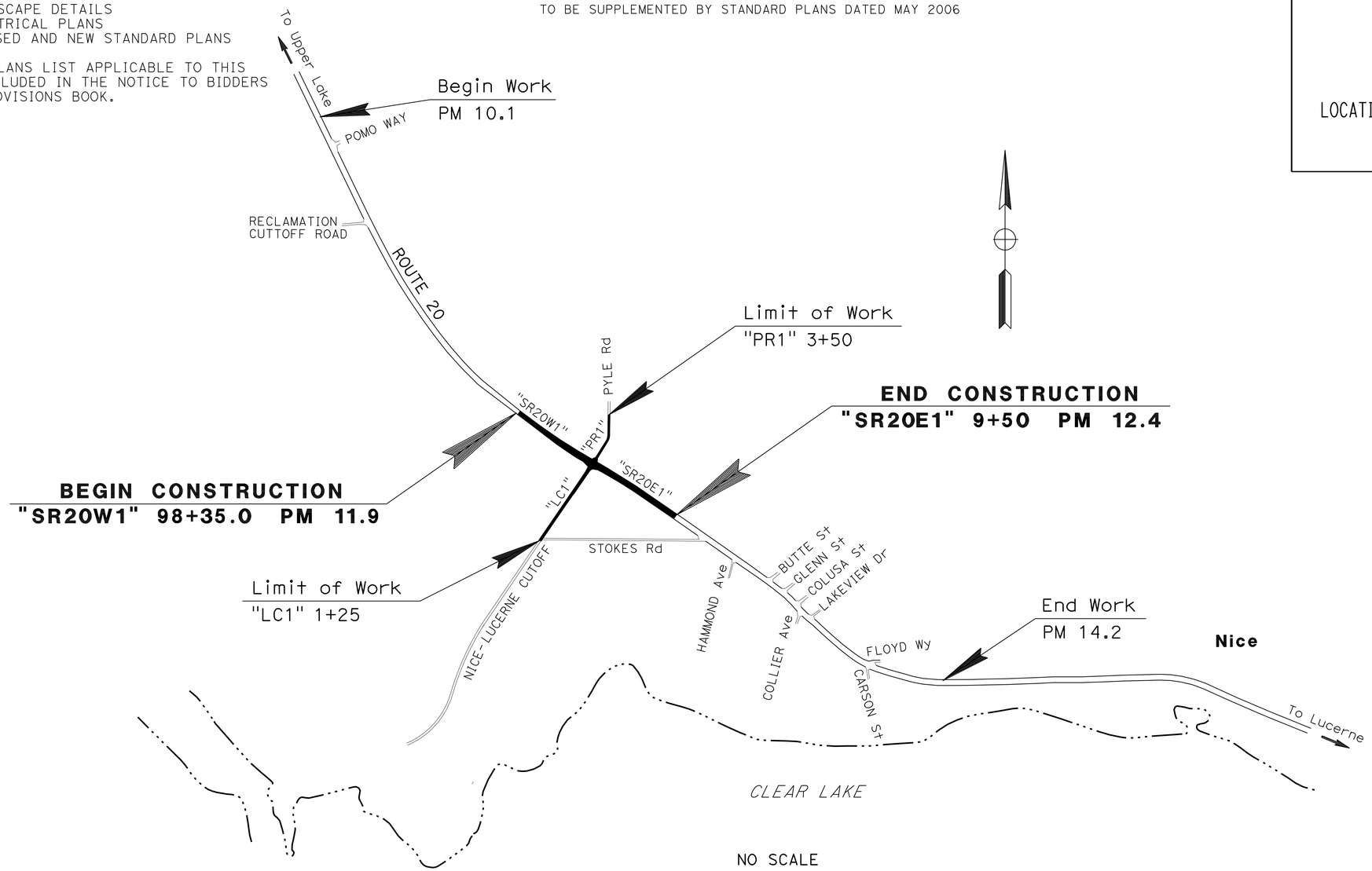

NO SCALE

THE CONTRACTOR SHALL POSSESS THE CLASS (OR CLASSES) OF LICENSE AS SPECIFIED IN THE "NOTICE TO BIDDERS."

PROJECT MANAGER: MIKE YANCHEFF

DESIGN ENGINEER: DENNIS P. McBRIDE

Dianne M. Edwards 5-4-11
PROJECT ENGINEER REGISTERED CIVIL ENGINEER — DATE

REGISTERED PROFESSIONAL ENGINEER — DIANNE EDWARDS — No. C 51898 — Exp. 6-30-12 — CIVIL — STATE OF CALIFORNIA

June 27, 2011
PLANS APPROVAL DATE

THE STATE OF CALIFORNIA OR ITS OFFICERS OR AGENTS SHALL NOT BE RESPONSIBLE FOR THE ACCURACY OR COMPLETENESS OF SCANNED COPIES OF THIS PLAN SHEET.

CONTRACT No.	01-480504
PROJECT ID	0100000378

LAST REVISION 00-00-00 — DATE PLOTTED => 05-AUG-2011 — TIME PLOTTED => 09:53

Dist	COUNTY	ROUTE	POST MILES TOTAL PROJECT	SHEET No.	TOTAL SHEETS
01	Lak	20	11.9/12.4	2	120

Dianne M Edwards 5-4-11
REGISTERED CIVIL ENGINEER DATE

6-27-11
PLANS APPROVAL DATE

REGISTERED PROFESSIONAL ENGINEER D.M. EDWARDS No. C-51898 Exp. 6-30-12 CIVIL STATE OF CALIFORNIA

THE STATE OF CALIFORNIA OR ITS OFFICERS OR AGENTS SHALL NOT BE RESPONSIBLE FOR THE ACCURACY OR COMPLETENESS OF SCANNED COPIES OF THIS PLAN SHEET.

NOTES:

1. DIMENSIONS OF THE PAVEMENT STRUCTURES (STRUCTURAL SECTIONS) ARE SUBJECT TO TOLERANCES SPECIFIED IN THE STANDARD SPECIFICATIONS.
2. SUPERELEVATION AS SHOWN ON THE SUPERELEVATION DIAGRAMS.
3. EXISTING UTILITY FACILITIES HAVE NOT BEEN PLOTTED ON THESE SHEETS.
4. FOR COMPLETE RIGHT OF WAY DATA, SEE RIGHT OF WAY RECORD MAPS AT DISTRICT OFFICE.
5. DRIVEWAYS ARE NOT REPRESENTED. REFER TO SHEET C-18.
6. SEE Const DETAIL SHEETS FOR GEOSYNTHETIC PAVEMENT INTERLAYER AND IMPORTED MATERIAL (SHOULDER BACKING).

DESIGN DESIGNATION

2007 ADT = 13,800	D = 60%
2030 ADT = 15,470	T = 7%
DHV = 1,440	V = 15 MPH

ABBREVIATIONS:

SR = SUPERELEVATION RATE
CP = CATCH POINT
BOC = BACK OF CURB
FSW = FACE OF SIDEWALK
BSW = BACK OF SIDEWALK
GPI = GEOSYNTHETIC PAVEMENT INTERLAYER

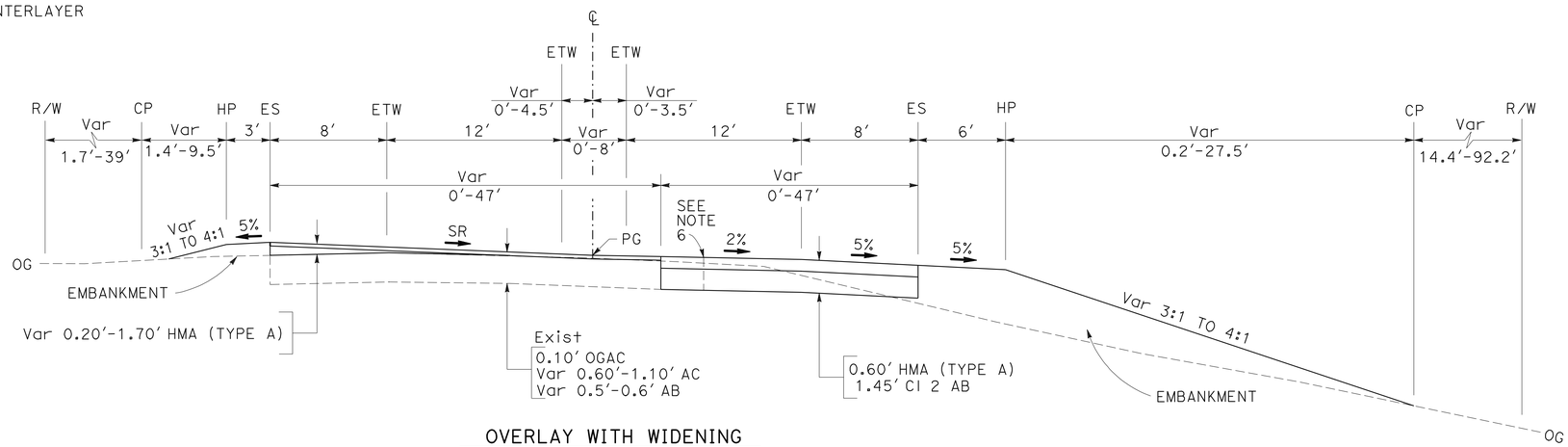

OVERLAY WITH WIDENING

"SR20W1" 99+62.5 TO 103+84.3

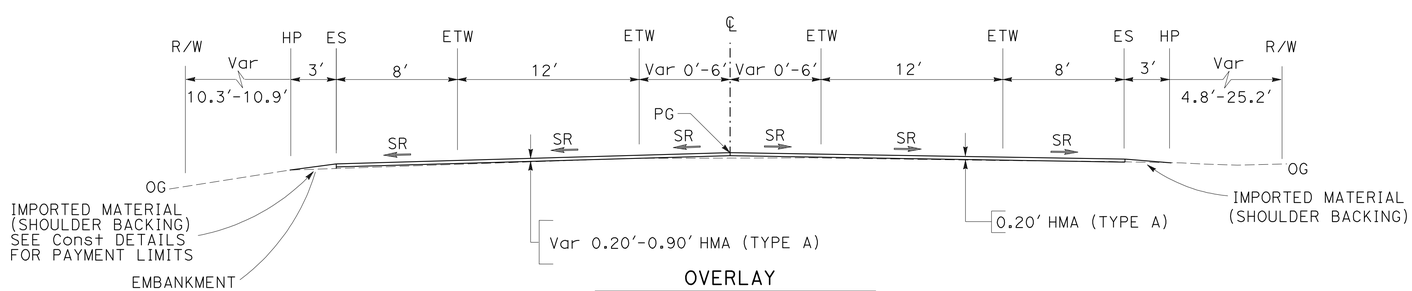

OVERLAY

"SR20W1" 98+35.0 TO 99+62.5
"SR20E1" 4+30.5 TO 7+62.5
"LC1" 1+25.0 TO 3+70.0

TYPICAL CROSS SECTIONS

NO SCALE

X-1

REVISED BY | DATE REVISED
DIANNE EDWARDS
CALCULATED-DESIGNED BY | CHECKED BY
FUNCTIONAL SUPERVISOR
Dennis P. McBride

STATE OF CALIFORNIA - DEPARTMENT OF TRANSPORTATION
Caltrans
DESIGN

P:\proj1\01\48050\drafting\sheets\148050ca001.dgn

LAST REVISION 00-00-00 | DATE PLOTTED => 28-JUN-2011 | TIME PLOTTED => 15:50

Dist	COUNTY	ROUTE	POST MILES TOTAL PROJECT	SHEET No.	TOTAL SHEETS
01	Lak	20	11.9/12.4	3	120

Dianne M Edwards 5-4-11
REGISTERED CIVIL ENGINEER DATE

6-27-11
PLANS APPROVAL DATE

REGISTERED PROFESSIONAL ENGINEER
D.M. EDWARDS
No. C-51898
Exp. 6-30-12
CIVIL
STATE OF CALIFORNIA

THE STATE OF CALIFORNIA OR ITS OFFICERS OR AGENTS SHALL NOT BE RESPONSIBLE FOR THE ACCURACY OR COMPLETENESS OF SCANNED COPIES OF THIS PLAN SHEET.

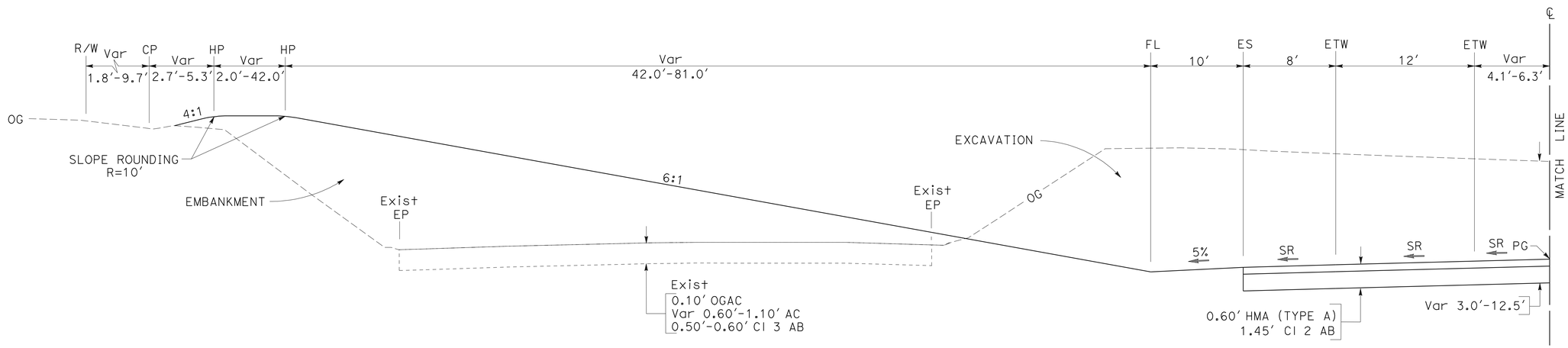

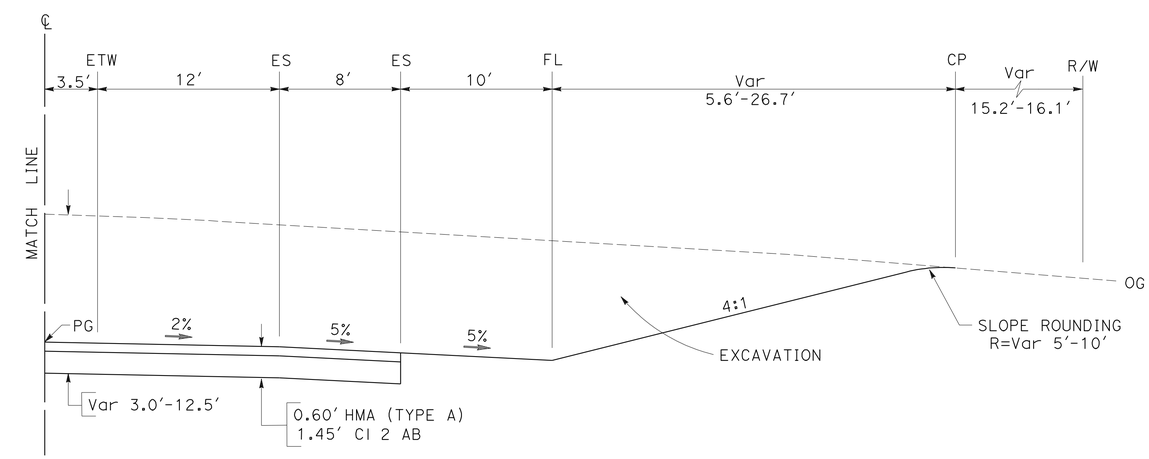

FULL HMA STRUCTURAL SECTION

"SR20W1" 103+84.3 TO 105+20.6

TYPICAL CROSS SECTIONS

NO SCALE

X-2

REVISED BY	DATE REVISED
DIANNE EDWARDS	

CALCULATED-DESIGNED BY	CHECKED BY

FUNCTIONAL SUPERVISOR: Dennis P. McBride

STATE OF CALIFORNIA - DEPARTMENT OF TRANSPORTATION

Caltrans® **DESIGN**

P:\proj1\01\48050\drafting\sheets\148050ca002.dgn

LAST REVISION 00-00-00 | DATE PLOTTED => 28-JUN-2011 | TIME PLOTTED => 15:50

Dist	COUNTY	ROUTE	POST MILES TOTAL PROJECT	SHEET No.	TOTAL SHEETS
01	Lak	20	11.9/12.4	4	120

REGISTERED CIVIL ENGINEER 5-4-11 DATE

6-27-11
PLANS APPROVAL DATE

REGISTERED PROFESSIONAL ENGINEER D.M. EDWARDS No. C-51898 Exp. 6-30-12 CIVIL STATE OF CALIFORNIA

THE STATE OF CALIFORNIA OR ITS OFFICERS OR AGENTS SHALL NOT BE RESPONSIBLE FOR THE ACCURACY OR COMPLETENESS OF SCANNED COPIES OF THIS PLAN SHEET.

NOTES:

1. STATIONING REVERSED TO VIEW APPROACHING ROUNDABOUT.
2. SEE CONSTRUCTION DETAILS FOR EXACT LIMITS OF SIDEWALKS.
3. FOR INFORMATION OUTSIDE OF BREAK LINES, SEE SPECIFIC CROSS SECTIONS.
4. "SPLTRX" REFERS GENERICALLY TO ALIGNMENTS "SPLTR1" THROUGH "SPLTR8".

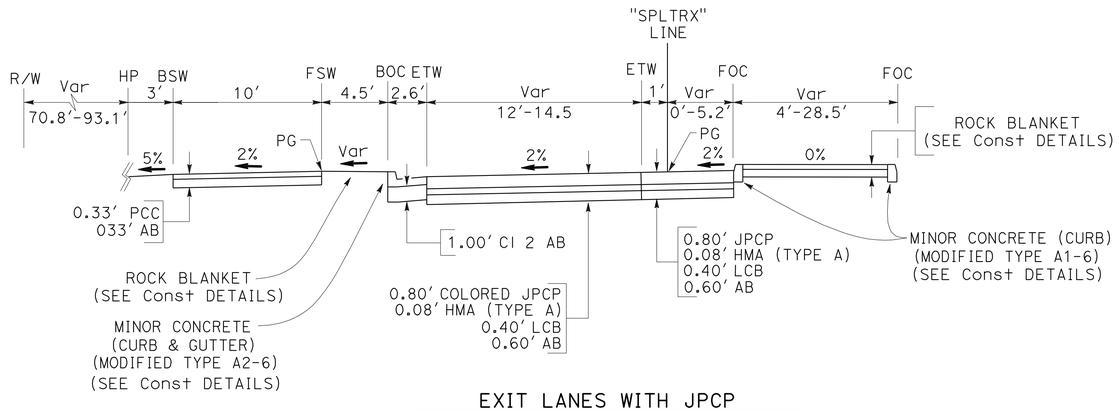

EXIT LANES WITH JPCP

"SPLTR2" 7+19.8 TO 7+60.6
"SPLTR4" 108+43.6 TO 108+82.3
"SPLTR6" 1+05.0 TO 0+66.1 (SEE NOTE 1)

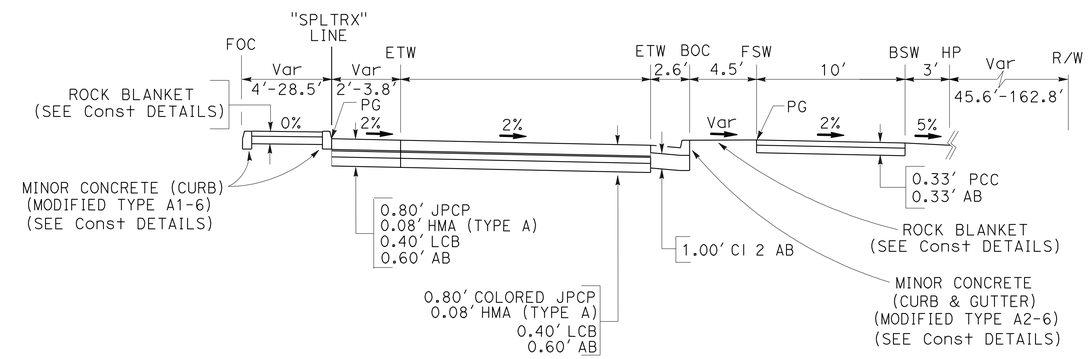

APPROACH LANES WITH JPCP

"SPLTR1" 7+18.9 TO 7+54.2
"SPLTR3" 108+41.0 TO "SPLTR3" 108+76.8
"SPLTR5" 1+09.1 TO 0+73.2 (SEE NOTE 1)

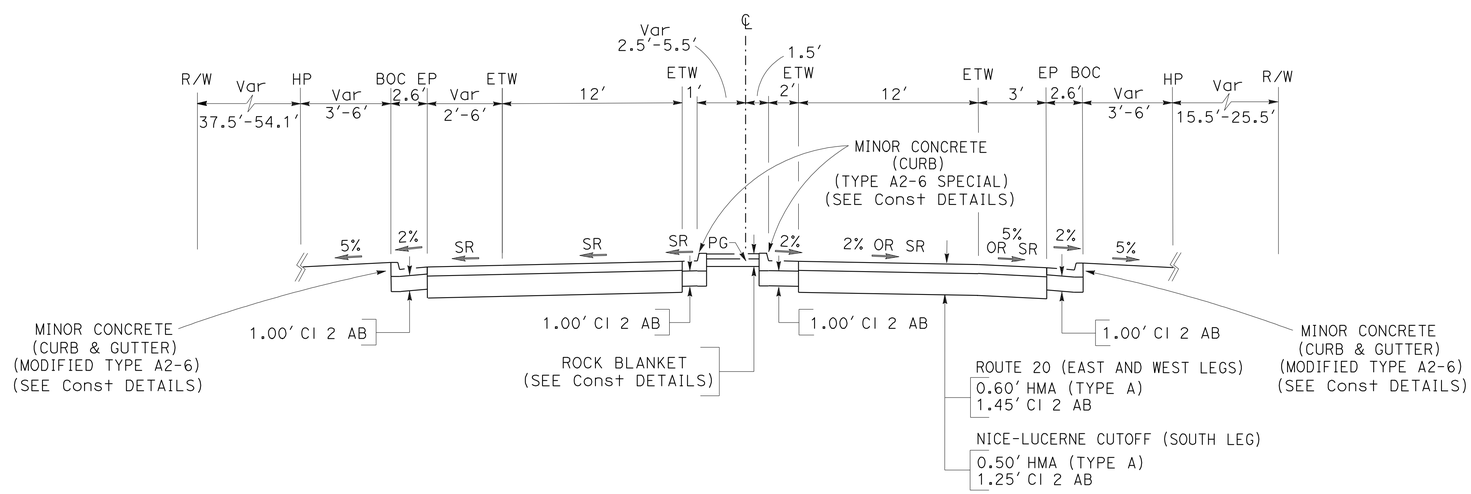

"SR20W1" 105+20.6 TO 107+45.4
"SR20E1" 1+96.0 TO 2+40.4
"LC1" 5+63.5 TO 6+11.9

TYPICAL CROSS SECTIONS

NO SCALE

X-3

REVISED BY | DATE REVISED
DIANNE EDWARDS
CALCULATED-DESIGNED BY | CHECKED BY
FUNCTIONAL SUPERVISOR
Dennis P. McBride

STATE OF CALIFORNIA - DEPARTMENT OF TRANSPORTATION
Caltrans
DESIGN

P:\proj1\01\48050\drafting\sheets\148050ca003.dgn

LAST REVISION 00-00-00 | DATE PLOTTED => 28-JUN-2011 | TIME PLOTTED => 15:50

Dist	COUNTY	ROUTE	POST MILES TOTAL PROJECT	SHEET No.	TOTAL SHEETS
01	Lak	20	11.9/12.4	5	120

REGISTERED CIVIL ENGINEER 5-4-11 DATE

6-27-11
PLANS APPROVAL DATE

REGISTERED PROFESSIONAL ENGINEER D.M. EDWARDS No. C-51898 Exp. 6-30-12 CIVIL STATE OF CALIFORNIA

THE STATE OF CALIFORNIA OR ITS OFFICERS OR AGENTS SHALL NOT BE RESPONSIBLE FOR THE ACCURACY OR COMPLETENESS OF SCANNED COPIES OF THIS PLAN SHEET.

NOTES:

1. STATIONING REVERSED TO VIEW APPROACHING ROUNDABOUT.
2. SEE CONSTRUCTION DETAILS FOR EXACT LIMITS OF SIDEWALKS.
3. FOR INFORMATION OUTSIDE OF BREAK LINES, SEE SPECIFIC CROSS SECTIONS.
4. "SPLTRX" REFERS GENERICALLY TO ALIGNMENTS "SPLTR1" THROUGH "SPLTR8".

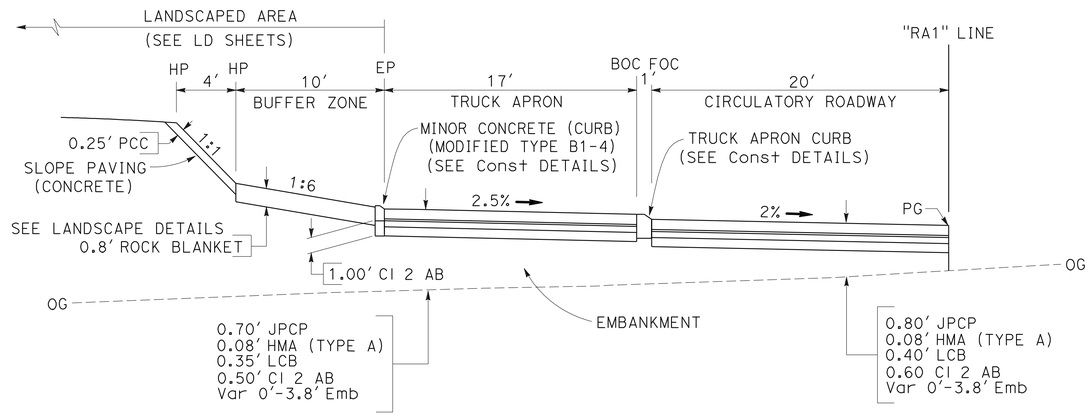

CENTRAL ISLAND AND CIRCULATORY ROADWAY

"RA1" 100+00 TO 104+71.2

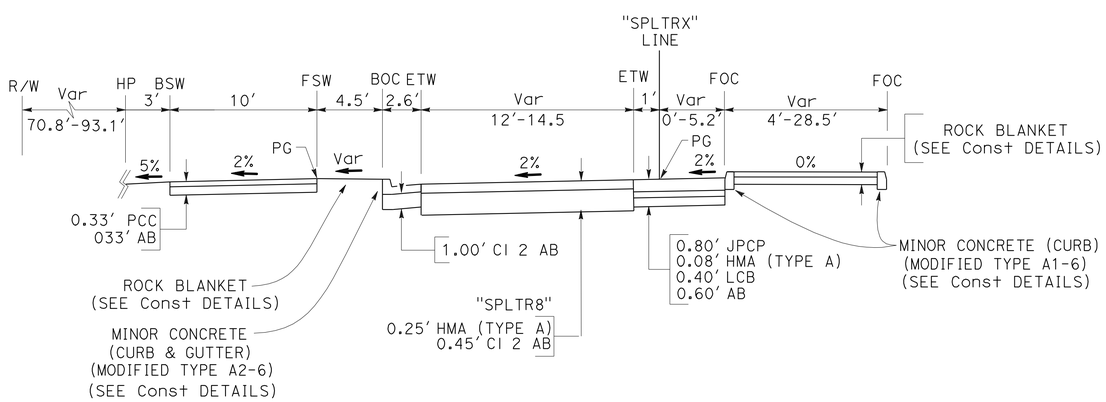

EXIT LANE WITH JPCP MEDIAN

"SPLTR8" 0+99.5 TO 0+69.8 (SEE NOTE 1)

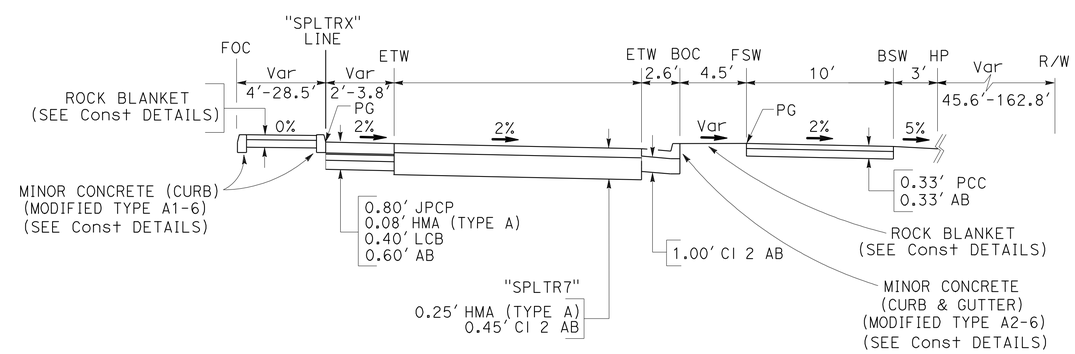

APPROACH LANE WITH JPCP MEDIAN

"SPLTR7" 0+99.3 TO 0+72.5 (SEE NOTE 1)

TYPICAL CROSS SECTIONS

NO SCALE

X-4

REVISED BY | DATE REVISED

DIANNE EDWARDS

CALCULATED-DESIGNED BY | CHECKED BY

FUNCTIONAL SUPERVISOR

Dennis P. McBride

STATE OF CALIFORNIA - DEPARTMENT OF TRANSPORTATION

Caltrans

DESIGN

P:\proj1\01\48050\drafting\sheets\148050ca004.dgn

LAST REVISION 00-00-00 | DATE PLOTTED => 28-JUN-2011 | TIME PLOTTED => 15:50

Dist	COUNTY	ROUTE	POST MILES TOTAL PROJECT	SHEET No.	TOTAL SHEETS
01	Lak	20	11.9/12.4	6	120

Dianne M Edwards 5-4-11
REGISTERED CIVIL ENGINEER DATE

6-27-11
PLANS APPROVAL DATE

REGISTERED PROFESSIONAL ENGINEER D.M. EDWARDS No. C-51898 Exp. 6-30-12 CIVIL STATE OF CALIFORNIA

THE STATE OF CALIFORNIA OR ITS OFFICERS OR AGENTS SHALL NOT BE RESPONSIBLE FOR THE ACCURACY OR COMPLETENESS OF SCANNED COPIES OF THIS PLAN SHEET.

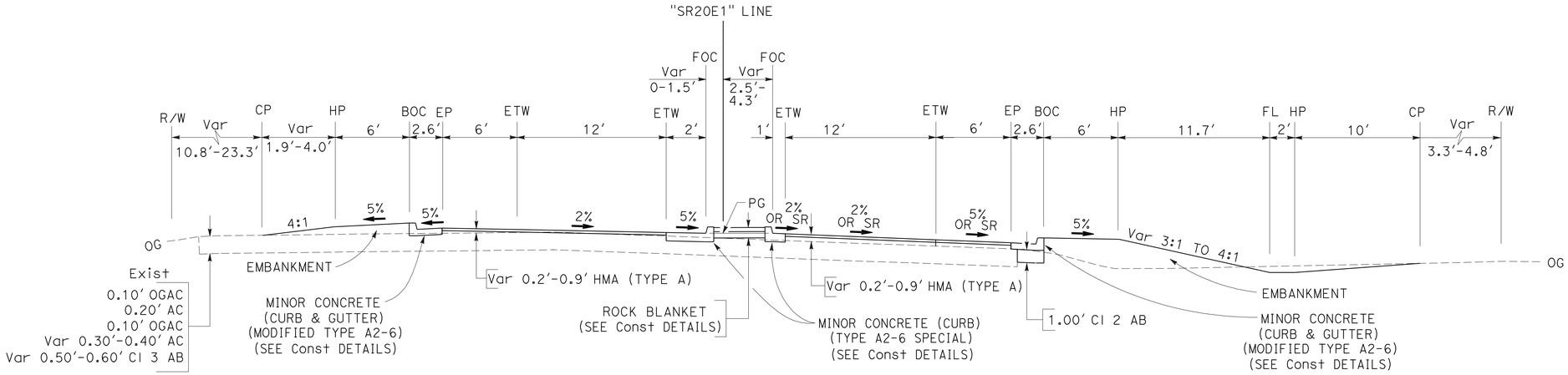

OVERLAY WITH CURB AND GUTTER

"SR20E1" 3+92.4 TO 4+30.5

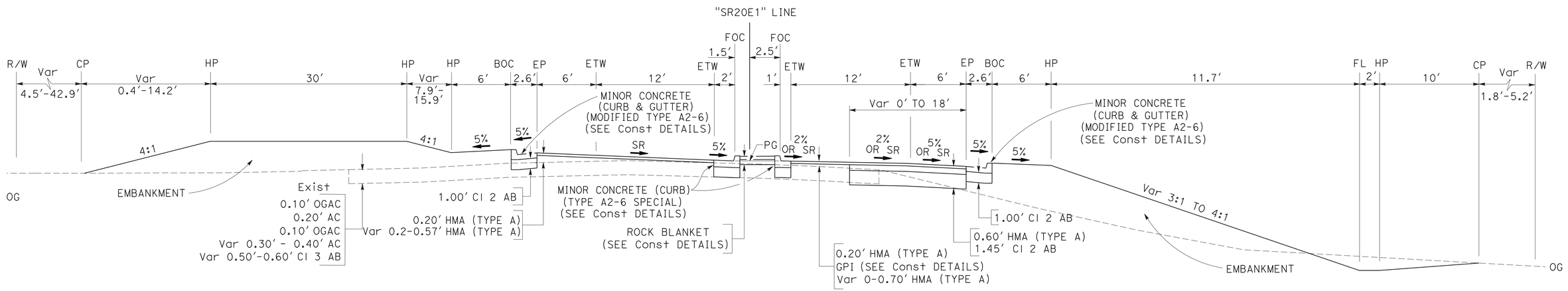

OVERLAY WITH WIDENING AND CURB AND GUTTER

"SR20E1" 3+12.6 TO 3+92.4

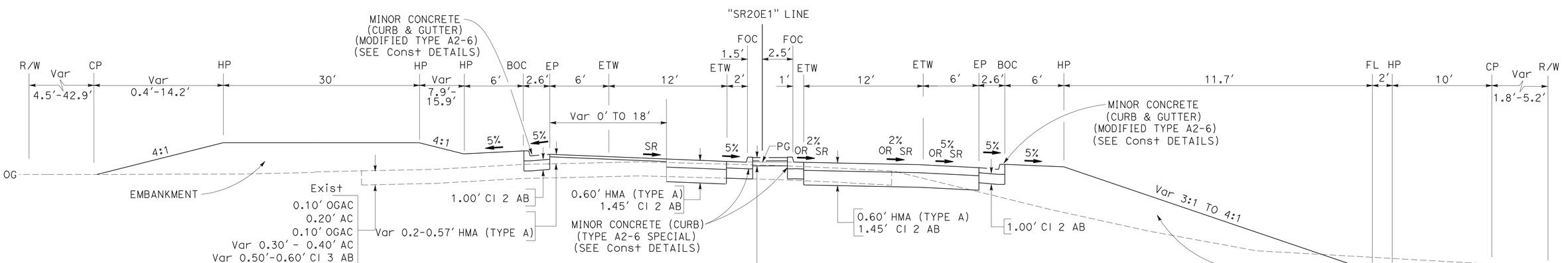

OVERLAY WITH WIDENING AND CURB AND GUTTER

"SR20E1" 2+40.4 TO 3+12.6

TYPICAL CROSS SECTIONS

NO SCALE

X-5

REVISED BY	DATE REVISED

DIANNE EDWARDS

CALCULATED-DESIGNED BY | CHECKED BY

FUNCTIONAL SUPERVISOR: Dennis P. McBride

STATE OF CALIFORNIA - DEPARTMENT OF TRANSPORTATION

Caltrans® **DESIGN**

LAST REVISION 00-00-00 | DATE PLOTTED => 28-JUN-2011 | TIME PLOTTED => 15:50

Dist	COUNTY	ROUTE	POST MILES TOTAL PROJECT	SHEET No.	TOTAL SHEETS
01	Lak	20	11.9/12.4	7	120

Dianne M Edwards 5-4-11
REGISTERED CIVIL ENGINEER DATE

6-27-11
PLANS APPROVAL DATE

REGISTERED PROFESSIONAL ENGINEER
D.M. EDWARDS
No. C-51898
Exp. 6-30-12
CIVIL
STATE OF CALIFORNIA

THE STATE OF CALIFORNIA OR ITS OFFICERS OR AGENTS SHALL NOT BE RESPONSIBLE FOR THE ACCURACY OR COMPLETENESS OF SCANNED COPIES OF THIS PLAN SHEET.

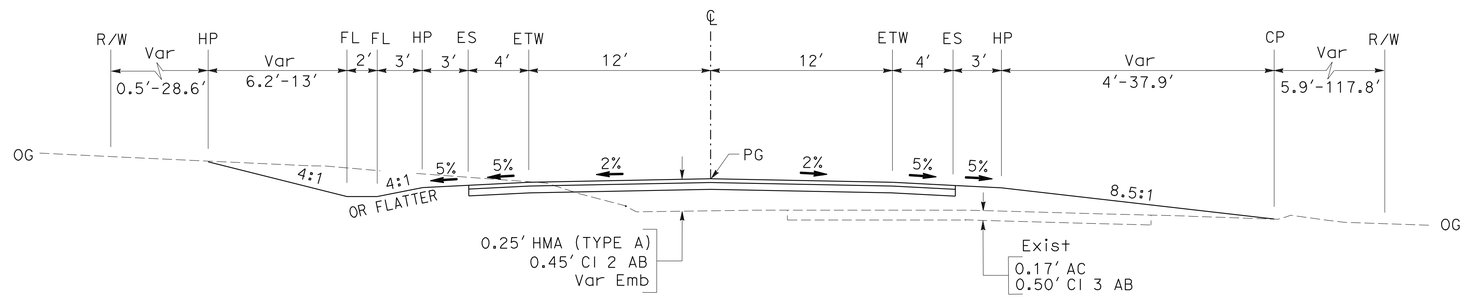

"PR1" 1+75.0 TO 3+50.0

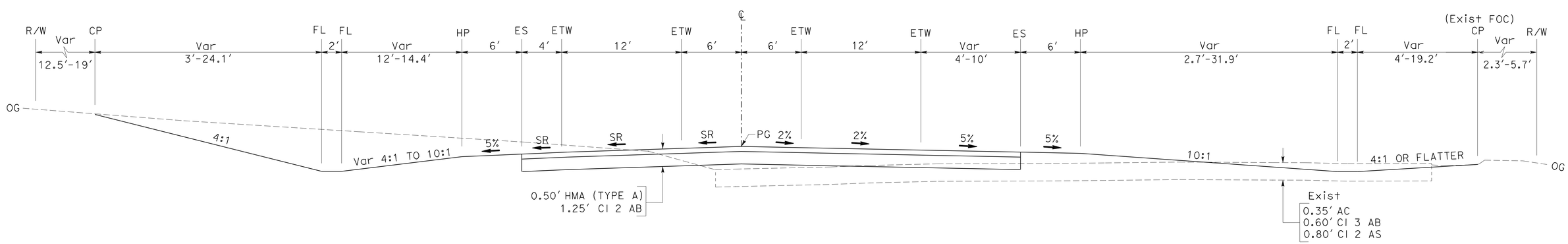

"LC1" 3+70.0 TO 5+54.0

TYPICAL CROSS SECTIONS

NO SCALE

X-6

REVISED BY	DATE REVISED
DIANNE EDWARDS	

CALCULATED-DESIGNED BY	CHECKED BY

FUNCTIONAL SUPERVISOR
Dennis P. McBride

STATE OF CALIFORNIA - DEPARTMENT OF TRANSPORTATION
Caltrans®
DESIGN

P:\proj1\01\48050\drafting\sheets\148050ca006.dgn

LAST REVISION 00-00-00
DATE PLOTTED => 28-JUN-2011
TIME PLOTTED => 15:51

NOTES:

1. FOR ACCURATE RIGHT OF WAY DATA, CONTACT RIGHT OF WAY ENGINEERING AT THE DISTRICT OFFICE.
2. FOR "RA1" ALIGNMENT SEE CONSTRUCTION DETAILS.
3. FOR SIDEWALK ALIGNMENT SEE CONSTRUCTION DETAILS.
4. FOR CONTOUR GRADING SEE SHEET G-1.

LEGEND

TCE = TEMPORARY CONSTRUCTION EASEMENT

TFESA — TEMPORARY FENCE (TYPE ESA)

COLD PLANE AC PAVEMENT

REMOVE BASE AND SURFACING

EQUATIONS

A	"SR20W1" 105+20.6, 5.2′ L+ = "SPLTR4" 105+20.6, 0.0′ R+
B	"SR20W1" 108+28.9, 1.5′ R+ = "SPLTR3" 108+28.9, 0.0′ R+
C	"RA1" 101+51.1, 0.0′ R+ = "SPLTR4" 108+82.3, 0.0′ R+
D	"RA1" 100+65.3, 0.0′ R+ = "SPLTR7" 0+72.5, 0.0′ R+
E	"PR1" 1+75.0, 0.2′ L+ = "SPLTR7" 1+75.0, 0.0′ R+
F	"PR1" 1+75.0, 0.1′ R+ = "SPLTR8" 1+75.0, 0.0′ R+
G	"RA1" 100+35.6, 0.0′ R+ = "SPLTR8" 0+69.8, 0.0′ R+
S	"RA1" 101+88.2, 0.0′ = "SPLTR3" 108+76.80, 0.0′ R+
T	"SR20W1" 102+55.0, 0.0′ R+ = "D" 50+00.0, 0.0′ R+

Dist	COUNTY	ROUTE	POST MILES TOTAL PROJECT	SHEET No.	TOTAL SHEETS
01	Lak	20	11.9/12.4	8	120

Dianne M Edwards 5-4-11
REGISTERED CIVIL ENGINEER DATE

6-27-11
PLANS APPROVAL DATE

REGISTERED PROFESSIONAL ENGINEER D.M. EDWARDS No. C-51898 Exp. 6-30-12 CIVIL STATE OF CALIFORNIA

THE STATE OF CALIFORNIA OR ITS OFFICERS OR AGENTS SHALL NOT BE RESPONSIBLE FOR THE ACCURACY OR COMPLETENESS OF SCANNED COPIES OF THIS PLAN SHEET.

CURVE AND TANGENT DATA

CURVE No.	ALIGNMENT LINE	STATION FROM (BC)	STATION TO (EC)	BEARING	DISTANCE	R	Δ	T	L
11	"SPLTR7"	0+27.08	1+27.08			97.00′	59°04′04.13"	54.956′	100.000′
12	"SPLTR7"	1+27.08	1+79.86			548.00′	5°31′08.05"	26.413′	52.785′
13	"SPLTR8"	0+32.80	1+22.99			201.00′	25°42′27.86"	45.865′	90.186′
14	"SPLTR8"	1+22.90	1+78.00			501.00′	6°31′10.71"	28.536′	57.008′
	"PR1"	1+75.00	1+82.6	N30°43′14"E	7.58′				
	"PR1"	1+82.6	2+14.23	N49°20′29"E	31.64′				
15	"PR1"	2+14.23	2+44.29			500.00′	3°26′39.44"	15.033′	30.057′
16	"PR1"	2+44.29	3+19.42			350.00′	12°17′58.15"	37.712′	75.133′
17	"PR1"	3+19.42	5+55.60			350.00′	38°39′43.53"	122.781′	267.173′
	"D"	50+00.00	50+56.54	N44°13′52"E	56.54′				
18	"RA1"	100+00.00	104+71.24			75.00′	360°00′00"		471.24′
19	"D"	50+56.54	50+75			100.00′	10°34′36"	9.3′	18.5′

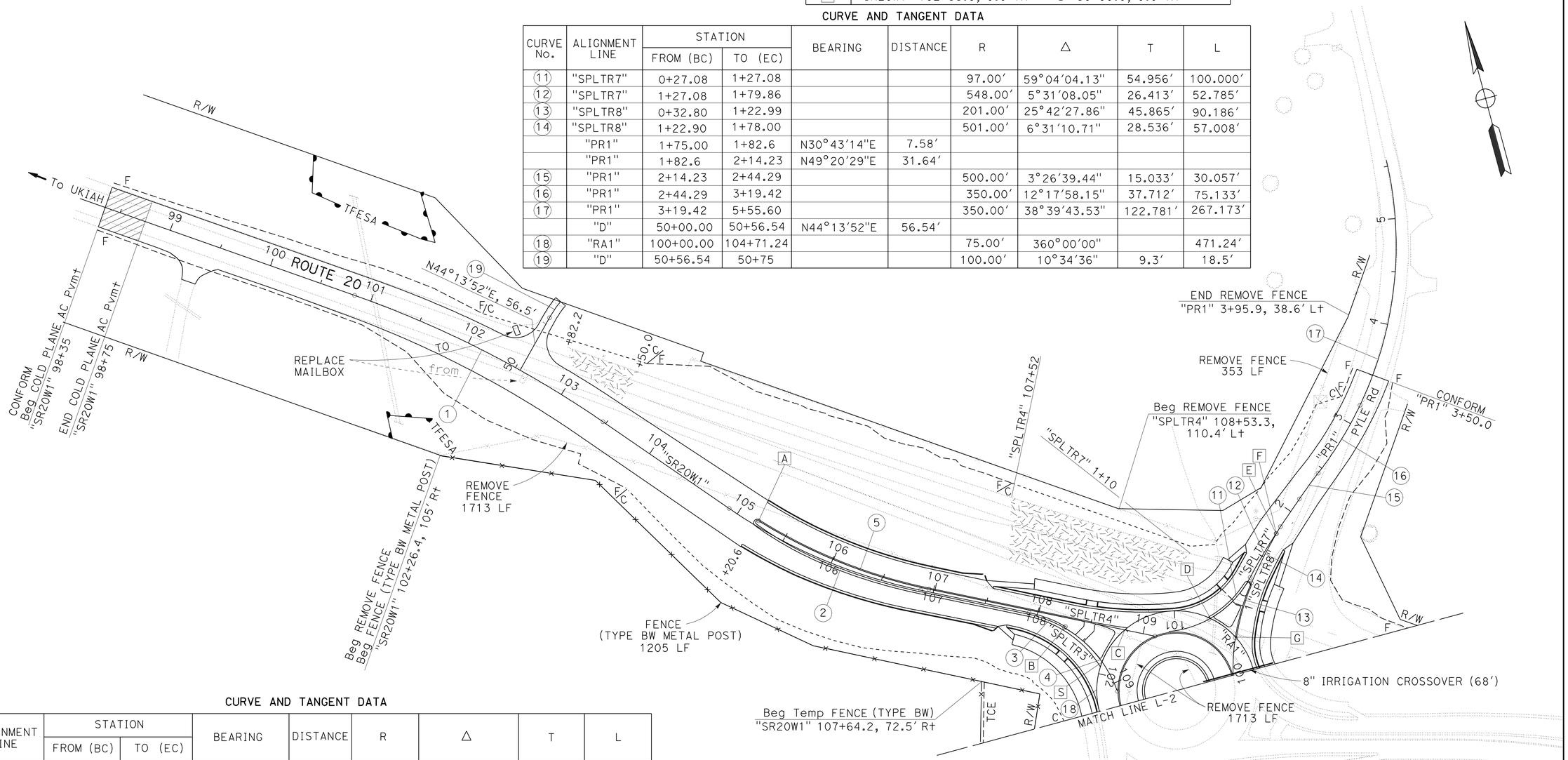

CURVE AND TANGENT DATA

CURVE No.	ALIGNMENT LINE	STATION FROM (BC)	STATION TO (EC)	BEARING	DISTANCE	R	Δ	T	L
	"SR20W1"	98+00.00	100+83.84	S55°34′33"E	283.84′				
1	"SR20W1"	100+83.84	103+46.77			1000.00′	5°43′46.48"	132.231′	262.936′
	"SR20W1"	103+46.77	104+90.76	S40°30′39"E	143.99′				
2	"SR20W1"	104+90.76	106+87.86			496.50′	22°44′40.64"	99.862′	197.095′
	"SR20W1"	106+87.86	107+92.19	S63°15′20"E	104.33′				
3	"SR20W1"	107+92.19	108+28.91			115.50′	18°13′6.86"	18.519′	36.726′
4	"SPLTR3"	107+92.66	109+08.77			114.00′	58°21′16.30"	63.653′	116.107′
5	"SPLTR4"	105+20.67	106+94.16			491.00′	20°14′45.38"	87.664′	173.499′
	"SPLTR4"	106+94.16	109+11.43	S63°15′20"E	217.27′				

LAYOUT L-1

SCALE: 1" = 50′

STATE OF CALIFORNIA - DEPARTMENT OF TRANSPORTATION
Caltrans DESIGN

FUNCTIONAL SUPERVISOR: Dennis P. McBride
CALCULATED-DESIGNED BY: DIANNE EDWARDS
CHECKED BY
REVISED BY
DATE REVISED

P:\proj1\01\48050\drafting\sheets\148050ea001.dgn

LAST REVISION 00-00-00 | DATE PLOTTED => 28-JUN-2011 | TIME PLOTTED => 15:51

Dist	COUNTY	ROUTE	POST MILES TOTAL PROJECT	SHEET No.	TOTAL SHEETS
01	Lak	20	11.9/12.4	9	120

Dianne M Edwards 5-4-11
REGISTERED CIVIL ENGINEER DATE

6-27-11
PLANS APPROVAL DATE

REGISTERED PROFESSIONAL ENGINEER
D.M. EDWARDS
No. C-51898
Exp. 6-30-12
CIVIL
STATE OF CALIFORNIA

THE STATE OF CALIFORNIA OR ITS OFFICERS OR AGENTS SHALL NOT BE RESPONSIBLE FOR THE ACCURACY OR COMPLETENESS OF SCANNED COPIES OF THIS PLAN SHEET.

NOTES:

1. FOR ACCURATE RIGHT OF WAY DATA, CONTACT RIGHT OF WAY ENGINEERING AT THE DISTRICT OFFICE.
2. TCE IS AVAILABLE FOR THE EXCLUSIVE USE OF THE CONTRACTOR.

EQUATIONS

H	"RA1" 102+84.5, 0.0 Rt = "SPLTR2" 7+60.6, 0.0′ Rt
I	"LC1" 6+71.6, 1.5′ Rt = "SPLTR1" 6+71.6, 0.0 Rt
J	"LC1" 5+65.5, 3.6′ Lt = "SPLTR2" 5+65.5, 0.0 Rt
K	"LC1" 4+00.0, 0.0′ Rt = "LCDRWY1" 10+00.0, 0.0 Rt
L	"LC1" 3+33.0, 0.0′ Rt = "LCDRWY6" 30+00.0, 0.0 Rt
M	"LC1" 4+87.0, 0.0′ Rt = "LCDRWY5" 20+00.0, 0.0 Rt
N	"RA1" 103+20.1, 0.0 Rt = "SPLTR1" 7+54.2, 0.0′ Rt
O	"RA1" 104+02.6, 0.0 Rt = "SPLTR6" 0+66.1, 0.0′ Rt
P	"SR20E1" 1+57.0, 2.5′ Rt = "SPLTR6" 1+57.0, 0.0 Rt
Q	"SR20E1" 1+57.0, 1.5′ Lt = "SPLTR5" 1+57.0, 0.0 Rt
R	"RA1" 104+39.4, 0.0 Rt = "SPLTR5" 0+73.2, 0.0′ Rt

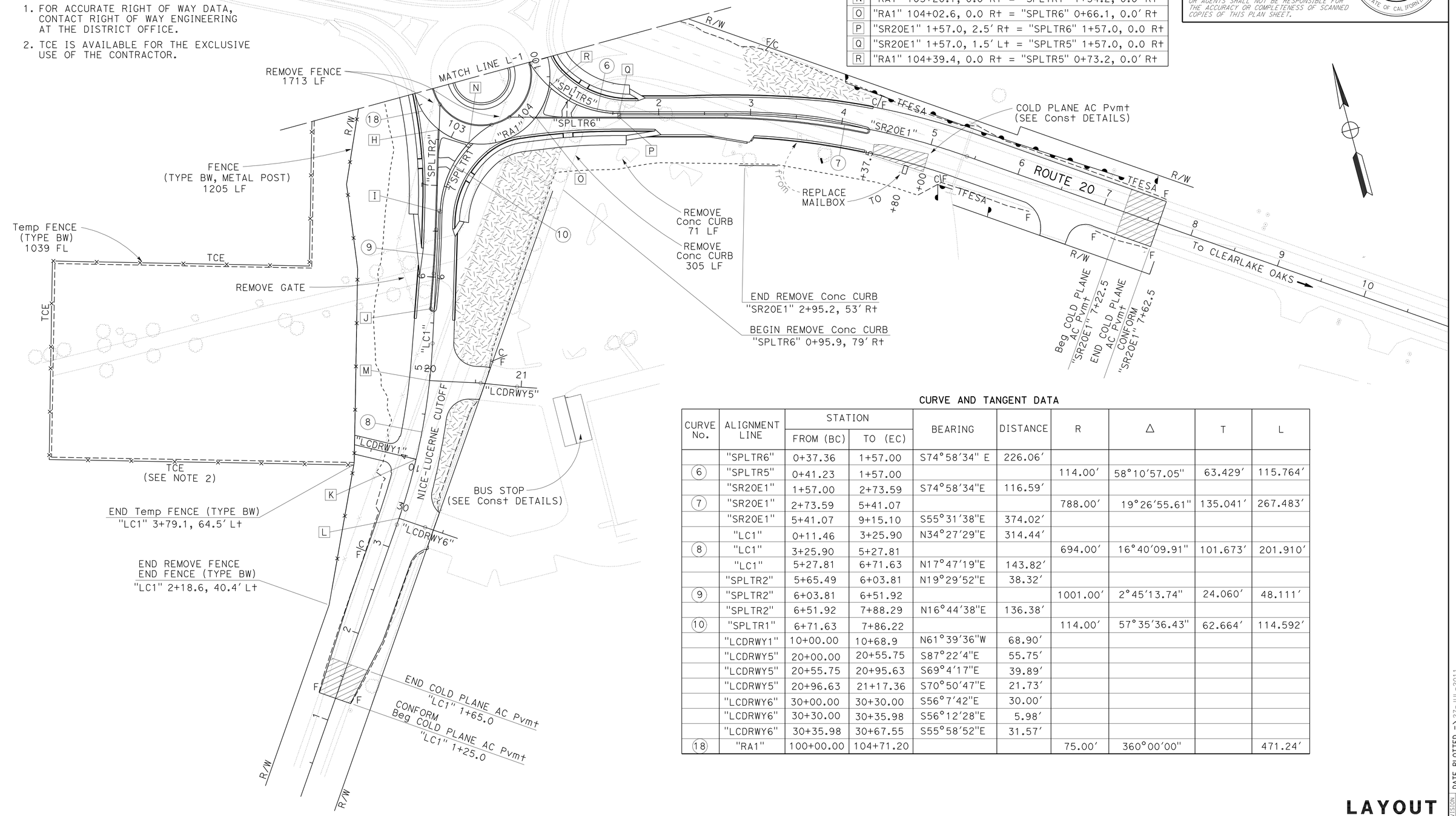

CURVE AND TANGENT DATA

CURVE No.	ALIGNMENT LINE	STATION FROM (BC)	STATION TO (EC)	BEARING	DISTANCE	R	Δ	T	L
	"SPLTR6"	0+37.36	1+57.00	S74°58′34" E	226.06′				
6	"SPLTR5"	0+41.23	1+57.00			114.00′	58°10′57.05"	63.429′	115.764′
	"SR20E1"	1+57.00	2+73.59	S74°58′34"E	116.59′				
7	"SR20E1"	2+73.59	5+41.07			788.00′	19°26′55.61"	135.041′	267.483′
	"SR20E1"	5+41.07	9+15.10	S55°31′38"E	374.02′				
	"LC1"	0+11.46	3+25.90	N34°27′29"E	314.44′				
8	"LC1"	3+25.90	5+27.81			694.00′	16°40′09.91"	101.673′	201.910′
	"LC1"	5+27.81	6+71.63	N17°47′19"E	143.82′				
	"SPLTR2"	5+65.49	6+03.81	N19°29′52"E	38.32′				
9	"SPLTR2"	6+03.81	6+51.92			1001.00′	2°45′13.74"	24.060′	48.111′
	"SPLTR2"	6+51.92	7+88.29	N16°44′38"E	136.38′				
10	"SPLTR1"	6+71.63	7+86.22			114.00′	57°35′36.43"	62.664′	114.592′
	"LCDRWY1"	10+00.00	10+68.9	N61°39′36"W	68.90′				
	"LCDRWY5"	20+00.00	20+55.75	S87°22′4"E	55.75′				
	"LCDRWY5"	20+55.75	20+95.63	S69°4′17"E	39.89′				
	"LCDRWY5"	20+96.63	21+17.36	S70°50′47"E	21.73′				
	"LCDRWY6"	30+00.00	30+30.00	S56°7′42"E	30.00′				
	"LCDRWY6"	30+30.00	30+35.98	S56°12′28"E	5.98′				
	"LCDRWY6"	30+35.98	30+67.55	S55°58′52"E	31.57′				
18	"RA1"	100+00.00	104+71.20			75.00′	360°00′00"		471.24′

SCALE: 1" = 50′

LAYOUT L-2

REVISED BY | DATE REVISED
DIANNE EDWARDS | CALCULATED-DESIGNED BY
CHECKED BY
FUNCTIONAL SUPERVISOR
Dennis P. McBride

STATE OF CALIFORNIA - DEPARTMENT OF TRANSPORTATION
Caltrans
DESIGN

P:\proj1\01\48050\drafting\Resubmit\148050ea002.dgn

LAST REVISION 00-00-00 | DATE PLOTTED => 27-JUL-2011 | TIME PLOTTED => 11:28

NOTE:
SEE CONSTRUCTION DETAILS FOR LOCATION OF "SW" LINES.

Dist	COUNTY	ROUTE	POST MILES TOTAL PROJECT	SHEET No.	TOTAL SHEETS
01	Lak	20	11.9/12.4	10	120

Dianne M Edwards 5-4-11
REGISTERED CIVIL ENGINEER DATE

6-27-11
PLANS APPROVAL DATE

REGISTERED PROFESSIONAL ENGINEER
D.M. EDWARDS
No. C-51898
Exp. 6-30-12
CIVIL
STATE OF CALIFORNIA

THE STATE OF CALIFORNIA OR ITS OFFICERS OR AGENTS SHALL NOT BE RESPONSIBLE FOR THE ACCURACY OR COMPLETENESS OF SCANNED COPIES OF THIS PLAN SHEET.

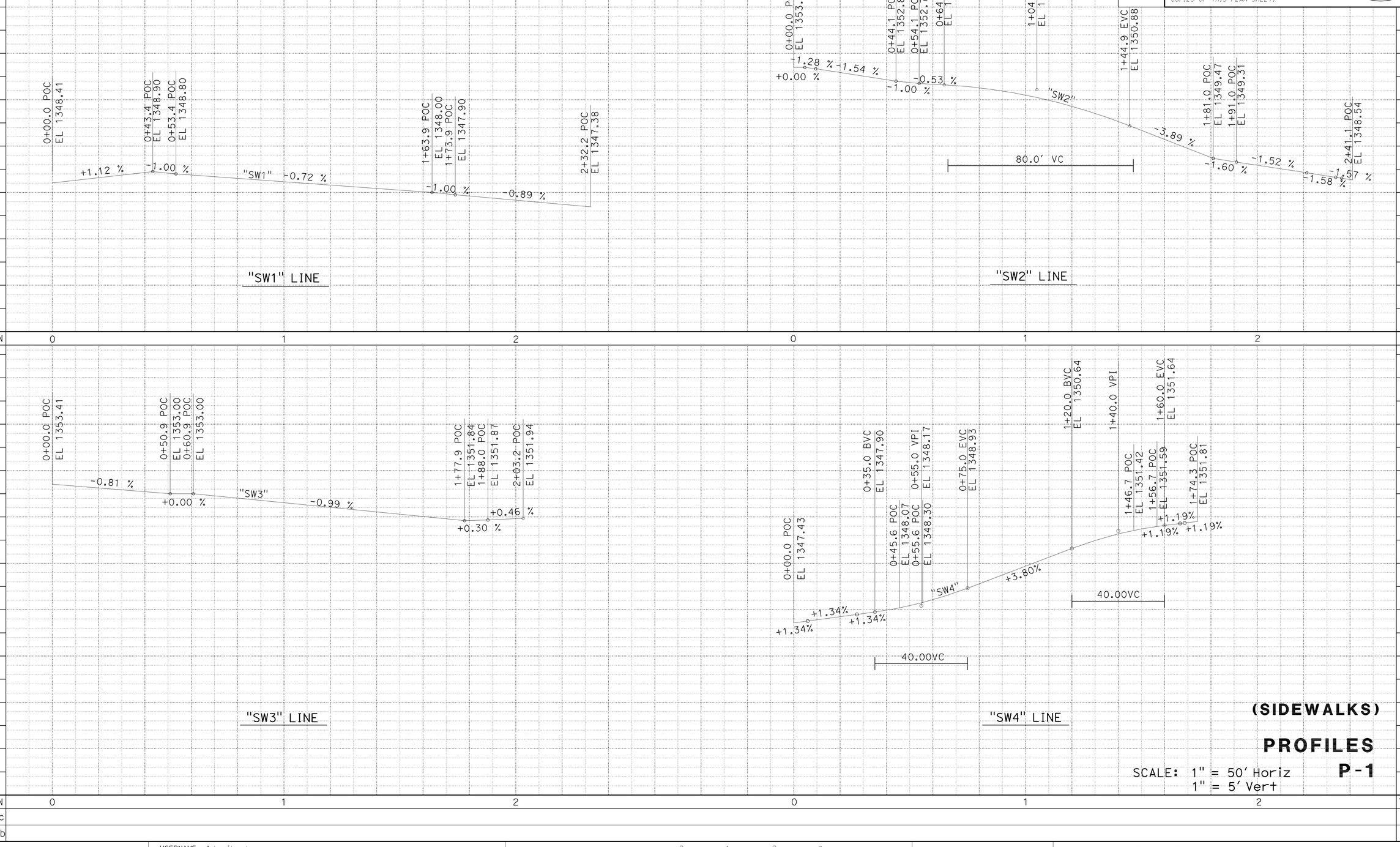

(SIDEWALKS)

PROFILES

SCALE: 1" = 50' Horiz
1" = 5' Vert

P-1

REVISED BY | DATE REVISED
DIANNE EDWARDS
CALCULATED-DESIGNED BY | CHECKED BY
FUNCTIONAL SUPERVISOR
Dennis P. McBride

STATE OF CALIFORNIA - DEPARTMENT OF TRANSPORTATION
Caltrans
DESIGN

P:\proj1\01\48050\drafting\sheets\148050fa001.dgn

LAST REVISION 00-00-00 | DATE PLOTTED => 28-JUN-2011 | TIME PLOTTED => 15:51

Dist	COUNTY	ROUTE	POST MILES TOTAL PROJECT	SHEET No.	TOTAL SHEETS
01	Lak	20	11.9/12.4	11	120

Dianne M Edwards 5-4-11
REGISTERED CIVIL ENGINEER DATE

6-27-11
PLANS APPROVAL DATE

REGISTERED PROFESSIONAL ENGINEER
D.M. EDWARDS
No. C-51898
Exp. 6-30-12
CIVIL
STATE OF CALIFORNIA

THE STATE OF CALIFORNIA OR ITS OFFICERS OR AGENTS SHALL NOT BE RESPONSIBLE FOR THE ACCURACY OR COMPLETENESS OF SCANNED COPIES OF THIS PLAN SHEET.

NOTE:
SEE CONSTRUCTION DETAILS FOR LOCATION OF "SW" LINES.

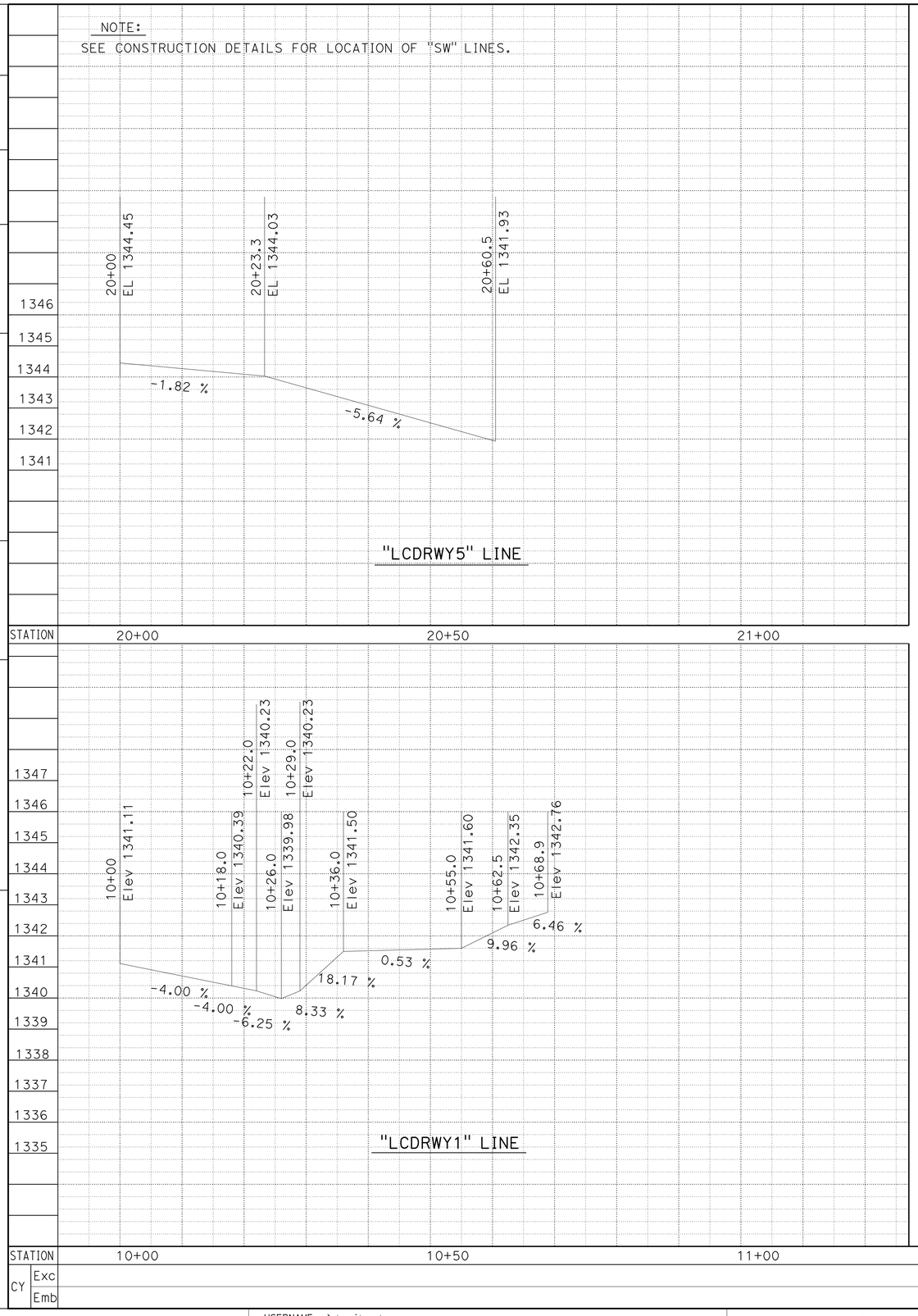

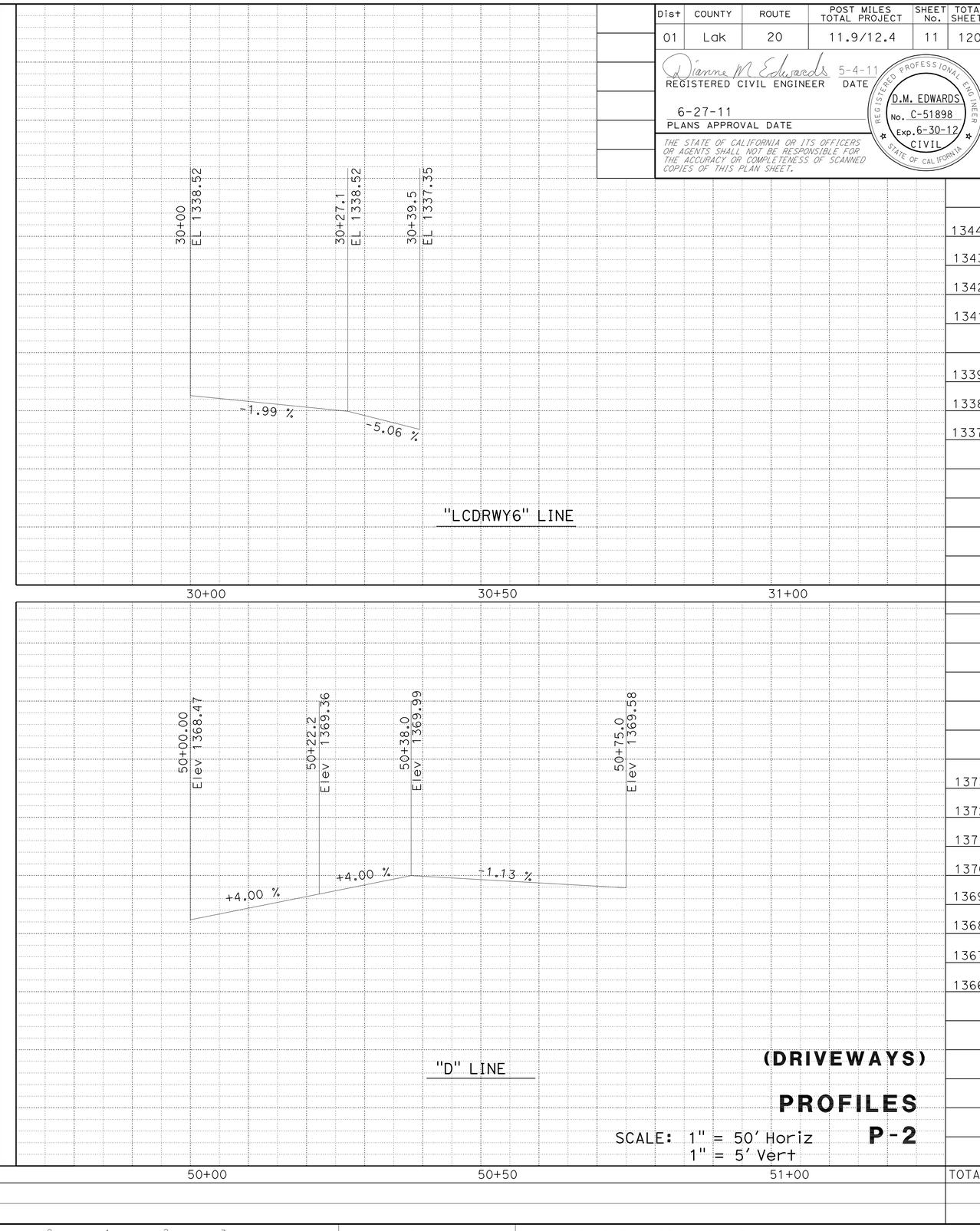

(DRIVEWAYS)

PROFILES

SCALE: 1" = 50' Horiz
1" = 5' Vert

P-2

CY	
Exc	
Emb	

REVISED BY | DATE REVISED
DIANNE EDWARDS
CALCULATED-DESIGNED BY | CHECKED BY
FUNCTIONAL SUPERVISOR
Dennis P. McBride

STATE OF CALIFORNIA - DEPARTMENT OF TRANSPORTATION
Caltrans
DESIGN

P:\proj1\01\48050\drafting\sheets\148050fa002.dgn

LAST REVISION 00-00-00 | DATE PLOTTED => 28-JUN-2011 | TIME PLOTTED => 15:51

Dist	COUNTY	ROUTE	POST MILES TOTAL PROJECT	SHEET No.	TOTAL SHEETS
01	Lak	20	11.9/12.4	12	120

Dianne M Edwards 5-4-11
REGISTERED CIVIL ENGINEER DATE

6-27-11
PLANS APPROVAL DATE

REGISTERED PROFESSIONAL ENGINEER
D.M. EDWARDS
No. C-51898
Exp. 6-30-12
CIVIL
STATE OF CALIFORNIA

THE STATE OF CALIFORNIA OR ITS OFFICERS OR AGENTS SHALL NOT BE RESPONSIBLE FOR THE ACCURACY OR COMPLETENESS OF SCANNED COPIES OF THIS PLAN SHEET.

LEGEND

TW = TRAVELED WAY

NOTES:

1. PROFILES OF "SPLTR3" AND "SPLTR4" MATCH PROFILE OF "SR20W1" FROM 105+20.57 TO 106+05.6
2. AT INTERSECTION WITH "RA1", "SPLTR4" PROFILE IS 0.19' HIGHER THAN "SPLTR3" PROFILE.

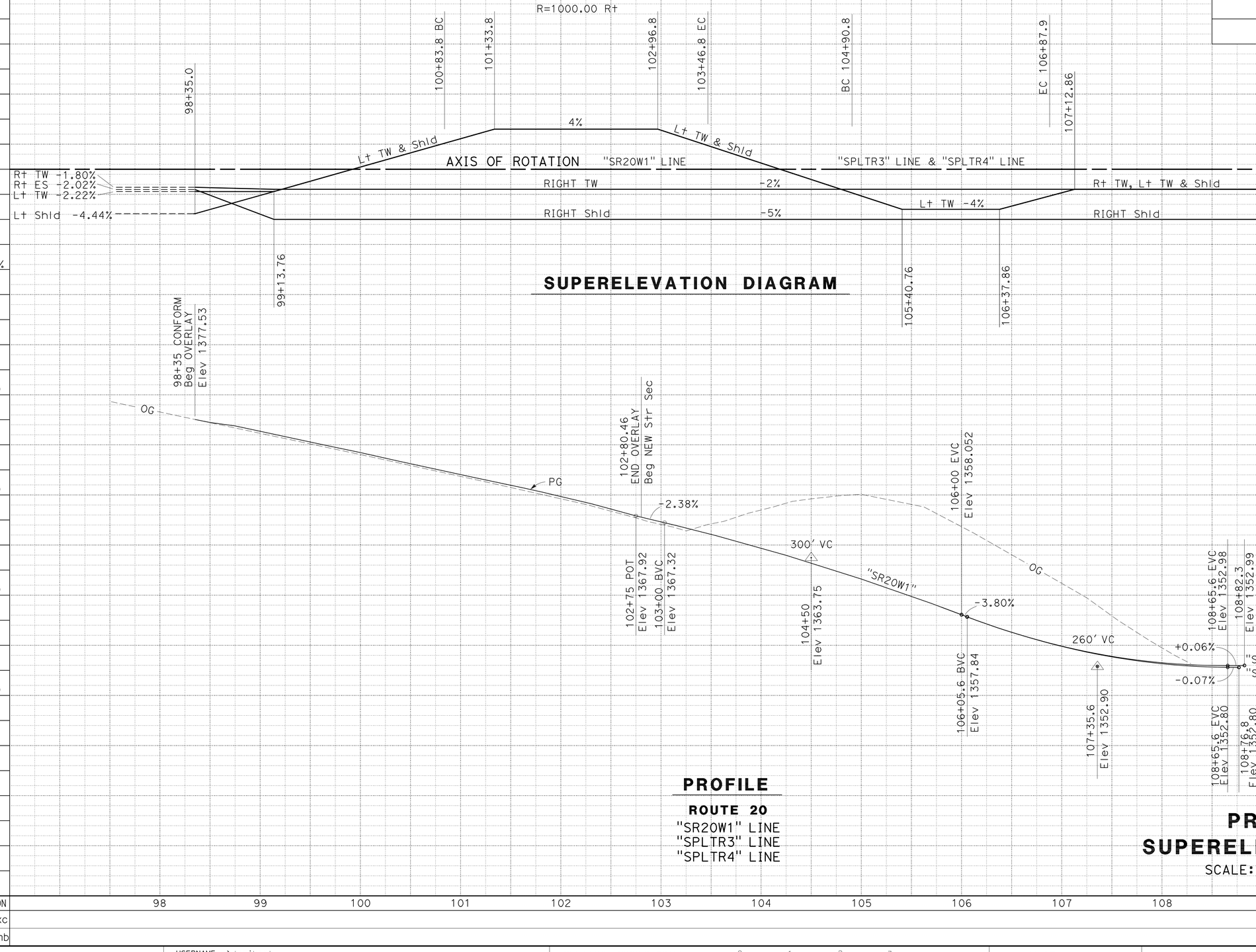

REVISED BY | DATE REVISED

DIANNE EDWARDS

CALCULATED-DESIGNED BY | CHECKED BY

FUNCTIONAL SUPERVISOR

Dennis P. McBride

STATE OF CALIFORNIA - DEPARTMENT OF TRANSPORTATION

Caltrans®

DESIGN

P:\proj1\01\48050\drafting\sheets\148050fb001.dgn

LAST REVISION 00-00-00 | DATE PLOTTED => 28-JUN-2011 | TIME PLOTTED => 15:51

Dist	COUNTY	ROUTE	POST MILES TOTAL PROJECT	SHEET No.	TOTAL SHEETS
01	Lak	20	11.9/12.4	13	120

Dianne M Edwards 5-4-11
REGISTERED CIVIL ENGINEER DATE

6-27-11
PLANS APPROVAL DATE

REGISTERED PROFESSIONAL ENGINEER
D.M. EDWARDS
No. C-51898
Exp. 6-30-12
CIVIL
STATE OF CALIFORNIA

THE STATE OF CALIFORNIA OR ITS OFFICERS OR AGENTS SHALL NOT BE RESPONSIBLE FOR THE ACCURACY OR COMPLETENESS OF SCANNED COPIES OF THIS PLAN SHEET.

NOTES:

1. PROFILES OF "SPLTR5" AND "SPLTR6" MATCH PROFILE OF "SR20E1" FROM 2+70.0 TO 4+28.0
2. AT INTERSECTION WITH "RA1", "SPLTR5" PROFILE IS 0.40' HIGHER THAN "SPLTR6" PROFILE.

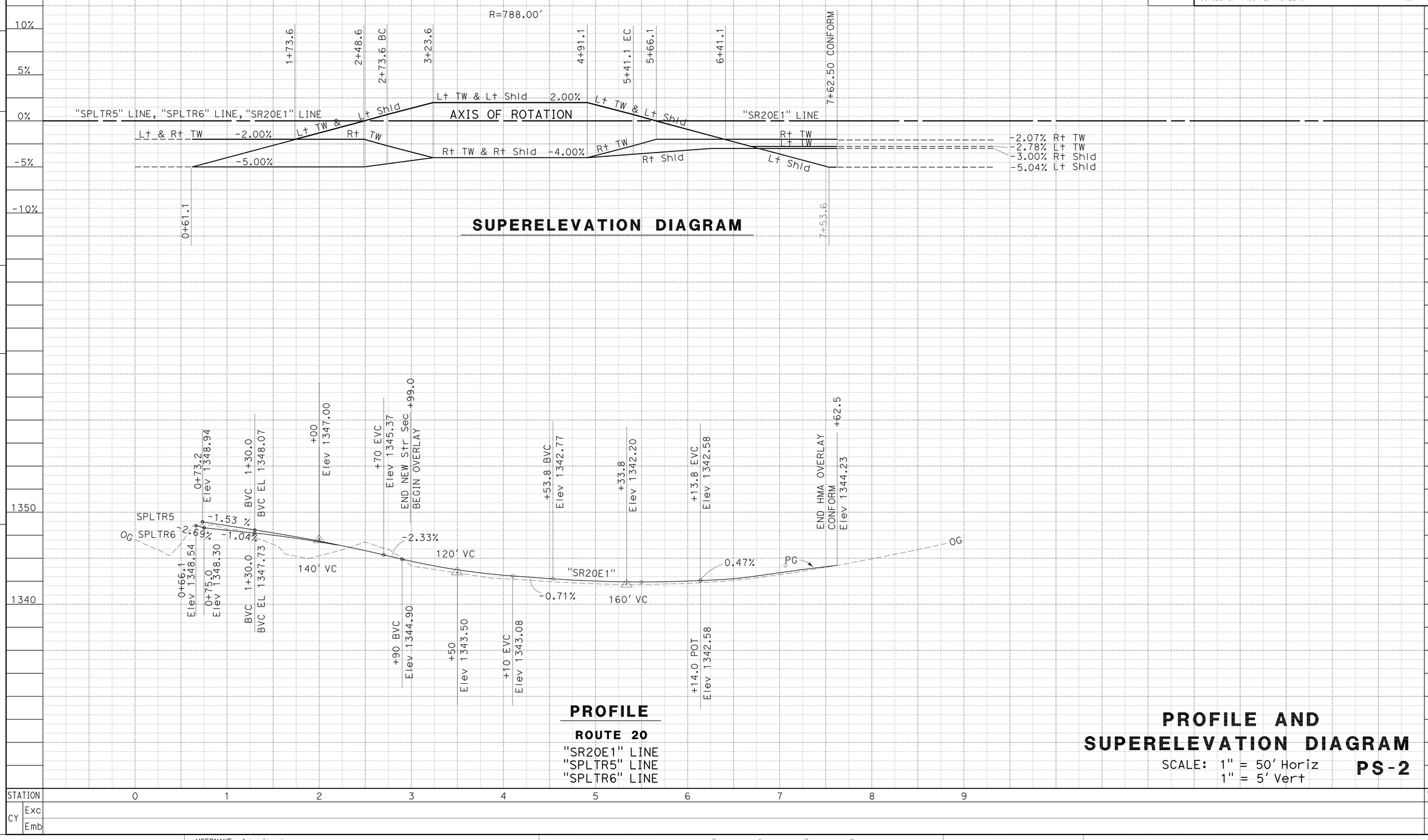

PROFILE AND SUPERELEVATION DIAGRAM

SCALE: 1" = 50' Horiz
1" = 5' Vert

PS-2

STATION	0	1	2	3	4	5	6	7	8	9	TOTAL
CY Exc											
CY Emb											

REVISED BY | DATE REVISED
DIANNE EDWARDS
CALCULATED-DESIGNED BY | CHECKED BY
FUNCTIONAL SUPERVISOR
Dennis P. McBride

STATE OF CALIFORNIA - DEPARTMENT OF TRANSPORTATION
Caltrans
DESIGN

P:\proj1\01\48050\drafting\sheets\148050fb002.dgn

LAST REVISION 00-00-00 | DATE PLOTTED => 28-JUN-2011 | TIME PLOTTED => 15:51

Dist	COUNTY	ROUTE	POST MILES TOTAL PROJECT	SHEET No.	TOTAL SHEETS
01	Lak	20	11.9/12.4	14	120

Dianne M Edwards 5-4-11
REGISTERED CIVIL ENGINEER DATE

6-27-11
PLANS APPROVAL DATE

REGISTERED PROFESSIONAL ENGINEER
D.M. EDWARDS
No. C-51898
Exp. 6-30-12
CIVIL
STATE OF CALIFORNIA

THE STATE OF CALIFORNIA OR ITS OFFICERS OR AGENTS SHALL NOT BE RESPONSIBLE FOR THE ACCURACY OR COMPLETENESS OF SCANNED COPIES OF THIS PLAN SHEET.

NOTES:

1. PROFILES OF "SPLTR1" AND "SPLTR2" MATCH PROFILE OF "LC1" FROM 5+65.5 to 6+71.6.
2. AT INTERSECTION WITH "RA1", "SPLTR2" PROFILE IS 1.03' HIGHER THAN "SPLTR1" PROFILE.

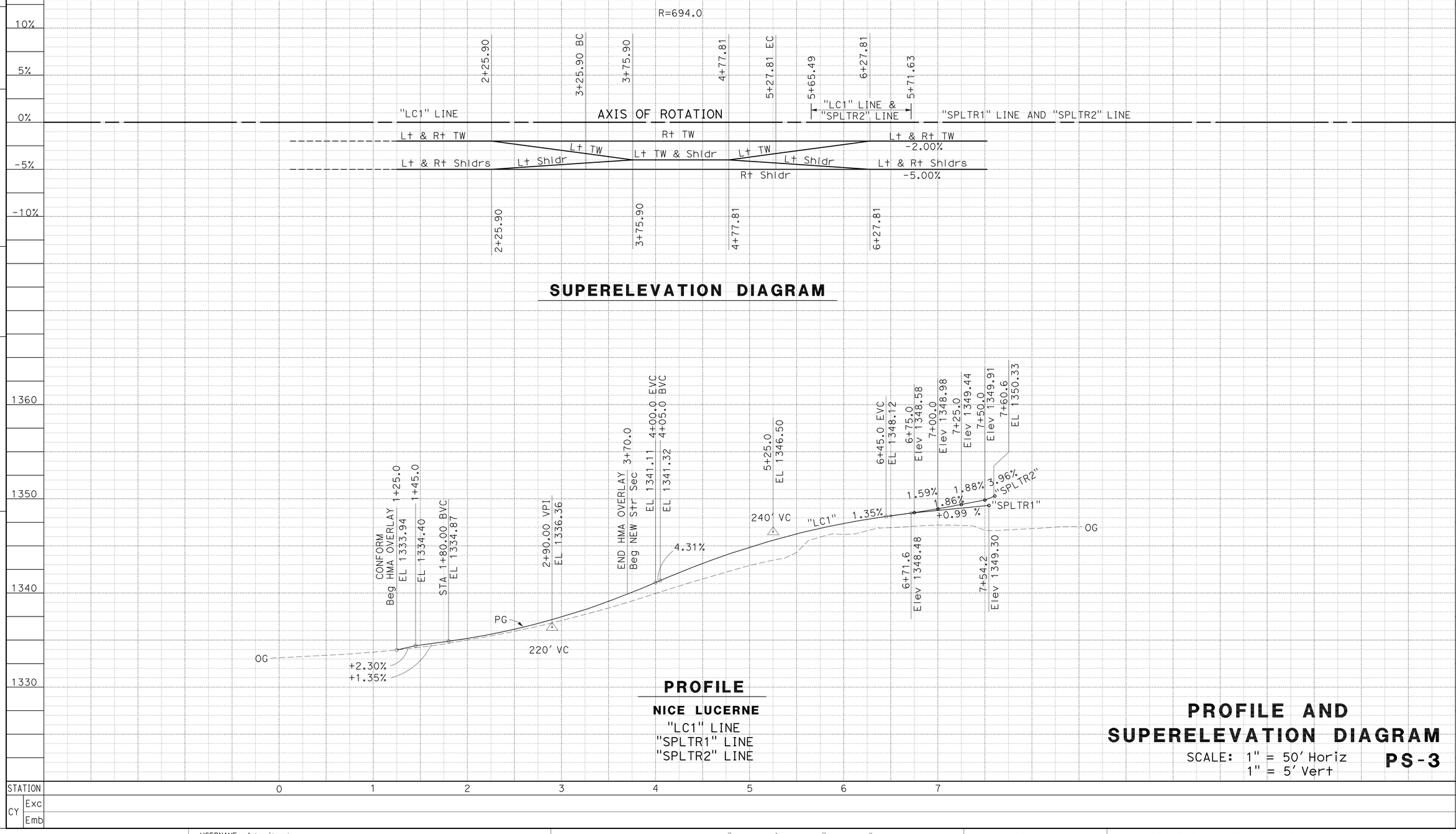

SUPERELEVATION DIAGRAM

PROFILE

NICE LUCERNE

"LC1" LINE
"SPLTR1" LINE
"SPLTR2" LINE

PROFILE AND SUPERELEVATION DIAGRAM

SCALE: 1" = 50' Horiz
1" = 5' Vert

PS-3

STATION	0	1	2	3	4	5	6	7	TOTAL
CY Exc									
CY Emb									

REVISED BY | DATE REVISED
DIANNE EDWARDS
CALCULATED-DESIGNED BY | CHECKED BY
FUNCTIONAL SUPERVISOR
Dennis P. McBride

STATE OF CALIFORNIA - DEPARTMENT OF TRANSPORTATION
Caltrans®
DESIGN

P:\proj1\01\48050\drafting\sheets\148050fb003.dgn

LAST REVISION 00-00-00 | DATE PLOTTED => 28-JUN-2011 | TIME PLOTTED => 15:51

Dist	COUNTY	ROUTE	POST MILES TOTAL PROJECT	SHEET No.	TOTAL SHEETS
01	Lak	20	11.9/12.4	15	120

Dianne M Edwards 5-4-11
REGISTERED CIVIL ENGINEER DATE

6-27-11
PLANS APPROVAL DATE

REGISTERED PROFESSIONAL ENGINEER D.M. EDWARDS No. C-51898 Exp. 6-30-12 CIVIL STATE OF CALIFORNIA

THE STATE OF CALIFORNIA OR ITS OFFICERS OR AGENTS SHALL NOT BE RESPONSIBLE FOR THE ACCURACY OR COMPLETENESS OF SCANNED COPIES OF THIS PLAN SHEET.

NOTES:

1. PROFILES OF "SPLTR7" AND "SPLTR8" MATCH PROFILE OF "PR1" FROM 1+20.0 to 3.50.0.
2. AT INTERSECTION WITH "RA1", "SPLTR7" PROFILE IS 0.95' HIGHER THAN "SPLTR8" PROFILE.

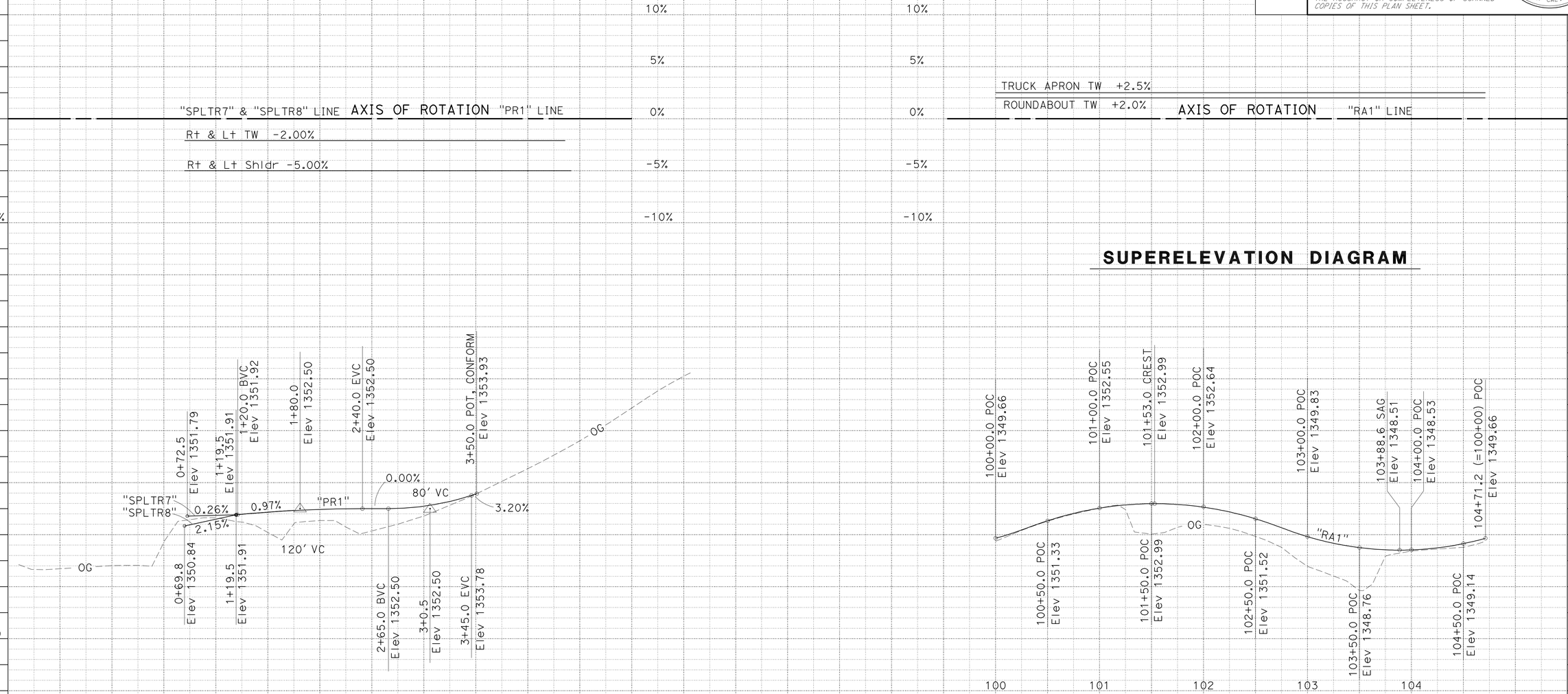

PROFILE

PYLE ROAD
"PR1" LINE
"SPLTR7" LINE
"SPLTR8" LINE

PROFILE

ROUNDABOUT
"RA1" LINE

PROFILE AND SUPERELEVATION DIAGRAM

SCALE: 1" = 50' Horiz
1" = 5' Vert

PS-4

STATION	0	1	2	3	4	5	6	TOTAL
CY Exc								
CY Emb								

REVISED BY | DATE REVISED
DIANNE EDWARDS
CALCULATED-DESIGNED BY | CHECKED BY
FUNCTIONAL SUPERVISOR
Dennis P. McBride

STATE OF CALIFORNIA - DEPARTMENT OF TRANSPORTATION
Caltrans
DESIGN

P:\proj1\01\48050\drafting\sheets\148050fb004.dgn

LAST REVISION 00-00-00
DATE PLOTTED => 28-JUN-2011
TIME PLOTTED => 15:51

Dist	COUNTY	ROUTE	POST MILES TOTAL PROJECT	SHEET No.	TOTAL SHEETS
01	Lak	20	11.9/12.4	16	120

Dianne M Edwards 5-4-11
REGISTERED CIVIL ENGINEER DATE

6-27-11
PLANS APPROVAL DATE

REGISTERED PROFESSIONAL ENGINEER
D.M. EDWARDS
No. C-51898
Exp. 6-30-12
CIVIL
STATE OF CALIFORNIA

THE STATE OF CALIFORNIA OR ITS OFFICERS OR AGENTS SHALL NOT BE RESPONSIBLE FOR THE ACCURACY OR COMPLETENESS OF SCANNED COPIES OF THIS PLAN SHEET.

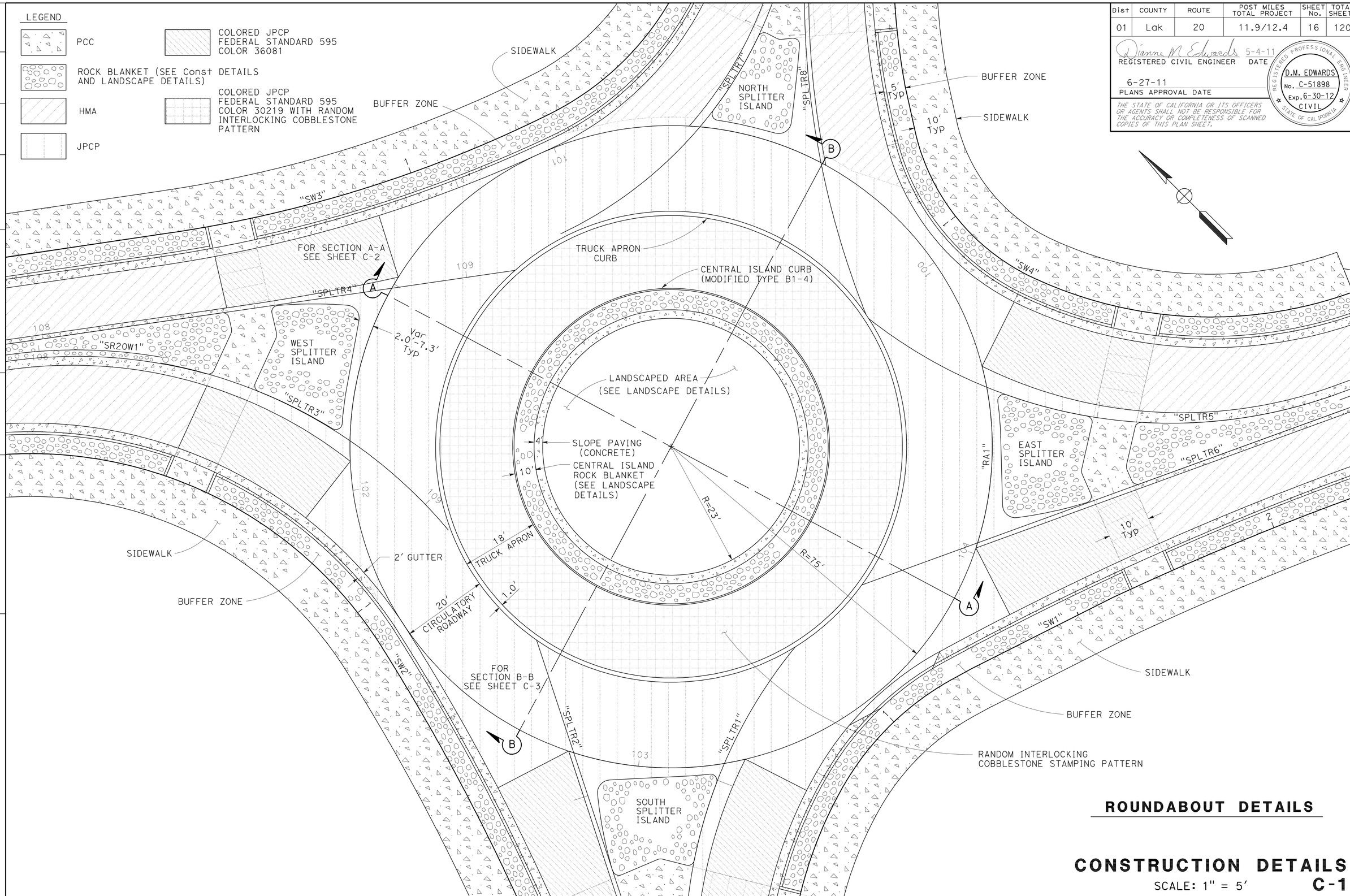

ROUNDABOUT DETAILS

CONSTRUCTION DETAILS

SCALE: 1" = 5'

C-1

REVISED BY	DATE REVISED
DIANNE EDWARDS	

CALCULATED-DESIGNED BY	CHECKED BY

FUNCTIONAL SUPERVISOR: Dennis P. McBride

STATE OF CALIFORNIA - DEPARTMENT OF TRANSPORTATION

Caltrans® DESIGN

P:\proj1\01\48050\drafting\sheets\148050ga001.dgn

LAST REVISION 00-00-00 | DATE PLOTTED => 28-JUN-2011 | TIME PLOTTED => 15:51

Dist	COUNTY	ROUTE	POST MILES TOTAL PROJECT	SHEET No.	TOTAL SHEETS
01	Lak	20	11.9/12.4	17	120

Dianne M Edwards 5-4-11
REGISTERED CIVIL ENGINEER DATE

6-27-11
PLANS APPROVAL DATE

REGISTERED PROFESSIONAL ENGINEER
D.M. EDWARDS
No. C-51898
Exp. 6-30-12
CIVIL
STATE OF CALIFORNIA

THE STATE OF CALIFORNIA OR ITS OFFICERS OR AGENTS SHALL NOT BE RESPONSIBLE FOR THE ACCURACY OR COMPLETENESS OF SCANNED COPIES OF THIS PLAN SHEET.

NOTES:

1. FOR "RA1" PROFILE INFORMATION SEE PROFILE AND SUPERELEVATION DIAGRAM SHEET PS-4.
2. FOR INFORMATION NOT SHOWN SEE TYPICAL CROSS SECTION SHEET X-2.
3. THE RIGHT ETW OF THE CIRCULATORY ROADWAY INSCRIBES A TILTED PLANE.
4. "RA1" 101+53.0 IS THE HIGHEST POINT ON THE RIGHT ETW OF THE CIRCULATORY ROADWAY. "RA1" 103+88.6 IS THE LOWEST POINT ON THE RIGHT ETW OF THE CIRCULATORY ROADWAY.

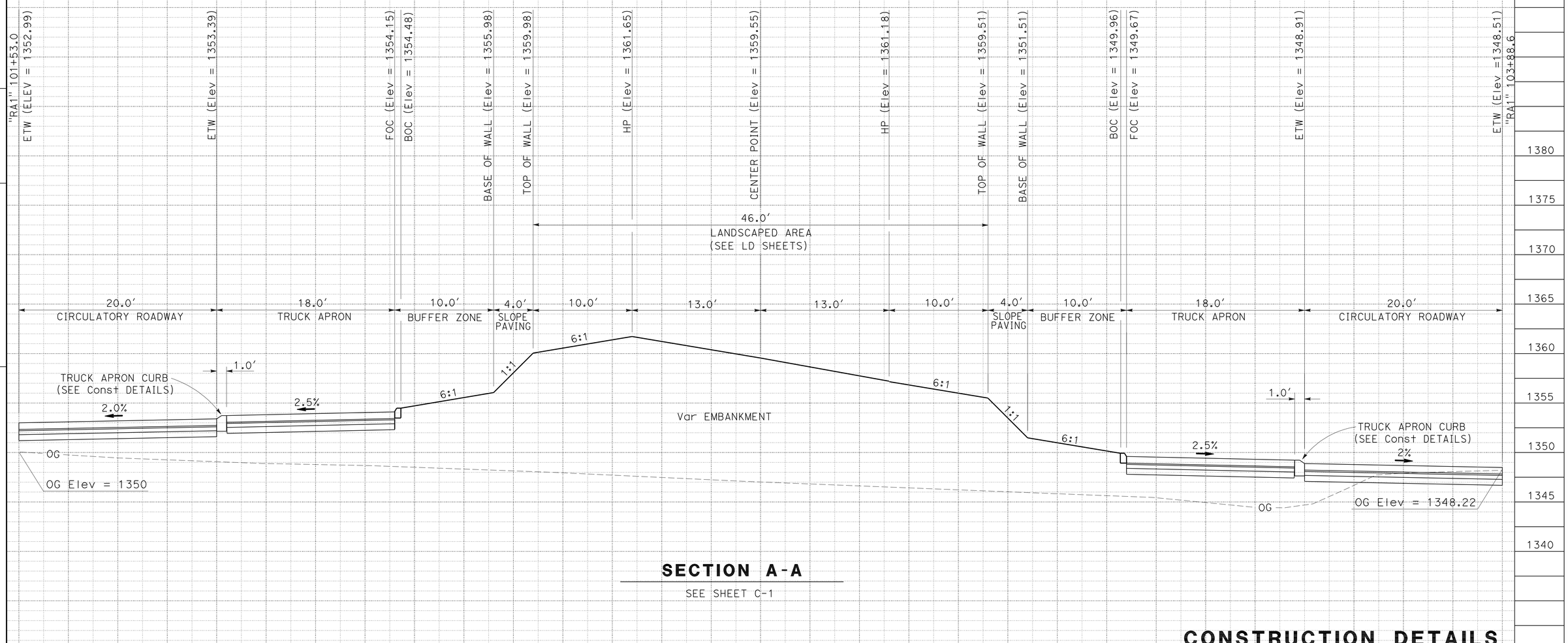

SECTION A-A

SEE SHEET C-1

SCALE: Horiz 1" = 5'
Vert 1" = 5'

CONSTRUCTION DETAILS
C-2

REVISED BY
DATE REVISED

DIANNE EDWARDS
CALCULATED-DESIGNED BY
CHECKED BY

FUNCTIONAL SUPERVISOR
Dennis P. McBride

STATE OF CALIFORNIA - DEPARTMENT OF TRANSPORTATION
Caltrans®
DESIGN

P:\proj1\01\48050\drafting\sheets\148050ga002.dgn

LAST REVISION 00-00-00
DATE PLOTTED => 28-JUN-2011
TIME PLOTTED => 15:52

Dist	COUNTY	ROUTE	POST MILES TOTAL PROJECT	SHEET No.	TOTAL SHEETS
01	Lak	20	11.9/12.4	18	120

Dianne M Edwards 5-4-11
REGISTERED CIVIL ENGINEER DATE

6-27-11
PLANS APPROVAL DATE

REGISTERED PROFESSIONAL ENGINEER
D.M. EDWARDS
No. C-51898
Exp. 6-30-12
CIVIL
STATE OF CALIFORNIA

THE STATE OF CALIFORNIA OR ITS OFFICERS OR AGENTS SHALL NOT BE RESPONSIBLE FOR THE ACCURACY OR COMPLETENESS OF SCANNED COPIES OF THIS PLAN SHEET.

NOTES:

1. FOR "RA1" PROFILE INFORMATION SEE SHEET PROFILE AND SUPERELEVATION DIAGRAM SHEET PS-4.
2. FOR STRUCTURAL SECTION INFORMATION SEE TYPICAL CROSS SECTION SHEET X-2.
3. POINTS "RA1" 102+70.8 AND "RA1" 100+35.2 ARE THE ONLY TWO POINTS DIRECTLY OPPOSITE EACH OTHER ON THE RIGHT ETW OF THE CIRCULATORY ROADWAY AT EXACTLY THE SAME ELEVATION.

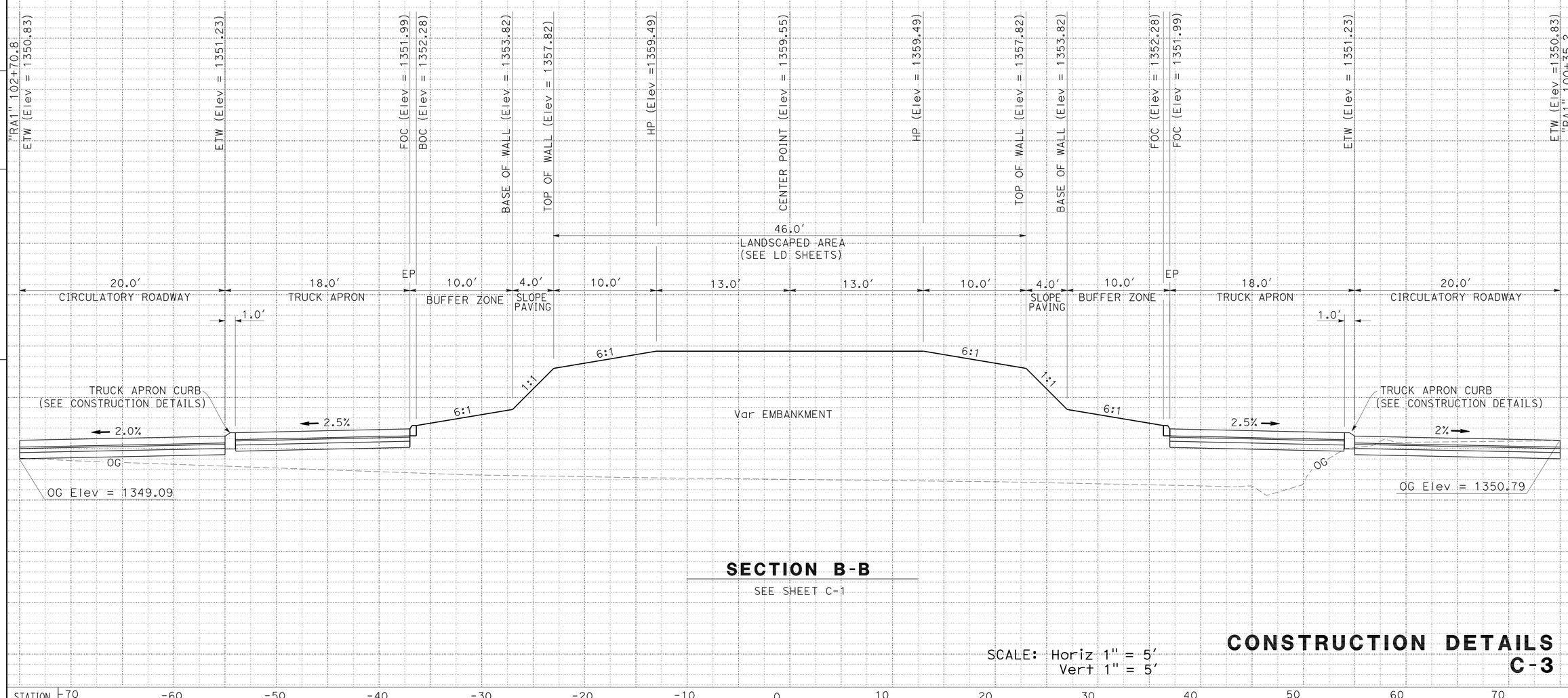

SECTION B-B

SEE SHEET C-1

SCALE: Horiz 1" = 5'
Vert 1" = 5'

CONSTRUCTION DETAILS
C-3

REVISED BY | DATE REVISED
DIANNE EDWARDS
CALCULATED-DESIGNED BY
CHECKED BY
FUNCTIONAL SUPERVISOR
Dennis P. McBride
STATE OF CALIFORNIA - DEPARTMENT OF TRANSPORTATION
DESIGN
Caltrans
P:\proj\01\48050\drafting\sheets\148050ga003.dgn

LAST REVISION 00-00-00 | DATE PLOTTED => 28-JUN-2011 | TIME PLOTTED => 15:52

Dist	COUNTY	ROUTE	POST MILES TOTAL PROJECT	SHEET No.	TOTAL SHEETS
01	Lak	20	11.9/12.4	19	120

REGISTERED CIVIL ENGINEER — DATE: 5-4-11

PLANS APPROVAL DATE: 6-27-11

REGISTERED PROFESSIONAL ENGINEER — D.M. EDWARDS — No. C-51898 — Exp. 6-30-12 — CIVIL — STATE OF CALIFORNIA

THE STATE OF CALIFORNIA OR ITS OFFICERS OR AGENTS SHALL NOT BE RESPONSIBLE FOR THE ACCURACY OR COMPLETENESS OF SCANNED COPIES OF THIS PLAN SHEET.

NOTES:

1. APPROACH LANE AND EXIT LANE ARE UNRELATED TO EACH OTHER.
2. IN NEAR PROXIMITY TO ROUNDABOUT, MEDIAN, LANE AND SHOULDER TAPERS ARE DEFINED BY ALIGNMENTS OF ETWs AND ESs.
3. ETWs BORDER GUTTER PAN OF MODIFIED TYPE A2-6 CURB AND APRON OF SPECIAL TYPE A2-6 CURB.

CURVE DATA

No.	R	Δ	T	L	BC	EC
7	490.00′	21°33′14"	93.3′	184.3′	"SR20W1" 105+09.4, 6.4′ L+	"SPLTR4" 106+94.2, 1.0′ L+
8	500.00′	4°11′31"	18.3′	36.6′	"SPLTR4" 108+47.7, 1.0′ L+	"SPLTR4" 108+84.3, 2.3′ L+
9	478.00′	21°33′14"	91.0′	179.8′	"SR20W1" 105+09.6, 18.4′ L+	"SPLTR4" 106+94.2, 13.0′ L+
10	327.00′	16°58′36"	48.8′	96.9′	"SPLTR4" 108+29.3, 13.0′ L+	"RA1" 100+99.6, 0.2′ R+

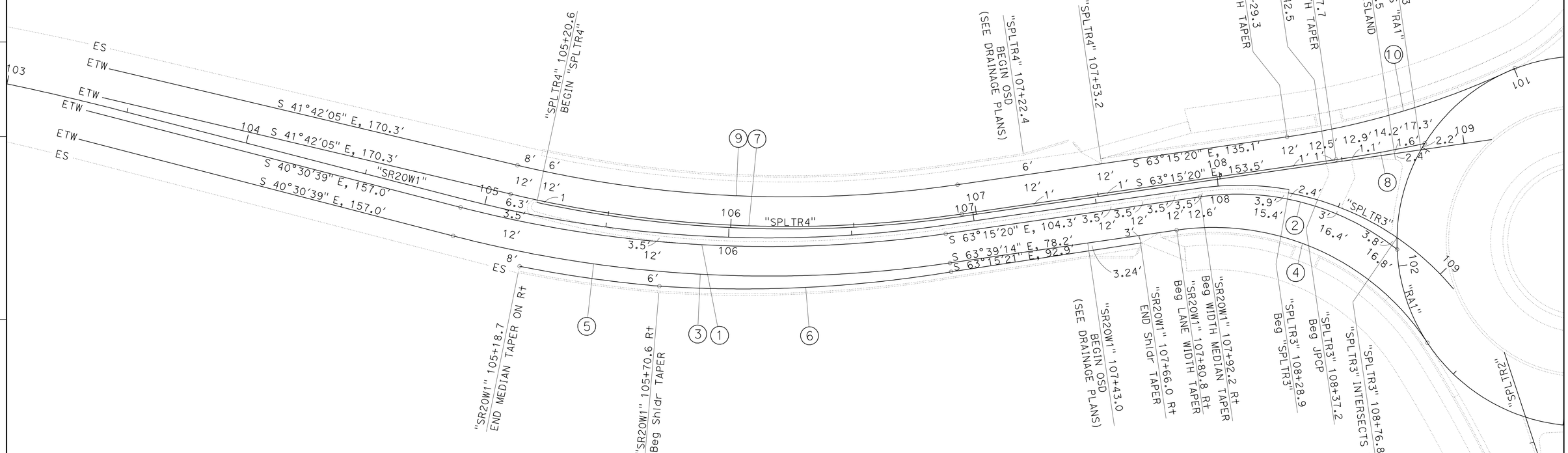

CURVE DATA

No.	R	Δ	T	L	BC	EC
1	500.00′	22°44′41"	100.6′	198.5′	"SR20W1" 104+90.8, 3.5′ R+	"SR20W1" 106+87.9, 3.5′ R+
2	105.00′	46°25′25"	45.0′	85.1′	"SR20W1" 107+92.2, 3.5′ R+	"SPLTR3" 108+79.8, 4.1′ R+
3	512.00′	22°44′42"	103.0′	203.3′	"SR20W1" 104+90.8, 15.5′ R+	"SR20W1" 106+87.9, 15.5′ R+
4	104.00′	64°52′33"	66.1′	117.8′	"SR20W1" 107+80.8, 15.5′ R+	"RA1" 102+33.5, 0.0′ R+
5	518.01′	6°20′39"	28.7′	57.4′	"SR20W1" 105+18.7, 21.5′ R+	"SR20W1" 105+73.7, 21.5′ R+
6	516.79′	13°10′17"	59.7′	118.8′	"SR20W1" 105+73.7, 21.5′ R+	"SR20W1" 106+87.8, 19.1′ R+

WEST LEGS
LANE, MEDIAN, AND SHOULDER TAPERS

CONSTRUCTION DETAILS

SCALE: 1" = 20′

C-4

REVISED BY | DATE REVISED

DIANNE EDWARDS

CALCULATED-DESIGNED BY | CHECKED BY

FUNCTIONAL SUPERVISOR: Dennis P. McBride

STATE OF CALIFORNIA - DEPARTMENT OF TRANSPORTATION

Caltrans® DESIGN

P:\proj1\01\48050\drafting\sheets\148050ga004.dgn

LAST REVISION 00-00-00 | DATE PLOTTED => 28-JUN-2011 | TIME PLOTTED => 15:52

BORDER LAST REVISED 7/2/2010 | USERNAME => trmikesl | DGN FILE => 148050ga004.dgn | RELATIVE BORDER SCALE IS IN INCHES 0 1 2 3 | UNIT 0312 | PROJECT NUMBER & PHASE 01000003781

Dist	COUNTY	ROUTE	POST MILES TOTAL PROJECT	SHEET No.	TOTAL SHEETS
01	Lak	20	11.9/12.4	20	120

REGISTERED CIVIL ENGINEER — DATE 5-4-11

6-27-11
PLANS APPROVAL DATE

REGISTERED PROFESSIONAL ENGINEER — D.M. EDWARDS — No. C-51898 — Exp. 6-30-12 — CIVIL — STATE OF CALIFORNIA

THE STATE OF CALIFORNIA OR ITS OFFICERS OR AGENTS SHALL NOT BE RESPONSIBLE FOR THE ACCURACY OR COMPLETENESS OF SCANNED COPIES OF THIS PLAN SHEET.

NOTES:

1. APPROACH LANE AND EXIT LANE ARE UNRELATED TO EACH OTHER.
2. IN NEAR PROXIMITY TO ROUNDABOUT, MEDIAN, LANE AND SHOULDER TAPERS ARE DEFINED BY ALIGNMENTS OF ETWs AND ESs.
3. ETWs BORDER GUTTER PAN OF MODIFIED TYPE A2-6 CURB AND APRON OF SPECIAL TYPE A2-6 CURB.

CURVE DATA

No.	R	Δ	T	L	BC	EC
7	688.00′	14°57′37"	90.3′	179.6′	"LC1" 3+25.9, 6.0′ Lt	"LC1" 5+07.1, 6.0′ Lt
8	999.99′	2°45′14"	24.0′	48.1′	"SPLTR2" 6+03.8, 1.0′ Lt	"SPLTR2" 6+51.9, 1.0′ Lt
9	676.00′	14°57′37"	88.8′	176.5′	"LC1" 3+25.9, 18.0′ Lt	"LC1" 5+07.1, 18.0′ Lt
10	988.00′	2°45′14"	23.7′	47.5′	"SPLTR2" 6+03.8, 13.0′ Lt	"SPLTR2" 6+51.9, 13.0′ Lt
11	496.00′	14°25′28"	62.8′	124.9′	"SPLTR2" 6+79.1, 13.0′ Lt	"RA1" 102+33.5, 0.0′ Lt
12	672.00′	14°57′37"	88.2′	175.5′	"LC1" 3+25.9, 22.0′ Lt	"LC1" 5+07.1, 22.0′ Lt

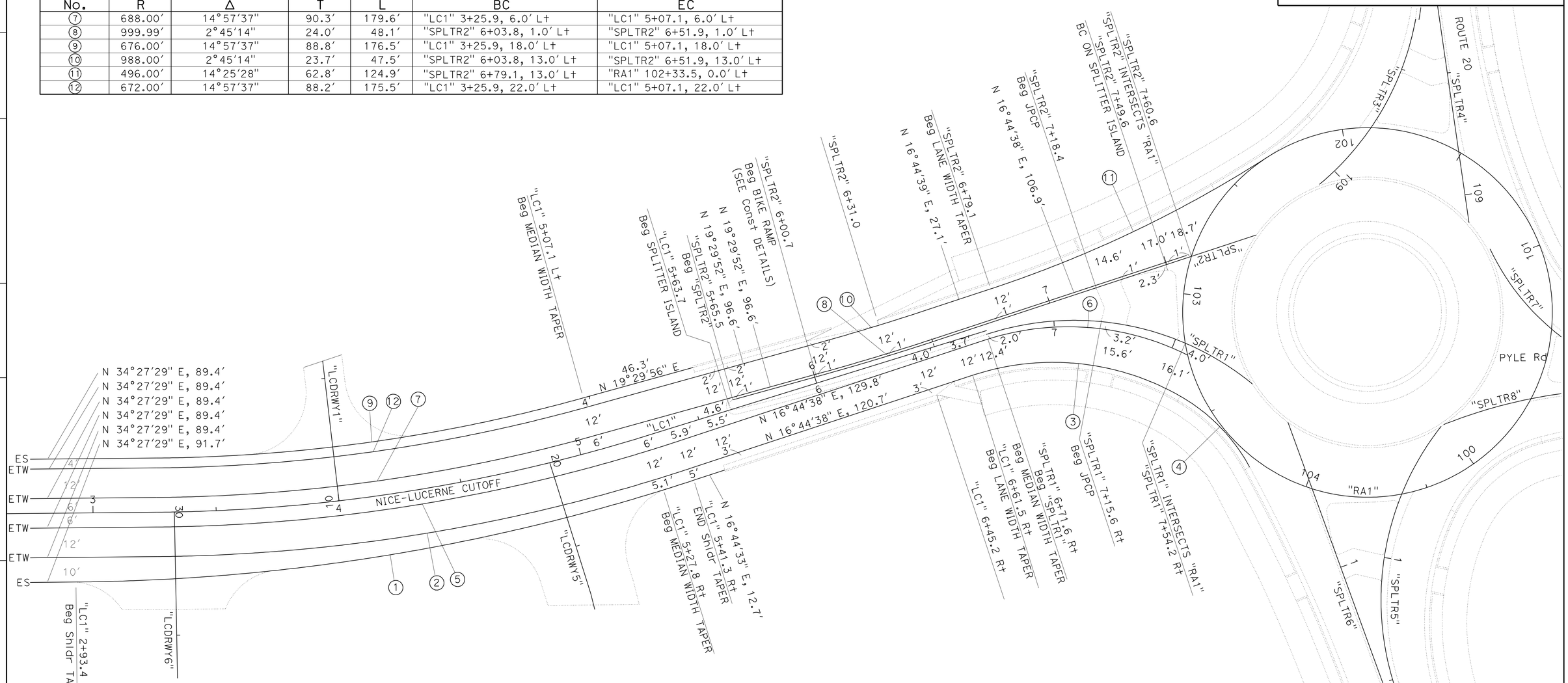

CURVE DATA

No.	R	Δ	T	L	BC	EC
1	825.00′	17°42′53"	128.6′	255.1′	"LC1" 2+93.4, 28.0′ Rt	"LC1" 5+41.3, 22.9′ Rt
2	712.00′	17°42′50"	110.9′	220.1′	"LC1" 3+25.9,18.0 Rt	"LC1" 5+40.8, 17.9′ Rt
3	104.00′	48°7′47"	46.4′	87.4′	"LC1" 6+61.5, 15.7′ Rt	"SPLTR1" 7+62.6, 20.3′ Rt
4	73.53′	31°33′29"	20.8′	40.5′	"SPLTR1" 7+62.6, 20.3′ Rt	"SPLTR6" 0+49.1, 20.9′ Lt
5	700.00′	17°42′50"	109.1′	216.4′	"LC1" 3+25.9, 6.0′ Rt	"LC1" 5+40.6, 5.9′ Rt
6	108.00′	44°58′40"	44.7′	84.8′	"LC1" 6+70.3, 3.5′ Rt	"SPLTR1" 7+57.2 4.1′ Rt

SOUTH LEGS
LANE, MEDIAN, AND SHOULDER TAPERS

CONSTRUCTION DETAILS

SCALE: 1" = 20′

C-5

REVISED BY	DATE REVISED
DIANNE EDWARDS	

CALCULATED-DESIGNED BY
CHECKED BY

FUNCTIONAL SUPERVISOR: Dennis P. McBride

STATE OF CALIFORNIA - DEPARTMENT OF TRANSPORTATION
Caltrans
DESIGN

P:\proj1\01\48050\drafting\sheets\148050ga005.dgn

LAST REVISION 00-00-00 | DATE PLOTTED => 28-JUN-2011 | TIME PLOTTED => 15:52

Dist	COUNTY	ROUTE	POST MILES TOTAL PROJECT	SHEET No.	TOTAL SHEETS
01	Lak	20	11.9/12.4	21	120

Dianne M Edwards 5-4-11
REGISTERED CIVIL ENGINEER DATE

6-27-11
PLANS APPROVAL DATE

REGISTERED PROFESSIONAL ENGINEER
D.M. EDWARDS
No. C-51898
Exp. 6-30-12
CIVIL
STATE OF CALIFORNIA

THE STATE OF CALIFORNIA OR ITS OFFICERS OR AGENTS SHALL NOT BE RESPONSIBLE FOR THE ACCURACY OR COMPLETENESS OF SCANNED COPIES OF THIS PLAN SHEET.

CURVE DATA

No.	R	Δ	T	L	BC	EC
5	105.00′	46°15′32"	44.9′	84.8′	"SPLTR5" 0+70.2, 4.1′ Lt	"SPLTR5" 1+57.0, 2.0′ Lt
6	800.00′	19°26′56"	137.1′	271.6′	"SR20E1" 2+79.6, 3.5′ Lt	"SR20E1" 5+49.6, 6.0′ Lt
7	57.00′	50°15′34"	26.7′	50.0′	"SPLTR8" 0+70.8, 15.9′ Rt	"SPLTR5" 0+73.3, 20.8′ Lt
8	104.00′	64°43′00"	65.9′	117.5′	"RA1" 100+13.4, 0.0′ Rt	"SR20E1" 1+68.4, 15.5′ Lt
9	812.00′	19°26′56"	139.2′	275.6′	"SR20E1" 2+79.5, 15.5′ Lt	"SR20E1" 5+49.6, 18.0′ Lt
10	1165.30′	7°29′31"	76.3′	152.4′	"SR20E1" 2+30.9, 18.5′ Lt	"SR20E1" 3+80.3, 22.2′ Lt
11	818.03′	3°34′51"	25.6′	51.1′	"SR20E1" 3+80.3, 22.2′ Lt	"SR20E1" 4+30.0, 22.7′ Lt

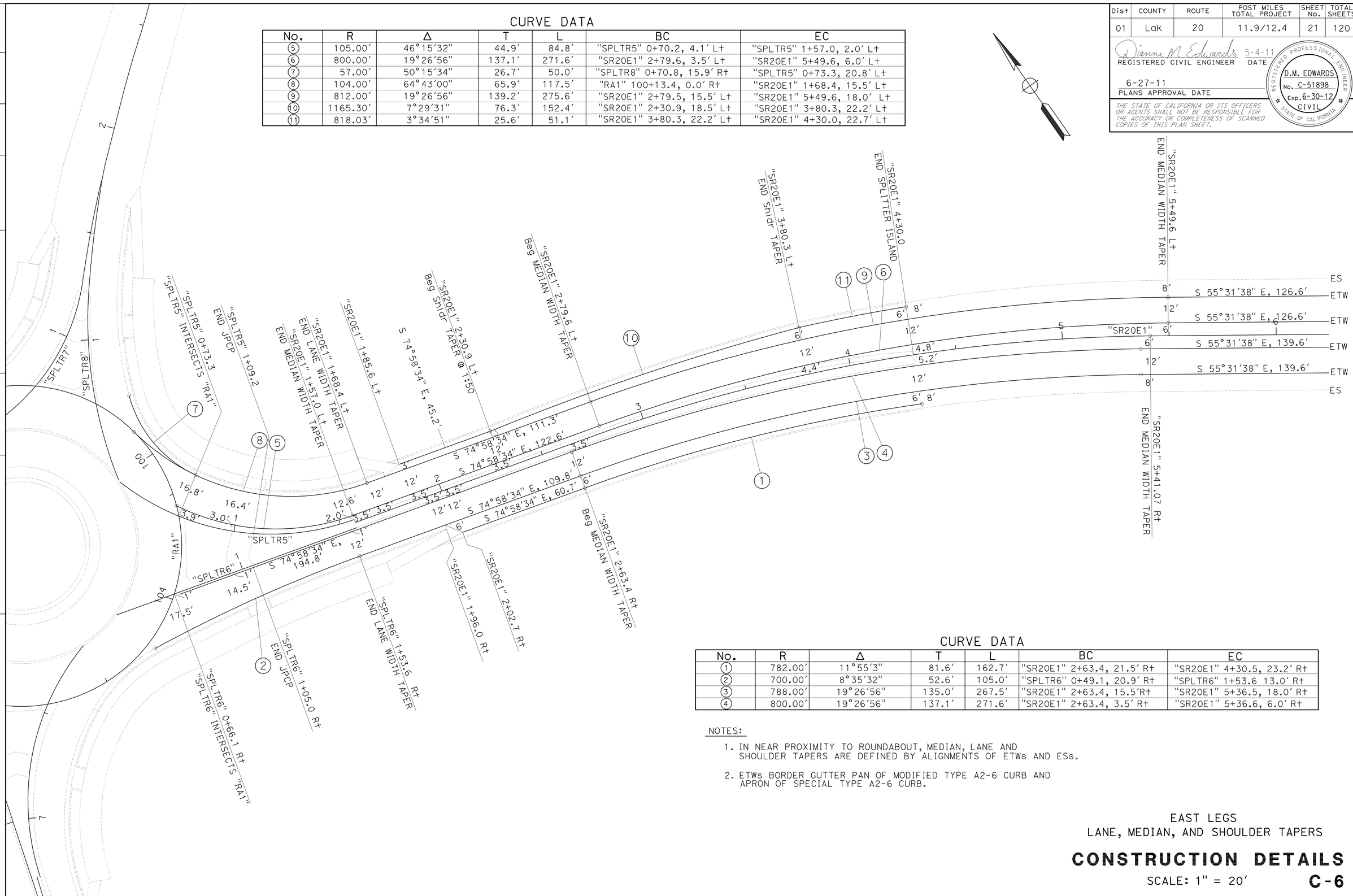

CURVE DATA

No.	R	Δ	T	L	BC	EC
1	782.00′	11°55′3"	81.6′	162.7′	"SR20E1" 2+63.4, 21.5′ Rt	"SR20E1" 4+30.5, 23.2′ Rt
2	700.00′	8°35′32"	52.6′	105.0′	"SPLTR6" 0+49.1, 20.9′ Rt	"SPLTR6" 1+53.6 13.0′ Rt
3	788.00′	19°26′56"	135.0′	267.5′	"SR20E1" 2+63.4, 15.5′Rt	"SR20E1" 5+36.5, 18.0′ Rt
4	800.00′	19°26′56"	137.1′	271.6′	"SR20E1" 2+63.4, 3.5′ Rt	"SR20E1" 5+36.6, 6.0′ Rt

NOTES:

1. IN NEAR PROXIMITY TO ROUNDABOUT, MEDIAN, LANE AND SHOULDER TAPERS ARE DEFINED BY ALIGNMENTS OF ETWs AND ESs.
2. ETWs BORDER GUTTER PAN OF MODIFIED TYPE A2-6 CURB AND APRON OF SPECIAL TYPE A2-6 CURB.

EAST LEGS
LANE, MEDIAN, AND SHOULDER TAPERS

CONSTRUCTION DETAILS

SCALE: 1" = 20′

C-6

REVISED BY | DATE REVISED
DIANNE EDWARDS
CALCULATED-DESIGNED BY | CHECKED BY
FUNCTIONAL SUPERVISOR
Dennis P. McBride

STATE OF CALIFORNIA - DEPARTMENT OF TRANSPORTATION
Caltrans
DESIGN

P:\proj1\01\48050\drafting\sheets\148050ga006.dgn

LAST REVISION 00-00-00 | DATE PLOTTED => 28-JUN-2011 | TIME PLOTTED => 15:52

BORDER LAST REVISED 7/2/2010 | USERNAME => trmikesl | DGN FILE => 148050ga006.dgn | RELATIVE BORDER SCALE IS IN INCHES 0 1 2 3 | UNIT 0312 | PROJECT NUMBER & PHASE 01000003781

Dist	COUNTY	ROUTE	POST MILES TOTAL PROJECT	SHEET No.	TOTAL SHEETS
01	Lak	20	11.9/12.4	22	120

REGISTERED CIVIL ENGINEER 5-4-11 DATE

6-27-11
PLANS APPROVAL DATE

REGISTERED PROFESSIONAL ENGINEER D.M. EDWARDS No. C-51898 Exp. 6-30-12 CIVIL STATE OF CALIFORNIA

THE STATE OF CALIFORNIA OR ITS OFFICERS OR AGENTS SHALL NOT BE RESPONSIBLE FOR THE ACCURACY OR COMPLETENESS OF SCANNED COPIES OF THIS PLAN SHEET.

CURVE DATA

No.	R	Δ	T	L	BC	EC
8	95.00′	33°5′39"	28.2′	54.9′	"RA1" 100+67.8, 0.1′ Lt	"SPLTR7" 1+27.1, 2.0′ Lt
9	550.00′	11°15′24"	54.2′	108.1′	"SPLTR7" 1+27.1, 2.0′ Lt	"PR1" 2+34.9, 0.2′ Lt
10	75.00′	56°32′46"	40.3′	74.0′	"RA1" 100+99.6, 0.2′ Lt	"SPLTR7" 1+28.5, 14.0′ Lt
11	562.00′	11°6′31"	54.7′	109.0′	"SPLTR7" 1+28.5, 14.0′ Lt	"PR1" 2+35.4, 12.2′ Lt
12	338.00′	13°50′39"	41.0′	81.7′	"PR1" 2+35.4, 12.2′ Lt	"PR1" 3+19.4, 12.0′ Lt
13	567.02′	2°47′55"	13.9′	27.7′	"SPLTR7" 1+51.7, 19.0′ Lt	"PR1" 1+79.3, 19.0′ Lt

NOTES:

1. IN NEAR PROXIMITY TO ROUNDABOUT, MEDIAN, LANE AND SHOULDER TAPERS ARE DEFINED BY ALIGNMENTS OF ETWs AND ESs.
2. ETWs BORDER GUTTER PAN OF MODIFIED TYPE A2-6 CURB AND APRON OF SPECIAL TYPE A2-6 CURB.

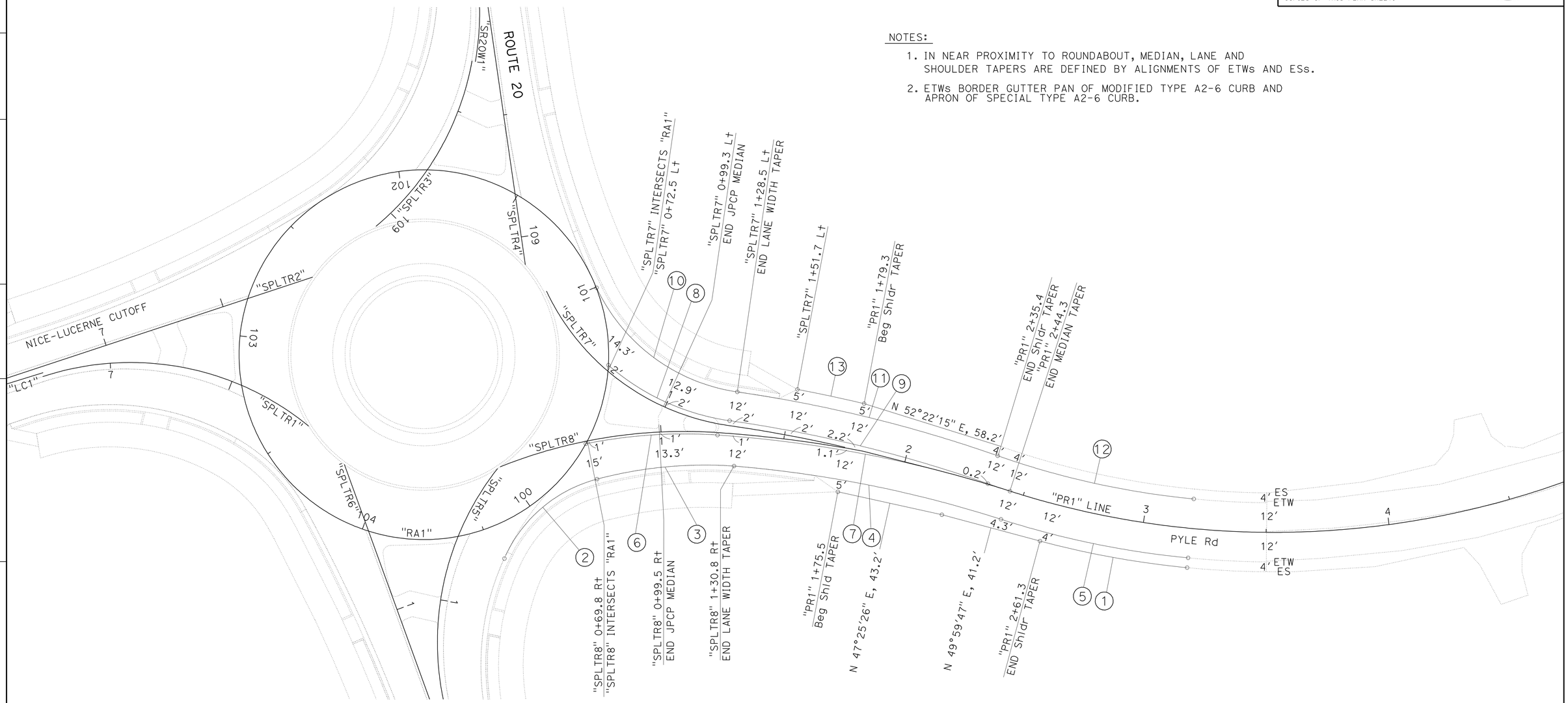

CURVE DATA

No.	R	Δ	T	L	BC	EC
1		9°30′38"	30.4′	60.8′	"PR1" 2+61.3, 16.0′ Rt	"PR1" 3+19.4, 16.0′ Rt
2	57.00′	50°15′34"	26.7′	50.0′	"SPLTR5" 0+73.3, 20.8′ Lt	"SPLTR8" 0+70.8, 15.9′Rt
3	172.00′	18°41′18"	28.3′	56.1′	"SPLTR8" 0+70.8, 15.9′Rt	"SPLTR8" 1+30.8, 13.0′ Rt
4	488.00′	12°59′37"	55.6′	110.7′	"SPLTR8" 1+30.8, 13.0′ Rt	"PR1" 2+44.3, 12.0′ Rt
5	362.00′	12°17′58"	39.0′	77.7′	"PR1" 2+44.3, 12.0′ Rt	"PR1" 3+19.4, 12.0′ Rt
6	200.00′	15°23′9"	27.0′	53.7′	"RA1" 100+34.2, 0.1′ Lt	"SPLTR8" 1+23.0, 1.0′ Rt
7	500.00′	13°52′54"	60.9′	121.1′	"SPLTR8" 1+23.0, 1.0′ Rt	"PR1" 2+44.3, 0.0′ Rt

NORTH LEGS
LANE, MEDIAN, AND SHOULDER TAPERS

CONSTRUCTION DETAILS

SCALE: 1" = 20′ **C-7**

REVISED BY | DATE REVISED
DIANNE EDWARDS | CALCULATED-DESIGNED BY | CHECKED BY
FUNCTIONAL SUPERVISOR: Dennis P. McBride

STATE OF CALIFORNIA - DEPARTMENT OF TRANSPORTATION
Caltrans® **DESIGN**

P:\proj\01\48050\drafting\sheets\148050ga007.dgn

LAST REVISION 00-00-00 | DATE PLOTTED => 28-JUN-2011 | TIME PLOTTED => 15:52

Dist	COUNTY	ROUTE	POST MILES TOTAL PROJECT	SHEET No.	TOTAL SHEETS
01	Lak	20	11.9/12.4	23	120

Dianne M Edwards 5-4-11
REGISTERED CIVIL ENGINEER DATE

6-27-11
PLANS APPROVAL DATE

REGISTERED PROFESSIONAL ENGINEER
D.M. EDWARDS
No. C-51898
Exp. 6-30-12
CIVIL
STATE OF CALIFORNIA

THE STATE OF CALIFORNIA OR ITS OFFICERS OR AGENTS SHALL NOT BE RESPONSIBLE FOR THE ACCURACY OR COMPLETENESS OF SCANNED COPIES OF THIS PLAN SHEET.

NOTE:

1. FOR INFORMATION NOT SHOWN, SEE SHEETS C-4 AND C-7.

LEGEND

Mod A2-6 = MINOR CONCRETE (CURB AND GUTTER) (MODIFIED TYPE A2-6)
Mod B2-4 = MINOR CONCRETE (CURB AND GUTTER) (MODIFIED TYPE B2-4)
Mod A1-6 = MINOR CONCRETE CURB (MODIFIED TYPE A1-6)

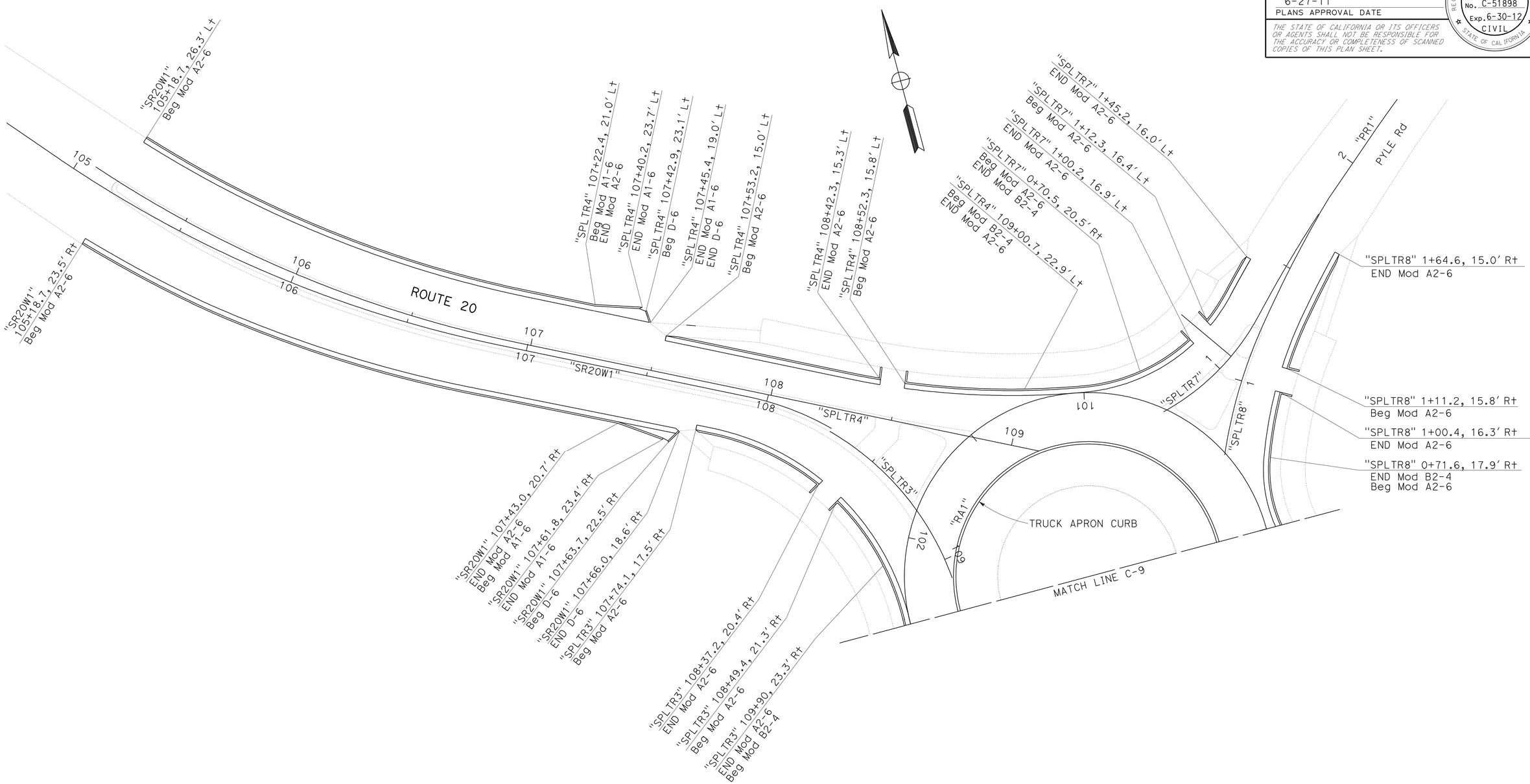

CURBS AND GUTTERS

CONSTRUCTION DETAILS

SCALE: 1" = 20'

C-8

REVISED BY	DATE REVISED
DIANNE EDWARDS	

CALCULATED-DESIGNED BY	CHECKED BY

FUNCTIONAL SUPERVISOR: Dennis P. McBride

STATE OF CALIFORNIA - DEPARTMENT OF TRANSPORTATION
Caltrans
DESIGN

P:\proj1\01\48050\drafting\sheets\148050ga008.dgn

LAST REVISION 00-00-00 | DATE PLOTTED => 28-JUN-2011 | TIME PLOTTED => 15:52

Dist	COUNTY	ROUTE	POST MILES TOTAL PROJECT	SHEET No.	TOTAL SHEETS
01	Lak	20	11.9/12.4	24	120

REGISTERED CIVIL ENGINEER 5-4-11 DATE

6-27-11
PLANS APPROVAL DATE

REGISTERED PROFESSIONAL ENGINEER D.M. EDWARDS No. C-51898 Exp. 6-30-12 CIVIL STATE OF CALIFORNIA

THE STATE OF CALIFORNIA OR ITS OFFICERS OR AGENTS SHALL NOT BE RESPONSIBLE FOR THE ACCURACY OR COMPLETENESS OF SCANNED COPIES OF THIS PLAN SHEET.

NOTE:

1. FOR INFORMATION NOT SHOWN, SEE SHEETS C-5 AND C-6.

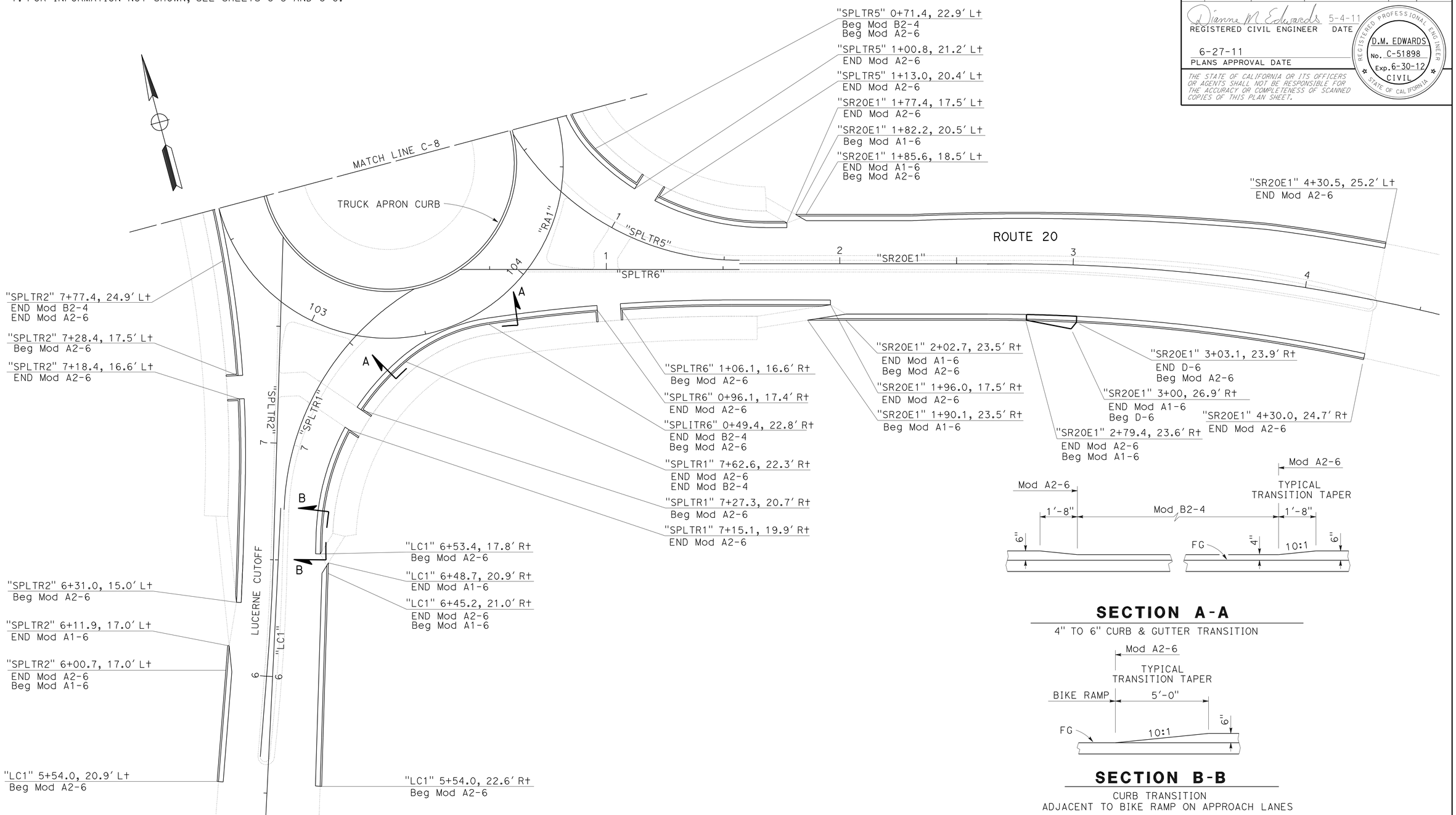

CURBS AND GUTTERS

CONSTRUCTION DETAILS

SCALE: 1" = 20'

C-9

REVISED BY | DATE REVISED

DIANNE EDWARDS | CALCULATED-DESIGNED BY | CHECKED BY

FUNCTIONAL SUPERVISOR: Dennis P. McBride

STATE OF CALIFORNIA - DEPARTMENT OF TRANSPORTATION

Caltrans® DESIGN

P:\proj1\01\48050\drafting\sheets\148050ga009.dgn

LAST REVISION 00-00-00 | DATE PLOTTED => 28-JUN-2011 | TIME PLOTTED => 15:52

Dist	COUNTY	ROUTE	POST MILES TOTAL PROJECT	SHEET No.	TOTAL SHEETS
01	Lak	20	11.9/12.4	25	120

Dianne M Edwards 5-4-11
REGISTERED CIVIL ENGINEER DATE

6-27-11
PLANS APPROVAL DATE

REGISTERED PROFESSIONAL ENGINEER D.M. EDWARDS No. C-51898 Exp. 6-30-12 CIVIL STATE OF CALIFORNIA

THE STATE OF CALIFORNIA OR ITS OFFICERS OR AGENTS SHALL NOT BE RESPONSIBLE FOR THE ACCURACY OR COMPLETENESS OF SCANNED COPIES OF THIS PLAN SHEET.

LEGEND

A1-6 = MINOR CONCRETE (CURB) (MODIFIED TYPE A1-6)
B1-4 = MINOR CONCRETE (CURB) (MODIFIED TYPE B1-4)
A2-6 Sp = MINOR CONCRETE (CURB) (TYPE A2-6 SPECIAL)

NORTH SPLITTER ISLAND CURVE DATA

No.	R	Δ	T	L	BC	EC
1	77.00′	6°19′29"	4.254′	8.500′	"SPLTR7" 0+79.78, 9.89′ R+	"SPLTR7" 0+76.31, 2.24′ R+
2	1.50′	119°12′00"	2.557′	3.121′	"SPLTR7" 0+76.31, 2.24′ R+	"SPLTR7" 0+77.59, 0.00′ R+
3	97.00′	11°55′19"	10.128′	20.184′	"SPLTR7" 0+77.59, 0.00′ R+	"SPLTR7" 0+97.77, 0.00′ R+
4	1.50′	91°32′16"	1.541′	2.396′	"SPLTR7" 0+97.77, 0.00′ R+	"SPLTR7" 0+99.25, 1.55′ R+
5	3.00′	32°36′25"	0.877′	1.707′	"SPLTR7" 0+99.15, 3.85′ R+	"SPLTR8" 0+99.20, 5.30′ L+
6	1.50′	100°40′47"	1.809′	2.636′	"SPLTR8" 0+99.31, 3.03′ L+	"SPLTR8" 0+97.62, 1.48′ L+
7	500.00′	2°04′29"	9.054′	18.105′	"SPLTR8" 0+97.62, 1.48′ L+	"SPLTR8" 0+80.19, 5.20′ L+
8	3.00′	97°21′42"	3.413′	5.098′	"SPLTR8" 0+80.19, 5.20′ L+	"SPLTR8" 0+78.30, 9.26′ L+
9	3.00′	32°36′26"	0.877′	1.707′	"SPLTR8" 1+09.18, 3.12′ L+	"SPLTR7" 1+09.09, 1.85′ R+
10	1.50′	80°51′42"	1.278′	2.117′	"SPLTR7" 1+09.18, 1.27′ R+	"SPLTR7" 1+10.64, 0.00′ R+
11	97.00′	5°23′13"	4.563′	9.120′	"SPLTR7" 1+10.64, 0.00′ R+	"SPLTR7" 1+19.76, 0.00′ R+
12	2.00′	170°36′21"	24.342′	5.955′	"SPLTR7" 1+19.76, 0.00′ R+	"SPLTR8" 1+19.84, 0.00′ L+
13	201.00′	2°33′49"	4.497′	8.993′	"SPLTR8" 1+19.84, 0.00′ L+	"SPLTR8" 1+10.84, 0.00′ L+
14	1.50′	83°52′34"	1.348′	2.196′	"SPLTR8" 1+10.84, 0.00′ L+	"SPLTR8" 1+09.36, 1.35′ L+

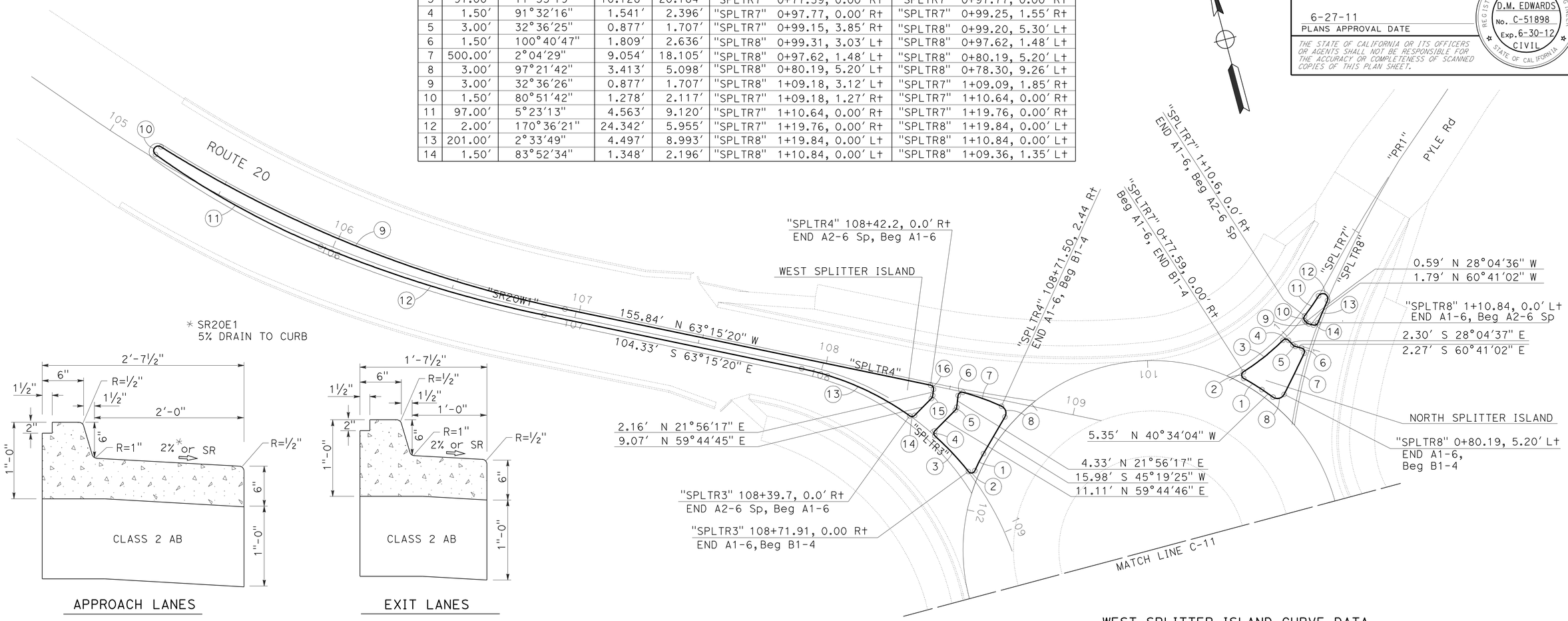

TYPE A2-6 SPECIAL CURB

NO SCALE

WEST SPLITTER ISLAND CURVE DATA

No.	R	Δ	T	L	BC	EC
1	77.00′	6°17′50"	4.236′	8.463′	"SPLTR3" 108+69.92, 9.92 L+	"SPLTR3" 108+73.22, 2.20 L+
2	1.50′	117°32′52"	2.474′	3.077′	"SPLTR3" 108+73.22, 2.20 L+	"SPLTR3" 108+71.91, 0.00 R+
3	114.00′	9°41′13"	9.660′	19.274′	"SPLTR3" 108+71.91, 0.00 R+	"SPLTR3" 108+52.64, 0.00 R+
4	1.50′	92°51′32"	1.577′	2.431′	"SPLTR3" 108+52.64, 0.00 R+	"SPLTR3" 108+51.16, 1.58 L+
5	3.00′	37°48′29"	1.027′	1.980′	"SPLTR4" 108+53.69, 7.99 R+	"SPLTR4" 108+54.16, 6.10 R+
6	1.50′	98°08′48"	1.730′	2.569′	"SPLTR4" 108+53.80, 1.79 R+	"SPLTR4" 108+55.38, 0.17 R+
7	100.00	9°20′11"	8.166′	16.295′	"SPLTR4" 108+55.38, 0.17 R+	"SPLTR4" 108+71.5, 2.44 R+
8	3.00′	95°54′09"	3.326′	5.021′	"SPLTR4" 108+71.50, 2.44 R+	"SPLTR4" 108+73.68, 6.32 R+
9	491.00′	20°14′45"	87.664′	173.499′	"SR20W1" 106+95.45, 2.50 L+	"SR20W1" 105+20.67, 5.25 L+
10	1.86′	176°17′31"	57.597′	5.737′	"SR20W1" 105+20.67, 5.25 L+	"SR20W1" 105+20.45, 1.53 L+
11	323.16′	13°19′30"	37.748′	75.156′	"SR20W1" 105+20.45, 1.53 L+	"SR20W1" 105+95.70, 1.50 R+
12	498.00′	10°38′06"	46.352′	92.438′	"SR20W1" 105+95.70, 1.50 R+	"SR20W1" 106+87.86, 1.50 R+
13	114.00′	23°39′13"	23.871′	47.063′	"SR20W1" 107+92.19, 1.50 R+	"SPLTR3" 108+39.73, 0.00 R+
14	1.50′	80°39′07"	1.273′	2.111′	"SPLTR3" 108+39.73, 0.00 R+	"SPLTR3" 108+41.19, 1.27 L+
15	3.00′	37°48′29"	1.027′	1.980′	"SPLTR4" 108+43.44, 5.41 R+	"SPLTR4" 108+43.91, 3.53 R+
16	1.50′	85°11′37"	1.379′	2.230′	"SPLTR4" 108+43.73, 1.37 R+	"SPLTR4" 108+42.23, 0.00 R+

LEGEND

- JPCP
- MINOR CONCRETE (SIDEWALK)
- ROCK BLANKET

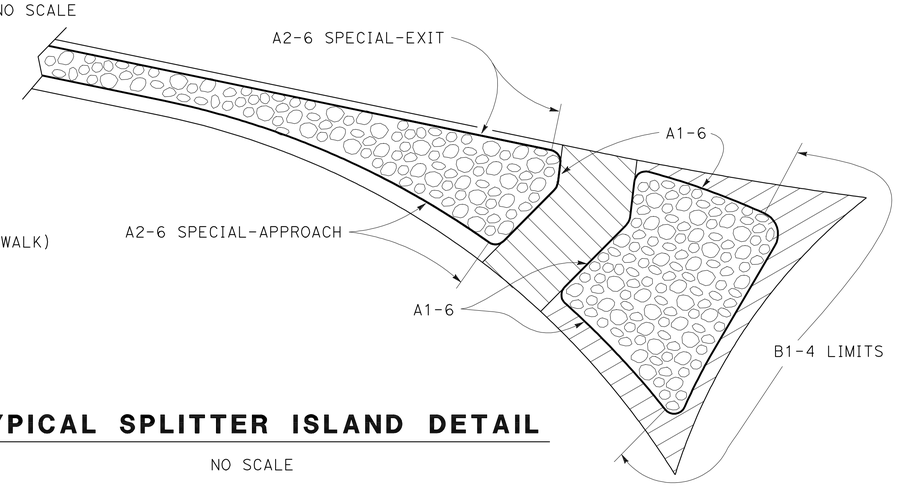

TYPICAL SPLITTER ISLAND DETAIL

NO SCALE

SPLITTER ISLANDS

CONSTRUCTION DETAILS

SCALE: 1" = 20′ **C-10**

STATE OF CALIFORNIA - DEPARTMENT OF TRANSPORTATION
Caltrans® DESIGN

CALCULATED-DESIGNED BY | CHECKED BY | FUNCTIONAL SUPERVISOR: Dennis P. McBride | DIANNE EDWARDS | REVISED BY | DATE REVISED

P:\proj\01\48050\drafting\sheets\148050ga010.dgn

LAST REVISION 00-00-00 | DATE PLOTTED => 28-JUN-2011 | TIME PLOTTED => 15:52

Dist	COUNTY	ROUTE	POST MILES TOTAL PROJECT	SHEET No.	TOTAL SHEETS
01	Lak	20	11.9/12.4	26	120

Dianne M Edwards 5-4-11
REGISTERED CIVIL ENGINEER DATE

6-27-11
PLANS APPROVAL DATE

REGISTERED PROFESSIONAL ENGINEER
D.M. EDWARDS
No. C-51898
Exp. 6-30-12
CIVIL
STATE OF CALIFORNIA

THE STATE OF CALIFORNIA OR ITS OFFICERS OR AGENTS SHALL NOT BE RESPONSIBLE FOR THE ACCURACY OR COMPLETENESS OF SCANNED COPIES OF THIS PLAN SHEET.

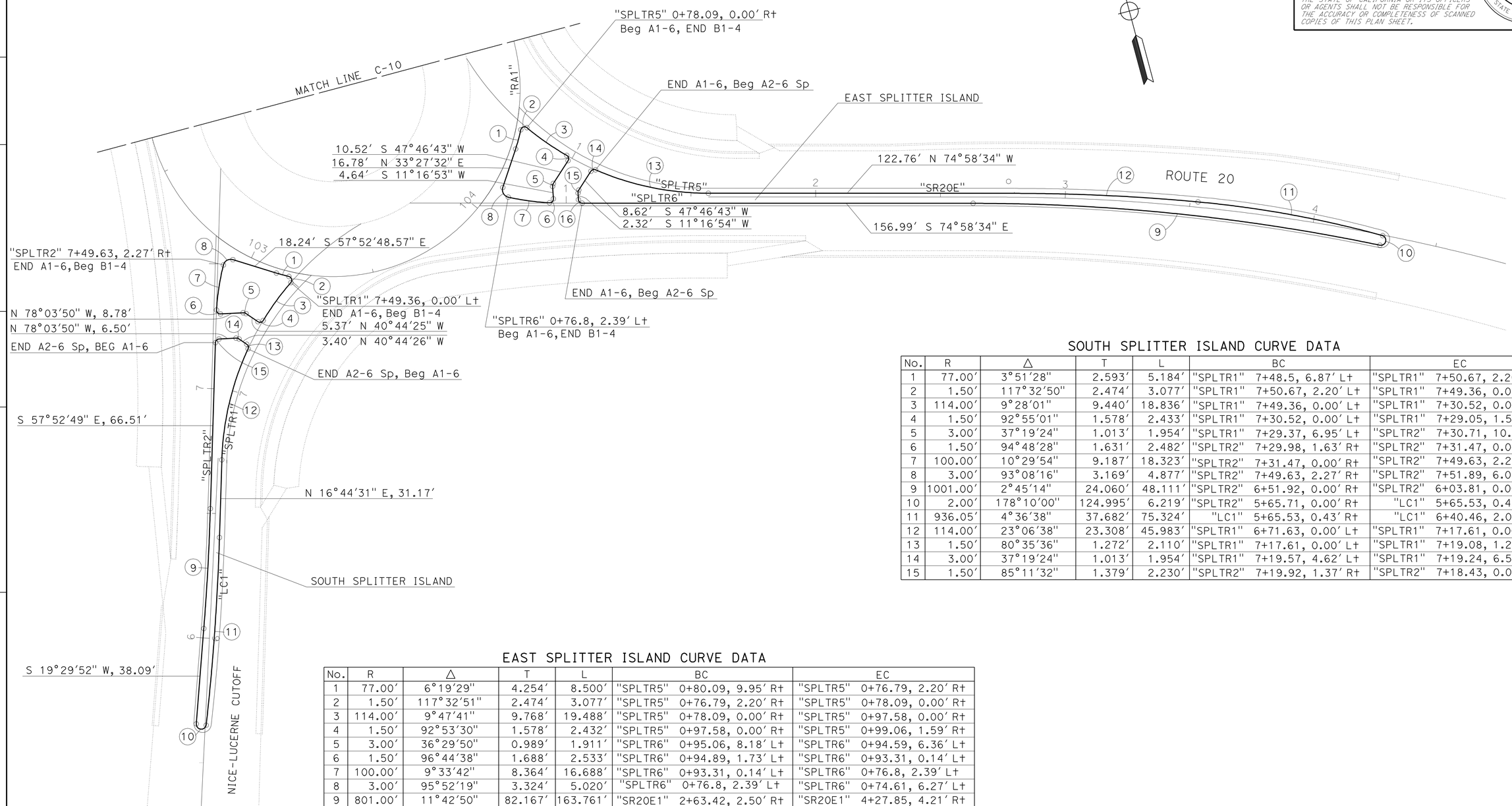

SOUTH SPLITTER ISLAND CURVE DATA

No.	R	△	T	L	BC	EC
1	77.00'	3°51'28"	2.593'	5.184'	"SPLTR1" 7+48.5, 6.87' L+	"SPLTR1" 7+50.67, 2.20' L+
2	1.50'	117°32'50"	2.474'	3.077'	"SPLTR1" 7+50.67, 2.20' L+	"SPLTR1" 7+49.36, 0.00' L+
3	114.00'	9°28'01"	9.440'	18.836'	"SPLTR1" 7+49.36, 0.00' L+	"SPLTR1" 7+30.52, 0.00' L+
4	1.50'	92°55'01"	1.578'	2.433'	"SPLTR1" 7+30.52, 0.00' L+	"SPLTR1" 7+29.05, 1.59' L+
5	3.00'	37°19'24"	1.013'	1.954'	"SPLTR1" 7+29.37, 6.95' L+	"SPLTR2" 7+30.71, 10.38' R+
6	1.50'	94°48'28"	1.631'	2.482'	"SPLTR2" 7+29.98, 1.63' R+	"SPLTR2" 7+31.47, 0.00' R+
7	100.00'	10°29'54"	9.187'	18.323'	"SPLTR2" 7+31.47, 0.00' R+	"SPLTR2" 7+49.63, 2.27' R+
8	3.00'	93°08'16"	3.169'	4.877'	"SPLTR2" 7+49.63, 2.27' R+	"SPLTR2" 7+51.89, 6.00' R+
9	1001.00'	2°45'14"	24.060'	48.111'	"SPLTR2" 6+51.92, 0.00' R+	"SPLTR2" 6+03.81, 0.00' R+
10	2.00'	178°10'00"	124.995'	6.219'	"SPLTR2" 5+65.71, 0.00' R+	"LC1" 5+65.53, 0.43' R+
11	936.05'	4°36'38"	37.682'	75.324'	"LC1" 5+65.53, 0.43' R+	"LC1" 6+40.46, 2.07' R+
12	114.00'	23°06'38"	23.308'	45.983'	"SPLTR1" 6+71.63, 0.00' L+	"SPLTR1" 7+17.61, 0.00' L+
13	1.50'	80°35'36"	1.272'	2.110'	"SPLTR1" 7+17.61, 0.00' L+	"SPLTR1" 7+19.08, 1.26' L+
14	3.00'	37°19'24"	1.013'	1.954'	"SPLTR1" 7+19.57, 4.62' L+	"SPLTR1" 7+19.24, 6.51' L+
15	1.50'	85°11'32"	1.379'	2.230'	"SPLTR2" 7+19.92, 1.37' R+	"SPLTR2" 7+18.43, 0.00' R+

EAST SPLITTER ISLAND CURVE DATA

No.	R	△	T	L	BC	EC
1	77.00'	6°19'29"	4.254'	8.500'	"SPLTR5" 0+80.09, 9.95' R+	"SPLTR5" 0+76.79, 2.20' R+
2	1.50'	117°32'51"	2.474'	3.077'	"SPLTR5" 0+76.79, 2.20' R+	"SPLTR5" 0+78.09, 0.00' R+
3	114.00'	9°47'41"	9.768'	19.488'	"SPLTR5" 0+78.09, 0.00' R+	"SPLTR5" 0+97.58, 0.00' R+
4	1.50'	92°53'30"	1.578'	2.432'	"SPLTR5" 0+97.58, 0.00' R+	"SPLTR5" 0+99.06, 1.59' R+
5	3.00'	36°29'50"	0.989'	1.911'	"SPLTR6" 0+95.06, 8.18' L+	"SPLTR6" 0+94.59, 6.36' L+
6	1.50'	96°44'38"	1.688'	2.533'	"SPLTR6" 0+94.89, 1.73' L+	"SPLTR6" 0+93.31, 0.14' L+
7	100.00'	9°33'42"	8.364'	16.688'	"SPLTR6" 0+93.31, 0.14' L+	"SPLTR6" 0+76.8, 2.39' L+
8	3.00'	95°52'19"	3.324'	5.020'	"SPLTR6" 0+76.8, 2.39' L+	"SPLTR6" 0+74.61, 6.27' L+
9	801.00'	11°42'50"	82.167'	163.761'	"SR20E1" 2+63.42, 2.50' R+	"SR20E1" 4+27.85, 4.21' R+
10	2.00'	176°23'16"	63.423'	6.157'	"SR20E1" 4+27.85, 4.21' R+	"SR20E1" 4+28.01, 0.22' R+
11	427.97'	10°02'19"	37.587'	74.982'	"SR20E1" 4+28.01, 0.22' R+	"SR20E1" 3+53.22, 2.14' L+
12	798.00'	5°17'15"	36.849'	73.645'	"SR20E1" 3+53.22, 2.14' L+	"SR20E1" 2+79.75, 1.52' L+
13	114.00'	23°22'24"	23.581'	46.506'	"SPLTR5" 1+57.00, 0.00' R+	"SPLTR5" 1+10.49, 0.00' R+
14	1.50'	80°37'08"	1.273'	2.111'	"SPLTR5" 1+10.49, 0.00' R+	"SPLTR5" 1+09.03, 1.27' R+
15	3.00'	36°29'49"	0.989'	1.911'	"SPLTR6" 1+05.25, 5.54' L+	"SPLTR6" 1+04.78, 3.72' L+
16	1.50'	86°15'27"	1.405'	2.258'	"SPLTR6" 1+04.93, 1.40' L+	"SPLTR6" 1+06.43, 0.00' L+

SPLITTER ISLANDS

CONSTRUCTION DETAILS

SCALE: 1" = 20'

C-11

REVISED BY | DATE REVISED
DIANNE EDWARDS
CALCULATED-DESIGNED BY | CHECKED BY
FUNCTIONAL SUPERVISOR
Dennis P. McBride

STATE OF CALIFORNIA - DEPARTMENT OF TRANSPORTATION
Caltrans
DESIGN

P:\proj1\01\48050\drafting\sheets\148050ga011.dgn

LAST REVISION 00-00-00 | DATE PLOTTED => 28-JUN-2011 | TIME PLOTTED => 15:53

Dist	COUNTY	ROUTE	POST MILES TOTAL PROJECT	SHEET No.	TOTAL SHEETS
01	Lak	20	11.9/12.4	27	120

Dianne M Edwards 5-4-11
REGISTERED CIVIL ENGINEER DATE

6-27-11
PLANS APPROVAL DATE

REGISTERED PROFESSIONAL ENGINEER
D.M. EDWARDS
No. C-51898
Exp. 6-30-12
CIVIL
STATE OF CALIFORNIA

THE STATE OF CALIFORNIA OR ITS OFFICERS OR AGENTS SHALL NOT BE RESPONSIBLE FOR THE ACCURACY OR COMPLETENESS OF SCANNED COPIES OF THIS PLAN SHEET.

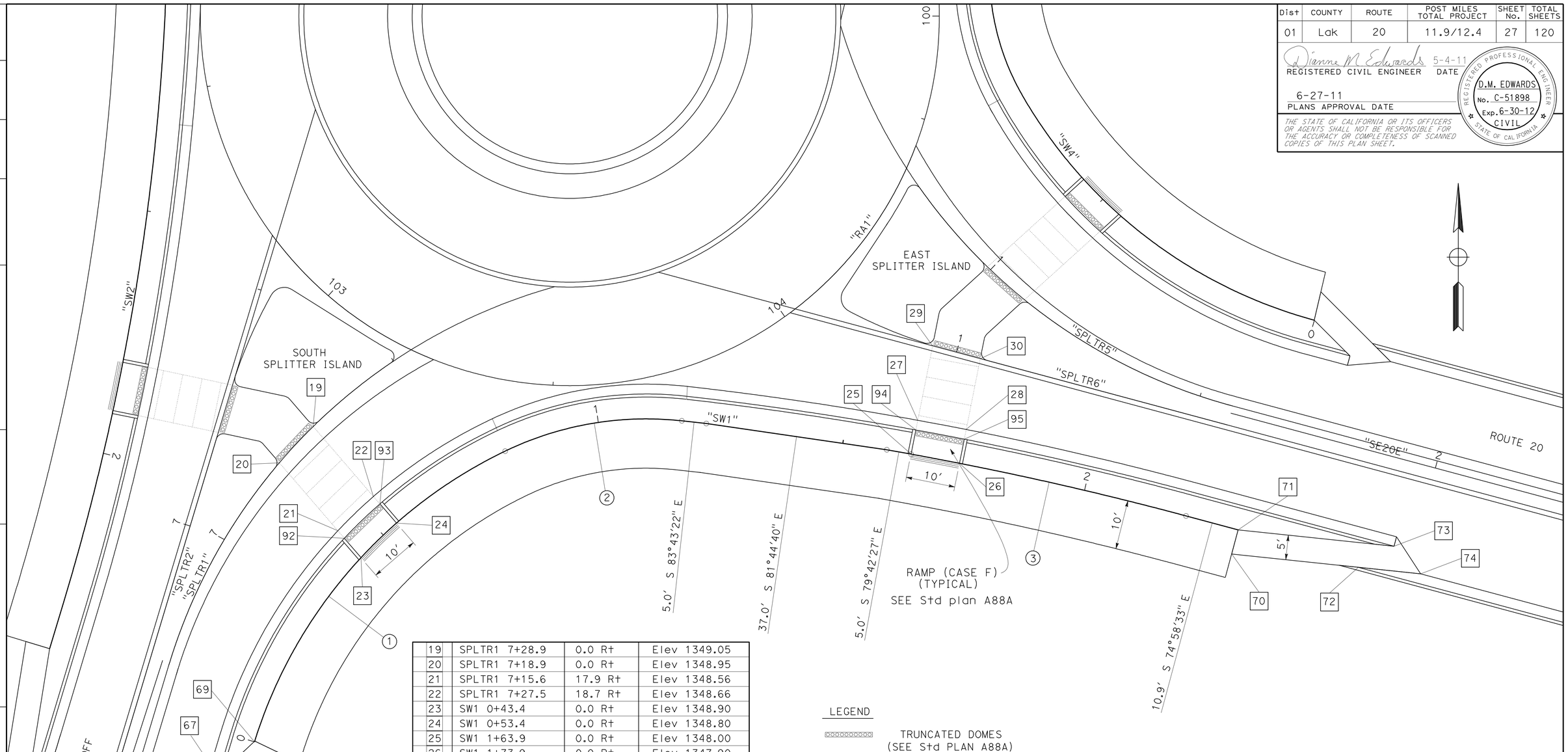

19	SPLTR1 7+28.9	0.0 Rt	Elev 1349.05
20	SPLTR1 7+18.9	0.0 Rt	Elev 1348.95
21	SPLTR1 7+15.6	17.9 Rt	Elev 1348.56
22	SPLTR1 7+27.5	18.7 Rt	Elev 1348.66
23	SW1 0+43.4	0.0 Rt	Elev 1348.90
24	SW1 0+53.4	0.0 Rt	Elev 1348.80
25	SW1 1+63.9	0.0 Rt	Elev 1348.00
26	SW1 1+73.9	0.0 Rt	Elev 1347.90
27	SPLTR6 0+96.0	15.4 Rt	Elev 1347.78
28	SPLTR6 1+06.0	14.6 Rt	Elev 1347.69
29	SPLTR6 0+95.0	0.0 Rt	Elev 1348.10
30	SPLTR6 1+05.0	0.0 Rt	Elev 1347.99
65	LC1 6+45.2	19.0 Rt	Elev 1347.63
66	LC1 6+48.7	20.9 Rt	Elev 1347.58
67	LC1 6+53.4	17.8 Rt	Elev 1347.79
68	SW1 0+0.0	5.7 Rt	Elev 1348.30
69	SW1 0+0.0	0.0 Rt	Elev 1348.41
70	SW1 2+32.2	5.1 Rt	Elev 1347.28
71	SW1 2+32.2	0.0 Rt	Elev 1347.38
72	SR20E1 1+90.1	23.5 Rt	Elev 1346.25
73	SR20E1 1+96.0	17.5 Rt	Elev 1346.45
74	SR20E1 2+02.7	21.5 Rt	Elev 1346.14
92	SPLTR1 7+15.1	19.9 Rt	Elev 1348.46
93	SPLTR1 7+27.3	20.7 Rt	Elev 1348.56
94	SPLTR6 +96.1	17.4 Rt	Elev 1347.77
95	SPLTR6 1+06.1	16.6 Rt	Elev 1347.59

CURVE DATA

No.	R	Δ	T	L	BC	EC
1	97.7′	47°0′0"	42.5′	80.1′	"SW1" 0+00.0	"SW1" 0+80.1
2	66.0′	32°0′0"	18.9′	36.9′	"SW1" 0+80.1	"SW1" 1+17.0
3	693.0′	4°43′56"	28.6′	57.2′	"SW1" 1+64.0	"SW1" 2+21.3

RAMPS AND SIDEWALKS

CONSTRUCTION DETAILS C-12

SCALE: 1" = 10′

REVISED BY	DATE REVISED

CALCULATED-DESIGNED BY	CHECKED BY
DIANNE EDWARDS	

FUNCTIONAL SUPERVISOR: Dennis P. McBride

STATE OF CALIFORNIA - DEPARTMENT OF TRANSPORTATION
Caltrans
DESIGN

P:\proj1\01\48050\drafting\sheets\148050ga012.dgn

LAST REVISION 00-00-00 | DATE PLOTTED => 28-JUN-2011 | TIME PLOTTED => 15:53

Dist	COUNTY	ROUTE	POST MILES TOTAL PROJECT	SHEET No.	TOTAL SHEETS
01	Lak	20	11.9/12.4	28	120

Dianne M Edwards 5-4-11
REGISTERED CIVIL ENGINEER DATE

6-27-11
PLANS APPROVAL DATE

REGISTERED PROFESSIONAL ENGINEER
D.M. EDWARDS
No. C-51898
Exp. 6-30-12
CIVIL
STATE OF CALIFORNIA

THE STATE OF CALIFORNIA OR ITS OFFICERS OR AGENTS SHALL NOT BE RESPONSIBLE FOR THE ACCURACY OR COMPLETENESS OF SCANNED COPIES OF THIS PLAN SHEET.

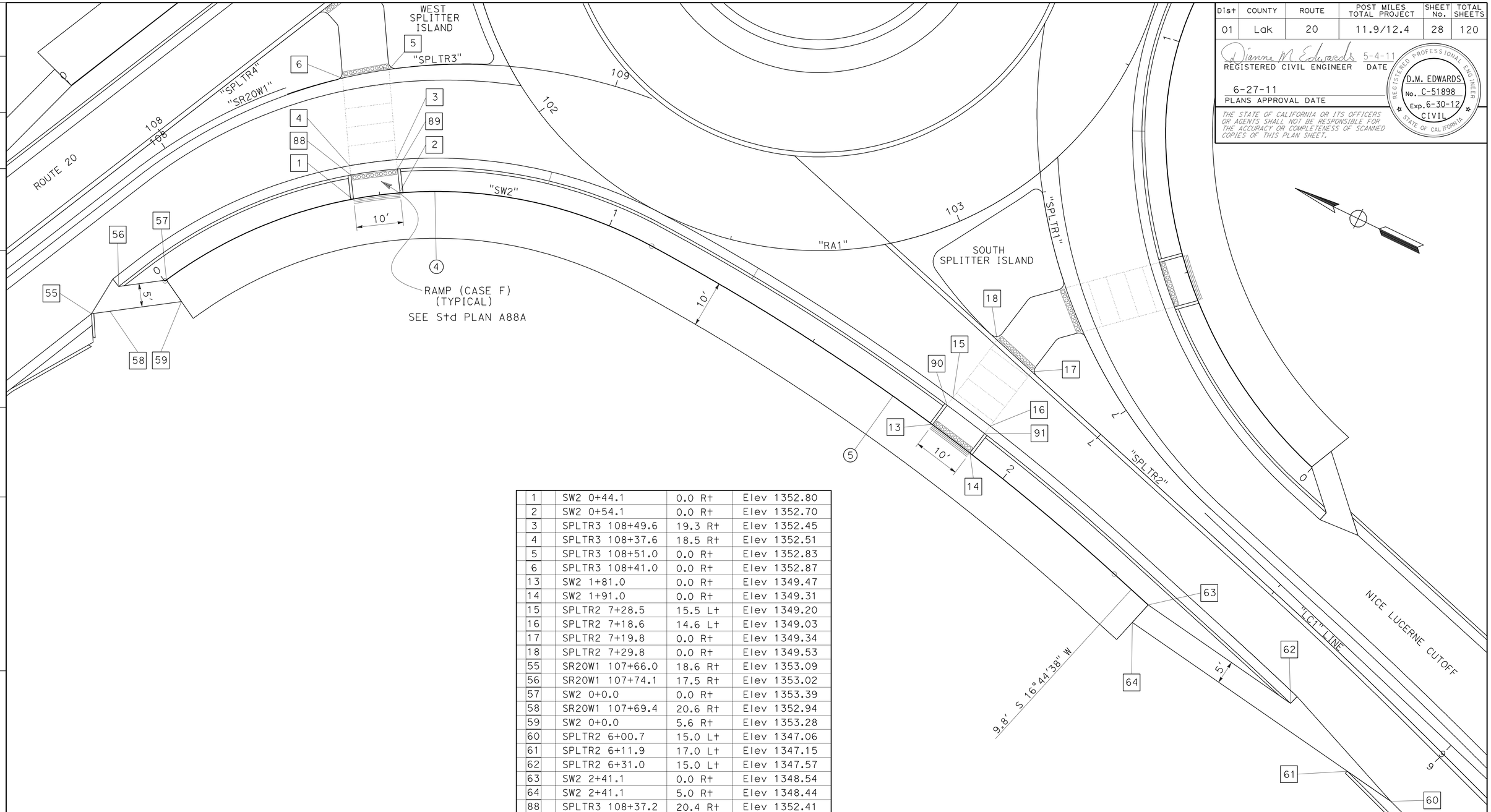

1		SW2 0+44.1	0.0 Rt	Elev 1352.80
2		SW2 0+54.1	0.0 Rt	Elev 1352.70
3		SPLTR3 108+49.6	19.3 Rt	Elev 1352.45
4		SPLTR3 108+37.6	18.5 Rt	Elev 1352.51
5		SPLTR3 108+51.0	0.0 Rt	Elev 1352.83
6		SPLTR3 108+41.0	0.0 Rt	Elev 1352.87
13		SW2 1+81.0	0.0 Rt	Elev 1349.47
14		SW2 1+91.0	0.0 Rt	Elev 1349.31
15		SPLTR2 7+28.5	15.5 Lt	Elev 1349.20
16		SPLTR2 7+18.6	14.6 Lt	Elev 1349.03
17		SPLTR2 7+19.8	0.0 Rt	Elev 1349.34
18		SPLTR2 7+29.8	0.0 Rt	Elev 1349.53
55		SR2OW1 107+66.0	18.6 Rt	Elev 1353.09
56		SR2OW1 107+74.1	17.5 Rt	Elev 1353.02
57		SW2 0+0.0	0.0 Rt	Elev 1353.39
58		SR2OW1 107+69.4	20.6 Rt	Elev 1352.94
59		SW2 0+0.0	5.6 Rt	Elev 1353.28
60		SPLTR2 6+00.7	15.0 Lt	Elev 1347.06
61		SPLTR2 6+11.9	17.0 Lt	Elev 1347.15
62		SPLTR2 6+31.0	15.0 Lt	Elev 1347.57
63		SW2 2+41.1	0.0 Rt	Elev 1348.54
64		SW2 2+41.1	5.0 Rt	Elev 1348.44
88		SPLTR3 108+37.2	20.4 Rt	Elev 1352.41
89		SPLTR3 108+49.4	21.3 Rt	Elev 1352.35
90		SPLTR2 7+28.4	17.5 Lt	Elev 1349.10
91		SPLTR2 7+18.4	16.6 Lt	Elev 1348.93

CURVE DATA

No.	R	Δ	T	L	BC	EC
4	96.9′	65°0′0"	61.7′	109.9′	"SW2" 0+00.1	"SW2" 1+10.0
5	500.0′	11°27′33"	61.0′	121.3′	"SW2" 1+10.0	"SW2" 2+31.3

RAMPS AND SIDEWALKS

CONSTRUCTION DETAILS

SCALE: 1" = 10′

C-13

REVISED BY | DATE REVISED
DIANNE EDWARDS
CALCULATED-DESIGNED BY | CHECKED BY
FUNCTIONAL SUPERVISOR
Dennis P. McBride

STATE OF CALIFORNIA - DEPARTMENT OF TRANSPORTATION
Caltrans
DESIGN

P:\proj1\01\48050\drafting\sheets\148050ga013.dgn

LAST REVISION 00-00-00 | DATE PLOTTED => 28-JUN-2011 | TIME PLOTTED => 15:53

Dist	COUNTY	ROUTE	POST MILES TOTAL PROJECT	SHEET No.	TOTAL SHEETS
01	Lak	20	11.9/12.4	29	120

Dianne M Edwards 5-4-11
REGISTERED CIVIL ENGINEER DATE

6-27-11
PLANS APPROVAL DATE

REGISTERED PROFESSIONAL ENGINEER D.M. EDWARDS No. C-51898 Exp. 6-30-12 CIVIL STATE OF CALIFORNIA

THE STATE OF CALIFORNIA OR ITS OFFICERS OR AGENTS SHALL NOT BE RESPONSIBLE FOR THE ACCURACY OR COMPLETENESS OF SCANNED COPIES OF THIS PLAN SHEET.

CURVE DATA

No.	R	Δ	T	L	BC	EC
6	296.0′	18°00′00″	46.9′	93.0′	"SW3" 0+42.1	"SW3" 1+35.1
7	67.0′	55°22′18″	35.2′	64.8′	"SW3" 1+35.1	"SW3" 1+99.9

7	SPLTR4 108+53.6	0.0 Rt	Elev 1352.98
8	SPLTR4 108+43.6	0.0 Rt	Elev 1353.00
9	SPLTR4 108+42.5	13.3 Lt	Elev 1352.74
10	SPLTR4 108+52.5	13.8 Lt	Elev 1352.71
11	SW3 0+50.9	0.0 Rt	Elev 1353.00
12	SW3 0+60.9	0.0 Rt	Elev 1353.00
37	SW3 1+77.9	0.0 Rt	Elev 1351.84
38	SW3 1+88.0	0.0 Rt	Elev 1351.87
39	SPLTR7 1+00.1	14.9 Lt	Elev 1351.56
40	SPLTR7 1+11.9	14.4 Lt	Elev 1351.60
41	SPLTR7 0+99.3	0.0 Rt	Elev 1351.86
42	SPLTR7 1+09.4	0.0 Rt	Elev 1351.88
49	SPLTR4 107+45.4	19.0 Lt	Elev 1353.39
50	SPLTR4 107+53.2	15.0 Lt	Elev 1353.46
51	SPLTR4 107+61.0	16.0 Lt	Elev 1353.29
52	SW3 0+0.0	0.0 Lt	Elev 1353.41
53	SPLTR4 107+60.4	21.0 Lt	Elev 1353.05
54	SW3 0+0.0	5.0 Lt	Elev 1353.31
84	SW3 2+03.2	0.0 Lt	Elev 1351.94
85	SW3 2+03.2	5.7 Lt	Elev 1351.83
86	SPLTR7 1+45.2	16.0 Lt	Elev 1351.66
87	SPLTR7 1+51.7	19.0 Lt	Elev 1351.56
100	SPLTR7 1+00.2	16.9 Lt	Elev 1351.46
101	SPLTR7 1+12.3	16.4 Lt	Elev 1351.50
102	SPLTR4 108+42.3	15.3 Lt	Elev 1352.64
103	SPLTR4 108+52.3	15.8 Lt	Elev 1352.61

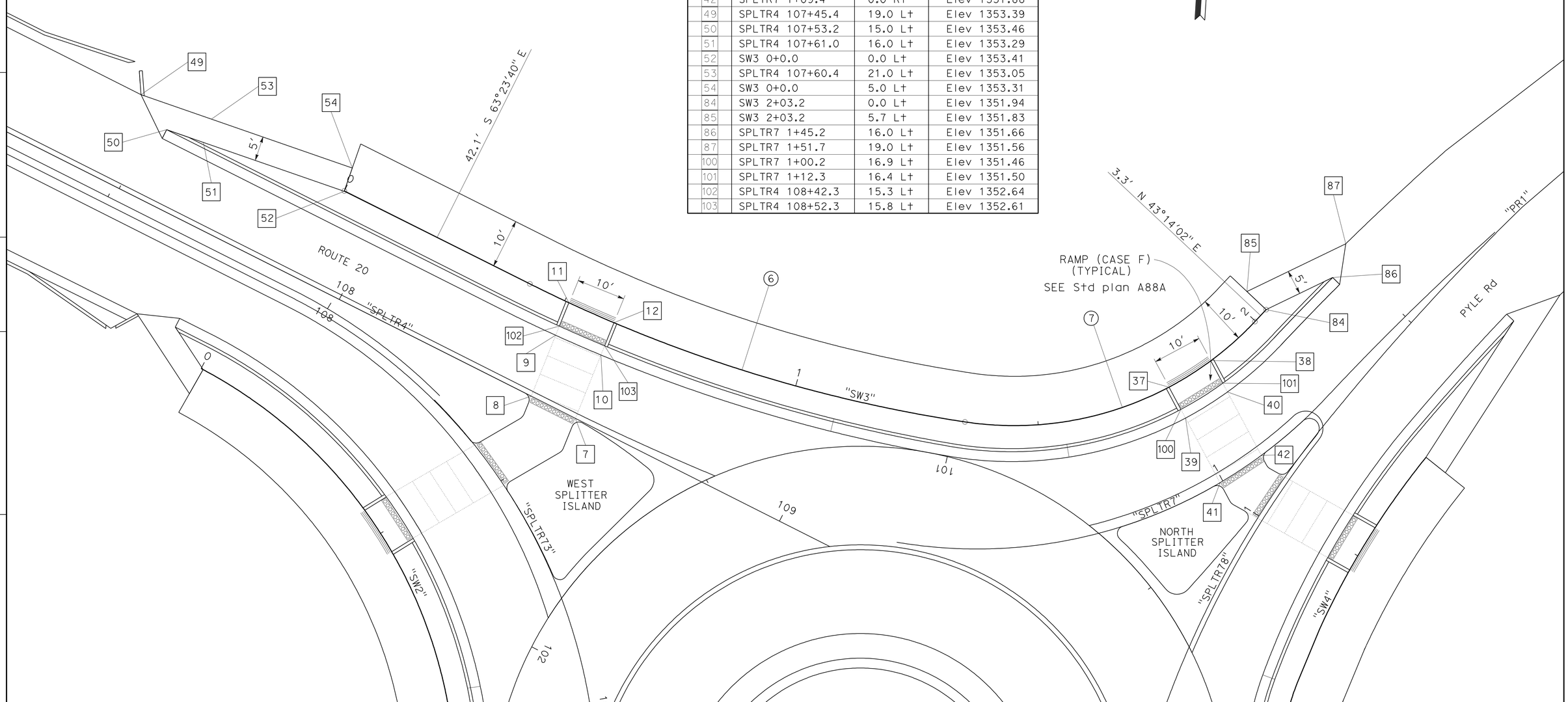

RAMPS AND SIDEWALKS

CONSTRUCTION DETAILS C-14

SCALE: 1″ = 10′

STATE OF CALIFORNIA - DEPARTMENT OF TRANSPORTATION
Caltrans® DESIGN

FUNCTIONAL SUPERVISOR: Dennis P. McBride
CALCULATED-DESIGNED BY: DIANNE EDWARDS
CHECKED BY
REVISED BY
DATE REVISED

P:\proj1\01\48050\drafting\sheets\148050gd014.dgn

LAST REVISION 00-00-00
DATE PLOTTED => 28-JUN-2011
TIME PLOTTED => 15:53

Dist	COUNTY	ROUTE	POST MILES TOTAL PROJECT	SHEET No.	TOTAL SHEETS
01	Lak	20	11.9/12.4	30	120

Dianne M Edwards 5-4-11
REGISTERED CIVIL ENGINEER DATE

6-27-11
PLANS APPROVAL DATE

REGISTERED PROFESSIONAL ENGINEER
D.M. EDWARDS
No. C-51898
Exp. 6-30-12
CIVIL
STATE OF CALIFORNIA

THE STATE OF CALIFORNIA OR ITS OFFICERS OR AGENTS SHALL NOT BE RESPONSIBLE FOR THE ACCURACY OR COMPLETENESS OF SCANNED COPIES OF THIS PLAN SHEET.

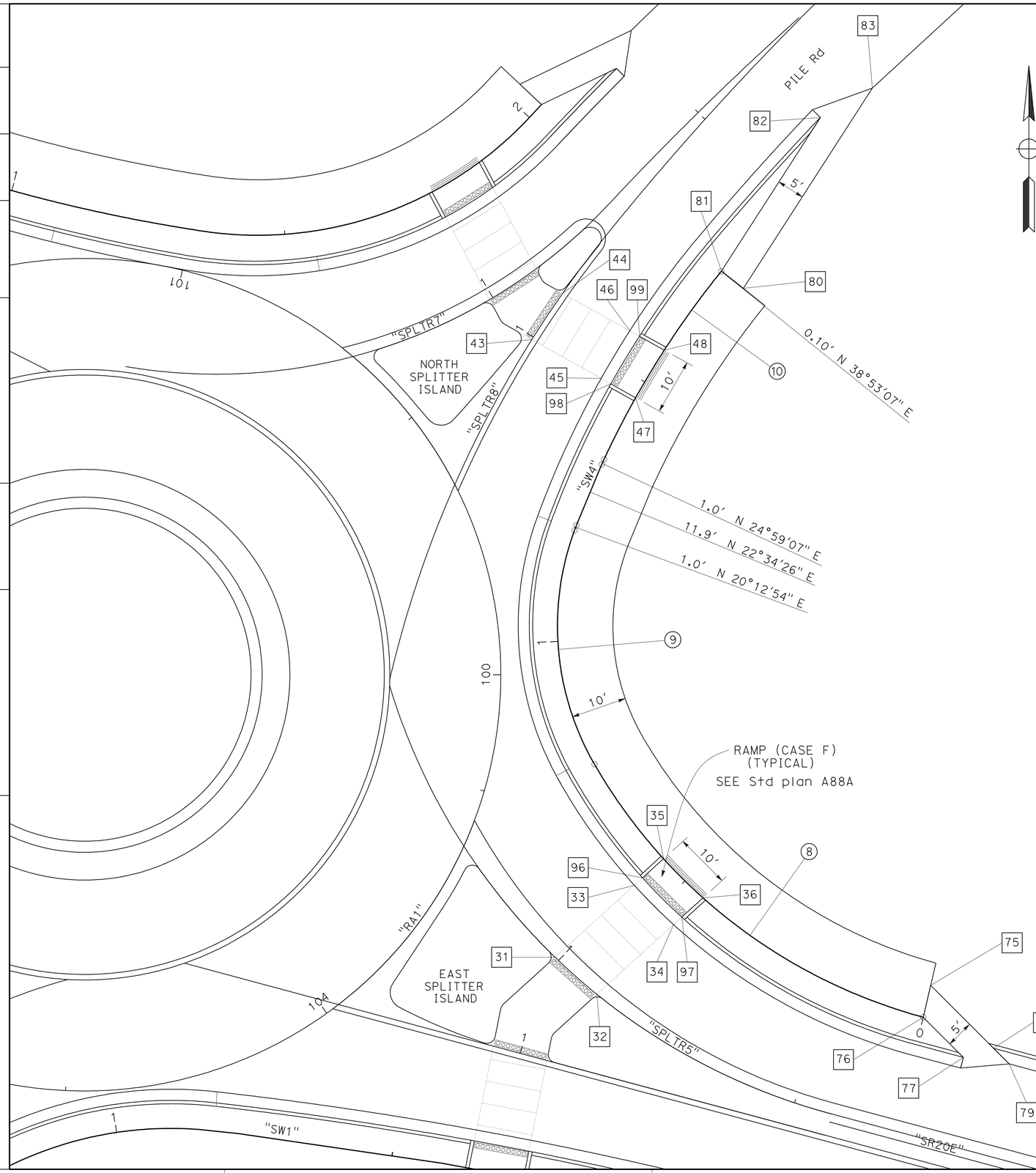

31	SPLTR5 0+99.1	0.0 Rt	Elev 1348.55
32	SPLTR5 1+09.2	0.0 Rt	Elev 1348.39
33	SPLTR5 1+00.6	19.2 Lt	Elev 1348.04
34	SPLTR5 1+12.6	18.4 Lt	Elev 1347.97
35	SW4 0+55.6	0.0 Rt	Elev 1348.30
36	SW4 0+45.6	0.0 Rt	Elev 1348.07
43	SPLTR8 0+99.5	0.0 Rt	Elev 1351.48
44	SPLTR8 1+09.5	0.0 Rt	Elev 1351.70
45	SPLTR8 1+00.2	14.3 Rt	Elev 1351.21
46	SPLTR8 1+11.0	13.8 Rt	Elev 1351.45
47	SW4 1+46.7	0.0 Rt	Elev 1351.42
48	SW4 1+56.7	0.0 Rt	Elev 1351.59
75	SW4 0+0.0	5.9 Lt	Elev 1347.31
76	SW4 0+0.0	0.0 Lt	Elev 1347.43
77	SR20E1 1+77.4	17.5 Lt	Elev 1346.84
78	SR20E1 1+82.2	20.5 Lt	Elev 1346.61
79	SR20E1 1+85.6	18.5 Lt	Elev 1346.64
80	SW4 1+74.3	5.0 Rt	Elev 1351.71
81	SW4 1+74.3	0.0 Rt	Elev 1351.81
82	SPLTR8 1+64.6	15.0 Rt	Elev 1351.87
83	PR1 1+75.5	18.1 Rt	Elev 1351.79
96	SPLTR5 1+00.8	21.2 Lt	Elev 1348.14
97	SPLTR5 1+13.0	20.4 Lt	Elev 1347.87
98	SPLTR8 1+00.4	16.3 Rt	Elev 1351.11
99	SPLTR8 1+11.2	15.8 Rt	Elev 1351.35

CURVE DATA

No.	R	Δ	T	L	BC	EC
8	97.9'	44°54'10"	40.4'	76.7'	"SW4" 0+00.0	"SW4" 0+76.7
9	49.9'	50°11'29"	23.4'	43.7'	"SW4" 0+76.7	"SW4" 1+20.4
10	164.9'	13°54'00"	20.1'	40.0'	"SW4" 1+34.2	"SW4" 1+74.2

RAMPS AND SIDEWALKS

CONSTRUCTION DETAILS

SCALE: 1" = 10'

C-15

STATE OF CALIFORNIA - DEPARTMENT OF TRANSPORTATION
DESIGN
Caltrans
FUNCTIONAL SUPERVISOR: Dennis P. McBride
DIANNE EDWARDS
CALCULATED-DESIGNED BY
CHECKED BY
REVISED BY
DATE REVISED
P:\proj\01\48050\drafting\sheets\148050ga015.dgn

LAST REVISION 00-00-00
DATE PLOTTED => 28-JUN-2011
TIME PLOTTED => 15:53

Dist	COUNTY	ROUTE	POST MILES TOTAL PROJECT	SHEET No.	TOTAL SHEETS
01	Lak	20	11.9/12.4	31	120

Dianne M Edwards 5-4-11
REGISTERED CIVIL ENGINEER DATE

6-27-11
PLANS APPROVAL DATE

REGISTERED PROFESSIONAL ENGINEER
D.M. EDWARDS
No. C-51898
Exp. 6-30-12
CIVIL
STATE OF CALIFORNIA

THE STATE OF CALIFORNIA OR ITS OFFICERS OR AGENTS SHALL NOT BE RESPONSIBLE FOR THE ACCURACY OR COMPLETENESS OF SCANNED COPIES OF THIS PLAN SHEET.

LEGEND

= LIMITS OF COLD PLANE AC PAVEMENT

MODIFIED CURB (TYPE A1-6) = MINOR CONCRETE (CURB) (MODIFIED TYPE A1-6)

BOC = BACK OF CURB

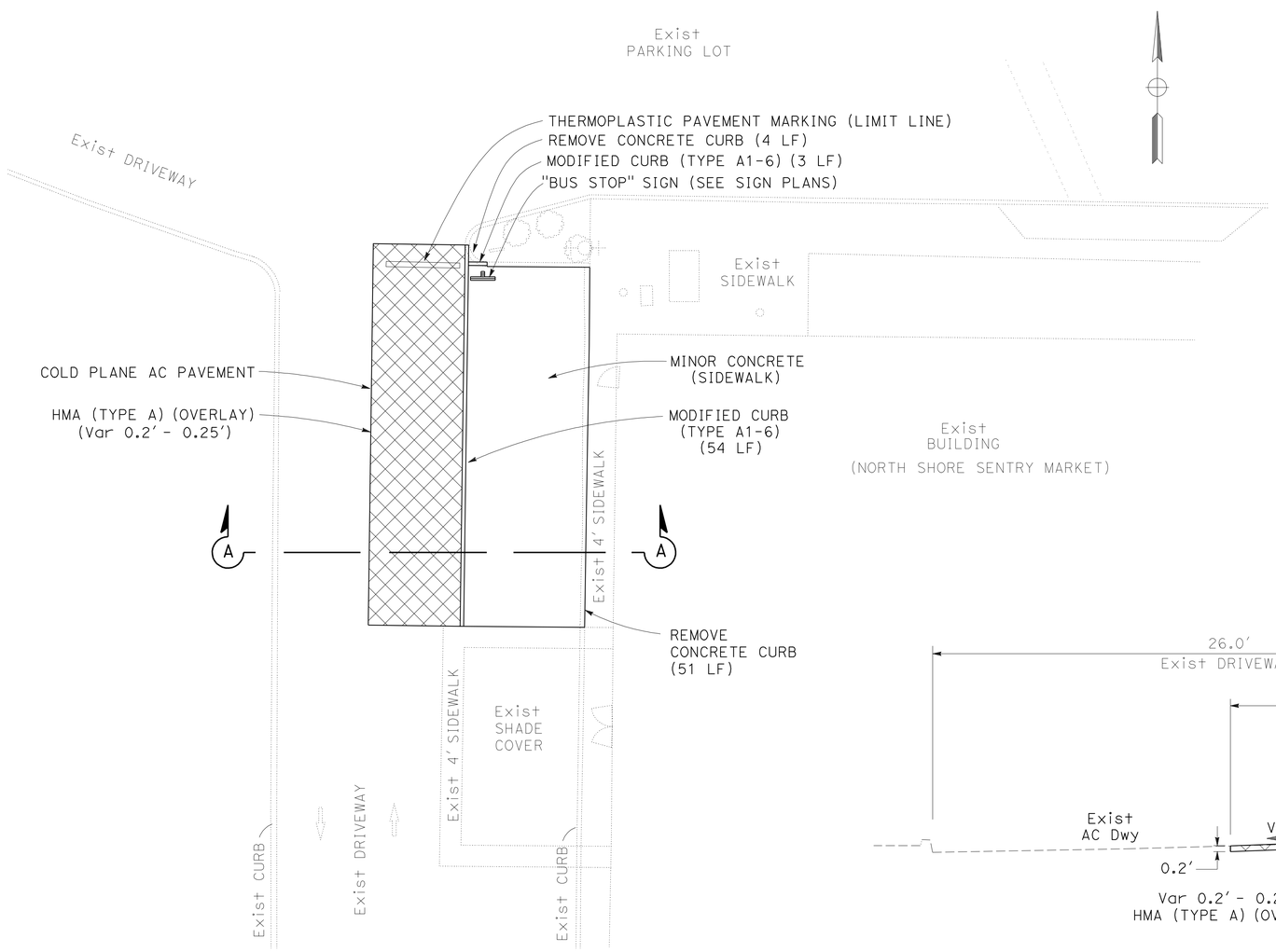

PLAN VIEW

BUS STOP DETAIL
(SENTRY MARKET)

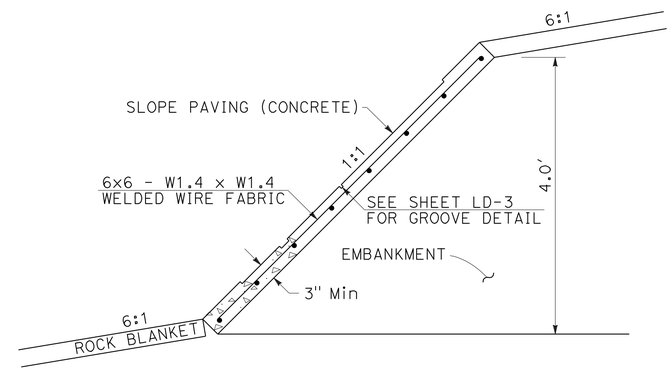

SLOPE PAVING (CONCRETE)
(FOR DETAILS NOT SHOWN, SEE LD SHEETS)

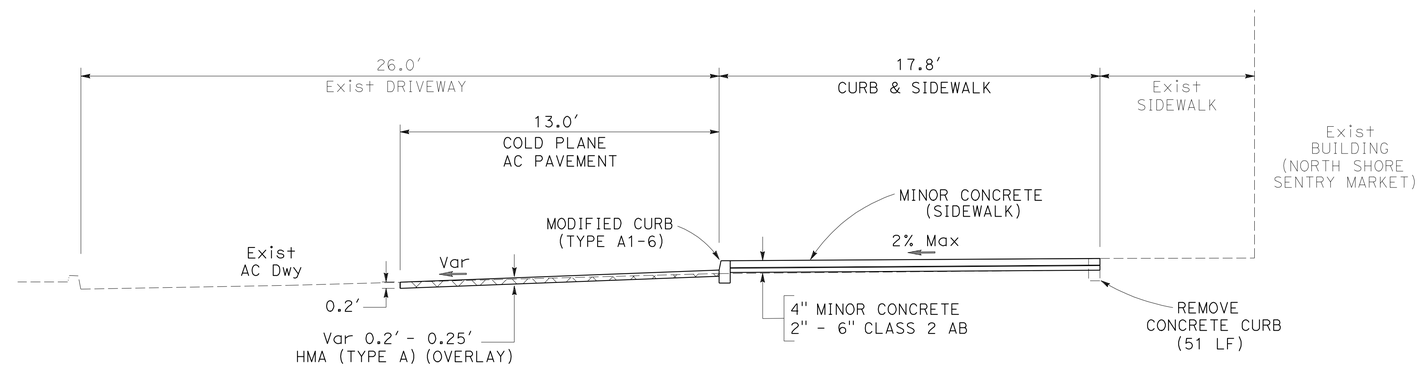

SECTION A-A

CONSTRUCTION DETAILS
NO SCALE

C-16

REVISED BY | DATE REVISED
DIANNE EDWARDS
CALCULATED-DESIGNED BY | CHECKED BY
FUNCTIONAL SUPERVISOR
Dennis P. McBride
STATE OF CALIFORNIA - DEPARTMENT OF TRANSPORTATION
DESIGN
Caltrans
P:\proj1\01\48050\drafting\sheets\148050ga016.dgn

LAST REVISION 00-00-00 | DATE PLOTTED => 28-JUN-2011 | TIME PLOTTED => 15:53

Dist	COUNTY	ROUTE	POST MILES TOTAL PROJECT	SHEET No.	TOTAL SHEETS
01	Lak	20	11.9/12.4	32	120

Dianne M Edwards 5-4-11
REGISTERED CIVIL ENGINEER DATE

6-27-11
PLANS APPROVAL DATE

REGISTERED PROFESSIONAL ENGINEER
D.M. EDWARDS
No. C-51898
Exp. 6-30-12
CIVIL
STATE OF CALIFORNIA

THE STATE OF CALIFORNIA OR ITS OFFICERS OR AGENTS SHALL NOT BE RESPONSIBLE FOR THE ACCURACY OR COMPLETENESS OF SCANNED COPIES OF THIS PLAN SHEET.

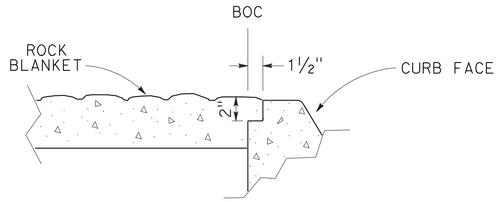

MODIFIED CURB DETAIL

APPLIES TO: MODIFIED TYPE A1-6 CURB
MODIFIED TYPE A2-6 CURB
MODIFIED TYPE B1-4 CURB
MODIFIED TYPE B2-4 CURB & GUTTER

FOR DETAILS NOT SHOWN SEE Std PLAN A87A

CURB PAYMENT QUANTITIES

CURB TYPE	CUBIC YARDS PER LINEAR FOOT
MODIFIED A1-6	0.02508
MODIFIED A2-6	0.05826
MODIFIED B1-4	0.02108
MODIFIED B2-4	0.05438
TRUCK APRON	0.06404
A2-6 SPECIAL-APPROACH	0.05826
A2-6 SPECIAL-EXIT	0.03974

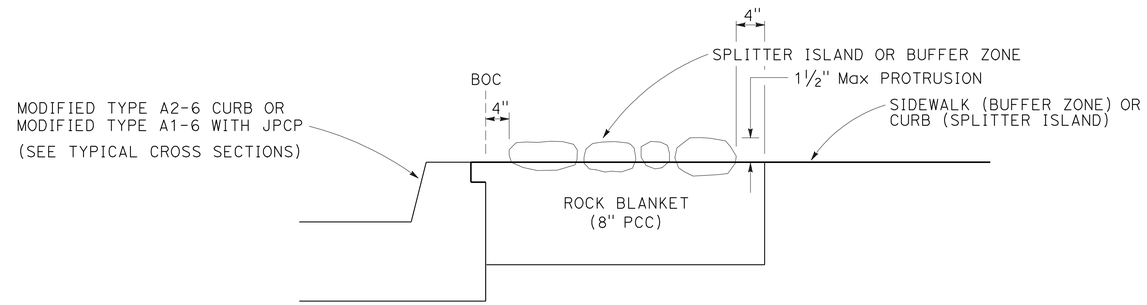

NOTE: FOR CENTRAL ISLAND ROCK BLANKET, SEE LANDSCAPE DETAILS.

ROCK BLANKET DETAILS

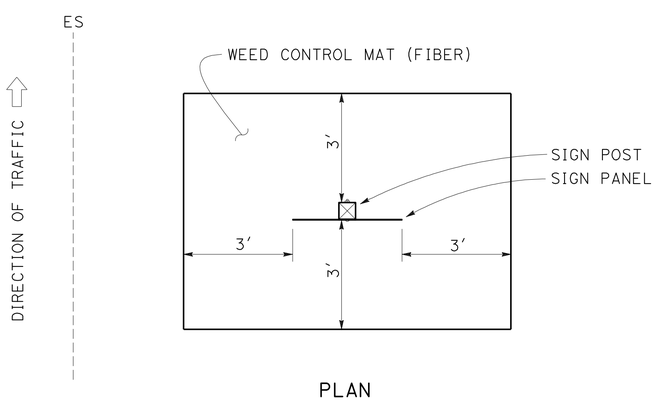

LIMITS OF WEED CONTROL MAT (FIBER)

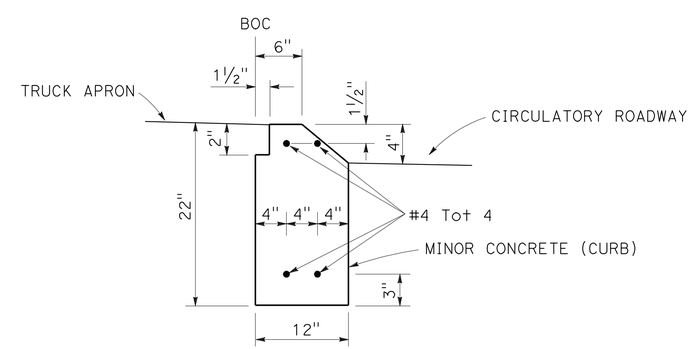

TRUCK APRON CURB DETAIL

NOTE:
TRUCK APRON CURB WILL BE JOINTED INLINE WITH JPCP JOINTING.

CONSTRUCTION DETAILS
NO SCALE
C-17

REVISED BY | DATE REVISED
DIANNE EDWARDS
CALCULATED-DESIGNED BY | CHECKED BY
FUNCTIONAL SUPERVISOR
Dennis P. McBride
STATE OF CALIFORNIA - DEPARTMENT OF TRANSPORTATION
Caltrans
DESIGN
P:\proj1\01\48050\drafting\sheets\148050ga017.dgn

LAST REVISION 00-00-00 | DATE PLOTTED => 28-JUN-2011 | TIME PLOTTED => 15:53

Dist	COUNTY	ROUTE	POST MILES TOTAL PROJECT	SHEET No.	TOTAL SHEETS
01	Lak	20	11.9/12.4	33	120

Dianne M Edwards 5-4-11
REGISTERED CIVIL ENGINEER DATE

6-27-11
PLANS APPROVAL DATE

REGISTERED PROFESSIONAL ENGINEER
D.M. EDWARDS
No. C-51898
Exp. 6-30-12
CIVIL
STATE OF CALIFORNIA

THE STATE OF CALIFORNIA OR ITS OFFICERS OR AGENTS SHALL NOT BE RESPONSIBLE FOR THE ACCURACY OR COMPLETENESS OF SCANNED COPIES OF THIS PLAN SHEET.

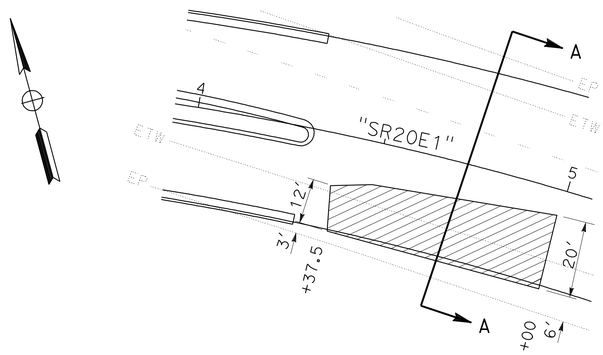

COLD PLANE AC PAVEMENT

SEE SHEET L-2

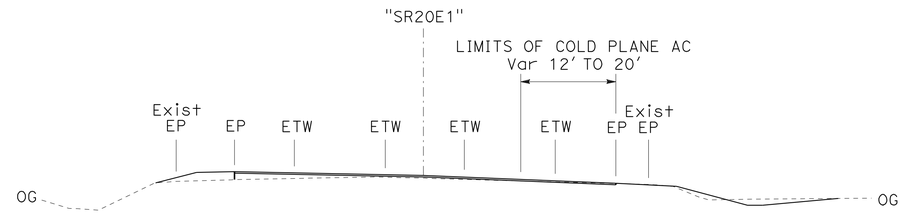

SECTION A-A

"SR20E1" 4+37.5 TO 5+00

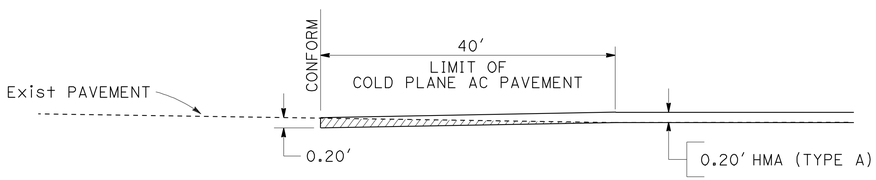

PAVING CONFORM

"SR20W1" 98+35 TO 98+75
"SR20E1" 7+22.5 TO 7+62.5
"LC1" 1+25 TO 1+65

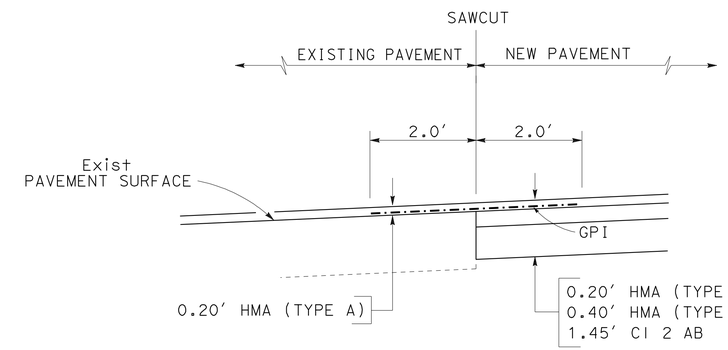

GEOSYNTHETIC PAVEMENT INTERLAYER (GPI)

"SR20W1" 100+34 TO 103+84
"SR20E1" 2+35 TO 3+94

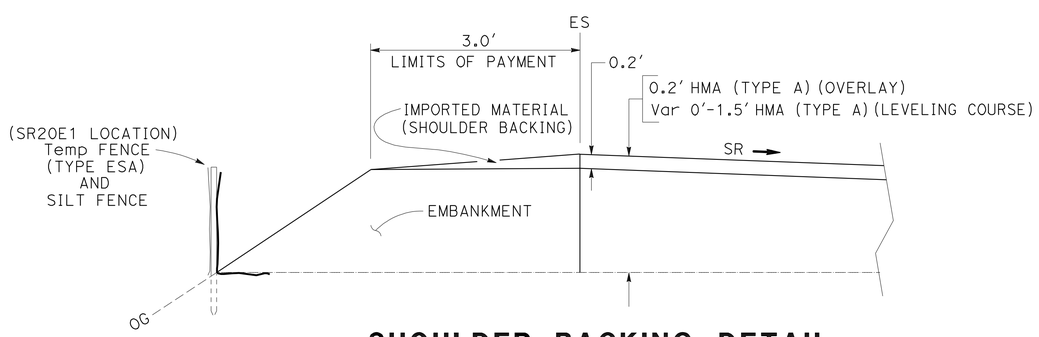

SHOULDER BACKING DETAIL

"SR20W1" 99+62.5 TO 103+84.3
"SR20E1" 41+30.5 TO 7+62.5
"LC1" 1+25.0 TO 3+70.0

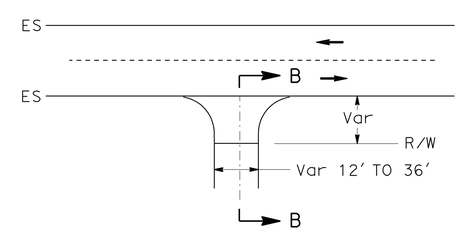

PRIVATE ROAD APPROACH PAVING LIMITS

"LCDRWY1"
"LCDRWY5"
"LCDRWY6"
"D1"

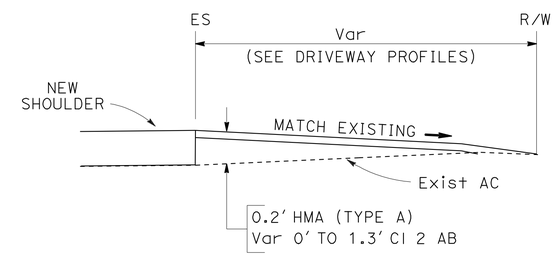

SECTION B-B

CONSTRUCTION DETAILS

NO SCALE

C-18

REVISED BY | DATE REVISED
DIANNE EDWARDS
CALCULATED-DESIGNED BY | CHECKED BY
FUNCTIONAL SUPERVISOR
Dennis P. McBride

STATE OF CALIFORNIA - DEPARTMENT OF TRANSPORTATION
Caltrans
DESIGN

P:\proj1\01\48050\drafting\sheets\148050ga018.dgn

LAST REVISION 00-00-00 | DATE PLOTTED => 28-JUN-2011 | TIME PLOTTED => 15:53

Dist	COUNTY	ROUTE	POST MILES TOTAL PROJECT	SHEET No.	TOTAL SHEETS
01	Lak	20	11.9/12.4	34	120

Dianne M Edwards 5-4-11
REGISTERED CIVIL ENGINEER DATE

6-27-11
PLANS APPROVAL DATE

REGISTERED PROFESSIONAL ENGINEER
D.M. EDWARDS
No. C-51898
Exp. 6-30-12
CIVIL
STATE OF CALIFORNIA

THE STATE OF CALIFORNIA OR ITS OFFICERS OR AGENTS SHALL NOT BE RESPONSIBLE FOR THE ACCURACY OR COMPLETENESS OF SCANNED COPIES OF THIS PLAN SHEET.

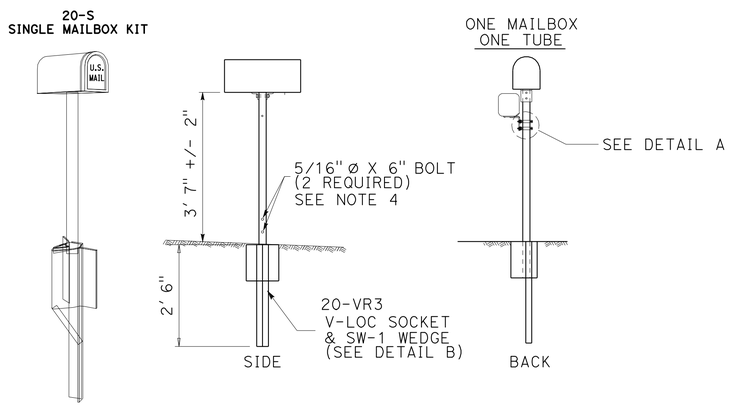

SINGLE POST MAILBOX AND NEWSPAPER BOX INSTALLATION

NEWSPAPER TUBE CONFIGURATION (SINGLE POST INSTALLATION)

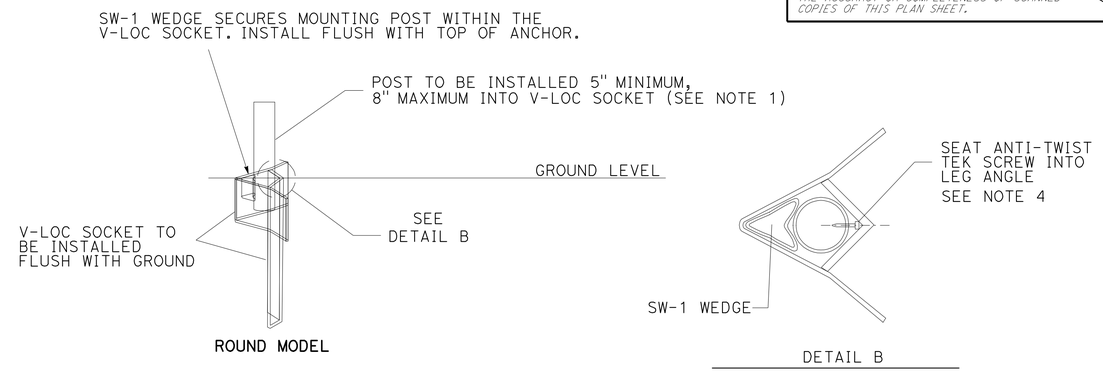

ROUND MODEL

DETAIL B

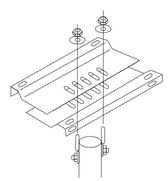

MBB-S

No. 1 OR No. 1A
MAILBOX BRACKET
FOR SINGLE POST
INSTALLATION

TAPCO PART No.	DESCRIPTION
20-S	SINGLE MAILBOX SUPPORT KIT FOR 1, 1A, T1 & T2 MAILBOXES. (SUPPORT KITS LISTED ABOVE COME WITH STANDARD 48" LONG POSTS AND 20-VR3 V-LOC SOCKET WITH WEDGE)

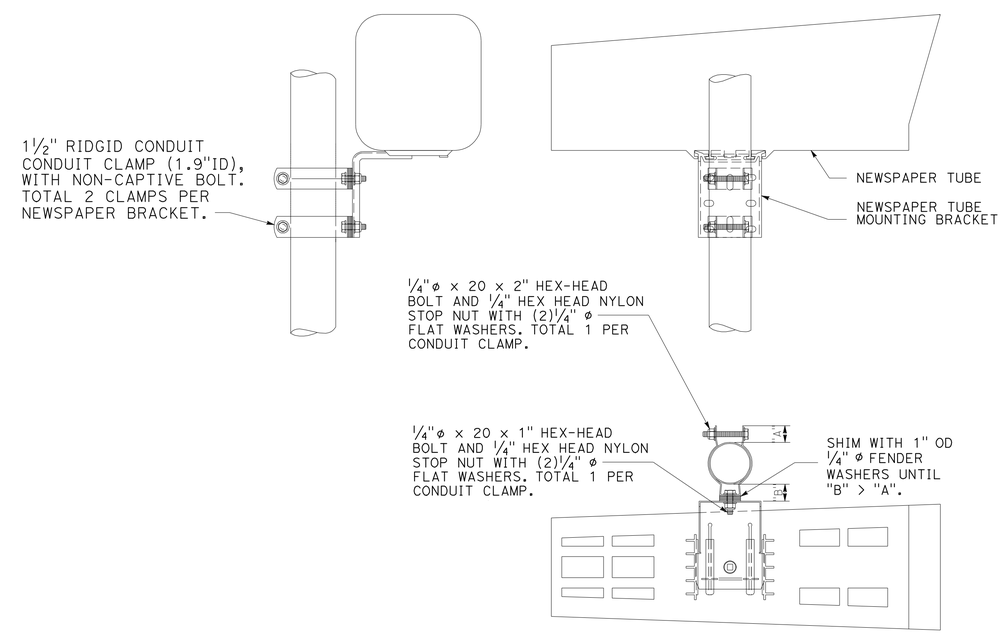

BOTTOM UP VIEW

DETAIL A

GENERAL NOTES FOR ALL DETAILS:

1. VERTICAL DISTANCE FROM BOTTOM OF MAILBOX DOOR(S) TO GROUND SHALL BE 3' 5" TO 3' 9".
2. ALL MAILBOXES TO FACE SR20 UNLESS OTHERWISE ORIENTATED ON LAYOUT SHEETS.
3. NO HOLES ARE TO BE DRILLED IN THE TUBE SUPPORT FRAME UNLESS CALLED FOR IN MANUFACTURER'S INSTALLATION INSTRUCTIONS.
4. FASTENERS PROVIDED IN TAPCO POST KITS.
5. EXACT MAILBOX LOCATION TO BE DETERMINED BY THE ENGINEER.
6. MAILBOXES TO BE GALVANIZED AND BLACK IN COLOR WITH GOLD NUMBERS FOR STREET ADDRESSES.
7. INSTALL ONE NEWSPAPER TUBE PER EACH MAILBOX.
8. NEWSPAPER TUBE CENTERLINE TO BE PARALLEL WITH MAILBOX CENTERLINE.
9. ALL NEWSPAPER TUBES TO FACE SR20.
10. ALL NUTS/WASHERS (ALL TYPES USED), MUFFLER CLAMPS, AND CONDUIT CLAMPS TO BE STAINLESS STEEL.
11. NO HOLES ARE TO BE DRILLED IN THE V-LOC POST TUBE SUPPORT FRAME UNLESS CALLED FOR IN THE MANUFACTURER'S INSTALLATION INSTRUCTIONS.

CONSTRUCTION DETAILS

NO SCALE

C-19

REVISED BY | DATE REVISED
DIANNE EDWARDS
CALCULATED-DESIGNED BY | CHECKED BY
FUNCTIONAL SUPERVISOR
Dennis P. McBride
STATE OF CALIFORNIA - DEPARTMENT OF TRANSPORTATION
Caltrans
DESIGN
P:\proj1\01\48050\drafting\sheets\148050ga019.dgn

LAST REVISION 00-00-00 | DATE PLOTTED => 28-JUN-2011 | TIME PLOTTED => 15:53

Dist	COUNTY	ROUTE	POST MILES TOTAL PROJECT	SHEET No.	TOTAL SHEETS
01	Lak	20	11.9/12.4	35	120

LICENSED LANDSCAPE ARCHITECT

6-27-11
PLANS APPROVAL DATE

LICENSED LANDSCAPE ARCHITECT
JAMES G. WILLIAMSON
No. 5415
Signature
02-29-12
Renewal Date
5-4-11
Date
STATE OF CALIFORNIA

THE STATE OF CALIFORNIA OR ITS OFFICERS OR AGENTS SHALL NOT BE RESPONSIBLE FOR THE ACCURACY OR COMPLETENESS OF SCANNED COPIES OF THIS PLAN SHEET.

NOTE:

1. ROLLED EROSION CONTROL PRODUCT (BLANKET) SHALL BE PLACED PRIOR TO THE APPLICATION OF COMPOST BLANKET IN ADJACENT AREAS.

LEGEND:

- EROSION CONTROL (TYPE 1)
  - EROSION CONTROL (COMPOST BLANKET)
- EROSION CONTROL (TYPE 2)
  - DECOMPACT SOIL
  - EROSION CONTROL (HYDROSEED)
- EROSION CONTROL (TYPE 3)
  - COMPOST (INCORPORATE)
  - EROSION CONTROL (DRY SEED)
  - ROLLED EROSION CONTROL PRODUCT (BLANKET)
- EROSION CONTROL (TYPE 4)
  - FIBER ROLLS
  - EROSION CONTROL (COMPOST BLANKET)

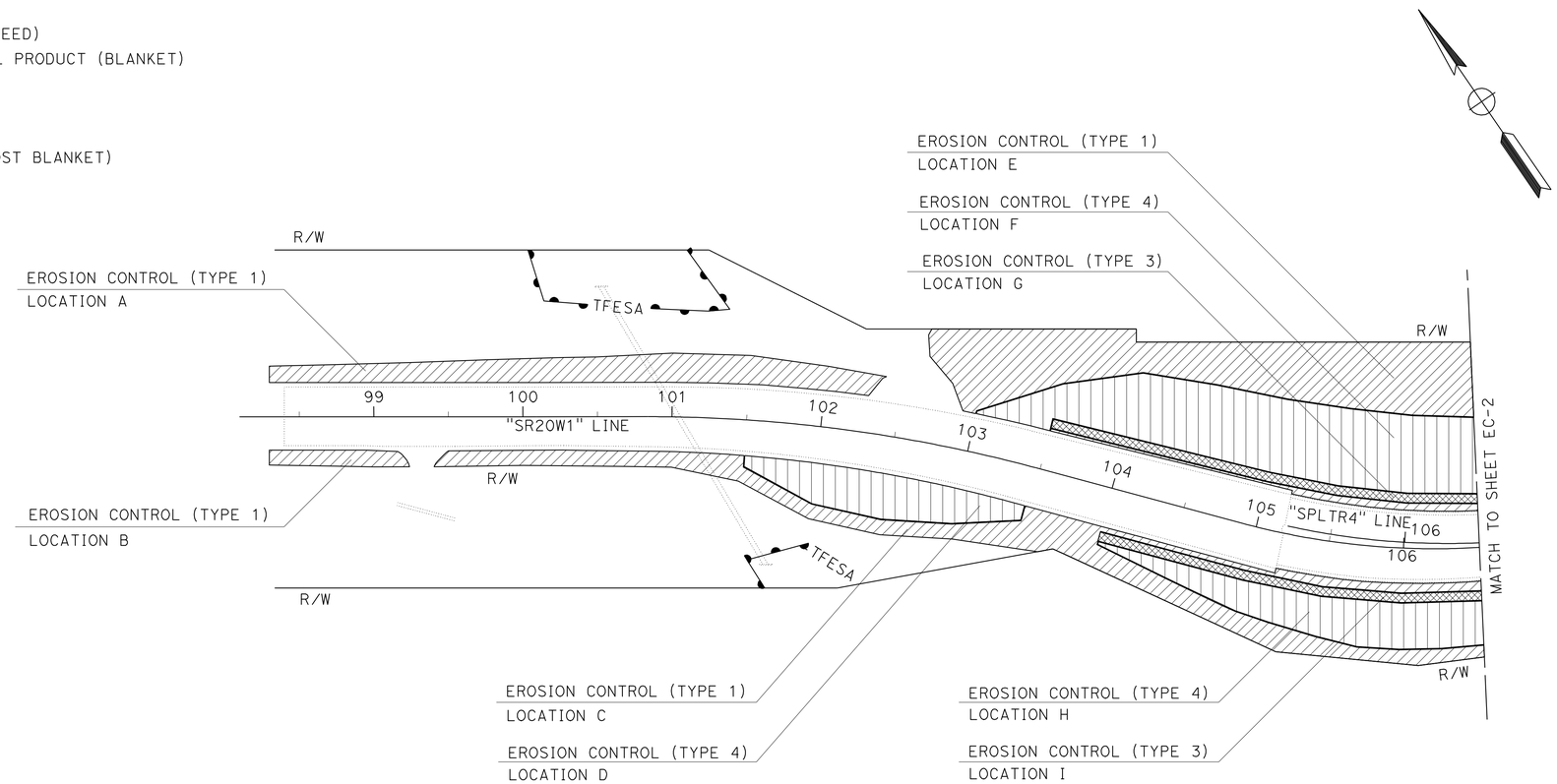

THIS PLAN ACCURATE FOR EROSION CONTROL WORK ONLY

EROSION CONTROL PLAN

SCALE: 1" = 50'

EC-1

STATE OF CALIFORNIA - DEPARTMENT OF TRANSPORTATION
Caltrans® LANDSCAPE ARCHITECTURE

SENIOR LANDSCAPE ARCHITECT: KENNETH MURRAY

CALCULATED-DESIGNED BY: J. WILLIAMSON
CHECKED BY

REVISED BY
DATE REVISED

LAST REVISION 00-00-00
DATE PLOTTED => 28-JUN-2011
TIME PLOTTED => 15:54

Dist	COUNTY	ROUTE	POST MILES TOTAL PROJECT	SHEET No.	TOTAL SHEETS
01	Lak	20	11.9/12.4	36	120

LICENSED LANDSCAPE ARCHITECT

6-27-11
PLANS APPROVAL DATE

LICENSED LANDSCAPE ARCHITECT
JAMES G. WILLIAMSON
No. 5415
Signature
02-29-12
Renewal Date
5-4-11
Date
STATE OF CALIFORNIA

THE STATE OF CALIFORNIA OR ITS OFFICERS OR AGENTS SHALL NOT BE RESPONSIBLE FOR THE ACCURACY OR COMPLETENESS OF SCANNED COPIES OF THIS PLAN SHEET.

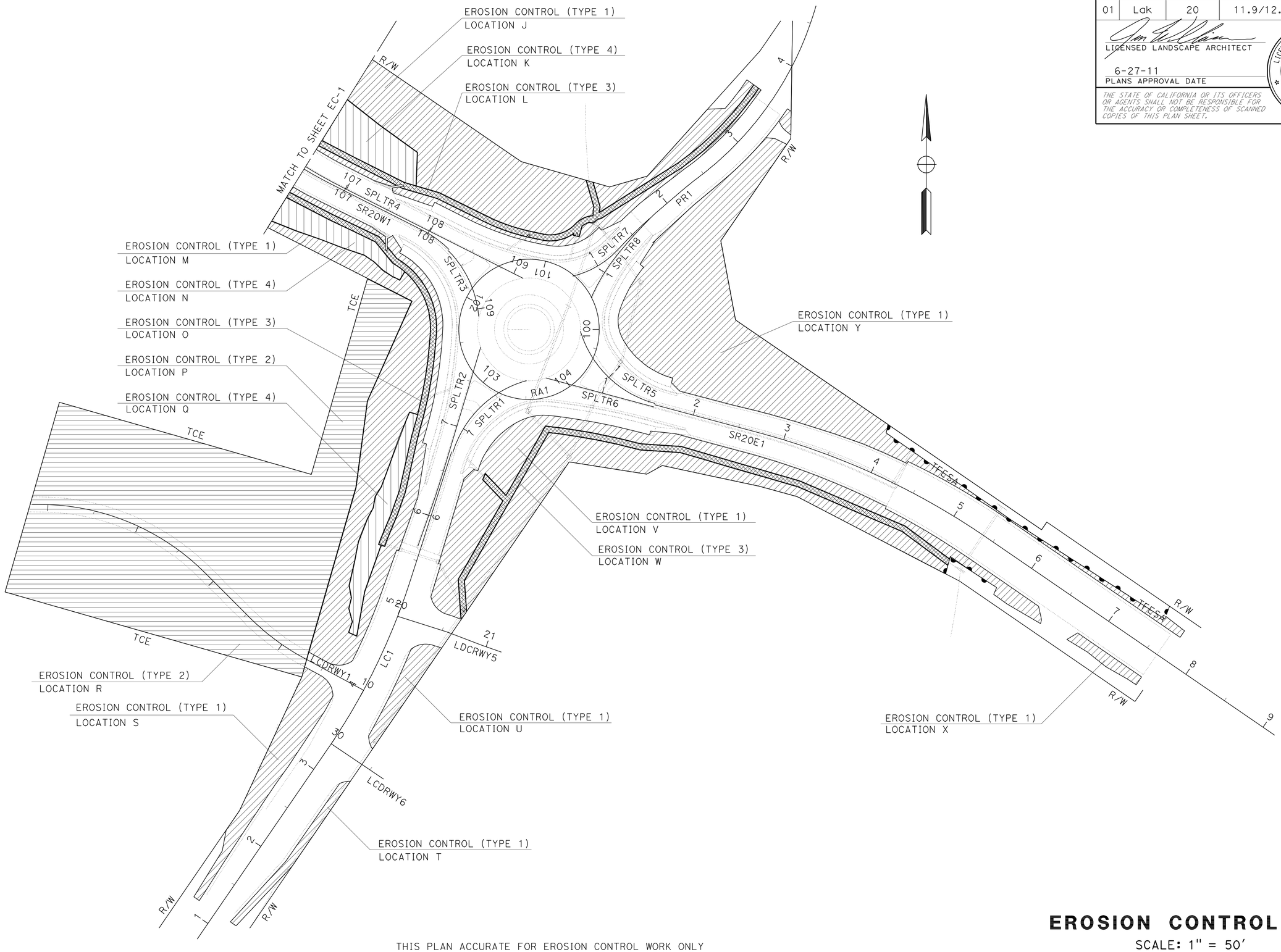

THIS PLAN ACCURATE FOR EROSION CONTROL WORK ONLY

EROSION CONTROL PLAN

SCALE: 1" = 50'

EC-2

REVISED BY	DATE REVISED

CALCULATED-DESIGNED BY: J. WILLIAMSON
CHECKED BY:

SENIOR LANDSCAPE ARCHITECT: KENNETH MURRAY

STATE OF CALIFORNIA - DEPARTMENT OF TRANSPORTATION
Caltrans® LANDSCAPE ARCHITECTURE

LAST REVISION 00-00-00
DATE PLOTTED => 28-JUN-2011
TIME PLOTTED => 15:54

Dist	COUNTY	ROUTE	POST MILES TOTAL PROJECT	SHEET No.	TOTAL SHEETS
01	Lak	20	11.9/12.4	37	120

LICENSED LANDSCAPE ARCHITECT

6-27-11
PLANS APPROVAL DATE

LICENSED LANDSCAPE ARCHITECT JAMES G. WILLIAMSON No. 5415 Signature 02-29-12 Renewal Date 5-4-11 Date STATE OF CALIFORNIA

THE STATE OF CALIFORNIA OR ITS OFFICERS OR AGENTS SHALL NOT BE RESPONSIBLE FOR THE ACCURACY OR COMPLETENESS OF SCANNED COPIES OF THIS PLAN SHEET.

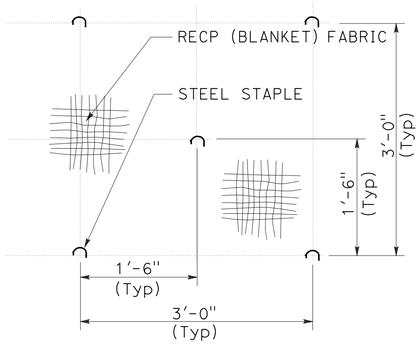

DETAIL A
STAPLE PATTERN

PLAN

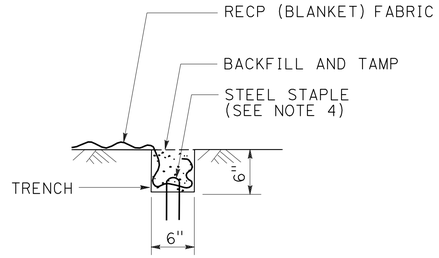

DETAIL B
KEY TRENCH

SECTION

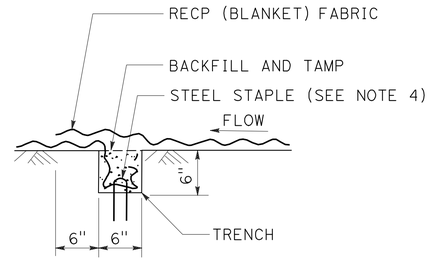

DETAIL C
TRANSVERSE BLANKET JOINT ABOVE DITCH INTERSECTION

SECTION

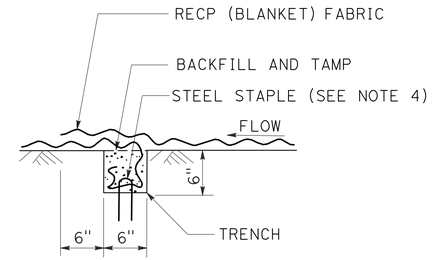

DETAIL D
TRANSVERSE BLANKET JOINT BELOW DITCH INTERSECTION

SECTION

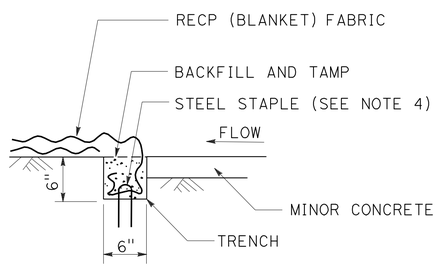

DETAIL E
OUTLET KEY TRENCH

SECTION

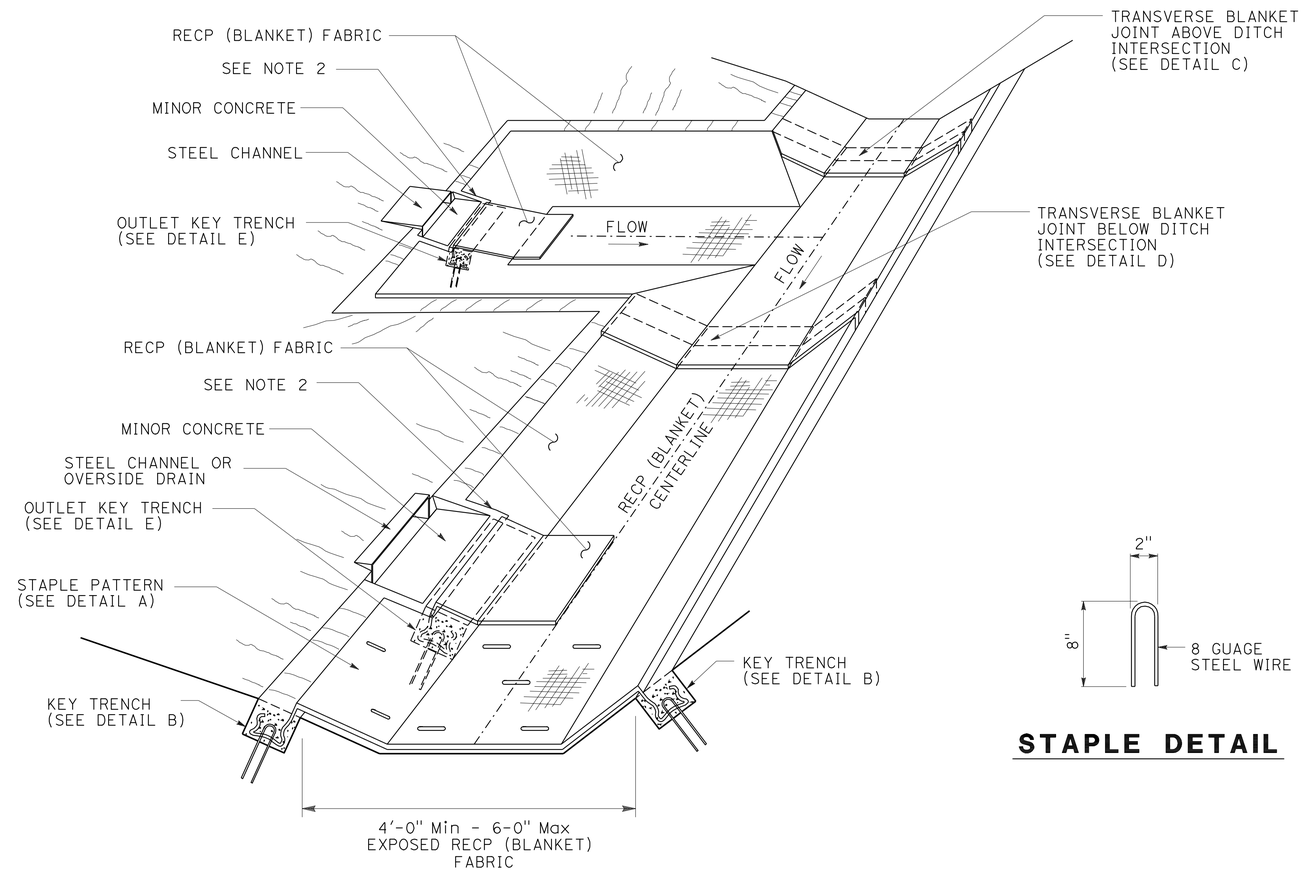

RECP (BLANKET) IN TRAPEZOIDAL DITCH

PERSPECTIVE

STAPLE DETAIL

NOTES:

1. FOR CLARITY, PERSPECTIVE VIEW DOES NOT SHOW ALL STAPLES.
2. NOTCH RECP (BLANKET) AROUND MINOR CONCRETE AT STEEL CHANNEL AND OVERSIDE DRAIN OUTLET LOCATIONS.
3. USE DETAIL D FOR TRANSVERSE BLANKET JOINTS AT NON-INTERSECTION LOCATIONS.
4. STEEL STAPLES TO BE PLACED 1'-0" ON CENTER ALONG THE LENGTH OF THE TRENCH.

ABBREVIATION:

RECP - ROLLED EROSION CONTROL PRODUCT

THIS PLAN ACCURATE FOR EROSION CONTROL WORK ONLY

EROSION CONTROL DETAILS

NO SCALE

ECD-1

STATE OF CALIFORNIA - DEPARTMENT OF TRANSPORTATION
Caltrans LANDSCAPE ARCHITECTURE
SENIOR LANDSCAPE ARCHITECT KENNETH MURRAY
CALCULATED-DESIGNED BY J. WILLIAMSON
CHECKED BY
REVISED BY
DATE REVISED

LAST REVISION 00-00-00
DATE PLOTTED => 28-JUN-2011
TIME PLOTTED => 15:54

Dist	COUNTY	ROUTE	POST MILES TOTAL PROJECT	SHEET No.	TOTAL SHEETS
01	Lak	20	11.9/12.4	38	120

LICENSED LANDSCAPE ARCHITECT

6-27-11
PLANS APPROVAL DATE

LICENSED LANDSCAPE ARCHITECT
JAMES G. WILLIAMSON
No. 5415
Signature
02-29-12
Renewal Date
5-4-11
Date
STATE OF CALIFORNIA

THE STATE OF CALIFORNIA OR ITS OFFICERS OR AGENTS SHALL NOT BE RESPONSIBLE FOR THE ACCURACY OR COMPLETENESS OF SCANNED COPIES OF THIS PLAN SHEET.

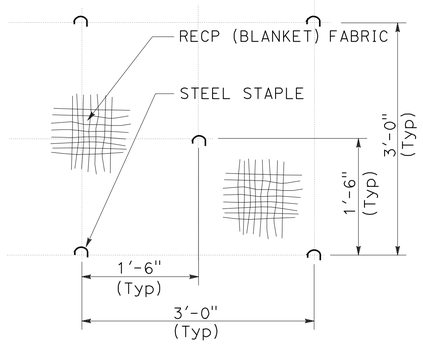

DETAIL A
STAPLE PATTERN

PLAN

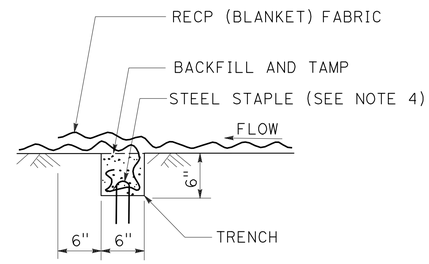

DETAIL B
TRANSVERSE BLANKET JOINT

SECTION

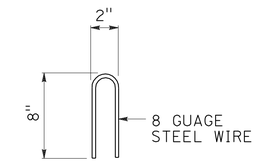

STAPLE DETAIL

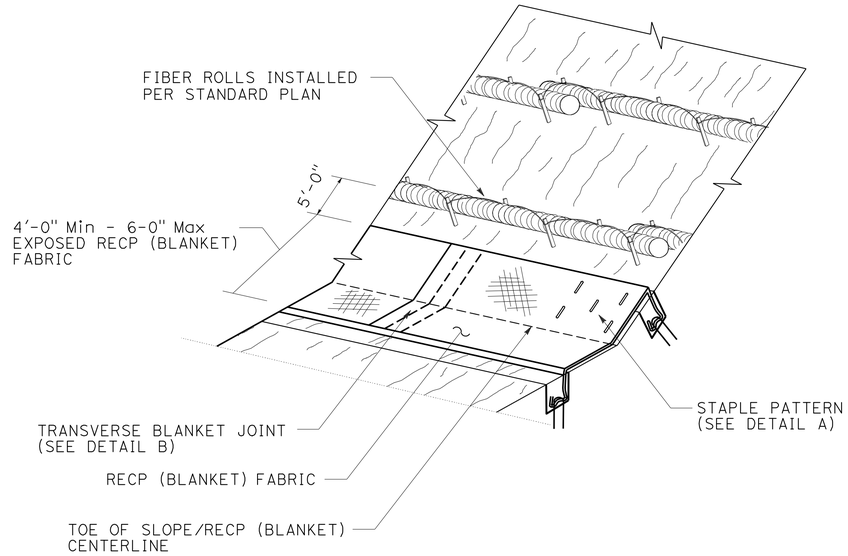

RECP (BLANKET) AT
TOE OF SLOPE LOCATIONS

PERSPECTIVE

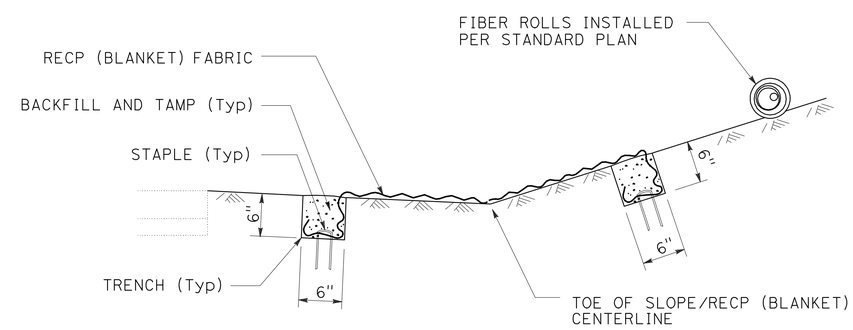

RECP (BLANKET) AT
TOE OF SLOPE LOCATIONS

SECTION

THIS PLAN ACCURATE FOR EROSION CONTROL WORK ONLY

EROSION CONTROL DETAILS
NO SCALE

ECD-2

STATE OF CALIFORNIA - DEPARTMENT OF TRANSPORTATION
Caltrans® LANDSCAPE ARCHITECTURE

SENIOR LANDSCAPE ARCHITECT: KENNETH MURRAY

CALCULATED-DESIGNED BY: J. WILLIAMSON
CHECKED BY

REVISED BY
DATE REVISED

LAST REVISION 00-00-00
DATE PLOTTED => 28-JUN-2011
TIME PLOTTED => 15:54

Dist	COUNTY	ROUTE	POST MILES TOTAL PROJECT	SHEET No.	TOTAL SHEETS
01	Lak	20	11.9/12.4	39	120

LICENSED LANDSCAPE ARCHITECT

6-27-11
PLANS APPROVAL DATE

LICENSED LANDSCAPE ARCHITECT JAMES G. WILLIAMSON No. 5415 Signature 02-29-12 Renewal Date 5-4-11 Date STATE OF CALIFORNIA

THE STATE OF CALIFORNIA OR ITS OFFICERS OR AGENTS SHALL NOT BE RESPONSIBLE FOR THE ACCURACY OR COMPLETENESS OF SCANNED COPIES OF THIS PLAN SHEET.

EROSION CONTROL QUANTITIES

SHEET	LOCATION	STATION	(N) EROSION CONTROL TYPE	(N) SEED MIX TYPE	EROSION CONTROL (COMPOST BLANKET) CY	EROSION CONTROL (DRY SEED) SQFT	FIBER ROLL LF	COMPOST (INCORPORATE) SQYD	EROSION CONTROL (HYDROSEED) SQFT	ROLLED EROSION CONTROL PRODUCT (BLANKET) SQFT	(N) SOIL DECOMPACTION SQYD
1	A	Sta "SR20W1" 98+30 Lt TO "SR20W1" 102+38 Lt	1	1	30						
1	B	Sta "SR20W1" 98+30 Rt TO "SR20W1" 99+24 Rt	1	1	4.5						
1	C	Sta "SR20W1" 99+40 Rt TO "SR20W1" 106+50 Rt	1	1	48						
1	D	Sta "SR20W1" 101+50 Rt TO "SR20W1" 103+50 Rt	4	1	21		255				
1	E	Sta "SR20W1" 102+61 Lt TO "SPLTR4" 106+50 Lt	1	1	69						
1	F	Sta "SR20W1" 103+00 Lt TO "SPLTR4" 106+50 Lt	4	1	67.5		779				
1	G	Sta "SR20W1" 103+50 Lt TO "SPLTR4" 106+50 Lt	3	1		1710		190		1710	
1	H	Sta "SR20W1" 104+00 Rt TO "SR20W1" 106+50 Rt	4	1	28		340				
1	I	Sta "SR20W1" 104+00 Rt TO "SR20W1" 106+50 Rt	3	1		1575		175		1575	
2	J	Sta "SPTR4" 106+50 Lt TO "PR1" 03+60 Lt	1	1	112.5						
2	K	Sta "SPTR4" 106+50 Lt TO "SPTR4" 107+64 Lt	4	1	20.5		216				
2	L	Sta "SPTR4" 106+50 Lt TO "PR1" 03+60 Lt	3	1		3510		390		3510	
2	M	Sta "SR20W1" 106+50 Rt TO "LC1" 04+09 Lt	1	1	97						
2	N	Sta "SR20W1" 106+50 Rt TO "SR20W1" 108+00 Rt	4	1	15		162				
2	O	Sta "SR20W1" 106+50 Rt TO "LC1" 05+54 Lt	3	1		2790		310		2790	
2	P	Sta "LCDRWY1" 10+71 Rt TO "LCDRWY1" 14+17 Rt	2	2					49,860		5540
2	Q	Sta "LC1" 04+50 Lt TO "SPLTR2" 07+00 Lt	4	1	19.5		221				
2	R	Sta "LCDRWY1" 10+65 Lt TO "LCDRWY1" 14+21 Lt	2	2					23,400		2600
2	S	Sta "LC1" 01+15 Lt TO "LC1" 03+91 Lt	1	1	28						
2	T	Sta "LC1" 01+15 Rt TO "LC1" 03+11 Rt	1	1	7.5						
2	U	Sta "LC1" 03+52 Rt TO "LC1" 04+73 Rt	1	1	10.5						
2	V	Sta "LC1" 05+07 Rt TO "SR20E1" 06+41 Rt	1	1	126						
2	W	Sta "LC1" 05+07 Rt TO "SR20E1" 05+23 Rt	3	1		4275		475		4275	
2	X	Sta "SR20E1" 06+74 Rt TO "SR20E1" 07+63 Rt	1	1	4.5						
2	Y	Sta "SR20E1" 07+73 Lt TO "PR1" 03+60 Rt	1	1	156						
				TOTAL	865	13,860	1973	1540	73,260	13,860	8140

(N) NOT A SEPARATE PAY ITEM, FOR INFORMATION ONLY.

REVISED BY | DATE REVISED

J. WILLIAMSON

CALCULATED-DESIGNED BY | CHECKED BY

SENIOR LANDSCAPE ARCHITECT

KENNETH MURRAY

STATE OF CALIFORNIA - DEPARTMENT OF TRANSPORTATION

Caltrans® LANDSCAPE ARCHITECTURE

EROSION CONTROL QUANTITIES
ECQ-1

LAST REVISION 00-00-00 | DATE PLOTTED => 28-JUN-2011 | TIME PLOTTED => 15:54

Dist	COUNTY	ROUTE	POST MILES TOTAL PROJECT	SHEET No.	TOTAL SHEETS
01	Lak	20	11.9/12.4	40	120

Dianne M Edwards 5-4-11
REGISTERED CIVIL ENGINEER DATE

6-27-11
PLANS APPROVAL DATE

REGISTERED PROFESSIONAL ENGINEER
D.M. EDWARDS
No. C-51898
Exp. 6-30-12
CIVIL
STATE OF CALIFORNIA

THE STATE OF CALIFORNIA OR ITS OFFICERS OR AGENTS SHALL NOT BE RESPONSIBLE FOR THE ACCURACY OR COMPLETENESS OF SCANNED COPIES OF THIS PLAN SHEET.

NOTE: CONTOURS AT 2' INTERVALS

CONTOUR GRADING

SCALE: 1" = 50'

G-1

REVISED BY	DATE REVISED
DIANNE EDWARDS	

CALCULATED-DESIGNED BY
CHECKED BY

FUNCTIONAL SUPERVISOR
Dennis P. McBride

STATE OF CALIFORNIA - DEPARTMENT OF TRANSPORTATION
Caltrans
DESIGN

P:\proj1\01\48050\drafting\sheets\148050ha001.dgn

LAST REVISION 00-00-00
DATE PLOTTED => 28-JUN-2011
TIME PLOTTED => 15:54

Dist	COUNTY	ROUTE	POST MILES TOTAL PROJECT	SHEET No.	TOTAL SHEETS
01	Lak	20	11.9/12.4	41	120

Dianne M Edwards 5-4-11
REGISTERED CIVIL ENGINEER DATE

6-27-11
PLANS APPROVAL DATE

REGISTERED PROFESSIONAL ENGINEER
D.M. EDWARDS
No. C-51898
Exp. 6-30-12
CIVIL
STATE OF CALIFORNIA

THE STATE OF CALIFORNIA OR ITS OFFICERS OR AGENTS SHALL NOT BE RESPONSIBLE FOR THE ACCURACY OR COMPLETENESS OF SCANNED COPIES OF THIS PLAN SHEET.

NOTES:

1. GRADE DITCHES TO DRAIN TO INLET STRUCTURES.
2. 24" CULVERT (2)(b) TO BE INSTALLED DURING STAGE 1.
   SAME CULVERT (2)(c) TO BE ABANDONED DURING STAGE 5.

ABBREVIATION:

OSD - OVERSIDE DRAIN

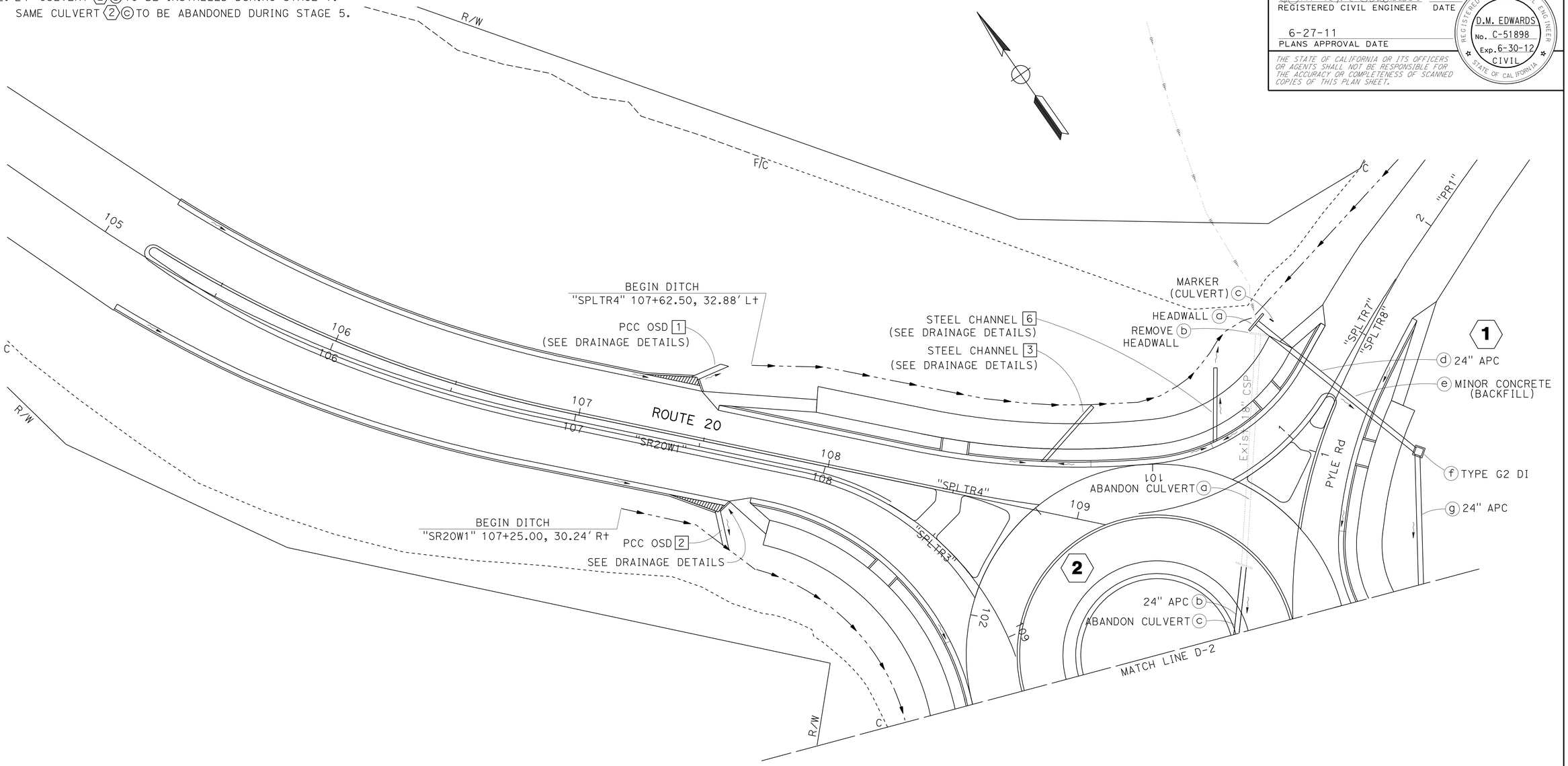

DRAINAGE PLAN

SCALE: 1" = 20'

D-1

REVISED BY	DATE REVISED

CALCULATED-DESIGNED BY: DIANNE EDWARDS
CHECKED BY:

FUNCTIONAL SUPERVISOR: Dennis P. McBride

STATE OF CALIFORNIA - DEPARTMENT OF TRANSPORTATION
Caltrans®
DESIGN

P:\proj1\01\48050\drafting\sheets\148050ia001.dgn

LAST REVISION 00-00-00
DATE PLOTTED => 28-JUN-2011
TIME PLOTTED => 15:54

Dist	COUNTY	ROUTE	POST MILES TOTAL PROJECT	SHEET No.	TOTAL SHEETS
01	Lak	20	11.9/12.4	42	120

Dianne M Edwards 5-4-11
REGISTERED CIVIL ENGINEER DATE

6-27-11
PLANS APPROVAL DATE

REGISTERED PROFESSIONAL ENGINEER
D.M. EDWARDS
No. C-51898
Exp. 6-30-12
CIVIL
STATE OF CALIFORNIA

THE STATE OF CALIFORNIA OR ITS OFFICERS OR AGENTS SHALL NOT BE RESPONSIBLE FOR THE ACCURACY OR COMPLETENESS OF SCANNED COPIES OF THIS PLAN SHEET.

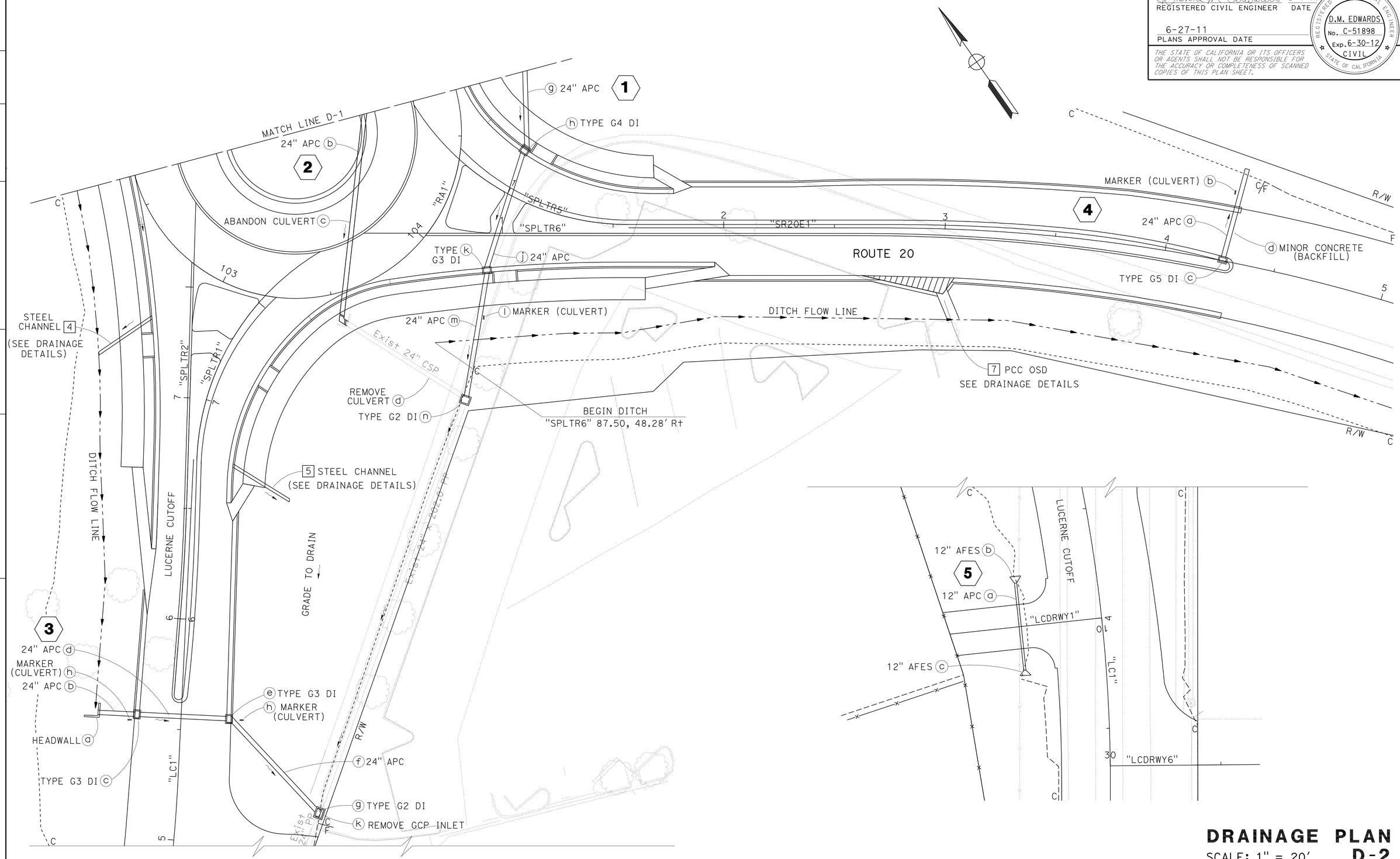

DRAINAGE PLAN

SCALE: 1" = 20'

D-2

STATE OF CALIFORNIA - DEPARTMENT OF TRANSPORTATION
Caltrans DESIGN

FUNCTIONAL SUPERVISOR: Dennis P. McBride
CALCULATED-DESIGNED BY: DIANNE EDWARDS
CHECKED BY
REVISED BY
DATE REVISED

P:\proj1\01\48050\drafting\sheets\148050ia002.dgn

LAST REVISION 00-00-00
DATE PLOTTED => 28-JUN-2011
TIME PLOTTED => 15:54

BORDER LAST REVISED 7/2/2010
USERNAME => trmikesl
DGN FILE => 148050ia002.dgn
RELATIVE BORDER SCALE IS IN INCHES 0 1 2 3
UNIT 0312
PROJECT NUMBER & PHASE 01000003781

Dist	COUNTY	ROUTE	POST MILES TOTAL PROJECT	SHEET No.	TOTAL SHEETS
01	Lak	20	11.9/12.4	43	120

Dianne M Edwards 5-4-11
REGISTERED CIVIL ENGINEER DATE

6-27-11
PLANS APPROVAL DATE

REGISTERED PROFESSIONAL ENGINEER
D.M. EDWARDS
No. C-51898
Exp. 6-30-12
CIVIL
STATE OF CALIFORNIA

THE STATE OF CALIFORNIA OR ITS OFFICERS OR AGENTS SHALL NOT BE RESPONSIBLE FOR THE ACCURACY OR COMPLETENESS OF SCANNED COPIES OF THIS PLAN SHEET.

NOTES:

1. CONTRACTOR TO LOCATE EXISTING PP AND ADJUST DI AND APC DIMENSIONS AS NECESSARY TO CONFORM TO EXISTING STORM DRAIN.
2. STATIONS OFFSETS AND ELEVATIONS ARE AT CENTERS OF DRAINAGE INLETS.

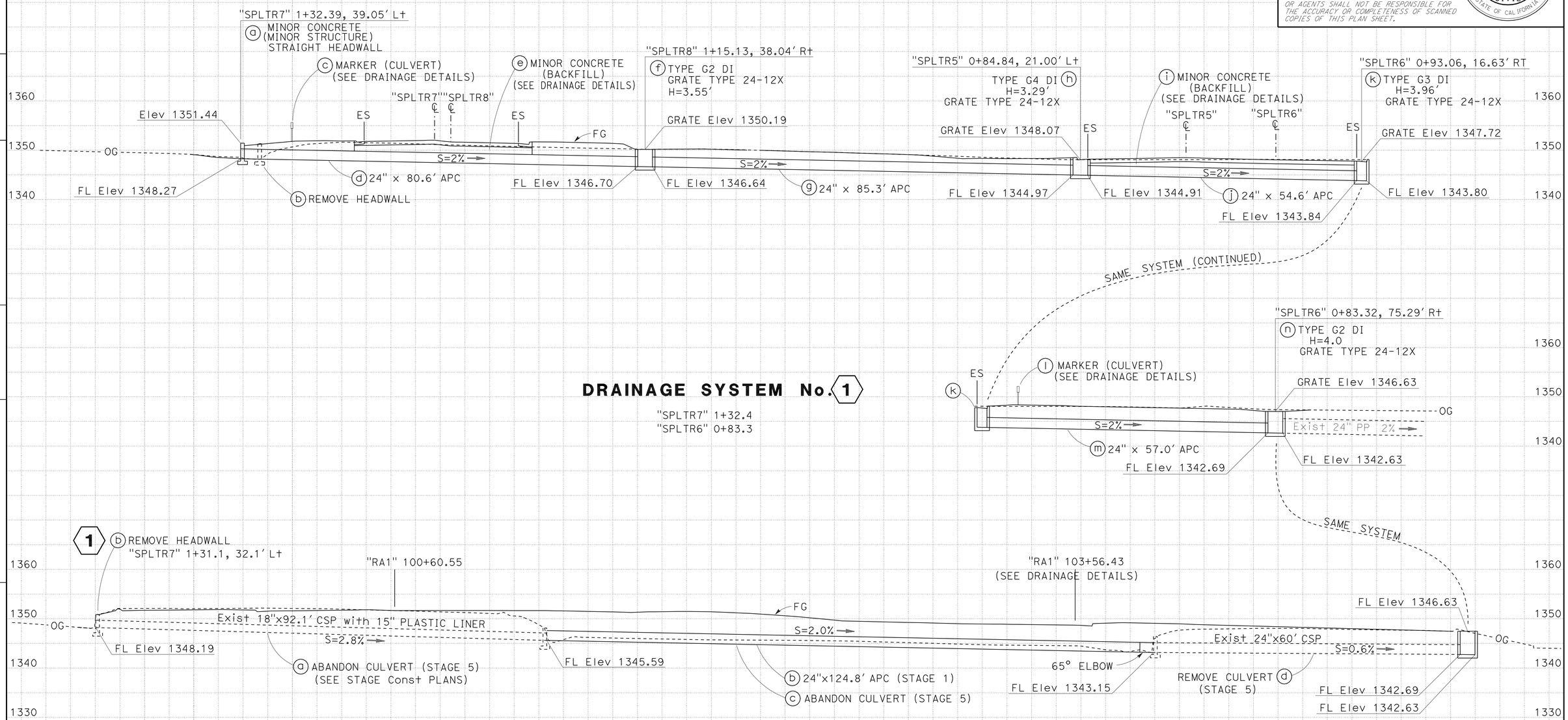

DRAINAGE PROFILES

SCALE: Vert 1" = 10'
Horiz 1" = 10'

DP-1

REVISED BY	DATE REVISED
DIANNE EDWARDS	

CALCULATED-DESIGNED BY	CHECKED BY

FUNCTIONAL SUPERVISOR: Dennis P. McBride

STATE OF CALIFORNIA - DEPARTMENT OF TRANSPORTATION
DESIGN
Caltrans

P:\proj\01\48050\drafting\sheets\148050ib001.dgn

LAST REVISION 00-00-00 | DATE PLOTTED => 28-JUN-2011 | TIME PLOTTED => 15:54

Dist	COUNTY	ROUTE	POST MILES TOTAL PROJECT	SHEET No.	TOTAL SHEETS
01	Lak	20	11.9/12.4	44	120

Dianne M Edwards 5-4-11
REGISTERED CIVIL ENGINEER DATE

6-27-11
PLANS APPROVAL DATE

REGISTERED PROFESSIONAL ENGINEER
D.M. EDWARDS
No. C-51898
Exp. 6-30-12
CIVIL
STATE OF CALIFORNIA

THE STATE OF CALIFORNIA OR ITS OFFICERS OR AGENTS SHALL NOT BE RESPONSIBLE FOR THE ACCURACY OR COMPLETENESS OF SCANNED COPIES OF THIS PLAN SHEET.

NOTE:

CONTRACTOR TO LOCATE EXISTING PP AND ADJUST DI AND APC DIMENSIONS AS NECESSARY TO CONFORM TO EXISTING STORM DRAIN.

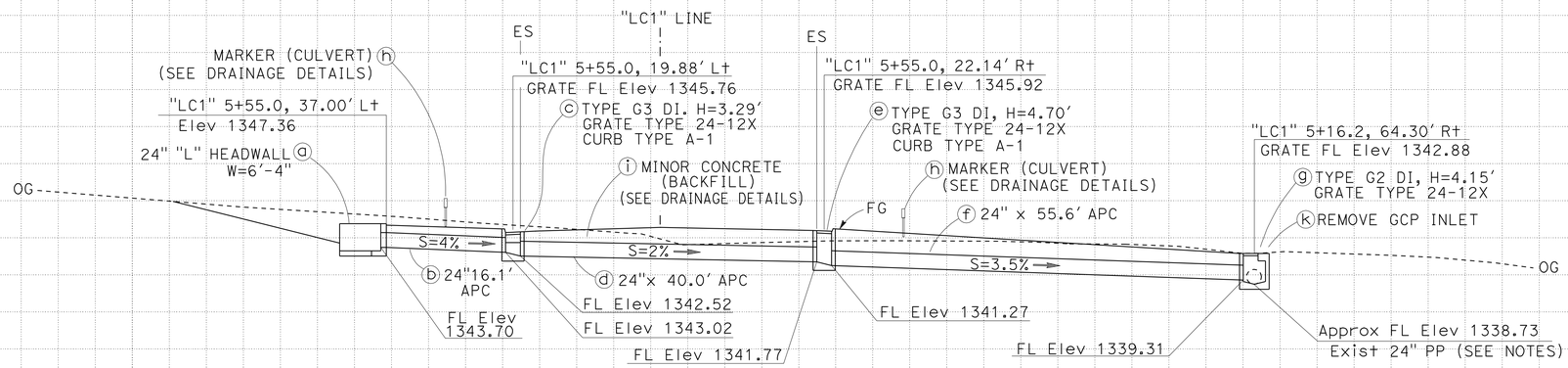

DRAINAGE SYSTEM No. 3

STA "LC1" 5+55.0

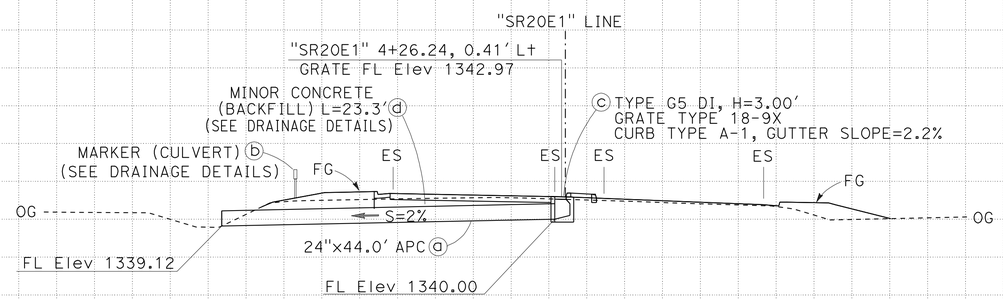

DRAINAGE SYSTEM No. 4

"SR20E1" 4+26.24

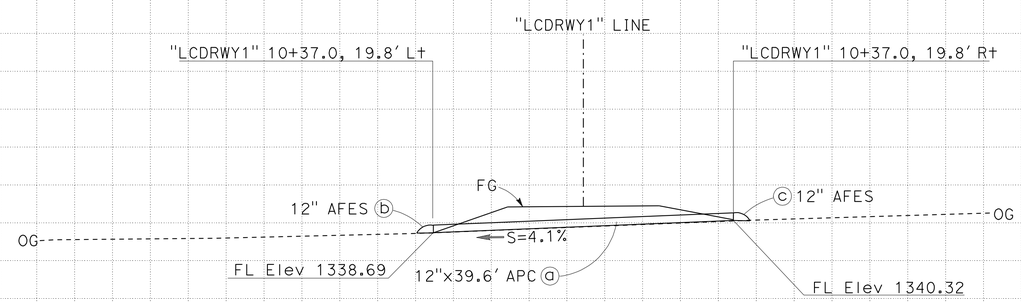

DRAINAGE SYSTEM No. 5

"LCDRWY1" 10+37.0

DRAINAGE PROFILES

SCALE: Vert 1" = 10'
Horiz 1" = 10'

DP-2

STATE OF CALIFORNIA - DEPARTMENT OF TRANSPORTATION
Caltrans
DESIGN

FUNCTIONAL SUPERVISOR: Dennis P. McBride
DIANNE EDWARDS
CALCULATED-DESIGNED BY
CHECKED BY
REVISED BY
DATE REVISED

P:\proj1\01\48050\drafting\sheets\148050ib002.dgn

LAST REVISION 00-00-00
DATE PLOTTED => 28-JUN-2011
TIME PLOTTED => 15:54

Dist	COUNTY	ROUTE	POST MILES TOTAL PROJECT	SHEET No.	TOTAL SHEETS
01	Lak	20	11.9/12.4	45	120

REGISTERED CIVIL ENGINEER 5-4-11 DATE

6-27-11
PLANS APPROVAL DATE

REGISTERED PROFESSIONAL ENGINEER D.M. EDWARDS No. C-51898 Exp. 6-30-12 CIVIL STATE OF CALIFORNIA

THE STATE OF CALIFORNIA OR ITS OFFICERS OR AGENTS SHALL NOT BE RESPONSIBLE FOR THE ACCURACY OR COMPLETENESS OF SCANNED COPIES OF THIS PLAN SHEET.

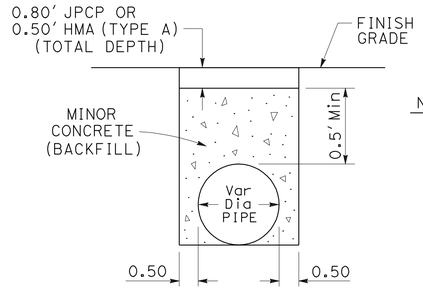

NOTES:

1. STRUCTURE BACKFILL
   TRENCH WIDTH SHALL ALLOW 2' Min CLEARANCE BETWEEN EXCAVATION AND SIDES OF PIPE.
   SLURRY CEMENT BACKFILL
   TRENCH WIDTH SHALL ALLOW 0.5' Min CLEARANCE BETWEEN EXCAVATION AND SIDES OF PIPES.
2. SEE Std PLAN A62F FOR EXCAVATION AND BACKFILL DETAILS.

MINOR CONCRETE (BACKFILL)

DRAINAGE SYSTEM No. 1 3 4

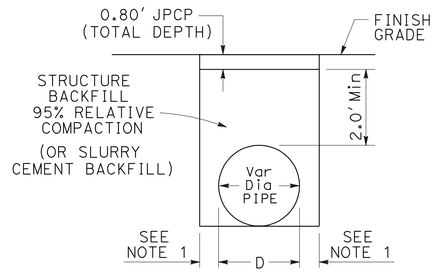

STRUCTURE BACKFILL OR SLURRY CEMENT BACKFILL

DRAINAGE SYSTEM No. 1 2 3 4

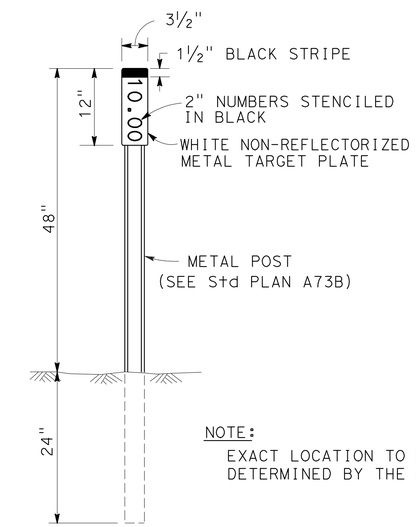

NOTE:
EXACT LOCATION TO BE DETERMINED BY THE ENGINEER

MARKER (CULVERT)

DRAINAGE SYSTEM No. 1 3 4

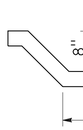

SECTION C-C

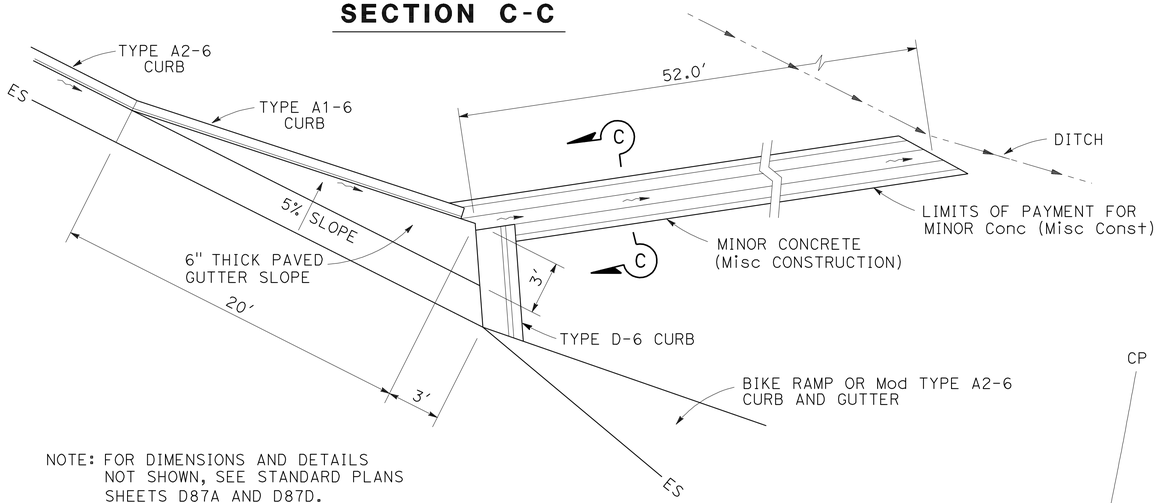

NOTE: FOR DIMENSIONS AND DETAILS NOT SHOWN, SEE STANDARD PLANS SHEETS D87A AND D87D.

PCC OVERSIDE DRAIN DETAIL (Typ)

1 "SPLTR4" 107+42.37, 24.00' L†
2 "SR20W1" 107+62.52, 23.60' R†
7 "SR20E1" 3+00.00, 24.89' R†

SECTION B-B

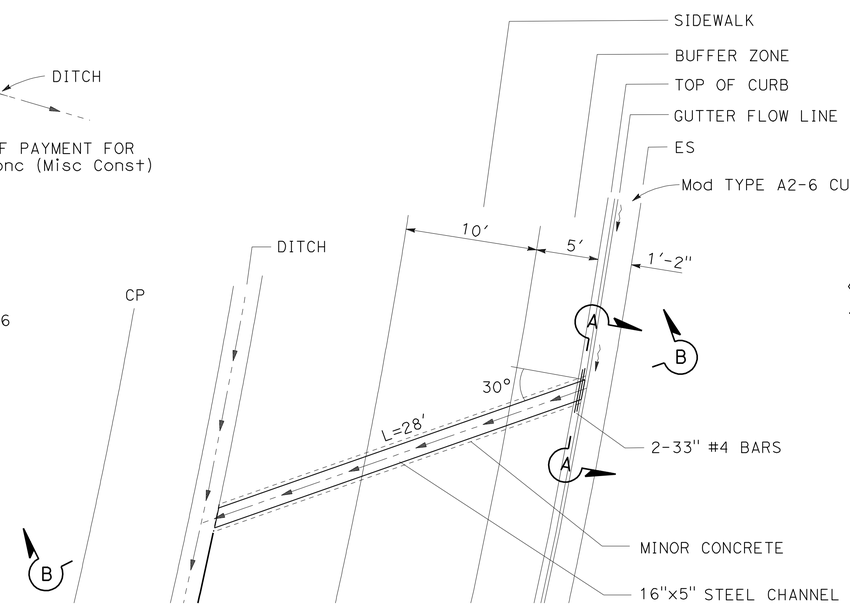

PLAN

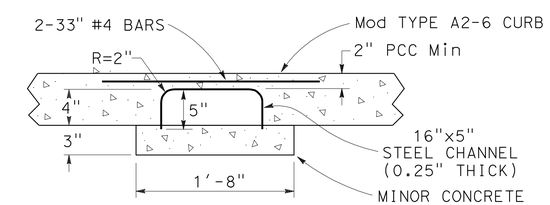

SECTION A-A

STEEL CHANNEL AND DITCH DETAIL (Typ)

4 STA "SPLTR2" 7+35.82, 18.28' LT
3 STA "SPLTR4" 108+82.34, 19.33' LT
5 STA "LC1" 6+70.34, 17.90' RT
6 STA "SPLTR7" 0+72.55, 18.32' LT

DRAINAGE DETAILS
NO SCALE

DD-1

REVISED BY	DATE REVISED

CALCULATED- DIANNE EDWARDS
DESIGNED BY
CHECKED BY

FUNCTIONAL SUPERVISOR Dennis P. McBride

STATE OF CALIFORNIA - DEPARTMENT OF TRANSPORTATION
Caltrans DESIGN

P:\proj1\01\48050\drafting\sheets\148050ic001.dgn

LAST REVISION 00-00-00
DATE PLOTTED => 28-JUN-2011
TIME PLOTTED => 15:54

Dist	COUNTY	ROUTE	POST MILES TOTAL PROJECT	SHEET No.	TOTAL SHEETS
01	Lak	20	11.9/12.4	46	120

REGISTERED CIVIL ENGINEER — DATE 5-4-11

6-27-11
PLANS APPROVAL DATE

REGISTERED PROFESSIONAL ENGINEER D.M. EDWARDS No. C-51898 Exp. 6-30-12 CIVIL STATE OF CALIFORNIA

THE STATE OF CALIFORNIA OR ITS OFFICERS OR AGENTS SHALL NOT BE RESPONSIBLE FOR THE ACCURACY OR COMPLETENESS OF SCANNED COPIES OF THIS PLAN SHEET.

NOTES:

1. ALL CULVERT JOINTS SHALL BE STANDARD.
2. LENGTHS OF PIPES AND ANGLES OF ELBOWS SHALL BE VERIFIED IN THE FIELD BY THE CONTRACTOR.
3. FOR MINIMUM ALLOWABLE CLASS OF RCP SEE STANDARD PLAN A62D.
4. PLASTIC PIPE SHALL BE SMOOTH WALL TYPE.
5. (N) NOT A SEPARATE PAY ITEM, FOR INFORMATION ONLY.

OVERSIDE DRAIN AND STEEL CHANNEL

SYSTEM No.	LOCATION			(N) PCC OVERSIDE DRAIN	16" x 5" STEEL CHANNEL (0.25" THICK)	(N) MINOR CONCRETE	MINOR CONCRETE (Misc Const)
	STATION	OFFSET	L+/R+	EA	LF	CY	CY
1	"SPLTR4" 107+42.37	24.00′	L+	1			3.1
2	"SR20W1" 107+62.52	23.60′	R+	1			3.1
3	"SPLTR4" 108+82.34	19.33′	L+		28	0.5	
4	"SPLTR2" 7+35.82	18.28′	L+		28	0.5	
5	"LC1" 6+70.34	17.90′	R+		28	0.5	
6	"SPLTR7" 0+72.55	18.32′	L+		28	0.5	
7	"SR20E1" 3+00.00	24.89′	R+	1			3.2
			TOTAL	3	112	2.0	9.4

NOTE: STATION AND OFFSET MEASURED FROM CENTER OF GUTTER DRAIN.

APC TABLE

DRAINAGE SYSTEM No.	RCP		PP
	TYPE II MODIFIED	TYPE IP CEMENT	
1	X	X	X
2	X	X	X
3	X	X	X
4	X	X	X

SYSTEM NUMBER	DRAINAGE UNIT	ABANDON CULVERT (EA)	REMOVE CULVERT (EA)	REMOVE INLET (EA)	REMOVE HEADWALL (EA)	SAND BACKFILL (CY)	MINOR CONCRETE (MINOR STRUCTURE) (CY)	MINOR CONCRETE (BACKFILL) (CY)	12" APC (LF)	12" AFES (EA)	24" APC (LF)	Misc IRON AND STEEL (LB)	MARKER (CULVERT) (EA)	INLET "H" (N) (FT)	SYSTEM NUMBER	DRAINAGE UNIT	STATION, OFFSET	REMARKS
1	a					1.20									1	a	"SPLTR7" 1+32.39, 39.05′ L+	STRAIGHT HEADWALL
	b			1												b	"SPLTR7" 1+31.1, 32.1′ L+	
	c												1			c		PM 12.20
	d										80.6					d		
	e						5.8									e		
	f					1.46						239		3.55		f	"SPLTR8" 1+15.13, 38.04′ R+	TYPE G2 DI, 24-12X GRATE
	g										85.3					g		
	h					1.34						239		3.29		h	"SPLTR5" 0+84.84, 21.00′ L+	TYPE G4 DI, 24-12X GRATE
	i						6.3									i		
	j										54.6					j		
	k					1.24						239		3.96		k	"SPLTR6" 0+93.06, 16.63′ R+	TYPE G3 DI, 24-12X GRATE
	l												1			l		PM 12.20
	m										57.0					m		
	n					1.53						239		4.00		n	"SPLTR6" 0+83.32, 75.29′ R+	TYPE G2 DI, 24-12X GRATE
2	a	1				4.2									2	a		18"x92.1′ CSP w/ 15" PLASTIC LINER
	b										124.8					b		65° ELBOW
	c	1				14.5										c		24"x124.8′ APC (Temp USAGE)
	d		1													d		24"x60′ CSP
3	a						1.74								3	a	"LC1" 5+55.0, 37.00′ L+	24" "L" HEADWALL, W=6′-4"
	b										16.1					b		
	c						1.10					239		3.29		c	"LC1" 5+55.0, 19.88′ L+	TYPE G3 DI, 24-12X GRATE
	d										40.0					d		
	e						1.42					239		4.70		e	"LC1" 5+55.0, 21.14′ R+	TYPE G3 DI, 24-12X GRATE
	f										55.6					f		
	g						1.89					239		4.15		g	"LC1" 5+16.20, 64.30′ R+	TYPE G2 DI (L=0.5′), 24-12X GRATE
	h												2			h		PM 2.4
	i							9.4								i		
	k			1												k		Exist 36" GCP INLET
4	a										44.0				4	a		
	b												1			b		PM 12.26
	c						1.02					187		3.00		c	"SR20E1" 4+26.24, 0.41 L+	TYPE G5 DI, 18-9X GRATE
	d							4.8								d		
5	a									1					5	a	"LCDRWY1" 10+37.0, 19.8 L+	
	b								39.6							b	"LCDRWY1" 10+37.0	
	c									1						c	"LCDRWY1" 10+37.0, 19.8 R+	
TOTAL		2	1	1	1	18.7	13.94	26.3	39.6	2	558.0	1860	5	-				

DRAINAGE QUANTITIES
DQ-1

REVISED BY | DATE REVISED
DIANNE EDWARDS
CALCULATED-DESIGNED BY | CHECKED BY
FUNCTIONAL SUPERVISOR
Dennis P. McBride

STATE OF CALIFORNIA - DEPARTMENT OF TRANSPORTATION
Caltrans
DESIGN

\\SV01S01\PSESUBMITTX01_480501\148050id001.dgn

LAST REVISION 00-00-00 | DATE PLOTTED => 28-JUN-2011 | TIME PLOTTED => 15:55

Dist	COUNTY	ROUTE	POST MILES TOTAL PROJECT	SHEET No.	TOTAL SHEETS
01	Lak	20	11.9/12.4	47	120

Dianne M Edwards 5-4-11
REGISTERED CIVIL ENGINEER DATE

6-27-11
PLANS APPROVAL DATE

REGISTERED PROFESSIONAL ENGINEER
D.M. EDWARDS
No. C-51898
Exp. 6-30-12
CIVIL
STATE OF CALIFORNIA

THE STATE OF CALIFORNIA OR ITS OFFICERS OR AGENTS SHALL NOT BE RESPONSIBLE FOR THE ACCURACY OR COMPLETENESS OF SCANNED COPIES OF THIS PLAN SHEET.

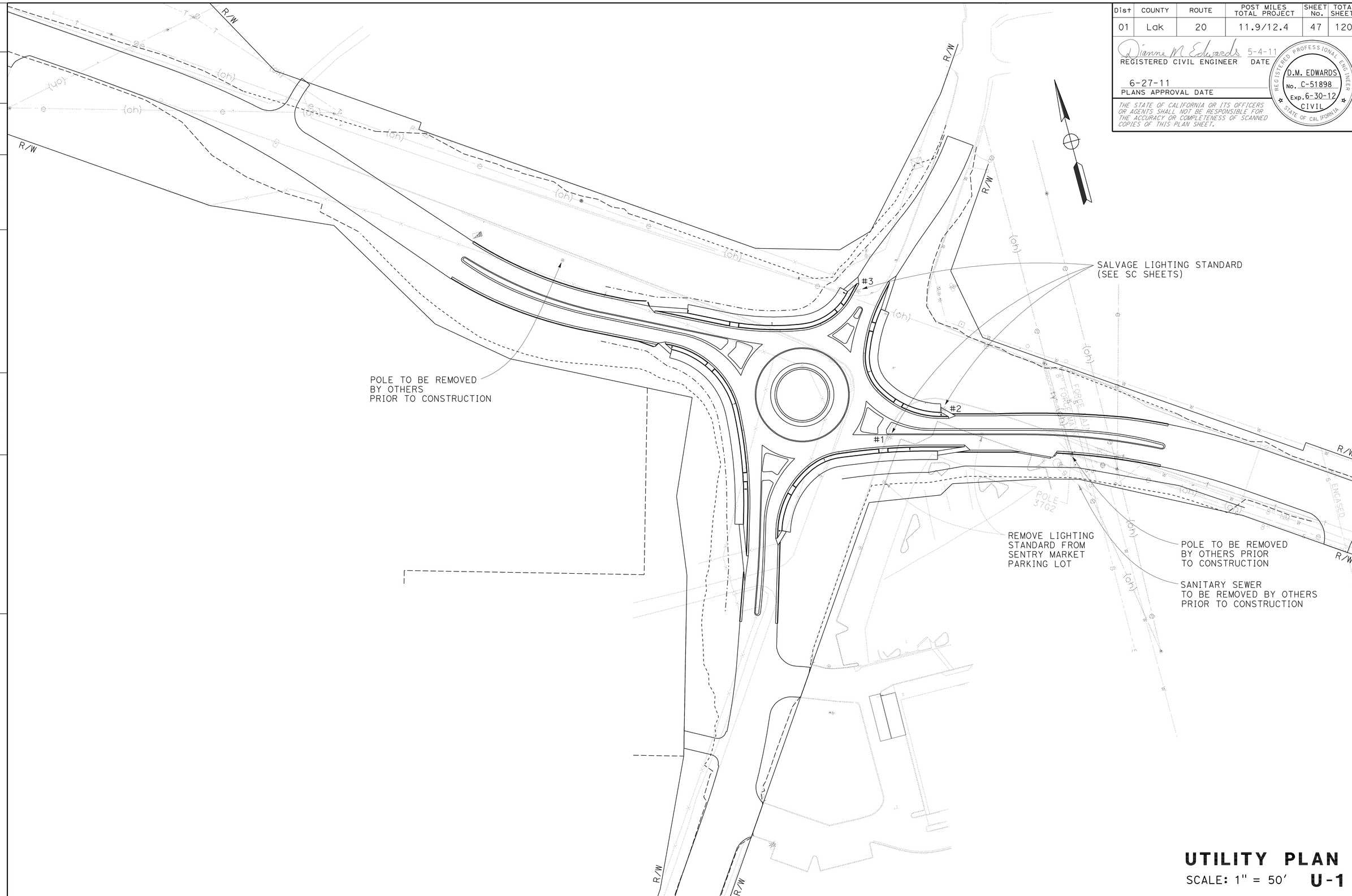

UTILITY PLAN

SCALE: 1" = 50′ **U-1**

REVISED BY	DATE REVISED

DIANNE EDWARDS — CALCULATED-DESIGNED BY
CHECKED BY

FUNCTIONAL SUPERVISOR
Dennis P. McBride

STATE OF CALIFORNIA - DEPARTMENT OF TRANSPORTATION
Caltrans
DESIGN

P:\proj1\01\48050\drafting\sheets\148050ka001.dgn

LAST REVISION 00-00-00 | DATE PLOTTED => 28-JUN-2011 | TIME PLOTTED => 15:55

Dist	COUNTY	ROUTE	POST MILES TOTAL PROJECT	SHEET No.	TOTAL SHEETS
01	Lak	20	11.9/12.4	48	120

Dianne M Edwards 5-4-11
REGISTERED CIVIL ENGINEER DATE

6-27-11
PLANS APPROVAL DATE

REGISTERED PROFESSIONAL ENGINEER
D.M. EDWARDS
No. C-51898
Exp. 6-30-12
CIVIL
STATE OF CALIFORNIA

THE STATE OF CALIFORNIA OR ITS OFFICERS OR AGENTS SHALL NOT BE RESPONSIBLE FOR THE ACCURACY OR COMPLETENESS OF SCANNED COPIES OF THIS PLAN SHEET.

NOTE:

FOR ADDITIONAL CONSTRUCTION AREA SIGN INFORMATION SEE STAGE CONSTRUCTION AND DETOUR SHEETS.

STATIONARY MOUNTED CONSTRUCTION AREA SIGNS

SIGN	SIGN CODE	SIGN MESSAGE	PANEL SIZE	NUMBER OF POSTS AND POST SIZE	NUMBER OF SIGNS
A	W20-1	ROAD WORK AHEAD	48" x 48"	1 - 4" x 6"	3
	SP1	ROUNDABOUT	36" x 12"		
B	C40 (CA)	TRAFFIC FINES DOUBLED IN CONSTRUCTION ZONES	108" x 42"	2 - 6" x 6"	3
C	W11-1	BICYCLE SYMBOL	36" x 36"	1 - 4" x 6"	4
	W16-1	SHARE THE ROAD	24" x 30"		
D	G20-2	END ROAD WORK	36" x 18"	1 - 4" x 4"	4
E	W20-1	ROAD WORK AHEAD	36" x 36"	1 - 4" x 6"	11

EXACT SIGN LOCATIONS TO BE DETERMINED BY THE ENGINEER.

SP1
36" x 12"
4" CAPS
BLACK/ORANGE

ROUNDABOUT

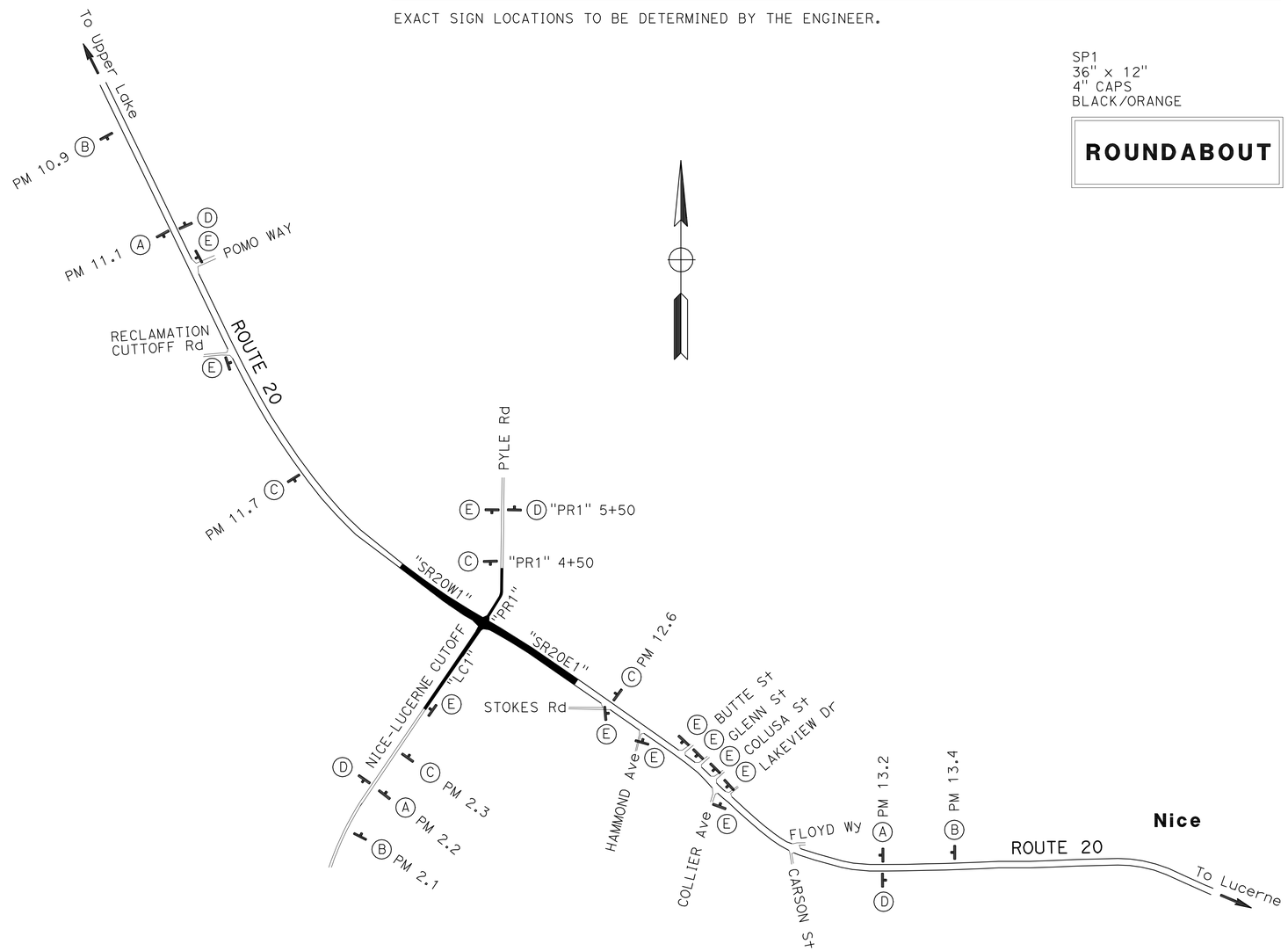

THIS PLAN ACCURATE FOR CONSTRUCTION AREA SIGN WORK ONLY

CONSTRUCTION AREA SIGNS

NO SCALE

CS-1

REVISED BY	DATE REVISED

DIANNE EDWARDS

CALCULATED-DESIGNED BY

CHECKED BY

FUNCTIONAL SUPERVISOR

Dennis P. McBride

STATE OF CALIFORNIA - DEPARTMENT OF TRANSPORTATION

Caltrans

DESIGN

P:\proj1\01\48050\drafting\sheets\1480501a001.dgn

LAST REVISION 00-00-00

DATE PLOTTED => 28-JUN-2011
TIME PLOTTED => 15:55

Dist	COUNTY	ROUTE	POST MILES TOTAL PROJECT	SHEET No.	TOTAL SHEETS
01	Lak	20	11.9/12.4	49	120

REGISTERED CIVIL ENGINEER 5-4-11 DATE

6-27-11
PLANS APPROVAL DATE

REGISTERED PROFESSIONAL ENGINEER D.M. EDWARDS No. C-51898 Exp. 6-30-12 CIVIL STATE OF CALIFORNIA

THE STATE OF CALIFORNIA OR ITS OFFICERS OR AGENTS SHALL NOT BE RESPONSIBLE FOR THE ACCURACY OR COMPLETENESS OF SCANNED COPIES OF THIS PLAN SHEET.

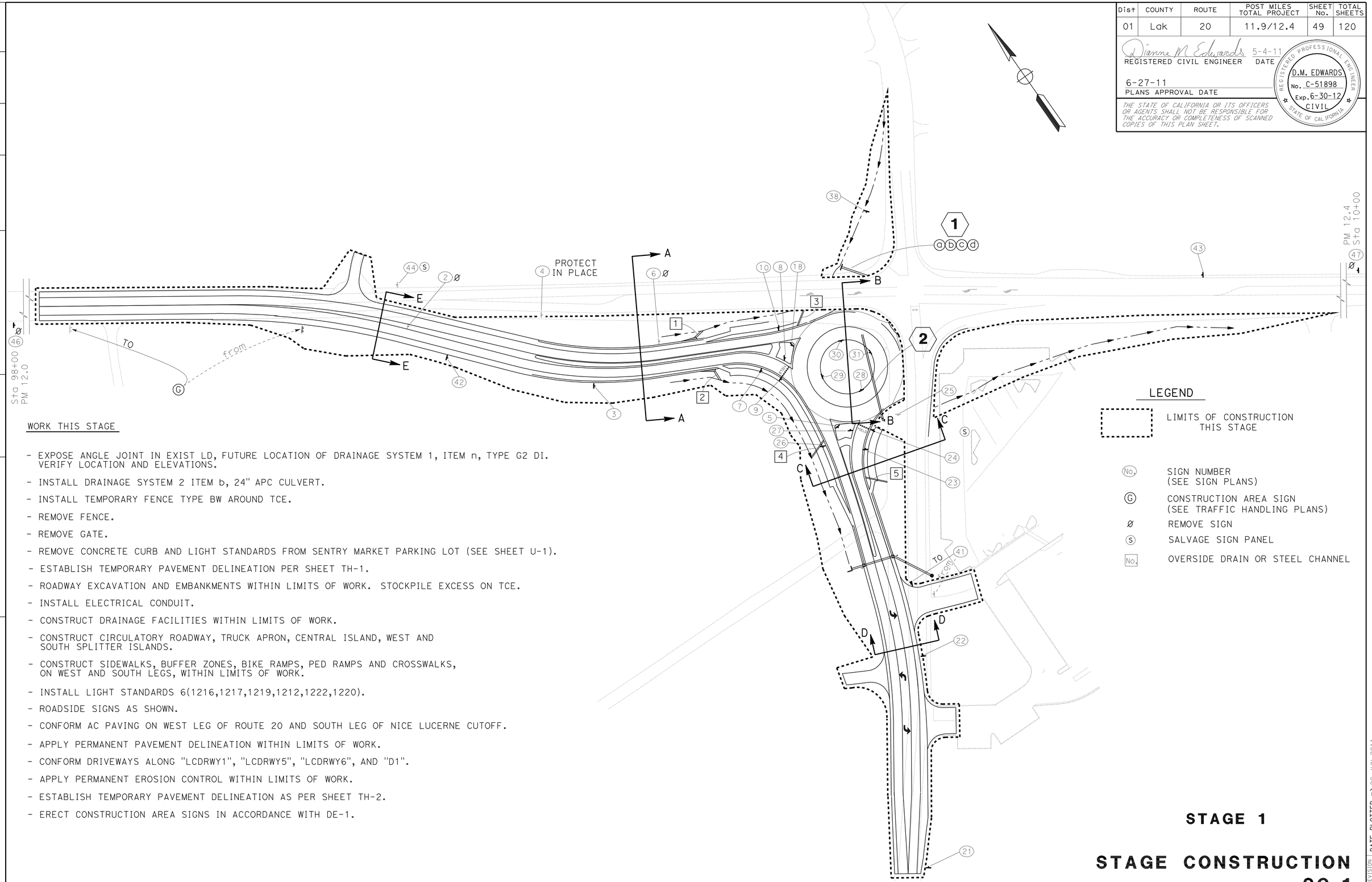

WORK THIS STAGE

- EXPOSE ANGLE JOINT IN EXIST LD, FUTURE LOCATION OF DRAINAGE SYSTEM 1, ITEM n, TYPE G2 DI. VERIFY LOCATION AND ELEVATIONS.
- INSTALL DRAINAGE SYSTEM 2 ITEM b, 24" APC CULVERT.
- INSTALL TEMPORARY FENCE TYPE BW AROUND TCE.
- REMOVE FENCE.
- REMOVE GATE.
- REMOVE CONCRETE CURB AND LIGHT STANDARDS FROM SENTRY MARKET PARKING LOT (SEE SHEET U-1).
- ESTABLISH TEMPORARY PAVEMENT DELINEATION PER SHEET TH-1.
- ROADWAY EXCAVATION AND EMBANKMENTS WITHIN LIMITS OF WORK. STOCKPILE EXCESS ON TCE.
- INSTALL ELECTRICAL CONDUIT.
- CONSTRUCT DRAINAGE FACILITIES WITHIN LIMITS OF WORK.
- CONSTRUCT CIRCULATORY ROADWAY, TRUCK APRON, CENTRAL ISLAND, WEST AND SOUTH SPLITTER ISLANDS.
- CONSTRUCT SIDEWALKS, BUFFER ZONES, BIKE RAMPS, PED RAMPS AND CROSSWALKS, ON WEST AND SOUTH LEGS, WITHIN LIMITS OF WORK.
- INSTALL LIGHT STANDARDS 6(1216,1217,1219,1212,1222,1220).
- ROADSIDE SIGNS AS SHOWN.
- CONFORM AC PAVING ON WEST LEG OF ROUTE 20 AND SOUTH LEG OF NICE LUCERNE CUTOFF.
- APPLY PERMANENT PAVEMENT DELINEATION WITHIN LIMITS OF WORK.
- CONFORM DRIVEWAYS ALONG "LCDRWY1", "LCDRWY5", "LCDRWY6", AND "D1".
- APPLY PERMANENT EROSION CONTROL WITHIN LIMITS OF WORK.
- ESTABLISH TEMPORARY PAVEMENT DELINEATION AS PER SHEET TH-2.
- ERECT CONSTRUCTION AREA SIGNS IN ACCORDANCE WITH DE-1.

STAGE 1

STAGE CONSTRUCTION

NO SCALE **SC-1**

REVISED BY | DATE REVISED
DIANNE EDWARDS
CALCULATED-DESIGNED BY | CHECKED BY
FUNCTIONAL SUPERVISOR
Dennis P. McBride

STATE OF CALIFORNIA - DEPARTMENT OF TRANSPORTATION
Caltrans
DESIGN

P:\proj1\01\48050\drafting\sheets\148050ma001.dgn

LAST REVISION 00-00-00 | DATE PLOTTED => 28-JUN-2011 | TIME PLOTTED => 15:55

Dist	COUNTY	ROUTE	POST MILES TOTAL PROJECT	SHEET No.	TOTAL SHEETS
01	Lak	20	11.9/12.4	50	120

Dianne M Edwards 5-4-11
REGISTERED CIVIL ENGINEER DATE

6-27-11
PLANS APPROVAL DATE

REGISTERED PROFESSIONAL ENGINEER
D.M. EDWARDS
No. C-51898
Exp. 6-30-12
CIVIL
STATE OF CALIFORNIA

THE STATE OF CALIFORNIA OR ITS OFFICERS OR AGENTS SHALL NOT BE RESPONSIBLE FOR THE ACCURACY OR COMPLETENESS OF SCANNED COPIES OF THIS PLAN SHEET.

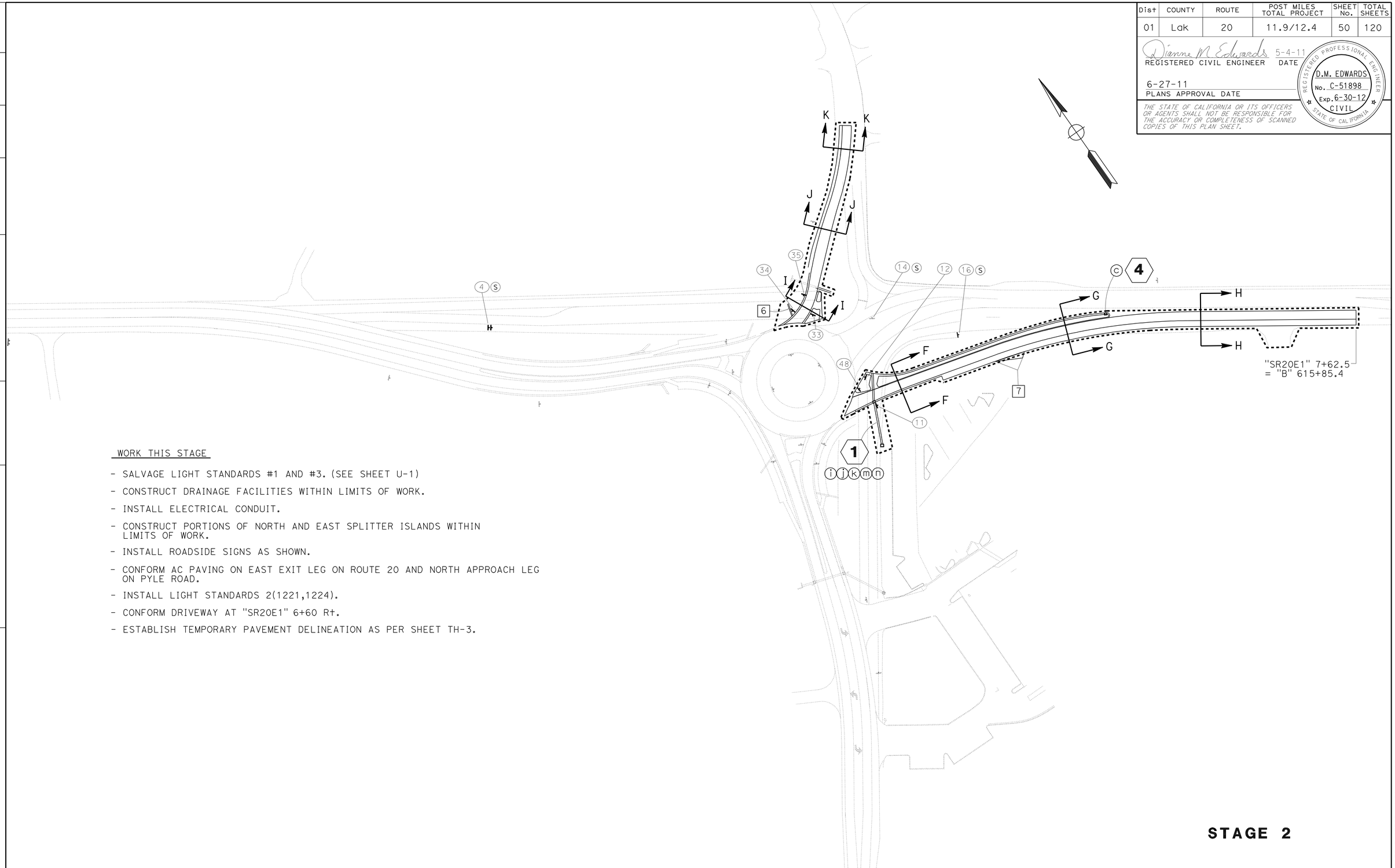

WORK THIS STAGE

- SALVAGE LIGHT STANDARDS #1 AND #3. (SEE SHEET U-1)
- CONSTRUCT DRAINAGE FACILITIES WITHIN LIMITS OF WORK.
- INSTALL ELECTRICAL CONDUIT.
- CONSTRUCT PORTIONS OF NORTH AND EAST SPLITTER ISLANDS WITHIN LIMITS OF WORK.
- INSTALL ROADSIDE SIGNS AS SHOWN.
- CONFORM AC PAVING ON EAST EXIT LEG ON ROUTE 20 AND NORTH APPROACH LEG ON PYLE ROAD.
- INSTALL LIGHT STANDARDS 2(1221,1224).
- CONFORM DRIVEWAY AT "SR20E1" 6+60 R†.
- ESTABLISH TEMPORARY PAVEMENT DELINEATION AS PER SHEET TH-3.

STAGE 2

STAGE CONSTRUCTION

NO SCALE

SC-2

REVISED BY | DATE REVISED
DIANNE EDWARDS
CALCULATED-DESIGNED BY | CHECKED BY
FUNCTIONAL SUPERVISOR
Dennis P. McBride

STATE OF CALIFORNIA - DEPARTMENT OF TRANSPORTATION
Caltrans
DESIGN

P:\proj1\01\48050\drafting\sheets\148050ma002.dgn

LAST REVISION 00-00-00 | DATE PLOTTED => 28-JUN-2011 | TIME PLOTTED => 15:55

Dist	COUNTY	ROUTE	POST MILES TOTAL PROJECT	SHEET No.	TOTAL SHEETS
01	Lak	20	11.9/12.4	51	120

Dianne M Edwards 5-4-11
REGISTERED CIVIL ENGINEER DATE

6-27-11
PLANS APPROVAL DATE

REGISTERED PROFESSIONAL ENGINEER
D.M. EDWARDS
No. C-51898
Exp. 6-30-12
CIVIL
STATE OF CALIFORNIA

THE STATE OF CALIFORNIA OR ITS OFFICERS OR AGENTS SHALL NOT BE RESPONSIBLE FOR THE ACCURACY OR COMPLETENESS OF SCANNED COPIES OF THIS PLAN SHEET.

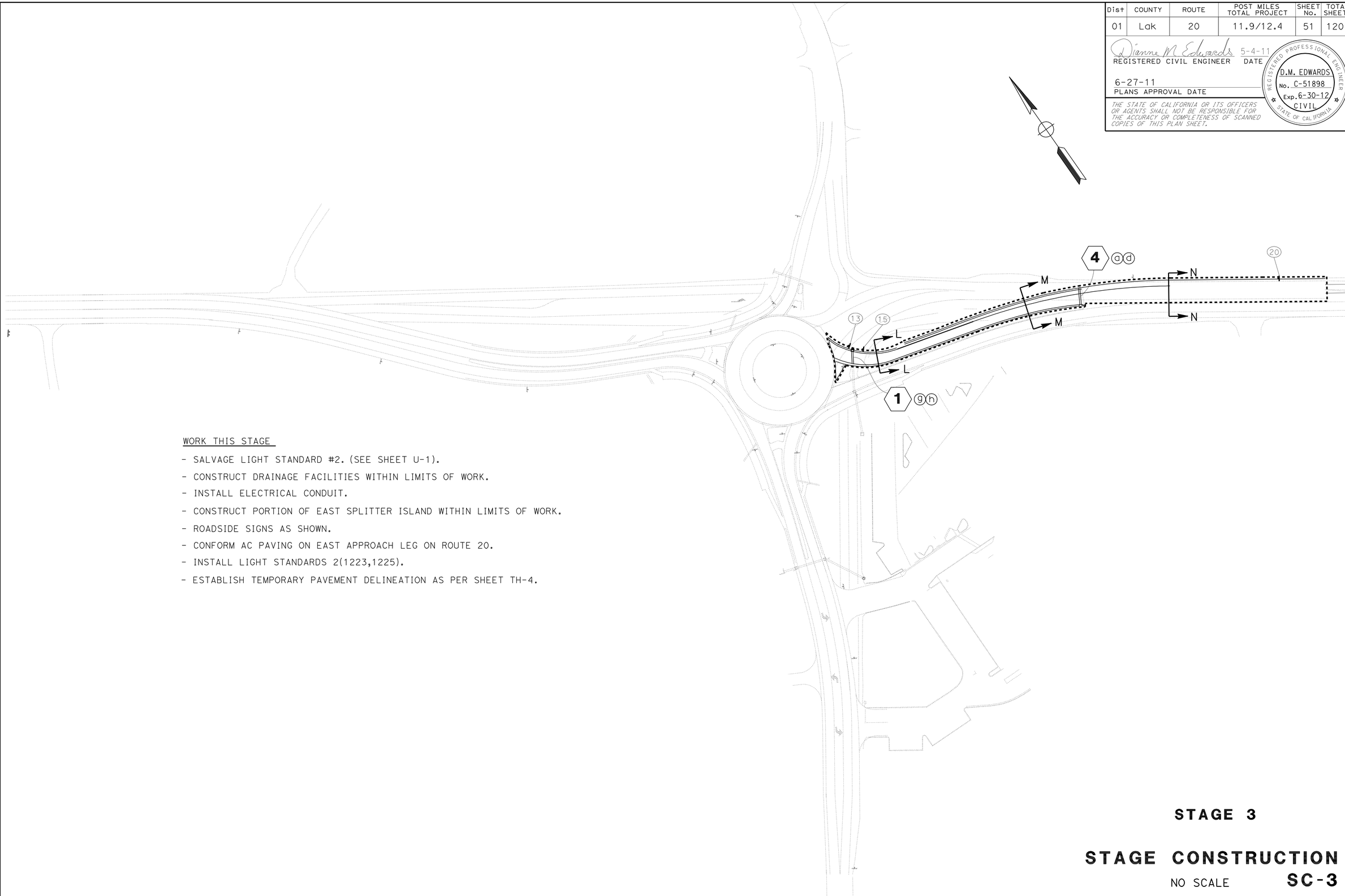

WORK THIS STAGE

- SALVAGE LIGHT STANDARD #2. (SEE SHEET U-1).
- CONSTRUCT DRAINAGE FACILITIES WITHIN LIMITS OF WORK.
- INSTALL ELECTRICAL CONDUIT.
- CONSTRUCT PORTION OF EAST SPLITTER ISLAND WITHIN LIMITS OF WORK.
- ROADSIDE SIGNS AS SHOWN.
- CONFORM AC PAVING ON EAST APPROACH LEG ON ROUTE 20.
- INSTALL LIGHT STANDARDS 2(1223,1225).
- ESTABLISH TEMPORARY PAVEMENT DELINEATION AS PER SHEET TH-4.

STAGE 3

STAGE CONSTRUCTION

NO SCALE **SC-3**

REVISED BY | DATE REVISED
DIANNE EDWARDS
CALCULATED-DESIGNED BY | CHECKED BY
FUNCTIONAL SUPERVISOR
Dennis P. McBride

STATE OF CALIFORNIA - DEPARTMENT OF TRANSPORTATION
Caltrans
DESIGN

P:\proj11\01\48050\drafting\sheets\148050ma003.dgn

LAST REVISION 00-00-00 | DATE PLOTTED => 28-JUN-2011 | TIME PLOTTED => 15:55

Dist	COUNTY	ROUTE	POST MILES TOTAL PROJECT	SHEET No.	TOTAL SHEETS
01	Lak	20	11.9/12.4	52	120

Dianne M Edwards 5-4-11
REGISTERED CIVIL ENGINEER DATE

6-27-11
PLANS APPROVAL DATE

REGISTERED PROFESSIONAL ENGINEER
D.M. EDWARDS
No. C-51898
Exp. 6-30-12
CIVIL
STATE OF CALIFORNIA

THE STATE OF CALIFORNIA OR ITS OFFICERS OR AGENTS SHALL NOT BE RESPONSIBLE FOR THE ACCURACY OR COMPLETENESS OF SCANNED COPIES OF THIS PLAN SHEET.

NOTE:

STAGE 5 INCLUDES ALL REMAINING WORK TO COMPLETE THE PROJECT.

WORK THIS STAGE

- ELECTRICAL CONDUIT.
- CONSTRUCT DRAINAGE FACILITIES WITHIN LIMITS OF WORK.
- CONSTRUCT PORTION OF NORTH SPLITTER ISLAND WITHIN LIMITS OF WORK.
- ROADSIDE SIGNS AS SHOWN.
- CONFORM AC PAVING ON NORTH APPROACH LEG ON PYLE ROAD.
- APPLY PERMANENT PAVEMENT DELINEATION.

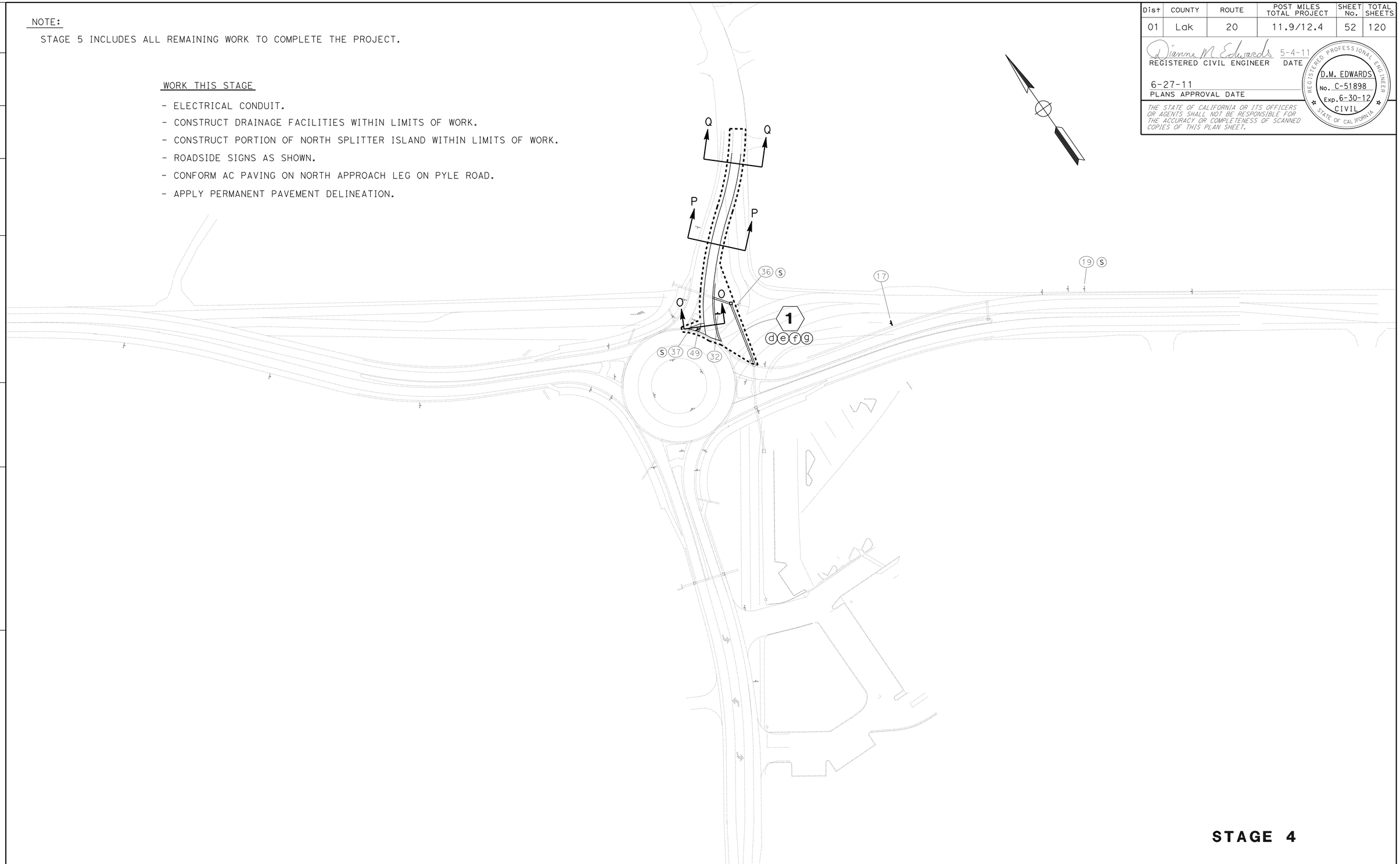

STAGE 4

STAGE CONSTRUCTION

NO SCALE

SC-4

REVISED BY | DATE REVISED

DIANNE EDWARDS

CALCULATED-DESIGNED BY | CHECKED BY

FUNCTIONAL SUPERVISOR

Dennis P. McBride

STATE OF CALIFORNIA - DEPARTMENT OF TRANSPORTATION

Caltrans

DESIGN

P:\proj1\01\48050\drafting\sheets\148050ma004.dgn

LAST REVISION 00-00-00 | DATE PLOTTED => 28-JUN-2011 | TIME PLOTTED => 15:55

Dist	COUNTY	ROUTE	POST MILES TOTAL PROJECT	SHEET No.	TOTAL SHEETS
01	Lak	20	11.9/12.4	53	120

Dianne M Edwards 5-4-11
REGISTERED CIVIL ENGINEER DATE

6-27-11
PLANS APPROVAL DATE

REGISTERED PROFESSIONAL ENGINEER
D.M. EDWARDS
No. C-51898
Exp. 6-30-12
CIVIL
STATE OF CALIFORNIA

THE STATE OF CALIFORNIA OR ITS OFFICERS OR AGENTS SHALL NOT BE RESPONSIBLE FOR THE ACCURACY OR COMPLETENESS OF SCANNED COPIES OF THIS PLAN SHEET.

NOTES:

1. FOR INFORMATION NOT SHOWN, SEE TYPICAL CROSS SECTIONS.

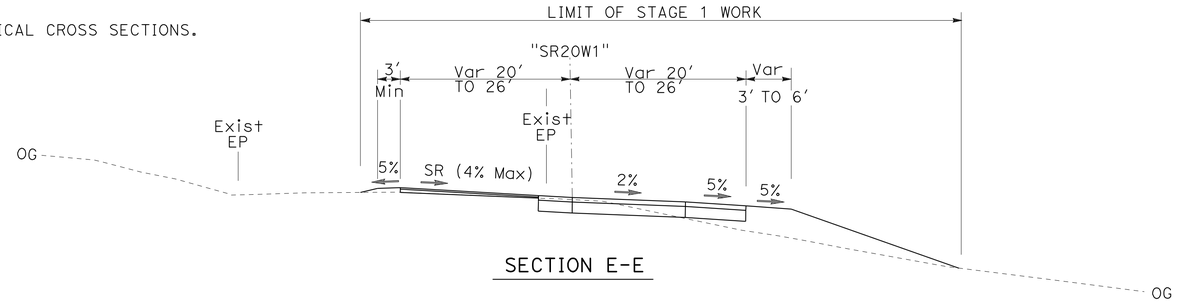

SECTION E-E

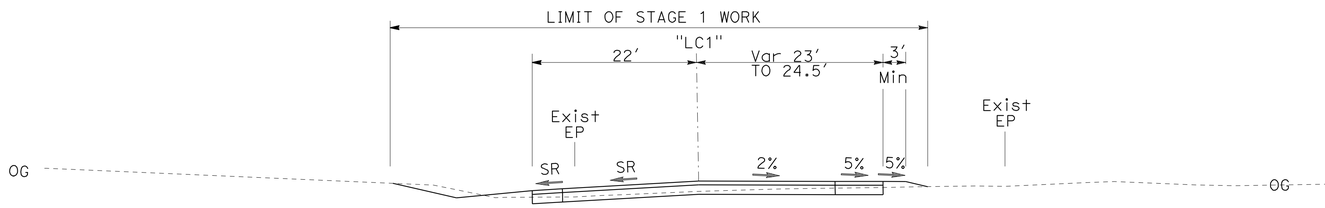

SECTION D-D

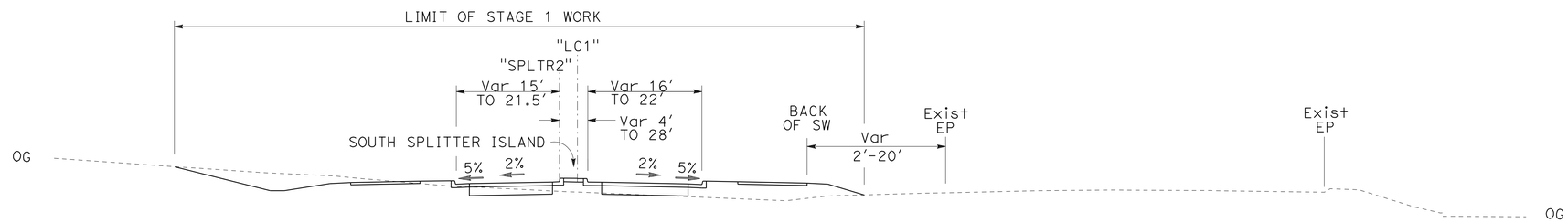

SECTION C-C

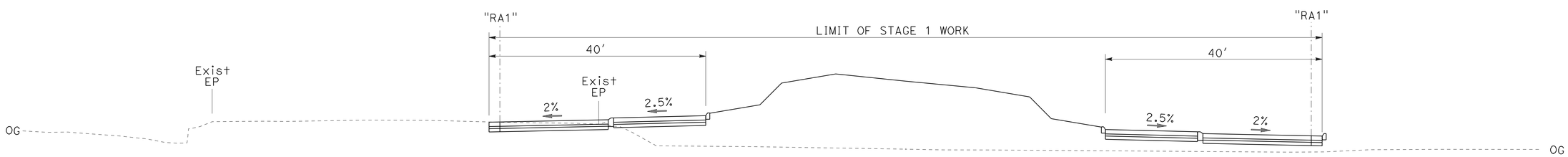

SECTION B-B

SECTION A-A

NO SCALE

STAGE CONSTRUCTION DETAILS

SD-1

REVISED BY	DATE REVISED
DIANNE EDWARDS	

CALCULATED-DESIGNED BY
CHECKED BY

FUNCTIONAL SUPERVISOR
Dennis P. McBride

STATE OF CALIFORNIA - DEPARTMENT OF TRANSPORTATION
Caltrans®
DESIGN

P:\proj1\01\48050\drafting\sheets\148050mb001.dgn

LAST REVISION 00-00-00
DATE PLOTTED => 28-JUN-2011
TIME PLOTTED => 15:55

Dist	COUNTY	ROUTE	POST MILES TOTAL PROJECT	SHEET No.	TOTAL SHEETS
01	Lak	20	11.9/12.4	54	120

Dianne M Edwards 5-4-11
REGISTERED CIVIL ENGINEER DATE

6-27-11
PLANS APPROVAL DATE

REGISTERED PROFESSIONAL ENGINEER
D.M. EDWARDS
No. C-51898
Exp. 6-30-12
CIVIL
STATE OF CALIFORNIA

THE STATE OF CALIFORNIA OR ITS OFFICERS OR AGENTS SHALL NOT BE RESPONSIBLE FOR THE ACCURACY OR COMPLETENESS OF SCANNED COPIES OF THIS PLAN SHEET.

NOTES:

1. FOR INFORMATION NOT SHOWN, SEE TYPICAL CROSS SECTIONS.

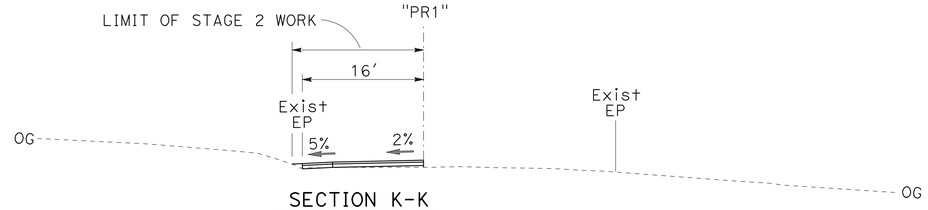

SECTION K-K

SECTION J-J

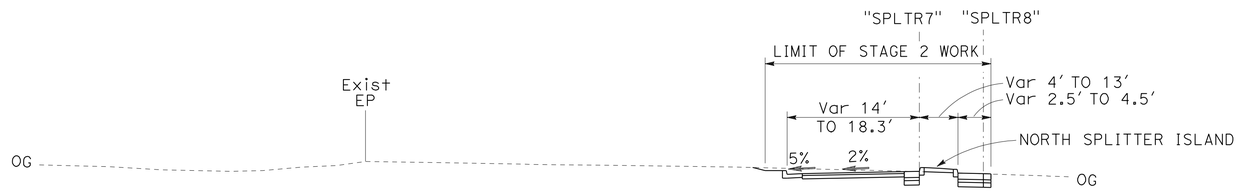

SECTION I-I

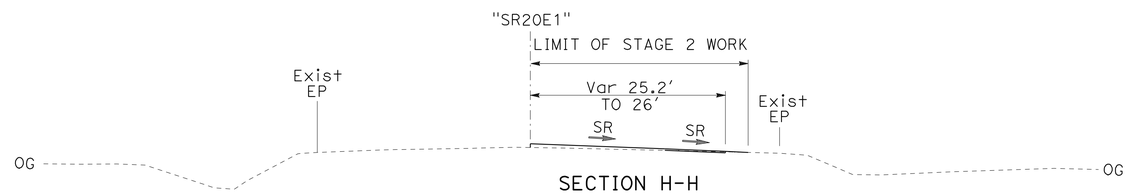

SECTION H-H

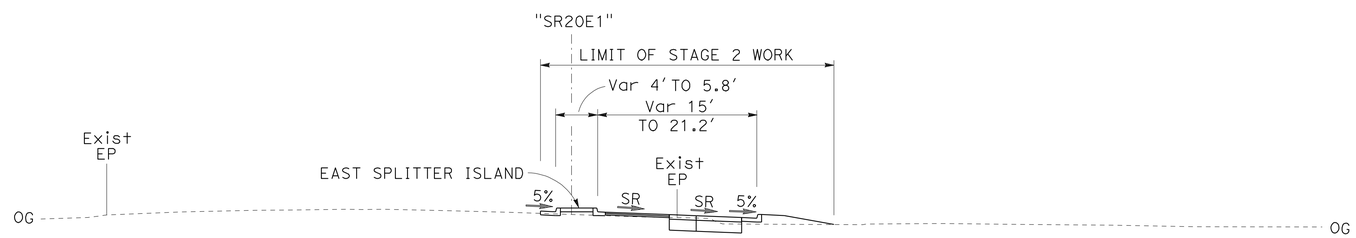

SECTION G-G

SECTION F-F

NO SCALE

STAGE CONSTRUCTION DETAILS

SD-2

REVISED BY	DATE REVISED

DIANNE EDWARDS

CALCULATED-DESIGNED BY

CHECKED BY

FUNCTIONAL SUPERVISOR

Dennis P. McBride

STATE OF CALIFORNIA - DEPARTMENT OF TRANSPORTATION

Caltrans®

DESIGN

P:\proj1\01\48050\drafting\sheets\148050mb002.dgn

LAST REVISION 00-00-00

DATE PLOTTED => 28-JUN-2011
TIME PLOTTED => 15:55

Dist	COUNTY	ROUTE	POST MILES TOTAL PROJECT	SHEET No.	TOTAL SHEETS
01	Lak	20	11.9/12.4	55	120

Dianne M Edwards 5-4-11
REGISTERED CIVIL ENGINEER DATE

6-27-11
PLANS APPROVAL DATE

REGISTERED PROFESSIONAL ENGINEER
D.M. EDWARDS
No. C-51898
Exp. 6-30-12
CIVIL
STATE OF CALIFORNIA

THE STATE OF CALIFORNIA OR ITS OFFICERS OR AGENTS SHALL NOT BE RESPONSIBLE FOR THE ACCURACY OR COMPLETENESS OF SCANNED COPIES OF THIS PLAN SHEET.

NOTES:

1. FOR INFORMATION NOT SHOWN, SEE TYPICAL CROSS SECTIONS.

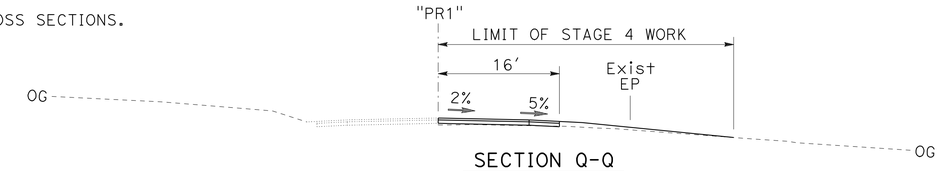

SECTION Q-Q

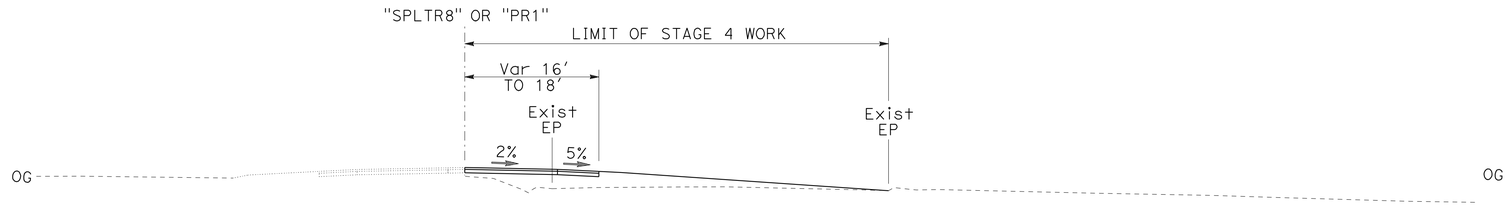

SECTION P-P

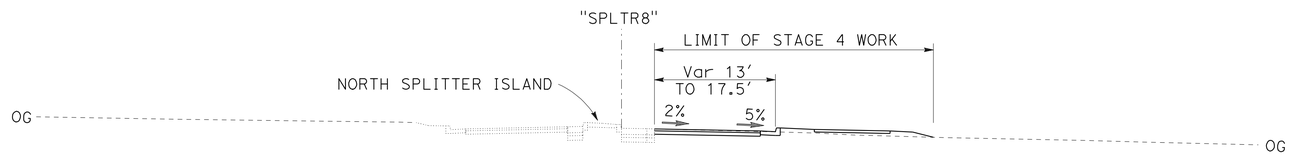

SECTION O-O

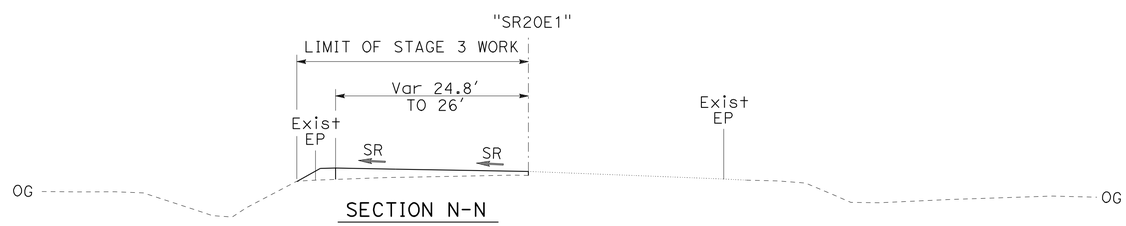

SECTION N-N

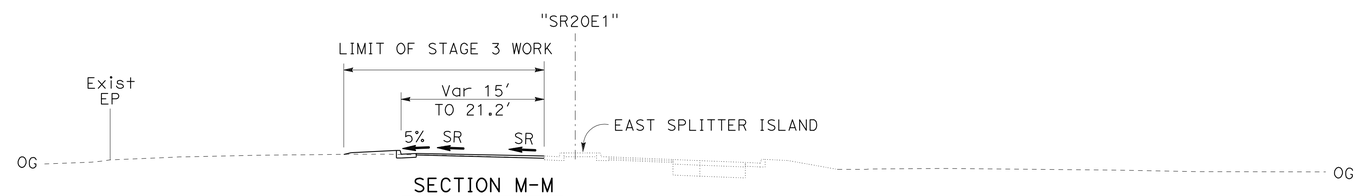

SECTION M-M

SECTION L-L

STAGE CONSTRUCTION DETAILS

NO SCALE

SD-3

REVISED BY | DATE REVISED

DIANNE EDWARDS

CALCULATED-DESIGNED BY | CHECKED BY

FUNCTIONAL SUPERVISOR

Dennis P. McBride

STATE OF CALIFORNIA - DEPARTMENT OF TRANSPORTATION

Caltrans

DESIGN

P:\proj1\01\48050\drafting\sheets\148050mb003.dgn

LAST REVISION 00-00-00 | DATE PLOTTED => 28-JUN-2011 | TIME PLOTTED => 15:56

Dist	COUNTY	ROUTE	POST MILES TOTAL PROJECT	SHEET No.	TOTAL SHEETS
01	Lak	20	11.9/12.4	56	120

REGISTERED CIVIL ENGINEER — DATE: 5-4-11

6-27-11
PLANS APPROVAL DATE

REGISTERED PROFESSIONAL ENGINEER — D.M. EDWARDS — No. C-51898 — Exp. 6-30-12 — CIVIL — STATE OF CALIFORNIA

THE STATE OF CALIFORNIA OR ITS OFFICERS OR AGENTS SHALL NOT BE RESPONSIBLE FOR THE ACCURACY OR COMPLETENESS OF SCANNED COPIES OF THIS PLAN SHEET.

NOTES:

1. FOR TRAFFIC HANDLING DETAILS NOT SHOWN SEE Std PLAN T-13.
2. ALL TRAFFIC STRIPING SHOWN IS TEMPORARY TRAFFIC STRIP (PAINT).
3. BEFORE PLACING TEMPORARY PAVEMENT DELINEATION SHOWN ON THIS SHEET, REMOVE ALL PAVEMENT DELINEATION FROM "A" 500+17.7 TO "A" 509+77.2 AND FROM "B" 600+75.0 TO "B" 617+69.8, EXCEPT DETAIL 27B ON SOUTH SIDE OF SR 20. SEE "REMOVE TRAFFIC STRIPE" AND "REMOVE THERMOPLASTIC PAVEMENT MARKING" QUANTITY TABLES.

LEGEND

- CHANNELIZER (SURFACE MOUNTED)
- REMOVE SIGN
- TRAFFIC PLASTIC DRUM
- LIMIT OF STRIPING DETAIL
- CHANGE IN STRIPING DETAIL
- 27B — PAVEMENT DELINEATION DETAIL No.
- DIRECTION OF TRAFFIC

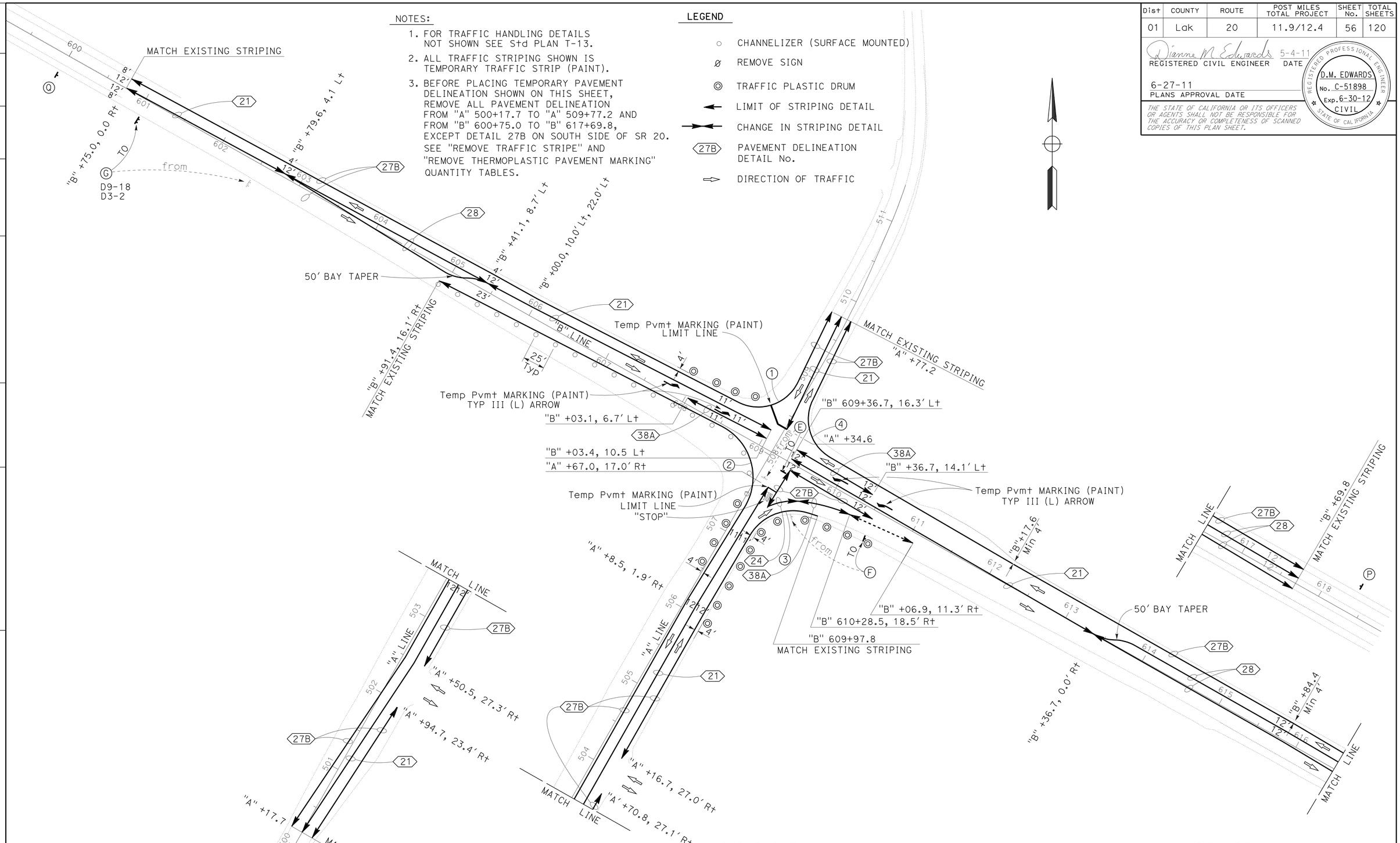

CURVE DATA

No.	R	Δ	T	L	BC	EC
1	50.0′	91°28′18"	51.3′	79.8′	"B" 608+55.4, 30.7′ Lt	"A" 508+87.6, 14.0′ Lt
2	65.0′	94°27′10"	70.3′	107.2′	"B" 608+52.9, 2.4′ Rt	"A" 507+34.0 5.0′ Rt
3	57.0′	76°55′0"	45.3′	76.5′	"A" 507+09.6, 26.5′ Rt	"B" 609+86.3, 40.1 Rt
4	50.0′	85°29′30"	46.2′	74.6′	"A" 508+78.2, 10.8′ Rt	"B" 609+77.2, 27.3′ Lt

STAGE 1

TRAFFIC HANDLING PLAN

NO SCALE

TH-1

STATE OF CALIFORNIA - DEPARTMENT OF TRANSPORTATION
Caltrans
DESIGN

FUNCTIONAL SUPERVISOR: Dennis P. McBride
DIANNE EDWARDS
CALCULATED-DESIGNED BY
CHECKED BY
REVISED BY
DATE REVISED

P:\proj\01\48050\drafting\sheets\148050md001.dgn

LAST REVISION 00-00-00 | DATE PLOTTED => 28-JUN-2011 | TIME PLOTTED => 15:56

Dist	COUNTY	ROUTE	POST MILES TOTAL PROJECT	SHEET No.	TOTAL SHEETS
01	Lak	20	11.9/12.4	57	120

Dianne M Edwards 5-4-11
REGISTERED CIVIL ENGINEER DATE

6-27-11
PLANS APPROVAL DATE

REGISTERED PROFESSIONAL ENGINEER
D.M. EDWARDS
No. C-51898
Exp. 6-30-12
CIVIL
STATE OF CALIFORNIA

THE STATE OF CALIFORNIA OR ITS OFFICERS OR AGENTS SHALL NOT BE RESPONSIBLE FOR THE ACCURACY OR COMPLETENESS OF SCANNED COPIES OF THIS PLAN SHEET.

NOTES:

1. REMOVE ALL STRIPING WITHIN DASHED BOUNDARY PRIOR TO PLACING STAGE 2 TEMPORARY STRIPING.
2. ALL TRAFFIC STRIPING SHOWN IS TEMPORARY TRAFFIC STRIPE (PAINT) UNLESS OTHERWISE SHOWN.

LEGEND

STRIPING REMOVAL LIMITS

1	"RA1" 104+14.0, 0.0 Rt
2	"RA1" 104+48.1, 0.0 Rt
3	"A" 507+37.1, 10.6 Rt
4	"A" 507+84.1, 1.6 Lt
5	"A" 507+87.0, 27.5 Lt
6	"A" 508+05.6, 9.2 Rt
7	"A" 508+45.5, 4.3 Lt
8	"A" 508+51.6, 6.0 Rt
9	"A" 508+80.3, 13.0 Lt
10	"A" 508+80.3, 1.0 Lt
11	"A" 508+80.3, 11.0 Rt
12	"B" 609+65.9, 33.2 Lt
13	"B" 609+73.2, 21.4 Lt
14	"B" 610+42.3, 28.9 Lt
15	"B" 610+51.6, 16.4 Lt
16	"B" 610+67.8, 13.9 Lt
17	"B" 610+79.6, 26.8 Lt
18	"B" 610+89.2, 1.8 Lt
19	"B" 611+03.3, 13.4 Lt
20	"RA1" 100+22.2, 0.1 Rt
21	"RA1" 100+61.1, 0.0 Rt
22	"RA1" 100+68.1, 0.0 Rt
23	"RA1" 103+58.8, 0.0 Rt

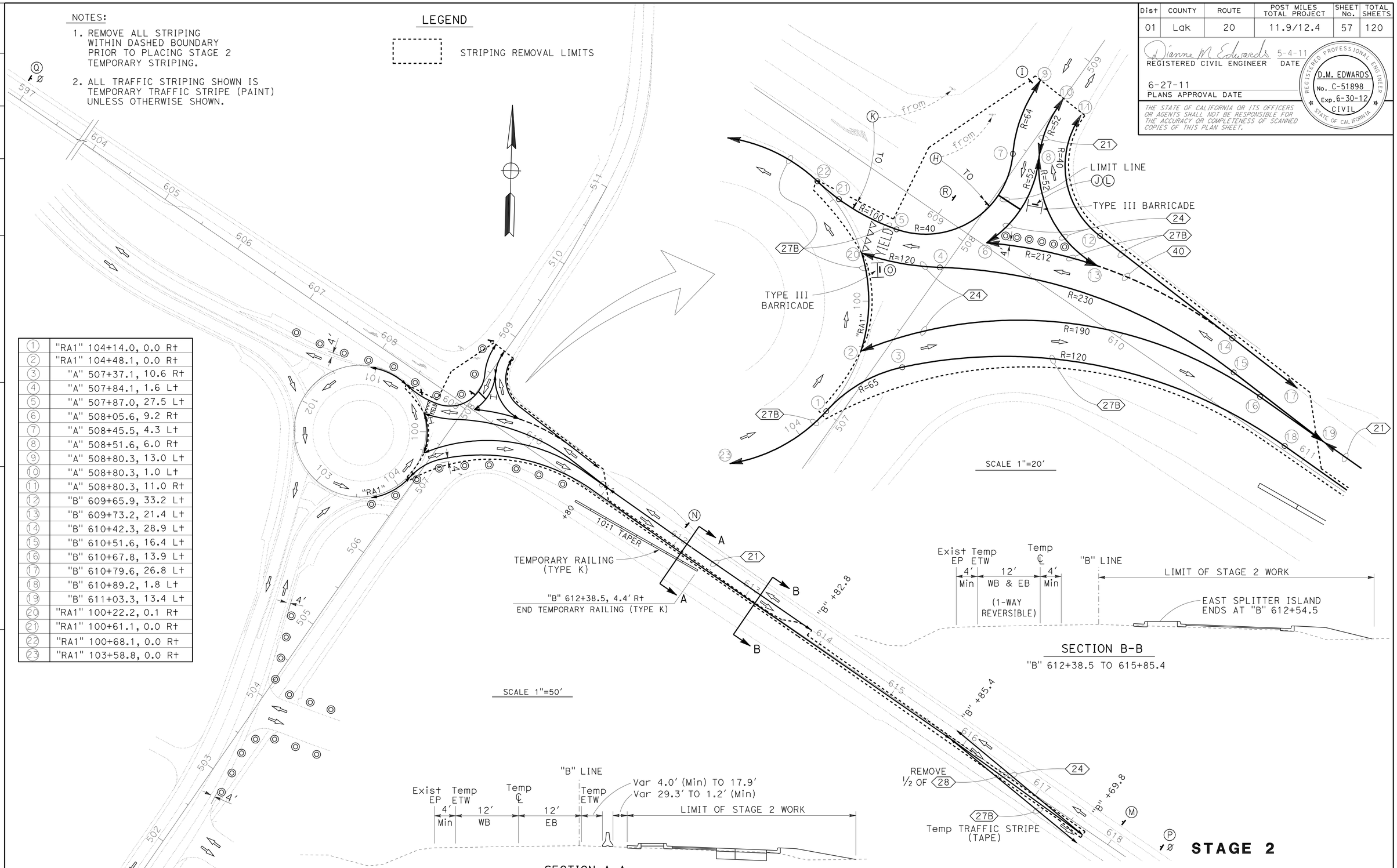

SECTION A-A
"B" 610+80 TO 612+38.5
NO SCALE

SECTION B-B
"B" 612+38.5 TO 615+85.4

STAGE 2

TRAFFIC HANDLING PLAN TH-2

STATE OF CALIFORNIA - DEPARTMENT OF TRANSPORTATION
Caltrans DESIGN

FUNCTIONAL SUPERVISOR: Dennis P. McBride
CALCULATED-DESIGNED BY: DIANNE EDWARDS
CHECKED BY
REVISED BY
DATE REVISED

P:\proj\01\48050\drafting\sheets\148050md002.dgn

LAST REVISION 00-00-00
DATE PLOTTED => 28-JUN-2011
TIME PLOTTED => 15:56

Dist	COUNTY	ROUTE	POST MILES TOTAL PROJECT	SHEET No.	TOTAL SHEETS
01	Lak	20	11.9/12.4	58	120

Dianne M Edwards 5-4-11
REGISTERED CIVIL ENGINEER DATE

6-27-11
PLANS APPROVAL DATE

REGISTERED PROFESSIONAL ENGINEER
D.M. EDWARDS
No. C-51898
Exp. 6-30-12
CIVIL
STATE OF CALIFORNIA

THE STATE OF CALIFORNIA OR ITS OFFICERS OR AGENTS SHALL NOT BE RESPONSIBLE FOR THE ACCURACY OR COMPLETENESS OF SCANNED COPIES OF THIS PLAN SHEET.

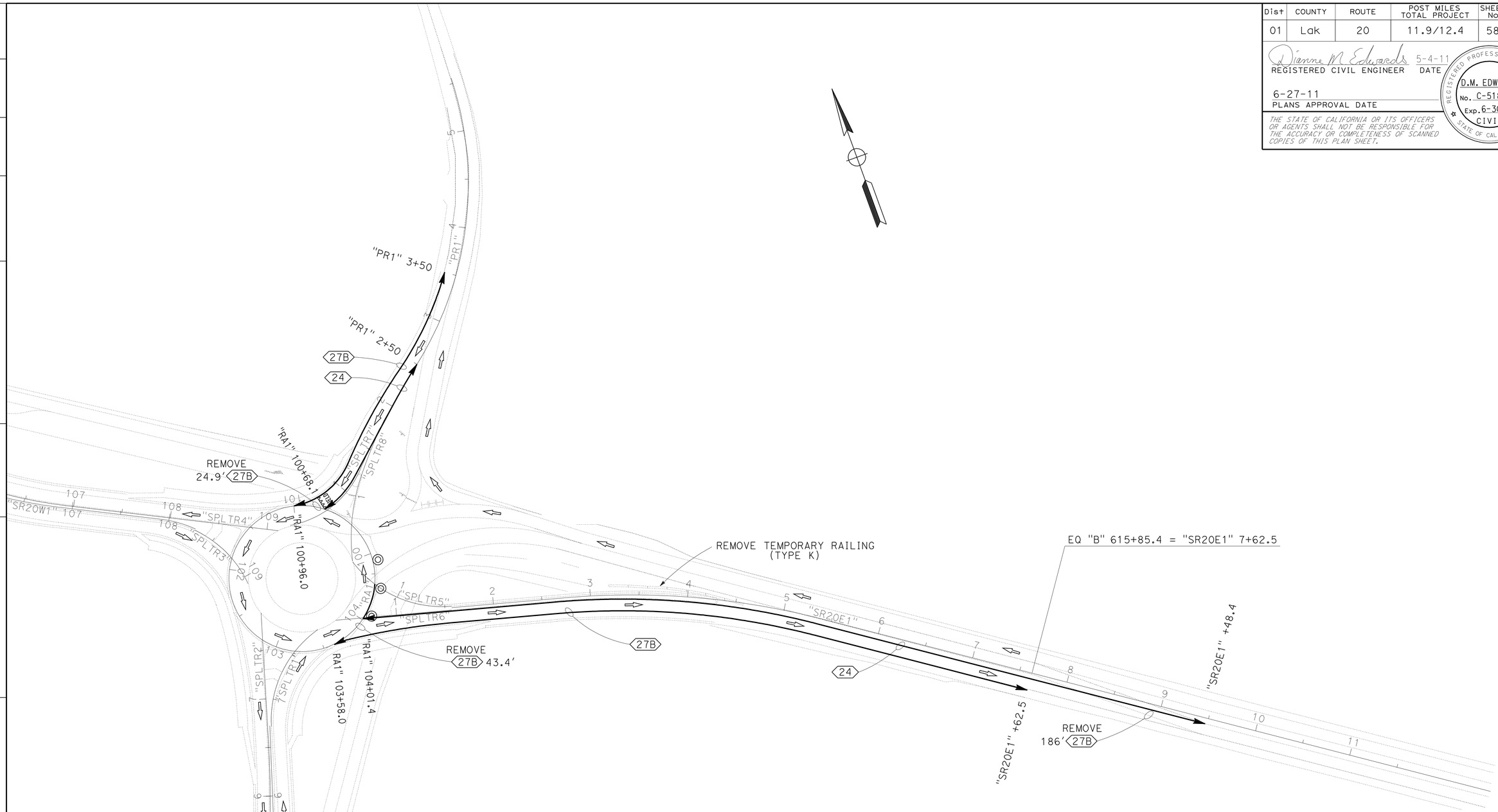

STAGE 3

TRAFFIC HANDLING PLAN
TH-3

SCALE: 1" = 50'

REVISED BY	DATE REVISED

CALCULATED-DESIGNED BY: DIANNE EDWARDS
CHECKED BY:

FUNCTIONAL SUPERVISOR: Dennis P. McBride

STATE OF CALIFORNIA - DEPARTMENT OF TRANSPORTATION
Caltrans®
DESIGN

P:\proj1\01\48050\drafting\sheets\148050md003.dgn

LAST REVISION 00-00-00
DATE PLOTTED => 28-JUN-2011
TIME PLOTTED => 15:56

Dist	COUNTY	ROUTE	POST MILES TOTAL PROJECT	SHEET No.	TOTAL SHEETS
01	Lak	20	11.9/12.4	59	120

Dianne M Edwards 5-4-11
REGISTERED CIVIL ENGINEER DATE

6-27-11
PLANS APPROVAL DATE

REGISTERED PROFESSIONAL ENGINEER
D.M. EDWARDS
No. C-51898
Exp. 6-30-12
CIVIL
STATE OF CALIFORNIA

THE STATE OF CALIFORNIA OR ITS OFFICERS OR AGENTS SHALL NOT BE RESPONSIBLE FOR THE ACCURACY OR COMPLETENESS OF SCANNED COPIES OF THIS PLAN SHEET.

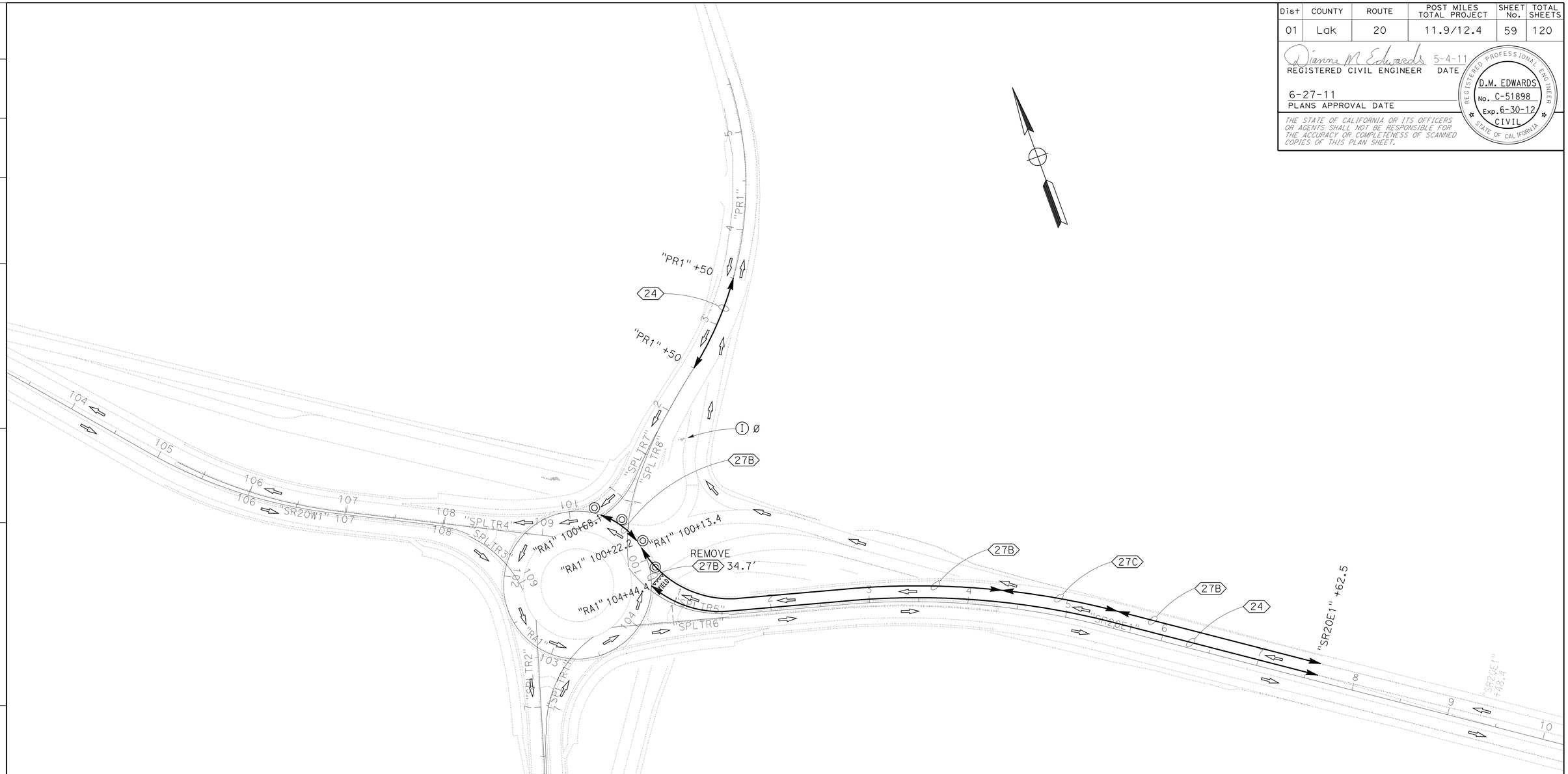

STAGE 4

TRAFFIC HANDLING PLAN
TH-4

SCALE: 1" = 50'

REVISED BY	DATE REVISED

CALCULATED-DESIGNED BY	DIANNE EDWARDS
CHECKED BY	

FUNCTIONAL SUPERVISOR: Dennis P. McBride

STATE OF CALIFORNIA - DEPARTMENT OF TRANSPORTATION
Caltrans
DESIGN

P:\proj1\01\48050\drafting\sheets\148050md004.dgn

LAST REVISION 00-00-00 | DATE PLOTTED => 28-JUN-2011 | TIME PLOTTED => 15:56

Dist	COUNTY	ROUTE	POST MILES TOTAL PROJECT	SHEET No.	TOTAL SHEETS
01	Lak	20	11.9/12.4	60	120

Dianne M Edwards 5-4-11
REGISTERED CIVIL ENGINEER DATE

6-27-11
PLANS APPROVAL DATE

REGISTERED PROFESSIONAL ENGINEER D.M. EDWARDS No. C-51898 Exp. 6-30-12 CIVIL STATE OF CALIFORNIA

THE STATE OF CALIFORNIA OR ITS OFFICERS OR AGENTS SHALL NOT BE RESPONSIBLE FOR THE ACCURACY OR COMPLETENESS OF SCANNED COPIES OF THIS PLAN SHEET.

REMOVE PAINTED PAVEMENT MARKING

STAGE	LOCATION	REMOVE PAINTED PAVEMENT MARKING	
			SQFT
2	"B" 610+03.0 Lt	TYPE III (L) ARROW	42.0
2	"B" 610+61.0 Lt	TYPE III (L) ARROW	42.0
		TOTAL	84.0

REMOVE THERMOPLASTIC PAVEMENT MARKING

STAGE	LOCATION	REMOVE THERMOPLASTIC PAVEMENT MARKING	
			SQFT
1	B 608+18.0 Rt	TYPE V ARROW	33.0
1	B 608+18.0 Rt	TYPE III (R) ARROW	42.0
1	B 608+68.0 Med	TYPE III (L) ARROW	42.0
1	B 609+55.0 Med	TYPE III (L) ARROW	42.0
1	B 613+21.0 Med	TYPE III (L) ARROW	42.0
1	A 507+62.0 Rt	STOP	22.0
1	A 507+80.0 Rt	LIMIT LINE	12.0
1	A 508+35.0 Lt	LIMIT LINE	12.0
1	A 508+49.0 Lt	STOP	22.0
		TOTAL	269.0

REMOVE TRAFFIC STRIPE

STAGE	LOCATION FROM	LOCATION TO	DETAIL NUMBER	LENGTH	REMOVE THERMOPLASTIC TRAFFIC STRIPE 4" WHITE	REMOVE THERMOPLASTIC TRAFFIC STRIPE 8" WHITE	REMOVE YELLOW THERMOPLASTIC TRAFFIC STRIPE (HAZARDOUS WASTE) 4" YELLOW	REMOVE PAINTED TRAFFIC STRIPE 4" WHITE	REMOVE PAINTED TRAFFIC STRIPE 8" WHITE	REMOVE PAINTED TRAFFIC STRIPE 4" YELLOW
				LF	LF	LF	LF	LF	LF	LF
1	B 600+75. Lt	A 509+77.2 Lt	27B	931.6	931.6					
1	B 600+75. Med	B 602+95.8 Med	22	218.9			437.8			
1	B 604+91.4 Rt	A 500+17.7 Lt	27B	1135.5	1135.5					
1	B 602+95.8 Med	B 606+90.2 Med	29	394.8			1579.2			
1	B 606+90.2 Med	B 608+92.2 Med	22	202.0			404.0			
1	B 607+22.2 Rt	B 608+88.9 Rt	38	166.7		333.4				
1	B 608+50. Rt	B 608+97. Rt	RIGHT TURN TRIANGLE	126.5	66.6	253.0				
1	B 609+30.4 Med	B 614+23.9 Med	22	493.4			986.8			
1	B 609+31. Lt	B 613+33.4 Lt	38	402.5		805.0				
1	B 614+23.9 Med	B 617+69.8 Med	29	347.7			1390.8			
1	A 500+17.7 Med	A 501+42.1 Med	29	572.7			383.9			
1	A 500+17.7 Rt	A 501+97.9 Rt	27B	177.3	177.3					
1	A 501+42.1 Rt	A 505+19.9 Rt	11	377.8	151.1					
1	A 501+42.1 Med	A 505+89.7 Med	32	447.5			1118.8			
1	A 502+52.8 Rt	A 503+68.2 Rt	27B	115.4	115.4					
1	A 504+31.3 Rt	B 609+97.7 Rt	27B	368.3	368.3					
1	A 505+19.9 Rt	A 507+33.1 Rt	27B	213.5	213.5					
1	A 505+89.7 Med	A 507+10. Med	29	120.4			481.6			
1	A 507+10. Med	A 507+79.5 Med	22	69.5			139.0			
1	A 507+33. Rt	A 507+85. Rt	RIGHT TURN TRIANGLE	185.6	158.9	371.2				
1	A 508+29. Lt	A 508+58. Lt	RIGHT TURN TRIANGLE	80.0		160.2				
1	A 508+33.8 Med	A 509+77.2 Med	22	143.5			287.0			
1	A 509+77.2 Rt	B 617+69.8 Lt	27B	973.4	973.4					
2	A 507+21.5 Rt	B 610+13.5 Rt	24	103.8						103.8
2	B 608+73.4 Rt	A 507+10.4 Lt	27B	121.8				121.8		
2	B 608+80.4 Lt	B 609+03.4 Lt	21	23.0						46.0
2	B 608+82.1 Lt	B 609+03.6 Lt	38A	21.2					42.3	
2	B 608+85.1 Lt	A 508+80.3 Lt	27B	45.0				45.0		
2	B 609+30.1 Rt	B 610+53.6 Rt	27B	120.4				120.4		
2	B 609+36.7 Lt	B 610+36.7 Lt	38A	100.0					200.0	
2	B 609+36.7 Lt	B 613+36.7 Lt	21	396.8						793.5
2	B 610+13.5 Rt	B 610+53.6 Rt	38A	39.3					78.5	
2	B 610+53.6 Rt	B 611+06.9 Rt	8	53.6				53.6		
2	B 613+36.7 Med (Lt)	B 613+84.3 Med (Lt)	28 (LEFT HALF OF DETAIL 28)	46.4						92.8
2	B 613+36.7 Med (Rt)	B 617+69.8 Med (Rt)	28 (RIGHT HALF OF DETAIL 28)	433.2						866.3
2	B 615+84.4 Med (Rt)	B 617+69.8 Rt	28 (RIGHT HALF OF DETAIL 28)	185.6			371.2			
2	A 507+21.5 Rt	A 507+92.6 Rt	27B	75.3				75.3		
2	A 507+32.4 Rt	A 507+92.6 Rt	21	61.9						123.8
2	A 508+34.7 Med	A 508+79.6 Med	21	45.1						90.2
2	A 508+77.9 Rt	B 610+79.3 Lt	27B	185.6	185.6					
3	RA1 100+68.1 Rt	RA1 100+96.0 Rt	27B	32.0				32.0		
3	RA1 103+58.0 Rt	RA1 104+01.4 Rt	27B	43.4				43.4		
4	RA1 104+44.4 Rt	RA1 100+13.4 Rt	27B	34.7				34.7		
				SUB-TOTAL	4477.2	1922.8	7580.1	526.2	320.8	2116.4
				TOTAL	6400.0		7580.1		2963.4	

(N) FOR INFORMATION ONLY. NOT A SEPARATE PAY ITEM.

TRAFFIC HANDLING QUANTITIES
THQ-1

REVISED BY | DATE REVISED
DIANNE EDWARDS | CALCULATED-DESIGNED BY
CHECKED BY
FUNCTIONAL SUPERVISOR
Dennis P. McBride
STATE OF CALIFORNIA - DEPARTMENT OF TRANSPORTATION
Caltrans® DESIGN
P:\proj\01\48050\drafting\sheets\148050mf001.dgn

LAST REVISION 00-00-00 | DATE PLOTTED => 28-JUN-2011 | TIME PLOTTED => 15:56

Dist	COUNTY	ROUTE	POST MILES TOTAL PROJECT	SHEET No.	TOTAL SHEETS
01	Lak	20	11.9/12.4	61	120

Dianne M Edwards 5-4-11
REGISTERED CIVIL ENGINEER DATE

6-27-11
PLANS APPROVAL DATE

REGISTERED PROFESSIONAL ENGINEER
D.M. EDWARDS
No. C-51898
Exp. 6-30-12
CIVIL
STATE OF CALIFORNIA

THE STATE OF CALIFORNIA OR ITS OFFICERS OR AGENTS SHALL NOT BE RESPONSIBLE FOR THE ACCURACY OR COMPLETENESS OF SCANNED COPIES OF THIS PLAN SHEET.

TEMPORARY PAVEMENT MARKING (PAINT)

STAGE	LOCATION	TEMPORARY PAVEMENT MARKING	
			SQFT
1	"A" 507+57.0 R+	"STOP"	22.0
1	"A" 507+67.0 R+	LIMIT LINE	12.0
1	"A" 508+35.0 L+	LIMIT LINE	12.0
1	"B" 607+77.0 L+	TYPE III (L) ARROW	42.0
1	"B" 608+44.0 L+	TYPE III (L) ARROW	42.0
1	"B" 610+03.0 L+	TYPE III (L) ARROW	42.0
1	"B" 610+61.0 L+	TYPE III (L) ARROW	42.0
2	"RA1" 100+22.2 R+	YIELD LINE	12.0
2	"A" 507+87.0 L+	"YIELD"	24.0
2	"A" 508+25 R+	LIMIT LINE	12.0
3	"SPLTR7" 0+76.0 R+	YIELD LINE	12.0
3	"SPLTR7" 0+81.0 R+	"YIELD"	24.0
4	"SPLTR5" 0+67.0 L+	YIELD LINE	12.0
4	"SPLTR5" 0+81.0 L+	"YIELD"	24.0
		TOTAL	334.0

TEMPORARY RAILING (TYPE K)

STAGE	LOCATION		TEMPORARY RAILING (TYPE K)
	FROM	TO	LF
2	"B" 610+90	"B" 612+38.5	160

DRUMS AND CHANNELIZERS

STAGE	TRAFFIC PLASTIC DRUM	CHANNELIZER (SURFACE MOUNTED)
	EA	EA
1	20	19
2	23	
3	3	
4	4	
TOTAL	60	19

TEMPORARY TRAFFIC STRIPE

STAGE	LOCATION FROM	LOCATION TO	DETAIL	LENGTH	TEMPORARY TRAFFIC STRIPE (PAINT) 4" WHITE	TEMPORARY TRAFFIC STRIPE (PAINT) 4" YELLOW	TEMPORARY TRAFFIC STRIPE (PAINT) 8" WHITE	TEMPORARY TRAFFIC STRIPE (TAPE) 4" WHITE	TEMPORARY TRAFFIC STRIPE (TAPE) 4" YELLOW	REMARKS
				LF	LF	LF	LF	LF	LF	
1	"B" 600+75.0 L+	"A" 509+77.2 L+	27B	903.5	903.5					
1	"B" 604+19.4 R+	"A" 500+17.7 L+	27B	1186.9	1186.9					
1	"B" 600+75.0 Med	"B" 602+79.6 Med	21	204.7		204.7				
1	"B" 602+79.6 Med	"B" 605+41.1 Med	28	261.5		525.2				
1	"B" 605+41.1 Med	"B" 609+03.1 Med	21	362.4		362.4				
1	"B" 608+03.1 L+	"B" 609+03.1 L+	38A	100.0			100.0			
1	"B" 609+44.8 R+	"B" 610+53.6 R+	27B	108.8	108.8					
1	"B" 609+36.7 Med	"B" 613+36.7 Med	21	396.8		396.8				
1	"B" 609+36.7 L+	"B" 610+36.7 L+	38A	100.0			100.0			
1	"B" 610+28.5 R+	"B" 611+06.9 R+	8	78.7	78.7					
1	"B" 613+36.7 Med	"B" 617+69.8 Med	28	434.7		869.1				
1	"A" 500+17.7 Med	"A" 507+67.0 Med	21	749.2		749.2				
1	"A" 500+17.7 R+	"A" 501+94.7 R+	27B	177.1	177.1					
1	"A" 502+50.5 R+	"A" 503+70.8 R+	27B	120.4	120.4					
1	"A" 504+16.7 R+	"B" 609+97.8 R+	27B	380.9	380.9					MATCH TO EXISTING DETAIL 27B
1	"A" 507+47.8 R+	"B" 609+70.1 R+	24	35.8		35.8				
1	"A" 507+47.8 R+	"A" 507+96.5 R+	27B	48.7	48.7					
1	"A" 508+34.6 Med	"A" 509+77.2 Med	21	142.5		142.5				
1	"A" 509+77.2 R+	"B" 617+69.8 L+	27B	966.9	966.9					
2	"RA1" 103+58.8 R+	"RA1" 104+14.0 R+	27B	55.0	55.0					
2	"RA1" 104+48.1 R+	"RA1" 100+22.2 R+	27B	44.9	44.9					
2	"RA1" 100+68.1 R+	"A" 508+80.3 L+	27B	148.3	148.3					
2	"RA1" 100+22.2 R+	"B" 611+03.3 L+	24	232.7		232.7				
2	"A" 508+05.6 L+	"B" 609+73.2 L+	27B	51.9	51.9					BOTTOM OF PAINTED ISLAND
2	"A" 508+05.6 L+	"A" 508+51.6 R+	24	47.8		47.8				LEFT SIDE OF PAINTED ISLAND
2	"B" 609+73.2 L+	"B" 610+42.3 L+	40	69.8	69.8					
2	"B" 611+03.3 L+	"B" 613+82.8 L+	21	279.5		279.5				
2	"B" 615+85.4 L+	"B" 617+69.8 R+	24	185.3					185.3	
2	"B" 615+85.4 L+	"B" 617+69.8 R+	27B	186.1				186.1		
2	"RA1" 103+58.8 R+	"B" 615+85.4 Med	27B	699.3	699.3					
2	"RA1" 104+48.1 L+	"B" 611+03.3 L+	24	223.7		223.7				
2	"A" 508+51.6 R+	"B" 609+73.2 L+	24	60.0		60.0				RIGHT SIDE OF PAINTED ISLAND
2	"A" 508+51.6 R+	"A" 508+80.3 Med	21	22.4		22.4				
2	"A" 508+80.3 R+	"B" 610+79.6 L+	27B	169.8	169.8					
3	"RA1" 103+58.0 R+	"SR20E1" 7+62.5 R+	27B	724.1				724.1		
3	"RA1" 104+01.4 R+	"SR20E1" 9+48.4 Med	24	880.9					880.9	
3	"RA1" 100+96.0 R+	"PR1" 3+50.0 R+	27B	294.3				294.3		
3	"RA1" 100+68.1 R+	"PR1" 2+50.0 Med	24	178.1					178.1	
4	"RA1" 100+13.4 R+	"SR20E1" 4+30.0 L+	27B	374.0				374.0		
4	"SR20E1" 4+30.0 L+	"SR20E1" 5+50.0 L+	27C	120.0				120.0		
4	"SR20E1" 5+50.0 L+	"SR20E1" 7+62.5 L+	27B	212.5				212.5		
4	"RA1" 100+22.2 R+	"RA1" 100+68.1 R+	27b	45.9				45.9		
4	"RA1" 104+44.4 R+	"SR20E1" 7+62.5 Med	24	691.5					691.5	
4	"PR1" 2+50.0 Med	"PR1" 3+50.0 Med	24	100.0					100.0	
			SUB-TOTAL	5210.9		4151.8	200.0	1956.9	2035.8	
			TOTAL			9562.7			3992.4	

TRAFFIC HANDLING QUANTITIES
THQ-2

REVISED BY | DATE REVISED
DIANNE EDWARDS | CALCULATED-DESIGNED BY | CHECKED BY
FUNCTIONAL SUPERVISOR: Dennis P. McBride
STATE OF CALIFORNIA - DEPARTMENT OF TRANSPORTATION
Caltrans® DESIGN
P:\proj1\01\48050\drafting\sheets\148050mf002.dgn

LAST REVISION 00-00-00 | DATE PLOTTED => 28-JUN-2011 | TIME PLOTTED => 15:56

Dist	COUNTY	ROUTE	POST MILES TOTAL PROJECT	SHEET No.	TOTAL SHEETS
01	Lak	20	11.9/12.4	62	120

Dianne M Edwards 5-4-11
REGISTERED CIVIL ENGINEER DATE

6-27-11
PLANS APPROVAL DATE

REGISTERED PROFESSIONAL ENGINEER
D.M. EDWARDS
No. C-51898
Exp. 6-30-12
CIVIL
STATE OF CALIFORNIA

THE STATE OF CALIFORNIA OR ITS OFFICERS OR AGENTS SHALL NOT BE RESPONSIBLE FOR THE ACCURACY OR COMPLETENESS OF SCANNED COPIES OF THIS PLAN SHEET.

STATIONARY MOUNTED CONSTRUCTION AREA SIGNS FOR STAGE CONSTRUCTION

STAGE	SIGN LETTER	SIGN CODE (CA MUTCD)	SIGN MESSAGE	LOCATION	Rt/Lt/Med	PANEL SIZE Horiz x Vert in. x in.	1-POST EA	REMOVE ROADSIDE SIGN EA	RELOCATE ROADSIDE SIGN EA	POST SIZE in. x in.	REMARKS
1	E	R1-1	STOP	"A" 507+80	Rt	30 x 30			1	4 x 6	"LAKEPORT CUTOFF", RELOCATE TO A 507+93 Rt"
1	F	R1-2	YIELD	"B" 609+72	Rt	36 x 36			1	4 x 6	"LAKEPORT CUTOFF", RELOCATE TO B 610+56 Rt"
1	G	D3-2 D9-18	DIRECTIONAL INFORMATION HOSPITAL	"B" 602+48	Rt	96 x 60			1	4 x 6	2 POSTS, RELOCATE TO B 599+47 Rt"
1	P	W13-1	40 MPH	"B" 618+22.9	Lt	30 x 30	1				REPLACE SIGN 47 AT "SR20E1" 10+00
1	Q	W13-1	40 MPH	"B" 596+97.6	Rt	30 x 30	1				REPLACE SIGN 46 AT "SR20W1" 98+00
2	P	W13-1	40 MPH	"B" 618+22.9	Lt	30 x 30		1			
2	Q	W13-1	40 MPH	"B" 596+97.6	Rt	30 x 30		1			
2	H	R1-1	STOP	"A" 508+55	Lt	30 x 30			1	4 x 6	RELOCATE TO A 508+19 Lt
2	I	R3-2 SW SPECIAL	NO LEFT TURN "AHEAD"	"A" 508+80	Lt	30 x 30 30 x 12	1			4 x 6	
2	J	R3-2	NO LEFT TURN	"A" 508+30	Rt	30 X 30					ON TYPE III BARRICADES
2	K	R1-2	YIELD	"B" 608+73	Lt	36 x 36			1	4 x 6	RELOCATE TO B 608+65 Rt
2	L	R6-1R	ONE WAY -->	"A" 508+30	Lt	36 x 12					ON TYPE III BARRICADES
2	M	SW SPECIAL W2-6 W13-1	USE ROUNDABOUT IMAGE OF ROUNDABOUT 15 MPH	"B" 618+00	Lt	30 x 12 30 x 30 30 x 30	1			4 x 6	
2	N	W1-4L W13-1	ARROW 15 MPH	"B" 612+00	Lt	36 x 36 30 x 30	1			4 x 6	
2	O	R6-1R W13-1	ARROW 15 MPH	"B" 609+00	Rt	48 x 24 30 x 30					ON TYPE III BARRICADE
2	R	W1-6L W13-1	ARROW 15 MPH	"B" 609+00	Rt	36 x 36 30 x 30					
4	I	R3-2 SW SPECIAL	NO LEFT TURN "AHEAD"	"A" 508+80	Lt	30 x 30 30 x 12		1			
4	J	R3-2	NO LEFT TURN	"A" 508+30	Rt	30 x 30		1			ON TYPE III BARRICADE
4	L	R6-1R	ONE WAY -->	"A" 508+30	Lt	36 x 12		1			ON TYPE III BARRICADE
4	M	SW SPECIAL W2-6 W13-1	USE ROUNDABOUT IMAGE OF ROUNDABOUT 15 MPH	"B" 618+00	Lt	30 x 12 30 x 30 30 x 30		1			
4	N	W1-4L W13-1	ARROW 15 MPH	"B" 612+00	Lt	36 x 36 30 x 30		1			
4	O	R6-1R W13-1	ARROW 15 MPH	"B" 609+00	Rt	48 x 24 30 x 30		1			ON TYPE III BARRICADE
4	R	W1-6L W13-1	ARROW 15 MPH	"B" 609+00	Rt	36 x 36 30 x 30		1			

TYPE III BARRICADES

STAGE	LOCATION	EA	REMARKS
2	"A" 508+30	1	SIGNS (J) AND (L)
2	"B" 609+00	1	SIGN (O)
	TOTAL	2	

TRAFFIC HANDLING QUANTITIES
THQ-3

REVISED BY | DATE REVISED
DIANNE EDWARDS
CALCULATED-DESIGNED BY | CHECKED BY
FUNCTIONAL SUPERVISOR
Dennis P. McBride
STATE OF CALIFORNIA - DEPARTMENT OF TRANSPORTATION
Caltrans
DESIGN
P:\proj1\01\48050\drafting\sheets\148050mf003.dgn

LAST REVISION 00-00-00 | DATE PLOTTED => 28-JUN-2011 | TIME PLOTTED => 15:56

Dist	COUNTY	ROUTE	POST MILES TOTAL PROJECT	SHEET No.	TOTAL SHEETS
01	Lak	20	11.9/12.4	63	120

Dianne M Edwards 5-4-11
REGISTERED CIVIL ENGINEER DATE

6-27-11
PLANS APPROVAL DATE

REGISTERED PROFESSIONAL ENGINEER
D.M. EDWARDS
No. C-51898
Exp. 6-30-12
CIVIL
STATE OF CALIFORNIA

THE STATE OF CALIFORNIA OR ITS OFFICERS OR AGENTS SHALL NOT BE RESPONSIBLE FOR THE ACCURACY OR COMPLETENESS OF SCANNED COPIES OF THIS PLAN SHEET.

TEMPORARY DETOUR SIGNS FOR STAGE CONSTRUCTION (STAGES 2,3 AND 4)

SIGN No. OR LETTER	STAGE No.	SIGN CODE (CA MUTCD)	SIGN MESSAGE	PANEL SIZE (Horiz x Vert)	No. OF POSTS	POST SIZE	No. OF SIGNS
				INCHES x INCHES	EA	INCHES x INCHES	EA
BA		G8-1 (CA)	PYLE Rd	60 x 18	1	6 x 6	3
		M4-10 (R)	DETOUR RIGHT	36 x 12			
		G8-1 (CA)	STOKES Rd	72 x 18			
BB		G8-1 (CA)	PYLE Rd	60 x 18	1	6 x 6	3
		M4-10 (L)	DETOUR LEFT	36 x 12			
		G8-1 (CA)	STOKES Rd	72 x 18			
BC		M4-10 (R)	DETOUR RIGHT	36 x 12	1	4 x 4	2
		G8-1 (CA)	PYLE Rd	60 x 18			
BD		G8-1 (CA)	PYLE Rd	60 x 18	1	4 x 6	1
		M4-10 (L)	DETOUR LEFT	36 x 12			
		G28-1 (CA)	ROUTE 20 SHIELD	10.5 x 15			
BE		M4-8a	END DETOUR	30 x 24	1	4 x 4	1

NOTE: LOCATIONS OF CONSTRUCTION AREA SIGNS SHOWN ARE APPROXIMATE.
EXACT LOCATIONS TO BE DETERMINED BY THE ENGINEER.

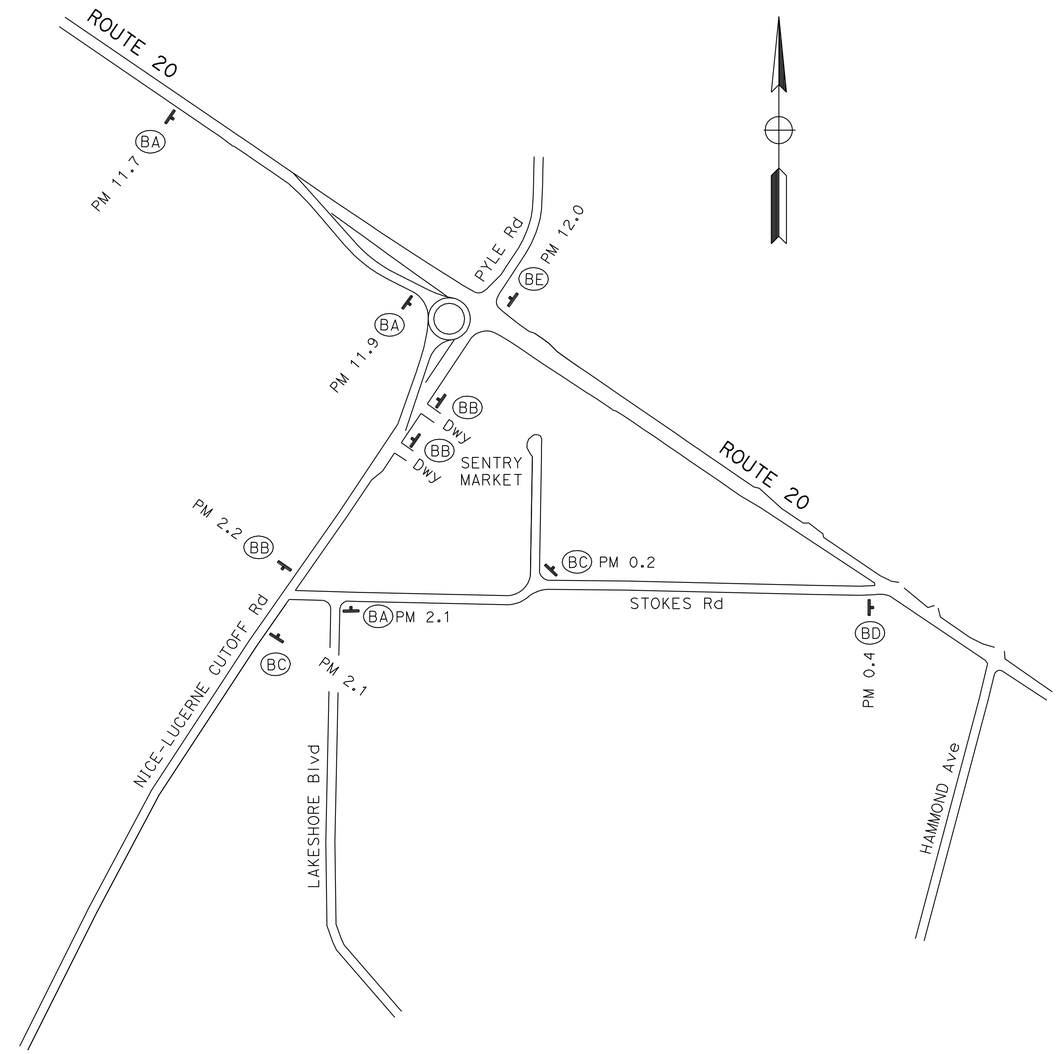

THIS PLAN ACCURATE FOR DETOUR SIGN WORK ONLY

DETOUR PLAN

NO SCALE

DE-1

REVISED BY | DATE REVISED
DIANNE EDWARDS
CALCULATED-DESIGNED BY | CHECKED BY
FUNCTIONAL SUPERVISOR
Dennis P. McBride
STATE OF CALIFORNIA - DEPARTMENT OF TRANSPORTATION
Caltrans
DESIGN

P:\proj1\01\48050\drafting\sheets\148050mg001.dgn

LAST REVISION 00-00-00 | DATE PLOTTED => 28-JUN-2011 | TIME PLOTTED => 15:56

Dist	COUNTY	ROUTE	POST MILES TOTAL PROJECT	SHEET No.	TOTAL SHEETS
01	Lak	20	11.9/12.4	64	120

Dianne M Edwards 5-4-11
REGISTERED CIVIL ENGINEER DATE

6-27-11
PLANS APPROVAL DATE

REGISTERED PROFESSIONAL ENGINEER
D.M. EDWARDS
No. C-51898
Exp. 6-30-12
CIVIL
STATE OF CALIFORNIA

THE STATE OF CALIFORNIA OR ITS OFFICERS OR AGENTS SHALL NOT BE RESPONSIBLE FOR THE ACCURACY OR COMPLETENESS OF SCANNED COPIES OF THIS PLAN SHEET.

NOTES:

1. FOR ACCURATE RIGHT OF WAY DATA, CONTACT RIGHT OF WAY ENGINEERING AT THE DISTRICT OFFICE.

LEGEND:

- • DELINEATOR (CLASS 1)
- (No.) PAVEMENT DELINEATION DETAIL NUMBER
- ← LIMIT OF STRIPING DETAIL
- →← CHANGE IN STRIPING DETAIL

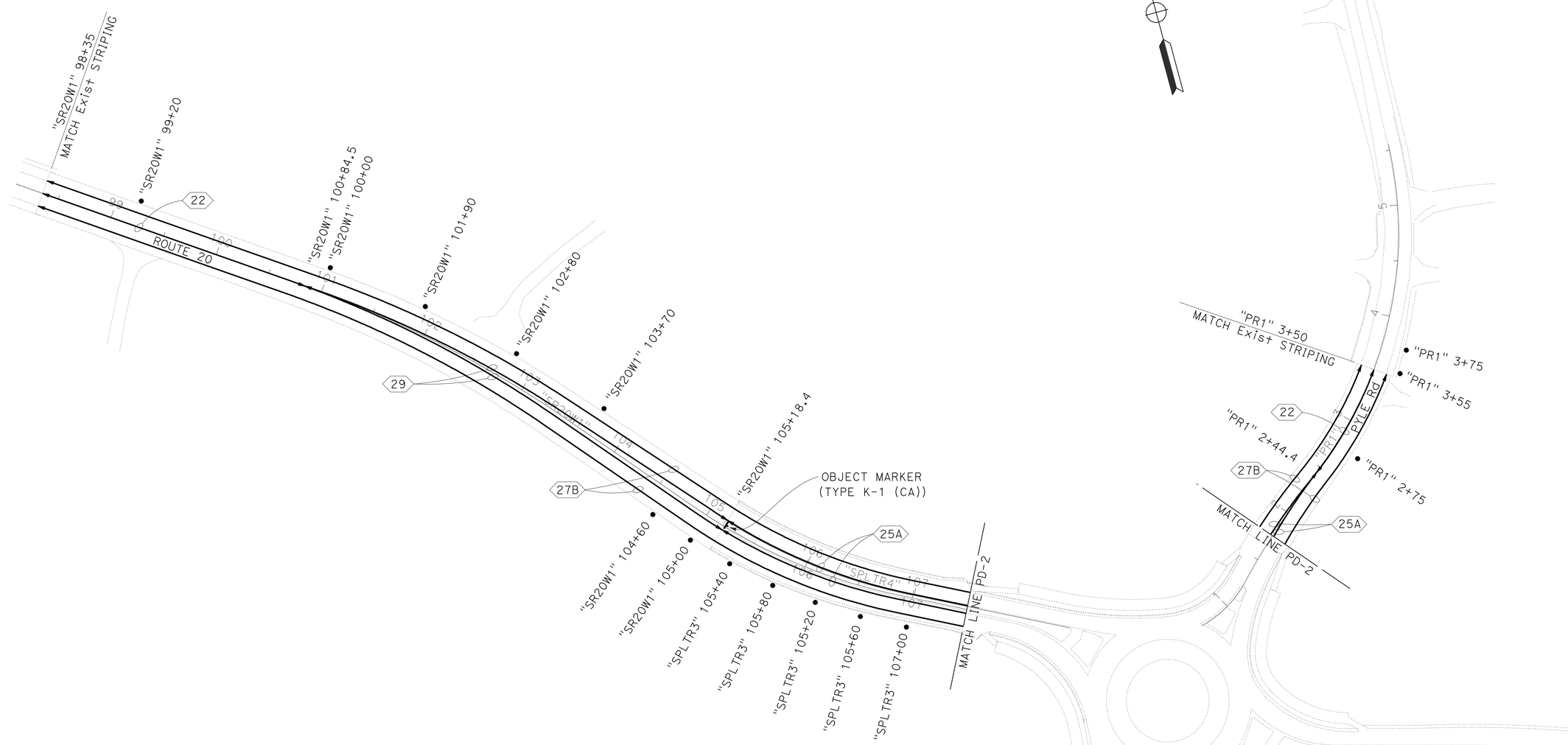

THIS PLAN ACCURATE FOR PAVEMENT DELINEATION ONLY

PAVEMENT DELINEATION

SCALE: 1" = 50'

PD-1

REVISED BY	DATE REVISED

CALCULATED-DESIGNED BY: DIANNE EDWARDS
CHECKED BY:

FUNCTIONAL SUPERVISOR: Dennis P. McBride

STATE OF CALIFORNIA - DEPARTMENT OF TRANSPORTATION
Caltrans®
DESIGN

P:\proj11\01\48050\drafting\sheets\148050na001.dgn

LAST REVISION 00-00-00
DATE PLOTTED => 28-JUN-2011
TIME PLOTTED => 15:56

Dist	COUNTY	ROUTE	POST MILES TOTAL PROJECT	SHEET No.	TOTAL SHEETS
01	Lak	20	11.9/12.4	65	120

REGISTERED CIVIL ENGINEER — DATE: 5-4-11

6-27-11
PLANS APPROVAL DATE

D.M. EDWARDS No. C-51898 Exp. 6-30-12 CIVIL — REGISTERED PROFESSIONAL ENGINEER — STATE OF CALIFORNIA

THE STATE OF CALIFORNIA OR ITS OFFICERS OR AGENTS SHALL NOT BE RESPONSIBLE FOR THE ACCURACY OR COMPLETENESS OF SCANNED COPIES OF THIS PLAN SHEET.

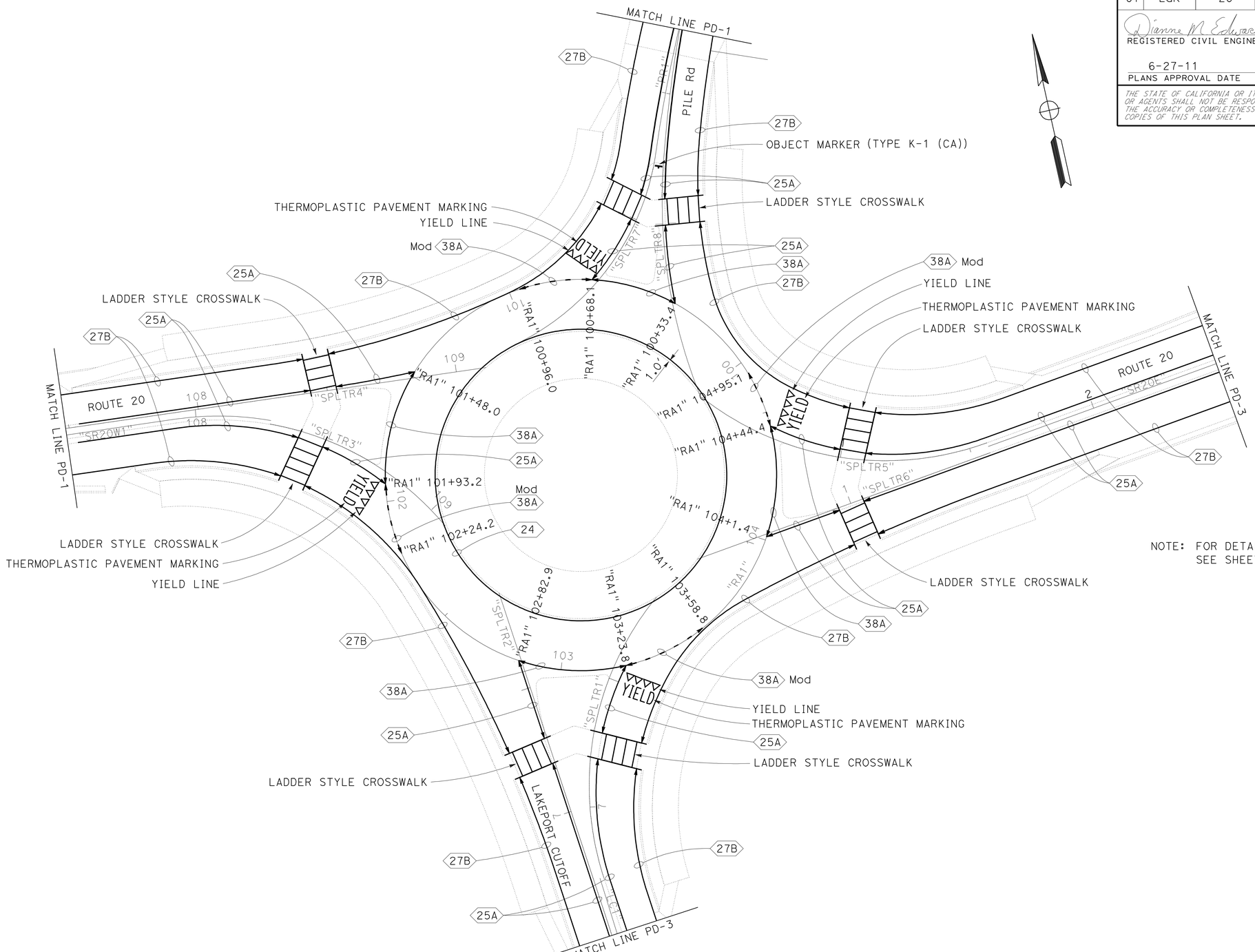

NOTE: FOR DETAILS NOT SHOWN SEE SHEET PDD-1.

PAVEMENT DELINEATION

SCALE: 1" = 20'

PD-2

REVISED BY	
DATE REVISED	
DIANNE EDWARDS	
CALCULATED-DESIGNED BY	
CHECKED BY	
FUNCTIONAL SUPERVISOR	Dennis P. McBride

STATE OF CALIFORNIA - DEPARTMENT OF TRANSPORTATION
Caltrans
DESIGN

P:\proj1\01\48050\drafting\sheets\148050na002.dgn

LAST REVISION 00-00-00 | DATE PLOTTED => 28-JUN-2011 | TIME PLOTTED => 15:57

Dist	COUNTY	ROUTE	POST MILES TOTAL PROJECT	SHEET No.	TOTAL SHEETS
01	Lak	20	11.9/12.4	66	120

Dianne M Edwards 5-4-11
REGISTERED CIVIL ENGINEER DATE

6-27-11
PLANS APPROVAL DATE

REGISTERED PROFESSIONAL ENGINEER
D.M. EDWARDS
No. C-51898
Exp. 6-30-12
CIVIL
STATE OF CALIFORNIA

THE STATE OF CALIFORNIA OR ITS OFFICERS OR AGENTS SHALL NOT BE RESPONSIBLE FOR THE ACCURACY OR COMPLETENESS OF SCANNED COPIES OF THIS PLAN SHEET.

NOTES:

1. FOR ACCURATE RIGHT OF WAY DATA, CONTACT RIGHT OF WAY ENGINEERING AT THE DISTRICT OFFICE.

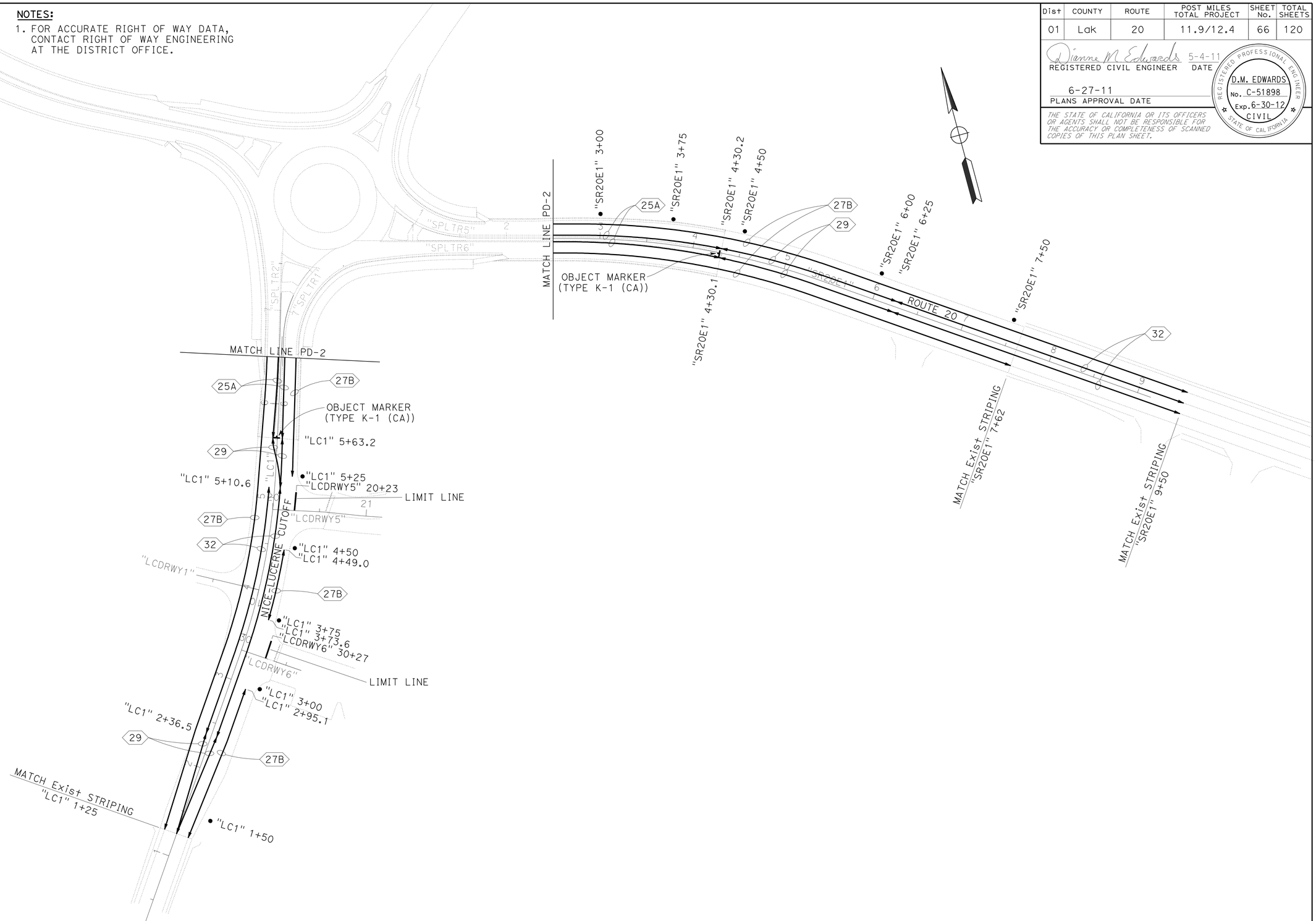

THIS PLAN ACCURATE FOR PAVEMENT DELINEATION ONLY

PAVEMENT DELINEATION

SCALE: 1" = 50′ **PD-3**

REVISED BY	DATE REVISED

DIANNE EDWARDS

CALCULATED-DESIGNED BY

CHECKED BY

FUNCTIONAL SUPERVISOR
Dennis P. McBride

STATE OF CALIFORNIA - DEPARTMENT OF TRANSPORTATION
Caltrans
DESIGN

P:\proj1\01\48050\drafting\sheets\148050na003.dgn

LAST REVISION 00-00-00
DATE PLOTTED => 28-JUN-2011
TIME PLOTTED => 15:57

Dist	COUNTY	ROUTE	POST MILES TOTAL PROJECT	SHEET No.	TOTAL SHEETS
01	Lak	20	11.9/12.4	67	120

Dianne M Edwards 5-4-11
REGISTERED CIVIL ENGINEER DATE

6-27-11
PLANS APPROVAL DATE

REGISTERED PROFESSIONAL ENGINEER
D.M. EDWARDS
No. C-51898
Exp. 6-30-12
CIVIL
STATE OF CALIFORNIA

THE STATE OF CALIFORNIA OR ITS OFFICERS OR AGENTS SHALL NOT BE RESPONSIBLE FOR THE ACCURACY OR COMPLETENESS OF SCANNED COPIES OF THIS PLAN SHEET.

LEGEND:

XX = PAVEMENT MARKING DETAIL NUMBER

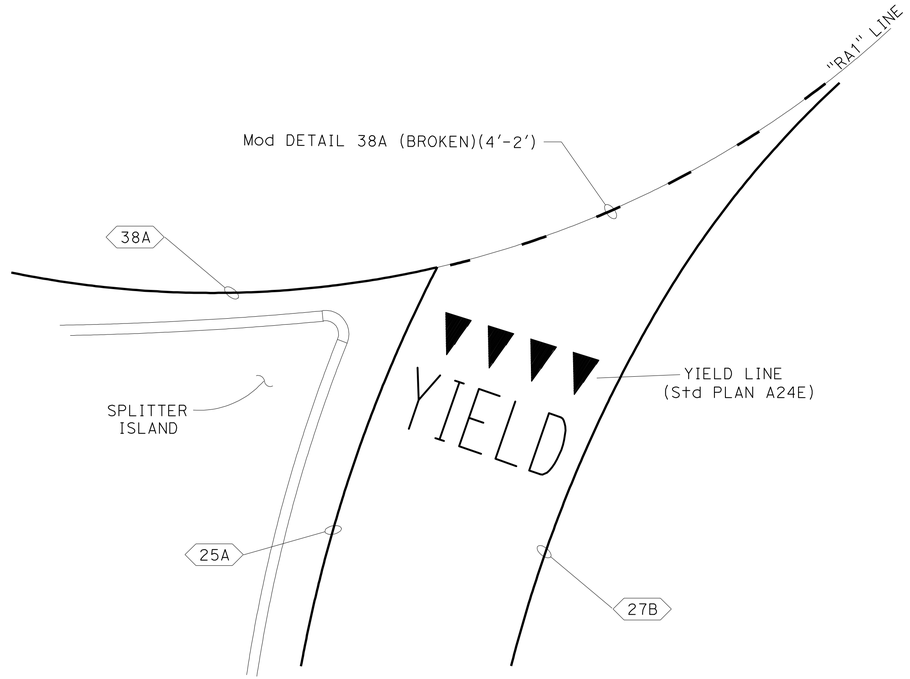

YIELD LINE AND DETAIL 38A

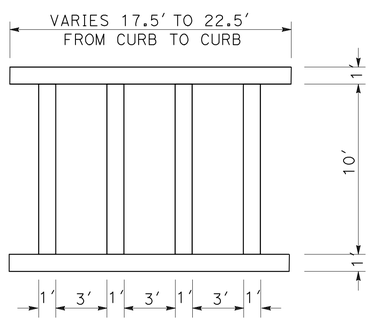

LADDER STYLE CROSSWALK

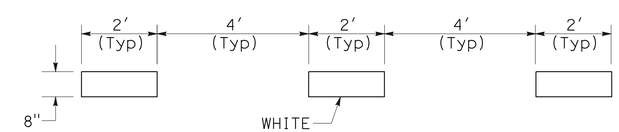

MODIFIED 38A DETAIL

PAVEMENT DELINEATION DETAILS

NO SCALE

PDD-1

REVISED BY	DATE REVISED

DIANNE EDWARDS

CALCULATED-DESIGNED BY

CHECKED BY

FUNCTIONAL SUPERVISOR

Dennis P. McBride

STATE OF CALIFORNIA - DEPARTMENT OF TRANSPORTATION

Caltrans®

DESIGN

P:\proj1\01\48050\drafting\sheets\148050nb001.dgn

LAST REVISION 00-00-00

DATE PLOTTED => 28-JUN-2011
TIME PLOTTED => 15:57

Dist	COUNTY	ROUTE	POST MILES TOTAL PROJECT	SHEET No.	TOTAL SHEETS
01	Lak	20	11.9/12.4	68	120

Dianne M Edwards 5-4-11
REGISTERED CIVIL ENGINEER DATE

6-27-11
PLANS APPROVAL DATE

REGISTERED PROFESSIONAL ENGINEER
D.M. EDWARDS
No. C-51898
Exp. 6-30-12
CIVIL
STATE OF CALIFORNIA

THE STATE OF CALIFORNIA OR ITS OFFICERS OR AGENTS SHALL NOT BE RESPONSIBLE FOR THE ACCURACY OR COMPLETENESS OF SCANNED COPIES OF THIS PLAN SHEET.

THERMOPLASTIC TRAFFIC STRIPE AND PAVEMENT MARKERS

STAGE	LOCATION FROM			LOCATION TO			DETAIL NUMBER	THERMOPLASTIC TRAFFIC STRIPE LENGTH	4" WHITE	4" YELLOW	8" WHITE	8" WHITE (BROKEN 4'-2')	PAVEMENT MARKER (RETROREFLECTIVE) TYPE D (YELLOW) (2-WAY)	TYPE H (YELLOW) (1-WAY)
								LF	LF	LF	LF	LF	EA	EA
1	"SR20W1"	98+35	Med	"SR20W1"	100+84.5	Med	22	249.2		498.5			44	
1	"SR20W1"	98+35	L+	"SPLTR4"	108+42.5	L+	27B	1005.5	1005.5					
1	"SR20W1"	98+35	R+	"SPLTR3"	108+39.7	R+	27B	998.4	998.4					
1	"SR20W1"	100+84.5	Med	"SR20W1"	105+18.4	Med	29	434.4		1737.6			76	
1	"SR20W1"	105+18.4	Med (L+)	"SPLTR4"	108+42.5	Med (L+)	25A	323.3		323.3				28
1	"SR20W1"	105+18.4	Med (R+)	"SPLTR3"	108+39.7	Med (R+)	25A	321.8		321.8				28
1	"SPLTR4"	108+53.6	Med (L+)	"SPLTR4"	108+84.3	Med (L+)	25A	30.7		30.7				4
1	"SPLTR3"	108+51.1	Med (R+)	"SPLTR3"	108+76.2	Med (R+)	25A	25.4		25.4				4
1	"LC1"	125+00	Med	"LC1"	2+36.5	Med	29	111.6		446.6			22	
1	"LC1"	125+00	L+	"SPLTR2"	7+18.6	L+	27B	588.2	588.2					
1	"LC1"	125+00	R+	"SPLTR1"	2+95.1	R+	27B	170.1	170.1					
1	"LC1"	3+73.6	R+	"LC1"	4+49	R+	27B	78.5	78.5					
1	"LC1"	5+28.1	R+	"LC1"	7+13.7	R+	27B	190.0	190.0					
1	"LC1"	2+36.5	Med	"LC1"	5+10.6	Med	32	272.5		681.3			31	
1	"LC1"	5+10.6	Med	"LC1"	5+63.2	Med	29	53.5		213.8			12	
1	"LC1"	5+63.2	Med (L+)	"SPLTR2"	7+19.7	Med (L+)	25A	156.2		156.2				15
1	"LC1"	5+63.2	Med (R+)	"SPLTR1"	7+18.3	Med (R+)	25A	154.3		154.3				14
1	"SPLTR2"	7+29.7	Med (L+)	"SPLTR2"	7+61.2	Med (L+)	25A	31.5		31.5				4
1	"SPLTR1"	7+28.3	Med (R+)	"SPLTR1"	7+55.9	Med (R+)	25A	27.6		27.6				4
1	"SPLTR2"	7+28.5	L+	"SPLTR3"	108+51.1	R+	27B	133.1	133.1					
1	"RA1"	101+48	R+	"RA1"	101+93.2	R+	38A	45.1			45.1			
1	"RA1"	102+82.9	R+	"RA1"	103+23.8	R+	38A	41.8			41.8			
1	"RA1"	101+93.2	Med (R+)	"RA1"	102+24.2	R+	38A MODIFIED	29.0				29.0		
1	"RA1"	103+25.8	Med (R+)	"RA1"	103+58.8	R+	38A MODIFIED	27.5				27.5		
1	"RA1"	100+00	R+	"RA1"	104+71.2	R+	24	351.9		351.9				
5	"SPLTR6"	+65.3	Med (R+)	"SPLTR6"	+95.1	Med (R+)	25A	27.2		27.2				4
5	"SPLTR6"	1+05.1	Med (R+)	"SR20E1"	4+30.1	Med (R+)	25A	324.2		324.2				29
5	"SPLTR7"	+71.7	Med (L+)	"SPLTR7"	+99.3	Med (L+)	25A	27.8		27.8				4
5	"SPLTR7"	1+09.4	Med (L+)	"SPLTR7"	1+21.5	Med (L+)	25A	12.0		12.0				2
5	"SPLTR7"	1+09.5	L+	"PR1"	3+50	L+	27B	234.8	234.8					
5	"PR1"	1+23.2	Med	"PR1"	3+19.4	Med	25A	196.2		392.4			40	
5	"PR1"	2+44.4	Med	"PR1"	3+50.0	Med	22	106.6		113.2			65	
5	"SPLTR4"	108+53.6	L+	"SPLTR7"	+99.4	L+	27B	124.7	124.7					
5	"SPLTR1"	7+28.3	R+	"SPLTR6"	+95.1	R+	27B	116.9	116.9					
5	"SPLTR5"	+71.1	Med (L+)	"SPLTR5"	+99.4	Med (L+)	25A	25.7		25.7				4
5	"SPLTR5"	1+09.4	Med (L+)	"SR20E1"	4+30.2	Med (L+)	25A	320.5		320.5				28
5	"SPLTR5"	1+09.4	L+	"SR20E1"	9+50.0	L+	27B	836.8	836.8					
5	"SPLTR6"	1+05.1	R+	"SR20E1"	7+62.5	R+	27B	650.8	650.8					
5	"SR20E1"	4+30.1	Med	"SR20E1"	6+25.	Med	29	194.8		779.1			36	
5	"SPLTR8"	+69.2	Med (R+)	"SPLTR8"	+99.5	Med (R+)	25A	30.3		30.3				4
5	"SPLTR8"	1+09.5	Med (R+)	"SPLTR8"	1+22.5	Med (R+)	25A	12.6		12.6				3
5	"SPLTR8"	1+09.5	R+	"PR1"	3+50	R+	27B	239.0	239.0					
5	"SPLTR8"	+99.5	R+	"SPLTR5"	+99.4	L+	27B	100.0	100.0					
5	"RA1"	100+33.4	R+	"RA1"	100+68.1	R+	38A	33.5			33.5			
5	"RA1"	104+01.4	R+	"RA1"	104+44.4	R+	38A	43.1			43.1			
5	"RA1"	100+68.1	Med (L+)	"RA1"	100+96	R+	38A MODIFIED	24.1				24.1		
5	"RA1"	104+44.4	Med (L+)	"RA1"	104+95.1	R+	38A MODIFIED	33.5				33.5		
							SUB-TOTAL		5466.8	7065.5		114.1	326	179
							TOTAL		12480.3		163.5	114.1	505	

PAVEMENT DELINEATION QUANTITIES
PDQ-1

REVISED BY | DATE REVISED
DIANNE EDWARDS
CALCULATED-DESIGNED BY | CHECKED BY
FUNCTIONAL SUPERVISOR
Dennis P. McBride
STATE OF CALIFORNIA - DEPARTMENT OF TRANSPORTATION
Caltrans
DESIGN

P:\proj1\01\48050\drafting\sheets\148050nc001.dgn

LAST REVISION 00-00-00 | DATE PLOTTED => 28-JUN-2011 | TIME PLOTTED => 15:57

Dist	COUNTY	ROUTE	POST MILES TOTAL PROJECT	SHEET No.	TOTAL SHEETS
01	Lak	20	11.9/12.4	69	120

Dianne M Edwards 5-4-11
REGISTERED CIVIL ENGINEER DATE

6-27-11
PLANS APPROVAL DATE

REGISTERED PROFESSIONAL ENGINEER
D.M. EDWARDS
No. C-51898
Exp. 6-30-12
CIVIL
STATE OF CALIFORNIA

THE STATE OF CALIFORNIA OR ITS OFFICERS OR AGENTS SHALL NOT BE RESPONSIBLE FOR THE ACCURACY OR COMPLETENESS OF SCANNED COPIES OF THIS PLAN SHEET.

THERMOPLASTIC PAVEMENT MARKING

STAGE	LOCATION		THERMOPLASTIC PAVEMENT MARKING	
				SQFT
1	SPLTR4 108+48.0	L†	CROSSWALK LADDER	75.4
1	SPLTR3 108+46.0	R†	CROSSWALK LADDER	95.6
1	SPLTR3 108+69.0	R†	"YIELD"	24.0
1	SPLTR3 108+74.0	R†	YIELD LINE	12.0
1	"LCDRWY5" 20+23		LIMIT LINE	12.0
1	"LCDRWY6" 30+27		LIMIT LINE	12.0
1	SPLTR2 7+25.0	L†	CROSSWALK LADDER	78.4
1	SPLTR1 7+23.0	R†	CROSSWALK LADDER	84.6
1	SPLTR1 7+45.0	R†	"YIELD"	24.0
1	SPLTR1 7+50.0	R†	YIELD LINE	12.0
5	SPLTR7 0+76.0	R†	YIELD LINE	12.0
5	SPLTR7 0+81.0	R†	"YIELD"	24.0
5	SPLTR7 1+05.0	L†	CROSSWALK LADDER	77.6
5	SPLTR6 1+00.0	R†	CROSSWALK LADDER	78.2
5	SPLTR5 0+67.0	L†	YIELD LINE	12.0
5	SPLTR5 0+81.0	L†	"YIELD"	24.0
5	SPLTR5 1+04.0	L†	CROSSWALK LADDER	95.8
5	SPLTR8 1+05.0	R†	CROSSWALK LADDER	78.8
	BUS STOP		LIMIT LINE	13.0
			TOTAL	845.4

DELINEATORS AND OBJECT MARKERS

STATION	L†/R† Med	OFFSET	DETAIL NUMBER OR PAVEMENT MARKING	DELINEATORS (CLASS 1)	OBJECT MARKERS
				EA	EA
SR20W1 99+20	L†	23.0	DELINEATOR (CLASS 1)	1	
SR20W1 101+00	L†	23.0	DELINEATOR (CLASS 1)	1	
SR20W1 101+90	L†	23.0	DELINEATOR (CLASS 1)	1	
SR20W1 102+80	L†	23.0	DELINEATOR (CLASS 1)	1	
SR20W1 103+70	L†	23.0	DELINEATOR (CLASS 1)	1	
SR20W1 104+60	R†	23.0	DELINEATOR (CLASS 1)	1	
SR20W1 105+00	R†	23.0	DELINEATOR (CLASS 1)	1	
SPLTR4 105+20	L†	3.4	OBJECT MARKER (TYPE K-1 (CA))		1
SPLTR3 105+40	R†	23.0	DELINEATOR (CLASS 1)	1	
SPLTR3 105+80	R†	23.0	DELINEATOR (CLASS 1)	1	
SPLTR3 106+20	R†	23.0	DELINEATOR (CLASS 1)	1	
SPLTR3 106+60	R†	23.0	DELINEATOR (CLASS 1)	1	
SPLTR3 107+00	R†	23.0	DELINEATOR (CLASS 1)	1	
SR20E1 3+00	L†	23.0	DELINEATOR (CLASS 1)	1	
SR20E1 3+75	L†	23.0	DELINEATOR (CLASS 1)	1	
SR20E1 4+28	R†	2.2	OBJECT MARKER (TYPE K-1 (CA))		1
SR20E1 4+50	L†	23.0	DELINEATOR (CLASS 1)	1	
SR20E1 6+00	L†	23.0	DELINEATOR (CLASS 1)	1	
SR20E1 7+50	L†	23.0	DELINEATOR (CLASS 1)	1	
LC1 1+50	R†	23.0	DELINEATOR (CLASS 1)	1	
LC1 3+00	R†	23.0	DELINEATOR (CLASS 1)	1	
LC1 3+75	R†	23.0	DELINEATOR (CLASS 1)	1	
LC1 4+50	R†	23.0	DELINEATOR (CLASS 1)	1	
LC1 5+25	R†	23.0	DELINEATOR (CLASS 1)	1	
LC1 5+65	L†	1.6	OBJECT MARKER (TYPE K-1 (CA))		1
SPLTR7 1+21	R†	2.0	OBJECT MARKER (TYPE K-1 (CA))		1
PR1 2+75	R†	23.0	DELINEATOR (CLASS 1)	1	
PR1 3+15	R†	23.0	DELINEATOR (CLASS 1)	1	
PR1 3+55	R†	23.0	DELINEATOR (CLASS 1)	1	
			TOTAL	25	4

PAVEMENT DELINEATION QUANTITIES
PDQ-2

REVISED BY | DATE REVISED
DIANNE EDWARDS
CALCULATED-DESIGNED BY | CHECKED BY
FUNCTIONAL SUPERVISOR
Dennis P. McBride

STATE OF CALIFORNIA - DEPARTMENT OF TRANSPORTATION
Caltrans
DESIGN

P:\proj1\01\48050\drafting\sheets\148050nc002.dgn

LAST REVISION 00-00-00 | DATE PLOTTED => 28-JUN-2011 | TIME PLOTTED => 15:57

Dist	COUNTY	ROUTE	POST MILES TOTAL PROJECT	SHEET No.	TOTAL SHEETS
01	Lak	20	11.9/12.4	70	120

Dianne M Edwards 5-4-11
REGISTERED CIVIL ENGINEER DATE

6-27-11
PLANS APPROVAL DATE

REGISTERED PROFESSIONAL ENGINEER
D.M. EDWARDS
No. C-51898
Exp. 6-30-12
CIVIL
STATE OF CALIFORNIA

THE STATE OF CALIFORNIA OR ITS OFFICERS OR AGENTS SHALL NOT BE RESPONSIBLE FOR THE ACCURACY OR COMPLETENESS OF SCANNED COPIES OF THIS PLAN SHEET.

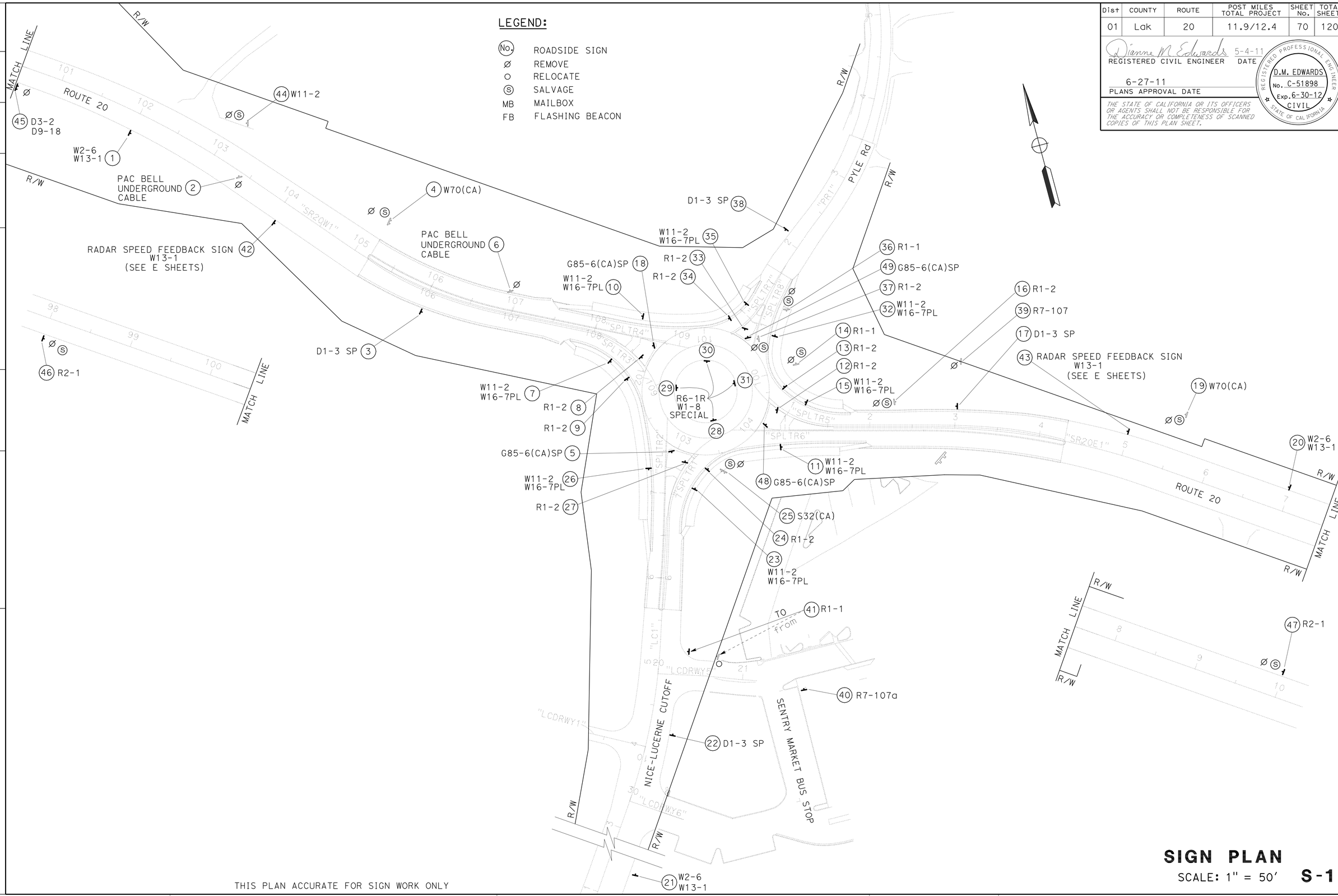

THIS PLAN ACCURATE FOR SIGN WORK ONLY

SIGN PLAN

SCALE: 1" = 50'

S-1

REVISED BY	DATE REVISED

DIANNE EDWARDS

CALCULATED-DESIGNED BY

CHECKED BY

FUNCTIONAL SUPERVISOR: Dennis P. McBride

STATE OF CALIFORNIA - DEPARTMENT OF TRANSPORTATION

Caltrans

DESIGN

P:\proj1\01\48050\drafting\sheets\148050oa001.dgn

LAST REVISION 00-00-00

DATE PLOTTED => 28-JUN-2011
TIME PLOTTED => 15:57

BORDER LAST REVISED 7/2/2010

USERNAME => trmikesl
DGN FILE => 148050oa001.dgn

RELATIVE BORDER SCALE IS IN INCHES 0 1 2 3

UNIT 0312

PROJECT NUMBER & PHASE 01000003781

Dist	COUNTY	ROUTE	POST MILES TOTAL PROJECT	SHEET No.	TOTAL SHEETS
01	Lak	20	11.9/12.4	71	120

Dianne M Edwards 5-4-11
REGISTERED CIVIL ENGINEER DATE

6-27-11
PLANS APPROVAL DATE

REGISTERED PROFESSIONAL ENGINEER
D.M. EDWARDS
No. C-51898
Exp. 6-30-12
CIVIL
STATE OF CALIFORNIA

THE STATE OF CALIFORNIA OR ITS OFFICERS OR AGENTS SHALL NOT BE RESPONSIBLE FOR THE ACCURACY OR COMPLETENESS OF SCANNED COPIES OF THIS PLAN SHEET.

NOTE:

SEE ELECTRICAL SHEETS FOR RADAR FEEDBACK SIGN DETAILS.

ROADSIDE SIGN SUMMARY

STAGE NUMBER	SIGN NUMBER	SIGN CODE (CA MUTCD)	SIGN MESSAGE	LOCATION	R+/L+/Med	ORIENTATION	PANEL SIZE Horiz x Vert in. x in.	POST SIZE in. x in.	WEED CONTROL MAT (FIBER) SQYD	ROADSIDE SIGN 1-POST EA	ROADSIDE SIGN 2-POST EA	REMOVE ROADSIDE SIGN EA	RELOCATE ROADSIDE SIGN EA	SALVAGE SIGN PANEL (N) EA	RADAR FEEDBACK SIGN EA
1	1	W2-6	ROUNDABOUT SYMBOL	"SR20W1" 102+00	R+	FEBT	30 x 30	4 x 6	2.17	1					
		W13-1	15 MPH				30 x 30								
1	2		PAC BELL UNDERGROUND CABLE	"SR20W1" 103+39	R+	FEBT						1			
1	3	D1-3 SPECIAL	DIRECTIONAL INFORMATION HOSPITAL	"SR20W1" 106+00	R+	FEBT	96 x 60	6 x 6	4.00		1				
1	5	G85-6(CA)SP	NICE-LUCERNE CUTOFF	"SPLTR2" 7+47	R+	FSBT	60 x 36	4 x 6		1					
1	6		PAC BELL UNDERGROUND CABLE	"SPLTR4" 106+92	L+	FEBT						1			
1	7	W11-2	PED X-ING	"SPLTR3" 108+35	R+	FEBT	30 x 30	4 x 6		1					
		W16-7PL	ARROW				24 x 12								
1	8	R1-2	YIELD	"SPLTR3" 108+64	Med	FEBT	36 x 36	4 x 6		1					
1	9	R1-2	YIELD	"SPLTR3" 108+67	R+	FEBT	36 x 36	4 x 6		1					
1	10	W11-2	PED X-ING	"SPLTR4" 108+53	L+	FWBT	30 x 30	4 x 6		1					
		W16-7PL	ARROW				24 x 12								
1	18	G85-6(CA)SP	20 WEST	"SPLTR4" 108+70	R+	FWBT	60 x 36	4 x 6		1					
1	21	W2-6	ROUNDABOUT SYMBOL	"LC1" 1+34	R+	FNBT	30 x 30	4 x 6	2.17	1					
		W13-1	15 MPH				30 x 30								
1	22	D1-3 SPECIAL	DIRECTIONAL INFORMATION	"LC1" 4+19	R+	FNBT	96 x 60	6 x 6	4.00		1				
1	23	W11-2	PED X-ING	"SPLTR1" 7+14	R+	FNBT	30 x 30	4 x 6		1					
		W16-7PL	ARROW				24 x 12								
1	24	R1-2	YIELD	"SPLTR1" 7+40	R+	FNBT	36 x 36	4 x 6		1					
1	25	S32 (CA)	ADOPT A HIGHWAY	"SPLTR1" 7+66	R+	FSBT						1		1	
1	26	W11-2	PED X-ING	"SPLTR2" 7+29	L+	FSBT	30 x 30	4 x 6		1					
		W16-7PL	ARROW				24 x 12								
1	27	R1-2	YIELD	"SPLTR1" 7+40	Med	FNBT	36 x 36	4 x 6		1					
1	28	W1-8 SPECIAL	TRIPLE CHEVRON SYMBOL	"RA1" 103+46	L+	FNBT	36 x 12	4 x 4		1					
		R6-1R	ONE WAY -->				36 x 12								
1	29	W1-8 SPECIAL	TRIPLE CHEVRON SYMBOL	"RA1" 102+14	L+	FEBT	36 x 12	4 x 4		1					
		R6-1R	ONE WAY -->				36 x 12								
1	30	W1-8 SPECIAL	TRIPLE CHEVRON SYMBOL	"RA1" 100+85	L+	FSBT	36 x 12	4 x 4		1					
		R6-1R	ONE WAY -->				36 x 12								
1	31	W1-8 SPECIAL	TRIPLE CHEVRON SYMBOL	"RA1" 100+01	L+	FWBT	36 x 12	4 x 4		1					
		R6-1R	ONE WAY -->				36 x 12								
1	38	D1-3 SPECIAL	DIRECTIONAL INFORMATION	"PR1" 2+11	L+	FSBT	96 x 60	6 x 6	4.00		1				
1	41	R1-1	STOP	"LC1" 5+12	R+	FWBT		4 x 6					1		
1	42	W13-1	RADAR SPEED FEEDBACK SIGN 15 MPH	"SR20W1" 104+00	R+	FEBT	30 x 30	4 x 6	2.17						1
1	43	W13-1	RADAR SPEED FEEDBACK SIGN 15 MPH	"SR20E1" 5+00	L+	FWBT	30 x 30	4 x 6	2.17						1
1	44	W11-2	PED X-ING	"SR20W1" 103+14	L+	FWBT						1		1	
1	46	R2-1	SPEED LIMIT 50	"SR20W1" 98+00	R+	FEBT						1		1	
1	47	R2-1	SPEED LIMIT 50	"SR20E1" 10+00	L+	FWBT						1		1	
						(THIS SHEET) SUB-TOTAL				16	3	6	1	4	2

SIGN QUANTITIES
SQ-1

REVISED BY | DATE REVISED
DIANNE EDWARDS | CALCULATED-DESIGNED BY | CHECKED BY
FUNCTIONAL SUPERVISOR: Dennis P. McBride
STATE OF CALIFORNIA - DEPARTMENT OF TRANSPORTATION
Caltrans® DESIGN
P:\proj1\01\48050\drafting\sheets\148050oc001.dgn

LAST REVISION 00-00-00 | DATE PLOTTED => 28-JUN-2011 | TIME PLOTTED => 15:57

Dist	COUNTY	ROUTE	POST MILES TOTAL PROJECT	SHEET No.	TOTAL SHEETS
01	Lak	20	11.9/12.4	72	120

Dianne M Edwards 5-4-11
REGISTERED CIVIL ENGINEER DATE

6-27-11
PLANS APPROVAL DATE

REGISTERED PROFESSIONAL ENGINEER
D.M. EDWARDS
No. C-51898
Exp. 6-30-12
CIVIL
STATE OF CALIFORNIA

THE STATE OF CALIFORNIA OR ITS OFFICERS OR AGENTS SHALL NOT BE RESPONSIBLE FOR THE ACCURACY OR COMPLETENESS OF SCANNED COPIES OF THIS PLAN SHEET.

ROADSIDE SIGN SUMMARY (CONTINUED)

STAGE NUMBER	SIGN NUMBER	SIGN CODE (CA MUTCD)	SIGN MESSAGE	LOCATION	R+/L+/Med	ORIENTATION	PANEL SIZE Horiz x Vert	POST SIZE	WEED CONTROL MAT (FIBER)	ROADSIDE SIGN 1-POST	ROADSIDE SIGN 2-POST	REMOVE ROADSIDE SIGN	RELOCATE ROADSIDE SIGN	SALVAGE SIGN PANEL (N)	RADAR FEEDBACK SIGN
							in. x in.	in. x in.	SQYD	EA	EA	EA	EA	EA	EA
2	4	W70 (CA)	CROSS TRAFFIC AHEAD (WITH 2 FLASHING BEACONS)	"SR20W1" 105+17	L+	FEBT						1		1	
2	11	W11-2 W16-7PL	PED X-ING ARROW	"SPLTR6" 0+94	R+	FEBT	30 x 30 24 x 12	4 x 6		1					
2	12	R1-2	YIELD	"SPLTR5" 0+90	Med	FWBT	36 x 36			1					
2	14	R1-1	STOP	"A" 507+93	R+	FNBT	30 x 30					1		1	
2	16	R1-2	YIELD	"SR20E1" 2+29	L+	FEBT	36 x 36					1		1	
2	32	W11-2 W16-7PL	PED X-ING ARROW	"SPLTR8" 1+00	R+	FNBT	30 x 30 24 x 12	4 x 6		1					
2	33	R1-2	YIELD	"SPLTR7" 0+91	Med	FSBT	36 x 36			1					
2	34	R1-2	YIELD	"SPLTR7" 0+80	L+	FSBT	36 x 36			1					
2	35	W11-2 W16-7PL	PED X-ING ARROW	"SPLTR7" 1+12	L+	FSBT	30 x 30 24 x 12	4 x 6		1					
2	45	D3-2 D9-18	DIRECTIONAL INFORMATION HOSPITAL									1			
2	48	G85-6(CA)SP	20 EAST	"SPLTR6" 0+80	L+	FEBT	60 x 36	4 x 6		1					
3	13	R1-2	YIELD	"SPLTR5" 0+90	L+	FWBT	36 x 36			1					
3	15	W11-2 W16-7PL	PED X-ING ARROW	"SPLTR5" 1+09	L+	FWBT	30 x 30 24 x 12	4 x 6		1					
3	20	W2-6 W13-1	ROUNDABOUT SYMBOL 15 MPH	"SR20E1" 7+00	L+	FWBT	30 x 30 30 x 30	4 x 6	2.17	1					
3	37	R1-2	YIELD	"SPLTR8" 0+81	L+	FWBT						1		1	
4	17	D1-3 SPECIAL	DIRECTIONAL INFORMATION HOSPITAL	"SR20E1" 3+00	L+	FWBT	96 x 60	6 x 6	4.00		1				
4	19	W70 (CA)	CROSS TRAFFIC AHEAD (WITH 2 FLASHING BEACONS)	"SR20E1" 5+57	L+	FWBT						1		1	
4	36	R1-1	STOP	"SPLTR8" 1+28	R+	FSBT						1		1	
4	49	G85-6(CA)SP	PYLE RD	"SPLTR8" 0+80	L+	FNBT	60 x 36	4 x 6		1					
	39	R7-107	BUS STOP	"SR20E1" 3+07	L+							1			
	40	R7-107a	NO PARKING - BUS STOP	"LC1" 4+87	R+		24 x 30	4 x 6		1					
(THIS SHEET) SUB-TOTAL									6.17	12	1	8		6	
(FROM SQ-1) SUB-TOTAL									20.68	16	3	6	1	4	2
TOTAL									26.85	28	4	14	1	10	2

SIGN QUANTITIES
SQ-2

REVISED BY | DATE REVISED
DIANNE EDWARDS
CALCULATED-DESIGNED BY | CHECKED BY
FUNCTIONAL SUPERVISOR
Dennis P. McBride
STATE OF CALIFORNIA - DEPARTMENT OF TRANSPORTATION
Caltrans
DESIGN
P:\proj1\01\48050\drafting\sheets\148050oc002.dgn

LAST REVISION 00-00-00 | DATE PLOTTED => 28-JUN-2011 | TIME PLOTTED => 15:57

Dist	COUNTY	ROUTE	POST MILES TOTAL PROJECT	SHEET No.	TOTAL SHEETS
01	Lak	20	11.9/12.4	73	120

Dianne M Edwards 5-4-11
REGISTERED CIVIL ENGINEER DATE

6-27-11
PLANS APPROVAL DATE

REGISTERED PROFESSIONAL ENGINEER D.M. EDWARDS No. C-51898 Exp. 6-30-12 CIVIL STATE OF CALIFORNIA

THE STATE OF CALIFORNIA OR ITS OFFICERS OR AGENTS SHALL NOT BE RESPONSIBLE FOR THE ACCURACY OR COMPLETENESS OF SCANNED COPIES OF THIS PLAN SHEET.

MINOR CONCRETE (CURB AND GUTTER)

FROM	OFFSET TO FACE OF CURB	TO	OFFSET TO FACE OF CURB	LT/RT	LENGTH	MODIFIED TYPE A2-6	MODIFIED TYPE B2-4	CLASS 2 AB
	LF		LF		LF	CY	CY	CY
"SR20W1" 105+18.7	26.3	"SPLTR4" 107+22.4	21.0	Lt	196.1	11.4		19.1
"SPLTR4" 107+53.2	15.0	"SPLTR4" 108+42.3	15.3	Lt	89.3	5.2		8.7
"SPLTR4" 108+52.3	15.8	"SPLTR4" 109+00.7	22.9	Lt	48.9	2.8		4.8
"SPLTR4" 109+00.7	22.9	"SPLTR7" 0+70.5	20.5	Lt	48.2		2.6	4.7
"SPLTR7" 0+70.5	20.5	"SPLTR7" 1+00.2	16.9	Lt	24.4	1.4		2.4
"SPLTR7" 1+12.3	16.4	"SPLTR7" 1+45.2	16.0	Lt	29.2	1.7		2.8
"SPLTR8" 0+71.6	17.9	"SPLTR8" 1+00.4	16.3	Rt	26.3	1.5		2.6
"SPLTR8" 1+11.2	15.8	"SPLTR8" 1+64.6	15.0	Rt	51.7	3.0		5.0
"SR20W1" 105+18.7	23.5	"SR20W1" 107+43.0	20.7	Rt	232.0	13.5		22.6
"SR20W1" 107+74.1	17.5	"SPLTR3" 108+37.2	20.4	Rt	55.6	3.2		5.4
"SPLTR3" 108+49.4	21.3	"SPLTR3" 109+90.0	23.3	Rt	32.6	1.9		3.2
"LC1" 5+54.0	20.9	"SPLTR2" 6+00.7	17.0	Lt	47.1	2.7		4.6
"SPLTR2" 6+31.0	15.0	"SPLTR2" 7+18.4	16.6	Lt	87.3	5.1		8.5
"SPLTR2" 7+28.4	17.5	"SPLTR2" 7+77.4	24.9	Lt	49.7	2.9		4.8
"SPLTR2" 7+77.4	24.9	"SPLTR3" 108+92.0	23.7	Rt	49.3		2.7	4.8
"LC1" 5+54.0	22.6	"LC1" 6+45.2	21.0	Rt	91.2	5.3		8.9
"LC1" 6+53.4	17.8	"SPLTR1" 7+15.1	19.9	Rt	56.4	3.3		5.5
"SPLTR1" 7+27.3	20.7	"SPLTR1" 7+62.6	22.3	Rt	28.5	1.7		2.8
"SPLTR1" 7+62.6	22.3	"SPLTR6" 0+49.4	22.8	Rt	39.4		0.8	3.8
"SPLTR6" 0+49.4	22.8	"SPLTR6" 0+96.1	17.4	Rt	47.0	2.7		4.6
"SPLTR6" 1+06.1	16.6	"SR20E1" 1+96.0	17.5	Rt	90.1	5.2		8.8
"SR20E1" 2+02.7	23.5	"SR20E1" 2+79.4	23.6	Rt	76.2	4.4		7.4
"SR20E1" 3+03.1	23.9	"SR20E1" 4+30.0	24.7	Rt	123.7	7.2		12.0
"SPLTR8" 0+71.6	17.9	"SPLTR5" 0+71.4	22.9	Lt	46.7		2.5	4.5
"SPLTR5" 0+71.4	22.9	"SPLTR5" 1+00.8	21.2	Lt	23.8	1.4		2.3
"SR20E1" 1+13.0	20.4	"SR20E1" 1+77.4	17.5	Lt	57.3	3.3		5.6
"SR20E1" 1+85.6	18.5	"SR20E1" 4+30.5	25.2	Lt	249.1	14.5		24.2
					SUB-TOTAL	105.3	8.6	194.1
					TOTAL	113.9		*

* SEE ROADWAY QUANTITIES FOR TOTAL

SHOULDER BACKING

FROM	TO	Rt/Lt	IMPORTED MATERIAL (SHOULDER BACKING)
			TON
"SR20W1" 98+35.0	"SR20W1" 99+62.5	Lt	5.7
"SR20W1" 98+35.0	"SR20W1" 99+62.5	Rt	5.7
"SR20W1" 99+62.5	"SR20W1" 103+84.5	Lt	19.0
"SR20E1" 4+30.0	"SR20E1" 7+62.5	Lt	15.0
"SR20E1" 4+30.0	"SR20E1" 7+62.5	Rt	15.0
"LC1" 1+25.0	"LC1" 2+50.0	Lt	5.6
"LC1" 1+25.0	"LC1" 2+50.0	Rt	5.6
		TOTAL	71.6

SIDEWALK AND SLOPE PAVING

STAGE	LOCATION	FROM	Rt/Lt	TO	Rt/Lt	MINOR CONCRETE (SIDEWALK)	CLASS 2 AB	SLOPE PAVING (CONCRETE)
						CY		
1	SIDEWALK "SW2"	"SR20W1" 107+66.0	Rt	"SPLTR2" 6+00.7	Lt	33.1	33.1	
1	CENTRAL ISLAND	"RA1" 100+00.0	Lt	"RA1" 104+71.2	Lt			8.2
2	SIDEWALK "SW1"	"LC1" 6+45.2	Rt	"SR20E1" 2+02.7	Rt	30.7	30.7	
2	SIDEWALK "SW3"	"SPLTR4" 107+45.4	Lt	"SPLTR7" 1+51.7	Lt	27.9	27.9	
4	SIDEWALK "SW4"	"SR20E1" 1+85.6	Lt	"PR1" 1+75.5	Rt	23.8	23.8	
	BUS STOP					11.2	14.0	
					TOTAL	126.7	129.5 *	8.2

NOTE: MINOR CONCRETE (SIDEWALK) INCLUDES ALL CONCRETE FOR CURB RAMPS AND RETAINING CURBS.

* SEE ROADWAY QUANTITIES FOR TOTAL

MISCELLANEOUS ITEMS

STAGE	FROM	Lt/Rt/Med	TO	Lt/Rt/Med	LENGTH	REMOVE FENCE	TEMPORARY FENCE (TYPE BW)	FENCE (TYPE BW, METAL POST)	REPLACE MAILBOX	REMOVE GATE	REMOVE LIGHTING STANDARD (N)	SALVAGE LIGHTING STANDARD (N)	REMOVE CONCRETE CURB
					LF	LF	LF	LF	EA	EA	EA	EA	LF
1	"A" 506+52	Rt										1	
1	"SR20W1" 107+64.2	Rt	"LC1" 3+79.1	Lt	1039		1039						
1	"SR20W1" 102+26.4	Rt	"SR20W1" 107+64.2	Rt	572			572					
1	"LC1" 2+18.6	Lt	"LC1" 3+79.1	Lt	158			158					
1	"LC1" 5+95	Lt								1			
1	"SR20W1" 102+26.4	Rt	"LC1" 2+18.6	Lt	1713	1713							
1	"SPLTR4" 108+53.3	Lt	"PR1" 3+95.9	Lt	353	353							
2	"SPLTR7" 1+48	Lt										1	
3	"SR20E1" 1+73	Lt										1	
4	"SR20W1" 107+64.2	Rt	"LC1" 3+79.1	Lt	475			475					
	"SR20W1" 102+63	Rt	"SR20W1" 102+36	Lt					1				
	"SR20E1" 3+56	Rt	"SR20E1" 4+80	Rt					1				
	"B" 610+47	Rt									1		
	"A" 508+47	Rt									1		
	BUS STOP												55
	SENTRY MARKET PARKING LOT ISLANDS												376
					TOTAL	2066	1039	1205	2	1	2	3	431

(N) - NOT A SEPARATE PAY ITEM, FOR INFORMATION ONLY.

ROCK BLANKET

LOCATION	ROCK BLANKET
	SQYD
WEST SPLITTER ISLAND	186
SOUTH SPLITTER ISLAND	117
EAST SPLITTER ISLAND	186
NORTH SPLITTER ISLAND	35
"SW3" BUFFER ZONE	104
"SW2" BUFFER ZONE	122
"SW1" BUFFER ZONE	115
"SW4" BUFFER ZONE	88
CENTRAL ISLAND	210
TOTAL	1163

SUMMARY OF QUANTITIES
Q-1

REVISED BY | DATE REVISED
DIANNE EDWARDS
CALCULATED-DESIGNED BY | CHECKED BY
FUNCTIONAL SUPERVISOR
Dennis P. McBride

STATE OF CALIFORNIA - DEPARTMENT OF TRANSPORTATION
Caltrans
DESIGN

P:\proj1\01\48050\drafting\sheets\148050pa001.dgn

LAST REVISION 00-00-00 | DATE PLOTTED => 28-JUN-2011 | TIME PLOTTED => 15:57

Dist	COUNTY	ROUTE	POST MILES TOTAL PROJECT	SHEET No.	TOTAL SHEETS
01	Lak	20	11.9/12.4	74	120

Dianne M Edwards 5-4-11
REGISTERED CIVIL ENGINEER DATE

6-27-11
PLANS APPROVAL DATE

REGISTERED PROFESSIONAL ENGINEER D.M. EDWARDS No. C-51898 Exp. 6-30-12 CIVIL STATE OF CALIFORNIA

THE STATE OF CALIFORNIA OR ITS OFFICERS OR AGENTS SHALL NOT BE RESPONSIBLE FOR THE ACCURACY OR COMPLETENESS OF SCANNED COPIES OF THIS PLAN SHEET.

CONSTRUCTION SITE BMPs

LOCATION			TEMPORARY FENCE (TYPE ESA)	TEMPORARY CONSTRUCTION ENTRANCE	TEMPORARY COVER	TEMPORARY DRAINAGE INLET PROTECTION	TEMPORARY HYDRAULIC MULCH	TEMPORARY FIBER ROLL	TEMPORARY CHECK DAM (7' EACH)	TEMPORARY SILT FENCE
FROM	TO	L+/R+	LF	EA	SQYD	EA	SQYD	LF	LF	LF
"SR20W1" 100+00	"SR20W1" 100+20	R+		1						
"SR20W1" 101+00	"SR20E1" 7+50				3375		3300			
"SR20W1" 100+04	"SR20W1" 101+10	L+	210							
"SR20W1" 101+70	"SR20W1" 102+37	R+	67							
"SR20W1" 103+50	"SR20W1" 107+50	L+						400	100	
"SR20W1" 104+00	"SR20W1" 108+00	L+							100	
"SR20W1" 104+00	"SR20W1" 108+00	R+								
"SR20E1" 3+98	"SR20E1" 7+48	L+	381							
"SR20E1" 4+00	"SR20E1" 7+00	L+								300
"SR20E1" 5+27	"SR20E1" 5+84	R+	45							
"SR20E1" 5+35	"SR20E1" 5+85	R+								50
"LC1" 3+58		R+				1				
"LC1" 5+15		R+				1				
"LC1" 5+80	"LC1" 6+00	L+		1						
		TOTAL	702	2	3375	2	3300	400	200	350

MINOR CONCRETE (CURB)

LOCATION		LENGTH	MODIFIED TYPE A1-6	MODIFIED TYPE B1-4	A2-6 SPECIAL APPROACH	A2-6 SPECIAL EXIT	TYPE D-6	TRUCK APRON	CLASS 2 AB
FROM	TO	LF	CY	CY	CY	CY	CY	CY	CY
"SPLTR4" 107+22.4 21.0' L+	"SPLTR4" 107+40.2 23.7' L+	20.2	0.5						0.2
"SPLTR4" 107+42.9 23.1' L+	"SPLTR4" 107+45.4 19.0' L+	5.8					0.4		0.2
"SPLTR4" 108+42.3 15.3' L+	"SPLTR4" 108+42.3 15.3' L+	4.5	0.1						0.1
"SPLTR4" 108+52.3 15.8' L+	"SPLTR4" 108+52.3 20.3' L+	4.5	0.1						0.1
"SPLTR7" 1+00.2 16.9' L+	"SPLTR7" 1+00.2 21.4' L+	4.5	0.1						0.1
"SPLTR7" 1+12.3 16.4' L+	"SPLTR7" 1+12.3 20.9' L+	4.5	0.1						0.1
"SPLTR8" 1+00.4 16.3' R+	"SPLTR8" 1+00.4 20.8' R+	4.5	0.1						0.1
"SPLTR8" 1+11.2 15.8' R+	"SPLTR8" 1+11.2 15.8' R+	4.5	0.1						0.1
"SR20W1" 107+43.0 20.7' R+	"SR20W1" 107+61.3 23.4' R+	19.0	0.5						0.2
"SR20W1" 107+63.3 23.0' R+	"SR20W1" 107+66.0 18.6' R+	5.8					0.4		0.2
"SPLTR3" 108+37.2 20.4' R+	"SPLTR3" 108+37.2 24.9' R+	4.5	0.1						0.1
"SPLTR3" 108+49.4 21.3' R+	"SPLTR3" 108+49.4 25.8' R+	4.5	0.1						0.1
"SPLTR2" 6+00.7 17.0' L+	"SPLTR2" 6+11.9 17.0' L+	11.1	0.3						0.1
"SPLTR2" 7+18.4 16.6' L+	"SPLTR2" 7+18.4 21.1' L+	4.5	0.1						0.1
"SPLTR2" 7+28.4 17.5' L+	"SPLTR2" 7+28.4 22.0' L+	4.5	0.1						0.1
"LC1" 6+45.2 21.0' R+	"LC1" 6+48.7 20.9' R+	3.0	0.1						0.1
"SPLTR1" 7+15.1 19.9' R+	"SPLTR1" 7+15.1 24.4' R+	4.5	0.1						0.1
"SPLTR1" 7+27.3 20.7' R+	"SPLTR1" 7+27.3 25.2' R+	4.5	0.1						0.1
"SPLTR6" 0+96.1 17.4' R+	"SPLTR6" 0+96.1 21.9' R+	4.5	0.1						0.1
"SPLTR6" 1+06.1 16.6' R+	"SPLTR6" 1+06.1 21.1' R+	4.5	0.1						0.1
"SR20E1" 1+90.1 23.5' R+	"SR20E1" 2+02.7 23.5' R+	12.6	0.3						0.1
"SPLTR5" 1+00.8 21.2' L+	"SPLTR5" 1+00.8 25.7' L+	4.5	0.1						0.1
"SPLTR5" 1+13.0 20.4' L+	"SPLTR5" 1+13.0 24.9' L+	4.5	0.1						0.1
"SR20E1" 1+82.2 20.5' L+	"SR20E1" 1+85.6 18.5' L+	3.4	0.1						3.4
"SR20E1" 2+79.4 23.6' R+	"SR20E1" 3+00.0 26.9' R+	20.2	0.5						0.2
"SR20E1" 3+00.0 26.9' R+	"SR20E1" 3+03.1 23.9' R+	4.2					0.3		0.2
"RA1" 100+00.0 20.0' L+	"RA1" 104+71.2 20.0' L+	345.6						22.1	
"RA1" 100+00.0 38.0' L+	"RA1" 104+71.2 38.0' L+	232.5		4.9					2.7
WEST SPLITTER ISLAND		754.7	1.9	0.7	18.9	12.8			90.8
SOUTH SPLITTER ISLAND		417.5	1.9	0.7	9.3	6.1			50.3
EAST SPLITTER ISLAND		753.6	1.9	0.7	18.9	12.7			90.7
NORTH SPLITTER ISLAND		104.2	1.5	0.5	0.9	0.4			12.5
BUS STOP			1.5						
SUB-TOTAL			12.6	7.9	48.0	32.0	1.1	22.1	259.5
TOTAL			123.3						*

* SEE ROADWAY QUANTITIES FOR TOTAL

SUMMARY OF QUANTITIES
Q-2

REVISED BY | DATE REVISED
DIANNE EDWARDS
CALCULATED-DESIGNED BY | CHECKED BY
FUNCTIONAL SUPERVISOR
Dennis P. McBride

STATE OF CALIFORNIA - DEPARTMENT OF TRANSPORTATION
Caltrans
DESIGN

P:\proj1\01\48050\drafting\sheets\148050pa002.dgn

LAST REVISION 00-00-00 | DATE PLOTTED => 28-JUN-2011 | TIME PLOTTED => 15:57

Dist	COUNTY	ROUTE	POST MILES TOTAL PROJECT	SHEET No.	TOTAL SHEETS
01	Lak	20	11.9/12.4	75	120

Dianne M Edwards 5-4-11
REGISTERED CIVIL ENGINEER DATE

6-27-11
PLANS APPROVAL DATE

REGISTERED PROFESSIONAL ENGINEER
D.M. EDWARDS
No. C-51898
Exp. 6-30-12
CIVIL
STATE OF CALIFORNIA

THE STATE OF CALIFORNIA OR ITS OFFICERS OR AGENTS SHALL NOT BE RESPONSIBLE FOR THE ACCURACY OR COMPLETENESS OF SCANNED COPIES OF THIS PLAN SHEET.

ROADWAY QUANTITIES

LOCATION FROM	LOCATION TO	ROADWAY EXCAVATION	EMBANKMENT (NP)	REMOVE BASE AND SURFACING	CLASS 2 AGGREGATE BASE	LEAN CONCRETE BASE	JOINTED PLAIN CONCRETE PAVEMENT	HMA (TYPE A)	PAVING ASPHALT ASPHALT (BINDER, GEOSYNTHETIC PAVEMENT INTERLAYER)	TACK COAT	COLD PLANE ASPHALT CONCRETE PAVEMENT	GEOSYNTHETIC PAVEMENT INTERLAYER	SEAL PAVEMENT JOINT
		CY						TONS			SQYD		LF
"SR20W1" 98+35.0	"SR20W1 98+75.0										178		
"SR20W1" 98+35.0	"SR20W1" 108+28.9	7610.0	1800.0		935.5			1272.3		0.5			
"SR20W1" 100+34.5	"SR20W1" 103+84.3								0.9			155.5	
"SR20W1" 102+82.2	"SR20W1" 103+50			100.0									
"SR20E1" 4+37.5	"SR20E1" 5+00.0										114		
"SR20E1" 7+22.5	"SR20E1" 7+62.5										231		
"SPLTR4" 105+20.6	"SPLTR4" 108+43.6	4310.0	2400.0		292.4			245.9					
"SPLTR4" 107+50.0	"SPLTR7" 1+10.0			573.3									
"SPLTR4" 108+43.6	"SPLTR4" 109+11.4	100.0	20.0		14.7	11.2	22.3	4.0					170
"SPLTR3" 108+28.9	"SPLTR3" 108+41.0	70.0	0.0		17.7			14.8					
"SPLTR3" 108+41.0	"SPLTR3" 109+08.8	35.0	10.0		15.7	11.9	23.6	4.2					181
"SPLTR5" 0+41.23	"SPLTR5" 1+09.1	20.0	130.0		15.8	11.8	23.5	4.3					181
"SPLTR5" 1+09.1	"SPLTR5" 1+57.0	56.0	240.0		45.6			38.2					
"SPLTR6" 0+37.5	"SPLTR6" 1+05.0	45.0	5.0		16.6	12.3	24.6	4.5					191
"SPLTR6" 1+05.0	"SPLTR6" 1+57.0	53.0	100.0		41.8			35.0					
"SR20E1" 1+57.0	"SR20E1" 7+62.5	515.0	1450.0		261.9			779.3		0.6			
"SR20E1" 2+88.0	"SR20E1" 4+30.0			316.7									
"SR20E1" 2+35.0	"SR20E1" 3+94.0								0.7			70.6	
"LC1" 1+25.0	"LC1" 1+65.0										175		
"LC1" 1+25.0	"LC1" 6+71.6	620.0	220.0		485.6			653.6		0.3			
"LC1" 1+25.0	"LC1" 2+50												
"LC1" 2+50.0	"LC1" 5+62.1												
"LC1" 5+62.1	"LC1" 6+71.6			225.0									
"SPLTR2" 5+65.5	"SPLTR2" 7+19.8	415.0	50.0		96.4			78.1					
"SPLTR2" 7+19.8	"SPLTR2" 7+88.29	30.0	50.0		18.3	13.5	27.0	5.0					211
"SPLTR1" 6+75.0	"SPLTR1" 7+18.9	20.0	150.0		34.8			28.2					
"SPLTR1" 7+18.9	"SPLTR1" 7+86.22	30.0	140.0		14.7	11.1	22.2	4.0					169
"SPLTR1" 6+71.6	"SPLTR1" 7+50.7			170.0									
"SPLTR1" 7+50.7	"SPLTR1" 7+86.3			15.0									
"SPLTR7" 0+27.1	"SPLTR7" 0+99.3	115.0	0.0		8.2	0.7	1.5	8.3					
"SPLTR7" 0+99.3	"SPLTR7" 1+75.0	90.0	50.0		18.6			20.9					
"SPLTR8" 0+50.0	"SPLTR8" 0+99.5	25.0	10.0		7.9	1.9	3.7	9.7					
"SPLTR8" 0+99.5	"SPLTR8" 1+75.0	3.0	160.0		10.7			18.6					
"PR1" 1+82.6	"PR1" 3+50.0	125.0	160.0		81.4			91.5					
"RA1" 100+00.0	"RA1" 104+71.2	190.0	7420.0		314.9	209.9	419.9	85.0					3420
BUS STOP					14.0			13.6			78		
SUB-TOTAL		14477.0	14565.0	1400.0	2763.2	284.3	568.3	3419.0	1.6		776	226.1	4522
RELOCATE STOCKPILED MATERIAL		7500.0											
FROM MINOR CONCRETE (SIDEWALK)					129.5								
FROM MINOR CONCRETE (CURB)					257.1								
FROM MINOR CONCRETE (CURB AND GUTTER)					194.1								
TOTAL		21977.0	14565.0	1400.0	3343.9	284.3	568.3	3419.0	1.6	1.2	776	226.1	4522

SUMMARY OF QUANTITIES
Q-3

REVISED BY | DATE REVISED
DIANNE EDWARDS
CALCULATED-DESIGNED BY | CHECKED BY
FUNCTIONAL SUPERVISOR
Dennis P. McBride

STATE OF CALIFORNIA - DEPARTMENT OF TRANSPORTATION
Caltrans
DESIGN

P:\proj1\01\48050\drafting\sheets\148050pa003.dgn

LAST REVISION 00-00-00 | DATE PLOTTED => 28-JUN-2011 | TIME PLOTTED => 15:58

Dist	COUNTY	ROUTE	POST MILES TOTAL PROJECT	SHEET No.	TOTAL SHEETS
01	Lak	20	11.9/12.4	76	120

LICENSED LANDSCAPE ARCHITECT

6-27-11
PLANS APPROVAL DATE

LICENSED LANDSCAPE ARCHITECT JAMES G. WILLIAMSON No. 5415 Signature 02-29-12 Renewal Date 5-4-11 Date STATE OF CALIFORNIA

THE STATE OF CALIFORNIA OR ITS OFFICERS OR AGENTS SHALL NOT BE RESPONSIBLE FOR THE ACCURACY OR COMPLETENESS OF SCANNED COPIES OF THIS PLAN SHEET.

ABBREVIATIONS:

AMEND — amendment
B & B — balled and burlapped
Dia — diameter
EA — each
LB — pound
Oz — ounce
Ft — foot/feet
SQFT — square feet
SQYD — square yard
CF — cubic feet
CY — cubic yard
Max — maximum
Min — minimum
NCN — no common name
No. — number
Pkt — packet
PLT ESTB - plant establishment
Pvmt — pavement
R/W — right of way
SF — state furnished
TRVD — traveled

PLANT LIST AND PLANTING SPECIFICATIONS

PLANT GROUP	PLANT No.	SYMBOL	BOTANICAL NAME	COMMON NAME	SIZE	QUANTITY EACH	HOLE SIZE (INCH) Dia	HOLE SIZE (INCH) DEPTH	BASIN TYPE	IRON SULFATE ①	SOIL AMEND ①	COMMERCIAL FERTILIZER ① PLANTING	COMMERCIAL FERTILIZER ① PLT ESTB	BASIN MULCH (CY)	STAKING	PLANTING LIMITS MINIMUM DISTANCE (Ft) FROM TRVD WAY	PVMT	FENCE	WALL	PAVED DITCH	EARTH DITCH	ON CENTER (Ft)	REMARKS
A	1		ARCTOSTAPHYLOS UVA-URSI 'POINT REYES'	BEARBERRY, KINNIKINNICK	No. 1	38	③	③	⑦	--	1 CF	2 Pkts	0.125 LB	②	--	--	8	8	8	8	10	⑦	GROUND COVER
	2		CEANOTHUS 'JULIA PHELPS'	WILD LILAC	No. 1	10	③	③	⑦	--	1 CF	2 Pkts	0.125 LB	②	--	--	15	10	6	10	12	⑦	SHRUB
B	3		CERCIS OCCIDENTALIS	WESTERN REDBUD	No. 5	3	③	③	⑦	--	1 CF	2 Pkts	0.125 LB	②	--	--	15	15	15	15	15	⑦	TREE
	4		QUERCUS WISLIZENII	INTERIOR LIVE OAK	No. 5	1	③	③	⑦	--	1 CF	2 Pkts	0.125 LB	②	⑦	30		15	15	10	10	⑦	TREE

APPLICABLE WHEN CIRCLED:

① - Quantities shown are "per plant" unless shown as SQFT or SQYD application rates
② - Basin mulch is included with mulch quantities shown on Planting Plan
③ - Sufficient to receive root ball and amendments if required
4 - See Detail
5 - See Special Provisions
6 - See Standard Specifications
⑦ - As shown on plans
8 - Unless otherwise shown on plans
9 - Foliage Protector required
10 - Root Protector required
11 - Root Barrier required
12 - State-Furnished

NOTE:

Underlined portions of botanical name indicate abbreviations used on Planting Plans.

PLANT LIST
PL-1

REVISED BY | DATE REVISED
J. WILLIAMSON
CALCULATED-DESIGNED BY | CHECKED BY
SENIOR LANDSCAPE ARCHITECT
KENNETH MURRAY
STATE OF CALIFORNIA - DEPARTMENT OF TRANSPORTATION
Caltrans® LANDSCAPE ARCHITECTURE

LAST REVISION 00-00-00 | DATE PLOTTED => 28-JUN-2011 | TIME PLOTTED => 15:58

Dist	COUNTY	ROUTE	POST MILES TOTAL PROJECT	SHEET No.	TOTAL SHEETS
01	Lak	20	11.9/12.4	77	120

LICENSED LANDSCAPE ARCHITECT

6-27-11
PLANS APPROVAL DATE

LICENSED LANDSCAPE ARCHITECT
JAMES G. WILLIAMSON
No. 5415
Signature
02-29-12
Renewal Date
5-4-11
Date
STATE OF CALIFORNIA

THE STATE OF CALIFORNIA OR ITS OFFICERS OR AGENTS SHALL NOT BE RESPONSIBLE FOR THE ACCURACY OR COMPLETENESS OF SCANNED COPIES OF THIS PLAN SHEET.

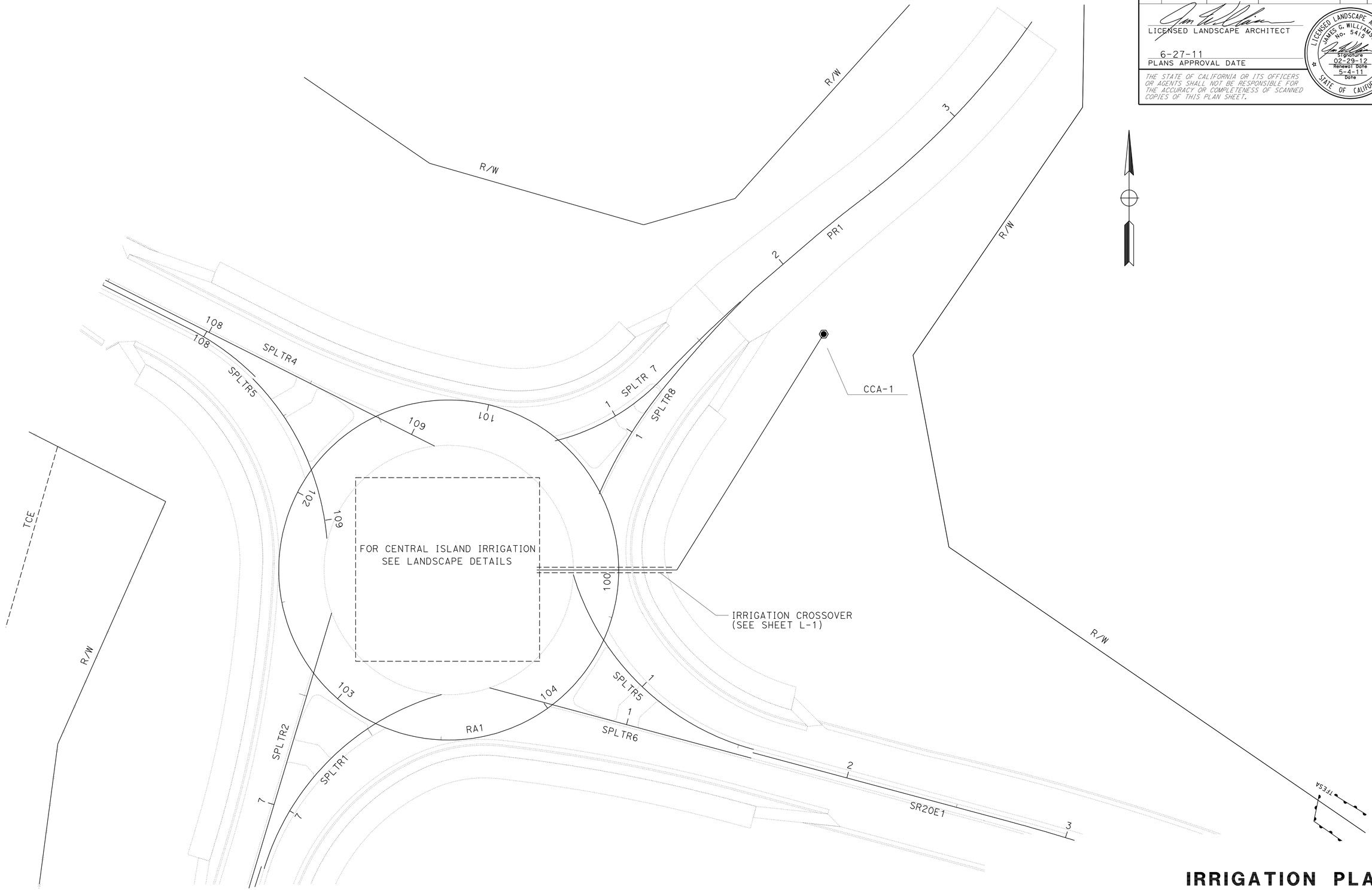

THIS PLAN ACCURATE FOR IRRIGATION WORK ONLY

IRRIGATION PLAN

SCALE: 1" = 20' **IP-1**

STATE OF CALIFORNIA - DEPARTMENT OF TRANSPORTATION
Caltrans® LANDSCAPE ARCHITECTURE

SENIOR LANDSCAPE ARCHITECT: KENNETH MURRAY

CALCULATED-DESIGNED BY: J. WILLIAMSON
CHECKED BY

REVISED BY
DATE REVISED

LAST REVISION 00-00-00
DATE PLOTTED => 28-JUN-2011
TIME PLOTTED => 15:58

Dist	COUNTY	ROUTE	POST MILES TOTAL PROJECT	SHEET No.	TOTAL SHEETS
01	Lak	20	11.9/12.4	78	120

LICENSED LANDSCAPE ARCHITECT

6-27-11
PLANS APPROVAL DATE

LICENSED LANDSCAPE ARCHITECT
JAMES G. WILLIAMSON
No. 5415
Signature
02-29-12
Renewal Date
5-4-11
Date
STATE OF CALIFORNIA

THE STATE OF CALIFORNIA OR ITS OFFICERS OR AGENTS SHALL NOT BE RESPONSIBLE FOR THE ACCURACY OR COMPLETENESS OF SCANNED COPIES OF THIS PLAN SHEET.

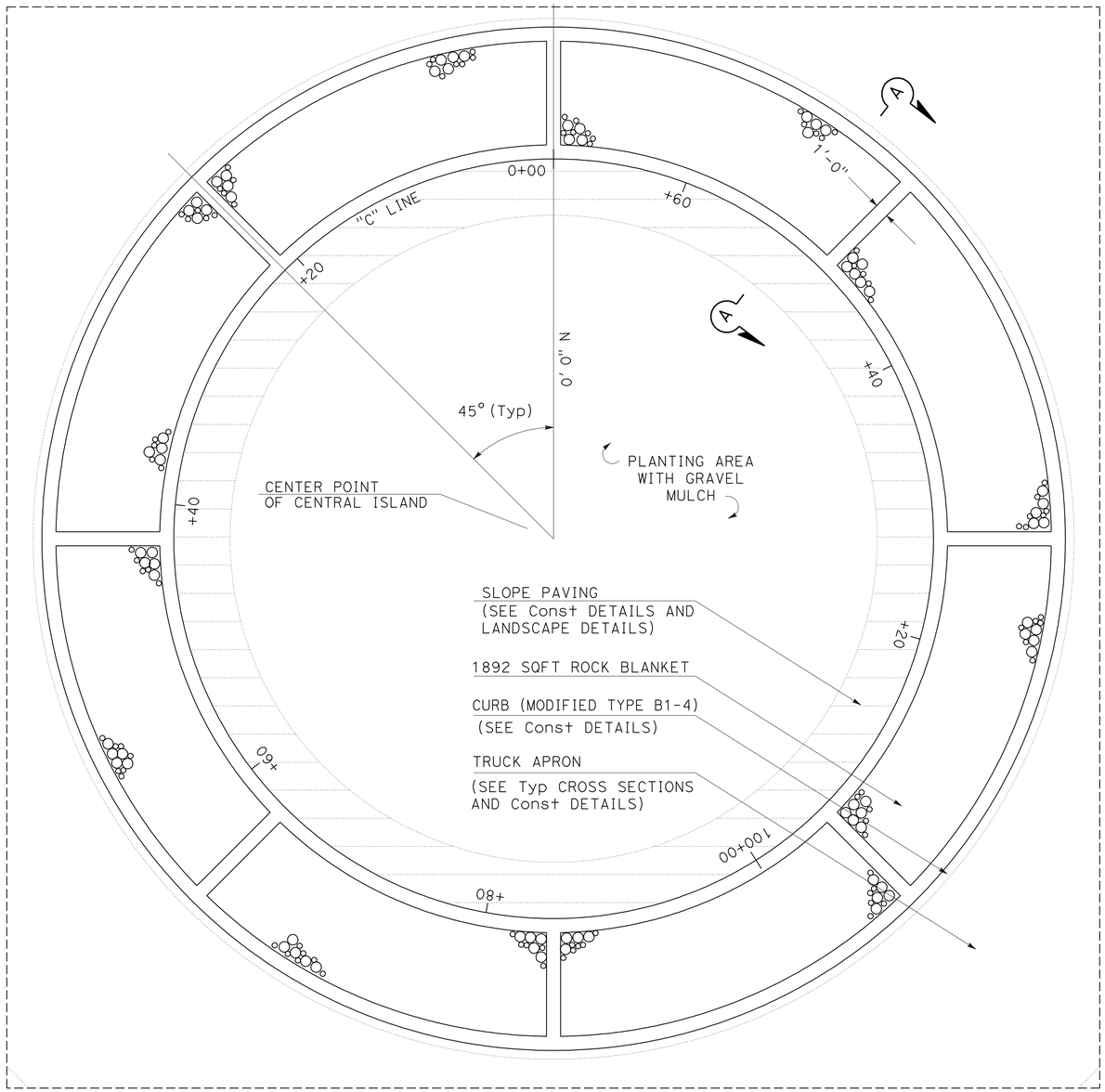

CENTRAL ISLAND ROCK BLANKET LAYOUT DETAIL

SCALE: 1" = 5'

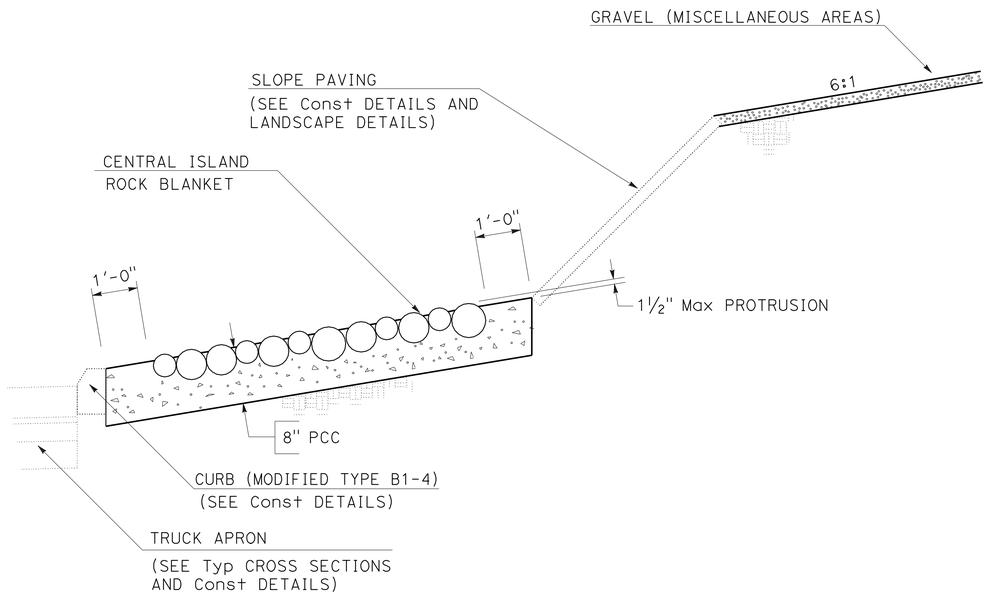

SECTION A-A

LANDSCAPE DETAILS

NO SCALE

LD-1

STATE OF CALIFORNIA - DEPARTMENT OF TRANSPORTATION
Caltrans® LANDSCAPE ARCHITECTURE

SENIOR LANDSCAPE ARCHITECT: KENNETH MURRAY

CALCULATED-DESIGNED BY: J. WILLIAMSON
CHECKED BY
REVISED BY
DATE REVISED

LAST REVISION 00-00-00
DATE PLOTTED => 28-JUN-2011
TIME PLOTTED => 15:58

Dist	COUNTY	ROUTE	POST MILES TOTAL PROJECT	SHEET No.	TOTAL SHEETS
01	Lak	20	11.9/12.4	79	120

LICENSED LANDSCAPE ARCHITECT

6-27-11
PLANS APPROVAL DATE

LICENSED LANDSCAPE ARCHITECT JAMES G. WILLIAMSON No. 5415 Signature 02-29-12 Renewal Date 5-4-11 Date STATE OF CALIFORNIA

THE STATE OF CALIFORNIA OR ITS OFFICERS OR AGENTS SHALL NOT BE RESPONSIBLE FOR THE ACCURACY OR COMPLETENESS OF SCANNED COPIES OF THIS PLAN SHEET.

NOTES:

1. CENTER POINT OF EYE SHALL BE FISH STAMP LAYOUT POINT.
2. FISH STAMP SHALL BE ORIENTED IN THE DIRECTION OF TRAVEL.
3. HORIZONTAL DIMENSIONS ARE MEASURED ALONG THE TOE OF SLOPE PAVING.
4. VERTICAL DIMENSIONS ARE MEASURED ALONG THE FACE OF SLOPE PAVING.
5. FOR "C" ALIGNMENT SEE SHEET LD-1.
6. CONSTRUCTION JOINTS SHALL NOT FALL WITHIN A FISH STAMP.

FISH STAMP LOCATION

LAYOUT POINT	HORIZONTAL DIMENSION	VERTICAL DIMENSION	STAMP
A	6'-6"	1'-10"	BASS
B	9'-6"	3'-6"	BASS
C	18'-9"	2'-2"	CATFISH
D	26'-10"	2'-6"	BASS
E	32'-3"	3'-3"	BASS
F	39'-3"	2'-4"	CRAPPIE
G	44'-0"	3'-9"	CRAPPIE
H	47'-10"	2'-0"	CRAPPIE
I	57'-10"	2'-0"	CATFISH
J	66'-0"	2'-0"	BASS
K	70'-8"	3'-3"	BASS
L	78'-3"	2'-8"	CRAPPIE
M	83'-6"	3'-3"	CRAPPIE
N	88'-6"	2'-4"	CRAPPIE
O	101'-0"	2'-0"	CATFISH
P	108'-3"	3'-3"	CRAPPIE
Q	112'-6"	2'-6"	CRAPPIE
R	117'-6"	3'-0"	CRAPPIE
S	126'-6"	2'-4"	CATFISH
T	132'-0"	2'-0"	CRAPPIE
U	136'-9"	3'-4"	CRAPPIE
V	145'-6"	3'-6"	BASS
W	150'-3"	2'-3"	BASS
X	156'-3"	3'-3"	BASS
Y	167'-0"	2'-6"	CATFISH

LINE LOCATION

LAYOUT POINT	HORIZONTAL DIMENSION	VERTICAL BOTTOM LINE	VERTICAL TOP LINE
1	0'-0"	0'-9"	4'-9"
2	10'-7.25"	0'-6"	4'-11.25"
3	21'-2.25"	0'-9"	5'-0"
4	31'-9.5"	1'-0"	4'-11.25"
5	42'-4.5"	0'-9"	4'-9"
6	52'-11.75"	0'-6"	4'-6.75"
7	63'-7"	0'-9"	4'-6"
8	74'-2.25"	1'-0"	4'-6.75"
9	84'-9.25"	0'-9"	4'-9"
10	95'-4.5"	0'-6"	4'-11.25"
11	105'-11.75"	0'-9"	5'-0"
12	116'-6.75"	1'-0"	4'-11.25"
13	127'-2"	0'-9"	4'-9"
14	137'-9.25"	0'-6"	4'-6.75"
15	148'-4.25"	0'-9"	4'-6"
16	158'-11.5"	1'-0"	4'-6.75"
17	169'-6.75"	0'-9"	4'-9"

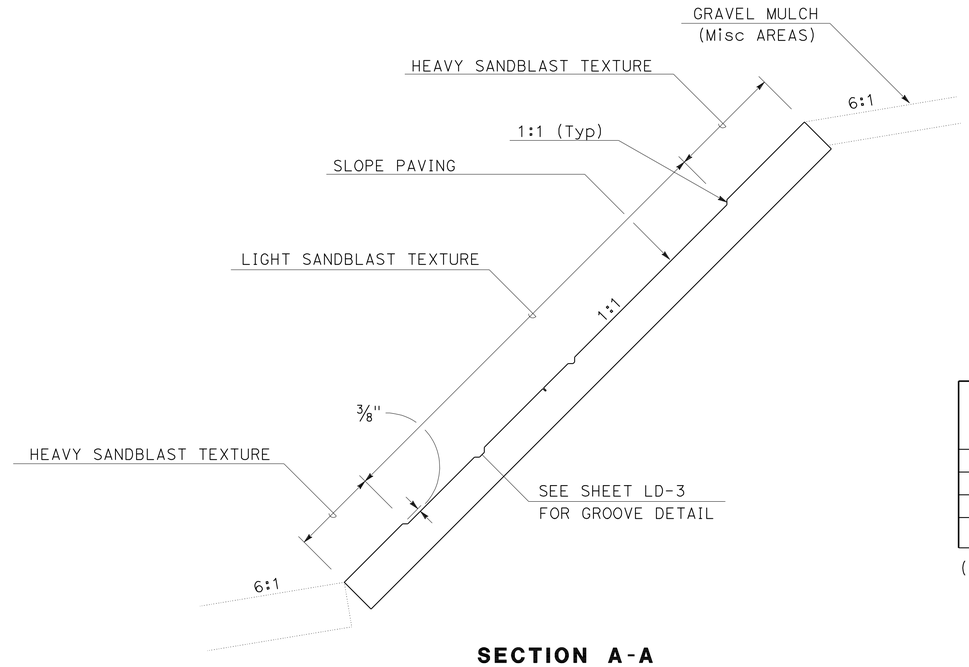

SECTION A-A

PREPARE AND PAINT FISH (N)

STAMP PATTERN	STAMPS PER PATTERN	PAINT PER STAMP	SUBTOTAL
	EA	SQFT	SQFT
CATFISH	5	2.25	11.25
BASS	9	1.50	13.50
CRAPPIE	11	1.50	16.50
		TOTAL	41.25

(N) - NOT A SEPARATE PAY ITEM, FOR INFORMATION ONLY

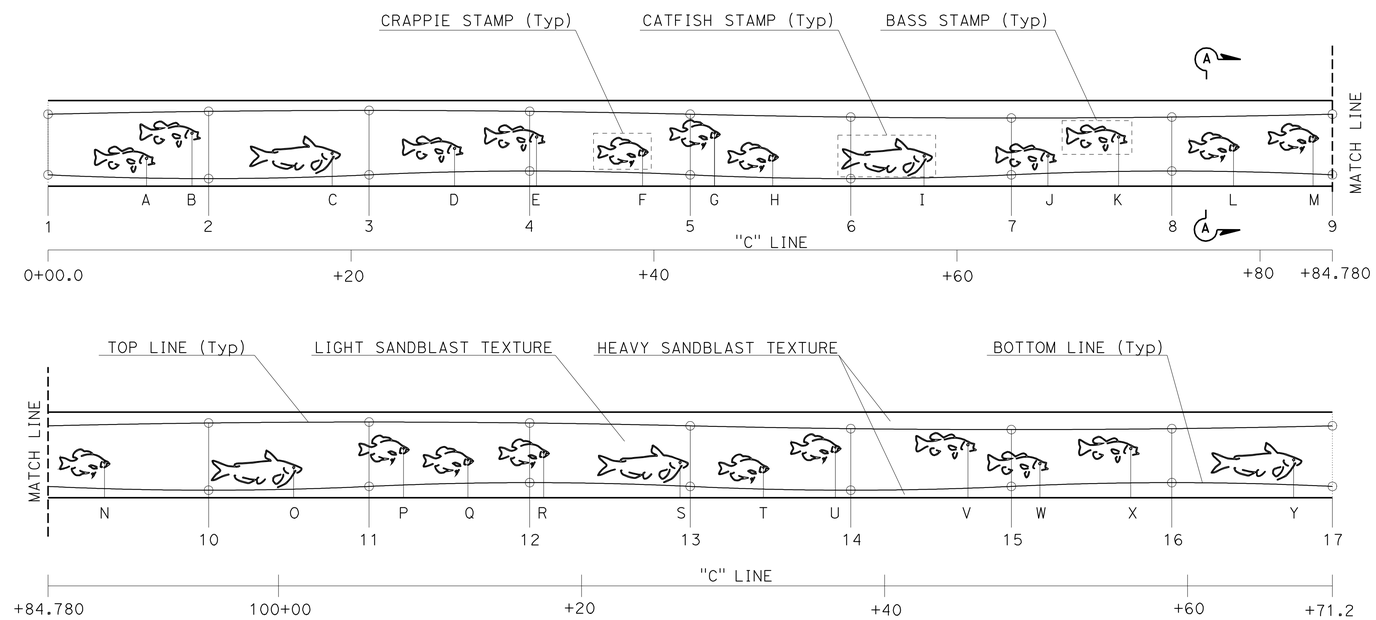

DEVELOPED ELEVATION

SLOPE PAVING AESTHETICS
LANDSCAPE DETAILS

NO SCALE

LD-2

STATE OF CALIFORNIA - DEPARTMENT OF TRANSPORTATION
Caltrans® LANDSCAPE ARCHITECTURE
SENIOR LANDSCAPE ARCHITECT KENNETH MURRAY
CALCULATED-DESIGNED BY J. WILLIAMSON
CHECKED BY
REVISED BY
DATE REVISED

LAST REVISION 00-00-00
DATE PLOTTED => 28-JUN-2011
TIME PLOTTED => 15:58

Dist	COUNTY	ROUTE	POST MILES TOTAL PROJECT	SHEET No.	TOTAL SHEETS
01	Lak	20	11.9/12.4	80	120

LICENSED LANDSCAPE ARCHITECT

6-27-11
PLANS APPROVAL DATE

LICENSED LANDSCAPE ARCHITECT
JAMES G. WILLIAMSON
No. 5415
Signature
02-29-12
Renewal Date
5-4-11
Date
STATE OF CALIFORNIA

THE STATE OF CALIFORNIA OR ITS OFFICERS OR AGENTS SHALL NOT BE RESPONSIBLE FOR THE ACCURACY OR COMPLETENESS OF SCANNED COPIES OF THIS PLAN SHEET.

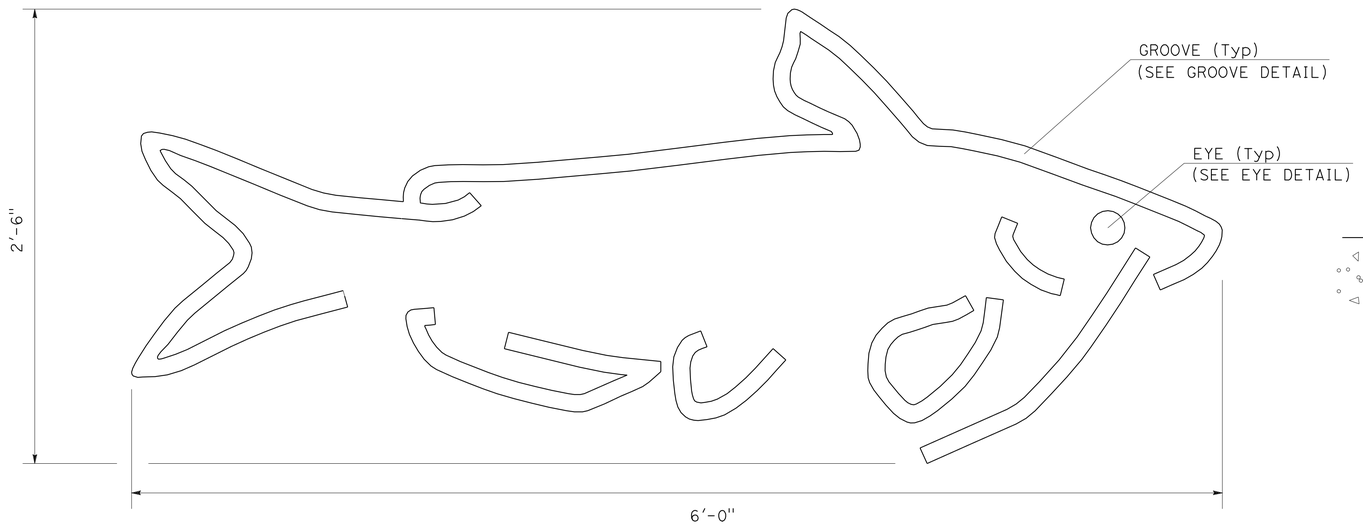

CATFISH STAMP

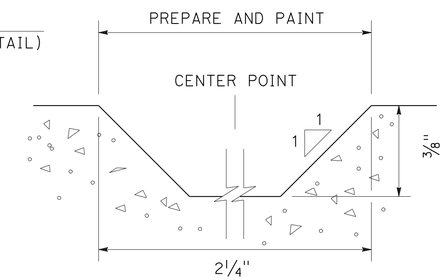

EYE DETAIL
SECTION

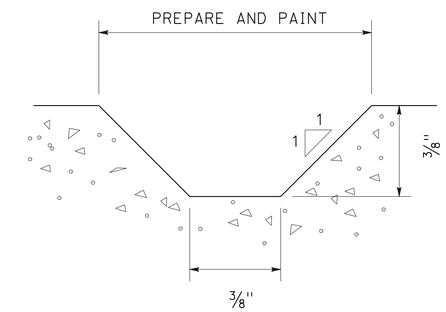

GROOVE DETAIL
SECTION

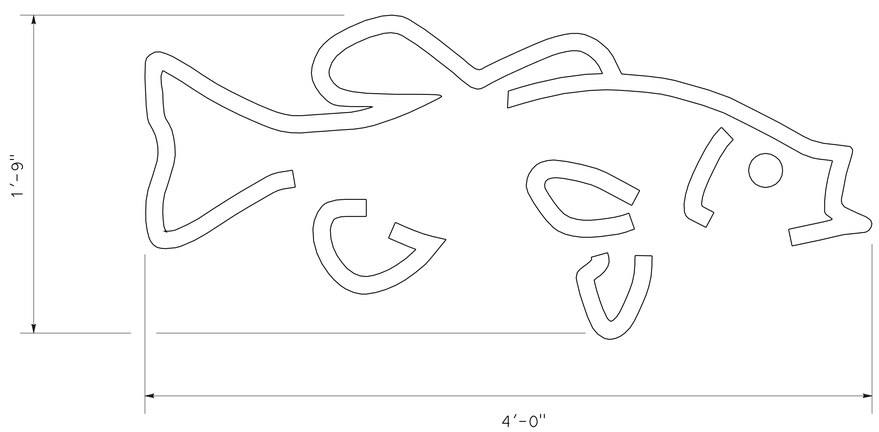

BASS STAMP

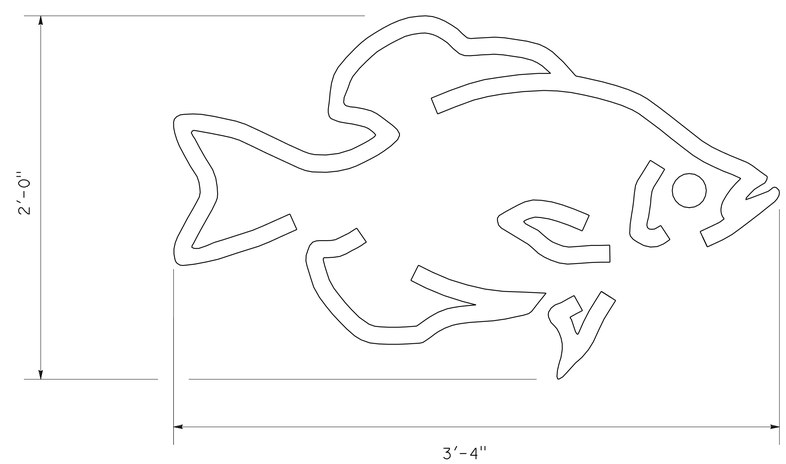

CRAPPIE STAMP

SLOPE PAVING AESTHETICS
LANDSCAPE DETAILS

NO SCALE

LD-3

STATE OF CALIFORNIA - DEPARTMENT OF TRANSPORTATION
Caltrans® LANDSCAPE ARCHITECTURE

SENIOR LANDSCAPE ARCHITECT: KENNETH MURRAY

CALCULATED-DESIGNED BY: J. WILLIAMSON
CHECKED BY

REVISED BY
DATE REVISED

LAST REVISION 00-00-00
DATE PLOTTED => 28-JUN-2011
TIME PLOTTED => 15:58

Dist	COUNTY	ROUTE	POST MILES TOTAL PROJECT	SHEET No.	TOTAL SHEETS
01	Lak	20	11.9/12.4	81	120

LICENSED LANDSCAPE ARCHITECT

6-27-11
PLANS APPROVAL DATE

LICENSED LANDSCAPE ARCHITECT
JAMES G. WILLIAMSON
No. 5415
Signature
02-29-12
Renewal Date
5-4-11
Date
STATE OF CALIFORNIA

THE STATE OF CALIFORNIA OR ITS OFFICERS OR AGENTS SHALL NOT BE RESPONSIBLE FOR THE ACCURACY OR COMPLETENESS OF SCANNED COPIES OF THIS PLAN SHEET.

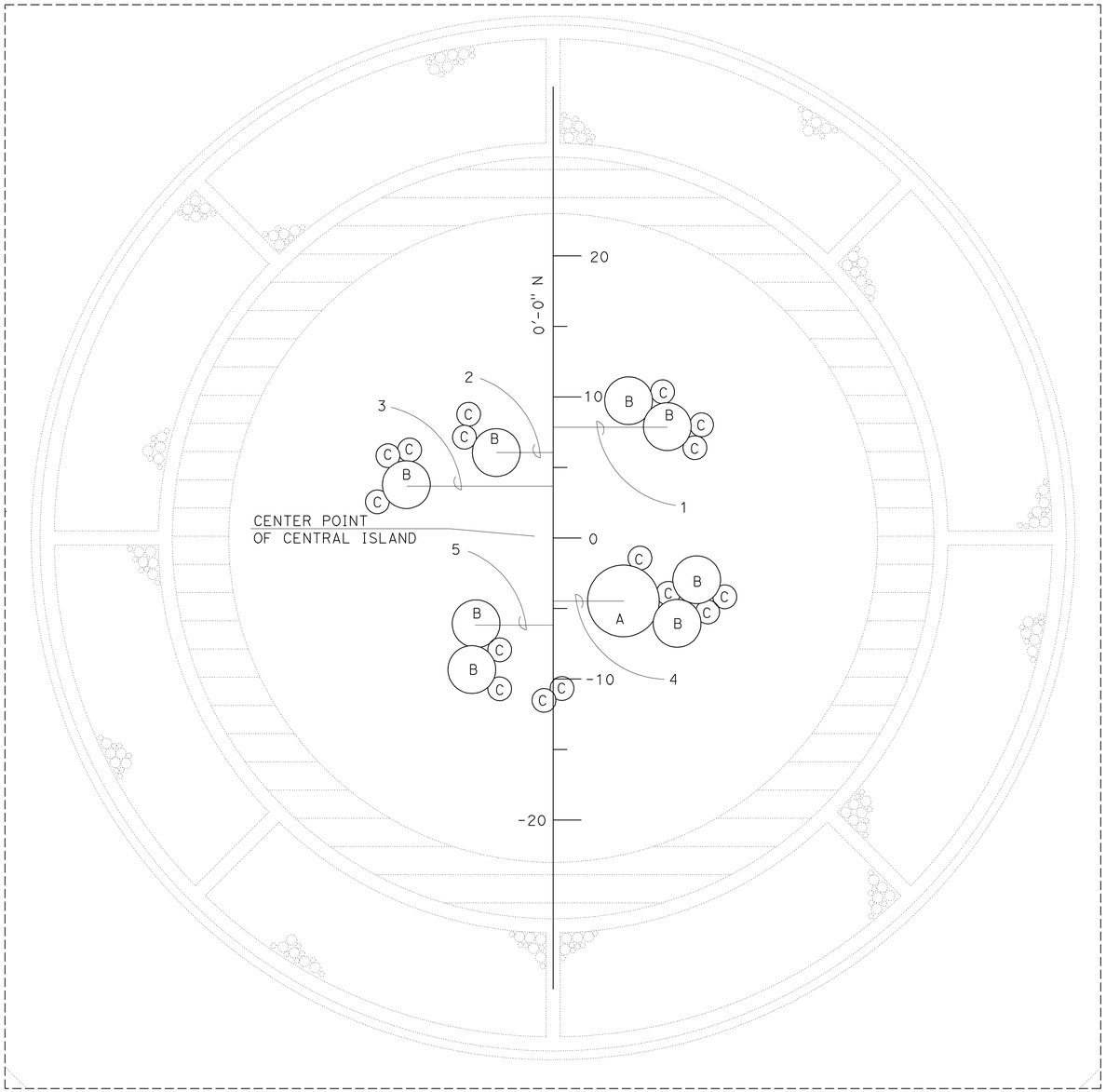

CENTRAL ISLAND BOULDER PLACEMENT DETAIL

SCALE: 1" = 5'

BOULDER GROUPING LOCATIONS

LOCATION	STATION	SIDE	OFFSET
	Ft		Ft
1	7.75	RT	8.00
2	6.00	LT	4.00
3	3.75	LT	10.25
4	-4.50	RT	5.00
5	-6.25	LT	5.50

* ALL OFFSETS MEASURED TO CENTER OF BOULDER

BOULDER INFORMATION

TYPE	SIZE	QUANTITY (N)
	Dia	EA
A	4.5'-6.0'	1
B	3.5'-4.5'	8
C	2.5'-3.5'	16
TOTAL		25

(N) NOT A SEPARATE PAY ITEM, FOR INFORMATION ONLY.

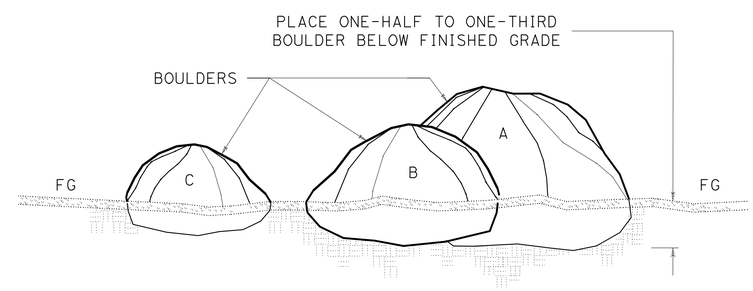

BOULDER PLACEMENT

SECTION

LANDSCAPE DETAILS

NO SCALE

LD-4

STATE OF CALIFORNIA - DEPARTMENT OF TRANSPORTATION
Caltrans® LANDSCAPE ARCHITECTURE

SENIOR LANDSCAPE ARCHITECT: KENNETH MURRAY

CALCULATED-DESIGNED BY: J. WILLIAMSON
CHECKED BY

REVISED BY
DATE REVISED

LAST REVISION 00-00-00
DATE PLOTTED => 28-JUN-2011
TIME PLOTTED => 15:58

Dist	COUNTY	ROUTE	POST MILES TOTAL PROJECT	SHEET No.	TOTAL SHEETS
01	Lak	20	11.9/12.4	82	120

LICENSED LANDSCAPE ARCHITECT

6-27-11
PLANS APPROVAL DATE

LICENSED LANDSCAPE ARCHITECT
JAMES G. WILLIAMSON
No. 5415
Signature
02-29-12
Renewal Date
5-4-11
Date
STATE OF CALIFORNIA

THE STATE OF CALIFORNIA OR ITS OFFICERS OR AGENTS SHALL NOT BE RESPONSIBLE FOR THE ACCURACY OR COMPLETENESS OF SCANNED COPIES OF THIS PLAN SHEET.

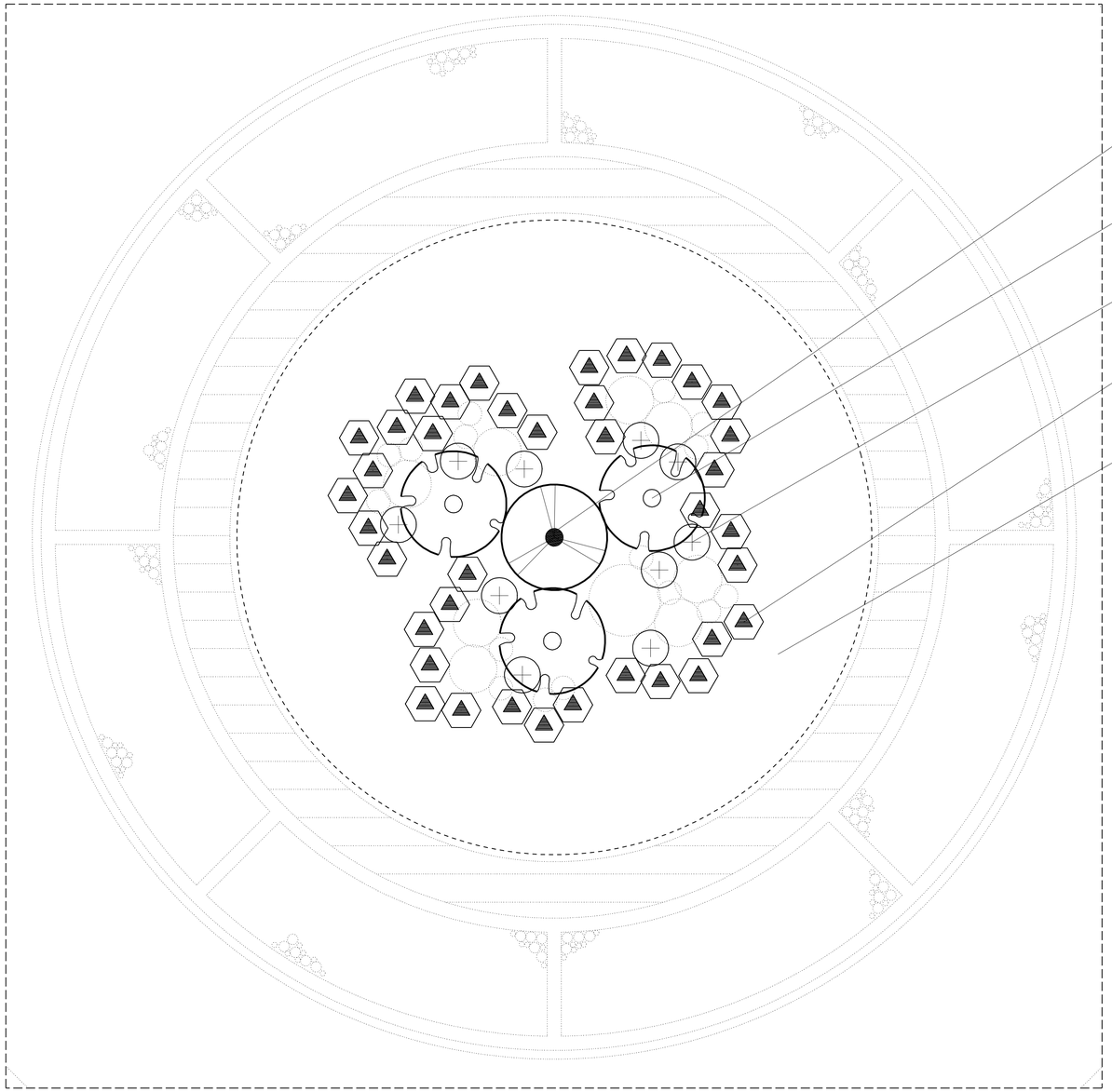

CENTRAL ISLAND PLANTING DETAIL

SCALE: 1" = 5'

GRAVEL (MISC AREAS)

LOCATION	GRAVEL (MISC AREAS)
	SQYD
LD-5	177
TOTAL	177

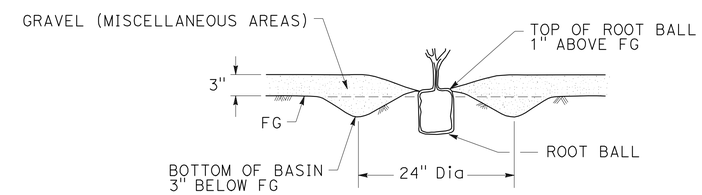

PLANT BASIN

SECTION

LANDSCAPE DETAILS

NO SCALE **LD-5**

STATE OF CALIFORNIA - DEPARTMENT OF TRANSPORTATION
Caltrans® LANDSCAPE ARCHITECTURE

SENIOR LANDSCAPE ARCHITECT: KENNETH MURRAY
CALCULATED-DESIGNED BY: J. WILLIAMSON
CHECKED BY
REVISED BY
DATE REVISED

LAST REVISION 00-00-00
DATE PLOTTED => 28-JUN-2011
TIME PLOTTED => 15:58

Dist	COUNTY	ROUTE	POST MILES TOTAL PROJECT	SHEET No.	TOTAL SHEETS
01	Lak	20	11.9/12.4	83	120

LICENSED LANDSCAPE ARCHITECT

6-27-11
PLANS APPROVAL DATE

LICENSED LANDSCAPE ARCHITECT
JAMES G. WILLIAMSON
No. 5415
Signature
02-29-12
Renewal Date
5-4-11
Date
STATE OF CALIFORNIA

THE STATE OF CALIFORNIA OR ITS OFFICERS OR AGENTS SHALL NOT BE RESPONSIBLE FOR THE ACCURACY OR COMPLETENESS OF SCANNED COPIES OF THIS PLAN SHEET.

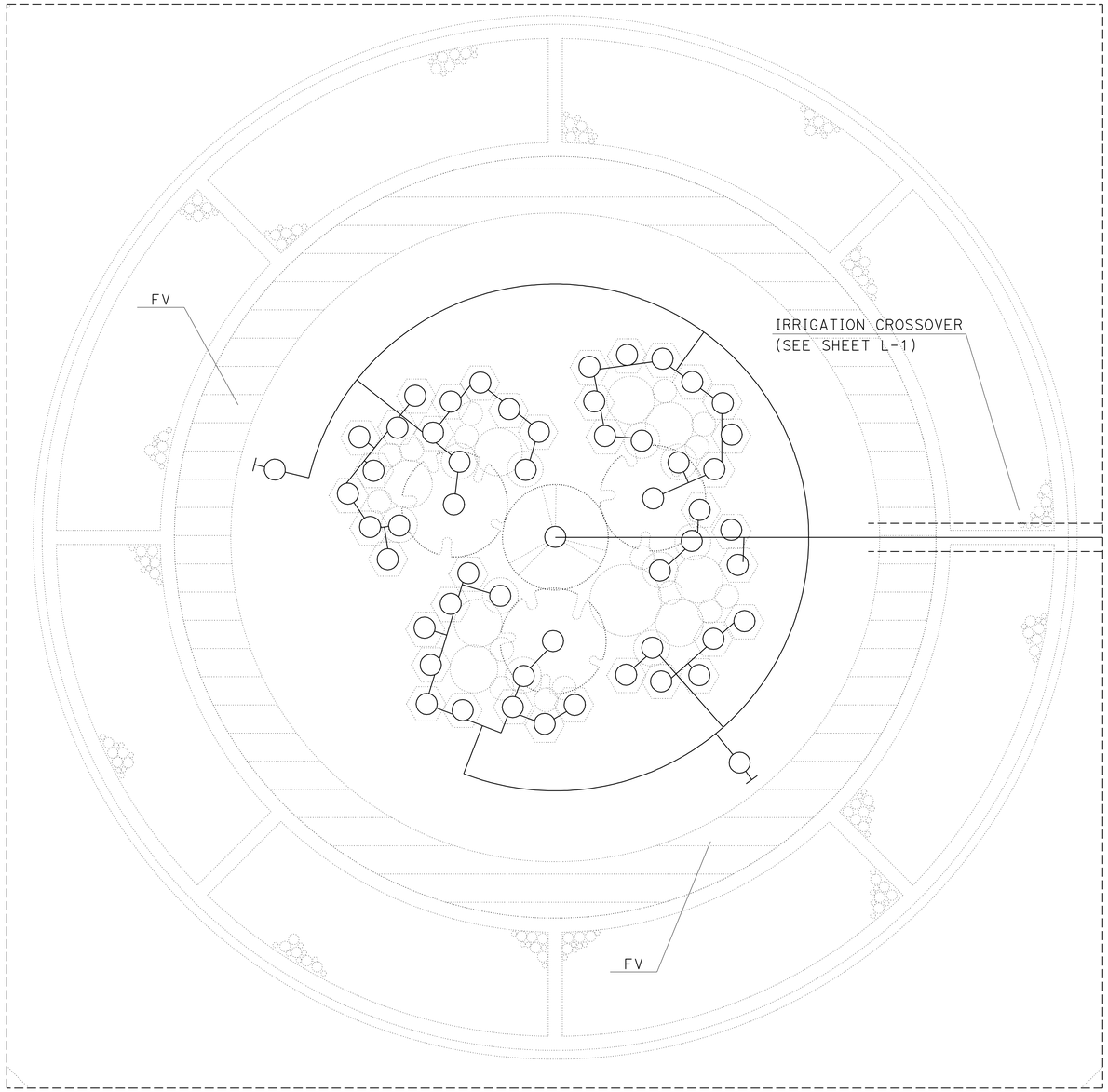

CENTRAL ISLAND IRRIGATION DETAIL

SCALE: 1" = 5'

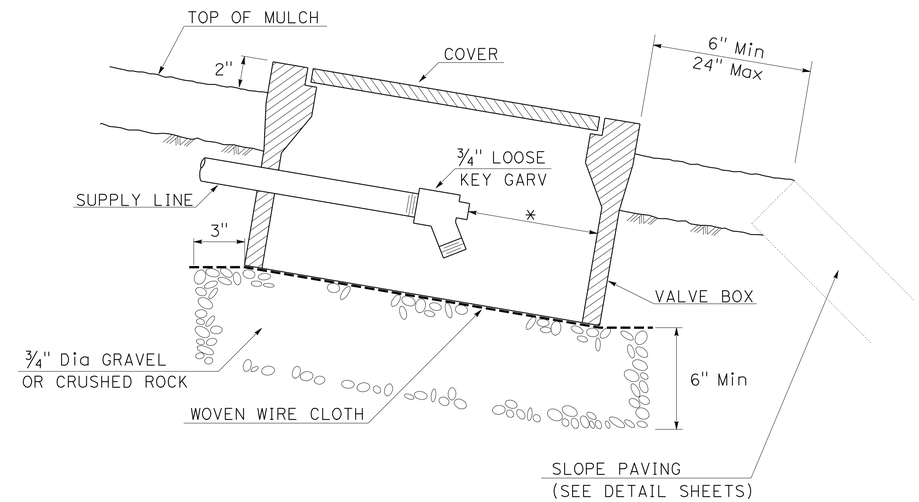

* - 2" CLEARANCE ON ALL SIDES Min

FLUSH VALVE

SECTION

LANDSCAPE DETAILS

NO SCALE

LD-6

STATE OF CALIFORNIA - DEPARTMENT OF TRANSPORTATION
Caltrans® LANDSCAPE ARCHITECTURE

SENIOR LANDSCAPE ARCHITECT: KENNETH MURRAY

CALCULATED-DESIGNED BY: J. WILLIAMSON
CHECKED BY

REVISED BY
DATE REVISED

LAST REVISION 00-00-00
DATE PLOTTED => 28-JUN-2011
TIME PLOTTED => 15:58

Dist	COUNTY	ROUTE	POST MILES TOTAL PROJECT	SHEET No.	TOTAL SHEETS
01	Lak	20	11.9/12.4	84	120

LICENSED LANDSCAPE ARCHITECT

6-27-11
PLANS APPROVAL DATE

LICENSED LANDSCAPE ARCHITECT JAMES G. WILLIAMSON No. 5413 Signature 02-29-12 Renewal Date 5-4-11 Date STATE OF CALIFORNIA

THE STATE OF CALIFORNIA OR ITS OFFICERS OR AGENTS SHALL NOT BE RESPONSIBLE FOR THE ACCURACY OR COMPLETENESS OF SCANNED COPIES OF THIS PLAN SHEET.

SPRINKLER SCHEDULE

SYMBOL	TYPE	DESCRIPTION	SPRAY PATTERN	OPERATING PRESSURE (PSI)	PRESSURE COMPENSATING	PLUS/MINUS 5% ② DISCHARGE: GALLONS PER MINUTE (GPM)	GALLONS PER HOUR (GPH)	RADIUS (Ft)	WIDTH x LENGTH (Ft)	MATERIAL	INLET CONNECTION (NPT INCH)	POSITIVE-LOCKING Adj ARC STOP	BACKSPLASH PREVENTER	DIFFUSER PIN	DISTANCE CONTROL FLAP	ADJ DISCHARGE	RISER: TYPE	MATERIAL: PLASTIC	GALVANIZED	SIZE (IPS INCH)	HEIGHT (INCH)	FLOW SHUTOFF DEVICE	⑤ SWING JOINT (TYPE)	RISER SUPPORT	SPRINKLER PROTECTOR (TYPE)	REMARKS
O	C-2	FLOOD BUBBLER	--	30	X	0.05		--	--	PL	½	--	--	--	--	--	V	FH	--	½	--	--	--	--	--	1 FLOOD BUBBLER PER SHRUB 2 FLOOD BUBBLER PER TREE

X IN BOX DENOTES REQUIREMENT

APPLICABLE WHEN CIRCLED BELOW:

1 - See Special Provisions.
2 - If a pressure compensating device is specified, the discharge and radii shown reflect its use.
3 - Arc Stop shall be fitted with a nut and bolt.
4 - Vinyl-coated cast iron housing.
5 - Swing Joints required adjacent to shoulders, curbs, sidewalks, and dikes.
6 - Unless otherwise shown on plans.

ABBREVIATIONS:

F — full circle
P — part circle
F/P — full/part circle
FH — flexible hose
Q — quarter circle
T — third circle
H — half circle
TT — two third circle
TQ — three quarter circle
CST — center strip
SST — side strip
EST — end strip

Ft — feet/foot
GPM — gallons per minute
GPH — gallons per hour
Adj — adjustable
PL — plastic
B/B — brass/bronze
B/PL — brass/plastic
B/B/PL — brass/bronze/plastic
NPT — national pipe thread
IPS — iron pipe size
PSI — pounds per square inch

PIPE SIZING FOR TYPE C SPRINKLERS

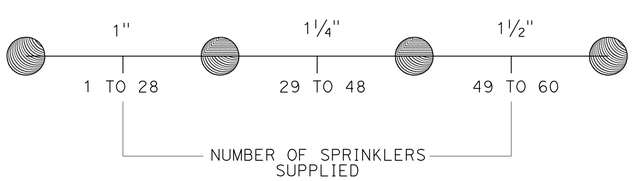

LANDSCAPE DETAILS
LD-7

STATE OF CALIFORNIA - DEPARTMENT OF TRANSPORTATION
Caltrans® LANDSCAPE ARCHITECTURE
SENIOR LANDSCAPE ARCHITECT KENNETH MURRAY
CALCULATED-DESIGNED BY J. WILLIAMSON
CHECKED BY
REVISED BY
DATE REVISED

LAST REVISION 00-00-00
DATE PLOTTED => 28-JUN-2011
TIME PLOTTED => 15:59

Dist	COUNTY	ROUTE	POST MILES TOTAL PROJECT	SHEET No.	TOTAL SHEETS
01	Lak	20	11.9/12.4	85	120

Brian T. Finck 5-4-11
REGISTERED ELECT ENGINEER DATE

6-27-11
PLANS APPROVAL DATE

REGISTERED PROFESSIONAL ENGINEER BRIAN T. FINCK No. 17756 Exp. 6-30-12 ELECT STATE OF CALIFORNIA

THE STATE OF CALIFORNIA OR ITS OFFICERS OR AGENTS SHALL NOT BE RESPONSIBLE FOR THE ACCURACY OR COMPLETENESS OF SCANNED COPIES OF THIS PLAN SHEET.

NOTES:

1. FOR ACCURATE RIGHT OF WAY DATA, CONTACT RIGHT OF WAY ENGINEERING AT THE DISTRICT OFFICE.
2. FOR EXISTING UTILITY SEE UTILITY SHEETS.

3 REMOVE AND SALVAGE FLASHING BEACON SYSTEM.

4 REMOVE AND SALVAGE LIGHTING STANDARD STAGE 2.

5 REMOVE AND SALVAGE LIGHTING STANDARD STAGE 3.

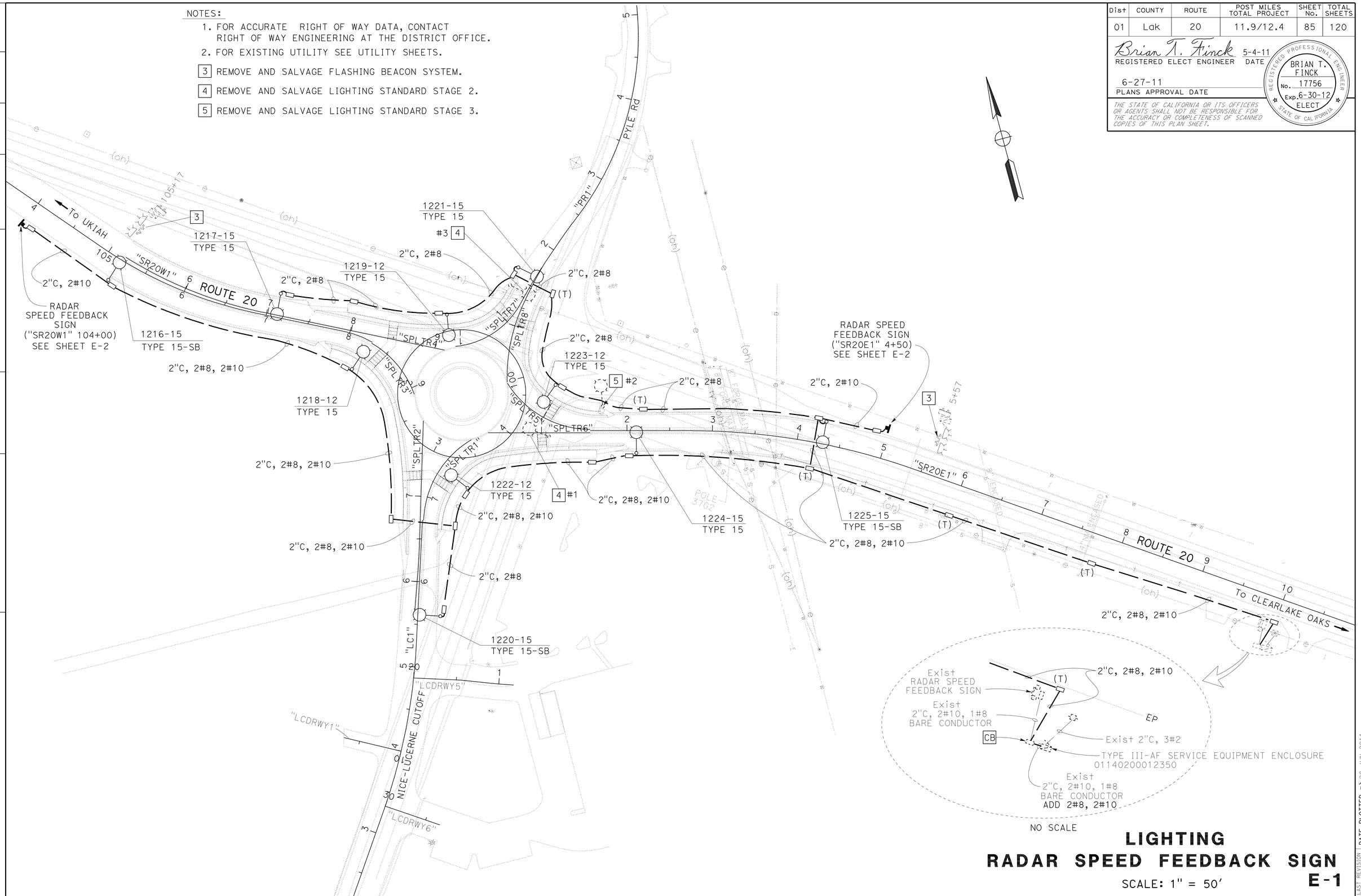

LIGHTING
RADAR SPEED FEEDBACK SIGN

SCALE: 1" = 50'

E-1

REVISED BY | DATE REVISED

BRIAN FINCK

CALCULATED-DESIGNED BY | CHECKED BY

FUNCTIONAL SUPERVISOR: TROY ARSENEAU

STATE OF CALIFORNIA - DEPARTMENT OF TRANSPORTATION

Caltrans® TRAFFIC ELECTRICAL

S:\01_480501\148050ua001.dgn

LAST REVISION 00-00-00 | DATE PLOTTED => 28-JUN-2011 | TIME PLOTTED => 15:59

BORDER LAST REVISED 7/2/2010 | USERNAME => trmikesl | DGN FILE => 148050ua001.dgn | RELATIVE BORDER SCALE IS IN INCHES 0 1 2 3 | UNIT 0045 | PROJECT NUMBER & PHASE 01000003781

Dist	COUNTY	ROUTE	POST MILES TOTAL PROJECT	SHEET No.	TOTAL SHEETS
01	Lak	20	11.9/12.4	86	120

Brian T. Finck 5-4-11
REGISTERED ELECT ENGINEER DATE

6-27-11
PLANS APPROVAL DATE

REGISTERED PROFESSIONAL ENGINEER BRIAN T. FINCK No. 17756 Exp. 6-30-12 ELECT STATE OF CALIFORNIA

THE STATE OF CALIFORNIA OR ITS OFFICERS OR AGENTS SHALL NOT BE RESPONSIBLE FOR THE ACCURACY OR COMPLETENESS OF SCANNED COPIES OF THIS PLAN SHEET.

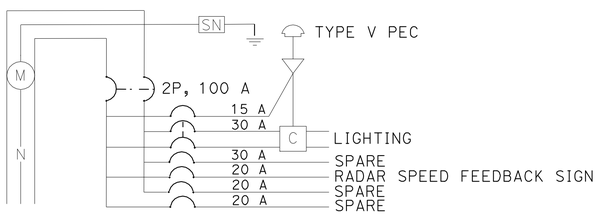

EXISTING SERVICE WIRING DIAGRAM

TYPE III-AF SERVICE EQUIPMENT ENCLOSURE
120/240 V SERVICE No.
CALTRANS ID 01140200012350

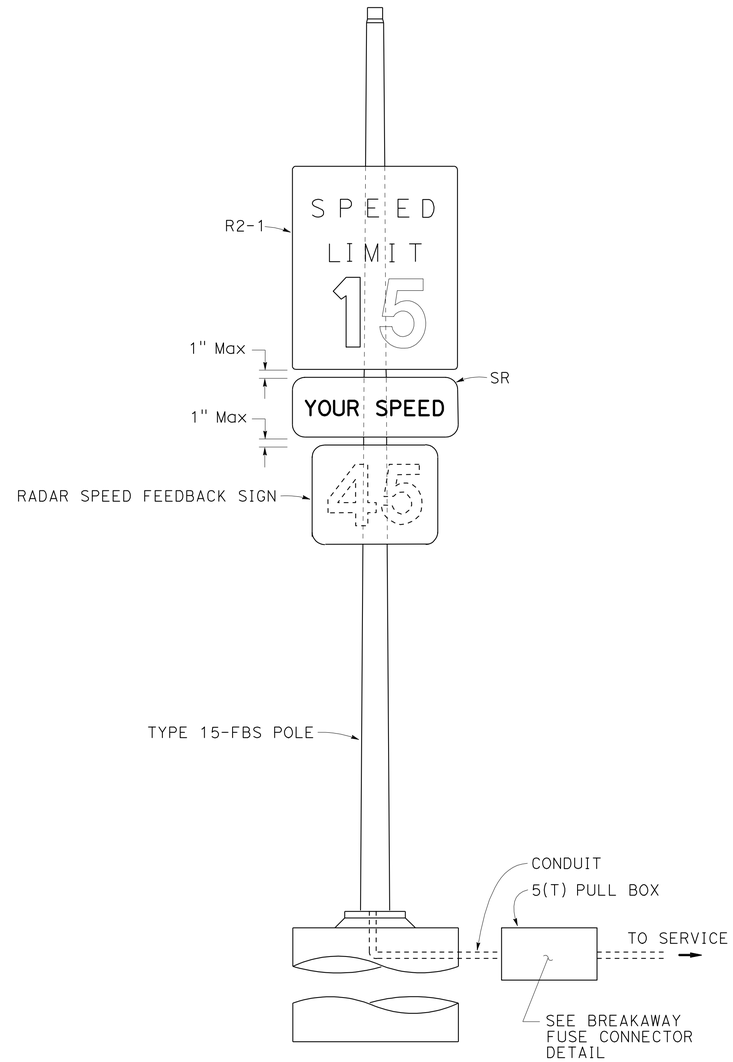

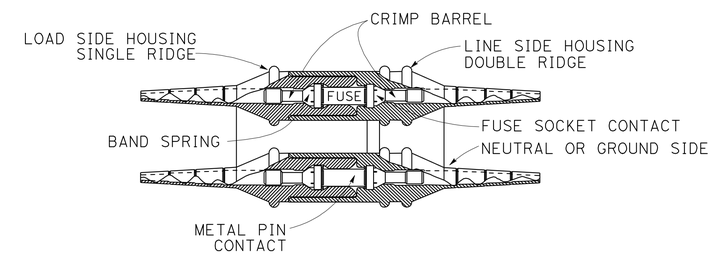

BREAKAWAY FUSE CONNECTOR

LEGEND:

- (M) METER
- PHOTOELECTRIC UNIT
- TEST SWITCH
- [C] CONTACTOR
- [SN] SOLID NEUTRAL

RADAR SPEED FEEDBACK SIGN ON TYPE 15-FBS

"SR20W1" 104+00 SIGN NUMBER (42)
"SR20E1" 5+00 SIGN NUMBER (43)

RADAR SPEED FEEDBACK SIGN
(ELECTRICAL DETAILS)

NO SCALE

E-2

REVISED BY	DATE REVISED

CALCULATED-DESIGNED BY: BRIAN FINCK
CHECKED BY:
FUNCTIONAL SUPERVISOR: TROY ARSENEAU

STATE OF CALIFORNIA - DEPARTMENT OF TRANSPORTATION
Caltrans TRAFFIC ELECTRICAL

P:\proj\01\48050\drafting\sheets\148050ua002.dgn

LAST REVISION 00-00-00 DATE PLOTTED => 28-JUN-2011 TIME PLOTTED => 15:59

DIST	COUNTY	ROUTE	POST MILES TOTAL PROJECT	SHEET No	TOTAL SHEETS
01	Lak	20	11.9/12.4	87	120

Eliseo Lopez 6/24/11
REGISTERED CIVIL ENGINEER DATE

6-27-11
PLANS APPROVAL DATE

REGISTERED PROFESSIONAL ENGINEER ELISEO LOPEZ No. C72910 Exp. 12/31/12 CIVIL STATE OF CALIFORNIA

The State of California or its officers or agents shall not be responsible for the accuracy or completeness of electronic copies of this plan sheet.

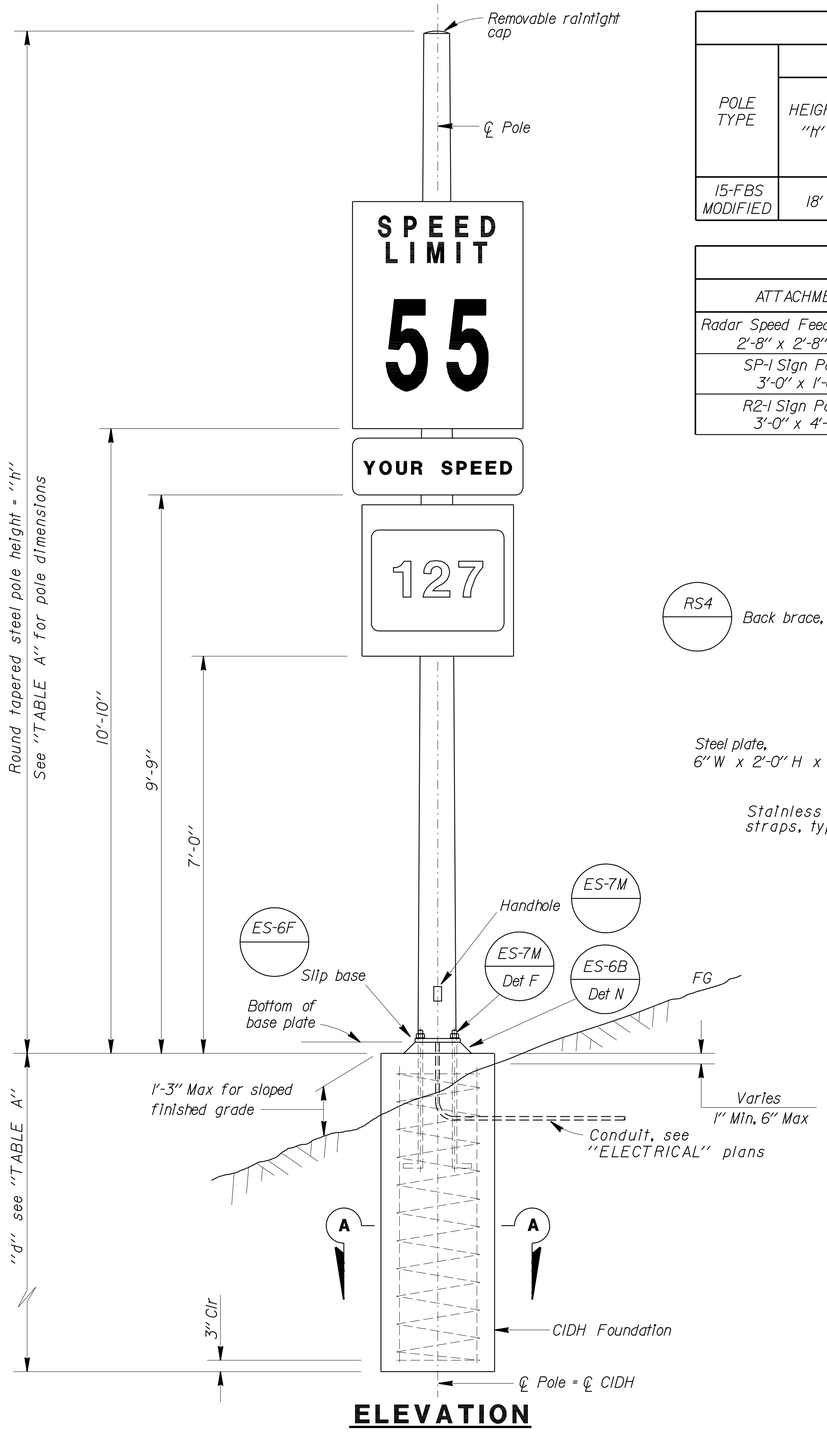

ELEVATION

TABLE A

POLE TYPE	POLE DATA				BASE PLATE DATA - SEE STANDARD PLAN ES-6F				"d" 2'-6" Ø CIDH Pile		STRUCTURAL STEEL LBS PLUS 3.5% GALVANIZING
	HEIGHT "H"	Min OD		THICKNESS	"C"	THICKNESS	H.S. ANCHOR BOLTS (A325)				
		BASE	TOP				SIZE	BC = BOLT CIRCLE	LEVEL GROUND	SLOPING GROUND	
15-FBS MODIFIED	18'	8"	5½"	0.1196"	—	—	1" x 3'-0" x 4"	1'-2"	7'-0"	9'-0"	381

TABLE B

ATTACHMENT	MOUNTING HEIGHT	WEIGHT LIMITS (Max)
Radar Speed Feedback Sign 2'-8" x 2'-8" x 8"	7'-0" Bottom Clr	45 lbs
SP-1 Sign Panel 3'-0" x 1'-0"	9'-9" Bottom Clr	7 lbs
R2-1 Sign Panel 3'-0" x 4'-0"	10'-10" Bottom Clr	23 lbs

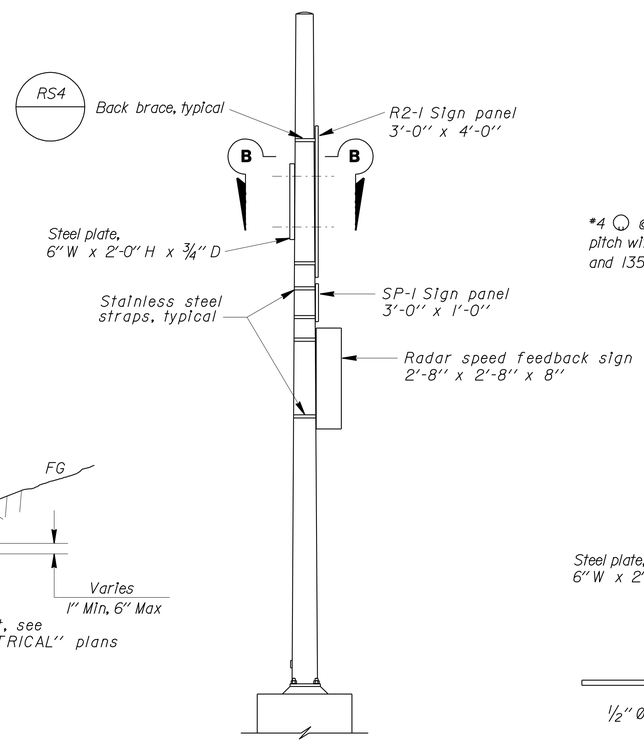

SIDE VIEW

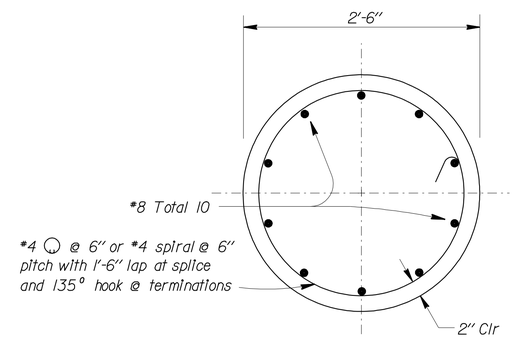

SECTION A-A

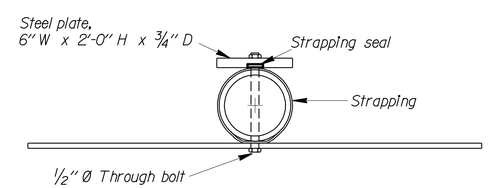

SECTION B-B
PLAN

GENERAL NOTES:

SPECIFICATIONS

Design: AASHTO Standard Specifications for Structural Supports for Highway Signs, Luminaires and Traffic Signals dated 2001.

LOADING

Wind Loadings: 100 mph

UNIT STRESSES

Structural steel: fy = 48,000 psi tapered steel pole
fy = 36,000 psi unless otherwise noted

H.S. Anchor bolts = A325

Reinforced concrete: f'_c = 3,600 psi
fy = 60,000 psi

NOTES:

1. For pole locations, see sheet E-1.
2. All steel shall be galvanized after fabrication.
3. During pole erection the pole shall be raked as necessary with the use of leveling nuts to provide a plumb pole axis.
4. The foundation shall be treated as level ground condition if the slope inclination is flatter than 4H:1V.
5. Foundation design is based on AASHTO 2001 article 13.6 Broms' approximate procedure assuming a cohesionless material. The angle of internal friction used is 30 degrees and unit weight of soil is 120 lb/ft³.
6. All attachments, unless otherwise noted, shall be mounted to pole with stainless steel straps or other method without drilling holes in pole.
7. For details not shown, see 2006 "STANDARD PLANS" and 2006 "REVISED STANDARD PLANS".
8. For Type 15-FBS pole, see 2006 Standard Plan ES-7J.
9. Steel plate, 6" W x 2'-0" H x ¾" D to be centered between back braces.

STANDARD PLAN SHEET No.
DETAIL No.

NOTE:
THE CONTRACTOR SHALL VERIFY ALL CONTROLLING FIELD DIMENSIONS BEFORE ORDERING OR FABRICATING ANY MATERIAL.

NO SCALE

BRANCH CHIEF JEFF WOODY

	BY	CHECKED
DESIGN	ELISEO LOPEZ	DEVANG VORA
DETAILS	R. YEE	ELISEO LOPEZ
QUANTITIES	ELISEO LOPEZ	DEVANG VORA

STATE OF CALIFORNIA
DEPARTMENT OF TRANSPORTATION

DIVISION OF ENGINEERING SERVICES
DESIGN AND TECHNICAL SERVICES
SPECIAL DESIGNS BRANCH A

BRIDGE NO.
POST MILE

TYPE 15 FBS (MODIFIED)
POLE DETAILS

SES-1

(ENGLISH) SPECIAL DESIGNS BRANCH BORDER SHEET (REV. 7-1-09)

ORIGINAL SCALE IN INCHES FOR REDUCED PLANS 0 1 2 3

UNIT: 3619
PROJECT NUMBER & PHASE: 0100000378-1
CONTRACT NO.: 01-480501

DISREGARD PRINTS BEARING EARLIER REVISION DATES

REVISION DATES 6/24/11 | SHEET | OF

FILE => /2011sd/01-480501/ses-1.dgn

USERNAME => trmikes1 DATE PLOTTED => 28-JUN-2011 TIME PLOTTED => 15:53

DIST	COUNTY	ROUTE	POST MILES TOTAL PROJECT	SHEET NO.	TOTAL SHEETS
01	Lak	20	11.9/12.4	88	120

REGISTERED CIVIL ENGINEER

November 17, 2006
PLANS APPROVAL DATE

REGISTERED PROFESSIONAL ENGINEER Dallas Forester No. C37765 Exp. 12-31-06 CIVIL STATE OF CALIFORNIA

The State of California or its officers or agents shall not be responsible for the accuracy or completeness of electronic copies of this plan sheet.

To accompany plans dated 6-27-11

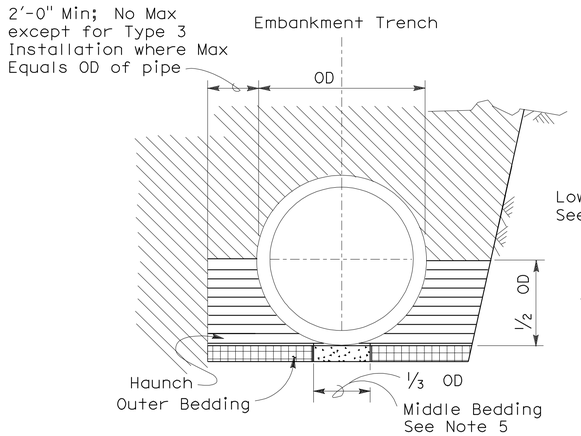

BACKFILL

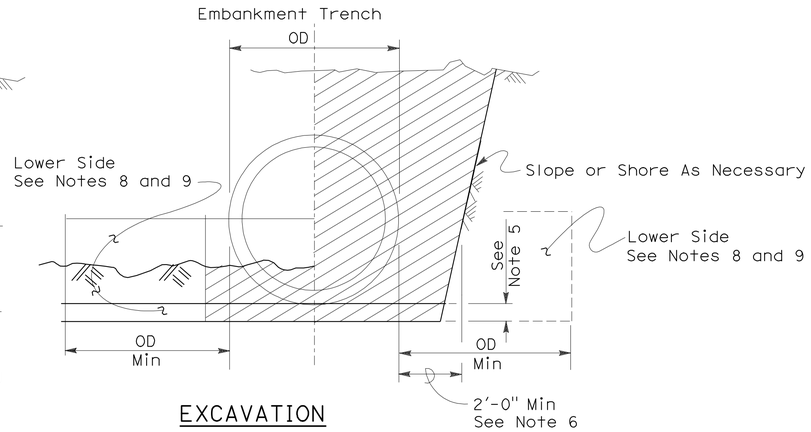

EXCAVATION

Roadway Embankment

Structure Backfill (Culvert) See Note 6

Structure Backfill (Culvert) See Note 6

Loose Backfill

Excavation Structure (Culvert)

TYPE 1 INSTALLATION:

The haunch and outer bedding shall be compacted to a minimum 90 percent relative compaction. In addition, the minimum sand equivalent in these areas shall be 30 and the maximum percentage passing the 75 μm sieve size shall be 12.

TYPE 2 INSTALLATION:

The haunch and outer bedding shall be compacted to a minimum 90 percent relative compaction. In addition, the minimum sand equivalent in these areas shall be 25.

TYPE 3 INSTALLATION:

The haunch and outer bedding shall be compacted to a minimum 85 percent relative compaction. 90 percent relative compaction will be required where the fill over the pipe is less than 4'-0" or 1/2 OD.

NOTES:

1. Unless otherwise shown on the plans or specified in the special provision, the Contractor shall have the option of selecting the class of RCP and the type of installation to be used, provided the height of cover does not exceed the value shown for the RCP selected.
   Example: 24" RCP culvert with maximum cover of 19'-0" the options are:
   a) Class III or stronger with Installation Type 1.
   b) Class III Special or stronger with Installation Type 2.
   c) Class IV Special or stronger with Installation Type 3.
   Cover is defined as the maximum vertical distance from top of the pipe to finished grade within the length of any given culvert.
2. The class of RCP and Installation Type selected shall be the same throughout the length of any given culvert.
3. The "length of any culvert" is defined as the culvert between:
   a) Successive drainage structure (inlets, junction boxes, headwalls, etc.).
   b) A drainage structure and the inlet or outlet end of the culvert.
   c) The inlet and outlet end of the culvert when there are no intervening drainage structures.
4. Oval and arch shaped RCP shall not be used.
5. 1/25 OD Min, not less than 3".
6. Slurry cement backfill may be substituted for backfill in the outer bedding and haunch areas. If slurry is used the outer and middle beddings shall be omitted. Prior to installation the soil under the middle 1/3 of the outside diameter of the pipe shall be softened by scarifying or other means to a minimum depth of 1/25 OD, but not less than 3". Where slurry cement backfill is used clear distance to trench wall may be reduced as set forth in Section 19-3.062 of the Standard Specifications.
7. Backfill shall be placed full width of excavation except where dimensions are shown for backfill width or thickness. Dimensions shown are minimums.
8. Lower side shall be suitable material as determined by the Engineer. Otherwise it shall be considered unsuitable as set forth in Section 19-2.02 of the Standard Specifications. See Note 9.
9. Where the pipe is placed in a trench, if the trench walls are sloped at 5 vertical to 1 horizontal or steeper for at least 90 percent of the trench height or up to not less than 12" from the grading plane, the firmness of the soil in the lower side need not be considered.
10. Non-reinforced precast concrete pipe sizes 3'-0" or smaller may be placed under installation Types 1, 2 or 3.

INSTALLATION TYPE 1

MINIMUM CLASS AND D-LOAD	COVER	
	108" Dia AND SMALLER	OVER 108" Dia
Class II 1000D	14.9'	12.9'
Class III 1350D	15.0' - 20.9'	13.0' - 18.9'
Class III Special 1700D	21.0' - 26.9'	19.0' - 24.9'
Class IV 2000D	27.0' - 31.9'	25.0' - 29.9'
Class IV Special 2500D	32.0' - 40.9'	30.0' - 38.9'
Class V 3000D	41.0' - 49.9'	39.0' - 46.9'
Class V Special 3600D	50.0' - 59.0'	47.0' - 58.0'

INSTALLATION TYPE 2

MINIMUM CLASS AND D-LOAD	COVER
Class II 1000D	9.9'
Class III 1350D	10.0'- 14.9'
Class III Special 1700D	15.0' - 19.9'
Class IV 2000D	20.0' - 24.9'
Class IV Special 2500D	25.0' - 31.9'
Class V 3000D	32.0' - 38.9'
Class V Special 3600D	39.0' - 47.0'

INSTALLATION TYPE 3

MINIMUM CLASS AND D-LOAD	COVER	
	48" Dia AND SMALLER	OVER 48" Dia
Class II 1000D	7.9'	5.9'
Class III 1350D	8.0' - 10.9'	6.0' - 8.9'
Class III Special 1700D	11.0' - 14.9'	9.0' - 12.9'
Class IV 2000D	15.0' - 17.9'	13.0' - 15.9'
Class IV Special 2500D	18.0' - 21.9'	16.0' - 19.9'
Class V 3000D	22.0' - 26.9'	20.0' - 24.9'
Class V Special 3600D	30.0' - 33.0'	25.0' - 31.0'

STATE OF CALIFORNIA
DEPARTMENT OF TRANSPORTATION

EXCAVATION AND BACKFILL CONCRETE PIPE CULVERTS

NO SCALE

RSP A62DA DATED NOVEMBER 17, 2006 SUPERSEDES STANDARD PLAN A62DA DATED MAY 1, 2006 - PAGE 20 OF THE STANDARD PLANS BOOK DATED MAY 2006.

REVISED STANDARD PLAN RSP A62DA

2006 REVISED STANDARD PLAN RSP A62DA

10-26-06

DIST	COUNTY	ROUTE	POST MILES TOTAL PROJECT	SHEET NO.	TOTAL SHEETS
01	Lak	20	11.9/12.4	89	120

REGISTERED CIVIL ENGINEER

November 17, 2006
PLANS APPROVAL DATE

REGISTERED PROFESSIONAL ENGINEER Michael Janzen No. 44788 Exp. 03-31-08 CIVIL STATE OF CALIFORNIA

The State of California or its officers or agents shall not be responsible for the accuracy or completeness of electronic copies of this plan sheet.

To accompany plans dated 6-27-11

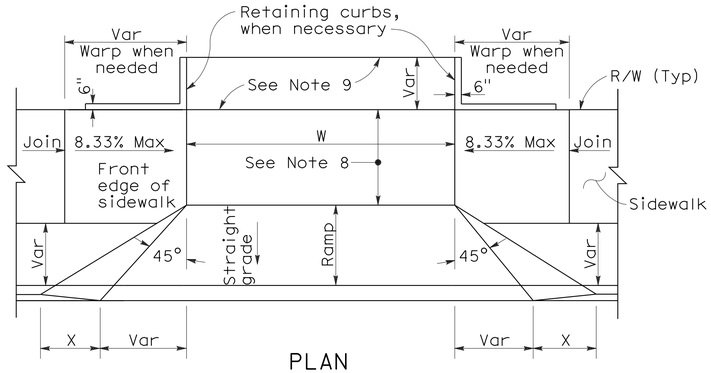

PLAN

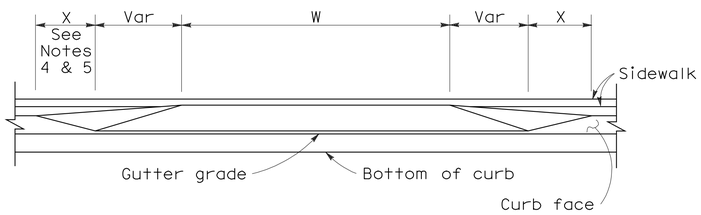

ELEVATION

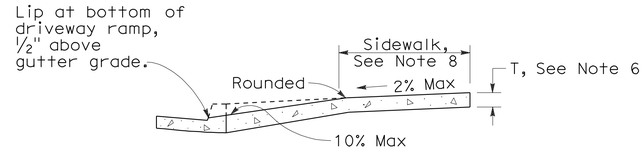

CASE A

Typical driveway, sidewalk not depressed

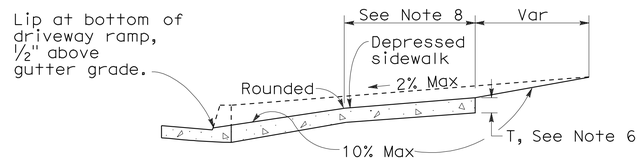

CASE B

Driveway with depressed sidewalk

SECTIONS

DRIVEWAYS

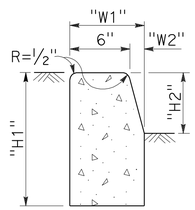

TYPE A1 CURBS

See Table A

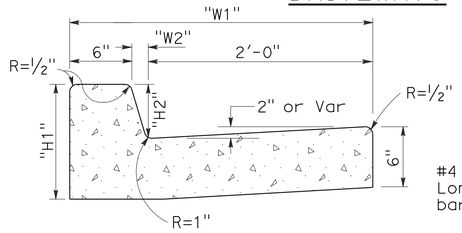

TYPE A2 CURBS

See Table A

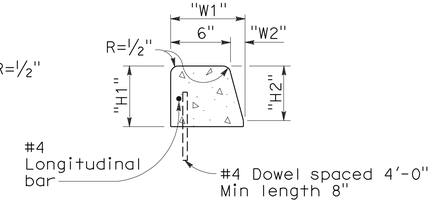

TYPE A3 CURBS

Superimposed on existing pavement
See Table A

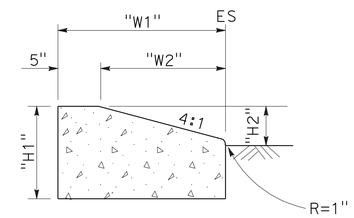

TYPE D CURBS

See Table A

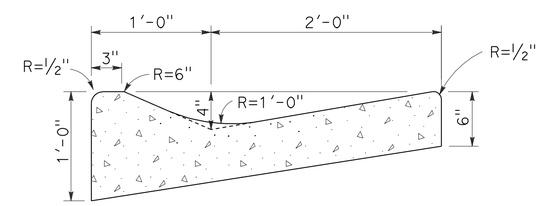

TYPE E CURB

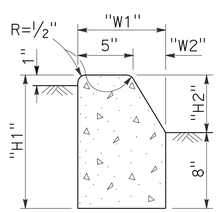

TYPE B1 CURBS

See Table A

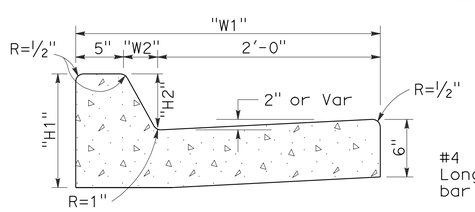

TYPE B2 CURBS

See Table A

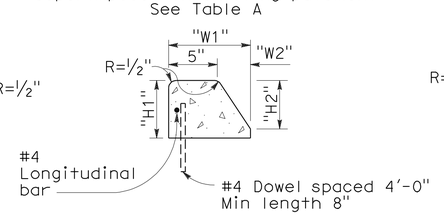

TYPE B3 CURBS

Superimposed on existing pavement
See Table A

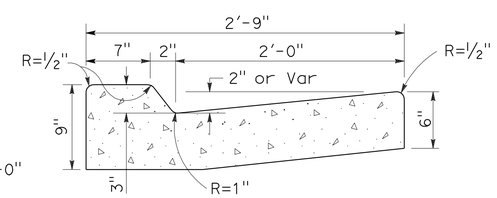

TYPE B4 CURBS

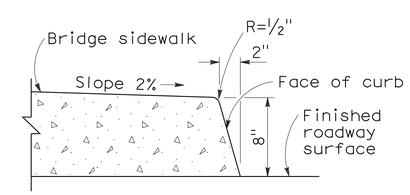

TYPE H CURB

On Bridges

CURBS

CURB QUANTITIES

TYPE	CUBIC YARDS PER LINEAR FOOT
A1-6	0.02585
A1-8	0.03084
A2-6	0.05903
A2-8	0.06379
A3-6	0.01036
A3-8	0.01435
B1-4	0.02185
B1-6	0.02930
B2-4	0.05515
B2-6	0.06171
B3-4	0.00641
B3-6	0.01074
B4	0.05709
D-4	0.04083
D-6	0.06804
E	0.06661

TABLE A

CURB TYPE	DIMENSIONS "H1"	"H2"	"W1"	"W2"
A1-6	1'-2"	6"	7½"	1½"
A1-8	1'-4"	8"	8"	2"
A2-6	1'-0"	6"	2'-7½"	1½"
A2-8	1'-2"	8"	2'-8"	2"
A3-6	6"	5"	7¼"	1¼"
A3-8	8"	7"	7¾"	1¾"
B1-4	1'-0"	4"	7½"	2½"
B1-6	1'-2"	6"	9"	4"
B2-4	10"	4"	2'-7½"	2½"
B2-6	1'-0"	6"	2'-9"	4"
B3-4	4"	3"	7"	2"
B3-6	6"	5"	8½"	3½"
D-4	10"	4"	1'-6"	1'-1"
D-6	1'-0"	6"	2'-2"	1'-8"

NOTES:

1. Case A driveway section typically applies.
2. Use Case B driveway section when ramp slopes would exceed 10% in Case A.
3. Use Case B driveway section when sidewalk cross slope would exceed 2% in Case A.
4. X=3'-0" except for curb heights over 10" where 4:1 slopes shall be used on curb slope.
5. X is a variable when sidewalk is located where wheelchairs may traverse the surface. Slopes shall not exceed 8.33%.
6. Sidewalk and ramp thickness "T" at driveway shall be 4" for residental and 6" for commercial.
7. Difference in slope of the driveway ramp and the slope of a line between the gutter and a point on the roadway 5'-0" from gutter line shall not exceed 15%. Reduce driveway ramp slope, not gutter slope, where required.
8. Minimum width of clear passageway for sidewalk shall be 4'-0".
9. Retaining curbs and acquisition of construction easement may be necessary for narrow sidewalks or curb heights in excess of 6".
10. Across the pedestrian route at curb ramp locations, the gutter pan slope shall not exceed 1" of depth for each 2'-0" of width.

STATE OF CALIFORNIA
DEPARTMENT OF TRANSPORTATION

CURBS AND DRIVEWAYS

NO SCALE

RSP A87A DATED NOVEMBER 17, 2006 SUPERSEDES STANDARD PLAN A87A DATED MAY 1, 2006 - PAGE 113 OF THE STANDARD PLANS BOOK DATED MAY 2006.

REVISED STANDARD PLAN RSP A87A

2006 REVISED STANDARD PLAN RSP A87A

10-25-06

DIST	COUNTY	ROUTE	POST MILES TOTAL PROJECT	SHEET NO.	TOTAL SHEETS
01	Lak	20	11.9/12.4	90	120

REGISTERED CIVIL ENGINEER

September 1, 2006
PLANS APPROVAL DATE

REGISTERED PROFESSIONAL ENGINEER — Hector David Cordova — No. C41957 — Exp. 3-31-08 — CIVIL — STATE OF CALIFORNIA

The State of California or its officers or agents shall not be responsible for the accuracy or completeness of electronic copies of this plan sheet.

To accompany plans dated 6-27-11

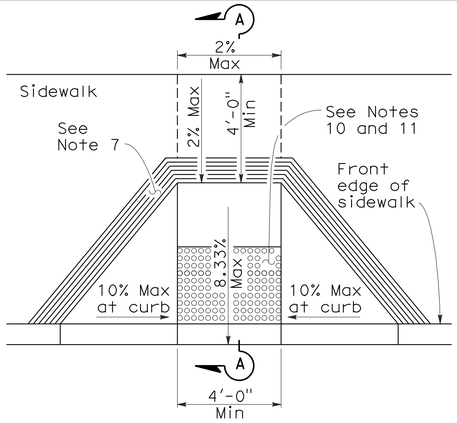

CASE A

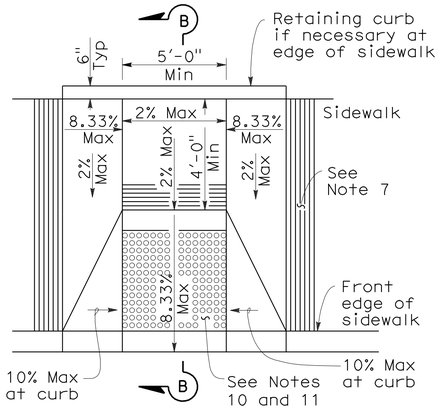

CASE B

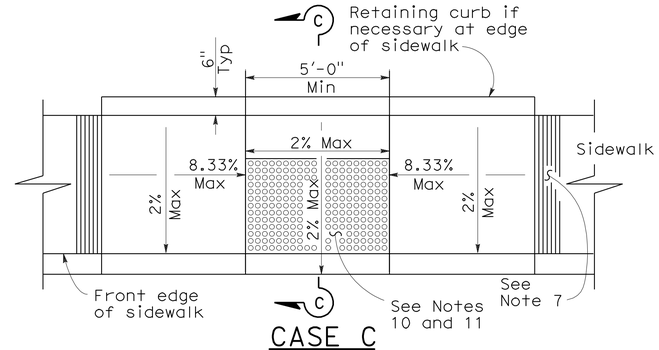

CASE C

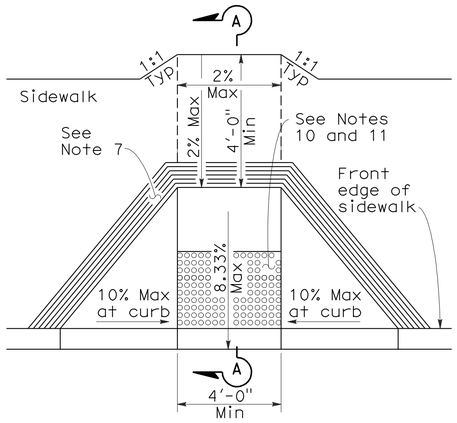

CASE D

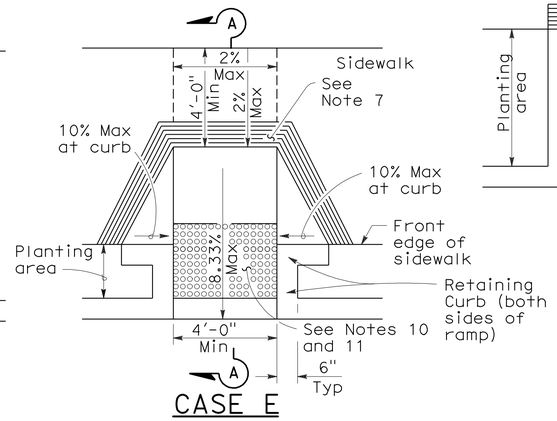

CASE E

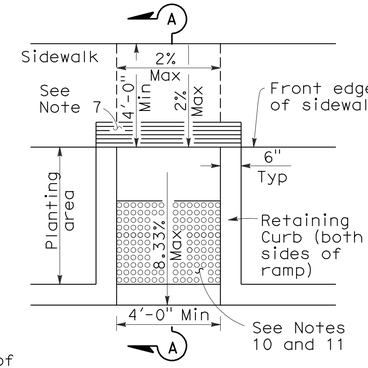

CASE F

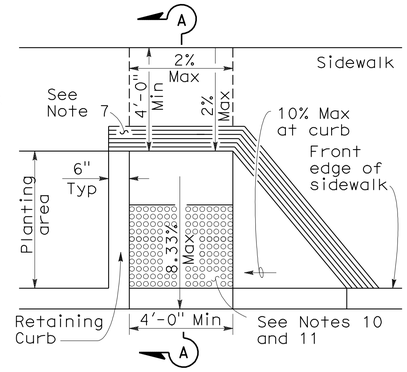

CASE G

See Note 4

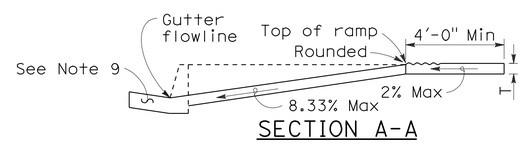

SECTION A-A

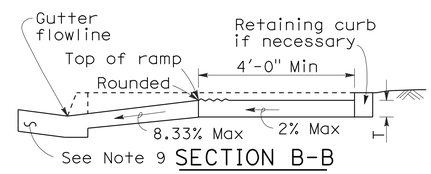

SECTION B-B

Depress entire sidewalk as required

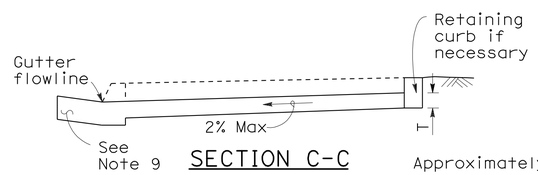

SECTION C-C

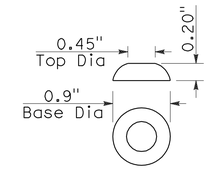

RAISED TRUNCATED DOME

NOTES:

1. As site conditions dictate, Case A through Case G curb ramps may be used for corner installations similar to those shown in Detail A and Detail B. The case of curb ramps used in Detail A do not have to be the same. Case A through Case G curb ramps also may be used at mid block locations, as site conditions dictate.
2. If distance from curb to back of sidewalk is too short to accommodate ramp and 4'-0" platform (landing) as shown in Case A, the sidewalk may be depressed longitudinally as in Case B, or C or may be widened as in Case D.
3. When ramp is located in center of curb return, crosswalk configuration must be similar to that shown for Detail B.
4. As site conditions dictate, the retaining curb side and the flared side of the Case G ramp shall be constructed in reversed position.
5. If located on a curve, the sides of the ramp need not be parallel, but the minimum width of the ramp shall be 4'-0".
6. Side slope of ramp flares vary uniformly from a maximum of 10% at curb to conform with longitudinal sidewalk slope adjacent to top of the ramp, except in Case C and Case F.
7. The curb ramp shall be outlined, as shown, with a 1'-0" wide border with 1/4" grooves approximately 3/4" on center. See grooving detail.
8. Transitions from ramps and landing to walks, gutters or streets shall be flush and free of abrupt changes.
9. Maximum slopes of adjoining gutters, the road surface immediately adjacent to the curb ramp or accessible route shall not exceed 5 percent within 4'-0" of the top and bottom of the curb ramp.
10. Curb ramps shall have a detectable warning surface that extends the full width and 3'-0" depth of the ramp. Detectable Warning Surfaces shall conform to the details on this plan and the requirements in the Special Provisions.
11. The edge of the detectable warning surface nearest the street shall be between 6" and 8" from the gutter flowline.
12. Sidewalk and ramp thickness, "T", shall be 3 1/2" minimum.
13. Utility pull boxes, manholes, vaults and all other utility facilities within the boundaries of the curb ramp will be relocated or adjusted to grade by the owner prior to, or in conjunction with, curb ramp construction.
14. For retrofit conditions, removal and replacement of curb apron will be at the Contractor's option, unless otherwise shown on project plans.

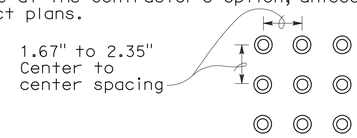

RAISED TRUNCATED DOME PATTERN (IN-LINE)

DETECTABLE WARNING SURFACE

See Note 10

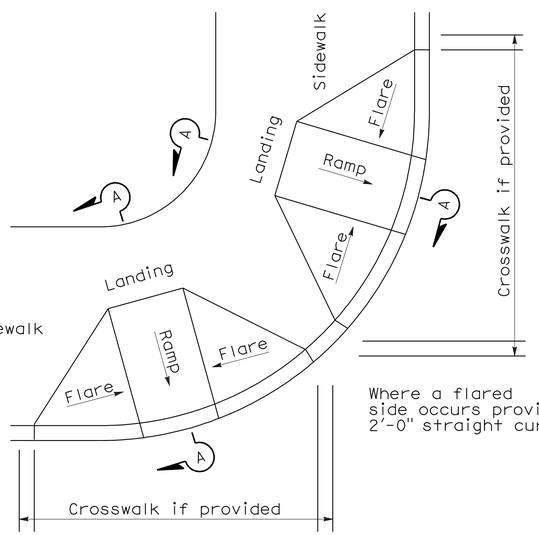

DETAIL A

TYPICAL TWO-RAMP CORNER INSTALLATION

See Note 1

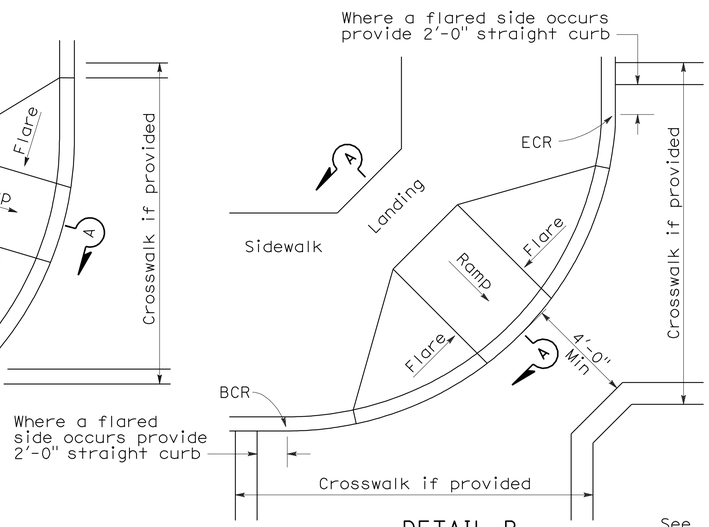

DETAIL B

TYPICAL ONE-RAMP CORNER INSTALLATION

See Notes 1 and 3

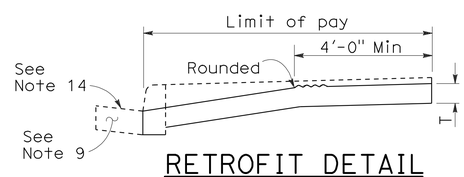

RETROFIT DETAIL

Existing curb and sidewalk

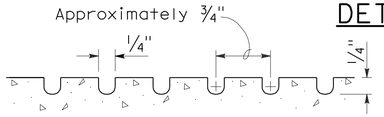

GROOVING DETAIL

STATE OF CALIFORNIA
DEPARTMENT OF TRANSPORTATION

CURB RAMP DETAILS

NO SCALE

RSP A88A DATED SEPTEMBER 1, 2006 SUPERSEDES STANDARD PLAN A88A DATED MAY 1, 2006 - PAGE 115 OF THE STANDARD PLANS BOOK DATED MAY 2006.

REVISED STANDARD PLAN RSP A88A

2006 REVISED STANDARD PLAN RSP A88A

8-3-06

DIST	COUNTY	ROUTE	POST MILES TOTAL PROJECT	SHEET NO.	TOTAL SHEETS
01	Lak	20	11.9/12.4	91	120

William K. Farnbach
REGISTERED CIVIL ENGINEER

May 15, 2009
PLANS APPROVAL DATE

REGISTERED PROFESSIONAL ENGINEER William K. Farnbach No. C49042 Exp. 9-30-10 CIVIL STATE OF CALIFORNIA

The State of California or its officers or agents shall not be responsible for the accuracy or completeness of electronic copies of this plan sheet.

To accompany plans dated 6-27-11

2006 REVISED STANDARD PLAN RSP P1

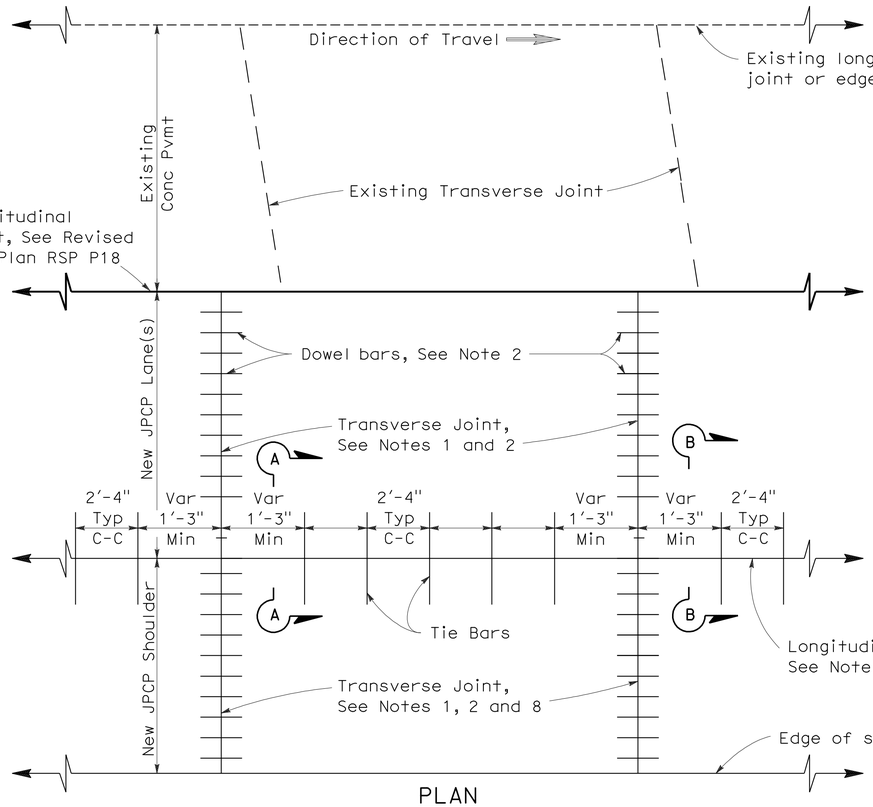

PLAN

LANE/SHOULDER ADDITION OR RECONSTRUCTION

See Notes 6 and 7

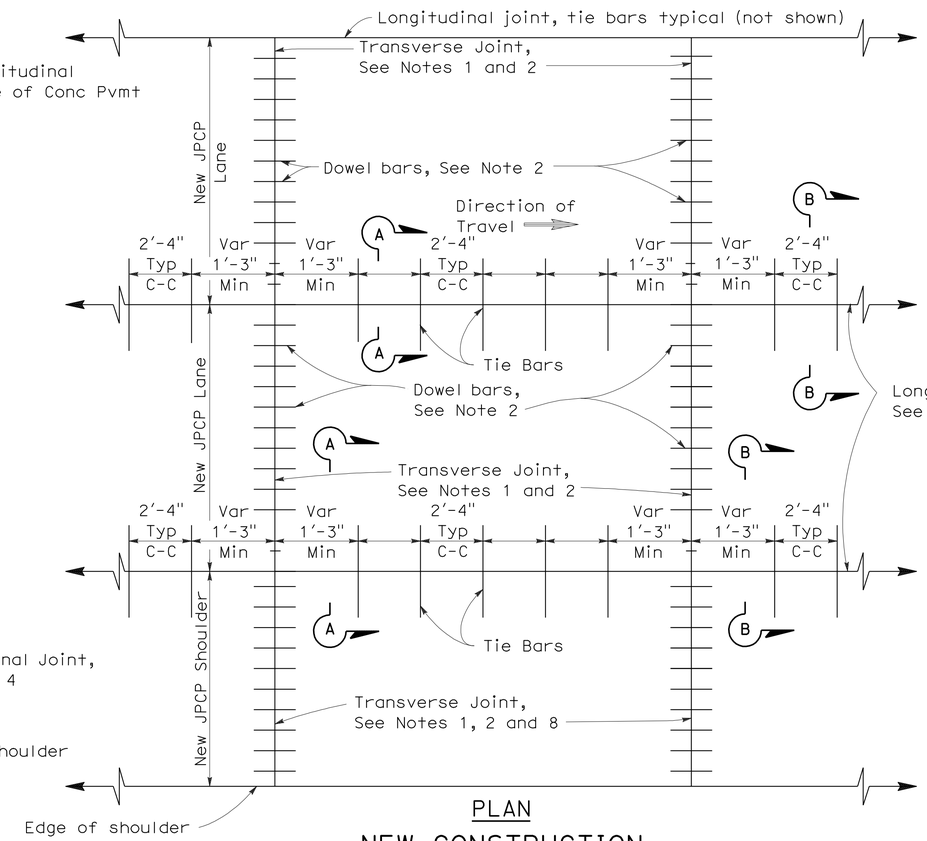

PLAN

NEW CONSTRUCTION

See Notes 6 and 7

NOTES:

1. Transverse joints shall be constructed at right angles to the longitudinal pavement joints in new jointed plain concrete pavement and spaced at successive repeated intervals of 12', 15', 13' and 14'.
2. For transverse joint and dowel bar details not shown, See Revised Standard Plan RSP P10.
3. Construct longitudinal contraction joints as shown in Section A-A when more than one lane or shoulder widths are placed at one time. If constructing one lane at a time, use longitudinal construction joint, as shown in Section B-B.
4. For additional longitudinal joint details, see Revised Standard Plan RSP P18.
5. If fresh concrete is placed adjacent to existing concrete, the top corner of the new hardened concrete does not need to be rounded to the 1/4" radius as shown.
6. Joint spacing patterns do not apply to intersections.
7. Details can also apply to inside widening.
8. Dowel bars may be omitted from shoulders when the shoulder cross slope is not the same as the adjacent traffic lane.

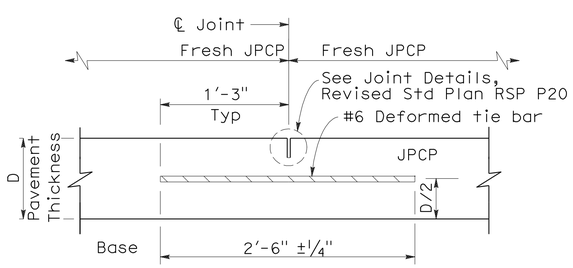

SECTION A-A

LONGITUDINAL CONTRACTION JOINT

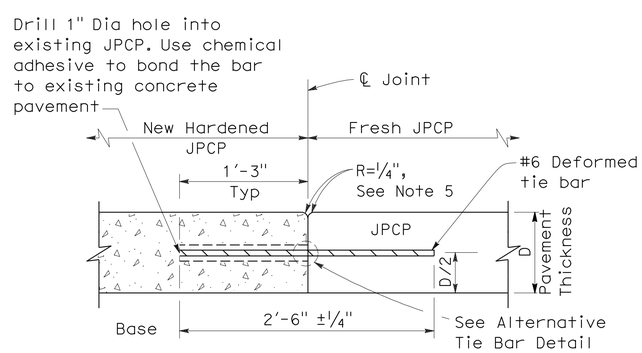

SECTION B-B

LONGITUDINAL CONSTRUCTION JOINT

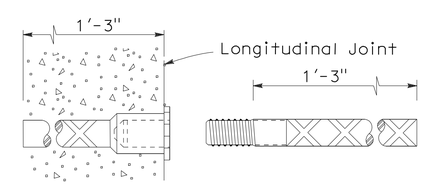

ALTERNATIVE TIE BAR SPLICE DETAIL

(Splice Coupler)

TIE BAR DETAILS

STATE OF CALIFORNIA
DEPARTMENT OF TRANSPORTATION

JOINTED PLAIN CONCRETE PAVEMENT

NO SCALE

RSP P1 DATED MAY 15, 2009 SUPERSEDES STANDARD PLAN P1
DATED MAY 1, 2006 - PAGE 119 OF THE STANDARD PLANS BOOK DATED MAY 2006.

REVISED STANDARD PLAN RSP P1

5-8-09

DIST	COUNTY	ROUTE	POST MILES TOTAL PROJECT	SHEET NO.	TOTAL SHEETS
01	Lak	20	11.9/12.4	92	120

William K. Farnbach
REGISTERED CIVIL ENGINEER

May 15, 2009
PLANS APPROVAL DATE

REGISTERED PROFESSIONAL ENGINEER William K. Farnbach No. C49042 Exp. 9-30-10 CIVIL STATE OF CALIFORNIA

The State of California or its officers or agents shall not be responsible for the accuracy or completeness of electronic copies of this plan sheet.

To accompany plans dated 6-27-11

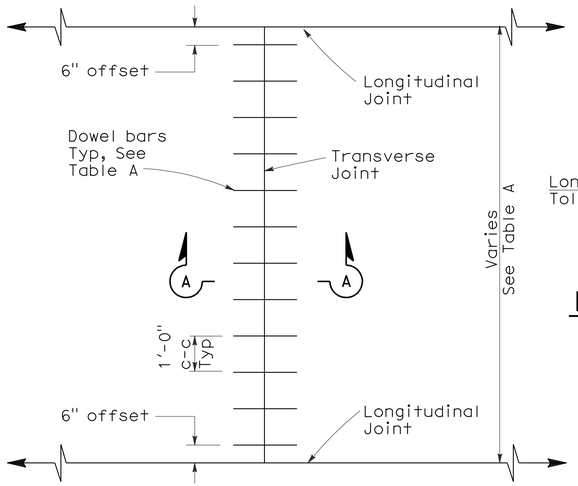

TRANSVERSE JOINT DOWEL BAR LAYOUT

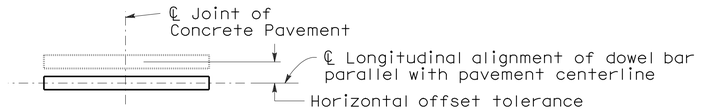

PLAN

HORIZONTAL OFFSET TOLERANCE

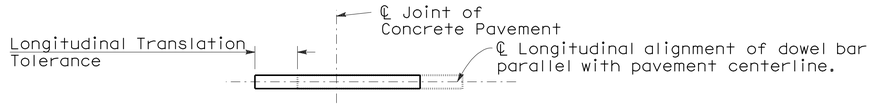

PLAN

LONGITUDINAL TRANSLATION TOLERANCE

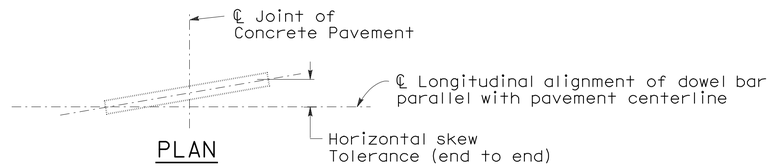

PLAN

HORIZONTAL SKEW TOLERANCE

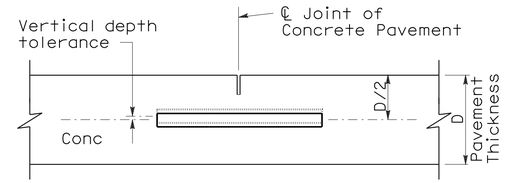

ELEVATION

VERTICAL DEPTH TOLERANCE

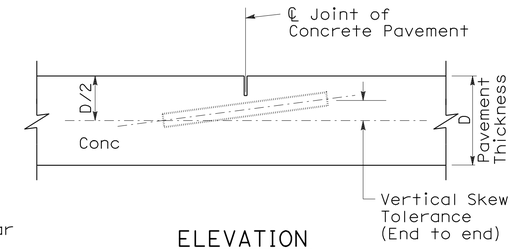

ELEVATION

VERTICAL SKEW TOLERANCE

NOTES:

1. See Revised Standard Plan RSP P1 for typical dowel bar placement and locations.
2. 1½" Dia smooth dowel bars are to be used with a pavement thickness, D, equal to or greater than 0.70 feet. For pavement thickness, D, less than 0.70 feet, use 1¼" Dia smooth dowel bars.
3. For widths not shown, see Project Plans.
4. If fresh concrete pavement is placed adjacent to existing concrete pavement, the top corner of the existing concrete pavement does not need to be rounded to the ¼" radius, as shown.

TABLE A (See Note 3)

Dowel Bar Transverse Spacing Table	
Width between Longitudinal Joints	Number of Dowels between Longitudinal Joints
14'-0"	14
13'-0"	13
12'-0"	12
11'-0"	11
10'-0"	10
8'-0"	8
5'-0"	5
4'-0"	4

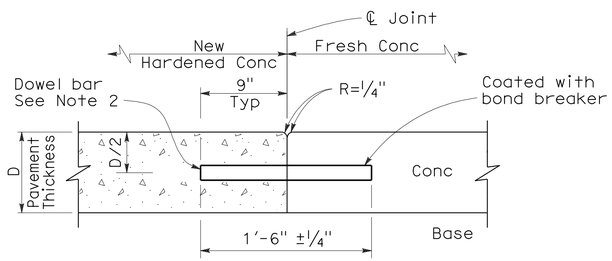

SECTION A-A

TRANSVERSE CONSTRUCTION JOINT DETAIL

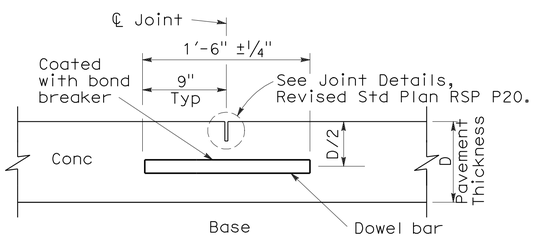

TRANSVERSE CONTRACTION JOINT

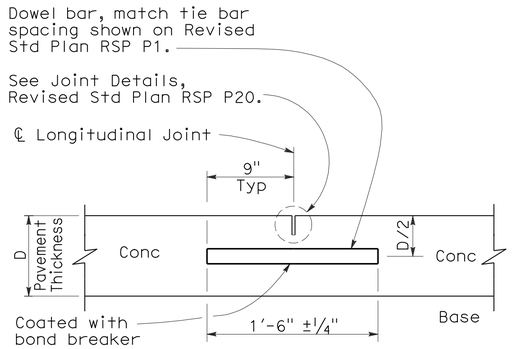

LONGITUDINAL CONTRACTION JOINT WITH DOWEL BARS

(See Revised Std Plan RSP P18)

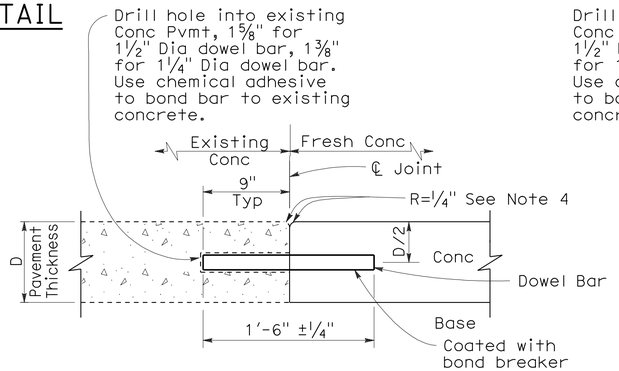

TRANSVERSE CONSTRUCTION JOINT FOR EXISTING CONCRETE PAVEMENT

(Drill and bond locations)

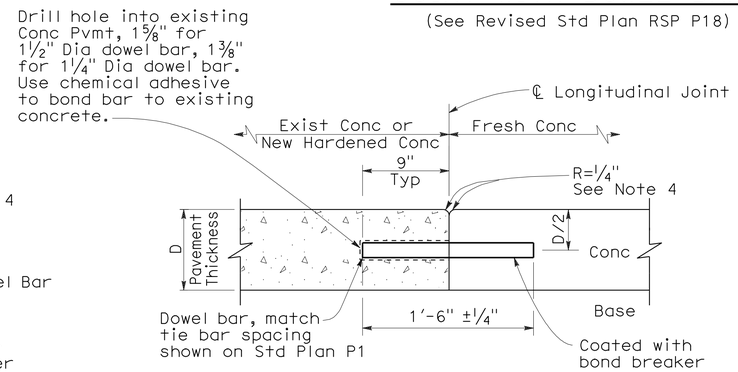

LONGITUDINAL CONSTRUCTION JOINT WITH DOWEL BARS

(See Revised Std Plan RSP P18)

STATE OF CALIFORNIA
DEPARTMENT OF TRANSPORTATION

CONCRETE PAVEMENT-DOWEL BAR DETAILS

NO SCALE

RSP P10 DATED MAY 15, 2009 SUPERSEDES STANDARD PLAN P10 DATED MAY 1, 2006 - PAGE 124 OF THE STANDARD PLANS BOOK DATED MAY 2006.

REVISED STANDARD PLAN RSP P10

2006 REVISED STANDARD PLAN RSP P10

5-8-09

DIST	COUNTY	ROUTE	POST MILES TOTAL PROJECT	SHEET NO.	TOTAL SHEETS
01	Lak	20	11.9/12.4	93	120

William K. Farnbach
REGISTERED CIVIL ENGINEER

May 15, 2009
PLANS APPROVAL DATE

REGISTERED PROFESSIONAL ENGINEER
William K. Farnbach
No. C49042
Exp. 9-30-10
CIVIL
STATE OF CALIFORNIA

The State of California or its officers or agents shall not be responsible for the accuracy or completeness of electronic copies of this plan sheet.

To accompany plans dated 6-27-11

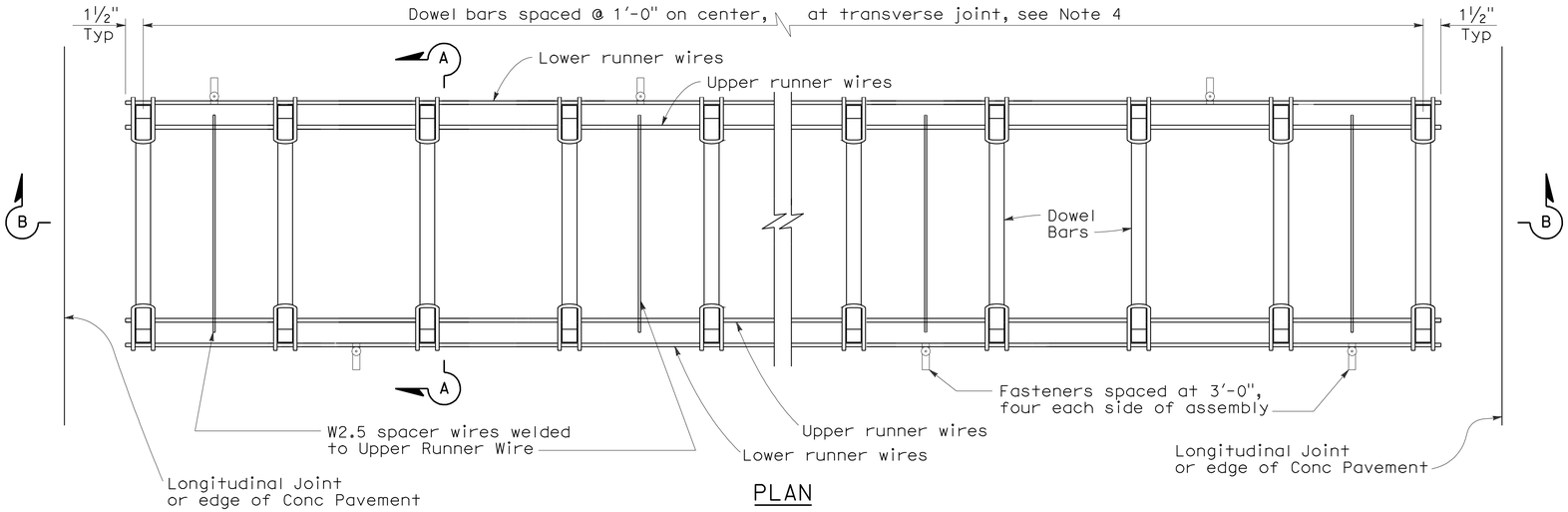

PLAN

DOWEL BAR BASKET (TRANSVERSE JOINT)

See Note 1

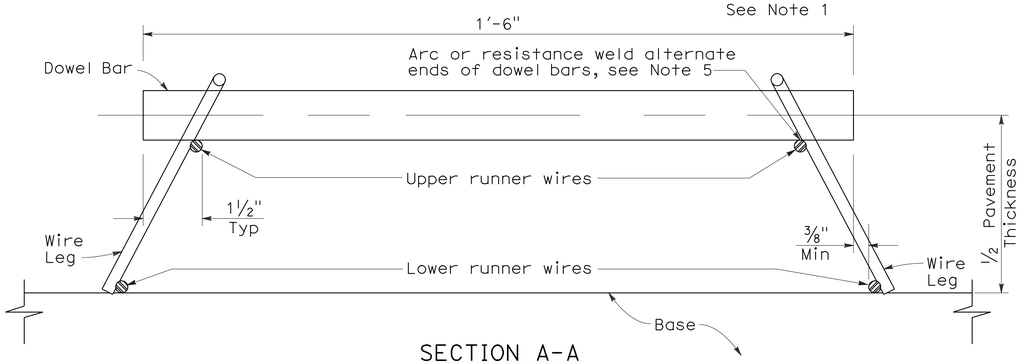

SECTION A-A

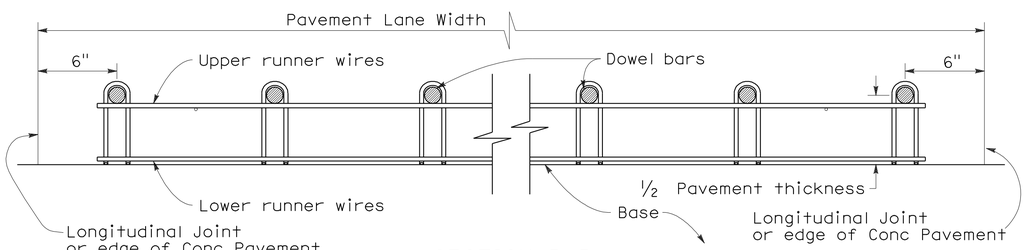

SECTION B-B

See Note 1

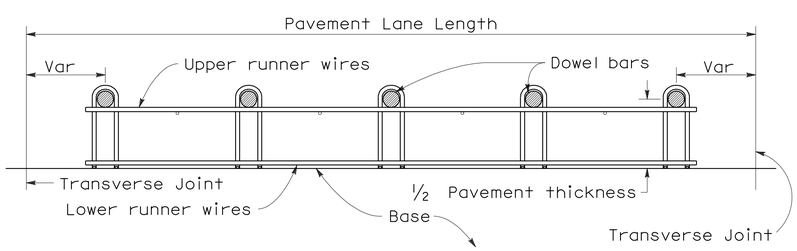

SECTION C-C

See Notes 1 and 4

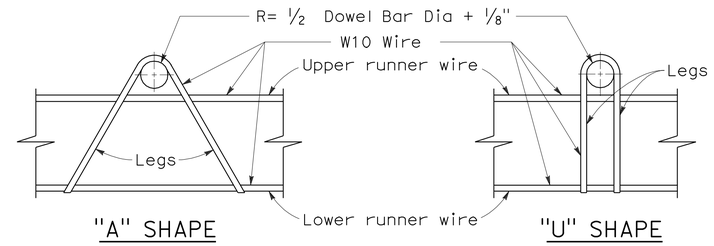

"A" SHAPE "U" SHAPE

ASSEMBLY FRAME DETAILS

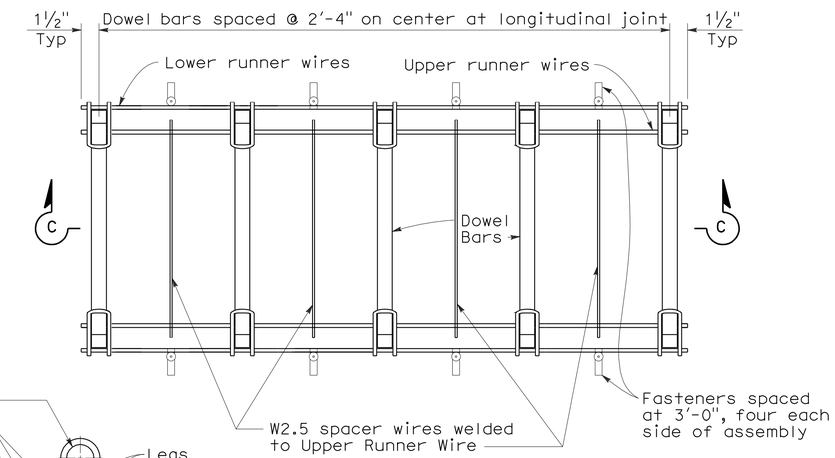

PLAN

DOWEL BAR BASKET (LONGITUDINAL JOINT)

See Note 1

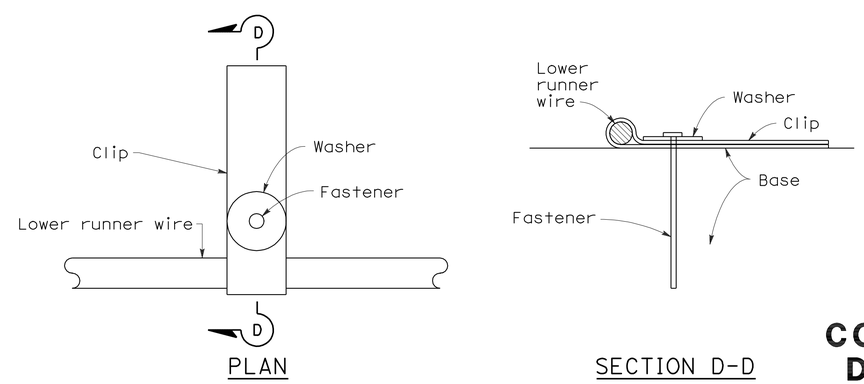

PLAN SECTION D-D

FASTENER DETAIL

NOTES:

1. "U" frame shape assembly shown. "U" frame shape or "A" frame shape are acceptable.
2. Wire sizes shown are minimum required.
3. All wire intersections are to be resistance welded.
4. Use tie bar spacing for longitudinal dowel bar locations. See Revised Std Plans RSPs P1, P2, and P3 for tie bar requirements.
5. Weld may be at top or bottom of dowel bar.

STATE OF CALIFORNIA
DEPARTMENT OF TRANSPORTATION

CONCRETE PAVEMENT-DOWEL BAR BASKET DETAILS

NO SCALE

RSP P12 DATED MAY 15, 2009 SUPERSEDES RSP P12 DATED NOVEMBER 17, 2006 AND STANDARD PLAN P12 DATED MAY 1, 2006 - PAGE 125 OF THE STANDARD PLANS BOOK DATED MAY 2006.

REVISED STANDARD PLAN RSP P12

2006 REVISED STANDARD PLAN RSP P12

5-8-09

DIST	COUNTY	ROUTE	POST MILES TOTAL PROJECT	SHEET NO.	TOTAL SHEETS
01	Lak	20	11.9/12.4	94	120

William K. Farnbach
REGISTERED CIVIL ENGINEER

May 15, 2009
PLANS APPROVAL DATE

REGISTERED PROFESSIONAL ENGINEER
William K. Farnbach
No. C49042
Exp. 9-30-10
CIVIL
STATE OF CALIFORNIA

The State of California or its officers or agents shall not be responsible for the accuracy or completeness of electronic copies of this plan sheet.

To accompany plans dated 6-27-11

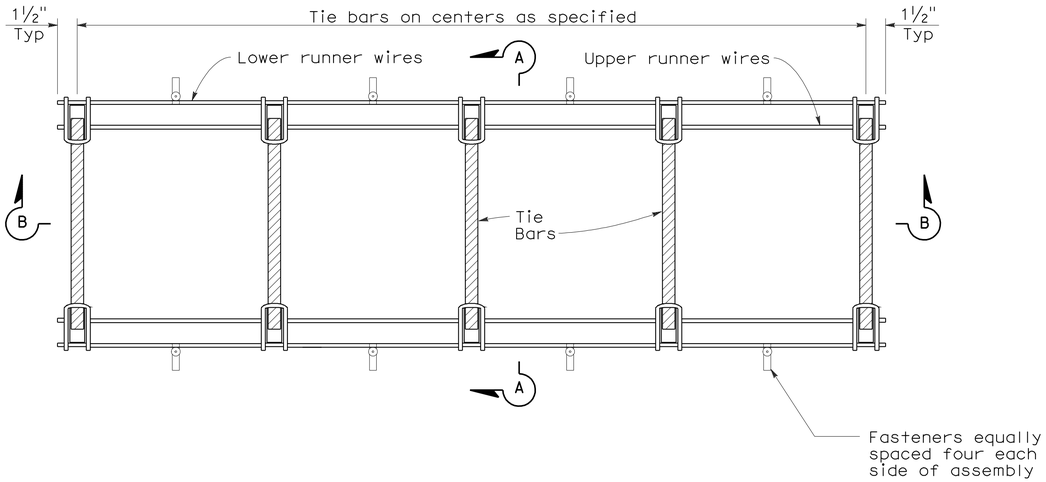

PLAN

TIE BAR BASKET

(TIE BARS AT LONGITUDINAL JOINT)
See Note 1

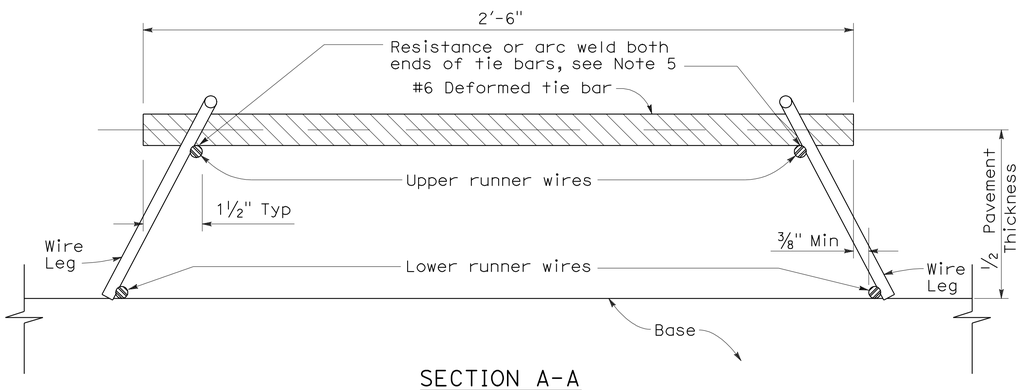

SECTION A-A

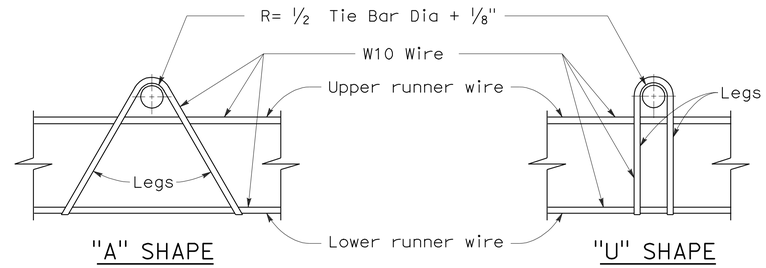

ASSEMBLY FRAME DETAILS

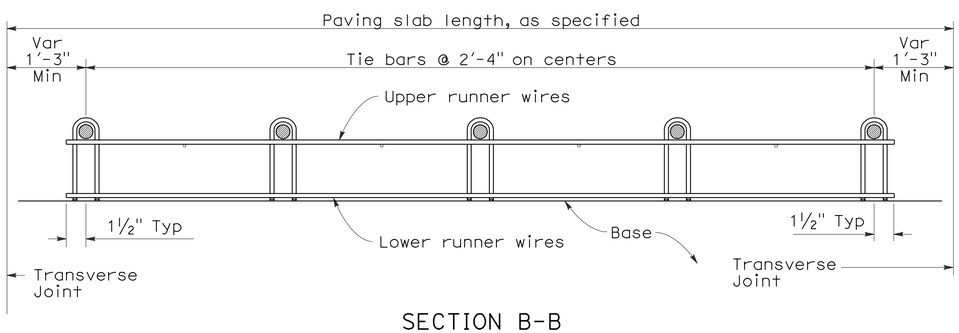

SECTION B-B
See Note 1

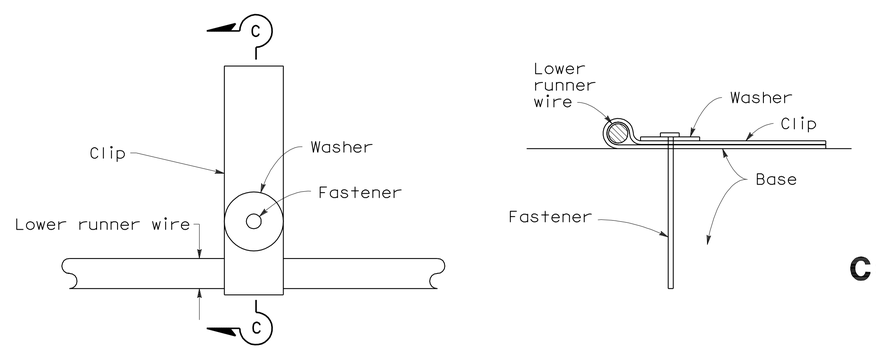

PLAN

SECTION C-C

FASTENER DETAIL

NOTES:

1. "U" frame shape assembly shown. "U" frame shape or "A" frame shape are acceptable.
2. Wire sizes shown are minimum required.
3. All wire intersections are to be resistance welded.
4. Not for use on nondoweled skewed jointed plain concrete pavement.
5. Weld may be at top or bottom of tie bar.

STATE OF CALIFORNIA
DEPARTMENT OF TRANSPORTATION

CONCRETE PAVEMENT-TIE BAR BASKET DETAILS

NO SCALE

RSP P17 DATED MAY 15, 2009 SUPERSEDES RSP P17 DATED NOVEMBER 17, 2006 AND STANDARD PLAN P17 DATED MAY 1, 2006 - PAGE 126 OF THE STANDARD PLANS BOOK DATED MAY 2006.

REVISED STANDARD PLAN RSP P17

2006 REVISED STANDARD PLAN RSP P17

5-8-09

DIST	COUNTY	ROUTE	POST MILES TOTAL PROJECT	SHEET NO.	TOTAL SHEETS
01	Lak	20	11.9/12.4	95	120

William K. Farnbach
REGISTERED CIVIL ENGINEER

June 5, 2009
PLANS APPROVAL DATE

REGISTERED PROFESSIONAL ENGINEER
William K. Farnbach
No. C49042
Exp. 9-30-10
CIVIL
STATE OF CALIFORNIA

The State of California or its officers or agents shall not be responsible for the accuracy or completeness of electronic copies of this plan sheet.

To accompany plans dated 6-27-11

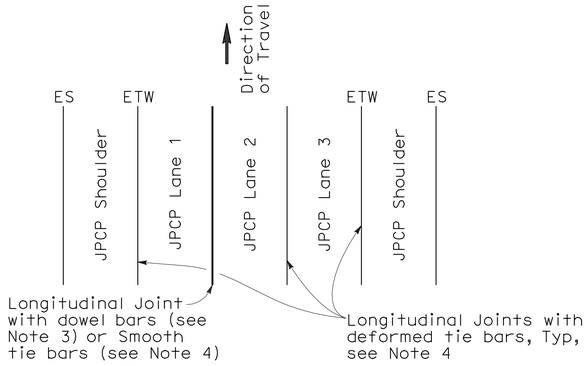

3 LANES WITH TIED CONCRETE SHOULDERS
PLAN

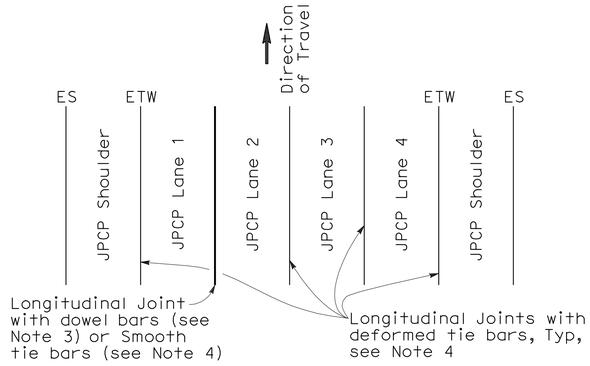

4 LANES WITH TIED CONCRETE SHOULDERS
PLAN

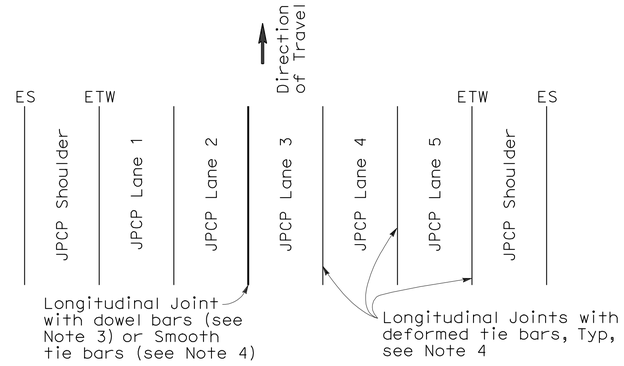

5 LANES WITH TIED CONCRETE SHOULDERS
PLAN

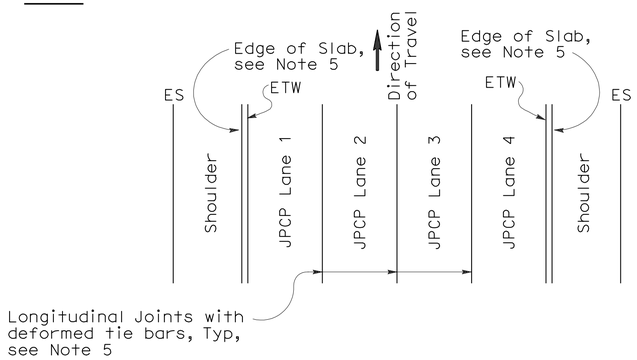

4 LANES OR LESS WITH WIDENED SLAB
PLAN

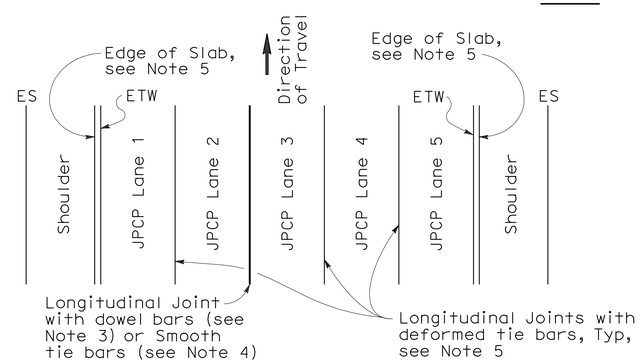

5 LANES WITH WIDENED SLAB
PLAN

NEW CONSTRUCTION

Location of Longitudinal Joints
(For JPCP)

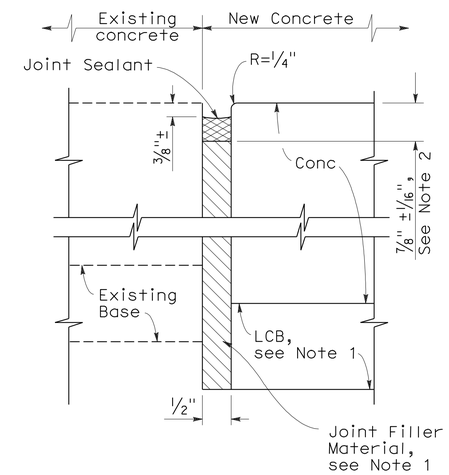

DETAIL A

ISOLATION JOINT

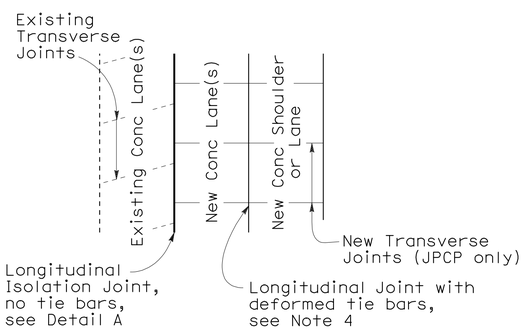

CASE 1
PLAN

Transverse Joints do not align between new and existing

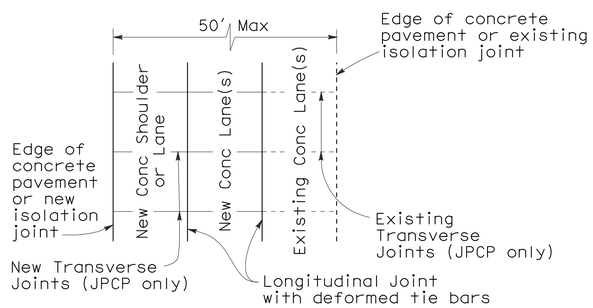

CASE 2
PLAN

Transverse Joints align between new and existing

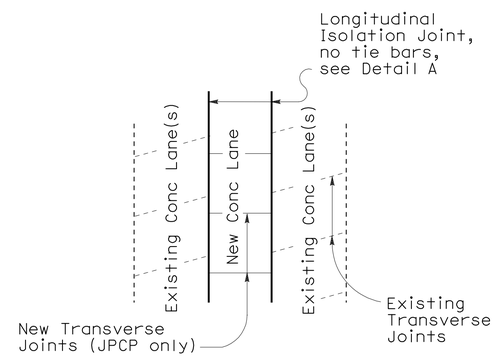

CASE 3 (INTERIOR LANE REPLACEMENT)
PLAN

Transverse Joints do not align between new and existing

LANE/SHOULDER ADDITION OR RECONSTRUCTION

(For JPCP and CRCP)

NOTES:

1. Where Lean Concrete Base is not used as base material, the joint filler material used for the longitudinal isolation joint shall only extend to the bottom of the new concrete slab. See Detail A.
2. Use 5/8" ±1/16" dimension for silicone sealant.
3. See Revised Standard Plan RSP P10 for longitudinal joint with dowel bars.
4. See Revised Standard Plan RSP P1.
5. See Revised Standard Plan RSP P2.

STATE OF CALIFORNIA
DEPARTMENT OF TRANSPORTATION

CONCRETE PAVEMENT-LANE SCHEMATICS AND ISOLATION JOINT DETAIL

NO SCALE

RSP P18 DATED JUNE 5, 2009 SUPERSEDES RSP P18 DATED MAY 15, 2009, RSP P18 DATED NOVEMBER 17, 2006 AND STANDARD PLAN P18 DATED MAY 1, 2006 - PAGE 127 OF THE STANDARD PLANS BOOK DATED MAY 2006.

REVISED STANDARD PLAN RSP P18

2006 REVISED STANDARD PLAN RSP P18

5-14-09

NOTE:

1. Tie bars, dowel bars, and reinforcement are not shown in joint seal details, see Revised Standard Plans RSP P1, RSP P3, RSP P10, RSP P35, RSP P45, or RSP P46 as applicable.

DIST	COUNTY	ROUTE	POST MILES TOTAL PROJECT	SHEET NO.	TOTAL SHEETS
01	Lak	20	11.9/12.4	96	120

REGISTERED CIVIL ENGINEER

May 15, 2009
PLANS APPROVAL DATE

REGISTERED PROFESSIONAL ENGINEER William K. Farnbach No. C49042 Exp. 9-30-10 CIVIL STATE OF CALIFORNIA

The State of California or its officers or agents shall not be responsible for the accuracy or completeness of electronic copies of this plan sheet.

To accompany plans dated 6-27-11

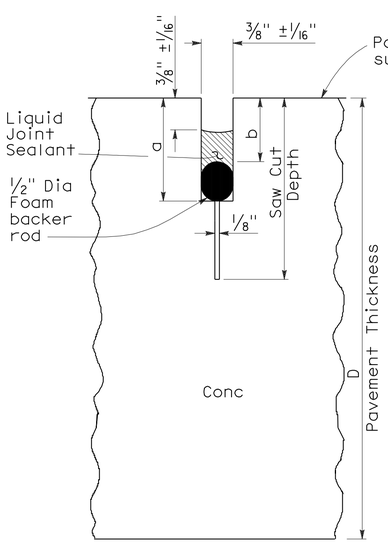

LIQUID SEALANT

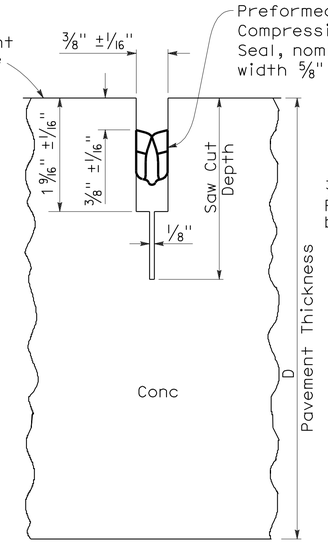

COMPRESSION SEAL

TYPE A1

Transverse Contraction Joints

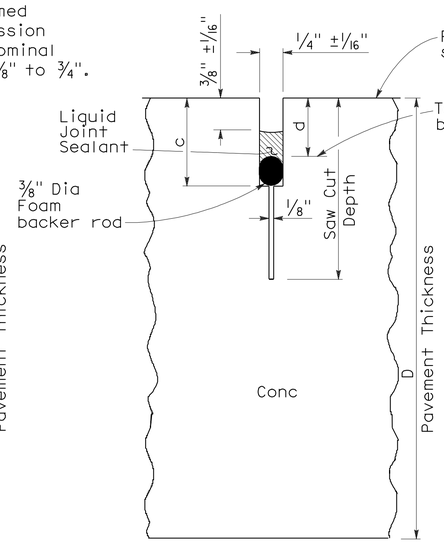

LIQUID SEALANT

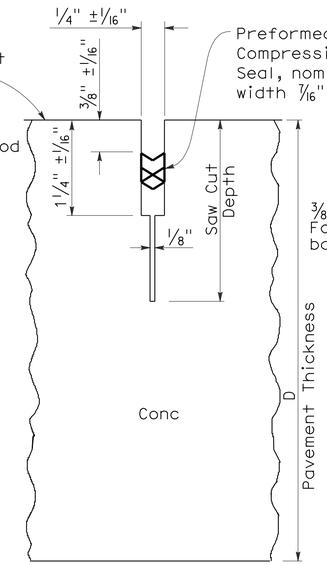

COMPRESSION SEAL

TYPE A2

Longitudinal Contraction Joints

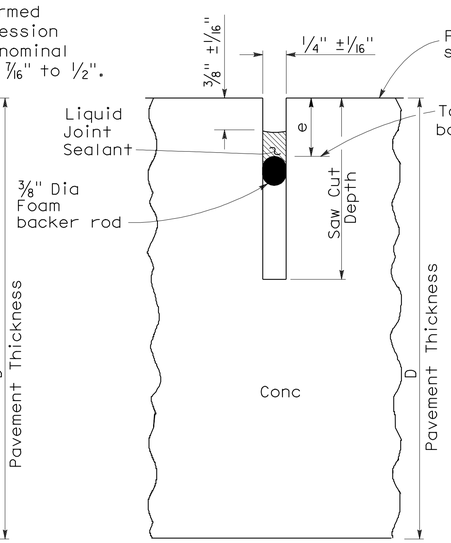

LIQUID SEALANT

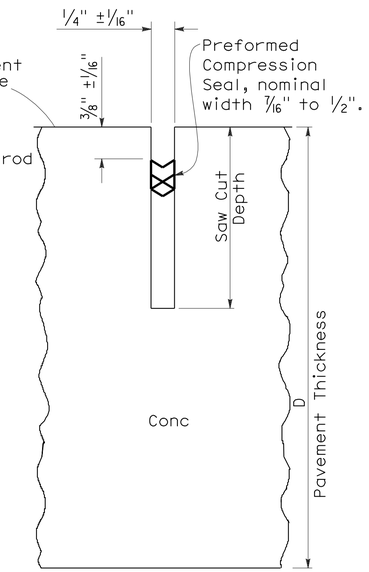

COMPRESSION SEAL

TYPE B

Longitudinal or Transverse Contraction Joint

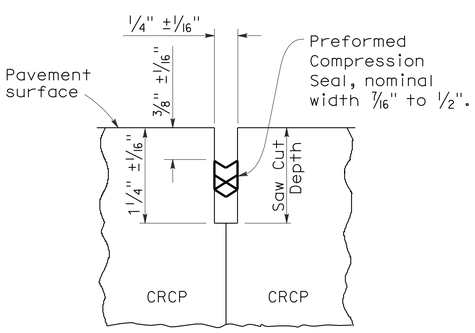

COMPRESSION SEAL

TYPE C

Transverse and Longitudinal Construction Joints (For CRCP)

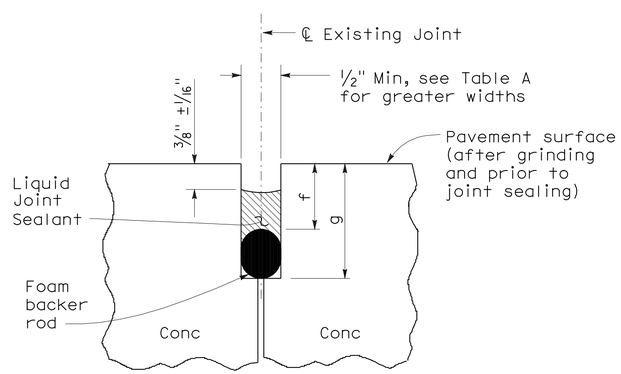

LIQUID SEALANT

TYPE R

Retrofit Transverse and Longitudinal Joints

LIQUID SEALANT RESERVOIR DEPTH

LIQUID SEALANT MATERIAL	3/8" Joint Width Type A1		1/4" Joint Width Type A2		1/4" Joint Width Type B
	DIMENSION		DIMENSION		DIMENSION
	a	b	c	d	e
SILCONE	1" ±1/16"	5/8" ±1/16"	15/16" ±1/16"	9/16" ±1/16"	9/16" ±1/16"
ASPHALT RUBBER	1 3/16" ±1/16"	3/4" ±1/16"	1 1/16" ±1/16"	11/16" ±1/16"	11/16" ±1/16"

TABLE A (TYPE R JOINT)

Sawn Joint Width	Backer Rod Diameter ± 1/16"	DIMENSION "f"	DIMENSION "g"
1"	1 5/16"	7/8"	2 1/4"
7/8"	1 3/16"	13/16"	2"
3/4"	1"	3/4"	1 3/4"
5/8"	7/8"	11/16"	1 1/2"
1/2"	11/16"	5/8"	1 1/4"

STATE OF CALIFORNIA
DEPARTMENT OF TRANSPORTATION

CONCRETE PAVEMENT-JOINT DETAILS

NO SCALE

RSP P20 DATED MAY 15, 2009 SUPERSEDES STANDARD PLAN P20 DATED MAY 1, 2006 - PAGE 128 OF THE STANDARD PLANS BOOK DATED MAY 2006.

REVISED STANDARD PLAN RSP P20

2006 REVISED STANDARD PLAN RSP P20

5-8-09

DIST	COUNTY	ROUTE	POST MILES TOTAL PROJECT	SHEET NO.	TOTAL SHEETS
01	Lak	20	11.9/12.4	97	120

William K. Farnbach
REGISTERED CIVIL ENGINEER

May 15, 2009
PLANS APPROVAL DATE

REGISTERED PROFESSIONAL ENGINEER
William K. Farnbach
No. C49042
Exp. 9-30-10
CIVIL
STATE OF CALIFORNIA

The State of California or its officers or agents shall not be responsible for the accuracy or completeness of electronic copies of this plan sheet.

To accompany plans dated 6-27-11

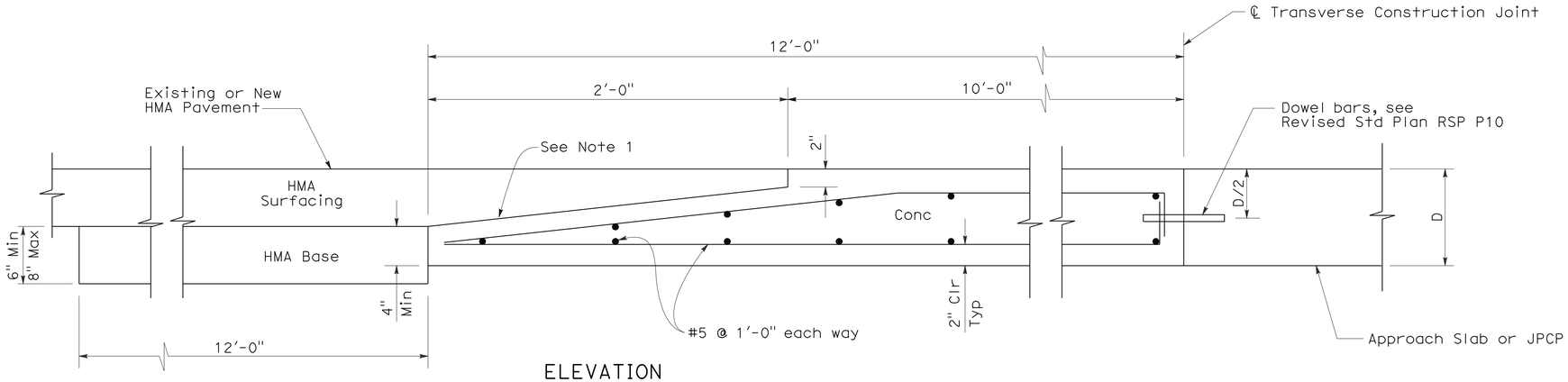

ELEVATION

CONCRETE PAVEMENT TO HOT MIXED ASPHALT PAVEMENT TRANSITION PANEL

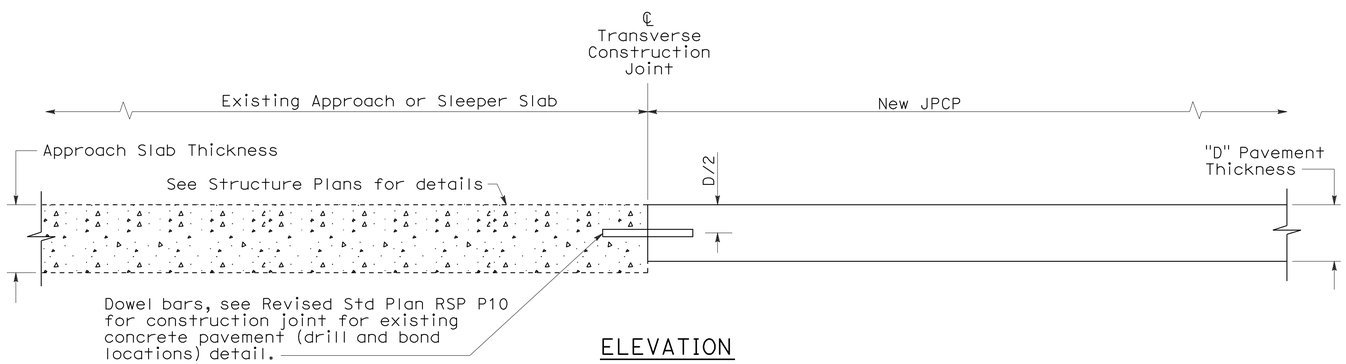

ELEVATION

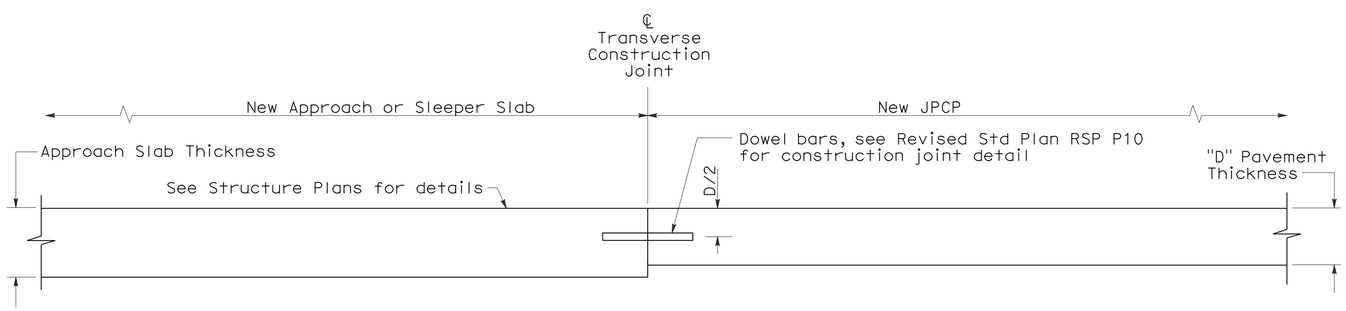

ELEVATION

CONCRETE PAVEMENT TRANSITION TO APPROACH OR SLEEPER SLAB

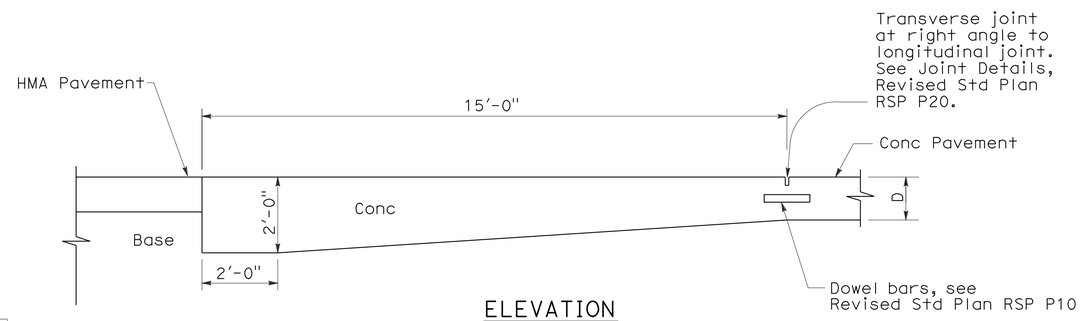

ELEVATION

PAVEMENT END ANCHOR

NOTE:

1. Heavy broom finish.

STATE OF CALIFORNIA
DEPARTMENT OF TRANSPORTATION

JOINTED PLAIN CONCRETE PAVEMENT-END PANEL PAVEMENT TRANSITIONS

NO SCALE

RSP P30 DATED MAY 15, 2009 SUPERSEDES STANDARD PLAN P30
DATED MAY 1, 2006 - PAGE 129 OF THE STANDARD PLANS BOOK DATED MAY 2006.

REVISED STANDARD PLAN RSP P30

2006 REVISED STANDARD PLAN RSP P30

5-8-09

DIST	COUNTY	ROUTE	POST MILES TOTAL PROJECT	SHEET NO.	TOTAL SHEETS
01	Lak	20	11.9/12.4	98	120

Raymond Don Tsztoo
REGISTERED CIVIL ENGINEER

January 18, 2008
PLANS APPROVAL DATE

REGISTERED PROFESSIONAL ENGINEER
Raymond Don Tsztoo
No. C37332
Exp. 6-30-08
CIVIL
STATE OF CALIFORNIA

The State of California or its officers or agents shall not be responsible for the accuracy or completeness of electronic copies of this plan sheet.

To accompany plans dated 6-27-11

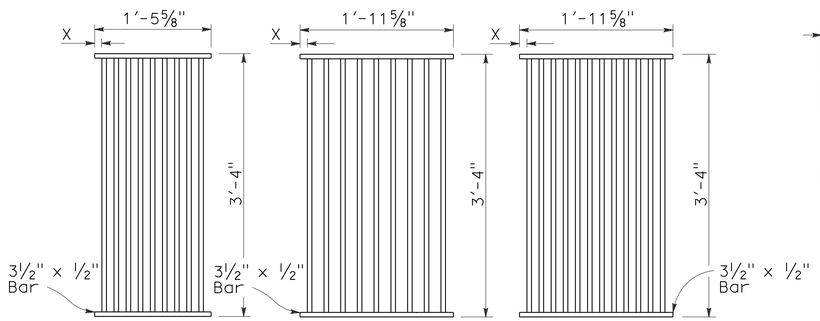

TYPE 18-9

1⅜" Clear spacing. Use within the roadbed on highways where bicycles and pedestrians are excluded.

TYPE 24-9

2" Clear spacing. Use in locations off the roadbed on all types of highways.

TYPE 24-12

1⅜" Clear spacing. Use within the roadbed on highways where bicycles and pedestrians are excluded.

RECTANGULAR GRATE DETAILS

(See table below)

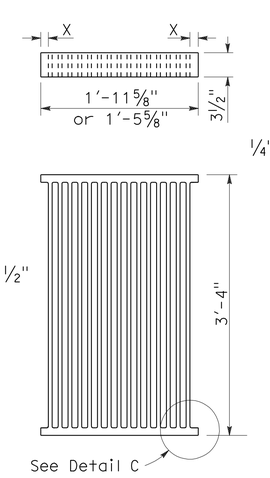

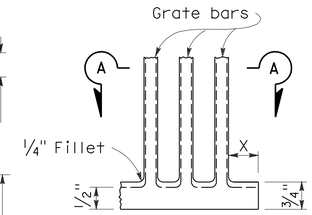

DETAIL C

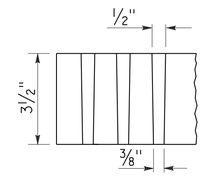

SECTION A-A

ALTERNATIVE CAST NODULAR IRON GRATE OR CAST STEEL GRATE

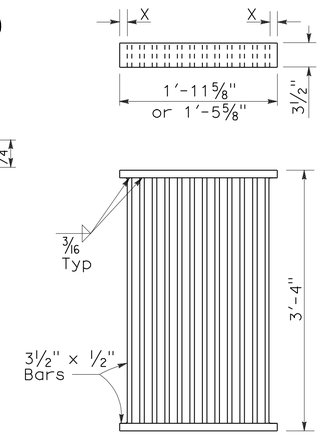

ALTERNATIVE WELDED GRATE

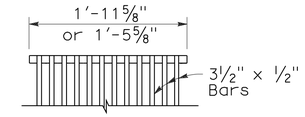

CAST END BLOCK

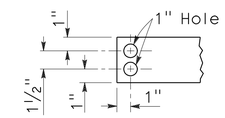

END OF BAR

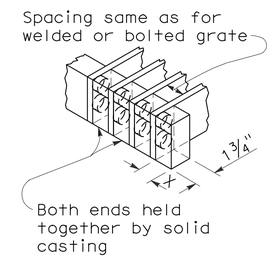

ALTERNATIVE CAST NODULAR IRON OR CAST STEEL END BLOCK GRATE

NOTES:

1. Grate type numbers refer to approximate width of grate in inches and number of bars, respectively.
2. Contractor has the option of using cast nodular iron, cast steel, welded, bolted, or cast end block grate.
3. See Special Provisions for requirements pertaining to galvanizing or asphalt dipping of grates and frames.
4. Rounded top of bars optional on all grates.
5. Pipe inlets with a grate shall be placed so that bars parallel direction of principle surface flow.
6. Full penetration butt welds may be substituted for the fillet welds on all anchors.
7. Standard square, hexagon, round or equivalent headed anchors may be substituted for the right angle hooks on the anchors shown on this plan.
8. Grate and frame weights are based on welded grates (weights of face angles, steps, protection bars, etc. are not included).

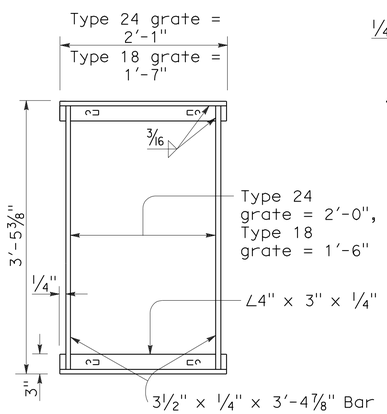

TYPICAL FRAME

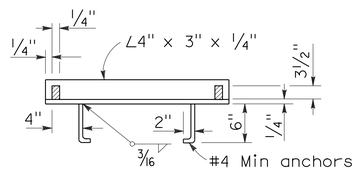

CROSS SECTION

(Thru frame)

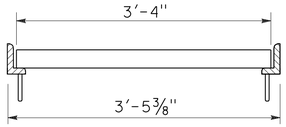

LONGITUDINAL SECTION

(Thru frame and grate)

RECTANGULAR FRAME DETAILS

(For all rectangular grates)

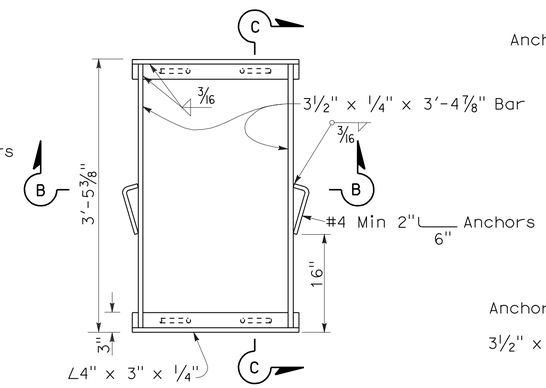

TYPICAL FRAME

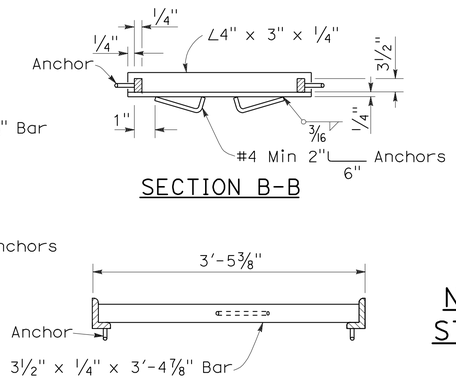

SECTION B-B

SECTION C-C

ALTERNATIVE ANCHOR FOR RECTANGULAR FRAME

(For details not shown, See Rectangular Frame Details)

INLET TYPE	GRATE TYPE	No. OF GRATES	WEIGHT LB
GDO	24-12	2	634
GOL-7	24-12	1	326
GOL-10	24-12	1	326
GO,G1,G2,G3,G4 (TYPE 24)	24-9	1	263
	24-12	1	326
G4 (TYPE 18),G5,G6	18-9	1	249
GT1	18-9	2	498
GT2	18-9	2	498
GT3	24-12	2	652
GT4	24-12	2	652
TRASH RACK			22

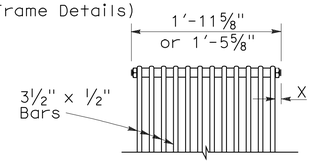

BOLTED END BLOCK

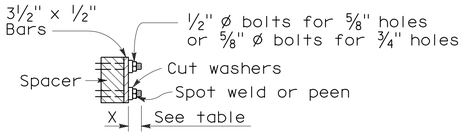

BOLTING DETAIL

ALTERNATIVE BOLTED GRATE

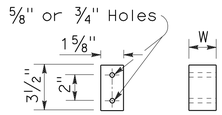

BAR SPACER

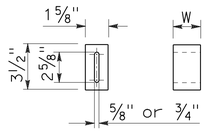

ALTERNATIVE SPACER

W = 1⅜" or 2"

GRATE BAR SPACING TABLE

TYPE	No. OF BARS	CLEAR BAR SPACING	X
18-9	9	1⅜"	1 1/16"
24-9	9	2"	1 9/16"
24-12	12	1⅜"	1¼"

INLET TYPE	COVER TYPE	WEIGHT LB
OS	PLATE	174
OL-7	PLATE	170
OL-10	PLATE	170
OL-14	PLATE	170
OL-21	PLATE	170
OCP	PLATE	112
OCPI	PLATE	112
OCPI	REDWOOD	42
OMP	PLATE	177
OMPI	PLATE	177

BASIS FOR MISC IRON & STEEL FINAL PAY WEIGHTS FOR DRAINAGE INLETS

(See General Notes, No 8)

STATE OF CALIFORNIA
DEPARTMENT OF TRANSPORTATION

GRATE DETAILS

NO SCALE

RSP D77A DATED JANUARY 18, 2008 SUPERSEDES STANDARD PLAN D77A DATED MAY 1, 2006 - PAGE 155 OF THE STANDARD PLANS BOOK DATED MAY 2006.

REVISED STANDARD PLAN RSP D77A

2006 REVISED STANDARD PLAN RSP D77A

12-14-07

DIST	COUNTY	ROUTE	POST MILES TOTAL PROJECT	SHEET NO.	TOTAL SHEETS
01	Lak	20	11.9/12.4	99	120

Gregory A. Balzer
LICENSED LANDSCAPE ARCHITECT

June 5, 2009
PLANS APPROVAL DATE

LICENSED LANDSCAPE ARCHITECT
Gregory A. Balzer 2516
10 January
2-28-11
Renewal Date
5-14-09
Date
STATE OF CALIFORNIA

The State of California or its officers or agents shall not be responsible for the accuracy or completeness of electronic copies of this plan sheet.

To accompany plans dated 6-27-11

A

AB	aggregate base
ABS	acrylonitrile-butadiene-styrene
AC	asphalt concrete
Adj	adjacent/adjustable
AIC	auxiliary irrigation controller
Alt	alternative
AMEND	amendment
ARV	air release valve
AUTO	automatic
AUX	auxiliary
AVB	atmospheric vacuum breaker

B

B&B	balled and burlapped
B/B	brass/bronze
B/B/PL	brass/bronze/plastic
B/PL	brass/plastic
BFM	bonded fiber matrix
Bit Ctd	bituminous coated
BP	booster pump
BPA	backflow preventer assembly
BPAE	backflow preventer assembly in enclosure
BPE	backflow preventer enclosure
BV	ball valve

C

CAP	corrugated aluminum pipe
CARV	combination air release valve
CCA	cam coupler assembly
CEC	controller enclosure cabinet
CHDPE	corrugated high density polyethylene
CL	chain link
CNC	control and neutral conductors
Conc	concrete
Cond	conduit
CSP	corrugated steel pipe
CST	center strip
CV	check valve

D

Dia	diameter
DIP	ductile iron pipe
DN	diameter nominal

E

EA	each
Elect	electric/electrical
Elev	elevation
ENCL	enclosure
EP	edge of pavement
ES	edge of shoulder
EST	end strip
ESTB	establishment
ETW	edge of traveled way

F

F	full circle
F/P	full/part circle
FAU	filter assembly unit
FCV	flow control valve
FERT	fertilizer
FG	finished grade
FIPT	female iron pipe thread
FIS	fertilizer injector system
FL	flow line
FM	flow monitor
FS	flow sensor
Ft	foot/feet
FV	flush valve

G

GAL	Gallon(s)
Galv	galvanized
GARV	garden valve
GPH	gallons per hour
GPM	gallons per minute
GSP	galvanized steel pipe
GV	gate valve

H

H	half circle
HB	hose bib
HDPE	high density polyethylene
HP	horsepower/hinge point
HPL	high pressure line
Hwy	highway

I

IC	irrigation controller
ICC	irrigation controller(s) in controller enclosure cabinet
ID	inside diameter
In	inches
IFS	irrigation filtration system
IPS	iron pipe size
IPT	iron pipe thread
Irr	irrigation

L

L	length
LF	linear foot

M

Max	maximum
MBGR	metal beam guard railing
MCV	manual control valve
MIC	master irrigation controller
Min	minimum
MIPT	male iron pipe thread
Misc	miscellaneous
Mtl	material
MVP	maintenance vehicle pullout

N

NCN	no common name
NL	nozzle line
No.	number
NPT	national pipe thread

O

O/C	on center
OD	outside diameter
Oz	ounce

P

P	part circle
PB	pull box
PCC	portland cement concrete
PE	polyethylene
Pkt	packet
PL	plastic
PLT	plant/planting
PLT ESTB	plant establishment
PM	post mile
PR	pressure rated
PRLV	pressure relief valve
PSFM	polymer stabilized fiber matrix
PSI	pounds per square inch
PRV	pressure reducing valve
PVC	polyvinyl chloride
Pvmt	pavement

Q

Q	quarter circle
QCV	quick coupling valve

R

R	radius
RCP	reinforced concrete pipe
RCV	remote control valve
RCVM	remote control valve (master)
RCVMF	remote control valve (master) w/ flow meter
RCW	recycled/reclaimed water
RECP	rolled erosion control product
REQ	required
R/W	right of way

S

S	slip
SCC	sprinkler control conduit
SCH	schedule
SF	state-furnished
Shld	shoulder
SQFT	square foot/feet
SQYD	square yard(s)
SST	side strip
Sta	station
Std	standard
SW	sidewalk/sound wall

T

T	third circle/thread
TLS	truck loading standpipe
TQ	three quarter circle
TRM	turf reinforcement mat
TRVD	traveled
TT	two third circle
Typ	typical

U

UG	underground

V

VAU	valve assembly unit

W

W	width
W/	with
WM	water meter
WS	wye strainer
WSP	welded steel pipe
WWM	welded wire mesh

NOTE:

FOR ADDITIONAL ABBREVIATIONS, SEE STANDARD PLANS A10A AND A10B.

STATE OF CALIFORNIA
DEPARTMENT OF TRANSPORTATION

PLANTING AND IRRIGATION ABBREVIATIONS

NO SCALE

RSP H1 DATED JUNE 5, 2009 SUPERSEDES STANDARD PLAN H1
DATED MAY 1, 2006 - PAGE 201 OF THE STANDARD PLANS BOOK DATED MAY 2006.

REVISED STANDARD PLAN RSP H1

2006 REVISED STANDARD PLAN RSP H1

DIST	COUNTY	ROUTE	POST MILES TOTAL PROJECT	SHEET NO.	TOTAL SHEETS
01	Lak	20	11.9/12.4	100	120

LICENSED LANDSCAPE ARCHITECT

June 5, 2009
PLANS APPROVAL DATE

The State of California or its officers or agents shall not be responsible for the accuracy or completeness of electronic copies of this plan sheet.

LICENSED LANDSCAPE ARCHITECT — Gregory A. Balzer — 2516 — 10 expiration date — 2-28-11 renewal date — 5-14-09 date — STATE OF CALIFORNIA

To accompany plans dated 6-27-11

EXISTING	PROPOSED	ITEM DESCRIPTION
		WATER METER (WM)
		BACKFLOW PREVENTER ASSEMBLY (BPA)
		BACKFLOW PREVENTER ASSEMBLY IN ENCLOSURE (BPAE)
		BACKFLOW PREVENTER ENCLOSURE (BPE)
		BOOSTER PUMP (BP)
		TRUCK LOADING STANDPIPE (TLS)
FS	FS	FLOW SENSOR (FS)
X	X	MASTER IRRIGATION CONTROLLER (MIC)
		AUXILIARY IRRIGATION CONTROLLER (AIC)
		IRRIGATION CONTROLLER (IC)/ IRRIGATION CONTROLLER (IC) (BATTERY) IRRIGATION CONTROLLER (IC) (SOLAR)
		IRRIGATION CONTROLLER(S) IN CONTROLLER ENCLOSURE CABINET (ICC)
		CONTROL AND NEUTRAL CONDUCTORS (CNC)
SCC	SCC	SPRINKLER CONTROL CONDUIT (SCC)
		IRRIGATION CROSSOVER
		EXTEND IRRIGATION CROSSOVER
		IRRIGATION SLEEVE
dip	DIP	DUCTILE IRON PIPE (SUPPLY LINE) (MAIN) (DIP)
		GALVANIZED STEEL PIPE (SUPPLY LINE) (MAIN) (GSP)
		GALVANIZED STEEL PIPE (SUPPLY LINE) (LATERAL) (GSP)
		PLASTIC PIPE (PR 200) (SUPPLY LINE) (MAIN)
		PLASTIC PIPE (PR 200) (SUPPLY LINE) (LATERAL)
		PLASTIC PIPE (IRRIGATION LINE)
		REMOTE CONTROL VALVE (RCV) REMOTE CONTROL VALVE (MASTER) (RCVM) REMOTE CONTROL VALVE (MASTER) W/FLOW METER (RCVMF)
		MANUAL CONTROL VALVE (MCV)
		VALVE ASSEMBLY UNIT (VAU)
		WYE STRAINER (WS)
		FILTER ASSEMBLY UNIT (FAU)
		GATE VALVE (GV)
		BALL VALVE (BV)

EXISTING	PROPOSED	ITEM DESCRIPTION
		QUICK COUPLING VALVE (QCV)
		CAM COUPLER ASSEMBLY (CCA)
		PRESSURE REDUCING VALVE (PRV)
		PRESSURE RELIEF VALVE (PRLV)
		FLOW CONTROL VALVE (FCV)
		COMBINATION AIR RELEASE VALVE (CARV)
		CHECK VALVE (CV)
		FLUSH VALVE (FV)
		NOZZLE LINE W/TURNING UNION
		IRRIGATION SYSTEM
		IRRIGATION SYSTEM TO BE REMOVED
		CHAIN LINK GATE
		QUICK COUPLING VALVE W/SPRINKLER PROTECTOR
3	3	SPRINKLER W/SPRINKLER PROTECTOR
	C	CONNECT TO EXISTING SYSTEM
		CAP
		CAP EXISTING

VALVE CODE

RCV SIZE
IRRIGATION CONTROLLER
CONTROLLER STATION
VALVE IN PARALLEL (IF APPLICABLE)
GPM
QUANTITY OF SPRINKLERS (WHEN SHOWN)

* 2½"-A-2b-40 -60

MCV SIZE
VALVE NUMBER
GPM
QUANTITY OF TYPE SPRINKLERS (WHEN SHOWN)

* 2"-3-30 -50

* VALVE CODES FOR EXISTING VALVES ARE SHOWN IN A DASHED ENCLOSURE.

STATE OF CALIFORNIA
DEPARTMENT OF TRANSPORTATION

PLANTING AND IRRIGATION SYMBOLS

NO SCALE

RSP H2 DATED JUNE 5, 2009 SUPERSEDES RSP H2 DATED MARCH 7, 2008 AND STANDARD PLAN H2 DATED MAY 1, 2006 - PAGE 202 OF THE STANDARD PLANS BOOK DATED MAY 2006.

REVISED STANDARD PLAN RSP H2

2006 REVISED STANDARD PLAN RSP H2

DIST	COUNTY	ROUTE	POST MILES TOTAL PROJECT	SHEET NO.	TOTAL SHEETS
01	Lak	20	11.9/12.4	101	120

LICENSED LANDSCAPE ARCHITECT

June 5, 2009
PLANS APPROVAL DATE

The State of California or its officers or agents shall not be responsible for the accuracy or completeness of electronic copies of this plan sheet.

LICENSED LANDSCAPE ARCHITECT — Gregory A. Balzer 2516 — 10 Expiration 2-28-11 Renewal Date — 5-14-09 Date — STATE OF CALIFORNIA

To accompany plans dated 6-27-11

2006 REVISED STANDARD PLAN RSP H5

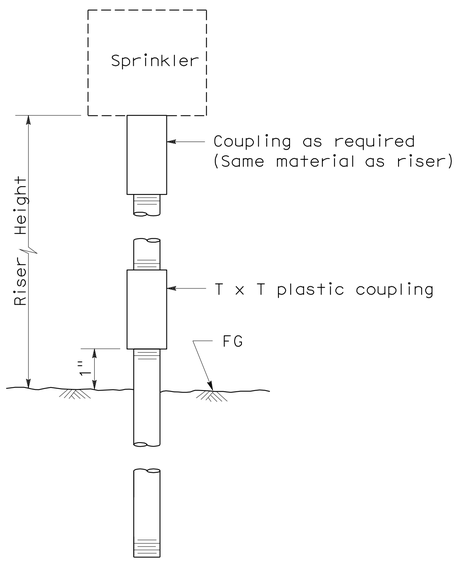

ELEVATION
RISER TYPE I

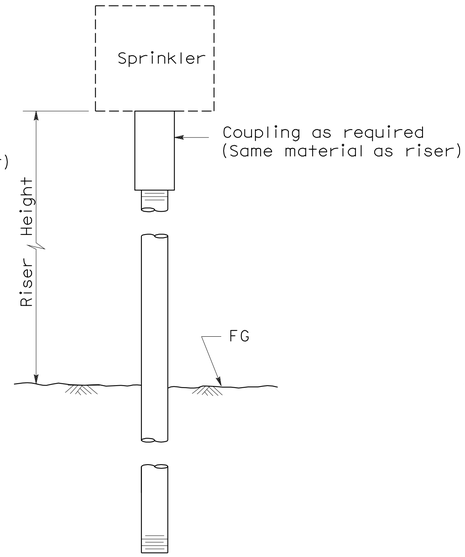

ELEVATION
RISER TYPE II

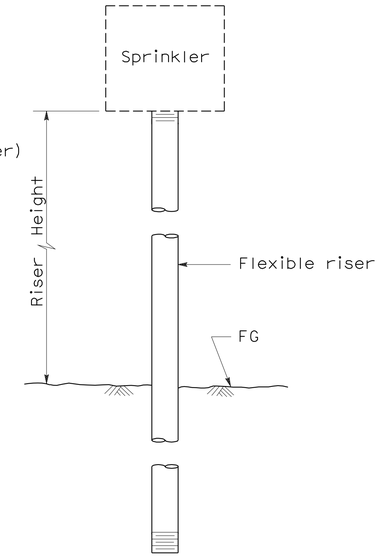

ELEVATION
RISER TYPE III

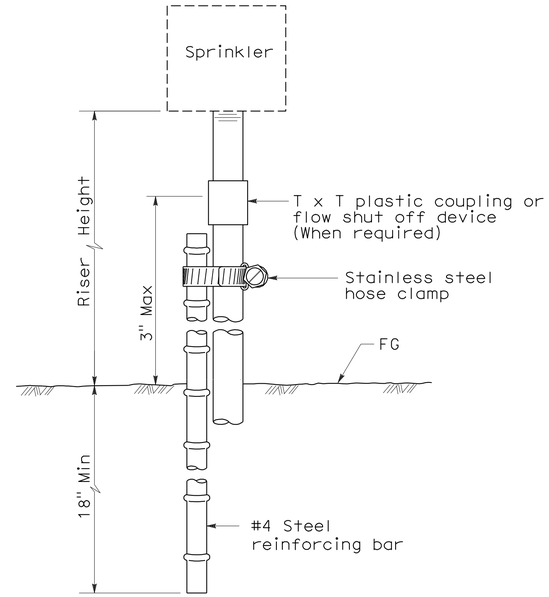

ELEVATION
RISER TYPE IV

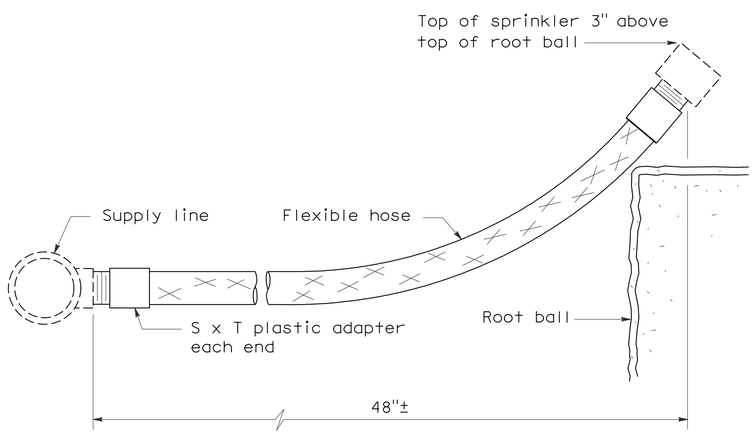

ELEVATION
RISER TYPE V

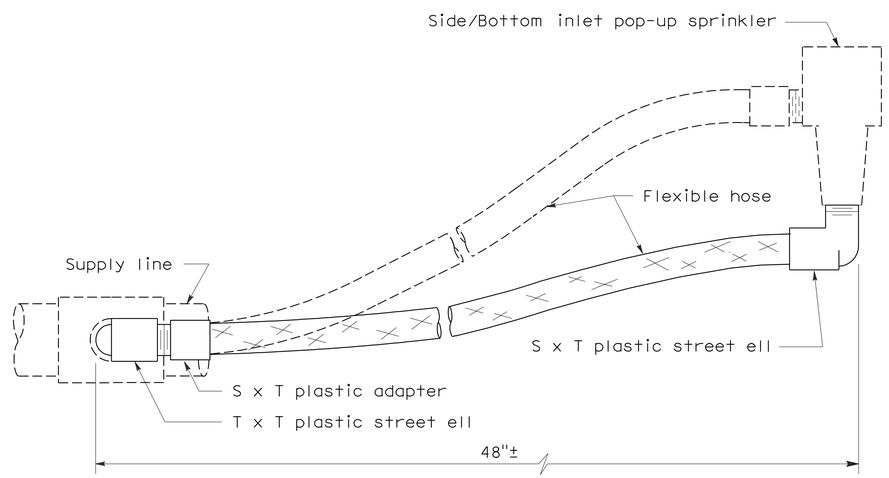

ELEVATION
RISER TYPE VI

STATE OF CALIFORNIA
DEPARTMENT OF TRANSPORTATION

PLANTING AND IRRIGATION DETAILS

NO SCALE

RSP H5 DATED JUNE 5, 2009 SUPERSEDES STANDARD PLAN H5
DATED MAY 1, 2006 - PAGE 205 OF THE STANDARD PLANS BOOK DATED MAY 2006.

REVISED STANDARD PLAN RSP H5

DIST	COUNTY	ROUTE	POST MILES TOTAL PROJECT	SHEET NO.	TOTAL SHEETS
01	Lak	20	11.9/12.4	102	120

LICENSED LANDSCAPE ARCHITECT

June 5, 2009
PLANS APPROVAL DATE

The State of California or its officers or agents shall not be responsible for the accuracy or completeness of electronic copies of this plan sheet.

LICENSED LANDSCAPE ARCHITECT Gregory A. Balzer 2576 STATE OF CALIFORNIA
10-01-09 Renewal Date
2-28-11 Renewal Date
5-14-09 Date

To accompany plans dated 6-27-11

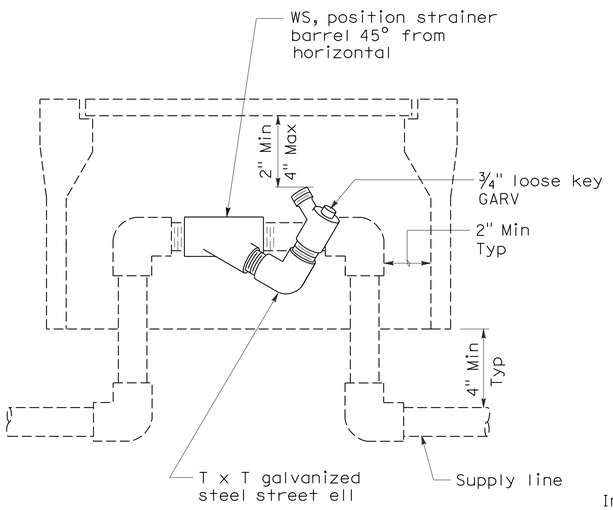

ELEVATION
WYE STRAINER

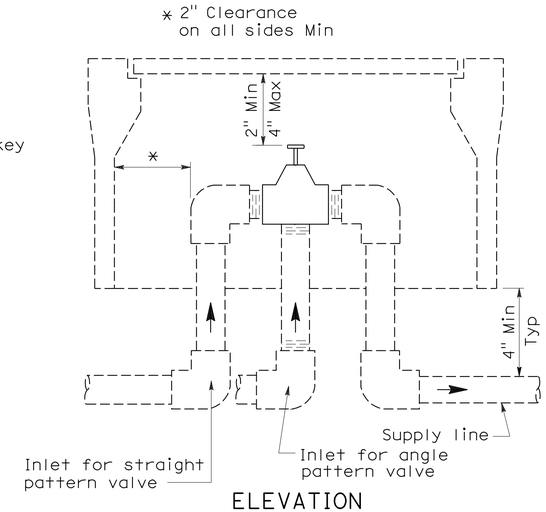

ELEVATION
VALVE

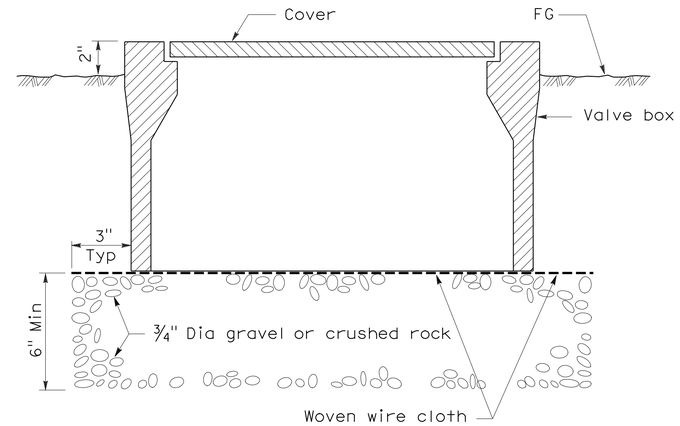

SECTION
VALVE BOX

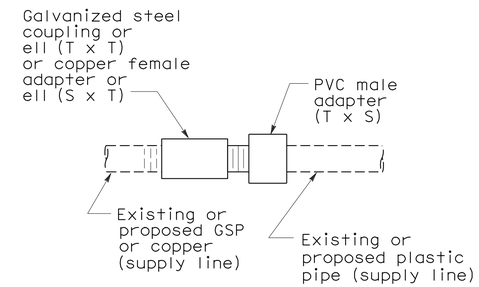

PLAN
GALVANIZED OR COPPER PIPE CONNECTION TO PLASTIC PIPE

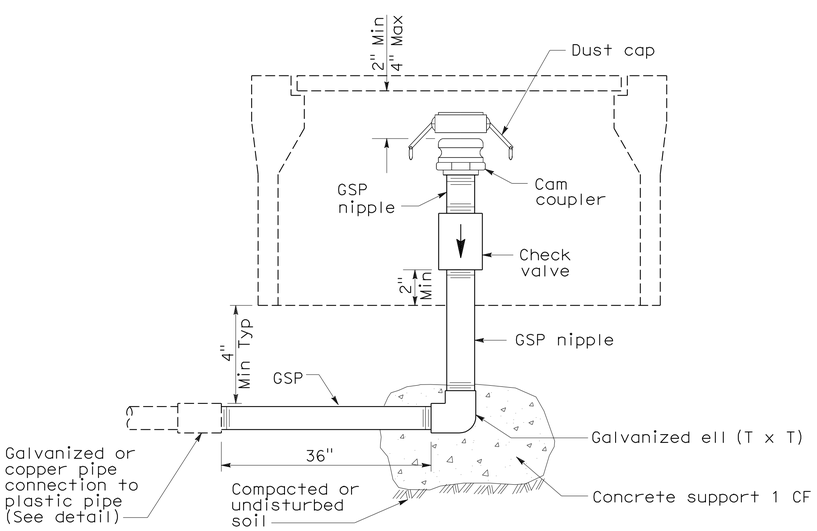

ELEVATION
CAM COUPLER ASSEMBLY

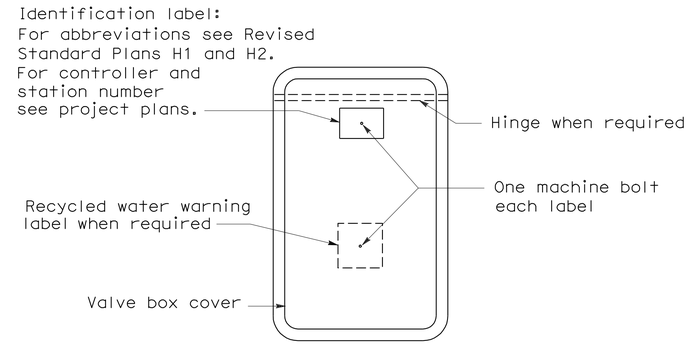

PLAN

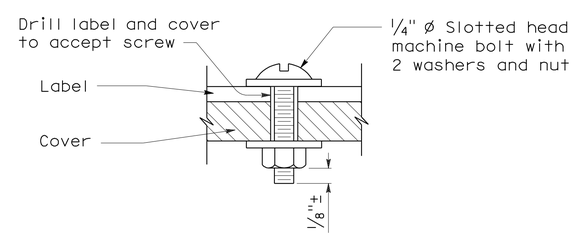

SECTION
VALVE BOX IDENTIFICATION

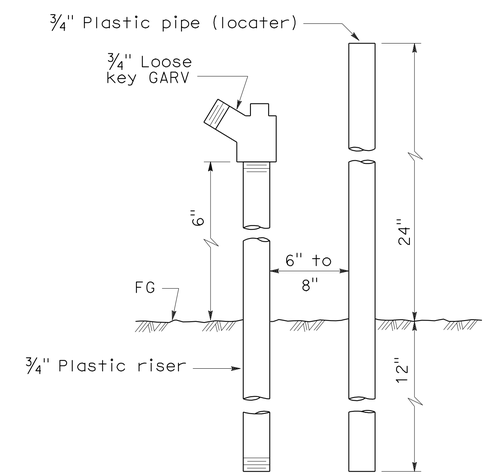

ELEVATION
FLUSH VALVE

STATE OF CALIFORNIA
DEPARTMENT OF TRANSPORTATION

PLANTING AND IRRIGATION DETAILS

NO SCALE

RSP H7 DATED JUNE 5, 2009 SUPERSEDES STANDARD PLAN H7
DATED MAY 1, 2006 - PAGE 207 OF THE STANDARD PLANS BOOK DATED MAY 2006.

REVISED STANDARD PLAN RSP H7

2006 REVISED STANDARD PLAN RSP H7

5-28-09

DIST	COUNTY	ROUTE	POST MILES TOTAL PROJECT	SHEET NO.	TOTAL SHEETS
01	Lak	20	11.9/12.4	103	120

LICENSED LANDSCAPE ARCHITECT

April 3, 2009
PLANS APPROVAL DATE

The State of California or its officers or agents shall not be responsible for the accuracy or completeness of electronic copies of this plan sheet.

LICENSED LANDSCAPE ARCHITECT — Gregory A. Balzer — 03-04-09 Signature — 02-28-11 Renewal Date — 03-04-09 Date — STATE OF CALIFORNIA

To accompany plans dated 6-27-11

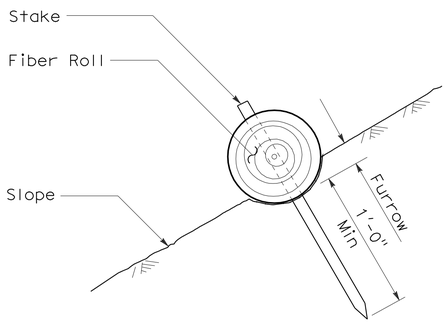

SECTION

FIBER ROLL (TYPE 1)

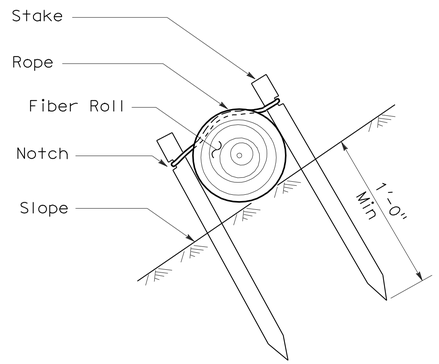

SECTION

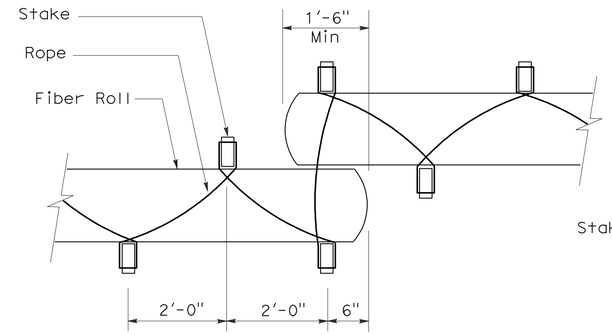

PLAN

FIBER ROLL (TYPE 2)

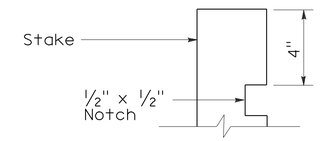

ELEVATION

STAKE NOTCH DETAIL

NOTES:

1. Fiber roll spacing varies depending upon slope inclination.
2. Installations shown in the perspectives are for slope inclination of 10:1 and steeper.

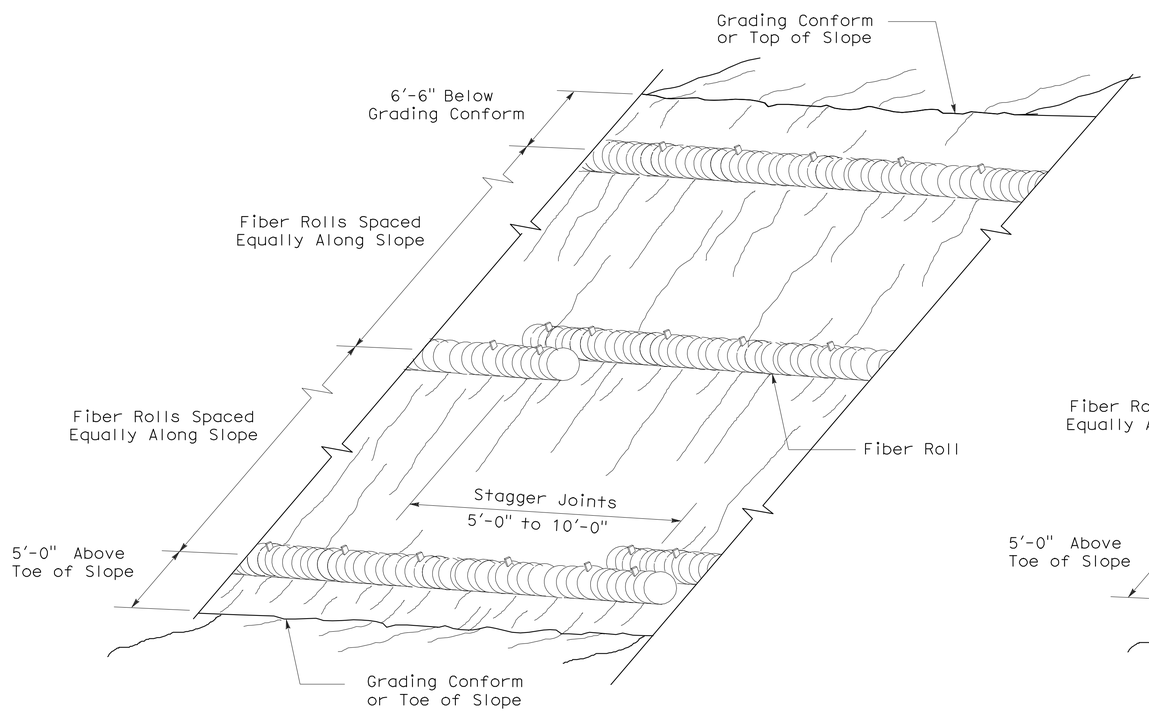

PERSPECTIVE

FIBER ROLL (TYPE 1)

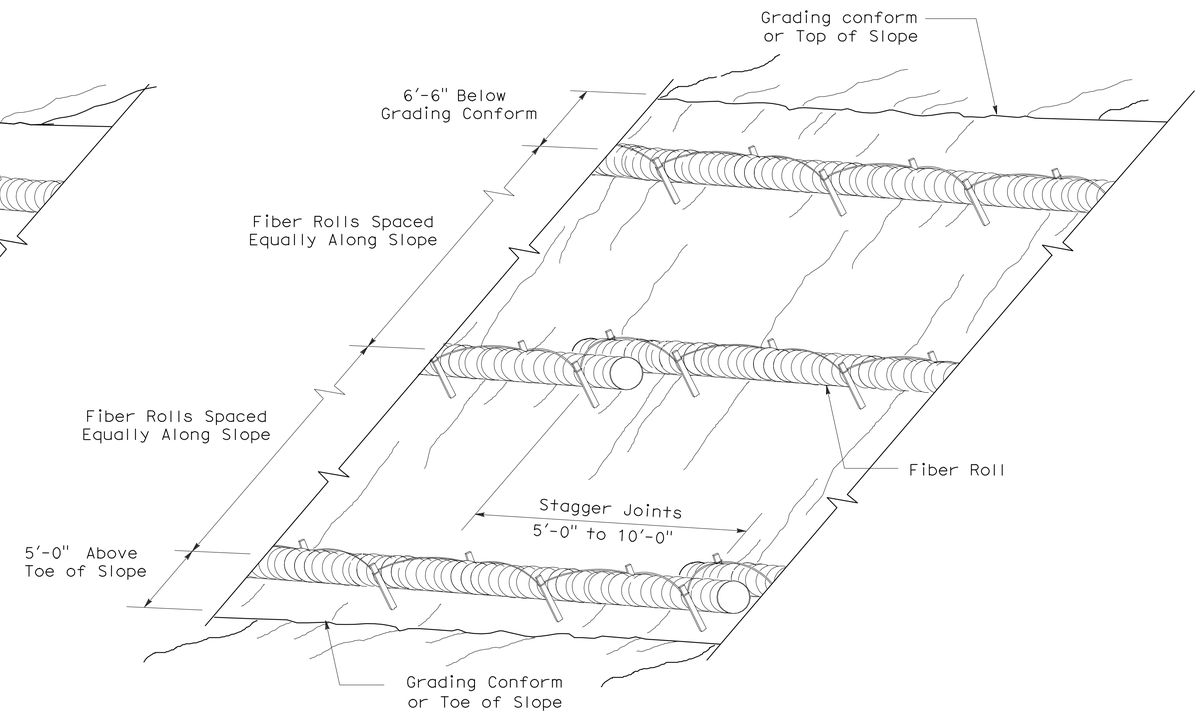

PERSPECTIVE

FIBER ROLL (TYPE 2)

STATE OF CALIFORNIA
DEPARTMENT OF TRANSPORTATION

EROSION CONTROL DETAILS (FIBER ROLL)

NO SCALE

RNSP H51 DATED APRIL 3, 2009 SUPERSEDES NSP H51 DATED DECEMBER 1, 2006 THAT SUPPLEMENTS THE STANDARD PLANS BOOK DATED MAY 2006.

REVISED NEW STANDARD PLAN RNSP H51

2006 REVISED NEW STANDARD PLAN RNSP H51

DIST	COUNTY	ROUTE	POST MILES TOTAL PROJECT	SHEET NO.	TOTAL SHEETS
01	Lak	20	11.9/12.4	104	120

Gregory A. Balzer
LICENSED LANDSCAPE ARCHITECT

June 5, 2009
PLANS APPROVAL DATE

LICENSED LANDSCAPE ARCHITECT
Gregory A. Balzer
6-9-09
Expiration
2-28-11
Renewal Date
5-14-09
Date
STATE OF CALIFORNIA

The State of California or its officers or agents shall not be responsible for the accuracy or completeness of electronic copies of this plan sheet.

To accompany plans dated 6-27-11

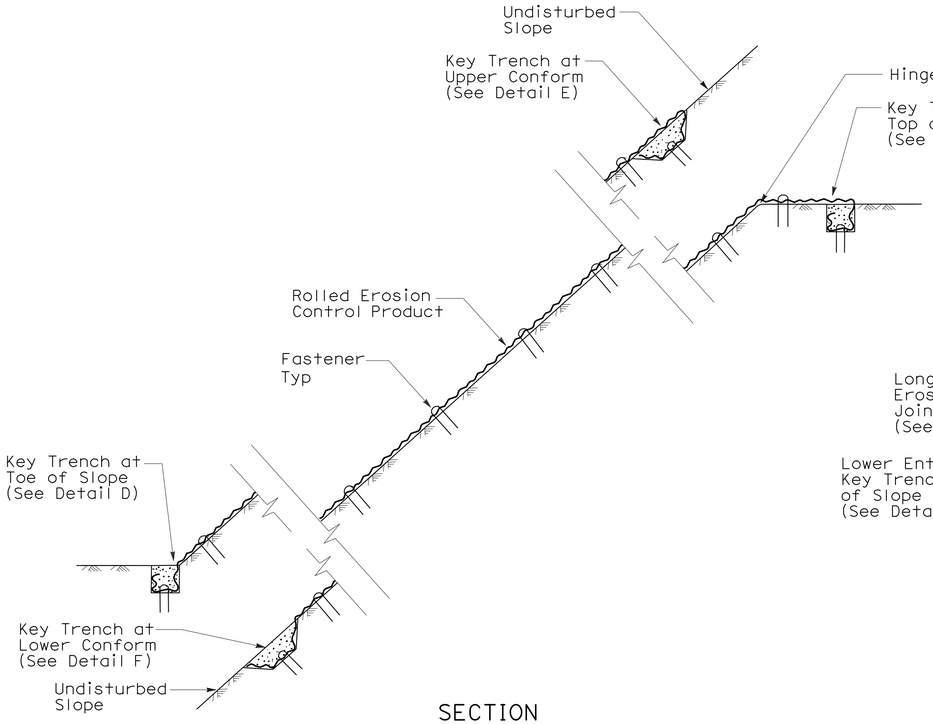

SECTION

ROLLED EROSION CONTROL PRODUCT
ON SLOPE WITH VARIOUS KEY ENTRENCHMENTS

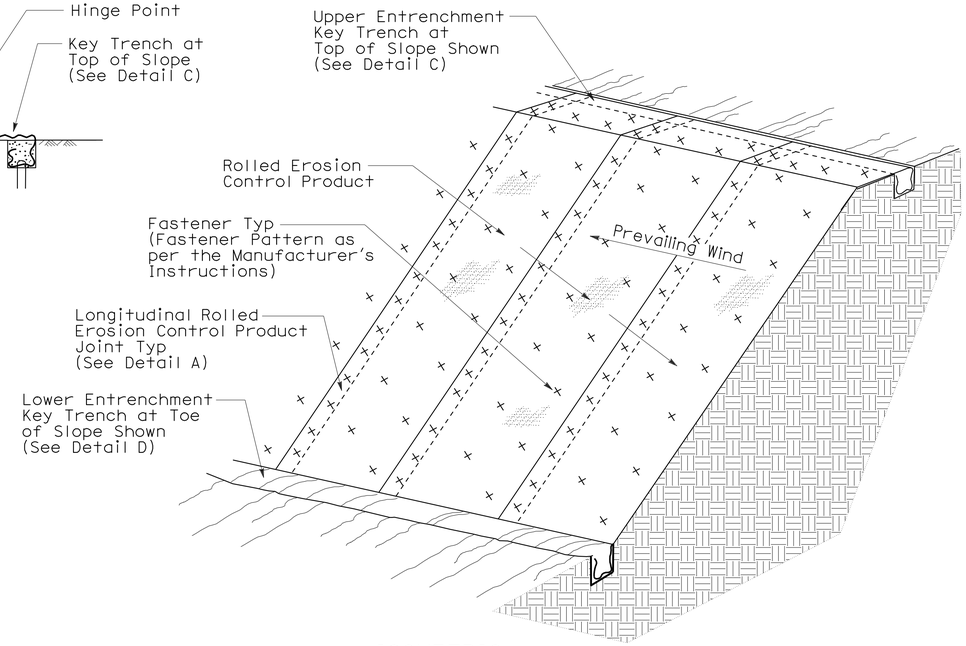

ISOMETRIC

ROLLED EROSION CONTROL PRODUCT
ON SLOPE

NOTE:

1. Fiber Roll/Compost Sock shown for reference purposes only.
2. If transverse rolled erosion control product joints are required on slopes, see Detail B.

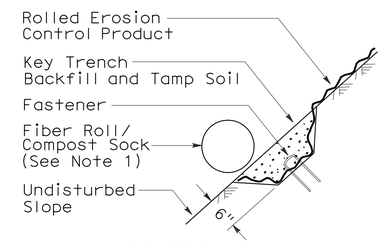

SECTION

DETAIL F
KEY TRENCH AT
LOWER CONFORM

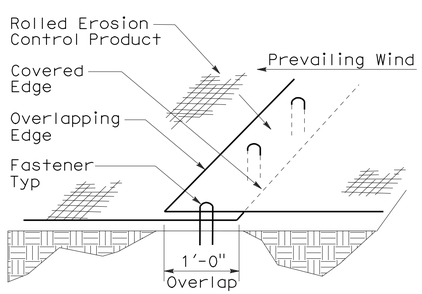

PERSPECTIVE

DETAIL A
LONGITUDINAL ROLLED EROSION
CONTROL PRODUCT JOINT

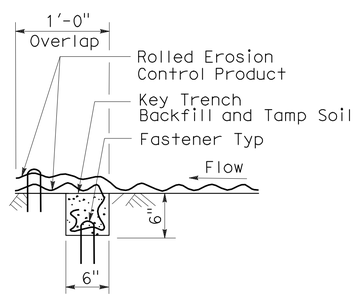

SECTION

DETAIL B
TRANSVERSE ROLLED EROSION
CONTROL PRODUCT JOINT

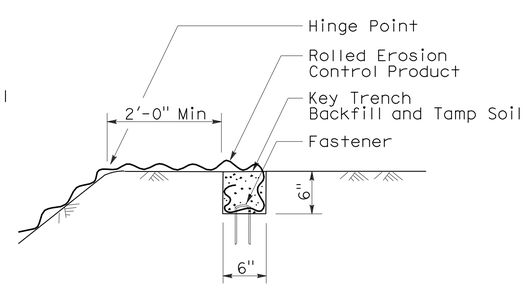

SECTION

DETAIL C
KEY TRENCH AT
TOP OF SLOPE

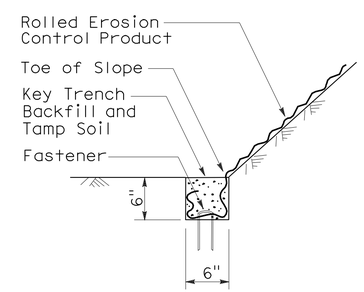

SECTION

DETAIL D
KEY TRENCH AT
TOE OF SLOPE

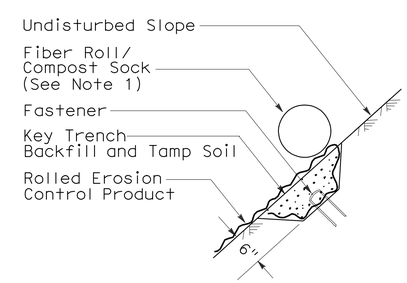

SECTION

DETAIL E
KEY TRENCH AT
UPPER CONFORM

STATE OF CALIFORNIA
DEPARTMENT OF TRANSPORTATION

ROLLED EROSION CONTROL PRODUCT

NO SCALE

NSP H53 DATED JUNE 5, 2009 SUPPLEMENTS
THE STANDARD PLANS BOOK DATED MAY 2006.

NEW STANDARD PLAN NSP H53

2006 NEW STANDARD PLAN NSP H53

3-4-09

DIST	COUNTY	ROUTE	POST MILES TOTAL PROJECT	SHEET NO.	TOTAL SHEETS
01	Lak	20	11.9/12.4	105	120

Randell D. Hiatt
REGISTERED CIVIL ENGINEER

June 6, 2008
PLANS APPROVAL DATE

REGISTERED PROFESSIONAL ENGINEER
Randell D. Hiatt
No. C50200
Exp. 6-30-09
CIVIL
STATE OF CALIFORNIA

The State of California or its officers or agents shall not be responsible for the accuracy or completeness of electronic copies of this plan sheet.

To accompany plans dated 6-27-11

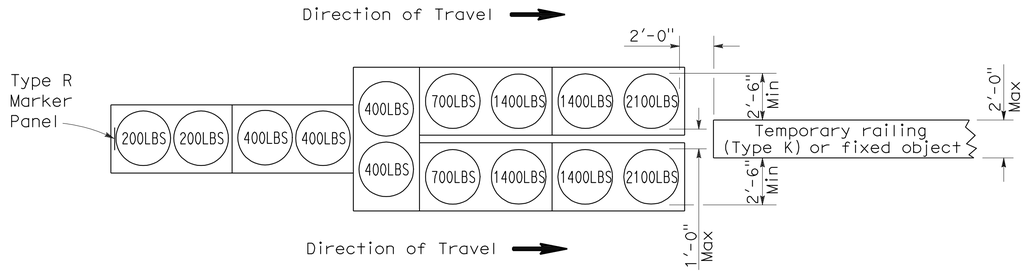

ARRAY 'TU14'

Approach speed 45 mph or more

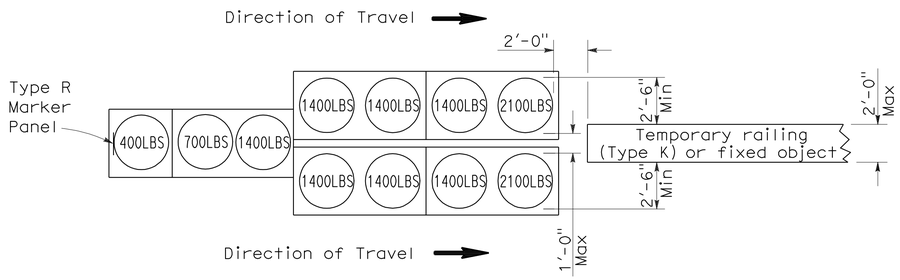

ARRAY 'TU11'

Approach speed less than 45 mph

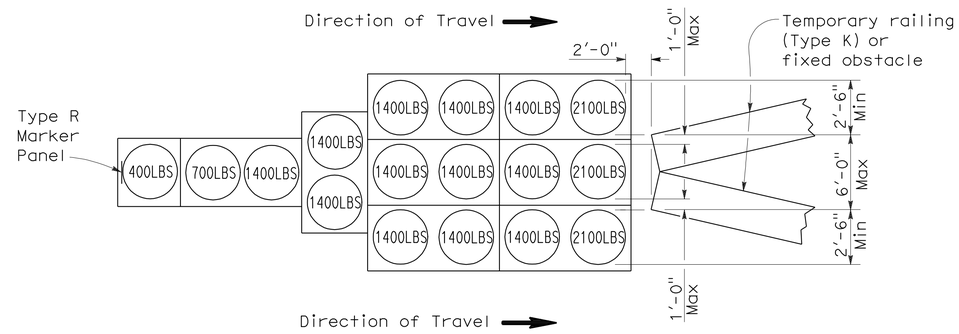

ARRAY 'TU17'

Approach speed less than 45 mph

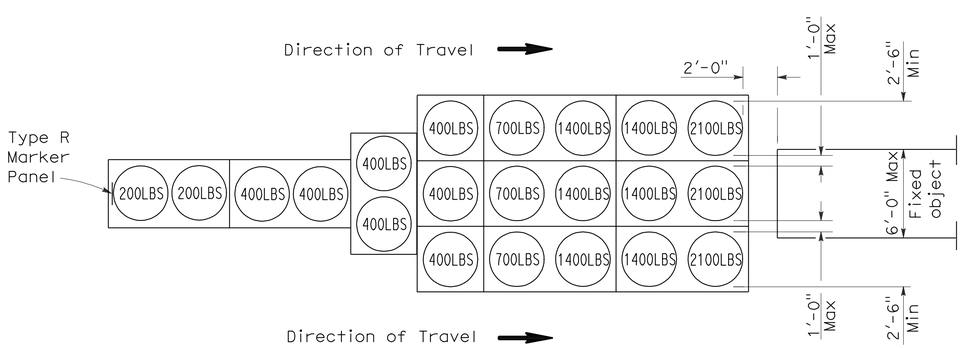

ARRAY 'TU21'

Approach speed 45 mph or more

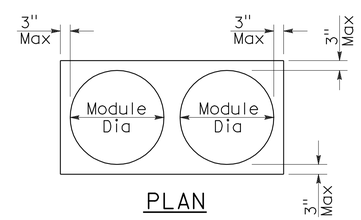

PLAN

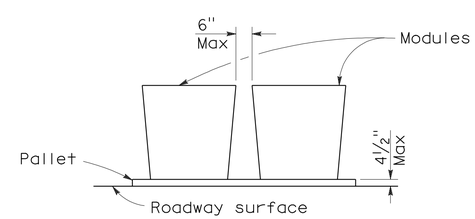

ELEVATION

CRASH CUSHION PALLET DETAIL

See Note 7

NOTES:

1. (XXX) Indicates sand filled module location and weight of sand in pounds for each module. Module spacing is based on the greater diameter of the module.
2. All sand weights are nominal.
3. Temporary crash cushion arrays shall not encroach on the traveled way.
4. Place the top of Type R marker panel 1" below the module lid.
5. Refer to Standard Plan A73B for marker details.
6. Approach speeds indicated conform to NCHRP 350 Report criteria.
7. Use of pallets is optional.

STATE OF CALIFORNIA
DEPARTMENT OF TRANSPORTATION

TEMPORARY CRASH CUSHION, SAND FILLED (UNIDIRECTIONAL)

NO SCALE

RSP T1A DATED JUNE 6, 2008 SUPERSEDES STANDARD PLAN T1A
DATED MAY 1, 2006 - PAGE 211 OF THE STANDARD PLANS BOOK DATED MAY 2006.

REVISED STANDARD PLAN RSP T1A

2006 REVISED STANDARD PLAN RSP T1A

DIST	COUNTY	ROUTE	POST MILES TOTAL PROJECT	SHEET NO.	TOTAL SHEETS
01	Lak	20	11.9/12.4	106	120

Randell D. Hiatt
REGISTERED CIVIL ENGINEER

June 6, 2008
PLANS APPROVAL DATE

REGISTERED PROFESSIONAL ENGINEER
Randell D. Hiatt
No. C50200
Exp. 6-30-09
CIVIL
STATE OF CALIFORNIA

The State of California or its officers or agents shall not be responsible for the accuracy or completeness of electronic copies of this plan sheet.

To accompany plans dated 6-27-11

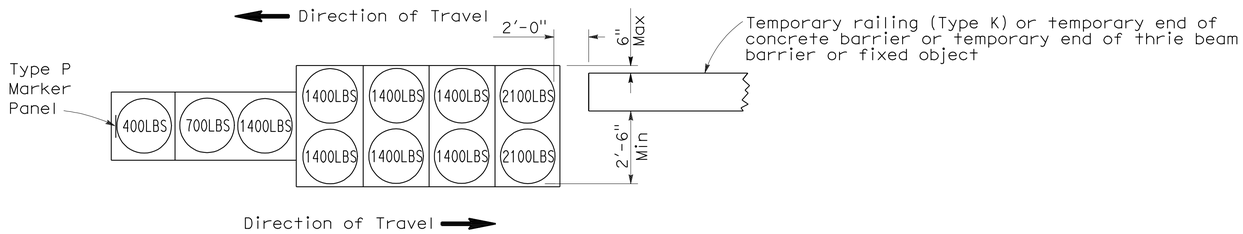

ARRAY 'TB11'

Approach speed less than 45 mph

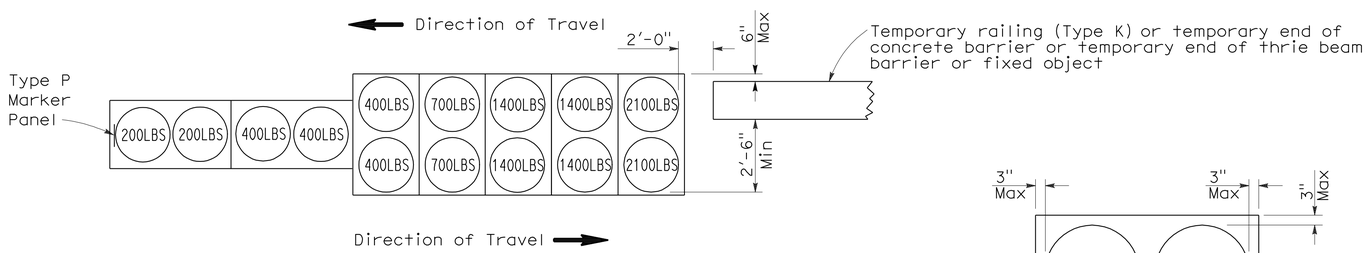

ARRAY 'TB14'

Approach speed 45 mph or more

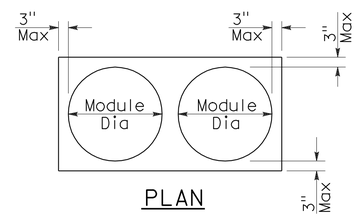

PLAN

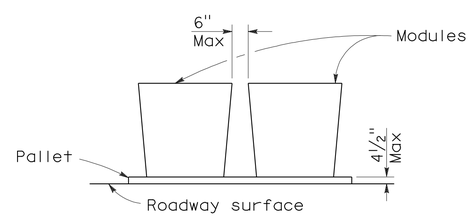

ELEVATION

CRASH CUSHION PALLET DETAIL

See Note 7

NOTES:

1. (XXX) Indicates sand filled module location and weight of sand in pounds for each module. Module spacing is based on the greater diameter of the module.
2. All sand weights are nominal.
3. Temporary crash cushion arrays shall not encroach on the traveled way.
4. Place the Type P marker panel so that the bottom of the panel rests upon the pallet.
5. Refer to Standard Plan A73B for marker details.
6. Approach speeds indicated conform to NCHRP 350 Report criteria.
7. Use of pallets is optional.

STATE OF CALIFORNIA
DEPARTMENT OF TRANSPORTATION

TEMPORARY CRASH CUSHION, SAND FILLED (BIDIRECTIONAL)

NO SCALE

RSP T1B DATED JUNE 6, 2008 SUPERSEDES STANDARD PLAN T1B
DATED MAY 1, 2006 - PAGE 212 OF THE STANDARD PLANS BOOK DATED MAY 2006.

REVISED STANDARD PLAN RSP T1B

2006 REVISED STANDARD PLAN RSP T1B

5-15-08

DIST	COUNTY	ROUTE	POST MILES TOTAL PROJECT	SHEET NO.	TOTAL SHEETS
01	Lak	20	11.9/12.4	107	120

Randell D. Hiatt
REGISTERED CIVIL ENGINEER

June 6, 2008
PLANS APPROVAL DATE

REGISTERED PROFESSIONAL ENGINEER
Randell D. Hiatt
No. C50200
Exp. 6-30-09
CIVIL
STATE OF CALIFORNIA

The State of California or its officers or agents shall not be responsible for the accuracy or completeness of electronic copies of this plan sheet.

To accompany plans dated 6-27-11

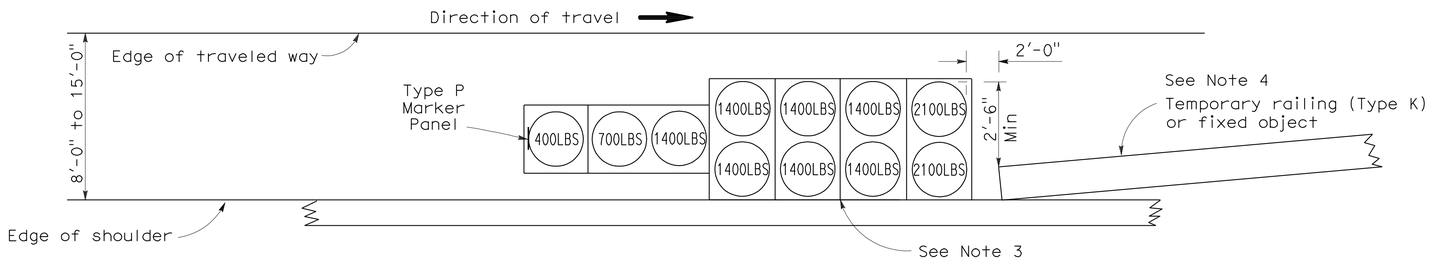

ARRAY 'TS11'

Approach speed less than 45 mph
See Note 9

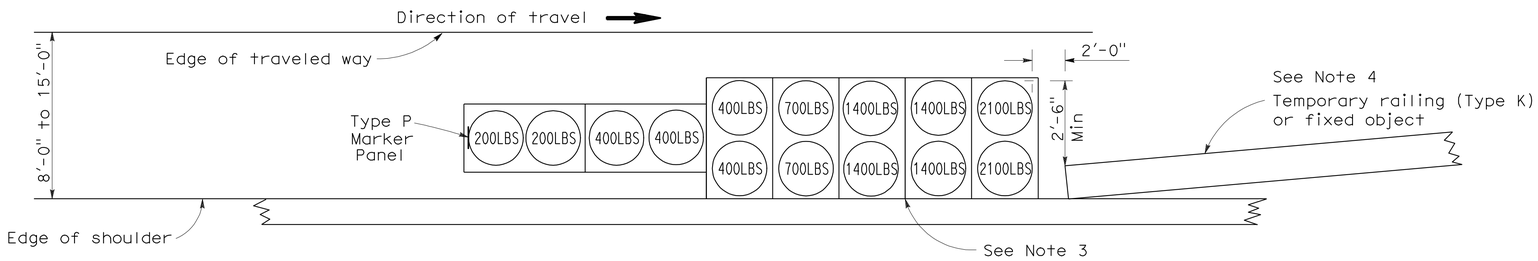

ARRAY 'TS14'

Approach speed 45 mph or more
See Note 9

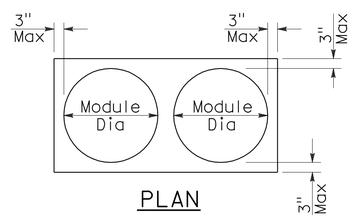

PLAN

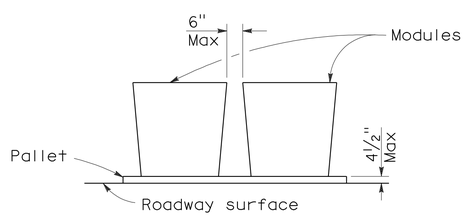

ELEVATION

CRASH CUSHION PALLET DETAIL

See Note 11

NOTES:

1. (XXX) Indicates sand filled module location and weight of sand in pounds for each module. Module spacing is based on the greater diameter of the module.
2. All sand weights are nominal.
3. The temporary crash cushion arrays shown on this plan shall be used only in locations where there will be traffic on one side of the temporary crash cushion array.
4. If the fixed object or approach end of the temporary railing is less than 15'-0" from the edge of traveled way, a temporary crash cushion is required in a construction or work zone.
5. Temporary crash cushion arrays shall not encroach on the traveled way.
6. Arrays for median shoulders shall conform to details shown on this plan for outside shoulders.
7. Place the Type P marker panel so that the bottom of the panel rests upon the pallet and faces traffic.
8. Refer to Standard Plan A73B for marker details.
9. For shoulder widths less than 8'-0", appropriate approved crash cushion protection, other than sand filled modules, shall be provided at fixed objects and at approach ends of temporary railing. The specific type of crash cushion shall be as shown on the project plans or as specified in the Special Provisions, or if not shown on the project plans or specified in the Special Provisions, shall be as approved by the Engineer.
10. Approach speeds indicated conform to NCHRP 350 Report criteria.
11. Use of pallets is optional.

STATE OF CALIFORNIA
DEPARTMENT OF TRANSPORTATION

TEMPORARY CRASH CUSHION, SAND FILLED (SHOULDER INSTALLATIONS)

NO SCALE

RSP T2 DATED JUNE 6, 2008 SUPERSEDES STANDARD PLAN T2
DATED MAY 1, 2006 - PAGE 213 OF THE STANDARD PLANS BOOK DATED MAY 2006.

REVISED STANDARD PLAN RSP T2

2006 REVISED STANDARD PLAN RSP T2

Dist	COUNTY	ROUTE	POST MILES TOTAL PROJECT	SHEET No.	TOTAL SHEETS
01	Lak	20	11.9/12.4	108	120

Randell D. Hiatt
REGISTERED CIVIL ENGINEER

May 20, 2011
PLANS APPROVAL DATE

REGISTERED PROFESSIONAL ENGINEER
Randell D. Hiatt
No. C50200
Exp. 6-30-11
CIVIL
STATE OF CALIFORNIA

The State of California or its officers or agents shall not be responsible for the accuracy or completeness of electronic copies of this plan sheet.

To accompany plans dated 6-27-11

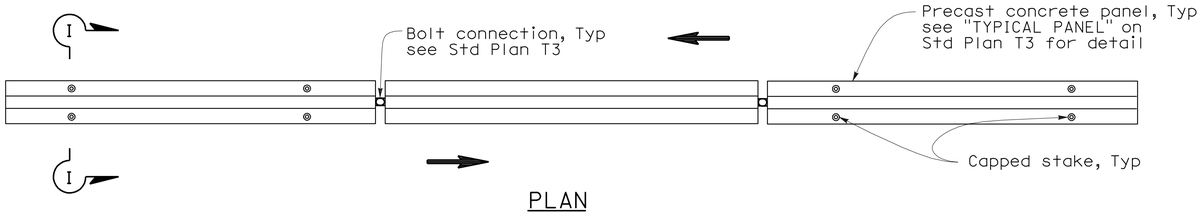

PLAN

RAILING STAKING CONFIGURATION FOR TWO-WAY TRAFFIC

See Note 1

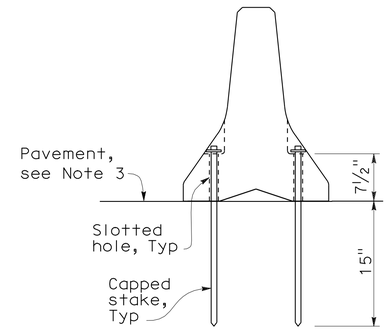

SECTION I-I

NOTES:

1. Where Type K Temporary Railing is placed as a temporary or long term barrier in two-way traffic on highways with less than 24" from the edge of traveled way, use four capped stakes per every other panel with end panels staked.
2. Where Type K Temporary Railing is placed 3" to 24" from the edge of an excavation on highways, use two capped stakes per panel along the traffic side.
3. Staked Type K Temporary Railing must be supported by at least 4" thick concrete, hot mix asphalt or existing asphalt concrete pavement.
4. The minimum yield strength for the washer must be 60,000 psi.
5. Direction of adjacent traffic indicated by ⟹.

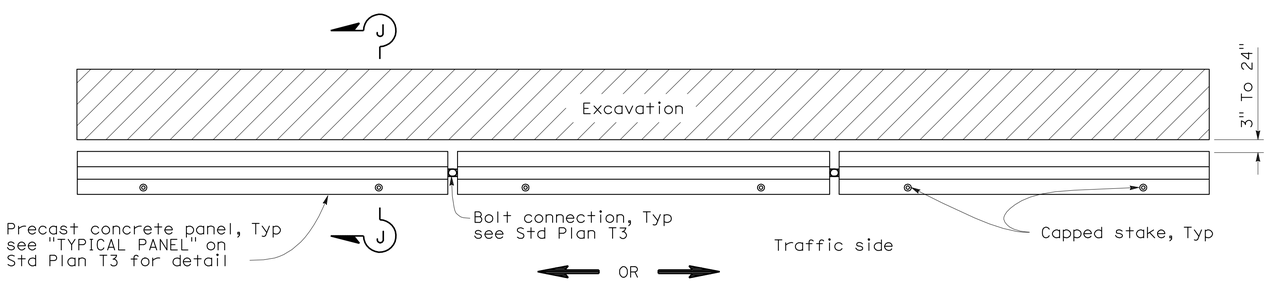

PLAN

RAILING STAKING CONFIGURATION ADJACENT TO AN EXCAVATION

See Note 2

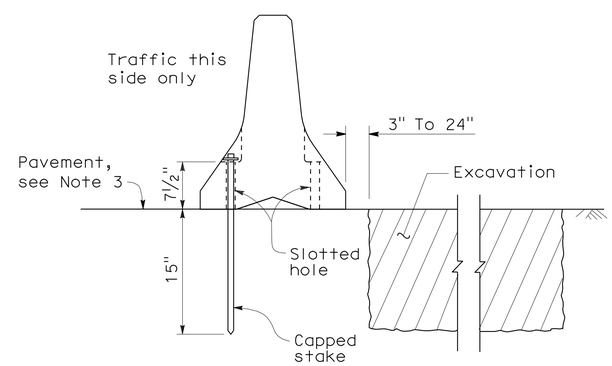

SECTION J-J

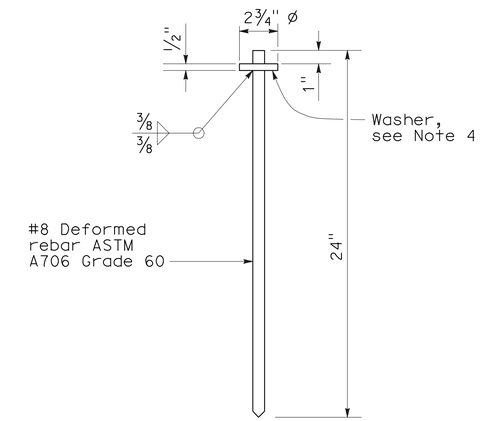

CAPPED STAKE DETAIL

STATE OF CALIFORNIA
DEPARTMENT OF TRANSPORTATION

TEMPORARY RAILING (TYPE K)

NO SCALE

NSP T3A DATED MAY 20, 2011 SUPPLEMENTS
THE STANDARD PLANS BOOK DATED MAY 2006.

NEW STANDARD PLAN NSP T3A

2006 NEW STANDARD PLAN NSP T3A

DIST	COUNTY	ROUTE	POST MILES TOTAL PROJECT	SHEET NO.	TOTAL SHEETS
01	Lak	20	11.9/12.4	109	120

REGISTERED CIVIL ENGINEER

November 17, 2006
PLANS APPROVAL DATE

REGISTERED PROFESSIONAL ENGINEER — Greg W. Edwards — No. C36386 — Exp. 6-30-08 — CIVIL — STATE OF CALIFORNIA

The State of California or its officers or agents shall not be responsible for the accuracy or completeness of electronic copies of this plan sheet.

To accompany plans dated 6-27-11

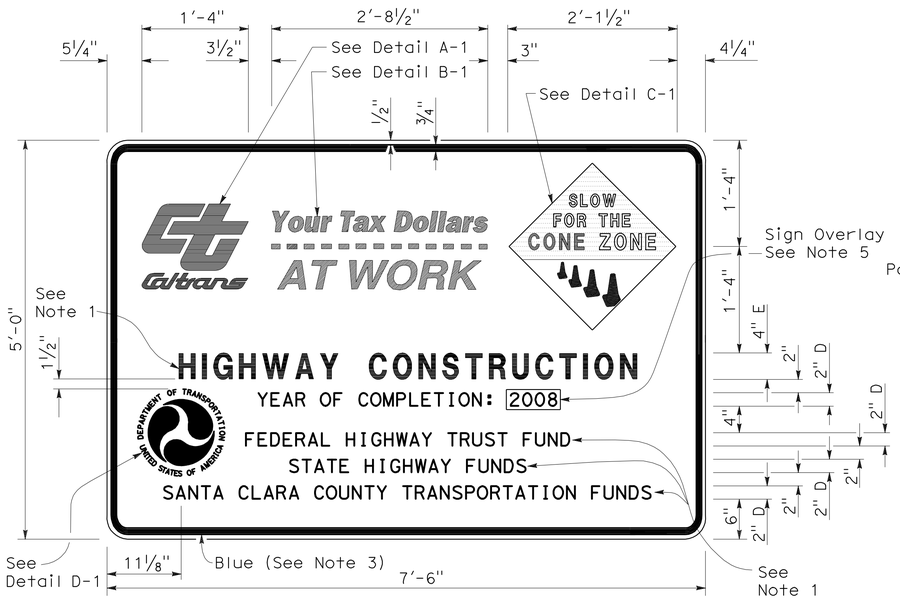

TYPE 1

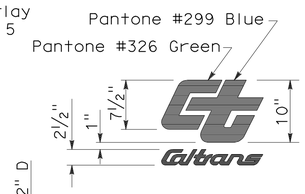

DETAIL A-1

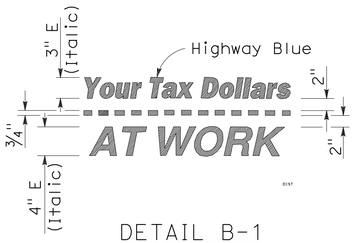

DETAIL B-1
(See Note 3)

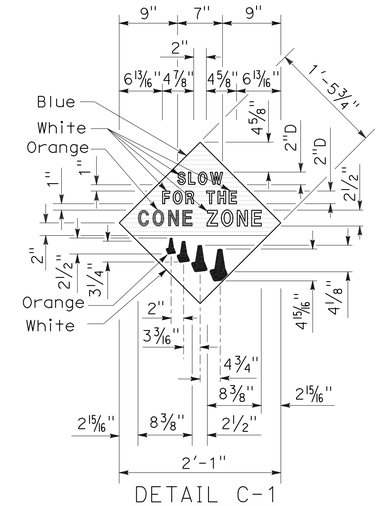

DETAIL C-1
(See Note 4)

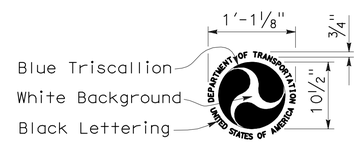

DETAIL D-1
(See Note 6)

NOTES:

1. The sign messages shown for type of project and fund types are examples only. See the Special Provisions for the applicable type of project and fund type messages to be used.
2. Except as otherwise shown, the legend of sign shall be black on a white background (non-reflective).
3. The border of the signs and details "B-1" and "B-2" shall be blue (non-reflective).
4. The diamond in details "C-1" and "C-2" shall be blue for the background of message, " SLOW FOR THE CONE ZONE", and white background for the orange cones. The color and type of font for the "SLOW FOR THE CONE ZONE" message shall be: "SLOW" white D; "FOR THE" white D; "CONE" orange Arial font; "ZONE" white Arial font.
5. Year of completion of project construction shown on the overlay is an example only. See the Special Provisions.
6. Use when the Project involves Federal Highway Trust Fund.

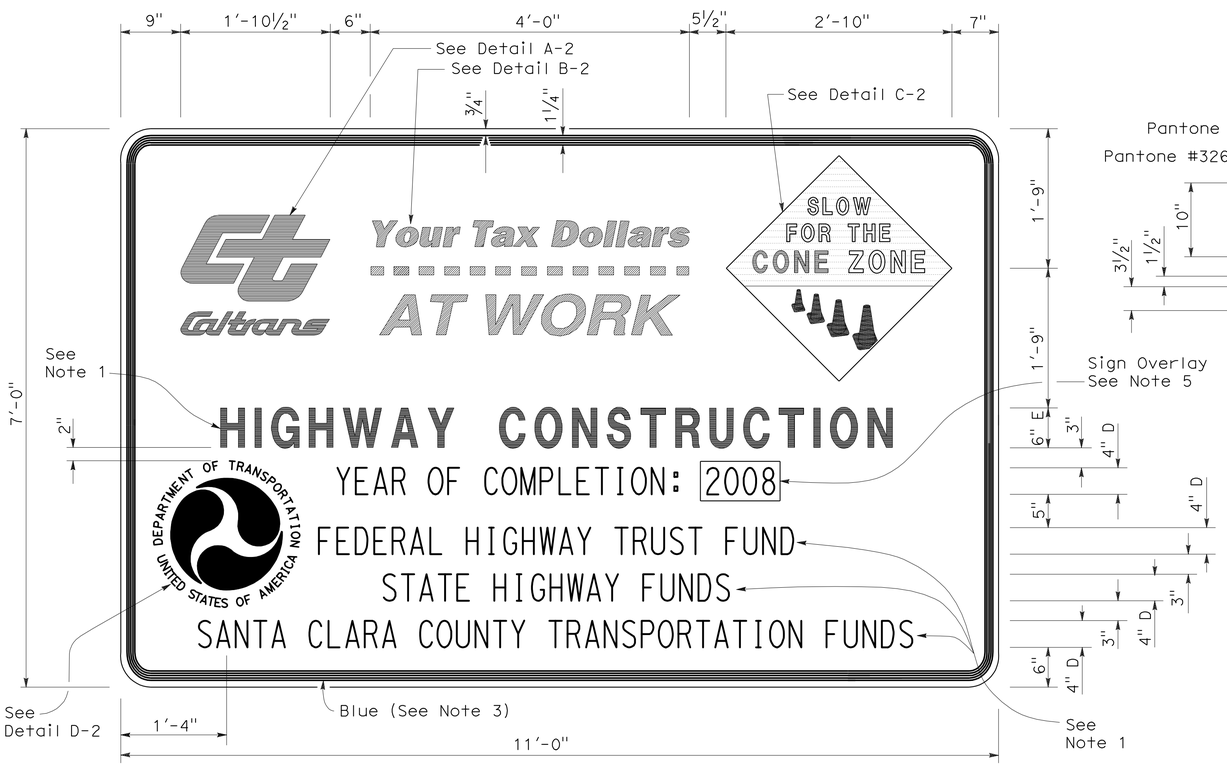

TYPE 2

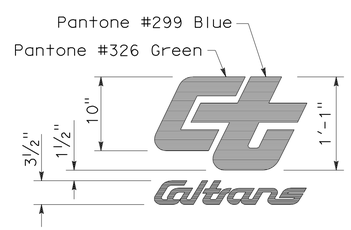

DETAIL A-2

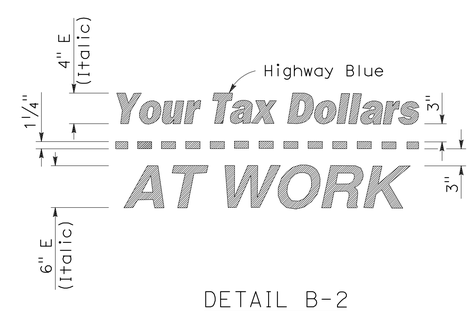

DETAIL B-2
(See Note 3)

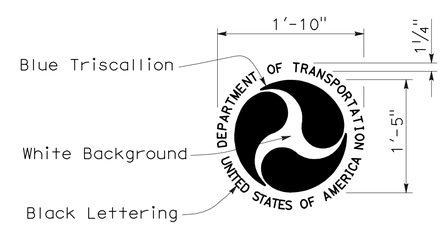

DETAIL D-2
(See Note 6)

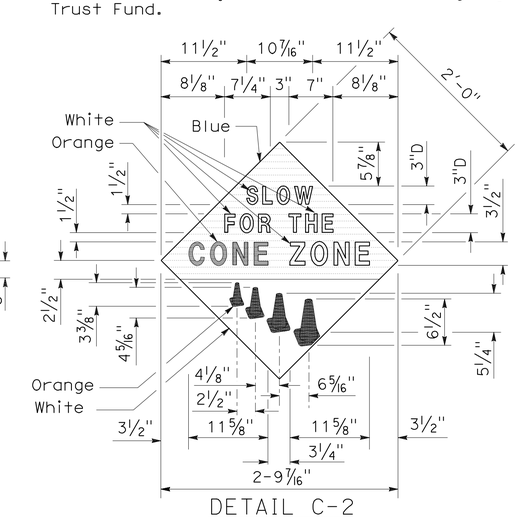

DETAIL C-2
(See Note 4)

STATE OF CALIFORNIA
DEPARTMENT OF TRANSPORTATION

CONSTRUCTION PROJECT FUNDING IDENTIFICATION SIGNS

NO SCALE

RSP T7 DATED NOVEMBER 17, 2006 SUPERSEDES STANDARD PLAN T7
DATED MAY 1, 2006 - PAGE 217 OF THE STANDARD PLANS BOOK DATED MAY 2006.

REVISED STANDARD PLAN RSP T7

2006 REVISED STANDARD PLAN RSP T7

9-7-06

DIST	COUNTY	ROUTE	POST MILES TOTAL PROJECT	SHEET NO.	TOTAL SHEETS
01	Lak	20	11.9/12.4	110	120

Robert B Schott
LICENSED LANDSCAPE ARCHITECT

April 3, 2009
PLANS APPROVAL DATE

LICENSED LANDSCAPE ARCHITECT
Robert B. Schott 3625
Signature
11-30-10
Renewal Date
2-25-09
Date
STATE OF CALIFORNIA

The State of California or its officers or agents shall not be responsible for the accuracy or completeness of electronic copies of this plan sheet.

To accompany plans dated 6-27-11

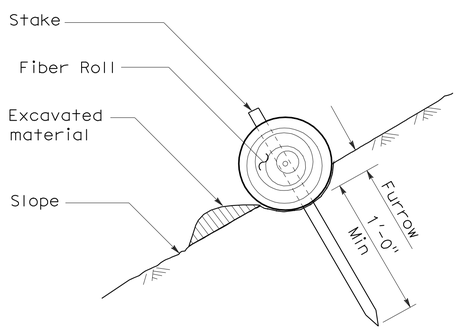

SECTION

TEMPORARY FIBER ROLL (TYPE 1)

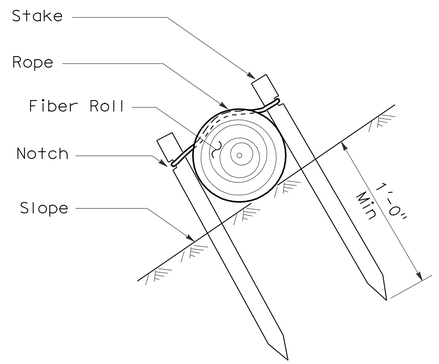

SECTION

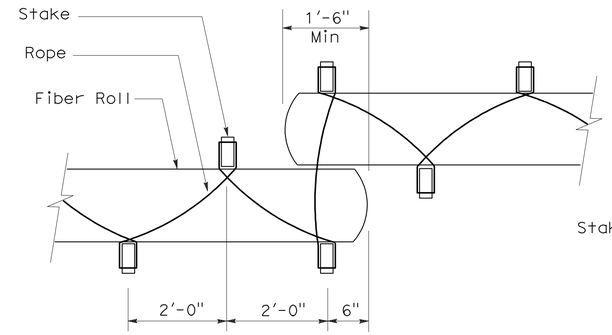

PLAN

TEMPORARY FIBER ROLL (TYPE 2)

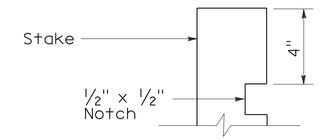

ELEVATION

STAKE NOTCH DETAIL

NOTES:

1. Temporary fiber roll spacing varies depending upon slope inclination.
2. Installations shown in the perspectives are for slope inclination of 10:1 and steeper.

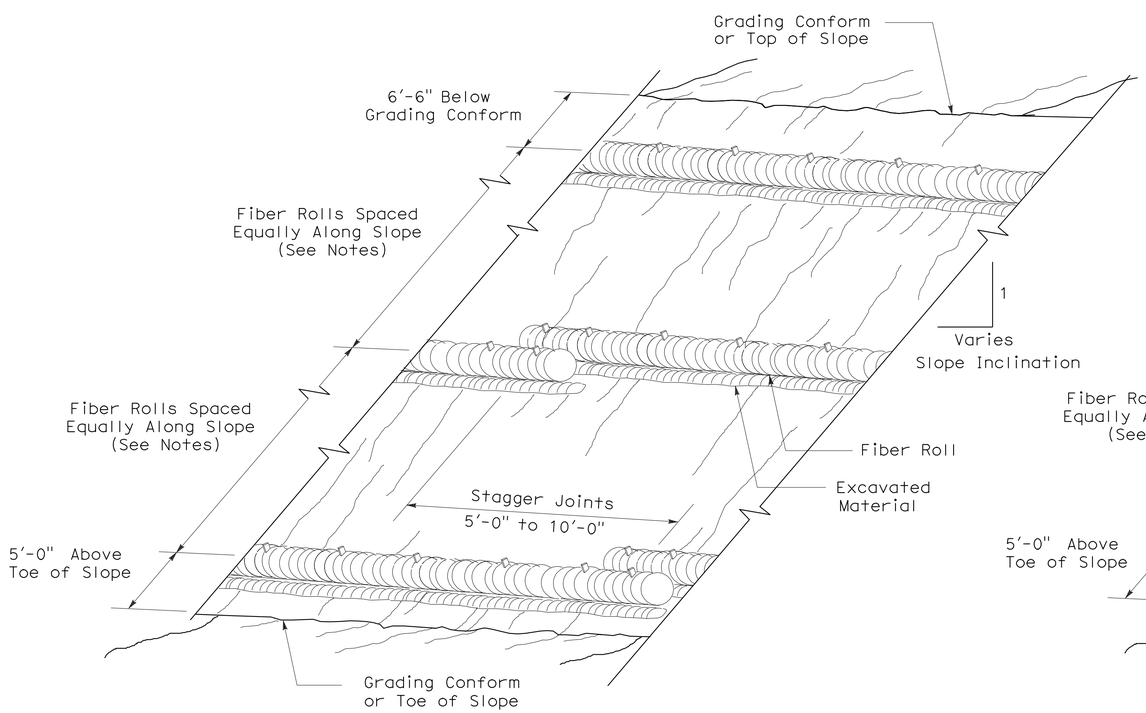

PERSPECTIVE

TEMPORARY FIBER ROLL (TYPE 1)

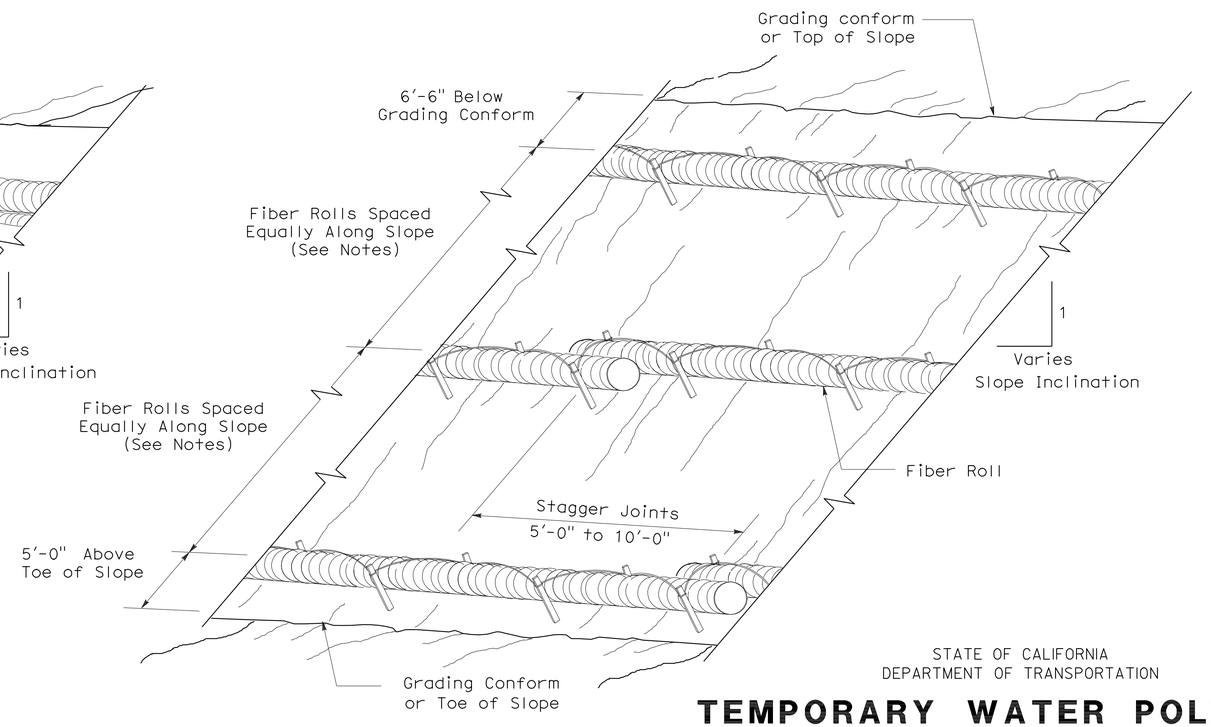

PERSPECTIVE

TEMPORARY FIBER ROLL (TYPE 2)

STATE OF CALIFORNIA
DEPARTMENT OF TRANSPORTATION

TEMPORARY WATER POLLUTION CONTROL DETAILS (TEMPORARY FIBER ROLL)

NO SCALE

RSP T56 DATED APRIL 3, 2009 SUPERSEDES STANDARD PLAN T56
DATED MAY 1, 2006 - PAGE 232 OF THE STANDARD PLANS BOOK DATED MAY 2006.

REVISED STANDARD PLAN RSP T56

2006 REVISED STANDARD PLAN RSP T56

2-23-09

DIST	COUNTY	ROUTE	POST MILES TOTAL PROJECT	SHEET NO.	TOTAL SHEETS
01	Lak	20	11.9/12.4	111	120

LICENSED LANDSCAPE ARCHITECT

August 15, 2008
PLANS Approval DATE

LICENSED LANDSCAPE ARCHITECT
Robert B. Schott 3625
Signature
11-04-08
Renewal Date
08-11-08
Date
STATE OF CALIFORNIA

The State of California or its officers or agents shall not be responsible for the accuracy or completeness of electronic copies of this plan sheet.

To accompany plans dated 6-27-11

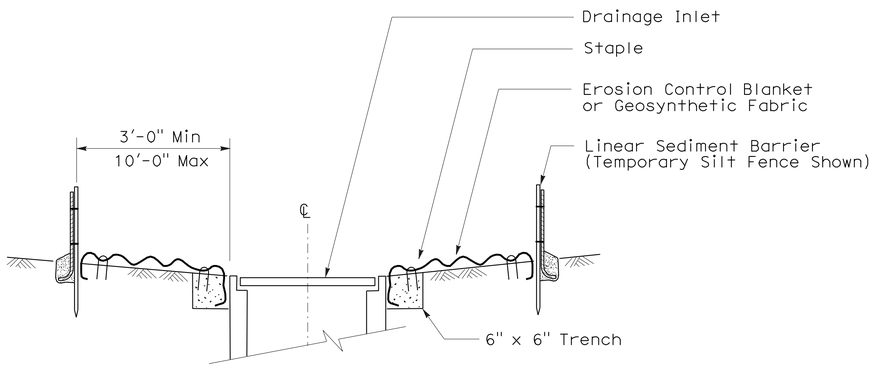

SECTION A-A

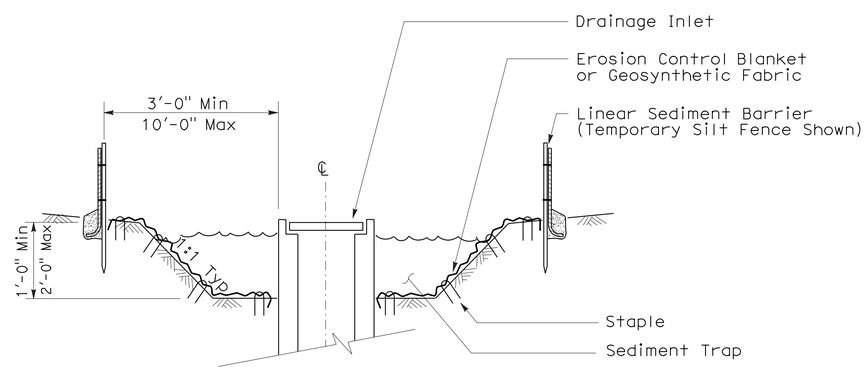

SECTION B-B

NOTES:

1. See Standard Plan T51 for Temporary Silt Fence.
2. Dimensions may vary to fit field conditions.

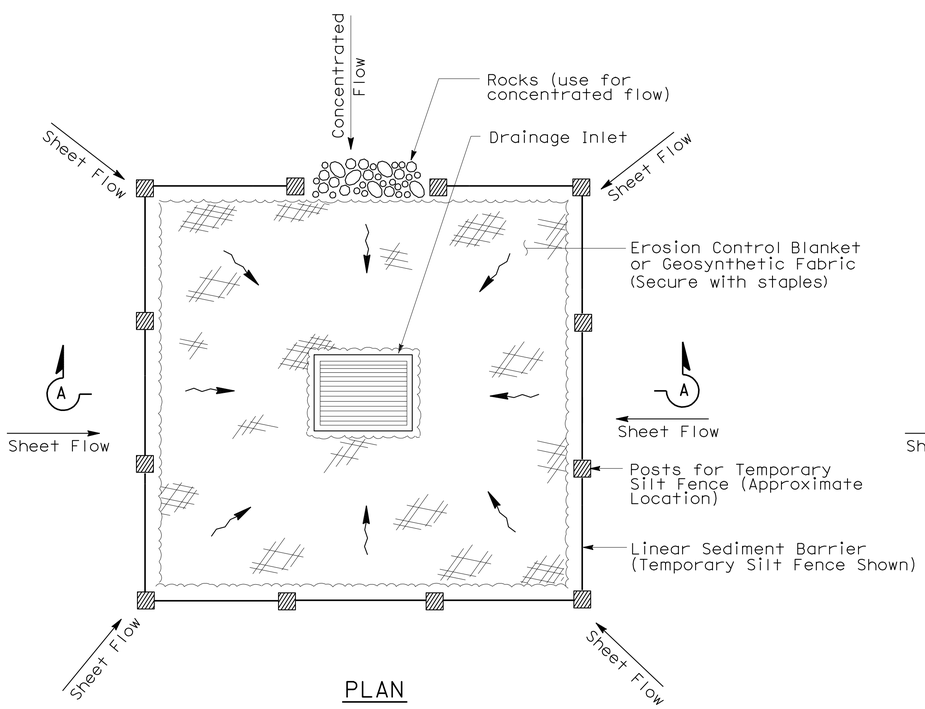

PLAN

TEMPORARY DRAINAGE INLET PROTECTION (TYPE 1)

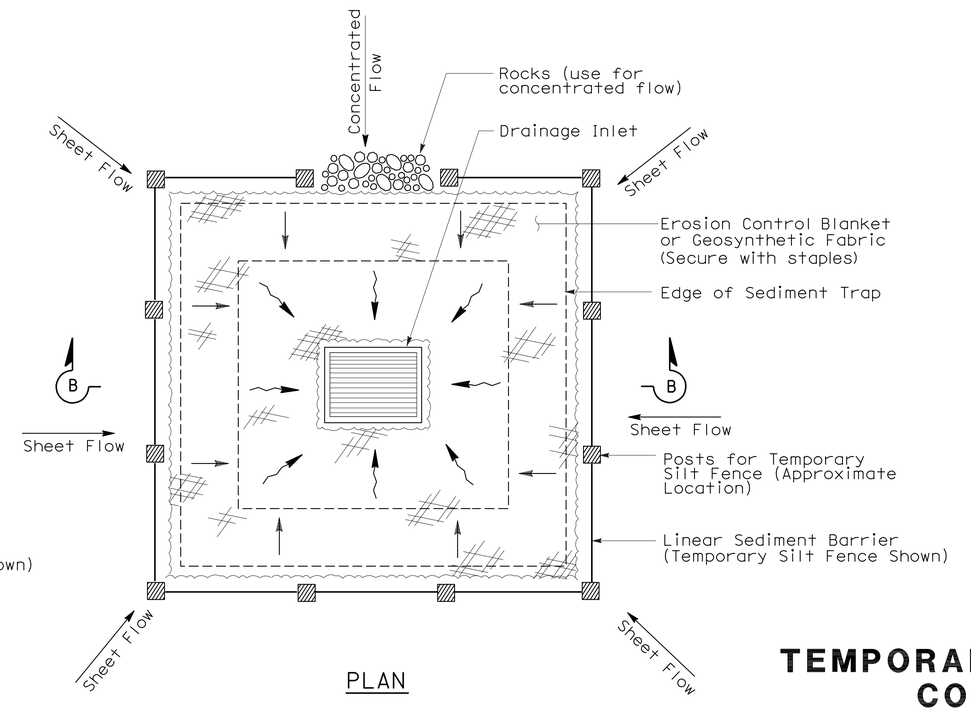

PLAN

TEMPORARY DRAINAGE INLET PROTECTION (TYPE 2) (EXCAVATED SEDIMENT TRAP)

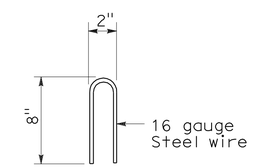

STAPLE DETAIL

STATE OF CALIFORNIA
DEPARTMENT OF TRANSPORTATION

TEMPORARY WATER POLLUTION CONTROL DETAILS (TEMPORARY DRAINAGE INLET PROTECTION)

NO SCALE

NSP T61 DATED AUGUST 15, 2008 SUPPLEMENTS THE STANDARD PLANS BOOK DATED MAY 2006.

NEW STANDARD PLAN NSP T61

2006 NEW STANDARD PLAN NSP T61

7-11-08

DIST	COUNTY	ROUTE	POST MILES TOTAL PROJECT	SHEET NO.	TOTAL SHEETS
01	Lak	20	11.9/12.4	112	120

LICENSED LANDSCAPE ARCHITECT

August 15, 2008
PLANS APPROVAL DATE

LICENSED LANDSCAPE ARCHITECT Robert B. Schott 3625 Signature 11-04-08 Renewal Date 08-11-08 Date STATE OF CALIFORNIA

The State of California or its officers or agents shall not be responsible for the accuracy or completeness of electronic copies of this plan sheet.

To accompany plans dated 6-27-11

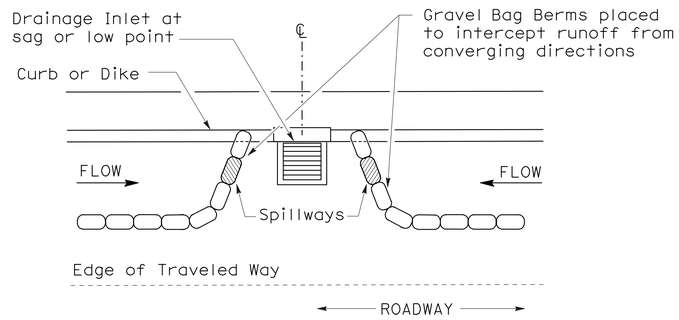

PLAN

CONFIGURATION FOR SAG POINT INLET (GRAVEL BAG BERM)

GRAVEL BAG BERM (TYPE 3A) SPACING TABLE

SLOPE OF ROADWAY (PERCENT)	1 to 3.9	4 to 5.9	6 to 7.9	8 to 10	10+
INTERVAL BETWEEN BERM	100′	75′	50′	25′	12′

For slope of less than 1%, install barriers only if erosion/sediment is prevalent

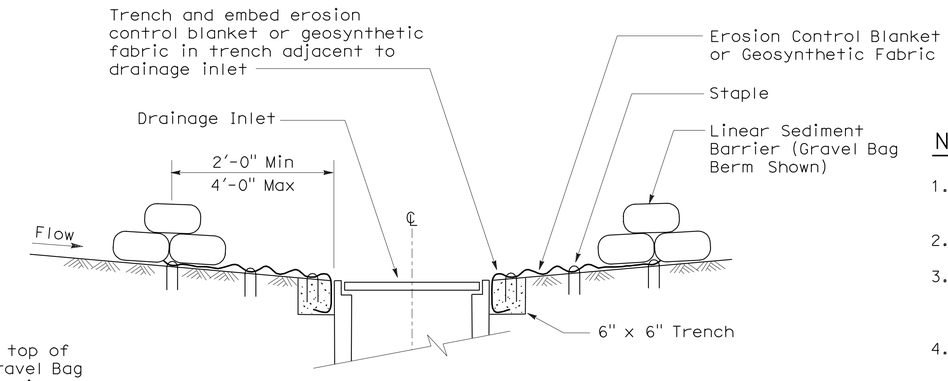

SECTION A-A

NOTES:

1. Place safety cones adjacent to drainage inlet protection.
2. Dimensions may vary to fit field conditions.
3. Install a minimum of 3 gravel bag berms upstream of each drainage inlet to be protected.
4. Position erosion control blanket or geosynthetic fabric at edge of concrete apron and secure in trench.
5. Erosion control blanket or geosynthetic fabric is not required if the area adjacent to the drainage inlet is vegetated or paved.

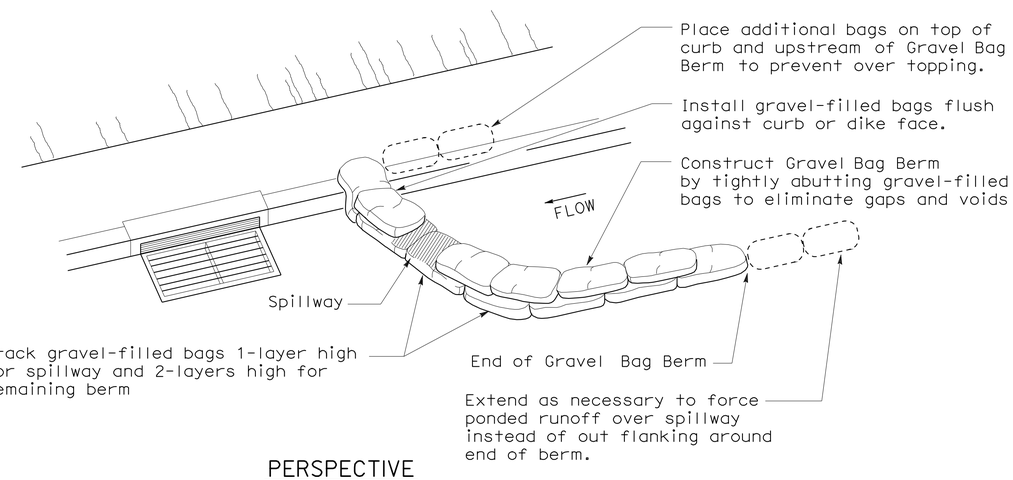

PERSPECTIVE

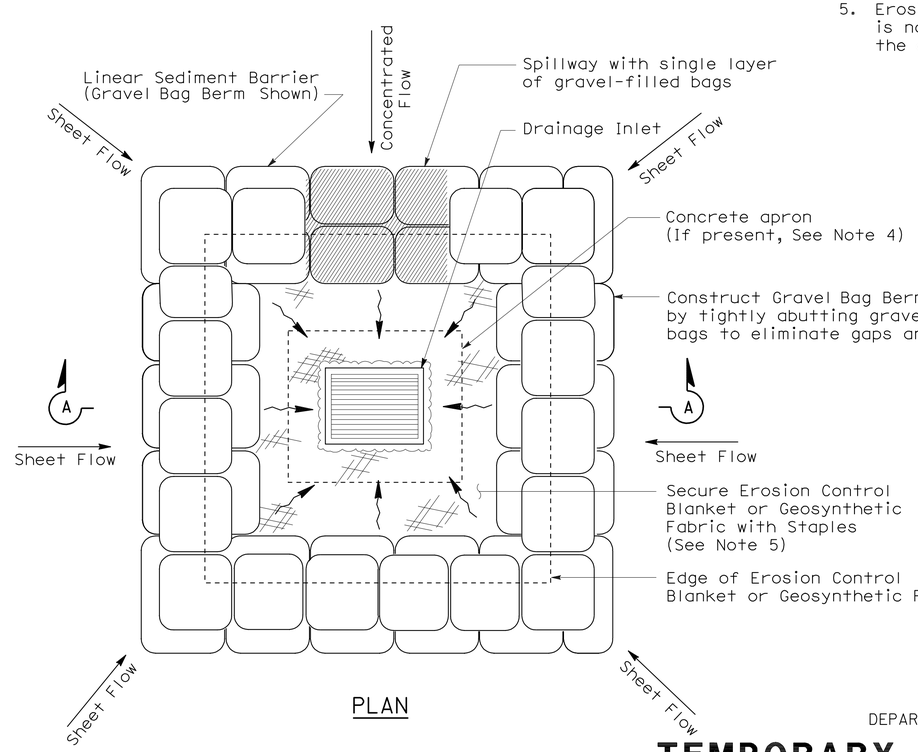

PLAN

TEMPORARY DRAINAGE INLET PROTECTION (TYPE 3B)

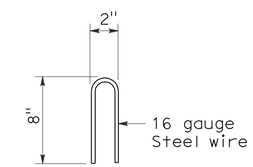

STAPLE DETAIL

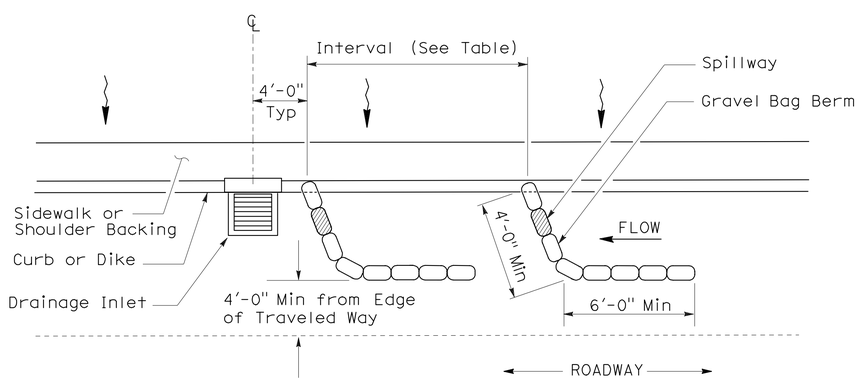

PLAN

TEMPORARY DRAINAGE INLET PROTECTION (TYPE 3A) (GRAVEL BAG BERM)

STATE OF CALIFORNIA
DEPARTMENT OF TRANSPORTATION

TEMPORARY WATER POLLUTION CONTROL DETAILS (TEMPORARY DRAINAGE INLET PROTECTION)

NO SCALE

NSP T62 DATED AUGUST 15, 2008 SUPPLEMENTS THE STANDARD PLANS BOOK DATED MAY 2006.

NEW STANDARD PLAN NSP T62

2006 NEW STANDARD PLAN NSP T62

7-11-08

DIST	COUNTY	ROUTE	POST MILES TOTAL PROJECT	SHEET NO.	TOTAL SHEETS
01	Lak	20	11.9/12.4	113	120

Robert B Schott
LICENSED LANDSCAPE ARCHITECT

August 15, 2008
PLANS APPROVAL DATE

The State of California or its officers or agents shall not be responsible for the accuracy or completeness of electronic copies of this plan sheet.

LICENSED LANDSCAPE ARCHITECT Robert B. Schott 3625 Signature 11-04-08 Renewal Date 08-11-08 Date STATE OF CALIFORNIA

To accompany plans dated 6-27-11

FLEXIBLE SEDIMENT BARRIER SPACING TABLE

SLOPE OF ROADWAY (PERCENT)	0 to 0.9	1 to 1.9	2 to 2.9	3 to 4	5+
INTERVAL BETWEEN BARRIERS	50′	35′	30′	25′	20′
ANGLE FROM FACE OF CURB	70°	70°	70°	45°	45°
SUGGESTED BARRIER LENGTH	6′	6′	6′	6′	6′

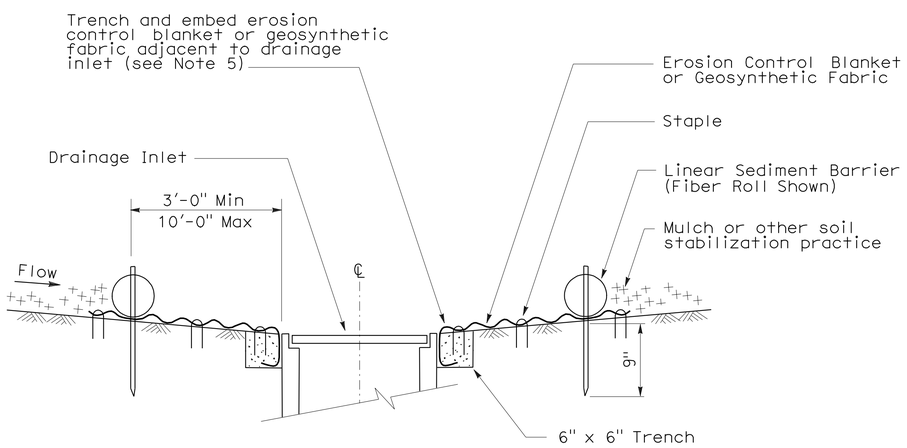

SECTION A-A

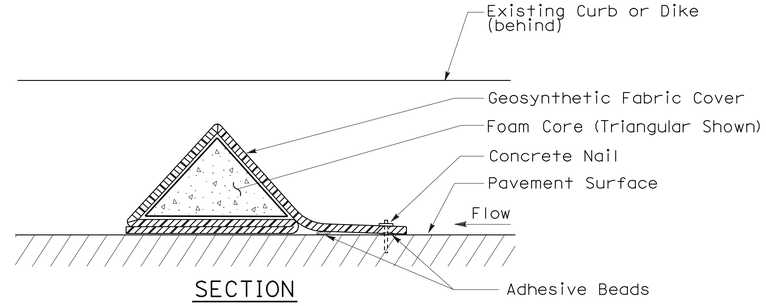

SECTION

FLEXIBLE SEDIMENT BARRIER DETAIL (FOAM BARRIER SHOWN)

NOTES:

1. See Standard Plan T51 for Temporary Silt Fence.
2. Dimensions may vary to fit field conditions.
3. Install a minimum of 3 flexible sediment barriers upstream of each drainage inlet to be protected.
4. Position erosion control blanket or geosynthetic fabric at edge of concrete apron and secure in trench.
5. Erosion control blanket or geosynthetic fabric is not required if the area adjacent to the drainage inlet is vegetated.

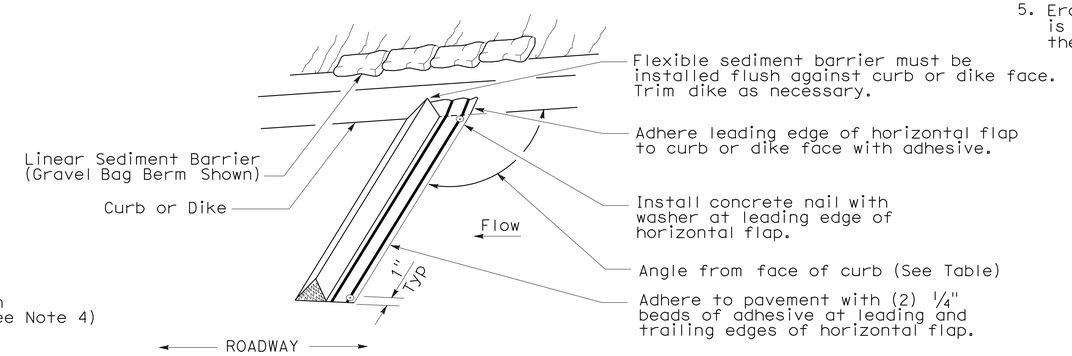

PERSPECTIVE

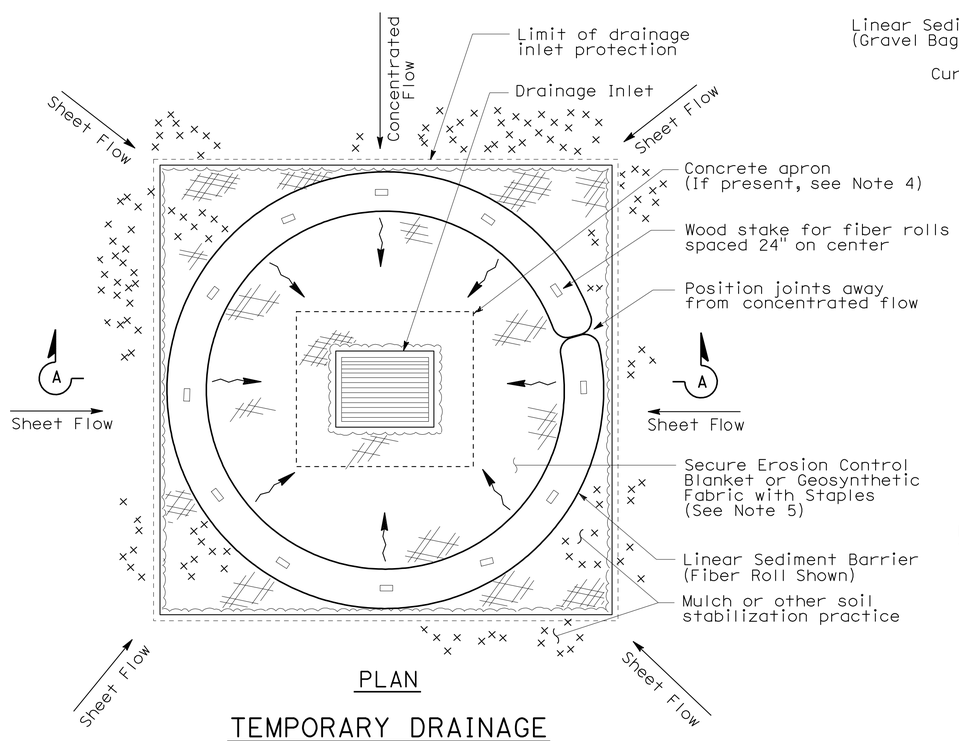

PLAN

TEMPORARY DRAINAGE INLET PROTECTION (TYPE 4A)

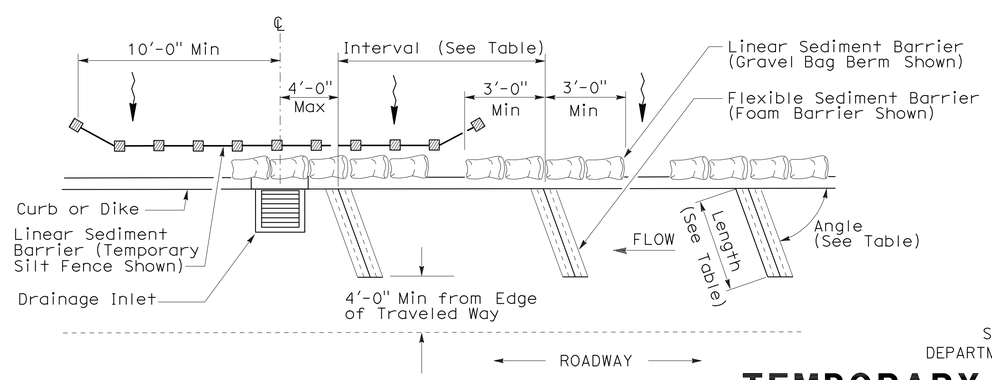

PLAN

TEMPORARY DRAINAGE INLET PROTECTION (TYPE 4B) FLEXIBLE SEDIMENT BARRIER

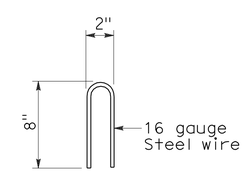

STAPLE DETAIL

STATE OF CALIFORNIA
DEPARTMENT OF TRANSPORTATION

TEMPORARY WATER POLLUTION CONTROL DETAILS (TEMPORARY DRAINAGE INLET PROTECTION)

NO SCALE

NSP T63 DATED AUGUST 15, 2008 SUPPLEMENTS THE STANDARD PLANS BOOK DATED MAY 2006.

NEW STANDARD PLAN NSP T63

2006 NEW STANDARD PLAN NSP T63

7-11-08

DIST	COUNTY	ROUTE	POST MILES TOTAL PROJECT	SHEET NO.	TOTAL SHEETS
01	Lak	20	11.9/12.4	114	120

LICENSED LANDSCAPE ARCHITECT

August 15, 2008
PLANS APPROVAL DATE

The State of California or its officers or agents shall not be responsible for the accuracy or completeness of electronic copies of this plan sheet.

LICENSED LANDSCAPE ARCHITECT — Robert B. Schott — Signature — 11-04-08 Renewal Date — 08-11-08 Date — STATE OF CALIFORNIA

To accompany plans dated 6-27-11

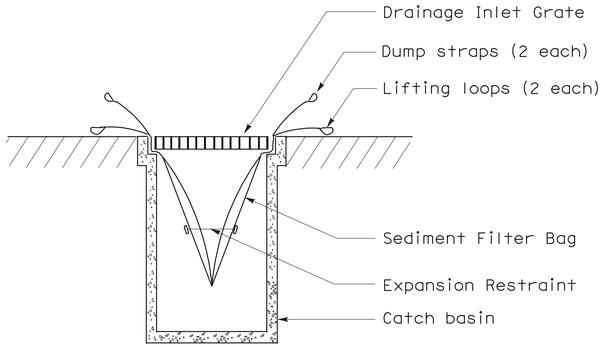

SECTION B-B

SEDIMENT FILTER BAG DETAIL

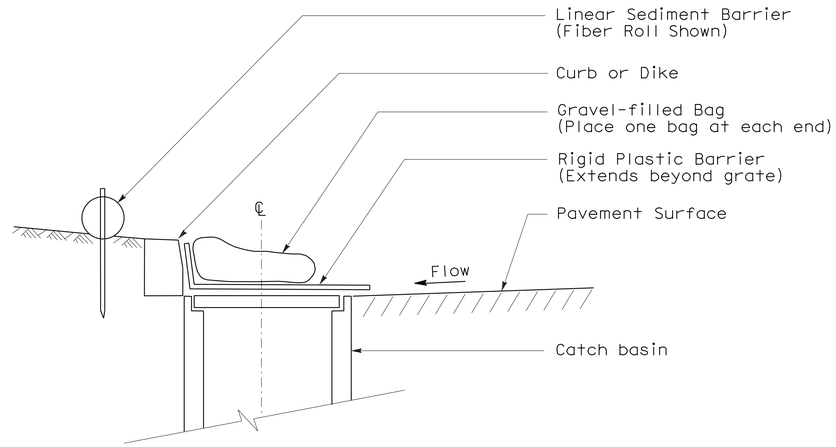

SECTION

TEMPORARY DRAINAGE INLET PROTECTION (TYPE 6A) (CATCH BASIN WITH GRATE)

NOTES:

1. See Standard Plan T51 for Temporary Silt Fence.
2. Dimensions may vary to fit field conditions.

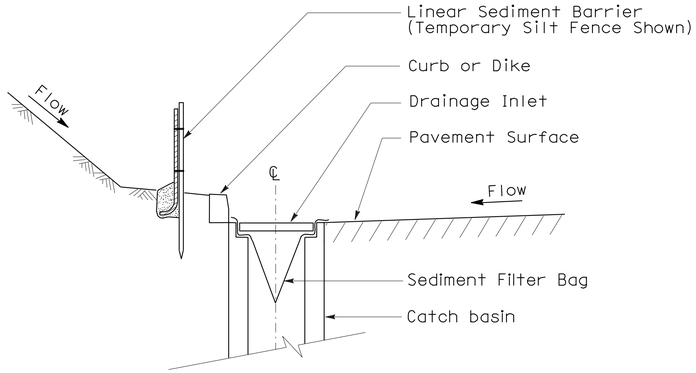

SECTION A-A

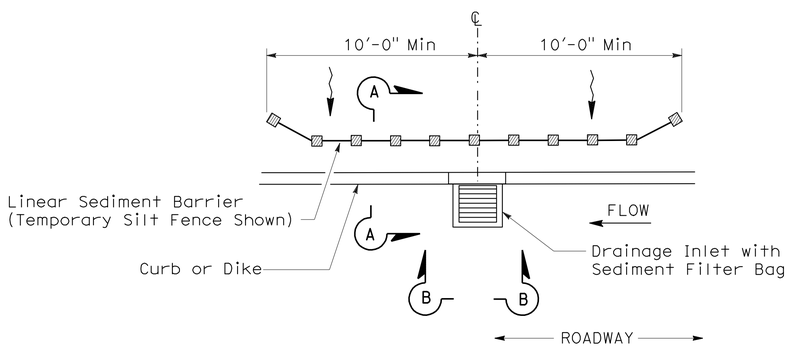

PLAN

TEMPORARY DRAINAGE INLET PROTECTION (TYPE 5) (SEDIMENT FILTER BAG)

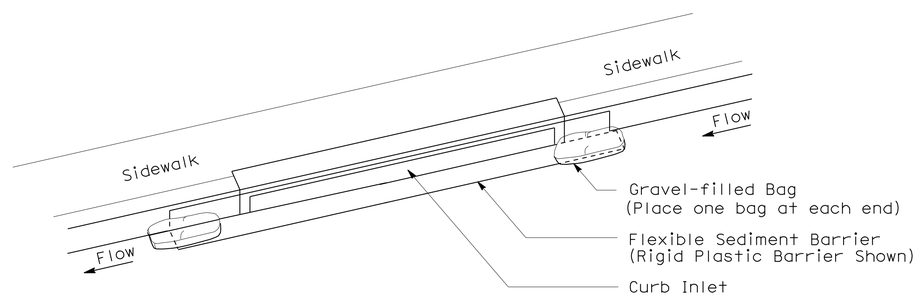

PERSPECTIVE

TEMPORARY DRAINAGE INLET PROTECTION (TYPE 6B) (CURB INLET WITHOUT GRATE)

STATE OF CALIFORNIA
DEPARTMENT OF TRANSPORTATION

TEMPORARY WATER POLLUTION CONTROL DETAILS (TEMPORARY DRAINAGE INLET PROTECTION)

NO SCALE

NSP T64 DATED AUGUST 15, 2008 SUPPLEMENTS
THE STANDARD PLANS BOOK DATED MAY 2006.

NEW STANDARD PLAN NSP T64

2006 NEW STANDARD PLAN NSP T64

DIST	COUNTY	ROUTE	POST MILES TOTAL PROJECT	SHEET NO.	TOTAL SHEETS
01	Lak	20	11.9/12.4	115	120

LICENSED LANDSCAPE ARCHITECT

April 3, 2009
PLANS APPROVAL DATE

LICENSED LANDSCAPE ARCHITECT
Robert B. Schott 3025
Signature
11-30-10
Renewal Date
2-25-09
Date
STATE OF CALIFORNIA

The State of California or its officers or agents shall not be responsible for the accuracy or completeness of electronic copies of this plan sheet.

To accompany plans dated 6-27-11

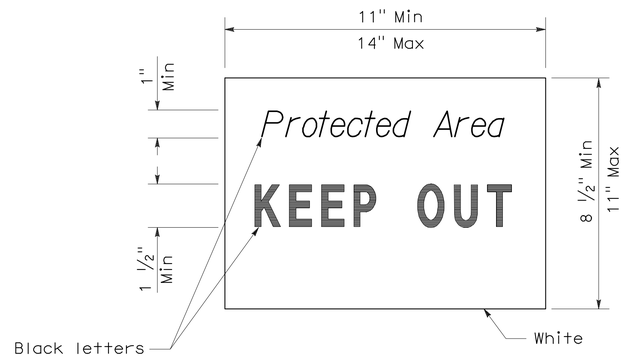

SIGN DETAIL

NOTE:

1. Temporary silt fence and temporary straw bale barrier shown for reference purposes only.

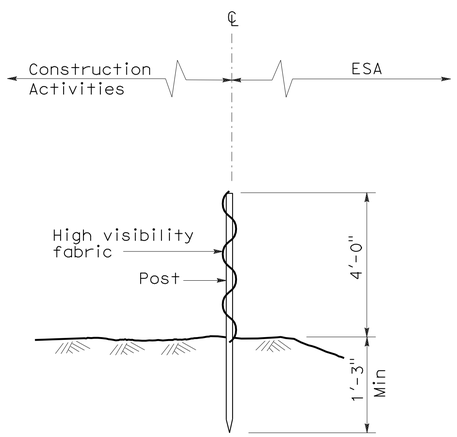

SECTION
TEMPORARY FENCE (TYPE ESA)

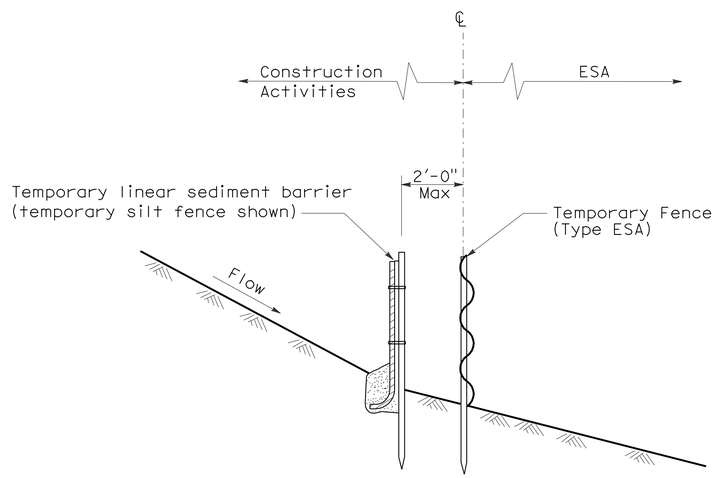

SECTION
PLACEMENT DETAIL
FOR TEMPORARY LINEAR SEDIMENT BARRIER
USED WITH TEMPORARY
FENCE (TYPE ESA)
(See Note 1)

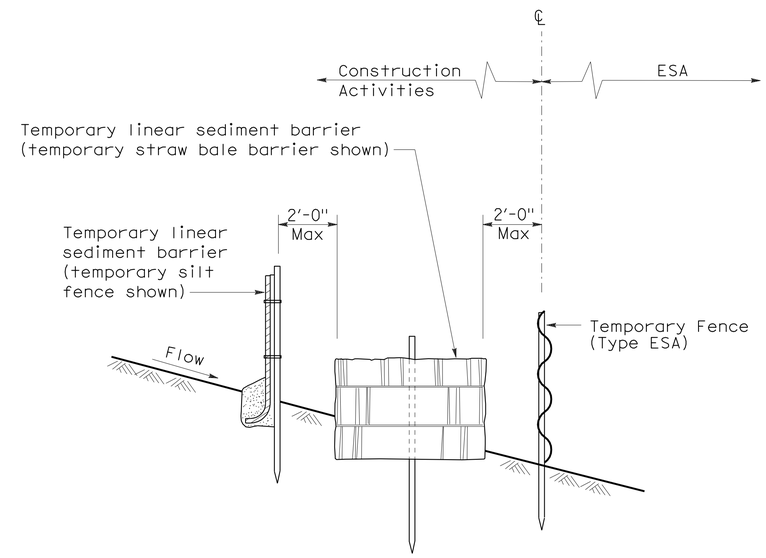

SECTION
PLACEMENT DETAIL
FOR TEMPORARY SILT FENCE
AND TEMPORARY STRAW BALE BARRIER
USED WITH TEMPORARY FENCE (TYPE ESA)
(See Note 1)

STATE OF CALIFORNIA
DEPARTMENT OF TRANSPORTATION

TEMPORARY WATER POLLUTION CONTROL DETAILS [TEMPORARY FENCE (TYPE ESA)]

NO SCALE

NSP T65 DATED APRIL 3, 2009 SUPPLEMENTS
THE STANDARD PLANS BOOK DATED MAY 2006.

NEW STANDARD PLAN NSP T65

2006 NEW STANDARD PLAN NSP T65

DIST	COUNTY	ROUTE	POST MILES TOTAL PROJECT	SHEET NO.	TOTAL SHEETS
01	Lak	20	11.9/12.4	116	120

REGISTERED ELECTRICAL ENGINEER

October 5, 2007
PLANS APPROVAL DATE

REGISTERED PROFESSIONAL ENGINEER Jeffery G. McRae No. E14512 Exp. 6-30-08 ELECTRICAL STATE OF CALIFORNIA

The State of California or its officers or agents shall not be responsible for the accuracy or completeness of electronic copies of this plan sheet.

To accompany plans dated 6-27-11

2006 REVISED STANDARD PLAN RSP ES-1A

ELECTROLIERS

STANDARD TYPES
15, 15D
15 STRUCTURE
21, 21D STRUCTURE
30
31
32
35
36-20A

High mast light pole

Double Arm lighting standard

Existing electrolier

Electrolier foundation (Future installation)

NOTES:

1. Luminaires shall be 310 W HPS when installed on Type 21, 21D, 30, 31, 32, 35 and 36-20A Standards, unless otherwise specified. Luminaires shall be 200 W HPS when installed on other type standards or poles, unless otherwise specified.
2. Luminaires shall be the cutoff type, ANSI Type Ⅲ medium cutoff lighting distribution, unless otherwise specified.
3. Variations noted adjacent to symbol on project plans.

Electrolier (see project notes or project plans)

Luminaire on wood pole

STANDARD NOTES:

- AB — Abandon. If applied to conduit, remove conductors.
- BC — Install pull box in existing conduit run.
- BP — Pedestrian barricade, type as indicated on plan.
- CB — Install conduit into existing pull box.
- CC — Connect new and existing conduit. Remove existing conductors and install conductors as indicated.
- CF — Conduit to remain for future use. Remove conductors. Install pull wire or rope.
- DH — Detector handhole.
- FA — Foundation to be abandoned.
- IS — Install sign on signal mast arm.
- NS — No slip base on standard.
- PEC — Photoelectric control.
- PEU — Photoelectric unit.
- RC — Equipment or material to be removed and become the property of the Contractor.
- RE — Remove electrolier, fuses and ballast. Tape ends of conductors.
- RL — Relocate equipment.
- RR — Remove and reuse equipment.
- RS — Remove and salvage equipment.
- SC — Splice new to existing conductors.
- SD — Service disconnect.
- SF — Standard to remain for future use. Remove luminaire, pole conductors, fuses and ballast.
- TSP — Telephone service point.

ABBREVIATIONS AND EQUIPMENT DESIGNATIONS

PROPOSED	EXISTING	
BBS	bbs	Battery backup system
BC	bc	Bolt circle
C	C	Conduit
CCTV	cctv	Closed circuit television
CKT	ckt	Circuit
CMS	cms	Changeable message sign
DLC	dlc	Loop detector lead-in cable
EMS	ems	Extinguishable message sign
EVC	evc	Emergency vehicle cable
EVD	evd	Emergency vehicle detector
FB	fb	Flashing beacon
FBCA	fbca	Flashing beacon control assembly
FBS	fbs	Flashing beacon with slip base
FO	fo	Fiber optic
G	G	Ground (Equipment Grounding Conductor)
GFCI	GFCI	Ground fault circuit interrupt
HAR	har	Highway advisory radio
HEX	hex	Hexagonal
HPS	hps	High pressure sodium
IISNS	iisns	Internally illuminated street name sign
ISL	isl	Induction sign lighting
LED	led	Light emitting diode
LMA	lma	Luminaire mast arm
LPS	lps	Low pressure sodium
LTG	ltg	Lighting
LUM	lum	Luminaire
MAT	mat	Mast arm mounting vehicle signal faces, top attachment
MAS	mas	Mast arm mounting vehicle signal faces, side attachment
MAS-4A	mas-4A	Mast arm mounting vehicle signal faces, side attachment - 4 signal section
MAS-4B	mas-4B	
MAS-4C	mas-4C	
MAS-5A	mas-5A	Mast arm mounting vehicle signal faces, side attachment - 5 signal section
MAS-5B	mas-5B	
MC	mc	Mercury contactor
M/M	m/m	Multiple to multiple transformer
MT	mt	Conduit with pull wire or rope only
MTG	mtg	Mounting
	mv	Mercury vapor lighting fixture
N	N	Neutral (Grounded Conductor)
NC	NC	Normally closed
NO	NO	Normally open
PB	pb	Pull box
PEC	pec	Photoelectric control (Type Ⅰ, Ⅱ, Ⅲ, Ⅳ or Ⅴ as shown)
PED	ped	Pedestrian
PEU	peu	Photoelectric unit
PPB	ppb	Pedestrian push button
RL		Relocated equipment
RM	rm	Ramp metering
SB	sb	Slip base
SIC	sic	Signal interconnect cable
SIG	sig	Signal
SMA	sma	Signal mast arm
SNS	sns	Street name sign
SP	sp	Service point
TDC	tdc	Telephone demarcation cabinet
TMS	tms	Traffic monitoring station
TOS	tos	Traffic Operations System
VEH	veh	Vehicle
XFMR	xfmr	Transformer
COMM	comm	Communication
RWIS	rwis	Roadway weather information system

SOFFIT AND WALL MOUNTED LUMINAIRES

Pendant, 70 W HPS unless otherwise specified.

Flush, 70 W HPS unless otherwise specified.

Wall surface, 70 W HPS unless otherwise specified.

Existing soffit or wall luminaire to remain unmodified.

Existing soffit or wall luminaire to be modified as specified.

NOTE:

Arrow indicates "street side" of luminaire.

STATE OF CALIFORNIA
DEPARTMENT OF TRANSPORTATION

ELECTRICAL SYSTEMS (SYMBOLS AND ABBREVIATIONS)

NO SCALE

RSP ES-1A DATED OCTOBER 5, 2007 SUPERSEDES STANDARD PLAN ES-1A DATED MAY 1, 2006 - PAGE 400 OF THE STANDARD PLANS BOOK DATED MAY 2006.

REVISED STANDARD PLAN RSP ES-1A

DIST	COUNTY	ROUTE	POST MILES TOTAL PROJECT	SHEET NO.	TOTAL SHEETS
01	Lak	20	11.9/12.4	117	120

REGISTERED ELECTRICAL ENGINEER

October 5, 2007
PLANS APPROVAL DATE

REGISTERED PROFESSIONAL ENGINEER Jeffery G. McRae No. E14512 Exp. 6-30-08 ELECTRICAL STATE OF CALIFORNIA

The State of California or its officers or agents shall not be responsible for the accuracy or completeness of electronic copies of this plan sheet.

To accompany plans dated 6-27-11

CONDUIT

PROPOSED	EXISTING	
		Lighting Conduit, unless otherwise indicated or noted
		Traffic signal conduit
C	c	Communication conduit
T	t	Telephone conduit
F	f	Fire alarm conduit
FO	fo	Fiber optic conduit
		Conduit termination (RSP ES-9A C)
R	r	Conduit riser in/on structure or service pole

SERVICE EQUIPMENT

PROPOSED	EXISTING	
OH	oh	Overhead lines
U	U	Wood pole "U" indicates utility owned
		Pole guy with anchor
		Utility transformer - ground mounted
III		Service equipment enclosure type
		Service equipment enclosure door indicates front of enclosure
T	t	Telephone demarcation cabinet

POLE-MOUNTED SERVICE DESIGNATION

Type of installation

TYPE H SERVICE - 28'-10" ← Pole height above grade

ILLUMINATED OVERHEAD SIGN

PROPOSED	EXISTING	
		Overhead sign - Single post
		Overhead sign - Two post
		Overhead sign - Mounted on structure
		Overhead sign with electrolier

SIGNAL EQUIPMENT

PROPOSED	EXISTING	
		Pedestrian signal face
		Pedestrian push button post
		Pedestrian barricade
		Vehicle signal face (with backplate, 3-Section: red, yellow and green)
		Vehicle signal face with angle visors
PV	PV	Modifications of basic symbols: "L" indicates all non-arrow sections louvered "LG" indicates louvered green section only "PV" indicates 12" programmed visibility sections "8" indicates all 8" sections (only when specified)
		Type 15TS and Vehicle signal face
		Vehicle signal face with red, yellow and green left arrow sections
		Vehicle signal face with red and yellow sections and up green arrow
		Vehicle signal face (5 Section) with red, yellow and green sections and yellow and green right arrows
		Type 1 Standard and attached vehicle signal faces
		Standard with signal mast arm only and attached vehicle signal faces and internally illuminated street name sign
		Type 33 Standard, Left-turn vehicle signal face and sign
		Standard with luminaire and signal mast arms and attached vehicle signal faces
		Cantilever flashing beacon Type 9 Frame, with a sign unless otherwise specified or indicated
		Type 15-FBS Standard with two vehicle signal face sections with lens, backplate and visor with a sign
R	Y	Flashing beacon. One vehicle signal face section with lens, backplate and visor. "R" indicates red indication, "Y" indicates yellow indication
		Controller assembly. Door indicates front of cabinet

SIGNAL EQUIPMENT Cont

PROPOSED	EXISTING	
		Guard post
		Type 1 Standard with "Meter On" sign
		Emergency Vehicle detector

NOTES:

1. All signal sections shall be 12" unless shown otherwise.
2. Signal heads shall be provided with backplates unless shown otherwise.
3. Signal indication shall be LED.

STATE OF CALIFORNIA
DEPARTMENT OF TRANSPORTATION

ELECTRICAL SYSTEMS (SYMBOLS AND ABBREVIATIONS)

NO SCALE

RSP ES-1B DATED OCTOBER 5, 2007 SUPERCEDES STANDARD PLAN ES-1B DATED MAY 1, 2006 - PAGE 401 OF THE STANDARD PLANS BOOK DATED MAY 2006.

REVISED STANDARD PLAN RSP ES-1B

2006 REVISED STANDARD PLAN RSP ES-1B

DIST	COUNTY	ROUTE	POST MILES TOTAL PROJECT	SHEET NO.	TOTAL SHEETS
01	Lak	20	11.9/12.4	118	120

REGISTERED ELECTRICAL ENGINEER

October 5, 2007
PLANS APPROVAL DATE

REGISTERED PROFESSIONAL ENGINEER
Jeffery G. McRae
No. E14512
Exp. 6-30-08
ELECTRICAL
STATE OF CALIFORNIA

The State of California or its officers or agents shall not be responsible for the accuracy or completeness of electronic copies of this plan sheet.

To accompany plans dated 6-27-11

EQUIPMENT IDENTIFICATION

ILLUMINATED SIGN IDENTIFICATION NUMBER:

Sign No. 12345 — Sign number - Place on post or structure

10 ISL SCI 1.0

- 1.0 — Transformer rating (kVA)
- SCI — Lighting control type
- ISL — Number and type of fixtures

Do NOT place on standard or structure

ELECTROLIER OR EQUIPMENT IDENTIFICATION NUMBER:

12345 - 15'-0"

- 15'-0" — Mast arm length, if shown. Do not place on standard or structure.
- 12345 — Equipment number - Place on standard or structure. Existing equipment numbers are shown in parenthesis

CONDUIT AND CONDUCTOR IDENTIFICATION:

1½"C, 2#10, 15#14, 2 DLC

- 2#10, 15#14, 2 DLC — Number and size of conductors and cables
- 1½"C — Size of conduit in inches

Ø1, Ø2, Ø2P, etc.	Traffic phase identification for signal faces, detectors and phase diagrams
1 2 3	Project note numbers
A B C	Equipment description, installation or item numbers
1 2 3	Conduit run numbers

SIGNAL AND LIGHTING STANDARD (TYPICAL DESIGNATION):

19A - 3 - 100

- 100 — Wind velocity = 100 mph
- 3 — Case 3 arm loading
- 19A — Standard type
- Standard Plan sheet number
- Detail number or letter

MISCELLANEOUS EQUIPMENT

PROPOSED	EXISTING	
CMS	cms	Changeable message sign
		Closed circuit television camera
		Highway advisory radio pole and antenna
EMS	ems	Extinguishable message sign
M V	m v	Detection device M = Microwave sensor V = Video image sensor

WIRING DIAGRAM LEGEND

P	Pole
CB	Circuit breaker
A	Ampere
V	Volt
M	Metered
UM	Unmetered
NB	Neutral bus
GB	Ground bus
G	Equipment grounding conductor
N	Grounded conductor (Neutral)

- External conductor
- Conductor or bus
- Tie point
- Contactor coil
- Contactor, Contact NO
- Terminal blocks
- Contactor, Contact NC
- Enclosure bond
- Grounding electrode
- Circuit breaker
- Receptacle

PULL BOXES

PROPOSED — EXISTING

Pull box-No. 5 unless otherwise indicated or noted.

3 — 9A(21)

Pull box-Additional designations or descriptions

- 3 = No. 3½ pull box
- 5 = No. 5 pull box
- 6 = No. 6 pull box
- 7 = No. 7 (Ceiling pull box)
- 8 = No. 8 (Pendant soffit pull box)
- 9 = No. 9 pull box
- 9A = No. 9A pull box

- (C) = Communications pull box
- (E) = Pull box with extension
- (S) = Sprinkler control pull box
- (21) = Anchor bolts and conduit for future installation of Type 21 Standard
- (T) = Traffic pull box

VEHICLE DETECTORS

5 J 9 U

- U = Upper
- L = Lower
- Slot number in input file
- Input file (I or J)
- Phase

PROPOSED	EXISTING	
		Type A detector loop. Outline of sawcut shown.
		Type B detector loop. Outline of sawcut shown.
		Type C detector loop. Outline of sawcut shown.
		Type D detector loop. Outline of sawcut shown.
		Type E detector loop. Outline of sawcut shown.
		Type Q detector loop. Outline of sawcut shown.
		Magnetic detector
DH	dh	Detector handhole
		Microwave or video detection zone

STATE OF CALIFORNIA
DEPARTMENT OF TRANSPORTATION

ELECTRICAL SYSTEMS (SYMBOLS AND ABBREVIATIONS)

NO SCALE

RSP ES-1C DATED OCTOBER 5, 2007 SUPERCEDES STANDARD PLAN ES-1C DATED MAY 1, 2006 - PAGE 402 OF THE STANDARD PLANS BOOK DATED MAY 2006.

REVISED STANDARD PLAN RSP ES-1C

2006 REVISED STANDARD PLAN RSP ES-1C

7-10-07

DIST	COUNTY	ROUTE	POST MILES TOTAL PROJECT	SHEET NO.	TOTAL SHEETS
01	Lak	20	11.9/12.4	119	120

REGISTERED CIVIL ENGINEER

October 5, 2007
PLANS APPROVAL DATE

REGISTERED PROFESSIONAL ENGINEER
Stanley P. Johnson
No. C57793
Exp. 3-31-08
CIVIL
STATE OF CALIFORNIA

The State of California or its officers or agents shall not be responsible for the accuracy or completeness of electronic copies of this plan sheet.

To accompany plans dated 6-27-11

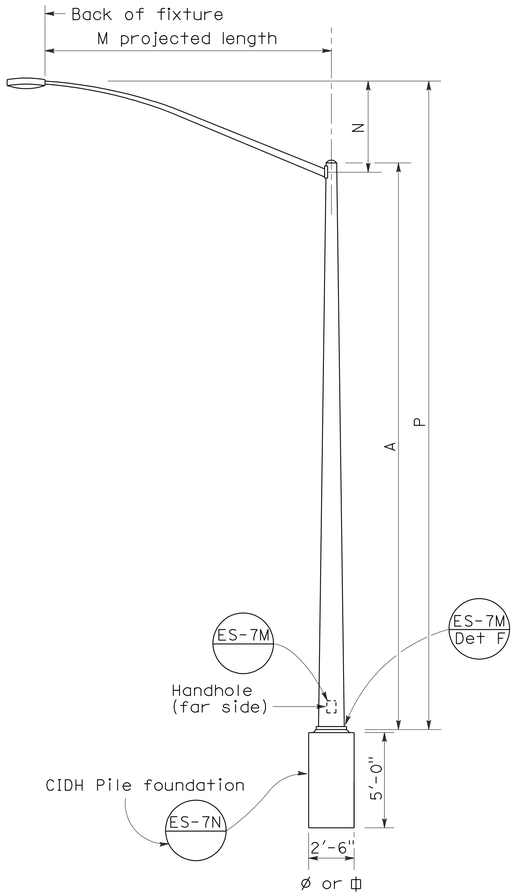

ELEVATION
TYPE 15 AND TYPE 21

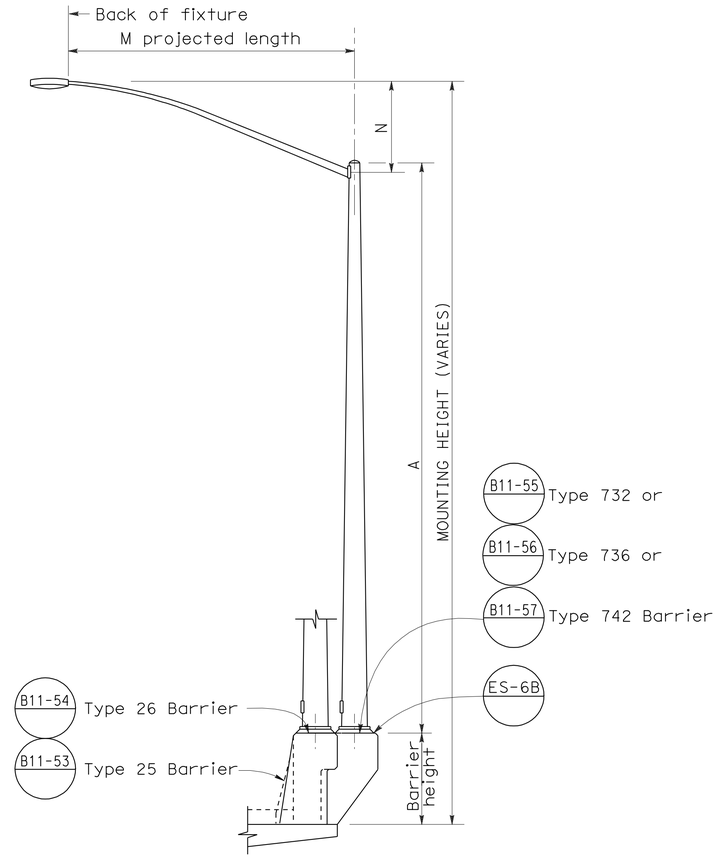

ELEVATION
TYPE 15 AND TYPE 21 BARRIER RAIL MOUNTED

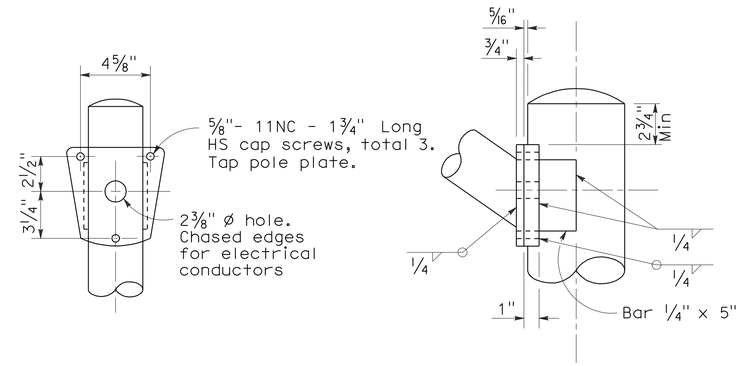

DETAIL R
LUMINAIRE ARM CONNECTION

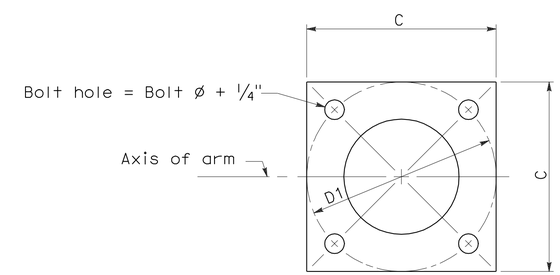

BASE PLATE

POLE TYPE	POLE DATA				BASE PLATE DATA				LUMINAIRE ARM
	A Height	Min OD Base	Min OD Top	Wall Thickness	C	D1 Bolt Circle	Thickness	Anchor Bolts Size	
15	30'	8"	3 7/8"	0.1196"	1'-0"	1'-0"	1"	1" ø x 3'-0" x 4"*	6' - 15' [12']
21	35'	8 5/8"	3 7/8"	0.1196"	1'-0"	1'-0"	1"	1 1/4"ø x 3'-0" x 4"*	6' - 15' [12']

* For barrier rail bolts, see Standard Plan ES-6B.

LUMINAIRE ARM DATA					
M Projected Length	N Rise	Min OD At Pole	Nominal Thickness	P Type 15	P Type 21
6'-0"	2'-0"±	3 1/4"	0.1196"	31'-6"±	36'-6"±
8'-0"	2'-6"±	3 1/2"	0.1196"	32'-0"±	37'-0"±
10'-0"	3'-3"±	3 7/8"	0.1196"	32'-9"±	37'-9"±
12'-0"	4'-3"±	3 7/8"	0.1196"	33'-9"±	38'-9"±
15'-0"	4'-9"±	4 1/4"	0.1196"	34'-3"±	39'-3"±

NOTES:

1. ☐ Indicates arm length to be used unless otherwise noted on the plans.
2. For Type 15-SB, use Type 15 standard with Type 30 slip base plate details, see Standard Plan ES-6F.
3. For additional notes, see Standard Plan ES-7M and ES-7N.

STATE OF CALIFORNIA
DEPARTMENT OF TRANSPORTATION

ELECTRICAL SYSTEMS (LIGHTING STANDARD TYPES 15 AND 21)

NO SCALE

RSP ES-6A DATED OCTOBER 5, 2007 SUPERCEDES STANDARD PLAN ES-6A DATED MAY 1, 2006 - PAGE 427 OF THE STANDARD PLANS BOOK DATED MAY 2006.

REVISED STANDARD PLAN RSP ES-6A

2006 REVISED STANDARD PLAN RSP ES-6A

7-10-07

DIST	COUNTY	ROUTE	POST MILES TOTAL PROJECT	SHEET NO.	TOTAL SHEETS
01	Lak	20	11.9/12.4	120	120

REGISTERED CIVIL ENGINEER

October 5, 2007
PLANS APPROVAL DATE

REGISTERED PROFESSIONAL ENGINEER
Stanley P. Johnson
No. C57793
Exp. 3-31-08
CIVIL
STATE OF CALIFORNIA

The State of California or its officers or agents shall not be responsible for the accuracy or completeness of electronic copies of this plan sheet.

To accompany plans dated 6-27-11

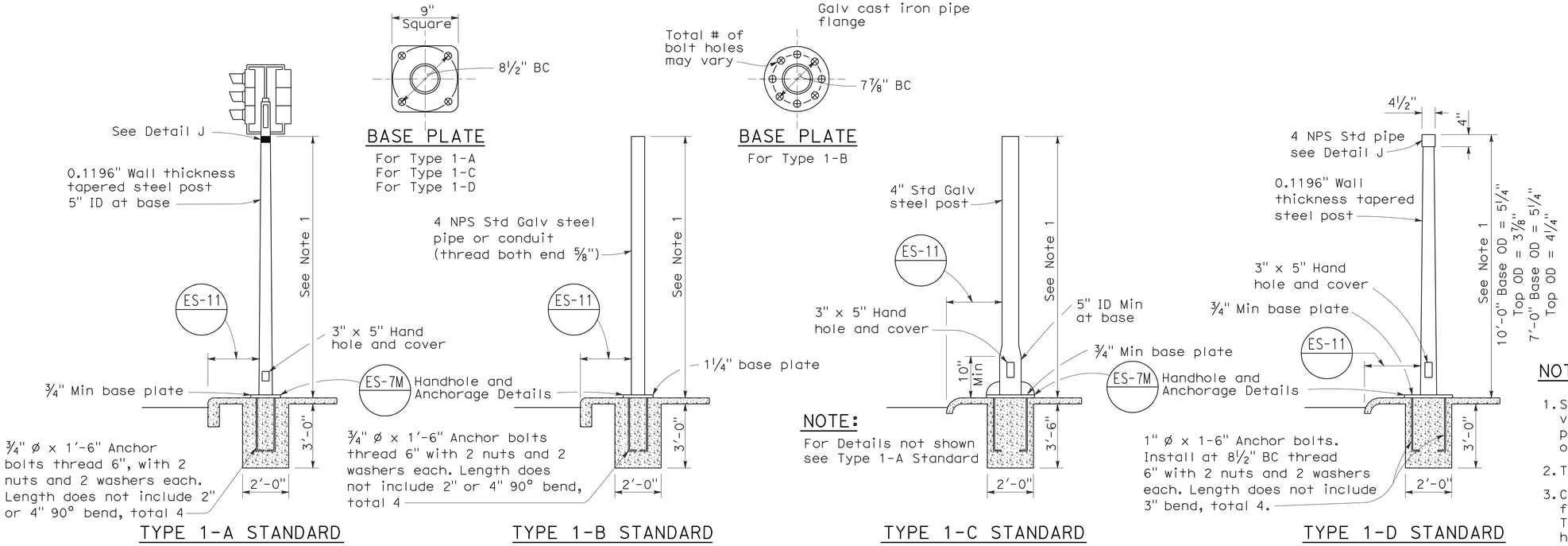

TYPE 1 SIGNAL STANDARDS

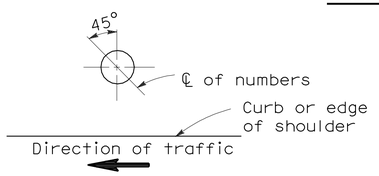

PLAN

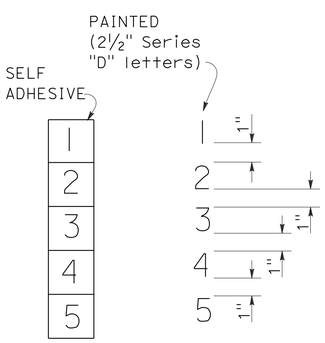

NUMBER DETAIL

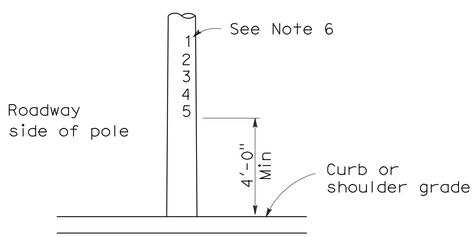

TYPICAL NUMBER FORMAT

LOCATION OF EQUIPMENT NUMBERS ON STANDARDS AND POSTS

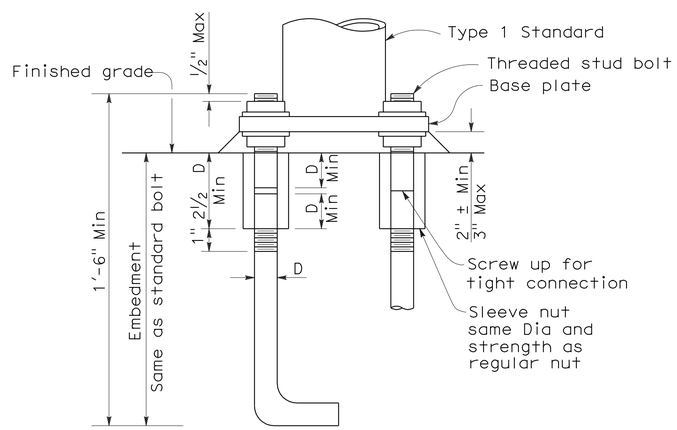

ANCHOR BOLTS WITH SLEEVE NUTS

Sleeve nuts to be used only when shown or specified on Project Plans

D = Diameter of anchor bolt

NOTES:

1. Standards shall be 10'-0" ± 2" for vehicle signals and 7'-0" ± 2" for pedestrian signals unless otherwise noted on plans.
2. Top of standards shall be 4½" OD.
3. Conduits shall extend 2" maximum above finished surface of foundation and for Types 1-A, 1-C and 1-D shall be sloped toward handhole.
4. Anchor bolts shall be bonded to conduit or grounding conductor.
5. Conduit between standard and adjacent pull box shall be 2" minimum.
6. Paint numbers on roadway side facing traffic when electrolier or post is left of direction of traffic.

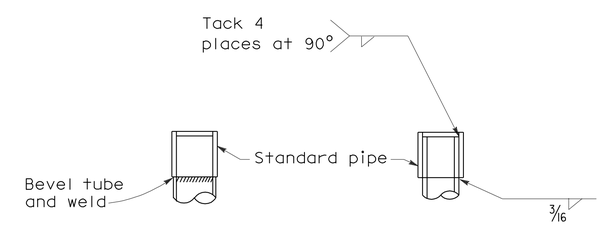

DETAIL J

Tube may be inserted into pipe or butted as required

STATE OF CALIFORNIA
DEPARTMENT OF TRANSPORTATION

ELECTRICAL SYSTEMS (SIGNAL AND LIGHTING STANDARD TYPE 1 STANDARD AND EQUIPMENT NUMBERING)

NO SCALE

RSP ES-7B DATED OCTOBER 5, 2007 SUPERCEDES STANDARD PLAN ES-7B DATED MAY 1, 2006 - PAGE 438 OF THE STANDARD PLANS BOOK DATED MAY 2006.

REVISED STANDARD PLAN RSP ES-7B

2006 REVISED STANDARD PLAN RSP ES-7B

7-10-07