Dist	COUNTY	ROUTE	POST MILES TOTAL PROJECT	SHEET No.	TOTAL SHEETS
01	Men	101	81.9/R83.8	1	61

STATE OF CALIFORNIA

DEPARTMENT OF TRANSPORTATION

ACNH-43L4(004)E

PROJECT PLANS FOR CONSTRUCTION ON

STATE HIGHWAY

IN MENDOCINO COUNTY AT VARIOUS LOCATIONS FROM 0.5 MILE SOUTH OF EMPIRE CAMP SAFETY ROADSIDE REST AREA TO 0.2 MILE SOUTH OF RATTLESNAKE CREEK BRIDGE No. 10-0029

TO BE SUPPLEMENTED BY STANDARD PLANS DATED MAY 2006

INDEX OF PLANS

SHEET No.	DESCRIPTION
1	TITLE AND LOCATION MAP
2-3	TYPICAL CROSS SECTIONS
4-7	LAYOUTS
8-13	CONSTRUCTION DETAILS
14-22	DRAINAGE PROFILES, DETAILS AND QUANTITIES
23	CONSTRUCTION AREA SIGNS
24-31	TRAFFIC HANDLING PLANS, DETAILS AND QUANTITIES
32-33	PAVEMENT DELINEATION PLANS
34-35	SUMMARY OF QUANTITIES
36-52	REVISED AND NEW STANDARD PLANS

STRUCTURE PLANS

53-61	RETAINING WALL PM 83.82, Br No. 10E0019

THE STANDARD PLANS LIST APPLICABLE TO THIS CONTRACT IS INCLUDED IN THE NOTICE TO BIDDERS AND SPECIAL PROVISIONS BOOK.

LOCATION MAP

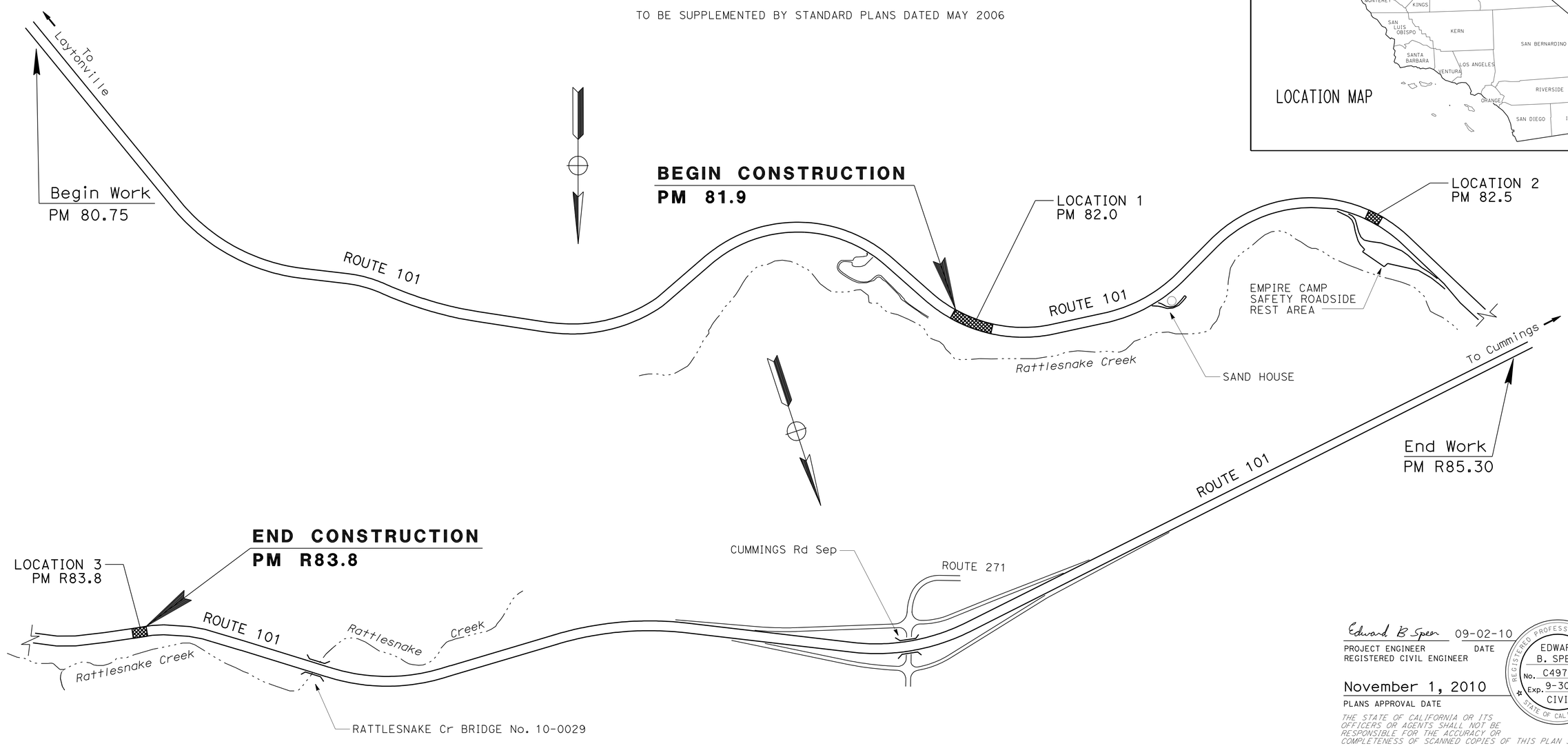

Edward B Speer 09-02-10
PROJECT ENGINEER REGISTERED CIVIL ENGINEER DATE

REGISTERED PROFESSIONAL ENGINEER EDWARD B. SPEER No. C49740 Exp. 9-30-12 CIVIL STATE OF CALIFORNIA

November 1, 2010
PLANS APPROVAL DATE

THE STATE OF CALIFORNIA OR ITS OFFICERS OR AGENTS SHALL NOT BE RESPONSIBLE FOR THE ACCURACY OR COMPLETENESS OF SCANNED COPIES OF THIS PLAN SHEET.

PROJECT MANAGER: FRANK DEMLING
DESIGN ENGINEER: ROB BURNETT

THE CONTRACTOR SHALL POSSESS THE CLASS (OR CLASSES) OF LICENSE AS SPECIFIED IN THE "NOTICE TO BIDDERS."

NO SCALE

CONTRACT No.	01-477704
PROJECT ID	0100000358

LAST REVISION 09-02-10 | DATE PLOTTED => 08-FEB-2011 | TIME PLOTTED => 13:15

P:\proj2\01\47770_plans\pse\147770ab001.dgn

Dist	COUNTY	ROUTE	POST MILES TOTAL PROJECT	SHEET No.	TOTAL SHEETS
01	Men	101	81.9/R83.8	2	61

Edward B Speer 09-02-10
REGISTERED CIVIL ENGINEER DATE

11-1-10
PLANS APPROVAL DATE

REGISTERED PROFESSIONAL ENGINEER
EDWARD B. SPEER
No. C49740
Exp. 9-30-12
CIVIL
STATE OF CALIFORNIA

THE STATE OF CALIFORNIA OR ITS OFFICERS OR AGENTS SHALL NOT BE RESPONSIBLE FOR THE ACCURACY OR COMPLETENESS OF SCANNED COPIES OF THIS PLAN SHEET.

NOTES:

1. DIMENSIONS OF THE PAVEMENT STRUCTURES (STRUCTURAL SECTIONS) ARE SUBJECT TO TOLERANCES SPECIFIED IN THE STANDARD SPECIFICATIONS.
2. SUPERELEVATIONS AS SHOWN OR AS DETERMINED BY THE ENGINEER.
3. SEE PAVEMENT DELINEATION SHEETS FOR LOCATIONS OF RUMBLE STRIPS.

ABBREVIATIONS

OGFC	OPEN GRADED FRICTION COURSE
EPS	EXPANDED POLYSTYRENE

DESIGN DESIGNATION

2009 ADT = 6600	D = 60%
2029 ADT = 9600	T = 11.4%
2029 DHV = 1340	V = 65 MPH

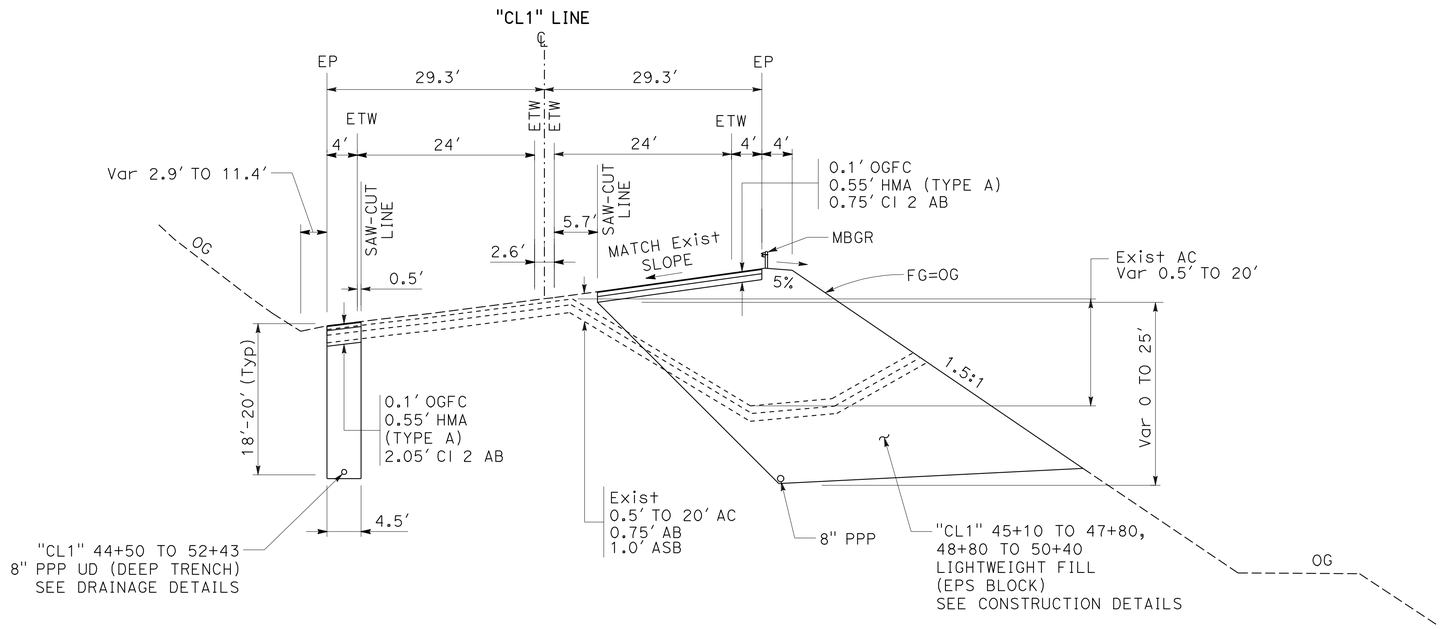

LOCATION 1

PM 82.0

"CL1" 44+50 TO 52+96.1

TYPICAL CROSS SECTIONS

NO SCALE

X-1

REVISED BY	
DATE REVISED	
CALCULATED-DESIGNED BY	ED SPEER
CHECKED BY	RODDY ESTES
FUNCTIONAL SUPERVISOR	ROB BURNETT

STATE OF CALIFORNIA - DEPARTMENT OF TRANSPORTATION
Caltrans
DESIGN

P:\proj2\01\47770_plans\pse\147770ca001.dgn

LAST REVISION DATE PLOTTED => 05-NOV-2010
09-02-10 TIME PLOTTED => 13:47

Dist	COUNTY	ROUTE	POST MILES TOTAL PROJECT	SHEET No.	TOTAL SHEETS
01	Men	101	81.9/R83.8	3	61

Edward B Speer 09-02-10
REGISTERED CIVIL ENGINEER DATE

11-1-10
PLANS APPROVAL DATE

REGISTERED PROFESSIONAL ENGINEER
EDWARD B. SPEER
No. C49740
Exp. 9-30-12
CIVIL
STATE OF CALIFORNIA

THE STATE OF CALIFORNIA OR ITS OFFICERS OR AGENTS SHALL NOT BE RESPONSIBLE FOR THE ACCURACY OR COMPLETENESS OF SCANNED COPIES OF THIS PLAN SHEET.

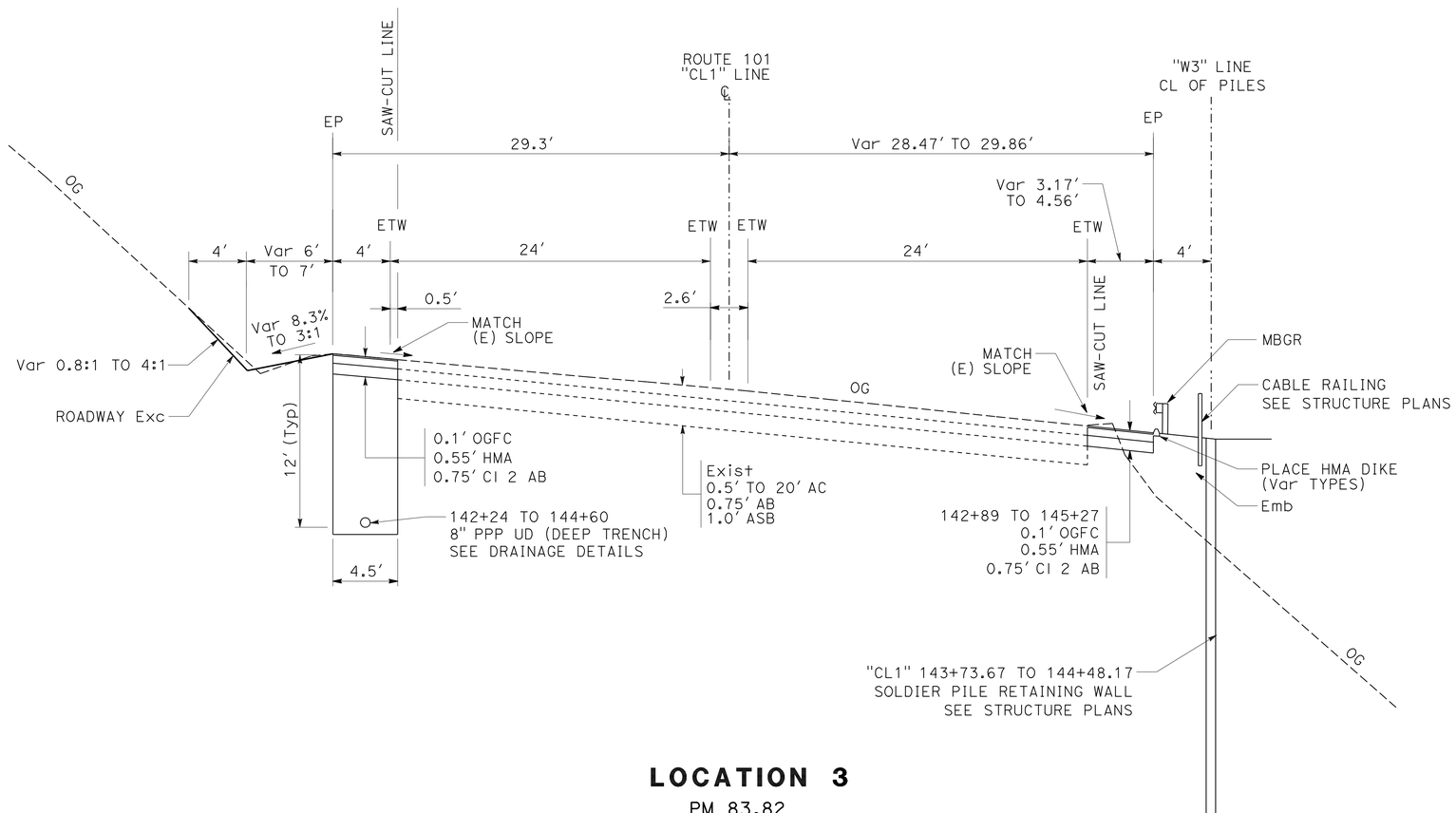

LOCATION 3

PM 83.82

"CL1" 142+24 TO 145+27

TYPICAL CROSS SECTIONS

NO SCALE

X-2

REVISED BY	DATE REVISED

CALCULATED-DESIGNED BY: ED SPEER
CHECKED BY: RODDY ESTES
FUNCTIONAL SUPERVISOR: ROB BURNETT

STATE OF CALIFORNIA - DEPARTMENT OF TRANSPORTATION
Caltrans
DESIGN

P:\proj2\01\47770_plans\pse\147770ca002.dgn

LAST REVISION | DATE PLOTTED => 05-NOV-2010 | TIME PLOTTED => 13:48
09-02-10

BORDER LAST REVISED 7/2/2010 | USERNAME => trpierce | DGN FILE => 147770ca002.dgn | RELATIVE BORDER SCALE IS IN INCHES 0 1 2 3 | UNIT 0317 | PROJECT NUMBER & PHASE | 01000003581

Dist	COUNTY	ROUTE	POST MILES TOTAL PROJECT	SHEET No.	TOTAL SHEETS
01	Men	101	81.9/R83.8	4	61

Edward B Speer 09-02-10
REGISTERED CIVIL ENGINEER DATE

11-1-10
PLANS APPROVAL DATE

REGISTERED PROFESSIONAL ENGINEER
EDWARD B. SPEER
No. C49740
Exp. 9-30-12
CIVIL
STATE OF CALIFORNIA

THE STATE OF CALIFORNIA OR ITS OFFICERS OR AGENTS SHALL NOT BE RESPONSIBLE FOR THE ACCURACY OR COMPLETENESS OF SCANNED COPIES OF THIS PLAN SHEET.

NOTES:

1. FOR ACCURATE RIGHT OF WAY DATA, CONTACT RIGHT OF WAY ENGINEERING AT THE DISTRICT OFFICE.

CURVE DATA

No.	R	Δ	T	L
1	1550.00′	5°12′05″	70.41′	140.71′
2	834.00′	48°02′38″	371.70′	699.33′

LEGEND

- STRUCTURAL SECTION
- TFESA — TEMPORARY FENCE (TYPE ESA)
- TEMPORARY SILT FENCE
  TEMPORARY REINFORCED SILT FENCE
- SOLDIER PILE RETAINING WALL
- Exist HORIZONTAL DRAIN OUTLET
- DRAINAGE SYSTEM
- DRAINAGE UNIT
- DITCH FLOW LINE
- MARKER (CULVERT)

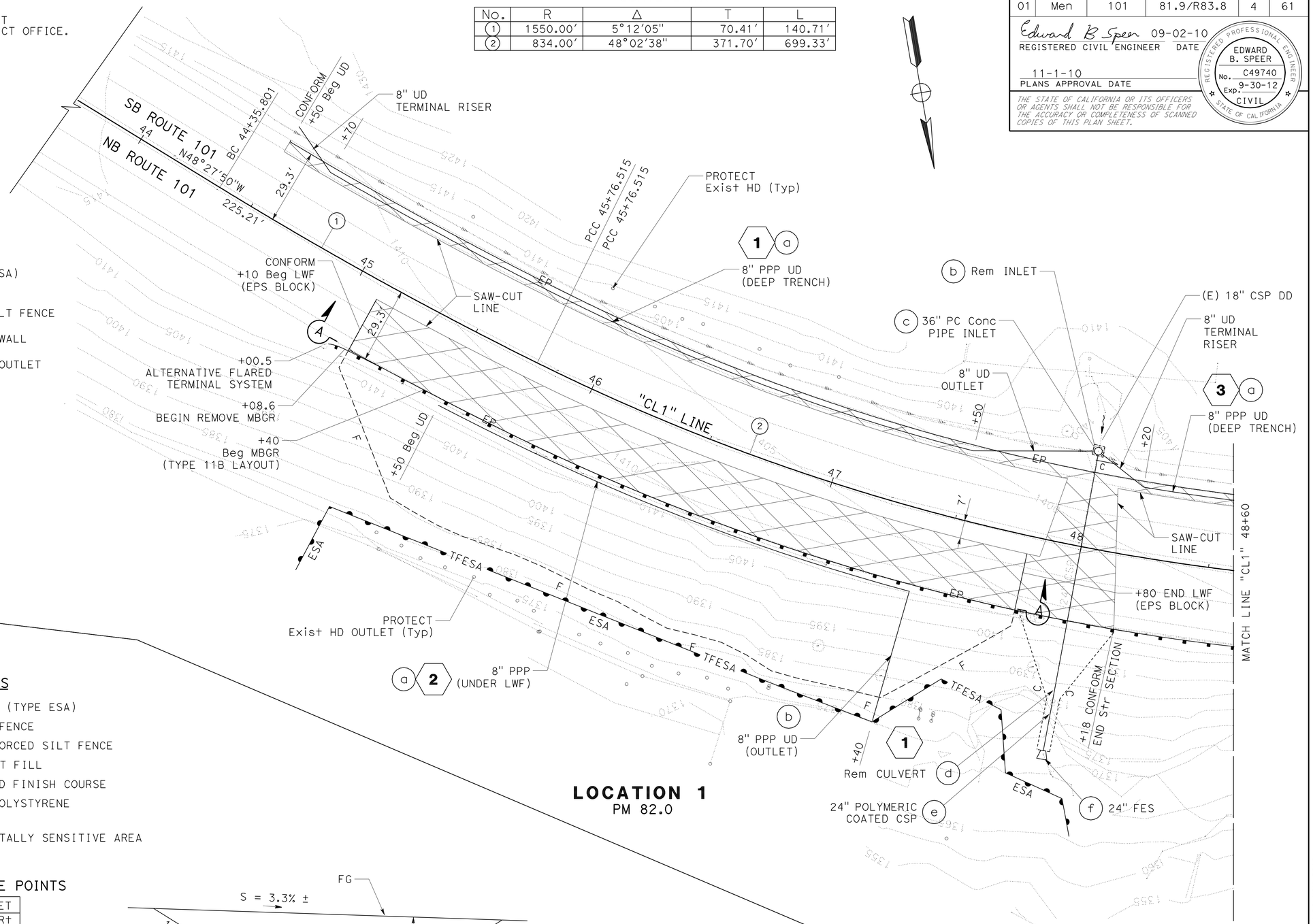

ABBREVIATIONS

TFESA	Temp FENCE (TYPE ESA)
TSF	Temp SILT FENCE
TRSF	Temp REINFORCED SILT FENCE
LWF	LIGHTWEIGHT FILL
OGFC	OPEN GRADED FINISH COURSE
EPS	EXPANDED POLYSTYRENE
Rem	REMOVE
ESA	ENVIRONMENTALLY SENSITIVE AREA

TFESA FENCE ANGLE POINTS

"CL1" Sta	OFFSET
45+32	114′ Rt
45+32	86′ Rt
47+03	81′ Rt
47+39	85′ Rt
47+59	62′ Rt
47+83	68′ Rt
47+89	92′ Rt
48+10	97′ Rt
48+15	112′ Rt

SECTION A-A
PARALLEL TO "CL1" LINE
NO SCALE

LAYOUT

SCALE: 1" = 20′ **L-1**

REVISED BY	DATE REVISED
ED SPEER	RODDY ESTES
CALCULATED-DESIGNED BY	CHECKED BY
FUNCTIONAL SUPERVISOR	ROB BURNETT

STATE OF CALIFORNIA - DEPARTMENT OF TRANSPORTATION
Caltrans® DESIGN

P:\proj2\01\47770_plans\pse\147770ea001.dgn

LAST REVISION 09-02-10 | DATE PLOTTED => 08-NOV-2010 | TIME PLOTTED => 06:27

Dist	COUNTY	ROUTE	POST MILES TOTAL PROJECT	SHEET No.	TOTAL SHEETS
01	Men	101	81.9/R83.8	5	61

Edward B Speer 09-02-10
REGISTERED CIVIL ENGINEER DATE

11-1-10
PLANS APPROVAL DATE

REGISTERED PROFESSIONAL ENGINEER
EDWARD B. SPEER
No. C49740
Exp. 9-30-12
CIVIL
STATE OF CALIFORNIA

THE STATE OF CALIFORNIA OR ITS OFFICERS OR AGENTS SHALL NOT BE RESPONSIBLE FOR THE ACCURACY OR COMPLETENESS OF SCANNED COPIES OF THIS PLAN SHEET.

NOTE:

1. FOR ACCURATE RIGHT OF WAY DATA, CONTACT RIGHT OF WAY ENGINEERING AT THE DISTRICT OFFICE.

CURVE DATA

No.	R	Δ	T	L
(2)	834.00′	48°02′38″	371.70′	699.33′

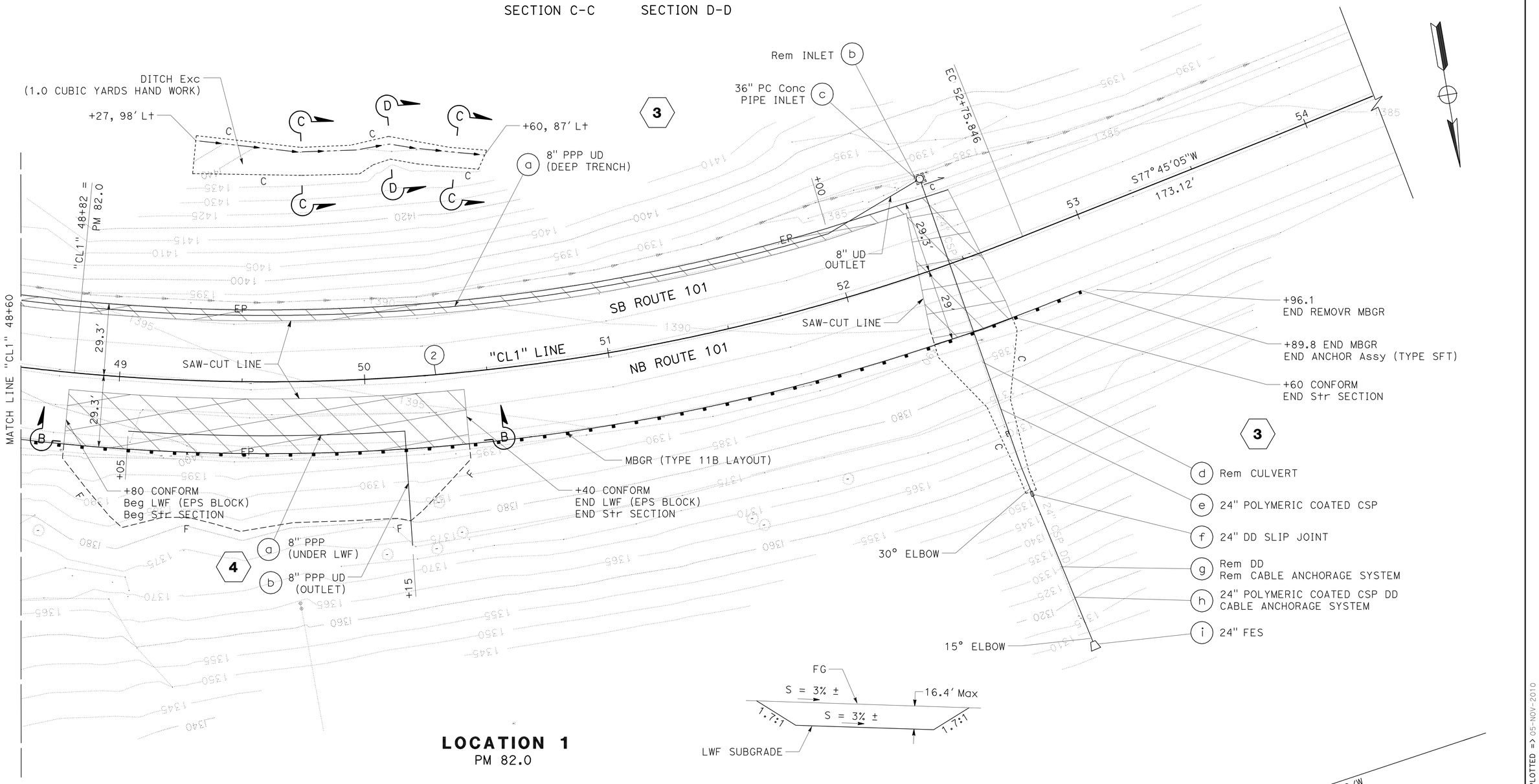

LOCATION 1
PM 82.0

SECTION B-B
PARALLEL TO "CL1" LINE
NO SCALE

LAYOUT
SCALE: 1" = 20′

L-2

REVISED BY	DATE REVISED

CALCULATED-DESIGNED BY	CHECKED BY
ED SPEER	RODDY ESTES

FUNCTIONAL SUPERVISOR: ROB BURNETT

STATE OF CALIFORNIA - DEPARTMENT OF TRANSPORTATION
DESIGN

P:\proj2\01\47770_plans\pse\147770ea002.dgn

LAST REVISION 09-02-10 | DATE PLOTTED => 05-NOV-2010 | TIME PLOTTED => 13:48

Dist	COUNTY	ROUTE	POST MILES TOTAL PROJECT	SHEET No.	TOTAL SHEETS
01	Men	101	81.9/R83.8	6	61

Edward B Speer 09-02-10
REGISTERED CIVIL ENGINEER DATE

11-1-10
PLANS APPROVAL DATE

REGISTERED PROFESSIONAL ENGINEER
EDWARD B. SPEER
No. C49740
Exp. 9-30-12
CIVIL
STATE OF CALIFORNIA

THE STATE OF CALIFORNIA OR ITS OFFICERS OR AGENTS SHALL NOT BE RESPONSIBLE FOR THE ACCURACY OR COMPLETENESS OF SCANNED COPIES OF THIS PLAN SHEET.

NOTE:

1. FOR ACCURATE RIGHT OF WAY DATA, CONTACT RIGHT OF WAY ENGINEERING AT THE DISTRICT OFFICE.

CURVE DATA

No.	R	Δ	T	L
3	850.00′	89°17′37″	839.58′	1324.70′

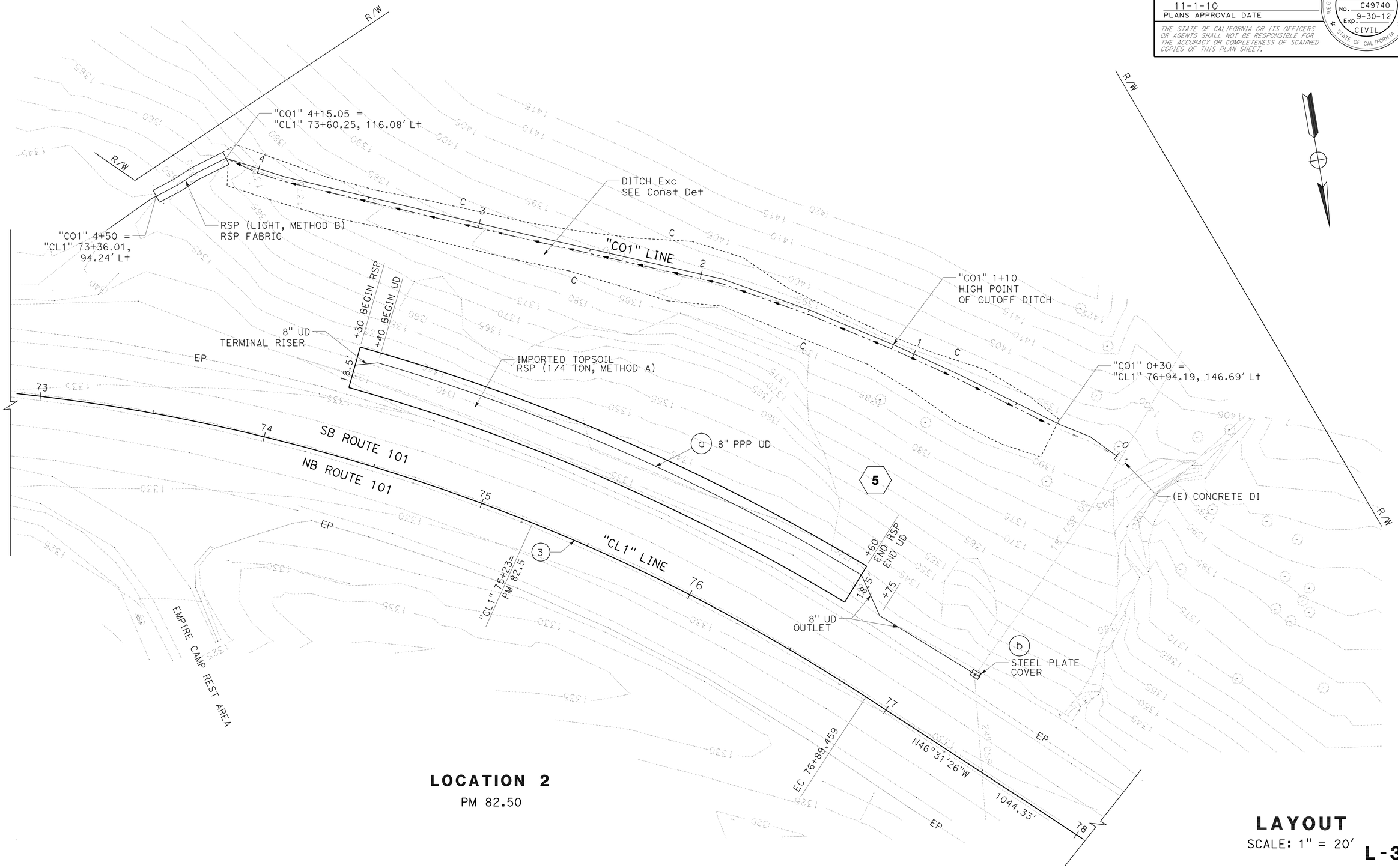

LOCATION 2
PM 82.50

LAYOUT
SCALE: 1" = 20′

L-3

REVISED BY	DATE REVISED
ED SPEER	RODDY ESTES

CALCULATED-DESIGNED BY / CHECKED BY

FUNCTIONAL SUPERVISOR: ROB BURNETT

STATE OF CALIFORNIA - DEPARTMENT OF TRANSPORTATION
Caltrans® **DESIGN**

P:\proj2\01\147770_plans\pse\147770ea003.dgn

LAST REVISION 09-02-10 | DATE PLOTTED => 05-NOV-2010 | TIME PLOTTED => 13:48

Dist	COUNTY	ROUTE	POST MILES TOTAL PROJECT	SHEET No.	TOTAL SHEETS
01	Men	101	81.9/R83.8	7	61

Edward B Speer 09-02-10
REGISTERED CIVIL ENGINEER DATE

11-1-10
PLANS APPROVAL DATE

REGISTERED PROFESSIONAL ENGINEER
EDWARD B. SPEER
No. C49740
Exp. 9-30-12
CIVIL
STATE OF CALIFORNIA

THE STATE OF CALIFORNIA OR ITS OFFICERS OR AGENTS SHALL NOT BE RESPONSIBLE FOR THE ACCURACY OR COMPLETENESS OF SCANNED COPIES OF THIS PLAN SHEET.

NOTE:

1. FOR ACCURATE RIGHT OF WAY DATA, CONTACT RIGHT OF WAY ENGINEERING AT THE DISTRICT OFFICE.

CURVE DATA

No.	R	Δ	T	L
4	1000.00′	23°0′48″	203.57′	401.66′

TFESA FENCE ANGLE POINTS

"CL1" Sta	OFFSET
143+04	50′ Lt
143+10	39.3′ Lt
143+85	39.8′ Lt
144+15	39.3′ Lt
144+19	50′ Lt

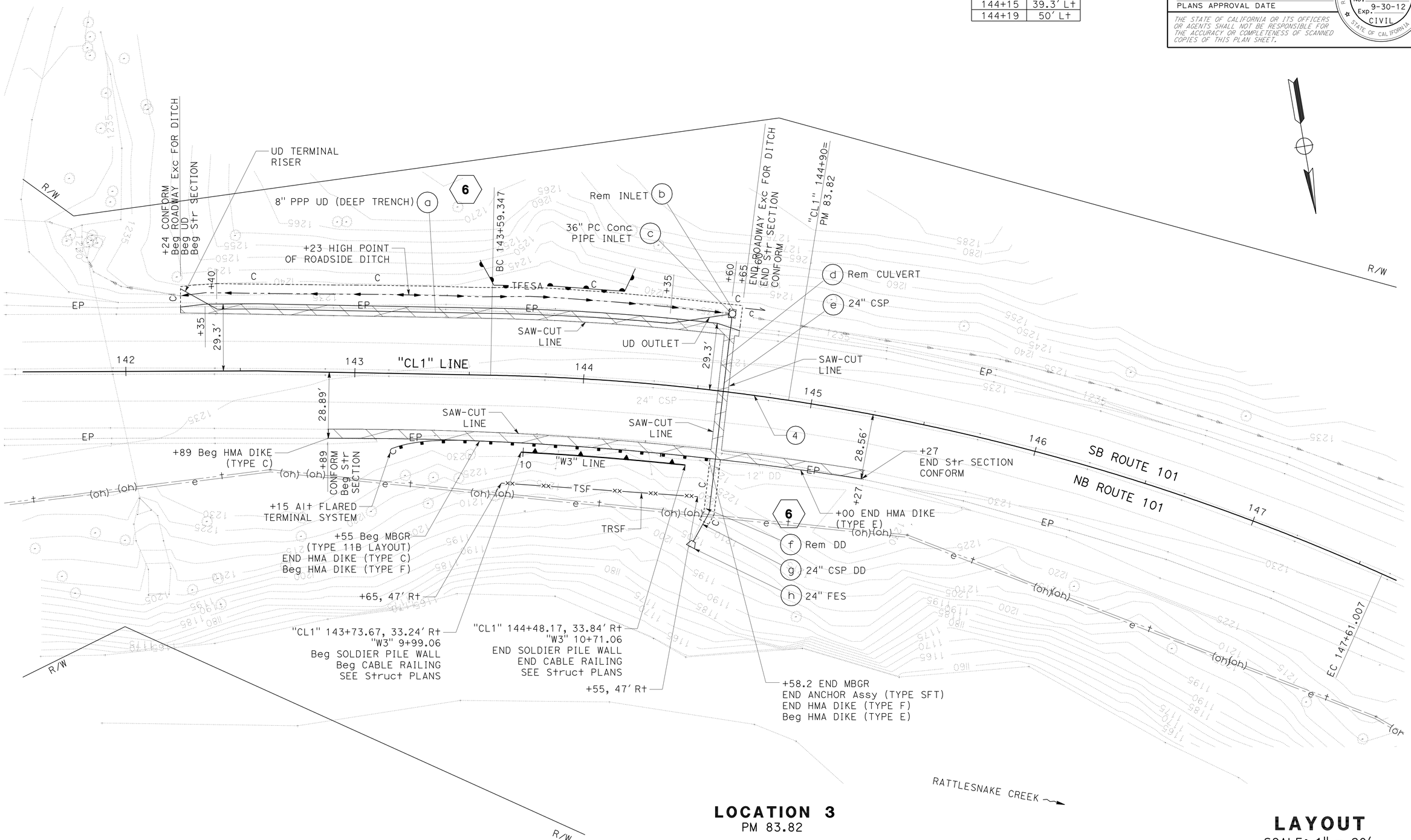

LOCATION 3
PM 83.82

LAYOUT
SCALE: 1" = 20′ **L-4**

STATE OF CALIFORNIA - DEPARTMENT OF TRANSPORTATION
Caltrans® **DESIGN**

FUNCTIONAL SUPERVISOR: ROB BURNETT
CALCULATED-DESIGNED BY: ED SPEER
CHECKED BY: RODDY ESTES
REVISED BY
DATE REVISED

P:\proj2\01\147770_plans\pse\147770ea004.dgn

LAST REVISION DATE PLOTTED => 05-NOV-2010
09-02-10 TIME PLOTTED => 13:48

Dist	COUNTY	ROUTE	POST MILES TOTAL PROJECT	SHEET No.	TOTAL SHEETS
01	Men	101	81.9/R83.8	8	61

Edward B Speer 09-02-10
REGISTERED CIVIL ENGINEER DATE

11-1-10
PLANS APPROVAL DATE

REGISTERED PROFESSIONAL ENGINEER
EDWARD B. SPEER
No. C49740
Exp. 9-30-12
CIVIL
STATE OF CALIFORNIA

THE STATE OF CALIFORNIA OR ITS OFFICERS OR AGENTS SHALL NOT BE RESPONSIBLE FOR THE ACCURACY OR COMPLETENESS OF SCANNED COPIES OF THIS PLAN SHEET.

LEGEND:

\\\\\\\\ FR \\\\\\\\ FIBER ROLLS

ABBREVIATIONS

EPS EXPANDED POLYSTYRENE
ASB AGGREGATE SUBBASE

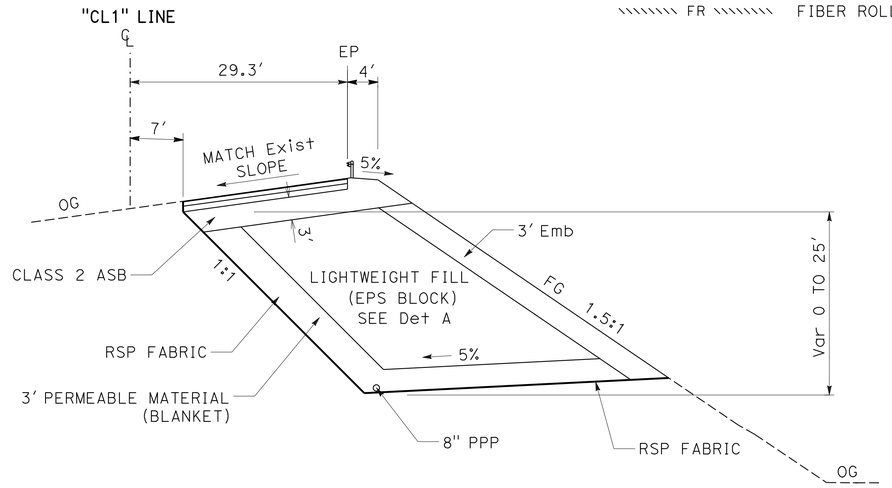

LIGHTWEIGHT FILL (EPS BLOCK)

"CL1" 45+10 TO 47+80
"CL1" 48+80 TO 50+40

DRAINAGE SYSTEM No. 2 a 4 a

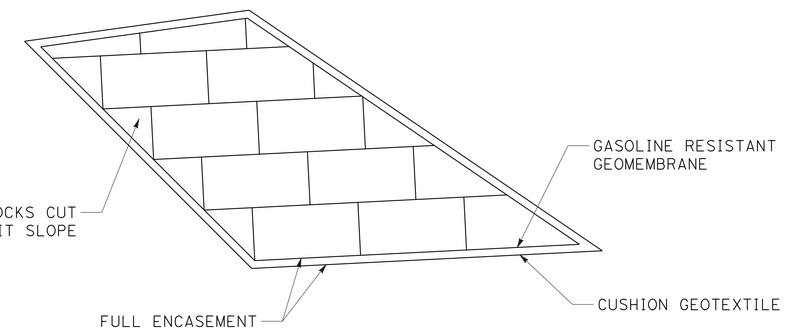

DETAIL A

NOTE: EPS BLOCK PATTERN ENLARGED TO SHOW DETAIL

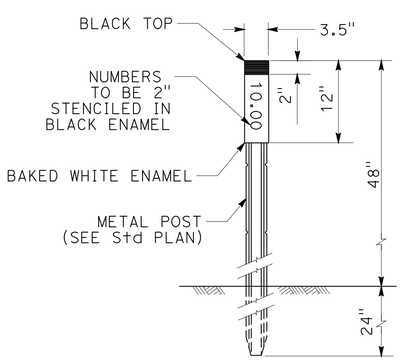

MARKER (CULVERT)

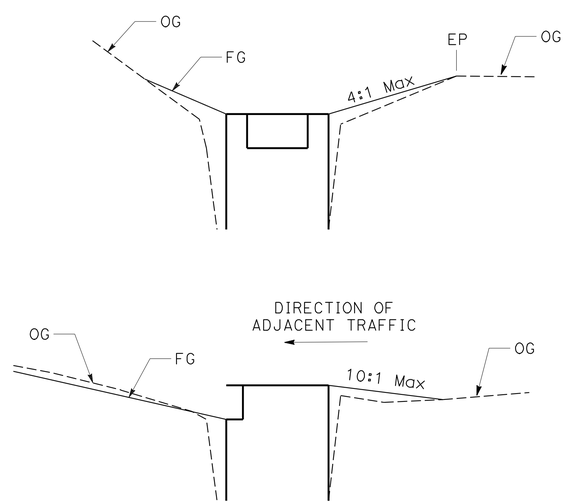

GRADING AT SIDE OPENING DI

DRAINAGE SYSTEM No. 1 c 3 c 5 b

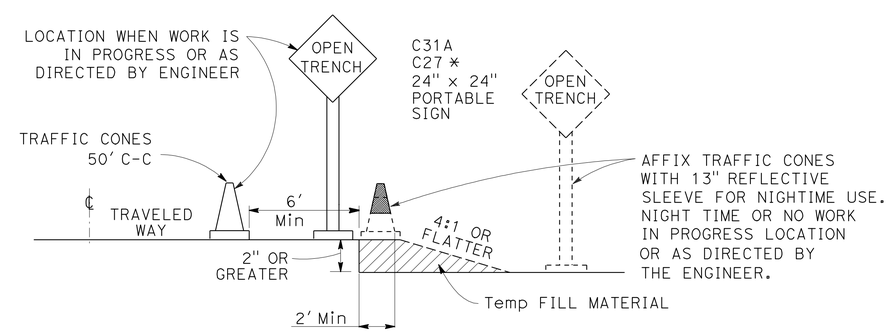

OPEN TRENCH SIGNING AND MARKING

* PLACE AT 250′ INTERVALS THROUGH THE OPEN TRENCH AREA, ALTERNATE C27 (OPEN TRENCH) AND C31A (NO SHOULDER) SIGNS

CONSTRUCTION DETAILS

NO SCALE

C-1

REVISED BY | DATE REVISED
ED SPEER | RODDY ESTES
CALCULATED-DESIGNED BY | CHECKED BY
FUNCTIONAL SUPERVISOR
ROB BURNETT

STATE OF CALIFORNIA - DEPARTMENT OF TRANSPORTATION
Caltrans
DESIGN

P:\proj2\01\47770_plans\pse\147770ga001.dgn

LAST REVISION 09-02-10 | DATE PLOTTED => 05-NOV-2010 | TIME PLOTTED => 13:48

Dist	COUNTY	ROUTE	POST MILES TOTAL PROJECT	SHEET No.	TOTAL SHEETS
01	Men	101	81.9/R83.8	9	61

Edward B Speer 09-02-10
REGISTERED CIVIL ENGINEER DATE

11-1-10
PLANS APPROVAL DATE

REGISTERED PROFESSIONAL ENGINEER
EDWARD B. SPEER
No. C49740
Exp. 9-30-12
CIVIL
STATE OF CALIFORNIA

THE STATE OF CALIFORNIA OR ITS OFFICERS OR AGENTS SHALL NOT BE RESPONSIBLE FOR THE ACCURACY OR COMPLETENESS OF SCANNED COPIES OF THIS PLAN SHEET.

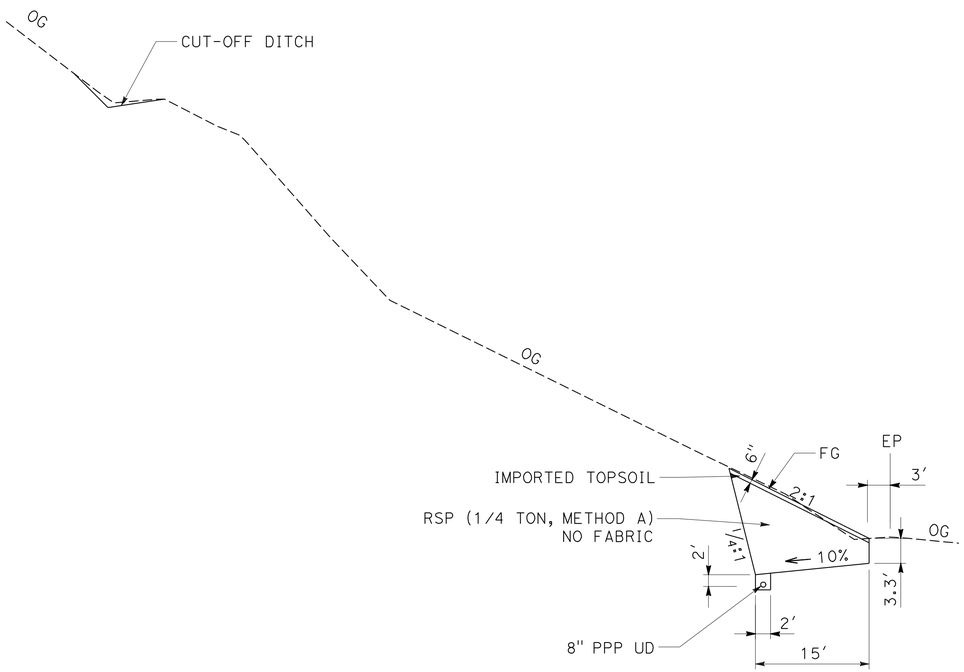

5 a

RSP BUTTRESS

"CL1" 74+30 TO 76+60

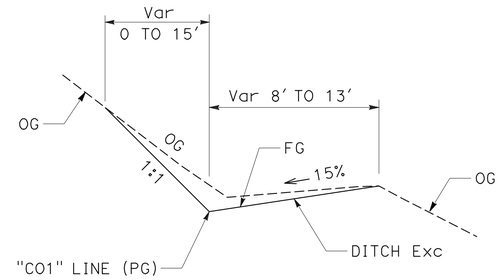

CUTOFF DITCH

"CL1" 73+60.25 TO 76+94.19

NOTE: EXCAVATION BY END HAUL.
NO SIDE CASTING.

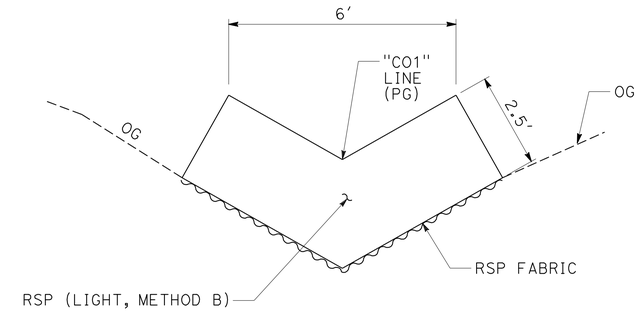

CUTOFF DITCH OUTFALL

"CL1" 73+36.01 TO 73+60.25

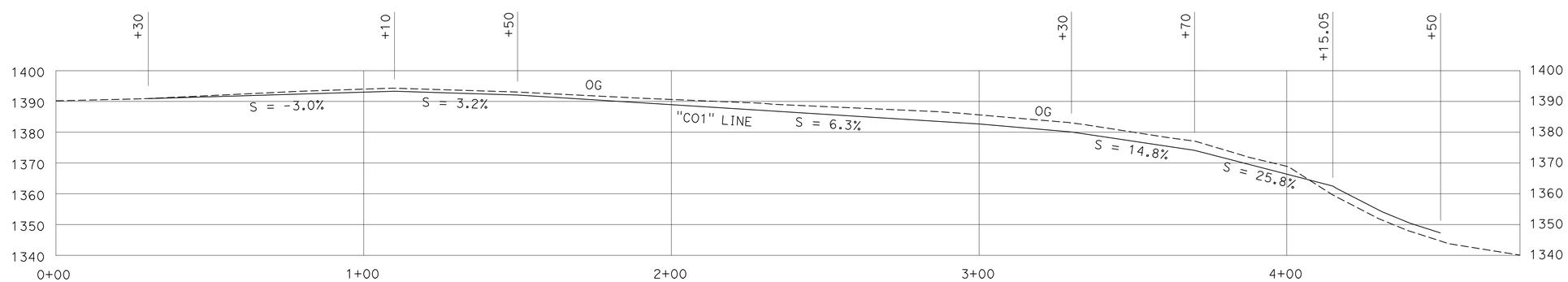

CUTOFF DITCH PROFILE

CONSTRUCTION DETAILS

NO SCALE

C-2

REVISED BY | DATE REVISED
ED SPEER | RODDY ESTES
CALCULATED-DESIGNED BY | CHECKED BY
FUNCTIONAL SUPERVISOR
ROB BURNETT

STATE OF CALIFORNIA - DEPARTMENT OF TRANSPORTATION
Caltrans
DESIGN

P:\proj2\01\47770_plans\pse\147770ga002.dgn

LAST REVISION 09-02-10
DATE PLOTTED => 05-NOV-2010
TIME PLOTTED => 13:48

Dist	COUNTY	ROUTE	POST MILES TOTAL PROJECT	SHEET No.	TOTAL SHEETS
01	Men	101	81.9/R83.8	10	61

Edward B Speer 09-02-10
REGISTERED CIVIL ENGINEER DATE

11-1-10
PLANS APPROVAL DATE

REGISTERED PROFESSIONAL ENGINEER
EDWARD B. SPEER
No. C49740
Exp. 9-30-12
CIVIL
STATE OF CALIFORNIA

THE STATE OF CALIFORNIA OR ITS OFFICERS OR AGENTS SHALL NOT BE RESPONSIBLE FOR THE ACCURACY OR COMPLETENESS OF SCANNED COPIES OF THIS PLAN SHEET.

NOTE:

1. FOR DETAILS NOT SHOWN, SEE STANDARD PLAN A20A AND A20B.

LEGEND:

PAVEMENT MARKER (RETROREFLECTIVE-RECESSED)

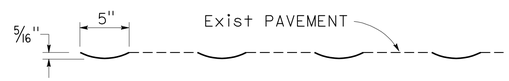

ELEVATION

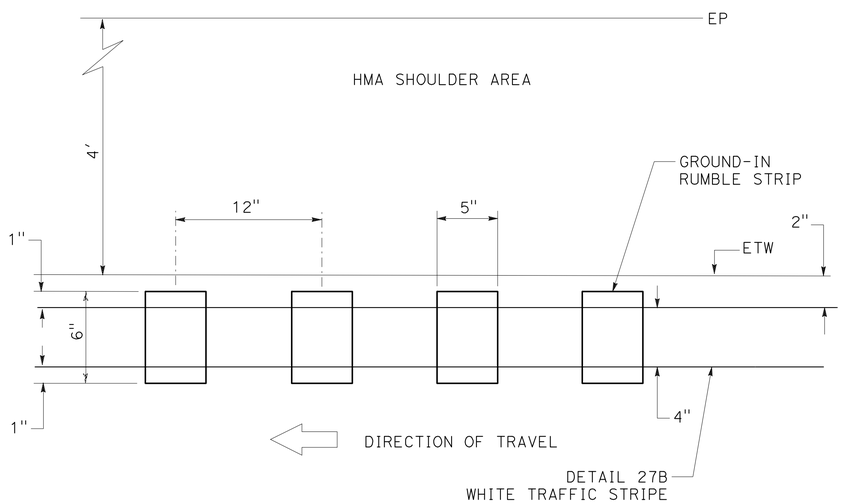

PLAN
RIGHT SHOULDER

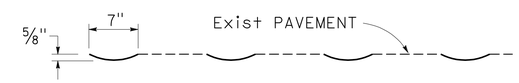

ELEVATION

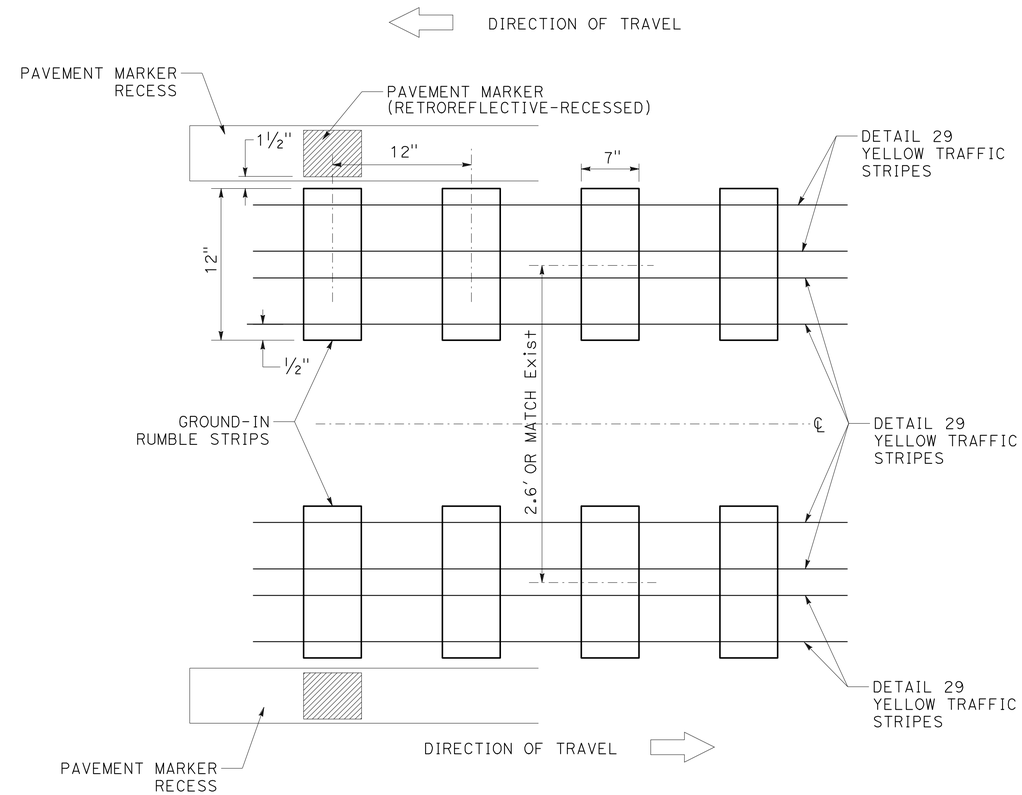

PLAN
CENTER MEDIAN/LEFT ETW

GROUND-IN RUMBLE STRIP

CONSTRUCTION DETAILS
NO SCALE
C-3

REVISED BY	DATE REVISED

CALCULATED-DESIGNED BY	CHECKED BY
ED SPEER	RODDY ESTES

FUNCTIONAL SUPERVISOR: ROB BURNETT

STATE OF CALIFORNIA - DEPARTMENT OF TRANSPORTATION
Caltrans® **DESIGN**

P:\proj2\01\47770_plans\pse\147770ga003.dgn

LAST REVISION 09-02-10 | DATE PLOTTED => 08-NOV-2010 | TIME PLOTTED => 06:38

Dist	COUNTY	ROUTE	POST MILES TOTAL PROJECT	SHEET No.	TOTAL SHEETS
01	Men	101	81.9/R83.8	11	61

Edward B Speer 09-02-10
REGISTERED CIVIL ENGINEER DATE

11-1-10
PLANS APPROVAL DATE

REGISTERED PROFESSIONAL ENGINEER
EDWARD B. SPEER
No. C49740
Exp. 9-30-12
CIVIL
STATE OF CALIFORNIA

THE STATE OF CALIFORNIA OR ITS OFFICERS OR AGENTS SHALL NOT BE RESPONSIBLE FOR THE ACCURACY OR COMPLETENESS OF SCANNED COPIES OF THIS PLAN SHEET.

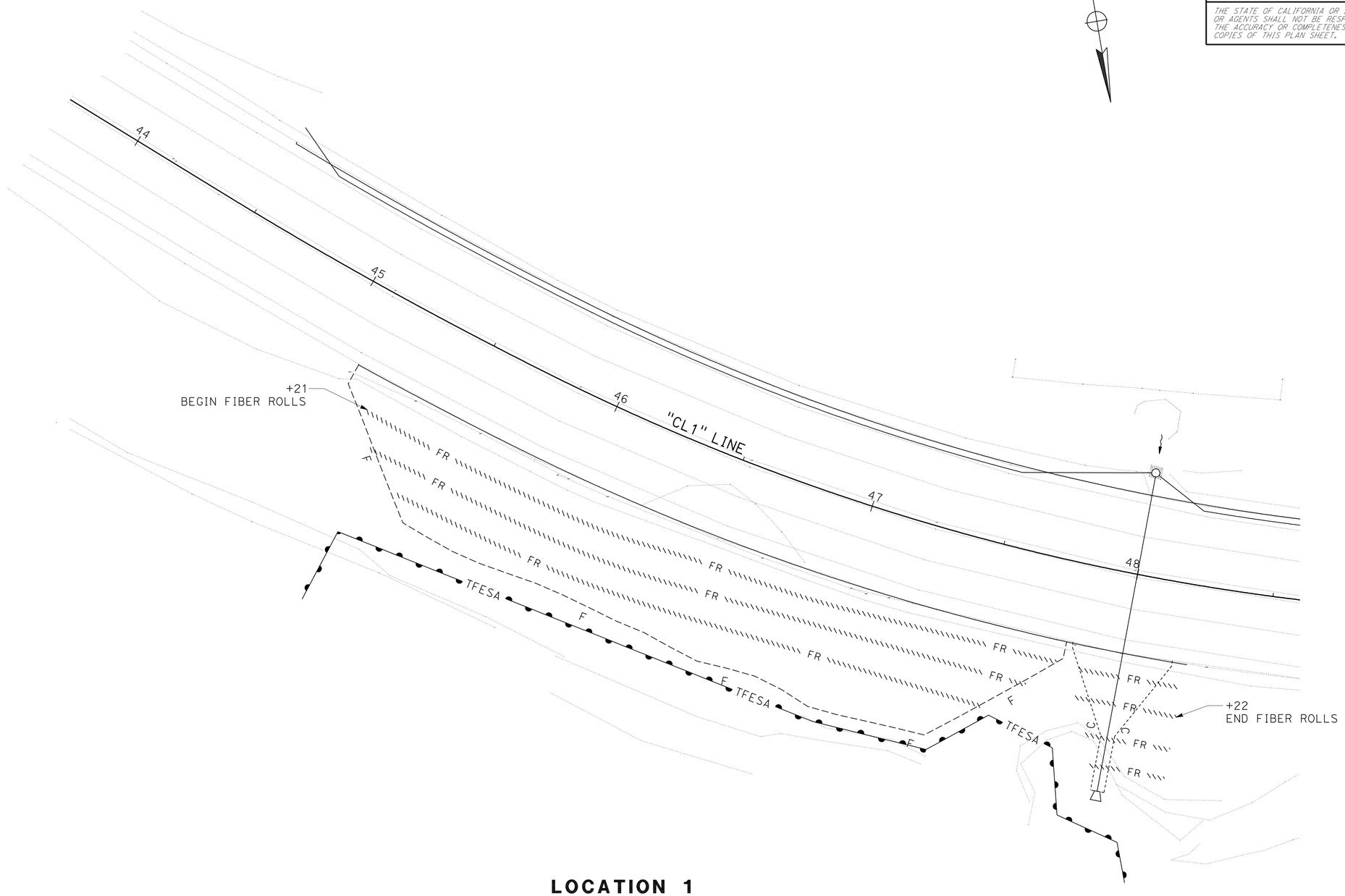

LOCATION 1
PM 82.0

CONSTRUCTION DETAILS

SCALE: 1" = 20'

C-4

REVISED BY | DATE REVISED
ED SPEER | RODDY ESTES
CALCULATED-DESIGNED BY | CHECKED BY
FUNCTIONAL SUPERVISOR: ROB BURNETT

STATE OF CALIFORNIA - DEPARTMENT OF TRANSPORTATION
Caltrans DESIGN

P:\proj2\01\47770_plans\pse\147770ga004.dgn

LAST REVISION 09-02-10 | DATE PLOTTED => 05-NOV-2010 | TIME PLOTTED => 13:48

BORDER LAST REVISED 7/2/2010 | USERNAME => trpierce | DGN FILE => 147770ga004.dgn | RELATIVE BORDER SCALE IS IN INCHES 0 1 2 3 | UNIT 0317 | PROJECT NUMBER & PHASE 01000003581

Dist	COUNTY	ROUTE	POST MILES TOTAL PROJECT	SHEET No.	TOTAL SHEETS
01	Men	101	81.9/R83.8	12	61

Edward B Speer 09-02-10
REGISTERED CIVIL ENGINEER DATE

11-1-10
PLANS APPROVAL DATE

REGISTERED PROFESSIONAL ENGINEER
EDWARD B. SPEER
No. C49740
Exp. 9-30-12
CIVIL
STATE OF CALIFORNIA

THE STATE OF CALIFORNIA OR ITS OFFICERS OR AGENTS SHALL NOT BE RESPONSIBLE FOR THE ACCURACY OR COMPLETENESS OF SCANNED COPIES OF THIS PLAN SHEET.

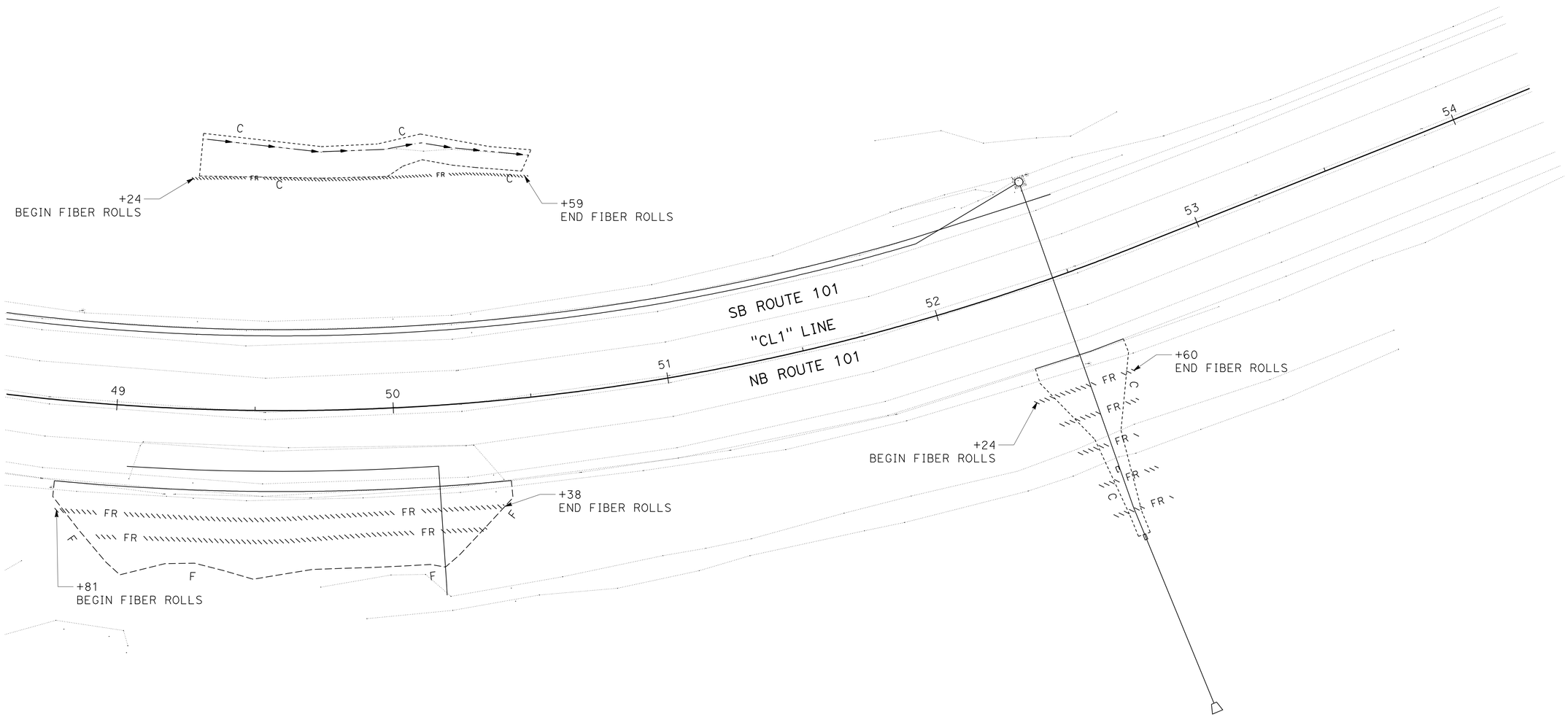

LOCATION 1
PM 82.0

CONSTRUCTION DETAILS

SCALE: 1" = 20'

C-5

REVISED BY	
DATE REVISED	
ED SPEER	
RODDY ESTES	
CALCULATED-DESIGNED BY	
CHECKED BY	
FUNCTIONAL SUPERVISOR	
ROB BURNETT	

STATE OF CALIFORNIA - DEPARTMENT OF TRANSPORTATION
Caltrans
DESIGN

P:\proj2\01\47770_plans\pse\147770ga005.dgn

LAST REVISION 09-02-10
DATE PLOTTED => 05-NOV-2010
TIME PLOTTED => 13:48

BORDER LAST REVISED 7/2/2010
USERNAME => trpierce
DGN FILE => 147770ga005.dgn
RELATIVE BORDER SCALE IS IN INCHES 0 1 2 3
UNIT 0317
PROJECT NUMBER & PHASE 01000003581

Dist	COUNTY	ROUTE	POST MILES TOTAL PROJECT	SHEET No.	TOTAL SHEETS
01	Men	101	81.9/R83.8	13	61

Edward B Speer 09-02-10
REGISTERED CIVIL ENGINEER DATE

11-1-10
PLANS APPROVAL DATE

REGISTERED PROFESSIONAL ENGINEER
EDWARD B. SPEER
No. C49740
Exp. 9-30-12
CIVIL
STATE OF CALIFORNIA

THE STATE OF CALIFORNIA OR ITS OFFICERS OR AGENTS SHALL NOT BE RESPONSIBLE FOR THE ACCURACY OR COMPLETENESS OF SCANNED COPIES OF THIS PLAN SHEET.

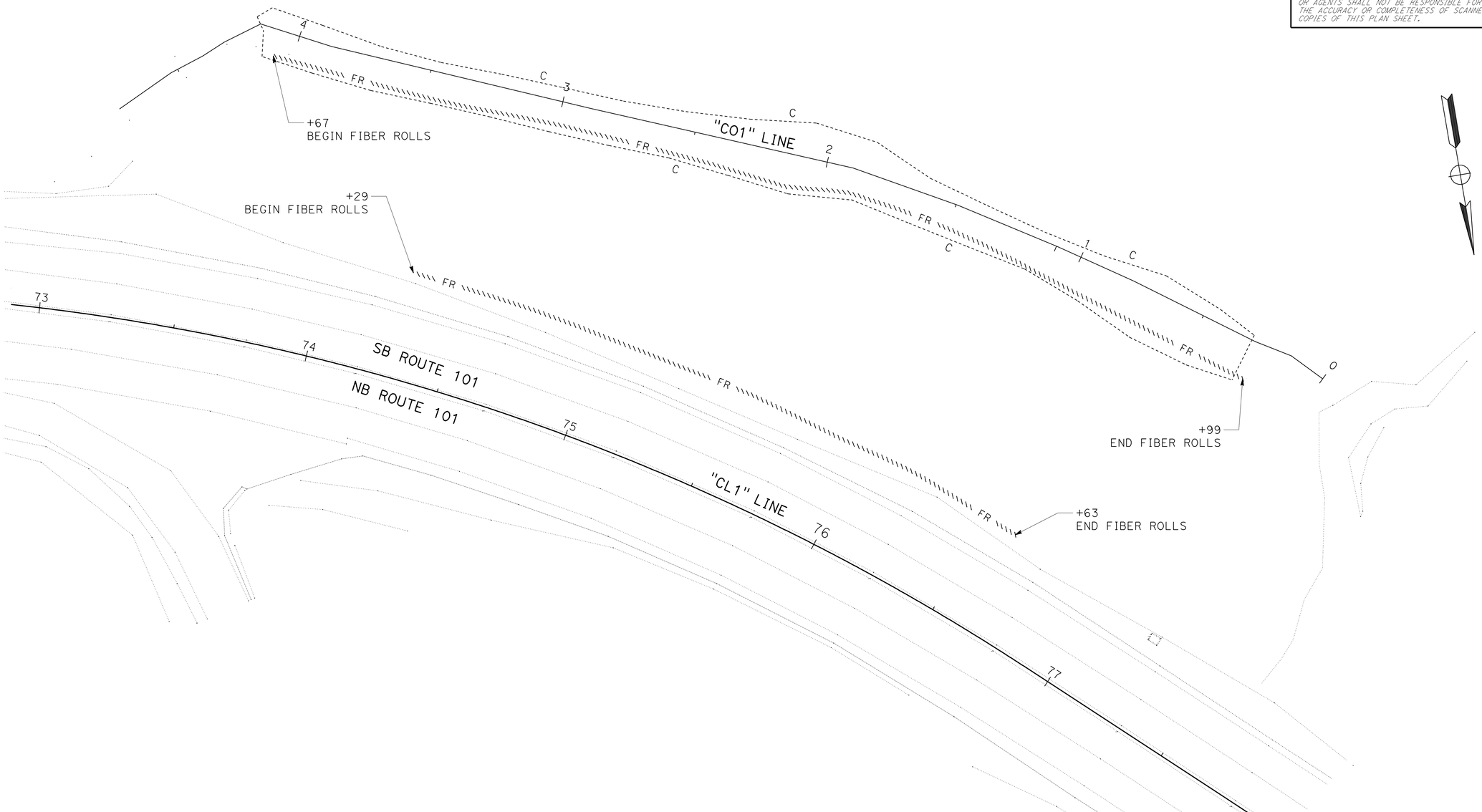

LOCATION 2

PM 82.50

CONSTRUCTION DETAILS

SCALE: 1" = 20'

C-6

REVISED BY	DATE REVISED

CALCULATED-DESIGNED BY	CHECKED BY
ED SPEER	RODDY ESTES

FUNCTIONAL SUPERVISOR: ROB BURNETT

STATE OF CALIFORNIA - DEPARTMENT OF TRANSPORTATION

Caltrans® **DESIGN**

P:\proj2\01\147770_plans\pse\147770ga006.dgn

LAST REVISION 09-02-10 | DATE PLOTTED => 05-NOV-2010 | TIME PLOTTED => 13:48

Dist	COUNTY	ROUTE	POST MILES TOTAL PROJECT	SHEET No.	TOTAL SHEETS
01	Men	101	81.9/R83.8	14	61

Edward B Speer 09-02-10
REGISTERED CIVIL ENGINEER DATE

11-1-10
PLANS APPROVAL DATE

REGISTERED PROFESSIONAL ENGINEER
EDWARD B. SPEER
No. C49740
Exp. 9-30-12
CIVIL
STATE OF CALIFORNIA

THE STATE OF CALIFORNIA OR ITS OFFICERS OR AGENTS SHALL NOT BE RESPONSIBLE FOR THE ACCURACY OR COMPLETENESS OF SCANNED COPIES OF THIS PLAN SHEET.

NOTE:

1. (N) - NOT A SEPARATE PAY ITEM, FOR INFORMATION ONLY

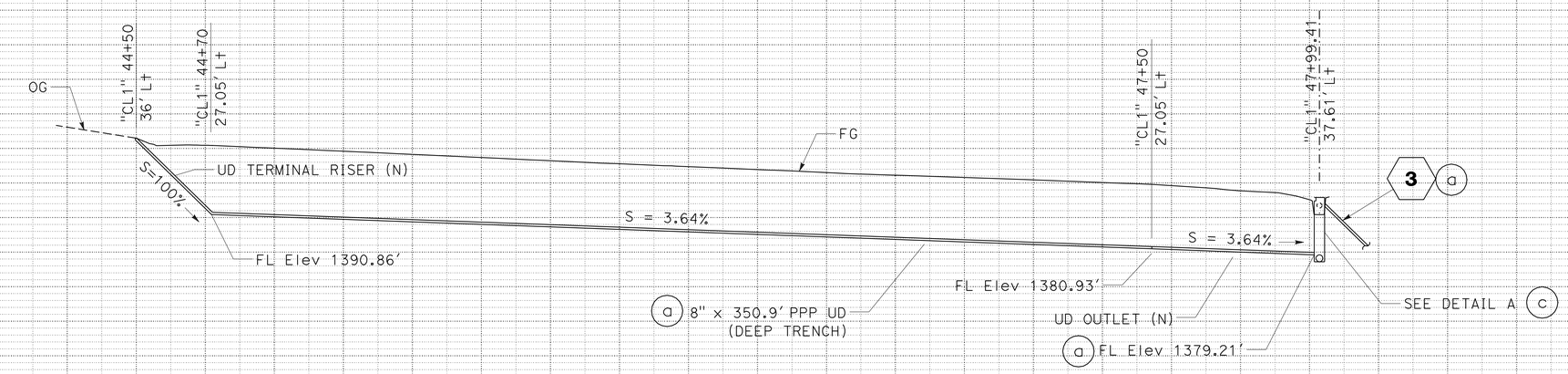

UNDERDRAIN "CL1" 44+50, 36' Lt TO "CL1" 47+99.41, 37.61' Lt

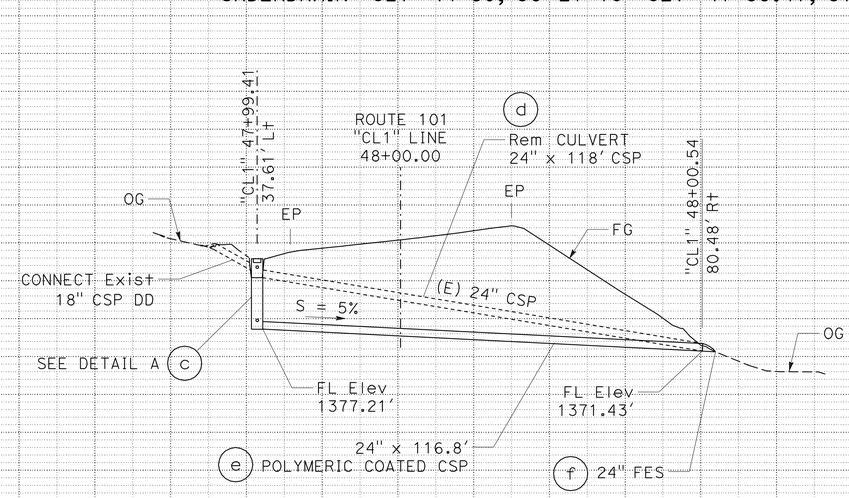

CULVERT "CL1" 48+00
0.5° SKEW LT

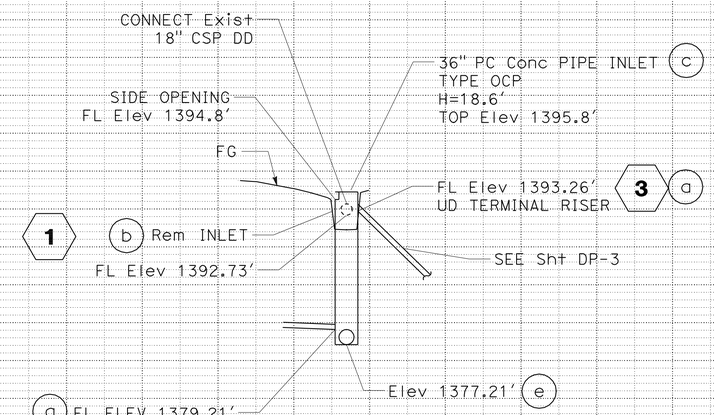

DETAIL A
NO SCALE

DRAINAGE SYSTEM No. 1

DRAINAGE PROFILES
SCALE: Horiz 1" = 20'
Vert 1" = 20'

DP-1

STATION		TOTAL
CY	Exc	
	Emb	

STATE OF CALIFORNIA - DEPARTMENT OF TRANSPORTATION
Caltrans
DESIGN
FUNCTIONAL SUPERVISOR: ROB BURNETT
CALCULATED-DESIGNED BY: RODDY ESTES
CHECKED BY: ED SPEER
REVISED BY
DATE REVISED
P:\proj2\01\47770_plans\pse\147770ib001.dgn

LAST REVISION DATE PLOTTED => 05-NOV-2010
09-02-10 TIME PLOTTED => 13:49

Dist	COUNTY	ROUTE	POST MILES TOTAL PROJECT	SHEET No.	TOTAL SHEETS
01	Men	101	81.9/R83.8	15	61

Edward B Speer 09-02-10
REGISTERED CIVIL ENGINEER DATE

11-1-10
PLANS APPROVAL DATE

REGISTERED PROFESSIONAL ENGINEER
EDWARD B. SPEER
No. C49740
Exp. 9-30-12
CIVIL
STATE OF CALIFORNIA

THE STATE OF CALIFORNIA OR ITS OFFICERS OR AGENTS SHALL NOT BE RESPONSIBLE FOR THE ACCURACY OR COMPLETENESS OF SCANNED COPIES OF THIS PLAN SHEET.

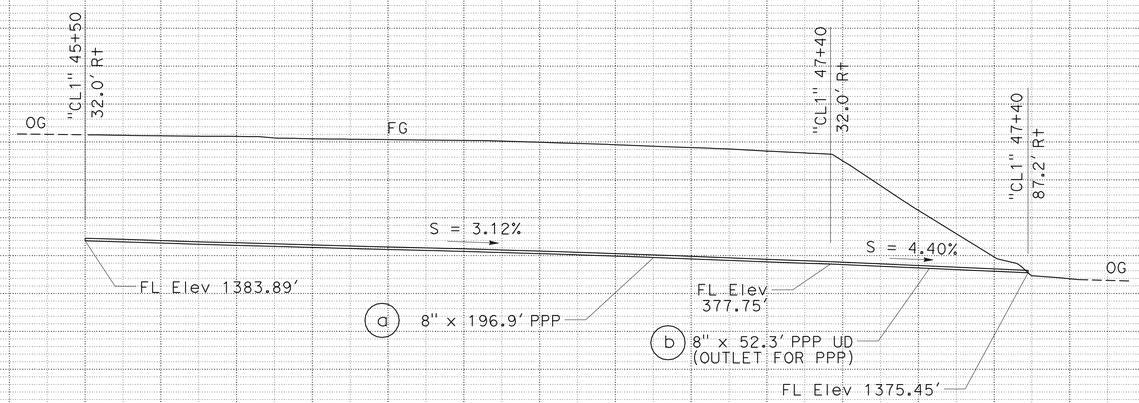

DRAINAGE SYSTEM No. 2

"CL1" 45+50, 32.0' Rt TO 47+40, 87.2' Rt

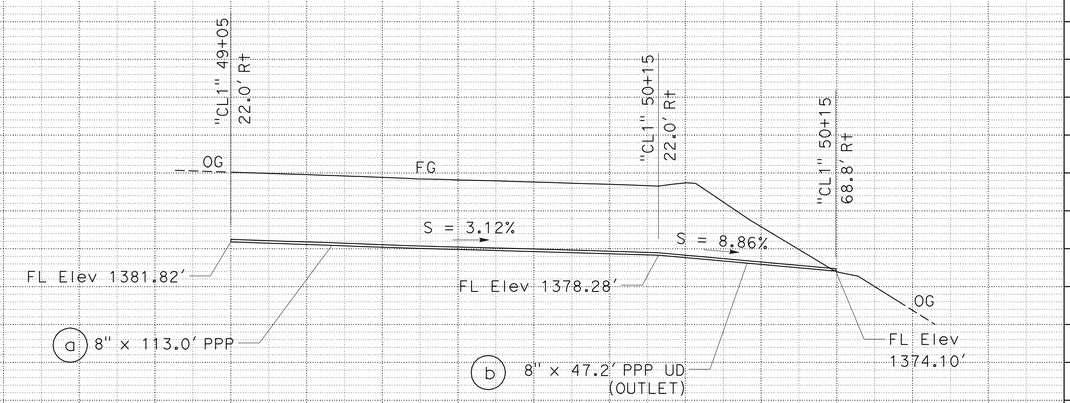

DRAINAGE SYSTEM No. 4

"CL1" 49+05, 22.0' Rt TO "CL1" 50+15, 68.8' Rt

DRAINAGE PROFILES

SCALE: Horiz 1" = 20'
Vert 1" = 20'

DP-2

REVISED BY | DATE REVISED
ED SPEER | RODDY ESTES
CALCULATED-DESIGNED BY | CHECKED BY
FUNCTIONAL SUPERVISOR: ROB BURNETT

STATE OF CALIFORNIA - DEPARTMENT OF TRANSPORTATION
Caltrans
DESIGN

P:\proj2\01\47770_plans\pse\147770ib002.dgn

LAST REVISION | DATE PLOTTED => 05-NOV-2010 | TIME PLOTTED => 13:49
09-02-10

Dist	COUNTY	ROUTE	POST MILES TOTAL PROJECT	SHEET No.	TOTAL SHEETS
01	Men	101	81.9/R83.8	16	61

Edward B Speer 09-02-10
REGISTERED CIVIL ENGINEER DATE

11-1-10
PLANS APPROVAL DATE

REGISTERED PROFESSIONAL ENGINEER EDWARD B. SPEER No. C49740 Exp. 9-30-12 CIVIL STATE OF CALIFORNIA

THE STATE OF CALIFORNIA OR ITS OFFICERS OR AGENTS SHALL NOT BE RESPONSIBLE FOR THE ACCURACY OR COMPLETENESS OF SCANNED COPIES OF THIS PLAN SHEET.

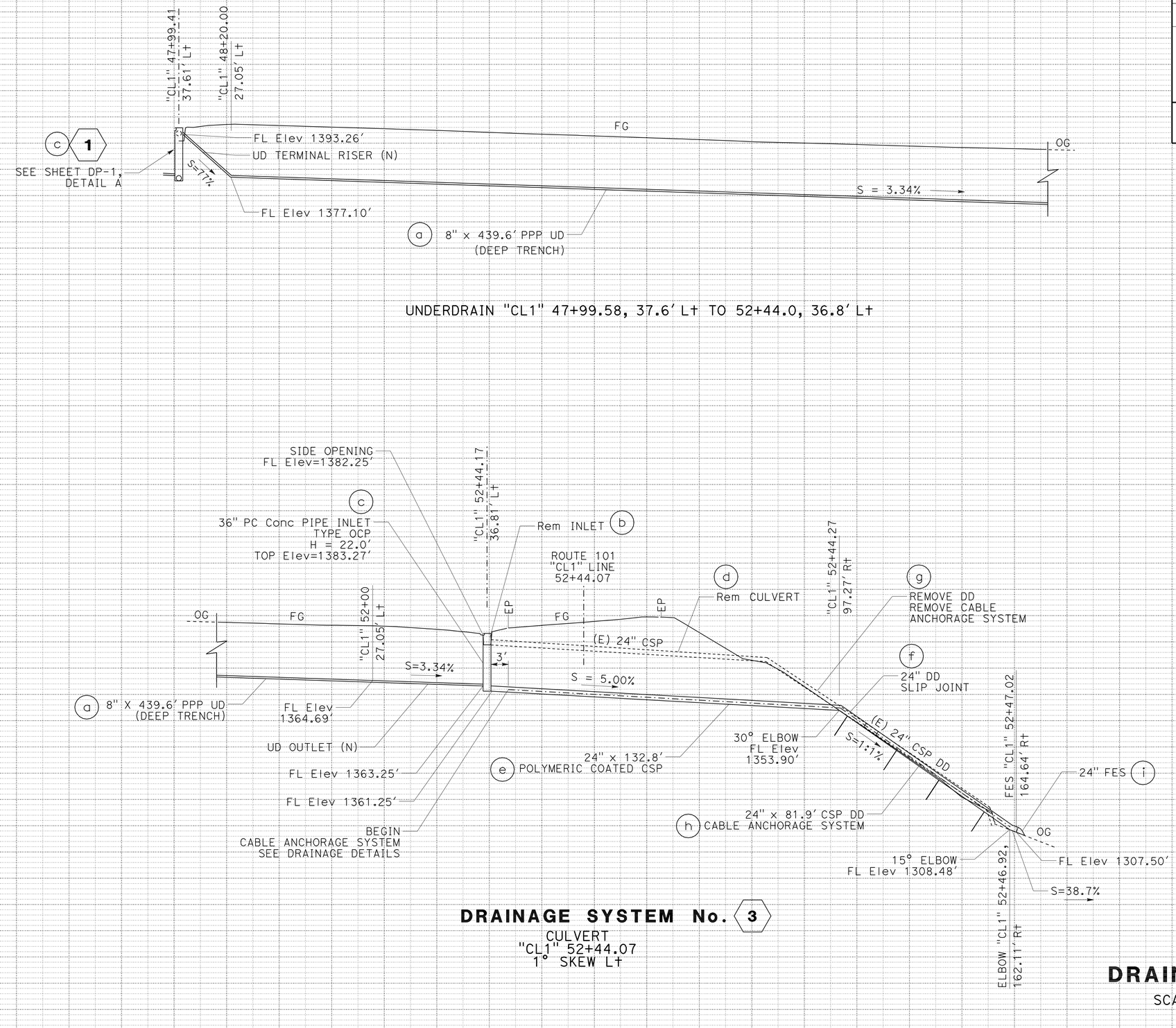

DRAINAGE SYSTEM No. 3

CULVERT
"CL1" 52+44.07
1° SKEW Lt

DRAINAGE PROFILES

SCALE: Horiz 1" = 20'
Vert 1" = 20'

DP-3

REVISED BY | DATE REVISED
ED SPEER | RODDY ESTES
CALCULATED-DESIGNED BY | CHECKED BY
FUNCTIONAL SUPERVISOR: ROB BURNETT

STATE OF CALIFORNIA - DEPARTMENT OF TRANSPORTATION
Caltrans
DESIGN

P:\proj2\01\47770_plans\pse\147770ib003.dgn

LAST REVISION 09-02-10
DATE PLOTTED => 05-NOV-2010
TIME PLOTTED => 13:49

Dist	COUNTY	ROUTE	POST MILES TOTAL PROJECT	SHEET No.	TOTAL SHEETS
01	Men	101	81.9/R83.8	17	61

Edward B Speer 09-02-10
REGISTERED CIVIL ENGINEER DATE

11-1-10
PLANS APPROVAL DATE

REGISTERED PROFESSIONAL ENGINEER
EDWARD B. SPEER
No. C49740
Exp. 9-30-12
CIVIL
STATE OF CALIFORNIA

THE STATE OF CALIFORNIA OR ITS OFFICERS OR AGENTS SHALL NOT BE RESPONSIBLE FOR THE ACCURACY OR COMPLETENESS OF SCANNED COPIES OF THIS PLAN SHEET.

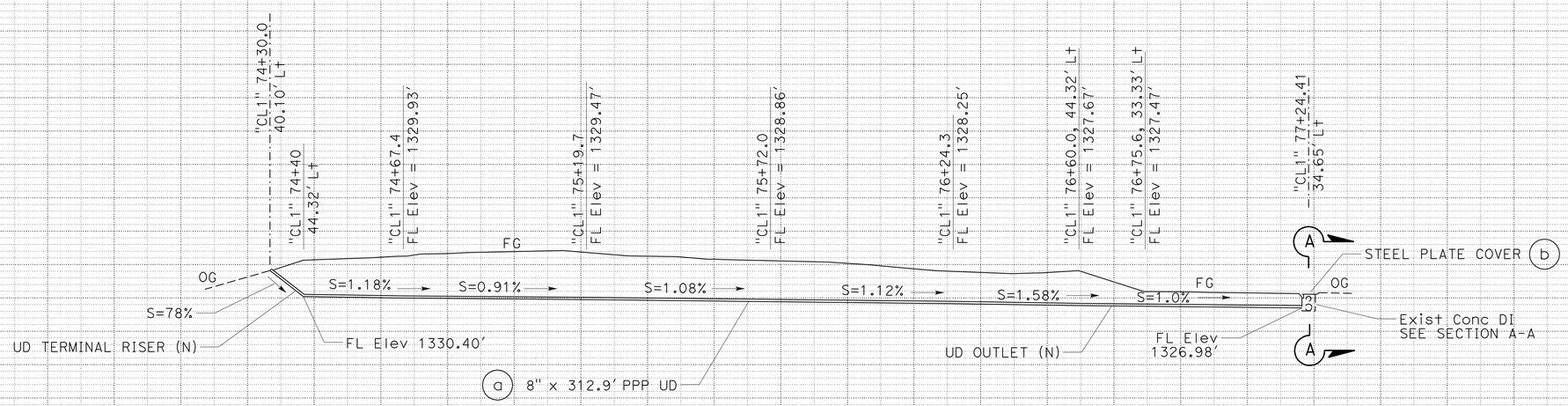

DRAINAGE SYSTEM No. 5

"CL1" 74+30, 40.1' LT TO 77+25, 34.7' LT

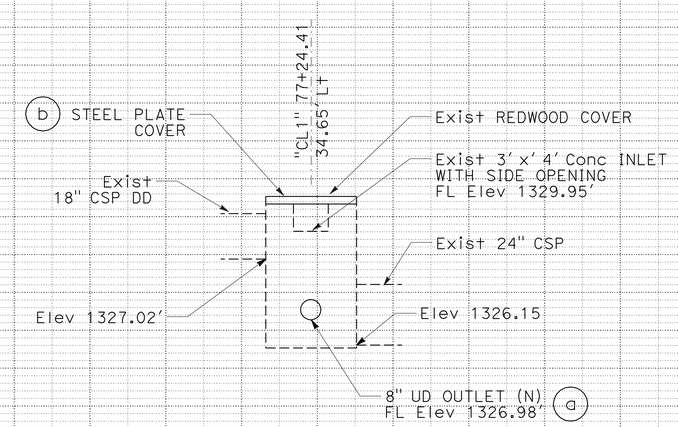

SECTION A-A
NO SCALE

DRAINAGE PROFILES

SCALE: Horiz 1" = 20'
Vert 1" = 20'

DP-4

STATION		TOTAL
CY	Exc	
	Emb	

REVISED BY | DATE REVISED
ED SPEER | RODDY ESTES
CALCULATED-DESIGNED BY | CHECKED BY
FUNCTIONAL SUPERVISOR: ROB BURNETT

STATE OF CALIFORNIA - DEPARTMENT OF TRANSPORTATION
Caltrans DESIGN

P:\proj2\01\47770_plans\pse\147770ib004.dgn

LAST REVISION | DATE PLOTTED => 05-NOV-2010 | TIME PLOTTED => 13:49
09-02-10

BORDER LAST REVISED 7/2/2010 | USERNAME => trpierce | DGN FILE => 147770ib004.dgn | RELATIVE BORDER SCALE IS IN INCHES 0 1 2 3 | UNIT 0317 | PROJECT NUMBER & PHASE 01000003581

Dist	COUNTY	ROUTE	POST MILES TOTAL PROJECT	SHEET No.	TOTAL SHEETS
01	Men	101	81.9/R83.8	18	61

Edward B Speer 09-02-10
REGISTERED CIVIL ENGINEER DATE

11-1-10
PLANS APPROVAL DATE

REGISTERED PROFESSIONAL ENGINEER
EDWARD B. SPEER
No. C49740
Exp. 9-30-12
CIVIL
STATE OF CALIFORNIA

THE STATE OF CALIFORNIA OR ITS OFFICERS OR AGENTS SHALL NOT BE RESPONSIBLE FOR THE ACCURACY OR COMPLETENESS OF SCANNED COPIES OF THIS PLAN SHEET.

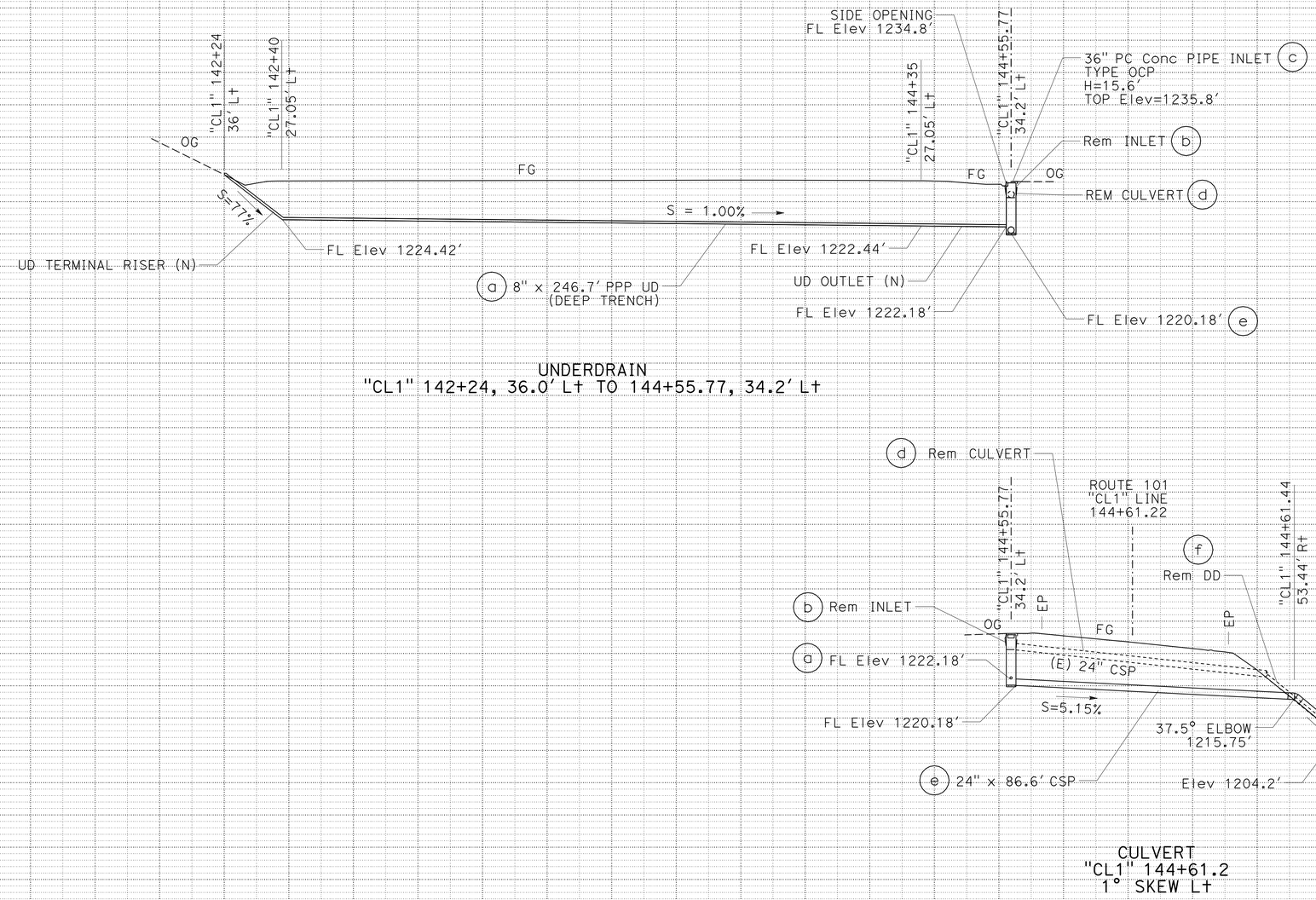

DRAINAGE SYSTEM No. 6

DRAINAGE PROFILES

SCALE: Horiz 1" = 20'
Vert 1" = 20'

DP-5

STATE OF CALIFORNIA - DEPARTMENT OF TRANSPORTATION
Caltrans
DESIGN

FUNCTIONAL SUPERVISOR: ROB BURNETT
CALCULATED-DESIGNED BY: ED SPEER
CHECKED BY: RODDY ESTES
REVISED BY
DATE REVISED

STATION
CY Exc
Emb
TOTAL

P:\proj2\01\47770_plans\pse\147770ib005.dgn

LAST REVISION 09-02-10
DATE PLOTTED => 05-NOV-2010
TIME PLOTTED => 13:49

Dist	COUNTY	ROUTE	POST MILES TOTAL PROJECT	SHEET No.	TOTAL SHEETS
01	Men	101	81.9/R83.8	19	61

Edward B Speer 09-02-10
REGISTERED CIVIL ENGINEER DATE

11-1-10
PLANS APPROVAL DATE

REGISTERED PROFESSIONAL ENGINEER
EDWARD B. SPEER
No. C49740
Exp. 9-30-12
CIVIL
STATE OF CALIFORNIA

THE STATE OF CALIFORNIA OR ITS OFFICERS OR AGENTS SHALL NOT BE RESPONSIBLE FOR THE ACCURACY OR COMPLETENESS OF SCANNED COPIES OF THIS PLAN SHEET.

NOTE:

1. (N) - NOT A SEPARATE PAY ITEM, FOR INFORMATION ONLY

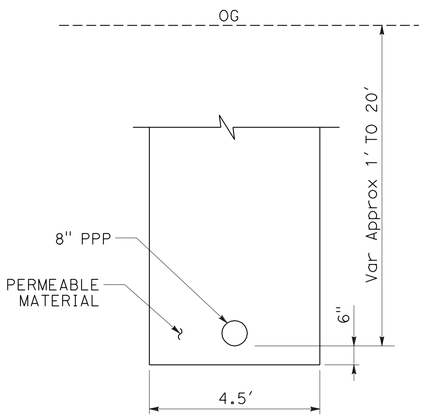

8" PERFORATED PLASTIC PIPE UD (DEEP TRENCH)

DRAINAGE SYSTEM No. 1 a 3 a 6 a

NOTE: NO FILTER FABRIC

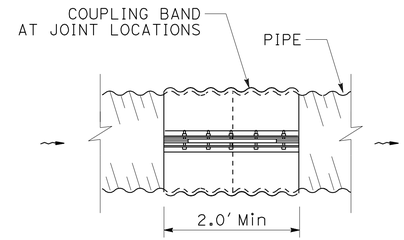

COUPLING BAND

NOTES:

1. USE ON ALL CSP CULVERTS, DOWNDRAINS AND CROSS DRAIN LOCATIONS.
2. USE STANDARD DETAIL D-97A, ALTERNATIVE B.

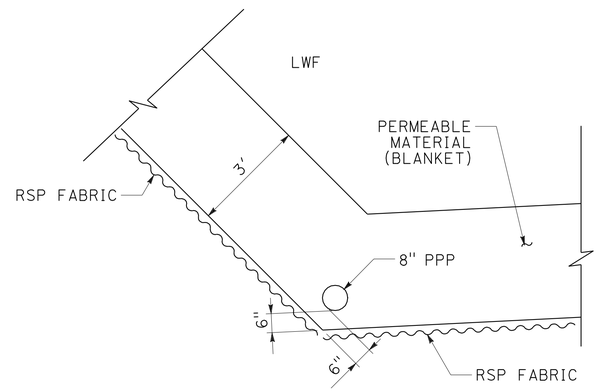

8" PERFORATED PLASTIC PIPE

DRAINAGE SYSTEM No. 2 a 4 a

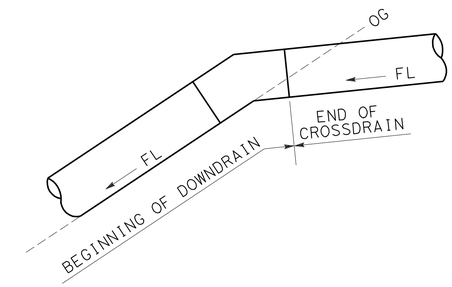

LIMITS OF MEASUREMENT FOR PAYMENT

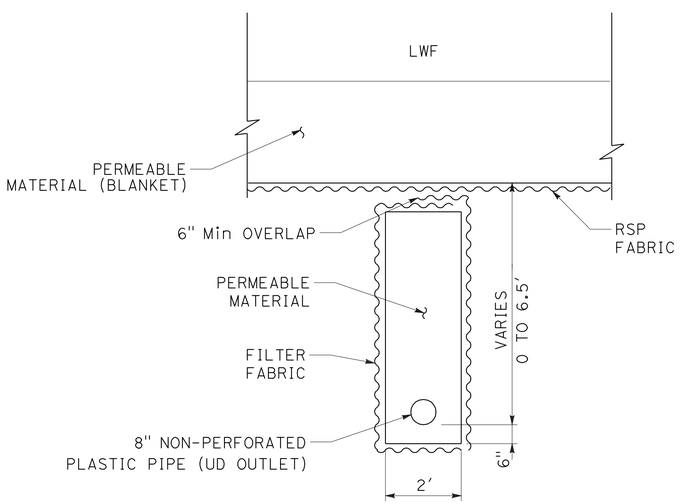

8" PERFORATED PLASTIC PIPE UD

DRAINAGE SYSTEM No. 2 b 4 b

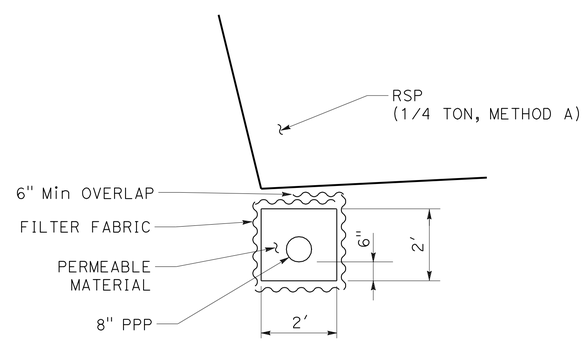

8" PERFORATED PLASTIC PIPE UD

DRAINAGE SYSTEM No. 5 a

UNDERDRAIN MATERIAL QUANTITIES (N)

DRAINAGE SYSTEM No.	"CL1" LINE	(N) PERMEABLE MATERIAL CY	(N) FILTER FABRIC SQYD
1	44+50 TO 48+98 L+	1077	
2	47+40, 32' R+ TO 47+40, 87' R+	13	66
3	48+00 TO 52+44 L+	1505	
4	50+15, 22' R+ TO 52+15,69' R+	14	64
5	74+40 TO 77+24 L+	42	270
6	142+24 TO 144+61 L+	516	
TOTAL			

DRAINAGE DETAILS

NO SCALE

DD-1

REVISED BY | DATE REVISED
ED SPEER | RODDY ESTES
CALCULATED-DESIGNED BY | CHECKED BY
FUNCTIONAL SUPERVISOR: ROB BURNETT

STATE OF CALIFORNIA - DEPARTMENT OF TRANSPORTATION
Caltrans DESIGN

P:\proj2\01\147770_plans\pse\147770ic001.dgn

LAST REVISION 09-02-10 | DATE PLOTTED => 05-NOV-2010 | TIME PLOTTED => 13:49

Dist	COUNTY	ROUTE	POST MILES TOTAL PROJECT	SHEET No.	TOTAL SHEETS
01	Men	101	81.9/R83.8	20	61

Edward B Speer 09-02-10
REGISTERED CIVIL ENGINEER DATE

11-1-10
PLANS APPROVAL DATE

REGISTERED PROFESSIONAL ENGINEER
EDWARD B. SPEER
No. C49740
Exp. 9-30-12
CIVIL
STATE OF CALIFORNIA

THE STATE OF CALIFORNIA OR ITS OFFICERS OR AGENTS SHALL NOT BE RESPONSIBLE FOR THE ACCURACY OR COMPLETENESS OF SCANNED COPIES OF THIS PLAN SHEET.

NOTE:

1. FOR DETAILS NOT SHOWN SEE Std PLANS D87A AND D87C.

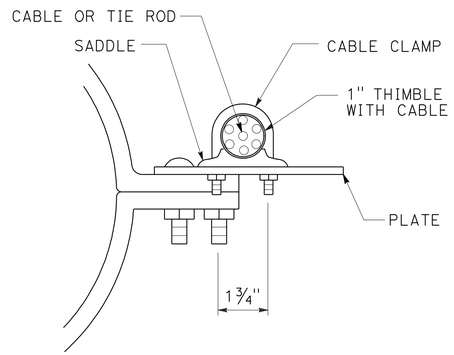

END VIEW

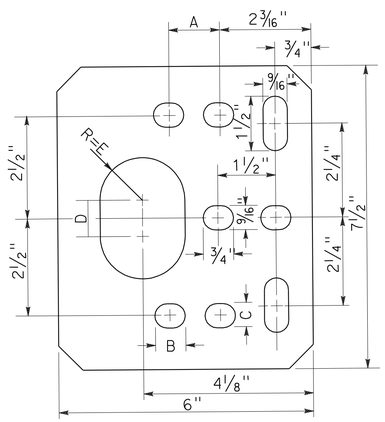

PLAN

5 PLATE DETAIL

MATERIAL TO BE 1/4" STEEL PLATE, GALVANIZED AFTER FABRICATION

CABLE SIZE	A	B	C	D	E
5/8"	1 1/4"	3/4"	9/16"	1"	1"
3/4"	1 1/2"	7/8"	11/16"	1"	1"
7/8"	1 3/4"	1"	13/16"	1"	1"
1"	2"	1"	13/16"	1"	1"

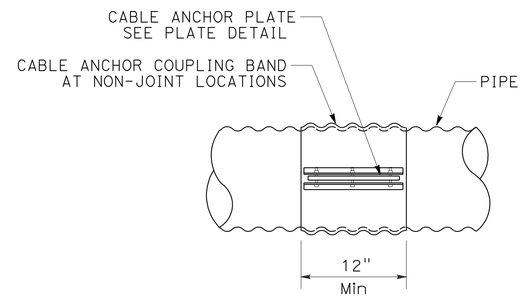

SIDE

7 CABLE ANCHOR COUPLING BAND

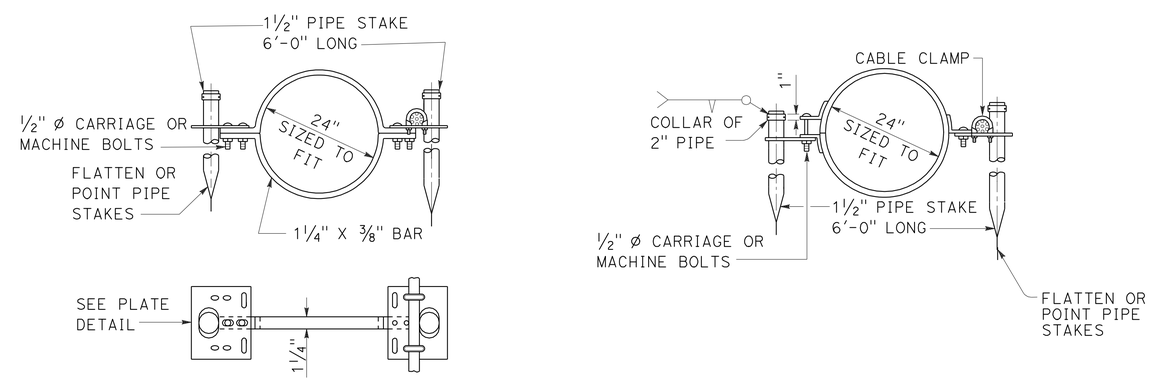

ALTERNATIVE A

ALTERNATIVE B

9 CABLE ANCHORAGE SYSTEM ANCHOR ASSEMBLY FOR CSP DD

DRAINAGE SYSTEM No. 3

DRAINAGE DETAILS

NO SCALE

DD-2

STATE OF CALIFORNIA - DEPARTMENT OF TRANSPORTATION
Caltrans® DESIGN

FUNCTIONAL SUPERVISOR: ROB BURNETT
ED SPEER — RODDY ESTES
CALCULATED-DESIGNED BY / CHECKED BY
REVISED BY / DATE REVISED

P:\proj2\01\47770_plans\pse\147770ic002.dgn

LAST REVISION 09-02-10 | DATE PLOTTED => 05-NOV-2010 | TIME PLOTTED => 13:49

Dist	COUNTY	ROUTE	POST MILES TOTAL PROJECT	SHEET No.	TOTAL SHEETS
01	Men	101	81.9/R83.8	21	61

Edward B Speer 09-02-10
REGISTERED CIVIL ENGINEER DATE

11-1-10
PLANS APPROVAL DATE

REGISTERED PROFESSIONAL ENGINEER
EDWARD B. SPEER
No. C49740
Exp. 9-30-12
CIVIL
STATE OF CALIFORNIA

THE STATE OF CALIFORNIA OR ITS OFFICERS OR AGENTS SHALL NOT BE RESPONSIBLE FOR THE ACCURACY OR COMPLETENESS OF SCANNED COPIES OF THIS PLAN SHEET.

NOTES:

1. FOR DETAILS NOT SHOWN SEE Std PLANS D87A AND D87C.
2. TIE ROD FROM INLET TO FIRST DOWNDRAIN SCETION (BOTH SIDES).

KEY NOTES:

1. END CABLE ANCHORAGE ON LAST SECTION OF DOWNDRAIN. SEE CABLE ANCHOR TERMINAL DETAIL.
2. 24" DD SLIP JOINT
3. CABLE CLAMPED TO CABLE ANCHOR COUPLING BANDS (ONE PER PIPE SECTION)
4. SEE TURNBUCKLE DETAILS
5. SEE PLATE DETAIL
6. SEE TIE ROD ANCHOR TERMINAL DETAIL
7. SEE CABLE ANCHOR COUPLING BAND DETAIL
8. CABLE BOTH SIDES 6x19-IWRC (GALVANIZED)
9. PIPE STAKES (ONE EACH SIDE)
10. JOINT COUPLING BANDS

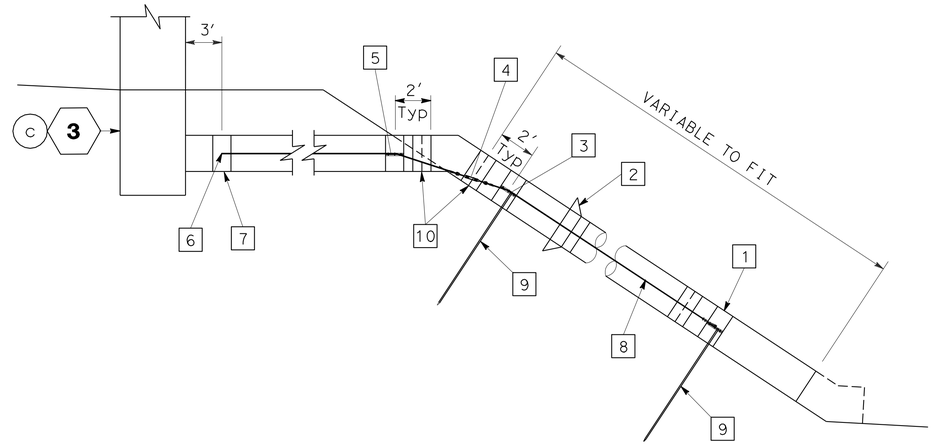

CABLE ANCHORAGE SYSTEM DETAIL

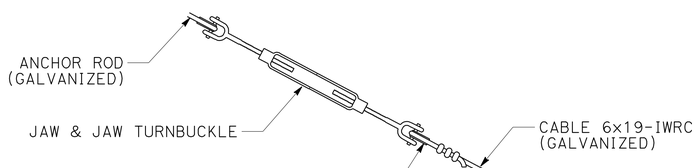

4 ANCHOR ROD TURNBUCKLE DETAIL

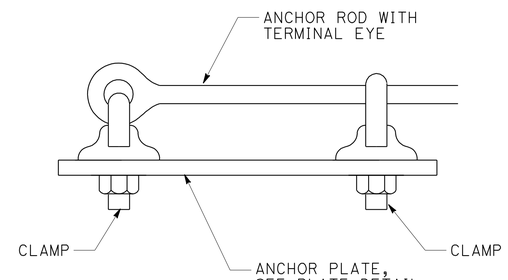

6 TIE ROD ANCHOR TERMINAL DETAIL

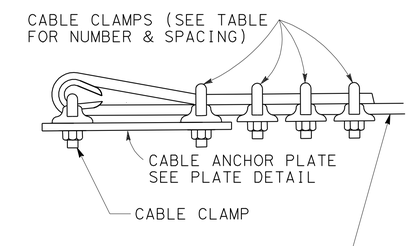

1 CABLE ANCHOR TERMINAL DETAIL

SWL (1000 LBS)	15K	23K	30K	38K
CABLE CLAMP SPACING	4"	4½"	5¼"	6"
CABLE CLAMPS	3	4	4	5
TURNBUCKLES	⅞" x 18"	1" x 18"	1¼" x 18"	1¼" x 18"
CABLE SIZE (THIMBLE)	⅝"	¾"	⅞"	1"

4 CABLE TURNBUCKLE DETAIL

DRAINAGE DETAILS

NO SCALE

DD-3

REVISED BY | DATE REVISED
ED SPEER | RODDY ESTES
CALCULATED-DESIGNED BY | CHECKED BY
FUNCTIONAL SUPERVISOR: ROB BURNETT
STATE OF CALIFORNIA - DEPARTMENT OF TRANSPORTATION
Caltrans® DESIGN
P:\proj2\01\47770_plans\pse\147770ic003.dgn

LAST REVISION 09-02-10 | DATE PLOTTED => 05-NOV-2010 | TIME PLOTTED => 14:11

BORDER LAST REVISED 7/2/2010 | USERNAME => trstrk | DGN FILE => 147770ic003.dgn | RELATIVE BORDER SCALE IS IN INCHES 0 1 2 3 | UNIT 0317 | PROJECT NUMBER & PHASE 01000003581

Dist	COUNTY	ROUTE	POST MILES TOTAL PROJECT	SHEET No.	TOTAL SHEETS
01	Men	101	81.9/R83.8	22	61

Edward B Speer 09-02-10
REGISTERED CIVIL ENGINEER DATE

11-1-10
PLANS APPROVAL DATE

REGISTERED PROFESSIONAL ENGINEER
EDWARD B. SPEER
No. C49740
Exp. 9-30-12
CIVIL
STATE OF CALIFORNIA

THE STATE OF CALIFORNIA OR ITS OFFICERS OR AGENTS SHALL NOT BE RESPONSIBLE FOR THE ACCURACY OR COMPLETENESS OF SCANNED COPIES OF THIS PLAN SHEET.

NOTES:

1. (N) NOT A SEPARATE PAY ITEM, FOR INFORMATION ONLY.
2. ALL CULVERT JOINTS SHALL BE POSITIVE.
3. THE JOINT CLASSIFICATION FOR DOWNDRAIN SHALL BE DOWNDRAIN.
4. LENGTH OF PIPES AND ANGLE OF ELBOWS SHALL BE VERIFIED IN THE FIELD BY THE CONTRACTOR.

DRAINAGE QUANTITIES

PLAN SHEET No.	DRAINAGE SYSTEM NO. ⬡	DRAINAGE UNIT NO. ◯	REMOVE CULVERT	REMOVE INLET	REMOVE DOWNDRAIN	REMOVE CABLE ANCHORAGE SYSTEM	8" PERFORATED PLASTIC PIPE UNDERDRAIN (DEEP TRENCH)	8" PERFORATED PLASTIC PIPE UNDERDRAIN	8" PERFORATED PLASTIC PIPE	24" POLYMERIC COATED CORRUGATED STEEL PIPE (.168" THICK)	24" CORRUGATED STEEL PIPE (.079" THICK)	24" STEEL FLARED END SECTION	24" DOWNDRAIN SLIP JOINT	24" POLYMERIC COATED CORRUGATED STEEL PIPE DOWNDRAIN (.064" THICK)	24" CORRUGATED STEEL PIPE DOWNDRAIN (.079" THICK)	36" PRECAST CONCRETE PIPE INLET	CABLE ANCHORAGE SYSTEM	(N) STEEL PLATE COVER	MISCELLANEOUS IRON & STEEL	MINOR CONCRETE (MINOR STRUCTURE)	(N) HEIGHT OF INLET "H"	DESCRIPTION	LOCATION	PLAN SHEET No.	DRAINAGE SYSTEM ⬡	DRAINAGE UNIT ◯
			EA	EA	EA	EA	LF	LF	LF	LF	LF	EA	EA	LF	LF	LF	EA	EA	LB	CY	LF					
L-1	1	a					350.9															INCLUDES RISER & OUTLET	"CL1" 44+50, 36.0′ Lt TO 47+97.87, 37.32′ Lt	L-1	1	a
L-1	1	b		1																	10.0	Exist 4′ x 4′ INLET	"CL1" 47.99.41, 37.61′ Lt	L-1	1	b
L-1	1	c														19.1		1	112	0.1	18.6	TYPE OCP	"CL1" 47+99.41, 37.61′ Lt	L-1	1	c
L-1	1	d	1																			Exist 24" x 118′ CSP	"CL1" 47+99.4, 36.2′ Lt TO 48+00.5, 80.5′ Rt	L-1	1	d
L-1	1	e								116.8													"CL1" 47+99.6, 36.2′ Lt TO 48+00.5, 80.5′ Rt	L-1	1	e
L-1	1	f										1											"CL1" 48+00.54, 80.48′ Rt	L-1	1	f
L-1	2	a							196.9													UNDER LWF	"CL1" 45+50, 32.0′ Rt TO 47+40, 32.0′ Rt	L-1	2	a
L-1	2	b						52.3														OUTLET FOR PPP	"CL1" 47+40, 32.0′ Rt TO 47+40, 87.17′ Rt	L-1	2	b
L-1&2	3	a					439.6															INCLUDES RISER & OUTLET	"CL1" 48+00.8, 36.88′ Lt TO 52+42.63′, 36.51′ Lt	L-1&2	3	a
L-2	3	b		1																	4.5	Exist 4′ x 4′ INLET	"CL1" 52+44.2, 36.8′ Lt	L-2	3	b
L-2	3	c														22.5		1	112	0.1	22.0	TYPE OCP	"CL1" 52+44.07, 36.81′ Lt	L-2	3	c
L-2	3	d	1																			Exist 24" x 105′ CSP	"CL1" 52+44.16, 35.31′ Lt TO 52+43.24, 73.18′ Rt	L-2	3	d
L-2	3	e								132.8													"CL1" 52+44.16, 35.3′ Lt TO 52+44.27, 97.27′ Rt	L-2	3	e
L-2	3	f											1										"CL1" 52+44.3, 98.6′ Rt	L-2	3	f
L-2	3	g			1	1																Exist 18" x 110′ CSP DD	"CL1" 52+43.2, 73.18′ Rt TO 52+46.70, 156.24′ Rt	L-2	3	g
L-2	3	h												81.9			1					1" CABLE	"CL1" 52+44.3, 97.27′ Rt TO 52+47.02, 164.64′ Rt	L-2	3	h
L-2	3	i										1											"CL1′ 52+47.02, 164.64′ Rt	L-2	3	i
L-2	4	a							113.0													UNDER LWF	"CL1" 49+05.0, 22.0′ Rt TO 50+15.0, 22.0′ Rt	L-2	4	a
L-2	4	b						47.2														OUTLET FOR PPP	"CL1" 50+15.0, 22.0′ Rt TO 50+15.0, 68.84′ Rt	L-2	4	b
L-3	5	a						312.9														INCLUDES RISER & OUTLET	"CL1" 74+30, 40.1′ Lt TO 77+22.6, 34.60′ Lt	L-3	5	a
L-3	5	b																1	170			USE TYPE OL STEEL COVER	"CL1" 77+22.6, 34.60′ Lt	L-3	5	b
L-4	6	a					246.7															INCLUDES RISER & OUTLET	"CL1" 142+24, 36′ Lt TO 144+59.71, 34.2′ Lt	L-4	6	a
L-4	6	b		1																	4.5	Exist 3.7′ x 2.8′	"CL1" 144+61, 34′ Lt	L-4	6	b
L-4	6	c														16.1		1	112	0.1	15.6	TYPE OCP	"CL1" 144+61.11, 34.2′ Lt	L-4	6	c
L-4	6	d	1																			Exist 24" x 78′ CSP	"CL1" 144+60.9, 32.7′ Lt TO 144+61.39, 46.15′ Rt	L-4	6	d
L-4	6	e									86.6												"CL1" 144+60.9, 32.7′ Lt TO 144+61.45, 53.44 Rt	L-4	6	e
L-4	6	f			1																	Exist 12" x 32′ CSP DD	"CL1" 144+61.4, 46.15′ Rt TO 144+54.72, 69′ Rt	L-4	6	f
L-4	6	g													17.5								"CL1" 144+61.4, 53.4′ Rt TO 144+55.77, 66.61′ Rt	L-4	6	g
L-4	6	h										1											"CL1" 144+55.77, 66.61′ Rt	L-4	6	h
TOTAL			3	3	2	1	1037.2	412.4	309.9	249.6	86.6	3	1	81.9	17.5	57.7	1		506	0.3						

DRAINAGE QUANTITIES
DQ-1

REVISED BY | DATE REVISED
ED SPEER | RODDY ESTES
CALCULATED-DESIGNED BY | CHECKED BY
FUNCTIONAL SUPERVISOR: ROB BURNETT

STATE OF CALIFORNIA - DEPARTMENT OF TRANSPORTATION
Caltrans® DESIGN

P:\proj2\01\147770_plans\pse\147770id001.dgn

LAST REVISION 09-02-10 | DATE PLOTTED => 05-NOV-2010 | TIME PLOTTED => 14:11

Dist	COUNTY	ROUTE	POST MILES TOTAL PROJECT	SHEET No.	TOTAL SHEETS
01	Men	101	81.9/R83.8	23	61

Edward B Speer 09-02-10
REGISTERED CIVIL ENGINEER DATE

11-1-10
PLANS APPROVAL DATE

REGISTERED PROFESSIONAL ENGINEER EDWARD B. SPEER No. C49740 Exp. 9-30-12 CIVIL STATE OF CALIFORNIA

THE STATE OF CALIFORNIA OR ITS OFFICERS OR AGENTS SHALL NOT BE RESPONSIBLE FOR THE ACCURACY OR COMPLETENESS OF SCANNED COPIES OF THIS PLAN SHEET.

CONSTRUCTION AREA SIGNS

NOTE:

EXACT SIGN LOCATIONS TO BE DETERMINED BY THE ENGINEER.

LEGEND:

- CONSTRUCTION AREA SIGN - 1 POST
- CONSTRUCTION AREA SIGN - 2 POST
- PORTABLE CHANGEABLE MESSAGE SIGN
- (XX.XX) POST MILE

ABBREVIATION:

PCMS PORTABLE CHANGEABLE MESSAGE SIGN

TYPE	LOCATION	CODE	PANEL SIZE	SIGN MESSAGE	MOUNT TYPE	No. OF POSTS AND SIZE	No. OF SIGNS
A	AS SHOWN	W20-1* C23B (CA)	48" x 48" 42" x 24"	ROAD WORK AHEAD REPAIR ROADWAY	STATIONARY	2 - 4" x 6"	3
B	AS SHOWN	W16-1 W11-1	18" x 24" 36" x 36"	SHARE THE ROAD BICYCLE (SYMBOL)	STATIONARY	2 - 4" x 6"	2
C	AS SHOWN	G20-2*	36" x 18"	END ROAD WORK	STATIONARY	1 - 4" x 4"	2
D	AS SHOWN			FLASHING ARROW SIGN	ON TRAILER		1
E	AS SHOWN	C40 (CA)	72" x 36"	TRAFFIC FINES DOUBLED IN CONSTRUCTION ZONES	STATIONARY	2 - 4" x 6"	2
F	AS SHOWN	C20 (CA)*	48" x 48"	LEFT LANE CLOSED AHEAD	STATIONARY	1 - 6" x 6"	3
G	AS SHOWN	W4-2L*	48" x 48"	LANE DROP (SYMBOL)	STATIONARY	1 - 6" x 6"	1
H	EVERY 2000′	C30 (CA)*	48" x 48"	LANE CLOSED	PORTABLE BASE	1 - 6" x 6"	6
I	AS SHOWN	G84 (CA)*	54" x 48"	EXIT	PORTABLE BASE	2 - 4" x 6"	1
J	AS SHOWN	W4-1L*	48" x 48"	MERGE (SYMBOL)	PORTABLE BASE	1 - 6" x 6"	1
K	AS SHOWN	R2-1	36" x 48"	SPEED LIMIT 55	USE EXISTING "MAX SPEED 65" SIGN POST	1 - 6" x 6"	2
L	AS SHOWN	R2-1	36" x 48"	SPEED LIMIT 55	STATIONARY	1 - 4" x 6"	1
M	AS SHOWN	R2-1	36" x 48"	SPEED LIMIT 65	STATIONARY	1 - 4" x 6"	1

* - DENOTES BLACK ON ORANGE SIGN.

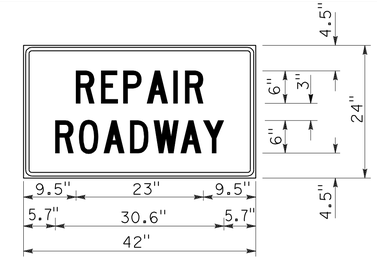

1.5" Radius, 0.6" Border, 0.4" Indent, Black on Orange; [REPAIR] C; [ROADWAY] C;

DETAIL SIGN C23B (CA)

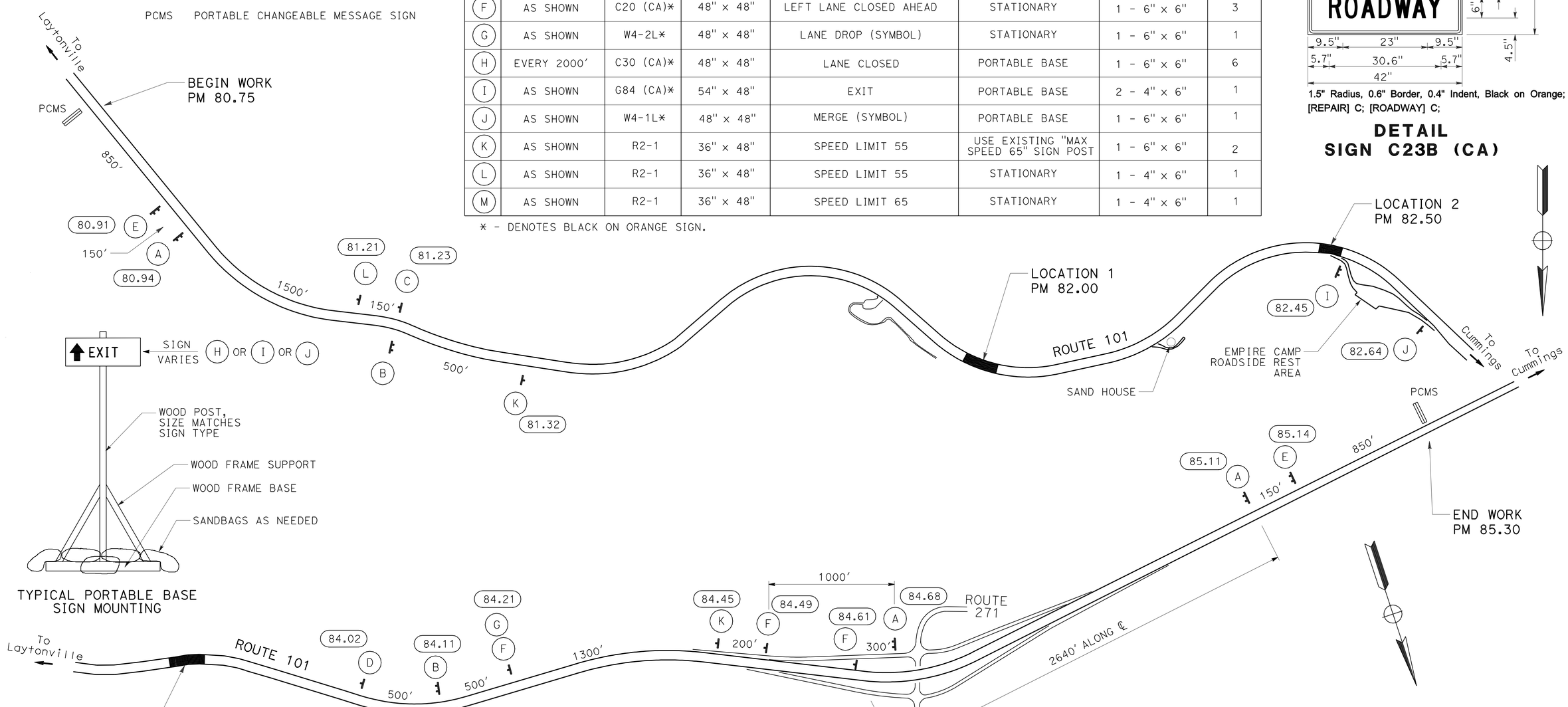

CONSTRUCTION AREA SIGNS
NO SCALE

CS-1

THIS PLAN ACCURATE FOR CONSTRUCTION AREA SIGN WORK ONLY

REVISED BY	DATE REVISED

CALCULATED-DESIGNED BY: ED SPEER
CHECKED BY: RODDY ESTES
FUNCTIONAL SUPERVISOR: ROB BURNETT

STATE OF CALIFORNIA - DEPARTMENT OF TRANSPORTATION
Caltrans DESIGN

P:\proj2\01\47770_plans\pse\1477701a001.dgn

LAST REVISION DATE PLOTTED => 05-NOV-2010
TIME PLOTTED => 13:59
09-02-10

Dist	COUNTY	ROUTE	POST MILES TOTAL PROJECT	SHEET No.	TOTAL SHEETS
01	Men	101	81.9/R83.8	24	61

Edward B Speer 09-02-10
REGISTERED CIVIL ENGINEER DATE

11-1-10
PLANS APPROVAL DATE

REGISTERED PROFESSIONAL ENGINEER
EDWARD B. SPEER
No. C49740
Exp. 9-30-12
CIVIL
STATE OF CALIFORNIA

THE STATE OF CALIFORNIA OR ITS OFFICERS OR AGENTS SHALL NOT BE RESPONSIBLE FOR THE ACCURACY OR COMPLETENESS OF SCANNED COPIES OF THIS PLAN SHEET.

NOTE:

1. SIGNS SHOWN ON SHEET CS-1.

LEGEND:

Rem YS	COLD PLANE 4 YELLOW CENTERLINE STRIPES, RUMBLE STRIPS AND MARKER RECESSES. SEE SHEET THD-1.
Rem TS	REMOVE THERMOPLASTIC TRAFFIC STRIPE. REMOVE RECESSED PAVEMENT MARKERS (N).
TS (XX)	PERMANENT OR TEMPORARY TRAFFIC STRIPE (DETAIL No.)
	TEMPORARY RAILING (TYPE K)
	CHANNELIZER (SURFACE MOUNTED)
	MATCH EXISTING STRIPING
	DIRECTION OF TRAVEL
	WORK AREA

ABBREVIATIONS:

Rem	REMOVE
K-RAIL	TEMPORARY RAILING (TYPE K)
LWF	LIGHTWEIGHT FILL

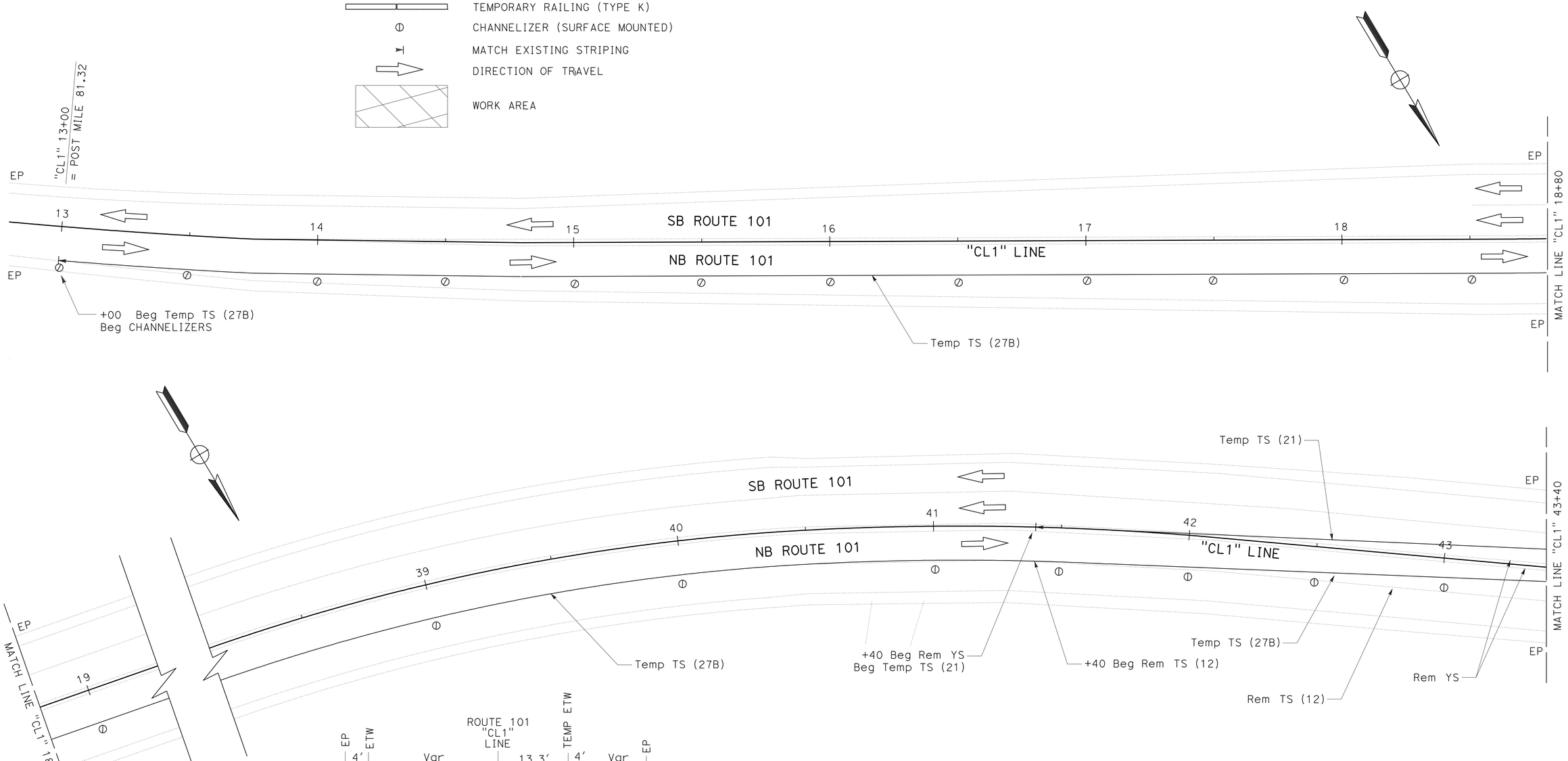

TYPICAL
"CL1" 13+00 TO "CL1" 43+40
NO SCALE

THIS PLAN ACCURATE FOR TRAFFIC HANDLING WORK ONLY

LOCATION 1
TRAFFIC HANDLING PLAN

SCALE: 1" = 20'

TH-1

REVISED BY	DATE REVISED

CALCULATED-DESIGNED BY	CHECKED BY
ED SPEER	RODDY ESTES

FUNCTIONAL SUPERVISOR: ROB BURNETT

STATE OF CALIFORNIA - DEPARTMENT OF TRANSPORTATION
Caltrans® DESIGN

P:\proj2\01\47770_plans\pse\147770md001.dgn

LAST REVISION 09-02-10
DATE PLOTTED => 05-NOV-2010
TIME PLOTTED => 14:19

Dist	COUNTY	ROUTE	POST MILES TOTAL PROJECT	SHEET No.	TOTAL SHEETS
01	Men	101	81.9/R83.8	25	61

Edward B Speer 09-02-10
REGISTERED CIVIL ENGINEER DATE

11-1-10
PLANS APPROVAL DATE

REGISTERED PROFESSIONAL ENGINEER
EDWARD B. SPEER
No. C49740
Exp. 9-30-12
CIVIL
STATE OF CALIFORNIA

THE STATE OF CALIFORNIA OR ITS OFFICERS OR AGENTS SHALL NOT BE RESPONSIBLE FOR THE ACCURACY OR COMPLETENESS OF SCANNED COPIES OF THIS PLAN SHEET.

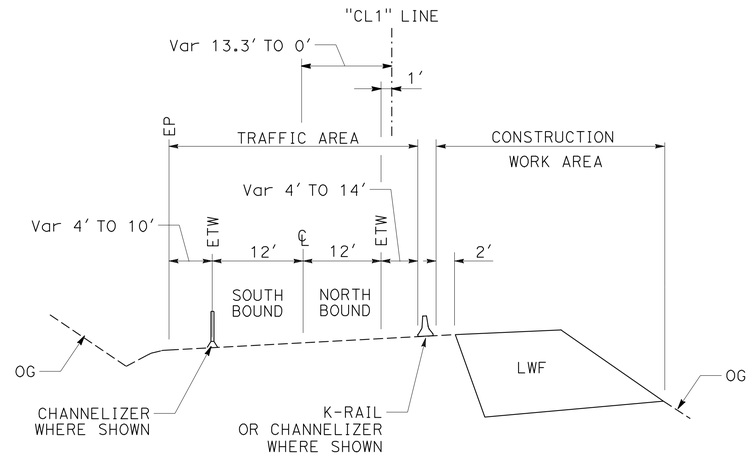

TYPICAL SECTION
"CL1" 43+40 TO "CL1" 136+60
NO SCALE

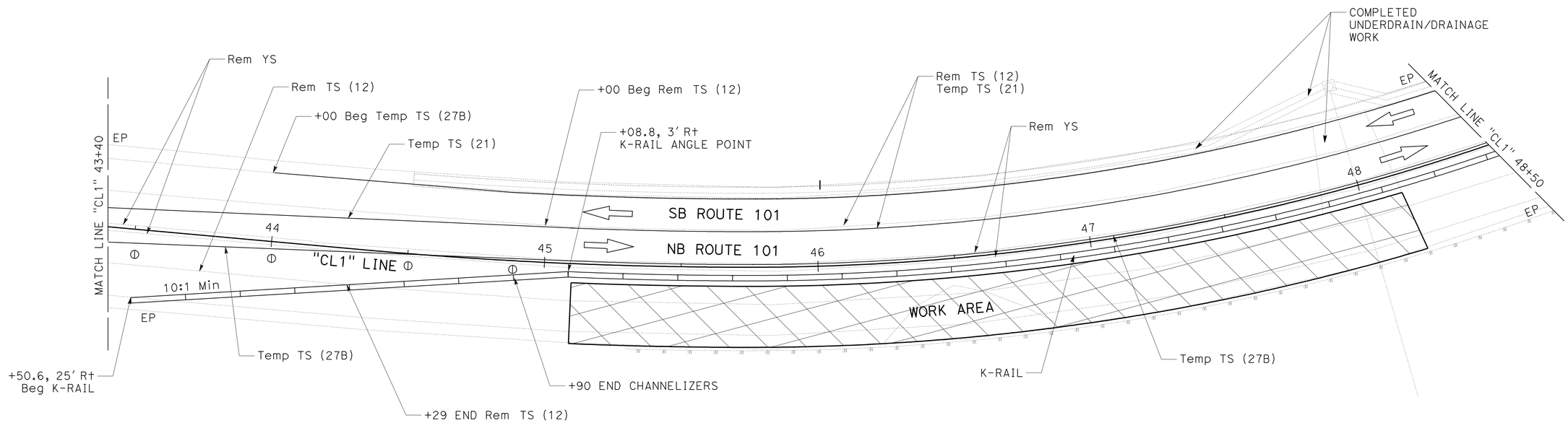

LOCATION 1
TRAFFIC HANDLING PLAN

SCALE: 1" = 20'

TH-2

THIS PLAN ACCURATE FOR TRAFFIC HANDLING WORK ONLY

REVISED BY	DATE REVISED

CALCULATED-DESIGNED BY	ED SPEER
CHECKED BY	RODDY ESTES
FUNCTIONAL SUPERVISOR	ROB BURNETT

STATE OF CALIFORNIA - DEPARTMENT OF TRANSPORTATION
Caltrans
DESIGN

P:\proj2\01\147770_plans\pse\147770md002.dgn

LAST REVISION 09-02-10 | DATE PLOTTED => 05-NOV-2010 | TIME PLOTTED => 14:00

Dist	COUNTY	ROUTE	POST MILES TOTAL PROJECT	SHEET No.	TOTAL SHEETS
01	Men	101	81.9/R83.8	26	61

Edward B Speer 09-02-10
REGISTERED CIVIL ENGINEER DATE

11-1-10
PLANS APPROVAL DATE

REGISTERED PROFESSIONAL ENGINEER
EDWARD B. SPEER
No. C49740
Exp. 9-30-12
CIVIL
STATE OF CALIFORNIA

THE STATE OF CALIFORNIA OR ITS OFFICERS OR AGENTS SHALL NOT BE RESPONSIBLE FOR THE ACCURACY OR COMPLETENESS OF SCANNED COPIES OF THIS PLAN SHEET.

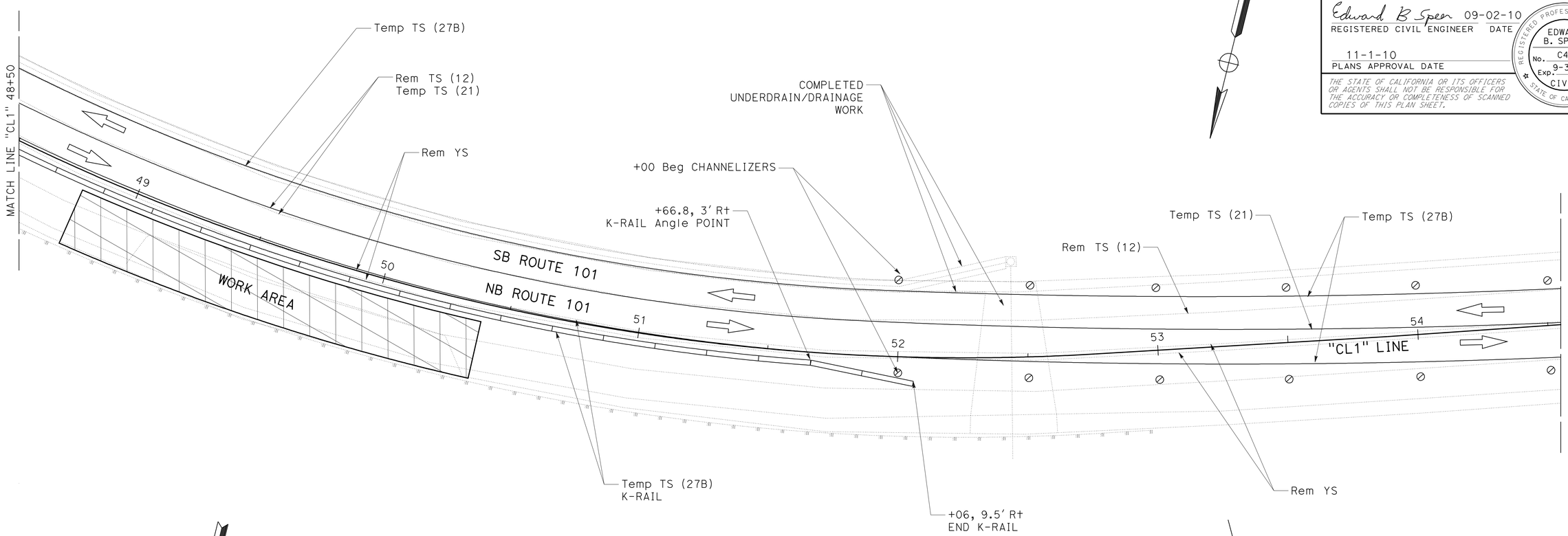

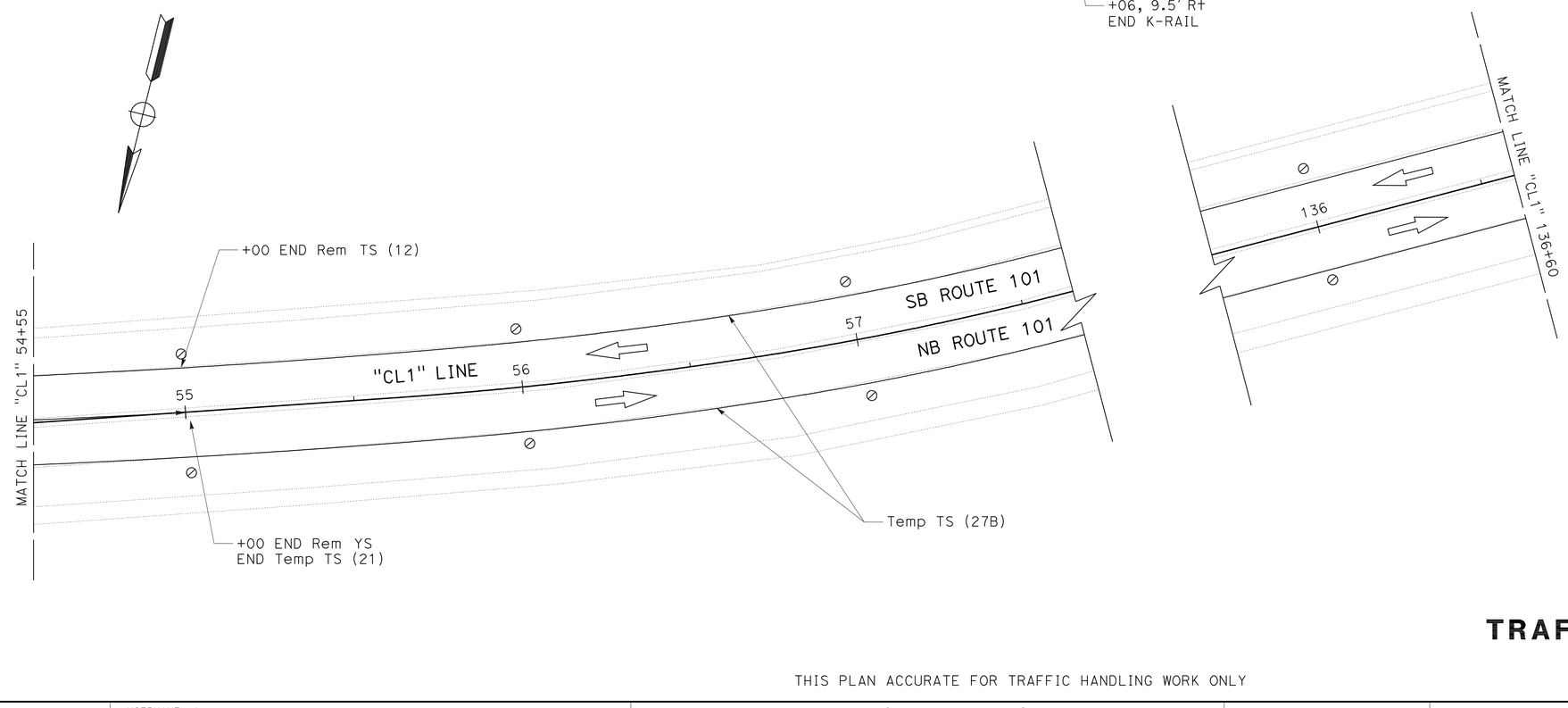

LOCATION 1
TRAFFIC HANDLING PLAN

SCALE: 1" = 20'

TH-3

THIS PLAN ACCURATE FOR TRAFFIC HANDLING WORK ONLY

REVISED BY	DATE REVISED
ED SPEER	RODDY ESTES

CALCULATED-DESIGNED BY	CHECKED BY

FUNCTIONAL SUPERVISOR: ROB BURNETT

STATE OF CALIFORNIA - DEPARTMENT OF TRANSPORTATION
Caltrans
DESIGN

P:\proj2\01\47770_plans\pse\147770md003.dgn

LAST REVISION 09-02-10
DATE PLOTTED => 05-NOV-2010
TIME PLOTTED => 14:00

Dist	COUNTY	ROUTE	POST MILES TOTAL PROJECT	SHEET No.	TOTAL SHEETS
01	Men	101	81.9/R83.8	27	61

Edward B Speer 09-02-10
REGISTERED CIVIL ENGINEER DATE

11-1-10
PLANS APPROVAL DATE

REGISTERED PROFESSIONAL ENGINEER
EDWARD B. SPEER
No. C49740
Exp. 9-30-12
CIVIL
STATE OF CALIFORNIA

THE STATE OF CALIFORNIA OR ITS OFFICERS OR AGENTS SHALL NOT BE RESPONSIBLE FOR THE ACCURACY OR COMPLETENESS OF SCANNED COPIES OF THIS PLAN SHEET.

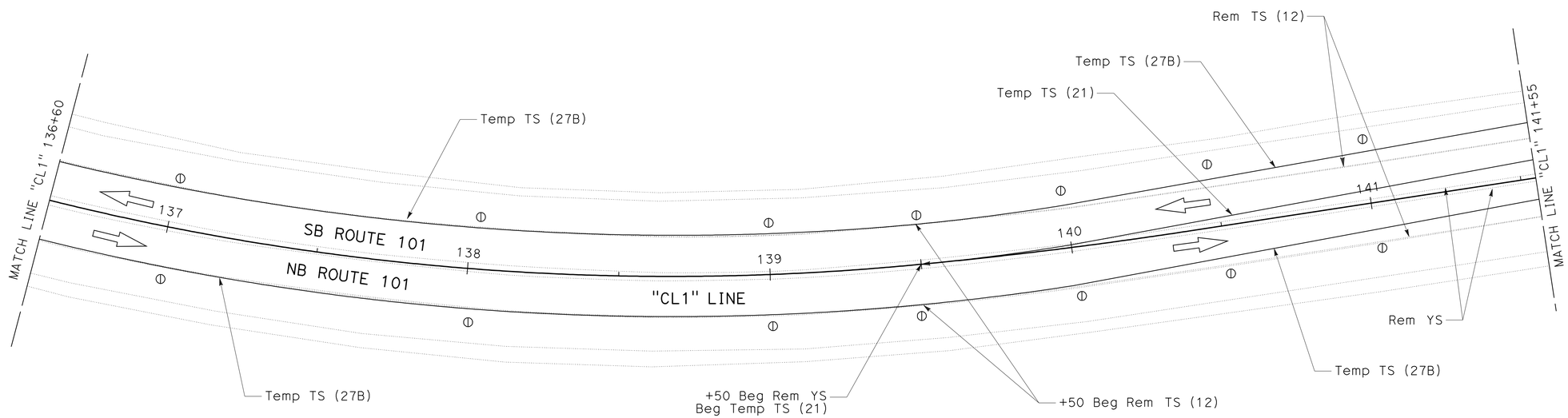

LOCATION 3
TRAFFIC HANDLING PLAN

SCALE: 1" = 20'

TH-4

THIS PLAN ACCURATE FOR TRAFFIC HANDLING WORK ONLY

REVISED BY	DATE REVISED

CALCULATED-DESIGNED BY: ED SPEER
CHECKED BY: RODDY ESTES
FUNCTIONAL SUPERVISOR: ROB BURNETT

STATE OF CALIFORNIA - DEPARTMENT OF TRANSPORTATION
Caltrans
DESIGN

P:\proj2\01\147770_plans\pse\147770md004.dgn

LAST REVISION 09-02-10
DATE PLOTTED => 05-NOV-2010
TIME PLOTTED => 14:00

Dist	COUNTY	ROUTE	POST MILES TOTAL PROJECT	SHEET No.	TOTAL SHEETS
01	Men	101	81.9/R83.8	28	61

Edward B Speer 09-02-10
REGISTERED CIVIL ENGINEER DATE

11-1-10
PLANS APPROVAL DATE

REGISTERED PROFESSIONAL ENGINEER
EDWARD B. SPEER
No. C49740
Exp. 9-30-12
CIVIL
STATE OF CALIFORNIA

THE STATE OF CALIFORNIA OR ITS OFFICERS OR AGENTS SHALL NOT BE RESPONSIBLE FOR THE ACCURACY OR COMPLETENESS OF SCANNED COPIES OF THIS PLAN SHEET.

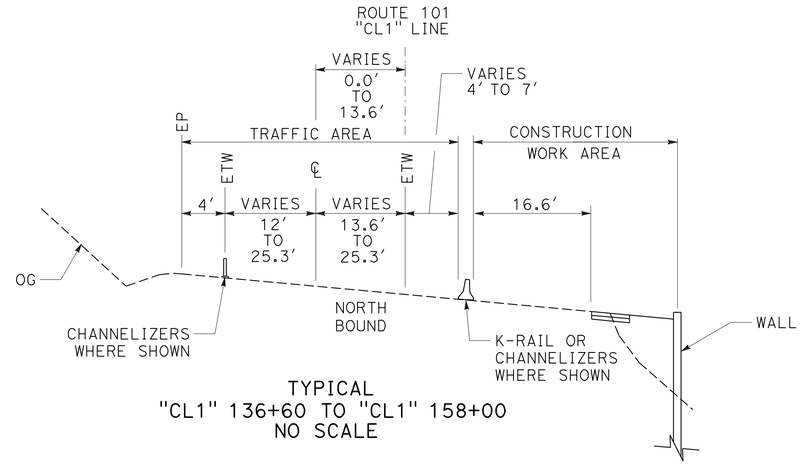

TYPICAL
"CL1" 136+60 TO "CL1" 158+00
NO SCALE

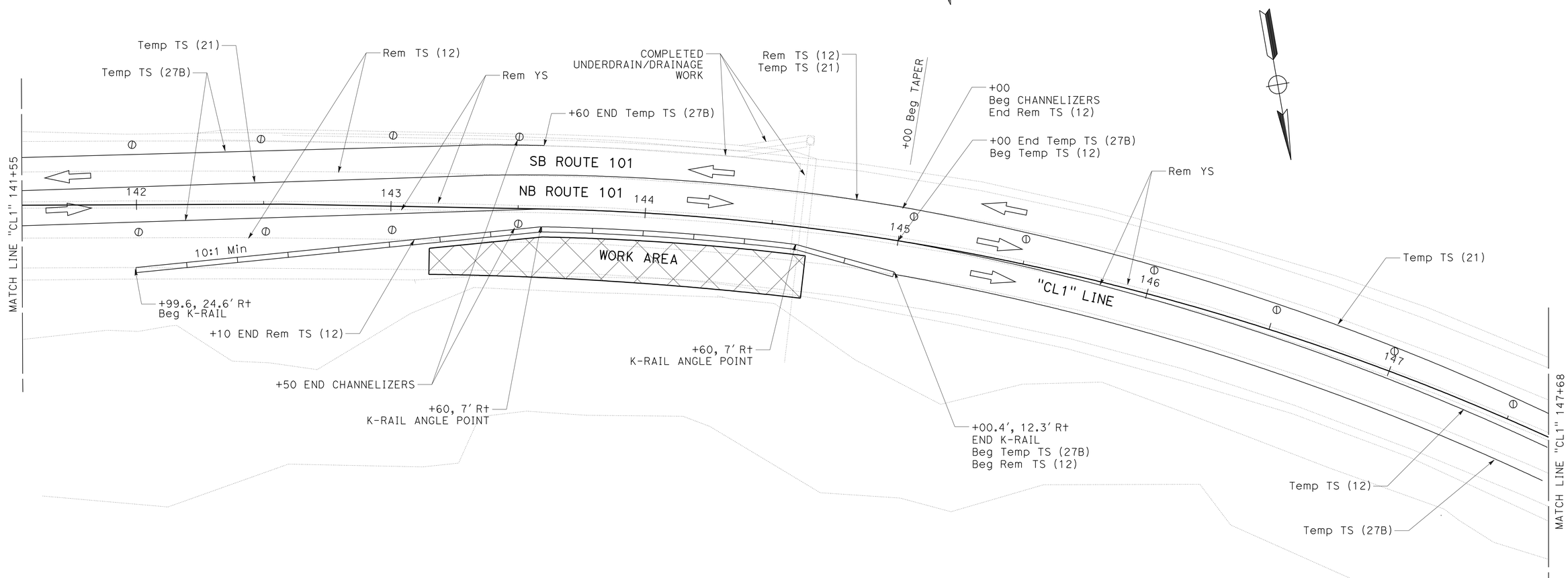

LOCATION 3
TRAFFIC HANDLING PLAN

SCALE: 1" = 20′

TH-5

THIS PLAN ACCURATE FOR TRAFFIC HANDLING WORK ONLY

REVISED BY | DATE REVISED
ED SPEER | RODDY ESTES
CALCULATED-DESIGNED BY | CHECKED BY
FUNCTIONAL SUPERVISOR
ROB BURNETT

STATE OF CALIFORNIA - DEPARTMENT OF TRANSPORTATION
Caltrans
DESIGN

P:\proj2\01\147770_plans\pse\147770md005.dgn

LAST REVISION 09-02-10
DATE PLOTTED => 05-NOV-2010
TIME PLOTTED => 14:00

Dist	COUNTY	ROUTE	POST MILES TOTAL PROJECT	SHEET No.	TOTAL SHEETS
01	Men	101	81.9/R83.8	29	61

Edward B Speer 09-02-10
REGISTERED CIVIL ENGINEER DATE

11-1-10
PLANS APPROVAL DATE

REGISTERED PROFESSIONAL ENGINEER
EDWARD B. SPEER
No. C49740
Exp. 9-30-12
CIVIL
STATE OF CALIFORNIA

THE STATE OF CALIFORNIA OR ITS OFFICERS OR AGENTS SHALL NOT BE RESPONSIBLE FOR THE ACCURACY OR COMPLETENESS OF SCANNED COPIES OF THIS PLAN SHEET.

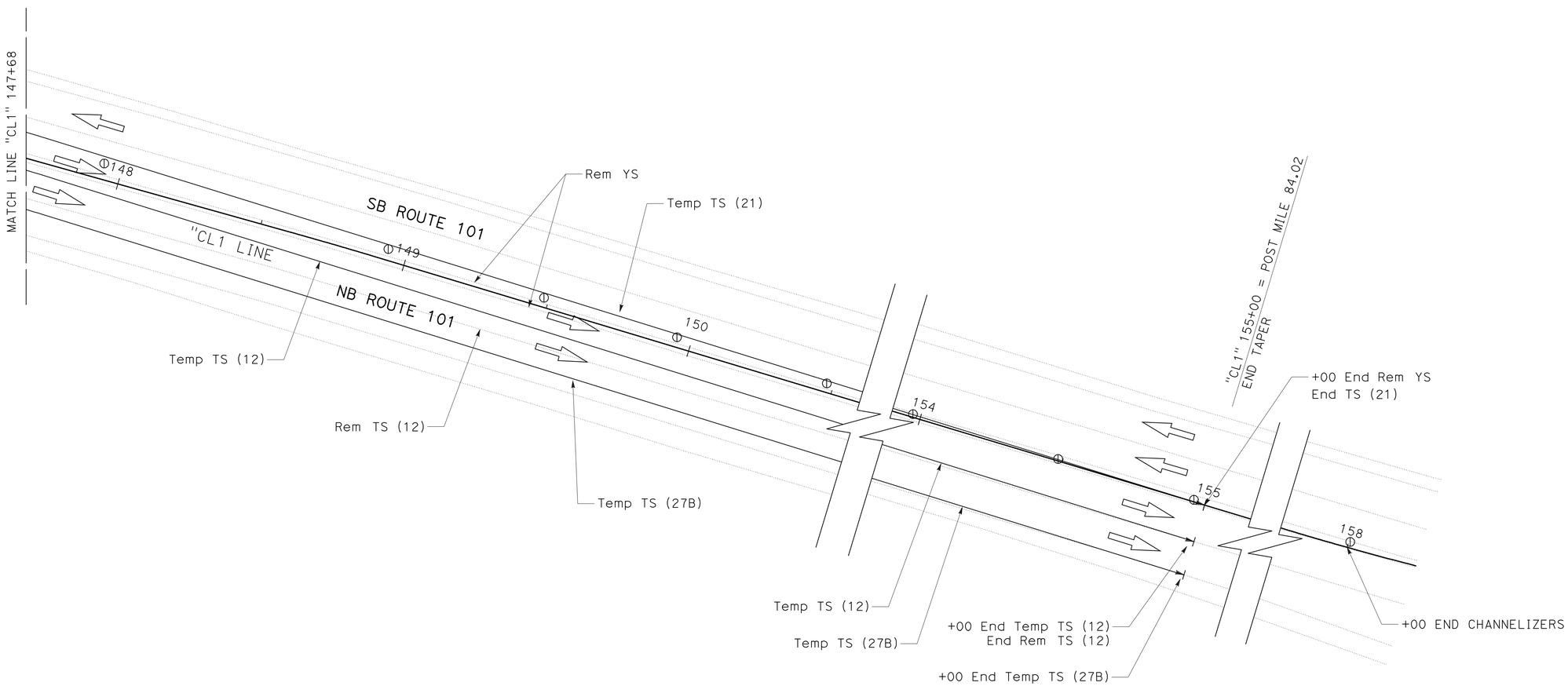

LOCATION 3
TRAFFIC HANDLING PLAN

SCALE: 1" = 20'

TH-6

THIS PLAN ACCURATE FOR TRAFFIC HANDLING WORK ONLY

REVISED BY | DATE REVISED
ED SPEER | RODDY ESTES
CALCULATED-DESIGNED BY | CHECKED BY
FUNCTIONAL SUPERVISOR
ROB BURNETT

STATE OF CALIFORNIA - DEPARTMENT OF TRANSPORTATION
Caltrans
DESIGN

P:\proj2\01\47770_plans\pse\147770md006.dgn

LAST REVISION 09-02-10 | DATE PLOTTED => 05-NOV-2010 | TIME PLOTTED => 14:00

Dist	COUNTY	ROUTE	POST MILES TOTAL PROJECT	SHEET No.	TOTAL SHEETS
01	Men	101	81.9/R83.8	30	61

Edward B Speer 09-02-10
REGISTERED CIVIL ENGINEER DATE

11-1-10
PLANS APPROVAL DATE

REGISTERED PROFESSIONAL ENGINEER
EDWARD B. SPEER
No. C49740
Exp. 9-30-12
CIVIL
STATE OF CALIFORNIA

THE STATE OF CALIFORNIA OR ITS OFFICERS OR AGENTS SHALL NOT BE RESPONSIBLE FOR THE ACCURACY OR COMPLETENESS OF SCANNED COPIES OF THIS PLAN SHEET.

NOTE:

(N) - NOT A SEPARATE PAY ITEM, FOR INFORMATION ONLY.

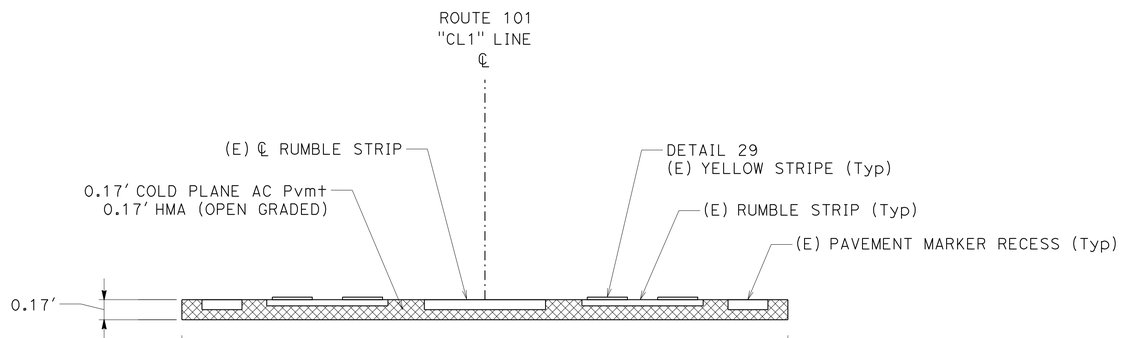

REMOVE YS (N)

"CL1" 41+40 TO "CL1" 55+00
"CL1" 139+50 TO "CL1" 155+00

TEMPORARY PAVEMENT DELINEATION OFFSETS

"CL1" LINE	TS 27B OFFSET (FT)		TS 21 OFFSET (FT)	TS 12 OFFSET (FT)
	SB	NB		
13+00 TO 41+00		R+ 13.3		
41+40		R+ 13.3		
42+00		R+ 11.1	L+ 2.2	
43+00		R+ 7.4	L+ 5.9	
44+00	L+ 25.1	R+ 3.7	L+ 9.6	
45+00 TO 49+00	L+ 25.0	L+ 1.0	L+ 13.0	
50+00	L+ 25.1	L+ 0.7	L+ 13.0	
51+00	L+ 25.2	L+ 0.3	L+ 13.1	
52+00	L+ 25.3	R+ 0.1	L+ 13.2	
52+50	L+ 23.9	R+ 1.7	L+ 11.6	
53+00	L+ 20.7	R+ 5.2	L+ 8.2	
53+50	L+ 17.8	R+ 8.2	L+ 5.1	
54+00	L+ 15.7	R+ 10.5	L+ 2.8	
54+50	L+ 14	R+ 12.3	L+ 1	
55+00 TO 139+50	L+ 13.3	R+ 13.3		
140+00	L+ 14.2	R+ 12.5	L+ 0.9	
141+00	L+ 17.1	R+ 8.9	L+ 4.4	
142+00	L+ 19.9	R+ 6.8	L+ 7.1	
143+00	L+ 23.1	R+ 3	L+ 10.9	
143+50	L+ 24.9	R+ 0.5	L+ 13.2	
144+00			L+ 13.6	
145+00 BACK			L+ 13.3	
145+00 AHEAD		R+ 13.3	L+ 13.3	
145+50		R+ 14	L+ 12.4	R+ 0.8
146+00		R+ 14.7	L+ 11.4	R+ 1.6
146+50		R+ 15.3	L+ 10.5	R+ 2.3
147+00		R+ 15.8	L+ 9.6	R+ 3
147+50		R+ 16.3	L+ 8.7	R+ 3.6
148+00		R+ 17.3	L+ 7.5	R+ 4.7
149+00		R+ 19.6	L+ 5.2	R+ 7.1
150+00		R+ 20.4	L+ 4.3	R+ 8.1
151+00		R+ 21.3	L+ 3.5	R+ 9.1
152+00		R+ 22.1	L+ 2.6	R+ 9.9
153+00		R+ 22.9	L+ 1.8	R+ 10.8
154+00		R+ 23.7	L+ 0.9	R+ 11.8
155+00		R+ 24.5		R+ 12.8

TRAFFIC HANDLING DETAILS

NO SCALE

THD-1

REVISED BY | DATE REVISED
ED SPEER | RODDY ESTES
CALCULATED-DESIGNED BY | CHECKED BY
FUNCTIONAL SUPERVISOR: ROB BURNETT

STATE OF CALIFORNIA - DEPARTMENT OF TRANSPORTATION
Caltrans
DESIGN

P:\proj2\01\47770_plans\pse\147770me001.dgn

LAST REVISION | DATE PLOTTED => 05-NOV-2010 | TIME PLOTTED => 14:00
09-02-10

Dist	COUNTY	ROUTE	POST MILES TOTAL PROJECT	SHEET No.	TOTAL SHEETS
01	Men	101	81.9/R83.8	31	61

Edward B Speer 09-02-10
REGISTERED CIVIL ENGINEER DATE

11-1-10
PLANS APPROVAL DATE

REGISTERED PROFESSIONAL ENGINEER
EDWARD B. SPEER
No. C49740
Exp. 9-30-12
CIVIL
STATE OF CALIFORNIA

THE STATE OF CALIFORNIA OR ITS OFFICERS OR AGENTS SHALL NOT BE RESPONSIBLE FOR THE ACCURACY OR COMPLETENESS OF SCANNED COPIES OF THIS PLAN SHEET.

NOTES:

1. (N) - NOT A SEPARATE PAY ITEM, FOR INFORMATION ONLY
2. * SEE SHEET Q-1 FOR TOTAL PROJECT QUANTITIES

CHANNELIZER QUANTITIES

"CL1" LINE FROM	"CL1" LINE TO	POSITION	SPACE FT	CHANNELIZER (SURFACE MOUNTED) EA
13+00	23+00	R†	50	21
23+00	41+00	R†	100	18
41+00	45+00	R†	50	8
52+00	55+00	R†/L†	50	14
55+00	139+00	R†/L†	100	168
139+00	143+50	R†/L†	50	18
145+00	158+00	L†	50	27
TOTAL				274

TEMPORARY PAVEMENT DELINEATION QUANTITIES

"CL1" LINE FROM	"CL1" LINE TO	POSITION	REMOVE THERMOPLASTIC TRAFFIC STRIPE	TEMPORARY TRAFFIC STRIPE (TAPE) DETAIL 12	TEMPORARY TRAFFIC STRIPE (TAPE) DETAIL 21	TEMPORARY TRAFFIC STRIPE (TAPE) DETAIL 27B	TEMPORARY RAILING (TYPE K)	REMOVE YS (N) HMA (OPEN GRADED)	REMOVE YS (N) COLD PLANE AC PAVEMENT	REMOVE YS (N) (N) REMOVE Pvm† MARKER
			LF	LF	LF	LF	LF	TON	SQYD	EA
41+40	55+00	℄						78	756	116
139+50	155+00	℄						89	861	132
41+40	55+00	L†			2720					
139+50	155+00	L†			3100					
41+40	44+29	R†	289							8
45+00	55+00	L†	1000							22
139+50	143+10	R†	360							8
139+50	145+00	L†	550							13
145+00	155+00	R†	1000							22
13+00	145+00	R†				13,200				
44+00	143+60	L†				9960				
145+00	155+00	R†				1000				
145+00	155+00	R†		1000						
43+50.6	52+06	R†					860			
141+99.6	145+00.4	R†					300			
TOTALS			3199	30,980			1160	*167	*1617	

TRAFFIC HANDLING QUANTITIES

THQ-1

REVISED BY | DATE REVISED
ED SPEER | RODDY ESTES
CALCULATED-DESIGNED BY | CHECKED BY
FUNCTIONAL SUPERVISOR: ROB BURNETT
STATE OF CALIFORNIA - DEPARTMENT OF TRANSPORTATION
Caltrans DESIGN
P:\proj2\01\47770_plans\pse\147770mf001.dgn

LAST REVISION 09-02-10 | DATE PLOTTED => 05-NOV-2010 | TIME PLOTTED => 13:26

Dist	COUNTY	ROUTE	POST MILES TOTAL PROJECT	SHEET No.	TOTAL SHEETS
01	Men	101	81.9/R83.8	32	61

Edward B Speer 09-02-10
REGISTERED CIVIL ENGINEER DATE

11-1-10
PLANS APPROVAL DATE

REGISTERED PROFESSIONAL ENGINEER
EDWARD B. SPEER
No. C49740
Exp. 9-30-12
CIVIL
STATE OF CALIFORNIA

THE STATE OF CALIFORNIA OR ITS OFFICERS OR AGENTS SHALL NOT BE RESPONSIBLE FOR THE ACCURACY OR COMPLETENESS OF SCANNED COPIES OF THIS PLAN SHEET.

LEGEND

- MATCH EXISTING STRIPING
- XX — THERMOPLASTIC TRAFFIC STRIPE DETAIL No.
- RUMBLE STRIP (HMA, GROUND-IN INDENTATIONS)
- DIRECTION OF TRAVEL

ABBREVIATIONS:

RS RUMBLE STRIP
TTS THERMOPLASTIC TRAFFIC STRIPE
CL CENTERLINE

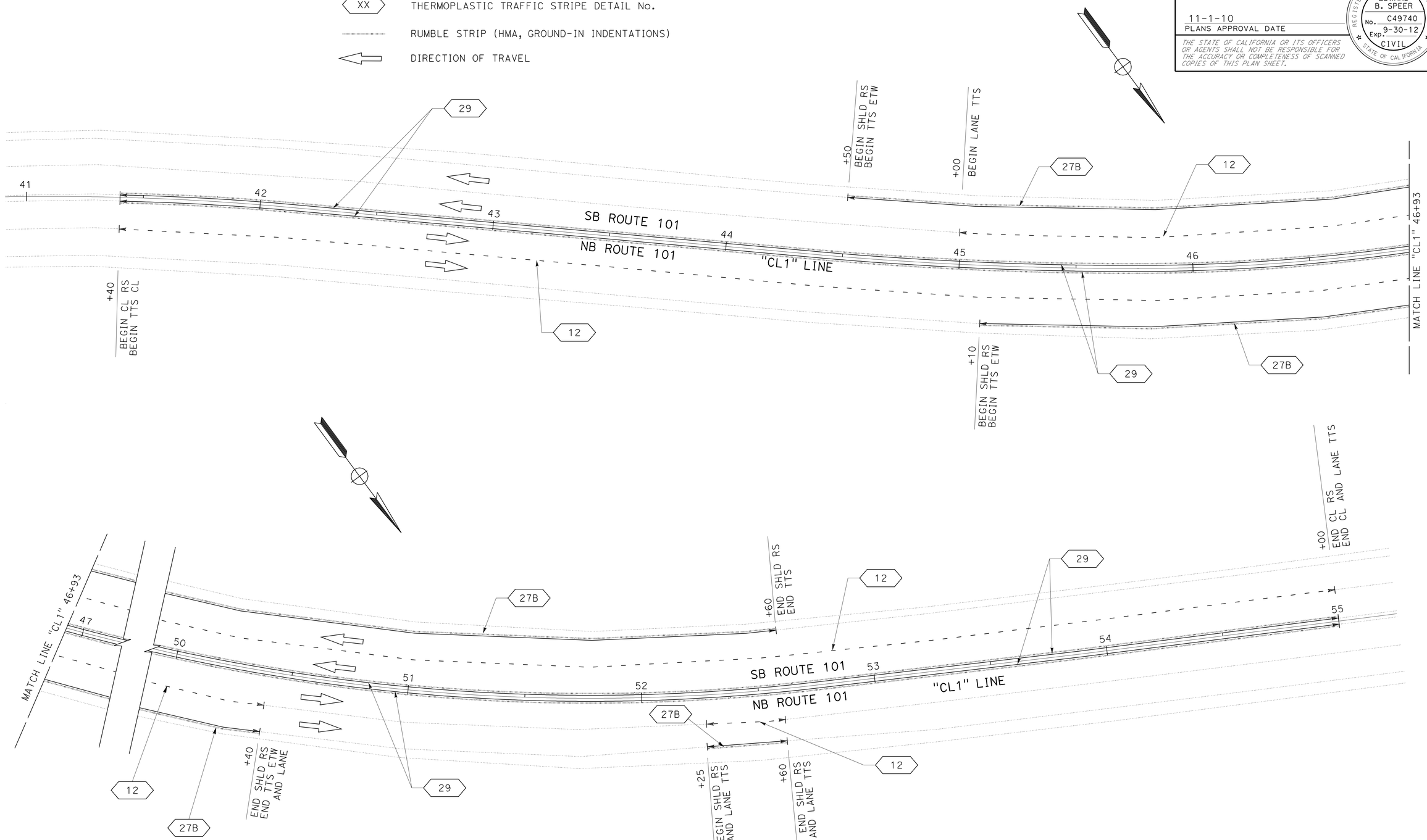

PAVEMENT DELINEATION PLAN

SCALE: 1" = 20'

PD-1

REVISED BY	DATE REVISED
ED SPEER	RODDY ESTES
CALCULATED-DESIGNED BY	CHECKED BY
FUNCTIONAL SUPERVISOR	ROB BURNETT

STATE OF CALIFORNIA - DEPARTMENT OF TRANSPORTATION
Caltrans
DESIGN

P:\proj2\01\47770_plans\pse\147770na001.dgn

LAST REVISION 09-02-10 | DATE PLOTTED => 05-NOV-2010 | TIME PLOTTED => 13:26

Dist	COUNTY	ROUTE	POST MILES TOTAL PROJECT	SHEET No.	TOTAL SHEETS
01	Men	101	81.9/R83.8	33	61

Edward B Speer 09-02-10
REGISTERED CIVIL ENGINEER DATE

11-1-10
PLANS APPROVAL DATE

REGISTERED PROFESSIONAL ENGINEER
EDWARD B. SPEER
No. C49740
Exp. 9-30-12
CIVIL
STATE OF CALIFORNIA

THE STATE OF CALIFORNIA OR ITS OFFICERS OR AGENTS SHALL NOT BE RESPONSIBLE FOR THE ACCURACY OR COMPLETENESS OF SCANNED COPIES OF THIS PLAN SHEET.

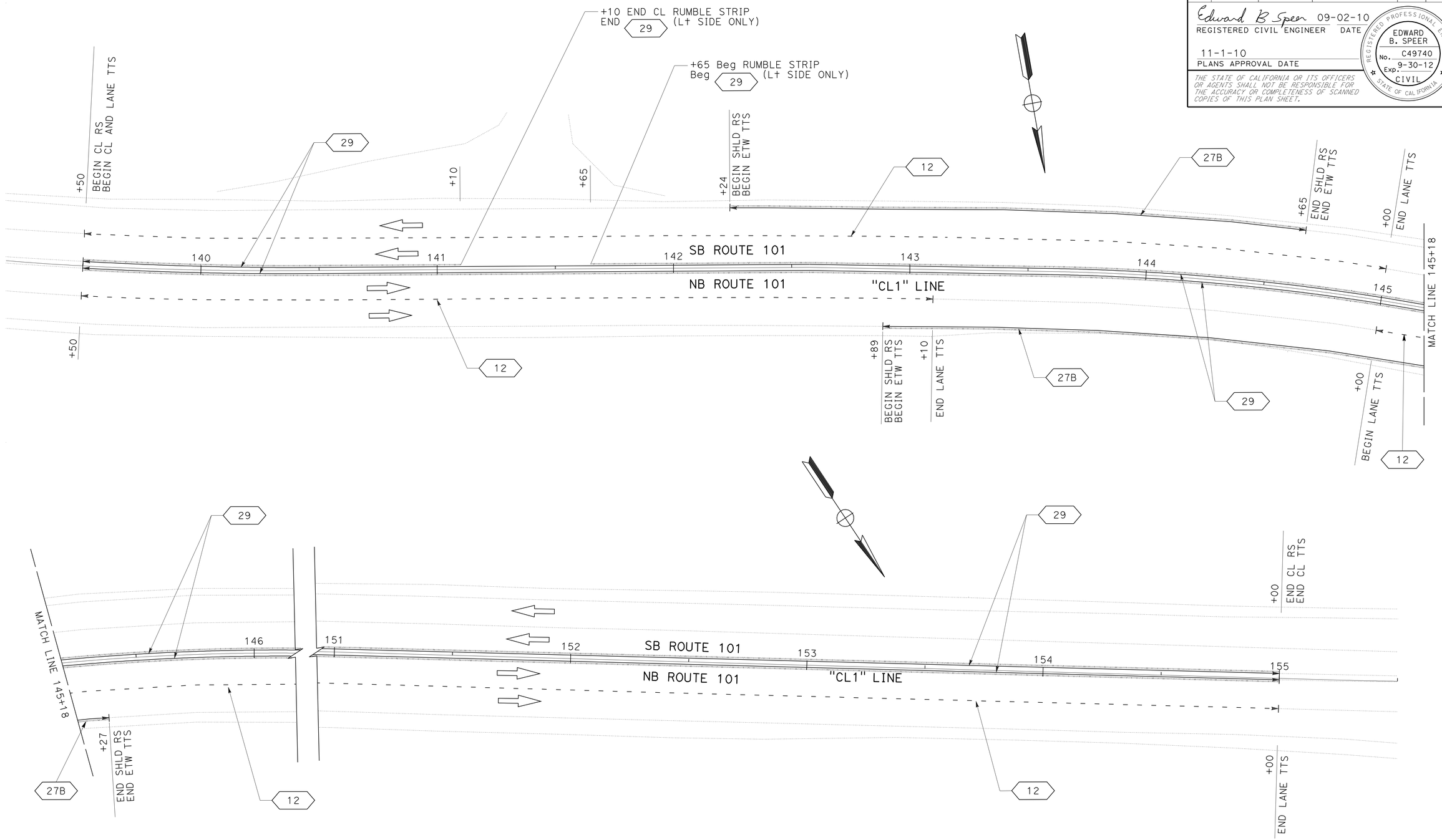

PAVEMENT DELINEATION PLAN

SCALE: 1" = 20'

PD-2

REVISED BY	DATE REVISED
ED SPEER	RODDY ESTES
CALCULATED-DESIGNED BY	CHECKED BY
FUNCTIONAL SUPERVISOR	ROB BURNETT

STATE OF CALIFORNIA - DEPARTMENT OF TRANSPORTATION
Caltrans
DESIGN

P:\proj2\01\47770_plans\pse\147770na002.dgn

LAST REVISION 09-02-10 | DATE PLOTTED => 05-NOV-2010 | TIME PLOTTED => 13:26

Dist	COUNTY	ROUTE	POST MILES TOTAL PROJECT	SHEET No.	TOTAL SHEETS
01	Men	101	81.9/R83.8	34	61

Edward B Speer 09-02-10
REGISTERED CIVIL ENGINEER DATE

11-1-10
PLANS APPROVAL DATE

REGISTERED PROFESSIONAL ENGINEER
EDWARD B. SPEER
No. C49740
Exp. 9-30-12
CIVIL
STATE OF CALIFORNIA

THE STATE OF CALIFORNIA OR ITS OFFICERS OR AGENTS SHALL NOT BE RESPONSIBLE FOR THE ACCURACY OR COMPLETENESS OF SCANNED COPIES OF THIS PLAN SHEET.

NOTE:

1. (N) - NOT A SEPARATE PAY ITEM, FOR INFORMATION ONLY

ABBREVIATIONS

DS DRAINAGE SYSTEM No.

METAL BEAM GUARD RAILING

LOCATION	"CL1" STATION	REMOVE MBGR	MBGR	END ANCHOR ASSEMBLY (TYPE SFT)	ALTERNATIVE FLARED TERMINAL SYSTEM
		LF	LF	EA	EA
1	45+00.5 TO 45+40 RT				1
1	45+08.6 TO 52+96.1 RT	700			
1	45+40.0 TO 52+89.8 RT		775		
1	52+89.8 RT			1	
3	143+15.5 TO 143+55 RT				1
3	143+55 TO 144+58.2 RT		100		
3	144+58.2 RT			1	
TOTAL		700	875	2	2

MARKER (CULVERT)

SHEET NO.	"CL1" STATION	EA
L-1	48+00 LT	1
L-2	52+50 LT	1
L-4	144+65 LT	1
TOTAL		3

ROADWAY QUANTITIES

SHEET NO.	"CL1" STATION	ROADWAY EXCAVATION	DITCH EXCAVATION	(N) EMBANKMENT	(N) DITCH Emb	COLD PLANE AC PAVEMENT	CLASS 2 AGGREGATE SUBBASE	LIGHTWEIGHT FILL (EPS BLOCK)	CUSHION GEOTEXTILE	GASOLINE RESISTANT GEOMEMBRANE	IMPORTED TOPSOIL	CLASS 2 AGGREGATE BASE	HOT MIX ASPHALT (TYPE A)	HOT MIX ASPHALT (OPEN GRADED)	PLACE HOT MIX ASPHALT DIKE TYPE C	PLACE HOT MIX ASPHALT DIKE TYPE F	PLACE HOT MIX ASPHALT DIKE TYPE E	TACK COAT	PERMEABLE MATERIAL (BLANKET)	RSP (LIGHT, METHOD B)	RSP (1/4 TON, METHOD A)	RSP FABRIC	REMARKS
		CY	CY	CY	CY	SQYD	CY	CY	SQYD	SQYD	CY	CY	TON	TON	LF	LF	LF	TON	CY	CY	CY	SQYD	
TH-1,2,3	41+40 TO 55+00					*756								*78				0.16					* FROM SHEET THQ-1
L-2	49+27 TO 50+60 Lt		1.0																				HAND WORK
L-3	73+60.25 TO 76+94.19 Lt		253		3																		
L-1	45+10 TO 48+18 Rt	8479		1073			830	4602	3048	3048		199	290	49				0.39	1679			2152	INCLUDES PAVING OVER DS 1
L-2	48+80 TO 52+60.21 Rt	2911		362			481	1196	1229	1229		124	182	31				0.25	695			981	INCLUDES PAVING OVER DS 3
L-1&2	44+50 TO 52+58 Lt											276	177	30				0.27					OVER DS 1 AND DS 3
L-3	74+30 TO 76+60 Lt										177										1141		
L-3	73+36.01 TO 73+60.25 Lt																			30		34	CUTOFF DITCH OUTFALL
L-4	142+24 TO 144+65 Lt	10			13							31	44	8				0.07					INCLUDES PAVING OVER DS 6
L-4	142+89 TO 145+27 Rt											30	45	8				0.07					INCLUDES PAVING OVER DS 6
L-4	142+89 TO 145+00												3		66	100	41	0.01					* FROM SHEET THQ-1
TH-4,5,6	139+50 TO 155+00					*861								*89				0.18					* FROM SHEET THQ-1
	TOTALS	11,400	254			*1617	1311	5798	4277	4277	177	660	741	293		207		1.40	2374	30	1141	3167	

* FROM SHEET THQ-1

SUMMARY OF QUANTITIES
Q-1

REVISED BY | DATE REVISED
ED SPEER | RODDY ESTES
CALCULATED-DESIGNED BY | CHECKED BY
FUNCTIONAL SUPERVISOR: ROB BURNETT

STATE OF CALIFORNIA - DEPARTMENT OF TRANSPORTATION
Caltrans® DESIGN

P:\proj2\01\47770_plans\pse\147770pa001.dgn

LAST REVISION | DATE PLOTTED => 05-NOV-2010
09-02-10 | TIME PLOTTED => 13:26

Dist	COUNTY	ROUTE	POST MILES TOTAL PROJECT	SHEET No.	TOTAL SHEETS
01	Men	101	81.9/R83.8	35	61

Edward B Speer 09-02-10
REGISTERED CIVIL ENGINEER DATE

11-1-10
PLANS APPROVAL DATE

REGISTERED PROFESSIONAL ENGINEER
EDWARD B. SPEER
No. C49740
Exp. 9-30-12
CIVIL
STATE OF CALIFORNIA

THE STATE OF CALIFORNIA OR ITS OFFICERS OR AGENTS SHALL NOT BE RESPONSIBLE FOR THE ACCURACY OR COMPLETENESS OF SCANNED COPIES OF THIS PLAN SHEET.

NOTE:

1. (N) - NOT A SEPARATE PAY ITEM, FOR INFORMATION ONLY

PAVEMENT DELINEATION QUANTITIES

"CL1" STATION		POSITION	4" THERMOPLASTIC TRAFFIC STRIPE			PAVEMENT MARKER (RETROREFLECTIVE-RECESSED)		RUMBLE STRIP (HMA, GROUND-IN INDENTATIONS)		
			DETAIL 12	DETAIL 27B *	DETAIL 29 *	TYPE D	TYPE G	L+ ETW	CL	R+ ETW
FROM	TO		LF	LF	LF	EA	EA	Sta		
41+40	50+40	R+	900				20			
41+40	55+00	CL			5456	118			27.20	
44+50	52+60	L+		814						
44+50	52+60	L+						8.10		
45+00	55+00	L+	1000				22			
45+10	50+40	R+		534						5.30
52+25	52+60	R+	35	39			1			0.35
139+50	143+10	R+	360				9			
139+50	145+00	L+	550				13			
139+50	141+10	CL							3.20	
141+10	141+65	CL **			55				0.55	
141+65	155+00	CL							26.70	
139+50	155+00	CL			6208	134				
142+24	144+65	L+		245				2.41		
142+89	145+27	R+		242						2.38
145+00	155+00	R+	1000				22			
SUBTOTAL			3845	1874	11,719	252	87	10.51	57.65	8.03
TOTAL			17,438			339		76.20		

* INCLUDES 2' OVERLAP AT EACH MATCH EXISTING STRIPING LOCATION
** DETAIL 29 AND RUMBLE STRIP RIGHT HALF ONLY

TEMPORARY EROSION CONTROL

LOCATION	TEMPORARY SILT FENCE	TEMPORARY DRAINAGE INLET PROTECTION	TEMPORARY REINFORCED SILT FENCE (TYPE 2)	TEMPORARY CHECK DAM
	LF	EA	LF	LF
1	537	2		60
2		1		
3	67	2	86	
TOTAL	604	5	86	60

TEMPORARY FENCE (TYPE ESA)

LOCATION	TEMPORARY FENCE (TYPE ESA)
	LF
1	373
3	81
TOTAL	454

PERMANENT EROSION CONTROL

LOCATION	EROSION CONTROL (HYDRO-SEED)	EROSION CONTROL (COMPOST BLANKET)	FIBER ROLLS	(N) STRAW	(N) FIBER	(N) PURE LIVE SEED	(N) STABILIZING EMULSION
	SQFT	CY	LF	TON	LB	LB	LB
1	29,835	47	1590	1.4	1400	62	42
2	43,888	67	635	2.0	2000	89	60
3	6570	13		0.4	400	18	12
TOTAL	80,293	127	2225				

SUMMARY OF QUANTITIES
Q-2

REVISED BY | DATE REVISED
ED SPEER | RODDY ESTES
CALCULATED-DESIGNED BY | CHECKED BY
FUNCTIONAL SUPERVISOR: ROB BURNETT
STATE OF CALIFORNIA - DEPARTMENT OF TRANSPORTATION
Caltrans DESIGN
P:\proj2\01\47770_plans\pse\147770pa002.dgn

LAST REVISION 09-02-10 | DATE PLOTTED => 05-NOV-2010 | TIME PLOTTED => 13:26

DIST	COUNTY	ROUTE	POST MILES TOTAL PROJECT	SHEET NO.	TOTAL SHEETS
01	Men	101	81.9/R83.8	36	61

Randell D. Hiatt
REGISTERED CIVIL ENGINEER

June 6, 2008
PLANS APPROVAL DATE

REGISTERED PROFESSIONAL ENGINEER
Randell D. Hiatt
No. C50200
Exp. 6-30-09
CIVIL
STATE OF CALIFORNIA

The State of California or its officers or agents shall not be responsible for the accuracy or completeness of electronic copies of this plan sheet.

To accompany plans dated 11-1-10

NOTES:

1. When necessary to place dike in front of face of guard railing, only Type C dike may be used. For dike details, see Standard Plan A87B.
2. For standard railing post embedment, see Standard Plans A77C3.
3. Guard railing delineation to be used where shown on the Project Plans.
4. When dike or curb is placed under guard railing, the maximum height of the dike or curb shall be 4". Mountable dike should not be used. For dike and curb details, see Revised Standard Plans RSP A87A and Standard Plan A87B.
5. For details of typical distance between the face of rail and hinge point, see Standard Plan A77C3.

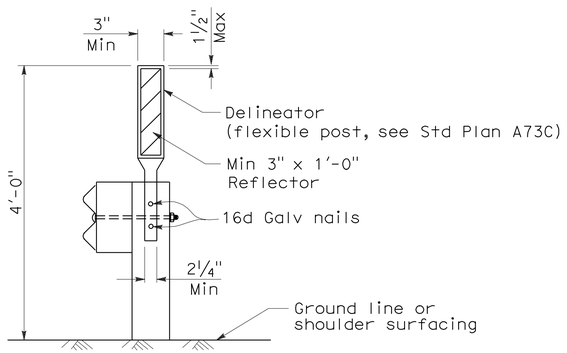

GUARD RAILING DELINEATION

See Note 3

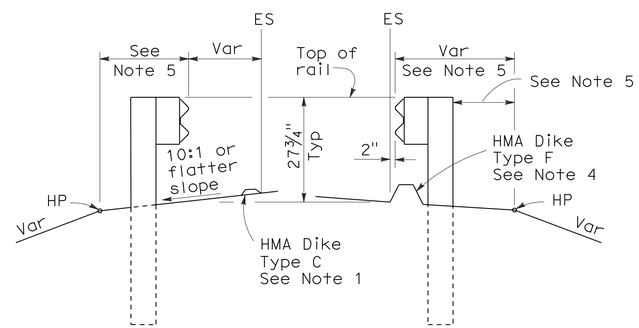

DIKE POSITIONING

See Note 1

STATE OF CALIFORNIA
DEPARTMENT OF TRANSPORTATION

METAL BEAM GUARD RAILING TYPICAL RAILING DELINEATION AND DIKE POSITIONING DETAILS

NO SCALE

RSP A77C4 DATED JUNE 6, 2008 SUPERSEDES STANDARD PLAN A77C4
DATED MAY 1, 2006 - PAGE 47 OF THE STANDARD PLANS BOOK DATED MAY 2006.

REVISED STANDARD PLAN RSP A77C4

2006 REVISED STANDARD PLAN RSP A77C4

12-10-07

DIST	COUNTY	ROUTE	POST MILES TOTAL PROJECT	SHEET NO.	TOTAL SHEETS
01	Men	101	81.9/R83.8	37	61

Randell D. Hiatt
REGISTERED CIVIL ENGINEER

June 6, 2008
PLANS APPROVAL DATE

REGISTERED PROFESSIONAL ENGINEER Randell D. Hiatt No. C50200 Exp. 6-30-09 CIVIL STATE OF CALIFORNIA

The State of California or its officers or agents shall not be responsible for the accuracy or completeness of electronic copies of this plan sheet.

To accompany plans dated 11-1-10

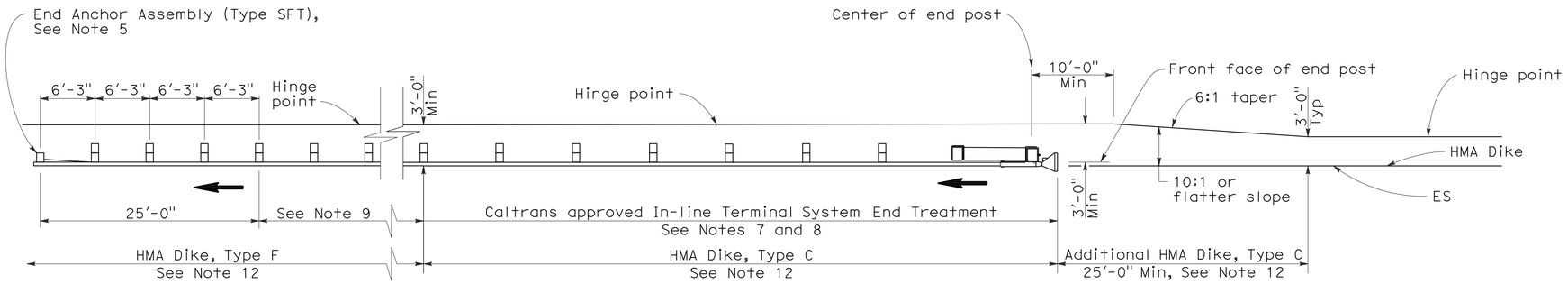

TYPE 11A LAYOUT

(EMBANKMENT GUARD INSTALLATION WITH IN-LINE END TREATMENT AT TRAFFIC APPROACH END OF RAILING)
See Note 6

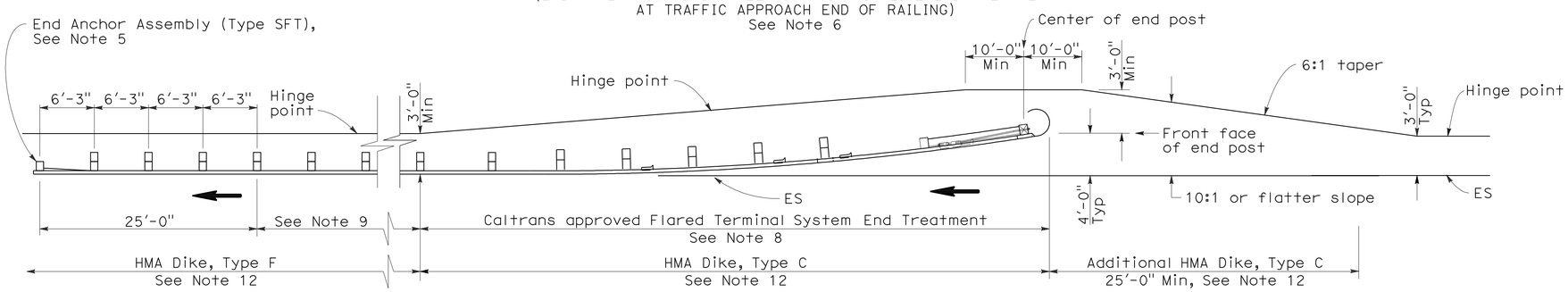

TYPE 11B LAYOUT

(EMBANKMENT GUARD RAILING INSTALLATION WITH FLARED END TREATMENT AT TRAFFIC APPROACH END OF RAILING)
See Note 6

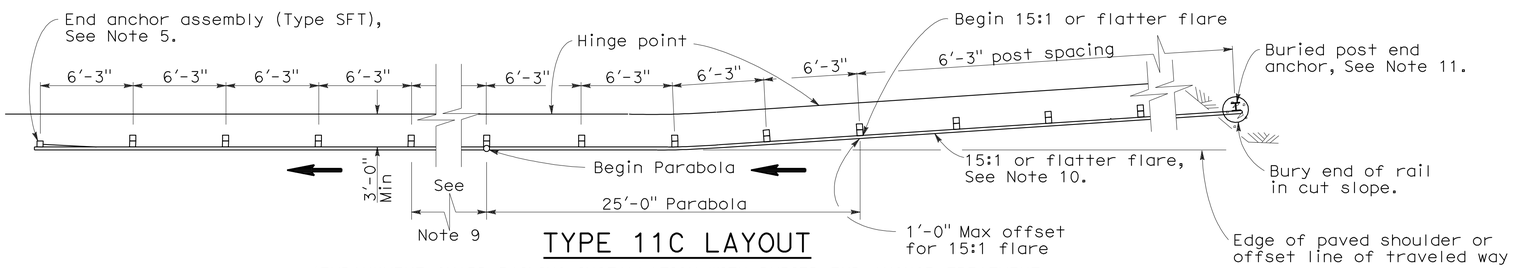

TYPE 11C LAYOUT

(EMBANKMENT GUARD RAILING INSTALLATION WITH BURIED END ANCHOR TREATMENT AT TRAFFIC APPROACH END OF RAILING)
See Notes 6 and 12

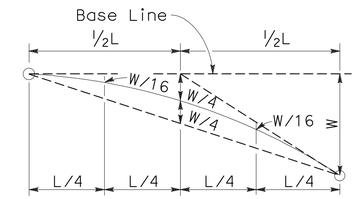

TYPICAL PARABOLIC LAYOUT

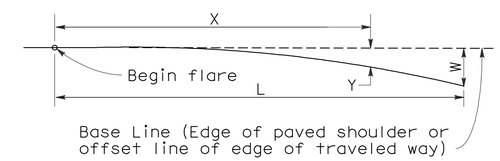

$$Y = \frac{WX^2}{L^2}$$

Y = Offset from base line
W = Maximum offset
X = Distance along base line
L = Length of flare

PARABOLIC FLARE OFFSETS

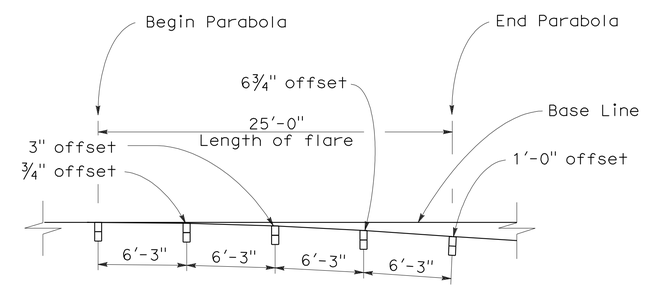

TYPICAL FLARE OFFSETS FOR 1 FOOT MAX END OFFSET

NOTES:

1. Line post, blocks and hardware to be used are shown on Standard Plans A77A1, A77A2, A77B1, A77C1, and A77C2.
2. Guard rail post spacing to be 6'-3" center to center, except as otherwise noted.
3. Except as noted, line posts are 6" x 8" x 6'-0" wood with 6" x 8" x 1'-2" wood blocks. W6 x 9 steel posts, 6'-0" in length, with 6" x 8" x 1'-2" notched wood blocks or recycled plastic blocks may be used for 6" x 8" x 6'-0" wood post with 6" x 8" x 1'-2" wood blocks where applicable and when specified.
4. Direction of adjacent traffic indicated by ⟶.
5. For End Anchor Assembly (Type SFT) details, see Standard Plan A77H1.
6. Layout Types 11A, 11B or 11C are typically used where guard railing is recommended to shield embankment slopes and a crashworthy end treatment is required for only one direction of traffic.
7. In-line Terminal System End Treatments are used where site conditions will not accommodate a flared end treatment.
8. The type of terminal system end treatment to be used will be shown on the Project Plans.
9. Dependent on site conditions (embankment height and side slope), construction of additional guard railing (length equal to multiples of 12'-6" with 6'-3" post spacing) may be advisable.
10. The 15:1 or flatter flare used with buried end anchors is based on the edge of the paved shoulder or offset line of edge of the traveled way. The length of guard railing within the 15:1 or flatter flare is based on site conditions and should be a length equal to multiples of 12'-6".
11. For details of the buried post end anchor used with Type 11C Layout, see Standard Plan A77I2.
12. Where placement of dike is required with guard railing installations, see Revised Standard Plan RSP A77C4 for dike positioning details.

STATE OF CALIFORNIA
DEPARTMENT OF TRANSPORTATION

METAL BEAM GUARD RAILING TYPICAL LAYOUTS FOR EMBANKMENTS

NO SCALE

RSP A77E1 DATED JUNE 6, 2008 SUPERSEDES STANDARD PLAN A77E1
DATED MAY 1, 2006 - PAGE 48 OF THE STANDARD PLANS BOOK DATED MAY 2006.

REVISED STANDARD PLAN RSP A77E1

2006 REVISED STANDARD PLAN RSP A77E1

12-10-07

DIST	COUNTY	ROUTE	POST MILES TOTAL PROJECT	SHEET NO.	TOTAL SHEETS
01	Men	101	81.9/R83.8	38	61

Raymond Don Tsztoo
REGISTERED CIVIL ENGINEER

June 6, 2008
PLANS APPROVAL DATE

REGISTERED PROFESSIONAL ENGINEER
Raymond Don Tsztoo
No. C37332
Exp. 6-30-08
CIVIL
STATE OF CALIFORNIA

The State of California or its officers or agents shall not be responsible for the accuracy or completeness of electronic copies of this plan sheet.

To accompany plans dated 11-1-10

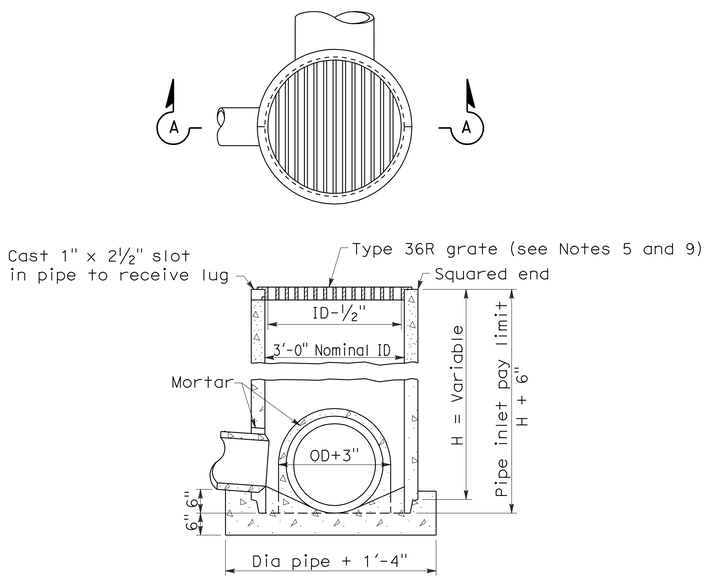

SECTION A-A

TYPE GCP

CONCRETE PIPE INLET WITH GRATE

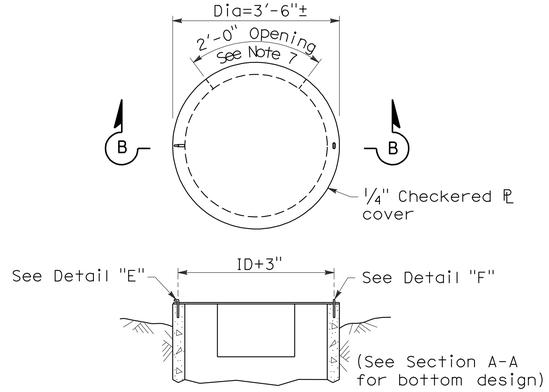

SECTION B-B

TYPE OCP or OCPI

CONCRETE PIPE INLET WITH STEEL COVER
(See Note 6)

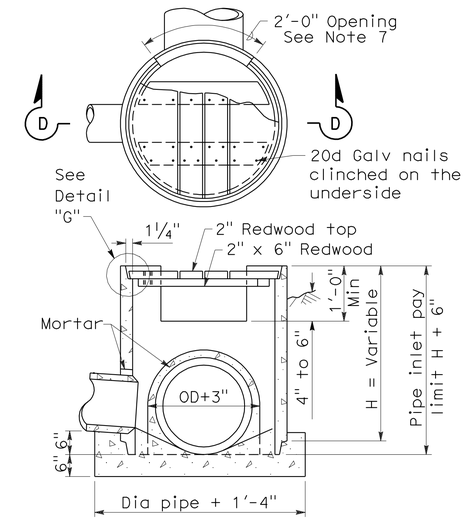

SECTION D-D

TYPE OCP or OCPI

CONCRETE PIPE INLET WITH REDWOOD COVER
(See Notes 6 and 10)

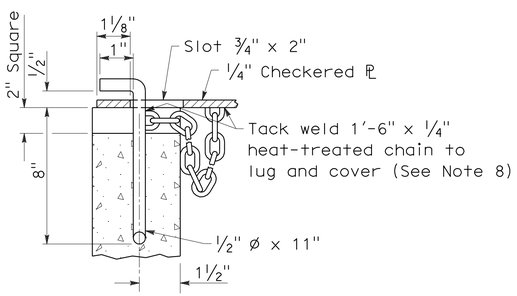

DETAIL "E"

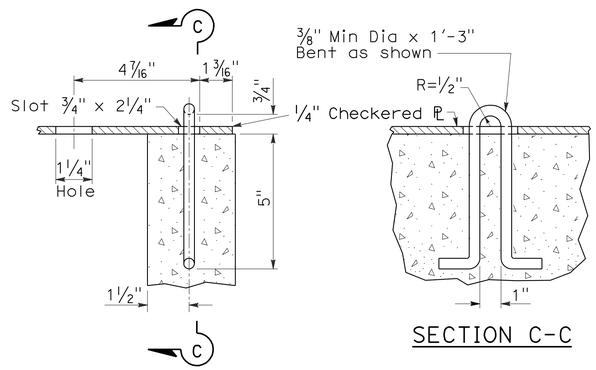

DETAIL "F"

SECTION C-C

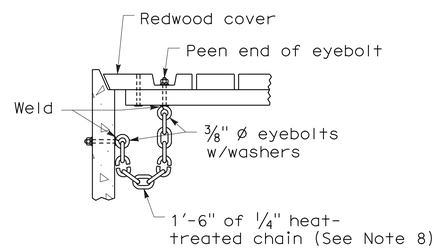

DETAIL "G"

NOTES:

1. For details of steel pipe inlets, see Standard Plan D75A.
2. For details of ladder and steps and when ladder or steps are required, see Standard Plan D75C.
3. Inlet pipes shall not protrude into basin.
4. Except for inlets used for junction boxes, basin floors shall have minimum slope of 4:1 from all directions toward outlet pipe, and a wood trowel finish.
5. See Revised Standard Plan RSP D77A and Standard Plan D77B for Grate and Frame Details and Weights of Miscellaneous Iron and Steel.
6. Designation of Type OCPI pipe inlets on plans indicates trash racks are to be furnished and installed on all side openings. See Standard Plan D75C for Trash Rack details.
7. More than one side opening may be required. Location and number as ordered by the Engineer. Opening may be cast in pipe.
8. Chain to be provided when specified.
9. Place pipe so bars of grate will be parallel with main surface flow.
10. Redwood covers shall only be placed at locations designated on the plans.

STATE OF CALIFORNIA
DEPARTMENT OF TRANSPORTATION

CONCRETE PIPE INLETS

NO SCALE

RSP D75B DATED JUNE 6, 2008 SUPERSEDES STANDARD PLAN D75B
DATED MAY 1, 2006 - PAGE 153 OF THE STANDARD PLANS BOOK DATED MAY 2006.

REVISED STANDARD PLAN RSP D75B

2006 REVISED STANDARD PLAN RSP D75B

5-20-08

DIST	COUNTY	ROUTE	POST MILES TOTAL PROJECT	SHEET NO.	TOTAL SHEETS
01	Men	101	81.9/R83.8	39	61

Raymond Don Tsztoo
REGISTERED CIVIL ENGINEER

January 18, 2008
PLANS APPROVAL DATE

REGISTERED PROFESSIONAL ENGINEER
Raymond Don Tsztoo
No. C37332
Exp. 6-30-08
CIVIL
STATE OF CALIFORNIA

The State of California or its officers or agents shall not be responsible for the accuracy or completeness of electronic copies of this plan sheet.

To accompany plans dated 11-1-10

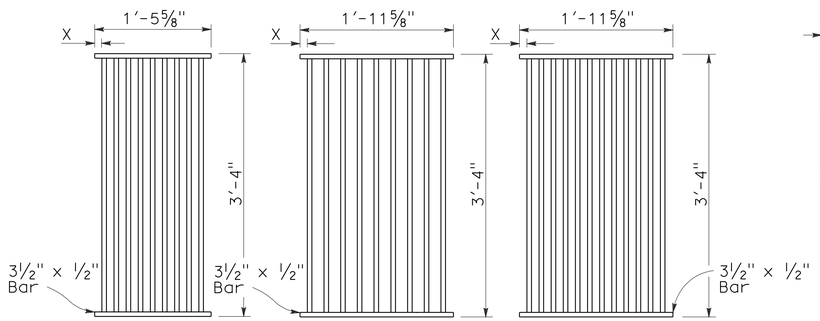

TYPE 18-9

1⅜" Clear spacing. Use within the roadbed on highways where bicycles and pedestrians are excluded.

TYPE 24-9

2" Clear spacing. Use in locations off the roadbed on all types of highways.

TYPE 24-12

1⅜" Clear spacing. Use within the roadbed on highways where bicycles and pedestrians are excluded.

RECTANGULAR GRATE DETAILS

(See table below)

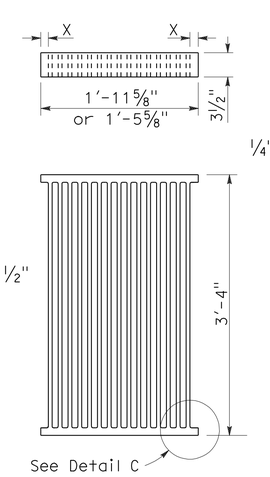

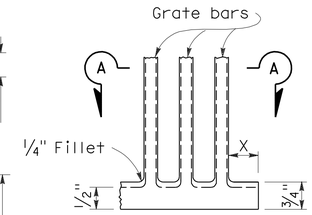

DETAIL C

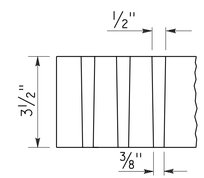

SECTION A-A

ALTERNATIVE CAST NODULAR IRON GRATE OR CAST STEEL GRATE

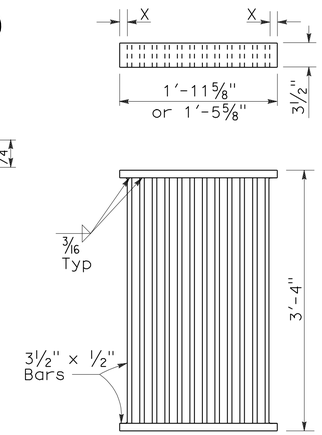

ALTERNATIVE WELDED GRATE

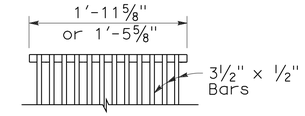

CAST END BLOCK

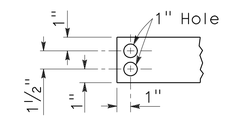

END OF BAR

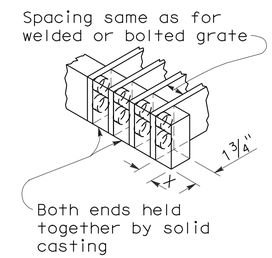

ALTERNATIVE CAST NODULAR IRON OR CAST STEEL END BLOCK GRATE

NOTES:

1. Grate type numbers refer to approximate width of grate in inches and number of bars, respectively.
2. Contractor has the option of using cast nodular iron, cast steel, welded, bolted, or cast end block grate.
3. See Special Provisions for requirements pertaining to galvanizing or asphalt dipping of grates and frames.
4. Rounded top of bars optional on all grates.
5. Pipe inlets with a grate shall be placed so that bars parallel direction of principle surface flow.
6. Full penetration butt welds may be substituted for the fillet welds on all anchors.
7. Standard square, hexagon, round or equivalent headed anchors may be substituted for the right angle hooks on the anchors shown on this plan.
8. Grate and frame weights are based on welded grates (weights of face angles, steps, protection bars, etc. are not included).

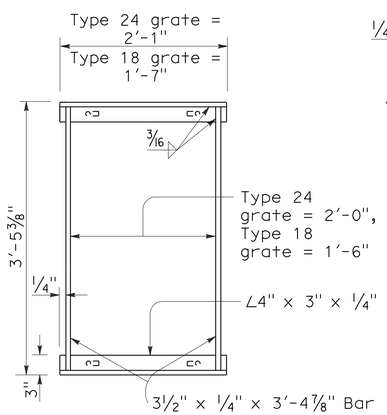

TYPICAL FRAME

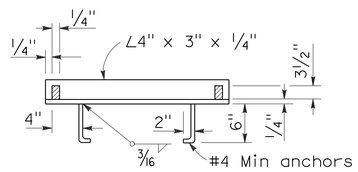

CROSS SECTION

(Thru frame)

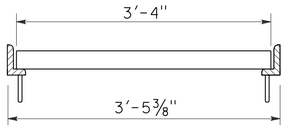

LONGITUDINAL SECTION

(Thru frame and grate)

RECTANGULAR FRAME DETAILS

(For all rectangular grates)

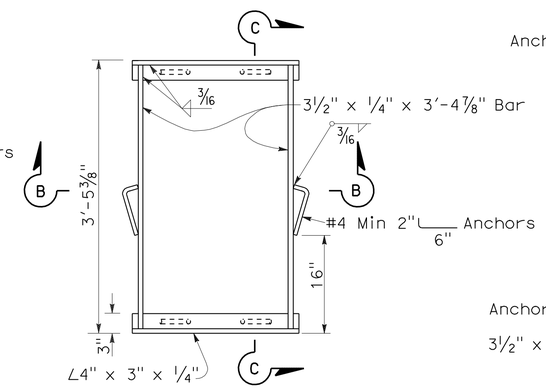

TYPICAL FRAME

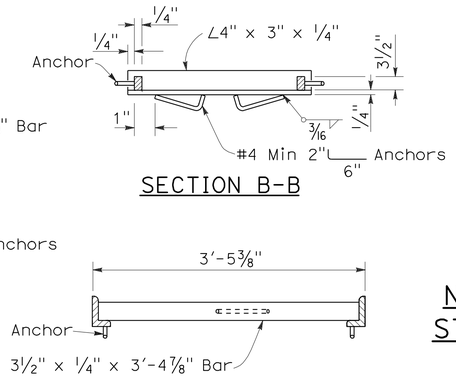

SECTION B-B

SECTION C-C

ALTERNATIVE ANCHOR FOR RECTANGULAR FRAME

(For details not shown, See Rectangular Frame Details)

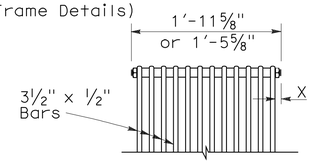

BOLTED END BLOCK

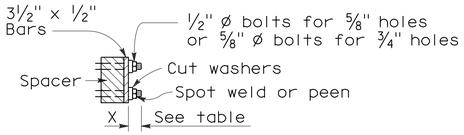

BOLTING DETAIL

ALTERNATIVE BOLTED GRATE

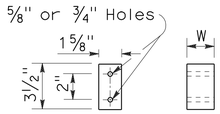

BAR SPACER

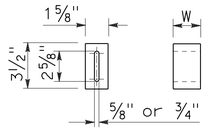

ALTERNATIVE SPACER

W = 1⅜" or 2"

GRATE BAR SPACING TABLE

TYPE	No. OF BARS	CLEAR BAR SPACING	X
18-9	9	1⅜"	1 1/16"
24-9	9	2"	1 9/16"
24-12	12	1⅜"	1¼"

INLET TYPE	COVER TYPE	WEIGHT LB
OS	PLATE	174
OL-7	PLATE	170
OL-10	PLATE	170
OL-14	PLATE	170
OL-21	PLATE	170
OCP	PLATE	112
OCPI	PLATE	112
OCPI	REDWOOD	42
OMP	PLATE	177
OMPI	PLATE	177

INLET TYPE	GRATE TYPE	No. OF GRATES	WEIGHT LB
GDO	24-12	2	634
GOL-7	24-12	1	326
GOL-10	24-12	1	326
GO,G1,G2,G3,G4 (TYPE 24)	24-9	1	263
	24-12	1	326
G4 (TYPE 18),G5,G6	18-9	1	249
GT1	18-9	2	498
GT2	18-9	2	498
GT3	24-12	2	652
GT4	24-12	2	652
TRASH RACK			22

BASIS FOR MISC IRON & STEEL FINAL PAY WEIGHTS FOR DRAINAGE INLETS

(See General Notes, No 8)

STATE OF CALIFORNIA
DEPARTMENT OF TRANSPORTATION

GRATE DETAILS

NO SCALE

RSP D77A DATED JANUARY 18, 2008 SUPERSEDES STANDARD PLAN D77A DATED MAY 1, 2006 - PAGE 155 OF THE STANDARD PLANS BOOK DATED MAY 2006.

REVISED STANDARD PLAN RSP D77A

2006 REVISED STANDARD PLAN RSP D77A

12-14-07

DIST	COUNTY	ROUTE	POST MILES TOTAL PROJECT	SHEET NO.	TOTAL SHEETS
01	Men	101	81.9/R83.8	40	61

Raymond Don Tsztoo
REGISTERED CIVIL ENGINEER

June 6, 2008
PLANS APPROVAL DATE

REGISTERED PROFESSIONAL ENGINEER
Raymond Don Tsztoo
No. C37332
Exp. 6-30-08
CIVIL
STATE OF CALIFORNIA

The State of California or its officers or agents shall not be responsible for the accuracy or completeness of electronic copies of this plan sheet.

To accompany plans dated 11-1-10

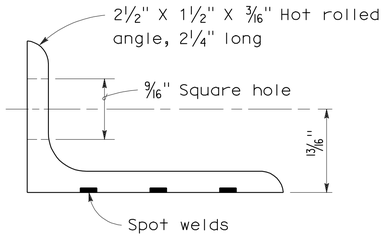

ANGLE

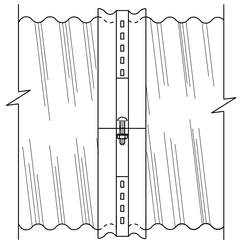

SIDE VIEW
ANGLE

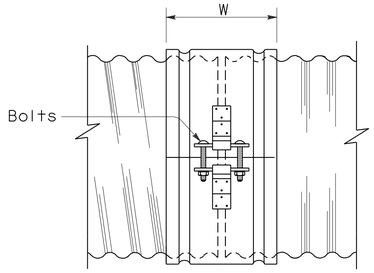

SIDE VIEW
SINGLE BAR AND STRAP

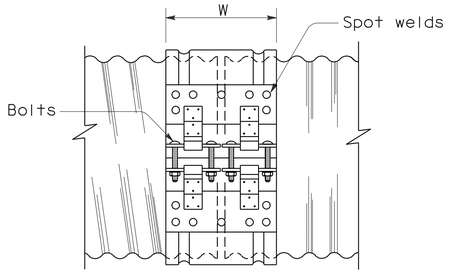

SIDE VIEW
DOUBLE BAR AND STRAP

NOTES:

1. All ferrous metal coupling band connection hardware shall be galvanized or electroplated in accordance with the Standard Specifications.
2. Dimensions and thicknesses shown are minimum.
3. Spot welds shall develop minimum required strength of strap.
4. Fillet welds of equivalent strength may be substituted for spot welds or rivets.
5. Dimension depends upon whether end condition is lips up or lips down.

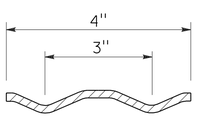

SECTION

H-4 HUGGER BAND

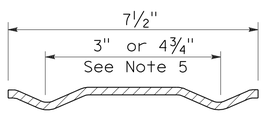

SECTION

H-7 HUGGER BAND

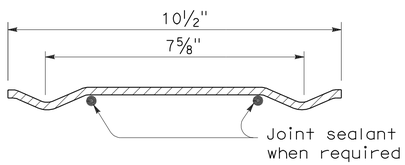

SECTION

H-10 HUGGER BAND

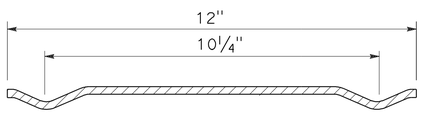

SECTION

H-12 HUGGER BAND

HUGGER COUPLING BANDS

STATE OF CALIFORNIA
DEPARTMENT OF TRANSPORTATION

CORRUGATED METAL PIPE COUPLING DETAILS No. 4 HUGGER COUPLING BANDS

NO SCALE

RSP D97D DATED JUNE 6, 2008 SUPERSEDES STANDARD PLAN D97D
DATED MAY 1, 2006 - PAGE 186 OF THE STANDARD PLANS BOOK DATED MAY 2006.

REVISED STANDARD PLAN RSP D97D

2006 REVISED STANDARD PLAN RSP D97D

3-24-08

DIST	COUNTY	ROUTE	POST MILES TOTAL PROJECT	SHEET NO.	TOTAL SHEETS
01	Men	101	81.9/R83.8	41	61

Raymond Don Tsztoo
REGISTERED CIVIL ENGINEER

June 6, 2008
PLANS APPROVAL DATE

REGISTERED PROFESSIONAL ENGINEER Raymond Don Tsztoo No. C37332 Exp. 6-30-08 CIVIL STATE OF CALIFORNIA

The State of California or its officers or agents shall not be responsible for the accuracy or completeness of electronic copies of this plan sheet.

To accompany plans dated 11-1-10

ANNULAR AND HELICAL PROFILE

COUPLING TYPE	PIPE CORRUGATION	PIPE SIZE	W OR A	PIPE WALL THICKNESS CSP	PIPE WALL THICKNESS CAP	BAND THICKNESS CSP	BAND THICKNESS CAP	BAR AND STRAP (CSP ONLY) STRAP THICKNESS	BOLTS Dia	BAR Dia	BAR YIELD STRENGTH	ANGLE DIMENSIONS CSP	ANGLE DIMENSIONS CAP	BOLTS (No. - Dia) CSP	BOLTS (No. - Dia) CAP	RIVETS ANGLE TO BAND CSP	RIVETS ANGLE TO BAND CAP	SPOT WELDS ANGLE TO BAND CSP
TWO PIECE INTEGRAL FLANGE	1½" × ¼"	6"-10"	7"	0.064"-0.079"	0.060"	0.064"	0.060"							2-⅜"	2-⅜"			
	2⅔" × ½"	12"-24"	12"		0.060"-0.105"		0.060"								3-½"			
UNIVERSAL	2⅔" × ½"	THROUGH 36"	12"	0.064"-0.138"	0.060"-0.135"	0.064"	0.060"	0.079"	½"	⅞"	32 ksi	2" × 2" × 3/16"	2" × 2" × 3/16"	3-½"	3-½"	3-⅜"	3-⅜"	5-½"
		42"-60"	16¼"	0.064"-0.168"	0.060"-0.164"	0.064"	0.060"	DOUBLE 0.079"	½"	⅞"	32 ksi	2" × 2" × ¼"	2" × 2" × ¼"	4-½"	4-½"	5-⅜"	5-⅜"	
ANNULAR	2⅔" × ½"	THROUGH 36"	12"	0.064"-0.138"	0.060"-0.135"	0.064"	0.060"					2" × 2" × 3/16"	2" × 2" × 3/16"	3-½"	3-½"	3-⅜"	3-⅜"	5-½"
		42"-60"	12"	0.064"-0.079"		0.064"						2" × 2" × 3/16"		3-½"		3-⅜"		5-½"
		42"-60"	12"	0.109"-0.168"	0.135"-0.164"	0.064"	0.075"					2" × 2" × ¼"	2" × 2" × ¼"	3-½"	3-½"	5-⅜"	5-⅜"	
		66"-72"	24"		0.164"		0.105"						2" × 2" × ¼"		5-½"		5-½"	
		66"-84"	24"	0.109"-0.168"		0.064"						2" × 2" × ¼"		5-½"		7-⅜"		
		42"-54"	12"		0.060"-0.105"		0.060"						2" × 2" × 3/16"		3-½"		3-⅜"	
	3" × 1"	48"-60"	14"	0.064"-0.079"		0.064"						2" × 2" × 3/16"		3-½"		3-⅜"		5-½"
		48"-60"	14"	0.109"		0.064"						2" × 2" × 3/16"		3-½"		5-⅜"		
		66"-120"	25"	0.064"-0.109"		0.064"						2" × 2" × 3/16"		5-½"		9-⅜"		
		42"-60"	14"		0.060"-0.105"		0.060"						2" × 2" × 3/16"		3-½"		5-⅜"	
		42"-60"	14"		0.135"		0.075"						2" × 2" × ¼"		3-½"		5-⅜"	
		66"-96"	25"		0.060"-0.135"		0.060"						2" × 2" × ¼"		5-½"		7-⅜"	
		96"-108"	25"		0.135"		0.075"						2" × 2" × ¼"		5-½"		7-⅜"	
HELICAL	2⅔" × ½"	THROUGH 36"	12"	0.064"-0.138"	0.060"-0.135"	0.064"	0.060"					2" × 2" × 3/16"	2" × 2" × 3/16"	3-½"	3-½"	3-⅜"	3-⅜"	5-½"
		42"-54"	12"		0.060"-0.105"		0.060"						2" × 2" × 3/16"		3-½"		3-⅜"	
		42"-60"	12"	0.064"-0.079"		0.064"						2" × 2" × 3/16"		3-½"		3-⅜"		5-½"
		42"-60"	12"	0.109"-0.168"	0.135"-0.164"	0.064"	0.075"					2" × 2" × ¼"	2" × 2" × ¼"	3-½"	3-½"	5-⅜"	5-⅜"	
		66'-84"	24"	0.109"-0.168"		0.064"						2" × 2" × ¼"		5-½"		7-⅜"		
		66"-72"	24"		0.164"		0.105"						2" × 2" × ¼"		5-½"		5-⅜"	
	3" × 1"	48"-60"	14"	0.064"-0.079"		0.064"						2" × 2" × 3/16"		3-½"		3-⅜"		5-½"
		48"-60"	14"	0.109"		0.064"						2" × 2" × 3/16"		3-½"		5-⅜"		
		66"-120"	25"	0.064"-0.109"		0.064"						2" × 2" × 3/16"		5-½"		9-⅜"		
		42"-60"	14"		0.060"-0.105"		0.060"						2" × 2" × 3/16"		3-½"		5-⅜"	
		42"-60"	14"		0.135"		0.075"						2" × 2" × ¼"		3-½"		5-⅜"	
		66"-96"	25"		0.060"-0.135"		0.060"						2" × 2" × ¼"		5-½"		7-⅜"	
		96"-108"	25"		0.135"		0.075"						2" × 2" × ¼"		5-½"		7-⅜"	
HUGGER	2⅔" × ½" REROLLED END	THROUGH 48"	10½"	0.109"		0.064"		0.079"	½"	⅞"	32 ksi							
		54"- 66"	10½"	0.109"		0.064"		DOUBLE 0.079"	½"	⅞"	32 ksi							
		THROUGH 54"	10½"	0.064"-0.079"		0.064"		0.079"	½"	⅞"	32 ksi							
		THROUGH 60"	10½"	0.138"		0.079"		DOUBLE 0.079"	½"	⅞"	32 ksi							
		66"-72"	10½"	0.138"		0.109"		DOUBLE 0.079"	½"	⅞"	32 ksi							
		THROUGH 72"	10½"	0.168"		0.109"		DOUBLE 0.109"	½"	⅞"	45 ksi							
	3" × 1" REROLLED END	48"-84"	10½"	0.109"		0.079"		DOUBLE 0.079"	½"	⅞"	32 ksi							
		48"-90"	10½"	0.064"-0.079"		0.064"		DOUBLE 0.079"	½"	⅞"	32 ksi							
		96"-102"	10½"	0.079"		0.079"		DOUBLE 0.079"	½"	⅞"	32 ksi							
		90"-120"	10½"	0.109"		0.109"		DOUBLE 0.109"	½"	⅞"	45 ksi							

SPIRAL RIB PROFILE

COUPLING TYPE	PIPE CORRUGATION	PIPE SIZE	W	PIPE WALL THICKNESS SSRP	PIPE WALL THICKNESS ASRP	BAND THICKNESS SSRP	BAND THICKNESS ASRP	BAR AND STRAP (SSRP ONLY) STRAP THICKNESS	BOLTS Dia	BAR Dia	BAR YIELD STRENGTH	ANGLE DIMENSIONS SSRP	ANGLE DIMENSIONS ASRP	BOLTS (No.- Dia) SSRP	BOLTS (No.- Dia) ASRP	RIVETS ANGLE TO BAND SSRP	RIVETS ANGLE TO BAND ASRP	SPOT WELDS ANGLE TO BAND SSRP
ANNULAR	2⅔" × ½" * REROLLED END	24"-36"	12"	0.064"-0.109"	0.060"-0.105"	0.064"	0.060"	0.079"	½"	⅞"	32 ksi	2" × 2" × 3/16"	2" × 2" × 3/16"	3-½"	3-½"	3-⅜"	3-⅜"	5-½"
		42"-60"	12"	0.064"-0.079"	0.075"-0.105"	0.064"	0.075"	0.079"	½"	⅞"	32 ksi	2" × 2" × 3/16"	2" × 2" × 3/16"	3-½"	3-½"	3-⅜"	3-⅜"	5-½"
		42"-60"	12"	0.109"		0.064"		0.079"	½"	⅞"	32 ksi	2" × 2" × ¼"		3-½"		5-⅜"		
		66"-84"	24"	0.109"		0.064"		0.079"	½"	⅞"	32 ksi	2" × 2" × ¼"		5-½"		7-⅜"		
HUGGER	2⅔" × ½" * REROLLED END	24"-54"	10½"	0.064"-0.079"		0.064"		0.079"	½"	⅞"	32 ksi							
		24"-48"	10½"	0.109"		0.064"		0.079"	½"	⅞"	32 ksi							
		54"-66"	10½"	0.109"		0.064"		Double 0.079"	½"	⅞"	32 ksi							

* See Note 13.

NOTES:

1. All ferrous metal coupling band connection hardware shall be galvanized or electroplated in accordance with the Standard Specifications.
2. For helically corrugated coupling bands, the connection angles may be oriented parallel to the pipe axis, provided connecting holes are slotted lengthwise sufficiently to allow adjustment for the helix angle.
3. Tension strap may be connected to band with either spot welds or fillet welds that develop minimum required strength of strap.
4. Use 1¼" gage line dimension on attached angle leg for rivets and spot welds.
5. Band thickness shall not be less than:
   a. 3 standard thicknesses lighter than the thickness of the pipe for Corrugated Steel Pipe.
   b. 2 standard thicknesses lighter than the thickness of the pipe and in no case lighter than 0.060" for Corrugated Aluminum Pipe.
6. Dimensions, thicknesses and strengths shown are minimum.
7. For pipe arches use same width band as for round pipe of equal periphery.
8. Fillet welds of equivalent strength may be substituted for spot welds or rivets.
9. Spot welds shall develop minimum required strength of strap.
10. Pipe with rerolled ends having at least two 2⅔" × ½" annular corrugations at each end with or without an upturned flange may be connected with any of the annular coupling bands shown for pipe of the same diameter and wall thickness and having 2⅔" × ½" corrugations.
11. In the case of H-12 huggerbands, two piece bands are required for diameters through 96" and three piece bands are required for diameters 102" through 120".
12. Two piece bands are required for pipes greater than 42" diameter.
13. All profiles of Spiral Rib Pipe (¾" × ¾" ribs at 7½" pitch and ¾" × 1" ribs at 11½" pitch in both steel and aluminum and ¾" × 1" ribs at 8½" pitch in steel only) shall be manufactured with rerolled ends. Corrugation profile of the rerolled ends shall be 2⅔" × ½" annual corrugations with a minimum of two full corrugations at each end.

STATE OF CALIFORNIA
DEPARTMENT OF TRANSPORTATION

CORRUGATED METAL PIPE COUPLING DETAILS No. 6 POSITIVE JOINT

NO SCALE

RSP D97F DATED JUNE 6, 2008 SUPERSEDES STANDARD PLAN D97F
DATED MAY 1, 2006 - PAGE 188 OF THE STANDARD PLANS BOOK DATED MAY 2006.

REVISED STANDARD PLAN RSP D97F

2006 REVISED STANDARD PLAN RSP D97F

4-2-08

DIST	COUNTY	ROUTE	POST MILES TOTAL PROJECT	SHEET NO.	TOTAL SHEETS
01	Men	101	81.9/R83.8	42	61

Raymond Don Tsztoo
REGISTERED CIVIL ENGINEER

June 6, 2008
PLANS APPROVAL DATE

REGISTERED PROFESSIONAL ENGINEER
Raymond Don Tsztoo
No. C37332
Exp. 6-30-08
CIVIL
STATE OF CALIFORNIA

The State of California or its officers or agents shall not be responsible for the accuracy or completeness of electronic copies of this plan sheet.

To accompany plans dated 11-1-10

ANNULAR AND HELICAL PROFILE

COUPLING TYPE	PIPE CORRUGATION	PIPE SIZE	W OR A	PIPE WALL THICKNESS		BAND THICKNESS		BAR AND STRAP (CSP ONLY)			ANGLE						
											DIMENSIONS		BOLTS (No.- Dia)		RIVETS ANGLE TO BAND		SPOT WELDS ANGLE TO BAND
				CSP	CAP	CSP	CAP	STRAP THICKNESS	BOLTS Dia	BAR Dia	CSP	CAP	CSP	CAP	CSP	CAP	CSP
TWO PIECE INTEGRAL FLANGE	1½′ × ¼"	6"	7"	0.064"-0.168"		0.052"							3-⅜"				
	1½′ × ¼"	8"-10"	7"	0.064"-0.168"	0.060"-0.164"	0.064"	0.060"						3-⅜"	3-⅜"			
ANNULAR	2⅔" × ½"	THROUGH 24"	12"	0.064"-0.168"	0.060"-0.164"	0.064"	0.060"				2" × 2" × 3/16"	2" × 2" × 3/16"	3-½"	3-½"	3-⅜"	3-⅜"	3-½"
HUGGER	2⅔" × ½" REROLLED END	THROUGH 24"	10½"	0.064"-0.168"		0.064"		0.079"	½"	⅞"							

SPIRAL RIB PROFILE

COUPLING TYPE	PIPE CORRUGATION	PIPE SIZE	W	PIPE WALL THICKNESS		BAND THICKNESS		BAR AND STRAP (SSRP ONLY)			ANGLE						
											DIMENSIONS		BOLTS (No.- Dia)		RIVETS ANGLE TO BAND		SPOT WELDS ANGLE TO BAND
				SSRP	ASRP	SSRP	ASRP	STRAP THICKNESS	BOLTS Dia	BAR Dia	SSRP	ASRP	SSRP	ASRP	SSRP	ASRP	SSRP
ANNULAR	2⅔" × ½" * REROLLED END	24"	12"	0.064"-0.168"	0.060"-0.164"	0.064"	0.060"				2" × 2" × 3/16"	2" × 2" × 3/16"	3-½"	3-½"	3-⅜"	3-⅜"	3-½"
HUGGER	2⅔" × ½" * REROLLED END	24"	10½"	0.064"-0.168"		0.064"		0.079"	½"	⅞"							

* See Note 12.

NOTES:

1. All ferrous metal coupling band connection hardware shall be galvanized or electro-plated in accordance with the Standard Specifications.
2. For helically corrugated coupling bands, the connection angles may be oriented parallel to the pipe axis, provided connecting holes are slotted lengthwise sufficiently to allow adjustment for the helix angle.
3. Tension strap may be connected to band with either spot welds or fillet welds that develop minimum required strength of strap.
4. Use 1¼" gage line dimension on attached angle leg for rivets and spot welds.
5. Band thickness shall not be less than:
   a. 3 standard thicknesses lighter than the thickness of the pipe for Corrugated Steel Pipe.
   b. 2 standard thicknesses lighter than the thickness of the pipe and in no case lighter than 0.060" for Corrugated Aluminum Pipe.
6. Dimensions, thicknesses and strengths shown are minimum.
7. For pipe arches use same width band as for round pipe of equal periphery.
8. Fillet welds of equivalent strenght may be substituted for spot welds or rivets.
9. Spot welds shall develop minimum required strength of strap.
10. Pipe with rerolled ends having at least two 2⅔" × ½" annular corrugations at each end with or without an upturned flange may be connected with any of the annular coupling bands shown for pipe of the same diameter and wall thickness and having 2⅔" × ½" corrugations.
11. For downdrain applications, two piece integral flange couplers shall have factory applied sleeve type rubber gaskets with a minimum length of 7" measured along the length of the pipe.
12. All profiles of Spiral Rib Pipe (¾" × ¾" ribs at 7½" pitch and ¾" × 1" ribs at 11½" pitch in both steel and aluminum and ¾" × 1" ribs at 8½" pitch in steel only) shall be manufactured with rerolled ends. Corrugation profile of the rerolled ends shall be 2⅔" × ½" annual corrugations with a minimum of two full corrugations at each end.

STATE OF CALIFORNIA
DEPARTMENT OF TRANSPORTATION

CORRUGATED METAL PIPE COUPLING DETAILS No. 7 DOWNDRAIN

NO SCALE

RSP D97G DATED JUNE 6, 2008 SUPERSEDES STANDARD PLAN D97G
DATED MAY 1, 2006 - PAGE 189 OF THE STANDARD PLANS BOOK DATED MAY 2006.

REVISED STANDARD PLAN RSP D97G

2006 REVISED STANDARD PLAN RSP D97G

4-4-08

DIST	COUNTY	ROUTE	POST MILES TOTAL PROJECT	SHEET NO.	TOTAL SHEETS
01	Men	101	81.9/R83.8	43	61

LICENSED LANDSCAPE ARCHITECT

April 3, 2009
PLANS APPROVAL DATE

The State of California or its officers or agents shall not be responsible for the accuracy or completeness of electronic copies of this plan sheet.

LICENSED LANDSCAPE ARCHITECT
Gregory A. Balzer 3878
Registered Professional Engineer
02-28-11
Renewal Date
03-04-09
Date
STATE OF CALIFORNIA

To accompany plans dated 11-1-10

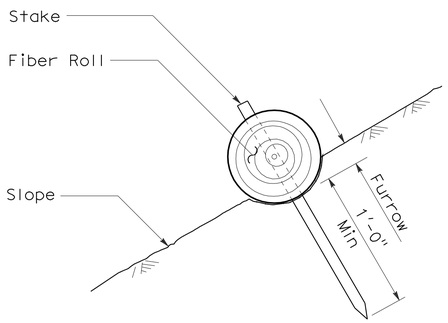

SECTION

FIBER ROLL
(TYPE 1)

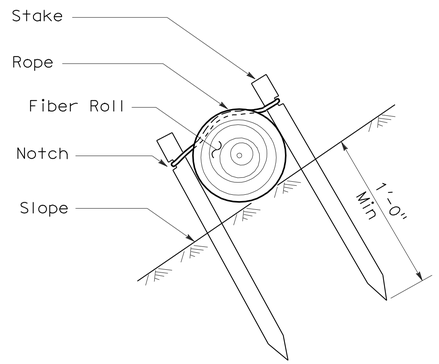

SECTION

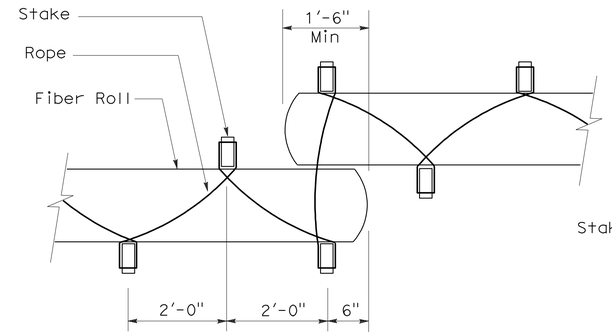

PLAN

FIBER ROLL
(TYPE 2)

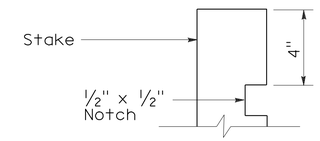

ELEVATION

STAKE NOTCH DETAIL

NOTES:

1. Fiber roll spacing varies depending upon slope inclination.
2. Installations shown in the perspectives are for slope inclination of 10:1 and steeper.

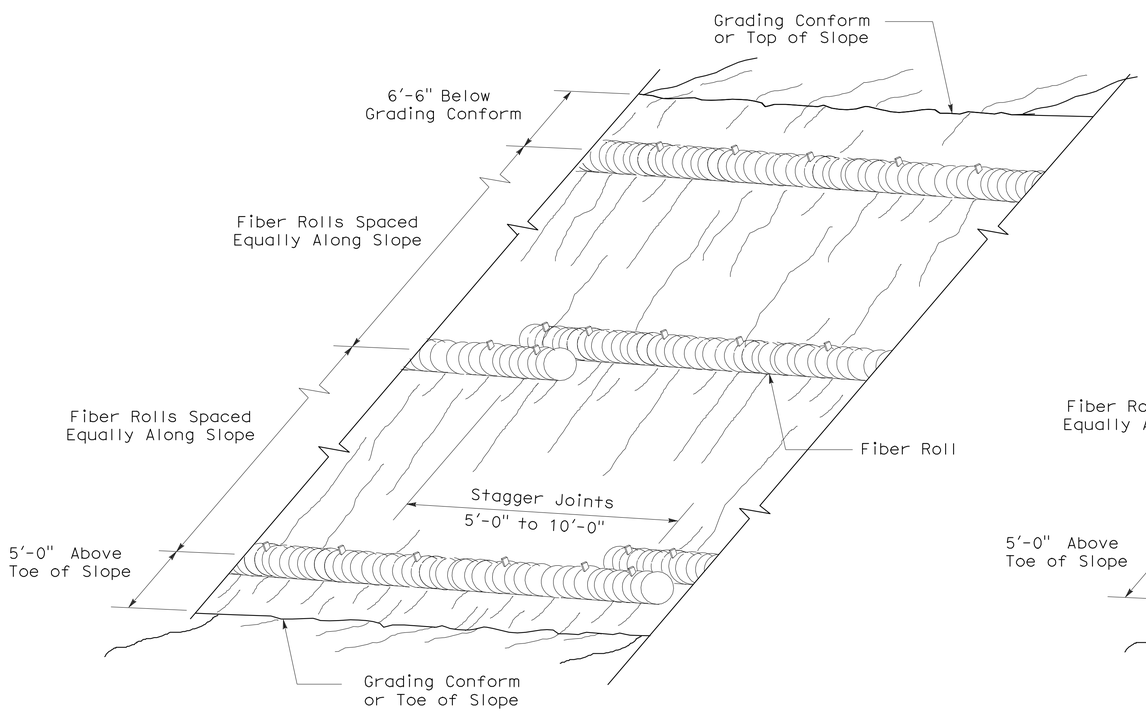

PERSPECTIVE

FIBER ROLL (TYPE 1)

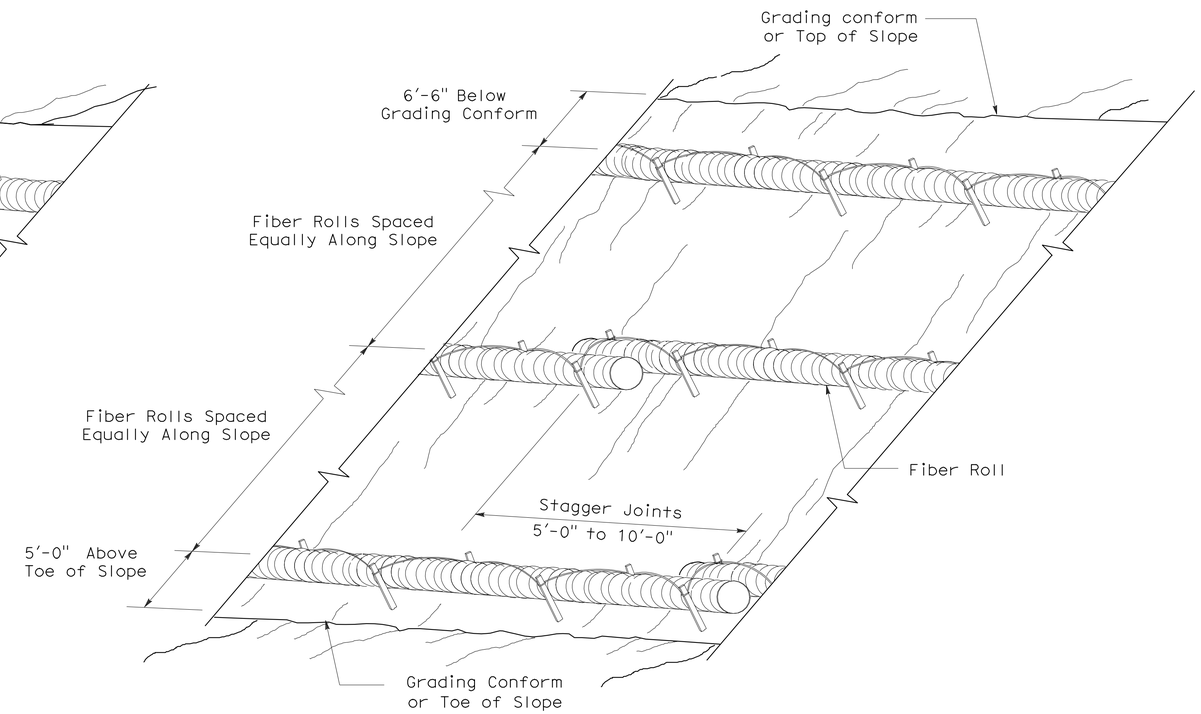

PERSPECTIVE

FIBER ROLL (TYPE 2)

STATE OF CALIFORNIA
DEPARTMENT OF TRANSPORTATION

EROSION CONTROL DETAILS (FIBER ROLL)

NO SCALE

RNSP H51 DATED APRIL 3, 2009 SUPERSEDES NSP H51 DATED DECEMBER 1, 2006 THAT SUPPLEMENTS THE STANDARD PLANS BOOK DATED MAY 2006.

REVISED NEW STANDARD PLAN RNSP H51

2006 REVISED NEW STANDARD PLAN RNSP H51

DIST	COUNTY	ROUTE	POST MILES TOTAL PROJECT	SHEET NO.	TOTAL SHEETS
01	Men	101	81.9/R83.8	44	61

Randell D. Hiatt
REGISTERED CIVIL ENGINEER

June 6, 2008
PLANS APPROVAL DATE

REGISTERED PROFESSIONAL ENGINEER
Randell D. Hiatt
No. C50200
Exp. 6-30-09
CIVIL
STATE OF CALIFORNIA

The State of California or its officers or agents shall not be responsible for the accuracy or completeness of electronic copies of this plan sheet.

To accompany plans dated 11-1-10

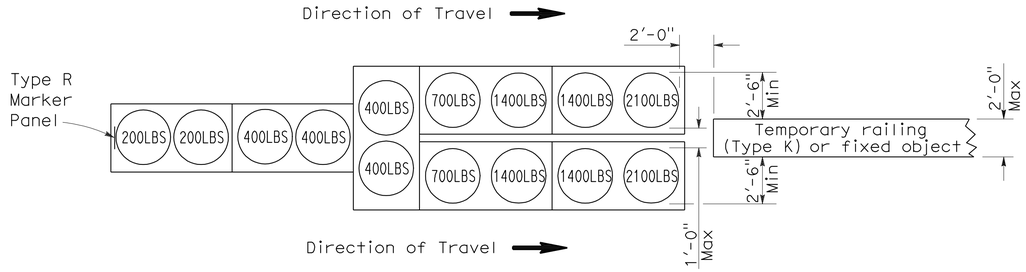

ARRAY 'TU14'

Approach speed 45 mph or more

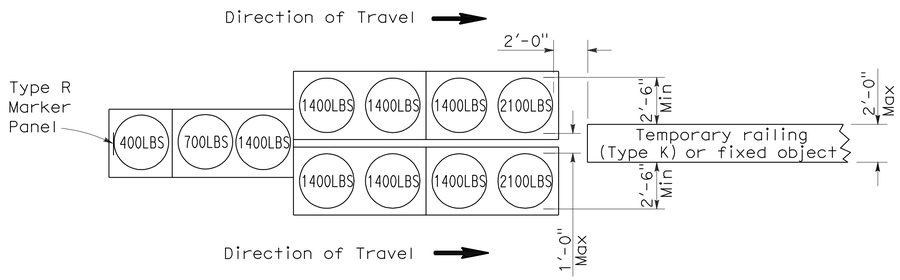

ARRAY 'TU11'

Approach speed less than 45 mph

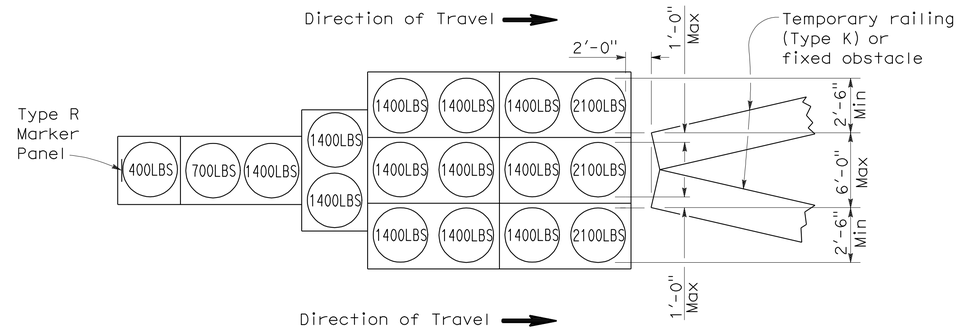

ARRAY 'TU17'

Approach speed less than 45 mph

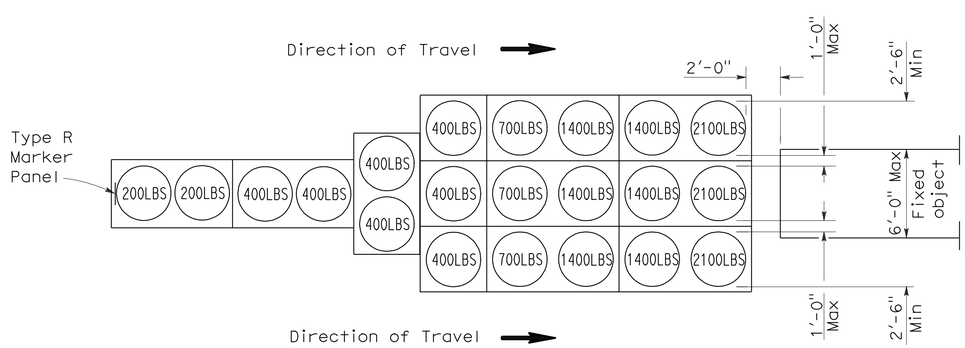

ARRAY 'TU21'

Approach speed 45 mph or more

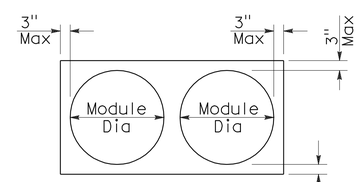

PLAN

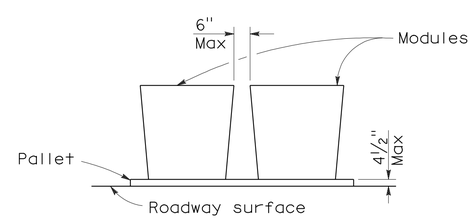

ELEVATION

CRASH CUSHION PALLET DETAIL

See Note 7

NOTES:

1. (XXX) Indicates sand filled module location and weight of sand in pounds for each module. Module spacing is based on the greater diameter of the module.
2. All sand weights are nominal.
3. Temporary crash cushion arrays shall not encroach on the traveled way.
4. Place the top of Type R marker panel 1" below the module lid.
5. Refer to Standard Plan A73B for marker details.
6. Approach speeds indicated conform to NCHRP 350 Report criteria.
7. Use of pallets is optional.

STATE OF CALIFORNIA
DEPARTMENT OF TRANSPORTATION

TEMPORARY CRASH CUSHION, SAND FILLED (UNIDIRECTIONAL)

NO SCALE

RSP T1A DATED JUNE 6, 2008 SUPERSEDES STANDARD PLAN T1A
DATED MAY 1, 2006 - PAGE 211 OF THE STANDARD PLANS BOOK DATED MAY 2006.

REVISED STANDARD PLAN RSP T1A

2006 REVISED STANDARD PLAN RSP T1A

DIST	COUNTY	ROUTE	POST MILES TOTAL PROJECT	SHEET NO.	TOTAL SHEETS
01	Men	101	81.9/R83.8	45	61

Randell D. Hiatt
REGISTERED CIVIL ENGINEER

June 6, 2008
PLANS APPROVAL DATE

REGISTERED PROFESSIONAL ENGINEER
Randell D. Hiatt
No. C50200
Exp. 6-30-09
CIVIL
STATE OF CALIFORNIA

The State of California or its officers or agents shall not be responsible for the accuracy or completeness of electronic copies of this plan sheet.

To accompany plans dated 11-1-10

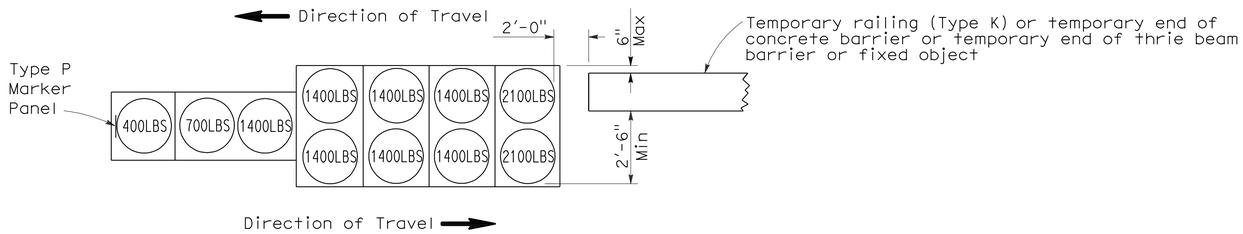

ARRAY 'TB11'

Approach speed less than 45 mph

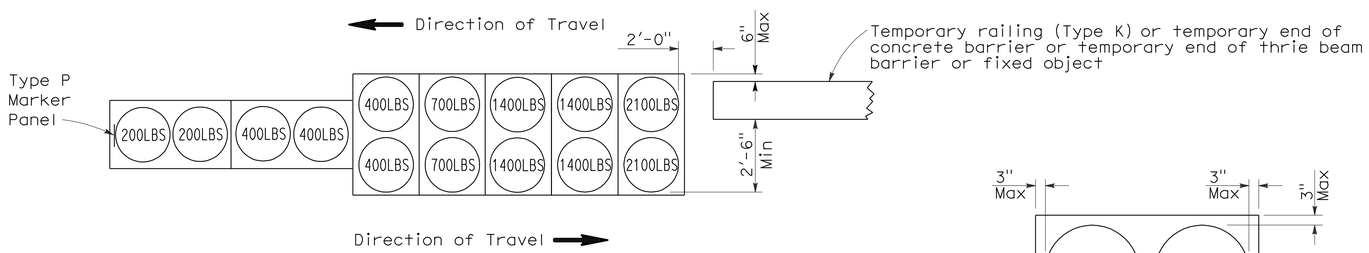

ARRAY 'TB14'

Approach speed 45 mph or more

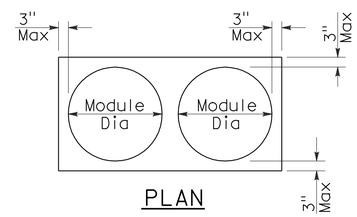

PLAN

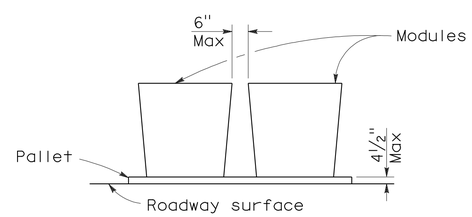

ELEVATION

CRASH CUSHION PALLET DETAIL

See Note 7

NOTES:

1. (XXX) Indicates sand filled module location and weight of sand in pounds for each module. Module spacing is based on the greater diameter of the module.
2. All sand weights are nominal.
3. Temporary crash cushion arrays shall not encroach on the traveled way.
4. Place the Type P marker panel so that the bottom of the panel rests upon the pallet.
5. Refer to Standard Plan A73B for marker details.
6. Approach speeds indicated conform to NCHRP 350 Report criteria.
7. Use of pallets is optional.

STATE OF CALIFORNIA
DEPARTMENT OF TRANSPORTATION

TEMPORARY CRASH CUSHION, SAND FILLED (BIDIRECTIONAL)

NO SCALE

RSP T1B DATED JUNE 6, 2008 SUPERSEDES STANDARD PLAN T1B
DATED MAY 1, 2006 - PAGE 212 OF THE STANDARD PLANS BOOK DATED MAY 2006.

REVISED STANDARD PLAN RSP T1B

2006 REVISED STANDARD PLAN RSP T1B

5-15-08

DIST	COUNTY	ROUTE	POST MILES TOTAL PROJECT	SHEET NO.	TOTAL SHEETS
01	Men	101	81.9/R83.8	46	61

Randell D. Hiatt
REGISTERED CIVIL ENGINEER

June 6, 2008
PLANS APPROVAL DATE

REGISTERED PROFESSIONAL ENGINEER
Randell D. Hiatt
No. C50200
Exp. 6-30-09
CIVIL
STATE OF CALIFORNIA

The State of California or its officers or agents shall not be responsible for the accuracy or completeness of electronic copies of this plan sheet.

To accompany plans dated 11-1-10

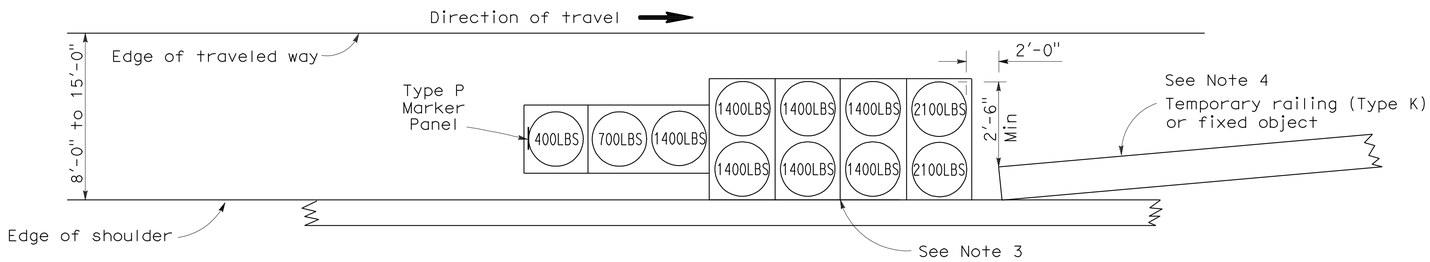

ARRAY 'TS11'

Approach speed less than 45 mph
See Note 9

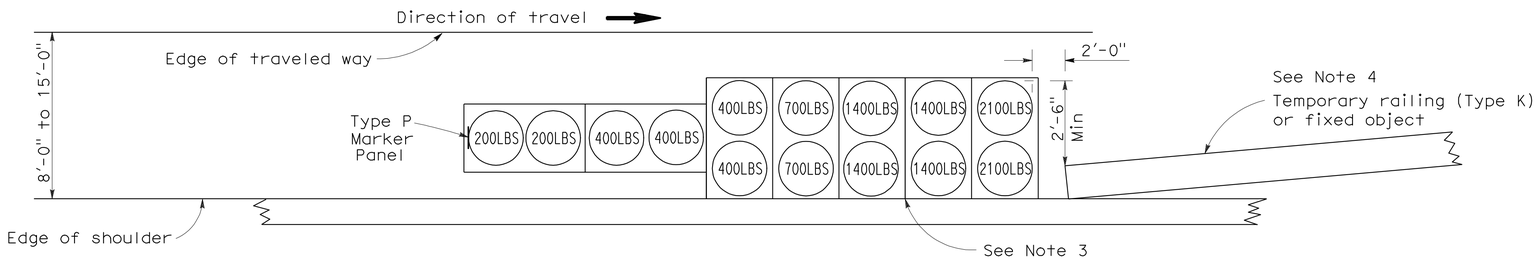

ARRAY 'TS14'

Approach speed 45 mph or more
See Note 9

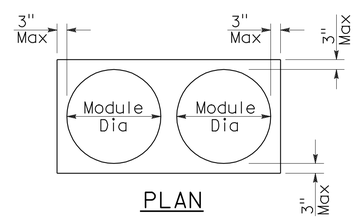

PLAN

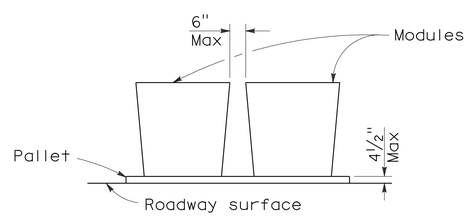

ELEVATION

CRASH CUSHION PALLET DETAIL

See Note 11

NOTES:

1. (XXX) Indicates sand filled module location and weight of sand in pounds for each module. Module spacing is based on the greater diameter of the module.
2. All sand weights are nominal.
3. The temporary crash cushion arrays shown on this plan shall be used only in locations where there will be traffic on one side of the temporary crash cushion array.
4. If the fixed object or approach end of the temporary railing is less than 15'-0" from the edge of traveled way, a temporary crash cushion is required in a construction or work zone.
5. Temporary crash cushion arrays shall not encroach on the traveled way.
6. Arrays for median shoulders shall conform to details shown on this plan for outside shoulders.
7. Place the Type P marker panel so that the bottom of the panel rests upon the pallet and faces traffic.
8. Refer to Standard Plan A73B for marker details.
9. For shoulder widths less than 8'-0", appropriate approved crash cushion protection, other than sand filled modules, shall be provided at fixed objects and at approach ends of temporary railing. The specific type of crash cushion shall be as shown on the project plans or as specified in the Special Provisions, or if not shown on the project plans or specified in the Special Provisions, shall be as approved by the Engineer.
10. Approach speeds indicated conform to NCHRP 350 Report criteria.
11. Use of pallets is optional.

STATE OF CALIFORNIA
DEPARTMENT OF TRANSPORTATION

TEMPORARY CRASH CUSHION, SAND FILLED (SHOULDER INSTALLATIONS)

NO SCALE

RSP T2 DATED JUNE 6, 2008 SUPERSEDES STANDARD PLAN T2
DATED MAY 1, 2006 - PAGE 213 OF THE STANDARD PLANS BOOK DATED MAY 2006.

REVISED STANDARD PLAN RSP T2

2006 REVISED STANDARD PLAN RSP T2

DIST	COUNTY	ROUTE	POST MILES TOTAL PROJECT	SHEET NO.	TOTAL SHEETS
01	Men	101	81.9/R83.8	47	61

REGISTERED CIVIL ENGINEER

November 17, 2006
PLANS APPROVAL DATE

REGISTERED PROFESSIONAL ENGINEER
Greg W. Edwards
No. C36386
Exp. 6-30-08
CIVIL
STATE OF CALIFORNIA

The State of California or its officers or agents shall not be responsible for the accuracy or completeness of electronic copies of this plan sheet.

To accompany plans dated 11-1-10

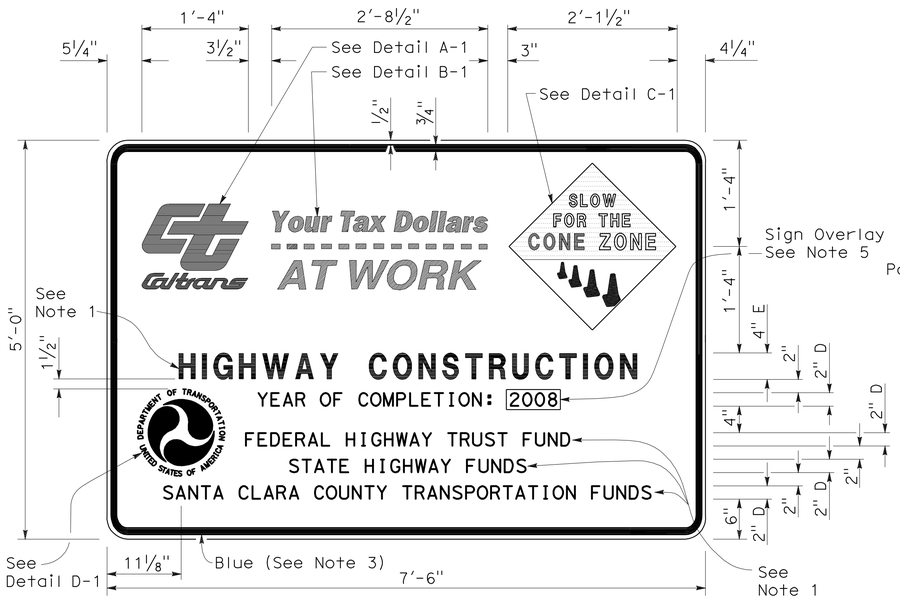

TYPE 1

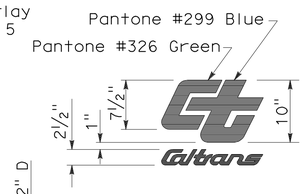

DETAIL A-1

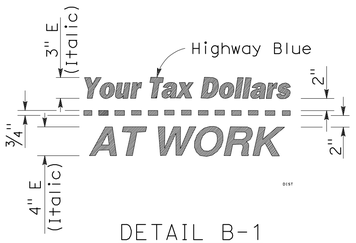

DETAIL B-1
(See Note 3)

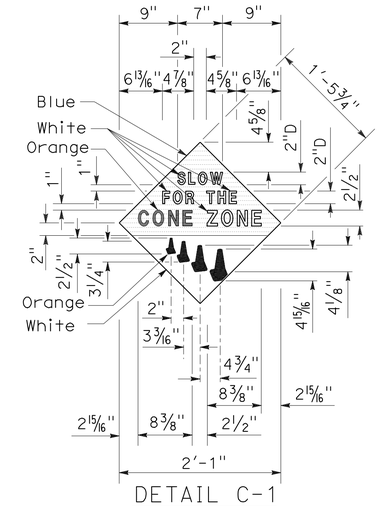

DETAIL C-1
(See Note 4)

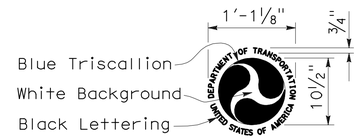

DETAIL D-1
(See Note 6)

NOTES:

1. The sign messages shown for type of project and fund types are examples only. See the Special Provisions for the applicable type of project and fund type messages to be used.
2. Except as otherwise shown, the legend of sign shall be black on a white background (non-reflective).
3. The border of the signs and details "B-1" and "B-2" shall be blue (non-reflective).
4. The diamond in details "C-1" and "C-2" shall be blue for the background of message, " SLOW FOR THE CONE ZONE", and white background for the orange cones. The color and type of font for the "SLOW FOR THE CONE ZONE" message shall be: "SLOW" white D; "FOR THE" white D; "CONE" orange Arial font; "ZONE" white Arial font.
5. Year of completion of project construction shown on the overlay is an example only. See the Special Provisions.
6. Use when the Project involves Federal Highway Trust Fund.

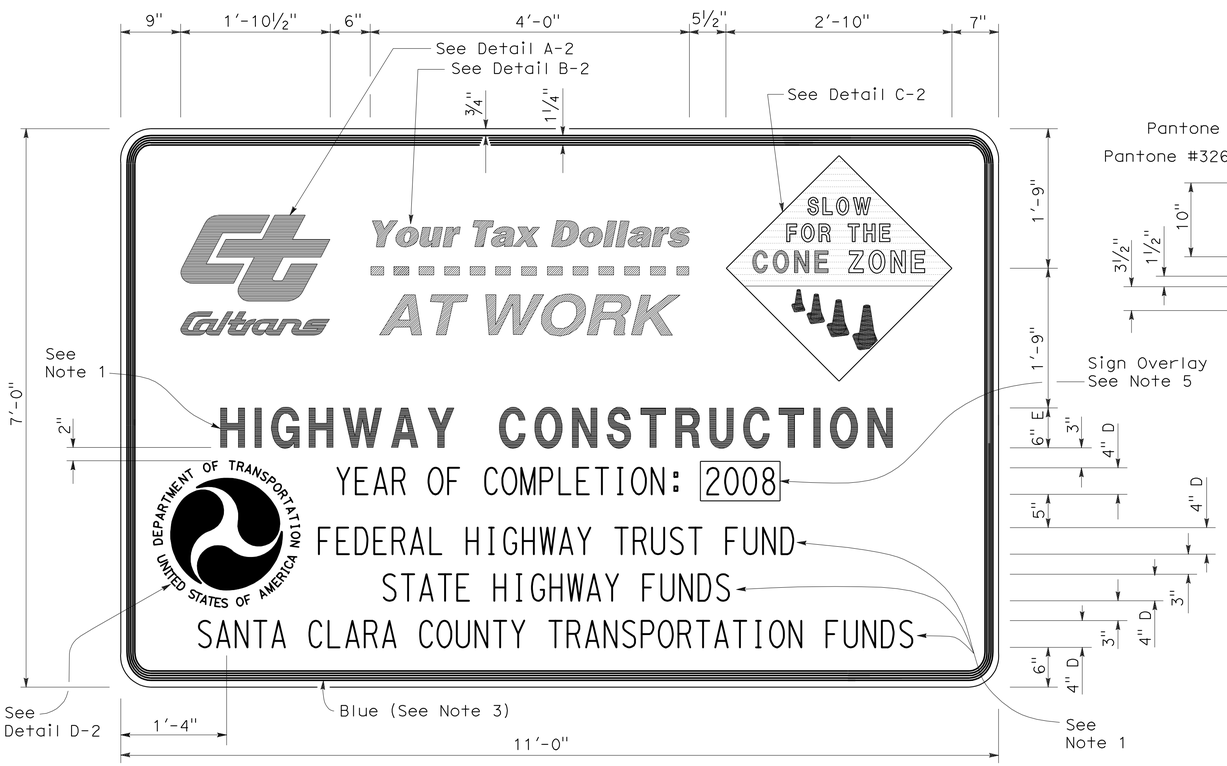

TYPE 2

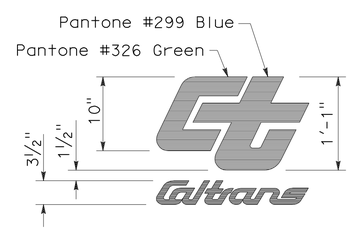

DETAIL A-2

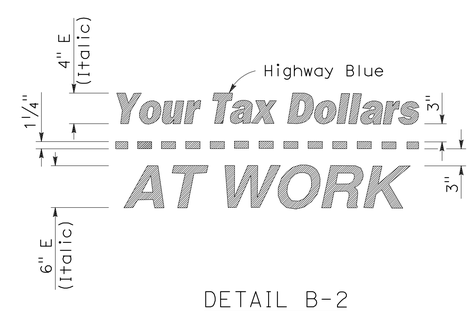

DETAIL B-2
(See Note 3)

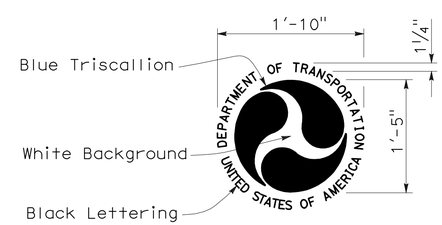

DETAIL D-2
(See Note 6)

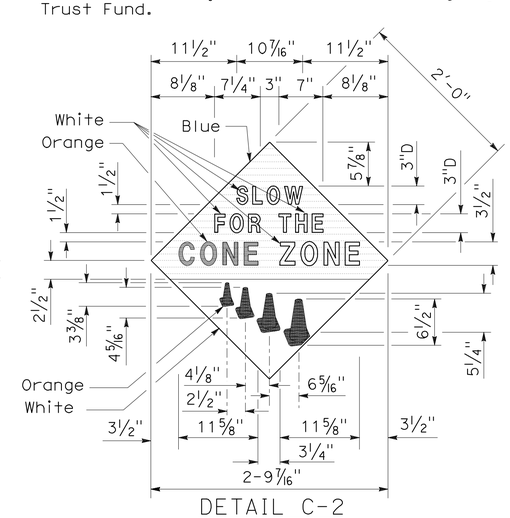

DETAIL C-2
(See Note 4)

STATE OF CALIFORNIA
DEPARTMENT OF TRANSPORTATION

CONSTRUCTION PROJECT FUNDING IDENTIFICATION SIGNS

NO SCALE

RSP T7 DATED NOVEMBER 17, 2006 SUPERSEDES STANDARD PLAN T7
DATED MAY 1, 2006 - PAGE 217 OF THE STANDARD PLANS BOOK DATED MAY 2006.

REVISED STANDARD PLAN RSP T7

2006 REVISED STANDARD PLAN RSP T7

9-7-06

DIST	COUNTY	ROUTE	POST MILES TOTAL PROJECT	SHEET NO.	TOTAL SHEETS
01	Men	101	81.9/R83.8	48	61

Robert B. Schott
LICENSED LANDSCAPE ARCHITECT

April 3, 2009
PLANS APPROVAL DATE

LICENSED LANDSCAPE ARCHITECT — Robert B. Schott — 3025 — Signature — 11-30-10 Renewal Date — 2-25-09 Date — STATE OF CALIFORNIA

The State of California or its officers or agents shall not be responsible for the accuracy or completeness of electronic copies of this plan sheet.

To accompany plans dated 11-1-10

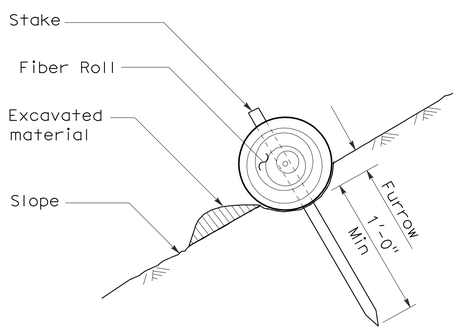

SECTION

TEMPORARY FIBER ROLL (TYPE 1)

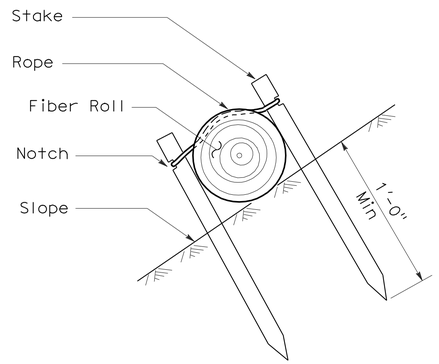

SECTION

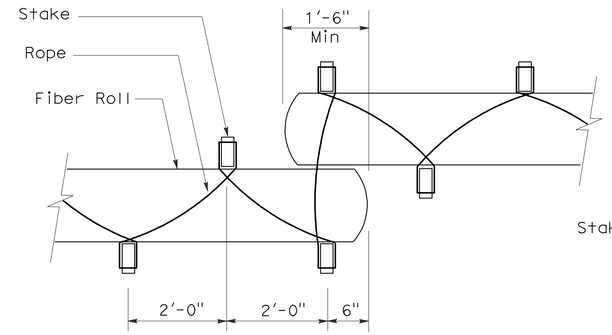

PLAN

TEMPORARY FIBER ROLL (TYPE 2)

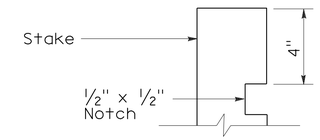

ELEVATION

STAKE NOTCH DETAIL

NOTES:

1. Temporary fiber roll spacing varies depending upon slope inclination.
2. Installations shown in the perspectives are for slope inclination of 10:1 and steeper.

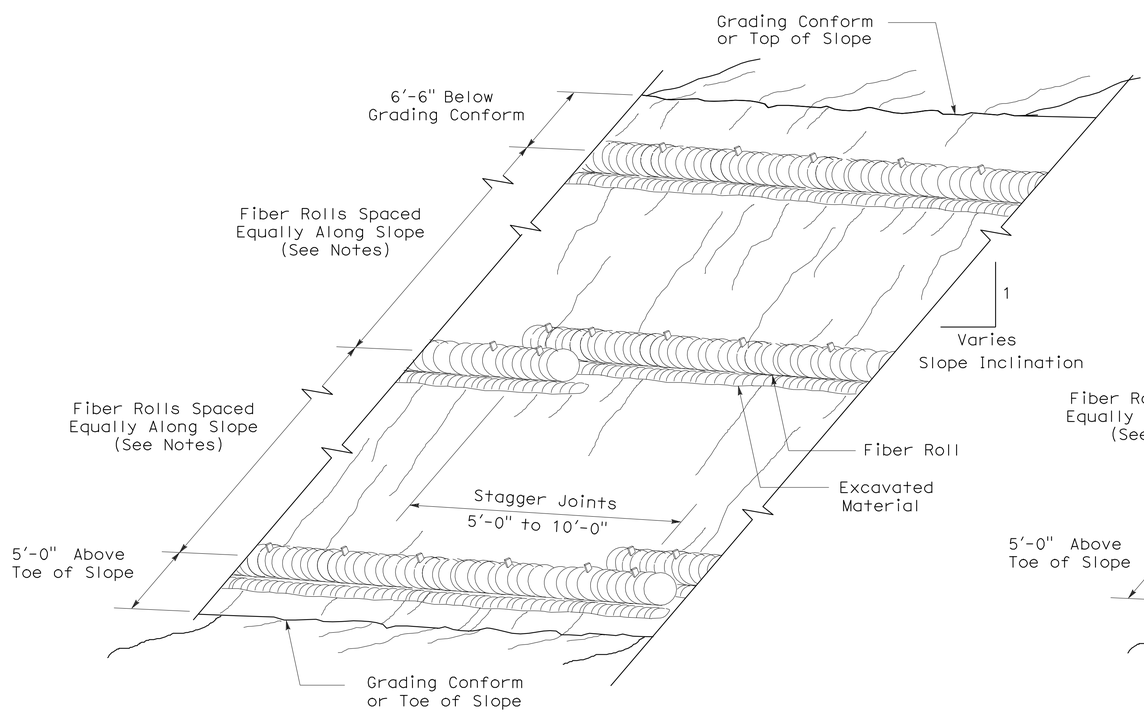

PERSPECTIVE

TEMPORARY FIBER ROLL (TYPE 1)

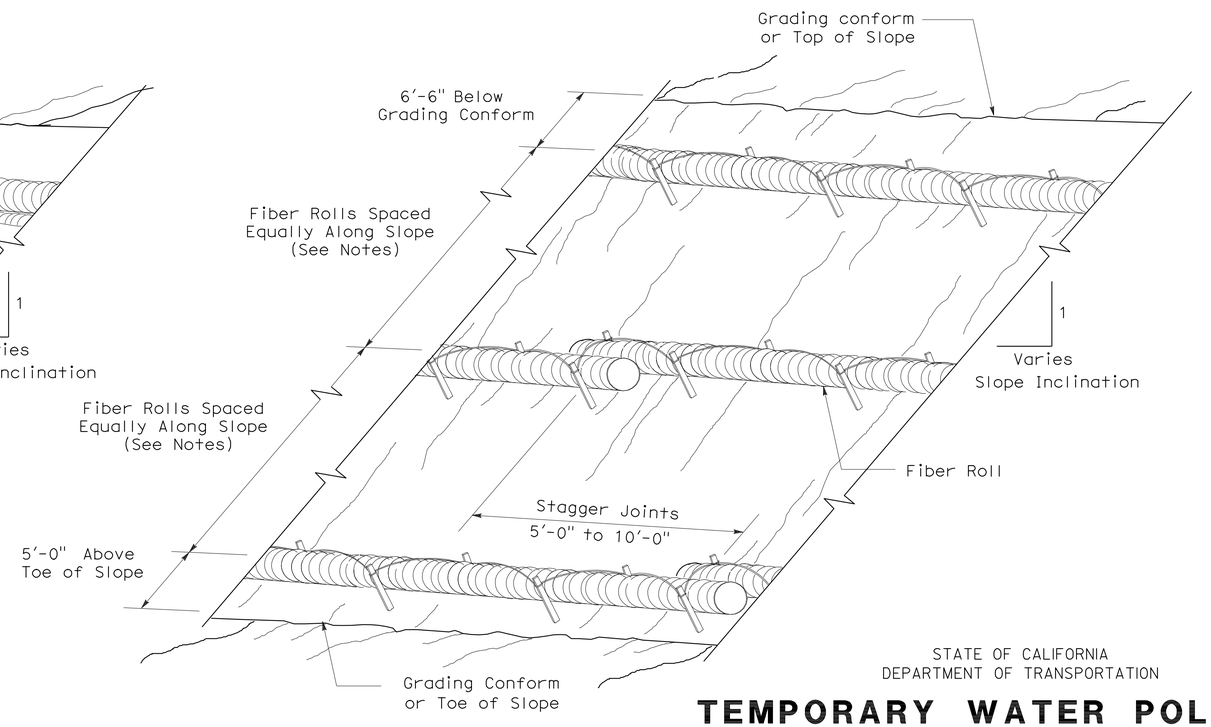

PERSPECTIVE

TEMPORARY FIBER ROLL (TYPE 2)

STATE OF CALIFORNIA
DEPARTMENT OF TRANSPORTATION

TEMPORARY WATER POLLUTION CONTROL DETAILS (TEMPORARY FIBER ROLL)

NO SCALE

RSP T56 DATED APRIL 3, 2009 SUPERSEDES STANDARD PLAN T56
DATED MAY 1, 2006 - PAGE 232 OF THE STANDARD PLANS BOOK DATED MAY 2006.

REVISED STANDARD PLAN RSP T56

2006 REVISED STANDARD PLAN RSP T56

2-23-09

DIST	COUNTY	ROUTE	POST MILES TOTAL PROJECT	SHEET NO.	TOTAL SHEETS
01	Men	101	81.9/R83.8	49	61

Robert B Schott
LICENSED LANDSCAPE ARCHITECT

April 3, 2009
PLANS APPROVAL DATE

LICENSED LANDSCAPE ARCHITECT
Robert B. Schott 3025
Robert B Schott
Signature
11-30-10
Renewal Date
2-25-09
Date
STATE OF CALIFORNIA

The State of California or its officers or agents shall not be responsible for the accuracy or completeness of electronic copies of this plan sheet.

To accompany plans dated 11-1-10

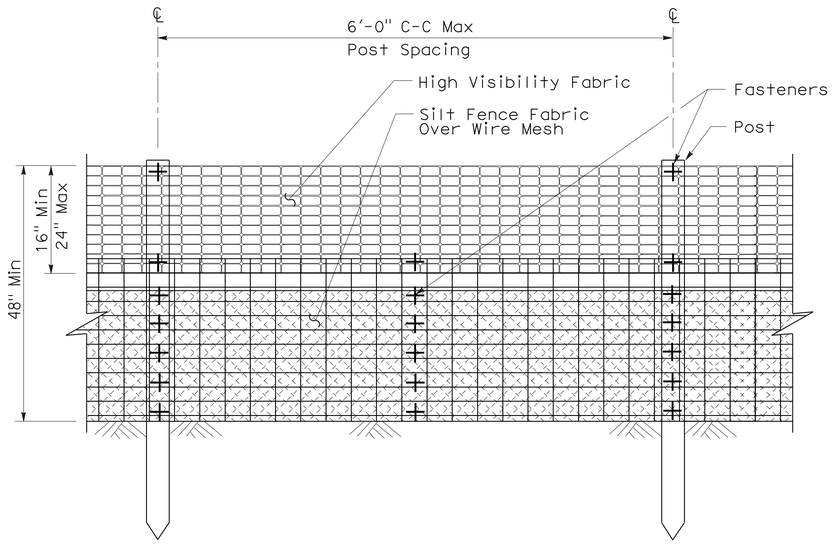

ELEVATION

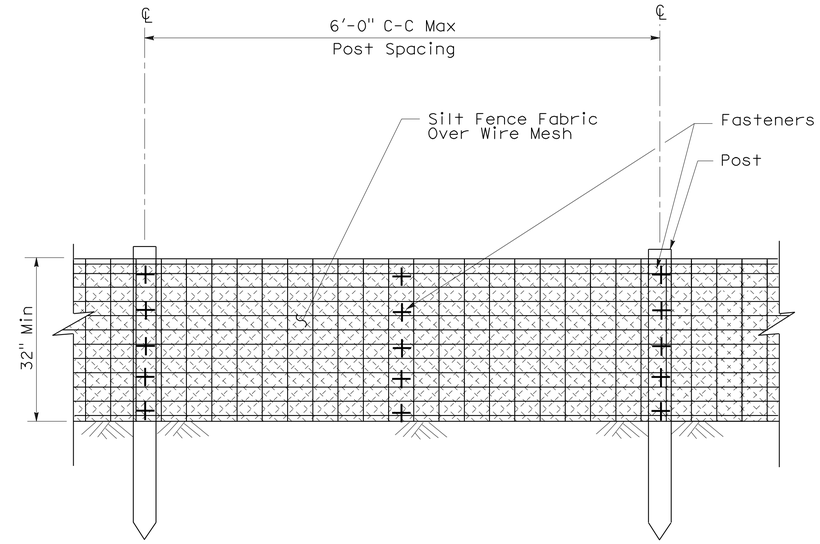

ELEVATION

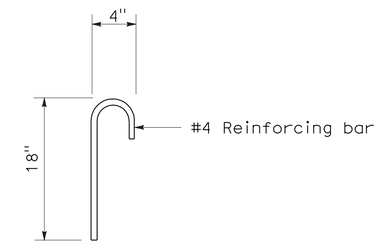

ANCHOR

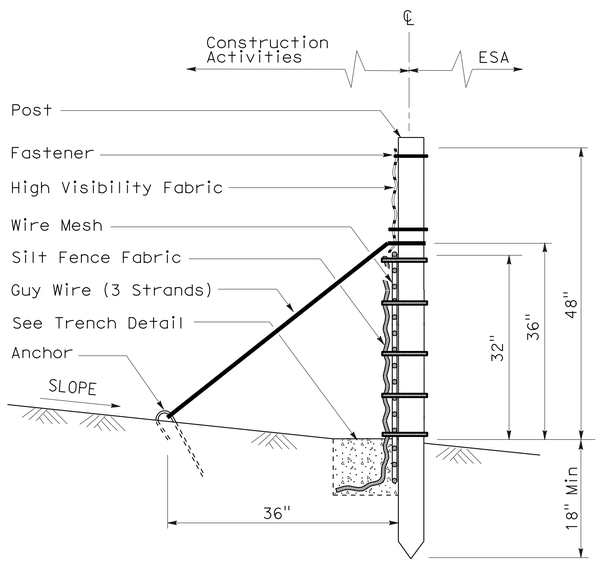

SECTION

TEMPORARY REINFORCED SILT FENCE (TYPE 1)

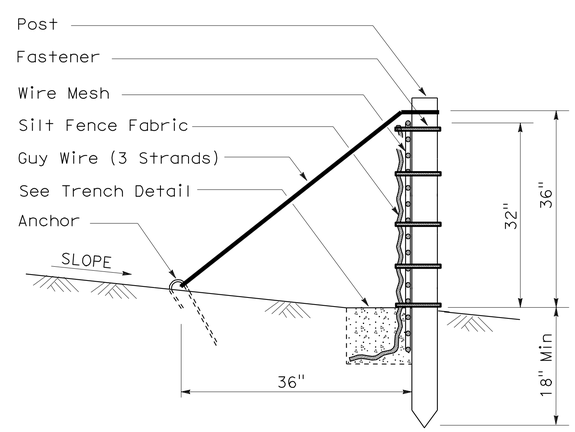

SECTION

TEMPORARY REINFORCED SILT FENCE (TYPE 2)

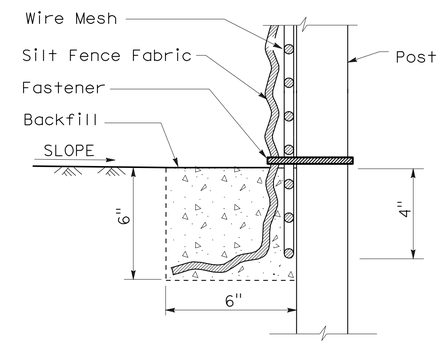

SECTION

TRENCH DETAIL

STATE OF CALIFORNIA
DEPARTMENT OF TRANSPORTATION

TEMPORARY WATER POLLUTION CONTROL DETAILS (TEMPORARY REINFORCED SILT FENCE)

NO SCALE

NSP T60 DATED APRIL 3, 2009 SUPPLEMENTS
THE STANDARD PLANS BOOK DATED MAY 2006.

NEW STANDARD PLAN NSP T60

2006 NEW STANDARD PLAN NSP T60

1-7-09

DIST	COUNTY	ROUTE	POST MILES TOTAL PROJECT	SHEET NO.	TOTAL SHEETS
01	Men	101	81.9/R83.8	50	61

LICENSED LANDSCAPE ARCHITECT

August 15, 2008
PLANS APPROVAL DATE

LICENSED LANDSCAPE ARCHITECT — Robert B. Schott — Signature — 11-04-08 Renewal Date — 08-11-08 Date — STATE OF CALIFORNIA

The State of California or its officers or agents shall not be responsible for the accuracy or completeness of electronic copies of this plan sheet.

To accompany plans dated 11-1-10

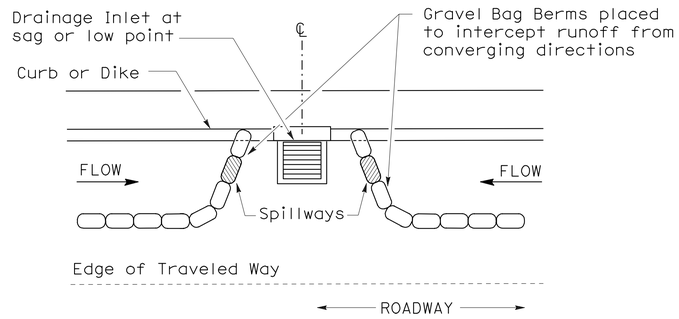

PLAN

CONFIGURATION FOR SAG POINT INLET (GRAVEL BAG BERM)

GRAVEL BAG BERM (TYPE 3A) SPACING TABLE

SLOPE OF ROADWAY (PERCENT)	1 to 3.9	4 to 5.9	6 to 7.9	8 to 10	10+
INTERVAL BETWEEN BERM	100′	75′	50′	25′	12′

For slope of less than 1%, install barriers only if erosion/sediment is prevalent

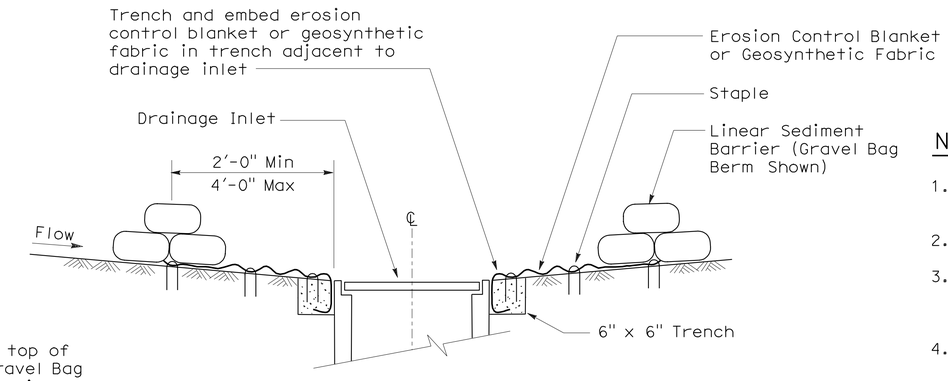

SECTION A-A

NOTES:

1. Place safety cones adjacent to drainage inlet protection.
2. Dimensions may vary to fit field conditions.
3. Install a minimum of 3 gravel bag berms upstream of each drainage inlet to be protected.
4. Position erosion control blanket or geosynthetic fabric at edge of concrete apron and secure in trench.
5. Erosion control blanket or geosynthetic fabric is not required if the area adjacent to the drainage inlet is vegetated or paved.

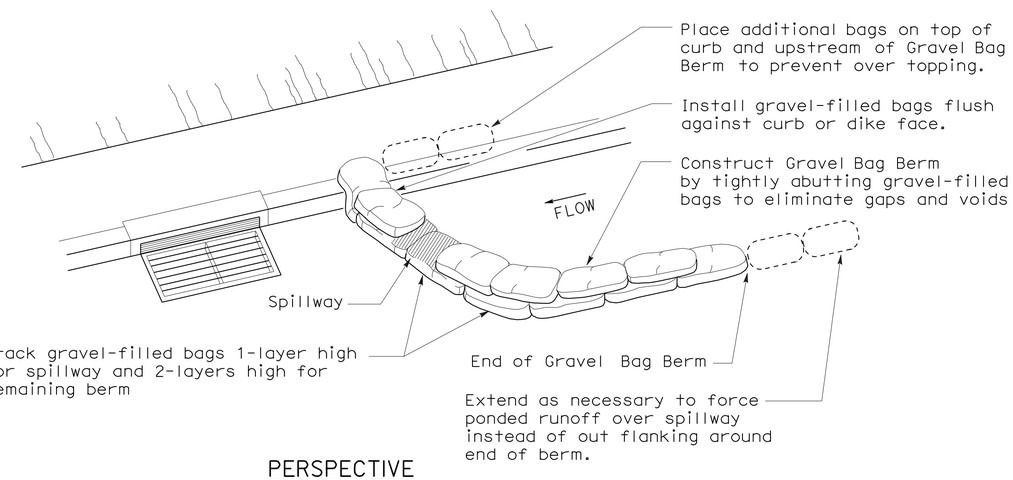

PERSPECTIVE

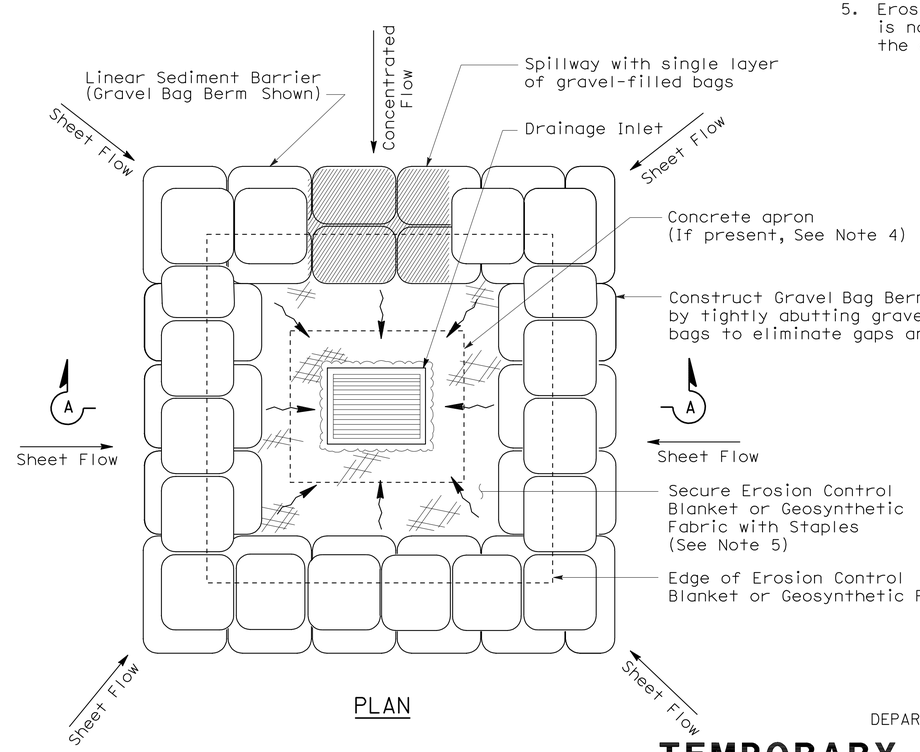

PLAN

TEMPORARY DRAINAGE INLET PROTECTION (TYPE 3B)

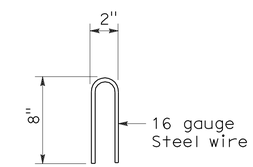

STAPLE DETAIL

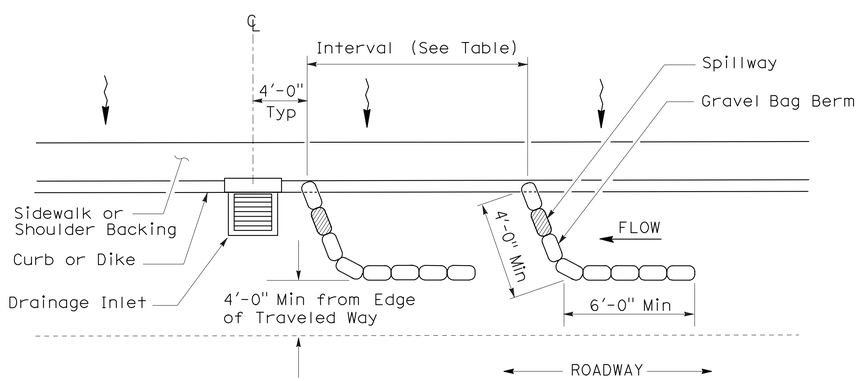

PLAN

TEMPORARY DRAINAGE INLET PROTECTION (TYPE 3A) (GRAVEL BAG BERM)

STATE OF CALIFORNIA
DEPARTMENT OF TRANSPORTATION

TEMPORARY WATER POLLUTION CONTROL DETAILS (TEMPORARY DRAINAGE INLET PROTECTION)

NO SCALE

NSP T62 DATED AUGUST 15, 2008 SUPPLEMENTS THE STANDARD PLANS BOOK DATED MAY 2006.

NEW STANDARD PLAN NSP T62

2006 NEW STANDARD PLAN NSP T62

7-11-08

DIST	COUNTY	ROUTE	POST MILES TOTAL PROJECT	SHEET NO.	TOTAL SHEETS
01	Men	101	81.9/R83.8	51	61

Robert B Schott
LICENSED LANDSCAPE ARCHITECT

August 15, 2008
PLANS APPROVAL DATE

LICENSED LANDSCAPE ARCHITECT Robert B. Schott 3625 Signature 11-04-08 Renewal Date 08-11-08 Date STATE OF CALIFORNIA

The State of California or its officers or agents shall not be responsible for the accuracy or completeness of electronic copies of this plan sheet.

To accompany plans dated 11-1-10

FLEXIBLE SEDIMENT BARRIER SPACING TABLE

SLOPE OF ROADWAY (PERCENT)	0 to 0.9	1 to 1.9	2 to 2.9	3 to 4	5+
INTERVAL BETWEEN BARRIERS	50′	35′	30′	25′	20′
ANGLE FROM FACE OF CURB	70°	70°	70°	45°	45°
SUGGESTED BARRIER LENGTH	6′	6′	6′	6′	6′

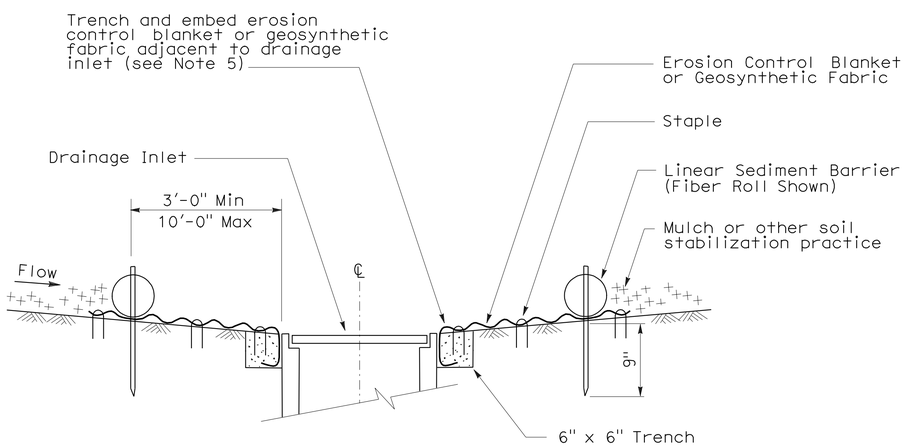

SECTION A-A

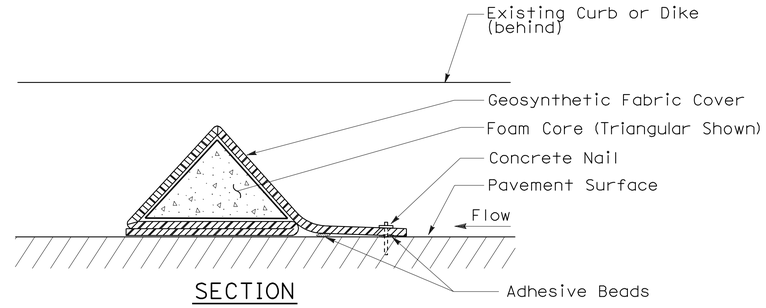

SECTION

FLEXIBLE SEDIMENT BARRIER DETAIL (FOAM BARRIER SHOWN)

NOTES:

1. See Standard Plan T51 for Temporary Silt Fence.
2. Dimensions may vary to fit field conditions.
3. Install a minimum of 3 flexible sediment barriers upstream of each drainage inlet to be protected.
4. Position erosion control blanket or geosynthetic fabric at edge of concrete apron and secure in trench.
5. Erosion control blanket or geosynthetic fabric is not required if the area adjacent to the drainage inlet is vegetated.

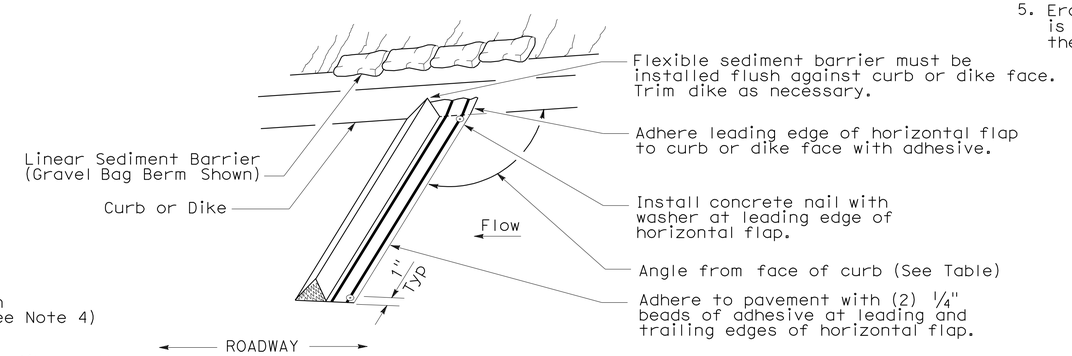

PERSPECTIVE

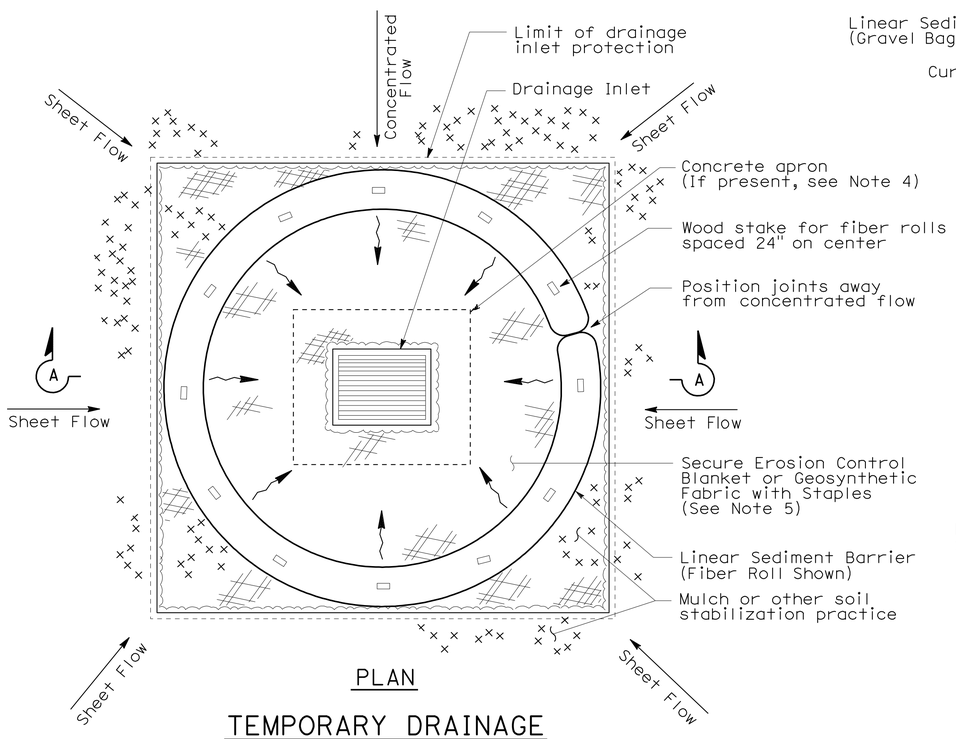

PLAN

TEMPORARY DRAINAGE INLET PROTECTION (TYPE 4A)

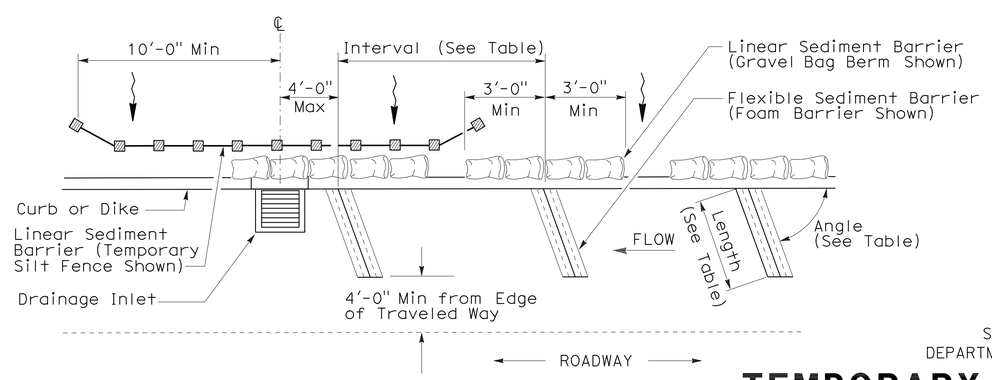

PLAN

TEMPORARY DRAINAGE INLET PROTECTION (TYPE 4B) FLEXIBLE SEDIMENT BARRIER

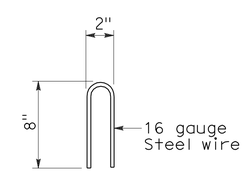

STAPLE DETAIL

STATE OF CALIFORNIA
DEPARTMENT OF TRANSPORTATION

TEMPORARY WATER POLLUTION CONTROL DETAILS (TEMPORARY DRAINAGE INLET PROTECTION)

NO SCALE

NSP T63 DATED AUGUST 15, 2008 SUPPLEMENTS THE STANDARD PLANS BOOK DATED MAY 2006.

NEW STANDARD PLAN NSP T63

2006 NEW STANDARD PLAN NSP T63

7-11-08

DIST	COUNTY	ROUTE	POST MILES TOTAL PROJECT	SHEET NO.	TOTAL SHEETS
01	Men	101	81.9/R83.8	52	61

LICENSED LANDSCAPE ARCHITECT

April 3, 2009
PLANS APPROVAL DATE

The State of California or its officers or agents shall not be responsible for the accuracy or completeness of electronic copies of this plan sheet.

LICENSED LANDSCAPE ARCHITECT — Robert B. Schott — 3025 — Signature — 11-30-10 Renewal Date — 2-25-09 Date — STATE OF CALIFORNIA

To accompany plans dated 11-1-10

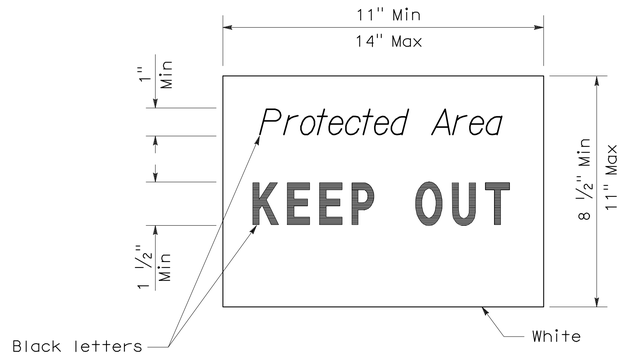

SIGN DETAIL

NOTE:

1. Temporary silt fence and temporary straw bale barrier shown for reference purposes only.

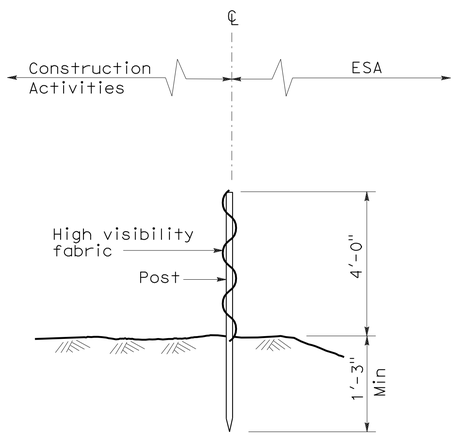

SECTION
TEMPORARY FENCE (TYPE ESA)

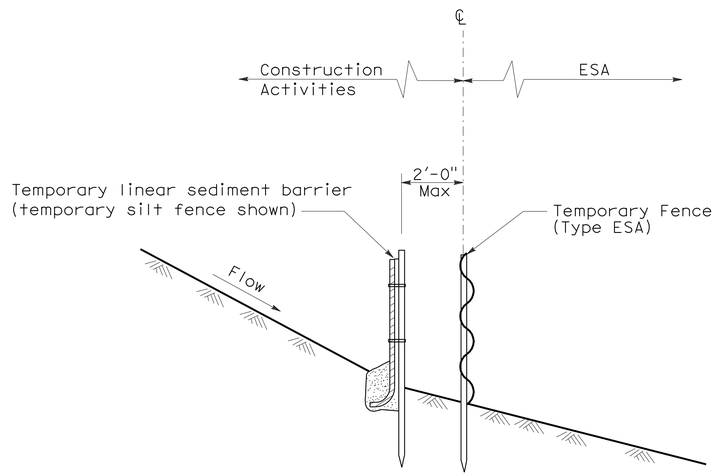

SECTION
PLACEMENT DETAIL
FOR TEMPORARY LINEAR SEDIMENT BARRIER
USED WITH TEMPORARY
FENCE (TYPE ESA)
(See Note 1)

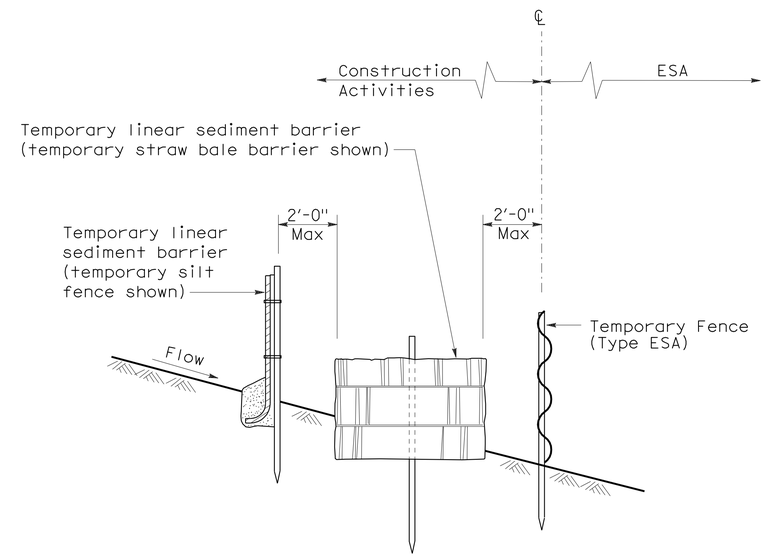

SECTION
PLACEMENT DETAIL
FOR TEMPORARY SILT FENCE
AND TEMPORARY STRAW BALE BARRIER
USED WITH TEMPORARY FENCE (TYPE ESA)
(See Note 1)

STATE OF CALIFORNIA
DEPARTMENT OF TRANSPORTATION

TEMPORARY WATER POLLUTION CONTROL DETAILS [TEMPORARY FENCE (TYPE ESA)]

NO SCALE

NSP T65 DATED APRIL 3, 2009 SUPPLEMENTS
THE STANDARD PLANS BOOK DATED MAY 2006.

NEW STANDARD PLAN NSP T65

2006 NEW STANDARD PLAN NSP T65

DIST	COUNTY	ROUTE	POST MILES TOTAL PROJECT	SHEET No	TOTAL SHEETS
01	Men	101	81.9/R83.8	53	61

REGISTERED CIVIL ENGINEER 4-9-09 DATE

11-1-10
PLANS APPROVAL DATE

REGISTERED PROFESSIONAL ENGINEER
Ashraf Ahmed
No. 64787
Exp. 6-30-11
CIVIL
STATE OF CALIFORNIA

The State of California or its officers or agents shall not be responsible for the accuracy or completeness of electronic copies of this plan sheet.

NOTE:
THE CONTRACTOR SHALL VERIFY ALL CONTROLLING FIELD DIMENSIONS BEFORE ORDERING OR FABRICATING ANY MATERIAL.

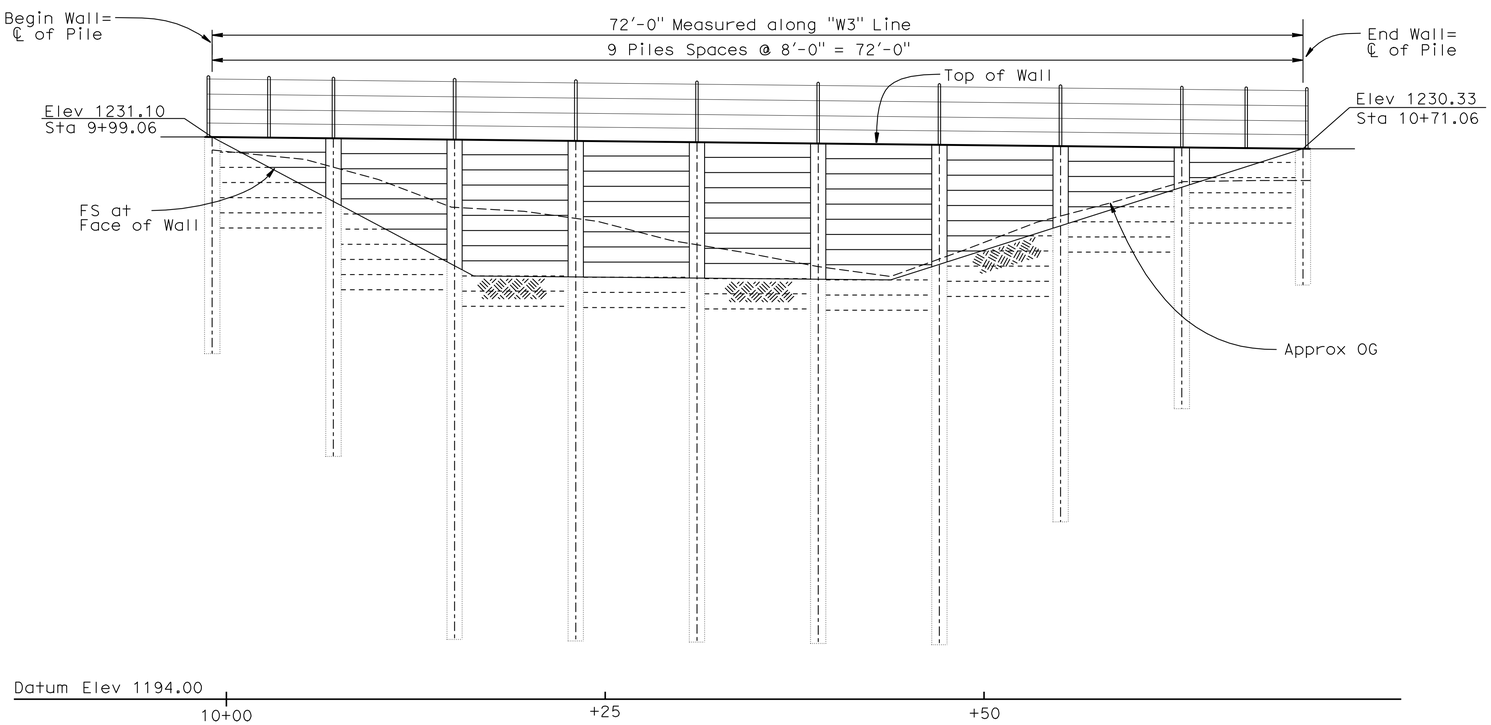

ELEVATION

1" = 5'-0"

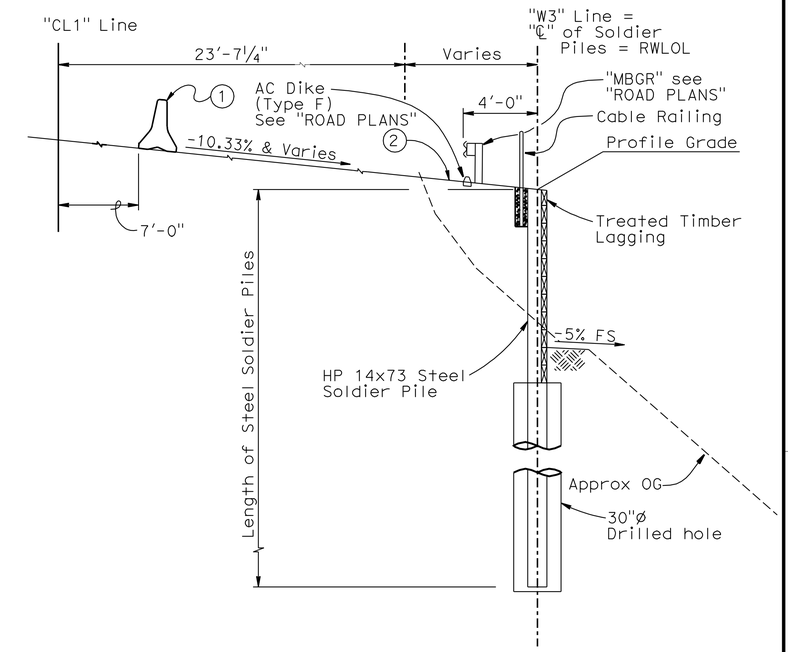

TYPICAL SECTION

¼" = 1'-0"

NOTES:

1. Temporary Railing (Type K), see "ROAD PLANS"
2. AC, see "ROAD PLANS"

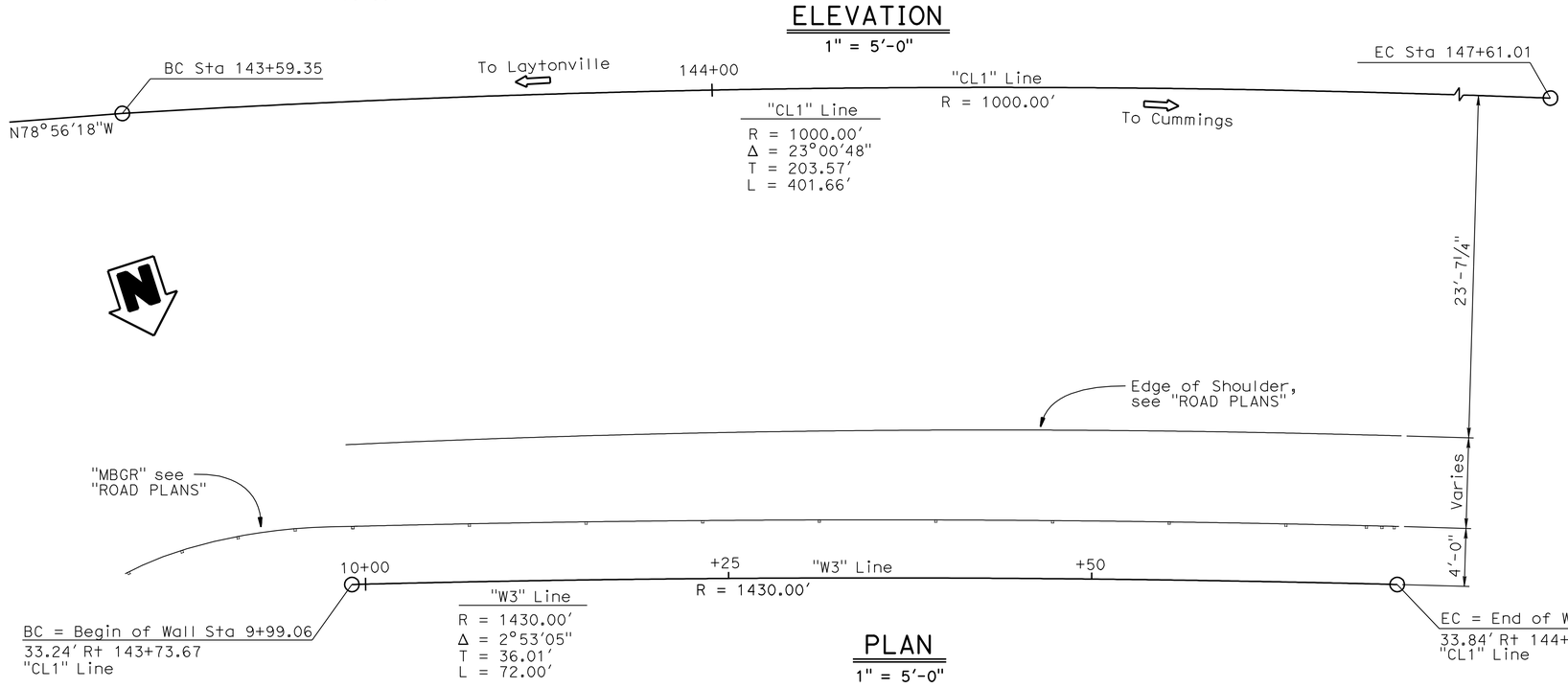

PLAN

1" = 5'-0"

QUANTITIES

STRUCTURE EXCAVATION (SOLDIER PILE WALL)	30	CY
STRUCTURE BACKFILL (SOLDIER PILE WALL)	35	CY
CONCRETE BACKFILL (SOLDIER PILE WALL)	31	CY
LEAN CONCRETE BACKFILL	9	CY
STEEL SOLDIER PILE (HP14 X 73)	252	LF
30" DRILLED HOLE	215	LF
TIMBER LAGGING	2	MFBM
CLEAN AND PAINT STEEL SOLDIER PILING	LUMP	SUM
CABLE RAILING	72	LF

NOTE:
For "GENERAL NOTES" and "INDEX TO PLANS" see "INDEX TO PLANS" sheet

Joseph E Downing
DESIGN ENGINEER

	BY	CHECKED
DESIGN	Ashraf Ahmed	Quang Nguyen
DETAILS	Jay Reid	Quang Nguyen
QUANTITIES	Ashraf Ahmed	Quang Nguyen

LOAD & RESISTANCE FACTOR DESIGN — LIVE LOADING: HL93 W/"LOW-BOY"; PERMIT DESIGN VEHICLE

	BY	CHECKED
LAYOUT	Ashraf Ahmed	Quang Nguyen
SPECIFICATIONS	Vaikunthan Renganathan	PLANS AND SPECS COMPARED Vaikunthan Renganathan

STATE OF CALIFORNIA
DEPARTMENT OF TRANSPORTATION

DIVISION OF ENGINEERING SERVICES
STRUCTURE DESIGN
DESIGN BRANCH 3

BRIDGE NO. 10E0019
POST MILE 83.82

RETAINING WALL @ PM 83.82
GENERAL PLAN

ORIGINAL SCALE IN INCHES FOR REDUCED PLANS 0 1 2 3

CU 01243
EA 477701

DISREGARD PRINTS BEARING EARLIER REVISION DATES

REVISION DATES: 9-8-10 11-09-08 11-06-08 01-22-09 01-09-09 04-01-09 2-26-10 8-31-10

SHEET 1 OF 9

STRUCTURES DESIGN GENERAL PLAN SHEET (ENGLISH) (REV.07-24-06)

FILE => 10e0019-a-gp.dgn

USERNAME => s135318 DATE PLOTTED => 05-NOV-2010 TIME PLOTTED => 14:41

DIST	COUNTY	ROUTE	POST MILES TOTAL PROJECT	SHEET No	TOTAL SHEETS
01	Men	101	81.9/R83.8	54	61

REGISTERED CIVIL ENGINEER 4-9-09 DATE

11-1-10
PLANS APPROVAL DATE

REGISTERED PROFESSIONAL ENGINEER
Ashraf Ahmed
No. 64787
Exp. 6-30-11
CIVIL
STATE OF CALIFORNIA

The State of California or its officers or agents shall not be responsible for the accuracy or completeness of electronic copies of this plan sheet.

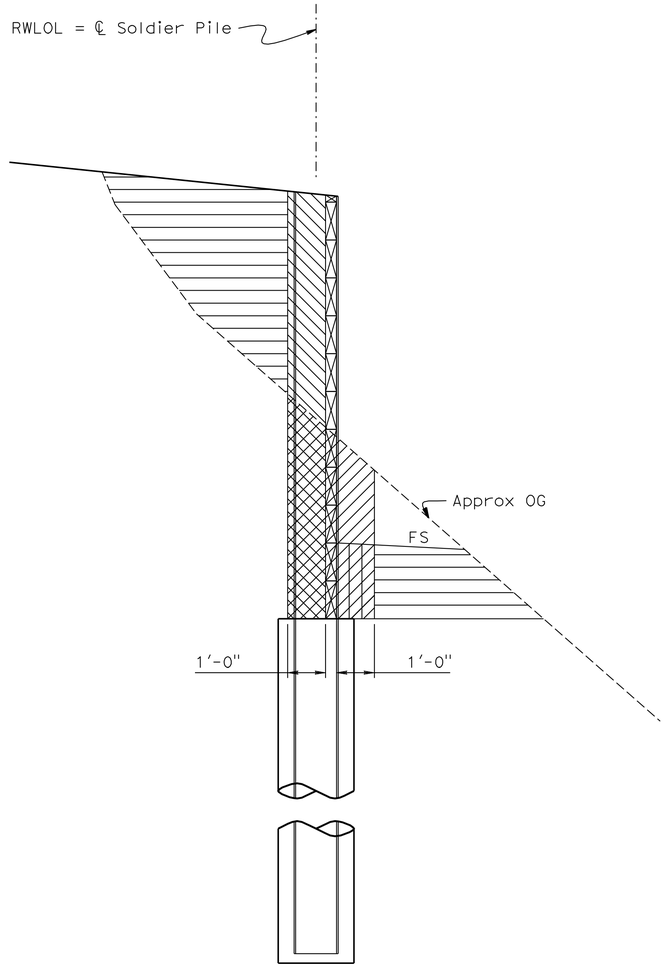

Structure Excavation, Soldier Pile Wall

Roadway Backfill, see "ROAD PLANS"

Pervious Backfill Material, Soldier Pile Wall

Structure Backfill, Soldier Pile wall

LIMITS OF PAYMENT FOR EXCAVATION AND BACKFILL

1/2" = 1'-0"

GENERAL NOTES

DESIGN: BRIDGE DESIGN SPECIFICATIONS - April 2000 (LFD)
(1996 AASHTO with interims and Revisions by CALTRANS)

SOIL PARAMETERS:

Layer	Depth (ft)	Parameters
1	0 - 26	γ = 130 lb/ft^3 ϕ = 40° C = 0
2	26 - 50	γ = 140 lb/ft^3 ϕ = 40° C = 500 lb/ft^2

REINFORCED CONCRETE:

f'_c = 3600 psi
fy = 60 ksi

STRUCTURAL STEEL:

Fy = 50 ksi

STRUCTURAL TIMBER:

Treated Douglas Fir. Grade No. 1 or better
Timber to be full sawn

INDEX TO PLANS

Sheet No.	Title
1	GENERAL PLAN
2	INDEX TO PLANS
3	STRUCTURE PLAN
4	FOUNDATION PLAN
5	WALL DETAILS NO. 1
6	WALL DETAILS NO. 2
7	LOG OF TEST BORINGS 1 OF 3
8	LOG OF TEST BORINGS 2 OF 3
9	LOG OF TEST BORINGS 3 OF 3

STANDARD PLANS dated MAY 2006

A10A	ACRONYMS AND ABBREVIATIONS (SHEET 1 OR 2)
A10B	ACRONYMS AND ABBREVIATIONS (SHEET 2 OF 2)
A10C	SYMBOLS (SHEET 1 OF 2)
A10D	SYMBOLS (SHEET 2 OF 2)
B11-47	CABLE RAILING

STANDARD PLAN SHEET NO.

DETAIL NO.

NOTE:
THE CONTRACTOR SHALL VERIFY ALL CONTROLLING FIELD DIMENSIONS BEFORE ORDERING OR FABRICATING ANY MATERIAL.

	BY	CHECKED
DESIGN	Ashraf Ahmed	Quang Nguyen
DETAILS	Jay Reid	Quang Nguyen
QUANTITIES	Ashraf Ahmed	Quang Nguyen

STATE OF CALIFORNIA
DEPARTMENT OF TRANSPORTATION

DIVISION OF ENGINEERING SERVICES
STRUCTURE DESIGN
DESIGN BRANCH 3

BRIDGE NO. 10E0019
POST MILE 83.82

RETAINING WALL @ PM 83.82
INDEX TO PLANS

STRUCTURES DESIGN DETAIL SHEET (ENGLISH) (REV. 10/25/05)

ORIGINAL SCALE IN INCHES FOR REDUCED PLANS 0 1 2 3

CU 01243
EA 477701

DISREGARD PRINTS BEARING EARLIER REVISION DATES

REVISION DATES: 10-8-08 10-30-08 11-3-08 11/20/08 11/26/08 01/20/09 01/29/09 2-26-10

SHEET 2 OF 9

FILE => 10e0019-b-index.dgn

USERNAME => s135318 DATE PLOTTED => 05-NOV-2010 TIME PLOTTED => 14:41

DIST	COUNTY	ROUTE	POST MILES TOTAL PROJECT	SHEET No	TOTAL SHEETS
01	Men	101	81.9/R83.8	55	61

4-9-09
REGISTERED CIVIL ENGINEER DATE

11-1-10
PLANS APPROVAL DATE

REGISTERED PROFESSIONAL ENGINEER
Ashraf Ahmed
No. 64787
Exp. 6-30-11
CIVIL
STATE OF CALIFORNIA

The State of California or its officers or agents shall not be responsible for the accuracy or completeness of electronic copies of this plan sheet.

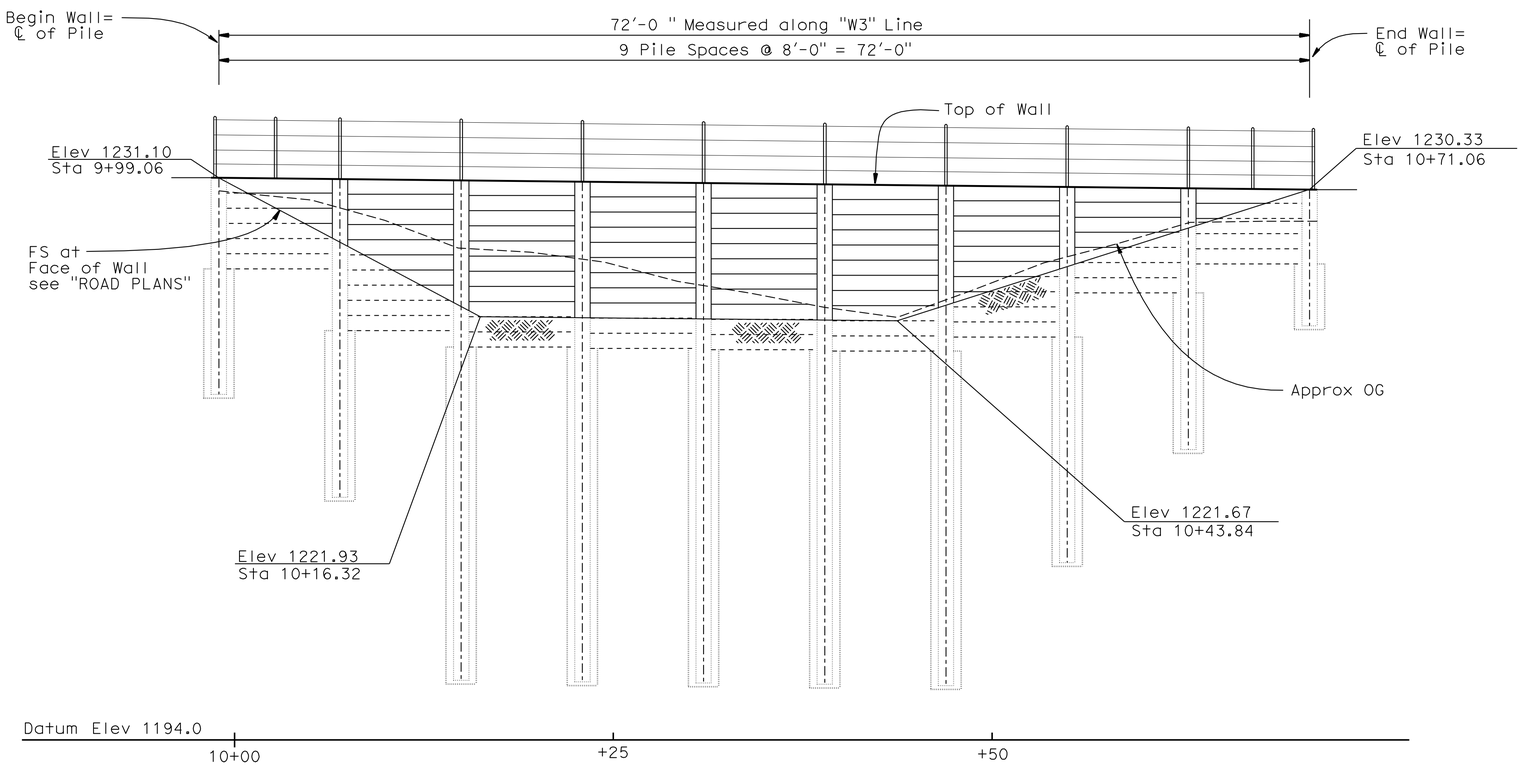

Pile Number	1	2	3	4	5	6	7	8	9	10
Pile Length	14'-3"	21'-0"	33'-0"	33'-0"	33'-0"	33'-0"	33'-0"	24'-9"	17'-3"	9'-0"
Pile Tip Elev (ft)	1216.80	1210.13	1197.93	1197.84	1197.76	1197.67	1197.59	1205.70	1213.17	1221.33
Number of Lagging Members	6	10	11	11	11	11	10	7	5	

ELEVATION
1" = 5'-0"

NOTE:
THE CONTRACTOR SHALL VERIFY ALL CONTROLLING FIELD DIMENSIONS BEFORE ORDERING OR FABRICATING ANY MATERIAL.

	BY	CHECKED
DESIGN	Ashraf Ahmed	Quang Nguyen
DETAILS	Jay Reid	Quang Nguyen
QUANTITIES	Ashraf Ahmed	Quang Nguyen

STATE OF CALIFORNIA
DEPARTMENT OF TRANSPORTATION

DIVISION OF ENGINEERING SERVICES
STRUCTURE DESIGN
DESIGN BRANCH 3

BRIDGE NO. 10E0019
POST MILE 83.82

RETAINING WALL @ PM 83.82
STRUCTURE PLAN

STRUCTURES DESIGN DETAIL SHEET (ENGLISH) (REV. 10/25/05)

ORIGINAL SCALE IN INCHES FOR REDUCED PLANS 0 1 2 3

CU 01243
EA 477701

DISREGARD PRINTS BEARING EARLIER REVISION DATES

REVISION DATES: 10-31-08 11-26-08 11-26-08 11-26-08 01-27-09 01-27-09 2-26-10 8-31-10

SHEET 3 OF 9

FILE => 10e0019-b-sp.dgn

USERNAME => s135318 DATE PLOTTED => 05-NOV-2010 TIME PLOTTED => 14:42

DIST	COUNTY	ROUTE	POST MILES TOTAL PROJECT	SHEET No	TOTAL SHEETS
01	Men	101	81.9/R83.8	56	61

REGISTERED CIVIL ENGINEER X DATE

11-1-10
PLANS APPROVAL DATE

The State of California or its officers or agents shall not be responsible for the accuracy or completeness of electronic copies of this plan sheet.

REGISTERED PROFESSIONAL ENGINEER
Ashraf Ahmed
No. 64787
Exp. 6-30-11
CIVIL
STATE OF CALIFORNIA

NOTE:
THE CONTRACTOR SHALL VERIFY ALL CONTROLLING FIELD DIMENSIONS BEFORE ORDERING OR FABRICATING ANY MATERIAL.

CURVE DATA

No.	R	Δ	T	L
A	1000.00	23°00'48"	203.57	401.66
B	1430.00	2°53'05"	36.01	72.00

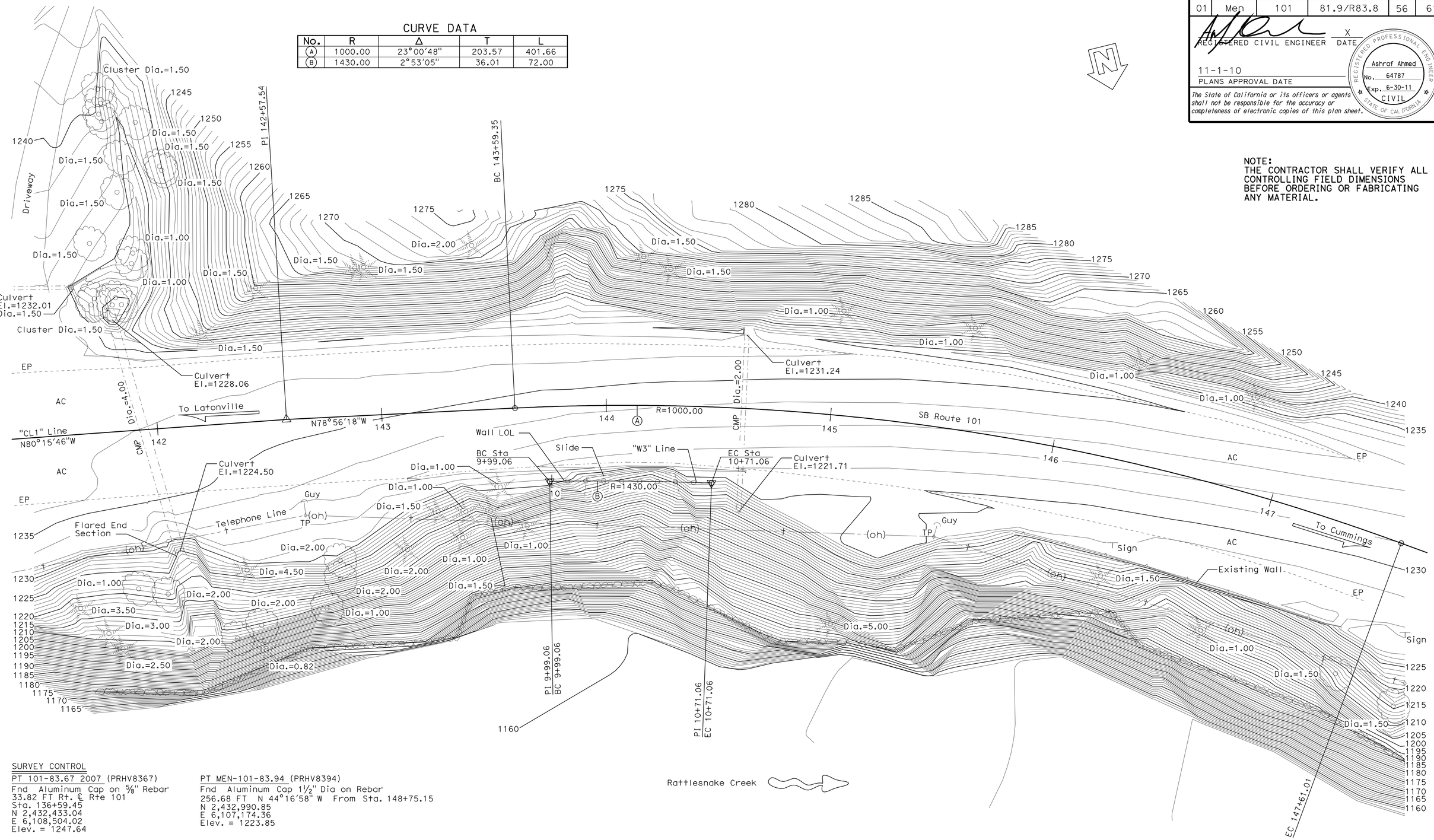

SURVEY CONTROL

PT 101-83.67 2007 (PRHV8367)
Fnd Aluminum Cap on 5/8" Rebar
33.82 FT Rt. ℄ Rte 101
Sta. 136+59.45
N 2,432,433.04
E 6,108,504.02
Elev. = 1247.64

PT MEN-101-83.94 (PRHV8394)
Fnd Aluminum Cap 1½" Dia on Rebar
256.68 FT N 44°16'58" W From Sta. 148+75.15
N 2,432,990.85
E 6,107,174.36
Elev. = 1223.85

PRELIMINARY INVESTIGATION SECTION

SCALE	VERT.DATUM NAVD88	PHOTOGRAMMETRY AS OF: X			
1"=20'	HORZ.DATUM NAD83 (2004.69)	SURVEYED	BY District	CHECKED	BY T.Gillett 08/2008
ALIGNMENT TIES Dist. Traverse Sheet		DRAFTED	BY J.Martinez 08/2008	CHECKED	BY T.Zolnikova 08/2008

	BY	CHECKED
DESIGN	Ashraf Ahmed	Quang Nguyen
DETAILS	Jay Reid	Quang Nguyen
QUANTITIES	Ashraf Ahmed	Quang Nguyen

STATE OF CALIFORNIA
DEPARTMENT OF TRANSPORTATION

DIVISION OF ENGINEERING SERVICES
STRUCTURE DESIGN
DESIGN BRANCH 03

BRIDGE NO. 10E0019
POST MILE 83.82

RATTLESNAKE WALL
FOUNDATION PLAN

STRUCTURES FOUNDATION PLAN SHEET (ENGLISH) (REV. 10/25/05)

ORIGINAL SCALE IN INCHES FOR REDUCED PLANS 0 1 2 3

CU 01
EA 477701

DISREGARD PRINTS BEARING EARLIER REVISION DATES

REVISION DATES: 08/24/08 3/01/10

SHEET 4 OF 9

FILE => 10e0019-e-fpl01.dgn

USERNAME => s135318 DATE PLOTTED => 05-NOV-2010

DIST	COUNTY	ROUTE	POST MILES TOTAL PROJECT	SHEET No	TOTAL SHEETS
01	Men	101	81.9/R83.8	57	61

4-9-09
REGISTERED CIVIL ENGINEER DATE

11-1-10
PLANS APPROVAL DATE

REGISTERED PROFESSIONAL ENGINEER
Ashraf Ahmed
No. 64787
Exp. 6-30-11
CIVIL
STATE OF CALIFORNIA

The State of California or its officers or agents shall not be responsible for the accuracy or completeness of electronic copies of this plan sheet.

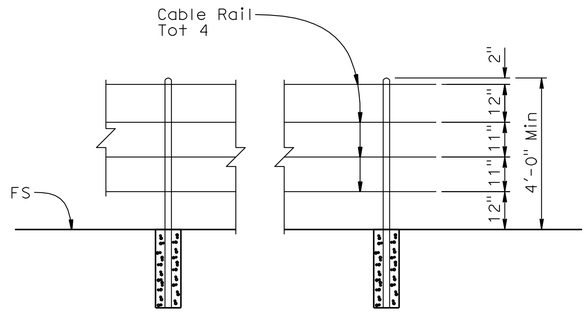

DETAIL A
NO SCALE

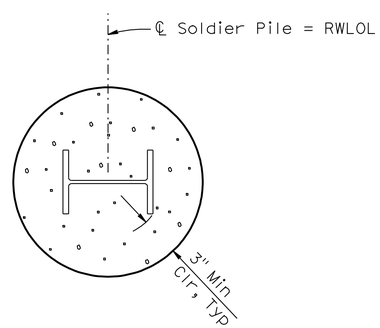

SECTION A - A
NO SCALE

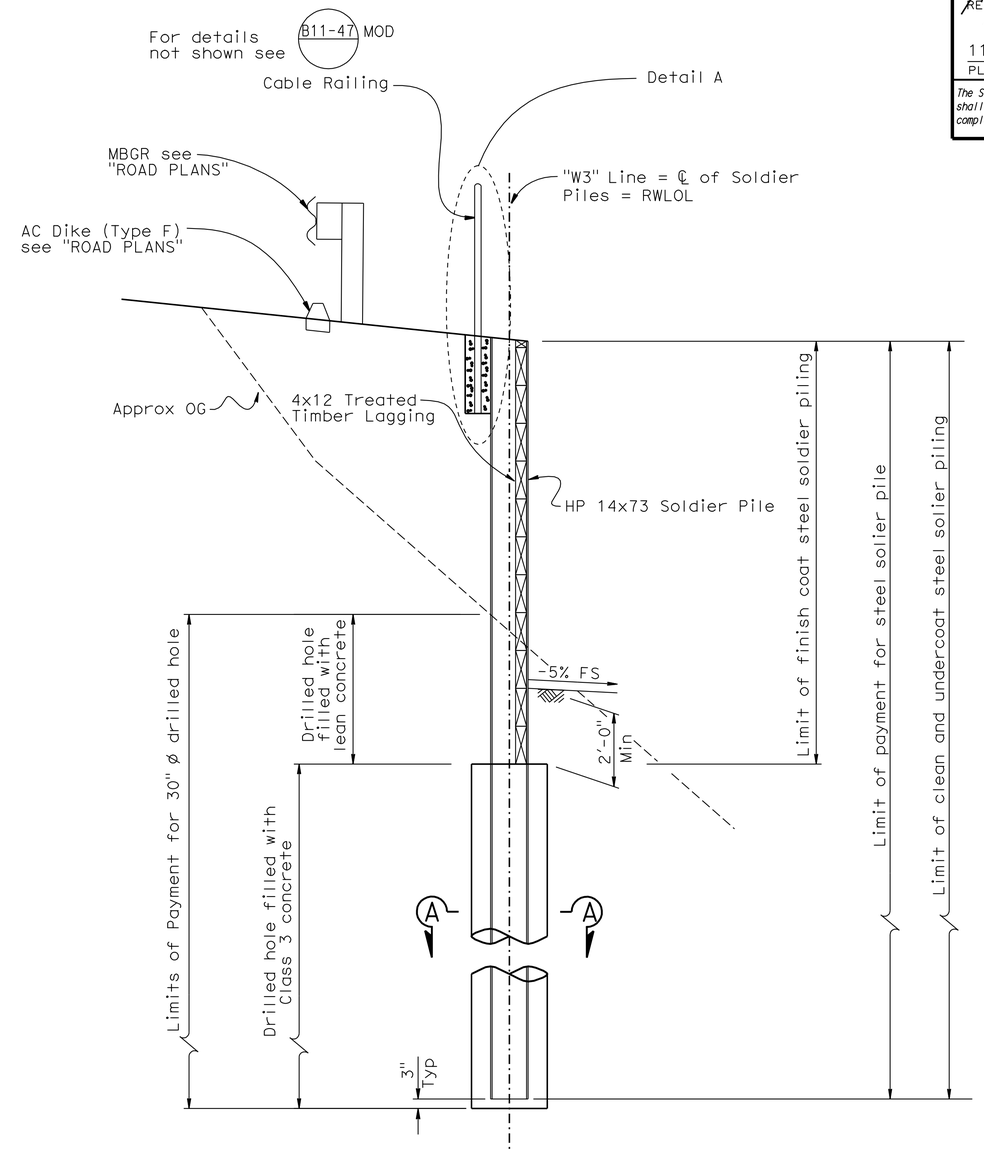

TYPICAL SECTION
½" = 1'-0"

NOTE:
THE CONTRACTOR SHALL VERIFY ALL CONTROLLING FIELD DIMENSIONS BEFORE ORDERING OR FABRICATING ANY MATERIAL.

	BY	CHECKED
DESIGN	Ashraf Ahmed	Quang Nguyen
DETAILS	Jay Reid	Quang Nguyen
QUANTITIES	Ashraf Ahmed	Quang Nguyen

STATE OF CALIFORNIA
DEPARTMENT OF TRANSPORTATION

DIVISION OF ENGINEERING SERVICES
STRUCTURE DESIGN
DESIGN BRANCH 3

BRIDGE NO. 10E0019
POST MILE 83.82

RETAINING WALL @ PM 83.82
WALL DETAILS NO. 1

STRUCTURES DESIGN DETAIL SHEET (ENGLISH) (REV. 10/25/05)

ORIGINAL SCALE IN INCHES FOR REDUCED PLANS 0 1 2 3

CU 01243
EA 477701

DISREGARD PRINTS BEARING EARLIER REVISION DATES

REVISION DATES: 10-3-08, 10-31-08, 11/26/08, 11/26/08, 01/28/09, 2-26-10, 8-31-10

SHEET 5 OF 9

FILE => 10e0019-f-wdet01.dgn

USERNAME => s135318 DATE PLOTTED => 05-NOV-2010 TIME PLOTTED => 14:42

DIST	COUNTY	ROUTE	POST MILES TOTAL PROJECT	SHEET No	TOTAL SHEETS
01	Men	101	81.9/R83.8	58	61

REGISTERED CIVIL ENGINEER 4-9-09 DATE

11-1-10
PLANS APPROVAL DATE

REGISTERED PROFESSIONAL ENGINEER Ashraf Ahmed No. 64787 Exp. 6-30-11 CIVIL STATE OF CALIFORNIA

The State of California or its officers or agents shall not be responsible for the accuracy or completeness of electronic copies of this plan sheet.

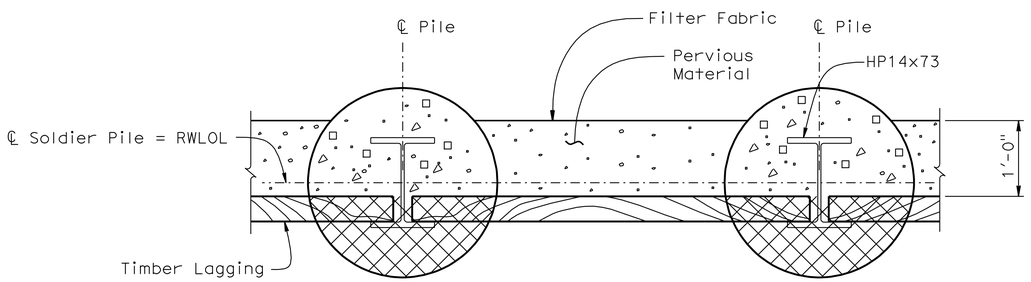

NOTE:

- Indicates lean concrete removal

PART PLAN AT LAGGING

NO SCALE

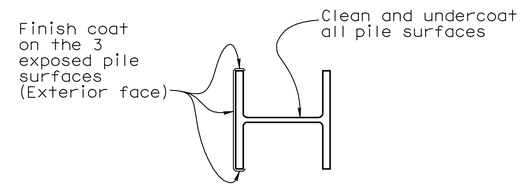

LIMITS OF CLEAN & PAINT STEEL SOLDIER PILE

1" = 1'-0"

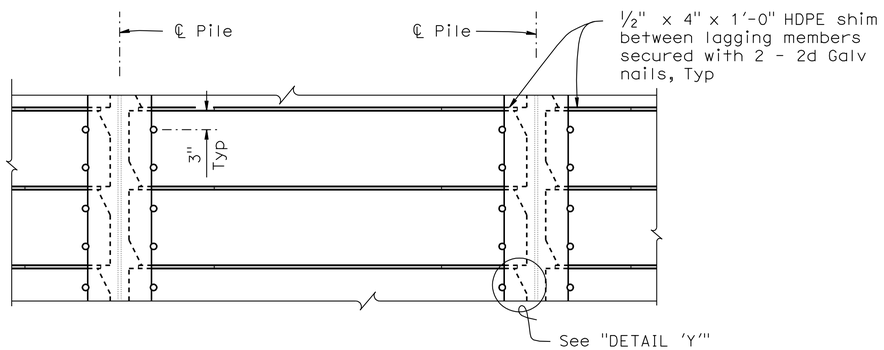

ELEVATION

PLAN

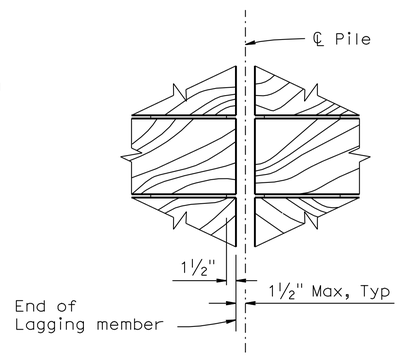

PART ELEVATION

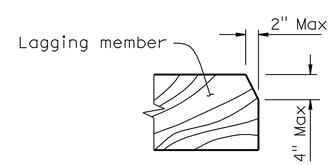

NOTE:
Diagonally opposite corners may be clipped to facilitate placement

DETAIL 'Y'

LAGGING DETAILS

NO SCALE

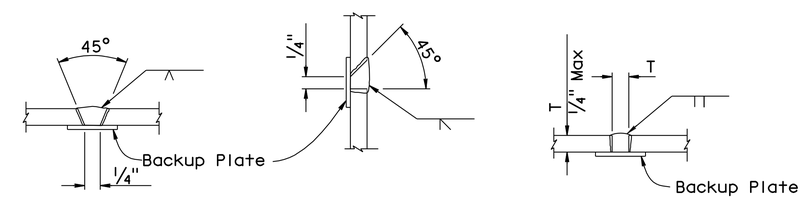

SINGLE VEE-GROOVE SINGLE BEVEL-GROOVE SQUARE GROOVE

PILE WELDING DETAIL-BUTT JOINTS

NOTES:

1. Single Vee-Groove and Square Groove permitted for all positions
2. Single Bevel-Groove permitted for horizontal joints only

NOTE:
THE CONTRACTOR SHALL VERIFY ALL CONTROLLING FIELD DIMENSIONS BEFORE ORDERING OR FABRICATING ANY MATERIAL.

	BY	CHECKED
DESIGN	Ashraf Ahmed	Quang Nguyen
DETAILS	Jay Reid	Quang Nguyen
QUANTITIES	Ashraf Ahmed	Quang Nguyen

STATE OF CALIFORNIA DEPARTMENT OF TRANSPORTATION

DIVISION OF ENGINEERING SERVICES STRUCTURE DESIGN DESIGN BRANCH 3

BRIDGE NO. 10E0019
POST MILE 83.82

RETAINING WALL @ PM 83.82
WALL DETAILS NO. 2

STRUCTURES DESIGN DETAIL SHEET (ENGLISH) (REV. 10/25/05)

ORIGINAL SCALE IN INCHES FOR REDUCED PLANS 0 1 2 3

CU 01243
EA 477701

DISREGARD PRINTS BEARING EARLIER REVISION DATES

REVISION DATES: 10-3-08 11-20-08 11-24-08 01-29-09 2-26-10

SHEET 6 OF 9

FILE => 10e0019-f-wdet02.dgn

USERNAME => s135318 DATE PLOTTED => 05-NOV-2010 TIME PLOTTED => 14:42

DIST	COUNTY	ROUTE	POST MILES TOTAL PROJECT	SHEET No	TOTAL SHEETS
01	Men	101	81.9/R83.8	59	61

9-29-08
GEOTECHNICAL PROFESSIONAL DATE

REGISTERED GEOLOGIST
WILLIAM V. McCORMICK III
No. 1673
Exp. 11-30-08
CERTIFIED ENGINEERING GEOLOGIST
STATE OF CALIFORNIA

11-1-10
PLANS APPROVAL DATE

The State of California or its officers or agents shall not be responsible for the accuracy or completeness of electronic copies of this plan sheet.

KLEINFELDER
2240 NORTHPOINT PKWY.
SANTA ROSA, CA 95407

WEATHERING DESCRIPTORS

Modified from United States Bureau of Reclamation, Engineering Geology Field Manual.

Descriptors		Diagnostic features					
		Chemical weathering-Discoloration and/or oxidation		Mechanical weathering-Grain boundary conditions (disaggregation) primarily for granitics and some coarse-grained sediments	Texture and solutioning		General characteristics (strength, excavation, etc.)§
Alphanumeric descriptor	Descriptive term	Body of rock	Fracture surfaces †		Texture	Solutioning	
W1	Fresh	No discoloration, not oxidized.	No discoloration or oxidation.	No separation, intact (tight).	No change.	No solutioning.	Hammer rings when crystalline rocks are struck. Almost always rock excavation except for naturally weak or weakly cemented rocks such as siltstones or shales.
W2	Slightly weathered to fresh ○						
W3	Slightly weathered	Discoloration or oxidation is limited to surface of, or short distance from, fractures; some feldspar crystals are dull.	Minor to complete discoloration or oxidation of most surfaces.	No visible separation, intact (tight).	Preserved.	Minor leaching of some soluble minerals may be noted.	Hammer rings when crystalline rocks are struck. Body of rock not weakened. With few exceptions, such as siltstones or shales, classified as rock excavation.
W4	Moderately to slightly weathered ○						
W5	Moderately weathered	Discoloration or oxidation extends from fractures usually throughout; Fe-Mg minerals are "rusty," feldspar crystals are "cloudy."	All fracture surfaces are discolored or oxidized.	Partial separation of boundaries visible.	Generally preserved.	Soluble minerals may be mostly leached.	Hammer does not ring when rock is struck. Body of rock is slightly weakened. Depending on fracturing, usually is rock excavation except in naturally weak rocks such as siltstones or shales.
W6	Intensely to moderately weathered ○						
W7	Intensely weathered	Discoloration or oxidation throughout; all feldspars and Fe-Mg minerals are altered to clay to some extent; or chemical alteration produces in-situ disaggregation, see grain boundary conditions.	All fracture surfaces are discolored or oxidized, surfaces friable.	Partial separation, rock is friable; in semiarid conditions granitics are disaggregated.	Texture altered by chemical disintegra-tion (hy-dration, argillation).	Leaching of soluble minerals may be complete.	Dull sound when struck with hammer, usually can be broken with moderate to heavy manual pressure or by light hammer blow without reference to planes of weakness such as incipient or hairline fractures, or veinlets. Rock is significantly weakened. Usually common excavation.
W8	Very intensely weathered						
W9	Decomposed	Discolored or oxidized throughout, but resistant minerals such as quartz may be unaltered; all feldspars and Fe-Mg minerals are completely altered to clay.		Complete separation of grain boundaries (disaggregated).	Resembles a soil, partial or complete remnant rock structure may be preserved; leaching of soluble minerals usually complete.		Can be granulated by hand. Always common excavation. Resistant minerals such as quartz may be present as "stringers" or "dikes."

Note: This chart and its horizontal categories are more readily applied to rocks with feldspars and mafic minerals. Weathering in various sedimentary rocks, particularly limestones and poorly indurated sediments, will not always fit the categories established. This chart and weathering categories may have to be modified for particular site conditions or alteration such as hydrothermal effects; however, the basic framework and similar descriptors are to be used.

○ Combination descriptors are permissible where equal distribution of both weathering characteristics are present over significant intervals or where characteristics present are "in between" the diagnostic feature. However, dual descriptors should not be used where significant, identifiable zones can be delineated. When given as a range, only two adjacent terms may be combined. "Decomposed to slightly weathered," or "moderately weathered to fresh" are not acceptable.

† Does not include directional weathering along shears or faults and their associated features. For example, a shear zone that carried weathering to great depths into a fresh rock mass would not require the rock mass to be classified as weathered.

§ These are generalizations and should not be used as diagnostic features for weathering or excavation classification. These characteristics vary to a large extent based on naturally weak materials or cementation and type of excavation.

BEDDING, FOLIATION, OR FLOW TEXTURE DESCRIPTORS

Descriptors	Thickness / Spacing
Massive	Greater than 10 ft
Very thickly (bedded, foliated, or banded)	3 to 10 ft
Thickly	1 to 3 ft
Moderately	0.3 to 1 ft
Thinly	0.1 to 0.3 ft
Very thinly	0.03 (3/8 in) to 0.1 ft
Laminated (intensely foliated or banded)	Less than 0.03 ft (3/8 in)

Modified from United States Bureau of Reclamation, Engineering Geology Field Manual.

FRACTURE DENSITY

Modified from United States Bureau of Reclamation, Engineering Geology Field Manual.

FRACTURE DENSITY- Based on the spacing of all natural fractures in an exposure or core recovery lengths in boreholes; excludes mechanical breaks, shears, and shear zones; however, shear-disturbed zones (fracturing outside the shear) are included. Descriptors for fracture density apply to all rock exposures such as tunnel walls, dozer trenches, outcrops, or foundation cut slopes and inverts, as well as boreholes. Descriptive criteria presented below are based on borehole cores where lengths are measured along the core axis, for other exposures the criteria is distance measured between fractures (size of blocks).

UNFRACTURED (FDØ): No fractures.

VERY SLIGHTLY FRACTURED (FD1): Core recovered mostly in lengths greater than 3 ft.

SLIGHTLY TO VERY SLIGHTLY FRACTURED (FD2)*

SLIGHTLY FRACTURED (FD3): Core recovered mostly in lengths from 1 to 3 ft. with few scattered lengths less than 1 ft or greater than 3 ft.

MODERATELY TO SLIGHTLY FRACTURED (FD4)*

MODERATELY FRACTURED (FD5): Core recovered mostly in 0.3 to 1.0 ft lengths with most lengths about 0.6 ft.

INTENSELY TO MODERATELY FRACTURED (FD6)*

INTENSELY FRACTURED (FD7): Lengths average from 0.1 to 0.3 ft with scattered fragmented intervals. Core recovered mostly in lengths less than 0.3 ft.

VERY INTENSELY TO INTENSELY FRACTURED (FD8)*

VERY INTENSELY FRACTURED (FD9): Core recovered mostly as chips and fragments with a few scattered short core lengths.

* Combinations of fracture densities (e.g. very intensely to intensely fractured, or moderately to slightly fractured) are used where equal distribution of both fracture density characteristics are present over a significant interval or exposure, or where characteristics are "in between" the descriptor definitions.

ROCK HARDNESS DESCRIPTORS

Alphanumeric Descriptor	Descriptor	Criteria
H1	Extremely hard	Core, fragment, or exposure cannot be scratched with knife or sharp pick; can only be chipped with repeated heavy hammer blows.
H2	Very hard	Cannot be scratched with knife on sharp pick. Core or fragment breaks with repeated heavy hammer blows.
H3	Hard	Can be scratched with knife or sharp pick with difficulty (heavy pressure). Heavy hammer blow required to break specimen.
H4	Moderately hard	Can be scratched with knife or sharp pick with light or moderate pressure. Core or fragment breaks with moderate hammer blow.
H5	Moderately soft	Can be grooved 1/16 inch deep by knife or sharp pick with moderate or heavy pressure. Core or fragment breaks with light hammer blow or heavy manual pressure.
H6	Soft	Can be grooved or gouged easily by knife or sharp pick with light pressure, can be scratched with fingernail. Breaks with light to moderate manual pressure.
H7	Very soft	Can be readily indented, grooved or gouged with fingernail, or carved with a knife. Breaks with light manual pressure.

Any bedrock unit softer than H7, very soft, is to be described using ASTM D-2488 consistency descriptors.

Note: Although "sharp pick" is included in these definitions, descriptions of ability to be scratched, grooved or gouged by a knife is the preferred criteria.

Modified from United States Bureau of Reclamation, Engineering Geology Field Manual.

LEGEND OF BORING OPERATIONS

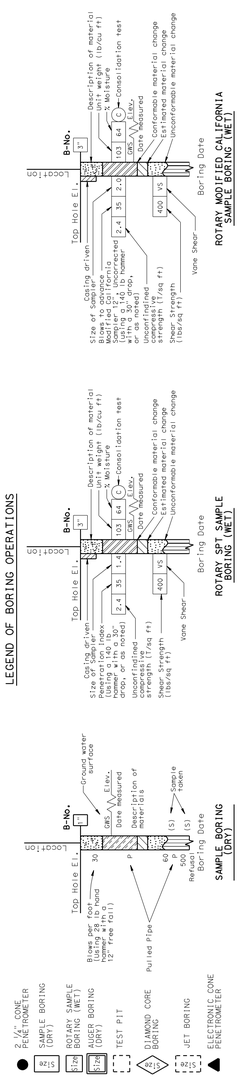

LEGEND OF EARTH MATERIALS

GRAVEL, SAND, SILT, CLAY, SANDY CLAY or CLAYEY SAND, SILTY SAND, SILTY CLAY, CLAYEY SILT, REAL and/or ORGANIC MATTER, TILL MATERIAL, IGNEOUS ROCK, SEDIMENTARY ROCK, METAMORPHIC

CONSISTENCY CLASSIFICATION FOR SOILS

According to the Standard Penetration Test

SPT N-Value (Blows/ foot)	Granular	SPT N-Value (Blows/ foot)	Cohesive
0-4	Very Loose	<2	Very Soft
5-10	Loose	2-4	Soft
11-30	Medium Dense	5-8	Firm
31-50	Dense	9-15	Stiff
>50	Very Dense	16-30	Very Stiff
		>31	Hard

NOTE: Classification of earth material as shown on this sheet is based upon field inspection and is not to be construed to imply mechanical analysis.

DESIGN OVERSIGHT	DRAWN BY: A. Sanchez	KLEINFELDER FIELD INVESTIGATION BY:	PREPARED FOR THE STATE OF CALIFORNIA DEPARTMENT OF TRANSPORTATION
SIGN OFF DATE	CHECKED BY: J. Richmond, C.E.G	DATE: August 2007	X PROJECT ENGINEER

BRIDGE NO. 10E0019
POST MILE 83.82

RETAINING WALL @ PM 83.82

LOG OF TEST BORINGS 1 OF 3

OSF GEOTECHNICAL LOG OF TEST BORINGS SHEET (ENGLISH) (REV. 2/25/05)

ORIGINAL SCALE IN INCHES FOR REDUCED PLANS 0 1 2 3

CU 01243
EA 477701

DISREGARD PRINTS BEARING EARLIER REVISION DATES

REVISION DATES (PRELIMINARY STAGE ONLY): 11-1-01, 9-29-08, 2-26-10

SHEET 7 OF 9

FILE => 10e0019-z-ltb01.dgn

USERNAME => s135318 DATE PLOTTED => 05-NOV-2010 TIME PLOTTED => 14:42

DIST	COUNTY	ROUTE	POST MILES TOTAL PROJECT	SHEET No	TOTAL SHEETS
01	Men	101	81.9/R83.8	60	61

9-29-08
GEOTECHNICAL PROFESSIONAL DATE

11-1-10
PLANS APPROVAL DATE

The State of California or its officers or agents shall not be responsible for the accuracy or completeness of electronic copies of this plan sheet.

REGISTERED GEOLOGIST
WILLIAM V. McCORMICK III
No. 1673
Exp. 11-30-08
CERTIFIED ENGINEERING GEOLOGIST
STATE OF CALIFORNIA

KLEINFELDER
2240 NORTHPOINT PKWY.
SANTA ROSA, CA 95407

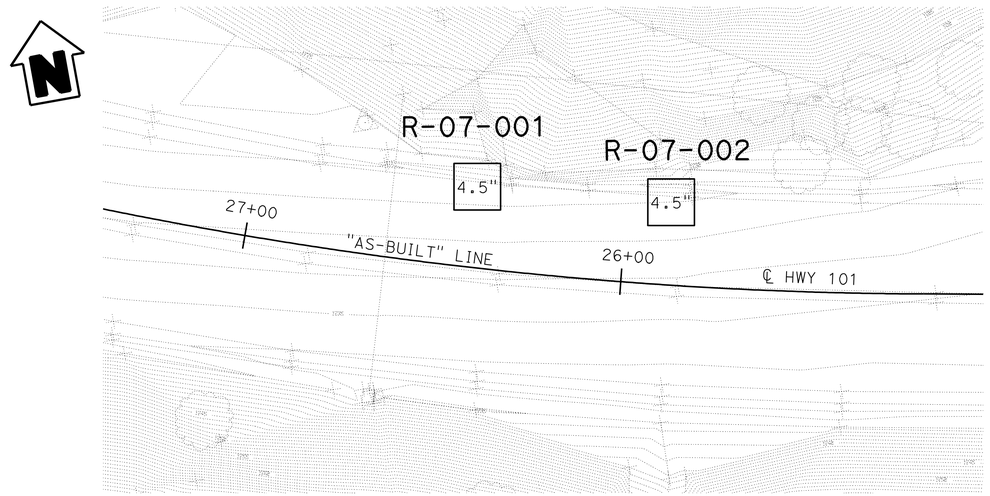

BORE HOLE LOCATIONS

BORING NUMBER	"AS-BUILT" LINE	"CL1" LINE
R-07-001	Sta 26+40, 21.4' Rt	Sta 143+87.9, 22.6' Rt
R-07-002	Sta 25+90, 21.0' Rt	Sta 144+38.1, 23.9' Rt

NOTE: GEOTECHNICAL INVESTIGATION WAS PERFORMED UTILIZING "AS-BUILT" LINE STATIONING.
ROADWAY DESIGN UTILIZES "CL1" LINE STATIONING.

LEGEND OF BORING OPERATIONS

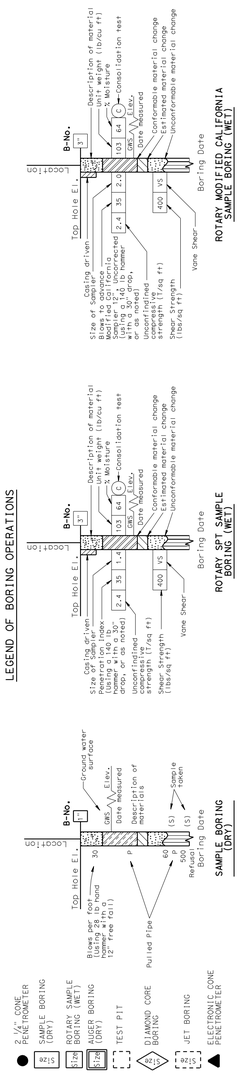

LEGEND OF EARTH MATERIALS

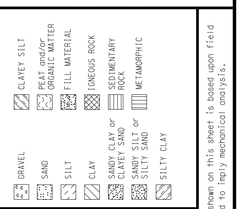

CONSISTENCY CLASSIFICATION FOR SOILS

According to the Standard Penetration Test

SPT N-Value (Blows/foot)	Granular	SPT N-Value (Blows/foot)	Cohesive
0-4	Very Loose	<2	Very Soft
5-10	Loose	2-4	Soft
11-30	Medium Dense	5-8	Firm
31-50	Dense	9-15	Stiff
>50	Very Dense	16-30	Very Stiff
		>31	Hard

NOTE: Classification of earth material as shown on this sheet is based upon field inspection and is not to be construed to imply mechanical analysis.

ROCK QUALITY DESIGNATION (RQD) & PERCENT RECOVERY (REC) LOGGING

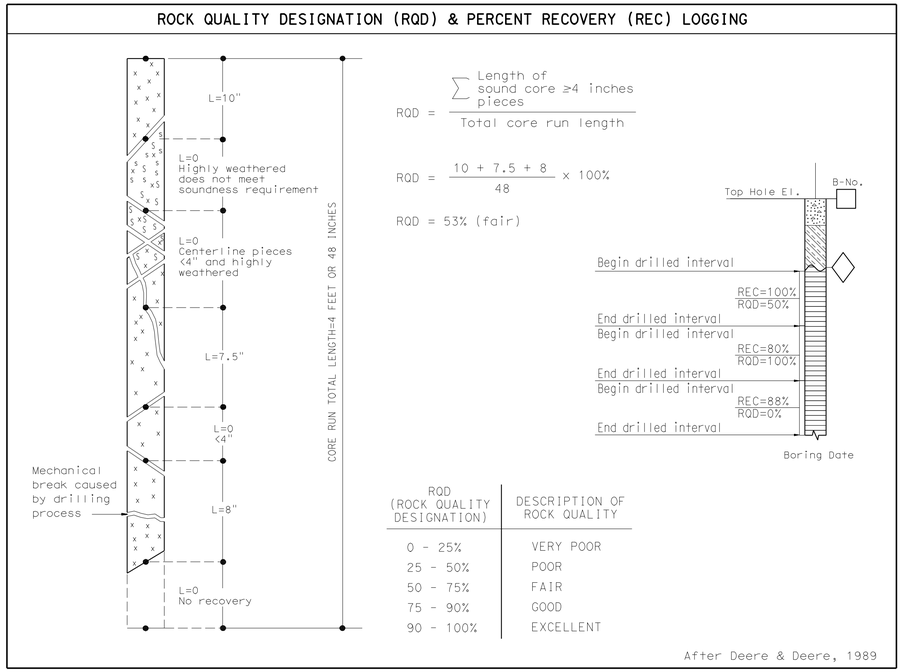

$$RQD = \frac{\sum \text{Length of sound core} \geq 4 \text{ inches pieces}}{\text{Total core run length}}$$

$$RQD = \frac{10 + 7.5 + 8}{48} \times 100\%$$

RQD = 53% (fair)

RQD (ROCK QUALITY DESIGNATION)	DESCRIPTION OF ROCK QUALITY
0 - 25%	VERY POOR
25 - 50%	POOR
50 - 75%	FAIR
75 - 90%	GOOD
90 - 100%	EXCELLENT

After Deere & Deere, 1989

Notes:

1. Samples were taken using a modified California split-barrel sampler with an inside diameter (I.D.) of 2 in. and an outside diameter (O.D.) of 2.5 in.
2. A safety semi-automatic hammer (140 lb) with a 30 inch drop was used to advance the sampler.
3. Blowcounts noted for boring are field blowcounts and have not been corrected.
4. Samples were taken using a SPT split-barrel sampler with an inside diameter (I.D.) of 1.4 in. and an outside diameter (O.D.) of 2 in.
5. Core samples were taken using either an HQ or HxB core sampler with a 2.5 in. and a 2.4 in. inside diameter (I.D.) and 3.8 in. and 3.7 in. outside diameter (O.D.) core barrel respectively.
6. Blowcounts 50/4 means 50 blows per 4 in. penetration.

IN-SITU, LAB & FIELD TEST DESIGNATIONS

- (AL) ATTERBERG LIMITS
- (CA) CHEMICAL ANALYSIS
- (CN) CONSOLIDATION
- (CU) CONSOLIDATED UNDRAINED TRIAXIAL
- (DS) DIRECT SHEAR
- (MD) MAX. DRY DENSITY
- (PL) POINT LOAD
- (PP) POCKET PENETROMETER
- (SA) SIEVE ANALYSIS
- (TV) TORVANE
- (UC) UNCONFINED COMPRESSION
- (UU) UNCONSOLIDATED UNDRAINED TRIAXIAL
- (VS) VANE SHEAR
- (WC) MOISTURE CONTENT

DESIGN OVERSIGHT
SIGN OFF DATE

DRAWN BY A. Sanchez
CHECKED BY J. Richmond, C.E.G

KLEINFELDER
FIELD INVESTIGATION BY:
DATE: August 2007

PREPARED FOR THE STATE OF CALIFORNIA DEPARTMENT OF TRANSPORTATION

X
PROJECT ENGINEER

BRIDGE NO. 10E0019
POST MILE 83.82

RETAINING WALL @ PM 83.82
LOG OF TEST BORINGS 2 OF 3

OSF GEOTECHNICAL LOG OF TEST BORINGS SHEET (ENGLISH) (REV. 2/25/05)

ORIGINAL SCALE IN INCHES FOR REDUCED PLANS 0 1 2 3

CU 01
EA 477701

DISREGARD PRINTS BEARING EARLIER REVISION DATES
REVISION DATES (PRELIMINARY STAGE ONLY) 11-1-01 9-29-08 3-26-09 2-26-10
SHEET 8 OF 9

FILE => 10e0019-z-1tb02.dgn

USERNAME => s135318 DATE PLOTTED => 05-NOV-2010 TIME PLOTTED => 14:42

DIST	COUNTY	ROUTE	POST MILES TOTAL PROJECT	SHEET No	TOTAL SHEETS
01	Men	101	81.9/R83.8	61	61

9-29-08
GEOTECHNICAL PROFESSIONAL DATE

11-1-10
PLANS APPROVAL DATE

REGISTERED GEOLOGIST WILLIAM V. McCORMICK III No. 1673 Exp. 11-30-08 CERTIFIED ENGINEERING GEOLOGIST STATE OF CALIFORNIA

The State of California or its officers or agents shall not be responsible for the accuracy or completeness of electronic copies of this plan sheet.

KLEINFELDER
2240 NORTHPOINT PKWY.
SANTA ROSA, CA 95407

FOR PLAN VIEW AND ADDITIONAL NOTES, SEE "LOG OF TEST BORINGS" SHEET 2 OF 3

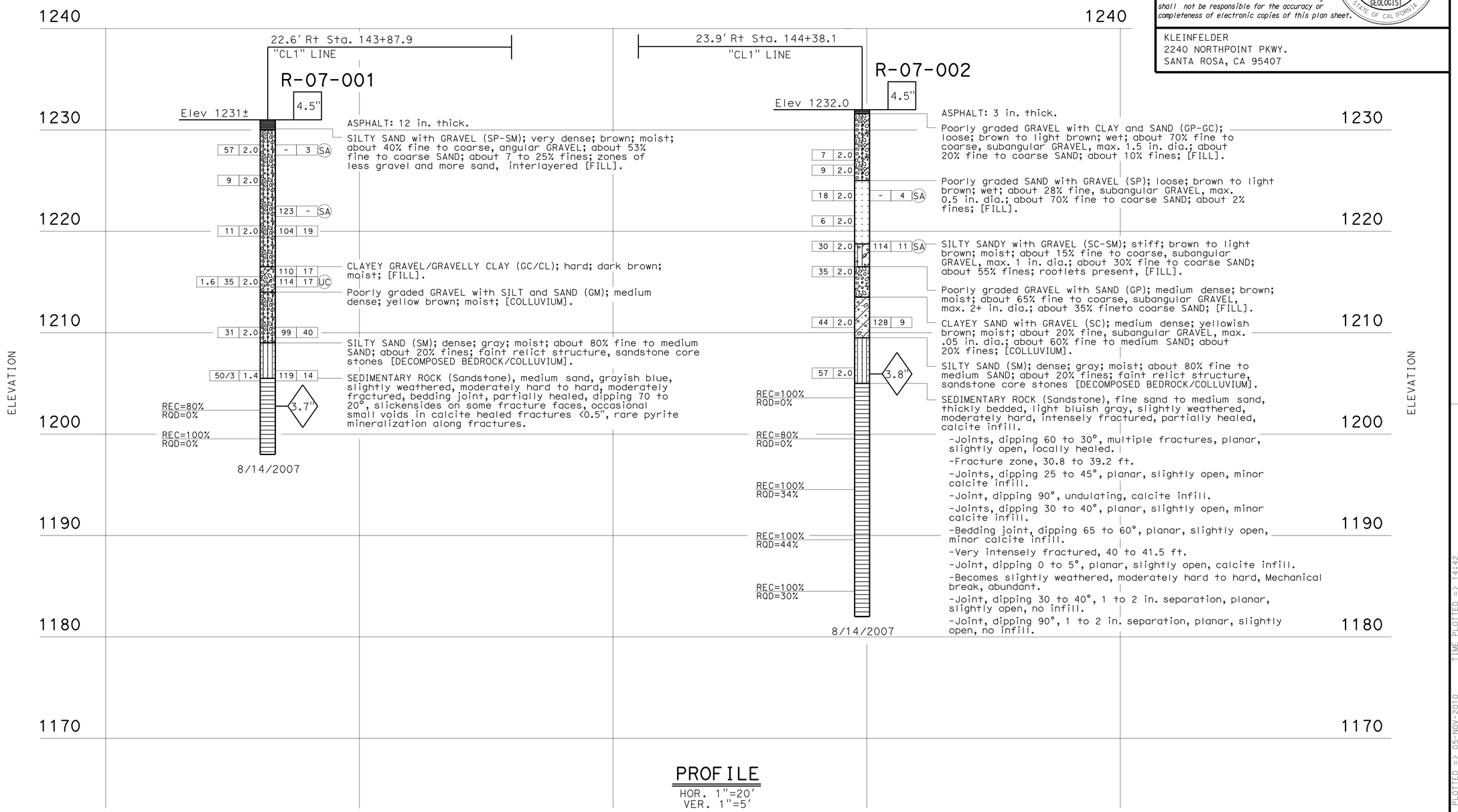

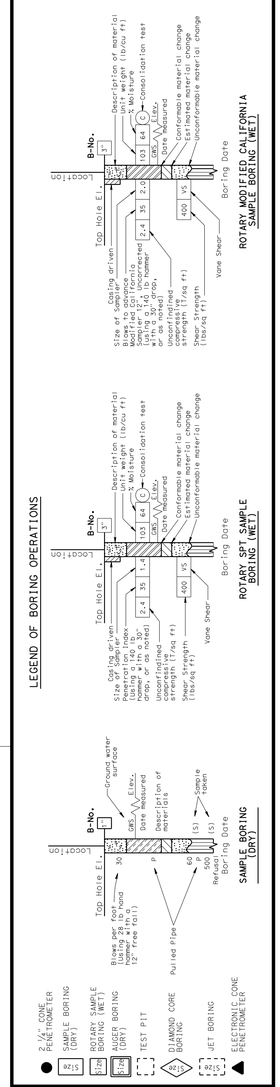

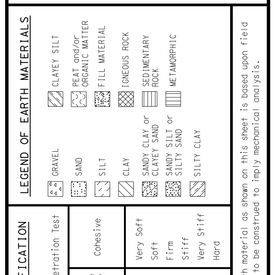

CONSISTENCY CLASSIFICATION FOR SOILS
According to the Standard Penetration Test

SPT N-Value (Blows/ foot)	Granular	SPT N-Value (Blows/ foot)	Cohesive
0-4	Very Loose	<2	Very Soft
5-10	Loose	2-4	Soft
11-30	Medium Dense	5-8	Firm
31-50	Dense	9-15	Stiff
>50	Very Dense	16-30	Very Stiff
		>31	Hard

NOTE: Classification of earth material as shown on this sheet is based upon field inspection and is not to be construed to imply mechanical analysis.

DESIGN OVERSIGHT	DRAWN BY	A. Sanchez	P. Holland, J. Richmond
SIGN OFF DATE	CHECKED BY	J. Richmond, C.E.G	FIELD INVESTIGATION BY: DATE: August 2007

PREPARED FOR THE STATE OF CALIFORNIA DEPARTMENT OF TRANSPORTATION

X
PROJECT ENGINEER

BRIDGE NO. 10E0019
POST MILE 83.82

RETAINING WALL @ PM 83.82
LOG OF TEST BORINGS 3 OF 3

OSF GEOTECHNICAL LOG OF TEST BORINGS SHEET (ENGLISH) (REV. 2/25/05)

ORIGINAL SCALE IN INCHES FOR REDUCED PLANS 0 1 2 3

CU 01
EA 477701

DISREGARD PRINTS BEARING EARLIER REVISION DATES

REVISION DATES (PRELIMINARY STAGE ONLY): 11-1-07, 9-29-08, 3-26-09, 2-26-10

SHEET 9 OF 9

FILE => 10e0019-z-ltb03-r.dgn

USERNAME => s135318 DATE PLOTTED => 05-NOV-2010 TIME PLOTTED => 14:42