Dist	COUNTY	ROUTE	POST MILES TOTAL PROJECT	SHEET No.	TOTAL SHEETS
01	Men	128	35.0/35.3	1	42

ER-43M5(004)

STATE OF CALIFORNIA
DEPARTMENT OF TRANSPORTATION

PROJECT PLANS FOR CONSTRUCTION ON
STATE HIGHWAY
IN MENDOCINO COUNTY
ABOUT 5 MILES EAST OF BOONVILLE
FROM 0.5 MILE EAST OF SHEARING CREEK BRIDGE
TO 0.9 MILE WEST OF MAPLE CREEK BRIDGE

TO BE SUPPLEMENTED BY STANDARD PLANS DATED 2010

INDEX OF PLANS

SHEET No.	DESCRIPTION
1	TITLE AND LOCATION MAP
2-3	TYPICAL CROSS SECTIONS
4	LAYOUT
5	PROFILE AND SUPERELEVATION DIAGRAM
6-7	CONSTRUCTION DETAILS
8-12	DRAINAGE PLAN, PROFILES, DETAILS AND QUANTITIES
13	CONSTRUCTION AREA SIGNS
14-16	PAVEMENT DELINEATION AND SIGN PLANS, DETAILS AND QUANTITIES
17	SUMMARY OF QUANTITIES
18-20	EROSION CONTROL LEGEND, PLAN AND QUANTITIES
21-26	REVISED STANDARD PLANS

STRUCTURE PLANS

27-42	SMOOT SINK GROUND ANCHOR WALERS

THE STANDARD PLANS LIST APPLICABLE TO THIS CONTRACT IS INCLUDED IN THE NOTICE TO BIDDERS AND SPECIAL PROVISIONS BOOK.

LOCATION MAP

BEGIN CONSTRUCTION
Sta 16+25 PM 35.0

END CONSTRUCTION
Sta 34+00 PM 35.3

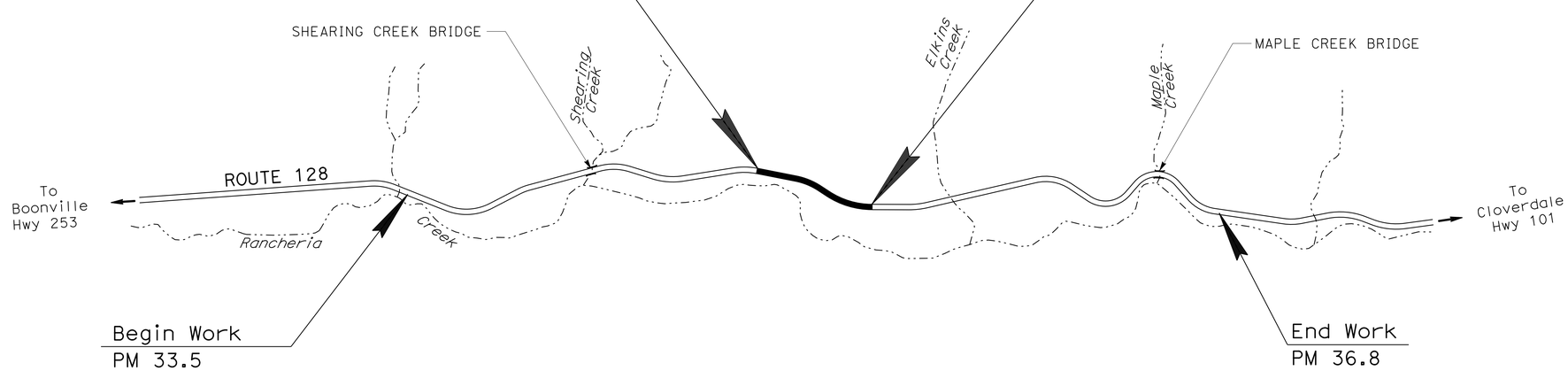

THE CONTRACTOR SHALL POSSESS THE CLASS (OR CLASSES) OF LICENSE AS SPECIFIED IN THE "NOTICE TO BIDDERS."

NO SCALE

PROJECT MANAGER: SEBASTIAN COHEN
DESIGN ENGINEER: JULIE CASEY

P:\proj2\01\47660_plans\pse\147660ab001.dgn

05-08-13
PROJECT ENGINEER REGISTERED CIVIL ENGINEER — DATE

June 24, 2013
PLANS APPROVAL DATE

REGISTERED PROFESSIONAL ENGINEER — M.J. ZDENEK — No. C76156 — Exp. 6-30-14 — CIVIL — STATE OF CALIFORNIA

THE STATE OF CALIFORNIA OR ITS OFFICERS OR AGENTS SHALL NOT BE RESPONSIBLE FOR THE ACCURACY OR COMPLETENESS OF SCANNED COPIES OF THIS PLAN SHEET.

CONTRACT No.	01-476604
PROJECT ID	0100000351

LAST REVISION 05-08-13 — DATE PLOTTED => 14-AUG-2013 — TIME PLOTTED => 13:41

Dist	COUNTY	ROUTE	POST MILES TOTAL PROJECT	SHEET No.	TOTAL SHEETS
01	Men	128	35.0/35.3	2	42

REGISTERED CIVIL ENGINEER 04-22-13 DATE

6-24-13
PLANS APPROVAL DATE

REGISTERED PROFESSIONAL ENGINEER M.J. ZDENEK No. C76156 Exp. 6-30-14 CIVIL STATE OF CALIFORNIA

THE STATE OF CALIFORNIA OR ITS OFFICERS OR AGENTS SHALL NOT BE RESPONSIBLE FOR THE ACCURACY OR COMPLETENESS OF SCANNED COPIES OF THIS PLAN SHEET.

NOTES:

1. DIMENSIONS OF THE PAVEMENT STRUCTURES (STRUCTURAL SECTIONS) ARE SUBJECT TO TOLERANCES SPECIFIED IN THE STANDARD SPECIFICATIONS.
2. SUPERELEVATIONS ARE SHOWN ON THE SUPERELEVATION DIAGRAM SHEETS.
3. CENTERLINE RUMBLE STRIPS ARE SHOWN ON THE CONSTRUCTION DETAIL SHEETS.
4. PLACE SAFETY EDGE ON OUTSIDE EDGE OF PAVEMENT AS SHOWN ON RSP P76, DETAIL B.
5. EXCESS EARTHEN MATERIAL TO BE EMBANKED ON 5 PERCENT BENCHES AS DETERMINED BY THE ENGINEER.

DESIGN DESIGNATION (ROUTE 128)

2013 ADT = 2440 D - 60%
2033 ADT = 3360 T - 8.5%
2033 DHV = 410 V = 55 MPH

PAVEMENT CLIMATE REGION

MEDITERRANEAN

LEGEND

RSP BUTTRESS

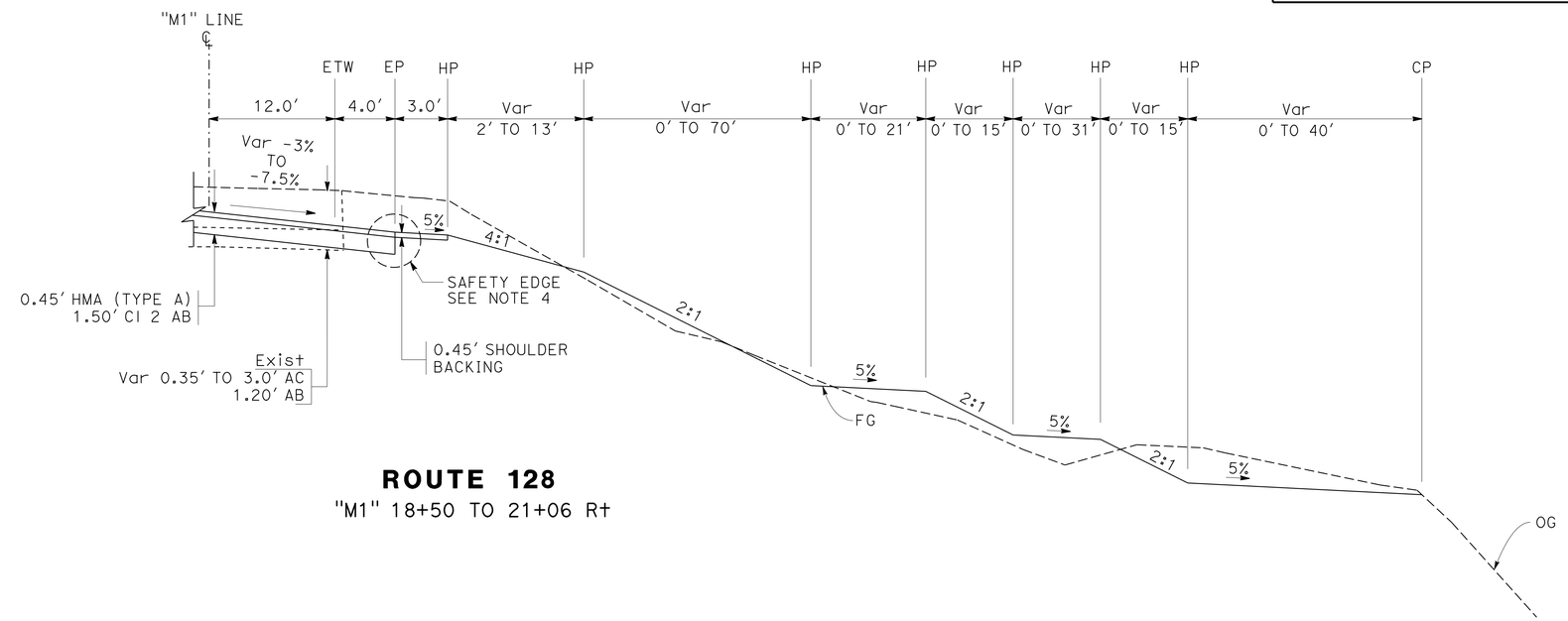

ROUTE 128
"M1" 18+50 TO 21+06 R†

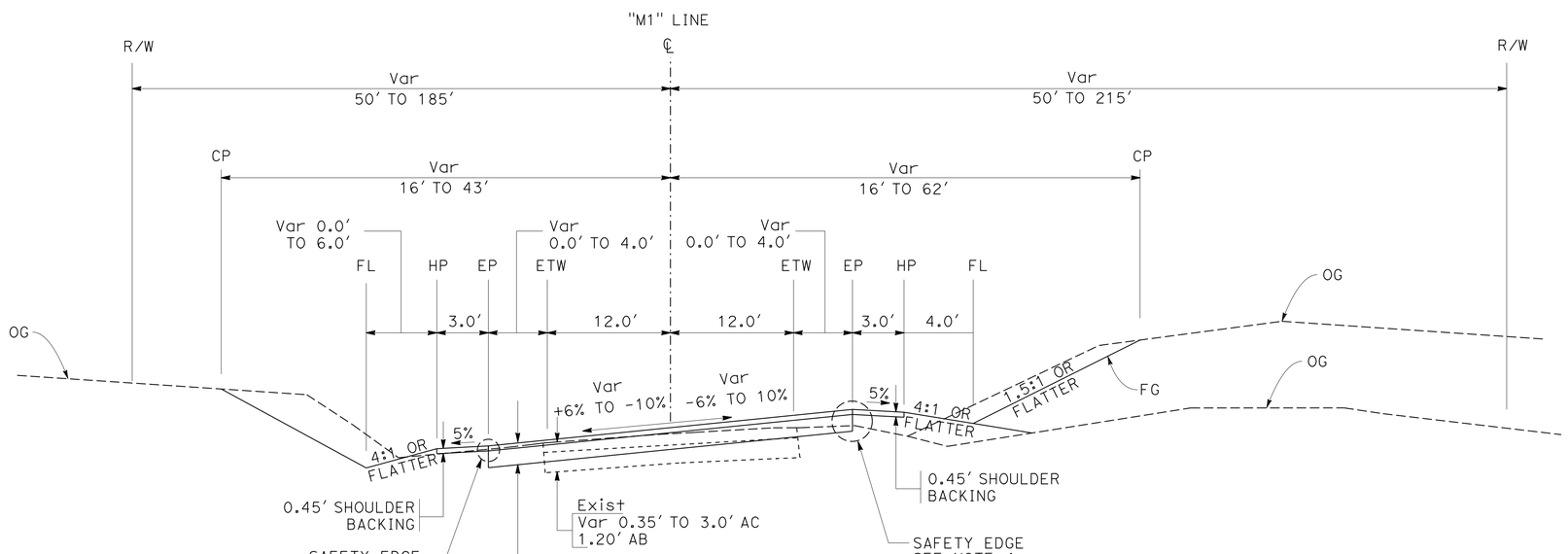

ROUTE 128
"M1" 17+00 TO 20+80
"M1" 26+44.3 TO 31+50

TYPICAL CROSS SECTIONS

NO SCALE

X-1

REVISED BY	DATE REVISED
MIKE ZDENEK	JEANNIE STEFFAN
CALCULATED-DESIGNED BY	CHECKED BY
FUNCTIONAL SUPERVISOR	JULIE CASEY

STATE OF CALIFORNIA - DEPARTMENT OF TRANSPORTATION
Caltrans® DESIGN

P:\proj2\01\47660_plans\pse\147660ca001.dgn

LAST REVISION 04-20-13 | DATE PLOTTED => 25-JUN-2013 | TIME PLOTTED => 14:55

Dist	COUNTY	ROUTE	POST MILES TOTAL PROJECT	SHEET No.	TOTAL SHEETS
01	Men	128	35.0/35.3	3	42

REGISTERED CIVIL ENGINEER 04-22-13 DATE

6-24-13
PLANS APPROVAL DATE

REGISTERED PROFESSIONAL ENGINEER M.J. ZDENEK No. C76156 Exp. 6-30-14 CIVIL STATE OF CALIFORNIA

THE STATE OF CALIFORNIA OR ITS OFFICERS OR AGENTS SHALL NOT BE RESPONSIBLE FOR THE ACCURACY OR COMPLETENESS OF SCANNED COPIES OF THIS PLAN SHEET.

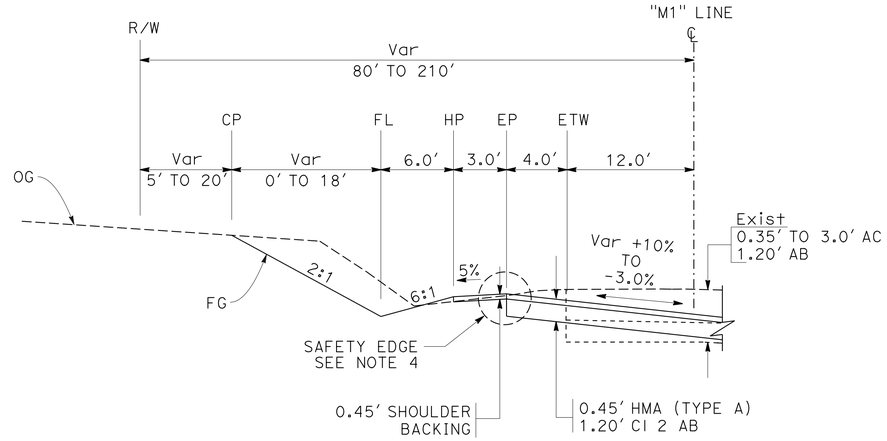

ROUTE 128

"M1" 23+25 TO 26+44.3 L+

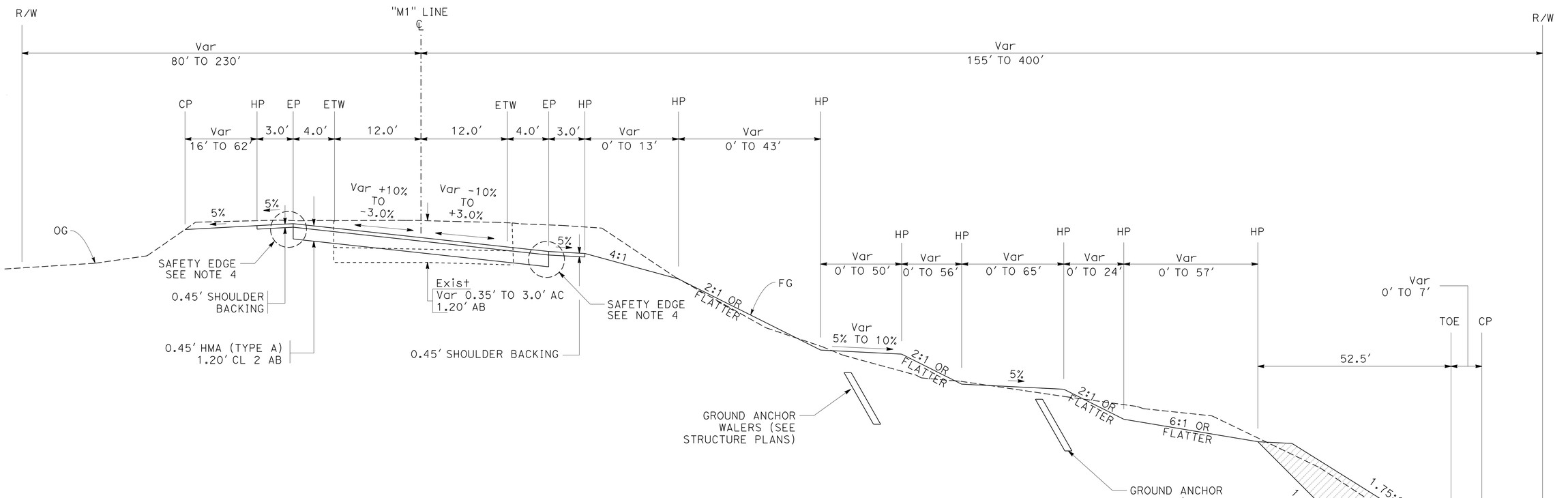

ROUTE 128

"M1" 20+80 TO 26+44.3

TYPICAL CROSS SECTIONS

NO SCALE

X-2

REVISED BY	DATE REVISED
MIKE ZDENEK	JEANNIE STEFFAN
CALCULATED-DESIGNED BY	CHECKED BY
FUNCTIONAL SUPERVISOR	JULIE CASEY

STATE OF CALIFORNIA - DEPARTMENT OF TRANSPORTATION

Caltrans® **DESIGN**

P:\proj2\01\47660_plans\pse\147660ca002.dgn

LAST REVISION 04-20-13 | DATE PLOTTED => 25-JUN-2013 | TIME PLOTTED => 14:55

BORDER LAST REVISED 7/2/2010 | USERNAME => s123631 | DGN FILE => 147660ca002.dgn | RELATIVE BORDER SCALE IS IN INCHES 0 1 2 3 | UNIT 0318 | PROJECT NUMBER & PHASE 01000003511

Dist	COUNTY	ROUTE	POST MILES TOTAL PROJECT	SHEET No.	TOTAL SHEETS
01	Men	128	35.0/35.3	4	42

REGISTERED CIVIL ENGINEER 04-22-13 DATE

6-24-13
PLANS APPROVAL DATE

REGISTERED PROFESSIONAL ENGINEER M.J. ZDENEK No. C76156 Exp. 6-30-14 CIVIL STATE OF CALIFORNIA

THE STATE OF CALIFORNIA OR ITS OFFICERS OR AGENTS SHALL NOT BE RESPONSIBLE FOR THE ACCURACY OR COMPLETENESS OF SCANNED COPIES OF THIS PLAN SHEET.

NOTES:

1. FOR ACCURATE RIGHT OF WAY DATA, CONTACT RIGHT OF WAY ENGINEERING AT THE DISTRICT OFFICE.
2. SEE STRUCTURE PLANS FOR GROUND ANCHOR WALERS.

ABBREVIATIONS

TFESA	TEMPORARY FENCE (TYPE ESA)
GAW	GROUND ANCHOR WALER

LEGEND

- RSP BUTTRESS
- CONFORM
- Exist Horiz DRAINS TO BE DESTROYED
- Exist MONITORING WELL TO BE DESTROYED
- GROUND ANCHOR WALER (SEE STRUCTURE PLANS)
- TREES TO REMAIN (PROTECT IN PLACE)

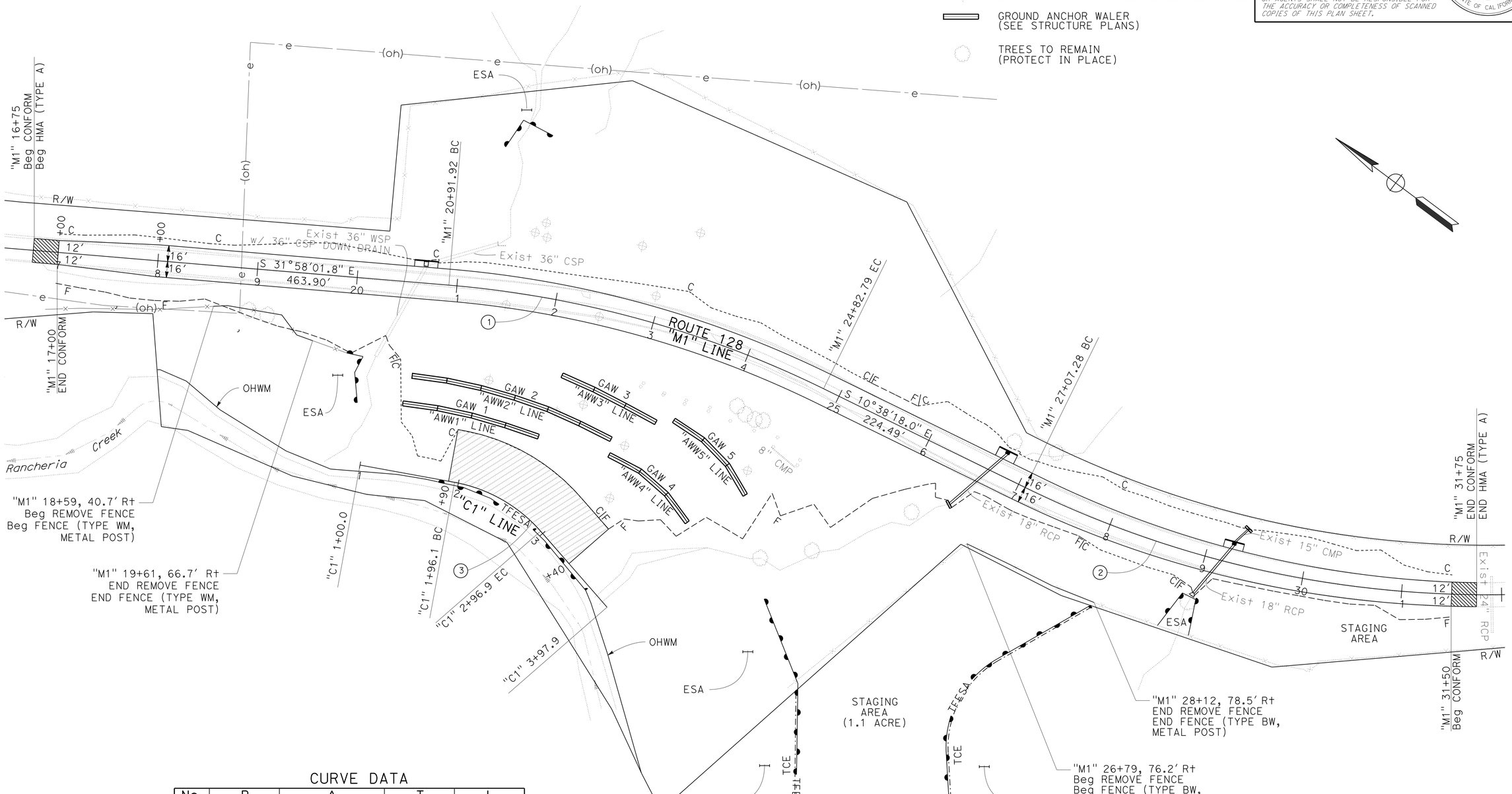

CURVE DATA

No.	R	Δ	T	L
1	1050.00	21°19'44"	197.72	390.87
2	1050.00	31°54'52"	300.23	584.86
3	150.00	38°30'51"	52.40	100.83

LAYOUT

SCALE: 1" = 50'

L-1

REVISED BY	DATE REVISED
MIKE ZDENEK	JEANNIE STEFFAN
CALCULATED-DESIGNED BY	CHECKED BY
FUNCTIONAL SUPERVISOR	JULIE CASEY

STATE OF CALIFORNIA - DEPARTMENT OF TRANSPORTATION

Caltrans® **DESIGN**

P:\proj2\01\47660_plans\pse\147660ea001.dgn

LAST REVISION 04-20-13 | DATE PLOTTED => 26-JUN-2013 | TIME PLOTTED => 12:22

Dist	COUNTY	ROUTE	POST MILES TOTAL PROJECT	SHEET No.	TOTAL SHEETS
01	Men	128	35.0/35.3	5	42

REGISTERED CIVIL ENGINEER DATE 04-22-13

6-24-13
PLANS APPROVAL DATE

REGISTERED PROFESSIONAL ENGINEER M.J. ZDENEK No. C76156 Exp. 6-30-14 CIVIL STATE OF CALIFORNIA

THE STATE OF CALIFORNIA OR ITS OFFICERS OR AGENTS SHALL NOT BE RESPONSIBLE FOR THE ACCURACY OR COMPLETENESS OF SCANNED COPIES OF THIS PLAN SHEET.

ABBREVIATIONS:

TW TRAVEL WAY

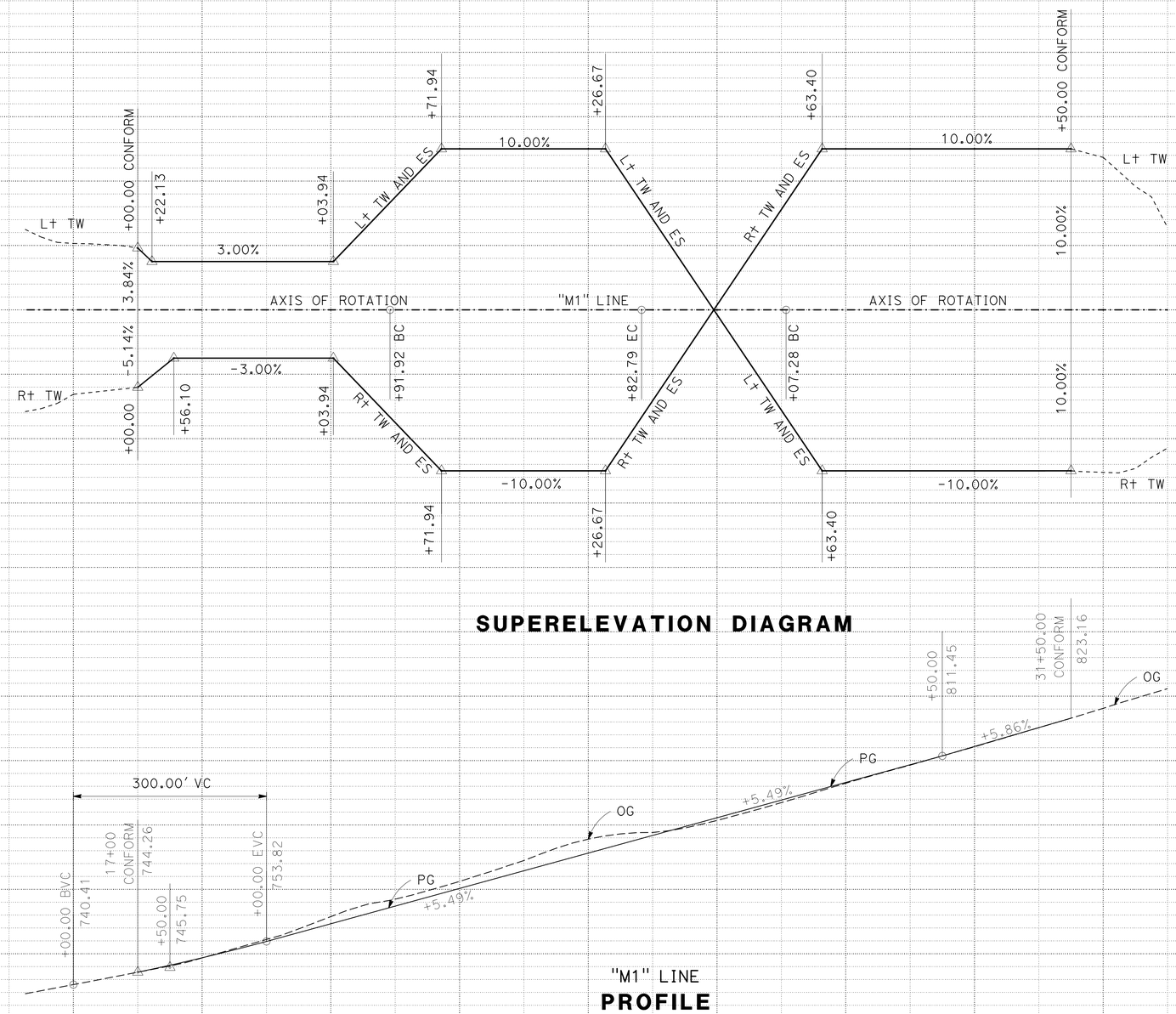

STATION		14+00	16+00	18+00	20+00	22+00	24+00	26+00	28+00	30+00	32+00	34+00	TOTAL
CY	Exc			1855		4921		1534					8310
	Emb			1590		6495		130					8215

PROFILE AND SUPERELEVATION DIAGRAM

SCALE: 1" = 100' Horiz
1" = 20' Vert

PS-1

REVISED BY | DATE REVISED
MIKE ZDENEK | JEANNIE STEFFAN
CALCULATED-DESIGNED BY | CHECKED BY
FUNCTIONAL SUPERVISOR: JULIE CASEY

STATE OF CALIFORNIA - DEPARTMENT OF TRANSPORTATION
Caltrans
DESIGN

P:\proj2\01\47660_plans\pse\147660fa001.dgn

LAST REVISION 04-20-13 | DATE PLOTTED => 25-JUN-2013 | TIME PLOTTED => 14:56

BORDER LAST REVISED 7/2/2010 | USERNAME => s123631 | DGN FILE => 147660fa001.dgn | RELATIVE BORDER SCALE IS IN INCHES 0 1 2 3 | UNIT 0318 | PROJECT NUMBER & PHASE 01000003511

Dist	COUNTY	ROUTE	POST MILES TOTAL PROJECT	SHEET No.	TOTAL SHEETS
01	Men	128	35.0/35.3	6	42

REGISTERED CIVIL ENGINEER 04-22-13 DATE

6-24-13
PLANS APPROVAL DATE

REGISTERED PROFESSIONAL ENGINEER M.J. ZDENEK No. C76156 Exp. 6-30-14 CIVIL STATE OF CALIFORNIA

THE STATE OF CALIFORNIA OR ITS OFFICERS OR AGENTS SHALL NOT BE RESPONSIBLE FOR THE ACCURACY OR COMPLETENESS OF SCANNED COPIES OF THIS PLAN SHEET.

NOTE:

1. (N) NOT A SEPARATE PAY ITEM, FOR INFORMATION ONLY
2. PLACE WILLOW CUTTINGS AT APPROXIMATELY 4.5 FOOT INTERVALS ALONG LENGTH OF CHANNEL

LEGEND

- COLD PLANE AC PAVEMENT
- RSP (1/2T, METHOD A)
- RSP (No. 2, METHOD B)
- DIRECTION OF TRAVEL

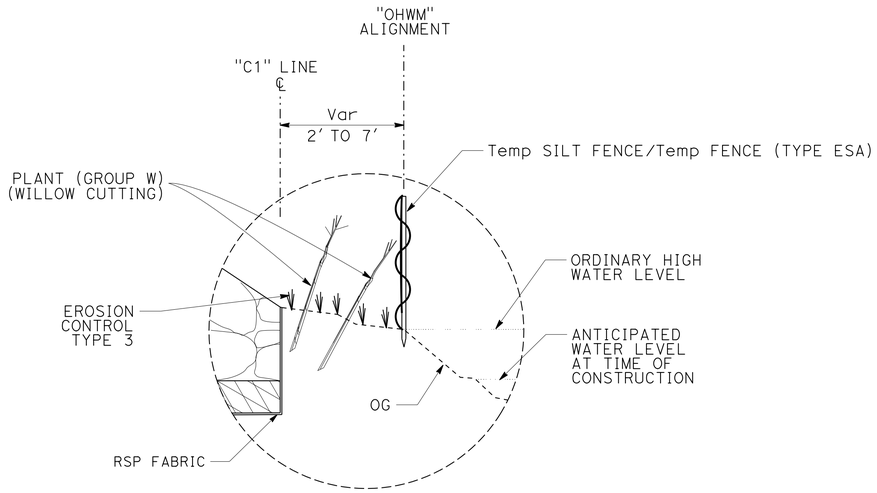

DETAIL B

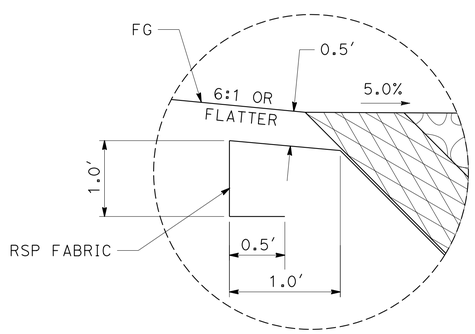

DETAIL A

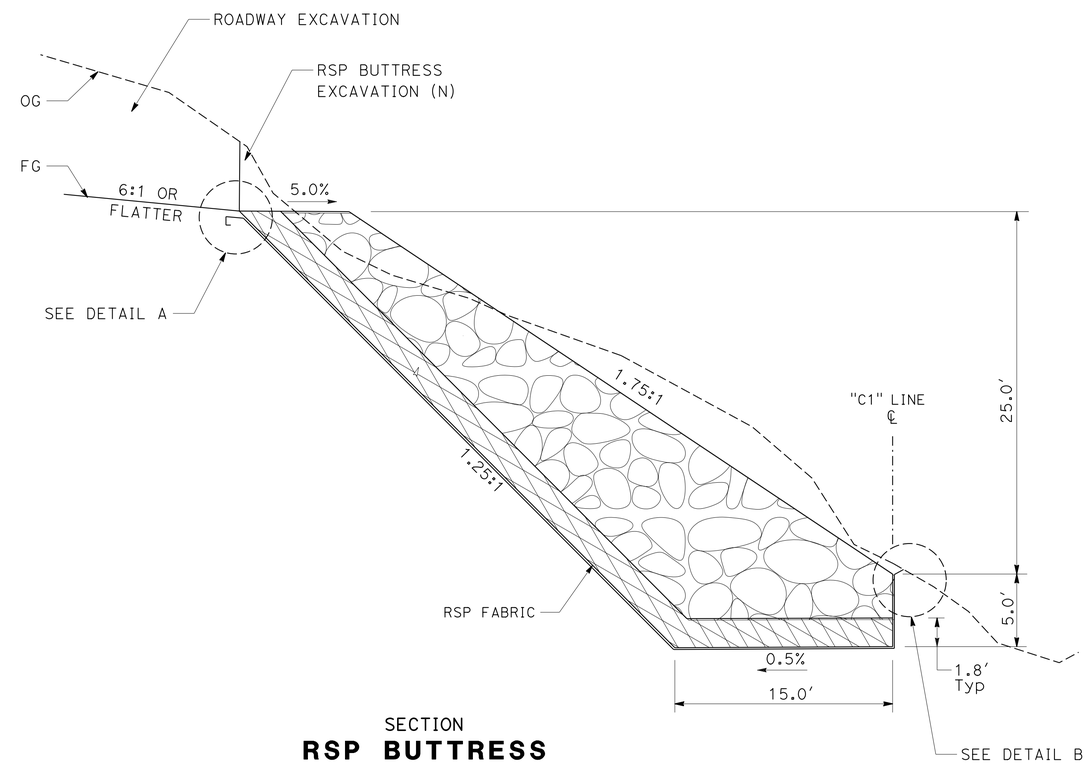

SECTION
RSP BUTTRESS
"C1" 1+90 TO 3+40

CONSTRUCTION DETAILS

NO SCALE

C-1

REVISED BY | DATE REVISED
MIKE ZDENEK | JEANNIE STEFFAN
CALCULATED-DESIGNED BY | CHECKED BY
FUNCTIONAL SUPERVISOR: JULIE CASEY

STATE OF CALIFORNIA - DEPARTMENT OF TRANSPORTATION
Caltrans
DESIGN

P:\proj2\01\147660_plans\pse\147660ga001.dgn

LAST REVISION 04-20-13 | DATE PLOTTED => 25-JUN-2013 | TIME PLOTTED => 14:56

Dist	COUNTY	ROUTE	POST MILES TOTAL PROJECT	SHEET No.	TOTAL SHEETS
01	Men	128	35.0/35.3	7	42

REGISTERED CIVIL ENGINEER 04-22-13 DATE

6-24-13
PLANS APPROVAL DATE

REGISTERED PROFESSIONAL ENGINEER M.J. ZDENEK No. C76156 Exp. 6-30-14 CIVIL STATE OF CALIFORNIA

THE STATE OF CALIFORNIA OR ITS OFFICERS OR AGENTS SHALL NOT BE RESPONSIBLE FOR THE ACCURACY OR COMPLETENESS OF SCANNED COPIES OF THIS PLAN SHEET.

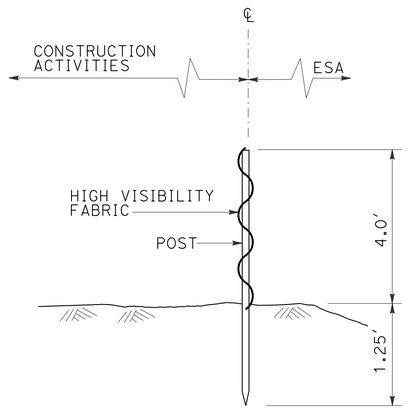

SECTION

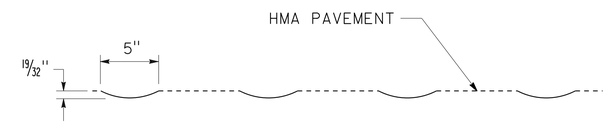

ELEVATION

CENTERLINE RUMBLE STRIP

TEMPORARY FENCE (TYPE ESA)

SHEET No.	LOCATION			LENGTH (LF)
	LINE	STATION		
		BEGIN	END	
L-1	"C1"	1+80.0, 2.8′ R+	3+71.2, 5.0′ R+	189
L-1	"M1"	19+95.8, 76.1′ R+	20+10.5, 124.7′ R+	65
L-1	"M1"	21+31.5, 143.4′ L+	21+73.6, 160.3′ L+	69
L-1	"M1"	25+11.3, 205.3 R+	28+10.0, 82.2′ R+	763
L-1	"M1"	28+80.7, 49.3′ R+	29+16.4, 54.5′ R+	96

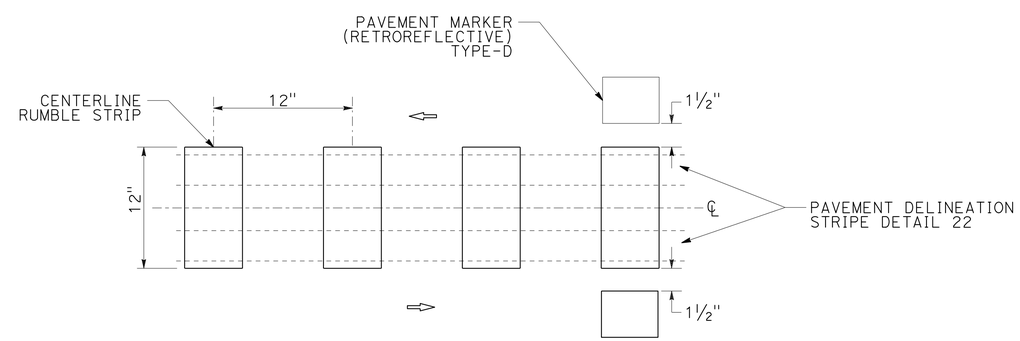

PLAN

CENTERLINE RUMBLE STRIP

"M1" 16+75 TO 31+75

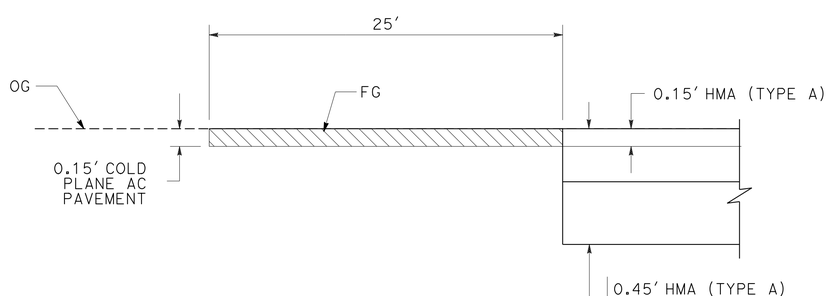

CONFORM

"M1" 16+75 TO 17+00
"M1" 31+50 TO 31+75

CONSTRUCTION DETAILS

NO SCALE

C-2

REVISED BY	DATE REVISED
MIKE ZDENEK	JEANNIE STEFFAN

CALCULATED-DESIGNED BY / CHECKED BY

FUNCTIONAL SUPERVISOR: JULIE CASEY

STATE OF CALIFORNIA - DEPARTMENT OF TRANSPORTATION

Caltrans® **DESIGN**

P:\proj2\01\47660_plans\pse\147660ga002.dgn

LAST REVISION 04-20-13 | DATE PLOTTED => 25-JUN-2013 | TIME PLOTTED => 14:56

Dist	COUNTY	ROUTE	POST MILES TOTAL PROJECT	SHEET No.	TOTAL SHEETS
01	Men	128	35.0/35.3	8	42

REGISTERED CIVIL ENGINEER 04-22-13 DATE

6-24-13
PLANS APPROVAL DATE

REGISTERED PROFESSIONAL ENGINEER M.J. ZDENEK No. C76156 Exp. 6-30-14 CIVIL STATE OF CALIFORNIA

THE STATE OF CALIFORNIA OR ITS OFFICERS OR AGENTS SHALL NOT BE RESPONSIBLE FOR THE ACCURACY OR COMPLETENESS OF SCANNED COPIES OF THIS PLAN SHEET.

NOTE:

FOR ACCURATE RIGHT OF WAY DATA, CONTACT RIGHT OF WAY ENGINEERING AT THE DISTRICT OFFICE.

ABBREVIATION:

GAW GROUND ANCHOR WALER

LEGEND:

- RSP BUTTRESS
- (x) DRAINAGE UNIT No.
- (X) DRAINAGE SYSTEM No.
- Exist Horiz DRAINS
- Exist MONITORING WELL
- Exist SURVEY MONUMENT
- GROUND ANCHOR WALER (SEE STRUCTURES PLANS)

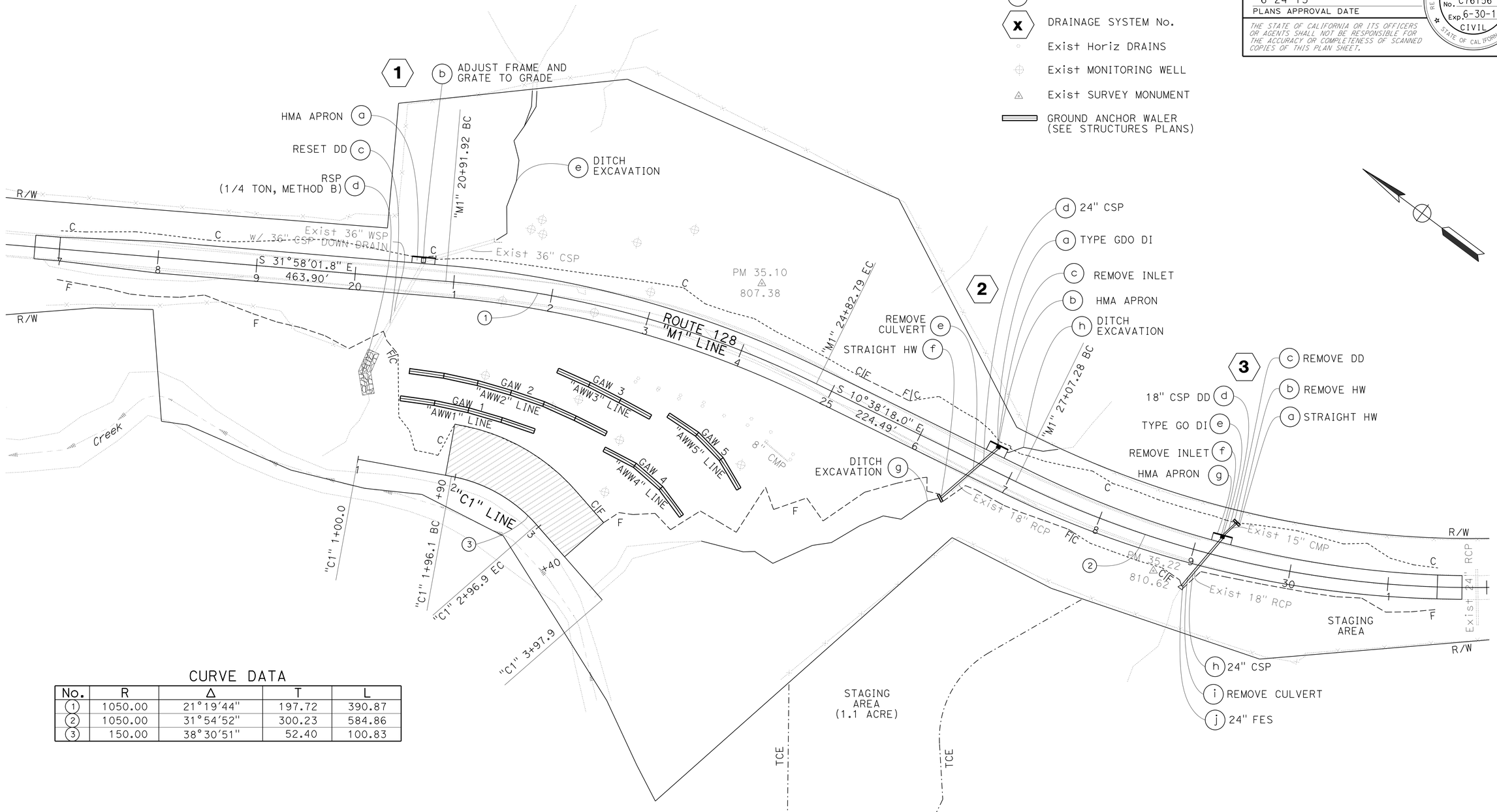

CURVE DATA

No.	R	Δ	T	L
1	1050.00	21°19'44"	197.72	390.87
2	1050.00	31°54'52"	300.23	584.86
3	150.00	38°30'51"	52.40	100.83

DRAINAGE PLAN

SCALE: 1" = 50'

D-1

APPROVED FOR DRAINAGE WORK ONLY

REVISED BY | DATE REVISED
MIKE ZDENEK | JEANNIE STEFFAN
CALCULATED-DESIGNED BY | CHECKED BY
FUNCTIONAL SUPERVISOR: JULIE CASEY

STATE OF CALIFORNIA - DEPARTMENT OF TRANSPORTATION
Caltrans
DESIGN

P:\proj2\01\147660_plans\pse\147660ia001.dgn

LAST REVISION 04-20-13 | DATE PLOTTED => 25-JUN-2013 | TIME PLOTTED => 14:54

Dist	COUNTY	ROUTE	POST MILES TOTAL PROJECT	SHEET No.	TOTAL SHEETS
01	Men	128	35.0/35.3	9	42

REGISTERED CIVIL ENGINEER DATE 04-22-13

6-24-13
PLANS APPROVAL DATE

REGISTERED PROFESSIONAL ENGINEER M.J. ZDENEK No. C76156 Exp. 6-30-14 CIVIL STATE OF CALIFORNIA

THE STATE OF CALIFORNIA OR ITS OFFICERS OR AGENTS SHALL NOT BE RESPONSIBLE FOR THE ACCURACY OR COMPLETENESS OF SCANNED COPIES OF THIS PLAN SHEET.

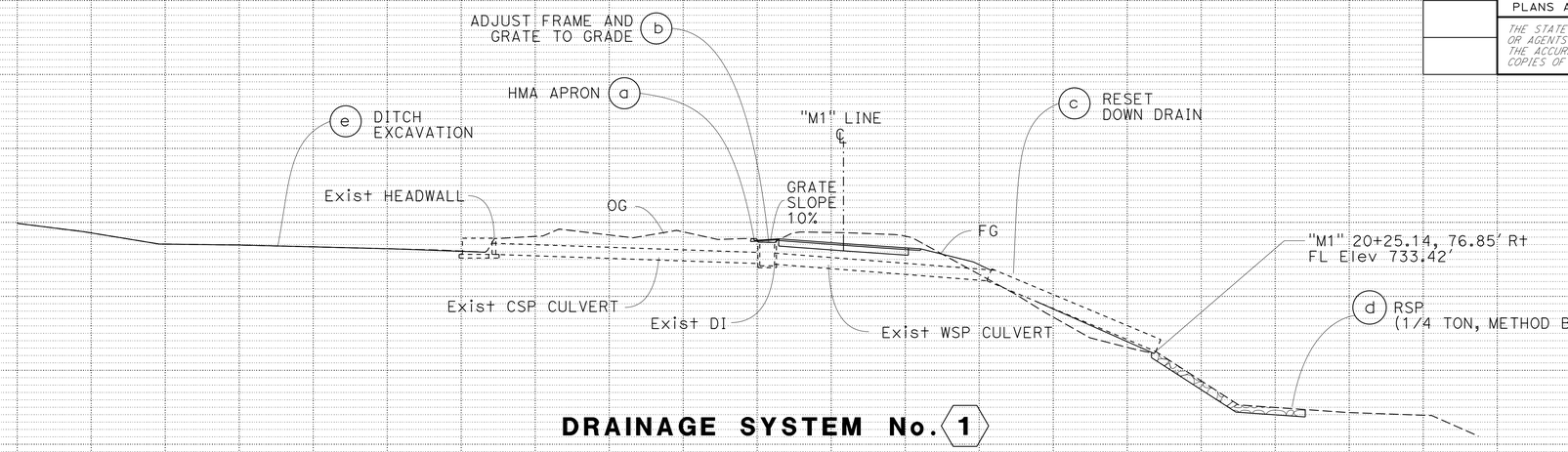

DRAINAGE SYSTEM No. 1

"M1" 20+59.98

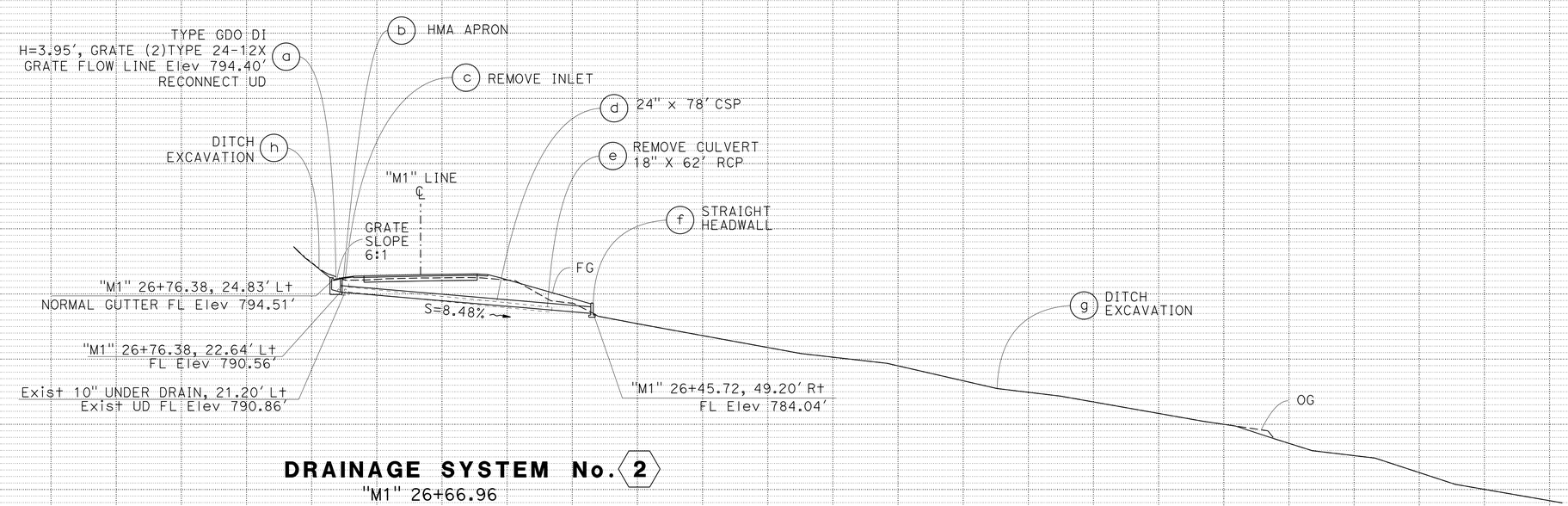

DRAINAGE SYSTEM No. 2

"M1" 26+66.96

DRAINAGE PROFILES

SCALE: 1" = 20' Horiz
1" = 20' Vert

DP-1

REVISED BY | DATE REVISED
MIKE ZDENEK | JEANNIE STEFFAN
CALCULATED-DESIGNED BY | CHECKED BY
FUNCTIONAL SUPERVISOR: JULIE CASEY

STATE OF CALIFORNIA - DEPARTMENT OF TRANSPORTATION
Caltrans
DESIGN

P:\proj2\01\47660_plans\pse\147660ib001.dgn

LAST REVISION 04-20-13 | DATE PLOTTED => 25-JUN-2013 | TIME PLOTTED => 14:54

BORDER LAST REVISED 7/2/2010 | USERNAME => s128843 | DGN FILE => 147660ib001.dgn | RELATIVE BORDER SCALE IS IN INCHES 0 1 2 3 | UNIT 0318 | PROJECT NUMBER & PHASE 01000003511

Dist	COUNTY	ROUTE	POST MILES TOTAL PROJECT	SHEET No.	TOTAL SHEETS
01	Men	128	35.0/35.3	10	42

REGISTERED CIVIL ENGINEER DATE 04-22-13

6-24-13
PLANS APPROVAL DATE

REGISTERED PROFESSIONAL ENGINEER M.J. ZDENEK No. C76156 Exp. 6-30-14 CIVIL STATE OF CALIFORNIA

THE STATE OF CALIFORNIA OR ITS OFFICERS OR AGENTS SHALL NOT BE RESPONSIBLE FOR THE ACCURACY OR COMPLETENESS OF SCANNED COPIES OF THIS PLAN SHEET.

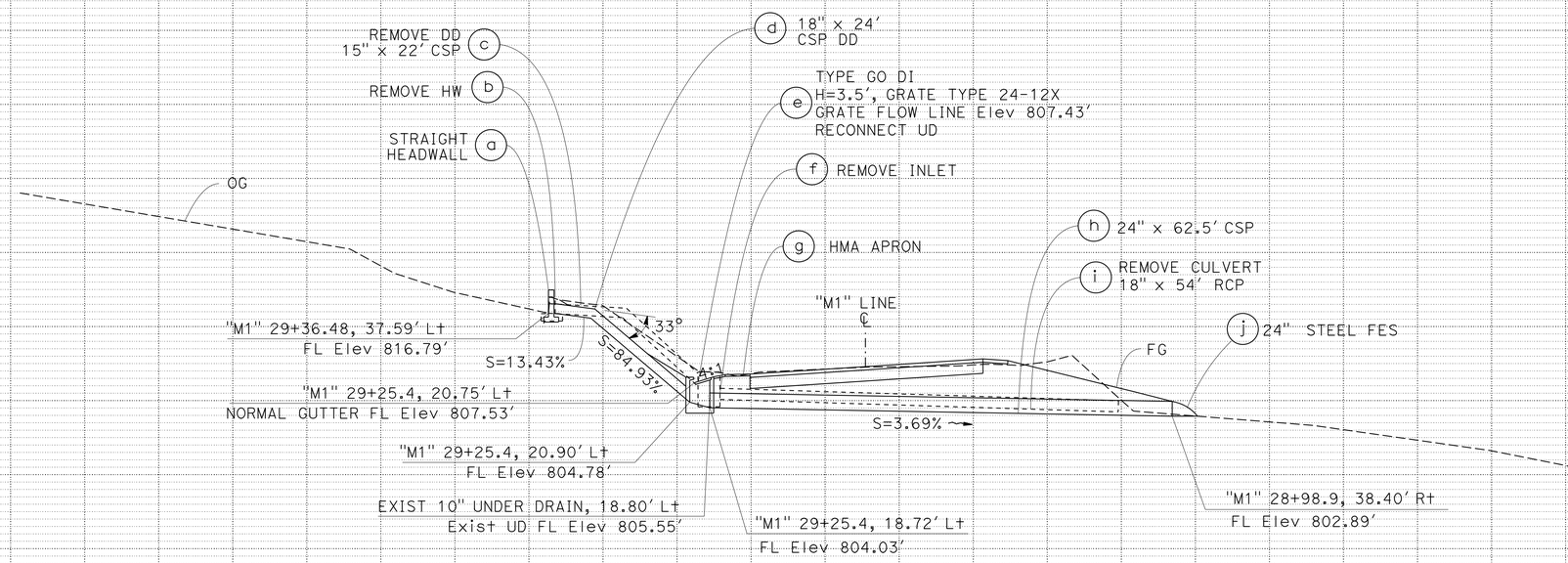

DRAINAGE SYSTEM No. 3

"M1" 29+16.5

DRAINAGE PROFILES

SCALE: 1" = 10' Horiz
1" = 10' Vert

DP-2

REVISED BY | DATE REVISED
MIKE ZDENEK | JEANNIE STEFFAN
CALCULATED-DESIGNED BY | CHECKED BY
FUNCTIONAL SUPERVISOR: JULIE CASEY

STATE OF CALIFORNIA - DEPARTMENT OF TRANSPORTATION
Caltrans DESIGN

P:\proj2\01\47660_plans\pse\147660ib002.dgn

LAST REVISION 04-20-13 | DATE PLOTTED => 25-JUN-2013 | TIME PLOTTED => 14:54

Dist	COUNTY	ROUTE	POST MILES TOTAL PROJECT	SHEET No.	TOTAL SHEETS
01	Men	128	35.0/35.3	11	42

REGISTERED CIVIL ENGINEER 04-22-13 DATE

6-24-13
PLANS APPROVAL DATE

REGISTERED PROFESSIONAL ENGINEER M.J. ZDENEK No. C76156 Exp. 6-30-14 CIVIL STATE OF CALIFORNIA

THE STATE OF CALIFORNIA OR ITS OFFICERS OR AGENTS SHALL NOT BE RESPONSIBLE FOR THE ACCURACY OR COMPLETENESS OF SCANNED COPIES OF THIS PLAN SHEET.

LEGEND:

ROCK SLOPE PROTECTION

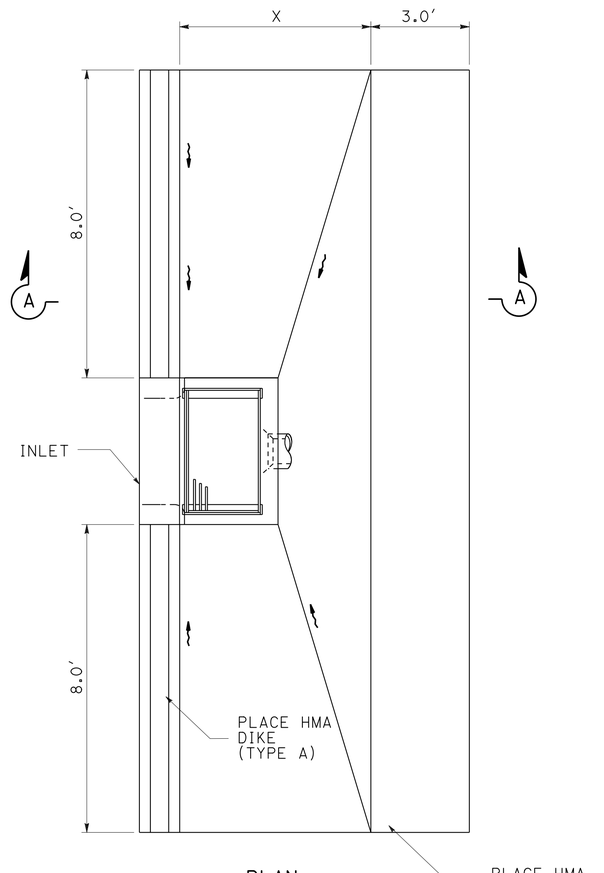

PLAN

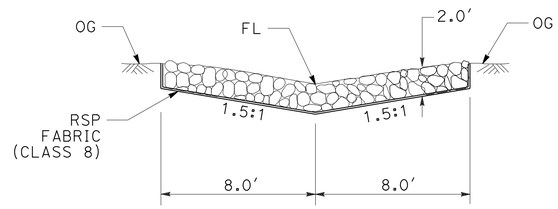

RSP TYPICAL SECTION

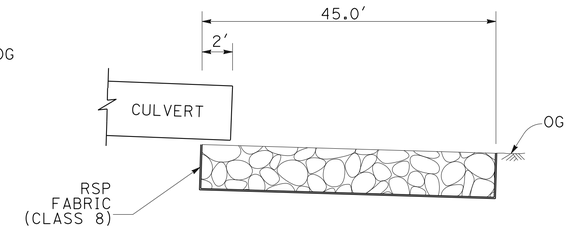

RSP TYPICAL PROFILE

ROCK SLOPE PROTECTION

DRAINAGE SYSTEM No. 1 d

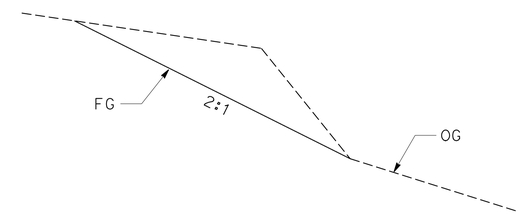

DITCH EXCAVATION

DRAINAGE SYSTEM No. 2 h

"M1" 26+66, 260.1 Rt

DRAINAGE SYSTEM No.	DRAINAGE UNIT No.	LOCATION			DIMENSIONS		
		LINE	STATION				
			BEGIN	END	L (LF)	H (LF)	LENGTH (LF)
1	e	"M1"	21+37.3, 46.9 Lt	21+53.3, 201.7 Lt	5	4	164
2	g	"M1"	24+40.7, 193.3 Lt	26+44.3, 49.9 Lt	8	5	262
2	h	"M1"	26+86.4, 22.7 Lt	27+32.8, 47.9 Lt	2	2	54

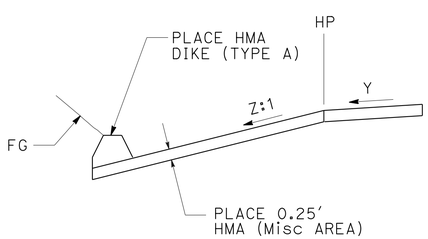

SECTION A-A

HMA APRON

DRAINAGE SYSTEM No. 1 2 3

DRAINAGE SYSTEM No.	DRAINAGE UNIT No.	DIMENSIONS		
		X (LF)	Y (%)	Z (Z:1)
1	a	4	10	10
2	b	6	5	6
3	g	4	5	4

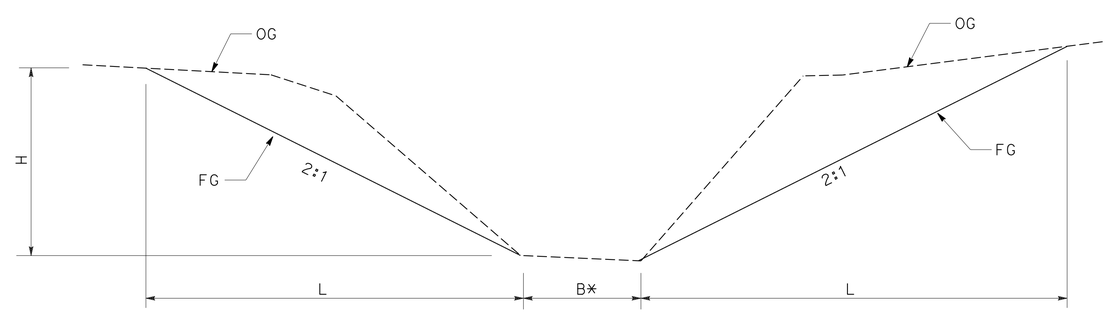

DITCH EXCAVATION

DRAINAGE SYSTEM No. 1 e 2 g h

* DO NOT MODIFY BOTTOM OF Exist CHANNEL

DRAINAGE DETAILS

NO SCALE

DD-1

REVISED BY	DATE REVISED

CALCULATED-DESIGNED BY: MIKE ZDENEK
CHECKED BY: JEANNIE STEFFAN
FUNCTIONAL SUPERVISOR: JULIE CASEY

STATE OF CALIFORNIA - DEPARTMENT OF TRANSPORTATION
Caltrans DESIGN

P:\proj2\01\47660_plans\pse\147660ic001.dgn

LAST REVISION 04-20-13 | DATE PLOTTED => 25-JUN-2013 | TIME PLOTTED => 14:54

Dist	COUNTY	ROUTE	POST MILES TOTAL PROJECT	SHEET No.	TOTAL SHEETS
01	Men	128	35.0/35.3	12	42

REGISTERED CIVIL ENGINEER 04-22-13 DATE

6-24-13
PLANS APPROVAL DATE

REGISTERED PROFESSIONAL ENGINEER M.J. ZDENEK No. C76156 Exp. 6-30-14 CIVIL STATE OF CALIFORNIA

THE STATE OF CALIFORNIA OR ITS OFFICERS OR AGENTS SHALL NOT BE RESPONSIBLE FOR THE ACCURACY OR COMPLETENESS OF SCANNED COPIES OF THIS PLAN SHEET.

ABBREVIATIONS:

DD DOWNDRAIN JOINT
P POSITIVE, WATER TIGHT JOINT

DRAINAGE QUANTITIES

DRAINAGE PLAN SHEET No.	DRAINAGE SYSTEM No.	DRAINAGE UNIT No.	REMOVE CULVERT	REMOVE INLET	REMOVE HEADWALL	REMOVE DOWNDRAIN	RESET DOWNDRAIN	ADJUST FRAME AND GRATE TO GRADE	DITCH EXCAVATION	HOT MIX ASPHALT (TYPE A)	PLACE HOT MIX ASPHALT DIKE (TYPE A)	PLACE HOT MIX ASPHALT (MISCELLANEOUS AREA)	MINOR CONCRETE (MINOR STRUCTURE)	24" CORRUGATED STEEL PIPE (0.138" THICK)	18" CORRUGATED STEEL PIPE DOWNDRAIN (0.138" THICK)	24" STEEL FLARED END SECTION	ROCK SLOPE PROTECTION (1/4 TON, METHOD B)	ROCK SLOPE PROTECTION FABRIC (CLASS 8)	MISCELLANEOUS IRON AND STEEL	(N) HEIGHT OF INLET	(N) JOINT CLASSIFICATION	DESCRIPTION	STATION	DRAINAGE PLAN SHEET No.	DRAINAGE SYSTEM No.	DRAINAGE UNIT No.
			EA	EA	EA	EA	EA	EA	CY	TON	LF	SQYD	CY	LF	LF	EA	CY	SQYD	LB	LF						
DP-1	1	a								3.2	20.0	15.6										HMA APRON	Sta "M1" 20+59.9	DP-1	1	a
		b						1														ADJUST FRAME AND GRATE				b
		c					1															RESET DD				c
		d															53.3	107.1				RSP (1/4TON, METHOD B)				d
		e							114.8													DITCH EXCAVATION				e
DP-1	2	a											1.93						478	3.95		DI (TYPE GDO), (2)24-12X GRATE	Sta "M1" 26+67	DP-1	2	a
		b								4.2	16.0	22.2										HMA APRON				b
		c		1																		REMOVE INLET				c
		d												78.0							P	24" CSP CULVERT				d
		e	1																			REMOVE 18" RCP CULVERT, L=62′				e
		f											1.51									STRAIGHT HW				f
		g							9.7													DITCH EXCAVATION				g
		h							314.4													DITCH EXCAVATION				h
DP-2	3	a											0.91									STRAIGHT HW	Sta "M1" 29+16.5	DP-2	3	a
		b			1																	REMOVE HW, H=3′				b
		c				1																REMOVE DD, L=22′				c
		d													24.0						DD	18" CSP DD				d
		e											1.36						239	3.5		DI (TYPE GO), 24-12X GRATE				e
		f		1																		REMOVE INLET				f
		g								3.4	16.0	17.8										HMA APRON				g
		h												64.0							P	24" CSP CULVERT				h
		i	1																			REMOVE 18" RCP CULVERT, L=54′				i
		j														1						24" STEEL FES				j
TOTAL			2	2	1	1	1	1	438.9	10.8*	52	55.6	5.71	142	24	1	53.3*	107.1*	717							

(N) NOT A SEPARATE PAY ITEM, FOR INFORMATION ONLY
(*) QUANTITIES APPEAR ON SUMMARY OF QUANTITIES SHEET

CALCULATED-DESIGNED BY MIKE ZDENEK
CHECKED BY JEANNIE STEFFAN
REVISED BY
DATE REVISED
FUNCTIONAL SUPERVISOR JULIE CASEY

STATE OF CALIFORNIA - DEPARTMENT OF TRANSPORTATION
Caltrans DESIGN

P:\proj2\01\47660_plans\pse\147660id001.dgn

DRAINAGE QUANTITIES
DQ-1

LAST REVISION 04-20-13
DATE PLOTTED => 25-JUN-2013
TIME PLOTTED => 14:54

Dist	COUNTY	ROUTE	POST MILES TOTAL PROJECT	SHEET No.	TOTAL SHEETS
01	Men	128	35.0/35.3	13	42

REGISTERED CIVIL ENGINEER 04-22-13 DATE

6-24-13
PLANS APPROVAL DATE

REGISTERED PROFESSIONAL ENGINEER M.J. ZDENEK No. C76156 Exp. 6-30-14 CIVIL STATE OF CALIFORNIA

THE STATE OF CALIFORNIA OR ITS OFFICERS OR AGENTS SHALL NOT BE RESPONSIBLE FOR THE ACCURACY OR COMPLETENESS OF SCANNED COPIES OF THIS PLAN SHEET.

NOTE:

EXACT LOCATION OF ALL SIGNS TO BE DETERMINED BY THE ENGINEER.

LEGEND:

SINGLE POST SIGN

DOUBLE POST SIGN

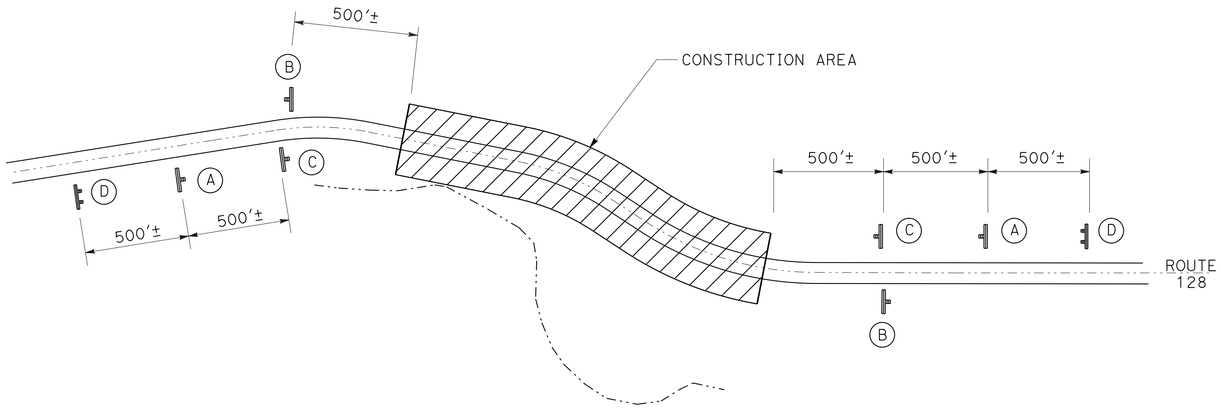

CONSTRUCTION AREA SIGNS (STATIONARY MOUNTED)

SIGN No.	SIGN CODE	PANEL SIZE	SIGN MESSAGE	No. AND SIZE OF POSTS	No. OF SIGNS
A	W20-1 C23B(CA)	48" x 48" 36" x 18"	ROAD WORK AHEAD HIGHWAY REPAIR	(1) 6" x 6"	2
B	G20-2	36" x 18"	END ROAD WORK	(1) 4" x 4"	2
C	W11-1 W16-1	36" x 36" 24" x 30"	BICYCLE SYMBOL SHARE THE ROAD	(1) 4" x 6"	2
D	C40(CA)	108" x 42"	TRAFFIC FINES DOUBLED IN CONSTRUCTION ZONE	(2) 6" x 6"	2

PORTABLE CHANGEABLE MESSAGE SIGN

	EA
TOTAL	2

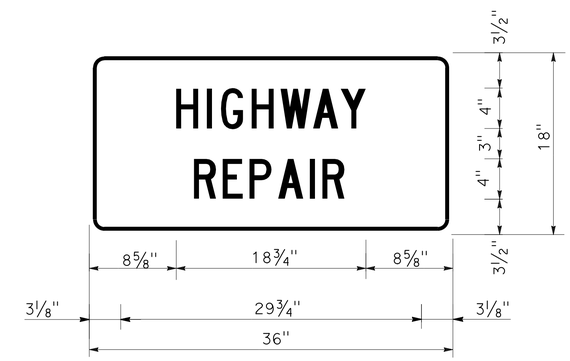

SIGN DETAIL

1.5" RADIUS, 0.4" BORDER, 0.4" INDENT, BLACK ON ORANGE;
[HIGHWAY] C; [REPAIR] C;

CONSTRUCTION AREA SIGNS

NO SCALE

CS-1

STATE OF CALIFORNIA - DEPARTMENT OF TRANSPORTATION
Caltrans DESIGN

FUNCTIONAL SUPERVISOR: JULIE CASEY
CALCULATED-DESIGNED BY: MIKE ZDENEK
CHECKED BY: JEANNIE STEFFAN
REVISED BY
DATE REVISED

P:\proj2\01\47660_plans\pse\1476601a001.dgn

LAST REVISION 04-20-13 | DATE PLOTTED => 25-JUN-2013 | TIME PLOTTED => 14:54

Dist	COUNTY	ROUTE	POST MILES TOTAL PROJECT	SHEET No.	TOTAL SHEETS
01	Men	128	35.0/35.3	14	42

REGISTERED CIVIL ENGINEER 04-22-13 DATE

6-24-13
PLANS APPROVAL DATE

REGISTERED PROFESSIONAL ENGINEER M.J. ZDENEK No. C76156 Exp. 6-30-14 CIVIL STATE OF CALIFORNIA

THE STATE OF CALIFORNIA OR ITS OFFICERS OR AGENTS SHALL NOT BE RESPONSIBLE FOR THE ACCURACY OR COMPLETENESS OF SCANNED COPIES OF THIS PLAN SHEET.

NOTE:

FOR ACCURATE RIGHT OF WAY DATA, CONTACT RIGHT OF WAY ENGINEERING AT THE DISTRICT OFFICE.

LEGEND:

- MILEPOST MARKER
- MARKER (CULVERT)
- DELINEATOR (CLASS 2), TYPE E
- WOOD SIGN (1-POST)
- REMOVE SIGN (1-POST)
- (x-x) ROADSIDE SIGN
- (xx) PAVEMENT DELINEATION STRIPE DETAIL No.

ABBREVIATION:

S DELINEATOR SPACING

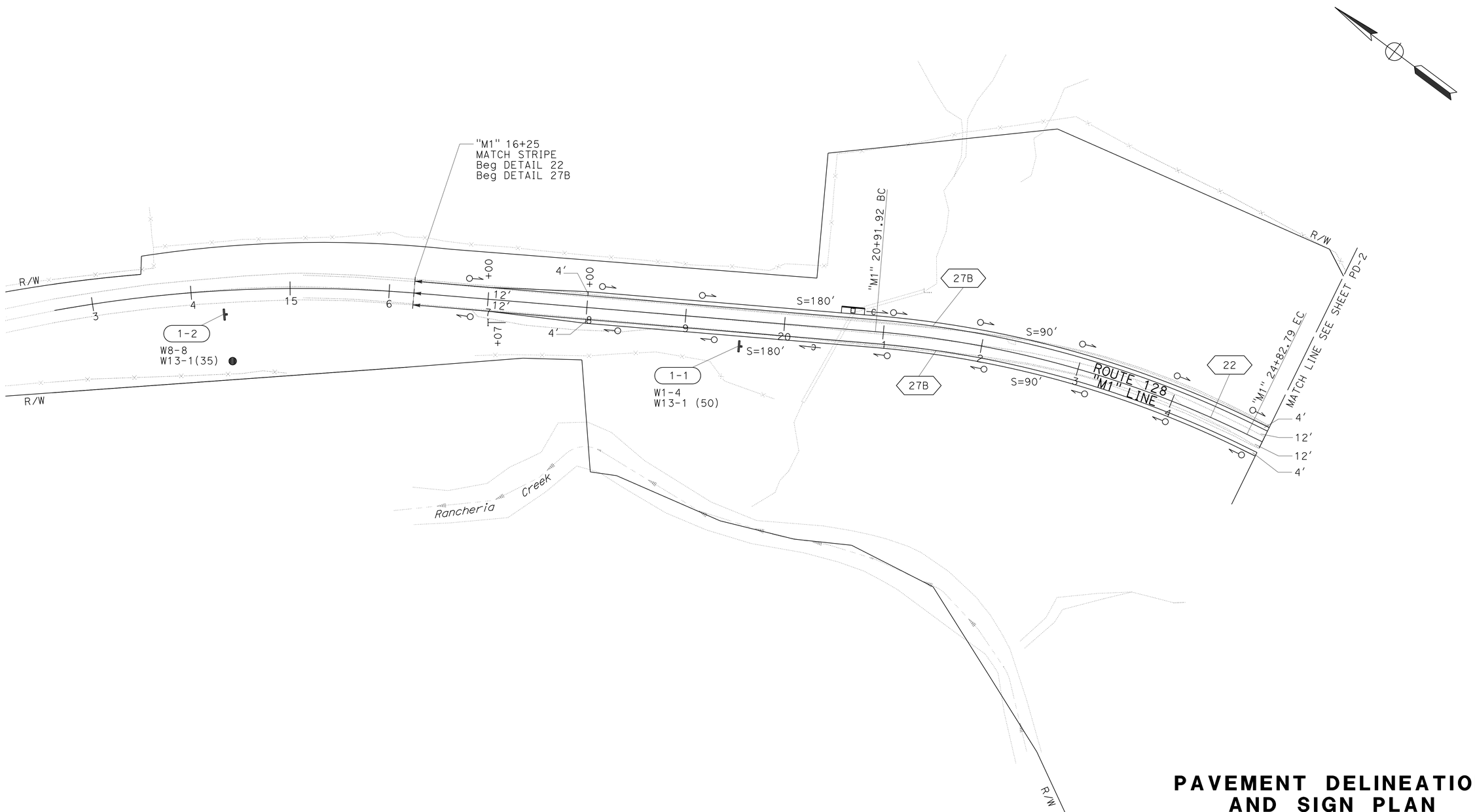

APPROVED FOR PAVEMENT DELINEATION AND SIGN WORK ONLY

PAVEMENT DELINEATION AND SIGN PLAN

SCALE: 1" = 50'

PD-1

REVISED BY | DATE REVISED
MIKE ZDENEK | JEANNIE STEFFAN
CALCULATED-DESIGNED BY | CHECKED BY
FUNCTIONAL SUPERVISOR
JULIE CASEY

STATE OF CALIFORNIA - DEPARTMENT OF TRANSPORTATION
Caltrans
DESIGN

P:\proj2\01\147660_plans\pse\147660na001.dgn

LAST REVISION 04-20-13 | DATE PLOTTED => 25-JUN-2013 | TIME PLOTTED => 14:54

Dist	COUNTY	ROUTE	POST MILES TOTAL PROJECT	SHEET No.	TOTAL SHEETS
01	Men	128	35.0/35.3	15	42

REGISTERED CIVIL ENGINEER 04-22-13 DATE

6-24-13
PLANS APPROVAL DATE

REGISTERED PROFESSIONAL ENGINEER M.J. ZDENEK No. C76156 Exp. 6-30-14 CIVIL STATE OF CALIFORNIA

THE STATE OF CALIFORNIA OR ITS OFFICERS OR AGENTS SHALL NOT BE RESPONSIBLE FOR THE ACCURACY OR COMPLETENESS OF SCANNED COPIES OF THIS PLAN SHEET.

NOTE:

FOR ACCURATE RIGHT OF WAY DATA, CONTACT
RIGHT OF WAY ENGINEERING AT THE DISTRICT OFFICE.

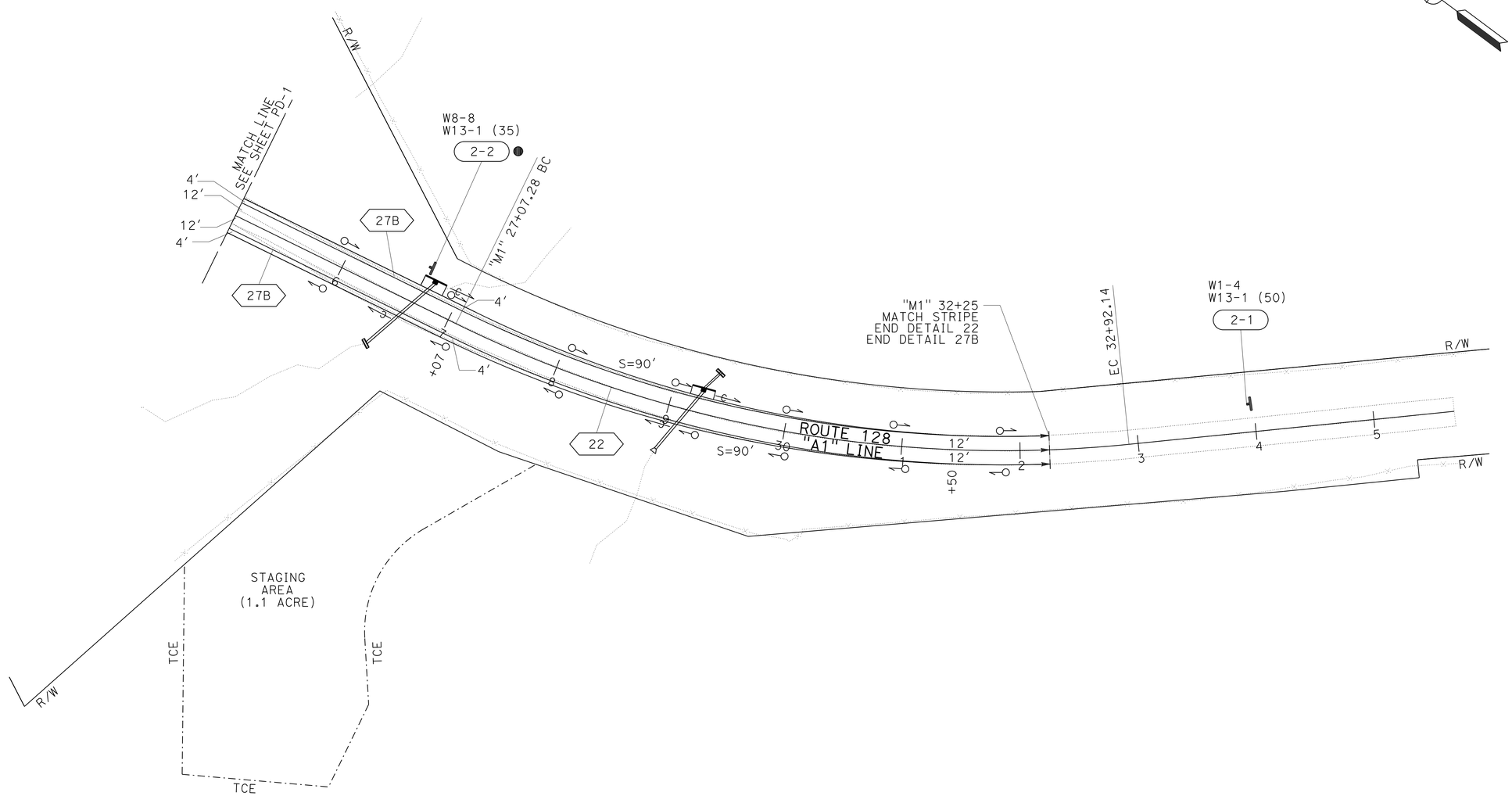

PAVEMENT DELINEATION AND SIGN PLAN

SCALE: 1" = 50'

PD-2

APPROVED FOR PAVEMENT DELINEATION AND SIGN WORK ONLY

REVISED BY	DATE REVISED

CALCULATED-DESIGNED BY	MIKE ZDENEK
CHECKED BY	JEANNIE STEFFAN
FUNCTIONAL SUPERVISOR	JULIE CASEY

STATE OF CALIFORNIA - DEPARTMENT OF TRANSPORTATION
Caltrans
DESIGN

P:\proj2\01\47660_plans\pse\147660na002.dgn

LAST REVISION 04-20-13 | DATE PLOTTED => 25-JUN-2013 | TIME PLOTTED => 14:54

Dist	COUNTY	ROUTE	POST MILES TOTAL PROJECT	SHEET No.	TOTAL SHEETS
01	Men	128	35.0/35.3	16	42

REGISTERED CIVIL ENGINEER 04-22-13 DATE

6-24-13
PLANS APPROVAL DATE

REGISTERED PROFESSIONAL ENGINEER M.J. ZDENEK No. C76156 Exp. 6-30-14 CIVIL STATE OF CALIFORNIA

THE STATE OF CALIFORNIA OR ITS OFFICERS OR AGENTS SHALL NOT BE RESPONSIBLE FOR THE ACCURACY OR COMPLETENESS OF SCANNED COPIES OF THIS PLAN SHEET.

NOTES:

1. (N) - NOT A SEPARATE PAY ITEM, FOR INFORMATION ONLY.
2. CALIFORNIA SIGN CODES ARE DESIGNATED BY (CA), OTHERWISE, FEDERAL SIGN CODES ARE SHOWN.
3. SPEED TO BE DETERMINED BY ENGINEER.

PAVEMENT DELINEATION QUANTITIES

LOCATION			THERMOPLASTIC TRAFFIC STRIPE		PAVEMENT MARKERS (RETROREFLECTIVE)
LINE	STATION		DETAIL 27B	DETAIL 22	TYPE D, DETAIL 22
	FROM	TO	LF	LF	EA
"M1"	16+25	32+25	3200	3200	136
TOTAL			6400		136

DELINEATOR (CLASS 2)

SHEET No.	EA
PD-1	16
PD-2	14
TOTAL	30

MARKER

SHEET No.	LOCATION		PM	MARKER TYPE	
				CULVERT	MILEPOST
	LINE	STATION		EA	EA
PD-1	"M1"	17+07	35.00		1
PD-1	"M1"	20+59.9	35.07	2	
PD-2	"M1"	26+66.9	35.17	2	
PD-2	"M1"	29+16.5	35.22	2	
TOTAL				6	1

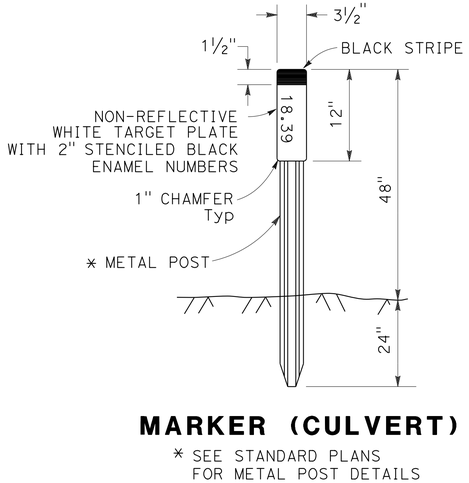

MARKER (CULVERT)

* SEE STANDARD PLANS FOR METAL POST DETAILS

ROADSIDE SIGNS

SHEET No.	SIGN No.	SIGN CODE	(N) PANEL SIZE	REMOVE SIGN	FURNISH SINGLE SHEET ALUMINUM SIGN (0.063"-UNFRAMED)	(N) POST LENGTH	ROADSIDE SIGN ONE POST 4" x 6"	REMARKS
				EA	SQFT	LF	EA	
PD-1	1-1	W1-4R	36" x 36"		9	18.0	1	REVERSING CURVES SYMBOL
		W13-1 (50)	24" x 24"		4			50 MPH (SEE NOTE 3)
	1-2	W8-8		1				ROUGH ROAD
		W13-1 (35)						35 MPH
PD-2	2-1	W1-4R	36" x 36"		9	18.0	1	REVERSING CURVES SYMBOL
		W13-1 (50)	24" x 24"		4			50 MPH (SEE NOTE 3)
	2-2	W8-8		1				ROUGH ROAD
		W13-1 (35)						35 MPH
TOTAL				2	26		2	

MATERIAL SUMMARY CONTRACTOR FURNISHED SIGNS

SHEET No.	SIGN No.	(N) SIGN CODE	(N) PANEL SIZE	(N) SINGLE FACED	(N) DOUBLE FACED	BACKGROUND (N) SHEETING COLOR	BACKGROUND (N) RETROREFLECTIVE ASTM TYPE	LEGEND (N) SHEETING COLOR	LEGEND (N) RETROREFLECTIVE ASTM TYPE	REMARKS
PD-1	1-1	W1-4R	36" X 36"	X		YELLOW	III	BLACK	III	REVERSING CURVES SYMBOL
		W13-1 (50)	18" X 18"	X		YELLOW	III	BLACK	III	50 MPH (SEE NOTE 3)
PD-2	2-1	W1-4R	36" X 36"	X		YELLOW	III	BLACK	III	REVERSING CURVES SYMBOL
		W13-1 (50)	18" X 18"	X		YELLOW	III	BLACK	III	50 MPH (SEE NOTE 3)

PAVEMENT DELINEATION AND SIGN DETAILS AND QUANTITIES

NO SCALE

PDQ-1

REVISED BY | DATE REVISED
MIKE ZDENEK | JEANNIE STEFFAN
CALCULATED-DESIGNED BY | CHECKED BY
FUNCTIONAL SUPERVISOR: JULIE CASEY

STATE OF CALIFORNIA - DEPARTMENT OF TRANSPORTATION
Caltrans® DESIGN

P:\proj2\01\47660_plans\pse\147660nc001.dgn

LAST REVISION 04-20-13 | DATE PLOTTED => 25-JUN-2013 | TIME PLOTTED => 14:58

Dist	COUNTY	ROUTE	POST MILES TOTAL PROJECT	SHEET No.	TOTAL SHEETS
01	Men	128	35.0/35.3	17	42

REGISTERED CIVIL ENGINEER DATE 04-20-13

PLANS APPROVAL DATE 6-24-13

REGISTERED PROFESSIONAL ENGINEER M.J. ZDENEK No. C76156 Exp. 6-30-14 CIVIL STATE OF CALIFORNIA

THE STATE OF CALIFORNIA OR ITS OFFICERS OR AGENTS SHALL NOT BE RESPONSIBLE FOR THE ACCURACY OR COMPLETENESS OF SCANNED COPIES OF THIS PLAN SHEET.

NOTES:

1. (N) NOT A SEPARATE PAY ITEM, FOR INFORMATION ONLY
2. TEMPORARY FIBER ROLLS MUST BE INSTALLED BEFORE TEMPORARY EROSION CONTROL.

DESTROY WELL

SHEET No.	LOCATION	EA
L-1	"M1" 21+00 TO 25+00 LT/R†	14
	TOTAL	14

REMOVE FENCE

SHEET No.	LOCATION	LF
L-1	"M1" 18+59 TO 19+61 R†	112
L-1	"M1" 26+79 TO 28+12 R†	140
	TOTAL	252

ROCK SLOPE PROTECTION

SHEET No.	LOCATION	RSP (1/2 TON, METHOD A)	RSP (1/4 TON, METHOD B)	RSP (No. 2, METHOD B)	RSP FABRIC (CLASS 8)
		CY	CY	CY	SQYD
L-1	RSP BUTTRESS	2140		656	1373
DQ-1	FROM DRAINAGE QUANTITIES		53.3		107.1
	TOTAL	2140	53.3	656	1480.1

TEMPORARY EROSION CONTROL

LOCATION			TEMPORARY HYDROSEED	MOVE IN/OUT
STATION	L†	R†	SQFT	EA
"M1" 17+00 TO 31+95	X		40,000	
"M1" 17+00 TO 31+95		X	174,500	
		TOTAL	214,500	6

FENCE

SHEET No.	LOCATION	TYPE		
		Temp ESA	BW, METAL POST	WM, METAL POST
		LF	LF	LF
L-1	"M1" 18+59 TO 19+61 R†			112
L-1	"M1" 26+79 TO 28+12 R†		140	
C-2	FROM CONSTRUCTION DETAILS	1182		
	TOTAL	1182	140	112

TEMPORARY HYDROSEED - SEED MIX

BOTANICAL NAME (COMMON NAME)	PERCENT GERMINATION (MINIMUM)	(N) POUNDS PURE LIVE SEED PER ACRE (SLOPE MEASUREMENT)
HORDEUM VULGARE (UC 937) COMMON BARLEY (UC 937)	85	70

ROADWAY QUANTITIES

SHEET No.	LOCATION	COLD PLANE ASPHALT CONCRETE PAVEMENT	ROADWAY EXCAVATION	(N) EMBANKMENT	SHOULDER BACKING	CLASS 2 AGGREGATE BASE	HOT MIX ASPHALT (TYPE A)	TACK COAT	CENTERLINE RUMBLE STRIP
		SQYD	CY	CY	TON	CY	TON	TON	STA
L-1	"M1" 16+75 TO 31+75 L†/R†	136	8518	8,215	300	2593	1676	2	15
DQ-1	FROM DRAINAGE QUANTITIES						10.8		
	TOTAL	136	8518	8,215	300	2593	1686.8	2	15

TEMPORARY WATER POLLUTION CONTROL

SHEET No.	LOCATION	TEMPORARY FIBER ROLL (SEE NOTE 2)	TEMPORARY SILT FENCE	TEMPORARY GRAVEL BAG BERM	TEMPORARY CONSTRUCTION ENTRANCE *	TEMPORARY CONSTRUCTION ROADWAY	TEMPORARY COVER	TEMPORARY CHECK DAM	TEMPORARY DRAINAGE INLET PROTECTION
		LF	LF	LF	EA	CY	SQYD	LF	EA
L-1	"M1" 16+75 TO 31.75 L†/R†	5000	1320	1800	3	260	200	360	3
L-1	"C1" 1+80 TO 3+71.2 L†		189						
	TOTAL	5000	1509	1800	3	260	200	360	3

* TEMPORARY CONSTRUCTION ENTRANCE MUST BE TYPE 1.

SUMMARY OF QUANTITIES

Q-1

REVISED BY | DATE REVISED

MIKE ZDENEK | JEANNIE STEFFAN

CALCULATED-DESIGNED BY | CHECKED BY

FUNCTIONAL SUPERVISOR: JULIE CASEY

STATE OF CALIFORNIA - DEPARTMENT OF TRANSPORTATION

Caltrans DESIGN

P:\proj2\01\47660_plans\pse\147660pa001.dgn

LAST REVISION 04-20-13 | DATE PLOTTED => 27-JUN-2013 | TIME PLOTTED => 12:43

Dist	COUNTY	ROUTE	POST MILES TOTAL PROJECT	SHEET No.	TOTAL SHEETS
01	Men	128	35.0/35.3	18	42

LICENSED LANDSCAPE ARCHITECT

6-24-13
PLANS APPROVAL DATE

LICENSED LANDSCAPE ARCHITECT
James S. Hibbert III L.A. 2596
Signature
5/31/15
Renewal Date
4/20/13
Date
STATE OF CALIFORNIA

THE STATE OF CALIFORNIA OR ITS OFFICERS OR AGENTS SHALL NOT BE RESPONSIBLE FOR THE ACCURACY OR COMPLETENESS OF SCANNED COPIES OF THIS PLAN SHEET.

EROSION CONTROL TYPE 1

SEQUENCE	ITEM	MATERIAL		APPLICATION RATE
		DESCRIPTION	TYPE	
STEP 1	COMPOST	COMPOST	MEDIUM	135 CY/ACRE
STEP 2	HYDROSEED	SEED	MIX 1	164 LB/ACRE
		FIBER	COMBINATION	2000 LB/ACRE
STEP 3	STRAW	STRAW	RICE	2 TONS/ACRE
STEP 4	HYDROMULCH	FIBER	COMBINATION	2000 LB/ACRE
		TACKIFIER	PSYLLIUM	150 LB/ACRE

EROSION CONTROL TYPE 2

SEQUENCE	ITEM	MATERIAL		APPLICATION RATE
		DESCRIPTION	TYPE	
STEP 1	DRY SEED	SEED	MIX 1	164 LB/ACRE
STEP 2	HYDROMULCH	FIBER	COMBINATION	2000 LB/ACRE
		TACKIFIER	PSYLLIUM	150 LB/ACRE
STEP 3	ROLLED EROSION CONTROL PRODUCT (BLANKET)	BLANKET	TYPE B	--

EROSION CONTROL TYPE 3

SEQUENCE	ITEM	MATERIAL		APPLICATION RATE
		DESCRIPTION	TYPE	
STEP 1	COMPOST	COMPOST	MEDIUM	135 CY/ACRE
STEP 2	HYDROSEED	SEED	MIX 1	164 LB/ACRE
		FIBER	COMBINATION	2000 LB/ACRE
STEP 3	STRAW	STRAW	RICE	2 TONS/ACRE
STEP 4	HYDROMULCH	FIBER	COMBINATION	2000 LB/ACRE
		TACKIFIER	PSYLLIUM	150 LB/ACRE
STEP 5	PLANT GROUP W	WILLOW CUTTINGS	--	5 FEET ON CENTER

FIBER ROLLS

SEQUENCE	ITEM	MATERIAL		CONSTRUCTION	REMARKS
		DESCRIPTION	TYPE	INSTALLATION	
FIBER ROLLS MUST BE INSTALLED BEFORE EROSION CONTROL (TYPE 1)	FIBER ROLLS	FIBER ROLL	TYPE B 8" TO 10" Dia	TYPE 1	AS SHOWN

SEED MIX

SEED	BOTANICAL NAME (COMMON NAME)	PERCENT GERMINATION (MINIMUM)	POUNDS PURE LIVE SEED PER ACRE (SLOPE MEASUREMENT)
MIX 1	AGROSTIS PALLENS THIN GRASS	70	4
	ELYMUS GLAUCUS 'BERKELEY' BERKELEY BLUE WILDRYE	60	50
	FESTUCA IDAHOENSIS CALIFORNIA FESCUE 'MT TAMALPIAS'	70	15
	HORDEUM VULGARE (UC 937) COMMON BARLEY (UC 937)	85	70
	LOTUS PURSHIANUS INNOCULATED SPANISH CLOVER	80	2
	MELICA CALIFORNICA CALIFORNIA ONIONGRASS	80	15
	VULPIA MICROSTACHYS THREE WEEKS FESCUE	80	8

EROSION CONTROL LEGEND

ECL-1

REVISED BY	DATE REVISED
JIM HIBBERT	PATRICK SULLIVAN

CALCULATED-DESIGNED BY	CHECKED BY

SENIOR LANDSCAPE ARCHITECT: RON FLORY

STATE OF CALIFORNIA - DEPARTMENT OF TRANSPORTATION
Caltrans® LANDSCAPE ARCHITECTURE

P:\proj2\01\47660_plans\pse\147660tc001.dgn

LAST REVISION 04-20-13 | DATE PLOTTED => 25-JUN-2013 | TIME PLOTTED => 14:59

Dist	COUNTY	ROUTE	POST MILES TOTAL PROJECT	SHEET No.	TOTAL SHEETS
01	Men	128	35.0/35.3	19	42

LICENSED LANDSCAPE ARCHITECT

6-24-13
PLANS APPROVAL DATE

LICENSED LANDSCAPE ARCHITECT
James S. Hibbert III
Signature
5/31/15
Renewal Date
4/20/13
Date
STATE OF CALIFORNIA

THE STATE OF CALIFORNIA OR ITS OFFICERS OR AGENTS SHALL NOT BE RESPONSIBLE FOR THE ACCURACY OR COMPLETENESS OF SCANNED COPIES OF THIS PLAN SHEET.

LEGEND:

- EROSION CONTROL TYPE 1 COMPOST, HYDROSEED, STRAW AND HYDROMULCH
- EROSION CONTROL TYPE 2 DRY SEED, HYDROMULCH AND ROLLED EROSION CONTROL PRODUCT (BLANKET)
- EROSION CONTROL TYPE 3 COMPOST, HYDROSEED, STRAW, HYDROMULCH AND WILLOW CUTTINGS
- RSP BUTTRESS
- GROUND ANCHOR WALER

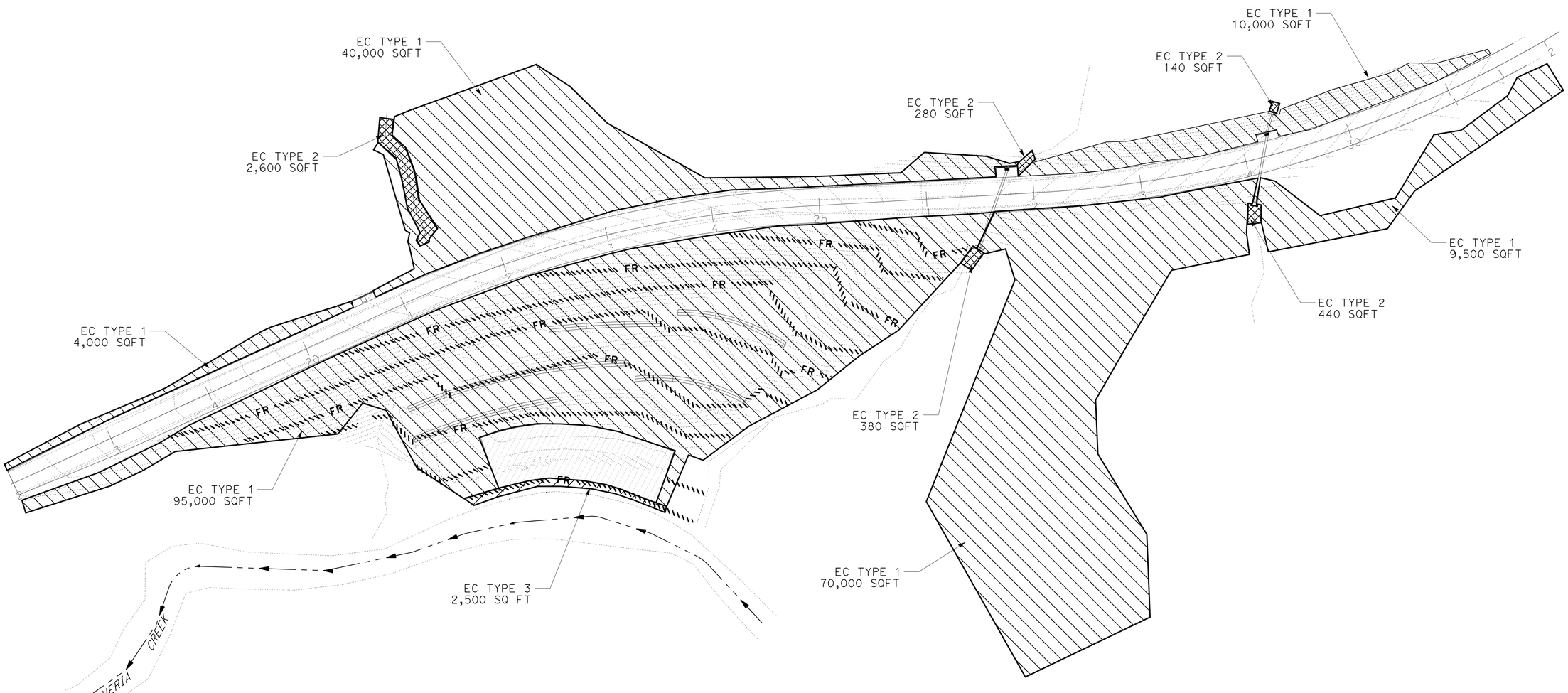

EROSION CONTROL PLAN

SCALE: 1" = 50'

EC-1

APPROVED FOR LANDSCAPE WORK ONLY

STATE OF CALIFORNIA - DEPARTMENT OF TRANSPORTATION
Caltrans® LANDSCAPE ARCHITECTURE

SENIOR LANDSCAPE ARCHITECT: RON FLORY
CALCULATED-DESIGNED BY: JIM HIBBERT
CHECKED BY: PATRICK SULLIVAN
REVISED BY
DATE REVISED

P:\proj2\01\47660_plans\pse\147660te001.dgn

LAST REVISION 04-20-13
DATE PLOTTED => 25-JUN-2013
TIME PLOTTED => 14:59

BORDER LAST REVISED 7/2/2010
USERNAME => s135318
DGN FILE => 147660te001.dgn
RELATIVE BORDER SCALE IS IN INCHES 0 1 2 3
UNIT 0318
PROJECT NUMBER & PHASE 01000003511

Dist	COUNTY	ROUTE	POST MILES TOTAL PROJECT	SHEET No.	TOTAL SHEETS
01	Men	128	35.0/35.3	20	42

LICENSED LANDSCAPE ARCHITECT

6-24-13
PLANS APPROVAL DATE

LICENSED LANDSCAPE ARCHITECT
James S. Hibbert III
Signature
5/31/15
Renewal Date
4/20/13
Date
STATE OF CALIFORNIA

THE STATE OF CALIFORNIA OR ITS OFFICERS OR AGENTS SHALL NOT BE RESPONSIBLE FOR THE ACCURACY OR COMPLETENESS OF SCANNED COPIES OF THIS PLAN SHEET.

EROSION CONTROL QUANTITIES

SHEET	LOCATION			DESCRIPTION	FIBER ROLL	COMPOST	ROLLED EROSION CONTROL PRODUCT (BLANKET)	EROSION CONTROL (DRY SEED)	HYDROSEED	STRAW	HYDROMULCH	PLANT (GROUP W)
	STATION	L†	R†		LF	SQFT	SQFT	SQFT	SQFT	SQFT	SQFT	EACH
EC SHEETS	"M1" 17+00 TO 20+55	X		EROSION CONTROL TYPE 1	--	4,000	--	--	4,000	4,000	4,000	--
	"M1" 17+00 TO 26+60		X	EROSION CONTROL TYPE 1	3,045	95,000	--	--	95,000	95,000	95,000	--
	"M1" 20+70 TO 23+15		X	EROSION CONTROL TYPE 3	250	2,500	--	--	2,500	2,500	2,500	40
	"M1" 20+80 TO 26+85	X		EROSION CONTROL TYPE 1	--	40,000	--		40,000	40,000	40,000	--
	"M1" 21+30 TO 21+75	X		EROSION CONTROL TYPE 2	--		2,600	2,600	--	--	2,600	--
	"M1" 26+00		X	EROSION CONTROL TYPE 2	--	--	380	380	--	--	380	--
	"M1" 26+60 TO 29+05		X	EROSION CONTROL TYPE 1	--	70,000	--	--	70,000	70,000	70,000	--
	"M1" 26+90 TO 31+55	X		EROSION CONTROL TYPE 1	--	10,000	--	--	10,000	10,000	10,000	--
	"M1" 27+00	X		EROSION CONTROL TYPE 2	--	--	280	280	--	--	280	--
	"M1" 29+00		X	EROSION CONTROL TYPE 2	--	--	440	440	--	--	440	--
	"M1" 29+05 TO 31+95		X	EROSION CONTROL TYPE 1	--	9,500	--	--	9,500	9,500	9,500	--
	"M1" 29+40	X		EROSION CONTROL TYPE 2	--	--	140	140	--	--	140	--
				TOTAL	3,295	231,000	3,840	3,840	231,000	231,000	234,840	40

EROSION CONTROL QUANTITIES

ECQ-1

REVISED BY | DATE REVISED
JIM HIBBERT | PATRICK SULLIVAN
CALCULATED-DESIGNED BY | CHECKED BY
SENIOR LANDSCAPE ARCHITECT
RON FLORY

STATE OF CALIFORNIA - DEPARTMENT OF TRANSPORTATION
Caltrans® LANDSCAPE ARCHITECTURE

P:\proj2\01\47660_plans\pse\147660tg001.dgn

LAST REVISION 04-20-13 | DATE PLOTTED => 25-JUN-2013 | TIME PLOTTED => 14:59

DIST	COUNTY	ROUTE	POST MILES TOTAL PROJECT	SHEET No.	TOTAL SHEETS
01	Men	128	35.0/35.3	21	42

REGISTERED CIVIL ENGINEER

January 20, 2012
PLANS APPROVAL DATE

REGISTERED PROFESSIONAL ENGINEER
Cornelis M. Hakim
No. C55610
Exp. 12-31-12
CIVIL
STATE OF CALIFORNIA

THE STATE OF CALIFORNIA OR ITS OFFICERS OR AGENTS SHALL NOT BE RESPONSIBLE FOR THE ACCURACY OR COMPLETENESS OF SCANNED COPIES OF THIS PLAN SHEET.

TO ACCOMPANY PLANS DATED 6-24-13

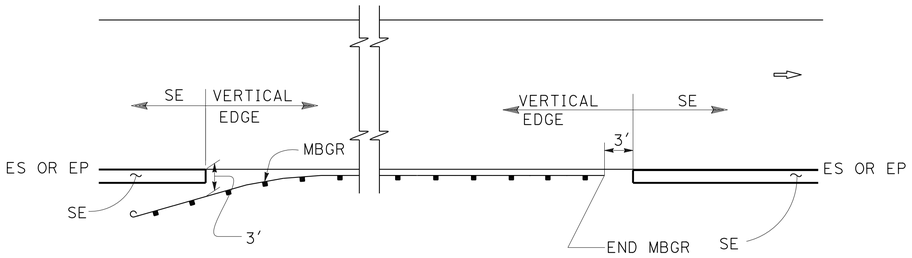

MBGR

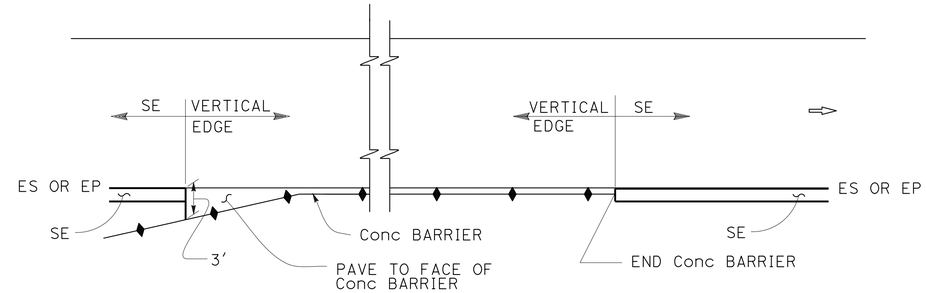

CONCRETE BARRIER

ABBREVIATIONS:

SE SAFETY EDGE

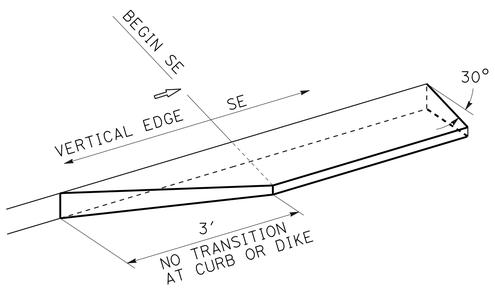

TRANSITION DETAIL
FOR CONCRETE ONLY

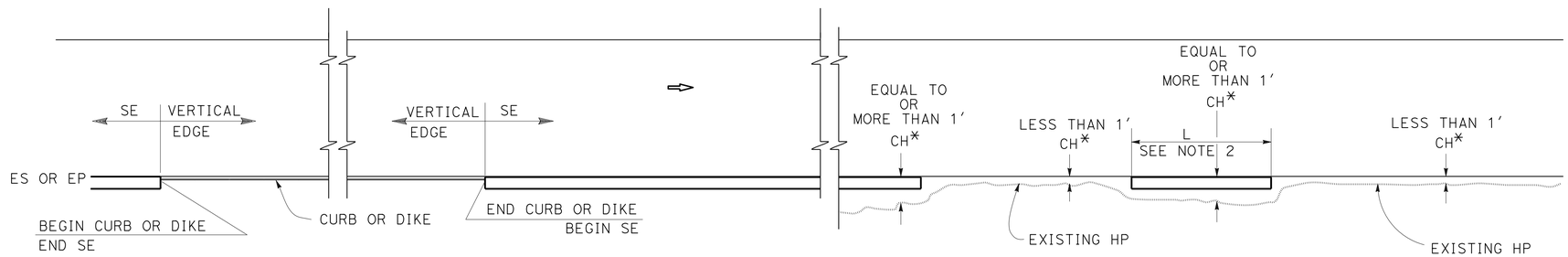

CURB OR DIKE

NARROW SIDE SLOPE

* CH = Distance from ES or EP to existing HP.

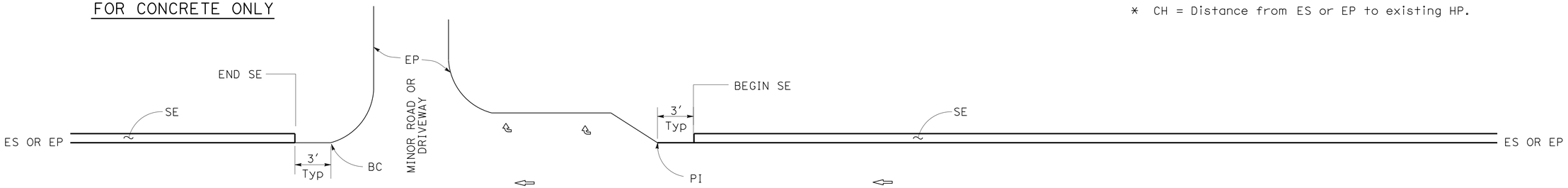

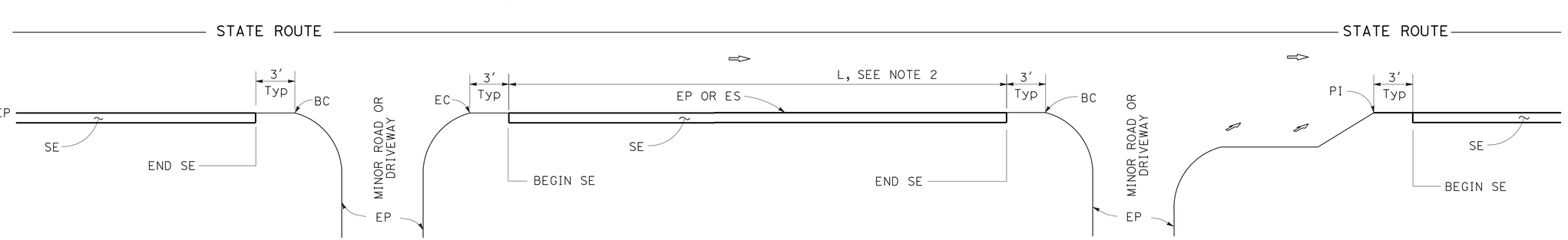

INTERSECTION

MINOR ROADWAY OR DRIVEWAY

DRIVEWAY AND INTERSECTION

NOTES:

1. For details not shown, see Revised Standard Plans RSP P75 and RSP P76.
2. Safety edge is optional when L is less than 30′.

STATE OF CALIFORNIA
DEPARTMENT OF TRANSPORTATION

PAVEMENT EDGE TREATMENTS

NO SCALE

RSP P74 DATED JANUARY 20, 2012 SUPPLEMENTS THE STANDARD PLANS BOOK DATED 2010.

REVISED STANDARD PLAN RSP P74

2010 REVISED STANDARD PLAN RSP P74

01-05-12

DIST	COUNTY	ROUTE	POST MILES TOTAL PROJECT	SHEET No.	TOTAL SHEETS
01	Men	128	35.0/35.3	22	42

REGISTERED CIVIL ENGINEER

January 20, 2012
PLANS APPROVAL DATE

REGISTERED PROFESSIONAL ENGINEER
Cornelis M. Hakim
No. C55610
Exp. 12-31-12
CIVIL
STATE OF CALIFORNIA

THE STATE OF CALIFORNIA OR ITS OFFICERS OR AGENTS SHALL NOT BE RESPONSIBLE FOR THE ACCURACY OR COMPLETENESS OF SCANNED COPIES OF THIS PLAN SHEET.

TO ACCOMPANY PLANS DATED 6-24-13

LEGEND:

- HMA PAVEMENT
- HMA OR CONCRETE PAVEMENT
- CONCRETE PAVEMENT

ABBREVIATIONS:

SE SAFETY EDGE
TT TOTAL THICKNESS OF SE
HW HINGE WIDTH, DISTANCE FROM ES OR EP TO HP

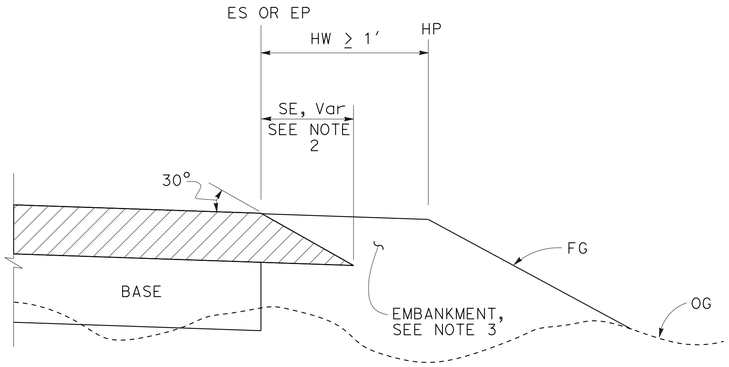

CASE K
Safety Edge - Fill Section, HW ≥ 1′

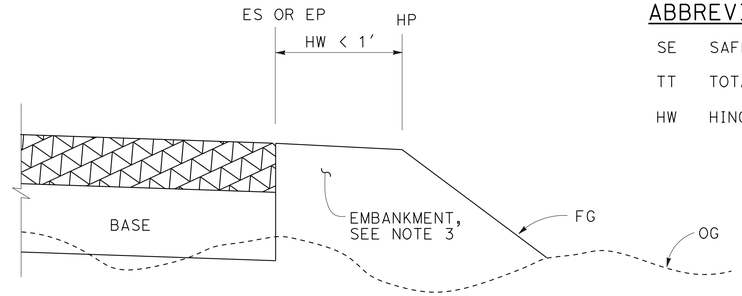

CASE L
Vertical Edge - Fill Section, HW < 1′

FILL SECTION

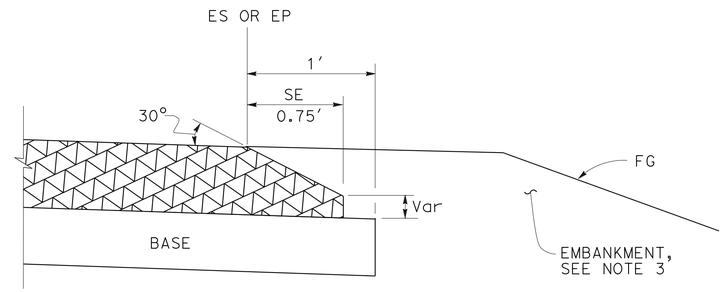

DETAIL "B"
For HMA pavement thickness more than 0.43′ or concrete pavement

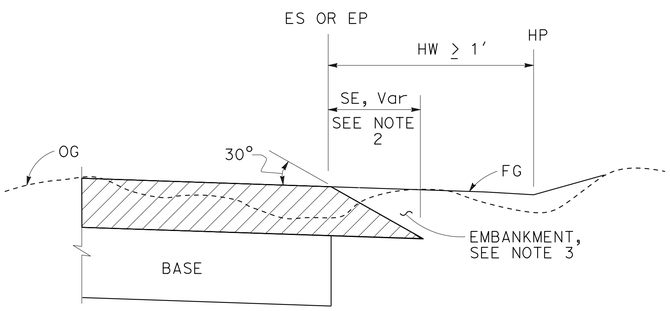

CASE M
Safety Edge - Cut Section, HW ≥ 1′

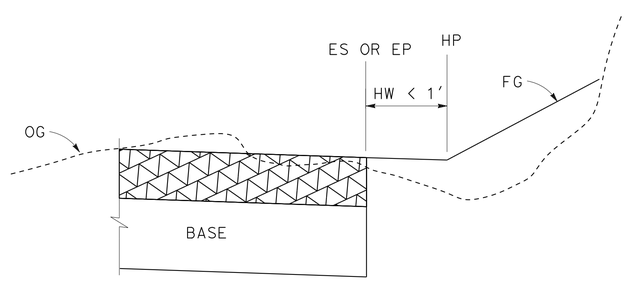

CASE N
Vertical Edge - Cut Section, HW < 1′

CUT SECTION

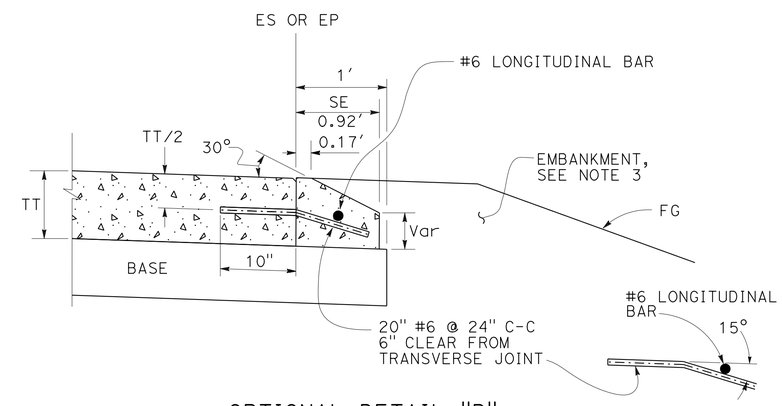

OPTIONAL DETAIL "B"
For concrete pavement
See Note 4

NOTES:

1. For limits of safety edge and vertical edge treatments, see Revised Standard Plan RSP P74
2. Details shown for HMA pavement thickness less than 0.43′. See Detail "B" for HMA pavement thickness more than 0.43′ or concrete pavement.
3. For locations and limits of embankment see project plans.
4. Safety edge transverse joint must match pavement transverse joint. End of #6 longitudinal bar must be 2" ±½" clear from transverse joint.
5. Safety edge is not needed in the area of MBGR, barrier, right turn lane and acceleration lane. See Revised Standard Plan RSP P74.

STATE OF CALIFORNIA
DEPARTMENT OF TRANSPORTATION

PAVEMENT EDGE TREATMENTS-NEW CONSTRUCTION

NO SCALE

RSP P76 DATED JANUARY 20, 2012 SUPPLEMENTS THE STANDARD PLANS BOOK DATED 2010.

REVISED STANDARD PLAN RSP P76

2010 REVISED STANDARD PLAN RSP P76

Dist	COUNTY	ROUTE	POST MILES TOTAL PROJECT	SHEET No.	TOTAL SHEETS
01	Men	128	35.0/35.3	23	42

Raymond Don Tsztoo
REGISTERED CIVIL ENGINEER

April 19, 2013
PLANS APPROVAL DATE

REGISTERED PROFESSIONAL ENGINEER Raymond Don Tsztoo No. C37332 Exp. 6-30-14 CIVIL STATE OF CALIFORNIA

THE STATE OF CALIFORNIA OR ITS OFFICERS OR AGENTS SHALL NOT BE RESPONSIBLE FOR THE ACCURACY OR COMPLETENESS OF SCANNED COPIES OF THIS PLAN SHEET.

TO ACCOMPANY PLANS DATED 6-24-13

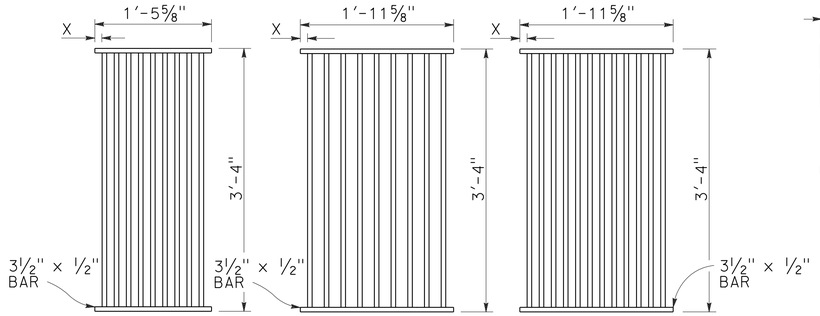

TYPE 18-9

1⅜" Clear spacing. Use within the roadbed on highways where bicycles and pedestrians are excluded.

TYPE 24-9

2" Clear spacing. Use in locations off the roadbed on all types of highways.

TYPE 24-12

1⅜" Clear spacing. Use within the roadbed on highways where bicycles and pedestrians are excluded.

RECTANGULAR GRATE DETAILS

(See table below)

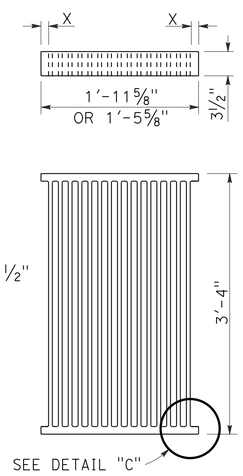

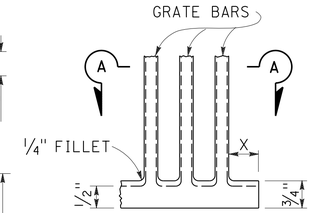

DETAIL "C"

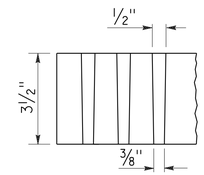

SECTION A-A

ALTERNATIVE CAST DUCTILE IRON GRATE OR CAST CARBON STEEL GRATE

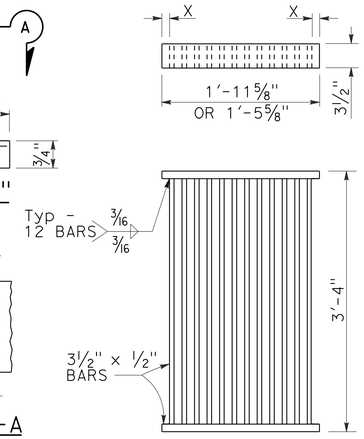

ALTERNATIVE WELDED GRATE

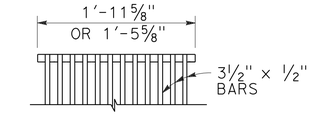

CAST END BLOCK

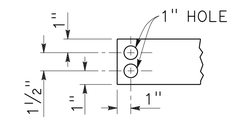

END OF BAR

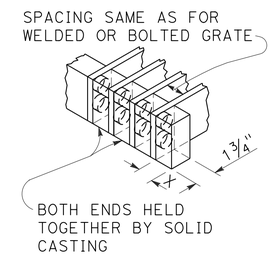

ALTERNATIVE CAST DUCTILE IRON OR CAST CARBON STEEL END BLOCK GRATE

NOTES:

1. Grate type numbers refer to approximate width of grate in inches and number of bars, respectively.
2. Contractor has the option of using cast ductile iron, cast carbon steel, welded, bolted, or cast end block grate.
3. Rounded top of bars optional on all grates.
4. Pipe inlets with a grate shall be placed so that bars parallel direction of principle surface flow.
5. Complete joint penetration butt welds may be substituted for the fillet welds on all anchors.
6. Standard square, hexagon, round or equivalent headed anchors may be substituted for the right angle hooks on the anchors shown on this plan.
7. Grate and frame weights are based on welded grates (weights of face angles, steps, protection bars, etc. are not included).
8. Connect chain to grate and frame only at locations shown on the plans. When chain is required, do not use cast ductile iron grates.

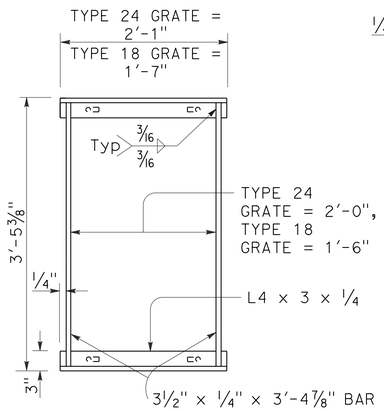

TYPICAL FRAME

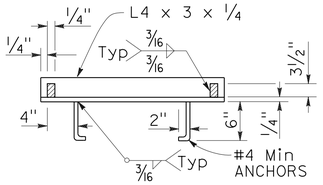

CROSS SECTION

(Thru frame)

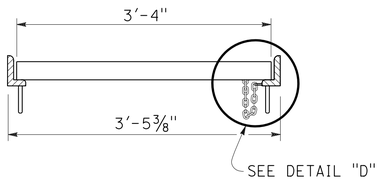

LONGITUDINAL SECTION

(Thru frame and grate)

RECTANGULAR FRAME DETAILS

(For all rectangular grates)

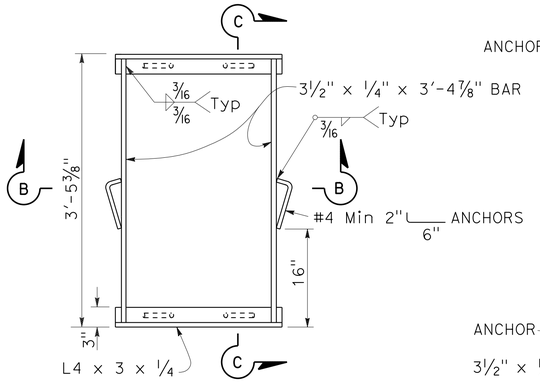

TYPICAL FRAME

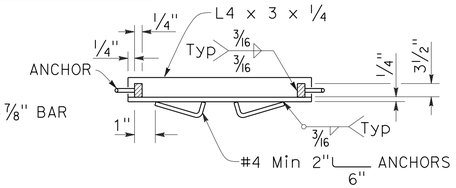

SECTION B-B

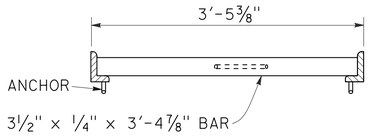

SECTION C-C

ALTERNATIVE ANCHOR FOR RECTANGULAR FRAME

(For details not shown, See Rectangular Frame Details)

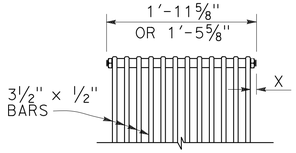

BOLTED END BLOCK

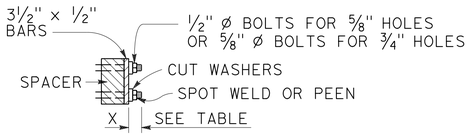

BOLTING DETAIL

ALTERNATIVE BOLTED GRATE

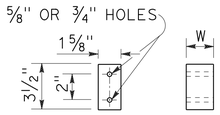

BAR SPACER

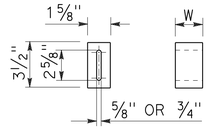

ALTERNATIVE SPACER

W = 1⅜" or 2"

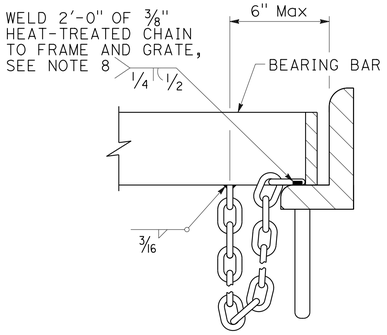

DETAIL "D"

(Steel grates only)

GRATE BAR SPACING TABLE

TYPE	No. OF BARS	CLEAR BAR SPACING	X
18-9	9	1⅜"	1 1/16"
24-9	9	2"	1 9/16"
24-12	12	1⅜"	1¼"

INLET TYPE	COVER TYPE	WEIGHT LB
OS	PLATE	174
OL-7	PLATE	170
OL-10	PLATE	170
OL-14	PLATE	170
OL-21	PLATE	170
OCP	PLATE	112
OCPI	PLATE	112
OCPI	REDWOOD	42
OMP	PLATE	177
OMPI	PLATE	177

INLET TYPE	GRATE TYPE	No. OF GRATES	WEIGHT LB
GDO	24-12	2	634
GOL-7	24-12	1	326
GOL-10	24-12	1	326
GO,G1,G2,G3,G4 (TYPE 24)	24-9	1	263
	24-12	1	326
G4 (TYPE 18),G5,G6	18-9	1	249
GT1	18-9	2	498
GT2	18-9	2	498
GT3	24-12	2	652
GT4	24-12	2	652
TRASH RACK			22
GRATE CHAIN			3

BASIS FOR Misc IRON & STEEL FINAL PAY WEIGHTS FOR DRAINAGE INLETS

(See Note 7)

STATE OF CALIFORNIA
DEPARTMENT OF TRANSPORTATION

GRATE DETAILS No. 1

NO SCALE

RSP D77A DATED APRIL 19, 2013 SUPERSEDES RSP D77A DATED JULY 20, 2012 AND STANDARD PLAN D77A DATED MAY 20, 2011 - PAGE 164 OF THE STANDARD PLANS BOOK DATED 2010.

REVISED STANDARD PLAN RSP D77A

2010 REVISED STANDARD PLAN RSP D77A

4-4-13

Dist	COUNTY	ROUTE	POST MILES TOTAL PROJECT	SHEET No.	TOTAL SHEETS
01	Men	128	35.0/35.3	24	42

Raymond Don Tsztoo
REGISTERED CIVIL ENGINEER

April 19, 2013
PLANS APPROVAL DATE

REGISTERED PROFESSIONAL ENGINEER Raymond Don Tsztoo No. C37332 Exp. 6-30-14 CIVIL STATE OF CALIFORNIA

THE STATE OF CALIFORNIA OR ITS OFFICERS OR AGENTS SHALL NOT BE RESPONSIBLE FOR THE ACCURACY OR COMPLETENESS OF SCANNED COPIES OF THIS PLAN SHEET.

TO ACCOMPANY PLANS DATED 6-24-13

2010 REVISED STANDARD PLAN RSP D77B

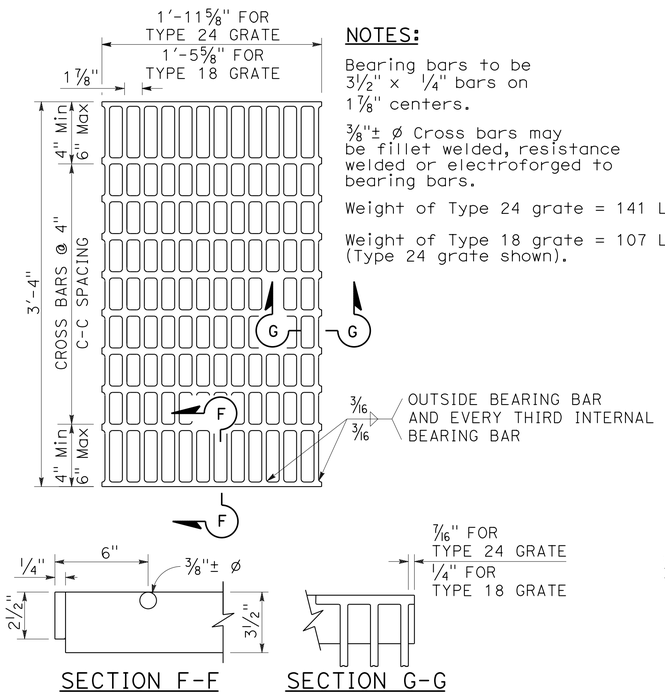

SECTION F-F SECTION G-G

TYPE 18-10 AND 24-13 GRATE

(Welded Steel)

NOTES:

Bearing bars to be 3½" x ¼" bars on 1⅞" centers.

⅜"± ø Cross bars may be fillet welded, resistance welded or electroforged to bearing bars.

Weight of Type 24 grate = 141 LBS.

Weight of Type 18 grate = 107 LBS. (Type 24 grate shown).

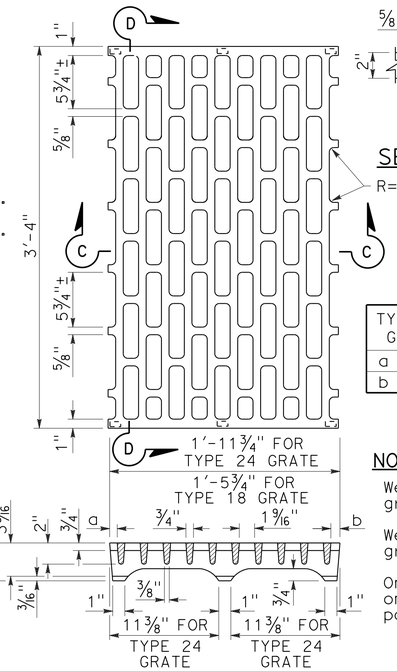

SECTION D-D

NOTES:

Weight of Type 24 grate = 155 LBS.

Weight of Type 18 grate = 130 LBS.

On Type 18 grate omit center bearing point.

TYPE 18 GRATE	TYPE 24 GRATE
a = ⅜"	a = ⅞"
b = ⅜"	b = ¾"

SECTION C-C

TYPE 18-8C AND 24-10C GRATE

(Cast ductile iron)

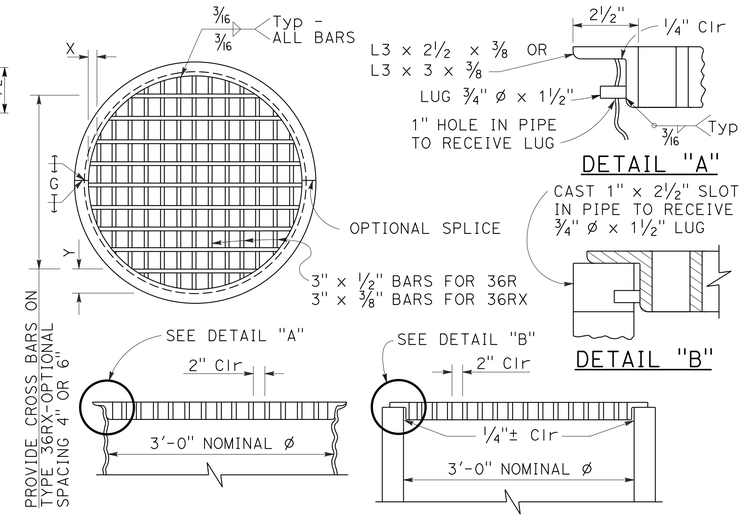

DETAIL "A"

DETAIL "B"

TYPE 36R AND 36RX GRATE DETAILS

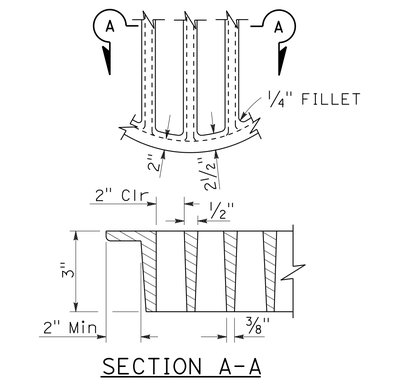

SECTION A-A

ALTERNATIVE CAST DUCTILE IRON GRATE OR CAST CARBON STEEL GRATE TYPE 36R AND 36RX

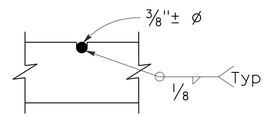

⅜"± ø Cross bars may be fillet welded, resistance welded or electroforged to bearing bars.

CROSS BAR DETAIL TYPE 36RX GRATE (WELDED STEEL)

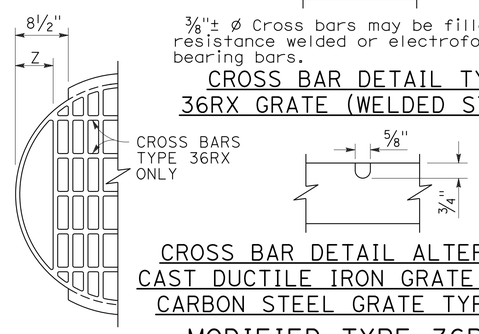

CROSS BAR DETAIL ALTERNATIVE CAST DUCTILE IRON GRATE OR CAST CARBON STEEL GRATE TYPE 36RX

MODIFIED TYPE 36R AND 36RX GRATE FOR ODI INLET

NOTES:

1. When alternative grates are allowed - Final pay based on alternative with the lesser weight.
2. Use frame shown on Standard Plan D74A, D74B or RSP D77A as appropriate.
3. When Type 24-10S, 24-12X or 24-13 grates are used with GDO Inlets, a ¼" x 3½" x 3'-4⅞" steel bar shall be welded across the center of inlet frame to separate the individual grates.
4. See Revised Standard Plan RSP D77A for connecting chain to welded grate and frame. When chain is required, do not use cast ductile iron grate.

BASIS FOR Misc IRON AND STEEL FINAL PAY WEIGHTS FOR DRAINAGE INLETS

INLET TYPE	GRATE TYPE	No. OF GRATES	WEIGHT LB
GDO (SEE NOTE 4)	24-10C	2	391
	24-10S	2	456
	24-12X	2	473
	24-13	2	374
GO,GOL,G1,G2, G3,G4 (TYPE 24)	24-10C	1	202
	24-10S	1	229
	24-12X	1	239
	24-13	1	188
G4 (TYPE 18) G5,G6	18-8S	1	187
	18-9X	1	187
	18-10	1	149
GT1,GT2	18-8S	2	374
	18-9X	2	374
	18-10	2	298
GT3,GT4	24-10C	2	404
	24-10S	2	458
	24-12X	2	478
	24-13	2	376
ODI	36RX (Mod)	1	196
GMP,GCP,GCPI	36RX	1	215
ODI	36R (Mod)	1	220
GMP,GCP,GCPI	36R	1	236
TRASH RACK			22
GRATE CHAIN			3

GRATE BAR SPACING TABLE

TYPE	No. OF BARS	CLEAR BAR SPACING	X	Y 4" SPACING	Y 6" SPACING	Z
36R	13	2"	2⅛"	-	-	-
36RX (STEEL)	15	2"	9/16"	3¾"	5¾"	-
36RX (CAST)	13	2"	2⅛"	3¾"	5¾"	-
36R Mod	12	2"	2⅛"	-	-	5"
36RX Mod (STEEL)	13	2"	9/16"	3¾"	5¾"	5 11/16"
36RX Mod (CAST)	12	2"	2⅛"	3¾"	5¾"	5"

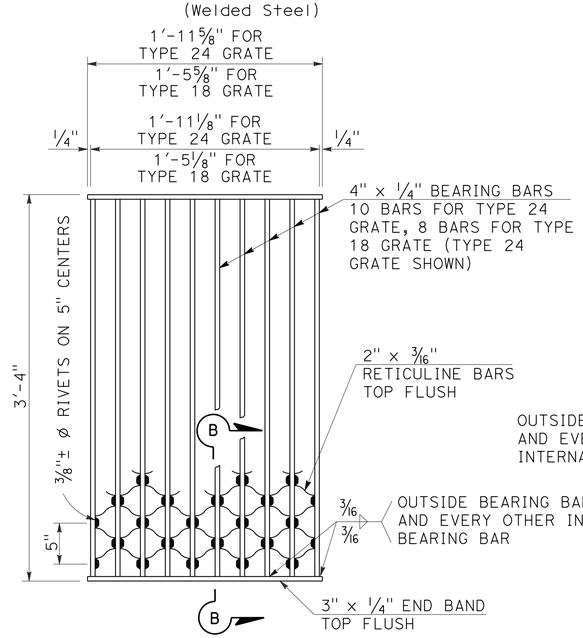

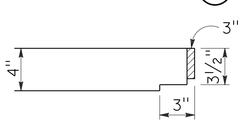

NOTES:

Weight of Type 24 grate = 182 LBS.
Weight of Type 18 grate = 145 LBS.

SECTION B-B

TYPE 18-8S AND 24-10S GRATE

(Welded Steel) Reticuline type

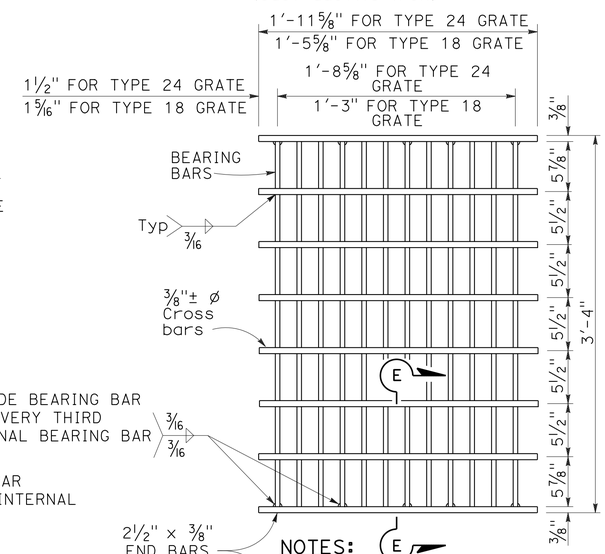

SECTION E-E

NOTES:

Bearing bars to be 3½" x ⅜" bars on 1⅞" centers.

12 Bars for Type 24 grate - 9 bars for Type 18 grates. (Type 24 grate shown).

Weight of Type 24 grate = 192 LBS.

Weight of Type 18 grate = 145 LBS.

⅜"± ø Cross bars may be fillet welded, resistance welded or electroforged to bearing bars.

TYPE 18-9X AND 24-12X GRATE

(Welded Steel)

STATE OF CALIFORNIA
DEPARTMENT OF TRANSPORTATION

GRATE DETAILS No. 2

NO SCALE

RSP D77B DATED APRIL 19, 2013 SUPERSEDES RSP D77B DATED JULY 20, 2012 AND STANDARD PLAN D77B DATED MAY 20, 2011 - PAGE 165 OF THE STANDARD PLANS BOOK DATED 2010.

REVISED STANDARD PLAN RSP D77B

4-4-13

Dist	COUNTY	ROUTE	POST MILES TOTAL PROJECT	SHEET No.	TOTAL SHEETS
01	Men	128	35.0/35.3	25	42

REGISTERED CIVIL ENGINEER

April 19, 2013
PLANS APPROVAL DATE

REGISTERED PROFESSIONAL ENGINEER
Gurinderpal Bhullar
No. C48815
Exp. 9-30-14
CIVIL
STATE OF CALIFORNIA

THE STATE OF CALIFORNIA OR ITS OFFICERS OR AGENTS SHALL NOT BE RESPONSIBLE FOR THE ACCURACY OR COMPLETENESS OF SCANNED COPIES OF THIS PLAN SHEET.

TO ACCOMPANY PLANS DATED 6-24-13

2010 REVISED STANDARD PLAN RSP T9

TABLE 1

TAPER LENGTH CRITERIA AND CHANNELIZING DEVICE SPACING

SPEED (S)	MINIMUM TAPER LENGTH * FOR WIDTH OF OFFSET 12 FEET (W)				MAXIMUM CHANNELIZING DEVICE SPACING		
					X	Y	Z **
	TANGENT 2L	MERGING L	SHIFTING L/2	SHOULDER L/3	TAPER	TANGENT	CONFLICT
mph	ft	ft	ft	ft	ft	ft	ft
20	160	80	40	27	20	40	10
25	250	125	63	42	25	50	12
30	360	180	90	60	30	60	15
35	490	245	123	82	35	70	17
40	640	320	160	107	40	80	20
45	1080	540	270	180	45	90	22
50	1200	600	300	200	50	100	25
55	1320	660	330	220	55	110	27
60	1440	720	360	240	60	120	30
65	1560	780	390	260	65	130	32
70	1680	840	420	280	70	140	35

* - For other offsets, use the following merging taper length formula for L:
For speed of 40 mph or less, $L = WS^2/60$
For speed of 45 mph or more, $L = WS$

Where: L = Taper length in feet
W = Width of offset in feet
S = Posted speed limit, off-peak 85th-percentile speed prior to work starting, or the anticipated operating speed in mph

** - Use for taper and tangent sections where there are no pavement markings or where there is a conflict between existing pavement markings and channelizers (CA).

TABLE 2

LONGITUDINAL BUFFER SPACE AND FLAGGER STATION SPACING

SPEED *	Min D **	DOWNGRADE Min D ***		
		-3%	-6%	-9%
mph	ft	ft	ft	ft
20	115	116	120	126
25	155	158	165	173
30	200	205	215	227
35	250	257	271	287
40	305	315	333	354
45	360	378	400	427
50	425	446	474	507
55	495	520	553	593
60	570	598	638	686
65	645	682	728	785
70	730	771	825	891

* - Speed is posted speed limit, off-peak 85th-percentile speed prior to work starting, or the anticipated operating speed in mph

** - Longitudinal buffer space or flagger station spacing

*** - Use on sustained downgrade steeper than -3 percent and longer than 1 mile.

TABLE 3

ADVANCE WARNING SIGN SPACING

ROAD TYPE	DISTANCE BETWEEN SIGNS *		
	A	B	C
	ft	ft	ft
URBAN - 25 mph OR LESS	100	100	100
URBAN - MORE THAN 25 mph TO 40 mph	250	250	250
URBAN - MORE THAN 40 mph	350	350	350
RURAL	500	500	500
EXPRESSWAY / FREEWAY	1000	1500	2640

* - The distances are approximate, are intended for guidance purposes only, and should be applied with engineering judgment. These distances should be adjusted by the Engineer for field conditions, if necessary, by increasing or decreasing the recommmended distances.

STATE OF CALIFORNIA
DEPARTMENT OF TRANSPORTATION

TRAFFIC CONTROL SYSTEM FOR LANE CLOSURE ON FREEWAYS AND EXPRESSWAYS

NO SCALE

RSP T9 DATED APRIL 19, 2013 SUPPLEMENTS THE STANDARD PLANS BOOK DATED 2010.

REVISED STANDARD PLAN RSP T9

1-23-13

Dist	COUNTY	ROUTE	POST MILES TOTAL PROJECT	SHEET No.	TOTAL SHEETS
01	Men	128	35.0/35.3	26	42

REGISTERED CIVIL ENGINEER

April 19, 2013
PLANS APPROVAL DATE

REGISTERED PROFESSIONAL ENGINEER
Gurinderpal Bhullar
No. C48815
Exp. 9-30-14
CIVIL
STATE OF CALIFORNIA

THE STATE OF CALIFORNIA OR ITS OFFICERS OR AGENTS SHALL NOT BE RESPONSIBLE FOR THE ACCURACY OR COMPLETENESS OF SCANNED COPIES OF THIS PLAN SHEET.

TO ACCOMPANY PLANS DATED 6-24-13

NOTES:

See Revised Standard Plan RSP T9 for tables.

Use cone spacing X for taper segment, Y for tangent segment or Z for conflict situations, as approriate, per Table 1, unless X, Y, or Z cone spacing is shown on this sheet.

Unless otherwise specified in the special provisions, all temporary warning signs shall have black legend on fluorescent orange background.

California codes are designated by (CA). Otherwise, Federal (MUTCD) codes are shown.

TYPICAL LANE CLOSURE WITH REVERSIBLE CONTROL

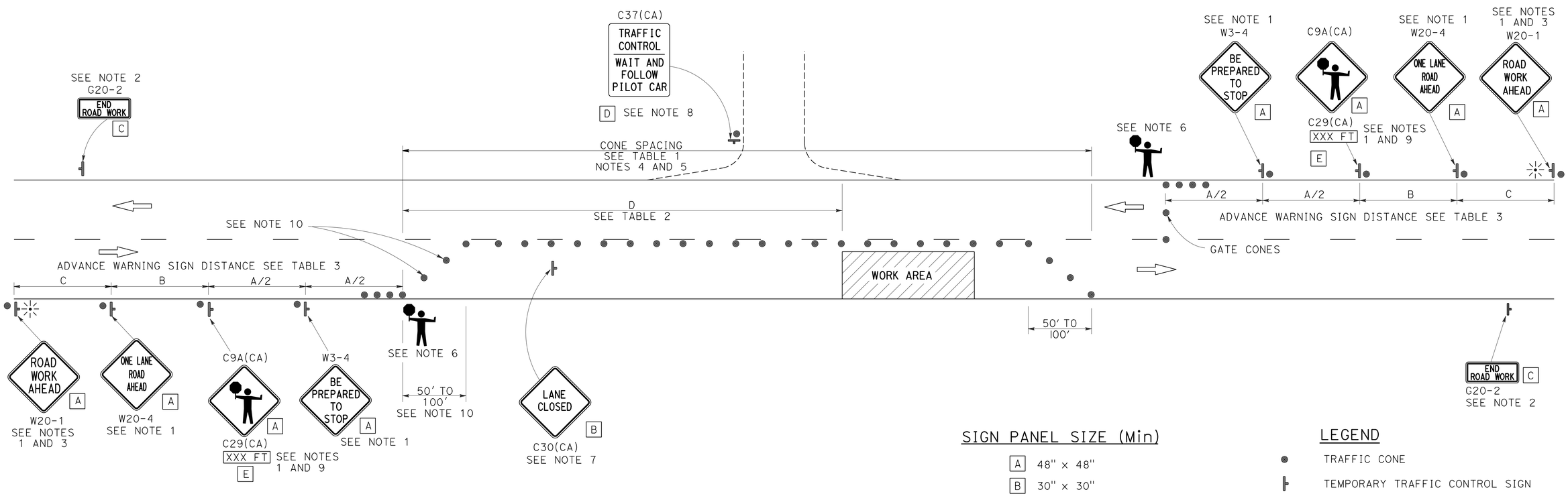

SIGN PANEL SIZE (Min)

A	48" x 48"
B	30" x 30"
C	36" x 18"
D	36" x 42"
E	20" x 7"

LEGEND

- TRAFFIC CONE
- TEMPORARY TRAFFIC CONTROL SIGN
- PORTABLE FLASHING BEACON
- FLAGGER

NOTES:

1. Each advance warning sign in each direction of travel shall be equipped with at least two flags for daytime closure. Each flag shall be at least 16" x 16" in size and shall be orange or fluorescent red-orange in color. Flashing beacons shall be placed at the locations indicated for lane closure during hours of darkness.
2. A G20-2 "END ROAD WORK" sign, as appropriate, shall be placed at the end of the lane control unless the end of work area is obvious, or ends within a larger project's limits.
3. If the W20-1 sign would follow within 2000' of a stationary W20-1 or G20-1 "ROAD WORK NEXT _____ MILES", use a W20-4 sign for the first advance warning sign.
4. All cones used for lane closures during the hours of darkness shall be fitted with retroreflective bands (or sleeves) as specified in the specifications.
5. Portable delineators, placed at one-half the spacing indicated for traffic cones, may be used instead of cones for daytime closures only.
6. Additional advance flaggers may be required. Flagger should stand in a conspicuous place, be visible to approaching traffic as well as approaching vehicles after the first vehicle has stopped. During the hours of darkness, the flagging-station and flagger shall be illuminated and clearly visible to approaching traffic. The illumination footprint of the lighting on the ground shall be at least 20' in diameter. Place a minimum of four cones at 50' intervals in advance of flagger station as shown.
7. Place C30(CA) "LANE CLOSED" sign at 500' to 1000' intervals throughout extended work areas. They are optional if the work area is visible from the flagger station.
8. When a pilot car is used, place a C37(CA) "TRAFFIC CONTROL-WAIT AND FOLLOW PILOT CAR" sign with black legend on white background at all intersections, driveways and alleys without a flagger within traffic control area. Signs shall be clean and visible at all times. Where traffic can not be effectively self-regulated, at least one flagger shall be used at each intersection within traffic control area.
9. An optional C29(CA) sign may be placed below the C9A(CA) sign.
10. Either traffic cones or barricades shall be placed on the taper. Barricades shall be Type I, II, or III.

STATE OF CALIFORNIA
DEPARTMENT OF TRANSPORTATION

TRAFFIC CONTROL SYSTEM FOR LANE CLOSURE ON TWO LANE CONVENTIONAL HIGHWAYS

NO SCALE

RSP T13 DATED APRIL 19, 2013 SUPERSEDES STANDARD PLAN T13 DATED MAY 20, 2011 - PAGE 241 OF THE STANDARD PLANS BOOK DATED 2010.

REVISED STANDARD PLAN RSP T13

2010 REVISED STANDARD PLAN RSP T13

4-2-13

DIST	COUNTY	ROUTE	POST MILES TOTAL PROJECT	SHEET No.	TOTAL SHEETS
01	Men	128	35.0/35.3	27	42

REGISTERED CIVIL ENGINEER 8-2-2012 DATE

6-24-13
PLANS APPROVAL DATE

REGISTERED PROFESSIONAL ENGINEER ERIC G BURGESON No. 67450 Exp. 6-30-13 CIVIL STATE OF CALIFORNIA

The State of California or its officers or agents shall not be responsible for the accuracy or completeness of scanned copies of this plan sheet.

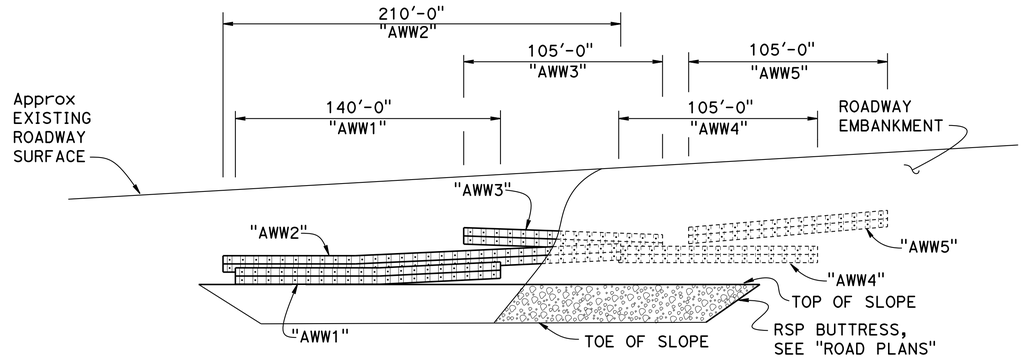

DATUM Elev 650.00

DEVELOPED ELEVATION

1" = 40'

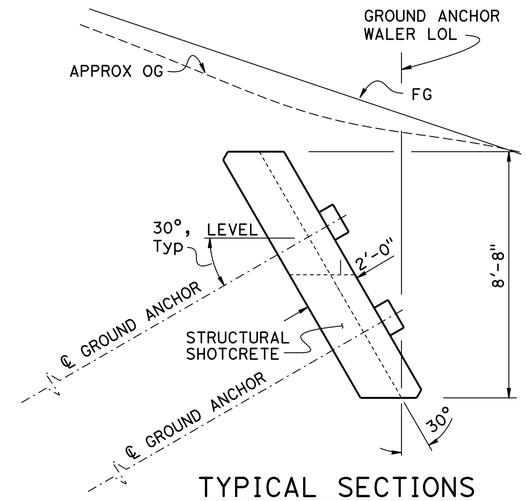

TYPICAL SECTIONS

3/8" = 1'-0"

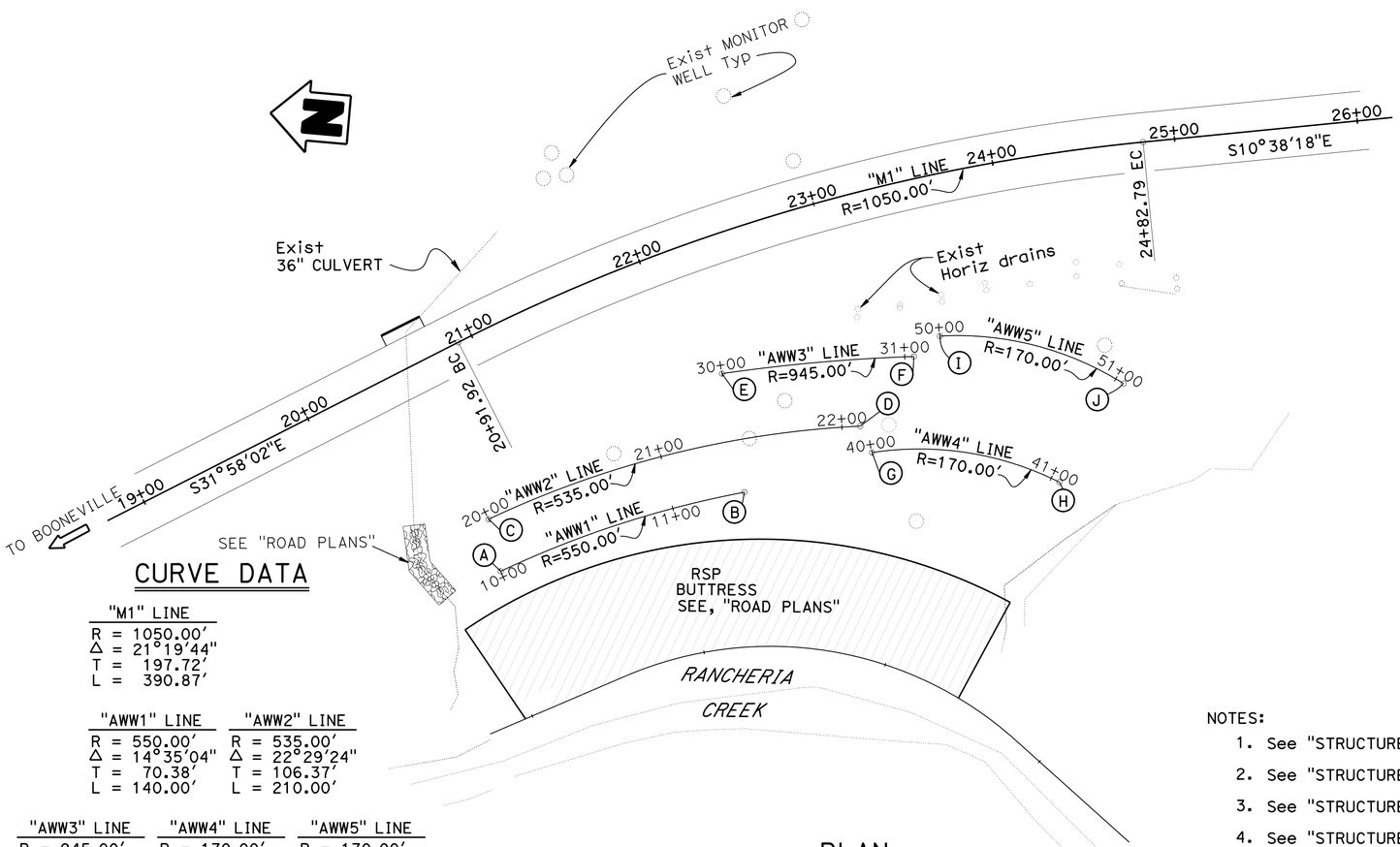

CURVE DATA

"M1" LINE
R = 1050.00'
Δ = 21°19'44"
T = 197.72'
L = 390.87'

"AWW1" LINE
R = 550.00'
Δ = 14°35'04"
T = 70.38'
L = 140.00'

"AWW2" LINE
R = 535.00'
Δ = 22°29'24"
T = 106.37'
L = 210.00'

"AWW3" LINE
R = 945.00'
Δ = 06°21'58"
T = 52.55'
L = 105.00'

"AWW4" LINE
R = 170.00'
Δ = 35°23'19"
T = 54.24'
L = 105.00'

"AWW5" LINE
R = 170.00'
Δ = 35°23'19"
T = 54.24'
L = 105.00'

PLAN

1" = 40'

AWW1 QUANTITIES

STRUCTURE EXCAVATION (WALER)	604	CY
STRUCTURE BACKFILL (WALER)	70	CY
GROUND ANCHOR (SUBHORIZONTAL)	40	EA
MINOR CONCRETE	0.8	CY
BAR REINFORCING STEEL (GROUND ANCHOR WALL)	11,055	LB
STRUCTURAL SHOTCRETE	79	CY

AWW2 QUANTITIES

STRUCTURE EXCAVATION (WALER)	702	CY
STRUCTURE BACKFILL (WALER)	105	CY
GROUND ANCHOR (SUBHORIZONTAL)	60	EA
MINOR CONCRETE	1.3	CY
BAR REINFORCING STEEL (GROUND ANCHOR WALL)	16,580	LB
STRUCTURAL SHOTCRETE	118	CY

AWW3 QUANTITIES

STRUCTURE EXCAVATION (WALER)	260	CY
STRUCTURE BACKFILL (WALER)	53	CY
GROUND ANCHOR (SUBHORIZONTAL)	30	EA
MINOR CONCRETE	0.6	CY
BAR REINFORCING STEEL (GROUND ANCHOR WALL)	8,292	LB
STRUCTURAL SHOTCRETE	59	CY

AWW4 QUANTITIES

STRUCTURE EXCAVATION (WALER)	281	CY
STRUCTURE BACKFILL (WALER)	52	CY
GROUND ANCHOR (SUBHORIZONTAL)	30	EA
MINOR CONCRETE	0.6	CY
BAR REINFORCING STEEL (GROUND ANCHOR WALL)	8,292	LB
STRUCTURAL SHOTCRETE	59	CY

AWW5 QUANTITIES

STRUCTURE EXCAVATION (WALER)	266	CY
STRUCTURE BACKFILL (WALER)	52	CY
GROUND ANCHOR (SUBHORIZONTAL)	30	EA
MINOR CONCRETE	0.6	CY
BAR REINFORCING STEEL (GROUND ANCHOR WALL)	8,292	LB
STRUCTURAL SHOTCRETE	59	CY

NOTES:

1. See "STRUCTURE PLAN No. 1" sheet for "AWW1" Wall details
2. See "STRUCTURE PLAN No. 2" sheet for "AWW2" Wall details
3. See "STRUCTURE PLAN No. 3" sheet for "AWW3" Wall details
4. See "STRUCTURE PLAN No. 4" sheet for "AWW4" Wall details
5. See "STRUCTURE PLAN No. 5" sheet for "AWW5" Wall details
6. For "INDEX TO PLANS" and "GENERAL NOTES" see "INDEX TO PLANS" sheet

"AWW1" LINE = WALL No. 10E0026	
BEGIN WALL Sta "AWW1" 10+00.00 END WALL Sta "AWW1" 11+40.00	
A	Sta "M1" 20+55.91, 121.66' Rt
B	Sta "M1" 22+09.45, 137.77' Rt

"AWW2" LINE = WALL No. 10E0027	
BEGIN WALL Sta "AWW2" 20+00.00 END WALL Sta "AWW2" 22+10.00	
C	Sta "M1" 20+62.95, 93.43' Rt
D	Sta "M1" 22+90.76, 123.43' Rt

"AWW3" LINE = WALL No. 10E0028	
BEGIN WALL Sta "AWW3" 30+00.00 END WALL Sta "AWW3" 31+05.00	
E	Sta "M1" 22+21.51, 72.92' Rt
F	Sta "M1" 23+32.92, 94.32' Rt

"AWW4" LINE = WALL No. 10E0029	
BEGIN WALL Sta "AWW4" 40+00.00 END WALL Sta "AWW4" 41+05.00	
G	Sta "M1" 22+93.28, 139.05' Rt
H	Sta "M1" 24+06.25, 177.65' Rt

"AWW5" LINE = WALL No. 10E0030	
BEGIN WALL Sta "AWW5" 50+00.00 END WALL Sta "AWW5" 51+05.00	
I	Sta "M1" 23+51.07, 86.74' Rt
J	Sta "M1" 24+55.96, 129.63' Rt

JOSEPH E DOWNING
DESIGN ENGINEER

	BY	CHECKED			
DESIGN	Arturo V Herrera	Ashraf Ahmed	LOAD FACTOR DESIGN		
DETAILS	Janie Chlubna	Ashraf Ahmed	LAYOUT	Arturo V Herrera	Eric Burgeson
QUANTITIES	Eric Burgeson	Quang H Nguyen	SPECIFICATIONS	Dave Klein	Dave Klein (PLANS AND SPECS COMPARED)

ORIGINAL SCALE IN INCHES FOR REDUCED PLANS 0 1 2 3

STATE OF CALIFORNIA
DEPARTMENT OF TRANSPORTATION

DIVISION OF ENGINEERING SERVICES
STRUCTURE DESIGN
DESIGN BRANCH 3

BRIDGE NO. VARIES
POST MILE 35.0/35.3

SMOOT SINK GROUND ANCHOR WALERS
GENERAL PLAN

UNIT: 3578
PROJECT NUMBER & PHASE: 01000003511
CONTRACT NO.: 01-476604

DISREGARD PRINTS BEARING EARLIER REVISION DATES

REVISION DATES: 7-5-11 | 6-23-13 | 6-12-13

SHEET 1 OF 16

USERNAME => s119571 DATE PLOTTED => 27-JUN-2013 TIME PLOTTED => 13:17

STRUCTURES DESIGN GENERAL PLAN SHEET (ENGLISH) (REV.09-01-10)

FILE => 10e0011-a-gp.dgn

DIST	COUNTY	ROUTE	POST MILES TOTAL PROJECT	SHEET No.	TOTAL SHEETS
01	Men	128	35.0/35.3	28	42

REGISTERED CIVIL ENGINEER 8-2-2012 DATE

6-24-13
PLANS APPROVAL DATE

REGISTERED PROFESSIONAL ENGINEER
ERIC G BURGESON
No. 67450
Exp. 6-30-13
CIVIL
STATE OF CALIFORNIA

The State of California or its officers or agents shall not be responsible for the accuracy or completeness of scanned copies of this plan sheet.

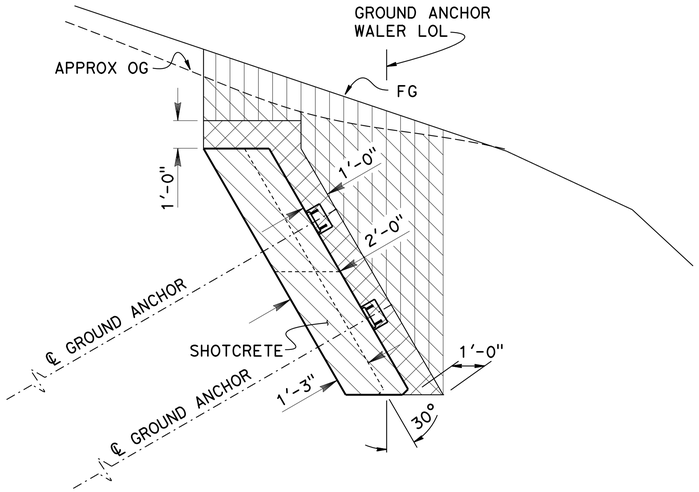

LIMITS OF EXCAVATION AND BACKFILL

No Scale

Structure Excavation

Structure Backfill

Embankment
See "ROAD PLANS"

MINIMUM UNBONDED LENGTH (FEET)				
WALL	AWW1			
STATION	10+00		11+40	
UNBONDED LENGTH (FEET)	50			
WALL	AWW2			
STATION	20+00		22+10	
UNBONDED LENGTH (FEET)	60			
WALL	AWW3			
STATION	30+00	30+75	30+75	31+05
UNBONDED LENGTH (FEET)	70		60	
WALL	AWW4			
STATION	40+00	40+55	40+55	41+05
UNBONDED LENGTH (FEET)	50		40	
WALL	AWW5			
STATION	50+00	50+55	50+55	51+05
UNBONDED LENGTH (FEET)	50		30	

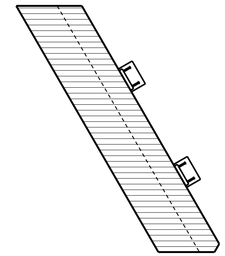

Minor Concrete

Structural Shotcrete

CONCRETE STRENGTH AND TYPE LIMITS

No Scale

GENERAL NOTES

DESIGN:

"CALTRANS BRIDGE DESIGN SPECIFICATIONS LFD Version April 2000" (1996 AASHTO with Interims and Revision by Caltrans)

SOIL PARAMETERS:

No lateral earth pressures considered in Design

REINFORCED CONCRETE:

Working Stress Design

Shotcrete Strength: f'_c = 3250 psi at 28 days

Reinforcing Steel ASTM Designation: A706

f_y = 60,000 psi

f_s = 2400 psi

n = 9

PRESTRESSING STEEL:

Strands -ASTM Designation: A416 (270 ksi Low Relaxation Steel)

Bars -ASTM Designation: A722 TYPE II (150 ksi)

T_1 = Design Force Per Ground Anchor Lift 1 = 100 kips

T_2 = Design Force Per Ground Anchor Lift 2 = 170 kips

f_{pu} = Minimum Tensile Strength of Prestressing Steel (ksi)

A_s (Min) = Minimum Cross Sectional Area of Prestressing Steel in Ground Anchor Tendon (Square Inches)

$$A_s \text{ (Min)} = \frac{1.50 * T}{0.75 * f_{pu}} \text{ (STRANDS)}$$

$$A_s \text{ (Min)} = \frac{1.50 * T}{0.80 * f_{pu}} \text{ (BARS)}$$

INDEX TO PLANS

SHEET No.	TITLE
1	GENERAL PLAN
2	INDEX TO PLANS
3	STRUCTURE PLAN No. 1
4	STRUCTURE PLAN No. 2
5	STRUCTURE PLAN No. 3
6	STRUCTURE PLAN No. 4
7	STRUCTURE PLAN No. 5
8	FOUNDATION PLAN
9	WALL DETAILS No. 1
10	WALL DETAILS No. 2
11	SUB HORIZONTAL GROUND ANCHOR DETAILS
12	LOG OF TEST BORINGS 1 OF 5
13	LOG OF TEST BORINGS 2 OF 5
14	LOG OF TEST BORINGS 3 OF 5
15	LOG OF TEST BORINGS 4 OF 5
16	LOG OF TEST BORINGS 5 OF 5

STANDARD PLANS DATED 2010

A10A	ABBREVIATIONS (SHEET 1 OF 2)
A10B	ABBREVIATIONS (SHEET 2 OF 2)
A10C	LINES AND SYMBOLS (SHEET 1 OF 3)
A10D	LINES AND SYMBOLS (SHEET 2 OF 3)
A10E	LINES AND SYMBOLS (SHEET 3 OF 3)
A62C	LIMITS OF PAYMENT FOR EXCAVATION AND BACKFILL BRIDGE

STANDARD PLAN SHEET No.

DETAIL No.

	BY	CHECKED
DESIGN	Arturo V Herrera	Ashraf Ahmed
DETAILS	Janie Chlubna	Ashraf Ahmed
QUANTITIES	Eric Burgeson	Quang H Nguyen

STATE OF CALIFORNIA
DEPARTMENT OF TRANSPORTATION

DIVISION OF ENGINEERING SERVICES
STRUCTURE DESIGN
DESIGN BRANCH 3

BRIDGE NO. VARIES
POST MILE 35.0/35.3

SMOOT SINK GROUND ANCHOR WALERS
INDEX TO PLANS

STRUCTURES DESIGN DETAIL SHEET (ENGLISH) (REV. 09-01-10)

ORIGINAL SCALE IN INCHES FOR REDUCED PLANS 0 1 2 3

UNIT: 3578
PROJECT NUMBER & PHASE: 01000003511
CONTRACT NO.: 01-476604

DISREGARD PRINTS BEARING EARLIER REVISION DATES

REVISION DATES: 7-12-11 5-22-13 6-28-13 5-02-13

SHEET 2 OF 16

FILE => 10e0011-b-index.dgn

USERNAME => s179577 DATE PLOTTED => 27-JUN-2013 TIME PLOTTED => 13:17

DIST	COUNTY	ROUTE	POST MILES TOTAL PROJECT	SHEET No.	TOTAL SHEETS
01	Men	128	35.0/35.3	29	42

REGISTERED CIVIL ENGINEER 8-2-2012 DATE

6-24-13
PLANS APPROVAL DATE

REGISTERED PROFESSIONAL ENGINEER
ERIC G BURGESON
No. 67450
Exp. 6-30-13
CIVIL
STATE OF CALIFORNIA

The State of California or its officers or agents shall not be responsible for the accuracy or completeness of scanned copies of this plan sheet.

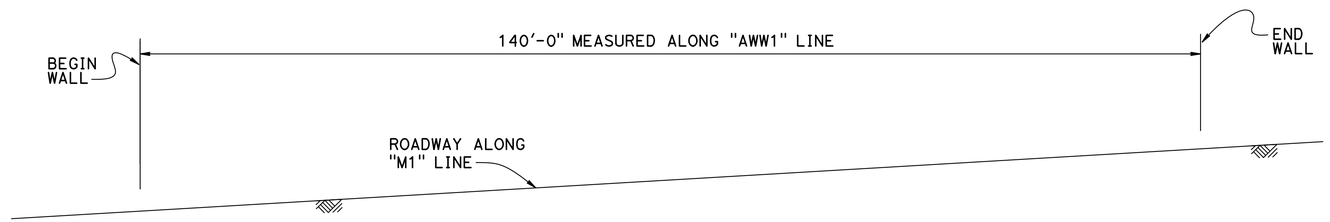

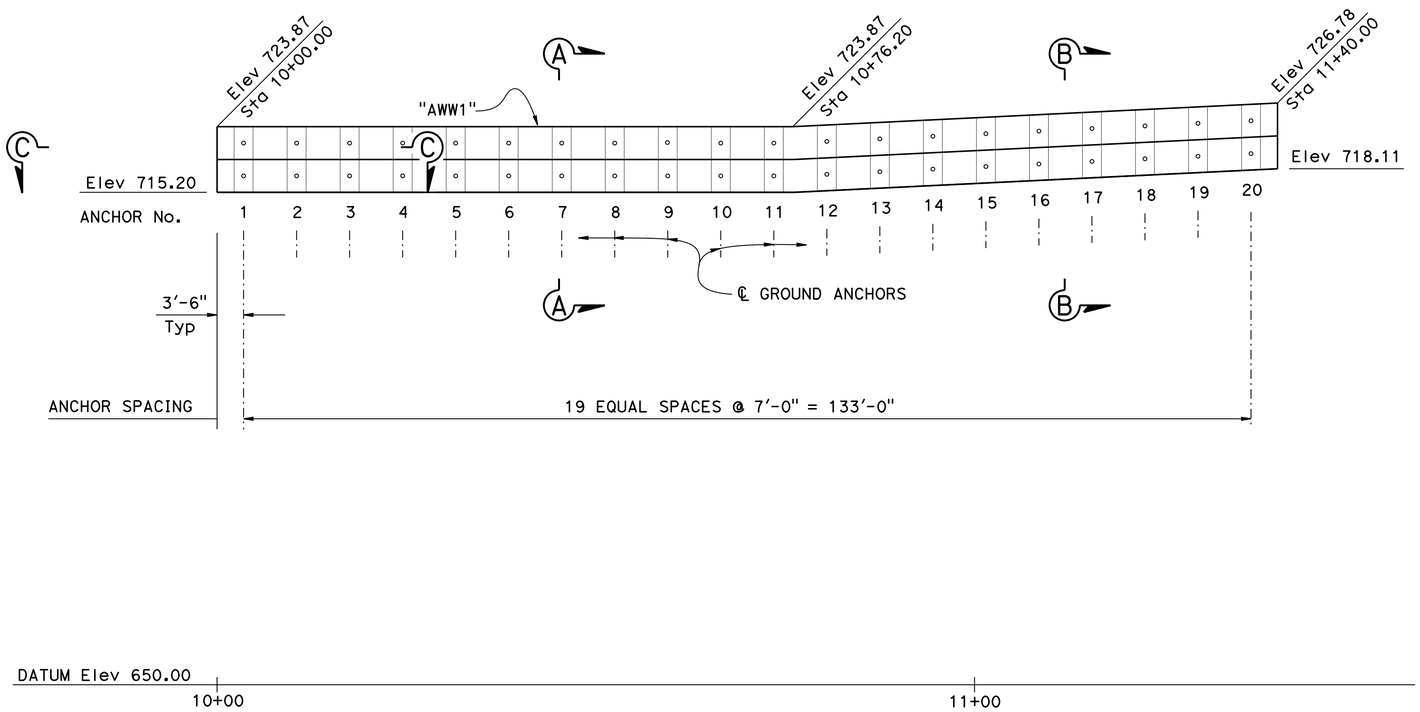

LEGEND:

◦ Indicates Ground Anchor

NOTE:

1. For "SECTION A-A", "SECTION B-B" and "SECTION C-C", see "WALL DETAILS No. 1" sheet

"AWW1" LINE DEVELOPED ELEVATION

1" = 10'

	BY	CHECKED
DESIGN	Arturo V Herrera	Ashraf Ahmed
DETAILS	Janie Chlubna	Ashraf Ahmed
QUANTITIES	Eric Burgeson	Quang H Nguyen

STATE OF CALIFORNIA
DEPARTMENT OF TRANSPORTATION

DIVISION OF ENGINEERING SERVICES
STRUCTURE DESIGN
DESIGN BRANCH 3

BRIDGE NO. 10E0026
POST MILE 35.0/35.3

SMOOT SINK GROUND ANCHOR WALERS
STRUCTURE PLAN No. 1

STRUCTURES DESIGN DETAIL SHEET (ENGLISH) (REV. 09-01-10)

ORIGINAL SCALE IN INCHES FOR REDUCED PLANS 0 1 2 3

UNIT: 3578
PROJECT NUMBER & PHASE: 01000003511
CONTRACT NO.: 01-476604

DISREGARD PRINTS BEARING EARLIER REVISION DATES

REVISION DATES: 1-26-11 5-25-12 7-5-11

SHEET 3 OF 16

FILE => 10e0011-c-sp01.dgn

USERNAME => s119571 DATE PLOTTED => 27-JUN-2013 TIME PLOTTED => 13:17

DIST	COUNTY	ROUTE	POST MILES TOTAL PROJECT	SHEET No.	TOTAL SHEETS
01	Men	128	35.0/35.3	30	42

REGISTERED CIVIL ENGINEER 8-2-2012 DATE

6-24-13
PLANS APPROVAL DATE

REGISTERED PROFESSIONAL ENGINEER
ERIC G BURGESON
No. 67450
Exp. 6-30-13
CIVIL
STATE OF CALIFORNIA

The State of California or its officers or agents shall not be responsible for the accuracy or completeness of scanned copies of this plan sheet.

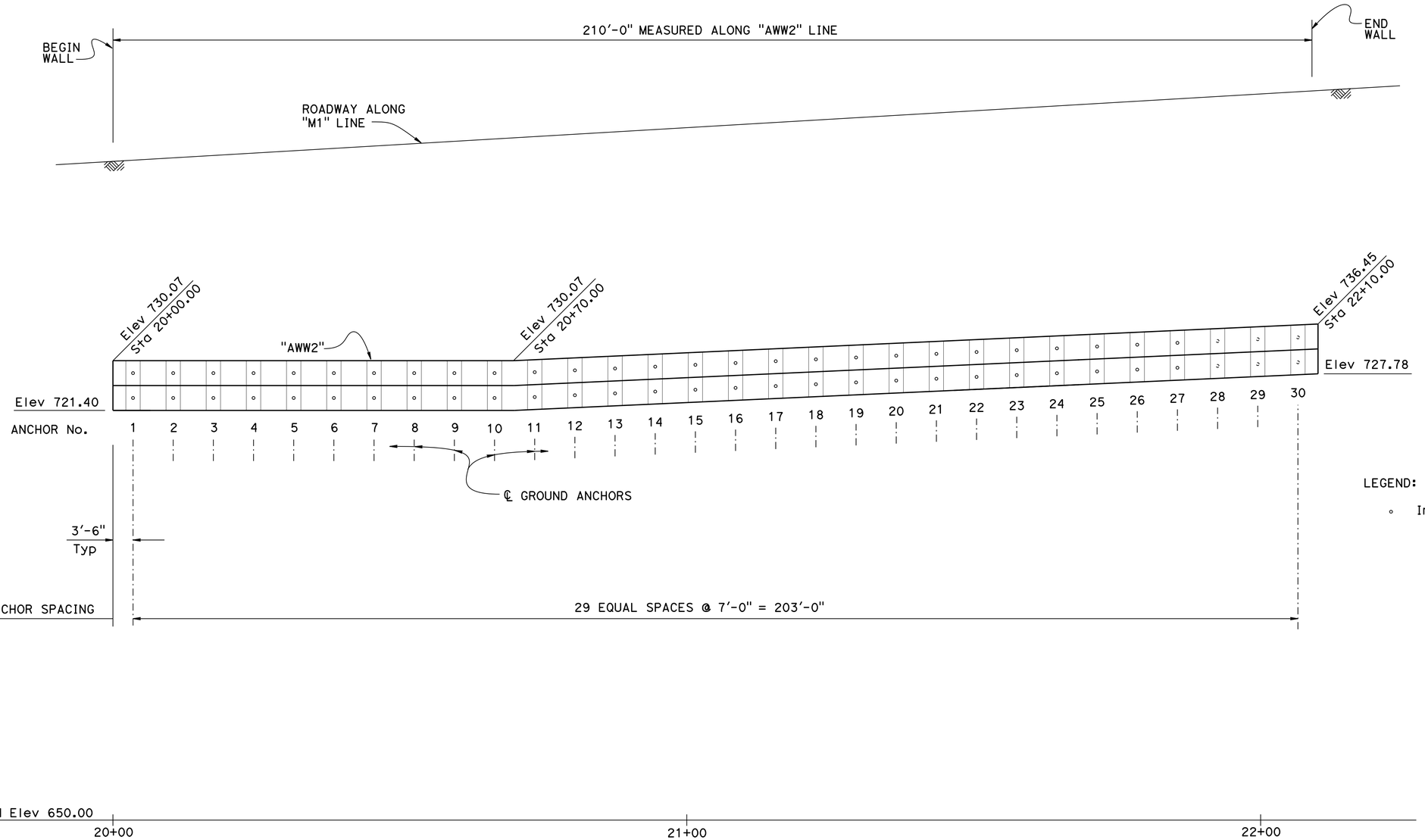

LEGEND:

∘ Indicates Ground Anchor

"AWW2" LINE DEVELOPED ELEVATION

1" = 10'

	BY	CHECKED
DESIGN	Eric Burgeson	Ashraf Ahmed
DETAILS	Janie Chlubna	Ashraf Ahmed
QUANTITIES	Eric Burgeson	Quang H Nguyen

STATE OF CALIFORNIA
DEPARTMENT OF TRANSPORTATION

DIVISION OF ENGINEERING SERVICES
STRUCTURE DESIGN
DESIGN BRANCH 3

BRIDGE NO. 10E0027
POST MILE 35.0/35.3

SMOOT SINK GROUND ANCHOR WALERS
STRUCTURE PLAN No. 2

STRUCTURES DESIGN DETAIL SHEET (ENGLISH) (REV. 09-01-10)

ORIGINAL SCALE IN INCHES FOR REDUCED PLANS 0 1 2 3

UNIT: 3578
PROJECT NUMBER & PHASE: 01000003511
CONTRACT NO.: 01-476604

DISREGARD PRINTS BEARING EARLIER REVISION DATES

REVISION DATES: 1-26-11 5-25-12 7-5-11

SHEET 4 OF 16

FILE => 10e0011-c-sp02.dgn

USERNAME => s119571 DATE PLOTTED => 27-JUN-2013 TIME PLOTTED => 13:18

DIST	COUNTY	ROUTE	POST MILES TOTAL PROJECT	SHEET No.	TOTAL SHEETS
01	Men	128	35.0/35.3	31	42

REGISTERED CIVIL ENGINEER 8-2-2012 DATE

6-24-13
PLANS APPROVAL DATE

REGISTERED PROFESSIONAL ENGINEER
ERIC G BURGESON
No. 67450
Exp. 6-30-13
CIVIL
STATE OF CALIFORNIA

The State of California or its officers or agents shall not be responsible for the accuracy or completeness of scanned copies of this plan sheet.

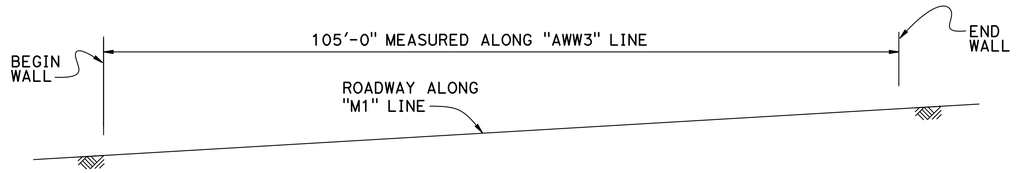

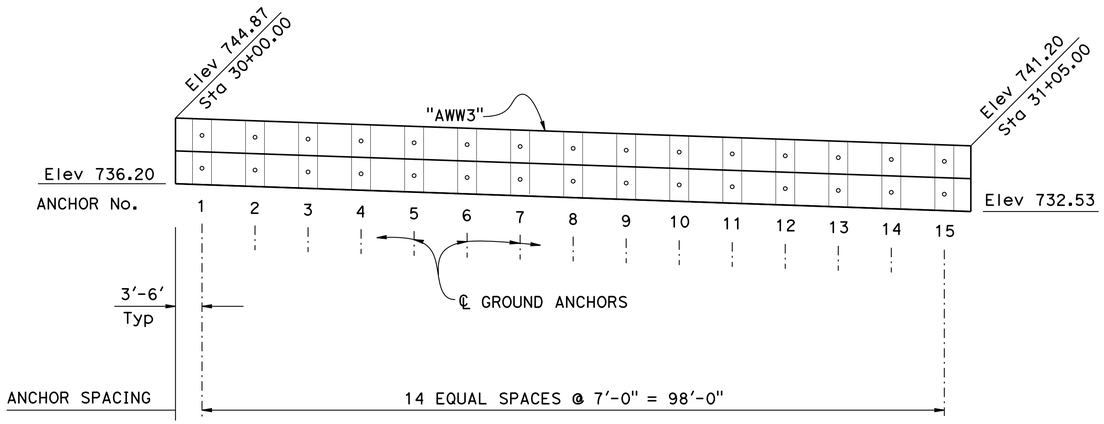

LEGEND:

◦ Indicates Ground Anchor

"AWW3" LINE DEVELOPED ELEVATION

1" = 10'

	BY	CHECKED
DESIGN	Eric Burgeson	Ashraf Ahmed
DETAILS	Janie Chlubna	Ashraf Ahmed
QUANTITIES	Eric Burgeson	Quang H Nguyen

STATE OF CALIFORNIA
DEPARTMENT OF TRANSPORTATION

DIVISION OF ENGINEERING SERVICES
STRUCTURE DESIGN
DESIGN BRANCH 3

BRIDGE NO. 10E0028
POST MILE 35.0/35.3

SMOOT SINK GROUND ANCHOR WALERS
STRUCTURE PLAN No. 3

STRUCTURES DESIGN DETAIL SHEET (ENGLISH) (REV. 09-01-10)

ORIGINAL SCALE IN INCHES FOR REDUCED PLANS 0 1 2 3

UNIT: 3578
PROJECT NUMBER & PHASE: 01000003511
CONTRACT NO.: 01-476604

DISREGARD PRINTS BEARING EARLIER REVISION DATES

REVISION DATES: 1-26-11 5-25-12 7-5-11

SHEET 5 OF 16

FILE => 10e0011-c-sp03.dgn

USERNAME => s124496 DATE PLOTTED => 28-JUN-2013 TIME PLOTTED => 12:24

DIST	COUNTY	ROUTE	POST MILES TOTAL PROJECT	SHEET No.	TOTAL SHEETS
01	Men	128	35.0/35.3	32	42

REGISTERED CIVIL ENGINEER 8-2-2012 DATE

6-24-13
PLANS APPROVAL DATE

REGISTERED PROFESSIONAL ENGINEER
ERIC G BURGESON
No. 67450
Exp. 6-30-13
CIVIL
STATE OF CALIFORNIA

The State of California or its officers or agents shall not be responsible for the accuracy or completeness of scanned copies of this plan sheet.

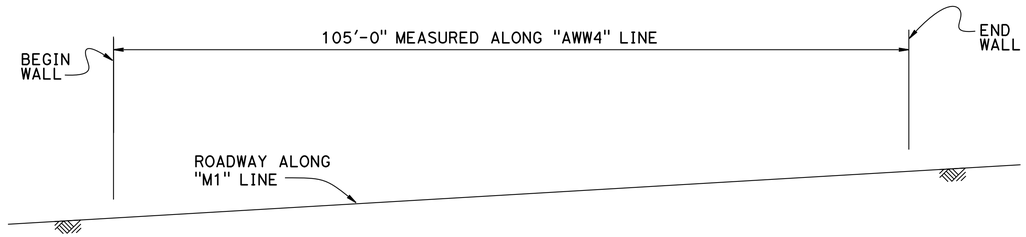

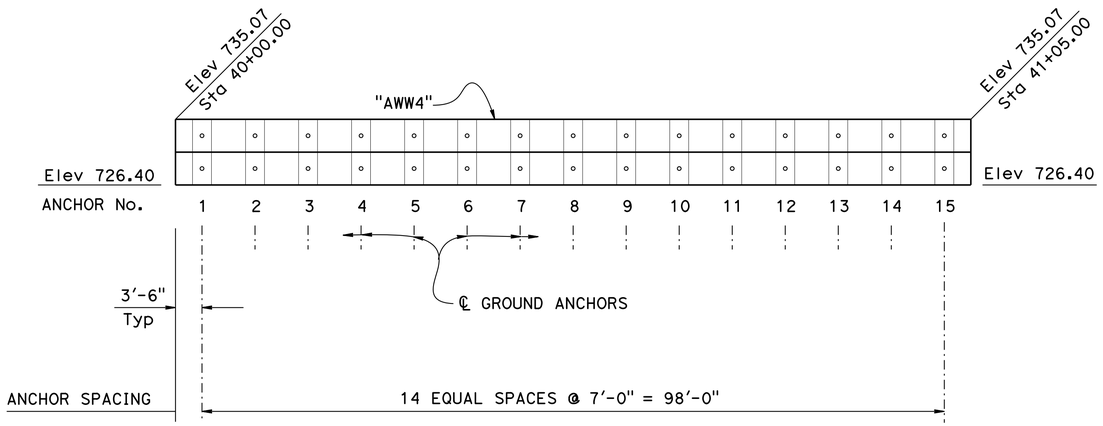

LEGEND:

∘ Indicates Ground Anchor

"AWW4" LINE DEVELOPED ELEVATION

1" = 10'

	BY	CHECKED
DESIGN	Eric Burgeson	Ashraf Ahmed
DETAILS	Janie Chlubna	Ashraf Ahmed
QUANTITIES	Eric Burgeson	Quang H Nguyen

STATE OF CALIFORNIA
DEPARTMENT OF TRANSPORTATION

DIVISION OF ENGINEERING SERVICES
STRUCTURE DESIGN
DESIGN BRANCH 3

BRIDGE NO. 10E0029
POST MILE 35.0/35.3

SMOOT SINK GROUND ANCHOR WALERS
STRUCTURE PLAN No. 4

STRUCTURES DESIGN DETAIL SHEET (ENGLISH) (REV. 09-01-10)

ORIGINAL SCALE IN INCHES FOR REDUCED PLANS 0 1 2 3

UNIT: 3578
PROJECT NUMBER & PHASE: 01000003511
CONTRACT NO.: 01-476604

DISREGARD PRINTS BEARING EARLIER REVISION DATES

REVISION DATES: 1-26-11 5-25-12 7-5-11

SHEET 6 OF 16

FILE => 10e0011-c-sp04.dgn

USERNAME => s119571 DATE PLOTTED => 27-JUN-2013 TIME PLOTTED => 13:18

DIST	COUNTY	ROUTE	POST MILES TOTAL PROJECT	SHEET No.	TOTAL SHEETS
01	Men	128	35.0/35.3	33	42

REGISTERED CIVIL ENGINEER 8-2-2012 DATE

6-24-13
PLANS APPROVAL DATE

REGISTERED PROFESSIONAL ENGINEER
ERIC G BURGESON
No. 67450
Exp. 6-30-13
CIVIL
STATE OF CALIFORNIA

The State of California or its officers or agents shall not be responsible for the accuracy or completeness of scanned copies of this plan sheet.

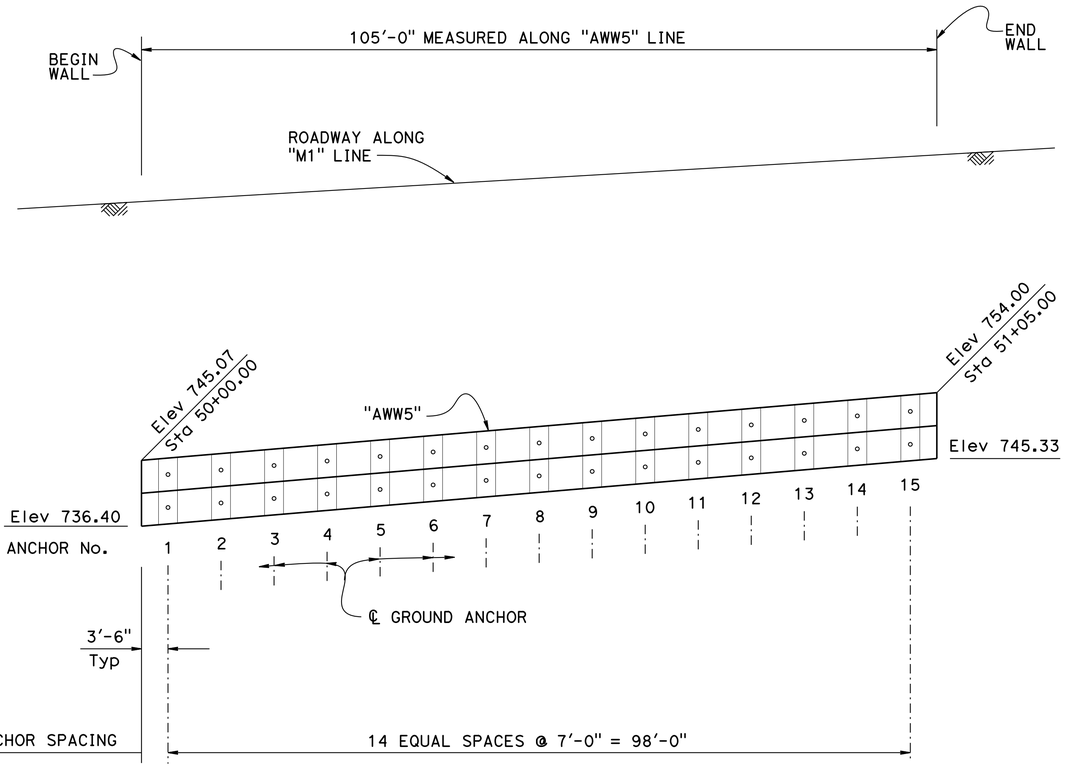

LEGEND:

∘ Indicates Ground Anchor

"AWW5" LINE DEVELOPED ELEVATION

1" = 10'

DESIGN	BY Eric Burgeson	CHECKED Ashraf Ahmed	
DETAILS	BY Janie Chlubna	CHECKED Ashraf Ahmed	
QUANTITIES	BY Eric Burgeson	CHECKED Quang H Nguyen	

STATE OF CALIFORNIA
DEPARTMENT OF TRANSPORTATION

DIVISION OF ENGINEERING SERVICES
STRUCTURE DESIGN
DESIGN BRANCH 3

BRIDGE NO. 10E0030
POST MILE 35.0/35.3

SMOOT SINK GROUND ANCHOR WALERS
STRUCTURE PLAN No. 5

STRUCTURES DESIGN DETAIL SHEET (ENGLISH) (REV. 09-01-10)

ORIGINAL SCALE IN INCHES FOR REDUCED PLANS 0 1 2 3

UNIT: 3578
PROJECT NUMBER & PHASE: 01000003511
CONTRACT NO.: 01-476604

DISREGARD PRINTS BEARING EARLIER REVISION DATES

REVISION DATES: 1-26-11 | 5-25-12 | 7-5-11

SHEET 7 OF 16

FILE => 10e0011-c-sp05.dgn

USERNAME => s119571 DATE PLOTTED => 27-JUN-2013 TIME PLOTTED => 13:18

DIST	COUNTY	ROUTE	POST MILES TOTAL PROJECT	SHEET No.	TOTAL SHEETS
01	Men	128	35.0/35.3	34	42

REGISTERED CIVIL ENGINEER 8-2-2012 DATE

6-24-13
PLANS APPROVAL DATE

REGISTERED PROFESSIONAL ENGINEER ERIC G BURGESON No. 67450 Exp. 6-30-13 CIVIL STATE OF CALIFORNIA

The State of California or its officers or agents shall not be responsible for the accuracy or completeness of scanned copies of this plan sheet.

CURVE DATA

No.	R	Δ	T	L
A	1050.00	21°19'44"	197.72	390.87
B	945.00	6°21'58"	52.55	105.00
C	170.00	35°23'19"	54.24	105.00
D	535.00	22°29'24"	106.37	210.00
E	170.00	35°23'19"	54.24	105.00
F	550.00	14°35'04"	70.38	140.00

NOTE:

1. For Ground Anchor Waler offsets, see "GENERAL PLAN" sheet

SURVEY CONTROL

PRHV3510 (Not Shown On Plan)
Fnd ALCAR MEN 128 35.10
70.76 Ft Lt "M1" Line, Rte 128
Sta 23+96.12
N 2,105,322.10
E 6,189,462.93
Elev= 807.38

PRHV3522 (Not Shown On Plan)
Fnd ALCAR MEN 128 35.22
32.38 Ft Rt "M1" Line, Rte 128
Sta 28+67.78
N 2,104,832.68
E 6,189,466.65
Elev= 30.59

PRELIMINARY INVESTIGATION SECTION

SCALE	VERT.DATUM NAVD88	PHOTOGRAMMETRY AS OF: X					
1"=20'	HORZ.DATUM NAD83 (1991.35)	SURVEYED	BY District	12/2006	CHECKED	BY J.Pallares	09/2010
ALIGNMENT TIES Dist. Traverse Sheet		DRAFTED	BY J.Martinez	09/2010	CHECKED	BY T.Schmalz	09/2010

DESIGN	BY Arturo V Herrera	CHECKED Ashraf Ahmed
DETAILS	BY Janie Chlubna	CHECKED Ashraf Ahmed
QUANTITIES	BY Eric Burgeson	CHECKED Quang H Nguyen

STATE OF CALIFORNIA
DEPARTMENT OF TRANSPORTATION

DIVISION OF ENGINEERING SERVICES
STRUCTURE DESIGN
DESIGN BRANCH 3

BRIDGE NO. VARIES
POST MILE 35.0/35.3

SMOOT SINK GROUND ANCHOR WALERS
FOUNDATION PLAN

STRUCTURES FOUNDATION PLAN SHEET (ENGLISH) (REV. 09-01-10)

ORIGINAL SCALE IN INCHES FOR REDUCED PLANS 0 1 2 3

UNIT: 3578
PROJECT NUMBER & PHASE: 0100003511
CONTRACT NO.: 01-476604

DISREGARD PRINTS BEARING EARLIER REVISION DATES

REVISION DATES: 09/21/10 02/16/11 4-23-13 5-25-13

SHEET 8 OF 16

FILE => 10e0011-d-fp.dgn

DIST	COUNTY	ROUTE	POST MILES TOTAL PROJECT	SHEET No.	TOTAL SHEETS
01	Men	128	35.0/35.3	35	42

REGISTERED CIVIL ENGINEER 8-2-2012 DATE

6-24-13
PLANS APPROVAL DATE

REGISTERED PROFESSIONAL ENGINEER ERIC G BURGESON No. 67450 Exp. 6-30-13 CIVIL STATE OF CALIFORNIA

The State of California or its officers or agents shall not be responsible for the accuracy or completeness of scanned copies of this plan sheet.

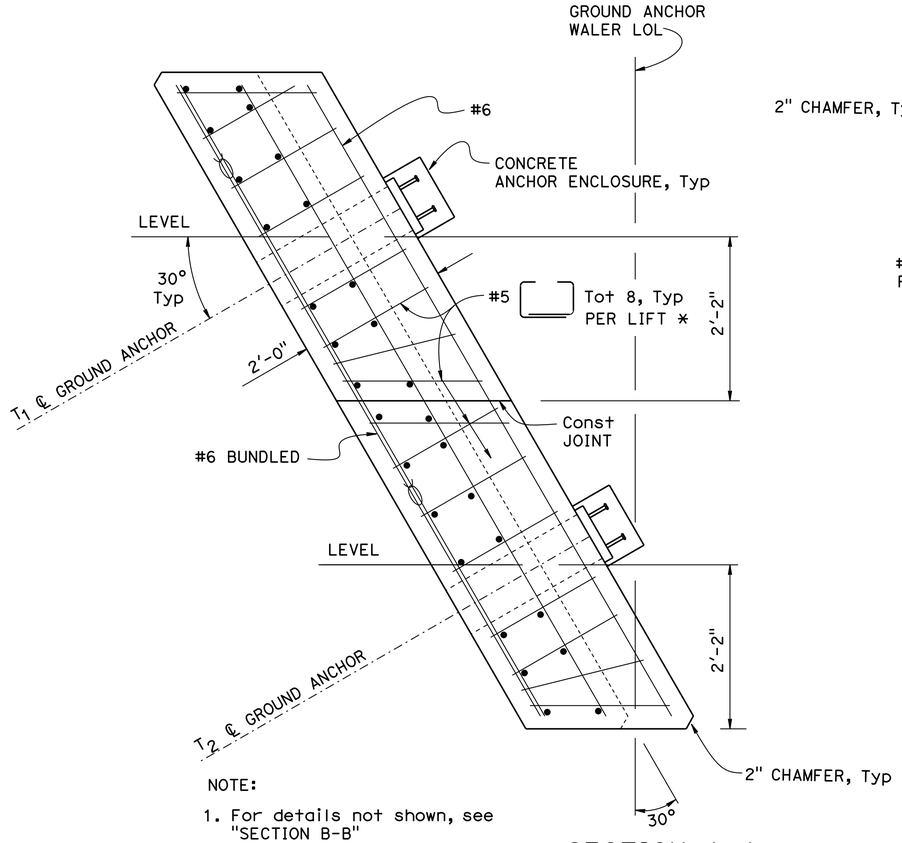

NOTE:

1. For details not shown, see "SECTION B-B"

SECTION A-A

1" = 1'-0"

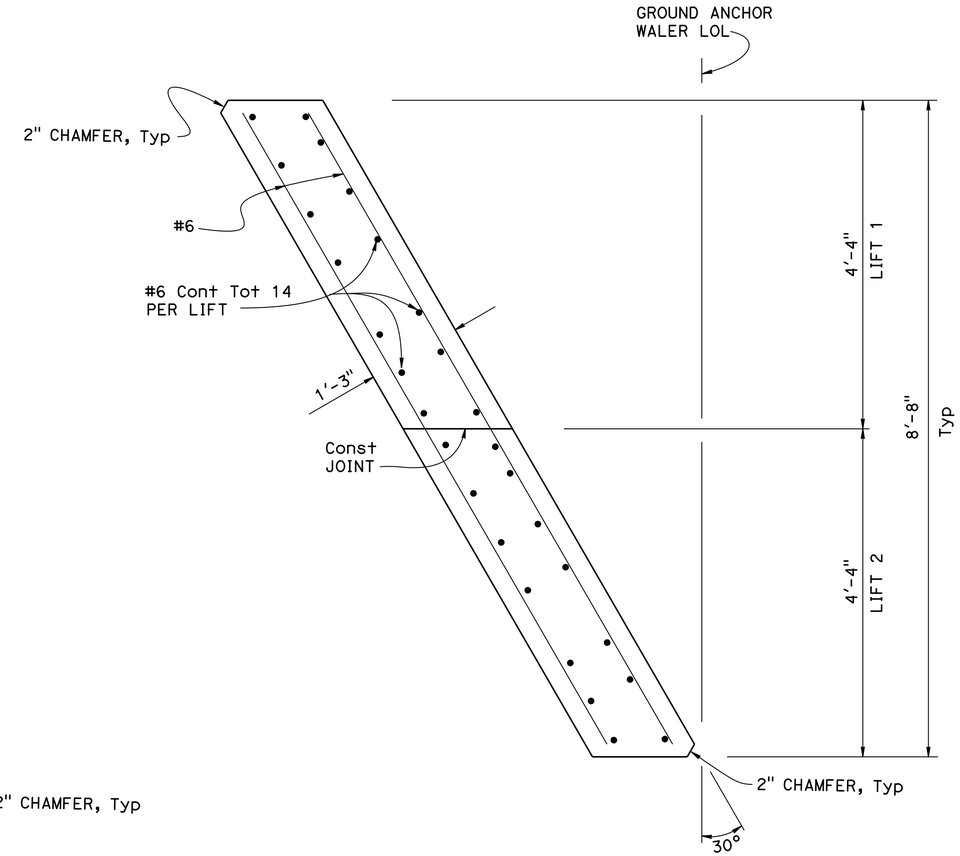

SECTION B-B

1" = 1'-0"

NOTES:

1. Maintain 2" Min clearance between ground anchor formed hole and adjacent reinforcement
2. Wall "AWW1" LINE shown, "AWW2", "AWW3", "AWW4" AND "AWW5" LINES similar
3. For "CONCRETE GROUND ANCHOR ENCLOSURE", see "WALL DETAILS No. 2" sheet

LEGEND:

Indicates Bundled bars

* Place as shown

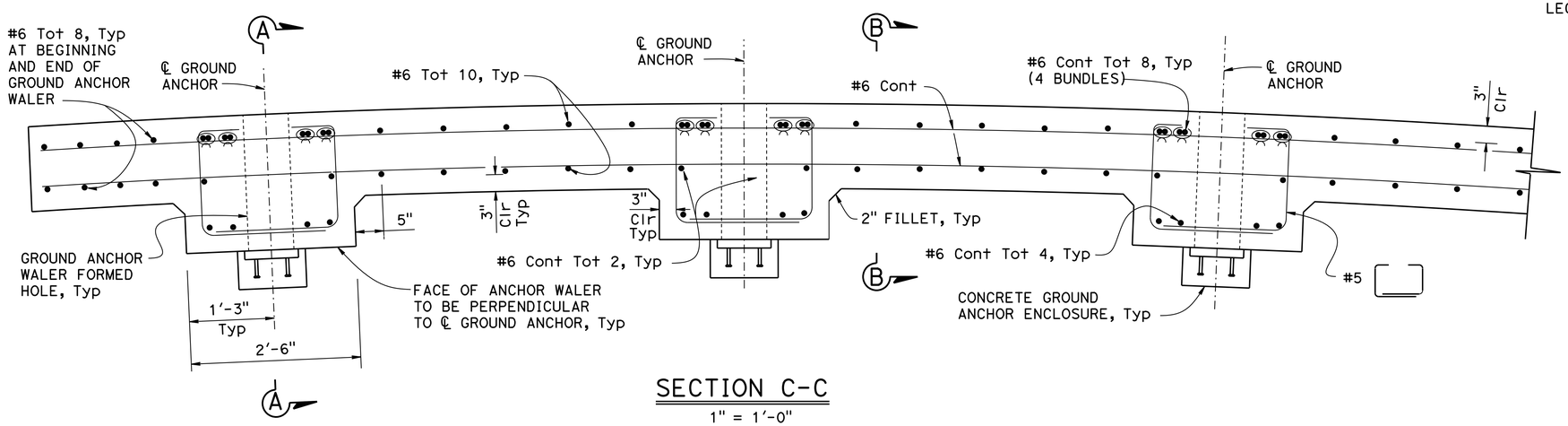

SECTION C-C

1" = 1'-0"

DESIGN	BY Arturo V Herrera	CHECKED Ashraf Ahmed	
DETAILS	BY Janie Chlubna	CHECKED Ashraf Ahmed	
QUANTITIES	BY Eric Burgeson	CHECKED Quang H Nguyen	

STATE OF CALIFORNIA
DEPARTMENT OF TRANSPORTATION

DIVISION OF ENGINEERING SERVICES
STRUCTURE DESIGN
DESIGN BRANCH 3

BRIDGE NO. VARIES
POST MILE 35.0/35.3

SMOOT SINK GROUND ANCHOR WALERS

WALL DETAILS No. 1

STRUCTURES DESIGN DETAIL SHEET (ENGLISH) (REV. 09-01-10)

ORIGINAL SCALE IN INCHES FOR REDUCED PLANS 0 1 2 3

UNIT: 3578
PROJECT NUMBER & PHASE: 01000003511
CONTRACT NO.: 01-476604

DISREGARD PRINTS BEARING EARLIER REVISION DATES

REVISION DATES: 3-7-11 3-21-12 5-25-12

SHEET 9 OF 16

FILE => 10e0011-f-wall-det01.dgn

USERNAME => s109858 DATE PLOTTED => 27-JUN-2013 TIME PLOTTED => 13:04

DIST	COUNTY	ROUTE	POST MILES TOTAL PROJECT	SHEET No.	TOTAL SHEETS
01	Men	128	35.0/35.3	36	42

REGISTERED CIVIL ENGINEER 8-2-2012 DATE

6-24-13
PLANS APPROVAL DATE

REGISTERED PROFESSIONAL ENGINEER
ERIC G BURGESON
No. 67450
Exp. 6-30-13
CIVIL
STATE OF CALIFORNIA

The State of California or its officers or agents shall not be responsible for the accuracy or completeness of scanned copies of this plan sheet.

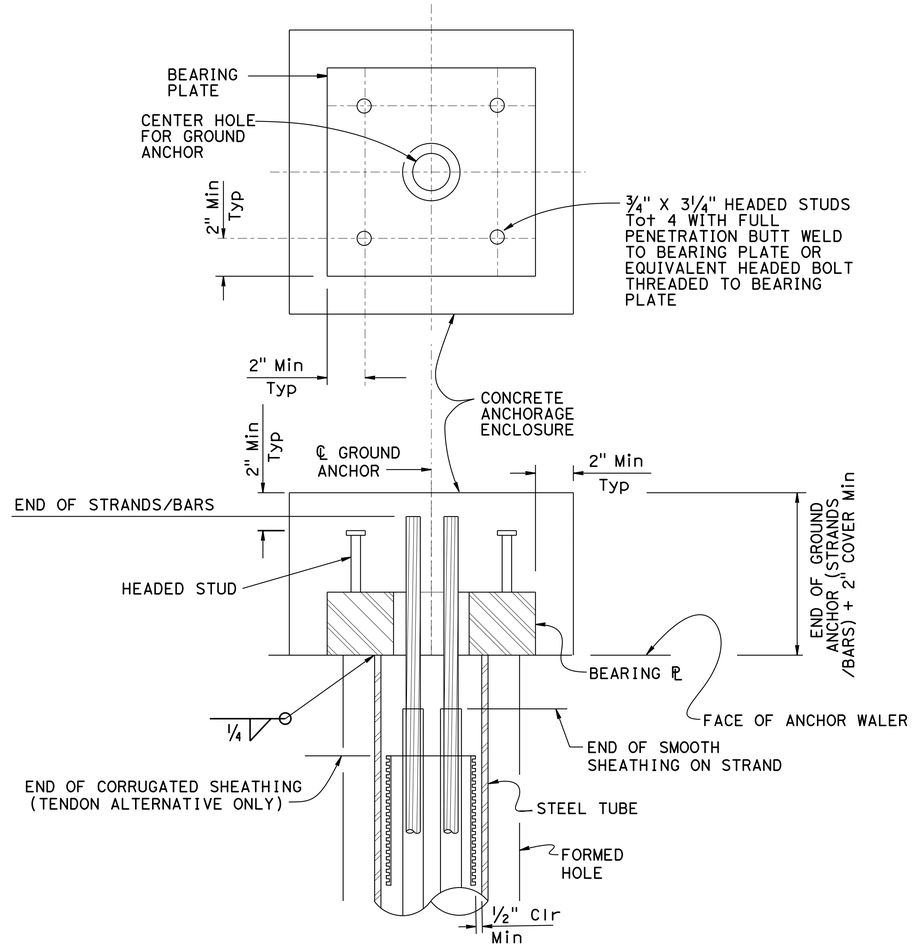

CONCRETE GROUND ANCHOR ENCLOSURE

3" = 1'-0"

DESIGN	BY Arturo V Herrera	CHECKED Ashraf Ahmed	
DETAILS	BY Janie Chlubna	CHECKED Ashraf Ahmed	
QUANTITIES	BY Eric Burgeson	CHECKED Quang H Nguyen	

STATE OF CALIFORNIA
DEPARTMENT OF TRANSPORTATION

DIVISION OF ENGINEERING SERVICES
STRUCTURE DESIGN
DESIGN BRANCH 3

BRIDGE NO. VARIES
POST MILE 35.0/35.3

SMOOT SINK GROUND ANCHOR WALERS
WALL DETAILS No. 2

STRUCTURES DESIGN DETAIL SHEET (ENGLISH) (REV. 09-01-10)

ORIGINAL SCALE IN INCHES FOR REDUCED PLANS 0 1 2 3

UNIT: 3578
PROJECT NUMBER & PHASE: 01000003511
CONTRACT NO.: 01-476604

DISREGARD PRINTS BEARING EARLIER REVISION DATES

REVISION DATES: 2-15-1 | 3-22-12 | 5-25-12

SHEET 10 OF 16

FILE => 10e0011-f-wall-det02.dgn

USERNAME => s124496 DATE PLOTTED => 28-JUN-2013 TIME PLOTTED => 12:25

DIST	COUNTY	ROUTE	POST MILES TOTAL PROJECT	SHEET No.	TOTAL SHEETS
01	Men	128	35.0/35.3	37	42

REGISTERED CIVIL ENGINEER 8-2-2012 DATE

6-24-13
PLANS APPROVAL DATE

REGISTERED PROFESSIONAL ENGINEER GERRARD HIGHT No. 52364 Exp. 12-31-12 CIVIL STATE OF CALIFORNIA

The State of California or its officers or agents shall not be responsible for the accuracy or completeness of scanned copies of this plan sheet.

GENERAL NOTES ⟨1⟩

DESIGN:

AASHTO LRFD Bridge Design Specifications, 4th Edition with California Amendments.

PRESTRESSING STEEL:

Bars - ASTM Designation: A722 Type II (150 ksi)

Strand Tendons-ASTM Designation: A416 (270 Ksi Low Relaxation steel)

FTL = Factored Test Load per anchor (Kips)

fpu = Minimum tensile strength of prestressing steel

As = Minimum cross sectional area of prestressing steel in ground anchor (square inch)

$As(Min) = \frac{1.0\ FTL}{0.75\ fpu}$ (Strands)

$As(Min) = \frac{1.0\ FTL}{0.80\ fpu}$ (Bars)

NOTES:

(A) Level of initial grouting for drilled hole 6" in diameter or smaller

(B) Level of secondary grouting

(C) Level of initial grouting inside corrugated sheathing

(D) Bonded length shall be determined by the contractor

(E) For unbonded length, see PROJECT PLANS

(F) For inclination, see PROJECT PLANS

(G) Face of Wall Excavation

NOTES:

1. Anchorage enclosure shall only be used when anchor head assembly is not enclosed in concrete.
2. Anchorage enclosure shall have provisions to allow injecting grout at low end and venting at high end. Galvanize after fabrication.
3. Silicone sealant to cover full width of flange.
4. Steel tube (Min thickness = 1/4") welded to bearing plate. Galvanize assembly after fabrication
5. Steel tube welded to bearing plate. Inside diameter of steel tube (Min thickness = 1/4") to be 1" greater than outside diameter of smooth sheathing.
6. Galvanize assembly after fabrication.
7. For other wall details, see PROJECT PLANS.

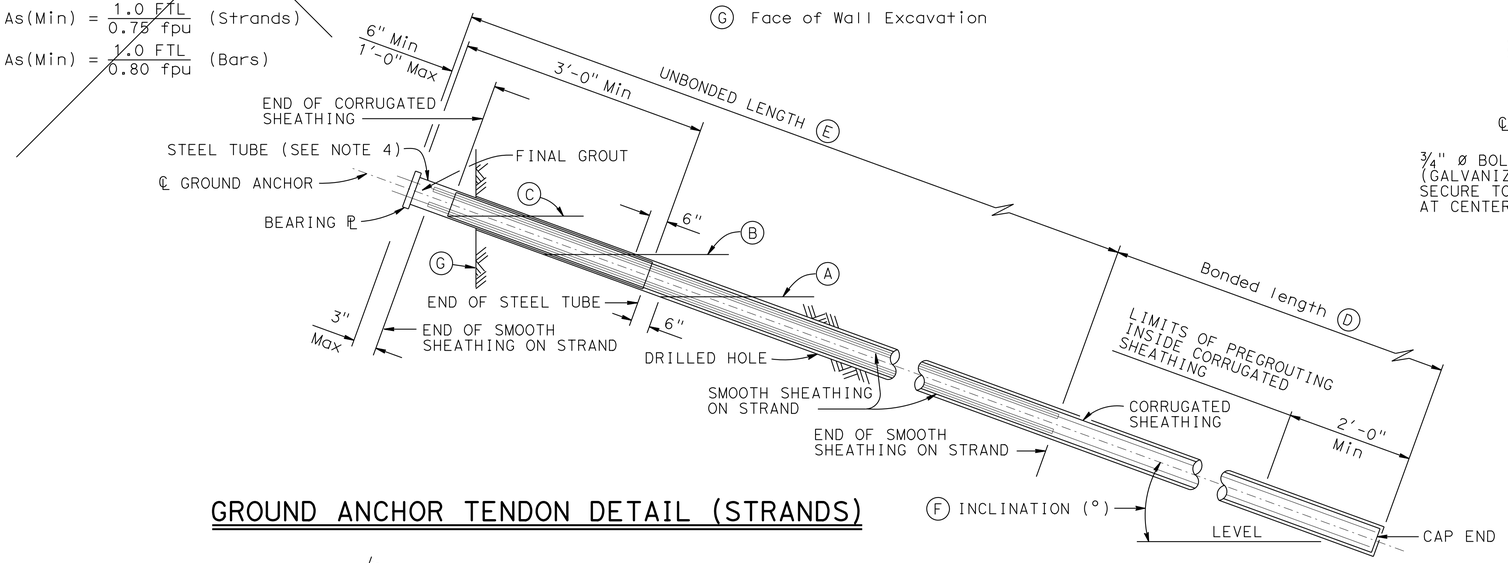

GROUND ANCHOR TENDON DETAIL (STRANDS)

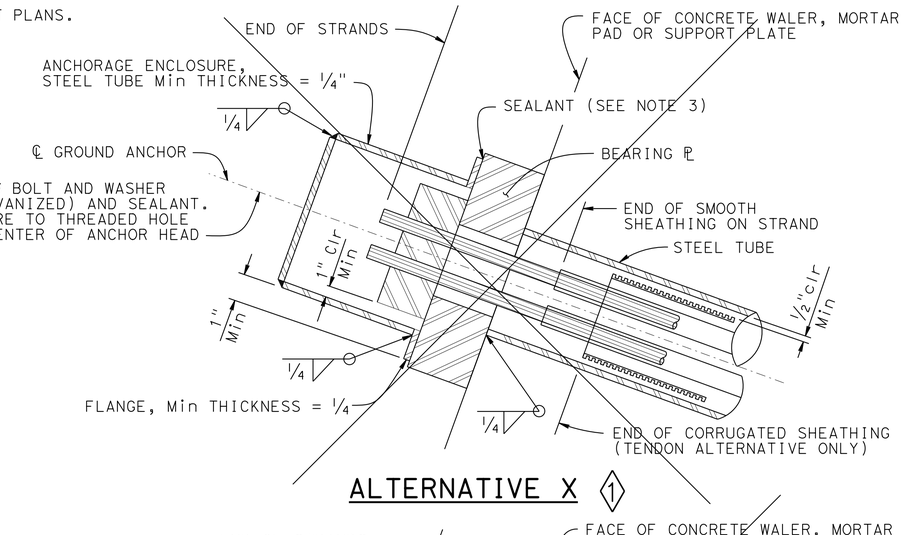

ALTERNATIVE X ⟨1⟩

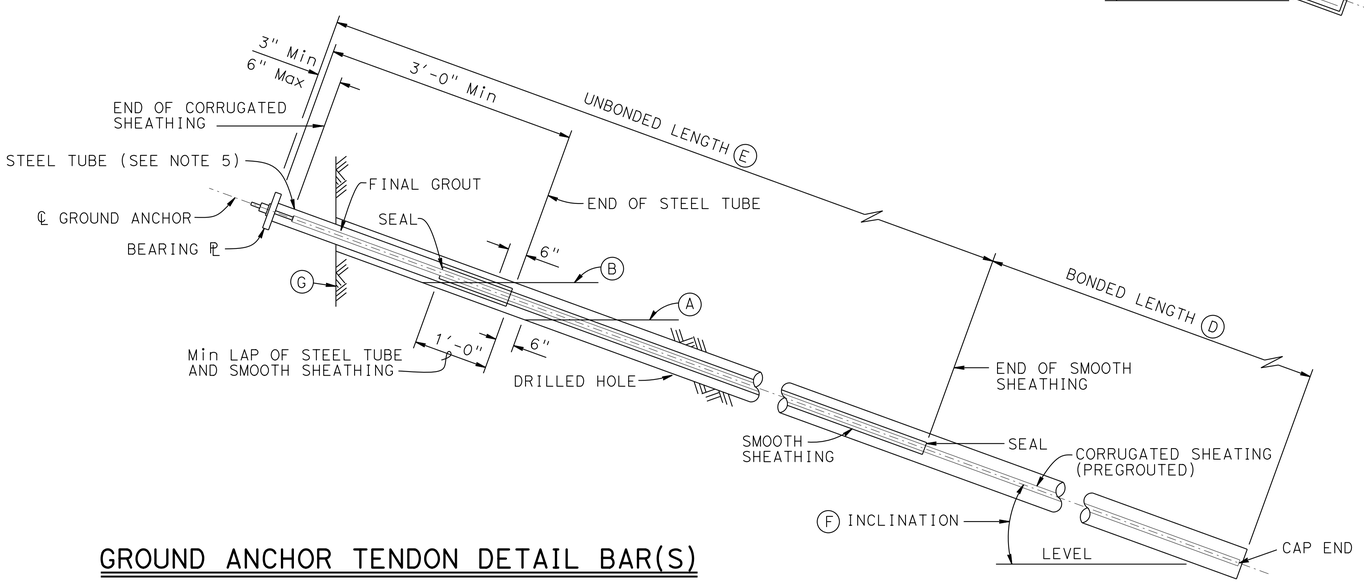

GROUND ANCHOR TENDON DETAIL BAR(S)

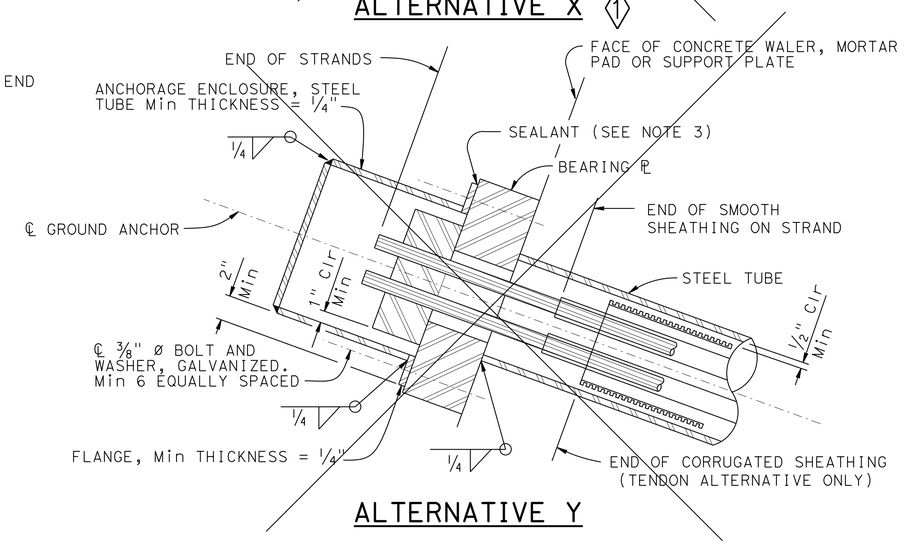

ALTERNATIVE Y

ANCHORAGE ENCLOSURE DETAILS ⟨1⟩

SPECIAL DETAILS

NO SCALE

REVISED STANDARD DRAWING

FILE NO. **xs12-040**

APPROVAL DATE January 2012

⟨1⟩ Deleted Detail

STATE OF **CALIFORNIA** DEPARTMENT OF TRANSPORTATION

DIVISION OF ENGINEERING SERVICES

BRIDGE NO. VARIES

POST MILE 35.0/35.3

SMOOT SINK GROUND ANCHOR WALERS

SUB HORIZONTAL GROUND ANCHOR DETAILS

DS OSD 2147A (ENGLISH STANDARD DRAWING "XS" BORDER REV. (02-02-11)

ORIGINAL SCALE IN INCHES FOR REDUCED PLANS 0 1 2 3

UNIT: 3578
PROJECT NUMBER & PHASE: 01000003511
CONTRACT NO.: 01-476604

DISREGARD PRINTS BEARING EARLIER REVISION DATES

REVISION DATES 3-7-11 2-10-12 3-22-12

SHEET 11 OF 16

FILE => 10e0011-u-xs.dgn

USERNAME => s109858 DATE PLOTTED => 27-JUN-2013 TIME PLOTTED => 13:04

DIST	COUNTY	ROUTE	POST MILES TOTAL PROJECT	SHEET No	TOTAL SHEETS
01	Men	128	35.0/35.3	38	42

PROFESSIONAL ENGINEER 2-29-12

6-24-13
PLANS APPROVAL DATE

REGISTERED PROFESSIONAL ENGINEER Mark Hagy No. GE2838 Exp. 12-31-12 GEOTECHNICAL STATE OF CALIFORNIA

The State of California or its officers or agents shall not be responsible for the accuracy or completeness of scanned copies of this plan sheet.

This LOTB sheet was prepared in accordance with the Caltrans Soil & Rock Logging, Classification, & Presentation Manual (2010 Edition).

BENCH MARK

REBAR WITH METAL CAP
CM 2.70 (SUHV270) PLU 70 PM 2.70
"A2" Line Sta 142+57 Lt 18'
N 1,845,391.66
E 6,741,389.82
Elev = 1701.14
NAVD88

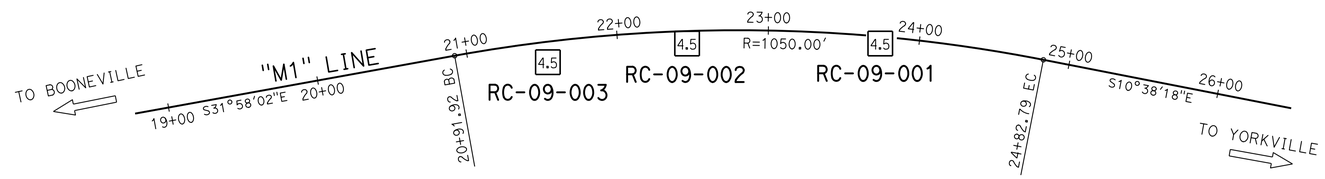

PLAN

1" = 50'

NOTE: "UCS"= Estimated uniaxial compresive strength per equation No. 6 of ASTM D 5731-08.

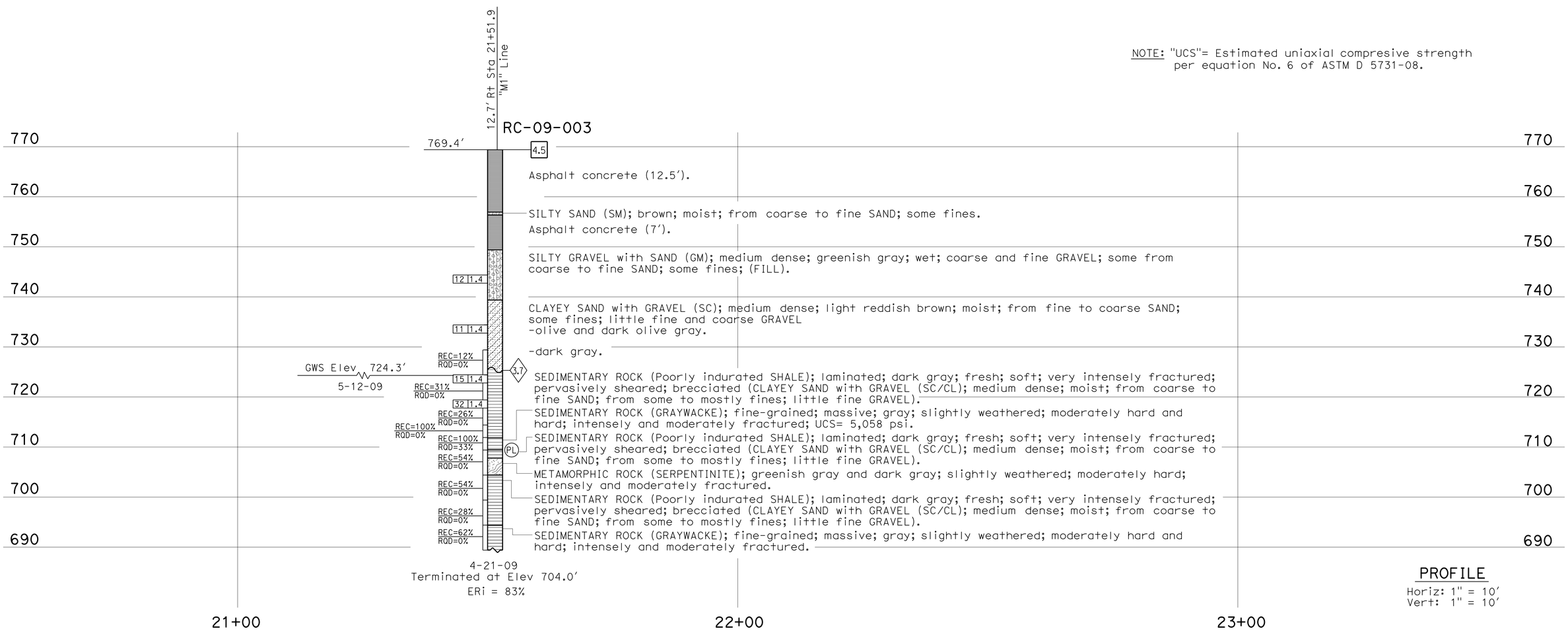

PROFILE

Horiz: 1" = 10'
Vert: 1" = 10'

ENGINEERING SERVICES	GEOTECHNICAL SERVICES	STATE OF CALIFORNIA DEPARTMENT OF TRANSPORTATION	DIVISION OF ENGINEERING SERVICES STRUCTURE DESIGN DESIGN BRANCH 3	BRIDGE NO. VARIES / POST MILE 35.0/35.3	SMOOT SINK GROUND ANCHOR WALERS LOG OF TEST BORINGS 1 OF 5
FUNCTIONAL SUPERVISOR NAME: R. Bibbens	DRAWN BY: F. Nguyen, I.G-Remmen / CHECKED BY: L. Paredes-Mejia	FIELD INVESTIGATION BY: H. AkbarZadegan			

OGS CIVIL LOG OF TEST BORINGS SHEET

ORIGINAL SCALE IN INCHES FOR REDUCED PLANS 0 1 2 3

UNIT: 3643
PROJECT NUMBER & PHASE: 01000003511 CONTRACT NO.: 01-476604

DISREGARD PRINTS BEARING EARLIER REVISION DATES

REVISION DATES 02-16-12 02-16-12 02-29-12 SHEET 12 OF 16

FILE => 10e0011-z-log-1of5.dgn

USERNAME => s109858 DATE PLOTTED => 27-JUN-2013 TIME PLOTTED => 13:04

DIST	COUNTY	ROUTE	POST MILES TOTAL PROJECT	SHEET No	TOTAL SHEETS
01	Men	128	35.0/35.3	39	42

PROFESSIONAL ENGINEER 2-29-12

6-24-13
PLANS APPROVAL DATE

REGISTERED PROFESSIONAL ENGINEER Mark Hagy No. GE2838 Exp. 12-31-12 GEOTECHNICAL STATE OF CALIFORNIA

The State of California or its officers or agents shall not be responsible for the accuracy or completeness of scanned copies of this plan sheet.

This LOTB sheet was prepared in accordance with the Caltrans Soil & Rock Logging, Classification, & Presentation Manual (2010 Edition).

FOR PLAN VIEW, SEE
"LOG OF TEST BORINGS 1 OF 5"

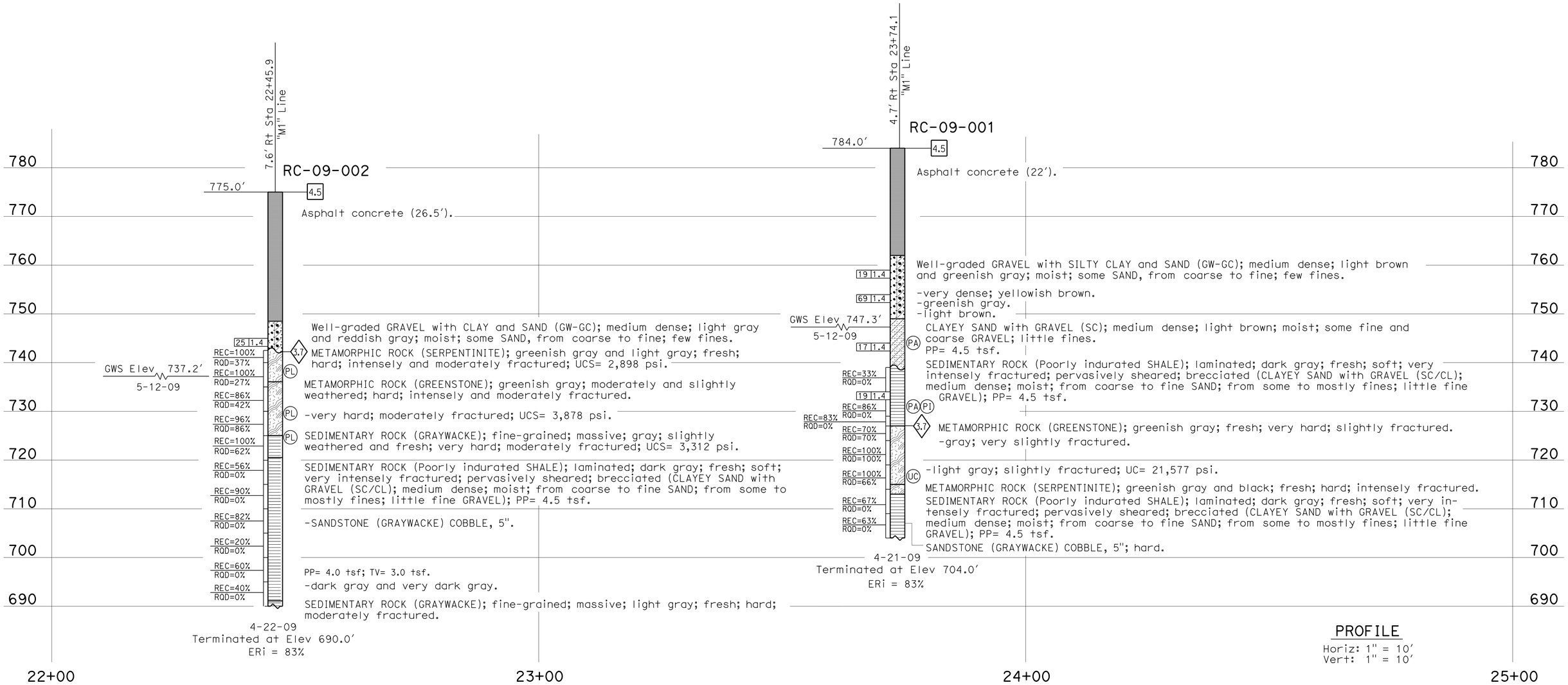

PROFILE
Horiz: 1" = 10'
Vert: 1" = 10'

ENGINEERING SERVICES	GEOTECHNICAL SERVICES	STATE OF CALIFORNIA DEPARTMENT OF TRANSPORTATION	DIVISION OF ENGINEERING SERVICES STRUCTURE DESIGN DESIGN BRANCH 3	BRIDGE NO. VARIES / POST MILE 35.0/35.3	SMOOT SINK GROUND ANCHOR WALERS LOG OF TEST BORINGS 2 OF 5
FUNCTIONAL SUPERVISOR NAME: R. Bibbens	DRAWN BY: F. Nguyen, I.G-Remmen / CHECKED BY: L. Paredes-Mejia	FIELD INVESTIGATION BY: H. AkbarZadegan			

OGS CIVIL LOG OF TEST BORINGS SHEET

ORIGINAL SCALE IN INCHES FOR REDUCED PLANS 0 1 2 3

UNIT: 3643
PROJECT NUMBER & PHASE: 01000003511 CONTRACT NO.: 01-476604

DISREGARD PRINTS BEARING EARLIER REVISION DATES

REVISION DATES 02-15-12 02-16-12 02-29-12 SHEET 13 OF 16

FILE => 10e0011-z-log-2of5.dgn

USERNAME => s103858 DATE PLOTTED => 27-JUN-2013 TIME PLOTTED => 13:04

DIST	COUNTY	ROUTE	POST MILES TOTAL PROJECT	SHEET No	TOTAL SHEETS
01	Men	128	35.0/35.3	40	42

PROFESSIONAL ENGINEER 2-29-12

6-24-13
PLANS APPROVAL DATE

REGISTERED PROFESSIONAL ENGINEER
Mark Hagy
No. GE2838
Exp. 12-31-12
GEOTECHNICAL
STATE OF CALIFORNIA

The State of California or its officers or agents shall not be responsible for the accuracy or completeness of scanned copies of this plan sheet.

REFERENCE: CALTRANS SOIL & ROCK LOGGING, CLASSIFICATION, AND PRESENTATION MANUAL (2010)

CEMENTATION

Description	Criteria
Weak	Crumbles or breaks with handling or little finger pressure.
Moderate	Crumbles or breaks with considerable finger pressure.
Strong	Will not crumble or break with finger pressure.

BOREHOLE IDENTIFICATION

Symbol	Hole Type	Description
Size	A	Auger Boring (hollow or solid stem bucket)
Size	R RW RC P	Rotary drilled boring (conventional) Rotary drilled with self-casing wire-line Rotary core with continuously-sampled, self-casing wire-line Rotary percussion boring (air)
Size	R	Rotary drilled diamond core
Size	HD HA	Hand driven (1-inch soil tube) Hand Auger
●	D	Dynamic Cone Penetration Boring
▲	CPT	Cone Penetration Test (ASTM D 5778)
⬚	O	Other (note on LOTB)

Note: Size in inches.

CONSISTENCY OF COHESIVE SOILS

Description	Shear Strength (tsf)	Pocket Penetrometer Measurement, PP, (tsf)	Torvane Measurement, TV, (tsf)	Vane Shear Measurement, VS, (tsf)
Very Soft	Less than 0.12	Less than 0.25	Less than 0.12	Less than 0.12
Soft	0.12 - 0.25	0.25 - 0.5	0.12 - 0.25	0.12 - 0.25
Medium Stiff	0.25 - 0.5	0.5 - 1	0.25 - 0.5	0.25 - 0.5
Stiff	0.5 - 1	1 - 2	0.5 - 1	0.5 - 1
Very Stiff	1 - 2	2 - 4	1 - 2	1 - 2
Hard	Greater than 2	Greater than 4	Greater than 2	Greater than 2

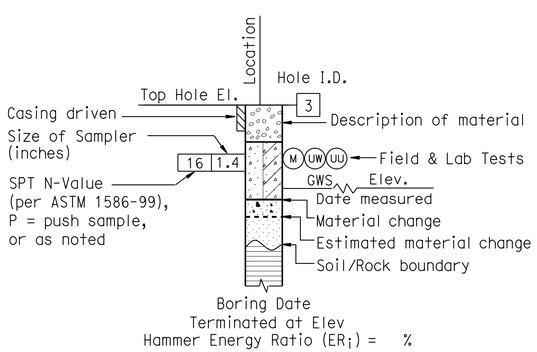

ROTARY BORING

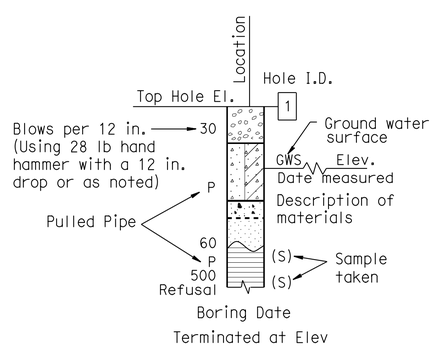

HAND BORING

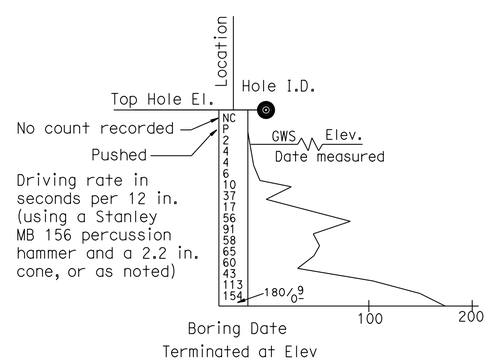

DYNAMIC CONE PENETRATION BORING

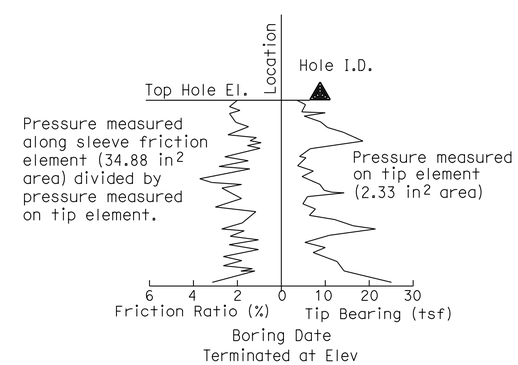

CONE PENETRATION TEST (CPT) BORING

ENGINEERING SERVICES	GEOTECHNICAL SERVICES	STATE OF CALIFORNIA DEPARTMENT OF TRANSPORTATION	DIVISION OF ENGINEERING SERVICES STRUCTURE DESIGN DESIGN BRANCH 3	BRIDGE NO. VARIES / POST MILE 35.0/35.3	SMOOT SINK GROUND ANCHOR WALERS LOG OF TEST BORINGS 3 OF 5
	PREPARED BY: I.G-Remmen				

GS LOTB SOIL LEGEND

ORIGINAL SCALE IN INCHES FOR REDUCED PLANS 0 1 2 3

UNIT: 3643
PROJECT NUMBER & PHASE: 01000003511 CONTRACT NO.: 01-476604

DISREGARD PRINTS BEARING EARLIER REVISION DATES

REVISION DATES

SHEET 14 OF 16

FILE => 10e0011-z-log-3of5.dgn

USERNAME => s109858 DATE PLOTTED => 27-JUN-2013 TIME PLOTTED => 13:04

REFERENCE: CALTRANS SOIL & ROCK LOGGING, CLASSIFICATION, AND PRESENTATION MANUAL (2010)

DIST	COUNTY	ROUTE	POST MILES TOTAL PROJECT	SHEET No	TOTAL SHEETS
01	Men	128	35.0/35.3	41	42

PROFESSIONAL ENGINEER 2-29-12

6-24-13
PLANS APPROVAL DATE

REGISTERED PROFESSIONAL ENGINEER Mark Hagy No. GE2838 Exp. 12-31-12 GEOTECHNICAL STATE OF CALIFORNIA

The State of California or its officers or agents shall not be responsible for the accuracy or completeness of scanned copies of this plan sheet.

GROUP SYMBOLS AND NAMES

Graphic/Symbol	Group Names
GW	Well-graded GRAVEL Well-graded GRAVEL with SAND
GP	Poorly-graded GRAVEL Poorly-graded GRAVEL with SAND
GW-GM	Well-graded GRAVEL with SILT Well-graded GRAVEL with SILT and SAND
GW-GC	Well-graded GRAVEL with CLAY (or SILTY CLAY) Well-graded GRAVEL with CLAY and SAND (or SILTY CLAY and SAND)
GP-GM	Poorly-graded GRAVEL with SILT Poorly-graded GRAVEL with SILT and SAND
GP-GC	Poorly-graded GRAVEL with CLAY (or SILTY CLAY) Poorly-graded GRAVEL with CLAY and SAND (or SILTY CLAY and SAND)
GM	SILTY GRAVEL SILTY GRAVEL with SAND
GC	CLAYEY GRAVEL CLAYEY GRAVEL with SAND
GC-GM	SILTY, CLAYEY GRAVEL SILTY, CLAYEY GRAVEL with SAND
SW	Well-graded SAND Well-graded SAND with GRAVEL
SP	Poorly-graded SAND Poorly-graded SAND with GRAVEL
SW-SM	Well-graded SAND with SILT Well-graded SAND with SILT and GRAVEL
SW-SC	Well-graded SAND with CLAY (or SILTY CLAY) Well-graded SAND with CLAY and GRAVEL (or SILTY CLAY and GRAVEL)
SP-SM	Poorly-graded SAND with SILT Poorly-graded SAND with SILT and GRAVEL
SP-SC	Poorly-graded SAND with CLAY (or SILTY CLAY) Poorly-graded SAND with CLAY and GRAVEL (or SILTY CLAY and GRAVEL)
SM	SILTY SAND SILTY SAND with GRAVEL
SC	CLAYEY SAND CLAYEY SAND with GRAVEL
SC-SM	SILTY, CLAYEY SAND SILTY, CLAYEY SAND with GRAVEL
PT	PEAT
	COBBLES COBBLES and BOULDERS BOULDERS

Graphic/Symbol	Group Names
CL	Lean CLAY Lean CLAY with SAND Lean CLAY with GRAVEL SANDY lean CLAY SANDY lean CLAY with GRAVEL GRAVELLY lean CLAY GRAVELLY lean CLAY with SAND
CL-ML	SILTY CLAY SILTY CLAY with SAND SILTY CLAY with GRAVEL SANDY SILTY CLAY SANDY SILTY CLAY with GRAVEL GRAVELLY SILTY CLAY GRAVELLY SILTY CLAY with SAND
ML	SILT SILT with SAND SILT with GRAVEL SANDY SILT SANDY SILT with GRAVEL GRAVELLY SILT GRAVELLY SILT with SAND
OL	ORGANIC lean CLAY ORGANIC lean CLAY with SAND ORGANIC lean CLAY with GRAVEL SANDY ORGANIC lean CLAY SANDY ORGANIC lean CLAY with GRAVEL GRAVELLY ORGANIC lean CLAY GRAVELLY ORGANIC lean CLAY with SAND
OL	ORGANIC SILT ORGANIC SILT with SAND ORGANIC SILT with GRAVEL SANDY ORGANIC SILT SANDY ORGANIC SILT with GRAVEL GRAVELLY ORGANIC SILT GRAVELLY ORGANIC SILT with SAND
CH	Fat CLAY Fat CLAY with SAND Fat CLAY with GRAVEL SANDY fat CLAY SANDY fat CLAY with GRAVEL GRAVELLY fat CLAY GRAVELLY fat CLAY with SAND
MH	Elastic SILT Elastic SILT with SAND Elastic SILT with GRAVEL SANDY elastic SILT SANDY elastic SILT with GRAVEL GRAVELLY elastic SILT GRAVELLY elastic SILT with SAND
OH	ORGANIC fat CLAY ORGANIC fat CLAY with SAND ORGANIC fat CLAY with GRAVEL SANDY ORGANIC fat CLAY SANDY ORGANIC fat CLAY with GRAVEL GRAVELLY ORGANIC fat CLAY GRAVELLY ORGANIC fat CLAY with SAND
OH	ORGANIC elastic SILT ORGANIC elastic SILT with SAND ORGANIC elastic SILT with GRAVEL SANDY ORGANIC elastic SILT SANDY ORGANIC elastic SILT with GRAVEL GRAVELLY ORGANIC elastic SILT GRAVELLY ORGANIC elastic SILT with SAND
OL/OH	ORGANIC SOIL ORGANIC SOIL with SAND ORGANIC SOIL with GRAVEL SANDY ORGANIC SOIL SANDY ORGANIC SOIL with GRAVEL GRAVELLY ORGANIC SOIL GRAVELLY ORGANIC SOIL with SAND

FIELD AND LABORATORY TESTING

- (C) Consolidation (ASTM D 2435)
- (CL) Collapse Potential (ASTM D 5333)
- (CP) Compaction Curve (CTM 216)
- (CR) Corrosivity Testing (CTM 643, CTM 422, CTM 417)
- (CU) Consolidated Undrained Triaxial (ASTM D 4767)
- (DS) Direct Shear (ASTM D 3080)
- (EI) Expansion Index (ASTM D 4829)
- (M) Moisture Content (ASTM D 2216)
- (OC) Organic Content-% (ASTM D 2974)
- (P) Permeability (CTM 220)
- (PA) Particle Size Analysis (ASTM D 422)
- (PI) Plasticity Index (AASHTO T 90) Liquid Limit (AASHTO T 89)
- (PL) Point Load Index (ASTM D 5731)
- (PM) Pressure Meter
- (R) R-Value (CTM 301)
- (SE) Sand Equivalent (CTM 217)
- (SG) Specific Gravity (AASHTO T 100)
- (SL) Shrinkage Limit (ASTM D 427)
- (SW) Swell Potential (ASTM D 4546)
- (UC) Unconfined Compression-Soil (ASTM D 2166) Unconfined Compression-Rock (ASTM D 2938)
- (UU) Unconsolidated Undrained Triaxial (ASTM D 2850)
- (UW) Unit Weight (ASTM D 4767)

APPARENT DENSITY OF COHESIONLESS SOILS

Description	SPT N_{60} (Blows / 12 in.)
Very Loose	0 - 5
Loose	5 - 10
Medium Dense	10 - 30
Dense	30 - 50
Very Dense	Greater than 50

MOISTURE

Description	Criteria
Dry	No discernable moisture
Moist	Moisture present, but no free water
Wet	Visible free water

PERCENT OR PROPORTION OF SOILS

Description	Criteria
Trace	Particles are present but estimated to be less than 5%
Few	5% - 10%
Little	15% - 25%
Some	30% - 45%
Mostly	50% - 100%

PARTICLE SIZE

Description		Size (in.)
Boulder		Greater than 12
Cobble		3 - 12
Gravel	Coarse	3/4 - 3
	Fine	1/5 - 3/4
Sand	Coarse	1/16 - 1/5
	Medium	1/64 - 1/16
	Fine	1/300 - 1/64
Silt and Clay		Less than 1/300

ENGINEERING SERVICES

GEOTECHNICAL SERVICES
PREPARED BY: I.G-Remmen

STATE OF CALIFORNIA
DEPARTMENT OF TRANSPORTATION

DIVISION OF ENGINEERING SERVICES
STRUCTURE DESIGN
DESIGN BRANCH 3

BRIDGE NO. VARIES
POST MILE 35.0/35.3

SMOOT SINK GROUND ANCHOR WALERS
LOG OF TEST BORINGS 4 OF 5

GS LOTB SOIL LEGEND

ORIGINAL SCALE IN INCHES FOR REDUCED PLANS 0 1 2 3

UNIT: 3643
PROJECT NUMBER & PHASE: 01000003511
CONTRACT NO.: 01-476604

DISREGARD PRINTS BEARING EARLIER REVISION DATES

REVISION DATES

SHEET 15 OF 16

FILE => 10e0011-z-log-4of5.dgn

USERNAME => s109858 DATE PLOTTED => 27-JUN-2013 TIME PLOTTED => 13:04

DIST	COUNTY	ROUTE	POST MILES TOTAL PROJECT	SHEET No	TOTAL SHEETS
01	Men	128	35.0/35.3	42	42

PROFESSIONAL ENGINEER 2-29-12

6-24-13
PLANS APPROVAL DATE

REGISTERED PROFESSIONAL ENGINEER Mark Hagy No. GE2838 Exp. 12-31-12 GEOTECHNICAL STATE OF CALIFORNIA

The State of California or its officers or agents shall not be responsible for the accuracy or completeness of scanned copies of this plan sheet.

REFERENCE: CALTRANS SOIL & ROCK LOGGING, CLASSIFICATION, AND PRESENTATION MANUAL (2010)

PERCENT CORE RECOVERY (REC) & ROCK QUALITY DESIGNATION (RQD)

$$REC = \frac{\sum \text{Length of the recovered core pieces (in.)}}{\text{Total length of core run (in.)}} \times 100\%$$

$$RQD = \frac{\sum \text{Length of intact core pieces} \geq 4 \text{ in.}}{\text{Total length of core run (in.)}} \times 100\%$$

RQD* Indicates soundness criteria not met.

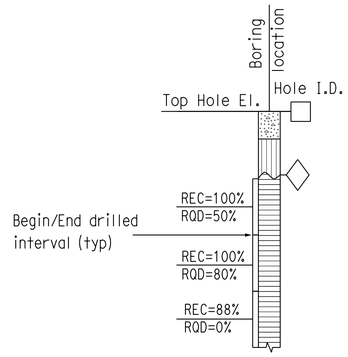

BEDDING SPACING

Description	Thickness / Spacing
Massive	Greater than 10 ft
Very Thickly Bedded	3 ft - 10 ft
Thickly Bedded	1 ft - 3 ft
Moderately Bedded	4 in. - 1 ft
Thinly Bedded	1 in. - 4 in.
Very Thinly Bedded	1/4 in. - 1 in.
Laminated	Less than 1/4 in.

LEGEND OF ROCK MATERIALS

- IGNEOUS ROCK
- SEDIMENTARY ROCK
- METAMORPHIC ROCK

ROCK HARDNESS

Description	Criteria
Extremely Hard	Cannot be scratched with a pocketknife or sharp pick. Can only be chipped with repeated heavy hammer blows.
Very Hard	Cannot be scratched with a pocketknife or sharp pick. Breaks with repeated heavy hammer blows.
Hard	Can be scratched with a pocketknife or sharp pick with difficulty (heavy pressure). Breaks with heavy hammer blows.
Moderately Hard	Can be scratched with pocketknife or sharp pick with light or moderate pressure. Breaks with moderate hammer blows.
Moderately Soft	Can be grooved 1/16 in. deep with a pocketknife or sharp pick with moderate or heavy pressure. Breaks with light hammer blow or heavy manual pressure.
Soft	Can be grooved or gouged easily by a pocketknife or sharp pick with light pressure, can be scratched with fingernail. Breaks with light to moderate manual pressure.
Very Soft	Can be readily indented, grooved or gouged with fingernail, or carved with a pocketknife. Breaks with light manual pressure.

FRACTURE DENSITY

Description	Observed Fracture Density
Unfractured	No fractures.
Very Slightly Fractured	Core lengths greater than 3 ft.
Slightly Fractured	Core lengths mostly from 1 to 3 ft.
Moderately Fractured	Core lengths mostly from 4 in. to 1 ft.
Intensely Fractured	Core lengths mostly from 1 to 4 in.
Very Intensely Fractured	Mostly chips and fragments.

WEATHERING DESCRIPTORS FOR INTACT ROCK

Description	Diagnostic Features					General Characteristics
	Chemical Weathering-Discoloration and/or Oxidation		Mechanical Weathering-Grain Boundary Conditions (Disaggregation) Primarily for Granitics and Some Coarse-Grained Sediments	Texture and Leaching		
	Body of Rock	Fracture Surfaces		Texture	Leaching	
Fresh	No discoloration, not oxidized.	No discoloration or oxidation.	No separation, intact (tight).	No change	No leaching	Hammer rings when crystalline rocks are struck.
Slightly Weathered	Discoloration or oxidation is limited to surface of, or short distance from, fractures; some feldspar crystals are dull.	Minor to complete discoloration or oxidation of most surfaces.	No visible separation, intact (tight).	Preserved	Minor leaching of some soluble minerals.	Hammer rings when crystalline rocks are struck. Body of rock not weakened.
Moderately Weathered	Discoloration or oxidation extends from fractures usually throughout; Fe-Mg minerals are "rusty," feldspar crystals are "cloudy."	All fracture surfaces are discolored or oxidized.	Partial separation of boundaries visible.	Generally preserved	Soluble minerals may be mostly leached.	Hammer does not ring when rock is struck. Body of rock is slightly weakened.
Intensely Weathered	Discoloration or oxidation throughout; all feldspars and Fe-Mg minerals are altered to clay to some extent; or chemical alteration produces in-situ disaggregation, see grain boundary conditions.	All fracture surfaces are discolored or oxidized, surfaces friable.	Partial separation, rock is friable; in semiarid conditions granitics are disaggregated.	Texture altered by chemical disintegration (hydration, argillation).	Leaching of soluble minerals may be complete.	Dull sound when struck with hammer, usually can be broken with moderate to heavy manual pressure or by light hammer blow without reference to planes of weakness such as incipient or hairline fractures, or veinlets. Rock is significantly weakened.
Decomposed	Discolored or oxidized throughout, but resistant minerals such as quartz may be unaltered; all feldspars and Fe-Mg minerals are completely altered to clay.		Complete separation of grain boundaries (disaggregated).	Resembles a soil, partial or complete remnant rock structure may be preserved; leaching of soluble minerals usually complete.		Can be granulated by hand. Resistant minerals such as quartz may be present as "stringers" or "dikes."

ENGINEERING SERVICES

GEOTECHNICAL SERVICES

PREPARED BY: I.G-Remmen

STATE OF CALIFORNIA
DEPARTMENT OF TRANSPORTATION

DIVISION OF ENGINEERING SERVICES
STRUCTURE DESIGN
DESIGN BRANCH 3

BRIDGE NO. VARIES
POST MILE 35.0/35.3

SMOOT SINK GROUND ANCHOR WALERS
LOG OF TEST BORINGS 5 OF 5

GS LOTB SOIL LEGEND

ORIGINAL SCALE IN INCHES FOR REDUCED PLANS 0 1 2 3

UNIT: 3643
PROJECT NUMBER & PHASE: 01000003511
CONTRACT NO.: 01-476604

DISREGARD PRINTS BEARING EARLIER REVISION DATES

REVISION DATES

SHEET 16 OF 16

FILE => 10e0011-z-log-5of5.dgn

USERNAME => s109558 DATE PLOTTED => 27-JUN-2013 TIME PLOTTED => 13:05