ACSTP-43K7(004)E

Dist	COUNTY	ROUTE	POST MILES TOTAL PROJECT	SHEET No.	TOTAL SHEETS
01	Men	162	14.4/19.5	1	24

STATE OF CALIFORNIA
DEPARTMENT OF TRANSPORTATION

PROJECT PLANS FOR CONSTRUCTION ON
STATE HIGHWAY
IN MENDOCINO COUNTY
AT VARIOUS LOCATIONS
FROM 1.1 MILES WEST
TO 4.4 MILES EAST OF
MIDDLE FORK EEL RIVER BRIDGE

TO BE SUPPLEMENTED BY STANDARD PLANS DATED MAY 2006

INDEX OF PLANS

SHEET No.	DESCRIPTION
1	TITLE AND LOCATION MAP
2	TYPICAL CROSS SECTIONS
3-5	LAYOUTS
6	CONSTRUCTION DETAILS
7-12	DRAINAGE PLANS, PROFILES, DETAILS AND QUANTITIES
13	CONSTRUCTION AREA SIGNS
14	SUMMARY OF QUANTITIES
15-24	REVISED AND NEW STANDARD PLANS

THE STANDARD PLANS LIST APPLICABLE TO THIS CONTRACT IS INCLUDED IN THE NOTICE TO BIDDERS AND SPECIAL PROVISIONS BOOK.

LOCATION MAP

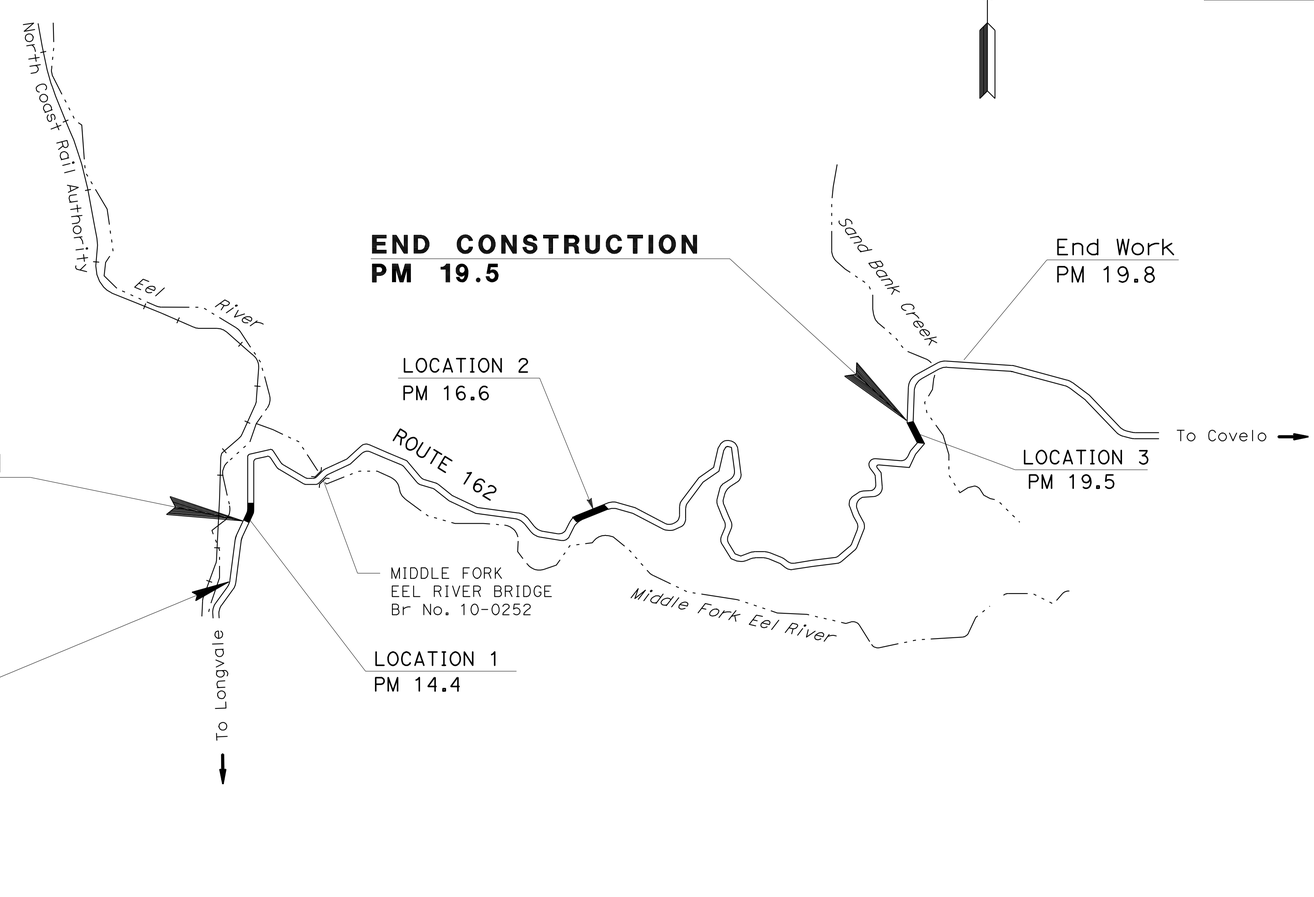

PROJECT MANAGER: FRANK DEMLING
DESIGN ENGINEER: STEVE TOPAL

P:\proj2\01\47650_plans\pse\147650ab001.dgn

10-27-08
PROJECT ENGINEER DATE
REGISTERED CIVIL ENGINEER

May 24, 2010
PLANS APPROVAL DATE

REGISTERED PROFESSIONAL ENGINEER
BYRON STANLEY
No. C60161
Exp. 06-30-10
CIVIL
STATE OF CALIFORNIA

THE STATE OF CALIFORNIA OR ITS OFFICERS OR AGENTS SHALL NOT BE RESPONSIBLE FOR THE ACCURACY OR COMPLETENESS OF ELECTRONIC COPIES OF THIS PLAN SHEET.

THE BIDDERS SHALL POSSESS THE CLASS (OR CLASSES) OF LICENSE AS SPECIFIED IN THE "NOTICE TO BIDDERS."

NO SCALE

CONTRACT No.	01-476504
PROJECT ID	0100000350

LAST REVISION 10-27-08
DATE PLOTTED => 04-AUG-2010
TIME PLOTTED => 05:37

Dist	COUNTY	ROUTE	POST MILES TOTAL PROJECT	SHEET No.	TOTAL SHEETS
01	Men	162	14.4/19.5	2	24

REGISTERED CIVIL ENGINEER DATE 10-28-08

5-24-10
PLANS APPROVAL DATE

REGISTERED PROFESSIONAL ENGINEER BYRON STANLEY No. C60161 Exp. 6-30-10 CIVIL STATE OF CALIFORNIA

THE STATE OF CALIFORNIA OR ITS OFFICERS OR AGENTS SHALL NOT BE RESPONSIBLE FOR THE ACCURACY OR COMPLETENESS OF ELECTRONIC COPIES OF THIS PLAN SHEET.

NOTES:

1. DIMENSIONS OF THE PAVEMENT STRUCTURE (STRUCTURAL SECTIONS) ARE SUBJECT TO TOLERANCES SPECIFIED IN THE STANDARD SPECIFICATIONS.
2. SUPERELEVATIONS AS SHOWN OR AS DIRECTED BY THE ENGINEER.

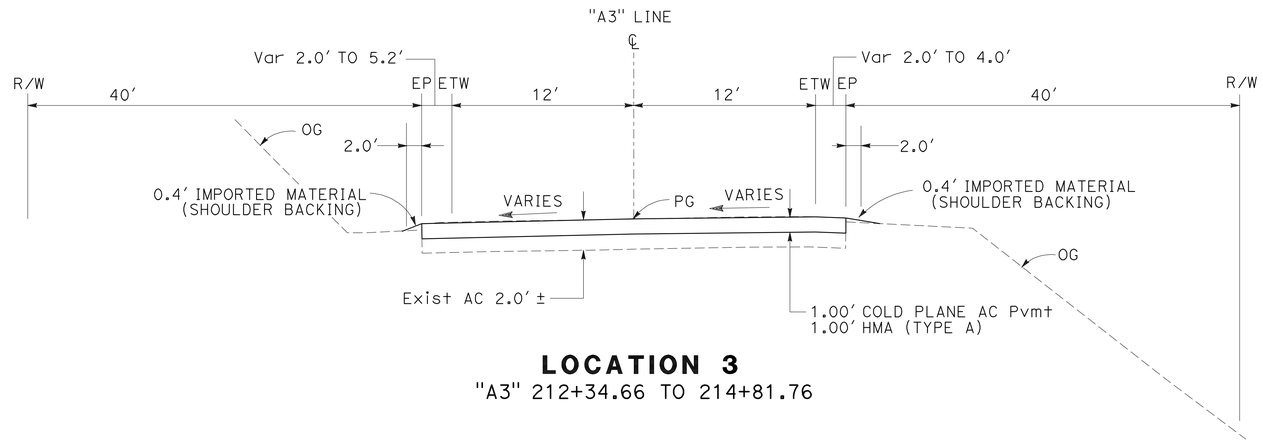

LOCATION 3

"A3" 212+34.66 TO 214+81.76

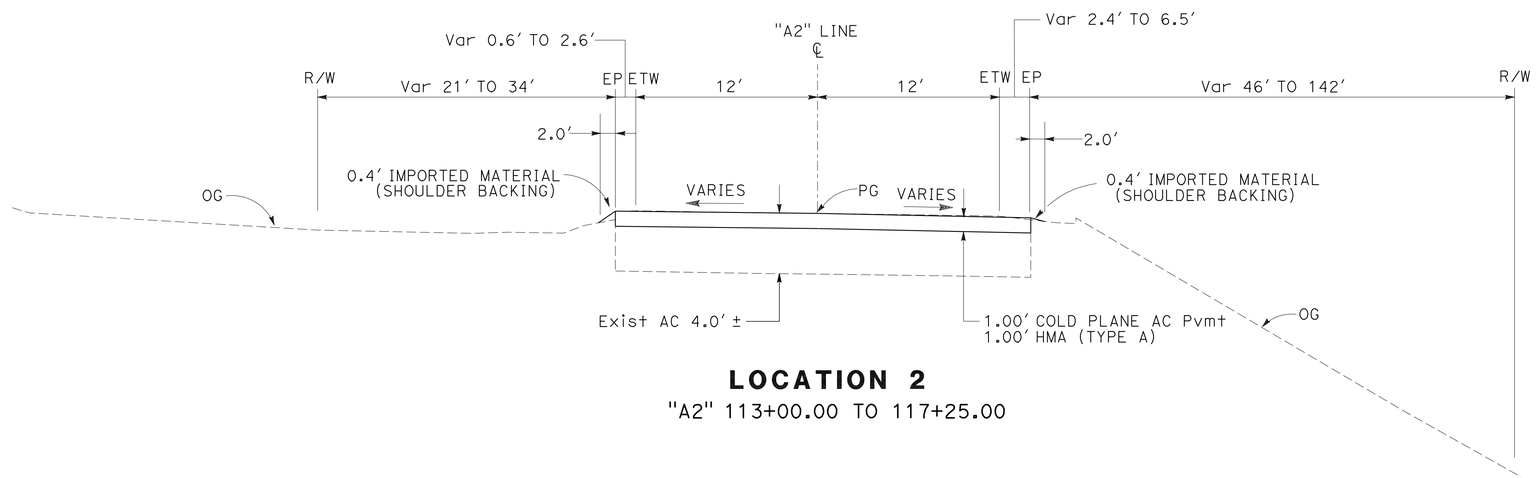

LOCATION 2

"A2" 113+00.00 TO 117+25.00

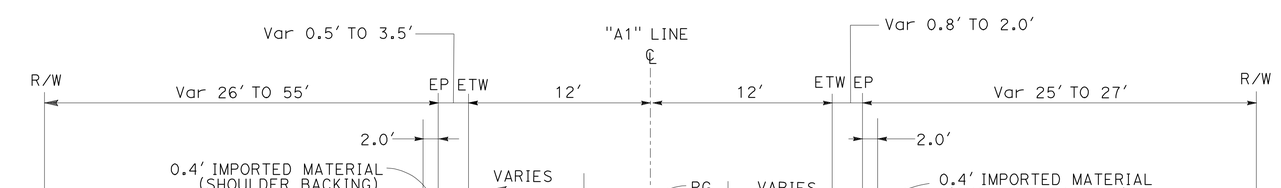

LOCATION 1

"A1" 10+00.00 TO 11+00.00

TYPICAL CROSS SECTIONS

NO SCALE

X-1

STATE OF CALIFORNIA - DEPARTMENT OF TRANSPORTATION
Caltrans **DESIGN**

FUNCTIONAL SUPERVISOR: STEVE TOPAL
CALCULATED-DESIGNED BY: BYRON STANLEY
CHECKED BY: WILL LESLIE
REVISED BY
DATE REVISED

LAST REVISION 10-28-08
DATE PLOTTED => 25-MAY-2010
TIME PLOTTED => 07:01

Dist	COUNTY	ROUTE	POST MILES TOTAL PROJECT	SHEET No.	TOTAL SHEETS
01	Men	162	14.4/19.5	3	24

REGISTERED CIVIL ENGINEER DATE 10-28-08

5-24-10
PLANS APPROVAL DATE

REGISTERED PROFESSIONAL ENGINEER BYRON STANLEY No. C60161 Exp. 6-30-10 CIVIL STATE OF CALIFORNIA

THE STATE OF CALIFORNIA OR ITS OFFICERS OR AGENTS SHALL NOT BE RESPONSIBLE FOR THE ACCURACY OR COMPLETENESS OF ELECTRONIC COPIES OF THIS PLAN SHEET.

NOTES:

1. FOR COMPLETE RIGHT OF WAY DATA, SEE RIGHT OF WAY RECORD MAPS AT THE DISTRICT OFFICE.
2. SEE CONSTRUCTION DETAILS FOR CONFORM CONSTRUCTION.
3. FINAL ESA FENCE LOCATION TO BE DETERMINED BY THE ENGINEER.

LEGEND

- 27B — PAVEMENT DELINEATION STRIPE DETAIL No.
- MARKER (CULVERT)
- DIRECTION OF TRAVEL
- CONTROL MONUMENT
- PAVEMENT CONFORM
- DRAINAGE SYSTEM
- DRAINAGE UNIT
- FLOW DIRECTION

CURVE DATA

No.	R	Δ	T	L
1	785.00′	3°55′17″	26.87′	53.73′
2	450.00′	33°15′14″	134.38′	261.17′

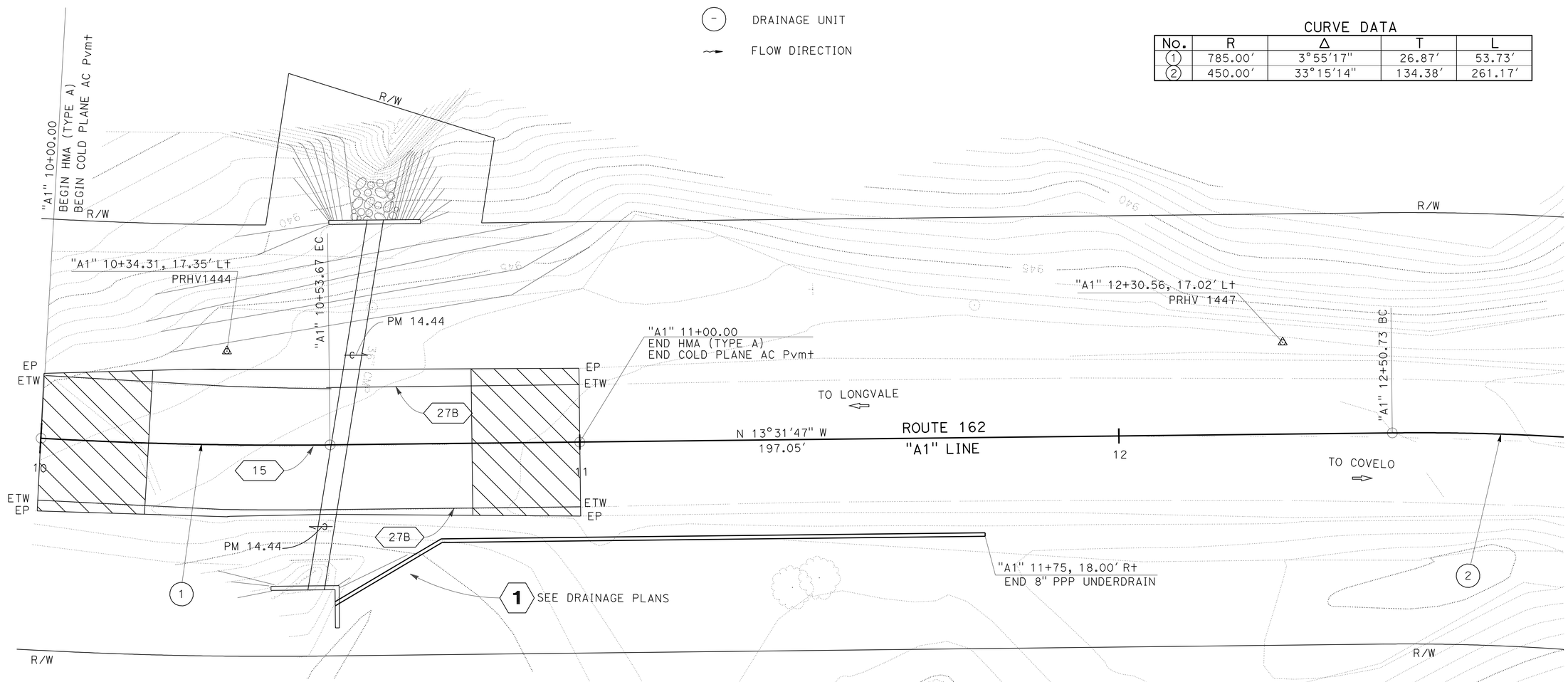

LOCATION 1
PM 14.44

LAYOUT
SCALE: 1" = 10′

L-1

STATE OF CALIFORNIA - DEPARTMENT OF TRANSPORTATION
Caltrans **DESIGN**

FUNCTIONAL SUPERVISOR: STEVE TOPAL
CALCULATED-DESIGNED BY: BYRON STANLEY
CHECKED BY: WILL LESLIE
REVISED BY
DATE REVISED

LAST REVISION 10-28-08
DATE PLOTTED => 25-MAY-2010
TIME PLOTTED => 13:44

Dist	COUNTY	ROUTE	POST MILES TOTAL PROJECT	SHEET No.	TOTAL SHEETS
01	Men	162	14.4/19.5	4	24

REGISTERED CIVIL ENGINEER DATE 10-28-08

5-24-10
PLANS APPROVAL DATE

REGISTERED PROFESSIONAL ENGINEER BYRON STANLEY No. C60161 Exp. 6-30-10 CIVIL STATE OF CALIFORNIA

THE STATE OF CALIFORNIA OR ITS OFFICERS OR AGENTS SHALL NOT BE RESPONSIBLE FOR THE ACCURACY OR COMPLETENESS OF ELECTRONIC COPIES OF THIS PLAN SHEET.

NOTES:

1. FOR COMPLETE RIGHT OF WAY DATA, SEE RIGHT OF WAY RECORD MAPS AT THE DISTRICT OFFICE.

CURVE DATA

No.	R	Δ	T	L
3	400.00′	25°56′19″	92.12′	181.09′
4	400.00′	10°11′42″	35.68′	71.18′

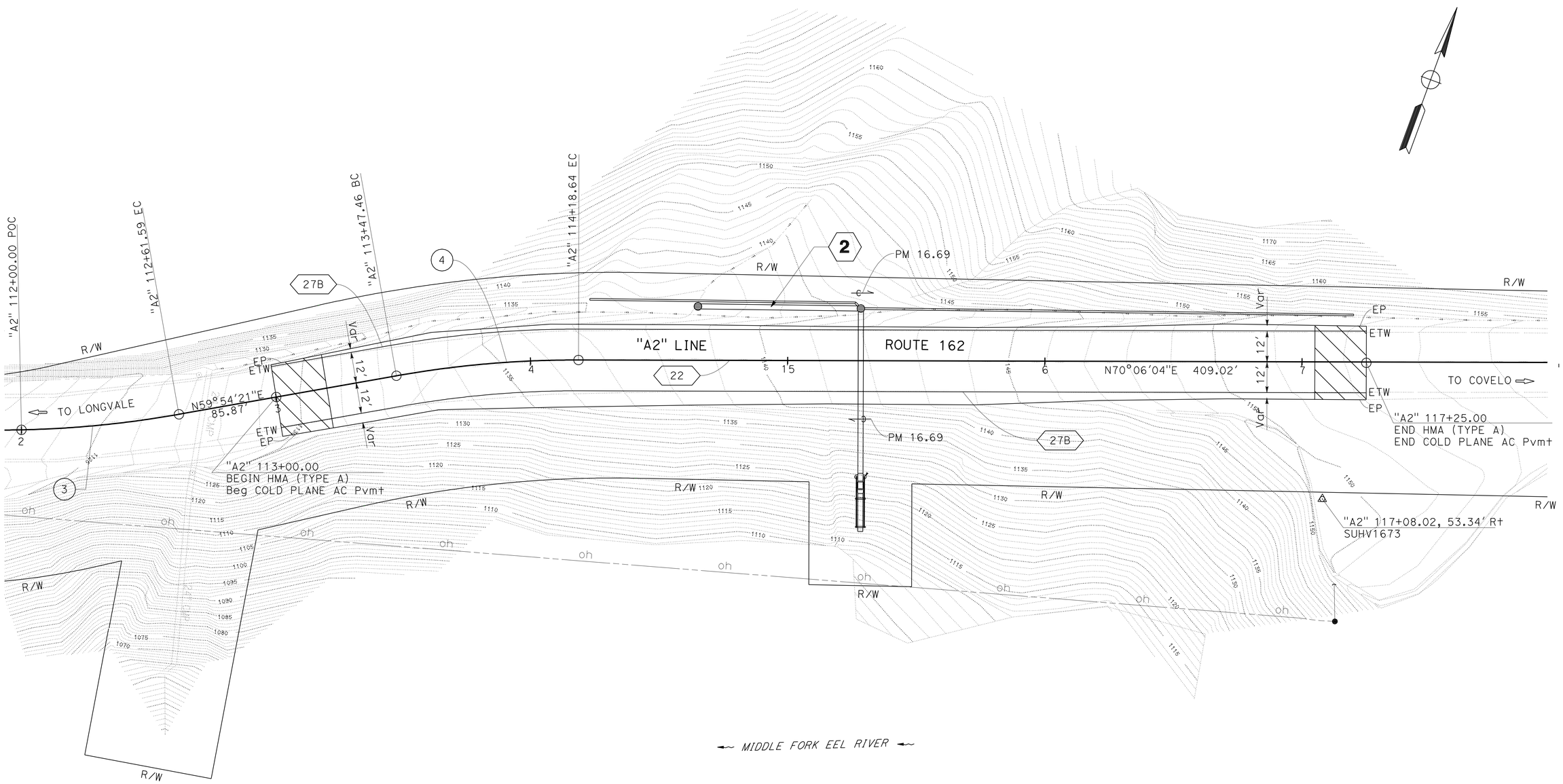

LOCATION 2
PM 16.6

LAYOUT
SCALE: 1" = 20′ **L-2**

STATE OF CALIFORNIA - DEPARTMENT OF TRANSPORTATION
Caltrans **DESIGN**

FUNCTIONAL SUPERVISOR: STEVE TOPAL
CALCULATED-DESIGNED BY: BYRON STANLEY
CHECKED BY: WILL LESLIE
REVISED BY
DATE REVISED

LAST REVISION 10-28-08 | DATE PLOTTED => 25-MAY-2010 | TIME PLOTTED => 07:01

Dist	COUNTY	ROUTE	POST MILES TOTAL PROJECT	SHEET No.	TOTAL SHEETS
01	Men	162	14.4/19.5	5	24

10-28-08
REGISTERED CIVIL ENGINEER DATE

5-24-10
PLANS APPROVAL DATE

REGISTERED PROFESSIONAL ENGINEER
BYRON STANLEY
No. C60161
Exp. 6-30-10
CIVIL
STATE OF CALIFORNIA

THE STATE OF CALIFORNIA OR ITS OFFICERS OR AGENTS SHALL NOT BE RESPONSIBLE FOR THE ACCURACY OR COMPLETENESS OF ELECTRONIC COPIES OF THIS PLAN SHEET.

NOTES:

1. FOR COMPLETE RIGHT OF WAY DATA, SEE RIGHT OF WAY RECORD MAPS AT THE DISTRICT OFFICE.

TANGENT DATA

No.	BEARING	DISTANCE
a	N2°30′15″W	1.71′
b	N31°36′45″W	16.22′
c	N35°46′37″W	108.51
d	N39°07′47″W	162.90′

CURVE DATA

No.	R	Δ	T	L
5	145.00′	10°54′02″	13.83′	27.59′
6	204.00′	28°58′30″	52.71′	103.16′
7	1000.00′	4°9′53″	36.36′	72.69′
8	1749.98′	3°21′10″	51.22′	102.40′
9	255.00′	11°29′11″	25.65′	51.12′

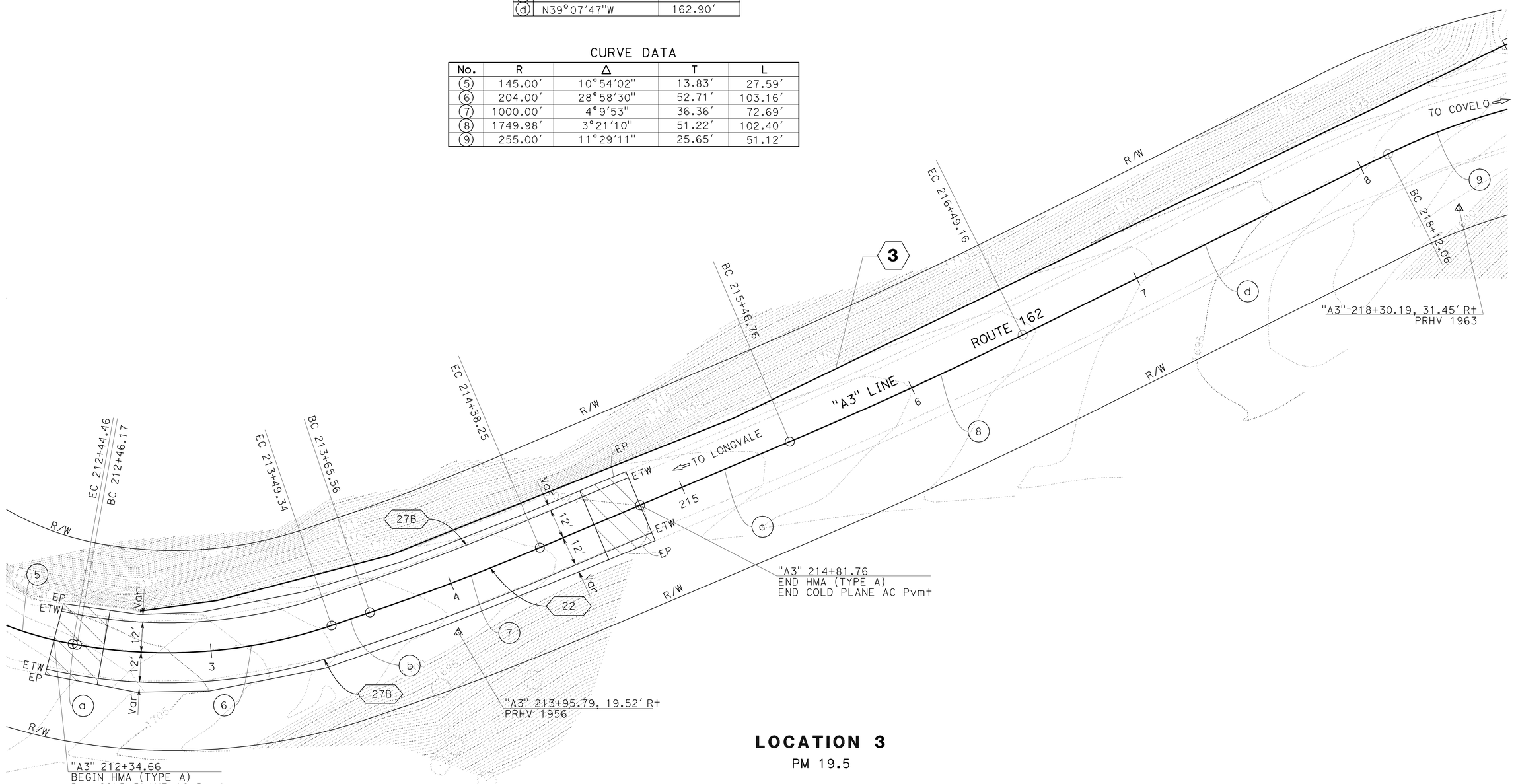

LOCATION 3
PM 19.5

LAYOUT
SCALE: 1" = 20′ **L-3**

STATE OF CALIFORNIA - DEPARTMENT OF TRANSPORTATION
Caltrans **DESIGN**
FUNCTIONAL SUPERVISOR: STEVE TOPAL
CALCULATED-DESIGNED BY: BYRON STANLEY
CHECKED BY: WILL LESLIE
REVISED BY
DATE REVISED

LAST REVISION DATE PLOTTED => 25-MAY-2010
TIME PLOTTED => 07:01
10-28-08

BORDER LAST REVISED 3/1/2007
RELATIVE BORDER SCALE IS IN INCHES 0 1 2 3
USERNAME => trlenard
DGN FILE => 147650ea003.dgn
CU 03 247
EA 476501

Dist	COUNTY	ROUTE	POST MILES TOTAL PROJECT	SHEET No.	TOTAL SHEETS
01	Men	162	14.4/19.5	6	24

REGISTERED CIVIL ENGINEER DATE 10-28-08

5-24-10
PLANS APPROVAL DATE

REGISTERED PROFESSIONAL ENGINEER
BYRON STANLEY
No. C60161
Exp. 6-30-10
CIVIL
STATE OF CALIFORNIA

THE STATE OF CALIFORNIA OR ITS OFFICERS OR AGENTS SHALL NOT BE RESPONSIBLE FOR THE ACCURACY OR COMPLETENESS OF ELECTRONIC COPIES OF THIS PLAN SHEET.

NOTE:

1. FOR DETAILS NOT SHOWN, SEE STANDARD PLANS.

LEGEND

⊣ END OF STRIPE

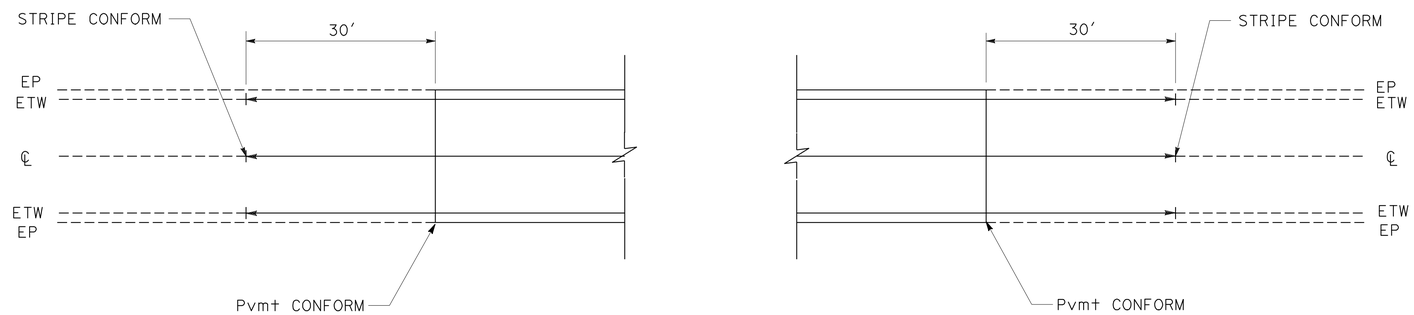

STRIPE CONFORM DETAIL

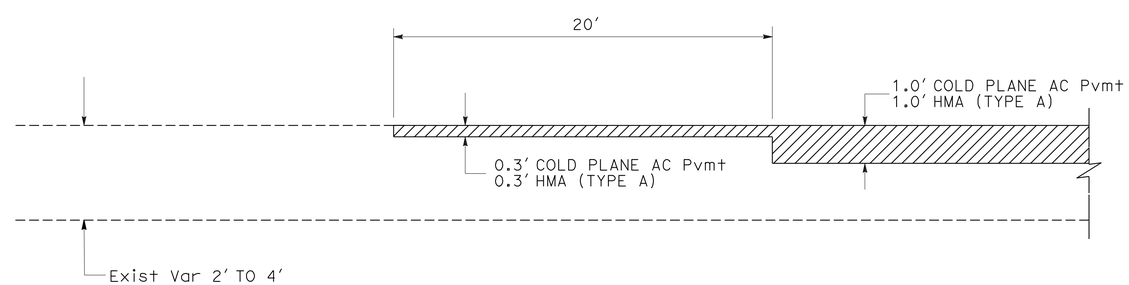

PAVEMENT CONFORM DETAIL

CONSTRUCTION DETAILS

NO SCALE

C-1

STATE OF CALIFORNIA - DEPARTMENT OF TRANSPORTATION
Caltrans DESIGN

FUNCTIONAL SUPERVISOR: STEVE TOPAL

CALCULATED-DESIGNED BY: BYRON STANLEY
CHECKED BY: WILL LESLIE

REVISED BY
DATE REVISED

LAST REVISION 10-28-08
DATE PLOTTED => 25-MAY-2010
TIME PLOTTED => 07:01

NOTE:
1. FOR COMPLETE RIGHT OF WAY DATA, SEE RIGHT OF WAY RECORD MAPS AT THE DISTRICT OFFICE.

Dist	COUNTY	ROUTE	POST MILES TOTAL PROJECT	SHEET No.	TOTAL SHEETS
01	Men	162	14.4/19.5	7	24

REGISTERED CIVIL ENGINEER 10-28-08 DATE

5-24-10
PLANS APPROVAL DATE

REGISTERED PROFESSIONAL ENGINEER BYRON STANLEY No. C60161 Exp. 6-30-10 CIVIL STATE OF CALIFORNIA

THE STATE OF CALIFORNIA OR ITS OFFICERS OR AGENTS SHALL NOT BE RESPONSIBLE FOR THE ACCURACY OR COMPLETENESS OF ELECTRONIC COPIES OF THIS PLAN SHEET.

LEGEND

—— FR ——	TEMPORARY FIBER ROLL
TGBB	TEMPORARY GRAVEL BAG BERM
TDIP	TEMPORARY DRAINAGE INLET PROTECTION
TCD	TEMPORARY CHECK DAM
-	DRAINAGE SYSTEM No.
-	DRAINAGE UNIT
~→	DIRECTION OF FLOW

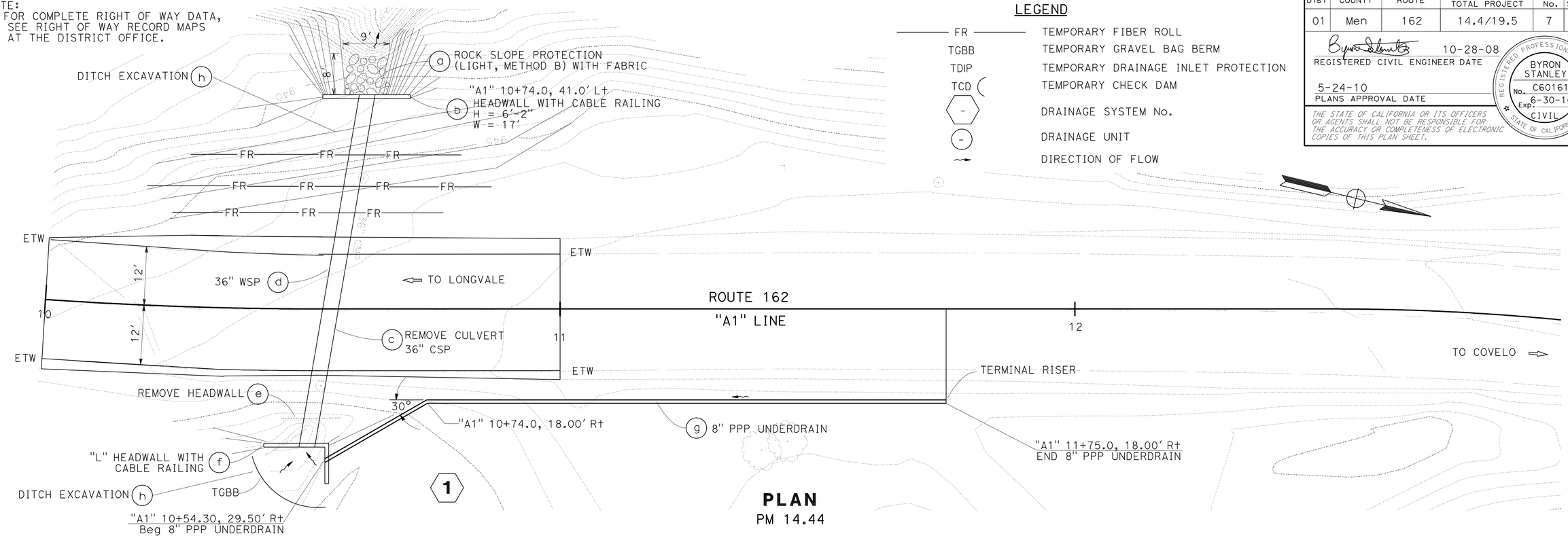

PLAN
PM 14.44

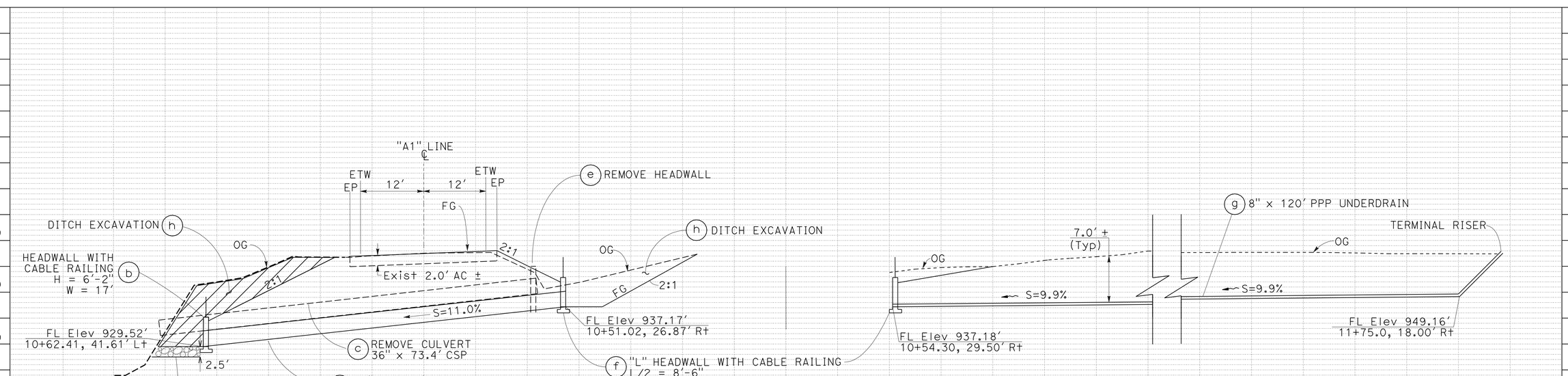

PROFILE
DRAINAGE SYSTEM No. 1
"A1" 10+55.40

THIS PLAN ACCURATE FOR DRAINAGE WORK ONLY.

DRAINAGE PLAN AND PROFILE (LOCATION 1)

SCALE: 1" = 10' **D-1**

STATE OF CALIFORNIA - DEPARTMENT OF TRANSPORTATION
Caltrans **DESIGN**
FUNCTIONAL SUPERVISOR: STEVE TOPAL
CALCULATED-DESIGNED BY: BYRON STANLEY
CHECKED BY: WILL LESLIE
REVISED BY / DATE REVISED

LAST REVISION DATE PLOTTED => 25-MAY-2010
TIME PLOTTED => 07:07
10-28-08

Dist	COUNTY	ROUTE	POST MILES TOTAL PROJECT	SHEET No.	TOTAL SHEETS
01	Men	162	14.4/19.5	8	24

REGISTERED CIVIL ENGINEER DATE 10-28-08

PLANS APPROVAL DATE 5-24-10

REGISTERED PROFESSIONAL ENGINEER BYRON STANLEY No. C60161 Exp. 6-30-10 CIVIL STATE OF CALIFORNIA

THE STATE OF CALIFORNIA OR ITS OFFICERS OR AGENTS SHALL NOT BE RESPONSIBLE FOR THE ACCURACY OR COMPLETENESS OF ELECTRONIC COPIES OF THIS PLAN SHEET.

NOTES:

1. SEE STANDARD PLANS FOR CABLE ANCHORAGE SYSTEM DETAILS.
2. FOR COMPLETE RIGHT OF WAY DATA, SEE RIGHT OF WAY RECORD MAPS AT THE DISTRICT OFFICE.

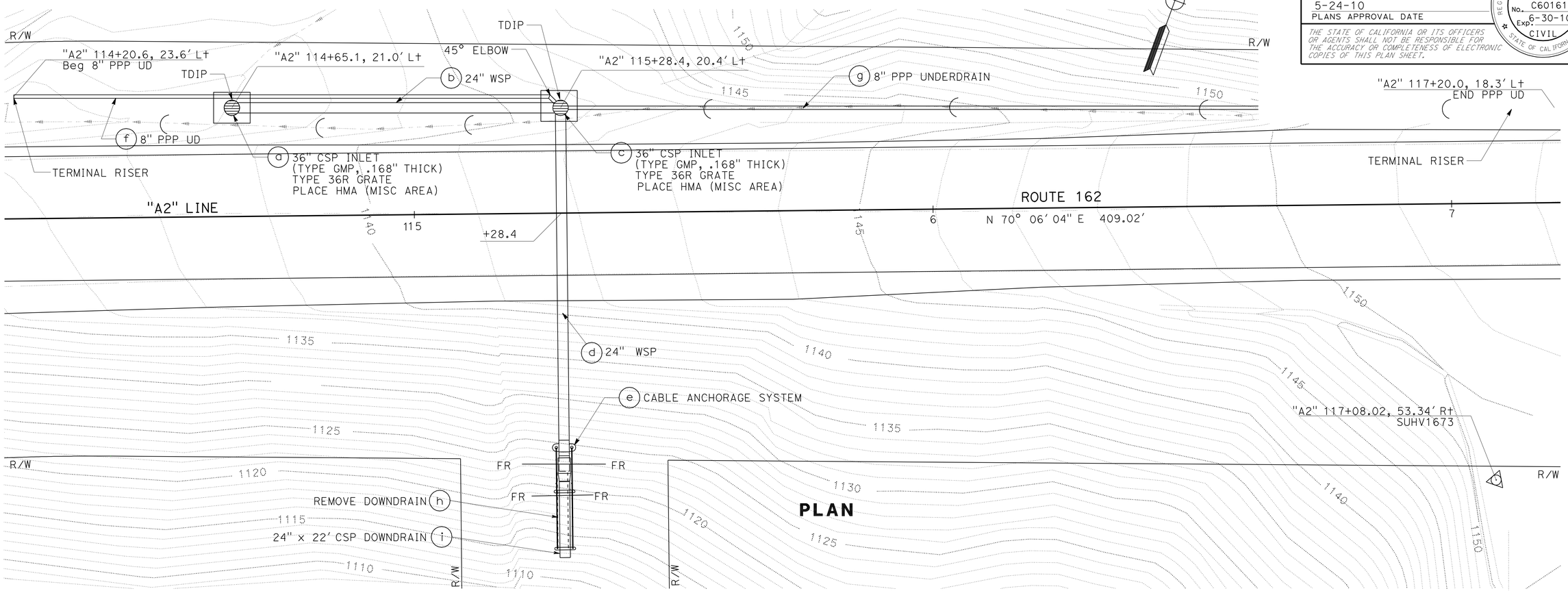

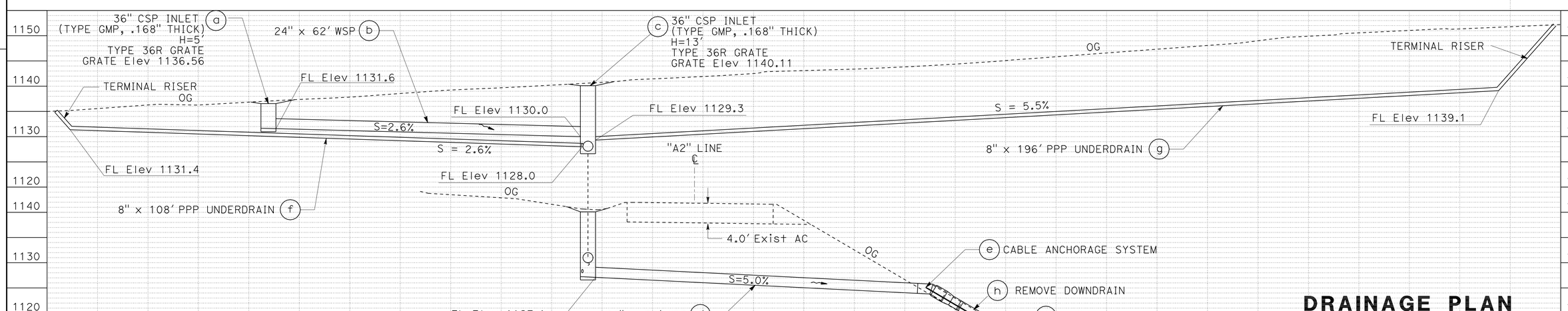

PROFILE

DRAINAGE SYSTEM No. 2

THIS PLAN ACCURATE FOR DRAINAGE WORK ONLY.

DRAINAGE PLAN AND PROFILE (LOCATION 2)

SCALE: 1" = 10'

D-2

STATE OF CALIFORNIA - DEPARTMENT OF TRANSPORTATION

Caltrans

DESIGN

FUNCTIONAL SUPERVISOR: STEVE TOPAL

CALCULATED-DESIGNED BY: BYRON STANLEY

CHECKED BY: WILL LESLIE

REVISED BY / DATE REVISED

LAST REVISION DATE PLOTTED => 25-MAY-2010 TIME PLOTTED => 07:01

10-28-08

Dist	COUNTY	ROUTE	POST MILES TOTAL PROJECT	SHEET No.	TOTAL SHEETS
01	Men	162	14.4/19.5	9	24

REGISTERED CIVIL ENGINEER DATE 10-28-08

PLANS APPROVAL DATE 5-24-10

REGISTERED PROFESSIONAL ENGINEER BYRON STANLEY No. C60161 Exp. 6-30-10 CIVIL STATE OF CALIFORNIA

THE STATE OF CALIFORNIA OR ITS OFFICERS OR AGENTS SHALL NOT BE RESPONSIBLE FOR THE ACCURACY OR COMPLETENESS OF ELECTRONIC COPIES OF THIS PLAN SHEET.

NOTE:
1. FOR COMPLETE RIGHT OF WAY DATA, SEE RIGHT OF WAY RECORD MAPS AT THE DISTRICT OFFICE.

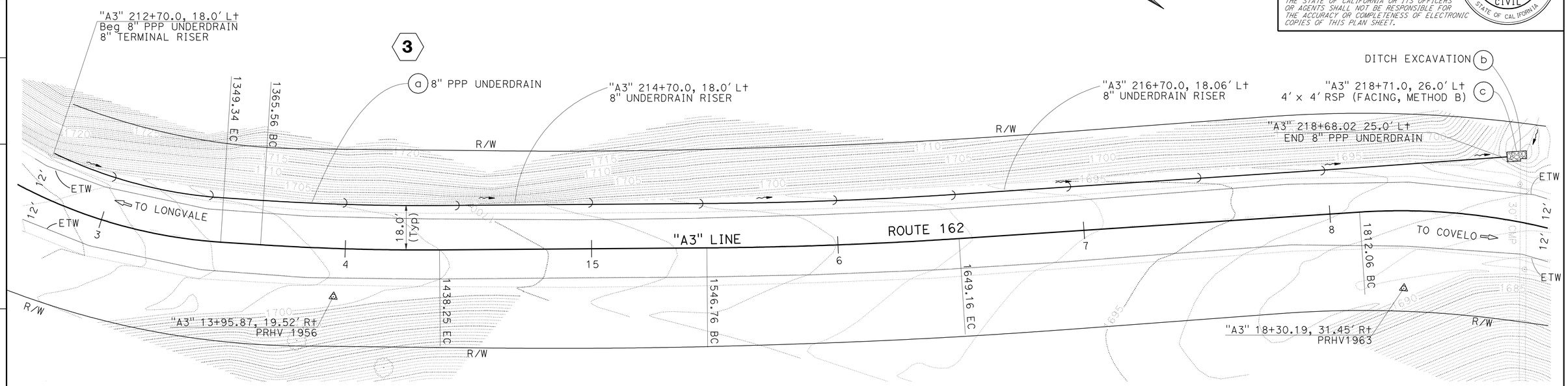

PLAN

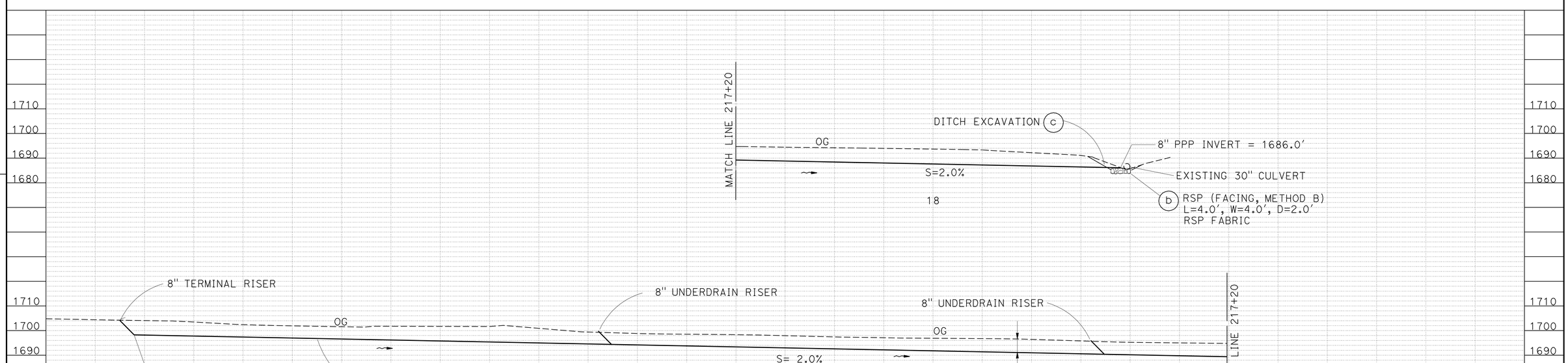

PROFILE

DRAINAGE SYSTEM No. 3

THIS PLAN ACCURATE FOR DRAINAGE WORK ONLY.

DRAINAGE PLAN AND PROFILE (LOCATION 3)

SCALE: 1" = 20' **D-3**

REVISED BY | DATE REVISED

BYRON STANLEY | WILL LESLIE

CALCULATED-DESIGNED BY | CHECKED BY

FUNCTIONAL SUPERVISOR: STEVE TOPAL

STATE OF CALIFORNIA - DEPARTMENT OF TRANSPORTATION

Caltrans DESIGN

P:\proj2\01\47650_plans\pse\147650ia003.dgn

LAST REVISION | DATE PLOTTED => 25-MAY-2010 | TIME PLOTTED => 07:01

10-28-08

BORDER LAST REVISED 3/1/2007 | RELATIVE BORDER SCALE IS IN INCHES 0 1 2 3 | USERNAME => trlenard | DGN FILE => 147650ia003.dgn | CU 03 247 | EA 476501

Dist	COUNTY	ROUTE	POST MILES TOTAL PROJECT	SHEET No.	TOTAL SHEETS
01	Men	162	14.4/19.5	10	24

REGISTERED CIVIL ENGINEER DATE 10-28-08

PLANS APPROVAL DATE 5-24-10

REGISTERED PROFESSIONAL ENGINEER BYRON STANLEY No. C60161 Exp. 6-30-10 CIVIL STATE OF CALIFORNIA

THE STATE OF CALIFORNIA OR ITS OFFICERS OR AGENTS SHALL NOT BE RESPONSIBLE FOR THE ACCURACY OR COMPLETENESS OF ELECTRONIC COPIES OF THIS PLAN SHEET.

NOTE:

1. FOR DETAILS NOT SHOWN, SEE STANDARD PLANS.

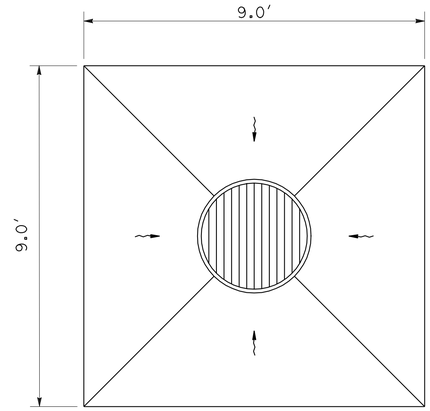

PLAN

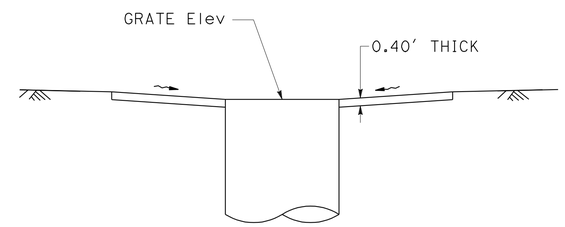

PROFILE

PLACE HMA (Misc AREA)

DRAINAGE SYSTEM No. 2 a c

LEGEND

- DRAINAGE SYSTEM No.
- DRAINAGE UNIT
- DIRECTION OF FLOW

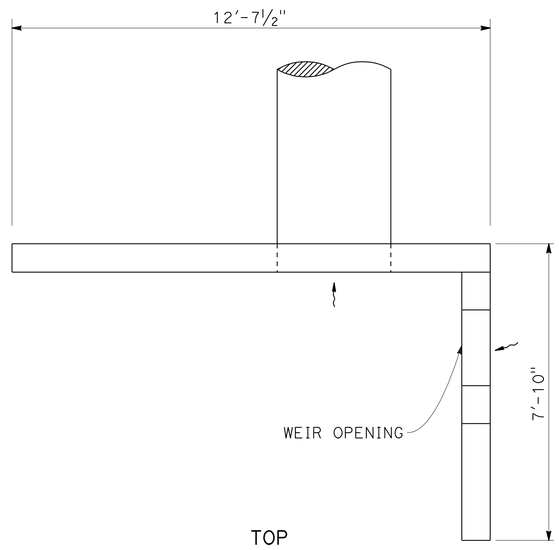

TOP

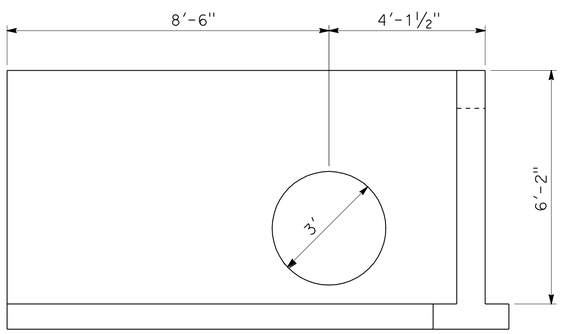

FRONT

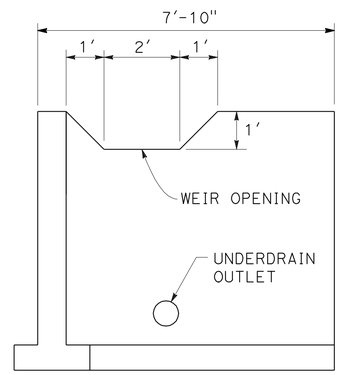

SIDE

"L" HEADWALL DETAILS

DRAINAGE SYSTEM No. 1 f

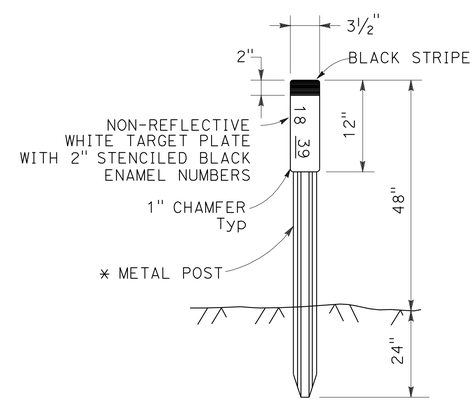

CULVERT (MARKER)

* SEE STANDARD PLANS FOR METAL POST DETAILS
EXACT LOCATION TO BE DETERMINED BY ENGINEER

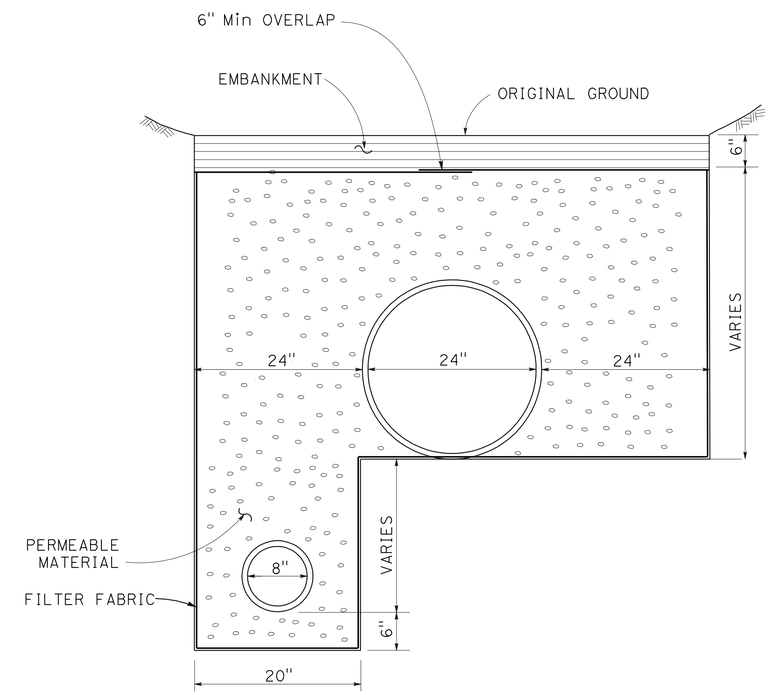

EXCAVATION AND BACKFILL FOR COINCIDENT CULVERT AND UNDERDRAIN

DRAINAGE SYSTEM No. 2 b f

DRAINAGE DETAILS

NO SCALE **DD-1**

STATE OF CALIFORNIA - DEPARTMENT OF TRANSPORTATION
Caltrans DESIGN

FUNCTIONAL SUPERVISOR: STEVE TOPAL
CALCULATED-DESIGNED BY: BYRON STANLEY
CHECKED BY: WILL LESLIE
REVISED BY
DATE REVISED

LAST REVISION DATE PLOTTED => 25-MAY-2010
10-28-08 TIME PLOTTED => 07:01

Dist	COUNTY	ROUTE	POST MILES TOTAL PROJECT	SHEET No.	TOTAL SHEETS
01	Men	162	14.4/19.5	11	24

REGISTERED CIVIL ENGINEER DATE 10-28-08

5-24-10
PLANS APPROVAL DATE

REGISTERED PROFESSIONAL ENGINEER BYRON STANLEY No. C60161 Exp. 6-30-10 CIVIL STATE OF CALIFORNIA

THE STATE OF CALIFORNIA OR ITS OFFICERS OR AGENTS SHALL NOT BE RESPONSIBLE FOR THE ACCURACY OR COMPLETENESS OF ELECTRONIC COPIES OF THIS PLAN SHEET.

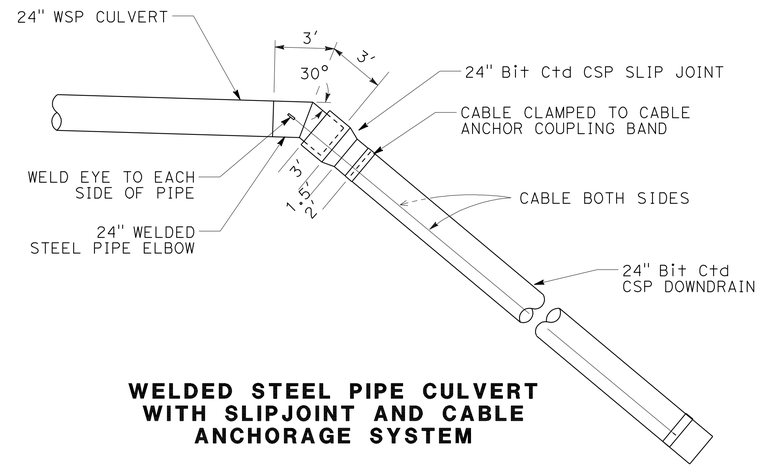

WELDED STEEL PIPE CULVERT WITH SLIPJOINT AND CABLE ANCHORAGE SYSTEM

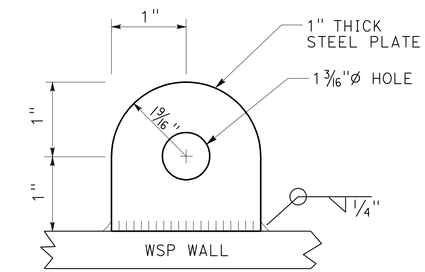

EYE DETAIL

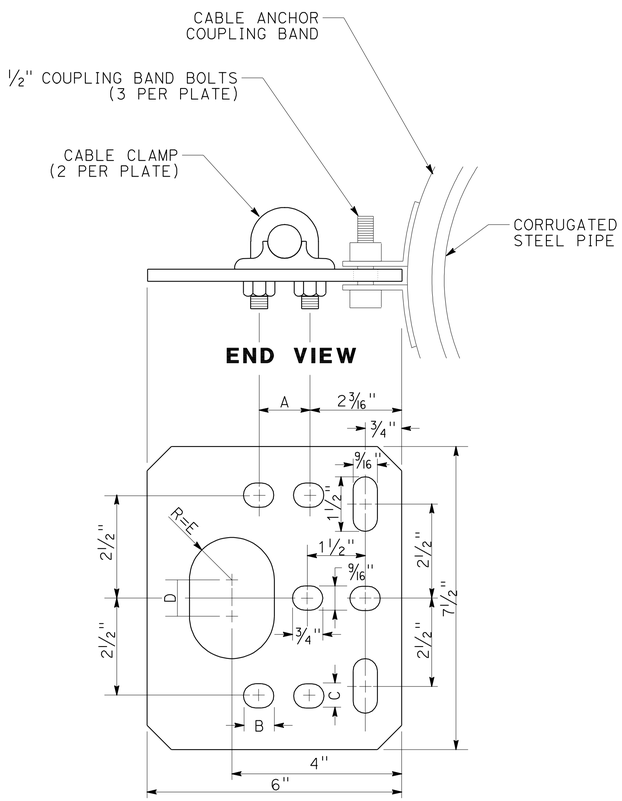

PLATE DETAIL

MATERIAL TO BE 1/4" STEEL PLATE, GALVANIZED AFTER FABRICATION

CABLE SIZE	A	B	C	D	E
5/8"	1 1/4"	3/4"	9/16"	1"	1"
3/4"	1 1/2"	7/8"	11/16"	1"	1"

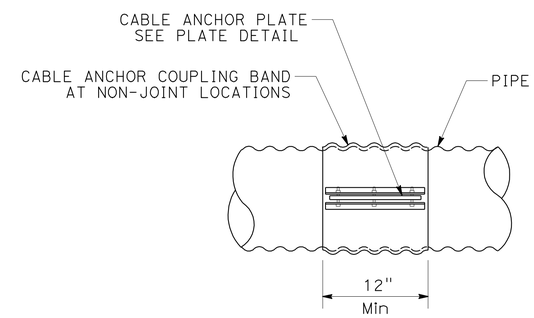

CABLE ANCHOR COUPLING BAND

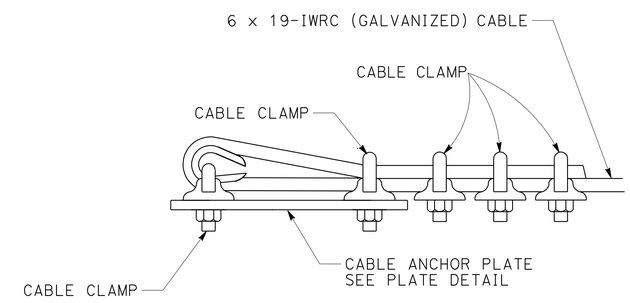

CABLE ANCHOR TERMINAL DETAIL

SWL (1000 lb)	15K	23K
CABLE CLAMP SPACING	4"	4-1/2"
CABLE CLAMPS	3 ea	4 ea
TURNBUCKLES	7/8"x24"	1"x24"
CABLE SIZE (THIMBLE)	5/8"	3/4"

IWRC = INDEPENDENT WIRE ROPE CORE
SWL = SAFE WORKING LOAD

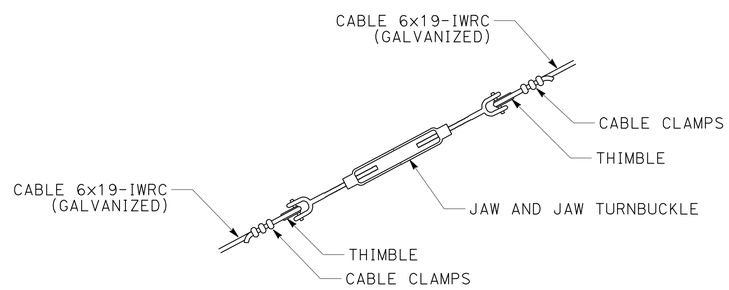

TURNBUCKLE DETAIL

CABLE ANCHORAGE SYSTEM DETAILS (2)

NOTE: FOR DETAILS NOT SHOWN SEE STD PLAN D87C

DRAINAGE DETAILS

NO SCALE

DD-2

STATE OF CALIFORNIA - DEPARTMENT OF TRANSPORTATION
Caltrans DESIGN
FUNCTIONAL SUPERVISOR: STEVE TOPAL
CALCULATED-DESIGNED BY: BYRON STANLEY
CHECKED BY: WILL LESLIE
REVISED BY
DATE REVISED

LAST REVISION DATE PLOTTED => 25-MAY-2010
10-28-08 TIME PLOTTED => 07:02

Dist	COUNTY	ROUTE	POST MILES TOTAL PROJECT	SHEET No.	TOTAL SHEETS
01	Men	162	14.4/19.5	12	24

REGISTERED CIVIL ENGINEER DATE 10-28-08

PLANS APPROVAL DATE 5-24-10

REGISTERED PROFESSIONAL ENGINEER BYRON STANLEY No. C60161 Exp. 6-30-10 CIVIL STATE OF CALIFORNIA

THE STATE OF CALIFORNIA OR ITS OFFICERS OR AGENTS SHALL NOT BE RESPONSIBLE FOR THE ACCURACY OR COMPLETENESS OF ELECTRONIC COPIES OF THIS PLAN SHEET.

NOTES:

1. (N) - NOT A SEPARATE PAY ITEM, FOR INFORMATION ONLY.
2. LENGTHS OF PIPE AND ANGLE OF ELBOWS SHALL BE VERIFIED IN THE FIELD BY THE CONTRACTOR.

DRAINAGE QUANTITIES

DRAINAGE SHEET No.	DRAINAGE SYSTEM No.	DRANAGE UNIT No.	REMOVE DOWNDRAIN	REMOVE CULVERT	REMOVE HEADWALL	DITCH EXCAVATION	HOT MIX ASPHALT (TYPE A)	PLACE HOT MIX ASPHALT (Misc AREA)	8" PERFORATED PLASTIC PIPE UNDERDRAIN (DEEP)	(N) MATERIAL CONTANING NATURALLY OCCURING ASBESTOS	(N) 8" UNDERDRAIN RISER	(N) 8" TERMINAL RISER	(N) PERMEABLE MATERIAL	(N) FILTER FABRIC	CABLE ANCHORAGE SYSTEM	24" CORRUGATED STEEL PIPE DOWNDRAIN (.138" THICK)	36" CORRUGATED STEEL PIPE INLET (.168" THICK)	24" WELDED STEEL PIPE (.250" THICK)	36" WELDED STEEL PIPE (.375" THICK)	MINOR CONCRETE (MINOR STRUCTURE)	ROCK SLOPE PROTECTION (FACING, METHOD B)	ROCK SLOPE PROTECTION (LIGHT, METHOD B)	ROCK SLOPE PROTECTION FABRIC	Misc IRON AND STEEL	(N) BAR REINFORCING STEEL	MARKER (CULVERT)	CABLE RAILING	DESCRIPTION	STATION	DRANAGE UNIT No.	DRAINAGE SYSTEM No.	DRAINAGE SHEET No.
			EA	EA	EA	CY	TON	SQYD	LF	CY	EA	EA	CY	SQFT	LF	LF	LF	LF	LF	CY	CY	CY	SQYD	LB	LB	EA	LF					
D-1	1	a																				6.7	21.3					RSP - 8' LONG x 9' WIDE x 2.5' DEEP	"A1" 10+55.4	a	1	D-1
		b																		3.3					190		25.0	HEADWALL (H=6'-2")		b		
		c		1																								REMOVE 36" x 73.4' CMP		c		
		d																	72.0							2		36" WELDED STEEL PIPE, Max COVER (11.3')		d		
		e			1																							REMOVE HEADWALL (1.95 CY)		e		
		f																		4.1					235			"L" HEADWALL (H=6'-2", W=7'-10", L/2=8'-6")		f		
		g							120			1	124	580														8" PPP UNDERDRAIN WITH TERMINAL RISER		g		
		h				19.8																					25.0			h		
D-2	2	a					2.3	8.21									5.5							236				Type GMP, 36R GRATE	A2" 114+20.6 TO 117+20.0	a	2	D-2
		b											81					62.0										24" WELDED STEEL PIPE, Max COVER (8.6')		b		
		c					2.3	8.21									13.5							236				TYPE GMP, 36R GRATE		c		
		d																70.0								2		24" WELDED STEEL PIPE, Max COVER (14.2')		d		
		e													20.0													CABLE ANCHORAGE SYSTEM		e		
		f							108	80		1	65	367														8" PPP UNDERDRAIN WITH CLEANOUT ASSEMBLY		f		
		g							196	145		1	116	527														8" PPP UNDERDRAIN WITH CLEANOUT ASSEMBLY		g		
		h	1																									REMOVE 24" x 20' CMP DOWNDRAIN		h		
		i														22.0												24" CSP DOWNDRAIN				
D-3	3	a							624		2	1	223	1170														8" PPP UNDERDRAIN WITH 3 RISERS	"A3" 212+70.0 TO 21871.0	a	3	D-3
		b				1.0																						DITCH EXCAVATION		b		
		c																			1.2		11.3					RSP - 4' WIDE x 8' LONG x 2' DEEP		c		
TOTAL			1	1	1	20.8	4.6*	16.42	1048	225					20.0	22.0	19.0	132.0	72.0	7.4	1.2	6.7	32.6	472		4	50.0					

* QUANTITY IS INCLUDED IN THE ROADWAY QUANTITIES TABLE.

STATE OF CALIFORNIA - DEPARTMENT OF TRANSPORTATION

Caltrans DESIGN

FUNCTIONAL SUPERVISOR: STEVE TOPAL

CALCULATED-DESIGNED BY: BYRON STANLEY

CHECKED BY: WILL LESLIE

REVISED BY

DATE REVISED

DRAINAGE QUANTITIES
DQ-1

LAST REVISION 10-28-08 | DATE PLOTTED => 25-MAY-2010 | TIME PLOTTED => 07:11

Dist	COUNTY	ROUTE	POST MILES TOTAL PROJECT	SHEET No.	TOTAL SHEETS
01	Men	162	14.4/19.5	13	24

REGISTERED CIVIL ENGINEER DATE 10-28-08

PLANS APPROVAL DATE 5-24-10

REGISTERED PROFESSIONAL ENGINEER BYRON STANLEY No. C60161 Exp. 6-30-10 CIVIL STATE OF CALIFORNIA

THE STATE OF CALIFORNIA OR ITS OFFICERS OR AGENTS SHALL NOT BE RESPONSIBLE FOR THE ACCURACY OR COMPLETENESS OF ELECTRONIC COPIES OF THIS PLAN SHEET.

NOTES:
1. EXACT SIGN LOCATION TO BE DETERMINED BY THE ENGINEER.
2. THE MESSAGE ON THE PCMS TO BE DETERMINED BY THE ENGINEER.
3. SIGNS SHOWN WITH (CA) INDICATE CALIFORNIA MUTCD SIGN CODE, OTHERWISE FEDERAL SIGN CODES ARE SHOWN

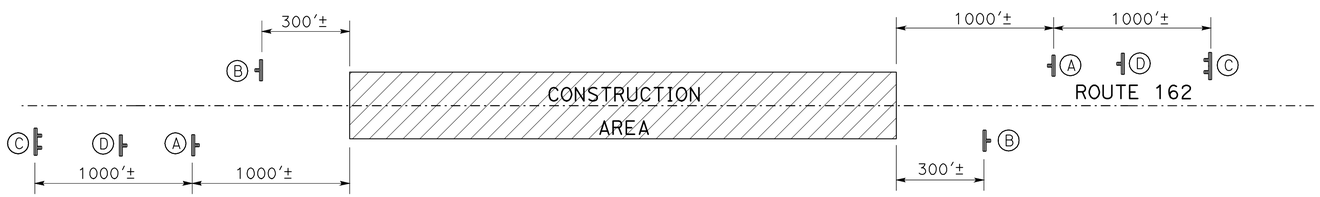

CONSTRUCTION AREA SIGNS

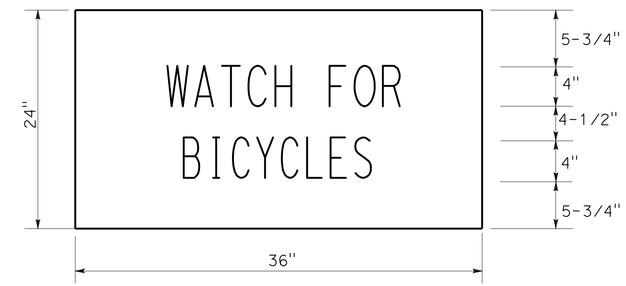

BLACK ON ORANGE

SP1 SIGN PANEL DETAIL

CONSTRUCTION AREA SIGNS (STATIONARY MOUNTED)

TYPE	SIGN CODE	PANEL SIZE	SIGN MESSAGE	NUMBER AND SIZE OF POST	No. OF SIGNS
A	W20-1 C23B (CA)	36" x 36" 36" x 24"	ROAD WORK AHEAD HIGHWAY REPAIR	1 - 4" x 6"	6
B	G20-2	36" x 18"	END ROAD WORK	1 - 4" x 4"	6
C	C40 (CA)	72" x 36"	TRAFFIC FINES DOUBLED IN WORK ZONES	2 - 4" x 6"	6
D	SP-1	36" x 24"	WATCH FOR BICYCLES	1 - 4" x 4"	6

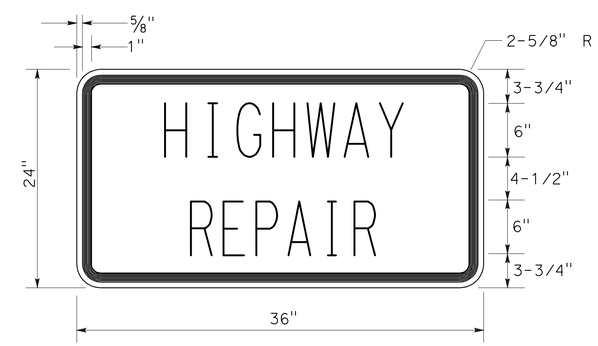

C23B (CA) SIGN PANEL DETAIL

CONSTRUCTION AREA SIGNS

NO SCALE

CS-1

STATE OF CALIFORNIA - DEPARTMENT OF TRANSPORTATION
Caltrans DESIGN

FUNCTIONAL SUPERVISOR: STEVE TOPAL

CALCULATED-DESIGNED BY: BYRON STANLEY
CHECKED BY: WILL LESLIE

REVISED BY
DATE REVISED

LAST REVISION 10-28-08
DATE PLOTTED => 25-MAY-2010
TIME PLOTTED => 07:02

Dist	COUNTY	ROUTE	POST MILES TOTAL PROJECT	SHEET No.	TOTAL SHEETS
01	Men	162	14.4/19.5	14	24

REGISTERED CIVIL ENGINEER DATE 10-28-08

PLANS APPROVAL DATE 5-24-10

REGISTERED PROFESSIONAL ENGINEER BYRON STANLEY No. C60161 Exp. 6-30-10 CIVIL STATE OF CALIFORNIA

THE STATE OF CALIFORNIA OR ITS OFFICERS OR AGENTS SHALL NOT BE RESPONSIBLE FOR THE ACCURACY OR COMPLETENESS OF ELECTRONIC COPIES OF THIS PLAN SHEET.

NOTES:

1. (N) NOT A SEPARATE PAY ITEM, FOR INFORMATION ONLY.
2. LENGTHS OF PIPE AND ANGLE OF ELBOWS SHALL BE VERIFIED IN THE FIELD BY THE CONTRACTOR.

TEMPORARY FENCE (TYPE ESA)

SHEET No.	LF
L1	125

EROSION CONTROL (TYPE D)

STATION	ERROSION CONTROL (TYPE D)
	SQYD
"A1" 10+00.00 TO 11+00.00	146
"A2" 113+00.00 TO 117+25.00	623
"A3" 212+34.66 TO 214+81.76	361
TOTAL	1130

TEMPORARY WATER POLLUTION CONTROL QUANTITIES

STATION	Temp FIBER ROLL	Temp GRAVEL BAG BERM	Temp CHECK DAM	Temp DRAINAGE INLET PROTECTION
	LF	LF	LF	EA
"A1" 10+00.00 TO 11+00.00	173	40		
"A2" 113+00.00 TO 117+25.00	28		70	2
"A3" 212+34.66 TO 214+81.76			110	
TOTAL	201	40	180	2

ROADWAY QUANTITIES

STATION	HOT MIX ASPHALT (TYPE A)	IMPORTED MATERIAL (SHOULDER BACKING)	COLD PLANE ASPHALT CONCRETE PAVEMENT
	TON	TON	SQYD
"A1" 10+00.00 TO 11+00.00	210	12	311
"A2" 113+00.00 TO 117+25.00	892	48	1424
"A3" 212+34.66 TO 214+81.76	514	28	835
FROM DRAINAGE	4.6		
TOTAL	1620.6	88	2570

PAVEMENT DELINEATION QUANTITIES

LOCATION		DETAIL No.	DETAIL LENGTH	THERMOPLASTIC TRAFFIC STRIPE (SPRAYABLE)			PAVEMENT MARKER (RETROREFLECTIVE -RECESSED)
				4" YELLOW (BROKEN 36-12)	4" YELLOW SOLID	4" WHITE SOLID	TYPE D YELLOW (TWO-WAY)
FROM	TO		LF	LF			EA
"A1" 9+70	"A1" 9+70	18	160	160	160		
"A1" 9+70	"A1" 9+70	27B	160			320	42
"A2" 112+70	"A2" 112+70	22	485		970		
"A2" 112+70	"A2" 112+70	27B	485			970	28
"A3" 212+04	"A3" 212+04	22	308		616		
"A3" 212+04	"A3" 212+04	27B	308			616	
SUBTOTAL				160	1746	1906	70
TOTAL				160	3652		70

SUMMARY OF QUANTITIES

Q-1

STATE OF CALIFORNIA - DEPARTMENT OF TRANSPORTATION

Caltrans DESIGN

FUNCTIONAL SUPERVISOR: STEVE TOPAL

CALCULATED-DESIGNED BY: BYRON STANLEY

CHECKED BY: WILL LESLIE

REVISED BY

DATE REVISED

LAST REVISION 10-28-08 DATE PLOTTED => 25-MAY-2010 TIME PLOTTED => 07:02

DIST	COUNTY	ROUTE	POST MILES TOTAL PROJECT	SHEET NO.	TOTAL SHEETS
01	Men	162	14.4/19.5	15	24

Raymond Don Tsztoo
REGISTERED CIVIL ENGINEER

January 18, 2008
PLANS APPROVAL DATE

REGISTERED PROFESSIONAL ENGINEER
Raymond Don Tsztoo
No. C37332
Exp. 6-30-08
CIVIL
STATE OF CALIFORNIA

The State of California or its officers or agents shall not be responsible for the accuracy or completeness of electronic copies of this plan sheet.

To accompany plans dated 5-24-10

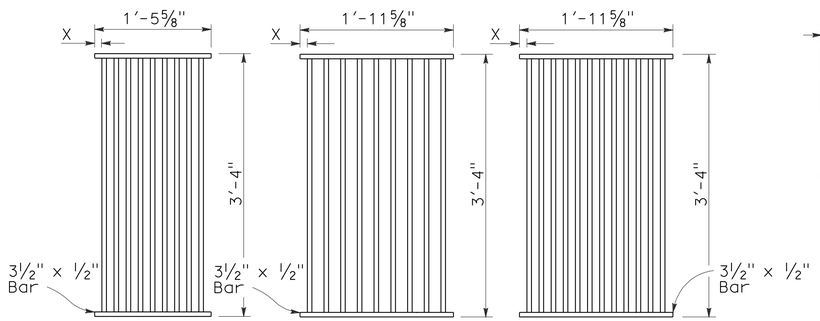

TYPE 18-9

1⅜" Clear spacing. Use within the roadbed on highways where bicycles and pedestrians are excluded.

TYPE 24-9

2" Clear spacing. Use in locations off the roadbed on all types of highways.

TYPE 24-12

1⅜" Clear spacing. Use within the roadbed on highways where bicycles and pedestrians are excluded.

RECTANGULAR GRATE DETAILS

(See table below)

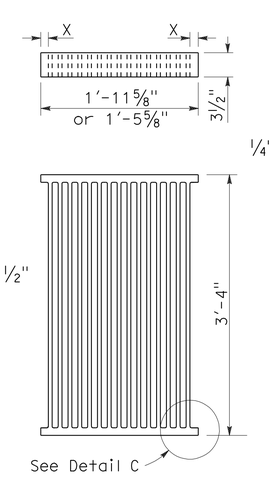

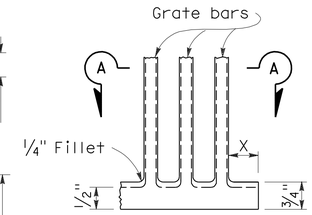

DETAIL C

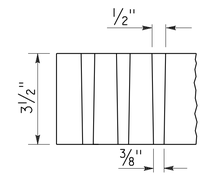

SECTION A-A

ALTERNATIVE CAST NODULAR IRON GRATE OR CAST STEEL GRATE

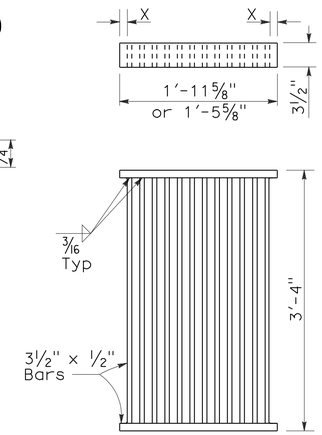

ALTERNATIVE WELDED GRATE

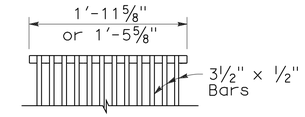

CAST END BLOCK

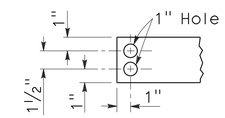

END OF BAR

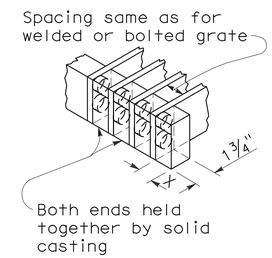

ALTERNATIVE CAST NODULAR IRON OR CAST STEEL END BLOCK GRATE

NOTES:

1. Grate type numbers refer to approximate width of grate in inches and number of bars, respectively.
2. Contractor has the option of using cast nodular iron, cast steel, welded, bolted, or cast end block grate.
3. See Special Provisions for requirements pertaining to galvanizing or asphalt dipping of grates and frames.
4. Rounded top of bars optional on all grates.
5. Pipe inlets with a grate shall be placed so that bars parallel direction of principle surface flow.
6. Full penetration butt welds may be substituted for the fillet welds on all anchors.
7. Standard square, hexagon, round or equivalent headed anchors may be substituted for the right angle hooks on the anchors shown on this plan.
8. Grate and frame weights are based on welded grates (weights of face angles, steps, protection bars, etc. are not included).

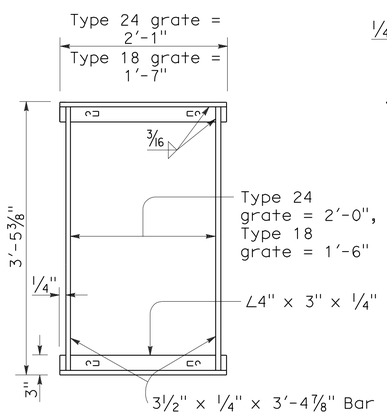

TYPICAL FRAME

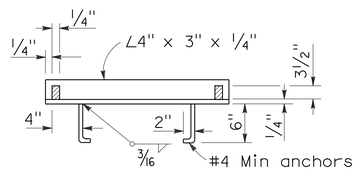

CROSS SECTION

(Thru frame)

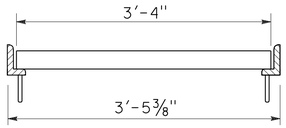

LONGITUDINAL SECTION

(Thru frame and grate)

RECTANGULAR FRAME DETAILS

(For all rectangular grates)

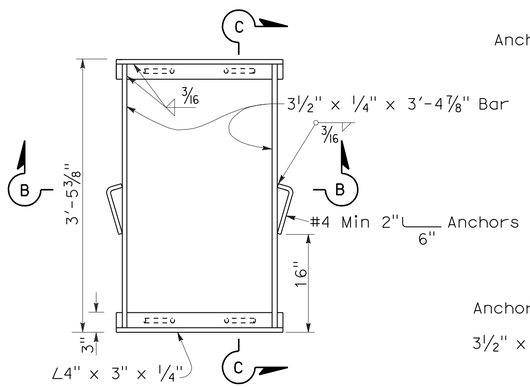

TYPICAL FRAME

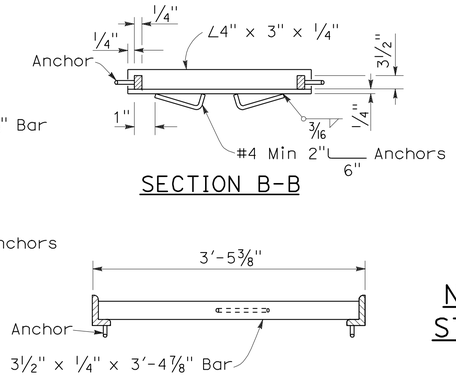

SECTION B-B

SECTION C-C

ALTERNATIVE ANCHOR FOR RECTANGULAR FRAME

(For details not shown, See Rectangular Frame Details)

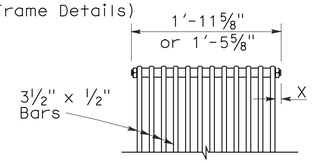

BOLTED END BLOCK

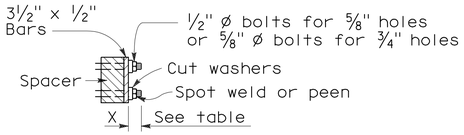

BOLTING DETAIL

ALTERNATIVE BOLTED GRATE

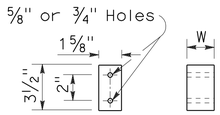

BAR SPACER

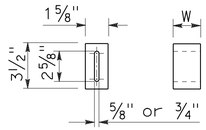

ALTERNATIVE SPACER

W = 1⅜" or 2"

GRATE BAR SPACING TABLE

TYPE	No. OF BARS	CLEAR BAR SPACING	X
18-9	9	1⅜"	1 1/16"
24-9	9	2"	1 9/16"
24-12	12	1⅜"	1¼"

INLET TYPE	COVER TYPE	WEIGHT LB
OS	PLATE	174
OL-7	PLATE	170
OL-10	PLATE	170
OL-14	PLATE	170
OL-21	PLATE	170
OCP	PLATE	112
OCPI	PLATE	112
OCPI	REDWOOD	42
OMP	PLATE	177
OMPI	PLATE	177

INLET TYPE	GRATE TYPE	No. OF GRATES	WEIGHT LB
GDO	24-12	2	634
GOL-7	24-12	1	326
GOL-10	24-12	1	326
GO,G1,G2,G3,G4 (TYPE 24)	24-9	1	263
	24-12	1	326
G4 (TYPE 18),G5,G6	18-9	1	249
GT1	18-9	2	498
GT2	18-9	2	498
GT3	24-12	2	652
GT4	24-12	2	652
TRASH RACK			22

BASIS FOR MISC IRON & STEEL FINAL PAY WEIGHTS FOR DRAINAGE INLETS

(See General Notes, No 8)

STATE OF CALIFORNIA
DEPARTMENT OF TRANSPORTATION

GRATE DETAILS

NO SCALE

RSP D77A DATED JANUARY 18, 2008 SUPERSEDES STANDARD PLAN D77A DATED MAY 1, 2006 - PAGE 155 OF THE STANDARD PLANS BOOK DATED MAY 2006.

REVISED STANDARD PLAN RSP D77A

2006 REVISED STANDARD PLAN RSP D77A

12-14-07

DIST	COUNTY	ROUTE	POST MILES TOTAL PROJECT	SHEET NO.	TOTAL SHEETS
01	Men	162	14.4/19.5	16	24

Randell D. Hiatt
REGISTERED CIVIL ENGINEER

June 6, 2008
PLANS APPROVAL DATE

REGISTERED PROFESSIONAL ENGINEER
Randell D. Hiatt
No. C50200
Exp. 6-30-09
CIVIL
STATE OF CALIFORNIA

The State of California or its officers or agents shall not be responsible for the accuracy or completeness of electronic copies of this plan sheet.

To accompany plans dated 5-24-10

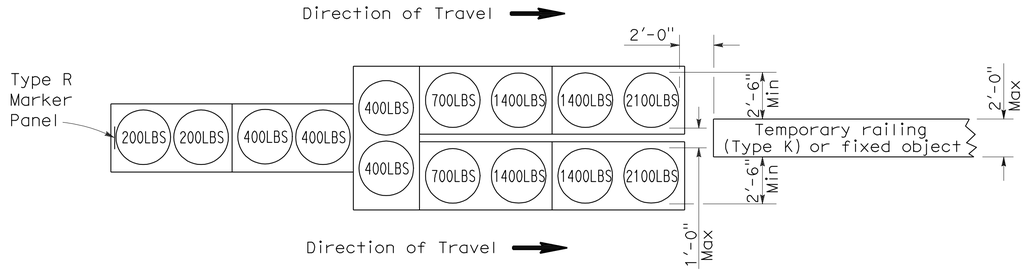

ARRAY 'TU14'

Approach speed 45 mph or more

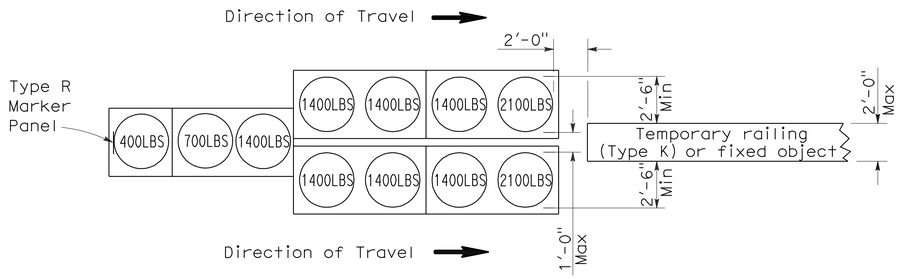

ARRAY 'TU11'

Approach speed less than 45 mph

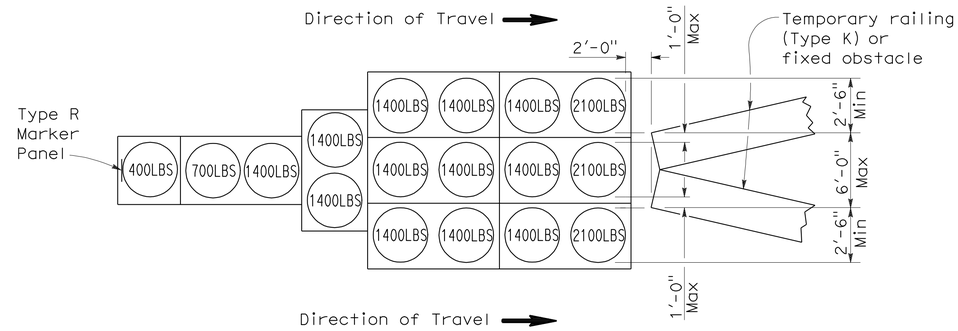

ARRAY 'TU17'

Approach speed less than 45 mph

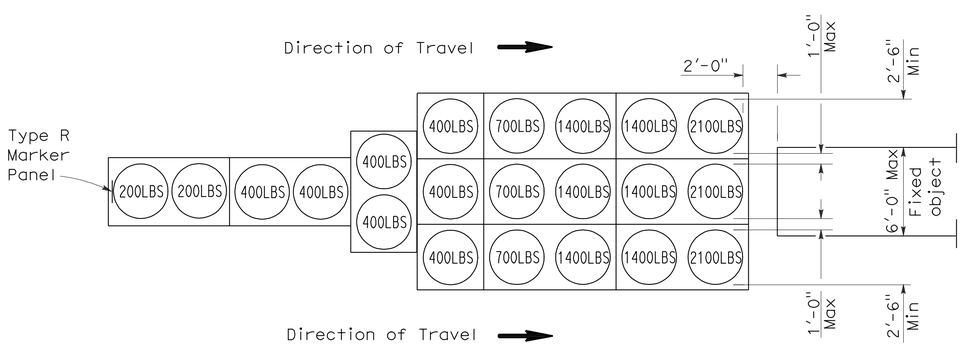

ARRAY 'TU21'

Approach speed 45 mph or more

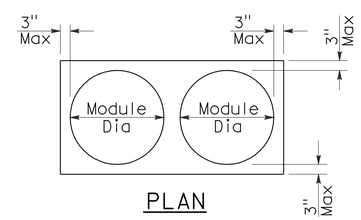

PLAN

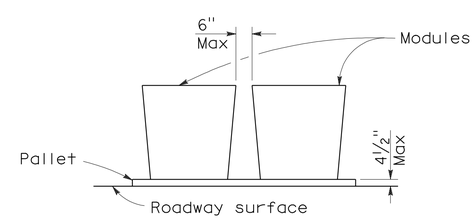

ELEVATION

CRASH CUSHION PALLET DETAIL

See Note 7

NOTES:

1. (XXX) Indicates sand filled module location and weight of sand in pounds for each module. Module spacing is based on the greater diameter of the module.
2. All sand weights are nominal.
3. Temporary crash cushion arrays shall not encroach on the traveled way.
4. Place the top of Type R marker panel 1" below the module lid.
5. Refer to Standard Plan A73B for marker details.
6. Approach speeds indicated conform to NCHRP 350 Report criteria.
7. Use of pallets is optional.

STATE OF CALIFORNIA
DEPARTMENT OF TRANSPORTATION

TEMPORARY CRASH CUSHION, SAND FILLED (UNIDIRECTIONAL)

NO SCALE

RSP T1A DATED JUNE 6, 2008 SUPERSEDES STANDARD PLAN T1A
DATED MAY 1, 2006 - PAGE 211 OF THE STANDARD PLANS BOOK DATED MAY 2006.

REVISED STANDARD PLAN RSP T1A

2006 REVISED STANDARD PLAN RSP T1A

DIST	COUNTY	ROUTE	POST MILES TOTAL PROJECT	SHEET NO.	TOTAL SHEETS
01	Men	162	14.4/19.5	17	24

Randell D. Hiatt
REGISTERED CIVIL ENGINEER

June 6, 2008
PLANS APPROVAL DATE

REGISTERED PROFESSIONAL ENGINEER
Randell D. Hiatt
No. C50200
Exp. 6-30-09
CIVIL
STATE OF CALIFORNIA

The State of California or its officers or agents shall not be responsible for the accuracy or completeness of electronic copies of this plan sheet.

To accompany plans dated 5-24-10

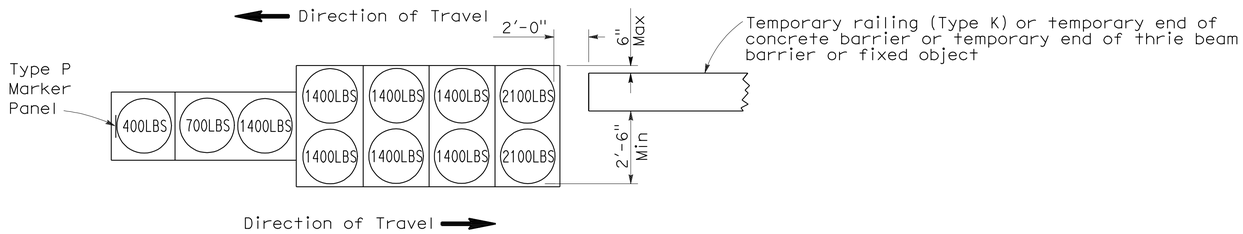

ARRAY 'TB11'

Approach speed less than 45 mph

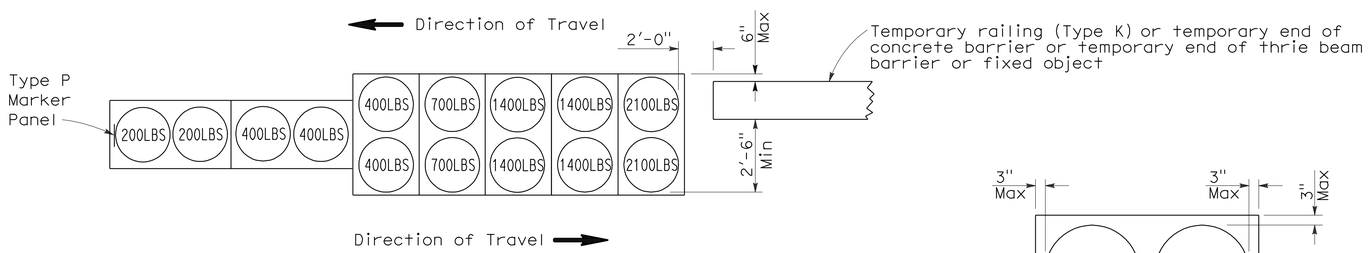

ARRAY 'TB14'

Approach speed 45 mph or more

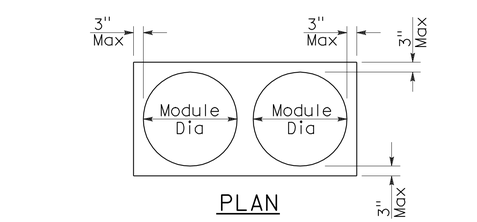

PLAN

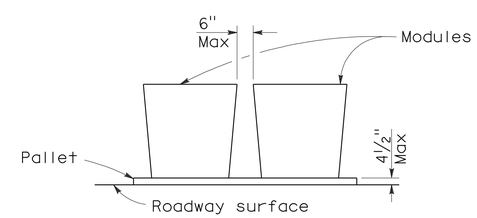

ELEVATION

CRASH CUSHION PALLET DETAIL

See Note 7

NOTES:

1. (XXX) Indicates sand filled module location and weight of sand in pounds for each module. Module spacing is based on the greater diameter of the module.
2. All sand weights are nominal.
3. Temporary crash cushion arrays shall not encroach on the traveled way.
4. Place the Type P marker panel so that the bottom of the panel rests upon the pallet.
5. Refer to Standard Plan A73B for marker details.
6. Approach speeds indicated conform to NCHRP 350 Report criteria.
7. Use of pallets is optional.

STATE OF CALIFORNIA
DEPARTMENT OF TRANSPORTATION

TEMPORARY CRASH CUSHION, SAND FILLED (BIDIRECTIONAL)

NO SCALE

RSP T1B DATED JUNE 6, 2008 SUPERSEDES STANDARD PLAN T1B
DATED MAY 1, 2006 - PAGE 212 OF THE STANDARD PLANS BOOK DATED MAY 2006.

REVISED STANDARD PLAN RSP T1B

2006 REVISED STANDARD PLAN RSP T1B

5-15-08

DIST	COUNTY	ROUTE	POST MILES TOTAL PROJECT	SHEET NO.	TOTAL SHEETS
01	Men	162	14.4/19.5	18	24

Randell D. Hiatt
REGISTERED CIVIL ENGINEER

June 6, 2008
PLANS APPROVAL DATE

REGISTERED PROFESSIONAL ENGINEER
Randell D. Hiatt
No. C50200
Exp. 6-30-09
CIVIL
STATE OF CALIFORNIA

The State of California or its officers or agents shall not be responsible for the accuracy or completeness of electronic copies of this plan sheet.

To accompany plans dated 5-24-10

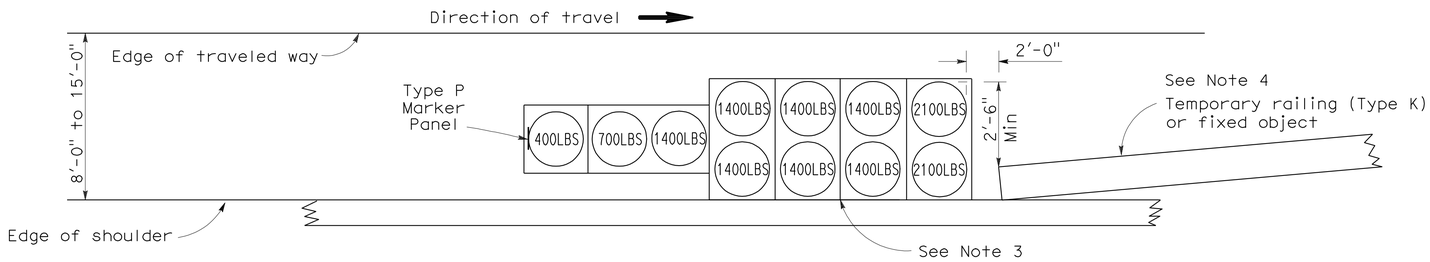

ARRAY 'TS11'

Approach speed less than 45 mph
See Note 9

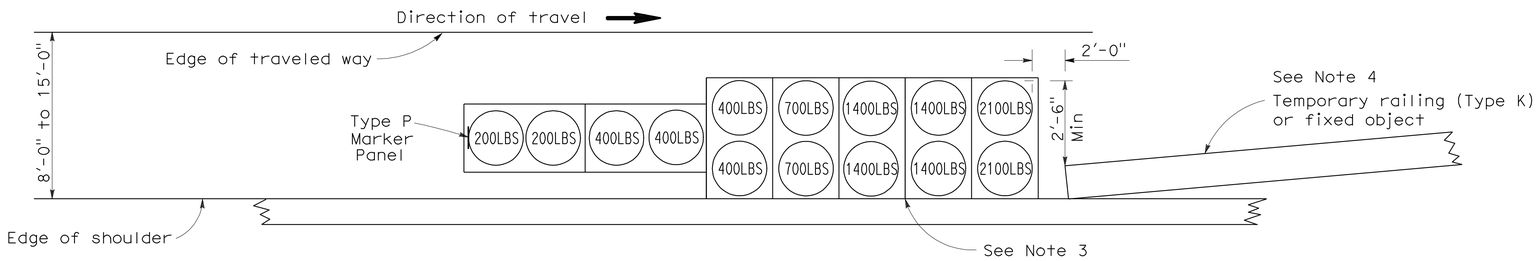

ARRAY 'TS14'

Approach speed 45 mph or more
See Note 9

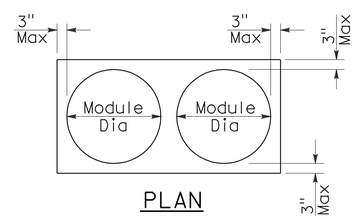

PLAN

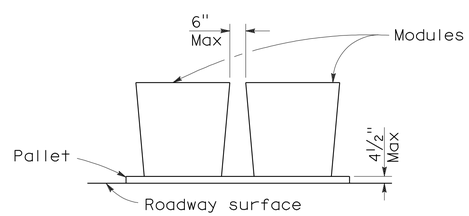

ELEVATION

CRASH CUSHION PALLET DETAIL

See Note 11

NOTES:

1. (XXX) Indicates sand filled module location and weight of sand in pounds for each module. Module spacing is based on the greater diameter of the module.
2. All sand weights are nominal.
3. The temporary crash cushion arrays shown on this plan shall be used only in locations where there will be traffic on one side of the temporary crash cushion array.
4. If the fixed object or approach end of the temporary railing is less than 15'-0" from the edge of traveled way, a temporary crash cushion is required in a construction or work zone.
5. Temporary crash cushion arrays shall not encroach on the traveled way.
6. Arrays for median shoulders shall conform to details shown on this plan for outside shoulders.
7. Place the Type P marker panel so that the bottom of the panel rests upon the pallet and faces traffic.
8. Refer to Standard Plan A73B for marker details.
9. For shoulder widths less than 8'-0", appropriate approved crash cushion protection, other than sand filled modules, shall be provided at fixed objects and at approach ends of temporary railing. The specific type of crash cushion shall be as shown on the project plans or as specified in the Special Provisions, or if not shown on the project plans or specified in the Special Provisions, shall be as approved by the Engineer.
10. Approach speeds indicated conform to NCHRP 350 Report criteria.
11. Use of pallets is optional.

STATE OF CALIFORNIA
DEPARTMENT OF TRANSPORTATION

TEMPORARY CRASH CUSHION, SAND FILLED (SHOULDER INSTALLATIONS)

NO SCALE

RSP T2 DATED JUNE 6, 2008 SUPERSEDES STANDARD PLAN T2
DATED MAY 1, 2006 - PAGE 213 OF THE STANDARD PLANS BOOK DATED MAY 2006.

REVISED STANDARD PLAN RSP T2

2006 REVISED STANDARD PLAN RSP T2

5-15-08

DIST	COUNTY	ROUTE	POST MILES TOTAL PROJECT	SHEET NO.	TOTAL SHEETS
01	Men	162	14.4/19.5	19	24

Robert B Schott
LICENSED LANDSCAPE ARCHITECT

April 3, 2009
PLANS APPROVAL DATE

LICENSED LANDSCAPE ARCHITECT
Robert B. Schott 3695
Signature
11-30-10
Renewal Date
2-25-09
Date
STATE OF CALIFORNIA

The State of California or its officers or agents shall not be responsible for the accuracy or completeness of electronic copies of this plan sheet.

To accompany plans dated 5-24-10

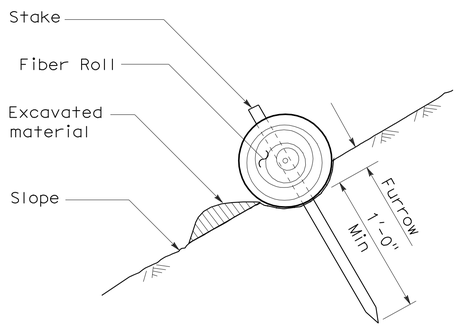

SECTION

TEMPORARY FIBER ROLL (TYPE 1)

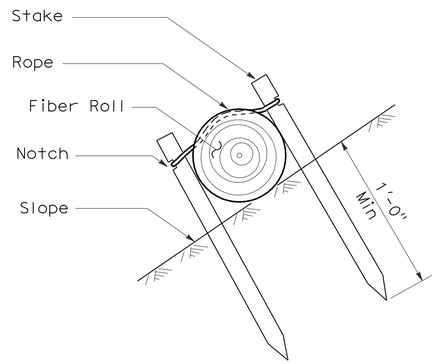

SECTION

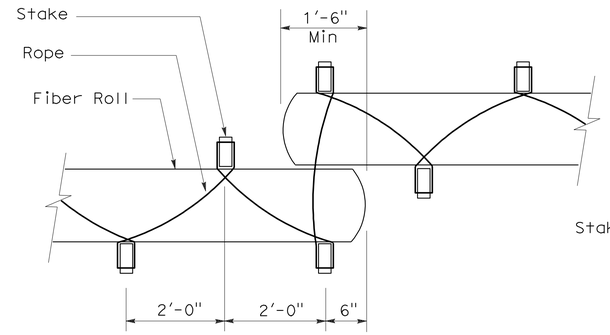

PLAN

TEMPORARY FIBER ROLL (TYPE 2)

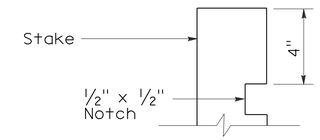

ELEVATION

STAKE NOTCH DETAIL

NOTES:

1. Temporary fiber roll spacing varies depending upon slope inclination.
2. Installations shown in the perspectives are for slope inclination of 10:1 and steeper.

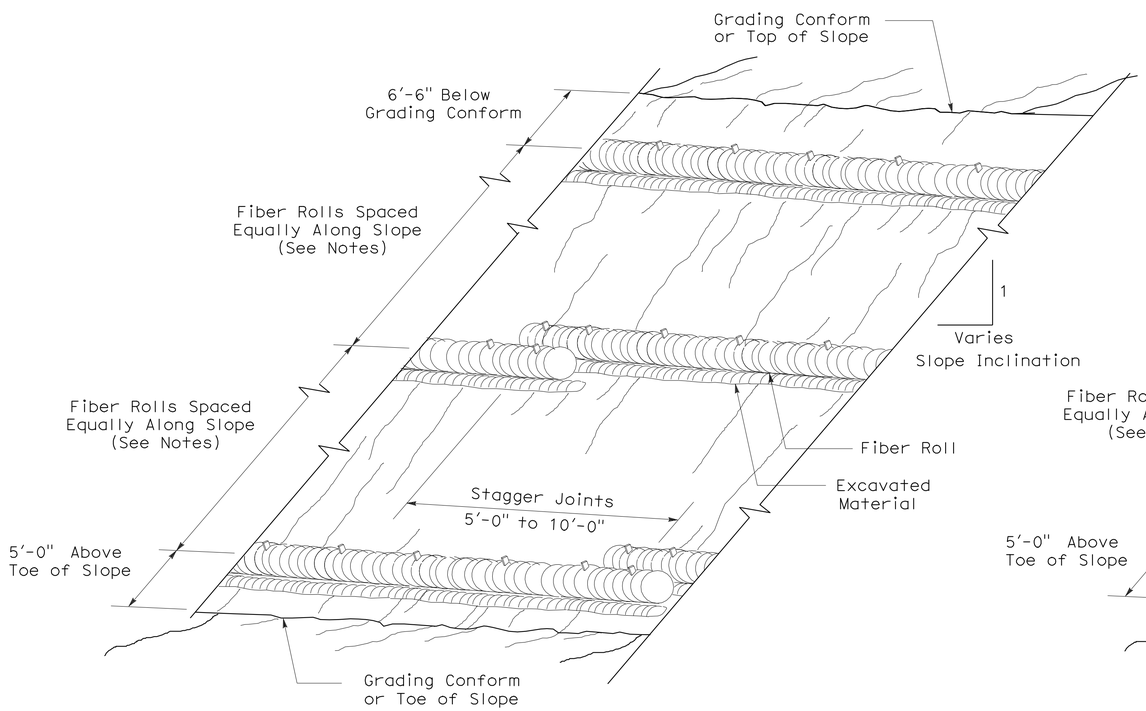

PERSPECTIVE

TEMPORARY FIBER ROLL (TYPE 1)

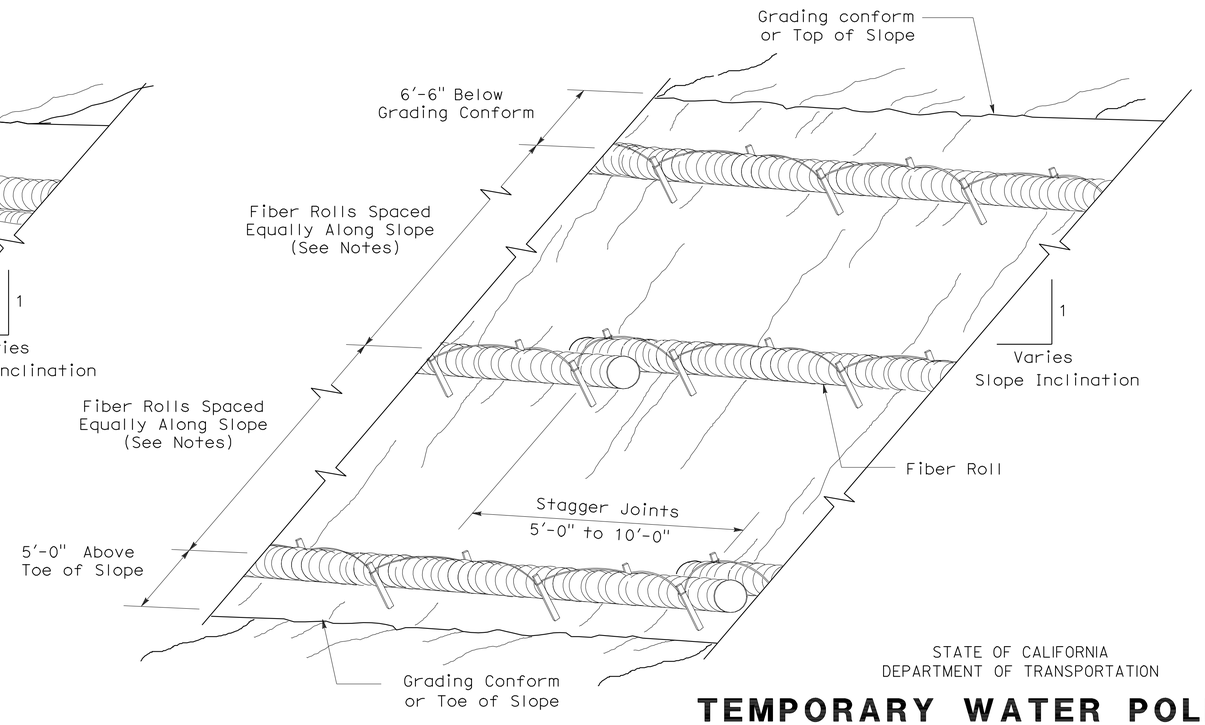

PERSPECTIVE

TEMPORARY FIBER ROLL (TYPE 2)

STATE OF CALIFORNIA
DEPARTMENT OF TRANSPORTATION

TEMPORARY WATER POLLUTION CONTROL DETAILS (TEMPORARY FIBER ROLL)

NO SCALE

RSP T56 DATED APRIL 3, 2009 SUPERSEDES STANDARD PLAN T56 DATED MAY 1, 2006 - PAGE 232 OF THE STANDARD PLANS BOOK DATED MAY 2006.

REVISED STANDARD PLAN RSP T56

2006 REVISED STANDARD PLAN RSP T56

2-23-09

DIST	COUNTY	ROUTE	POST MILES TOTAL PROJECT	SHEET NO.	TOTAL SHEETS
01	Men	162	14.4/19.5	20	24

LICENSED LANDSCAPE ARCHITECT

August 15, 2008
PLANS Approval DATE

The State of California or its officers or agents shall not be responsible for the accuracy or completeness of electronic copies of this plan sheet.

LICENSED LANDSCAPE ARCHITECT — Robert B. Schott — Signature — 11-04-08 Renewal Date — 08-11-08 Date — STATE OF CALIFORNIA

To accompany plans dated 5-24-10

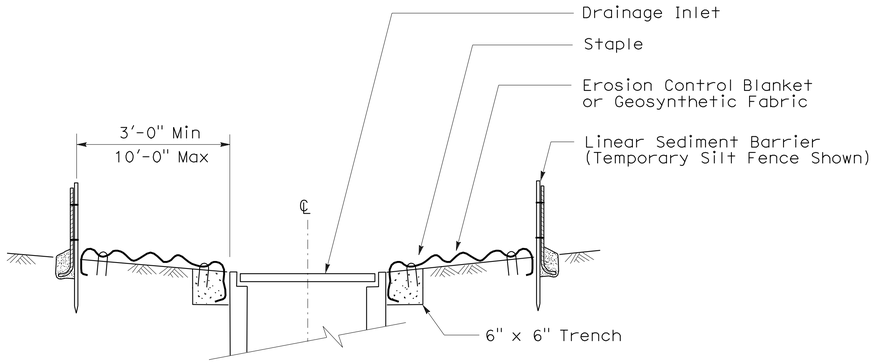

SECTION A-A

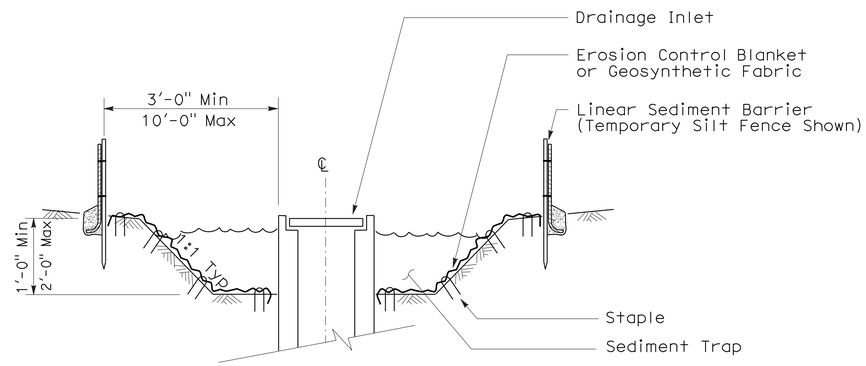

SECTION B-B

NOTES:

1. See Standard Plan T51 for Temporary Silt Fence.
2. Dimensions may vary to fit field conditions.

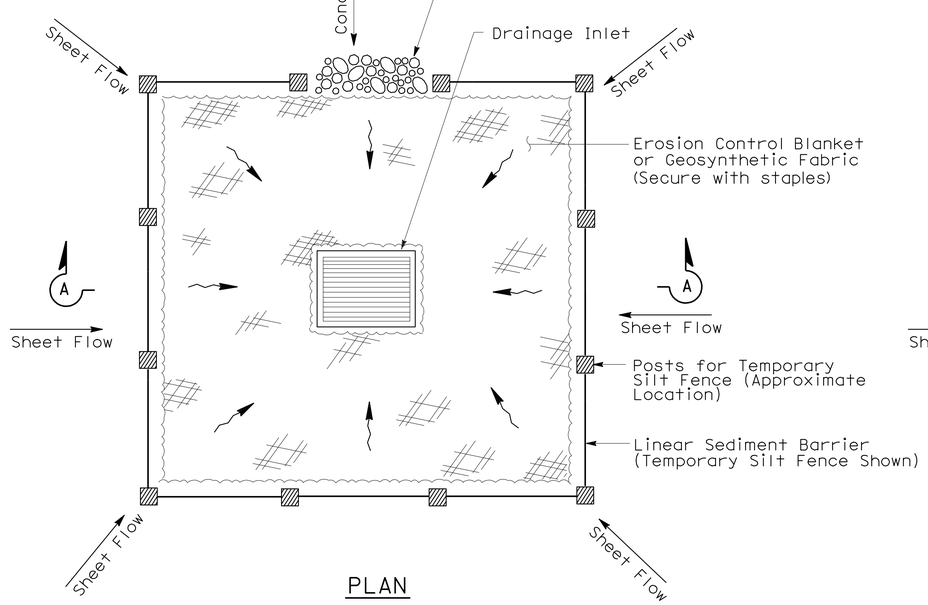

PLAN

TEMPORARY DRAINAGE INLET PROTECTION (TYPE 1)

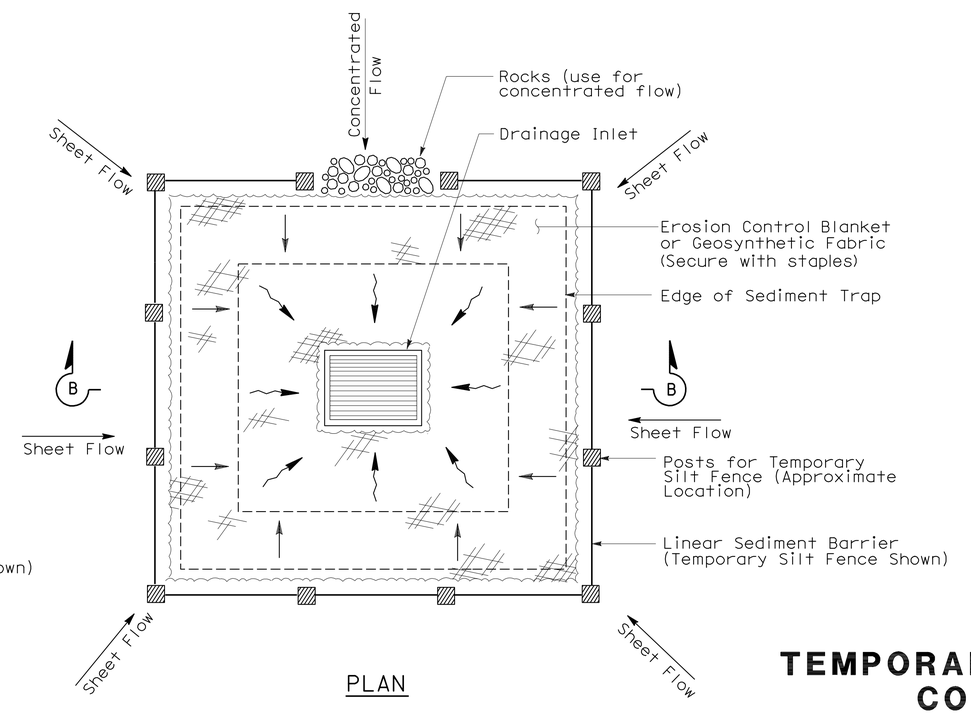

PLAN

TEMPORARY DRAINAGE INLET PROTECTION (TYPE 2) (EXCAVATED SEDIMENT TRAP)

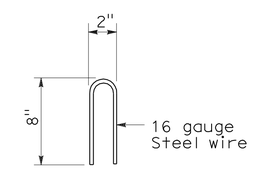

STAPLE DETAIL

STATE OF CALIFORNIA
DEPARTMENT OF TRANSPORTATION

TEMPORARY WATER POLLUTION CONTROL DETAILS (TEMPORARY DRAINAGE INLET PROTECTION)

NO SCALE

NSP T61 DATED AUGUST 15, 2008 SUPPLEMENTS THE STANDARD PLANS BOOK DATED MAY 2006.

NEW STANDARD PLAN NSP T61

2006 NEW STANDARD PLAN NSP T61

7-11-08

DIST	COUNTY	ROUTE	POST MILES TOTAL PROJECT	SHEET NO.	TOTAL SHEETS
01	Men	162	14.4/19.5	21	24

Robert B Schott
LICENSED LANDSCAPE ARCHITECT

August 15, 2008
PLANS APPROVAL DATE

LICENSED LANDSCAPE ARCHITECT
Robert B. Schott 3695
Signature
11-04-08
Renewal Date
08-11-08
Date
STATE OF CALIFORNIA

The State of California or its officers or agents shall not be responsible for the accuracy or completeness of electronic copies of this plan sheet.

To accompany plans dated 5-24-10

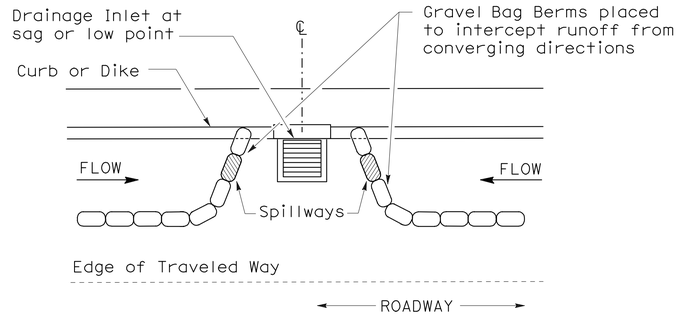

PLAN

CONFIGURATION FOR SAG POINT INLET (GRAVEL BAG BERM)

GRAVEL BAG BERM (TYPE 3A) SPACING TABLE

SLOPE OF ROADWAY (PERCENT)	1 to 3.9	4 to 5.9	6 to 7.9	8 to 10	10+
INTERVAL BETWEEN BERM	100′	75′	50′	25′	12′

For slope of less than 1%, install barriers only if erosion/sediment is prevalent

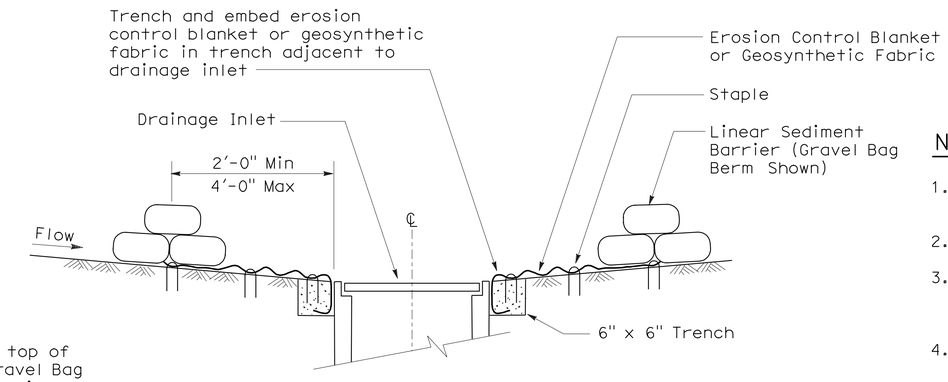

SECTION A-A

NOTES:

1. Place safety cones adjacent to drainage inlet protection.
2. Dimensions may vary to fit field conditions.
3. Install a minimum of 3 gravel bag berms upstream of each drainage inlet to be protected.
4. Position erosion control blanket or geosynthetic fabric at edge of concrete apron and secure in trench.
5. Erosion control blanket or geosynthetic fabric is not required if the area adjacent to the drainage inlet is vegetated or paved.

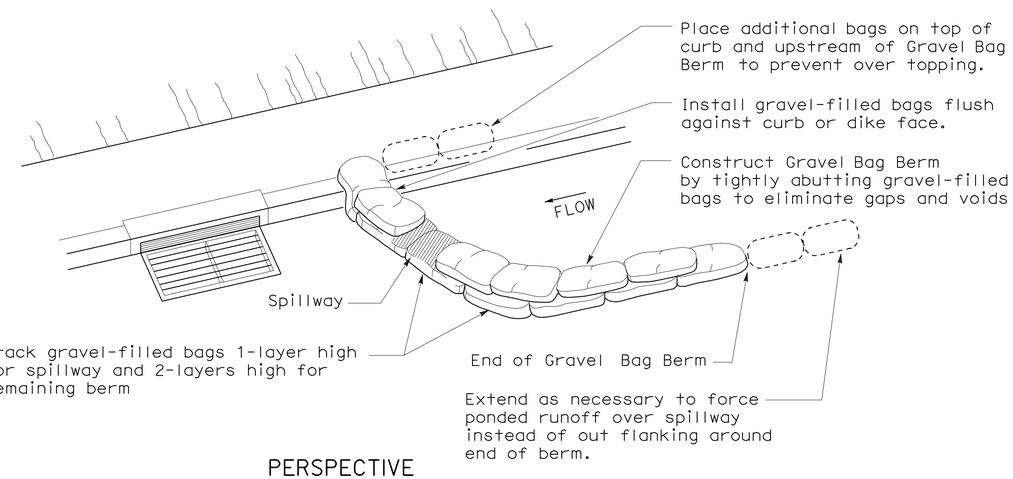

PERSPECTIVE

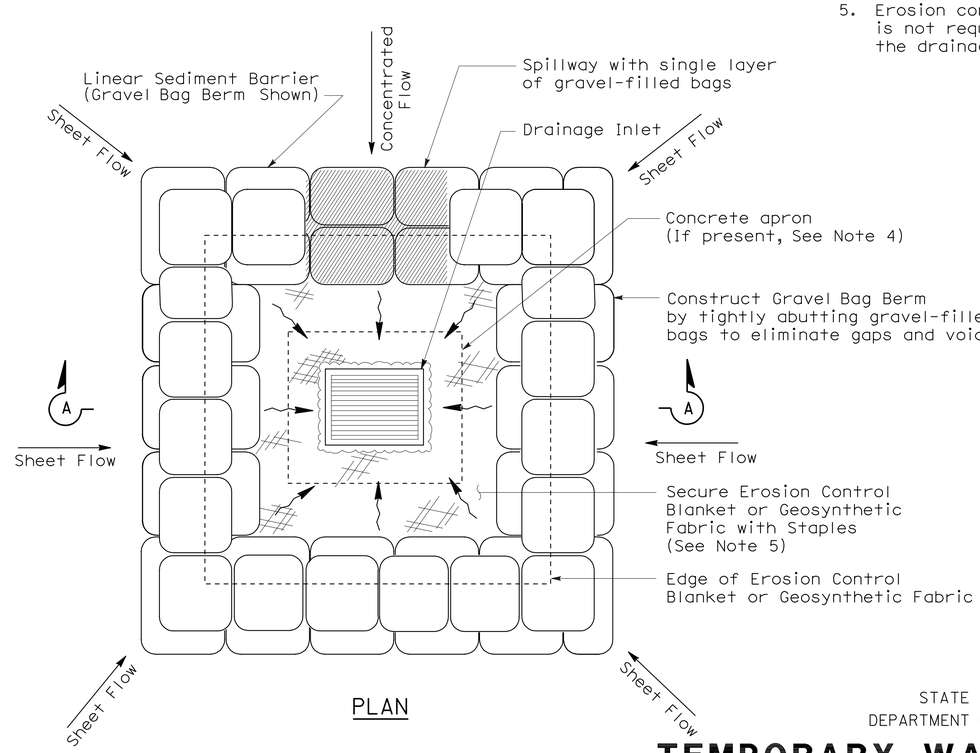

PLAN

TEMPORARY DRAINAGE INLET PROTECTION (TYPE 3B)

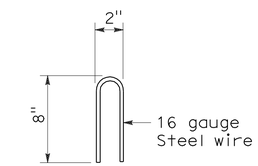

STAPLE DETAIL

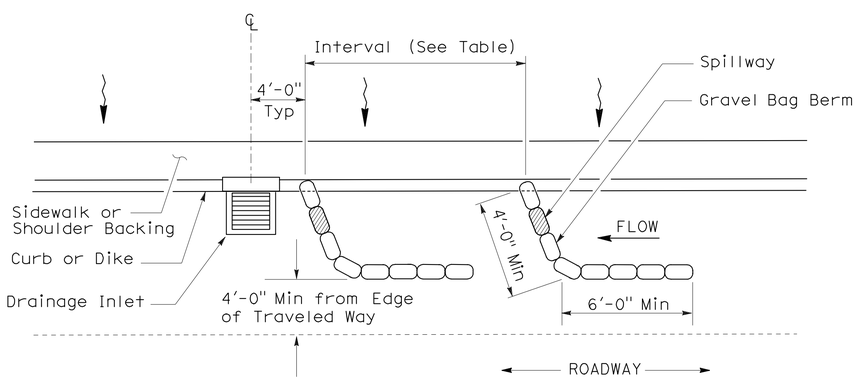

PLAN

TEMPORARY DRAINAGE INLET PROTECTION (TYPE 3A) (GRAVEL BAG BERM)

STATE OF CALIFORNIA
DEPARTMENT OF TRANSPORTATION

TEMPORARY WATER POLLUTION CONTROL DETAILS (TEMPORARY DRAINAGE INLET PROTECTION)

NO SCALE

NSP T62 DATED AUGUST 15, 2008 SUPPLEMENTS
THE STANDARD PLANS BOOK DATED MAY 2006.

NEW STANDARD PLAN NSP T62

2006 NEW STANDARD PLAN NSP T62

7-11-08

DIST	COUNTY	ROUTE	POST MILES TOTAL PROJECT	SHEET NO.	TOTAL SHEETS
01	Men	162	14.4/19.5	22	24

LICENSED LANDSCAPE ARCHITECT

August 15, 2008
PLANS APPROVAL DATE

The State of California or its officers or agents shall not be responsible for the accuracy or completeness of electronic copies of this plan sheet.

LICENSED LANDSCAPE ARCHITECT — Robert B. Schott — Signature — 11-04-08 Renewal Date — 08-11-08 Date — STATE OF CALIFORNIA

To accompany plans dated 5-24-10

FLEXIBLE SEDIMENT BARRIER SPACING TABLE

SLOPE OF ROADWAY (PERCENT)	0 to 0.9	1 to 1.9	2 to 2.9	3 to 4	5+
INTERVAL BETWEEN BARRIERS	50′	35′	30′	25′	20′
ANGLE FROM FACE OF CURB	70°	70°	70°	45°	45°
SUGGESTED BARRIER LENGTH	6′	6′	6′	6′	6′

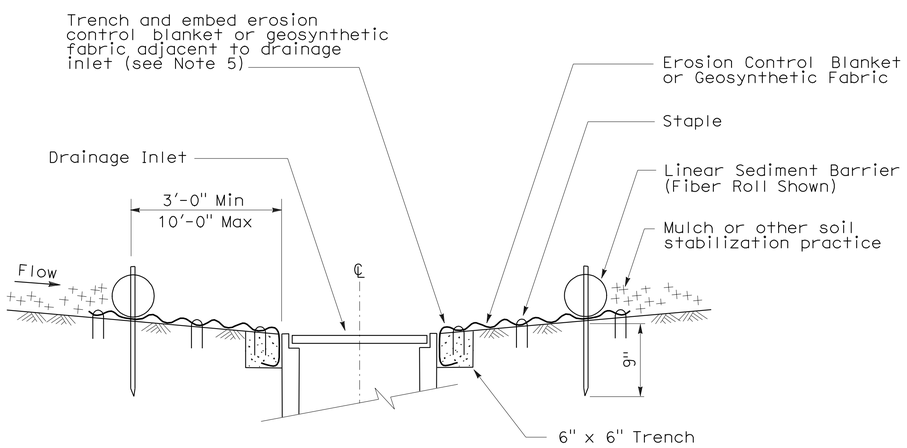

SECTION A-A

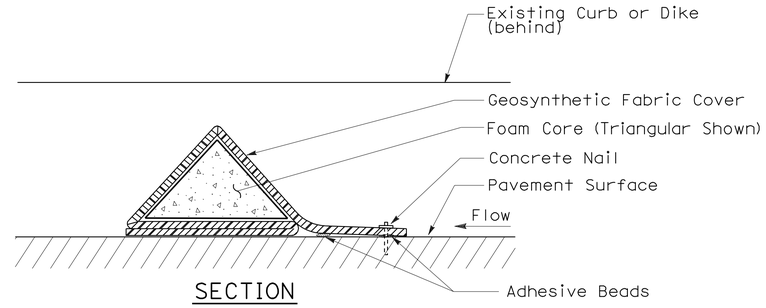

SECTION

FLEXIBLE SEDIMENT BARRIER DETAIL (FOAM BARRIER SHOWN)

NOTES:

1. See Standard Plan T51 for Temporary Silt Fence.
2. Dimensions may vary to fit field conditions.
3. Install a minimum of 3 flexible sediment barriers upstream of each drainage inlet to be protected.
4. Position erosion control blanket or geosynthetic fabric at edge of concrete apron and secure in trench.
5. Erosion control blanket or geosynthetic fabric is not required if the area adjacent to the drainage inlet is vegetated.

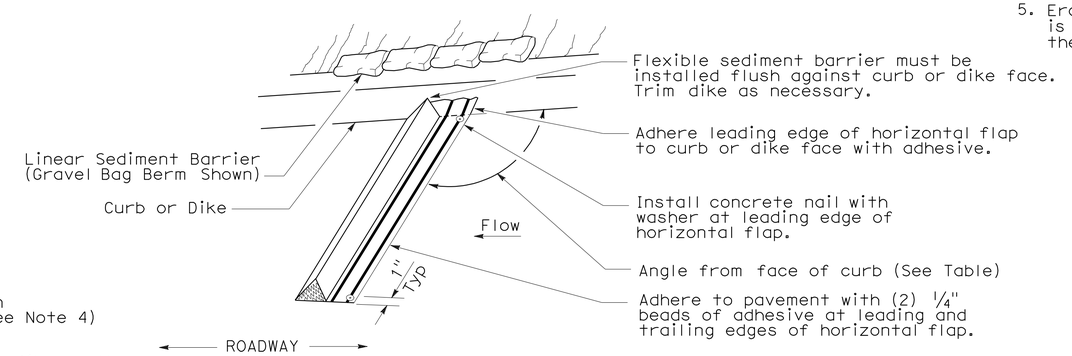

PERSPECTIVE

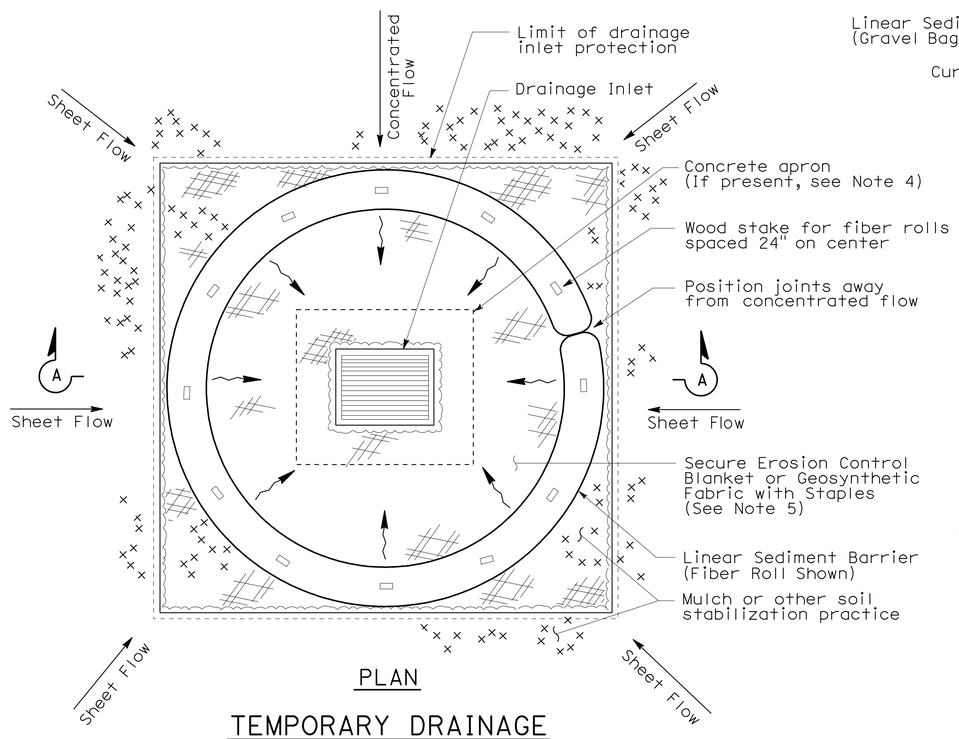

PLAN

TEMPORARY DRAINAGE INLET PROTECTION (TYPE 4A)

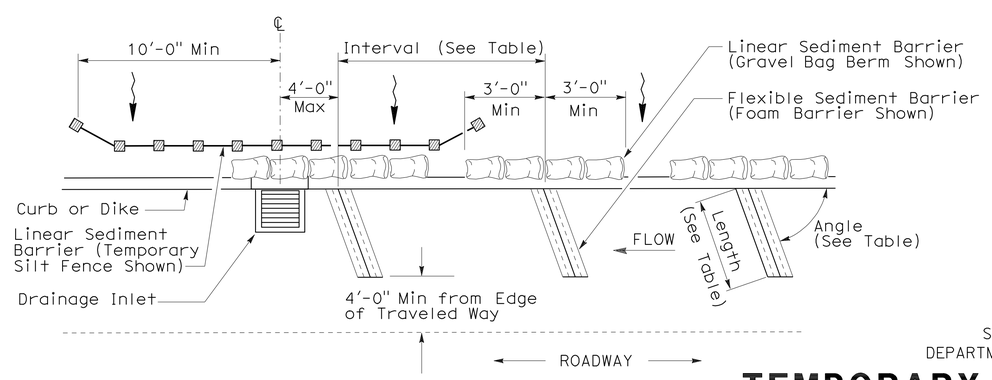

PLAN

TEMPORARY DRAINAGE INLET PROTECTION (TYPE 4B) FLEXIBLE SEDIMENT BARRIER

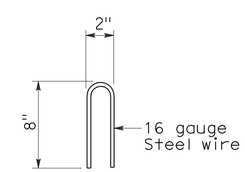

STAPLE DETAIL

STATE OF CALIFORNIA
DEPARTMENT OF TRANSPORTATION

TEMPORARY WATER POLLUTION CONTROL DETAILS (TEMPORARY DRAINAGE INLET PROTECTION)

NO SCALE

NSP T63 DATED AUGUST 15, 2008 SUPPLEMENTS THE STANDARD PLANS BOOK DATED MAY 2006.

NEW STANDARD PLAN NSP T63

2006 NEW STANDARD PLAN NSP T63

7-11-08

DIST	COUNTY	ROUTE	POST MILES TOTAL PROJECT	SHEET NO.	TOTAL SHEETS
01	Men	162	14.4/19.5	23	24

LICENSED LANDSCAPE ARCHITECT

August 15, 2008
PLANS APPROVAL DATE

The State of California or its officers or agents shall not be responsible for the accuracy or completeness of electronic copies of this plan sheet.

LICENSED LANDSCAPE ARCHITECT — Robert B. Schott — Signature — 11-04-08 Renewal Date — 08-11-08 Date — STATE OF CALIFORNIA

To accompany plans dated 5-24-10

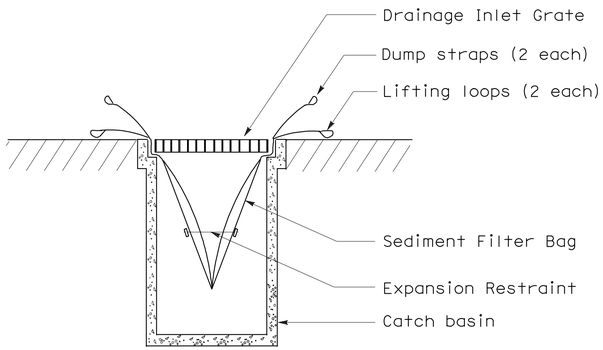

SECTION B-B

SEDIMENT FILTER BAG DETAIL

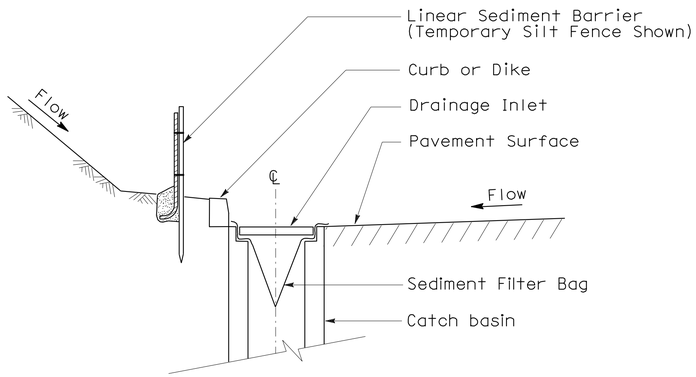

SECTION A-A

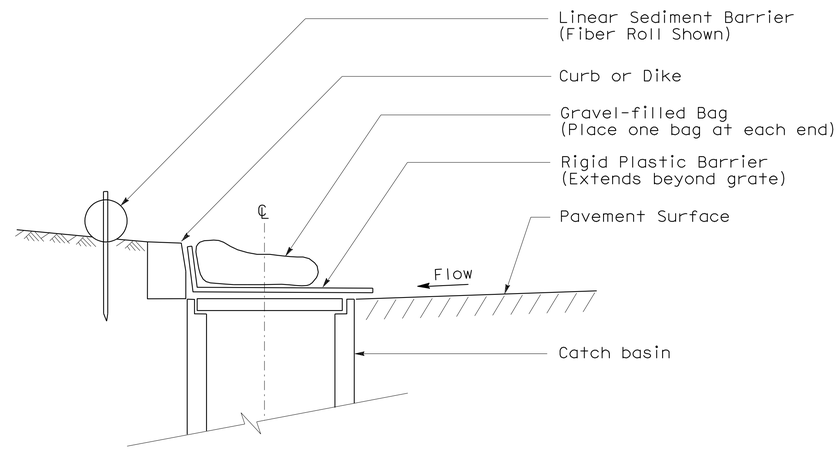

SECTION

TEMPORARY DRAINAGE INLET PROTECTION (TYPE 6A) (CATCH BASIN WITH GRATE)

NOTES:

1. See Standard Plan T51 for Temporary Silt Fence.
2. Dimensions may vary to fit field conditions.

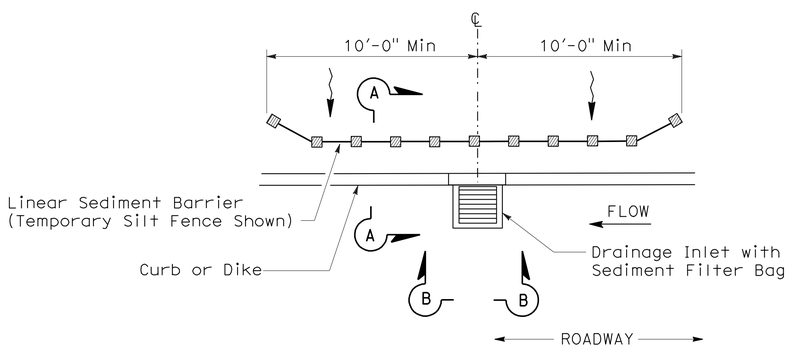

PLAN

TEMPORARY DRAINAGE INLET PROTECTION (TYPE 5) (SEDIMENT FILTER BAG)

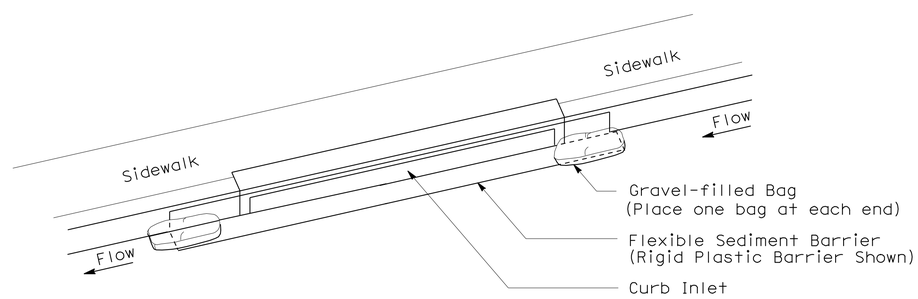

PERSPECTIVE

TEMPORARY DRAINAGE INLET PROTECTION (TYPE 6B) (CURB INLET WITHOUT GRATE)

STATE OF CALIFORNIA
DEPARTMENT OF TRANSPORTATION

TEMPORARY WATER POLLUTION CONTROL DETAILS (TEMPORARY DRAINAGE INLET PROTECTION)

NO SCALE

NSP T64 DATED AUGUST 15, 2008 SUPPLEMENTS THE STANDARD PLANS BOOK DATED MAY 2006.

NEW STANDARD PLAN NSP T64

2006 NEW STANDARD PLAN NSP T64

7-11-08

DIST	COUNTY	ROUTE	POST MILES TOTAL PROJECT	SHEET NO.	TOTAL SHEETS
01	Men	162	14.4/19.5	24	24

LICENSED LANDSCAPE ARCHITECT

April 3, 2009
PLANS APPROVAL DATE

LICENSED LANDSCAPE ARCHITECT
Robert B. Schott 3025
Signature
11-30-10
Renewal Date
2-25-09
Date
STATE OF CALIFORNIA

The State of California or its officers or agents shall not be responsible for the accuracy or completeness of electronic copies of this plan sheet.

To accompany plans dated 5-24-10

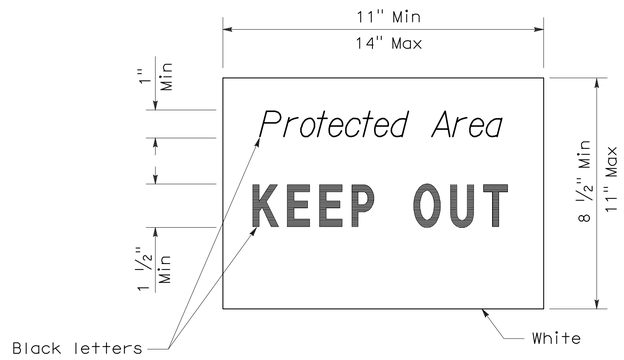

SIGN DETAIL

NOTE:

1. Temporary silt fence and temporary straw bale barrier shown for reference purposes only.

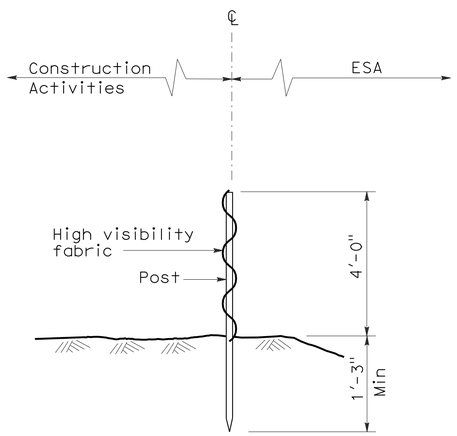

SECTION
TEMPORARY FENCE (TYPE ESA)

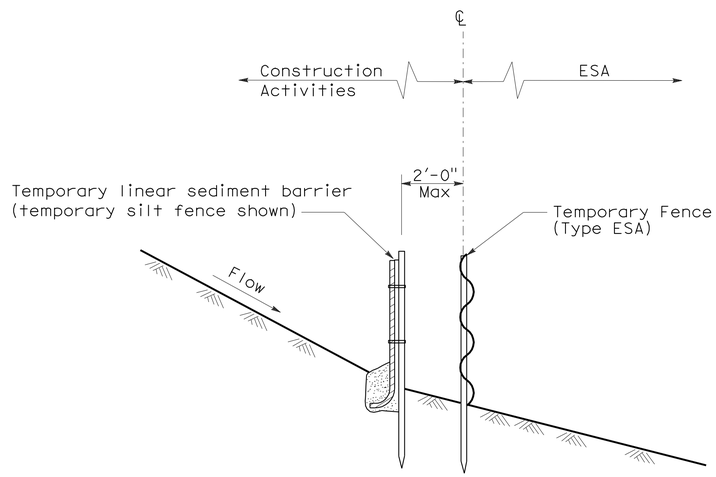

SECTION
PLACEMENT DETAIL
FOR TEMPORARY LINEAR SEDIMENT BARRIER
USED WITH TEMPORARY
FENCE (TYPE ESA)
(See Note 1)

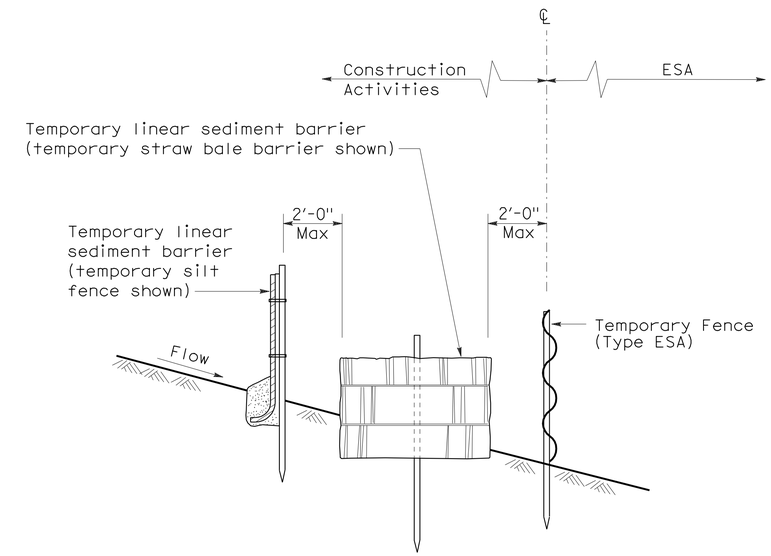

SECTION
PLACEMENT DETAIL
FOR TEMPORARY SILT FENCE
AND TEMPORARY STRAW BALE BARRIER
USED WITH TEMPORARY FENCE (TYPE ESA)
(See Note 1)

STATE OF CALIFORNIA
DEPARTMENT OF TRANSPORTATION

TEMPORARY WATER POLLUTION CONTROL DETAILS [TEMPORARY FENCE (TYPE ESA)]

NO SCALE

NSP T65 DATED APRIL 3, 2009 SUPPLEMENTS
THE STANDARD PLANS BOOK DATED MAY 2006.

NEW STANDARD PLAN NSP T65

2006 NEW STANDARD PLAN NSP T65