Dist	COUNTY	ROUTE	POST MILES TOTAL PROJECT	SHEET No.	TOTAL SHEETS
01	Hum	299	0.0/43.0	1	59

ACNHG-P299-(172)E

STATE OF CALIFORNIA
DEPARTMENT OF TRANSPORTATION

PROJECT PLANS FOR CONSTRUCTION ON
STATE HIGHWAY

IN HUMBOLDT COUNTY AT VARIOUS LOCATIONS FROM ROUTE 299/101 SEPARATION TO TRINITY COUNTY LINE

TO BE SUPPLEMENTED BY STANDARD PLANS DATED MAY 2006

INDEX OF PLANS

SHEET No.	DESCRIPTION
1	TITLE AND LOCATION MAP
2	LOCATIONS OF CONTRUCTION
3-6	CONSTRUCTION DETAILS
7-8	CONSTRUCTION AREA SIGNS
9-10	TRAFFIC HANDLING DETAILS
11-23	SUMMARY OF QUANTITIES
24-59	REVISED AND/OR NEW STANDARD PLANS

THE STANDARD PLANS LIST APPLICABLE TO THIS CONTRACT IS INCLUDED IN THE NOTICE TO BIDDERS AND SPECIAL PROVISIONS BOOK.

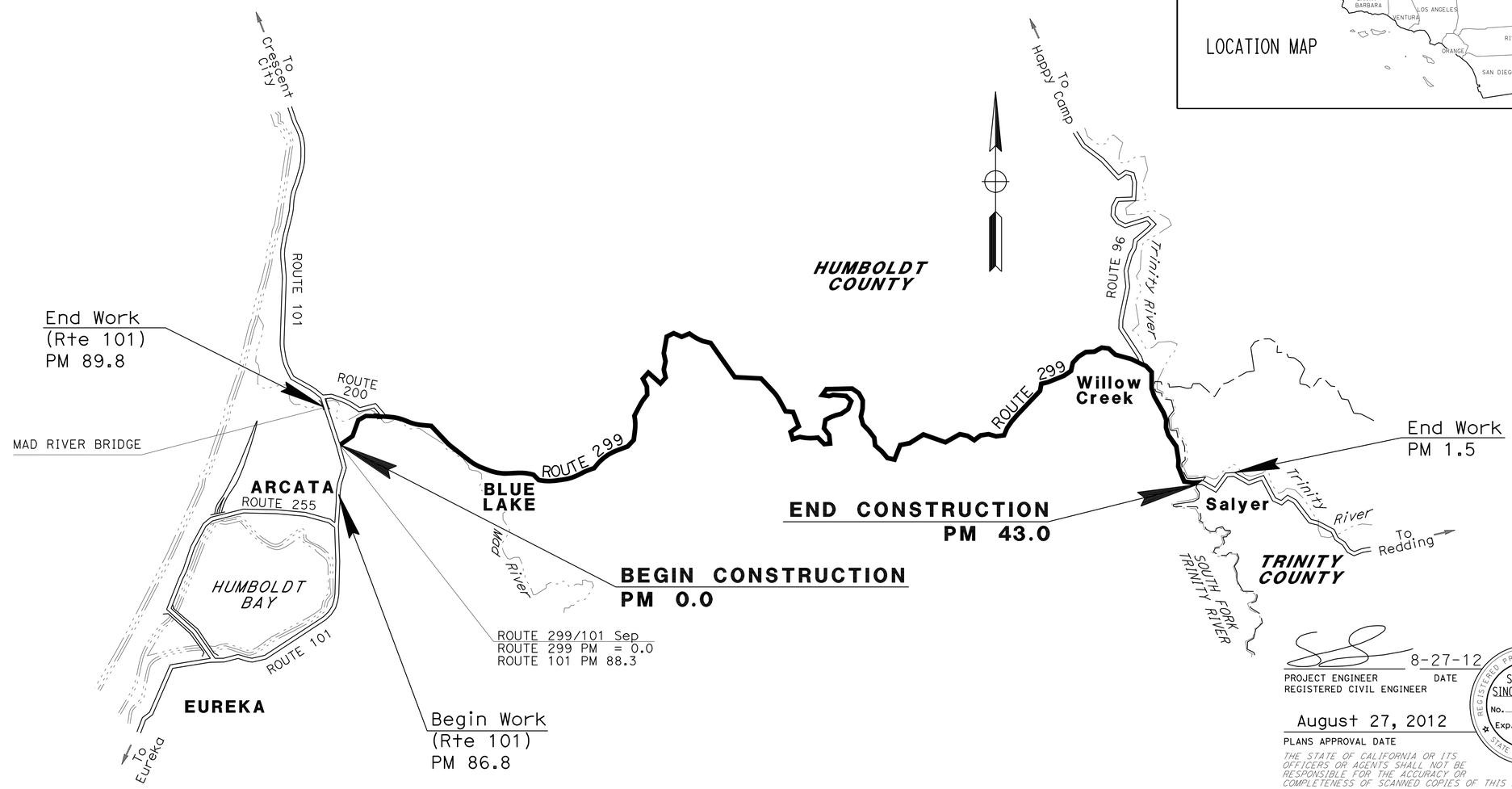

NO SCALE

THE CONTRACTOR SHALL POSSESS THE CLASS (OR CLASSES) OF LICENSE AS SPECIFIED IN THE "NOTICE TO BIDDERS."

8-27-12
PROJECT ENGINEER DATE
REGISTERED CIVIL ENGINEER

August 27, 2012
PLANS APPROVAL DATE

REGISTERED PROFESSIONAL ENGINEER
SUKHDEEP SINGH SANDHER
No. 74893
Exp. 12-31-13
CIVIL
STATE OF CALIFORNIA

THE STATE OF CALIFORNIA OR ITS OFFICERS OR AGENTS SHALL NOT BE RESPONSIBLE FOR THE ACCURACY OR COMPLETENESS OF SCANNED COPIES OF THIS PLAN SHEET.

CONTRACT No.	01-463914
PROJECT ID	0100020435

LAST REVISION 01-26-12
DATE PLOTTED => 11-SEP-2012
TIME PLOTTED => 08:13

PROJECT MANAGER: KIM FLOYD
DESIGN ENGINEER: KEN KEATON

Dist	COUNTY	ROUTE	POST MILES TOTAL PROJECT	SHEET No.	TOTAL SHEETS
01	Hum	299	0.0/43.0	2	59

8-27-12
REGISTERED CIVIL ENGINEER DATE

8-27-12
PLANS APPROVAL DATE

REGISTERED PROFESSIONAL ENGINEER
SUKHDEEP SINGH SANDHER
No. 74893
Exp. 12-31-13
CIVIL
STATE OF CALIFORNIA

THE STATE OF CALIFORNIA OR ITS OFFICERS OR AGENTS SHALL NOT BE RESPONSIBLE FOR THE ACCURACY OR COMPLETENESS OF SCANNED COPIES OF THIS PLAN SHEET.

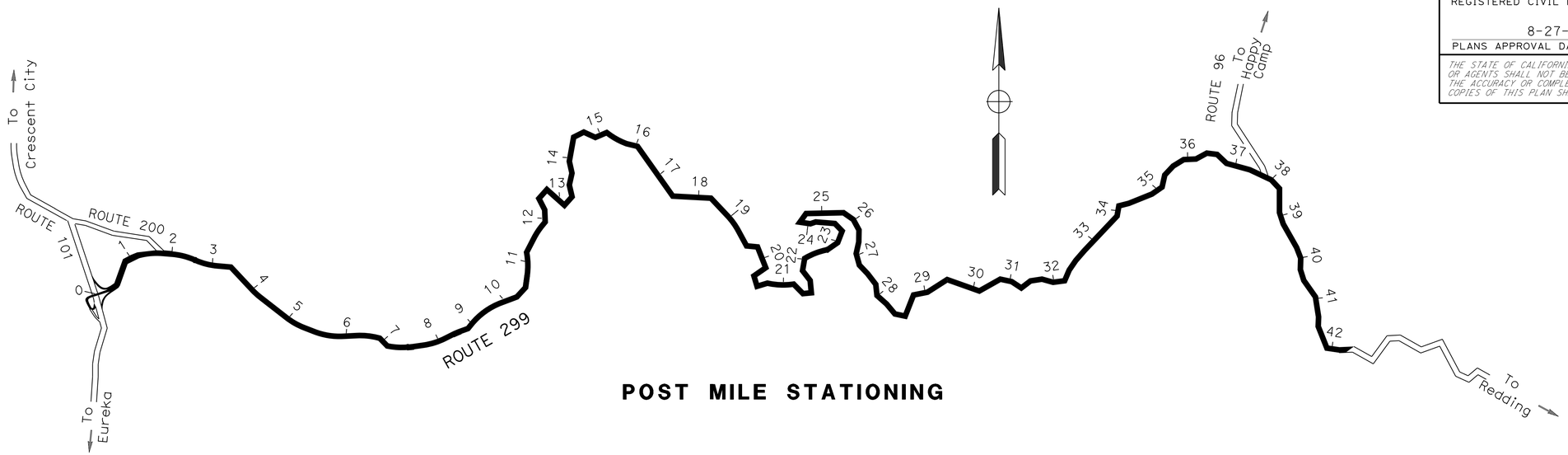

POST MILE STATIONING

LOCATIONS OF CONSTRUCTION

Loc	POST MILE FROM	POST MILE TO	DIRECTION
1	ON RAMP	0.00	EB
2	0.03	0.04	EB
3	0.15	0.17	WB
4	1.54	1.55	EB
5	1.53	1.55	EB
6	1.66	1.65	WB
7	2.46	2.58	EB
8	2.91	2.92	EB
9	2.93	2.94	WB
10	3.23	3.41	WB
11	3.49	3.50	EB
12	3.54	3.55	WB
13	3.77	3.78	EB
14	3.80	3.81	WB
15	4.04	4.06	WB
16	5.44	5.45	EB
17	5.47	5.46	WB
18	5.47	5.49	EB
19	7.14	7.18	EB
20	8.22	8.35	EB
21	8.73	8.80	EB
22	9.48	9.56	EB
23	9.93	10.04	EB
24	10.22	10.43	EB

Loc	POST MILE FROM	POST MILE TO	DIRECTION
25	10.56	10.60	EB
26	10.95	10.97	EB
27	11.00	11.02	EB
28	11.00	11.02	WB
29	11.10	11.12	EB
30	11.13	11.11	WB
31	11.62	12.00	EB
32	12.13	12.18	WB
33	12.27	12.47	EB
34	12.29	12.46	WB
35	12.52	12.68	EB
36	12.56	12.69	WB
37	12.74	12.78	EB
38	12.98	13.12	EB
39	13.17	13.28	EB
40	13.88	14.07	EB
41	14.50	14.66	EB
42	14.50	14.68	WB
43	14.89	15.00	EB
44	15.23	15.44	EB
45	15.25	15.33	WB
46	15.36	15.40	WB
47	15.73	15.90	EB
48	15.74	15.89	WB

Loc	POST MILE	TO	DIRECTION
49	16.03	16.15	WB
50	16.35	16.51	EB
51	16.41	16.51	WB
52	16.68	16.81	EB
53	16.70	16.78	WB
54	16.93	17.10	EB
55	21.16	21.39	WB
56	21.17	21.39	EB
57	21.61	21.81	WB
58	22.02	22.10	WB
59	22.12	22.16	WB
60	22.58	22.66	EB
61	22.62	22.65	WB
62	22.95	23.10	WB
63	23.46	23.57	WB
64	23.66	23.86	WB
65	24.02	24.13	WB
66	24.26	24.36	WB
67	24.33	24.36	EB
68	24.48	24.61	WB
69	24.49	24.59	EB
70	25.16	25.23	WB
71	25.34	25.46	WB
72	25.56	25.65	WB

Loc	POST MILE	TO	DIRECTION
73	26.21	26.46	EB
74	26.51	26.68	EB
75	26.94	27.07	EB
76	27.02	27.07	WB
77	27.33	27.44	EB
78	27.82	28.13	EB
79	28.24	28.37	EB
80	28.72	28.86	EB
81	29.15	29.46	EB
82	29.66	29.71	EB
83	30.36	30.46	WB
84	30.58	30.63	EB
85	31.01	31.09	EB
86	31.23	31.29	WB
87	31.31	31.39	WB
88	31.46	31.59	EB
89	31.83	31.92	WB
90	32.01	32.03	WB
91	32.21	32.23	EB
92	32.71	32.86	WB
93	32.96	33.06	EB
94	33.20	33.21	EB
95	33.21	33.22	WB
96	33.23	33.24	EB

Loc	POST MILE FROM	POST MILE TO	DIRECTION
97	33.22	33.23	WB
98	33.76	33.86	WB
99	33.83	33.95	EB
100	34.47	34.56	WB
101	34.55	34.56	EB
102	34.58	34.59	WB
103	34.59	34.60	EB
104	34.77	34.89	EB
105	35.53	35.55	WB
106	35.54	35.55	EB
107	35.55	35.59	WB
108	35.55	35.59	EB
109	36.04	36.28	WB
110	36.74	36.92	WB
111	37.49	37.57	WB
112	37.90	38.01	WB
113	38.15	38.16	EB
114	38.08	38.24	WB
115	40.62	40.66	WB
116	40.95	40.99	EB
117	41.53	41.61	WB

REVISED BY
DATE REVISED
MICHAEL J. LANGLEY
SUKHDEEP S. SANDHER
CALCULATED-DESIGNED BY
CHECKED BY
FUNCTIONAL SUPERVISOR
KEN KEATON

STATE OF CALIFORNIA - DEPARTMENT OF TRANSPORTATION
Caltrans
03-DESIGN

LOCATIONS OF CONSTRUCTION
LC-1

LAST REVISION 04-20-12
DATE PLOTTED => 30-AUG-2012
TIME PLOTTED => 09:53

Dist	COUNTY	ROUTE	POST MILES TOTAL PROJECT	SHEET No.	TOTAL SHEETS
01	Hum	299	0.0/43.0	3	59

REGISTERED CIVIL ENGINEER 8-27-12 DATE

8-27-12
PLANS APPROVAL DATE

REGISTERED PROFESSIONAL ENGINEER SUKHDEEP SINGH SANDHER No. 74893 Exp. 12-31-13 CIVIL STATE OF CALIFORNIA

THE STATE OF CALIFORNIA OR ITS OFFICERS OR AGENTS SHALL NOT BE RESPONSIBLE FOR THE ACCURACY OR COMPLETENESS OF SCANNED COPIES OF THIS PLAN SHEET.

NOTES:

1. FOR DETAILS NOT SHOWN, SEE STANDARD PLANS.
2. ANY NECESSARY DIMENSIONS WILL BE FIELD VERIFIED TO CONFORM WITH EXISTING CONDITIONS.
3. ALL PLATES AND BOLTS SHALL BE GALVANIZED.
4. TAPER THE TOP OF THE END OF THE BRIDGE RAILING AT 4:1 FOR BRIDGE RAIL HEIGHT ABOVE 32" TO MATCH THE TOP ELEVATION OF THE THRIE BEAM RAIL ELEMENT.
5. BRIDGE RAIL ANCHOR BLOCKS SHALL BE SHIELDED FROM TRAFFIC UNTIL FINAL MBGR CONNECTION OCCURS.
6. IF A CONFLICTING UNDERGROUND UTILITY IS DISCOVERED AT AN ANCHOR BLOCK LOCATION, ALL WORK AT THAT LOCATION WILL BE OMITTED FROM THE PROJECT.
7. SEE QUANTITY SHEET FOR LOCATIONS OF ANCHOR BLOCKS.
8. END CAP MAY BE INSTALLED OVER 12 GAUGE AND 10 GAUGE THRIE BEAM ELEMENTS WHERE TRANSITION RAILING IS INSTALLED ON THE DEPARTURE END OF BRIDGE RAILING.

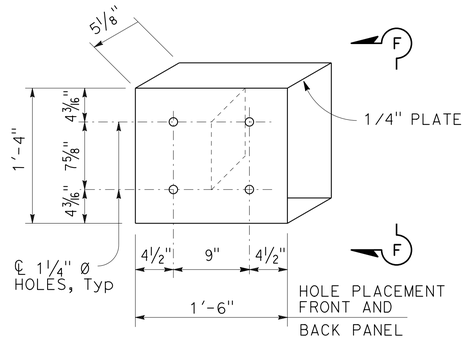

DETAIL E

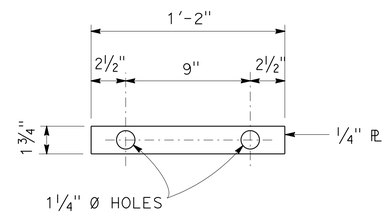

DETAIL G

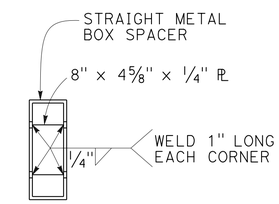

VIEW F-F

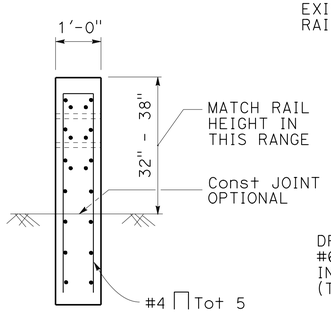

SECTION A-A

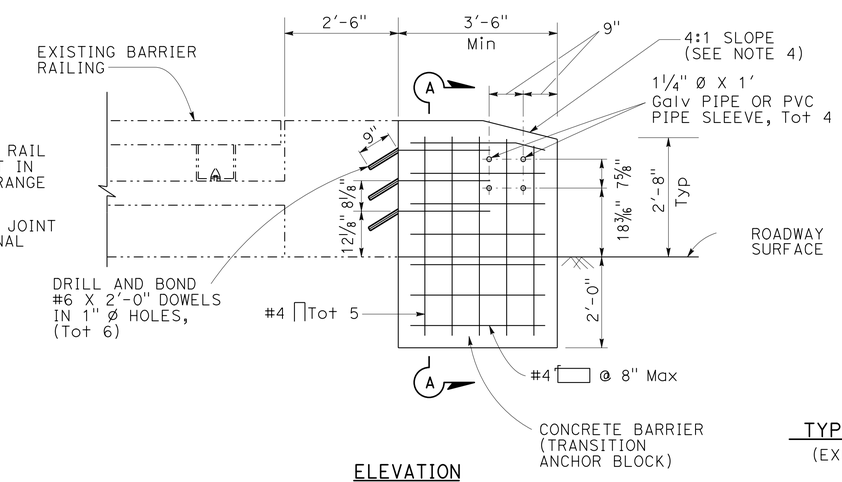

ELEVATION

TYPICAL SECTION
(EXISTING BARRIER)

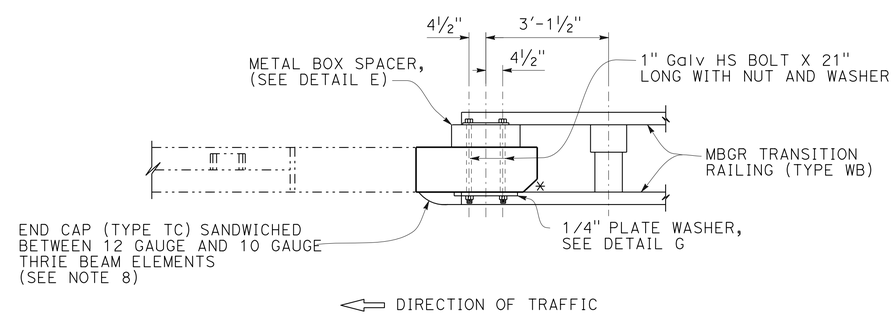

PLAN

ANCHOR BLOCK: MINOR CONCRETE (MINOR STRUCTURE)

END BLOCK: THRIE BEAM CONNECTION DETAILS
FOR EXISTING BARRIER RAILING TYPE 1

CONSTRUCTION DETAILS

NO SCALE

C-1

STATE OF CALIFORNIA - DEPARTMENT OF TRANSPORTATION
03-DESIGN
Caltrans

FUNCTIONAL SUPERVISOR: KEN KEATON
CALCULATED-DESIGNED BY: GARY DUGHI
CHECKED BY: SUKHDEEP S. SANDHER
REVISED BY
DATE REVISED

LAST REVISION 04-20-12
DATE PLOTTED => 30-AUG-2012
TIME PLOTTED => 09:53

Dist	COUNTY	ROUTE	POST MILES TOTAL PROJECT	SHEET No.	TOTAL SHEETS
01	Hum	299	0.0/43.0	4	59

REGISTERED CIVIL ENGINEER 8-27-12 DATE

8-27-12
PLANS APPROVAL DATE

REGISTERED PROFESSIONAL ENGINEER SUKHDEEP SINGH SANDHER No. 74893 Exp. 12-31-13 CIVIL STATE OF CALIFORNIA

THE STATE OF CALIFORNIA OR ITS OFFICERS OR AGENTS SHALL NOT BE RESPONSIBLE FOR THE ACCURACY OR COMPLETENESS OF SCANNED COPIES OF THIS PLAN SHEET.

NOTES:

1. PLACE DELINEATORS ON ALL GUARD RAIL INSTALLATIONS WITHIN 12 FEET OF THE ETW. THE SPACING ON TANGENT SECTIONS IS APPROXIMATELY 525 FEET. FOR SPACING ON CURVES, SEE TABLE ON THIS SHEET. SEE Q-SHEETS FOR QUANTITY.
2. SEE STANDARD PLAN A73C AND RSP A77C4 FOR PLACEMENT AND DELINEATOR/CHANNELIZER DETAILS.
3. FOR OTHER DETAILS, SEE 2006 STANDARD PLANS.
4. NESTING OF MBGR IS NOT A SEPARATE PAY ITEM. IT IS FOR INFORMATION ONLY.
5. SEE QUANTITY SHEET FOR LOCATIONS OF NESTED GUARDRAIL SPAN LOCATIONS.
6. EXISTING UTILITY FACILITIES HAVE NOT BEEN POSITIVELY LOCATED.

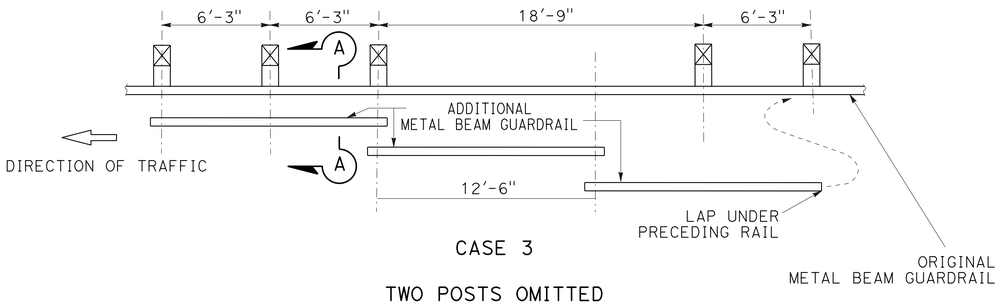

CASE 3

TWO POSTS OMITTED

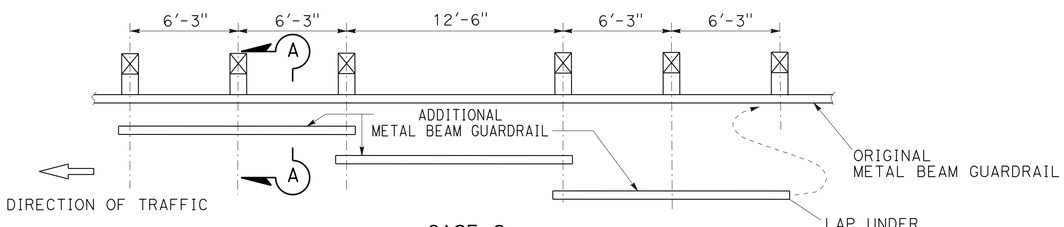

CASE 2

ONE POST OMITTED (SPLICE AT POSTS)

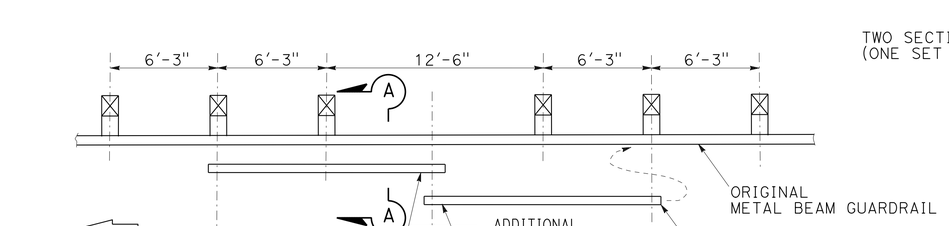

CASE 1

ONE POST OMITTED (SPLICE IN CENTER)

LONG SPAN NESTED GUARDRAIL

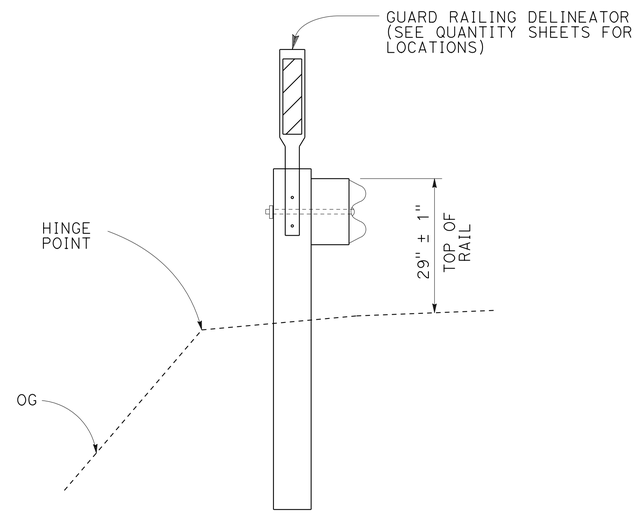

TYPICAL SECTION WITH DELINEATOR

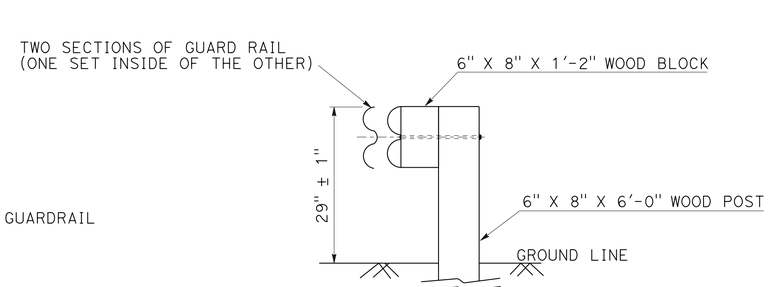

SECTION A-A

LEGEND

← DIRECTION OF TRAVEL

| DELINEATOR (CLASS 1)

S DELINEATOR SPACING (ft)

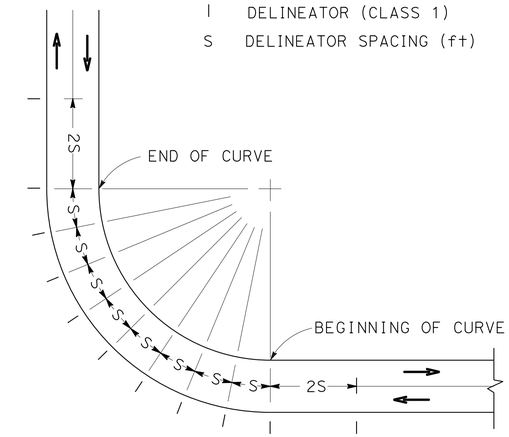

DELINEATOR SPACING TABLE

RADIUS OF CURVE	APPROX SPACING (S) ON CURVE
FEET	FEET
50	20
115	25
180	35
250	40
300	40
400	40
500	40
600	40
700	75
800	80
900	85
1,000 OR GREATER	90

NOTE: INSTALL DELINEATORS PERPENDICULAR TO ONCOMING TRAFFIC

DELINEATOR SPACING ON CURVES

CONSTRUCTION DETAILS

NO SCALE

C-2

STATE OF CALIFORNIA - DEPARTMENT OF TRANSPORTATION
03-DESIGN
Caltrans

FUNCTIONAL SUPERVISOR: KEN KEATON
CALCULATED-DESIGNED BY: GARY DUGHI
CHECKED BY: SUKHDEEP S. SANDHER
REVISED BY
DATE REVISED

LAST REVISION 04-20-12
DATE PLOTTED => 30-AUG-2012
TIME PLOTTED => 09:53

Dist	COUNTY	ROUTE	POST MILES TOTAL PROJECT	SHEET No.	TOTAL SHEETS
01	Hum	299	0.0/43.0	5	59

REGISTERED CIVIL ENGINEER 8-27-12 DATE

PLANS APPROVAL DATE 8-27-12

REGISTERED PROFESSIONAL ENGINEER SUKHDEEP SINGH SANDHER No. 74893 Exp. 12-31-13 CIVIL STATE OF CALIFORNIA

THE STATE OF CALIFORNIA OR ITS OFFICERS OR AGENTS SHALL NOT BE RESPONSIBLE FOR THE ACCURACY OR COMPLETENESS OF SCANNED COPIES OF THIS PLAN SHEET.

NOTES:

1. FOR LOCATIONS OF WEED CONTROL MAT (FIBER) SEE SUMMARY OF QUANTITIES SHEETS.
2. WHERE THE DISTANCE BETWEEN BACK OF POST AND HINGE POINT IS LESS THAN 24", WEED CONTROL TO BE CONSTRUCTED FLUSH WITH THE BACK EDGE OF THE POST.
3. WHERE EXISTING DIKE REMAINS UNDER RAILING, CONSTRUCT WEED CONTROL MAT (FIBER) TO BACK EDGE OF DIKE. WHERE PAVED SHOULDER IS CONSTRUCTED WITHIN 24" IN FRONT OF THE POST, CONSTRUCT WEED CONTROL MAT (FIBER) TO THE EDGE OF PAVED SHOULDER.
4. FOR LOCATIONS WHERE WEED CONTROL MAT (FIBER) IS ADJACENT TO EP; SEAL TO EP.
5. POST SPACING & OTHER DIMENSIONS TO BE VERIFIED IN THE FIELD BY THE CONTRACTOR.
6. DIRECTION OF ADJACENT TRAFFIC INDICATED BY ⟵ .
7. USE WEED CONTROL MAT (FIBER) DETAIL FOR BURIED POST ANCHOR.

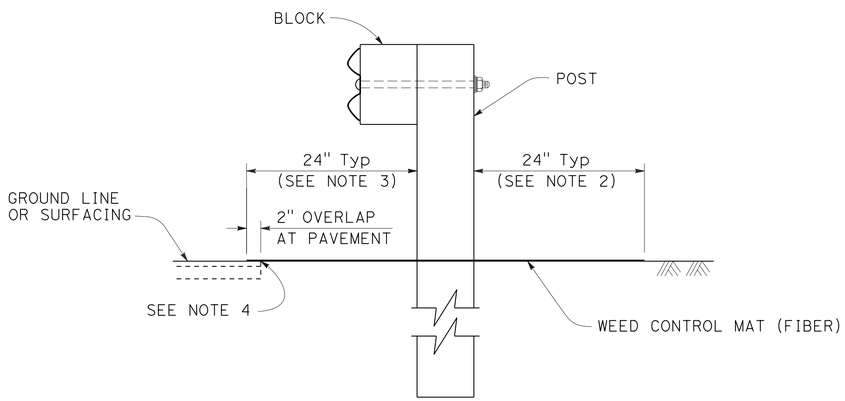

SECTION A-A

WEED CONTROL MAT (FIBER)
AT EDGE OF PAVEMENT

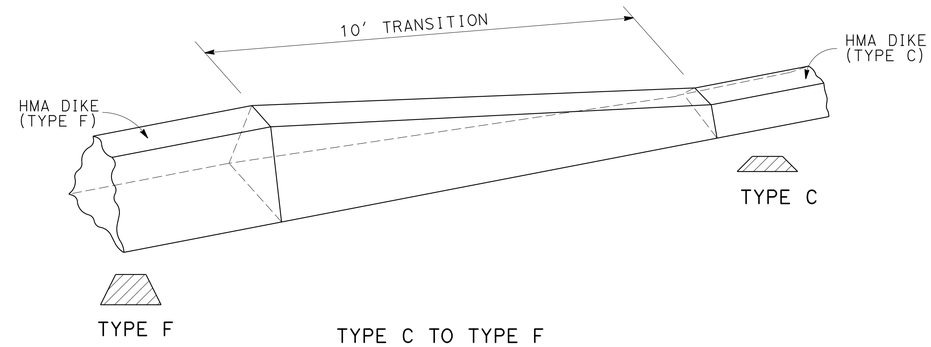

TYPE C TO TYPE F

DIKE TRANSITION

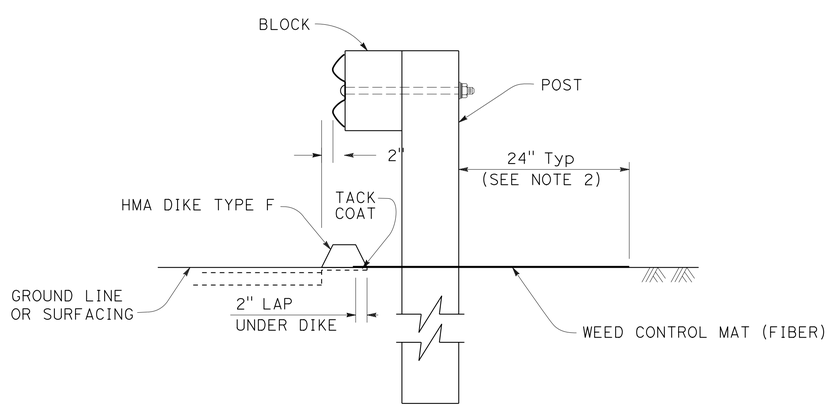

SECTION A-A

WEED CONTROL MAT (FIBER)
WITH NEW HMA DIKE

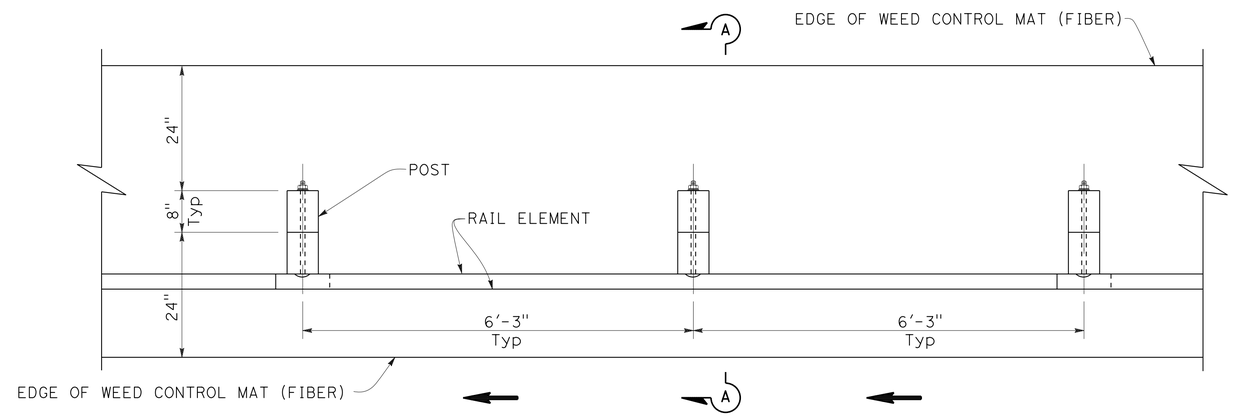

PLAN

METAL BEAM GUARD RAILING
TYPICAL WEED CONTROL MAT (FIBER)
STANDARD RAILING SECTION

CONSTRUCTION DETAILS

NO SCALE

C-3

STATE OF CALIFORNIA - DEPARTMENT OF TRANSPORTATION
Caltrans
03-DESIGN
FUNCTIONAL SUPERVISOR: KEN KEATON
CALCULATED-DESIGNED BY: GARY DUGHI
CHECKED BY: SUKHDEEP S. SANDHER
REVISED BY
DATE REVISED

LAST REVISION 04-20-12
DATE PLOTTED => 30-AUG-2012
TIME PLOTTED => 09:54

Dist	COUNTY	ROUTE	POST MILES TOTAL PROJECT	SHEET No.	TOTAL SHEETS
01	Hum	299	0.0/43.0	6	59

REGISTERED CIVIL ENGINEER 8-27-12 DATE

8-27-12
PLANS APPROVAL DATE

REGISTERED PROFESSIONAL ENGINEER SUKHDEEP SINGH SANDHER No. 74893 Exp. 12-31-13 CIVIL STATE OF CALIFORNIA

THE STATE OF CALIFORNIA OR ITS OFFICERS OR AGENTS SHALL NOT BE RESPONSIBLE FOR THE ACCURACY OR COMPLETENESS OF SCANNED COPIES OF THIS PLAN SHEET.

NOTES:

1. FOR LOCATIONS OF WEED CONTROL MAT (FIBER) SEE SUMMARY OF QUANTITIES SHEETS.
2. WHERE THE DISTANCE BETWEEN BACK OF POST AND HINGE POINT IS LESS THAN 24", WEED CONTROL MAT (FIBER) TO BE CONSTRUCTED FLUSH WITH THE BACK EDGE OF THE POST.
3. WHERE DIKE IS CONSTRUCTED UNDER RAILING, CONSTRUCT WEED CONTROL MAT (FIBER) TO BACK EDGE OF DIKE. WHERE PAVED SHOULDER IS CONSTRUCTED WITHIN 24" IN FRONT OF THE POST, CONSTRUCT WEED CONTROL MAT (FIBER) TO THE EDGE OF PAVED SHOULDER.
4. FOR LOCATIONS WHERE WEED CONTROL MAT (FIBER) IS ADJACENT TO EP; SEAL TO EP.
5. POST SPACING & OTHER DIMENSIONS TO BE VERIFIED IN THE FIELD BY THE CONTRACTOR.
6. DIRECTION OF ADJACENT TRAFFIC INDICATED BY ←.

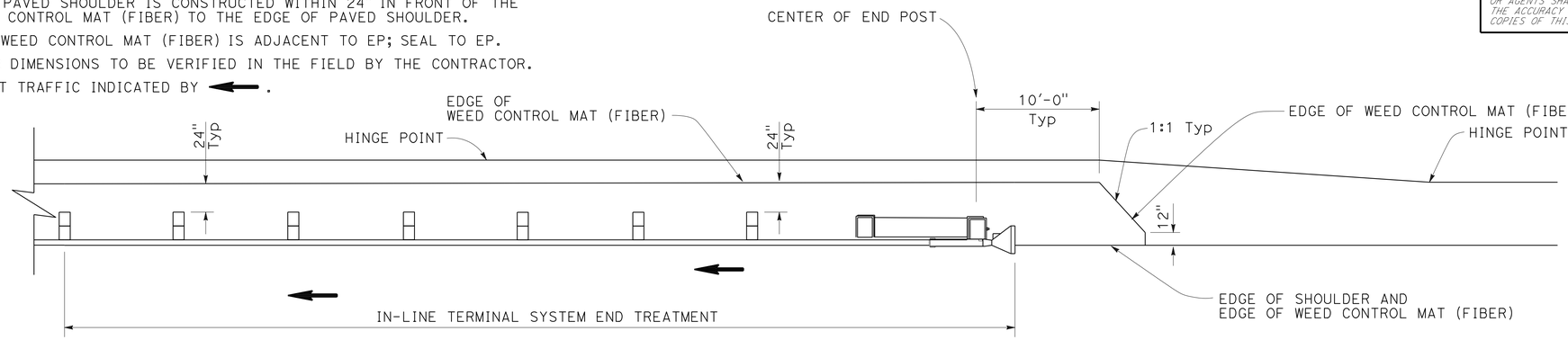

PLAN

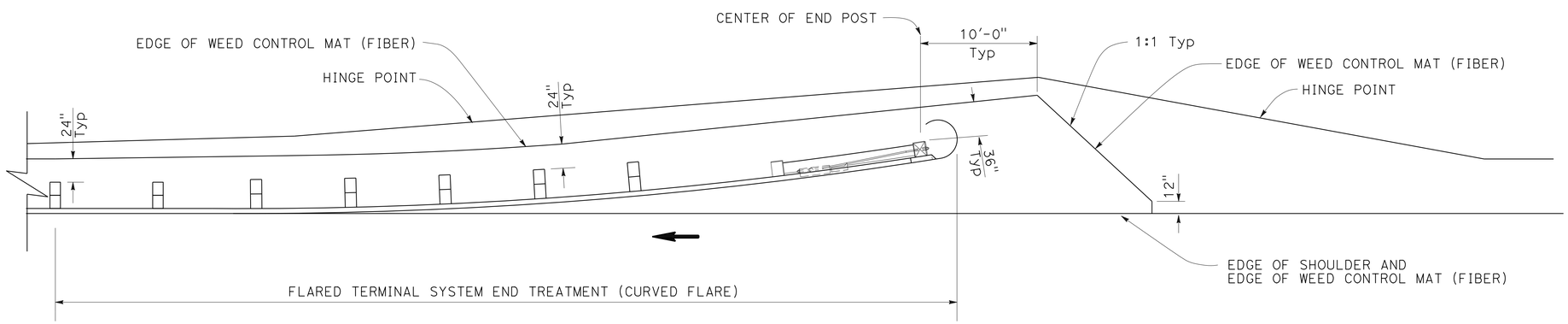

PLAN

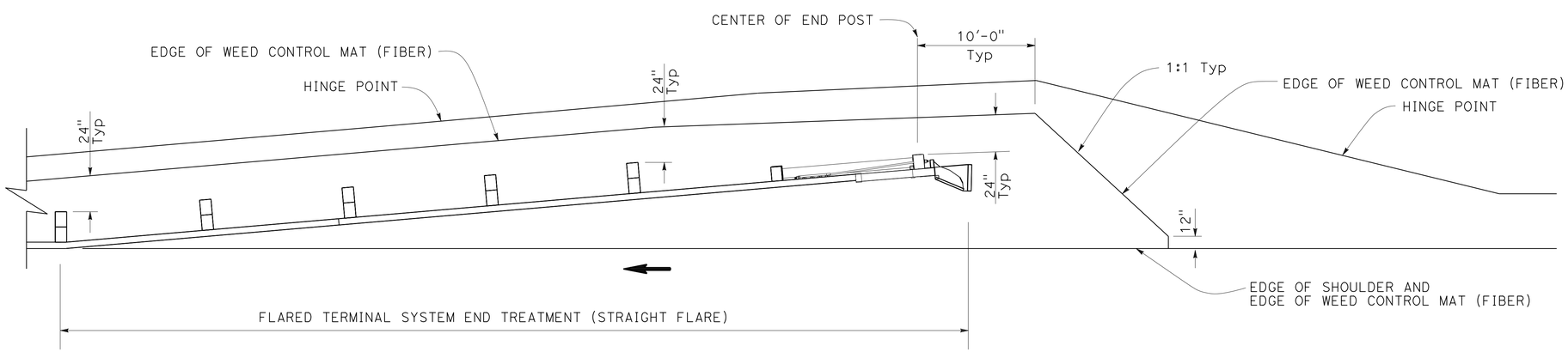

PLAN

METAL BEAM GUARD RAILING
TYPICAL WEED CONTROL MAT (FIBER) FOR TERMINAL SYSTEM END TREATMENTS

CONSTRUCTION DETAILS

NO SCALE

C-4

REVISED BY | DATE REVISED
GARY DUGHI | SUKHDEEP S. SANDHER
CALCULATED-DESIGNED BY | CHECKED BY
FUNCTIONAL SUPERVISOR
KEN KEATON

STATE OF CALIFORNIA - DEPARTMENT OF TRANSPORTATION
Caltrans
03-DESIGN

LAST REVISION 04-20-12 | DATE PLOTTED => 30-AUG-2012 | TIME PLOTTED => 09:54

Dist	COUNTY	ROUTE	POST MILES TOTAL PROJECT	SHEET No.	TOTAL SHEETS
01	Hum	299	0.0/43.0	7	59

REGISTERED CIVIL ENGINEER 8-27-12 DATE

8-27-12
PLANS APPROVAL DATE

REGISTERED PROFESSIONAL ENGINEER SUKHDEEP SINGH SANDHER No. 74893 Exp. 12-31-13 CIVIL STATE OF CALIFORNIA

THE STATE OF CALIFORNIA OR ITS OFFICERS OR AGENTS SHALL NOT BE RESPONSIBLE FOR THE ACCURACY OR COMPLETENESS OF SCANNED COPIES OF THIS PLAN SHEET.

NOTES:

1. THIS PLAN ACCURATE FOR SIGN WORK ONLY
2. EXACT LOCATION OF ALL SIGNS TO BE DETERMINED BY THE ENGINEER.
3. ALL SIGNS SHALL BE BLACK ON ORANGE EXCEPT C40 (CA), WHICH IS BLACK ON WHITE.
4. CALIFORNIA CODES ARE DESIGNATED BY (CA), OTHERWISE FEDERAL CODES ARE SHOWN.
5. CONSTRUCTION AREA SIGN DIAGRAMS ARE TO BE USED FOR BRIDGE LOCATIONS LISTED IN TABLE. USE APPROPRIATE STANDARD PLAN TRAFFIC CONTROL SYSTEM FOR ALL OTHER LOCATIONS.

LEGEND:

SIGN 1 POST

SIGN 2 POST

DIRECTION OF TRAFFIC

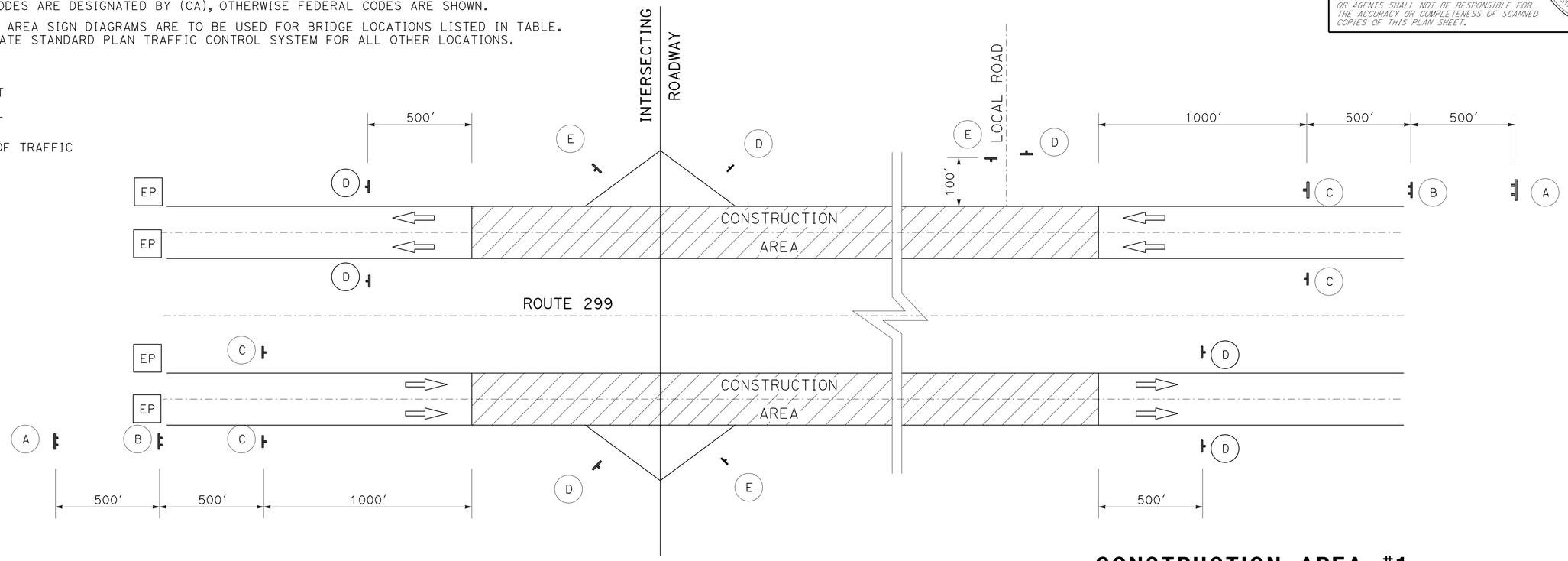

CONSTRUCTION AREA SIGNS (STATIONARY MOUNTED)

SIGN LETTER	SIGN CODE	PANEL SIZE	SIGN MESSAGE	NUMBER OF POSTS AND SIZE	NUMBER OF SIGNS
A	C40(CA)	144" X 60"	TRAFFIC FINES DOUBLED IN CONSTRUCTION ZONES	2 - 6" X 8"	2
B	W20-1	48" X 48"	ROAD WORK AHEAD	2 - 4" X 6"	2
	C23B(CA)	42" X 24"	GUARDRAIL REPAIR		
C	W11-1	36" X 36"	BICYCLE SYMBOL	1 - 4" X 6"	2
	W16-1P	24" X 30"	SHARE THE ROAD		
D	G20-2	48" X 24"	END ROAD WORK	1 - 4" X 6"	9
E	W20-1	48" X 48"	ROAD WORK AHEAD	1 - 6" X 6"	5

CONSTRUCTION AREA #1

BRIDGE NAME	BRIDGE NUMBER	BRIDGE POSTMILE	GUARDRAIL LOCATION	GUARDRAIL Beg PM	GUARDRAIL END PM	GUARDRAIL DIRECTION
MAD RIVER	04 0036R	R1.550	4	R1.54	R1.55	E
			5	R1.53	R1.55	E
	04 0036L	R1.560	6	R1.66	R1.65	W
ESSEX LANE UC	04 0185	R2.920	8	R2.91	R2.92	E
			9	R2.93	R2.94	W
			10	R3.23	R3.41	W
GLENDALE UC (RAMP Rd)	04 0191	R4.040	15	R4.04	R4.06	W
BLUE LAKE UC	04 0193	R5.450	16	R5.44	R5.45	E
			17	R5.47	R5.46	W
			18	R5.47	R5.49	E
LINDSAY CREEK	04 0187	R3.500	11	R3.49	R3.50	E
			12	R3.54	R3.55	W
GLENDALE DRIVE UC	04 0186	R3.780	13	R3.77	R3.78	E
			14	R3.80	R3.81	W

CONSTRUCTION AREA SIGNS

NO SCALE

CS-1

STATE OF CALIFORNIA - DEPARTMENT OF TRANSPORTATION
Caltrans
03-DESIGN

FUNCTIONAL SUPERVISOR: KEN KEATON
CALCULATED-DESIGNED BY: GARY DUGHI
CHECKED BY: SUKHDEEP S. SANDHER
REVISED BY
DATE REVISED

LAST REVISION 04-20-12
DATE PLOTTED => 30-AUG-2012
TIME PLOTTED => 09:54

Dist	COUNTY	ROUTE	POST MILES TOTAL PROJECT	SHEET No.	TOTAL SHEETS
01	Hum	299	0.0/43.0	8	59

REGISTERED CIVIL ENGINEER 8-27-12 DATE

8-27-12
PLANS APPROVAL DATE

REGISTERED PROFESSIONAL ENGINEER SUKHDEEP SINGH SANDHER No. 74893 Exp. 12-31-13 CIVIL STATE OF CALIFORNIA

THE STATE OF CALIFORNIA OR ITS OFFICERS OR AGENTS SHALL NOT BE RESPONSIBLE FOR THE ACCURACY OR COMPLETENESS OF SCANNED COPIES OF THIS PLAN SHEET.

NOTES:

1. THIS PLAN ACCURATE FOR SIGN WORK ONLY
2. EXACT LOCATION OF ALL SIGNS TO BE DETERMINED BY THE ENGINEER.
3. ALL SIGNS SHALL BE BLACK ON ORANGE EXCEPT C40 (CA), WHICH IS BLACK ON WHITE.
4. CALIFORNIA CODES ARE DESIGNATED BY (CA), OTHERWISE FEDERAL CODES ARE SHOWN.
5. CONSTRUCTION AREA SIGN DIAGRAMS ARE TO BE USED FOR BRIDGE LOCATIONS LISTED IN TABLE. USE APPROPRIATE STANDARD PLAN TRAFFIC CONTROL SYSTEM FOR ALL OTHER LOCATIONS.

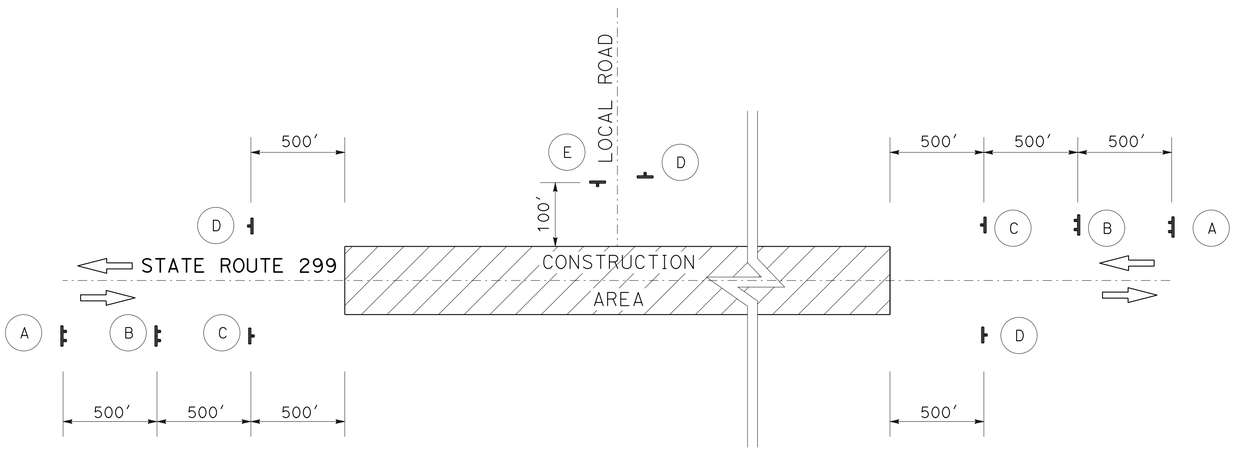

CONSTRUCTION AREA #2

BRIDGE NAME	BRIDGE NUMBER	BRIDGE POSTMILE	GUARDRAIL LOCATION	Beg PM	END PM	DIRECTION
NORTH FORK MAD RIVER	04 0194	R11.020	27	R11.00	R11.02	E
			28	R11.00	R11.02	W
			29	R11.10	R11.12	E
			30	R11.13	R11.11	W

CONSTRUCTION AREA #3

BRIDGE NAME	BRIDGE NUMBER	BRIDGE POSTMILE	GUARDRAIL LOCATION	Beg PM	END PM	DIRECTION
EAST FORK WILLOW CREEK	04 0115	R33.210	94	33.20	33.21	E
			95	33.21	33.22	W
			96	33.23	33.24	E
			97	33.22	33.23	W
WILLOW CREEK	04 0162	R34.560	100	34.47	34.56	W
			101	34.55	34.56	E
			102	34.58	34.59	W
			103	34.59	34.60	E
WILLOW CREEK	04 0163	R35.550	106	35.54	35.55	E
			107	35.55	35.59	W
			108	35.55	35.59	E

CONSTRUCTION AREA SIGNS (STATIONARY MOUNTED)

SIGN LETTER	SIGN CODE	PANEL SIZE	SIGN MESSAGE	NUMBER OF POSTS AND SIZE	NUMBER OF SIGNS
A	C40(CA)	108" X 42"	TRAFFIC FINES DOUBLED IN CONSTRUCTION ZONES	2 - 6" X 6"	4
B	W20-1	48" X 48"	ROAD WORK AHEAD	2 - 4" X 6"	4
	C23B(CA)	36" X 18"	GUARDRAIL REPAIR		
C	W11-1	36" X 36"	BICYCLE SYMBOL	1 - 4" X 6"	4
	W16-1P	24" X 30"	SHARE THE ROAD		
D	G20-2	36" X 18"	END ROAD WORK	1 - 4" X 4"	9
E	W20-1	36" X 36"	ROAD WORK AHEAD	1 - 4" X 6"	5

CONSTRUCTION AREA SIGNS

NO SCALE

CS-2

REVISED BY | DATE REVISED
GARY DUGHI | SUKHDEEP S. SANDHER
CALCULATED-DESIGNED BY | CHECKED BY
FUNCTIONAL SUPERVISOR | KEN KEATON
STATE OF CALIFORNIA - DEPARTMENT OF TRANSPORTATION
Caltrans
03-DESIGN

LAST REVISION 04-20-12 | DATE PLOTTED => 30-AUG-2012 TIME PLOTTED => 09:54

Dist	COUNTY	ROUTE	POST MILES TOTAL PROJECT	SHEET No.	TOTAL SHEETS
01	Hum	299	0.0/43.0	9	59

REGISTERED CIVIL ENGINEER DATE 8-27-12

PLANS APPROVAL DATE 8-27-12

REGISTERED PROFESSIONAL ENGINEER SUKHDEEP SINGH SANDHER No. 74893 Exp. 12-31-13 CIVIL STATE OF CALIFORNIA

THE STATE OF CALIFORNIA OR ITS OFFICERS OR AGENTS SHALL NOT BE RESPONSIBLE FOR THE ACCURACY OR COMPLETENESS OF SCANNED COPIES OF THIS PLAN SHEET.

NOTES:

1. EXACT LOCATION OF TEMPORARY RAILING (TYPE K), CHANNELIZERS AND SIGNS TO BE DETERMINED BY THE ENGINEER.

LEGEND

● = CHANNELIZER (SURFACE MOUNTED)

▨ = MINOR CONCRETE (MINOR STRUCTURE)

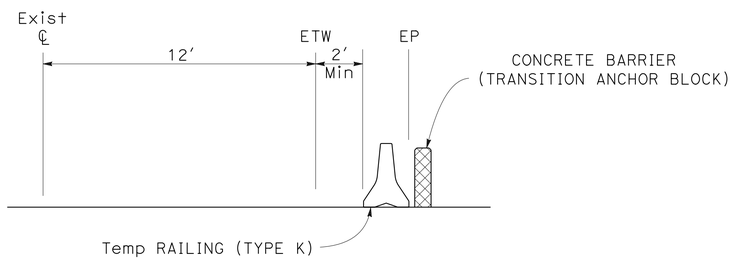

SECTION A-A

TRAFFIC HANDLING QUANTITIES

BRIDGE NAME	BRIDGE NUMBER	BRIDGE POSTMILE	GUARDRAIL LOCATION	GUARDRAIL Beg PM	GUARDRAIL END PM	GUARDRAIL DIRECTION	CHANNELIZER (SURFACE MOUNTED) EA	TEMPORARY RAILING (TYPE K) LF	ALTERNATIVE TEMPORARY CRASH CUSHION EA
MAD RIVER	04 0036R	R1.550	4	1.54	1.55	E	7	40	1
			5	1.53	1.55	E	7	40	1
			6	1.66	1.65	W	7	40	1
ESSEX LANE UC	04 0185	R2.920	8	2.91	2.92	E	7	40	2
			9	2.93	2.94	W	7	40	2
			10	3.23	3.41	W	7	40	2
LINDSAY CREEK	04 0187	R3.500	11	3.49	3.50	E	7	40	2
			12	3.54	3.55	W	7	40	2
GLENDALE DRIVE UC	04 0186	R3.780	13	3.77	3.78	E	7	40	2
			14	3.80	3.81	W	7	40	2
GLENDALE UC (RAMP RD)	04 0191	R4.040	15	4.04	4.06	W	7	40	2
BLUE LAKE UC	04 0193	R5.450	16	5.44	5.45	E	7	40	2
			17	5.47	5.46	W	7	40	2
			18	5.47	5.49	E	7	40	2
NORTH FORK MAD RIVER	04 0194	R11.020	27	11.00	11.02	E	7	40	2
			28	11.00	11.02	W	7	40	2
			29	11.10	11.12	E	7	40	2
			30	11.13	11.11	W	7	40	2
EAST FORK WILLOW CREEK	04 0115	R33.210	94	33.20	33.21	E	7	40	2
			95	33.21	33.22	W	7	40	2
			96	33.23	33.24	E	7	40	2
			97	33.22	33.23	W	7	40	2
WILLOW CREEK	04 0162	R34.560	100	34.47	34.56	W	7	40	2
			101	34.55	34.56	E	7	40	2
			102	34.58	34.59	W	7	40	2
			103	34.59	34.60	E	7	40	2
WILLOW CREEK	04 0163	R35.550	106	35.54	35.55	E	7	40	2
			107	35.55	35.59	W	7	40	2
			108	35.55	35.59	E	7	40	2
						TOTAL	203	1160	58

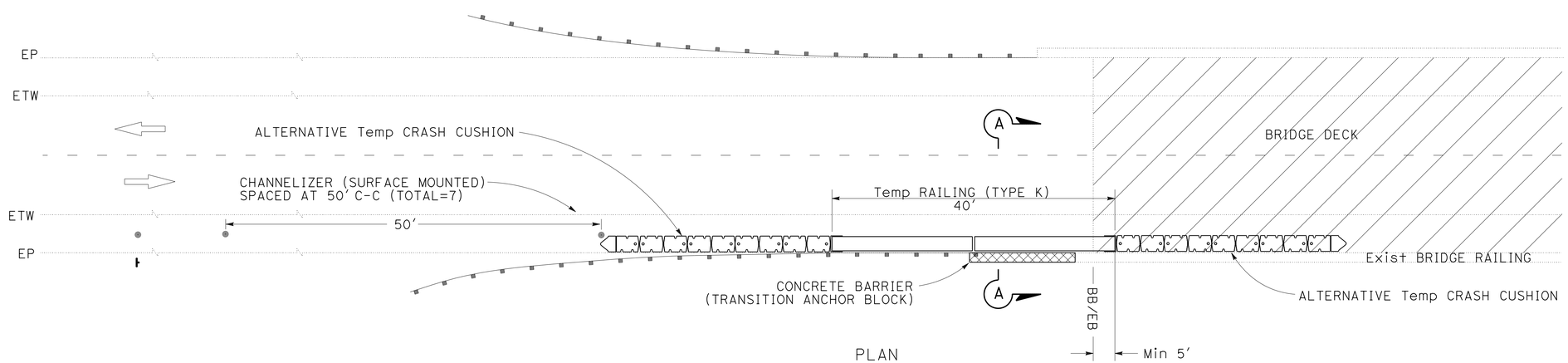

PLAN

TEMPORARY RAILING (TYPE K) PLACEMENT

TRAFFIC HANDLING DETAILS

NO SCALE

THD-1

STATE OF CALIFORNIA - DEPARTMENT OF TRANSPORTATION

Caltrans 03-DESIGN

FUNCTIONAL SUPERVISOR: KEN KEATON

CALCULATED-DESIGNED BY: GARY DUGHI

CHECKED BY: SUKHDEEP S. SANDHER

REVISED BY | DATE REVISED

LAST REVISION 04-20-12 | DATE PLOTTED => 30-AUG-2012 | TIME PLOTTED => 09:54

Dist	COUNTY	ROUTE	POST MILES TOTAL PROJECT	SHEET No.	TOTAL SHEETS
01	Hum	299	0.0/43.0	10	59

REGISTERED CIVIL ENGINEER 8-27-12 DATE

8-27-12
PLANS APPROVAL DATE

REGISTERED PROFESSIONAL ENGINEER SUKHDEEP SINGH SANDHER No. 74893 Exp. 12-31-13 CIVIL STATE OF CALIFORNIA

THE STATE OF CALIFORNIA OR ITS OFFICERS OR AGENTS SHALL NOT BE RESPONSIBLE FOR THE ACCURACY OR COMPLETENESS OF SCANNED COPIES OF THIS PLAN SHEET.

NOTES:

1. TO PROTECT NEW CONCRETE BARRIER (ANCHOR BLOCK) DURING CURE TIME, RE-HANG EXISTING RAIL ELEMENT IN EXISTING BOLT HOLES.

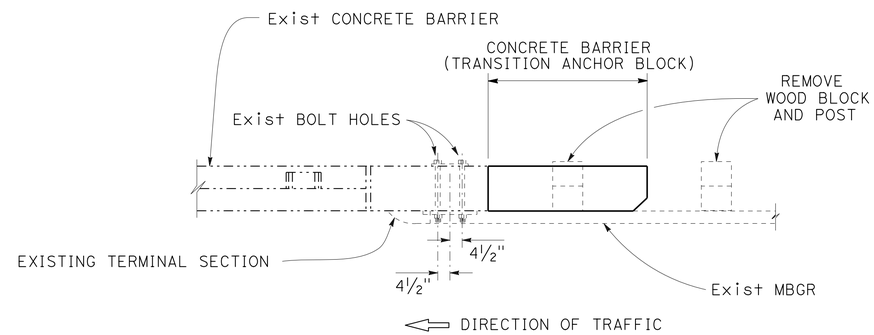

PLAN

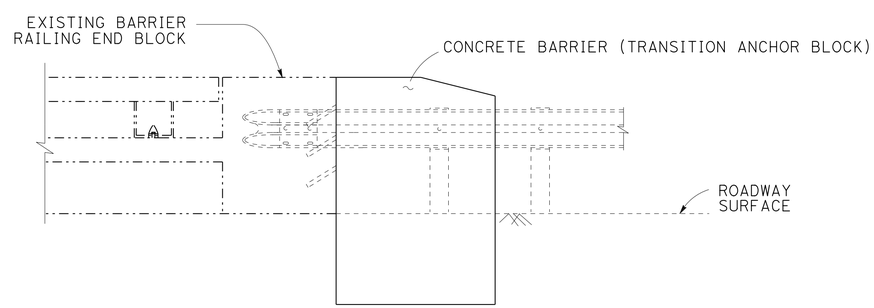

ELEVATION

TRAFFIC HANDLING DETAILS

NO SCALE

THD-2

STATE OF CALIFORNIA - DEPARTMENT OF TRANSPORTATION
Caltrans®
03-DESIGN

FUNCTIONAL SUPERVISOR: KEN KEATON

CALCULATED-DESIGNED BY: GARY DUGHI
CHECKED BY: SUKHDEEP S. SANDHER

REVISED BY
DATE REVISED

LAST REVISION 04-20-12
DATE PLOTTED => 30-AUG-2012
TIME PLOTTED => 09:54

Dist	COUNTY	ROUTE	POST MILES TOTAL PROJECT	SHEET No.	TOTAL SHEETS
01	Hum	299	0.0/43.0	11	59

REGISTERED CIVIL ENGINEER 8-27-12 DATE

8-27-12
PLANS APPROVAL DATE

REGISTERED PROFESSIONAL ENGINEER SUKHDEEP SINGH SANDHER No. 74893 Exp. 12-31-13 CIVIL STATE OF CALIFORNIA

THE STATE OF CALIFORNIA OR ITS OFFICERS OR AGENTS SHALL NOT BE RESPONSIBLE FOR THE ACCURACY OR COMPLETENESS OF SCANNED COPIES OF THIS PLAN SHEET.

NOTE:

1. EXISTING UTILITY FACILITIES HAVE NOT BEEN POSITIVELY LOCATED.

METAL BEAM GUARD RAILING

LOCATION #	BEGIN PM	END PM	DIRECTION	(N) LENGTH	METAL BEAM GUARD RAILING (ELEMENT)	(N) REPLACE MBGR	(N) NEST MBGR	RECONSTRUCT MBGR	RECONSTRUCT MBGR (7' POST)	ADJUST METAL BEAM GUARD RAILING	REMOVE METAL BEAM GUARD RAILING	(N) REMOVE METAL BEAM GUARD RAILING (7' POST)	MBGR (STEEL POST)	MBGR (WOOD POST)	MBGR (7' WOOD POST)	(N) ANCHOR BLOCK	MINOR CONCRETE (MINOR STRUCTURE)	TRANSITION RAILING (TYPE WB)	END CAP (TYPE A)	END CAP (TYPE TC)	END ANCHOR ASSEMBLY (TYPE SFT)	ALTERNATIVE FLARED TERMINAL SYSTEM	ALTERNATIVE IN-LINE TERMINAL SYSTEM	(N) BURIED POST END ANCHOR	RAIL TENSIONING ASSEMBLY	CRASH CUSHION (TYPE CAT)	CRASH CUSHION (TYPE CAT) BACKUP	TERMINAL SYSTEM (TYPE X-TENSION) FLARED	TERMINAL SYSTEM (TYPE X-TENSION) IN-LINE	(N) GUARD RAILING LAYOUT TYPE	COMMENTS	LOCATION #
				LF	EA	EA	EA	LF	LF	LF	LF	LF	LF	LF	LF	EA	CY	EA	EA	EA	EA	EA	EA	EA	EA	EA	EA	EA	EA			
1	Ramp	0.00	E	62.5							62.5					1	0.60	1		1		1							12B		1
2	0.03	0.04	E	62.5							62.5					1	0.60	1		1		1							12BB		2
3	0.15	0.17	W	87.5				50.0			37.5								1		1	1							16B	OFFRAMP	3
4	1.54	1.55	E	62.5						25.0	37.5					1	0.60	1		1									12B	MAD RIVER RT SHLDR	4
5	1.53	1.55	E	93.75							68.8			25		1	0.60	1		1					1	1	1		12E	MAD RIVER BEGIN MEDIAN	5
6	1.66	1.65	W	125							125.0		62.5			1	0.60	1		1		1							12B	MAD RIVER RT SHLDR	6
7	2.46	2.58	E	687.5						637.5	37.5												1						11A		7
8	2.91	2.92	E	75							62.5					1	0.70	1		1			1						12A	ESSEX LN UC	8
9	2.93	2.94	W	100	2		2				62.5		25.0			1	0.60	1		1			1						12A	ESSEX LN UC	9
10	3.23	3.41	W	950	2		2	100.0		787.5	87.5			100								1		1					11G		10
11	3.49	3.50	E	62.5							62.5					1	0.70	1		1		1							12B	LINDSAY CR (ABOVE FIELDBROOK RD)	11
12	3.54	3.55	W	62.5							62.5					1	0.70	1		1		1							12B	LINDSAY CR (ABOVE FIELDBROOK RD)	12
13	3.77	3.78	E	75							62.5					1	0.60	1		1			1						12A	GLENDALE DRIVE (NWP RR) UC	13
14	3.80	3.81	W	125							125.0			62.5		1	0.60	1		1		1							12B	GLENDALE DRIVE (NWP RR) UC	14
15	4.04	4.06	W	62.5							62.5					1	0.60	1		1		1							12B	GLENDALE DRIVE UC	15
16	5.44	5.45	E	225						162.5	62.5			100		1	0.60	1		1			1						12A	BLUE LAKE UC	16
SHEET TOTALS:					4	0	4	150.0	0.0	1612.5	1081.3	0.0	87.5	287.5	0	13	8.1	13	1	13	1	9	5	1	1	1	1	0				

(N) - NOT A SEPARATE PAY ITEM, FOR INFORMATION ONLY

SUMMARY OF QUANTITIES

Q-1

STATE OF CALIFORNIA - DEPARTMENT OF TRANSPORTATION
03-DESIGN

FUNCTIONAL SUPERVISOR: KEN KEATON
CALCULATED-DESIGNED BY: SUKHDEEP S. SNDHER
CHECKED BY: GARY DUGHT
REVISED BY
DATE REVISED

LAST REVISION 04-20-12
DATE PLOTTED => 30-AUG-2012
TIME PLOTTED => 09:54

Dist	COUNTY	ROUTE	POST MILES TOTAL PROJECT	SHEET No.	TOTAL SHEETS
01	Hum	299	0.0/43.0	12	59

REGISTERED CIVIL ENGINEER 8-27-12 DATE

8-27-12
PLANS APPROVAL DATE

REGISTERED PROFESSIONAL ENGINEER SUKHDEEP SINGH SANDHER No. 74893 Exp. 12-31-13 CIVIL STATE OF CALIFORNIA

THE STATE OF CALIFORNIA OR ITS OFFICERS OR AGENTS SHALL NOT BE RESPONSIBLE FOR THE ACCURACY OR COMPLETENESS OF SCANNED COPIES OF THIS PLAN SHEET.

METAL BEAM GUARD RAILING

LOCATION #	BEGIN PM	END PM	DIRECTION	(N) LENGTH	METAL BEAM GUARD RAILING (ELEMENT)	(N) REPLACE MBGR	NEST MBGR	RECONSTRUCT MBGR	RECONSTRUCT MBGR (7' POST)	ADJUST METAL BEAM GUARD RAILING	REMOVE METAL BEAM GUARD RAILING	(N) REMOVE METAL BEAM GUARD RAILING (7' POST)	MBGR (STEEL POST)	MBGR (WOOD POST)	MBGR (7' WOOD POST)	(N) ANCHOR BLOCK	MINOR CONCRETE (MINOR STRUCTURE)	TRANSITION RAILING (TYPE WB)	END CAP (TYPE A)	END CAP (TYPE TC)	END ANCHOR ASSEMBLY (TYPE SFT)	ALTERNATIVE FLARED TERMINAL SYSTEM	ALTERNATIVE IN-LINE TERMINAL SYSTEM	(N) BURIED POST END ANCHOR	RAIL TENSIONING ASSEMBLY	CRASH CUSHION (TYPE CAT)	CRASH CUSHION (TYPE CAT) BACKUP	TERMINAL SYSTEM (TYPE X-TENSION) FLARED	TERMINAL SYSTEM (TYPE X-TENSION) IN-LINE	(N) GUARD RAILING LAYOUT TYPE	COMMENTS	LOCATION #
				LF	EA	EA	EA	LF	LF	LF	LF	LF	LF	LF	LF	EA	CY	EA	EA	EA	EA	EA	EA	EA	EA	EA	EA	EA	EA			
17	5.47	5.46	W	62.5							62.5					1	0.60	1		1		1								12B	BLUE LAKE UC	17
18	5.47	5.49	E	125							125.0		75.0			1	0.70	1		1			1							12DD	BLUE LAKE UC	18
19	7.14	7.18	E	162.5	1	1		50.0		112.5																					TRANSITION TO COUNTY ROAD, PAVE OVERSIDE DRAIN	19
20	8.22	8.35	E	637.5					400.0		37.5			187.5									1	1						11I		20
21	8.73	8.80	E	375				300.0			75.0											2								11E		21
22	9.48	9.56	E	387.5	3		2		312.5		75.0											2								11E		22
23	9.93	10.04	E	600					600.0		600.0	600.0		600										2						11F		23
24	10.22	10.43	E	1100	2		2		1012.5		87.5			50					1		1	1								11B		24
25	10.56	10.60	E	250	1	1			175.0		75.0								1		1	1								11B		25
26	10.95	10.97	E	175						50.0	50.0			75									1	1						11K		26
27	11.00	11.02	E	125	2		2		62.5		62.5					1	0.60	1		1		1								12B	NF MAD RIVER	27
28	11.00	11.02	W	125					50.0		75.0			75				1		1				1						12CC	NF MAD RIVER	28
29	11.10	11.12	E	125					62.5		62.5					1	0.60	1		1		1								12BB	NF MAD RIVER	29
30	11.13	11.11	W	125							125.0			100				1		1				1						12C	NF MAD RIVER	30
31	11.62	12.00	E	2012.5				212.5		1800.0														1						11G	OBTAIN 10:1 SLOPE	31
32	12.13	12.18	W	275	2		2		175.0		75.0			100										2						11F	PIVOT MBGR IN FRONT OF DITCH	32
33	12.27	12.47	E	987.5	5				937.5		50.0								1		1	1								11B		33
34	12.29	12.46	W	887.5	3			600.0	250.0		37.5											1		1						11G		34
SHEET TOTALS:					19	2	8	1162.5	4037.5	1962.5	1675.0	600.0	75.0	1188	0	4	2.5	6	3	6	3	11	3	10	0	0	0	0				

(N) - NOT A SEPARATE PAY ITEM, FOR INFORMATION ONLY

SUMMARY OF QUANTITIES

Q-2

STATE OF CALIFORNIA - DEPARTMENT OF TRANSPORTATION
Caltrans®
03-DESIGN

FUNCTIONAL SUPERVISOR: KEN KEATON
CALCULATED-DESIGNED BY: SUKHDEEP S. SNDHER
CHECKED BY: GARY DUGHT
REVISED BY
DATE REVISED

LAST REVISION 04-20-12
DATE PLOTTED => 30-AUG-2012
TIME PLOTTED => 09:54

Dist	COUNTY	ROUTE	POST MILES TOTAL PROJECT	SHEET No.	TOTAL SHEETS
01	Hum	299	0.0/43.0	13	59

REGISTERED CIVIL ENGINEER 8-27-12 DATE

PLANS APPROVAL DATE 8-27-12

REGISTERED PROFESSIONAL ENGINEER SUKHDEEP SINGH SANDHER No. 74893 Exp. 12-31-13 CIVIL STATE OF CALIFORNIA

THE STATE OF CALIFORNIA OR ITS OFFICERS OR AGENTS SHALL NOT BE RESPONSIBLE FOR THE ACCURACY OR COMPLETENESS OF SCANNED COPIES OF THIS PLAN SHEET.

METAL BEAM GUARD RAILING

LOCATION #	BEGIN PM	END PM	DIRECTION	(N) LENGTH	METAL BEAM GUARD RAILING (ELEMENT)	(N) REPLACE MBGR	(N) NEST MBGR	RECONSTRUCT MBGR	RECONSTRUCT MBGR (7' POST)	ADJUST METAL BEAM GUARD RAILING	REMOVE METAL BEAM GUARD RAILING	(N) REMOVE METAL BEAM GUARD RAILING (7' POST)	MBGR (STEEL POST)	MBGR (WOOD POST)	MBGR (7' WOOD POST)	(N) ANCHOR BLOCK	MINOR CONCRETE (MINOR STRUCTURE)	TRANSITION RAILING (TYPE WB)	END (TYPE A)	CAP (TYPE TC)	END ANCHOR ASSEMBLY (TYPE SFT)	ALTERNATIVE FLARED TERMINAL SYSTEM	ALTERNATIVE IN-LINE TERMINAL SYSTEM	(N) BURIED POST END ANCHOR	RAIL TENSIONING ASSEMBLY	CRASH CUSHION (TYPE CAT)	CRASH CUSHION (TYPE CAT) BACKUP	TERMINAL SYSTEM (TYPE X-TENSION) FLARED	TERMINAL SYSTEM (TYPE X-TENSION) IN-LINE	(N) GUARD RAILING LAYOUT TYPE	COMMENTS	LOCATION #
				LF	EA	EA	EA	LF	LF	LF	LF	LF	LF	LF	LF	EA	CY	EA	EA	EA	EA	EA	EA	EA	EA	EA	EA	EA	EA			
35	12.52	12.68	E	837.5	4		4	100.0	612.5		100.0			87.5								1		1					11G		35
36	12.56	12.69	W	687.5	1	1			687.5															2					11F		36
37	12.74	12.78	E	187.5					187.5															2					11F	INCREASE HORIZONTAL CLEARANCE	37
38	12.98	13.12	E	750	2	2			225.0		512.5	462.5		475	12.5							1		1					11F		38
39	13.17	13.28	E	562.5	3	2			437.5		87.5			125										2					11G		39
40	13.88	14.07	E	1000	9	5	4		175.0		825.0	787.5							1		1	1							11G	INCREASE HORIZONTAL CLEARANCE	40
41	14.50	14.66	E	837.5	2		2		787.5		50.0								1		1	1							11B		41
42	14.50	14.68	W	1012.5	3	3					950.0	950.0	1012.5											2					11F		42
43	14.89	15.00	E	550	3	3			475.0		75.0											2							11E		43
44	15.23	15.44	E	1062.5	2		2		850.0		75.0			137.5								2							11E		44
45	15.25	15.33	W	437.5					387.5		50.0												1	1					11K		45
46	15.36	15.40	W	225	1	1			187.5		37.5											1		1					11G		46
47	15.73	15.90	E	875	4		4	637.5	225.0		12.5			12.5					1		1			1					11C		47
48	15.74	15.89	W	850	2				762.5		62.5			87.5										2					11F		48
49	16.03	16.15	W	537.5	5	1	4	75.0	425.0		37.5											1		1					11L		49
50	16.35	16.51	E	875					725.0		100.0			150										2					11F	BURIED PHONE (USA)	50
51	16.41	16.51	W	525	3	1	2		462.5		50.0			62.5								1		1					11L		51
52	16.68	16.81	E	700	4				625.0		75.0											2							11E	INCREASE HORIZONTAL CLEARANCE	52
SHEET TOTALS:					48	19	22	812.5	8237.5	0.0	3100.0	2200.0	1012.5	1138	12.5	0	0	0	3	0	3	13	1	19	0	0	0	0				

(N) - NOT A SEPARATE PAY ITEM, FOR INFORMATION ONLY

SUMMARY OF QUANTITIES

Q-3

STATE OF CALIFORNIA - DEPARTMENT OF TRANSPORTATION

Caltrans 03-DESIGN

FUNCTIONAL SUPERVISOR KEN KEATON

CALCULATED-DESIGNED BY

CHECKED BY

REVISED BY

DATE REVISED

LAST REVISION 04-20-12 DATE PLOTTED => 30-AUG-2012 TIME PLOTTED => 09:54

Dist	COUNTY	ROUTE	POST MILES TOTAL PROJECT	SHEET No.	TOTAL SHEETS
01	Hum	299	0.0/43.0	14	59

REGISTERED CIVIL ENGINEER 8-27-12 DATE

8-27-12
PLANS APPROVAL DATE

REGISTERED PROFESSIONAL ENGINEER SUKHDEEP SINGH SANDHER No. 74893 Exp. 12-31-13 CIVIL STATE OF CALIFORNIA

THE STATE OF CALIFORNIA OR ITS OFFICERS OR AGENTS SHALL NOT BE RESPONSIBLE FOR THE ACCURACY OR COMPLETENESS OF SCANNED COPIES OF THIS PLAN SHEET.

METAL BEAM GUARD RAILING

LOCATION #	BEGIN PM	END PM	DIRECTION	(N) LENGTH	METAL BEAM GUARD RAILING (ELEMENT)	(N) REPLACE MBGR	(N) NEST MBGR	RECONSTRUCT MBGR	RECONSTRUCT MBGR (7' POST)	ADJUST METAL BEAM GUARD RAILING	REMOVE METAL BEAM GUARD RAILING	(N) REMOVE METAL BEAM GUARD RAILING (7' POST)	MBGR (STEEL POST)	MBGR (WOOD POST)	MBGR (7' WOOD POST)	(N) ANCHOR BLOCK	MINOR CONCRETE (MINOR STRUCTURE)	TRANSITION RAILING (TYPE WB)	END CAP (TYPE A)	END CAP (TYPE TC)	END ANCHOR ASSEMBLY (TYPE SFT)	ALTERNATIVE FLARED TERMINAL SYSTEM	ALTERNATIVE IN-LINE TERMINAL SYSTEM	(N) BURIED POST END ANCHOR	RAIL TENSIONING ASSEMBLY	CRASH CUSHION (TYPE CAT)	CRASH CUSHION (TYPE CAT) BACKUP	TERMINAL SYSTEM (TYPE X-TENSION) FLARED	TERMINAL SYSTEM (TYPE X-TENSION) IN-LINE	(N) GUARD RAILING LAYOUT TYPE	COMMENTS	LOCATION #
				LF	EA	EA	EA	LF	LF	LF	LF	LF	LF	LF	LF	EA	CY	EA	EA	EA	EA	EA	EA	EA	EA	EA	EA	EA	EA			
53	16.70	16.78	W	425	3	1	2	200.0	162.5		50.0			62.5										2						11F	INCREASE HORIZONTAL CLEARANCE	53
54	16.93	17.10	E	912.5	2		2		825.0		62.5			50								1		1						11G	INCREASE HORIZONTAL CLEARANCE	54
55	21.16	21.39	W	1125	8		4				1125.0				1050							2								11E		55
56	21.17	21.39	E	1187.5	5			400.0			75.0			50	700									1				1		11G		56
57	21.61	21.81	W	1100	2		2	462.5		562.5	75.0											2								11E	INCREASE HORIZONTAL CLEARANCE	57
58	22.02	22.10	W	787.5	2		2	262.5		162.5	37.5				325							1		1						11L		58
59	22.12	22.16	W	237.5	2		2			200.0	37.5											1		1				1		11G		59
60	22.58	22.66	E	737.5						612.5	75.0			125										2						11F		60
61	22.51	22.61	W	450						187.5	337.5				262.5							2								11E		61
62	22.95	23.10	W	775	6	4	2	50.0		650.0	162.5				125							1		1						11L		62
63	23.46	23.57	W	662.5	3	2		625.0	100.0	525.0	75.0			112.5										2						11F		63
64	23.66	23.86	W	1025	2		2			1025.0	62.5			50								1		1						11G		64
65	24.02	24.13	W	537.5	4		4	537.5																2						11F		65
66	24.26	24.36	W	550				450.0			100.0				62.5							1		1						11L		66
67	24.33	24.36	E	200						150.0	25.0			50										2						11F		67
68	24.48	24.61	W	712.5	4		4	200.0		512.5														1						11G		68
69	24.49	24.59	E	525						150.0	375.0				337.5							1		1						11L		69
70	25.16	25.23	W	412.5	2		2		412.5															2						11F		70
71	25.34	25.46	W	662.5					662.5															2						11F		71
SHEET TOTALS:					45	7	28	3187.5	2162.5	4737.5	2675.0	0.0	0.0	500	2863	0	0	0	0	0	0	13	0	23	0	0	0	2				

(N) - NOT A SEPARATE PAY ITEM, FOR INFORMATION ONLY

SUMMARY OF QUANTITIES

Q-4

STATE OF CALIFORNIA - DEPARTMENT OF TRANSPORTATION
Caltrans 03-DESIGN

FUNCTIONAL SUPERVISOR: KEN KEATON
CALCULATED-DESIGNED BY: SUKHDEEP S. SNDHER
CHECKED BY: GARY DUGHT
REVISED BY
DATE REVISED

LAST REVISION 04-20-12
DATE PLOTTED => 30-AUG-2012
TIME PLOTTED => 09:54

Dist	COUNTY	ROUTE	POST MILES TOTAL PROJECT	SHEET No.	TOTAL SHEETS
01	Hum	299	0.0/43.0	15	59

REGISTERED CIVIL ENGINEER 8-27-12 DATE

PLANS APPROVAL DATE 8-27-12

REGISTERED PROFESSIONAL ENGINEER SUKHDEEP SINGH SANDHER No. 74893 Exp. 12-31-13 CIVIL STATE OF CALIFORNIA

THE STATE OF CALIFORNIA OR ITS OFFICERS OR AGENTS SHALL NOT BE RESPONSIBLE FOR THE ACCURACY OR COMPLETENESS OF SCANNED COPIES OF THIS PLAN SHEET.

METAL BEAM GUARD RAILING

LOCATION #	BEGIN PM	END PM	DIRECTION	(N) LENGTH	METAL BEAM GUARD RAILING (ELEMENT)	(N) REPLACE MBGR	(N) NEST MBGR	RECONSTRUCT MBGR	RECONSTRUCT MBGR (7' POST)	ADJUST METAL BEAM GUARD RAILING	REMOVE METAL BEAM GUARD RAILING	(N) REMOVE METAL BEAM GUARD RAILING (7' POST)	MBGR (STEEL POST)	MBGR (WOOD POST)	MBGR (7' WOOD POST)	(N) ANCHOR BLOCK	MINOR CONCRETE (MINOR STRUCTURE)	TRANSITION RAILING (TYPE WB)	END (TYPE A)	CAP (TYPE TC)	END ANCHOR ASSEMBLY (TYPE SFT)	ALTERNATIVE FLARED TERMINAL SYSTEM	ALTERNATIVE IN-LINE TERMINAL SYSTEM	(N) BURIED POST END ANCHOR	RAIL TENSIONING ASSEMBLY	CRASH CUSHION (TYPE CAT)	CRASH CUSHION (TYPE CAT) BACKUP	TERMINAL SYSTEM (TYPE X-TENSION) FLARED	TERMINAL SYSTEM (TYPE X-TENSION) IN-LINE	(N) GUARD RAILING LAYOUT TYPE	COMMENTS	LOCATION #
				LF	EA	EA	EA	LF	LF	LF	LF	LF	LF	LF	LF	EA	CY	EA	EA	EA	EA	EA	EA	EA	EA	EA	EA	EA	EA			
72	25.56	25.65	W	462.5	2		2		462.5															2						11F	NEST BY TWO POST SIGN	72
73	26.21	26.46	E	1300	2		2	600.0		562.5	112.5			100								1		1						11L		73
74	26.51	26.68	E	825	2		2	787.5			75.0											1						1		11E		74
75	26.94	27.07	E	625	4	2	2			625.0	75.0											2								11E	REMOVE NORTHERN HALF OF DIKE	75
76	27.02	27.07	W	237.5	3	1	2	150.0	25.0		62.5			25								1		1						11L		76
77	27.33	27.44	E	562.5				475.0			87.5			50					1		1	1								11B	INCREASE HORIZONTAL CLEARANCE	77
78	27.82	28.13	E	1600	2		2	800.0		762.5	37.5										1			1						11L		78
79	28.24	28.37	E	725				250.0		412.5	62.5				25							1		1						11G		79
80	28.72	28.86	E	1312.5				300.0		862.5	125.0			150										2						11F	PLACE IN FRONT OF DITCH	80
81	29.12	29.31	E	950	3						950.0				862.5								1					1		11E		81
82	29.54	29.70	E	875				600.0			275.0				200							2								11E		82
83	30.31	30.35	W	262.5		0					212.5			87.5	125								1							11I		83
84	30.58	30.63	E	262.5	3						262.5				187.5							1						1		11E		84
85	31.01	31.09	E	437.5	2		2				350.0				350							1	1							11H		85
86	31.23	31.29	W	275	2		2	87.5			75.0			75	112.5						1			1						11C		86
87	31.31	31.39	W	487.5					450.0		25.0			37.5										2						11F	INCREASE HORIZONTAL CLEARANCE	87
88	31.42	31.46	E	262.5	2		2	25.0		200.0				37.5										2						11F	NATURALLY OCCURRING ASBESTOS (NOA)	88
SHEET TOTALS:					27	3	18	4075.0	937.5	3425.0	2787.5	0.0	0.0	562.5	1863	0	0	0	1	0	3	11	3	13	0	0	0	3				

(N) - NOT A SEPARATE PAY ITEM, FOR INFORMATION ONLY

SUMMARY OF QUANTITIES

Q-5

STATE OF CALIFORNIA - DEPARTMENT OF TRANSPORTATION

03-DESIGN

FUNCTIONAL SUPERVISOR: KEN KEATON

CALCULATED-DESIGNED BY: SUKHDEEP S. SNDHER

CHECKED BY: GARY DUGHT

REVISED BY

DATE REVISED

LAST REVISION 04-20-12

DATE PLOTTED => 30-AUG-2012

TIME PLOTTED => 09:54

Dist	COUNTY	ROUTE	POST MILES TOTAL PROJECT	SHEET No.	TOTAL SHEETS
01	Hum	299	0.0/43.0	16	59

REGISTERED CIVIL ENGINEER 8-27-12 DATE

PLANS APPROVAL DATE 8-27-12

REGISTERED PROFESSIONAL ENGINEER SUKHDEEP SINGH SANDHER No. 74893 Exp. 12-31-13 CIVIL STATE OF CALIFORNIA

THE STATE OF CALIFORNIA OR ITS OFFICERS OR AGENTS SHALL NOT BE RESPONSIBLE FOR THE ACCURACY OR COMPLETENESS OF SCANNED COPIES OF THIS PLAN SHEET.

METAL BEAM GUARD RAILING

LOCATION #	BEGIN PM	END PM	DIRECTION	(N) LENGTH	METAL BEAM GUARD RAILING (ELEMENT)	(N) REPLACE MBGR	(N) NEST MBGR	RECONSTRUCT MBGR	RECONSTRUCT MBGR (7' POST)	ADJUST METAL BEAM GUARD RAILING	REMOVE METAL BEAM GUARD RAILING	(N) REMOVE METAL BEAM GUARD RAILING (7' POST)	MBGR (STEEL POST)	MBGR (WOOD POST)	MBGR (7' WOOD POST)	(N) ANCHOR BLOCK	MINOR CONCRETE (MINOR STRUCTURE)	TRANSITION RAILING (TYPE WB)	END (TYPE A)	CAP (TYPE TC)	END ANCHOR ASSEMBLY (TYPE SFT)	ALTERNATIVE FLARED TERMINAL SYSTEM	ALTERNATIVE IN-LINE TERMINAL SYSTEM	(N) BURIED POST END ANCHOR	RAIL TENSIONING ASSEMBLY	CRASH CUSHION (TYPE CAT)	CRASH CUSHION (TYPE CAT) BACKUP	TERMINAL SYSTEM (TYPE X-TENSION) FLARED	TERMINAL SYSTEM (TYPE X-TENSION) IN-LINE	(N) GUARD RAILING LAYOUT TYPE	COMMENTS	LOCATION #
				LF	EA	EA	EA	LF	LF	LF	LF	LF	LF	LF	LF	EA	CY	EA	EA	EA	EA	EA	EA	EA	EA	EA	EA	EA	EA			
89	31.83	31.92	W	500						225.0	275.0			100	137.5													1		11E	NOA	89
90	32.01	32.03	W	112.5						37.5	75.0																	1		11E	NOA	90
91	32.21	32.23	E	162.5	2		2	87.5			50.0			37.5	37.5									2						11F	INCREASE HORIZONTAL CLEARANCE, NOA	91
92	32.71	32.86	W	950	2		2			575.0	87.5				287.5								1					1		11H		92
93	32.96	33.06	E	750	2	1				500.0					250									2						11F		93
94	33.20	33.21	E	62.5							62.5					1	0.60	1		1								1		12B		94
95	33.21	33.22	W	87.5							62.5				25	1	0.60	1		1		1								12BB		95
96	33.23	33.24	E	87.5							50.0			25				1		1		1								12BB		96
97	33.22	33.23	W	100							100.0			25				1		1			1							12A		97
98	33.76	33.86	W	500							500.0			400									2					1	1	11H	STEEL POSTS AND BLOCKS. NEED NEW BLOCKS	98
99	33.83	33.95	E	675	2			550.0			87.5			37.5														1	1	11J		99
100	34.47	34.56	W	475				275.0	125.0		75.0					1	0.60	1		1			1							12AA	NOA	100
101	34.55	34.56	E	87.5							87.5			62.5		1	0.60	1		1				1						12C	NOA	101
102	34.58	34.59	W	75							75.0			50				1		1				1						12C	NOA	102
103	34.59	34.60	E	87.5							87.5			25		1	0.60	1		1								1		12BB		103
104	34.77	34.89	E	687.5	2					600.0	87.5											1							1	11H		104
105	35.53	35.55	W	175							175.0			150				1		1				1						12CC	CLEAR RUBBLE BEHIND MBGR	105
106	35.54	35.55	E	87.5							87.5				25			1		1								1		12B		106
SHEET TOTALS:					10	1	4	912.5	125.0	1937.5	2025.0	0.0	0.0	912.5	762.5	5	3	10	0	10	0	3	5	7	0	0	0	11				

(N) - NOT A SEPARATE PAY ITEM, FOR INFORMATION ONLY

SUMMARY OF QUANTITIES

Q-6

STATE OF CALIFORNIA - DEPARTMENT OF TRANSPORTATION

Caltrans® 03-DESIGN

FUNCTIONAL SUPERVISOR: KEN KEATON

CALCULATED-DESIGNED BY: SUKHDEEP S. SNDHER

CHECKED BY: GARY DUGHT

REVISED BY

DATE REVISED

LAST REVISION 04-20-12 | DATE PLOTTED => 30-AUG-2012 | TIME PLOTTED => 09:55

Dist	COUNTY	ROUTE	POST MILES TOTAL PROJECT	SHEET No.	TOTAL SHEETS
01	Hum	299	0.0/43.0	17	59

REGISTERED CIVIL ENGINEER 8-27-12 DATE

8-27-12
PLANS APPROVAL DATE

REGISTERED PROFESSIONAL ENGINEER SUKHDEEP SINGH SANDHER No. 74893 Exp. 12-31-13 CIVIL STATE OF CALIFORNIA

THE STATE OF CALIFORNIA OR ITS OFFICERS OR AGENTS SHALL NOT BE RESPONSIBLE FOR THE ACCURACY OR COMPLETENESS OF SCANNED COPIES OF THIS PLAN SHEET.

METAL BEAM GUARD RAILING

LOCATION #	BEGIN PM	END PM	DIRECTION	(N) LENGTH	METAL BEAM GUARD RAILING (ELEMENT)	(N) REPLACE MBGR	(N) NEST MBGR	RECONSTRUCT MBGR	RECONSTRUCT MBGR (7' POST)	ADJUST METAL BEAM GUARD RAILING	REMOVE METAL BEAM GUARD RAILING	(N) REMOVE METAL BEAM GUARD RAILING (7' POST)	MBGR (STEEL POST)	MBGR (WOOD POST)	MBGR (7' WOOD POST)	(N) ANCHOR BLOCK	MINOR CONCRETE (MINOR STRUCTURE)	TRANSITION RAILING (TYPE WB)	END CAP (TYPE A)	END CAP (TYPE TC)	END ANCHOR ASSEMBLY (TYPE SFT)	ALTERNATIVE FLARED TERMINAL SYSTEM	ALTERNATIVE IN-LINE TERMINAL SYSTEM	(N) BURIED POST END ANCHOR	RAIL TENSIONING ASSEMBLY	CRASH CUSHION (TYPE CAT)	CRASH CUSHION (TYPE CAT) BACKUP	TERMINAL SYSTEM (TYPE X-TENSION) FLARED	TERMINAL SYSTEM (TYPE X-TENSION) IN-LINE	(N) GUARD RAILING LAYOUT TYPE	COMMENTS	LOCATION #
				LF	EA	EA	EA	LF	LF	LF	LF	LF	LF	LF	LF	EA	CY	EA	EA	EA	EA	EA	EA	EA	EA	EA	EA	EA	EA			
107	35.55	35.59	W	87.5							87.5			25				1		1								1		12B	NOA	107
108	35.55	35.59	E	100							75.0			75		1	0.60	1		1				1						12CC	NOA	108
109	36.04	36.28	W	1225	4		4			937.5		287.5			287.5													2		11E	NOA	109
110	36.74	36.92	W	900	4		4			900.0														1						11G	NOA	110
111	37.49	37.57	W	462.5						425.0				37.5										1						11L		111
112	37.90	38.01	W	550	4		4	432.5			50.0				67.5						1	1								11B		112
113	38.15	38.16	E	175							100.0			100							1	1								11E	RE-ORIENT PARALLEL WITH TRAFFIC, LEVEL SURFACE	113
114	38.08	38.24	W	800	4	2	2				800.0			300	475															11E	ALL STEEL POSTS AND STEEL BLOCKS	114
115	40.62	40.66	W	200				112.5			87.5											1	1							11H	SIGN POST ATTACHED TO MBGR POST, RELOCATE SIGN	115
116	40.95	40.99	E	187.5	1	1					187.5			37.5	112.5						1	1								11B		116
117	41.53	41.61	W	512.5	1	1				512.5																				11E	DRILL BREAK-A-WAY POST HOLES	117
SHEET TOTALS:					18	4	14	545.0	0.0	2775.0	1387.5	287.5	0.0	575	942.5	1	0.6	2	0	2	3	4	1	3	0	0	0	3				

(N) - NOT A SEPARATE PAY ITEM, FOR INFORMATION ONLY

SUMMARY OF QUANTITIES

Q-7

STATE OF CALIFORNIA - DEPARTMENT OF TRANSPORTATION
Caltrans
03-DESIGN

FUNCTIONAL SUPERVISOR: KEN KEATON
CALCULATED-DESIGNED BY: SUKHDEEP S. SNDHER
CHECKED BY: GARY DUGHT
REVISED BY
DATE REVISED

LAST REVISION 04-20-12 | DATE PLOTTED => 30-AUG-2012 | TIME PLOTTED => 09:55

Dist	COUNTY	ROUTE	POST MILES TOTAL PROJECT	SHEET No.	TOTAL SHEETS
01	Hum	299	0.0/43.0	18	59

REGISTERED CIVIL ENGINEER 8-27-12 DATE

8-27-12
PLANS APPROVAL DATE

REGISTERED PROFESSIONAL ENGINEER SUKHDEEP SINGH SANDHER No. 74893 Exp. 12-31-13 CIVIL STATE OF CALIFORNIA

THE STATE OF CALIFORNIA OR ITS OFFICERS OR AGENTS SHALL NOT BE RESPONSIBLE FOR THE ACCURACY OR COMPLETENESS OF SCANNED COPIES OF THIS PLAN SHEET.

METAL BEAM GUARD RAILING

LOCATION #	BEGIN PM	END PM	DIRECTION	(N) LENGTH (LF)	METAL BEAM GUARD RAILING (ELEMENT) (EA)	(N) REPLACE MBGR (EA)	(N) NEST MBGR (EA)	RECONSTRUCT MBGR (LF)	RECONSTRUCT MBGR (7' POST) (LF)	ADJUST METAL BEAM GUARD RAILING (LF)	REMOVE METAL BEAM GUARD RAILING (LF)	(N) REMOVE METAL BEAM GUARD RAILING (7' POST) (LF)	MBGR (STEEL POST) (LF)	MBGR (WOOD POST) (LF)	MBGR (7' WOOD POST) (LF)	(N) ANCHOR BLOCK (EA)	MINOR CONCRETE (MINOR STRUCTURE) (CY)	TRANSITION RAILING (TYPE WB) (EA)	END (TYPE A) (EA)	CAP (TYPE TC) (EA)	END ANCHOR ASSEMBLY (TYPE SFT) (EA)	ALTERNATIVE FLARED TERMINAL SYSTEM (EA)	ALTERNATIVE IN-LINE TERMINAL SYSTEM (EA)	(N) BURIED POST END ANCHOR (EA)	RAIL TENSIONING ASSEMBLY (EA)	CRASH CUSHION (TYPE CAT) (EA)	CRASH CUSHION (TYPE CAT) BACKUP (EA)	TERMINAL SYSTEM (TYPE X-TENSION) FLARED (EA)	TERMINAL SYSTEM (TYPE X-TENSION) IN-LINE (EA)	(N) GUARD RAILING LAYOUT TYPE	COMMENTS	LOCATION #
TOTALS FROM SHEET Q-1:					4	0	4	150.0	0.0	1612.5	1081.3	0.0	87.5	287.5	0	13	8.1	13	1	13	1	9	5	1	1	1	1	0				
TOTALS FROM SHEET Q-2:					19	2	8	1162.5	4037.5	1962.5	1675.0	600.0	75.0	1188	0	4	2.5	6	3	6	3	11	3	10	0	0	0	0				
TOTALS FROM SHEET Q-3:					48	19	22	812.5	8237.5	0.0	3100.0	2200.0	1012.5	1138	12.5	0	0	0	3	0	3	13	1	19	0	0	0	0				
TOTALS FROM SHEET Q-4:					45	7	28	3187.5	2162.5	4737.5	2675.0	0.0	0.0	500	2863	0	0	0	0	0	0	13	0	23	0	0	0	2				
TOTALS FROM SHEET Q-5:					27	3	18	4075.0	937.5	3425.0	2787.5	0.0	0.0	562.5	1863	0	0	0	1	0	3	11	3	13	0	0	0	3				
TOTALS FROM SHEET Q-6:					10	1	4	912.5	125.0	1937.5	2025.0	0.0	0.0	912.5	762.5	5	3	10	0	10	0	3	5	7	0	0	0	11				
TOTALS FROM SHEET Q-7:					18	4	14	545.0	0.0	2775.0	1387.5	287.5	0.0	575	942.5	1	0.6	2	0	2	3	4	1	3	0	0	0	3				
MBGR QUANTITY TOTAL					171	36	98	10845.0	15500.0	16450.0	14731.3	3087.5	1175.0	5163	6443	23	14.2	31	8	31	13	64	18	76	1	1	1	19				

(N) - NOT A SEPARATE PAY ITEM, FOR INFORMATION ONLY

SUMMARY OF QUANTITIES
Q-8

REVISED BY | DATE REVISED
SUKHDEEP S. SNDHER | GARY DUGHT
CALCULATED-DESIGNED BY | CHECKED BY
FUNCTIONAL SUPERVISOR
KEN KEATON

STATE OF CALIFORNIA - DEPARTMENT OF TRANSPORTATION
Caltrans
03-DESIGN

LAST REVISION 04-20-12 | DATE PLOTTED => 30-AUG-2012 | TIME PLOTTED => 09:55

Dist	COUNTY	ROUTE	POST MILES TOTAL PROJECT	SHEET No.	TOTAL SHEETS
01	Hum	299	0.0/43.0	19	59

REGISTERED CIVIL ENGINEER 8-27-12 DATE

8-27-12
PLANS APPROVAL DATE

REGISTERED PROFESSIONAL ENGINEER SUKHDEEP SINGH SANDHER No. 74893 Exp. 12-31-13 CIVIL STATE OF CALIFORNIA

THE STATE OF CALIFORNIA OR ITS OFFICERS OR AGENTS SHALL NOT BE RESPONSIBLE FOR THE ACCURACY OR COMPLETENESS OF SCANNED COPIES OF THIS PLAN SHEET.

ROADWAY ITEMS (CONTINUED)

LOCATION #	WEED CONTROL MAT (FIBER) SQYD	SHOULDER BACKING TON	CLASS 2 AGGREGATE BASE CY	PLACE HOT MIX ASPHALT (MISCELLANEOUS AREA) SQYD	MINOR HOT MIX ASPHALT TON	REMOVE ASPHALT CONCRETE DIKE LF	PLACE HOT MIX ASPHALT DIKE (TYPE F) LF	PLACE HOT MIX ASPHALT DIKE (TYPE C) LF	RELOCATE ROADSIDE SIGN - ONE POST EA	RESET ROADSIDE SIGN (ONE POST) EA	RESET ROADSIDE SIGN (METAL POST) EA	RESET ROADSIDE SIGN (TWO POST) EA	RESET MILEPOST MARKER EA	RESET MARKER EA	LOCATION #
1										1					1
2															2
3															3
4										1				2	4
5														1	5
6				1.00	0.3					1				2	6
7										1		1	1	3	7
8				0.60	1.07	75	75			1				2	8
9				0.40	1.31	100	100			1				1	9
10														2	10
11													1		11
12					0.62	62.5	38	25							12
13										1		1		1	13
14				0.40	0.12									3	14
15					0.12	30		18		1				1	15
SHEET TOTALS:															

LOCATION #	WEED CONTROL MAT (FIBER) SQYD	SHOULDER BACKING TON	CLASS 2 AGGREGATE BASE CY	PLACE HOT MIX ASPHALT (MISCELLANEOUS AREA) SQYD	MINOR HOT MIX ASPHALT TON	REMOVE ASPHALT CONCRETE DIKE LF	PLACE HOT MIX ASPHALT DIKE (TYPE F) LF	PLACE HOT MIX ASPHALT DIKE (TYPE C) LF	RELOCATE ROADSIDE SIGN - ONE POST EA	RESET ROADSIDE SIGN (ONE POST) EA	RESET ROADSIDE SIGN (METAL POST) EA	RESET ROADSIDE SIGN (TWO POST) EA	RESET MILEPOST MARKER EA	RESET MARKER EA	LOCATION #
16			10		2.15	138	138	75						1	16
17										1					17
18					1.95	175	150	25					1		18
19				5.12	1.54					2				1	19
20		19.6												1	20
21															21
22													1	1	22
23													1	2	23
24				1.00	6.41	500	500	25						3	24
25										1					25
26														3	26
27					0.92	63	63	25		2			1		27
28										1					28
29															29
30										1					30
SHEET TOTALS:		19.6	10	8.52	16.5	1144	1064	193		16		2	6	30	

SUMMARY OF QUANTITIES

Q-9

STATE OF CALIFORNIA - DEPARTMENT OF TRANSPORTATION
Caltrans®
03-DESIGN

FUNCTIONAL SUPERVISOR: KEN KEATON
CALCULATED-DESIGNED BY: SUKHDEEP S. SNDHER
CHECKED BY: GARY DUGHT
REVISED BY
DATE REVISED

LAST REVISION 04-20-12 | DATE PLOTTED => 30-AUG-2012 | TIME PLOTTED => 09:55

Dist	COUNTY	ROUTE	POST MILES TOTAL PROJECT	SHEET No.	TOTAL SHEETS
01	Hum	299	0.0/43.0	20	59

REGISTERED CIVIL ENGINEER 8-27-12 DATE

PLANS APPROVAL DATE 8-27-12

REGISTERED PROFESSIONAL ENGINEER SUKHDEEP SINGH SANDHER No. 74893 Exp. 12-31-13 CIVIL STATE OF CALIFORNIA

THE STATE OF CALIFORNIA OR ITS OFFICERS OR AGENTS SHALL NOT BE RESPONSIBLE FOR THE ACCURACY OR COMPLETENESS OF SCANNED COPIES OF THIS PLAN SHEET.

ROADWAY ITEMS (CONTINUED)

LOCATION #	WEED CONTROL MAT (FIBER) SQYD	SHOULDER BACKING TON	CLASS 2 AGGREGATE BASE CY	PLACE HOT MIX ASPHALT (MISCELLANEOUS AREA) SQYD	MINOR HOT MIX ASPHALT TON	REMOVE ASPHALT CONCRETE DIKE LF	PLACE HOT MIX ASPHALT DIKE (TYPE F) LF	PLACE HOT MIX ASPHALT DIKE (TYPE C) LF	RELOCATE ROADSIDE SIGN - ONE POST EA	RESET ROADSIDE SIGN (ONE POST) EA	RESET ROADSIDE SIGN (METAL POST) EA	RESET ROADSIDE SIGN (TWO POST) EA	RESET MILEPOST MARKER EA	RESET MARKER EA	LOCATION #
31		3.92								1			1	3	31
32														1	32
33				0.20	0.06						1		1	1	33
34														2	34
35				0.30	0.09									2	35
36					0.57	84		84						1	36
37														1	37
38		157								1			1	1	38
39														2	39
40				2.00	0.6								1	3	40
41				8.00	2.4						1		1	2	41
42										1				1	42
43														1	43
44														1	44
45														2	45
SHEET TOTALS:															

LOCATION #	WEED CONTROL MAT (FIBER) SQYD	SHOULDER BACKING TON	CLASS 2 AGGREGATE BASE CY	PLACE HOT MIX ASPHALT (MISCELLANEOUS AREA) SQYD	MINOR HOT MIX ASPHALT TON	REMOVE ASPHALT CONCRETE DIKE LF	PLACE HOT MIX ASPHALT DIKE (TYPE F) LF	PLACE HOT MIX ASPHALT DIKE (TYPE C) LF	RELOCATE ROADSIDE SIGN - ONE POST EA	RESET ROADSIDE SIGN (ONE POST) EA	RESET ROADSIDE SIGN (METAL POST) EA	RESET ROADSIDE SIGN (TWO POST) EA	RESET MILEPOST MARKER EA	RESET MARKER EA	LOCATION #
46										1				2	46
47				0.20	0.06									2	47
48														4	48
49				0.20	0.06									3	49
50										1			1	4	50
51					0.46	67		67		1		1	1	2	51
52												1			52
53														1	53
54										3			1	1	54
55				0.30	0.09									3	55
56										1	1			3	56
57										2				4	57
58										2				4	58
59														1	59
60														3	60
SHEET TOTALS:		161		11.2	4.39	151		151		14	3	2	8	61	

SUMMARY OF QUANTITIES
Q-10

STATE OF CALIFORNIA - DEPARTMENT OF TRANSPORTATION
Caltrans®
03-DESIGN

FUNCTIONAL SUPERVISOR: KEN KEATON
CALCULATED-DESIGNED BY: SUKHDEEP S. SNDHER
CHECKED BY: GARY DUGHT
REVISED BY
DATE REVISED

LAST REVISION 04-20-12
DATE PLOTTED => 30-AUG-2012
TIME PLOTTED => 09:55

Dist	COUNTY	ROUTE	POST MILES TOTAL PROJECT	SHEET No.	TOTAL SHEETS
01	Hum	299	0.0/43.0	21	59

REGISTERED CIVIL ENGINEER DATE 8-27-12

PLANS APPROVAL DATE 8-27-12

REGISTERED PROFESSIONAL ENGINEER SUKHDEEP SINGH SANDHER No. 74893 Exp. 12-31-13 CIVIL STATE OF CALIFORNIA

THE STATE OF CALIFORNIA OR ITS OFFICERS OR AGENTS SHALL NOT BE RESPONSIBLE FOR THE ACCURACY OR COMPLETENESS OF SCANNED COPIES OF THIS PLAN SHEET.

ROADWAY ITEMS (CONTINUED)

LOCATION #	WEED CONTROL MAT (FIBER) SQYD	SHOULDER BACKING TON	CLASS 2 AGGREGATE BASE CY	PLACE HOT MIX ASPHALT (MISCELLANEOUS AREA) SQYD	MINOR HOT MIX ASPHALT TON	REMOVE ASPHALT CONCRETE DIKE LF	PLACE HOT MIX ASPHALT DIKE (TYPE F) LF	PLACE HOT MIX ASPHALT DIKE (TYPE C) (LF)	RELOCATE ROADSIDE SIGN - ONE POST EA	RESET ROADSIDE SIGN (ONE POST) EA	RESET ROADSIDE SIGN (METAL POST) EA	RESET ROADSIDE SIGN (TWO POST) EA	RESET MILEPOST MARKER EA	RESET MARKER EA	LOCATION #
61					0.3	44		44							61
62					6.11	500	500	25					1	2	62
63										1	1		1	2	63
64					5.52	450	450	25		3				2	64
65					2.31	180	180	25						2	65
66					2.29	178	178	25						1	66
67														1	67
68										3			1		68
69										1			1	2	69
70														2	70
71														2	71
72										5		1		2	72
73											1			3	73
74				0.20	10.5	825	850	50		1			1	3	74
75					4.92	400	400	25						3	75
SHEET TOTALS:															

LOCATION #	WEED CONTROL MAT (FIBER) SQYD	SHOULDER BACKING TON	CLASS 2 AGGREGATE BASE CY	PLACE HOT MIX ASPHALT (MISCELLANEOUS AREA) SQYD	MINOR HOT MIX ASPHALT TON	REMOVE ASPHALT CONCRETE DIKE LF	PLACE HOT MIX ASPHALT DIKE (TYPE F) LF	PLACE HOT MIX ASPHALT DIKE (TYPE C) LF	RELOCATE ROADSIDE SIGN - ONE POST EA	RESET ROADSIDE SIGN (ONE POST) EA	RESET ROADSIDE SIGN (METAL POST) EA	RESET ROADSIDE SIGN (TWO POST) EA	RESET MILEPOST MARKER EA	RESET MARKER EA	LOCATION #
76										1			1	1	76
77														3	77
78					10.4	863	863	25		1			1	4	78
79										1	1	1		2	79
80										5	2	1		3	80
81										2				1	81
82				0.10	9.34	769	769	25		1				2	82
83														1	83
84														1	84
85					5.37	438	438	25		2				3	85
86				0.30	9.43	772	772	25						1	86
87										1				2	87
88	997									4				1	88
89	1731									1				3	89
90	113	78.3													90
SHEET TOTALS:	2841	78.3		0.6	66.5	5419	5400	319		33	5	3	7	55	

SUMMARY OF QUANTITIES
Q-11

STATE OF CALIFORNIA - DEPARTMENT OF TRANSPORTATION
03-DESIGN
Caltrans®

FUNCTIONAL SUPERVISOR: KEN KEATON
CALCULATED-DESIGNED BY: SUKHDEEP S. SNDHER
CHECKED BY: GARY DUGHT
REVISED BY
DATE REVISED

LAST REVISION 04-20-12
DATE PLOTTED => 30-AUG-2012
TIME PLOTTED => 09:55

Dist	COUNTY	ROUTE	POST MILES TOTAL PROJECT	SHEET No.	TOTAL SHEETS
01	Hum	299	0.0/43.0	22	59

REGISTERED CIVIL ENGINEER 8-27-12 DATE

PLANS APPROVAL DATE 8-27-12

REGISTERED PROFESSIONAL ENGINEER SUKHDEEP SINGH SANDHER No. 74893 Exp. 12-31-13 CIVIL STATE OF CALIFORNIA

THE STATE OF CALIFORNIA OR ITS OFFICERS OR AGENTS SHALL NOT BE RESPONSIBLE FOR THE ACCURACY OR COMPLETENESS OF SCANNED COPIES OF THIS PLAN SHEET.

ROADWAY ITEMS (CONTINUED)

LOCATION #	WEED CONTROL MAT (FIBER)	SHOULDER BACKING	CLASS 2 AGGREGATE BASE	PLACE HOT MIX ASPHALT (MISCELLANEOUS AREA)	MINOR HOT MIX ASPHALT	REMOVE ASPHALT CONCRETE DIKE	PLACE HOT MIX ASPHALT DIKE (TYPE F)	PLACE HOT MIX ASPHALT DIKE (TYPE C)	RELOCATE ROADSIDE SIGN - ONE POST	RESET ROADSIDE SIGN (ONE POST)	RESET ROADSIDE SIGN (METAL POST)	RESET ROADSIDE SIGN (TWO POST)	RESET MILEPOST MARKER	RESET MARKER	LOCATION #
	SQYD	TON	CY	SQYD	TON	LF	LF	LF	EA	EA	EA	EA	EA	EA	
91	795													1	91
92										3				4	92
93										1			1	3	93
94										1				1	94
95															95
96															96
97						6									97
98										1				5	98
99										3		1		1	99
100	1531												1	1	100
101	67													1	101
102	75				0.47	25	25	25						2	102
103															103
104														3	104
SHEET TOTALS:															

LOCATION #	WEED CONTROL MAT (FIBER)	SHOULDER BACKING	CLASS 2 AGGREGATE BASE	PLACE HOT MIX ASPHALT (MISCELLANEOUS AREA)	MINOR HOT MIX ASPHALT	REMOVE ASPHALT CONCRETE DIKE	PLACE HOT MIX ASPHALT DIKE (TYPE F)	PLACE HOT MIX ASPHALT DIKE (TYPE C)	RELOCATE ROADSIDE SIGN - ONE POST	RESET ROADSIDE SIGN (ONE POST)	RESET ROADSIDE SIGN (METAL POST)	RESET ROADSIDE SIGN (TWO POST)	RESET MILEPOST MARKER	RESET MARKER	LOCATION #
	SQYD	TN	CY	SQYD	TON	LF	LF	LF	EA	EA	EA	EA	EA	EA	
105															105
106														1	106
107	100													1	107
108	75													1	108
109	4061			1.00	0.3					2				6	109
110	3195			10.00	3									2	110
111										1			1	2	111
112				3.00	0.9					1				2	112
113		3.92								1				1	113
114				1.00	0.3					1				2	114
115		19.6							1					1	115
116		19.6											1	2	116
117										2				2	117
SHEET TOTALS:	9899	43.1		15	4.97	31	25	25	1	17		1	4	45	

SUMMARY OF QUANTITIES

Q-12

STATE OF CALIFORNIA - DEPARTMENT OF TRANSPORTATION

Caltrans®

03-DESIGN

FUNCTIONAL SUPERVISOR: KEN KEATON

CALCULATED-DESIGNED BY: SUKHDEEP S. SNDHER

CHECKED BY: GARY DUGHT

REVISED BY

DATE REVISED

LAST REVISION 04-20-12

DATE PLOTTED => 30-AUG-2012

TIME PLOTTED => 09:55

Dist	COUNTY	ROUTE	POST MILES TOTAL PROJECT	SHEET No.	TOTAL SHEETS
01	Hum	299	0.0/43.0	23	59

REGISTERED CIVIL ENGINEER DATE 8-27-12

PLANS APPROVAL DATE 8-27-12

REGISTERED PROFESSIONAL ENGINEER SUKHDEEP SINGH SANDHER No. 74893 Exp. 12-31-13 CIVIL STATE OF CALIFORNIA

THE STATE OF CALIFORNIA OR ITS OFFICERS OR AGENTS SHALL NOT BE RESPONSIBLE FOR THE ACCURACY OR COMPLETENESS OF SCANNED COPIES OF THIS PLAN SHEET.

ROADWAY ITEMS

	WEED CONTROL MAT (FIBER) (SQYD)	SHOULDER BACKING (TON)	CLASS 2 AGGREGATE BASE (CY)	PLACE HOT MIX ASPHALT (MISCELLANEOUS AREA) (SQYD)	MINOR HOT MIX ASPHALT (TON)	REMOVE ASPHALT CONCRETE DIKE (LF)	PLACE HOT MIX ASPHALT DIKE (TYPE F) (LF)	PLACE HOT MIX ASPHALT DIKE (TYPE C) (LF)	RELOCATE ROADSIDE SIGN - ONE POST (EA)	RESET ROADSIDE SIGN (ONE POST) (EA)	RESET ROADSIDE SIGN (METAL POST) (EA)	RESET ROADSIDE SIGN (TWO POST) (EA)	RESET MILEPOST MARKER (EA)	RESET MARKER (EA)
TOTALS FROM SHEET Q-9:		19.6	10	8.52	16.5	1144	1064	193		16		2	6	30
TOTALS FROM SHEET Q-10:		161		11.2	4.39	151		151		14	3	2	8	61
TOTALS FROM SHEET Q-11:	2841	78.3		0.6	66.5	5419	5400	319		33	5	3	7	55
TOTALS FROM SHEET Q-12:	9899	43.1		15	4.97	31	25	25	1	17		1	4	45
ROADWAY QUANTITY TOTAL	12740	302	10	35.3	92.4	6744	6489	688	1	80	8	8	25	191

MISCELLANEOUS CONSTRUCTION ITEMS

TEMPORARY GRAVEL BAG BERM (LF)	6900
GUARD RAILING DELINEATOR (EA)	630
TEMPORARY FIBER ROLL (LF)	9000
TEMPORARY CONSTRUCTION ENTRANCE (EA)	3
TEMPORARY CHECK DAM (LF)	280
TEMPORARY DRAINAGE INLET PROTECTION (EA)	3
TEMPORARY HYDRAULIC MULCH (SQYD)	4840

* EXACT LOCATIONS TO BE DETERMINED BY ENGINEER

SUMMARY OF QUANTITIES
Q-13

REVISED BY | DATE REVISED

CALCULATED-DESIGNED BY | CHECKED BY

FUNCTIONAL SUPERVISOR: KEN KEATON

STATE OF CALIFORNIA - DEPARTMENT OF TRANSPORTATION

Caltrans

03-DESIGN

LAST REVISION | DATE PLOTTED => 30-AUG-2012 | TIME PLOTTED => 09:55

04-20-12

Dist	COUNTY	ROUTE	POST MILES TOTAL PROJECT	SHEET No.	TOTAL SHEETS
01	Hum	299	0.0/42.9	24	59

Randell D. Hiatt
REGISTERED CIVIL ENGINEER

May 20, 2011
PLANS APPROVAL DATE

REGISTERED PROFESSIONAL ENGINEER Randell D. Hiatt No. C50200 Exp. 6-30-11 CIVIL STATE OF CALIFORNIA

The State of California or its officers or agents shall not be responsible for the accuracy or completeness of electronic copies of this plan sheet.

To accompany plans dated 8-27-12

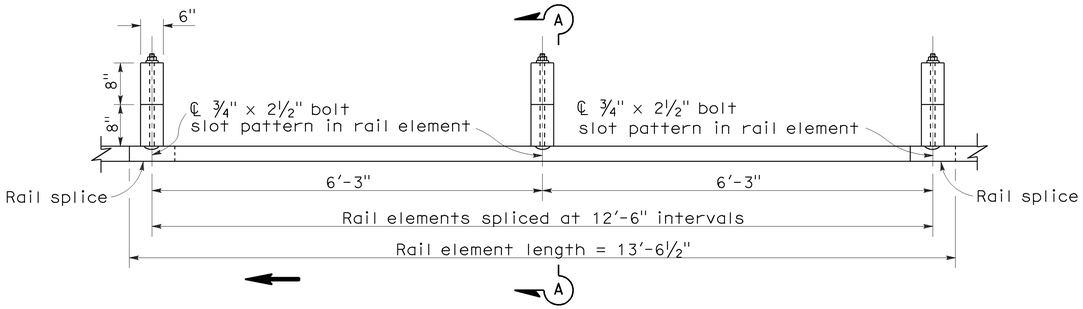

PLAN

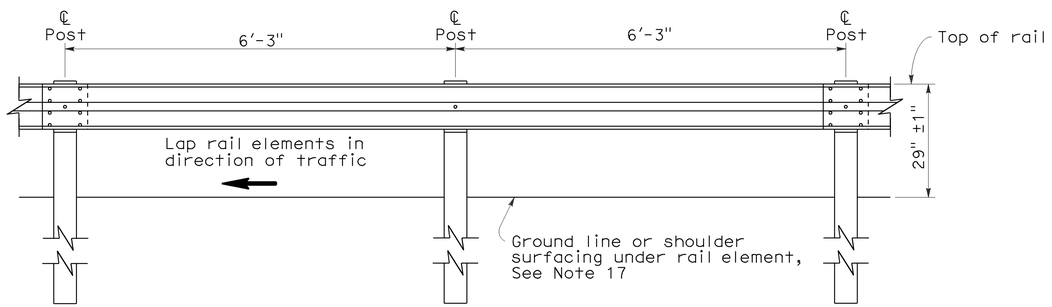

ELEVATION

METAL BEAM GUARD RAILING WITH WOOD POST AND BLOCKS

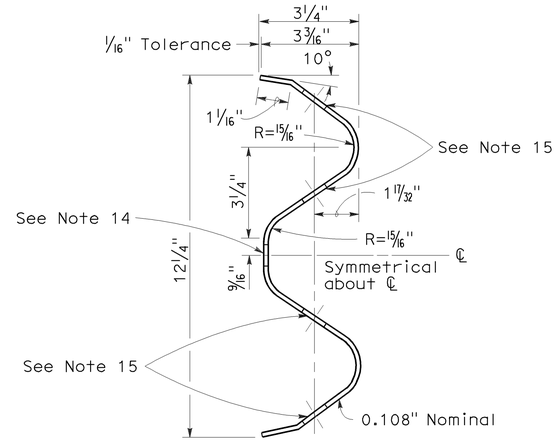

SECTION THRU RAIL ELEMENT

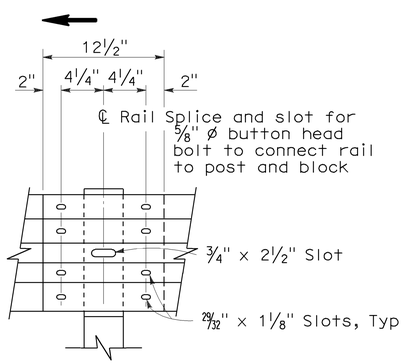

ELEVATION

RAIL ELEMENT SPLICE DETAIL

a) Connect the over lapped end of the rail elements with ⅝" ø x 1⅜" button head oval shoulder splice bolts inserted into the 29⁄32" x 1⅛" slots and bolted together with ⅝" ø recessed hex nuts. Recess of hex nut points toward rail element. A total of 8 bolts and nuts are to be used at each rail splice connection.

b) The ends of the rail elements are to be overlapped in the direction of traffic (see details).

c) Where end cap is to be attached to the end of a rail element, a total of 4 of the above described splice bolts and nuts are to be used.

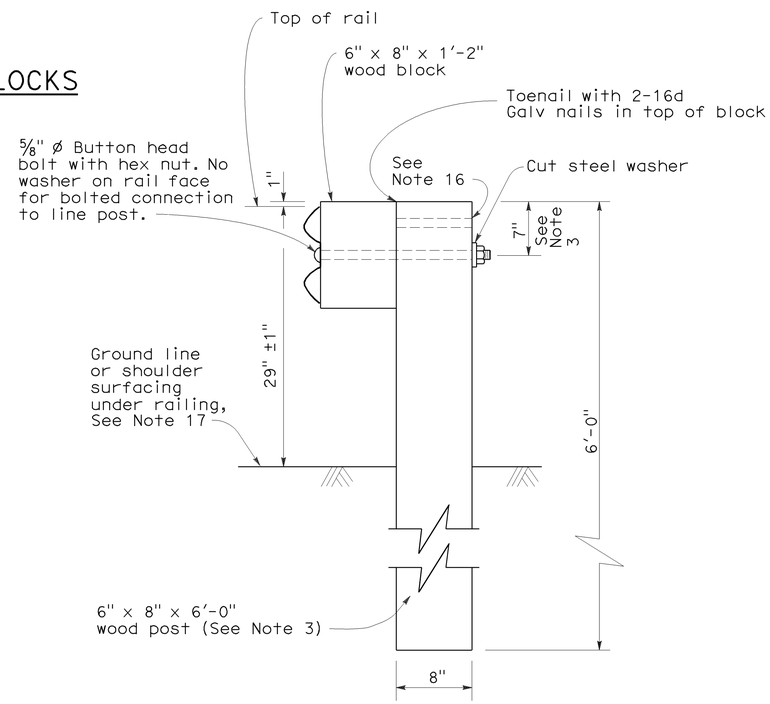

SECTION A-A

TYPICAL WOOD LINE POST INSTALLATION

See Note 4

NOTES:

1. For details of steel post installations, see Standard Plan A77A2.
2. For details of standard hardware used to construct guard railing, see Standard Plan A77B1.
3. For details of wood posts and wood blocks used to construct guard railing, see Standard Plan A77C1.
4. For additional installation details, see Standard Plan A77C3.
5. Guard railing post spacing to be 6'-3" center to center, except as otherwise noted.
6. For guard railing typical layouts, see the A77E, A77F and A77G Series of Standard Plans.
7. For terminal system end treatment details, see the A77L Series of Standard Plans. To connect railing to terminal system end treatment, transition the top of railing height at a ratio of 120:1 to terminal system end treatment height plus one 12'-6" standard railing section at the transitioned height for a horizontal connection to the end treatment.
8. For guard railing end anchor details, see Standard Plans A77H1 and A77I2.
9. For details of guard railing transition to bridge railing, see Standard Plan A77J4.
10. For additional details of guard railing connection to bridge railings, see Standard Plans A77J1, A77J2 and A77K1.
11. For guard railing connection details to abutments and walls, see Standard Plan A77J3.
12. Direction of adjacent traffic indicated by ➡.
13. For typical guard railing delineation and dike positioning details, see Standard Plan A77C4.
14. Slotted hole for bolted connection of rail element to block and post. See "Section Thru Rail Element".
15. Slotted holes for splice bolts to overlap ends of rail element. See "Section Thru Rail Element".
16. Additional hole in uppermost portion of line post is for potential future adjustments of railing height. See Standard Plan A77C1.
17. Install posts in soil.

STATE OF CALIFORNIA
DEPARTMENT OF TRANSPORTATION

METAL BEAM GUARD RAILING STANDARD RAILING SECTION (WOOD POST WITH WOOD BLOCK)

NO SCALE

RSP A77A1 DATED MAY 20, 2011 SUPERSEDES STANDARD PLAN A77A1 DATED MAY 1, 2006 - PAGE 41 OF THE STANDARD PLANS BOOK DATED MAY 2006.

REVISED STANDARD PLAN RSP A77A1

2006 REVISED STANDARD PLAN RSP A77A1

3-10-11

Dist	COUNTY	ROUTE	POST MILES TOTAL PROJECT	SHEET No.	TOTAL SHEETS
01	Hum	299	0.0/42.9	25	59

Randell D. Hiatt
REGISTERED CIVIL ENGINEER

May 20, 2011
PLANS APPROVAL DATE

REGISTERED PROFESSIONAL ENGINEER Randell D. Hiatt No. C50200 Exp. 6-30-11 CIVIL STATE OF CALIFORNIA

The State of California or its officers or agents shall not be responsible for the accuracy or completeness of electronic copies of this plan sheet.

To accompany plans dated 8-27-12

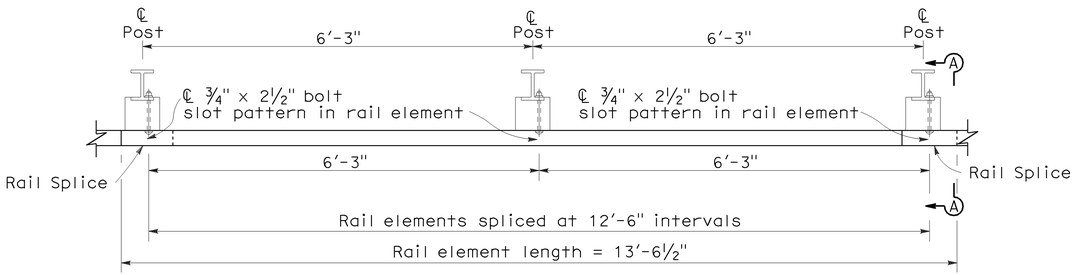

PLAN

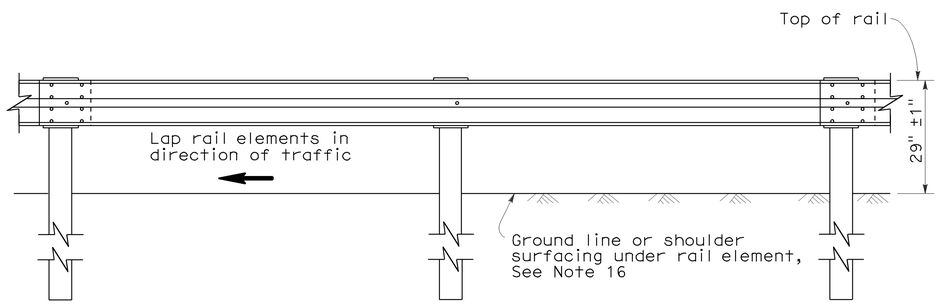

ELEVATION

METAL BEAM GUARD RAILING WITH STEEL POSTS AND NOTCHED WOOD OR NOTCHED RECYCLED PLASTIC BLOCKS

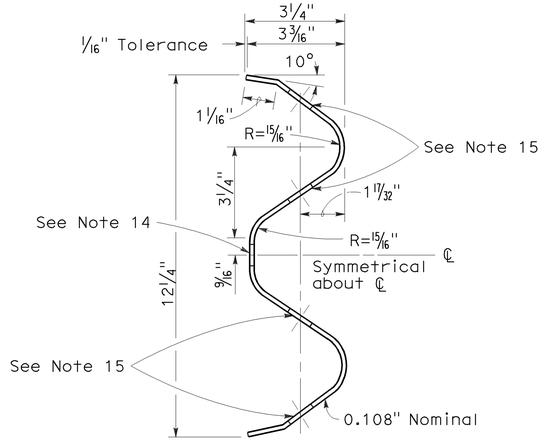

SECTION THRU RAIL ELEMENT

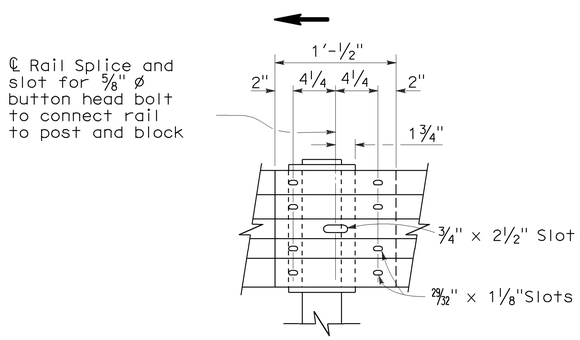

ELEVATION

RAIL ELEMENT SPLICE DETAIL

a) Connect the over lapped end of the rail elements with ⅝" ø × 1⅜" button head oval shoulder splice bolts inserted into the 29/32" × 1⅛" slots and bolted together with ⅝" ø recessed hex nuts. Recess of hex nut points toward rail element. A total of 8 bolts and nuts are to be used at each rail splice connection.

b) The ends of the rail elements are to be overlapped in the direction of traffic (see details).

c) Where end cap is to be attached to the end of a rail element, a total of 4 of the above described splice bolts and nuts are to be used.

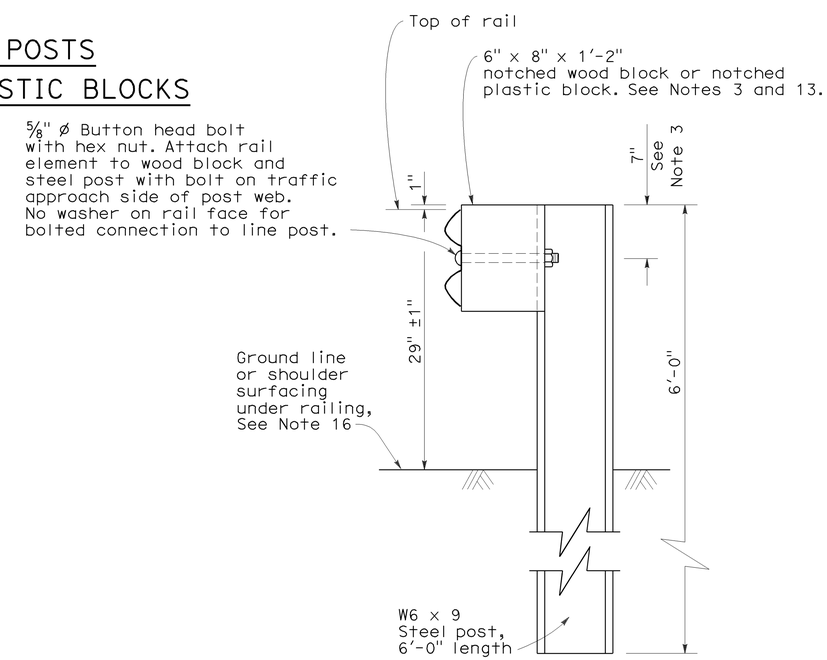

SECTION A-A

TYPICAL STEEL LINE POST INSTALLATION

See Note 4

NOTES:

1. For details of wood post installations, see Standard Plan A77A1.
2. For details of standard hardware used to construct guard railing, see Standard Plan A77B1.
3. For details of steel posts and notched wood blocks used to construct guard railing, see Standard Plan A77C2.
4. For additional installation details, see Standard Plan A77C3.
5. Guard railing post spacing to be 6′-3" center to center, except as otherwise noted.
6. For guard railing typical layouts, see the A77E, A77F and A77G Series of Standard Plans.
7. For terminal system end treatment details, see the A77L Series of Standard Plans. To connect railing to terminal system end treatment, transition the top of railing height at a ratio of 120:1 to terminal system end treatment height plus one 12′-6" standard railing section at the transitioned height for a horizontal connection to the end treatment.
8. For guard railing end anchor details, see Standard Plans A77H1 and A77I2.
9. For details of guard railing transition to bridge railing, see Standard Plan A77J4.
10. For additional details of guard railing connection to bridge railings, see Standard Plans A77J1, A77J2 and A77K1.
11. For dike positioning and guard railing delineation details, see Standard Plan A77C4.
12. Direction of adjacent traffic indicated by → .
13. Notched face of block faces steel post.
14. Slotted hole for bolted connection of rail element to block and post. See "Section Thru Rail Element".
15. Slotted holes for splice bolts to overlap ends of rail element. See "Section Thru Rail Element".
16. Install posts in soil.

STATE OF CALIFORNIA
DEPARTMENT OF TRANSPORTATION

METAL BEAM GUARD RAILING STANDARD RAILING SECTION (STEEL POST WITH NOTCHED WOOD OR NOTCHED RECYCLED PLASTIC BLOCK)

NO SCALE

RSP A77A2 DATED MAY 20, 2011 SUPERSEDES STANDARD PLAN A77A2 DATED MAY 1, 2006 - PAGE 42 OF THE STANDARD PLANS BOOK DATED MAY 2006.

REVISED STANDARD PLAN RSP A77A2

2006 REVISED STANDARD PLAN RSP A77A2

5-4-11

To accompany plans dated 8-27-12

Dist	COUNTY	ROUTE	POST MILES TOTAL PROJECT	SHEET No.	TOTAL SHEETS
01	Hum	299	0.0/42.9	26	59

Randell D. Hiatt
REGISTERED CIVIL ENGINEER

May 20, 2011
PLANS APPROVAL DATE

REGISTERED PROFESSIONAL ENGINEER
Randell D. Hiatt
No. C50200
Exp. 6-30-11
CIVIL
STATE OF CALIFORNIA

The State of California or its officers or agents shall not be responsible for the accuracy or completeness of electronic copies of this plan sheet.

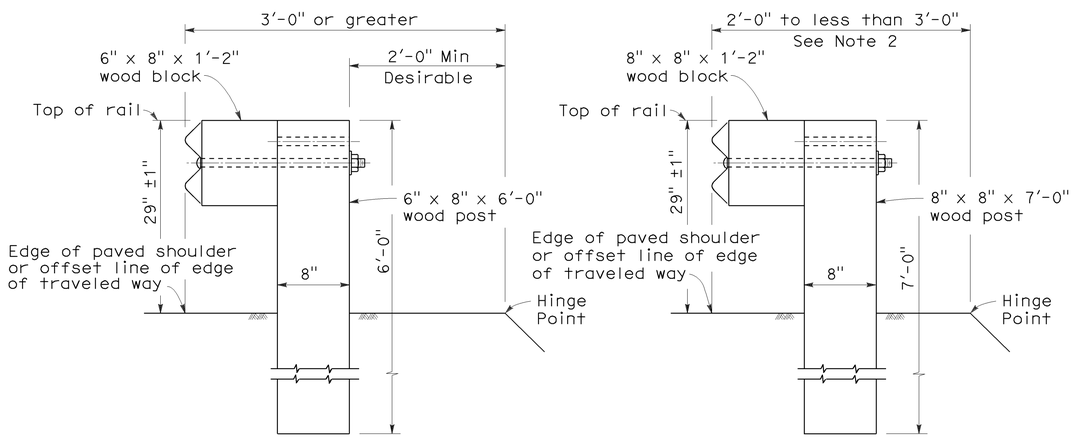

DETAIL A
TYPICAL ROADWAY INSTALLATION
See Note 1

DETAIL B
NARROW ROADWAY INSTALLATION
See Note 1

POST EMBEDMENT

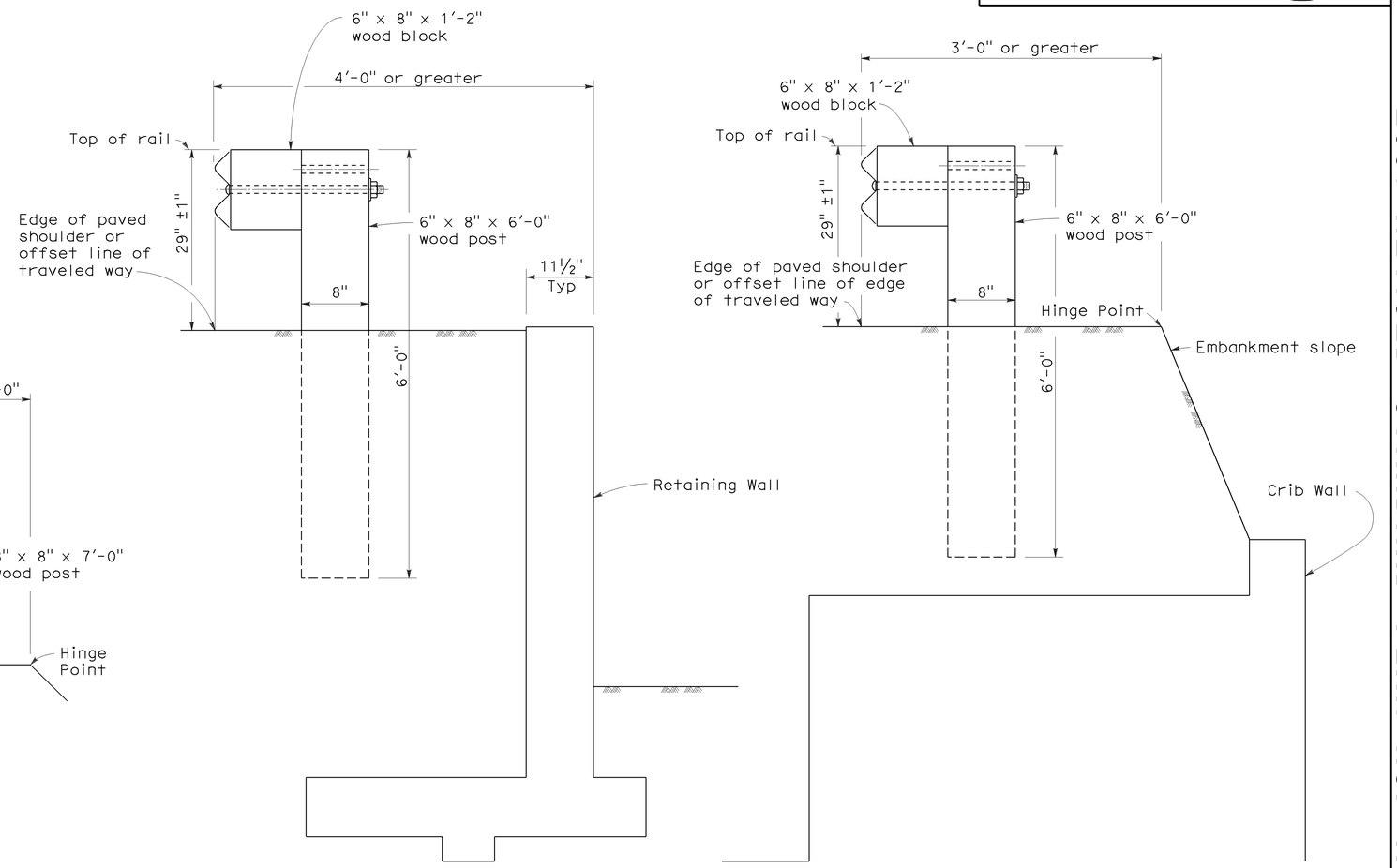

DETAIL C

DETAIL D

INSTALLATION AT EARTH RETAINING WALLS

NOTES:

1. These installation details also applicable to steel line post installations. For Detail A, C, and D, where steel line post installations are constructed, W6 x 9 steel post, 6'-0" in length, with 6" x 8" x 1'-2" notched wood blocks or notched recycled plastic blocks are to be used in place of the size of wood post and wood block shown. For Detail B, where steel line post installations are constructed, W6 x 9 steel post, 7'-0" in length, with 6" x 8" x 1'-2" notched wood blocks or notched recycled plastic blocks are to be used in place of the size of wood post and wood block shown. For additional installation details, see Standard Plans A77A1 and A77A2.
2. Where the distance between the face of the rail and the hinge point is less than 2'-0", see the Project Plans for special details.
3. For dike positioning with guard railing installations, see Standard Plan A77C4.

STATE OF CALIFORNIA
DEPARTMENT OF TRANSPORTATION

METAL BEAM GUARD RAILING TYPICAL LINE POST EMBEDMENT AND HINGE POINT OFFSET DETAILS

NO SCALE

RSP A77C3 DATED MAY 20, 2011 SUPERSEDES STANDARD PLAN A77C3
DATED MAY 1, 2006 - PAGE 46 OF THE STANDARD PLANS BOOK DATED MAY 2006.

REVISED STANDARD PLAN RSP A77C3

2006 REVISED STANDARD PLAN RSP A77C3

3-10-11

Dist	COUNTY	ROUTE	POST MILES TOTAL PROJECT	SHEET No.	TOTAL SHEETS
01	Hum	299	0.0/42.9	27	59

Randell D. Hiatt
REGISTERED CIVIL ENGINEER

May 20, 2011
PLANS APPROVAL DATE

REGISTERED PROFESSIONAL ENGINEER
Randell D. Hiatt
No. C50200
Exp. 6-30-11
CIVIL
STATE OF CALIFORNIA

The State of California or its officers or agents shall not be responsible for the accuracy or completeness of electronic copies of this plan sheet.

To accompany plans dated 8-27-12

NOTES:

1. When necessary to place dike in front of face of guard railing, only Type C dike may be used. For dike details, see Standard Plan A87B.
2. For standard railing post embedment, see Standard Plans A77C3.
3. Guard railing delineation to be used where shown on the Project Plans.
4. When dike or curb is placed under guard railing, the maximum height of the dike or curb shall be 4". Mountable dike should not be used. For dike and curb details, see Standard Plans A87A and A87B.
5. For details of typical distance between the face of rail and hinge point, see Standard Plan A77C3.
6. For steel line posts, use 1/4 - 20 self-tapping screws in 0.22" diameter holes or 1/4" bolts in 9/32" diameter holes.

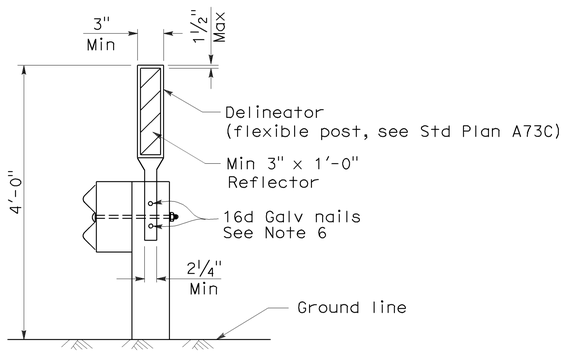

GUARD RAILING DELINEATION

See Note 3

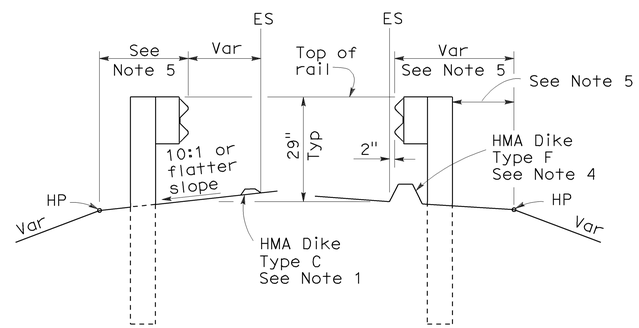

DIKE POSITIONING

See Note 1

STATE OF CALIFORNIA
DEPARTMENT OF TRANSPORTATION

METAL BEAM GUARD RAILING TYPICAL RAILING DELINEATION AND DIKE POSITIONING DETAILS

NO SCALE

RSP A77C4 DATED MAY 20, 2011 SUPERSEDES RSP A77C4 DATED JUNE 6, 2008 AND STANDARD PLAN A77C4 DATED MAY 1, 2006 - PAGE 47 OF THE STANDARD PLANS BOOK DATED MAY 2006.

REVISED STANDARD PLAN RSP A77C4

2006 REVISED STANDARD PLAN RSP A77C4

3-10-11

DIST	COUNTY	ROUTE	POST MILES TOTAL PROJECT	SHEET NO.	TOTAL SHEETS
01	Hum	299	0.0/42.9	28	59

Randell D. Hiatt
REGISTERED CIVIL ENGINEER

June 6, 2008
PLANS APPROVAL DATE

REGISTERED PROFESSIONAL ENGINEER Randell D. Hiatt No. C50200 Exp. 6-30-09 CIVIL STATE OF CALIFORNIA

The State of California or its officers or agents shall not be responsible for the accuracy or completeness of electronic copies of this plan sheet.

To accompany plans dated 8-27-12

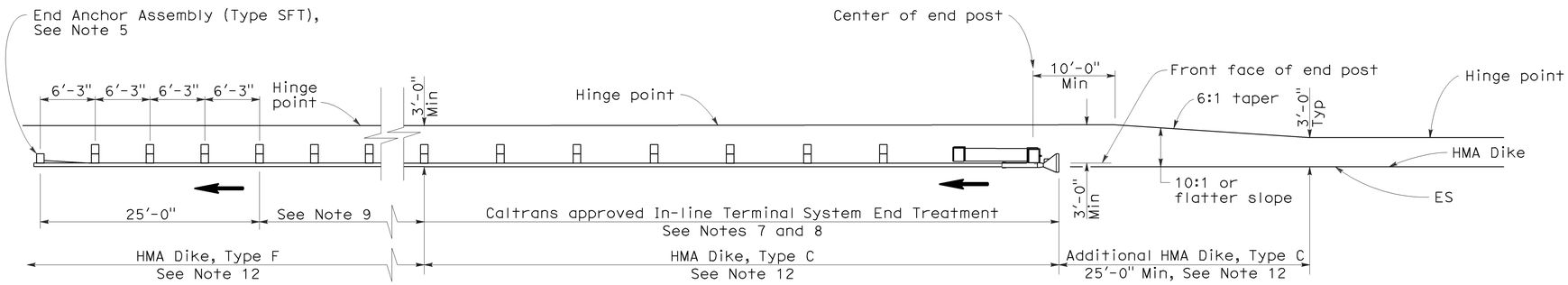

TYPE 11A LAYOUT

(EMBANKMENT GUARD INSTALLATION WITH IN-LINE END TREATMENT AT TRAFFIC APPROACH END OF RAILING)
See Note 6

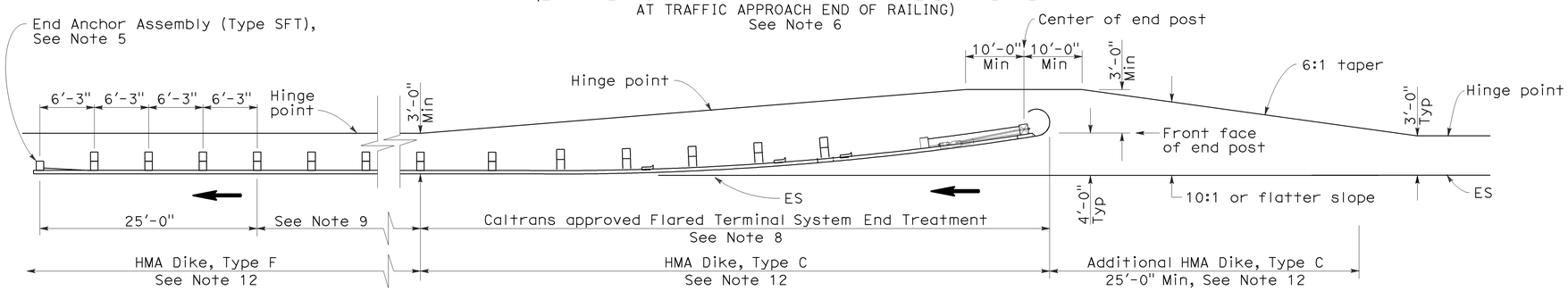

TYPE 11B LAYOUT

(EMBANKMENT GUARD RAILING INSTALLATION WITH FLARED END TREATMENT AT TRAFFIC APPROACH END OF RAILING)
See Note 6

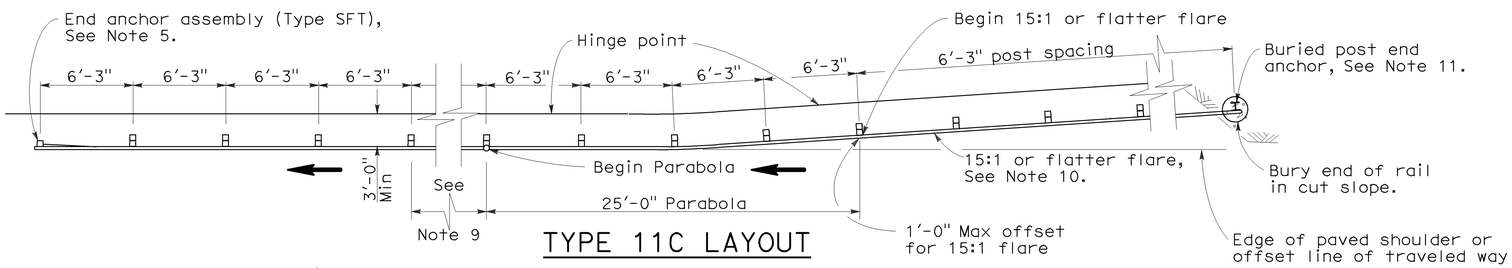

TYPE 11C LAYOUT

(EMBANKMENT GUARD RAILING INSTALLATION WITH BURIED END ANCHOR TREATMENT AT TRAFFIC APPROACH END OF RAILING)
See Notes 6 and 12

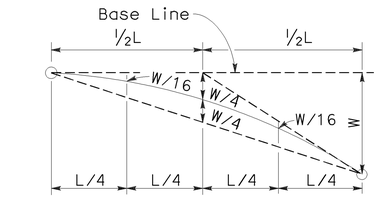

TYPICAL PARABOLIC LAYOUT

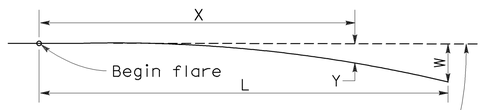

Base Line (Edge of paved shoulder or offset line of edge of traveled way)

$$Y = \frac{WX^2}{L^2}$$

Y = Offset from base line
W = Maximum offset
X = Distance along base line
L = Length of flare

PARABOLIC FLARE OFFSETS

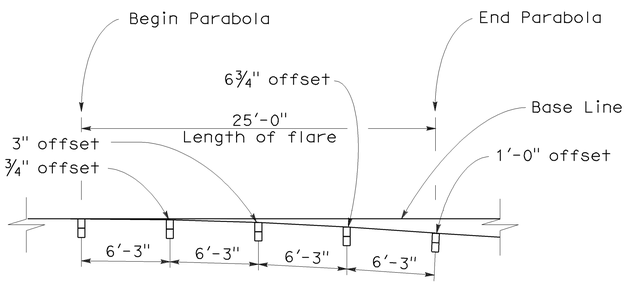

TYPICAL FLARE OFFSETS FOR 1 FOOT MAX END OFFSET

NOTES:

1. Line post, blocks and hardware to be used are shown on Standard Plans A77A1, A77A2, A77B1, A77C1, and A77C2.
2. Guard rail post spacing to be 6'-3" center to center, except as otherwise noted.
3. Except as noted, line posts are 6" x 8" x 6'-0" wood with 6" x 8" x 1'-2" wood blocks. W6 x 9 steel posts, 6'-0" in length, with 6" x 8" x 1'-2" notched wood blocks or recycled plastic blocks may be used for 6" x 8" x 6'-0" wood post with 6" x 8" x 1'-2" wood blocks where applicable and when specified.
4. Direction of adjacent traffic indicated by ⟶.
5. For End Anchor Assembly (Type SFT) details, see Standard Plan A77H1.
6. Layout Types 11A, 11B or 11C are typically used where guard railing is recommended to shield embankment slopes and a crashworthy end treatment is required for only one direction of traffic.
7. In-line Terminal System End Treatments are used where site conditions will not accommodate a flared end treatment.
8. The type of terminal system end treatment to be used will be shown on the Project Plans.
9. Dependent on site conditions (embankment height and side slope), construction of additional guard railing (length equal to multiples of 12'-6" with 6'-3" post spacing) may be advisable.
10. The 15:1 or flatter flare used with buried end anchors is based on the edge of the paved shoulder or offset line of edge of the traveled way. The length of guard railing within the 15:1 or flatter flare is based on site conditions and should be a length equal to multiples of 12'-6".
11. For details of the buried post end anchor used with Type 11C Layout, see Standard Plan A77I2.
12. Where placement of dike is required with guard railing installations, see Revised Standard Plan RSP A77C4 for dike positioning details.

STATE OF CALIFORNIA
DEPARTMENT OF TRANSPORTATION

METAL BEAM GUARD RAILING TYPICAL LAYOUTS FOR EMBANKMENTS

NO SCALE

RSP A77E1 DATED JUNE 6, 2008 SUPERSEDES STANDARD PLAN A77E1
DATED MAY 1, 2006 - PAGE 48 OF THE STANDARD PLANS BOOK DATED MAY 2006.

REVISED STANDARD PLAN RSP A77E1

2006 REVISED STANDARD PLAN RSP A77E1

12-10-07

DIST	COUNTY	ROUTE	POST MILES TOTAL PROJECT	SHEET NO.	TOTAL SHEETS
01	Hum	299	0.0/42.9	29	59

Randell D. Hiatt
REGISTERED CIVIL ENGINEER

June 6, 2008
PLANS APPROVAL DATE

REGISTERED PROFESSIONAL ENGINEER
Randell D. Hiatt
No. C50200
Exp. 6-30-09
CIVIL
STATE OF CALIFORNIA

The State of California or its officers or agents shall not be responsible for the accuracy or completeness of electronic copies of this plan sheet.

To accompany plans dated 8-27-12

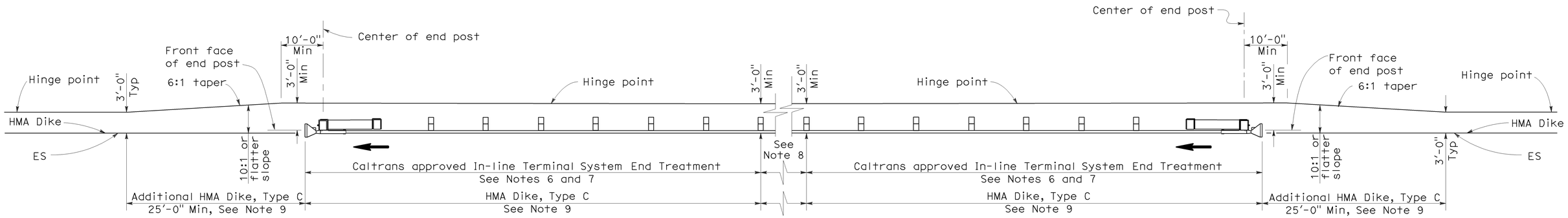

TYPE 11D LAYOUT

(EMBANKMENT GUARD RAILING INSTALLATION WITH
IN-LINE END TREATMENT AT EACH END OF RAILING)
See Note 5

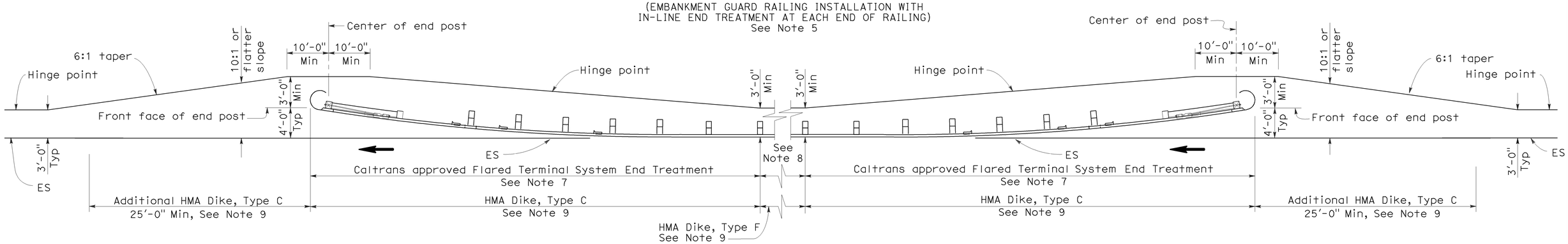

TYPE 11E LAYOUT

(EMBANKMENT GUARD RAILING INSTALLATION WITH
FLARED END TREATMENT AT EACH END OF RAILING)
See Note 5

NOTES:

1. Line post, blocks and hardware to be used are shown on Standard Plans A77A1, A77A2, A77B1, A77C1 and A77C2.
2. Guard rail post spacing to be 6'-3" center to center, except as otherwise noted.
3. Except as noted, line posts are 6" x 8" x 6'-0" wood with 6" x 8" x 1'-2" wood blocks, W6 x 9 steel posts, 6'-0" in length, with 6" x 8" x 1'-2" notched wood blocks or plastic blocks may be used for 6" x 8" x 6'-0" wood post with 6" x 8" x 1'-2" wood blocks where applicable and when specified.
4. Direction of adjacent traffic indicated by ⟶.
5. Layout Types 11D through 11L, shown on the A77E Series of Revised Standard Plans, are typically used where guard railing is recommended to shield embankment slopes and a crashworthy end treatment is required for both directions of traffic.
6. In-line Terminal System End Treatments are used where site conditions will not accommodate a flared end treatment.
7. The type of terminal system end treatment to be used will be shown on the Project Plans.
8. Dependent on site conditions (embankment height and side slope), construction of additional guard railing (length equal to multiples of 12'-6" with 6'-3" post spacing) may be advisable.
9. Where placement of dike is required with guard railing installations, see Revised Standard Plan RSP A77C4 for dike positioning details.

STATE OF CALIFORNIA
DEPARTMENT OF TRANSPORTATION

METAL BEAM GUARD RAILING TYPICAL LAYOUTS FOR EMBANKMENTS

NO SCALE

RSP A77E2 DATED JUNE 6, 2008 SUPERSEDES STANDARD PLAN A77E2
DATED MAY 1, 2006 - PAGE 49 OF THE STANDARD PLANS BOOK DATED MAY 2006.

REVISED STANDARD PLAN RSP A77E2

2006 REVISED STANDARD PLAN RSP A77E2

12-10-07

DIST	COUNTY	ROUTE	POST MILES TOTAL PROJECT	SHEET NO.	TOTAL SHEETS
01	Hum	299	0.0/42.9	30	59

Randell D. Hiatt
REGISTERED CIVIL ENGINEER

June 6, 2008
PLANS APPROVAL DATE

REGISTERED PROFESSIONAL ENGINEER Randell D. Hiatt No. C50200 Exp. 6-30-09 CIVIL STATE OF CALIFORNIA

The State of California or its officers or agents shall not be responsible for the accuracy or completeness of electronic copies of this plan sheet.

To accompany plans dated 8-27-12

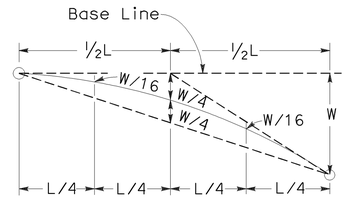

TYPICAL PARABOLIC LAYOUT

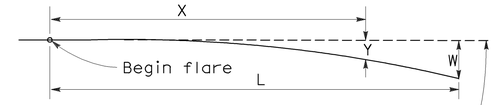

Base Line (Edge of paved shoulder or offset line of edge of traveled way)

$$Y = \frac{WX^2}{L^2}$$

Y = Offset from base line
W = Maximum offset
X = Distance along base line
L = Length of flare

PARABOLIC FLARE OFFSETS

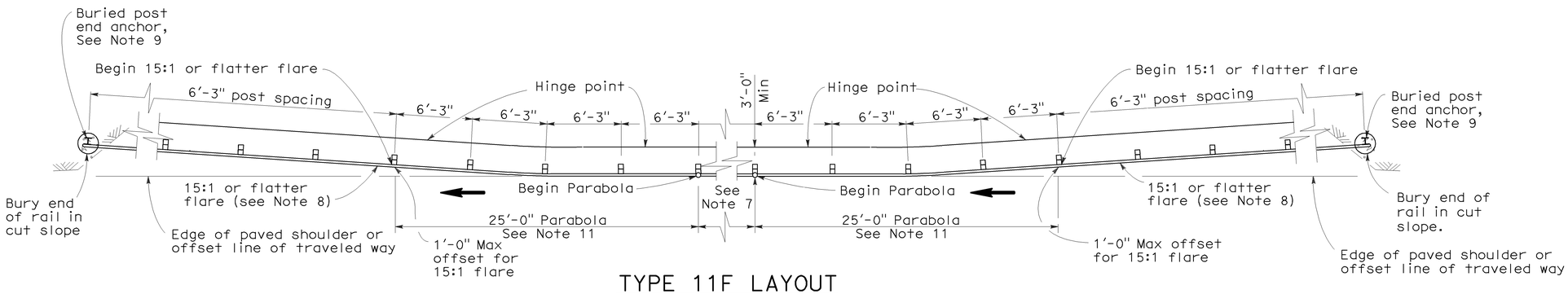

TYPE 11F LAYOUT

(EMBANKMENT GUARD RAILING INSTALLATION WITH A BURIED END ANCHOR TREATMENT AT EACH END OF RAILING)
See Notes 5 and 10

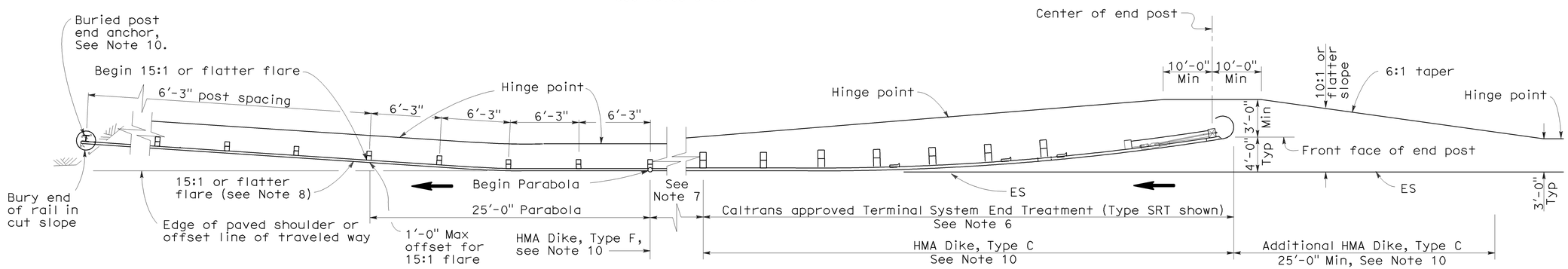

TYPE 11G LAYOUT

(EMBANKMENT GUARD RAILING INSTALLATION WITH FLARED END TREATMENT AND A BURIED END ANCHOR TREATMENT AT THE ENDS OF RAILING)
See Notes 5 and 10

NOTES:

1. Line post, blocks and hardware to be used are shown on Standard Plans A77A1, A77A2, A77B1, A77C1 and A77C2.
2. Guard rail post spacing to be 6'-3" center to center, except as otherwise noted.
3. Except as noted, line posts are 6" x 8" x 6'-0" wood with 6" x 8" x 1'-2" wood blocks. W6 x 9 steel posts, 6'-0" in length, with 6" x 8" x 1'-2" notched wood blocks or plastic blocks may be used for 6" x 8" x 6'-0" wood post with 6" x 8" x 1'-2" wood blocks where applicable and when specified.
4. Direction of adjacent traffic indicated by ⟶.
5. Layout Types 11D through 11L, shown on the A77E Series of Revised Standard Plans, are typically used where guard railing is recommended to shield embankment slopes and a crashworthy end treatment is required for both directions of traffic.
6. The type of terminal system end treatment to be used will be shown on the Project Plans.
7. Dependent on site conditions (embankment height and side slope), construction of additional guard railing (length equal to multiples of 12'-6" with 6'-3" post spacing) may be advisable.
8. The 15:1 or flatter flare used with buried end anchors is based on the edge of the paved shoulder or offset line of edge of the traveled way. The length of guard railing within the 15:1 or flatter flare is based on site conditions and should be a length equal to multiples of 12'-6".
9. For details of the buried post end anchor used with Type 11F and 11G Layouts, see Standard Plan A77I2.
10. Where placement of dike is required with guard railing installations, see Revised Standard Plan RSP A77C4 for dike positioning details.
11. For typical flare offsets for 25'-0" length parabola with maximum offset of 1'-0", see Revised Standard Plan RSP A77E1.

STATE OF CALIFORNIA
DEPARTMENT OF TRANSPORTATION

METAL BEAM GUARD RAILING TYPICAL LAYOUTS FOR EMBANKMENTS

NO SCALE

RSP A77E3 DATED JUNE 6, 2008 SUPERSEDES STANDARD PLAN A77E3
DATED MAY 1, 2006 - PAGE 50 OF THE STANDARD PLANS BOOK DATED MAY 2006.

REVISED STANDARD PLAN RSP A77E3

2006 REVISED STANDARD PLAN RSP A77E3

12-10-07

DIST	COUNTY	ROUTE	POST MILES TOTAL PROJECT	SHEET NO.	TOTAL SHEETS
01	Hum	299	0.0/42.9	31	59

Randell D. Hiatt
REGISTERED CIVIL ENGINEER

June 6, 2008
PLANS APPROVAL DATE

REGISTERED PROFESSIONAL ENGINEER
Randell D. Hiatt
No. C50200
Exp. 6-30-09
CIVIL
STATE OF CALIFORNIA

The State of California or its officers or agents shall not be responsible for the accuracy or completeness of electronic copies of this plan sheet.

To accompany plans dated 8-27-12

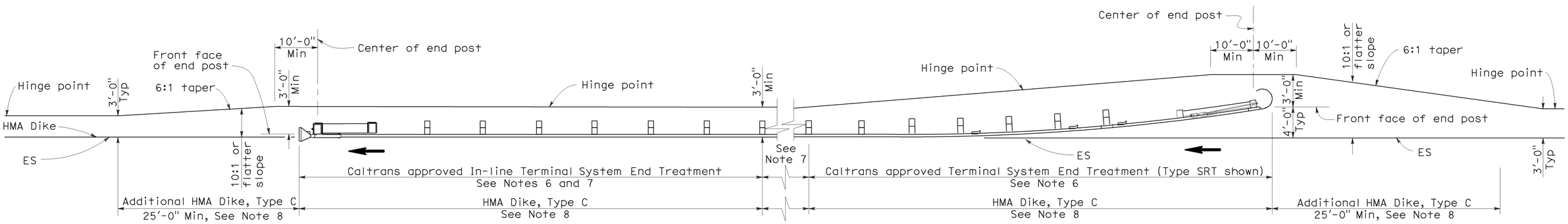

TYPE 11H LAYOUT

(EMBANKMENT GUARD RAILING INSTALLATION WITH FLARED END TREATMENT
AND AN IN-LINE TREATMENT AT THE ENDS OF RAILING)
See Notes 5 and 8

NOTES:

1. Line post, blocks and hardware to be used are shown on Standard Plans A77A1, A77A2, A77B1, A77C1 and A77C2.
2. Guard rail post spacing to be 6'-3" center to center, except as otherwise noted.
3. Except as noted, line posts are 6" x 8" x 6'-0" wood with 6" x 8" x 1'-2" wood blocks. W6 x 9 steel posts, 6'-0" in length, with 6" x 8" x 1'-2" notched wood blocks or plastic blocks may be used for 6" x 8" x 6'-0" wood post with 6" x 8" x 1'-2" wood blocks where applicable and when specified.
4. Direction of adjacent traffic indicated by ⟶.
5. Layout Types 11D through 11L, shown on the A77E Series of Revised Standard Plans, are typically used where guard railing is recommended to shield embankment slopes and a crashworthy end treatment is required for both directions of traffic.
6. The type of terminal system end treatment to be used will be shown on the Project Plans.
7. Dependent on site conditions (embankment height and side slope), construction of additional guard railing (length equal to multiples of 12'-6" with 6'-3" post spacing) may be advisable.
8. Where placement of dike is required with guard railing installations, see Revised Standard Plan RSP A77C4 for dike positioning details.

STATE OF CALIFORNIA
DEPARTMENT OF TRANSPORTATION

METAL BEAM GUARD RAILING TYPICAL LAYOUTS FOR EMBANKMENTS

NO SCALE

RSP A77E4 DATED JUNE 6, 2008 SUPERSEDES STANDARD PLAN A77E4
DATED MAY 1, 2006 - PAGE 51 OF THE STANDARD PLANS BOOK DATED MAY 2006.

REVISED STANDARD PLAN RSP A77E4

2006 REVISED STANDARD PLAN RSP A77E4

DIST	COUNTY	ROUTE	POST MILES TOTAL PROJECT	SHEET NO.	TOTAL SHEETS
01	Hum	299	0.0/42.9	32	59

Randell D. Hiatt
REGISTERED CIVIL ENGINEER

June 6, 2008
PLANS APPROVAL DATE

REGISTERED PROFESSIONAL ENGINEER Randell D. Hiatt No. C50200 Exp. 6-30-09 CIVIL STATE OF CALIFORNIA

The State of California or its officers or agents shall not be responsible for the accuracy or completeness of electronic copies of this plan sheet.

To accompany plans dated 8-27-12

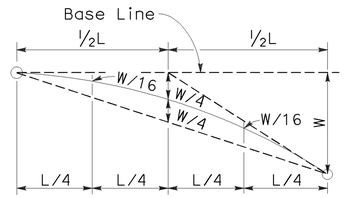

TYPICAL PARABOLIC LAYOUT

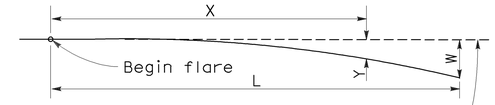

Base Line (Edge of paved shoulder or offset line of edge of traveled way)

$$Y = \frac{WX^2}{L^2}$$

Y = Offset from base line
W = Maximum offset
X = Distance along base line
L = Length of flare

PARABOLIC FLARE OFFSETS

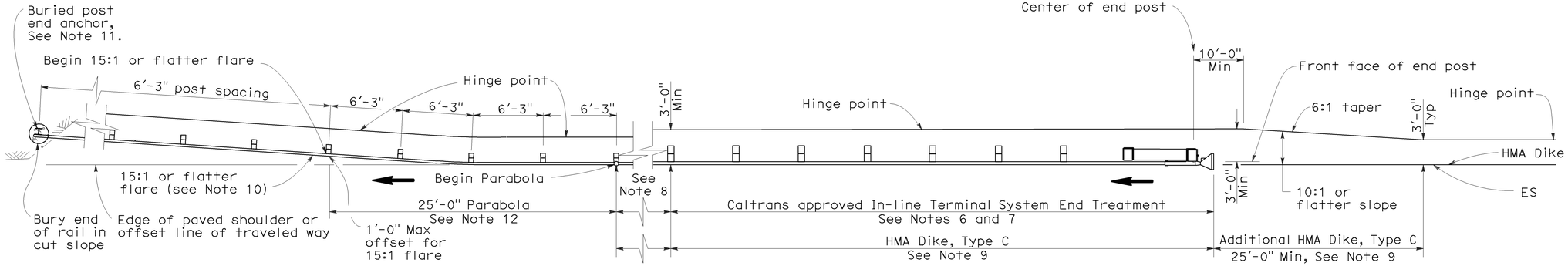

TYPE 11I LAYOUT

(EMBANKMENT GUARD RAILING INSTALLATION WITH IN-LINE END TREATMENT AND A BURIED END ANCHOR TREATMENT AT THE ENDS OF RAILING)
See Note 5

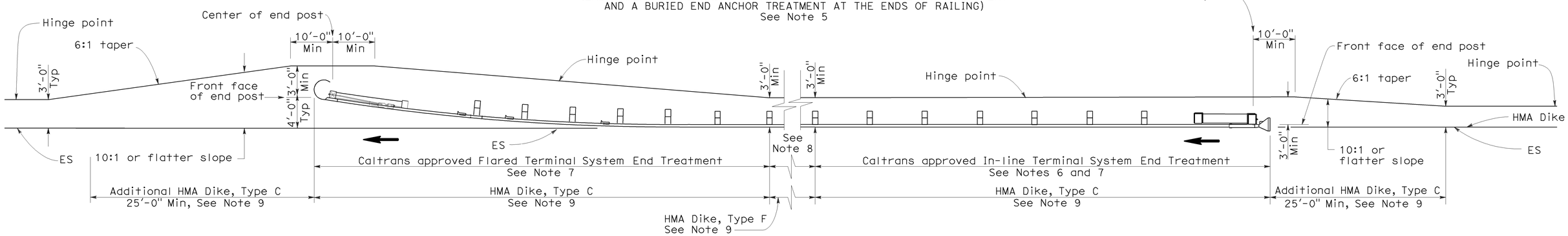

TYPE 11J LAYOUT

(EMBANKMENT GUARD RAILING INSTALLATION WITH IN-LINE END TREATMENT AND FLARED END TREATMENT AT THE ENDS OF RAILING)
See Note 5

NOTES:

1. Line post, blocks and hardware to be used are shown on Standard Plans A77A1, A77A2, A77B1, A77C1 and A77C2.
2. Guard rail post spacing to be 6'-3" center to center, except as otherwise noted.
3. Except as noted, line posts are 6" x 8" x 6'-0" wood with 6" x 8" x 1'-2" wood blocks. W6 x 9 steel posts, 6'-0" in length, with 6" x 8" x 1'-2" notched wood blocks or plastic blocks may be used for 6" x 8" x 6'-0" wood post with 6" x 8" x 1'-2" wood blocks where applicable and when specified.
4. Direction of adjacent traffic indicated by ⟶.
5. Layout Types 11D through 11L, shown on the A77E Series of Revised Standard Plans, are typically used where guard railing is recommended to shield embamkment slopes and a crashworthy end treatment is required for both directions of traffic.
6. In-line Terminal System End Treatments are used where site conditions will not accommodate a flared end treatment.
7. The type of terminal system end treatment to be used will be shown on the Project Plans.
8. Dependent on site conditions (embankment height and side slope), construction of additional guard railing (length equal to multiples of 12'-6" with 6'-3" post spacing) may be advisable.
9. Where placement of dike is required with guard railing installations, see Revised Standard Plan RSP A77C4 for dike positioning details.
10. The 15:1 or flatter flare used with buried end anchors is based on the edge of the paved shoulder or offset line of edge of the traveled way. The length of guard railing within the 15:1 or flatter flare is based on site conditions and should be a length equal to multiples of 12'-6".
11. For details of the buried post end anchor used with Type 11I Layout, see Standard Plan A77I2.
12. For typical flare offsets for 25'-0" length parabola with maximum offset of 1'-0", see Revised Standard Plan RSP A77E1.

STATE OF CALIFORNIA
DEPARTMENT OF TRANSPORTATION

METAL BEAM GUARD RAILING TYPICAL LAYOUTS FOR EMBANKMENTS

NO SCALE

RSP A77E5 DATED JUNE 6, 2008 SUPERSEDES STANDARD PLAN A77E5 DATED MAY 1, 2006 - PAGE 52 OF THE STANDARD PLANS BOOK DATED MAY 2006.

REVISED STANDARD PLAN RSP A77E5

2006 REVISED STANDARD PLAN RSP A77E5

12-10-07

DIST	COUNTY	ROUTE	POST MILES TOTAL PROJECT	SHEET NO.	TOTAL SHEETS
01	Hum	299	0.0/42.9	33	59

Randell D. Hiatt
REGISTERED CIVIL ENGINEER

June 6, 2008
PLANS APPROVAL DATE

REGISTERED PROFESSIONAL ENGINEER Randell D. Hiatt No. C50200 Exp. 6-30-09 CIVIL STATE OF CALIFORNIA

The State of California or its officers or agents shall not be responsible for the accuracy or completeness of electronic copies of this plan sheet.

To accompany plans dated 8-27-12

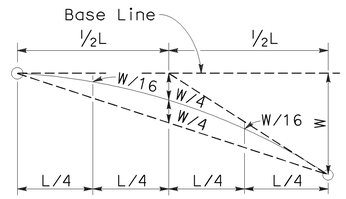

TYPICAL PARABOLIC LAYOUT

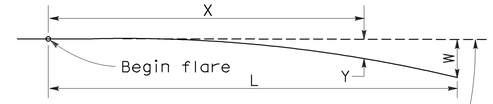

Base Line (Edge of paved shoulder or offset line of edge of traveled way)

$$Y = \frac{WX^2}{L^2}$$

Y = Offset from base line
W = Maximum offset
X = Distance along base line
L = Length of flare

PARABOLIC FLARE OFFSETS

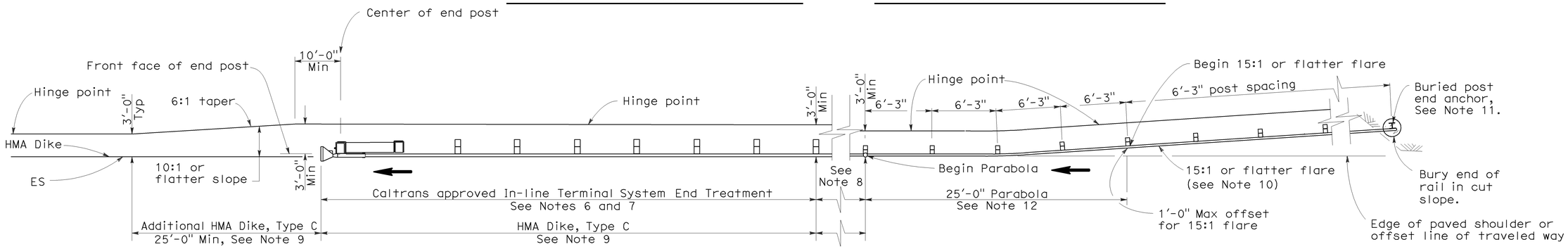

TYPE 11K LAYOUT

(EMBANKMENT GUARD RAILING INSTALLATION WITH A BURIED END ANCHOR TREATMENT AND AN IN-LINE END TREATMENT AT THE ENDS OF RAILING)
See Note 5

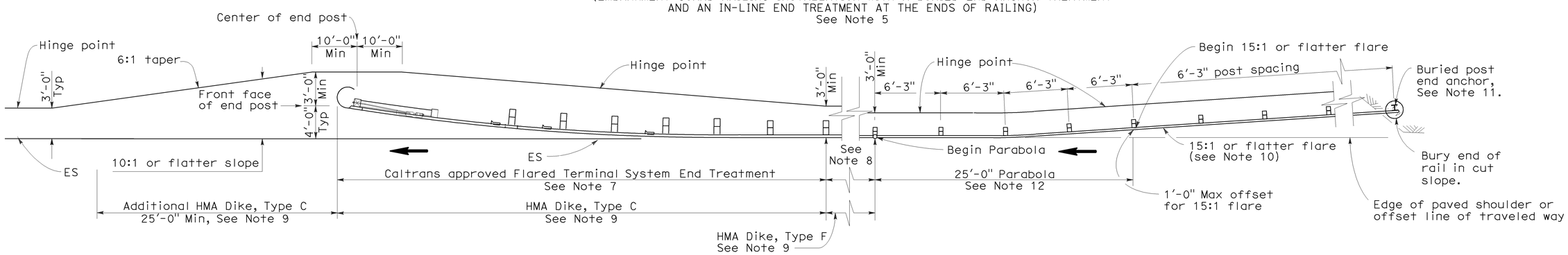

TYPE 11L LAYOUT

(EMBANKMENT GUARD RAILING INSTALLATION WITH A BURIED END ANCHOR TREATMENT AND A FLARED END TREATMENT AT THE ENDS OF RAILING)
See Note 5

NOTES:

1. Line post, blocks and hardware to be used are shown on Standard Plans A77A1, A77A2, A77B1, A77C1 and A77C2.
2. Guard rail post spacing to be 6'-3" center to center, except as otherwise noted.
3. Except as noted, line posts are 6" x 8" x 6'-0" wood with 6" x 8" x 1'-2" wood blocks. W6 x 9 steel posts, 6'-0" in length, with 6" x 8" x 1'-2" notched wood blocks or plastic blocks may be used for 6" x 8" x 6'-0" wood post with 6" x 8" x 1'-2" wood blocks where applicable and when specified.
4. Direction of adjacent traffic indicated by ⟶.
5. Layout Types 11D through 11L, shown on the A77E Series of Revised Standard Plans, are typically used where guard railing is recommended to shield embamkment slopes and a crashworthy end treatment is required for both directions of traffic.
6. In-line Terminal System End Treatments are used where site conditions will not accommodate a flared end treatment.
7. The type of terminal system end treatment to be used will be shown on the Project Plans.
8. Dependent on site conditions (embankment height and side slope), construction of additional guard railing (length equal to multiples of 12'-6" with 6'-3" post spacing) may be advisable.
9. Where placement of dike is required with guard railing installations, see Revised Standard Plan RSP A77C4 for dike positioning details.
10. The 15:1 or flatter flare used with buried end anchors is based on the edge of the paved shoulder or offset line of edge of the traveled way. The length of guard railing within the 15:1 or flatter flare is based on site conditions and should be a length equal to multiples of 12'-6".
11. For details of the buried post end anchor used with Type 11K and 11L Layouts, see Standard Plan A77I2.
12. For typical flare offsets for 25'-0" length parabola with maximum offset of 1'-0", see Revised Standard Plan RSP A77E1.

STATE OF CALIFORNIA
DEPARTMENT OF TRANSPORTATION

METAL BEAM GUARD RAILING TYPICAL LAYOUTS FOR EMBANKMENTS

NO SCALE

RSP A77E6 DATED JUNE 6, 2008 SUPERSEDES STANDARD PLAN A77E6
DATED MAY 1, 2006 - PAGE 53 OF THE STANDARD PLANS BOOK DATED MAY 2006.

REVISED STANDARD PLAN RSP A77E6

2006 REVISED STANDARD PLAN RSP A77E6

12-10-07

DIST	COUNTY	ROUTE	POST MILES TOTAL PROJECT	SHEET NO.	TOTAL SHEETS
01	Hum	299	0.0/42.9	34	59

Randell D. Hiatt
REGISTERED CIVIL ENGINEER

June 6, 2008
PLANS APPROVAL DATE

REGISTERED PROFESSIONAL ENGINEER
Randell D. Hiatt
No. C50200
Exp. 6-30-09
CIVIL
STATE OF CALIFORNIA

The State of California or its officers or agents shall not be responsible for the accuracy or completeness of electronic copies of this plan sheet.

To accompany plans dated 8-27-12

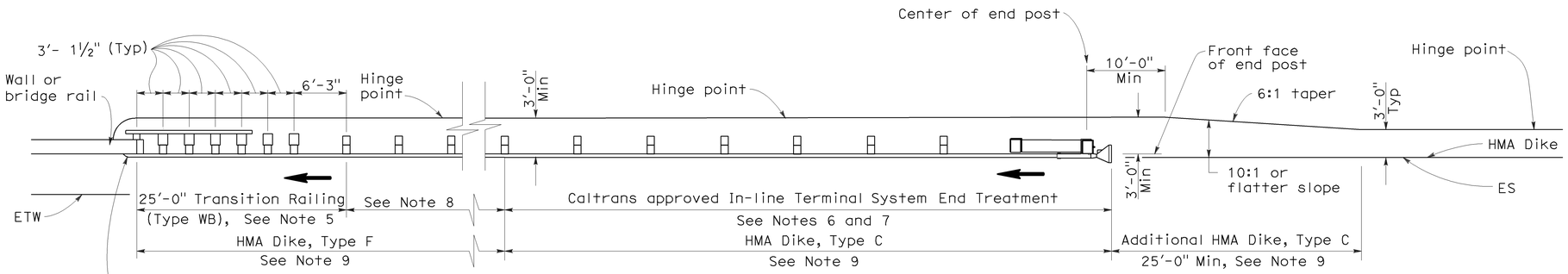

TYPE 12A LAYOUT

(GUARD RAILING INSTALLATION AT STRUCTURE APPROACH WITH AN IN-LINE END TREATMENT AT TRAFFIC APPROACH END OF RAILING)
See Notes 10

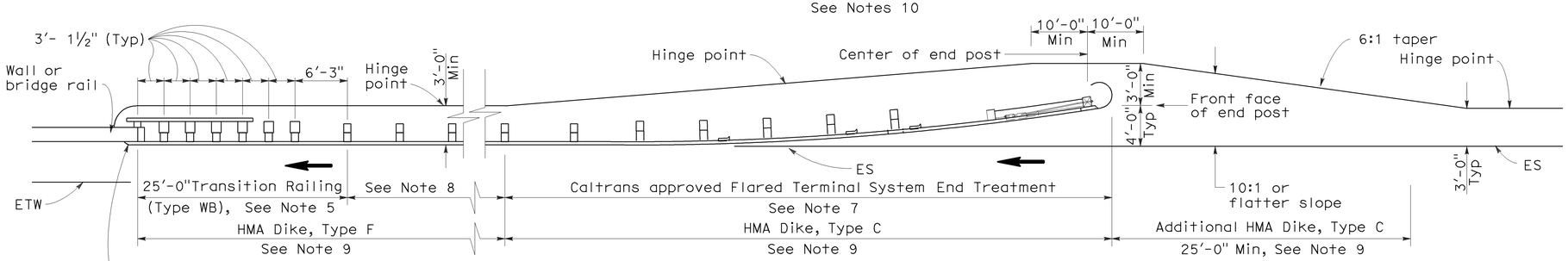

TYPE 12B LAYOUT

(GUARD RAILING INSTALLATION AT STRUCTURE APPROACH WITH A FLARED END TREATMENT AT TRAFFIC APPROACH END OF RAILING)
See Notes 10

NOTES:

1. Line post, blocks and hardware to be used are shown on Standard Plans A77A1, A77A2, A77B1, A77C1 and A77C2.
2. Guard rail post spacing to be 6'-3" center to center, except as otherwise noted.
3. Except as noted, line posts are 6" x 8" x 6'-0" wood with 6" x 8" x 1'-2" wood blocks. W6 x 9 steel posts, 6'-0" in length, with 6" x 8" x 1'-2" notched wood blocks or plastic blocks may be used for 6" x 8" x 6'-0" wood posts with 6" x 8" x 1'-2" wood blocks where applicable and when specified.
4. Direction of adjacent traffic indicated by ➡.
5. For Transition Railing (Type WB) details for Types 12A and 12B Layouts, see Standard Plan A77J4.
6. In-line Terminal System End Treatments are used where site conditions will not accommodate a flared end treatment.
7. The type of terminal system end treatment to be used will be shown on the Project Plans.
8. Dependent on site conditions (embankment height, side slopes, or other fixed objects), it may be advisable to construct additional guard railing (a length equal to multiples of 12'-6" with 6'-3" post spacing) between the transition railing and end treatment.
9. Where placement of dike is required with guard railing installations, see Revised Standard Plan RSP A77C4 for dike positioning details.
10. Type 12A or Type 12B Layouts are typically used:
    a. To the right of approaching traffic, at the end of a structure, on two-lane conventional highway where the roadbed width across the structure is less than 40 feet.
    b. To the left of approaching traffic, at the end of a structure, on two-lane conventional highway where the roadbed width across the structure is less than 40 feet.
    c. To the right of approaching traffic at the end of each structure on multilane freeways or expressways with separate adjacent or parallel bridges.
    d. To the right of approaching traffic at the end of the structure on multilane freeways or expressways with decked median on the bridge.
11. See Revised Standard Plan RSP A77F3 for typical layout used left of approaching traffic at the ends of each structure on multilane freeways or expressways with separate adjacent or parallel bridges.
12. For additional details of typical connections to bridge rail, see Connection Detail AA on Revised Standard Plans RSP A77J1 and RSP A77J2 and Connection Detail FF on Standard Plans A77K1 and A77K2.
13. For additional details of a typical connection to walls or abutments, see Standard Plan A77J3.

STATE OF CALIFORNIA
DEPARTMENT OF TRANSPORTATION

METAL BEAM GUARD RAILING TYPICAL LAYOUTS FOR STRUCTURE APPROACH

NO SCALE

RSP A77F1 DATED JUNE 6, 2008 SUPERSEDES STANDARD PLAN A77F1
DATED MAY 1, 2006 - PAGE 54 OF THE STANDARD PLANS BOOK DATED MAY 2006.

REVISED STANDARD PLAN RSP A77F1

2006 REVISED STANDARD PLAN RSP A77F1

Dist	COUNTY	ROUTE	POST MILES TOTAL PROJECT	SHEET No.	TOTAL SHEETS
01	Hum	299	0.0/42.9	35	59

Randell D. Hiatt
REGISTERED CIVIL ENGINEER

May 20, 2011
PLANS APPROVAL DATE

REGISTERED PROFESSIONAL ENGINEER
Randell D. Hiatt
No. C50200
Exp. 6-30-11
CIVIL
STATE OF CALIFORNIA

The State of California or its officers or agents shall not be responsible for the accuracy or completeness of electronic copies of this plan sheet.

To accompany plans dated 8-27-12

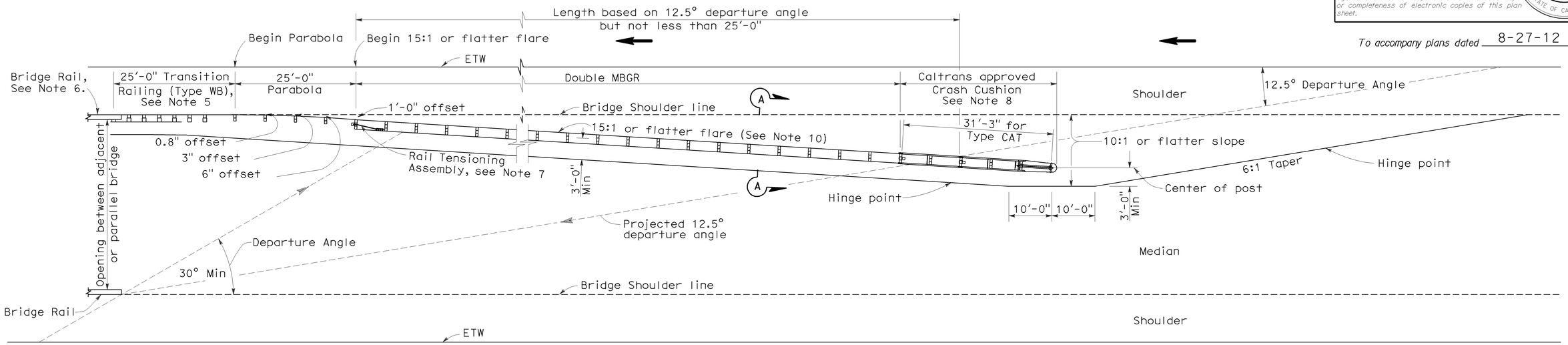

TYPE 12E LAYOUT

See Note 10

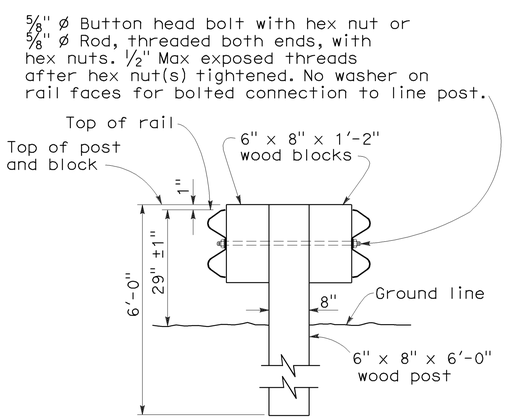

SECTION A-A

TYPICAL DOUBLE METAL BEAM GUARD RAILING

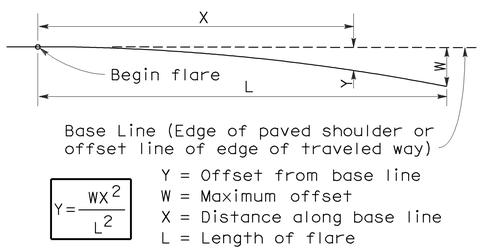

$$Y = \frac{WX^2}{L^2}$$

Y = Offset from base line
W = Maximum offset
X = Distance along base line
L = Length of flare

PARABOLIC FLARE OFFSETS

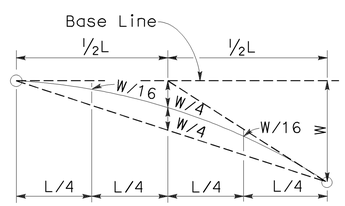

TYPICAL PARABOLIC LAYOUT

NOTES:

1. Line post, blocks and hardware to be used are shown on Standard Plans A77A1, A77A2, A77B1, A77C1 and A77C2.
2. Guard railing post spacing to be 6'-3" center to center, except as otherwise noted.
3. Except as noted, line posts are 6" x 8" x 6'-0" wood with 6" x 8" x 1'-2" wood blocks. W6 x 9 steel posts, 6'-0" in length, with 6" x 8" x 1'-2" notched wood blocks or notched recycled plastic blocks may be used for 6" x 8" x 6'-0" wood line posts with 6" x 8" x 1'-2" wood blocks where applicable and when specified.
4. Direction of adjacent traffic indicated by ⟶.
5. For Transition Railing (Type WB) details, see Standard Plan A77J4.
6. For additional details of a typical connection to bridge rail, see Connection Detail AA on Revised Standard Plan RSP A77J1.
7. For Rail Tensioning Assembly details, see Standard Plan A77H2.
8. The type of Crash Cushion to be used will be shown on the Project Plans.
9. Type 12E Layout is typically used left of approaching traffic at the end of each structure on multilane freeways or expressways where a median type barrier is not constructed between separated roadbeds.
10. The 15:1 or flatter flare is measured off of the edge of traveled way.

STATE OF CALIFORNIA
DEPARTMENT OF TRANSPORTATION

METAL BEAM GUARD RAILING TYPICAL LAYOUTS FOR STRUCTURE APPROACH

NO SCALE

RSP A77F3 DATED MAY 20, 2011 SUPERSEDES RSP A77F3 DATED JUNE 6, 2008 AND STANDARD PLAN A77F3 DATED MAY 1, 2006 - PAGE 56 OF THE STANDARD PLANS BOOK DATED MAY 2006.

REVISED STANDARD PLAN RSP A77F3

2006 REVISED STANDARD PLAN RSP A77F3

3-10-11

DIST	COUNTY	ROUTE	POST MILES TOTAL PROJECT	SHEET NO.	TOTAL SHEETS
01	Hum	299	0.0/42.9	36	59

Randell D. Hiatt
REGISTERED CIVIL ENGINEER

June 6, 2008
PLANS APPROVAL DATE

REGISTERED PROFESSIONAL ENGINEER
Randell D. Hiatt
No. C50200
Exp. 6-30-09
CIVIL
STATE OF CALIFORNIA

The State of California or its officers or agents shall not be responsible for the accuracy or completeness of electronic copies of this plan sheet.

To accompany plans dated 8-27-12

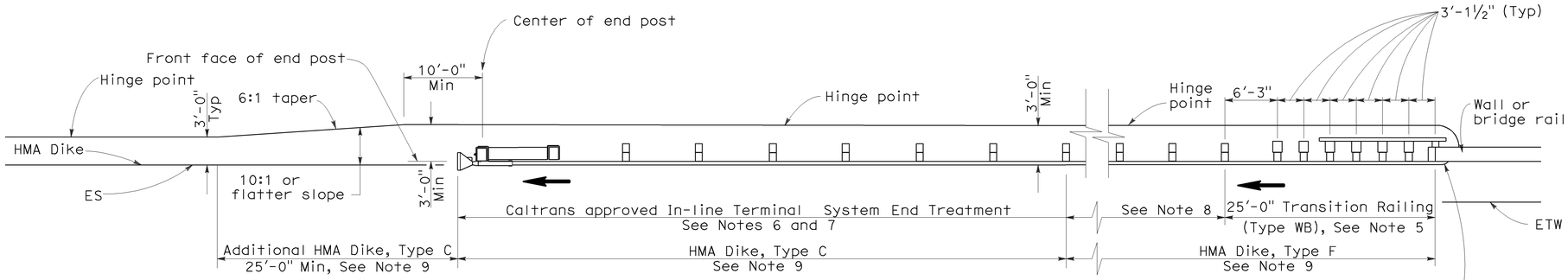

TYPE 12AA LAYOUT

(GUARD RAILING INSTALLATION AT STRUCTURE DEPARTURE WITH AN IN-LINE END TREATMENT AT TRAILING END OF RAILING)
See Notes 9 and 10

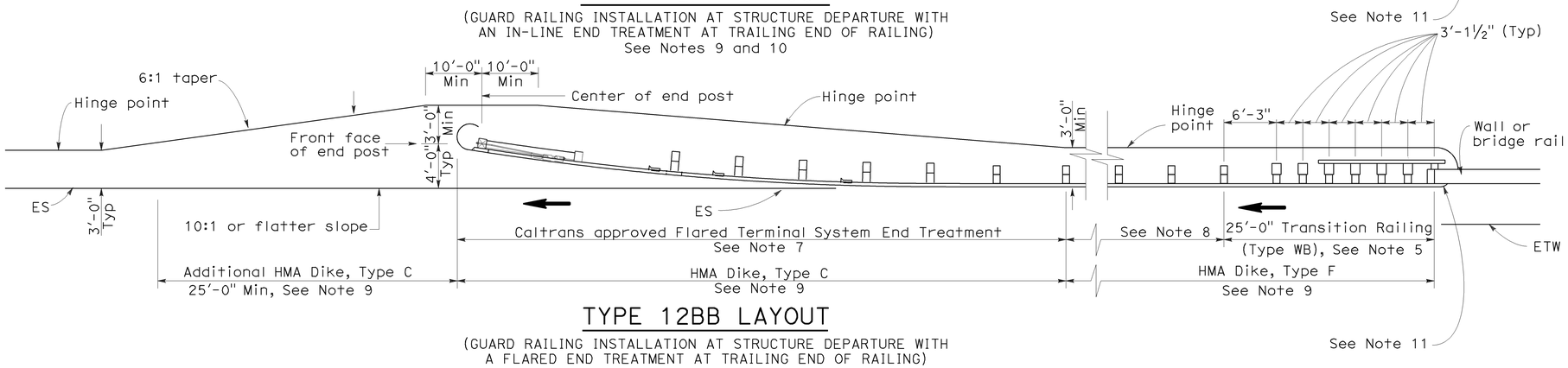

TYPE 12BB LAYOUT

(GUARD RAILING INSTALLATION AT STRUCTURE DEPARTURE WITH A FLARED END TREATMENT AT TRAILING END OF RAILING)
See Notes 9 and 10

NOTES:

1. Line post, blocks and hardware to be used are shown on Standard Plans A77A1, A77A2, A77B1, A77C1 and A77C2.
2. Guard rail post spacing to be 6'-3" center to center, except as otherwise noted.
3. Except as noted, line posts are 6" x 8" x 6'-0" wood with 6" x 8" x 1'-2" wood blocks. W6 x 9 steel posts, 6'-0" in length, with 6" x 8" x 1-2" notched wood blocks or notched recycled plastic blocks may be used for 6" x 8" x 6'-0" wood posts with 6" x 8" x 1'-2" wood blocks where applicable and when specified.
4. Direction of adjacent traffic indicated by ⟶.
5. For Transition Railing (Type WB) details for Types 12AA and 12BB Layouts, see Standard Plan A77J4.
6. In-line Terminal System Treatments are used where site conditions will not accommodate a flared end treatment.
7. The type of terminal system to be used will be shown on the Project Plans.
8. Dependent on site conditions (embankment height, side slopes, other fixed objects), it may be advisable to construct additional guard railing (a length equal to multiples of 12'-6" with 6'-3" post spacing) between the transition railing and end treatments.
9. Where placement of dike is required with guard railing installations, see Revised Standard Plan RSP A77C4 for dike positioning details.
10. Type 12AA or Type 12BB Layouts are typically used to the right of traffic departing a structure on two-way conventional highways where the roadbed width across the structure is less than 40 feet.
11. For additional details of typical connections to bridge rail, see Connection Detail CC on Revised Standard Plan RSP A77J2 and Connection Detail HH on Standard Plans A77k2.

STATE OF CALIFORNIA
DEPARTMENT OF TRANSPORTATION

METAL BEAM GUARD RAILING TYPICAL LAYOUTS FOR STRUCTURE DEPARTURE

NO SCALE

RSP A77F4 DATED JUNE 6, 2008 SUPERSEDES STANDARD PLAN A77F4
DATED MAY 1, 2006 - PAGE 57 OF THE STANDARD PLANS BOOK DATED MAY 2006.

REVISED STANDARD PLAN RSP A77F4

2006 REVISED STANDARD PLAN RSP A77F4

12-10-07

DIST	COUNTY	ROUTE	POST MILES TOTAL PROJECT	SHEET NO.	TOTAL SHEETS
01	Hum	299	0.0/42.9	37	59

Randell D. Hiatt
REGISTERED CIVIL ENGINEER

June 6, 2008
PLANS APPROVAL DATE

REGISTERED PROFESSIONAL ENGINEER Randell D. Hiatt No. C50200 Exp. 6-30-09 CIVIL STATE OF CALIFORNIA

The State of California or its officers or agents shall not be responsible for the accuracy or completeness of electronic copies of this plan sheet.

To accompany plans dated 8-27-12

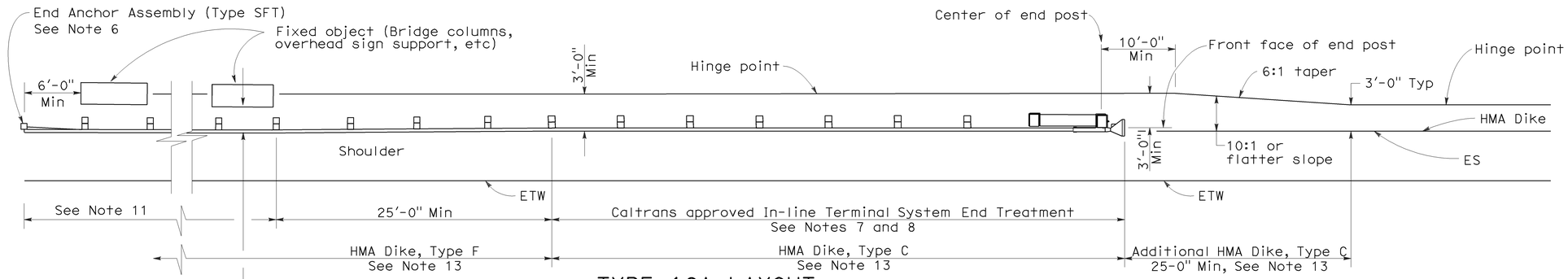

TYPE 16A LAYOUT

(GUARD RAILING INSTALLATION AT ROADSIDE FIXED OBJECT OR OBJECTS WITH AN IN-LINE END TREATMENT AT TRAFFIC APPROACH END OF RAILING)
See Notes 12 and 13

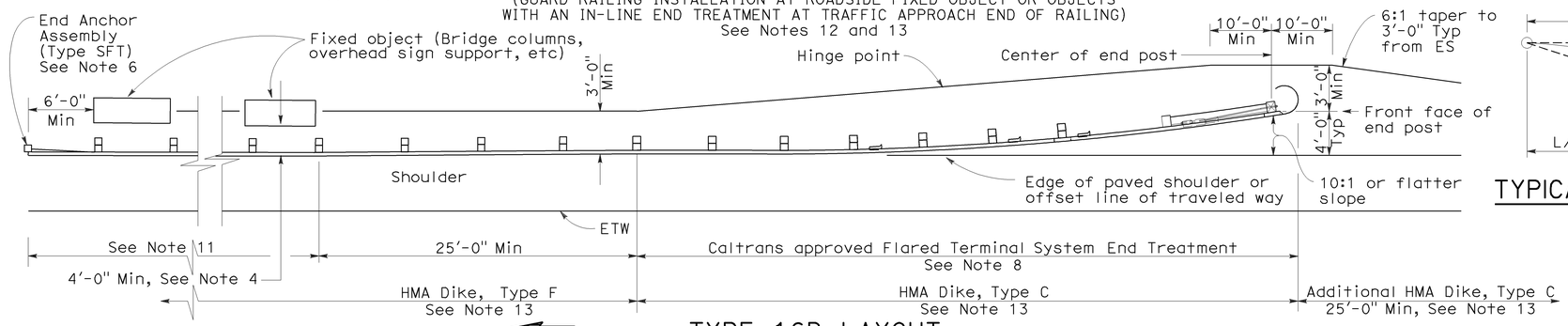

TYPE 16B LAYOUT

(GUARD RAILING INSTALLATION AT ROADSIDE FIXED OBJECT OR OBJECTS WITH A FLARED END TREATMENT AT TRAFFIC APPROACH END OF RAILING)
See Notes 12 and 13

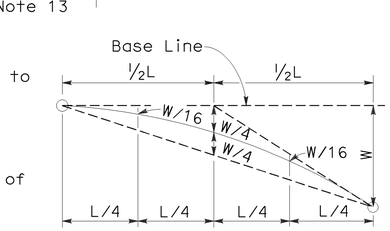

TYPICAL PARABOLIC LAYOUT

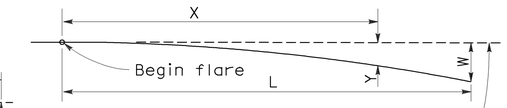

Base Line (Edge of paved shoulder or offset line of edge of traveled way)

$$Y = \frac{WX^2}{L^2}$$

Y = Offset from base line
W = Maximum offset
X = Distance along base line
L = Length of flare

PARABOLIC FLARE OFFSETS

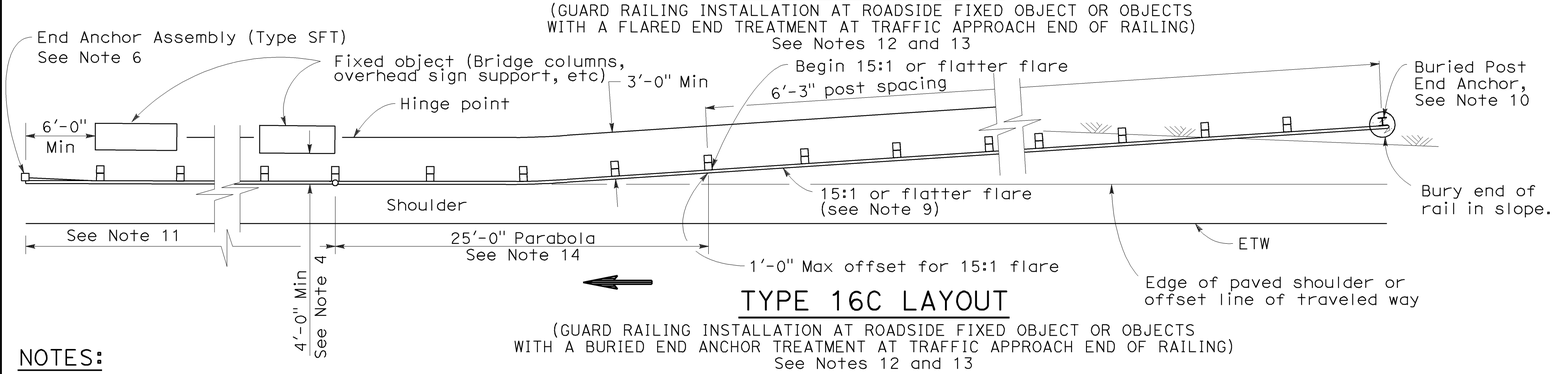

TYPE 16C LAYOUT

(GUARD RAILING INSTALLATION AT ROADSIDE FIXED OBJECT OR OBJECTS WITH A BURIED END ANCHOR TREATMENT AT TRAFFIC APPROACH END OF RAILING)
See Notes 12 and 13

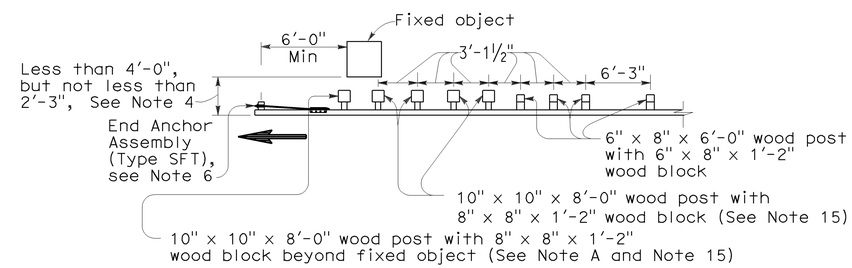

NOTE A: For a series of fixed objects (bridge columns, overhead sign supports, etc.) additional 10" x 10" x 8'-0" wood post with 8" x 8" x 1'-2" wood blocks at 3'-1½" center to center spacing are to be used between fixed objects.

STRENGTHENED RAILING SECTIONS FOR FIXED OBJECT

Use strengthened railing sections with Types 16A, 16B or 16C Layouts where minimum clearance between the face of the guard railing and fixed object(s) is less than 4'-0", but not less than 2'-3". See Note 4

NOTES:

1. Line post, blocks and hardware to be used are shown on Revised Standard Plans A77A1, A77A2, A77B1, A77C1 and A77C2.
2. Guard railing post spacing to be 6'-3" center to center, except as otherwise noted.
3. Except as noted, line posts are 6" x 8" x 6'-0" wood with 6" x 8" x 1'-2" wood blocks. W6 x 9 steel posts, 6'-0" in length, with 6" x 8" x 1'-2" notched wood blocks or notched recycled plastic blocks may be used for 6" x 8" x 6'-0" wood line posts with 6" x 8" x 1'-2" wood blocks where applicable and when specified.
4. A 4'-0" minimum clearance is required between the face of the railing and the face of a fixed object located directly behind standard guard railing sections with post spacing of 6'-3". Construct guard railing as shown in the detail "Strengthened Railing Sections for Fixed Objects" on this plan, where the clearance between the face of the railing and the face of a fixed object is less than 4'-0", but not less than 2'-3". Where the clearance is less than 2'-3", a concrete wall or barrier should be constructed to shield the fixed object(s).
5. Direction of adjacent traffic indicated by ⟶.
6. For End Anchor Assembly (Type SFT) details, see Standard Plan A77H1.
7. In-line Terminal System End Treatments are used where site conditions will not accommodate a flared end treatment.
8. The type of terminal system to be used will be shown on the Project Plans.
9. The 15:1 or flatter flare used with Type 16C Layout is based on the edge of the paved shoulder or offset line of edge of the traveled way. The length of guard railing within the 15:1 or flatter flare is based on site conditions and should be a length equal to multiples of 12'-6".
10. For details of the Buried Post End Anchor used with Type 16C Layout, see Standard Plan A77I2.
11. As site conditions dictate, construct additional guard railing to shield fixed object(s). Additional guard railing length equal to multiples of 12'-6". Post spacing at 6'-3" except as specified in Note 4.
12. Layout Types 16A, 16B or 16C are typically used where guard railing is recommended to shield roadside fixed object(s) and a crashworthy end treatment is required for only one direction of traffic.
13. Where placement of dike is required with guard railing, see Revised Standard Plan RSP A77C4 for dike positioning details.
14. For typical flare offsets for 25'-0" length parabola with maximum offset of 1'-0", see Revised Standard Plan RSP A77E1.
15. W6 x 15 steel post, 8'-0" in length, with 8" x 8" x 1'-2" notched wood block or notched recycled plastic blocks may be used in place of the 10" x 10" x 8'-0" wood post with 8" x 8" x 1'-2" wood block shown in the "Strengthened Railing Sections Detail".

STATE OF CALIFORNIA
DEPARTMENT OF TRANSPORTATION

METAL BEAM GUARD RAILING TYPICAL LAYOUTS FOR ROADSIDE FIXED OBJECTS

NO SCALE

RSP A77G3 DATED JUNE 6, 2008 SUPERSEDES STANDARD PLAN A77G3 DATED MAY 1, 2006 - PAGE 61 OF THE STANDARD PLANS BOOK DATED MAY 2006.

REVISED STANDARD PLAN RSP A77G3

2006 REVISED STANDARD PLAN RSP A77G3

12-10-07

DIST	COUNTY	ROUTE	POST MILES TOTAL PROJECT	SHEET NO.	TOTAL SHEETS
01	Hum	299	0.0/42.9	38	59

Randell D. Hiatt
REGISTERED CIVIL ENGINEER

June 6, 2008
PLANS APPROVAL DATE

REGISTERED PROFESSIONAL ENGINEER Randell D. Hiatt No. C50200 Exp. 6-30-09 CIVIL STATE OF CALIFORNIA

The State of California or its officers or agents shall not be responsible for the accuracy or completeness of electronic copies of this plan sheet.

To accompany plans dated 8-27-12

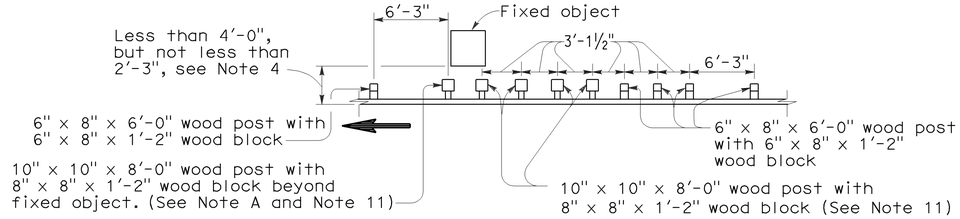

NOTE A: For a series of fixed objects (bridge columns, overhead sign supports, etc.) additional 10" x 10" x 8'-0" wood post with 8" x 8" x 1'-2" wood blocks at 3'-1½" center to center spacing are to be used between fixed object(s).

STRENGTHENED RAILING SECTIONS FOR FIXED OBJECT

Use strengthened railing sections with Layout Types 16D or 16E where minimum clearance between the guard railing and fixed object(s) is less than 4'-0", but not less than 2'-3". See Note 4.

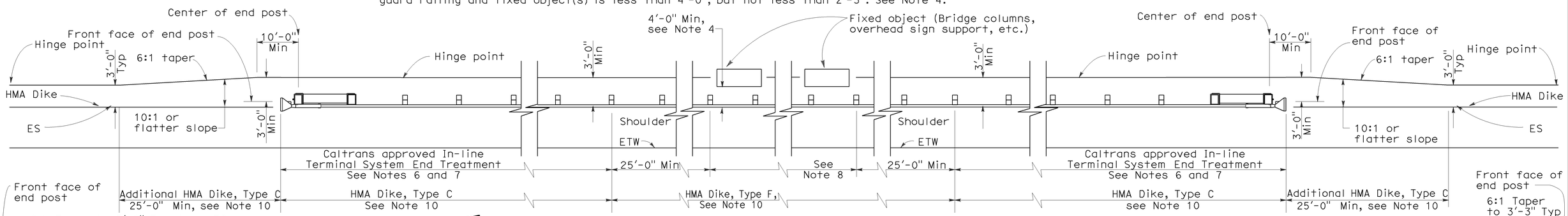

TYPE 16D LAYOUT

(GUARD RAILING INSTALLATION AT ROADSIDE FIXED OBJECT OR OBJECTS WITH AN IN-LINE END TREATMENT AT EACH END OF RAILING)
See Note 9

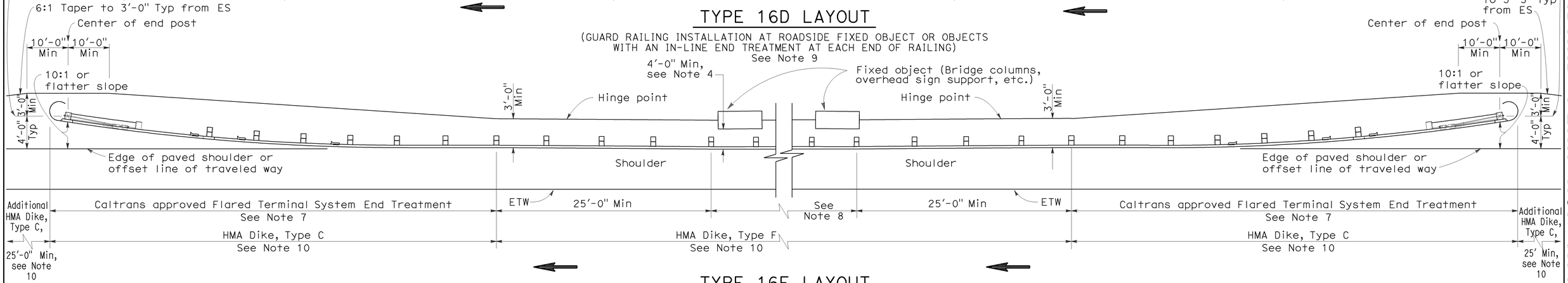

TYPE 16E LAYOUT

(GUARD RAILING INSTALLATION AT ROADSIDE FIXED OBJECT OR OBJECTS WITH A FLARED END TREATMENT AT EACH END OF RAILING)
See Note 9

NOTES:

1. Line post, blocks and hardware to be used are shown on Standard Plans A77A1, A77A2, A77B1, A77C1 and A77C2.
2. Guard railing post spacing to be 6'-3" center to center, except as otherwise noted.
3. Except as noted, line posts are 6" x 8" x 6'-0" wood with 6" x 8" x 1'-2" wood blocks. W6 x 9 steel posts, 6'-0" in length, with 6" x 8" x 1'-2" notched wood blocks or notched recycled plastic blocks may be used for 6" x 8" x 6'-0" wood line posts with 6" x 8" x 1'-2" wood blocks where applicable and when specified.
4. A 4'-0" minimum clearance is required between the face of the railing and the face of a fixed object located directly behind standard guard railing sections with post spacing at 6'-3". Construct guard railing as shown in the detail "Strengthened Railing Sections for Fixed Objects" on this plan, where the clearance between the face of the railing and the face of a fixed object is less than 4'-0", but not less than 2'-3". Where the clearance is less than 2'-3", a concrete wall or barrier should be constructed to shield the fixed object(s).
5. Direction of adjacent traffic indicated by ⟶ .
6. In-line Terminal System End Treatments are used where site conditions will not accommodate a flared end treatment.
7. The type of terminal system to be used will be shown on the Project Plans.
8. As site conditions dictate, construct additional guard railing to shield fixed object(s). Additional guard railing length equal to multiples of 12'-6". Post spacing at 6'-3", except as specified in Note 4.
9. Layout Types 16D through 16L, shown on the A77G Series of Revised Standard Plans, are typically used where guard railing is recommended to shield roadside fixed object(s) and a crashworthy end treatment is required for both directions of traffic.
10. Where placement of dike is required with guard railing, see Revised Standard Plan RSP A77C4 for dike positioning details.
11. W6 x 15 steel post, 8'-0" in length, with 8" x 8" x 1'-2" notched wood block or notched recycled plastic block may be used in place of the 10" x 10" x 8'-0" wood post with 8" x 8" x 1'-2" wood block shown in the "Strengthened Railing Sections Detail."

STATE OF CALIFORNIA
DEPARTMENT OF TRANSPORTATION

METAL BEAM GUARD RAILING TYPICAL LAYOUTS FOR ROADSIDE FIXED OBJECTS

NO SCALE

RSP A77G4 DATED JUNE 6, 2008 SUPERSEDES STANDARD PLAN A77G4
DATED MAY 1, 2006 - PAGE 62 OF THE STANDARD PLANS BOOK DATED MAY 2006.

REVISED STANDARD PLAN RSP A77G4

2006 REVISED STANDARD PLAN RSP A77G4

12-10-07

DIST	COUNTY	ROUTE	POST MILES TOTAL PROJECT	SHEET NO.	TOTAL SHEETS
01	Hum	299	0.0/42.9	39	59

Randell D. Hiatt
REGISTERED CIVIL ENGINEER

June 6, 2008
PLANS APPROVAL DATE

REGISTERED PROFESSIONAL ENGINEER Randell D. Hiatt No. C50200 Exp. 6-30-09 CIVIL STATE OF CALIFORNIA

The State of California or its officers or agents shall not be responsible for the accuracy or completeness of electronic copies of this plan sheet.

To accompany plans dated 8-27-12

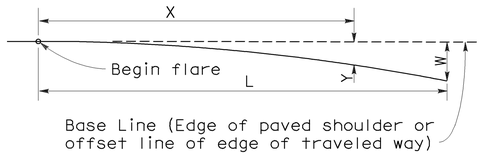

$$Y = \frac{WX^2}{L^2}$$

Y = Offset from base line
W = Maximum offset
X = Distance along base line
L = Length of flare

PARABOLIC FLARE OFFSETS

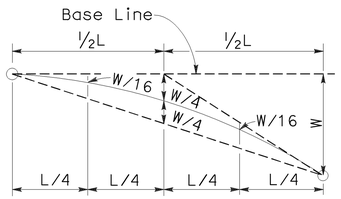

TYPICAL PARABOLIC LAYOUT

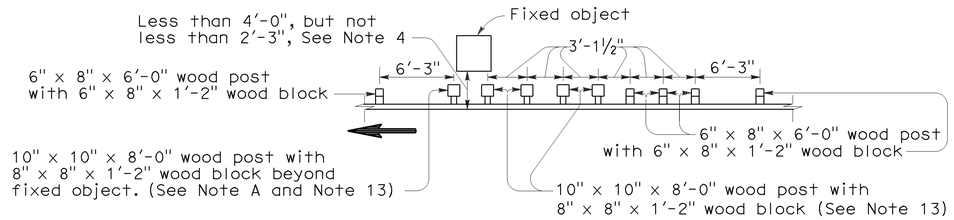

NOTE A: For a series of fixed objects (bridge columns, overhead sign supports, etc.) additional 10" x 10" x 8'-0" wood post with 8" x 8" x 1'-2" wood blocks at 3'-1½" center to center spacing are to be used between fixed object(s).

STRENGTHENED RAILING SECTIONS FOR FIXED OBJECT

Use strengthened railing sections with Layout Types 16F or 16G where minimum clearance between the face of the guard railing and fixed object(s) is less than 4'-0", but not less than 2'-3". See Note 4.

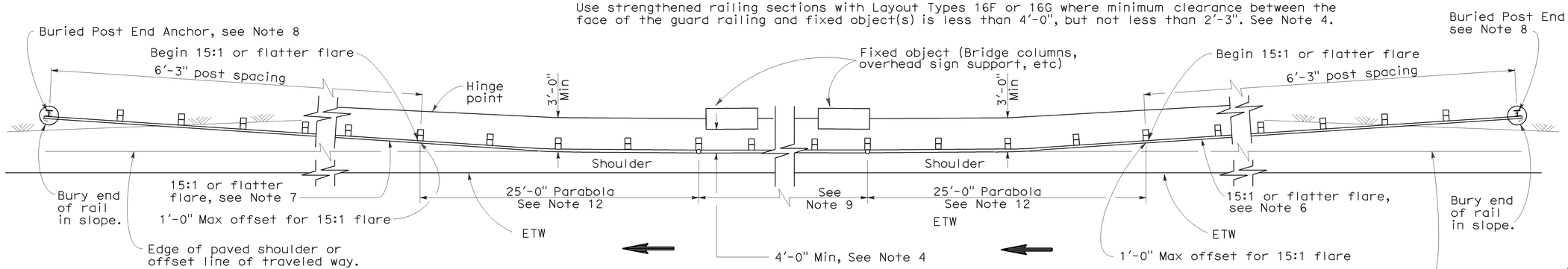

TYPE 16F LAYOUT

(GUARD RAILING INSTALLATION AT ROADSIDE FIXED OBJECT OR OBJECTS WITH A BURIED END ANCHOR TREATMENT AT EACH END OF RAILING)
See Notes 10 and 11

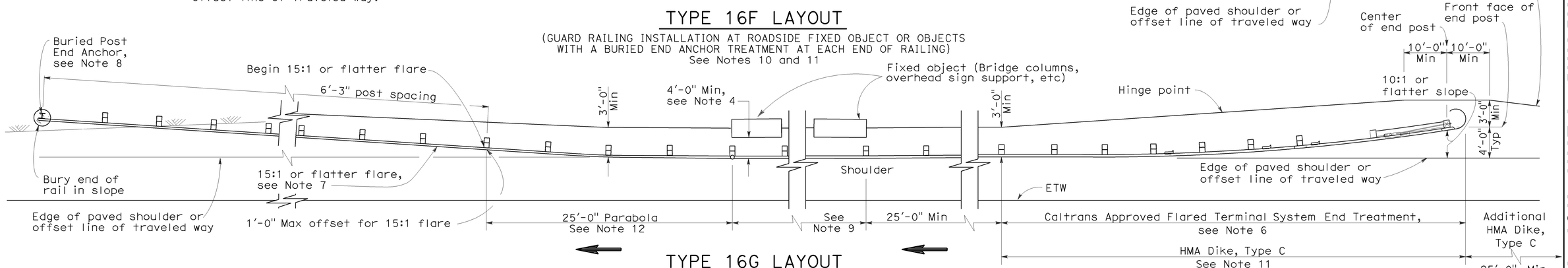

TYPE 16G LAYOUT

(GUARD RAILING INSTALLATION AT ROADSIDE FIXED OBJECT OR OBJECTS WITH A FLARED END TREATMENT AND A BURIED END ANCHOR TREATMENT AT THE ENDS OF RAILING)
See Notes 10 and 11

NOTES:

1. Line post, blocks and hardware to be used are shown on Standard Plans A77A1, A77A2, A77B1, A77C1 and A77C2.
2. Guard railing post spacing to be 6'-3" center to center, except as otherwise noted.
3. Except as noted, line posts are 6" x 8" x 6'-0" wood with 6" x 8" x 1'-2" wood blocks. W6 x 9 steel posts, 6'-0" in length, with 8" x 8" x 1'-2" notched wood blocks or notched recycled plastic blocks may be used for 6" x 8" x 6'-0" wood posts with 6" x 8" x 1'-2" wood blocks where applicable and when specified.
4. A 4'-0" minimum clearance is required between the face of the railing and the face of a fixed object located directly behind standard guard railing sections with post spacing at 6'-3". Construct guard railing as shown in the detail "Strengthened Railing Sections for Fixed Objects" on this plan, where the clearance between the face of the railing and the face of a fixed object is less than 4'-0", but not less than 2'-3". Where the clearance is less than 2'-3", a concrete wall or barrier should be constructed to shield the fixed object(s).
5. Direction of adjacent traffic indicated by ⟶.
6. The type of terminal system to be used will be shown on the Project Plans.
7. The 15:1 or flatter flare for the buried post anchor is based on the edge of the paved shoulder or offset line of edge of the traveled way. The length of guard railing within the 15:1 or flatter flare is based on site conditions and should be a length equal to multiples of 12'-6".
8. For details of the Buried Post End Anchor details, see Standard Plan A77I2.
9. As site conditions dictate, construct additional guard railing to shield fixed object(s). Additional guard railing length equal to multiples of 12'-6". Post spacing at 6'-3", except as specified in Note 4.
10. Layout Types 16D through 16L, shown on the A77G Series of Revised Standard Plans, are typically used on highways where guard railing is recommended to shield roadside fixed object(s) and a crashworthy end treatment is required for both directions of traffic.
11. Where placement of dike is required with guard railing, see Revised Standard Plan RSP A77C4 for dike positioning details.
12. For typical flare offsets for 25'-0" length parabola with maximum offset of 1'-0", see Revised Standard Plan RSP A77E1.
13. W6 x 15 steel post, 8'-0" in length, with 8" x 8" x 1'-2" notched wood block or notched recycled plastic blocks may be used in place of the 10" x 10" x 8'-0" wood post with 8" x 8" x 1'-2" wood block shown in the "Strengthened Railing Sections Detail".

STATE OF CALIFORNIA
DEPARTMENT OF TRANSPORTATION

METAL BEAM GUARD RAILING TYPICAL LAYOUTS FOR ROADSIDE FIXED OBJECTS

NO SCALE

RSP A77G5 DATED JUNE 6, 2008 SUPERSEDES STANDARD PLAN A77G5 DATED MAY 1, 2006 - PAGE 63 OF THE STANDARD PLANS BOOK DATED MAY 2006.

REVISED STANDARD PLAN RSP A77G5

2006 REVISED STANDARD PLAN RSP A77G5

12-10-07

DIST	COUNTY	ROUTE	POST MILES TOTAL PROJECT	SHEET NO.	TOTAL SHEETS
01	Hum	299	0.0/42.9	40	59

Randell D. Hiatt
REGISTERED CIVIL ENGINEER

June 6, 2008
PLANS APPROVAL DATE

REGISTERED PROFESSIONAL ENGINEER
Randell D. Hiatt
No. C50200
Exp. 6-30-09
CIVIL
STATE OF CALIFORNIA

The State of California or its officers or agents shall not be responsible for the accuracy or completeness of electronic copies of this plan sheet.

To accompany plans dated 8-27-12

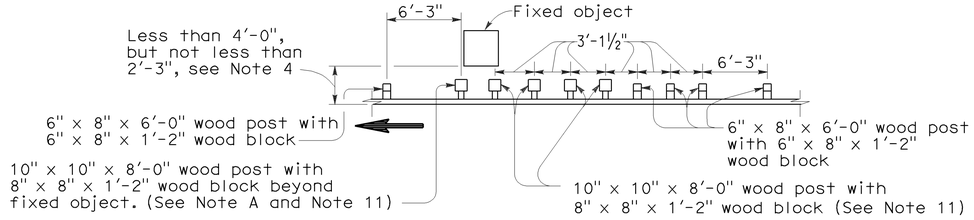

Note A. For a series of fixed objects (bridge columns, overhead sign supports, etc.) additional 10" x 10" x 8'-0" wood post with 8" x 8" x 1'-2" wood blocks at 3'-1½" center to center spacing are to be used between fixed object(s).

STRENGTHENED RAILING SECTIONS FOR FIXED OBJECT

Use strengthened railing sections with Layout Type 16H where minimum clearance between the face of the guard railing and fixed object(s) is less than 4'-0", but not less than 2'-3". See Note 4.

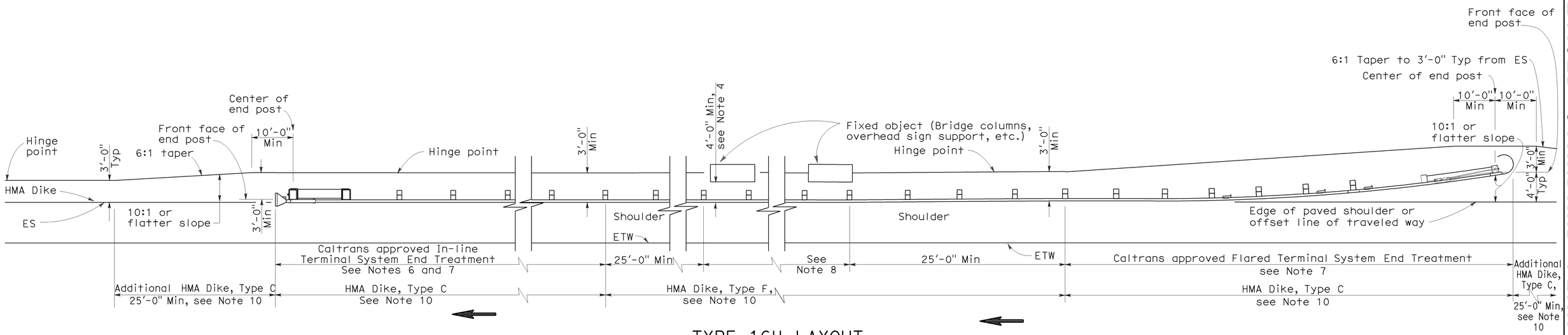

TYPE 16H LAYOUT

(GUARD RAILING INSTALLATION AT ROADSIDE FIXED OBJECT OR OBJECTS WITH A FLARED END TREATMENT AND AN IN-LINE TREATMENT AT THE ENDS OF RAILING)
See Note 9

NOTES:

1. Line post, blocks and hardware to be used are shown on Standard Plans A77A1, A77A2, A77B1, A77C1 and A77C2.
2. Guard railing post spacing to be 6'-3" center to center, except as otherwise noted.
3. Except as noted, line posts are 6" x 8" x 6'-0" wood with 6" x 8" x 1'-2" wood blocks. W6 x 9 steel posts, 6'-0" in length, with 6" x 8" x 1'-2" notched wood blocks or notched recycled plastic blocks may be used for 6" x 8" x 6'-0" wood posts with 6" x 8" x 1'-2" wood blocks where applicable and when specified.
4. A 4'-0" minimum clearance is required between the face of the railing and the face of a fixed object located directly behind standard guard railing sections with post spacing at 6'-3". Construct guard railing as shown in the detail "Strengthened Railing Sections for Fixed Objects" on this plan, where the clearance between the face of the railing and the face of a fixed object is less than 4'-0", but not less than 2'-3". Where the clearance is less than 2'-3", a concrete wall or barrier should be constructed to shield the fixed object(s).
5. Direction of adjacent traffic indicated by ⟶ .
6. In-line Terminal System End Treatments are used where site conditions will not accommodate a flared end treatment.
7. The type of terminal system to be used will be shown on the Project Plans.
8. As site conditions dictate, construct additional guard railing to shield fixed object(s). Additional guard railing length equal to multiples of 12'-6". Post spacing at 6'-3", except as specified in Note 4.
9. Layout Types 16D through 16L, shown on the A77G Series of Revised Standard PLans, typically used where guard railing is recommended to shield roadside fixed object(s) and a crashworthy end treatment is required for both directions of traffic.
10. Where placement of dike is required with guard railing, see Revised Standard Plan RSP A77C4 for dike positioning details.
11. W6 x 15 steel post, 8'-0" in length, with 8" x 8" x 1'-2" notched wood block or notched recycled plastic blocks may be used in place of the 10" x 10" x 8'-0" wood post with 8" x 8" x 1'-2" wood block shown in the "Strengthened Railing Sections Detail".

STATE OF CALIFORNIA
DEPARTMENT OF TRANSPORTATION

METAL BEAM GUARD RAILING TYPICAL LAYOUTS FOR ROADSIDE FIXED OBJECTS

NO SCALE

RSP A77G6 DATED JUNE 6, 2008 SUPERSEDES STANDARD PLAN A77G6
DATED MAY 1, 2006 - PAGE 64 OF THE STANDARD PLANS BOOK DATED MAY 2006.

REVISED STANDARD PLAN RSP A77G6

2006 REVISED STANDARD PLAN RSP A77G6

12-10-07

DIST	COUNTY	ROUTE	POST MILES TOTAL PROJECT	SHEET NO.	TOTAL SHEETS
01	Hum	299	0.0/42.9	41	59

Randell D. Hiatt
REGISTERED CIVIL ENGINEER

June 6, 2008
PLANS APPROVAL DATE

REGISTERED PROFESSIONAL ENGINEER Randell D. Hiatt No. C50200 Exp. 6-30-09 CIVIL STATE OF CALIFORNIA

The State of California or its officers or agents shall not be responsible for the accuracy or completeness of electronic copies of this plan sheet.

To accompany plans dated 8-27-12

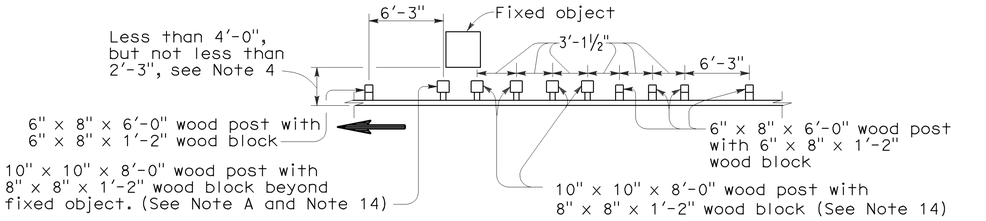

Note A. For a series of fixed objects (bridge columns, overhead sign supports, etc.) additional 10" x 10" x 8'-0" wood post with 8" x 8" x 1'-2" wood blocks at 3'-1½" center to center spacing are to be used between fixed object(s).

STRENGTHENED RAILING SECTIONS FOR FIXED OBJECT

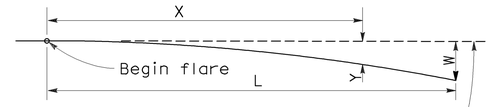

Base Line (Edge of paved shoulder or offset line of edge of traveled way)

$$Y = \frac{WX^2}{L^2}$$

Y = Offset from base line
W = Maximum offset
X = Distance along base line
L = Length of flare

PARABOLIC FLARE OFFSETS

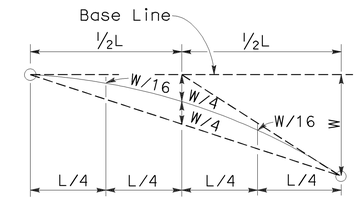

TYPICAL PARABOLIC LAYOUT

Use strengthened railing sections with Layout Types 16I or 16J Layouts where minimum clearance between the face of the guard railing and fixed object(s) is less than 4'-0", but not less than 2'-3". See Note 4.

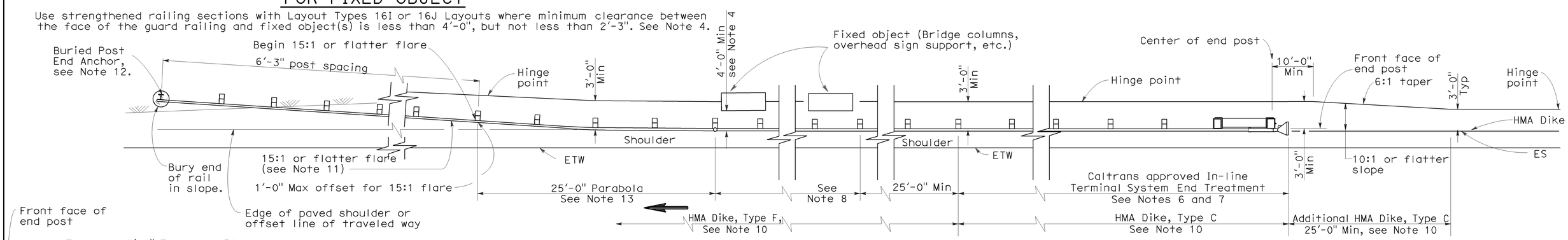

TYPE 16I LAYOUT

(GUARD RAILING INSTALLATION AT ROADSIDE FIXED OBJECT OR OBJECTS WITH AN IN-LINE END TREATMENT AND A BURIED END ANCHOR TREATMENT AT THE ENDS OF RAILING) See Note 9

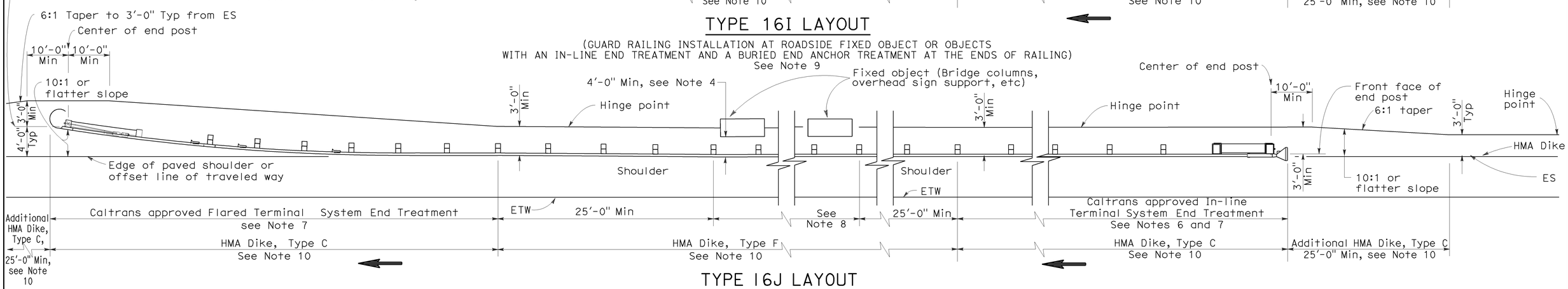

TYPE 16J LAYOUT

(GUARD RAILING INSTALLATION AT ROADSIDE FIXED OBJECT OR OBJECTS WITH AN IN-LINE END TREATMENT AND A FLARED END TREATMENT AT THE ENDS OF RAILING) See Note 9

NOTES:

1. Line post, blocks and hardware to be used are shown on Standard Plans A77A1, A77A2, A77B1, A77C1 and A77C2.
2. Guard railing post spacing to be 6'-3" center to center, except as otherwise noted.
3. Except as noted, line posts are 6" x 8" x 6'-0" wood with 6" x 8" x 1'-2" wood blocks. W6 x 9 steel posts, 6'-0" in length, with 6" x 8" x 1'-2" notched wood blocks or notched recycled plastic blocks may be used for 6" x 8" x 6'-0" wood posts with 6" x 8" x 1'-2" wood blocks where applicable and when specified.
4. A 4'-0" minimum clearance is required between the face of the railing and the face of a fixed object located directly behind standard guard railing sections with post spacing at 6'-3". Construct guard railing as shown in the detail "Strengthened Railing Sections for Fixed Objects" on this plan, where the clearance between the face of the railing and the face of a fixed object is less than 4'-0", but not less than 2'-3". Where the clearance is less than 2'-3", a concrete wall or barrier should be constructed to shield the fixed object(s).
5. Direction of adjacent traffic indicated by ➡.
6. In-line Terminal System End Treatments are used where site conditions will not accommodate a flared end treatment.
7. The type of terminal system to be used will be shown on the Project Plans.
8. As site conditions dictate, construct additional guard railing to shield fixed object(s). Additional guard railing length equal to multiples of 12'-6". Post spacing at 6'-3", except as specified in Note 4.
9. Layout Types 16D through 16L, shown on the A77G Series of Revised Standard Plans, are typically used where guard railing is recommended to shield roadside fixed object(s) and a crashworthy end treatment is required for both directions of traffic.
10. Where placement of dike is required with guard railing, see Revised Standard Plan RSP A77C4 for dike positioning details.
11. The 15:1 or flatter flare for the buried post anchor is based on the edge of the paved shoulder or offset line of edge of the traveled way. The length of guard railing within the 15:1 or flatter flare is based on site conditions and should be a length equal to multiples of 12'-6".
12. For details of Buried Post End Anchor details, see Standard Plan A77I2.
13. For typical flare offsets for 25'-0" length parabola with maximum offset of 1'-0", see Revised Standard RSP Plan A77E1.
14. W6 x 15 steel post, 8'-0" in length, with 8" x 8" x 1'-2" notched wood block or notched recycled plastic blocks may be used in place of the 10" x 10" x 8'-0" wood post with 8" x 8" x 1'-2" wood block shown in the "Strengthened Railing Sections Detail".

STATE OF CALIFORNIA
DEPARTMENT OF TRANSPORTATION

METAL BEAM GUARD RAILING TYPICAL LAYOUTS FOR ROADSIDE FIXED OBJECTS

NO SCALE

RSP A77G7 DATED JUNE 6, 2008 SUPERSEDES STANDARD PLAN A77G7
DATED MAY 1, 2006 - PAGE 65 OF THE STANDARD PLANS BOOK DATED MAY 2006.

REVISED STANDARD PLAN RSP A77G7

2006 REVISED STANDARD PLAN RSP A77G7

12-10-07

DIST	COUNTY	ROUTE	POST MILES TOTAL PROJECT	SHEET NO.	TOTAL SHEETS
01	Hum	299	0.0/42.9	42	59

Randell D. Hiatt
REGISTERED CIVIL ENGINEER

June 6, 2008
PLANS APPROVAL DATE

REGISTERED PROFESSIONAL ENGINEER Randell D. Hiatt No. C50200 Exp. 6-30-09 CIVIL STATE OF CALIFORNIA

The State of California or its officers or agents shall not be responsible for the accuracy or completeness of electronic copies of this plan sheet.

To accompany plans dated 8-27-12

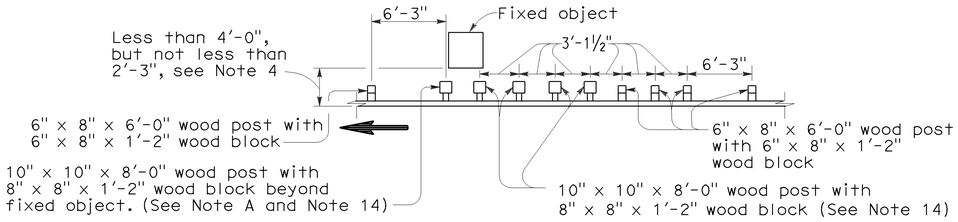

Note A. For a series of fixed objects (bridge columns, overhead sign supports, etc.) additional 10" x 10" x 8'-0" wood post with 8" x 8" x 1'-2" wood blocks at 3'-1½" center to center spacing are to be used between fixed object(s).

STRENGTHENED RAILING SECTIONS FOR FIXED OBJECT

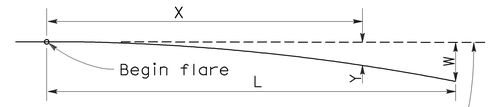

Base Line (Edge of paved shoulder or offset line of edge of traveled way)

$$Y = \frac{WX^2}{L^2}$$

Y = Offset from base line
W = Maximum offset
X = Distance along base line
L = Length of flare

PARABOLIC FLARE OFFSETS

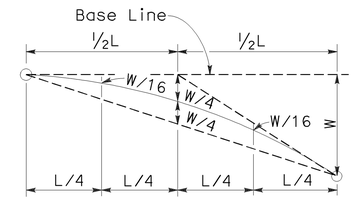

TYPICAL PARABOLIC LAYOUT

Use strengthened railing sections with Layout Types 16K or 16L Layouts where minimum clearance between the face of the guard railing and fixed object(s) is less than 4'-0", but not less than 2'-3". See Note 4.

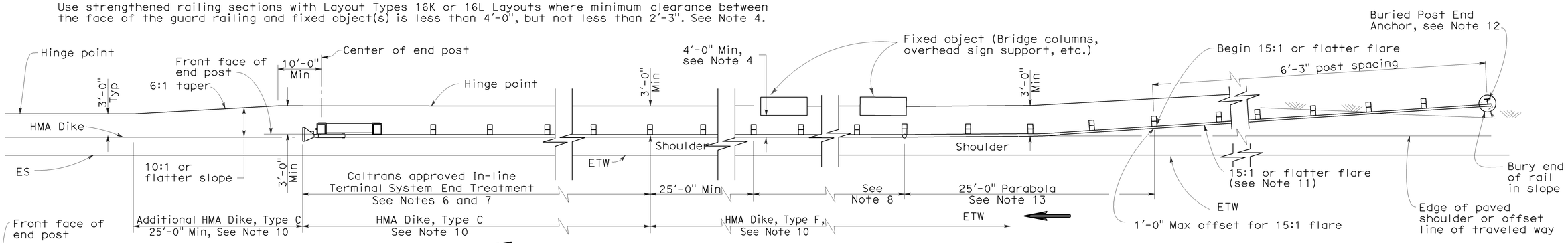

TYPE 16K LAYOUT

(GUARD RAILING INSTALLATION AT ROADSIDE FIXED OBJECT OR OBJECTS WITH A BURIED END ANCHOR TREATMENT AND AN IN-LINE END TREATMENT AT THE ENDS OF RAILING) See Note 9

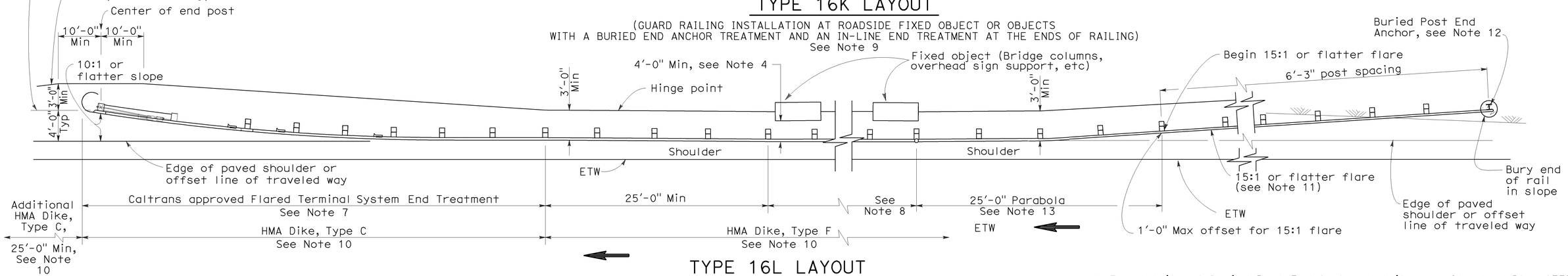

TYPE 16L LAYOUT

(GUARD RAILING INSTALLATION AT ROADSIDE FIXED OBJECT OR OBJECTS WITH A BURIED END ANCHOR TREATMENT AND A FLARED END TREATMENT AT THE ENDS OF RAILING) See Note 9

NOTES:

1. Line post, blocks and hardware to be used are shown on Standard Plans A77A1, A77A2, A77B1, A77C1 and A77C2.
2. Guard railing post spacing to be 6'-3" center to center, except as otherwise noted.
3. Except as noted, line posts are 6" x 8" x 6'-0" wood with 6" x 8" x 1'-2" wood blocks. W6 x 9 steel posts, 6'-0" in length, with 6" x 8" x 1'-2" notched wood blocks or notched recycled plastic blocks may be used for 6" x 8" x 6'-0" wood posts with 6" x 8" x 1'-2" wood blocks where applicable and when specified.
4. A 4'-0" minimum clearance is required between the face of the railing and the face of a fixed object located directly behind standard guard railing sections with post spacing at 6'-3". Construct guard railing as shown in the detail "Strengthened Railing Sections for Fixed Objects" on this plan, where the clearance between the face of the railing and the face of a fixed object is less than 4'-0", but not less than 2'-3". Where the clearance is less than 2'-3", a concrete wall or barrier should be constructed to shield the fixed object(s).
5. Direction of adjacent traffic indicated by ⟶.
6. In-line Terminal System End Treatments are used where site conditions will not accommodate a flared end treatment.
7. The type of terminal system to be used will be shown on the Project Plans.
8. As site conditions dictate, construct additional guard railing to shield fixed object(s). Additional guard railing length equal to multiples of 12'-6". Post spacing at 6'-3", except as specified in Note 4.
9. Layout Types 16D through 16L, shown on the A77G Series of Revised Standard Plans are typically used where guard railing is recommended to shield roadside fixed object(s) and a crashworthy end treatment is required for both directions of traffic.
10. Where placement of dike is required with guard railing, see Revised Standard Plan RSP A77C4 for dike positioning details.
11. The 15:1 or flatter flare for the buried post anchor is based on the edge of the paved shoulder or offset line of edge of the traveled way. The length of guard railing within the 15:1 or flatter flare is based on site conditions and should be a length equal to multiples of 12'-6".
12. For details of Buried Post End Anchor details, see Standard Plan A77I2.
13. For typical flare offsets for 25'-0" length parabola with maximum offset of 1'-0", see Revised Standard RSP Plan A77E1.
14. W6 x 15 steel post, 8'-0" in length, with 8" x 8" x 1'-2" notched wood block or notched recycled plastic blocks may be used in place of the 10" x 10" x 8'-0" wood post with 8" x 8" x 1'-2" wood block shown in the "Strengthened Railing Sections Detail".

STATE OF CALIFORNIA
DEPARTMENT OF TRANSPORTATION

METAL BEAM GUARD RAILING TYPICAL LAYOUTS FOR ROADSIDE FIXED OBJECTS

NO SCALE

RSP A77G8 DATED JUNE 6, 2008 SUPERSEDES STANDARD PLAN A77G8 DATED MAY 1, 2006 - PAGE 66 OF THE STANDARD PLANS BOOK DATED MAY 2006.

REVISED STANDARD PLAN RSP A77G8

2006 REVISED STANDARD PLAN RSP A77G8

12-10-07

Dist	COUNTY	ROUTE	POST MILES TOTAL PROJECT	SHEET No.	TOTAL SHEETS
01	Hum	299	0.0/42.9	43	59

Randell D. Hiatt
REGISTERED CIVIL ENGINEER

May 20, 2011
PLANS APPROVAL DATE

REGISTERED PROFESSIONAL ENGINEER
Randell D. Hiatt
No. C50200
Exp. 6-30-11
CIVIL
STATE OF CALIFORNIA

The State of California or its officers or agents shall not be responsible for the accuracy or completeness of electronic copies of this plan sheet.

To accompany plans dated 8-27-12

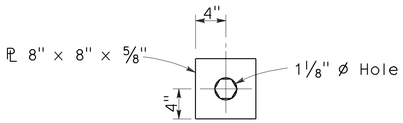

DETAIL A
CABLE CONNECTION
END PLATE

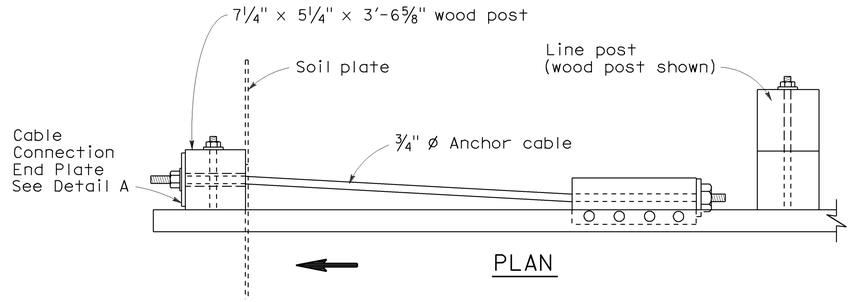

PLAN

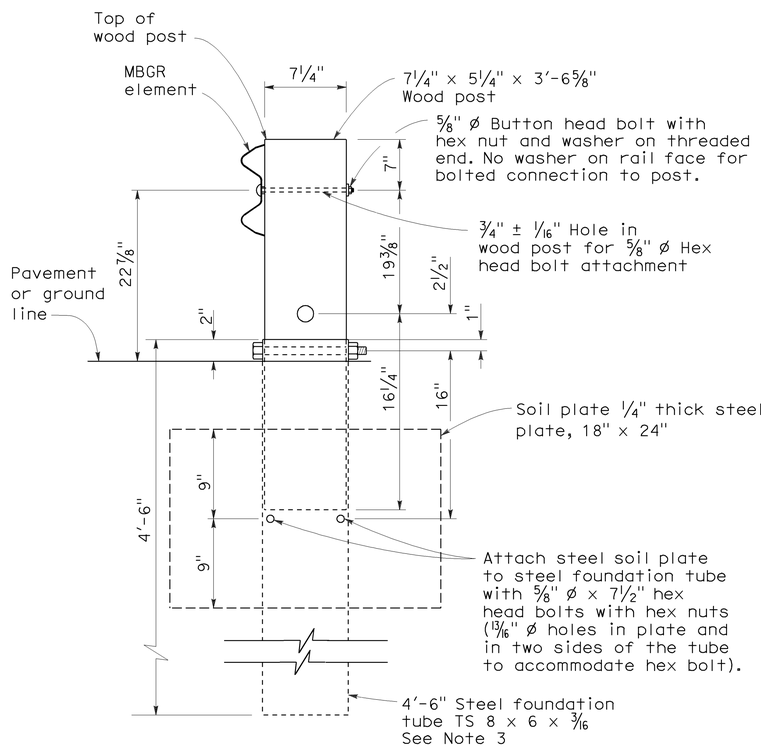

SECTION A-A

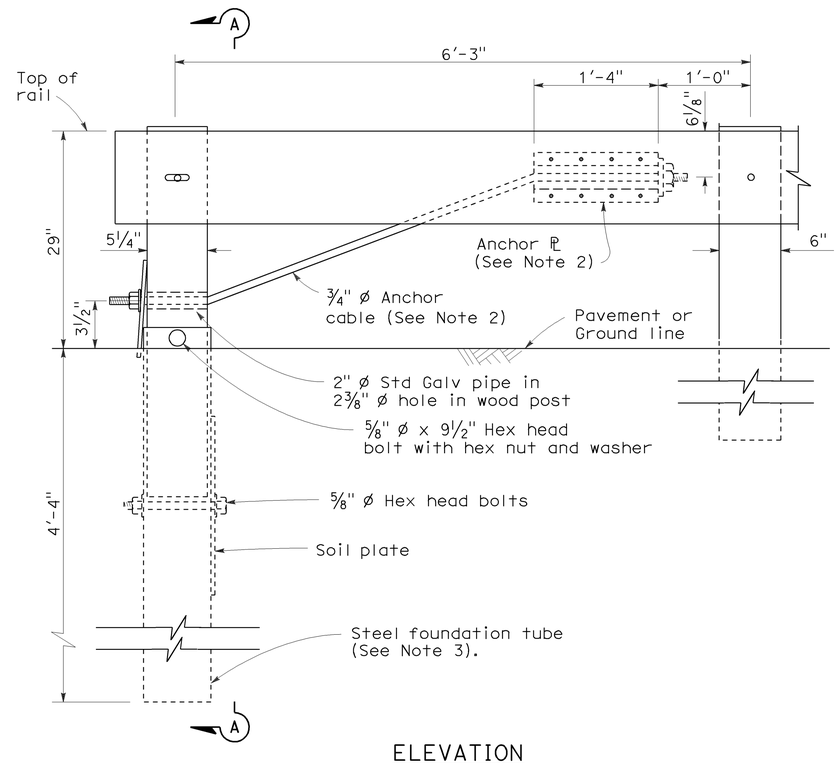

ELEVATION
END ANCHOR
ASSEMBLY (TYPE SFT)
See Note 1

NOTES:

1. See the A77E, A77F and A77G series of Standard Plans for typical use of End Anchor Assembly (Type SFT).
2. For details of the anchor plate and 3/4" cable, see Standard Plan A77H3.
3. A 6'-0" length steel foundation tube, TS 8 x 6 x 3/16, without a soil plate, may be furnished and installed in place of the 4'-6" length steel foundation tube and soil plate shown. Minimum embedment of the 6'-0" length tube shall be 5'-9". A 5/8" Ø hex head bolt and nut shall be installed in the hole in the 6'-0" length tube to keep the wood post from dropping into the tube.
4. Direction of traffic indicated by ⟶.
5. Install line post, steel foundation tube and soil plate in soil.

STATE OF CALIFORNIA
DEPARTMENT OF TRANSPORTATION

METAL RAILING END ANCHOR ASSEMBLY (TYPE SFT)

NO SCALE

RSP A77H1 DATED MAY 20, 2011 SUPERSEDES STANDARD PLAN A77H1
DATED MAY 1, 2006 - PAGE 67 OF THE STANDARD PLANS BOOK DATED MAY 2006.

REVISED STANDARD PLAN RSP A77H1

2006 REVISED STANDARD PLAN RSP A77H1

Dist	COUNTY	ROUTE	POST MILES TOTAL PROJECT	SHEET No.	TOTAL SHEETS
01	Hum	299	0.0/42.9	44	59

Randell D. Hiatt
REGISTERED CIVIL ENGINEER

May 20, 2011
PLANS APPROVAL DATE

REGISTERED PROFESSIONAL ENGINEER
Randell D. Hiatt
No. C50200
Exp. 6-30-11
CIVIL
STATE OF CALIFORNIA

The State of California or its officers or agents shall not be responsible for the accuracy or completeness of electronic copies of this plan sheet.

To accompany plans dated 8-27-12

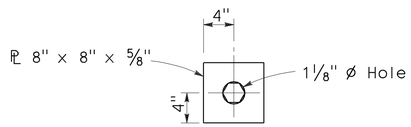

DETAIL A
CABLE CONNECTION
END PLATE

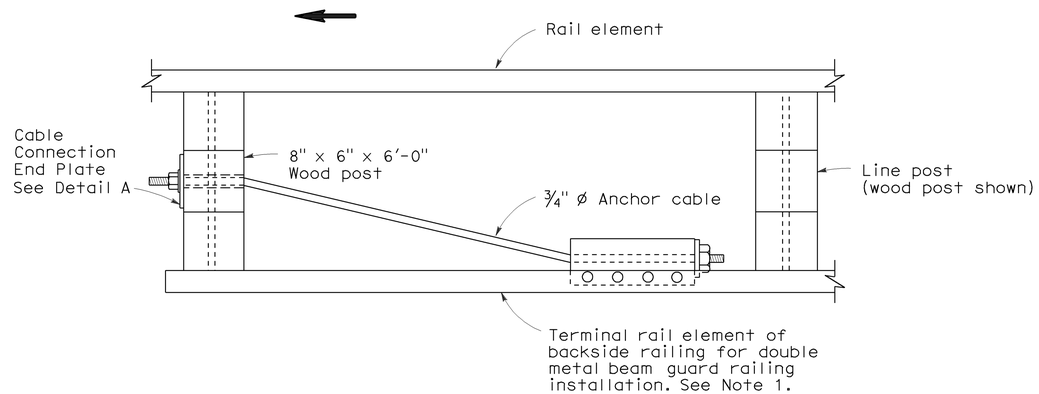

PLAN

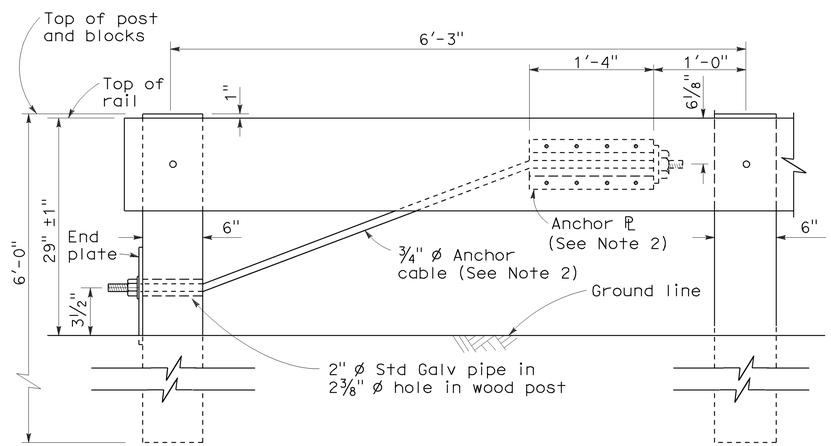

ELEVATION
RAIL TENSIONING
ASSEMBLY
See Note 1

NOTES:

1. See Standard Plan A77F3 and Standard Plan A77G1 for typical use of rail tensioning assembly.
2. For details of the anchor plate and 3/4" cable, see Standard Plan A77H3.
3. Direction of traffic indicated by ⟶.

STATE OF CALIFORNIA
DEPARTMENT OF TRANSPORTATION

METAL RAILING
RAIL TENSIONING ASSEMBLY

NO SCALE

RSP A77H2 DATED MAY 20, 2011 SUPERSEDES STANDARD PLAN A77H2
DATED MAY 1, 2006 - PAGE 68 OF THE STANDARD PLANS BOOK DATED MAY 2006.

REVISED STANDARD PLAN RSP A77H2

2006 REVISED STANDARD PLAN RSP A77H2

3-10-11

Dist	COUNTY	ROUTE	POST MILES TOTAL PROJECT	SHEET No.	TOTAL SHEETS
01	Hum	299	0.0/42.9	45	59

Randell D. Hiatt
REGISTERED CIVIL ENGINEER

May 20, 2011
PLANS APPROVAL DATE

REGISTERED PROFESSIONAL ENGINEER
Randell D. Hiatt
No. C50200
Exp. 6-30-11
CIVIL
STATE OF CALIFORNIA

The State of California or its officers or agents shall not be responsible for the accuracy or completeness of electronic copies of this plan sheet.

To accompany plans dated 8-27-12

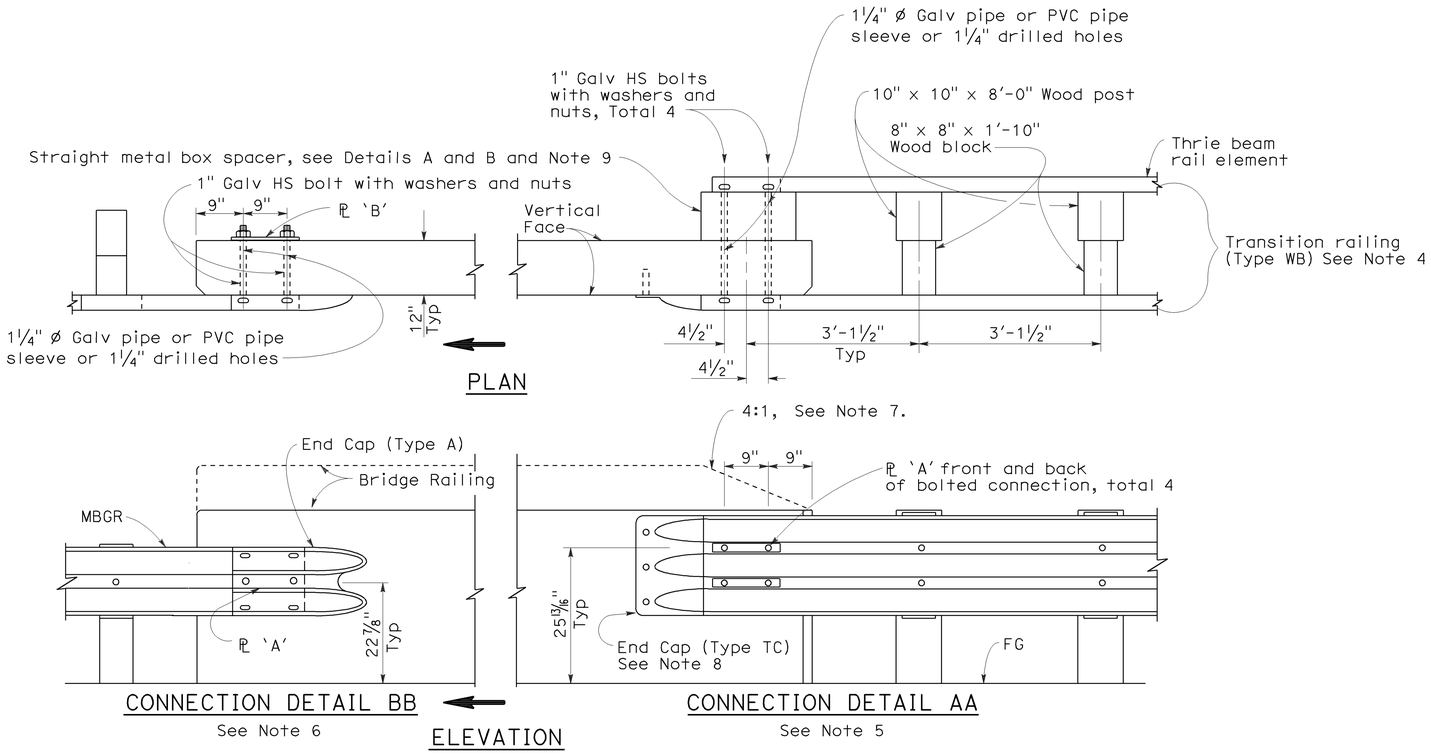

GUARD RAILING CONNECTION TO BRIDGE RAILING WITHOUT SIDEWALK

NOTES:

1. See Revised Standard Plan RSP A77J2 for additional connection details to bridges without sidewalks.
2. Additional details of posts, blocks and hardware are shown on Standard Plan A77B1, A77C1 and A77C2.
3. Direction of adjacent traffic indicated by ➡.
4. For additional details of Transition Railing (Type WB), see Standard Plan A77J4. Transition Railing (Type WB) transitions the 12 gage w-beam standard railing section of guard railing to a heavier gage nested thrie beam railing section which is connected to the concrete bridge railing.
5. For typical use of Connection Detail AA, see Layout Types 12A and 12B on Revised Standard Plan RSP A77F1, Layout Types 12C and 12D on Standard Plan A77F2, and Layout Type 12E on Revised Standard Plan RSP A77F3.
6. For typical use of Connection Detail BB, see Layout Type 12D (structure departure railing connection) on Standard Plan A77F2 and Layout Type 12DD on Standard Plan A77F5.
7. Where the height of the bridge railing exceeds the height of the thrie beam railing by more than 1" at Connection Detail AA, taper the top of the end of the bridge railing at 4:1 to match the top elevation of the thrie beam rail.
8. For details of End Cap (Type TC), see Standard Plan A77J4.
9. See Standard Plan A77J4 for additional details regarding depth dimension for straight metal box spacer.

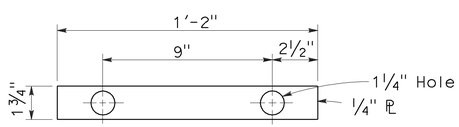

PLATE 'A'

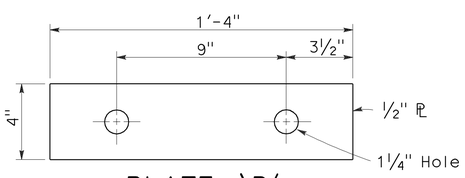

PLATE 'B'
(For backside of connection BB)

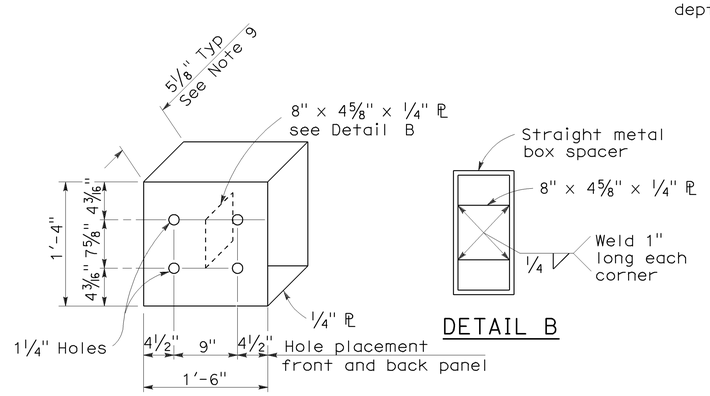

DETAIL A

DETAIL B

STRAIGHT METAL BOX SPACER

STATE OF CALIFORNIA
DEPARTMENT OF TRANSPORTATION

METAL BEAM GUARD RAILING CONNECTIONS TO BRIDGE RAILINGS WITHOUT SIDEWALKS DETAILS No.1

NO SCALE

RSP A77J1 DATED MAY 20, 2011 SUPERSEDES RSP A77J1 DATED JUNE 6, 2008 AND STANDARD PLAN A77J1 DATED MAY 1, 2006 - PAGE 72 OF THE STANDARD PLANS BOOK DATED MAY 2006.

REVISED STANDARD PLAN RSP A77J1

2006 REVISED STANDARD PLAN RSP A77J1

3-10-11

DIST	COUNTY	ROUTE	POST MILES TOTAL PROJECT	SHEET NO.	TOTAL SHEETS
01	Hum	299	0.0/42.9	46	59

Randell D. Hiatt
REGISTERED CIVIL ENGINEER

June 6, 2008
PLANS APPROVAL DATE

REGISTERED PROFESSIONAL ENGINEER Randell D. Hiatt No. C50200 Exp. 6-30-09 CIVIL STATE OF CALIFORNIA

The State of California or its officers or agents shall not be responsible for the accuracy or completeness of electronic copies of this plan sheet.

To accompany plans dated 8-27-12

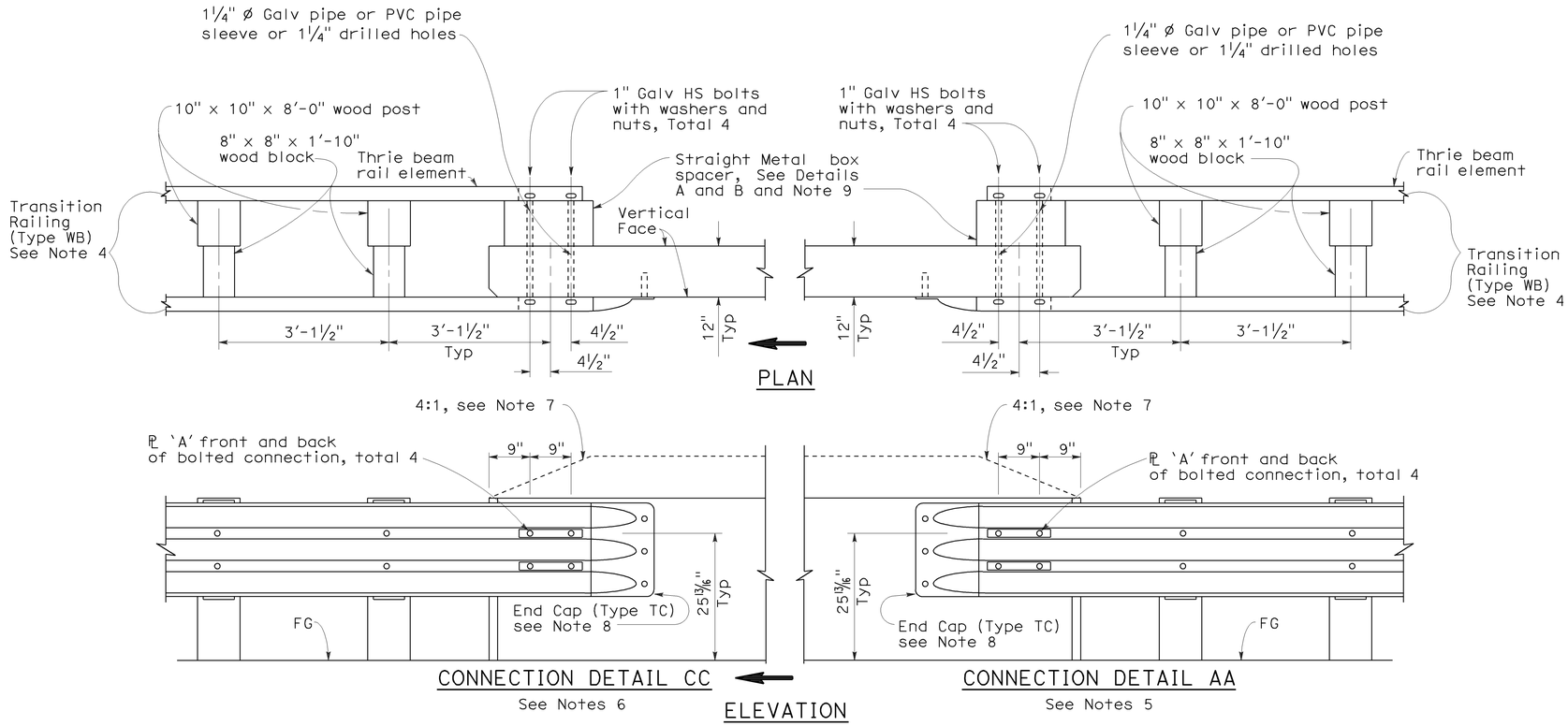

GUARD RAILING CONNECTION TO BRIDGE RAILING WITHOUT SIDEWALK

NOTES:

1. See Revised Standard Plan RSP A77J1 for additional connection details to bridges without sidewalks.
2. Additional details of posts, blocks and hardware are shown on Standard Plan A77B1, A77C1 and A77C2.
3. Direction of adjacent traffic indicated by ⟹.
4. For additional details of Transition Railing (Type WB), see Standard Plan A77J4. Transition Railing (Type WB) transitions the 12 gage w-beam standard railing section of guard railing to a heavier gage nested thrie beam railing section which is connected to the concrete bridge railing.
5. For typical use of Connection Detail AA, see Layout Types 12A and 12B on Revised Standard Plan RSP A77F1, Layout Types 12C and 12D on Standard Plan A77F2, and Layout Type 12E on Revised Standard Plan RSP A77F3.
6. For typical use of Connection Detail CC, see Layout Types 12AA and 12BB on Standard Plan A77F4 and Layout Type 12CC on Standard Plan A77F5.
7. Where the height of the bridge railing exceeds the height of the thrie beam railing by more than 1" at Connection Detail AA and connection Detail CC, taper the top of the end of the bridge railing at 4:1 to match the top elevation of the thrie beam railing.
8. For details of End Cap (Type TC), see Standard Plans A77J4.
9. See Standard Plans A77J4 for additional details regarding depth dimension for straight metal box spacer.

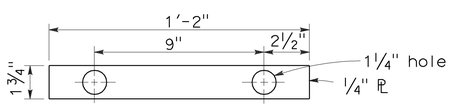

PLATE 'A'

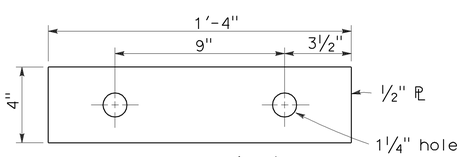

PLATE 'B'
(For backside of connection BB)

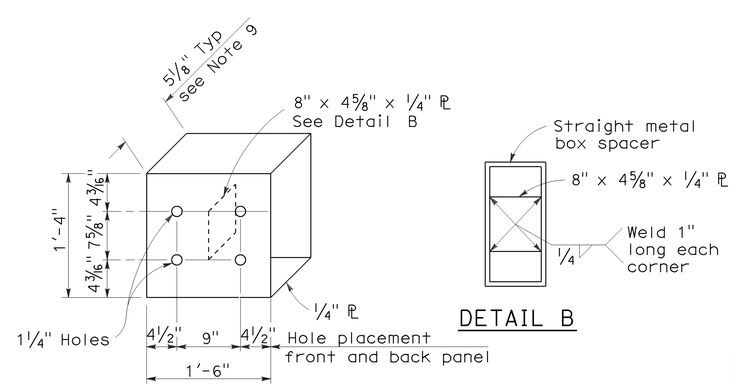

DETAIL A

DETAIL B

STRAIGHT METAL BOX SPACER

STATE OF CALIFORNIA
DEPARTMENT OF TRANSPORTATION

METAL BEAM GUARD RAILING CONNECTIONS TO BRIDGE RAILINGS WITHOUT SIDEWALKS DETAILS No.2

NO SCALE

RSP A77J2 DATED JUNE 6, 2008 SUPERSEDES STANDARD PLAN A77J2 DATED MAY 1, 2006 - PAGE 73 OF THE STANDARD PLANS BOOK DATED MAY 2006.

REVISED STANDARD PLAN RSP A77J2

2006 REVISED STANDARD PLAN RSP A77J2

12-10-07

Dist	COUNTY	ROUTE	POST MILES TOTAL PROJECT	SHEET No.	TOTAL SHEETS
01	Hum	299	0.0/42.9	47	59

Randell D. Hiatt
REGISTERED CIVIL ENGINEER

May 20, 2011
PLANS APPROVAL DATE

REGISTERED PROFESSIONAL ENGINEER
Randell D. Hiatt
No. C50200
Exp. 6-30-11
CIVIL
STATE OF CALIFORNIA

The State of California or its officers or agents shall not be responsible for the accuracy or completeness of electronic copies of this plan sheet.

To accompany plans dated 8-27-12

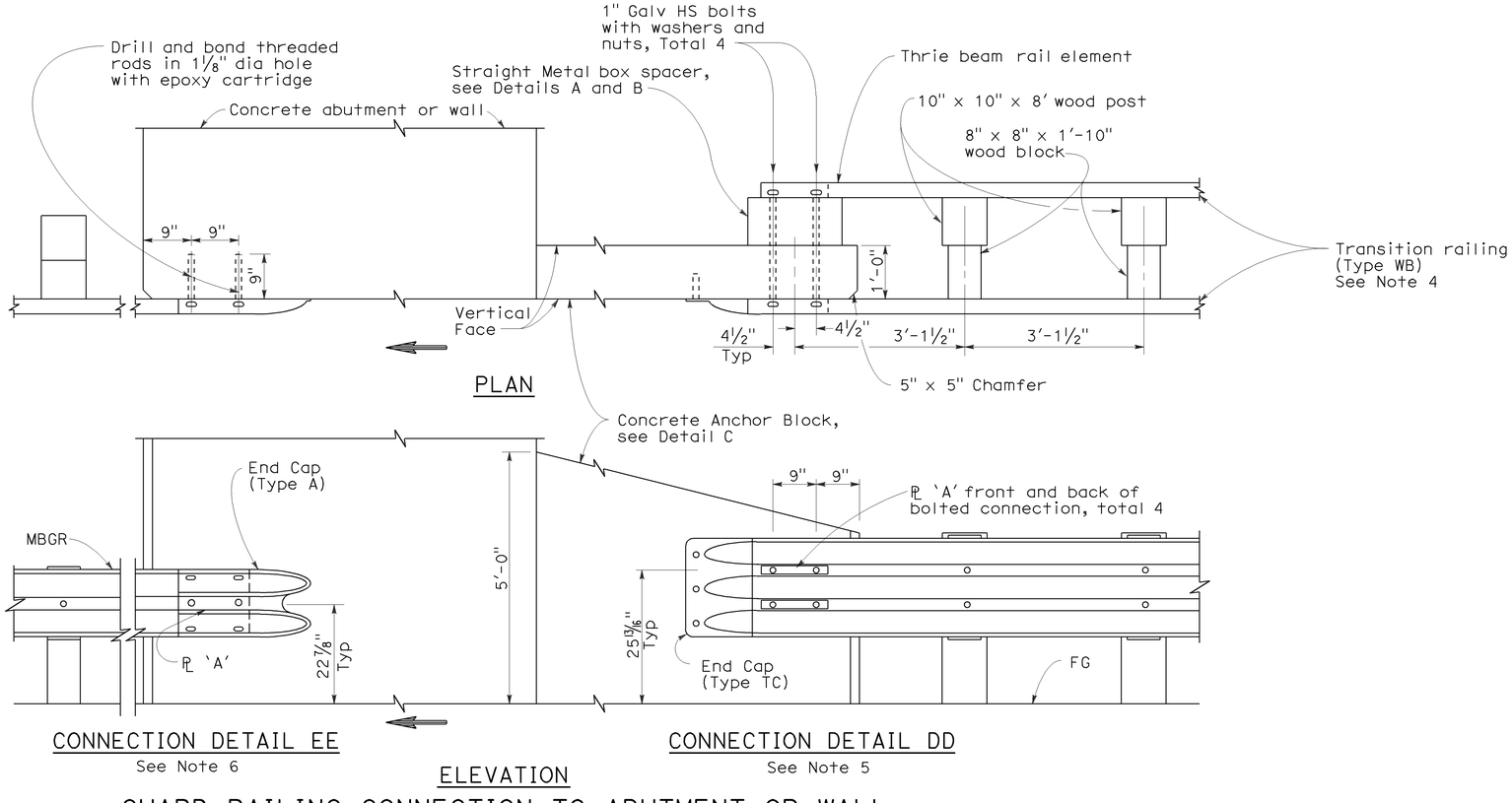

GUARD RAILING CONNECTION TO ABUTMENT OR WALL

NOTES:

1. These connection details apply to abutments and walls.
2. Additional details of posts, blocks and hardware are shown on Standard Plans A77B1, A77C1 and A77C2.
3. Direction of adjacent traffic indicated by ➡.
4. For additional details of Transition Railing (Type WB), see Standard Plan A77J4 Transition Railing (Type WB) transitions the 12 gage w-beam standard railing section of guard railing to a heavier gage nested thrie beam railing section which is connected to the concrete anchor block.
5. For typical use of Connection Details DD, See Layout Types 12A and 12B on Standard Plan A77F1 and Layout Types 12C and 12D on Standard Plan A77F2.
6. For typical use of Connection Detail EE, see Layout Type 12D on Standard Plan A77F2 and Layout Type 12DD on Standard Plan A77F5.

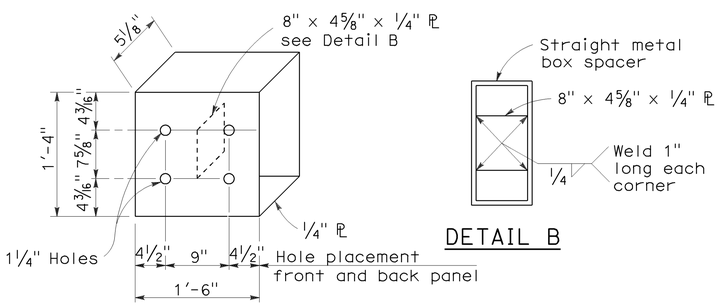

STRAIGHT METAL BOX SPACER

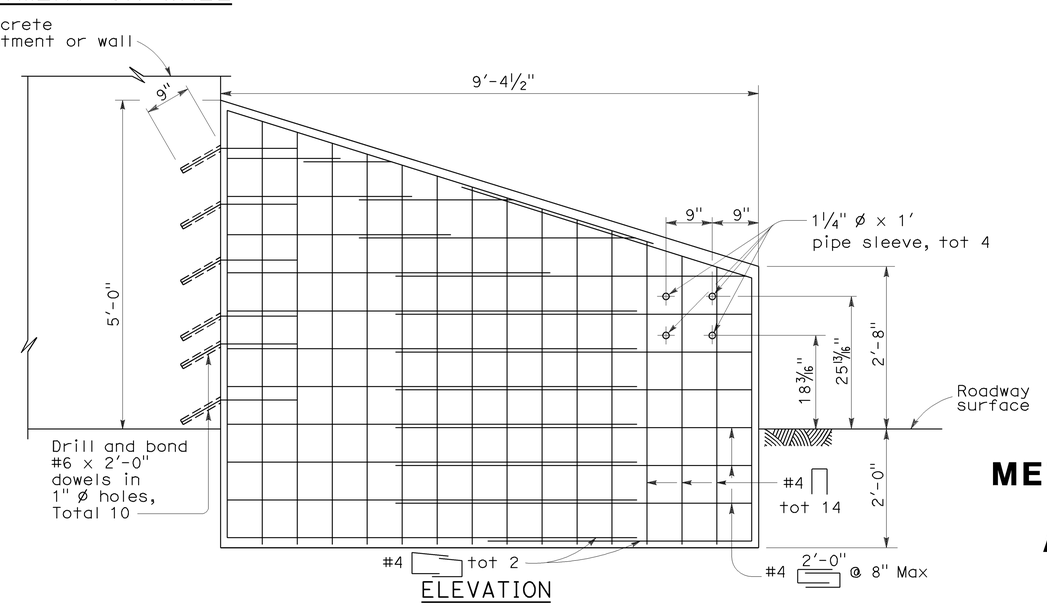

ANCHOR BLOCK FOR TRANSITION RAILING CONNECTION

DETAIL C

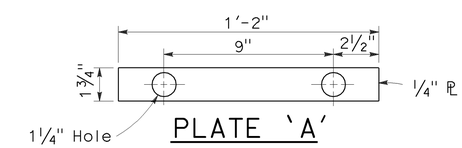

STATE OF CALIFORNIA
DEPARTMENT OF TRANSPORTATION

METAL BEAM GUARD RAILING CONNECTIONS TO ABUTMENTS AND WALLS

NO SCALE

RSP A77J3 DATED MAY 20, 2011 SUPERSEDES STANDARD PLAN A77J3 DATED MAY 1, 2006 - PAGE 74 OF THE STANDARD PLANS BOOK DATED MAY 2006.

REVISED STANDARD PLAN RSP A77J3

2006 REVISED STANDARD PLAN RSP A77J3

3-10-11

Dist	COUNTY	ROUTE	POST MILES TOTAL PROJECT	SHEET No.	TOTAL SHEETS
01	Hum	299	0.0/42.9	48	59

Randell D. Hiatt
REGISTERED CIVIL ENGINEER

May 20, 2011
PLANS APPROVAL DATE

REGISTERED PROFESSIONAL ENGINEER Randell D. Hiatt No. C50200 Exp. 6-30-11 CIVIL STATE OF CALIFORNIA

The State of California or its officers or agents shall not be responsible for the accuracy or completeness of electronic copies of this plan sheet.

To accompany plans dated 8-27-12

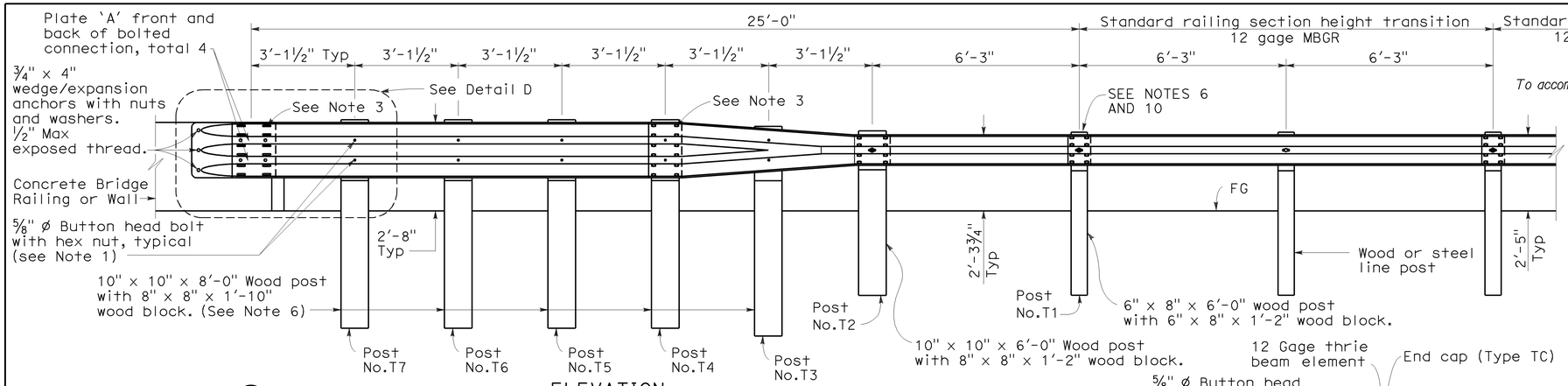

ELEVATION

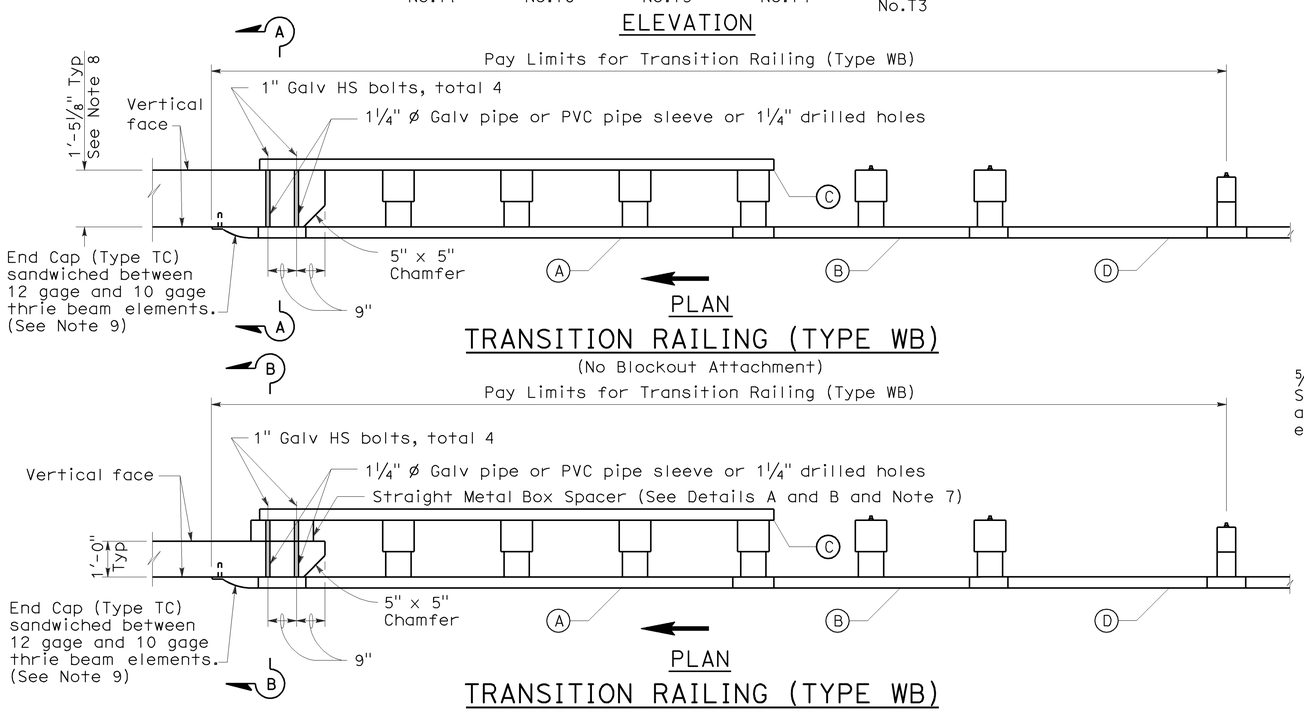

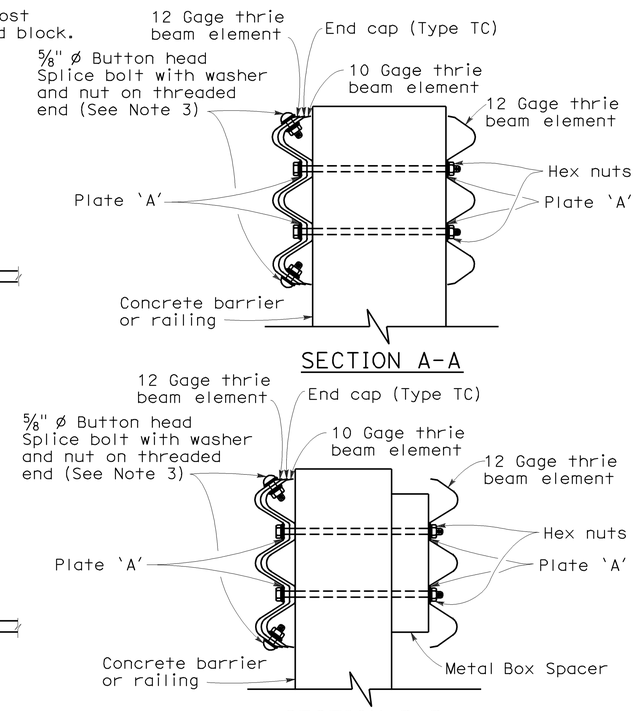

NOTES:

1. Use ⅝" ø Button head bolts and hex nuts for connections to posts. No washer on rail face for bolted connections to post.
2. The nested rail elements, end cap, and 'W' beam to thrie beam element may be spliced together prior to bolting the elements to the wood post and concrete barrier or railing.
3. Exterior splice bolt holes for rail element splices at Post No. T4 and the connection to the concrete barrier or railing shall be the standard 29/32" x 1⅛" slot size. Interior splice bolt holes at these locations may be increased up to 1¼" ø. Only the top 2 and the bottom 2 splice bolts with washers and nuts are required for rail splices at Post No. T4 and the connection to the concrete barrier or railing.
4. Direction of adjacent traffic indicated by ➡.
5. The top elevation of Posts No. T2 through No. T7 shall not project more than 1" above the top elevation of the rail element.
6. Typically, the railing connected to Transition Railing (Type WB) will be either standard railing section of metal beam guard railing with height transition ratio of 120:1 or an approved Caltrans end treatment attached to Post No. T1.
7. The depth of the metal box spacer varies from the 5⅛" to 1½" and is dependent on the width of the concrete railing or wall. The combined dimension for the depth of the metal box spacer plus the width of railing or wall is typically 17⅛". Where the space between the backside of the concrete railing or wall and the rear thrie beam element is less than 1½", metal plates similar to Plate 'A' are to be used as spacers.
8. Where the width of the concrete railing or wall is greater than 17⅛", wood blocks are to be used to fill the space created between the backside of Posts No. T4 through No. T7 and the rear thrie beam element. These wood blocks shall be 8" in width and 1'-2" in length. The dimension between the front thrie beam element and the rear thrie beam element is to match the width of the concrete railing or wall.
9. End cap may be installed over 12 gage and 10 gage thrie beam elements where transition railing is installed on the departure end of bridge railing.
10. Conform standard railing section height to 2'-3¾" at Post No. T1 using height transition ratio of 120:1.

LEGEND

(A) Nested thrie beam elements (one 12 gage element nested over one 10 gage element).

(B) One 10 gage "W" beam to thrie beam element.

(C) One 12 gage thrie beam element.

(D) One 10 gage "W" beam rail element (7'-3½" length)

10 gage = 0.135" thick

12 gage = 0.108" thick

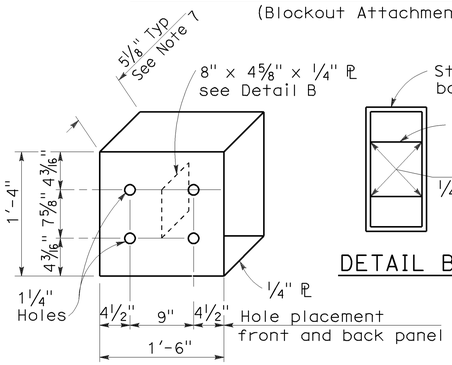

DETAIL A

STRAIGHT METAL BOX SPACER

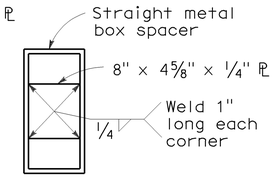

DETAIL B

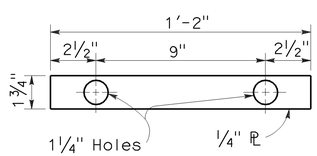

DETAIL C

PLATE 'A'

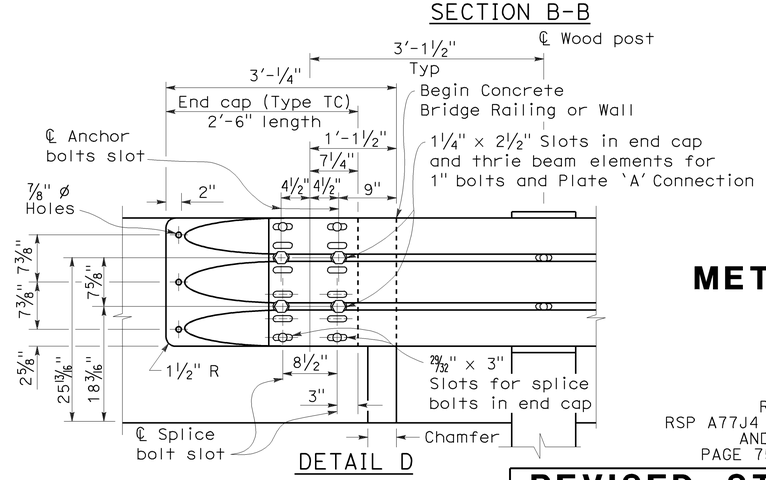

DETAIL D

STATE OF CALIFORNIA
DEPARTMENT OF TRANSPORTATION

METAL BEAM GUARD RAILING TRANSITION RAILING (TYPE WB)

NO SCALE

RSP A77J4 DATED MAY 20, 2011 SUPERSEDES
RSP A77J4 DATED JUNE 5, 2009, RSP A77J4 DATED JUNE 6, 2008
AND STANDARD PLAN A77J4 DATED MAY 1, 2006 -
PAGE 75 OF THE STANDARD PLANS BOOK DATED MAY 2006.

REVISED STANDARD PLAN RSP A77J4

2006 REVISED STANDARD PLAN RSP A77J4

5-14-09

Dist	COUNTY	ROUTE	POST MILES TOTAL PROJECT	SHEET No.	TOTAL SHEETS
01	Hum	299	0.0/42.9	49	59

Randell D. Hiatt
REGISTERED CIVIL ENGINEER

May 20, 2011
PLANS APPROVAL DATE

REGISTERED PROFESSIONAL ENGINEER
Randell D. Hiatt
No. C50200
Exp. 6-30-11
CIVIL
STATE OF CALIFORNIA

The State of California or its officers or agents shall not be responsible for the accuracy or completeness of electronic copies of this plan sheet.

To accompany plans dated 8-27-12

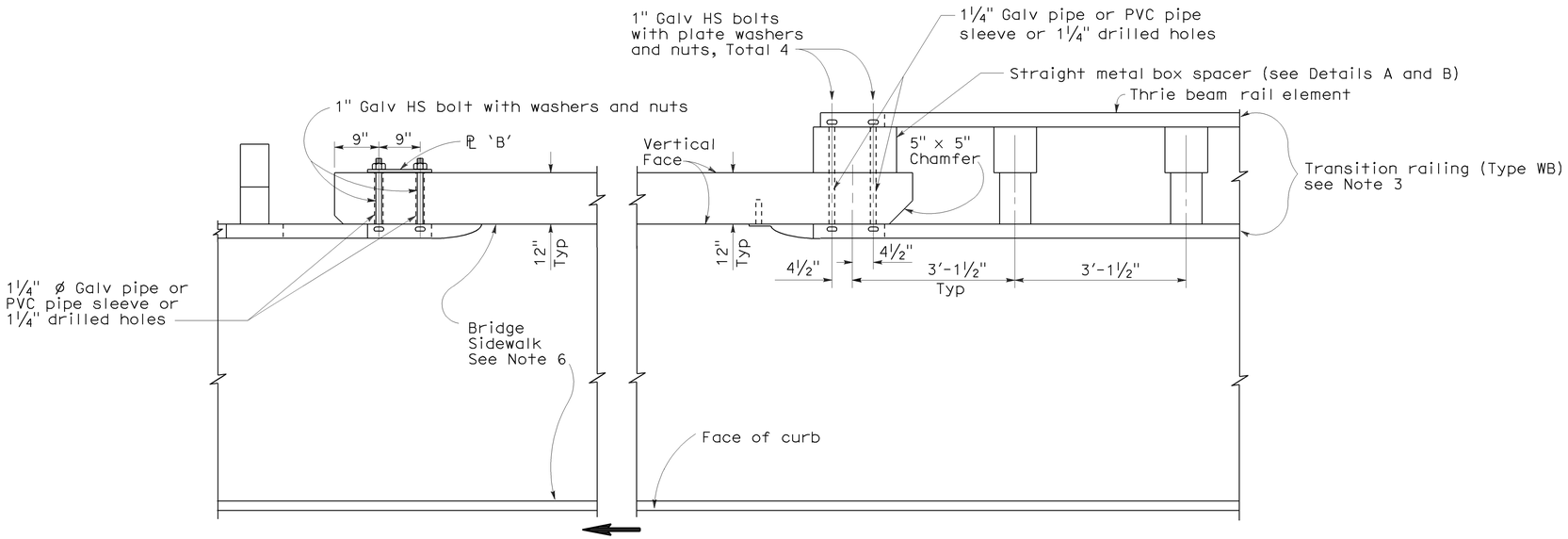

PLAN

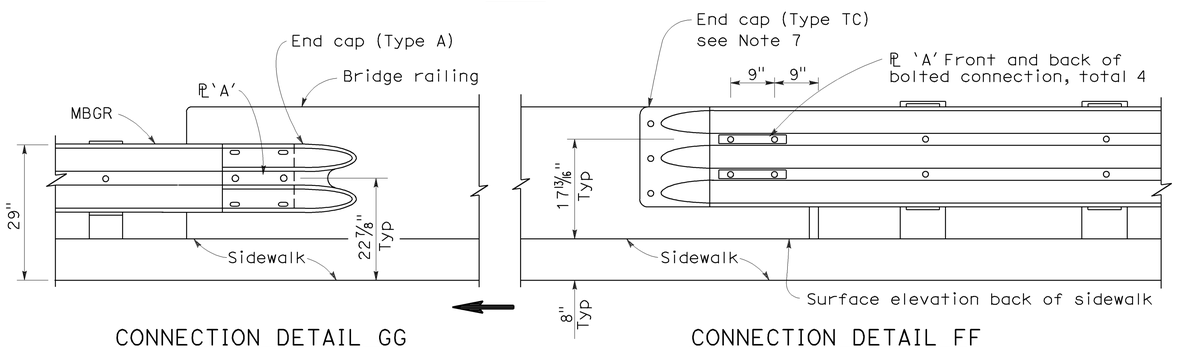

CONNECTION DETAIL GG
See Notes 5

ELEVATION

CONNECTION DETAIL FF
See Notes 4

GUARD RAILING CONNECTION TO BRIDGE RAILING WITH SIDEWALKS

NOTES:

1. See Standard Plan A77K2 for additional connection details to bridges with sidewalks.
2. Direction of adjacent traffic indicated by ⟶.
3. For additional details of Transition Railing (Type WB), see Standard Plan A77J4. Transition Railing (Type WB) transitions the 12 gage w-beam standard railing section of guard railing to a heavier gage nested thrie beam railing which is connected to the concrete bridge railing.
4. For typical use of Connection Detail FF, see Layout Types 12A and 12B on Standard Plan A77F1.
5. For typical use of Connection Detail GG, see Layout Type 12D on Standard Plan A77F2 and Layout Type 12DD on Standard Plan A77F5.
6. Where the bridge sidewalk is not continued beyond the end of the bridge railing, the portion of the sidewalk beyond each end of the bridge railing shall be transitioned down from the top elevation of the sidewalk, for its entire width, to the finished grade of the adjacent roadbed. The longitudinal slope of each sidewalk elevation transition shall not exceed 8.33 percent.
7. For details of End Cap (Type TC), see Standard Plan A77J4.
8. See Standard Plan A77J4 for additional details regarding depth dimension for straight metal box spacer.

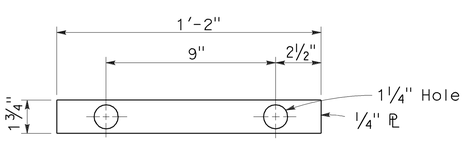

PLATE 'A'

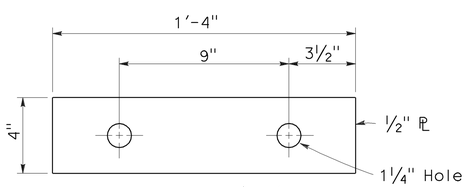

PLATE 'B'
(For backside of connection SB)

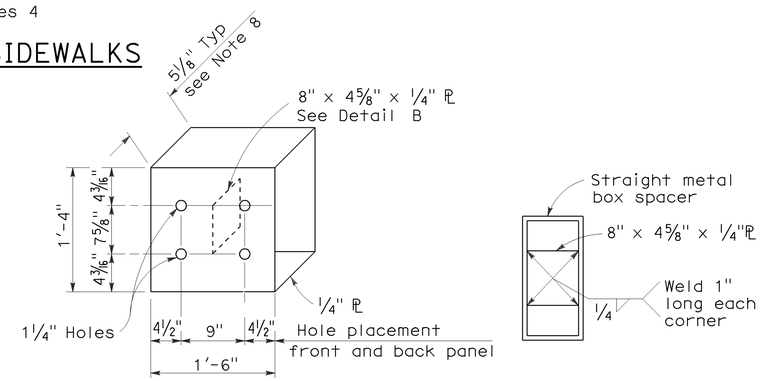

DETAIL A

DETAIL B

STRAIGHT METAL BOX SPACER

STATE OF CALIFORNIA
DEPARTMENT OF TRANSPORTATION

METAL BEAM GUARD RAILING CONNECTIONS TO BRIDGE RAILINGS WITH SIDEWALKS DETAILS No.1

NO SCALE

RSP A77K1 DATED MAY 20, 2011 SUPERSEDES STANDARD PLAN A77K1
DATED MAY 1, 2006 - PAGE 76 OF THE STANDARD PLANS BOOK DATED MAY 2006.

REVISED STANDARD PLAN RSP A77K1

2006 REVISED STANDARD PLAN RSP A77K1

3-10-11

DIST	COUNTY	ROUTE	POST MILES TOTAL PROJECT	SHEET NO.	TOTAL SHEETS
01	Hum	299	0.0/42.9	50	59

Randell D. Hiatt
REGISTERED CIVIL ENGINEER

June 6, 2008
PLANS APPROVAL DATE

REGISTERED PROFESSIONAL ENGINEER
Randell D. Hiatt
No. C50200
Exp. 6-30-09
CIVIL
STATE OF CALIFORNIA

The State of California or its officers or agents shall not be responsible for the accuracy or completeness of electronic copies of this plan sheet.

To accompany plans dated 8-27-12

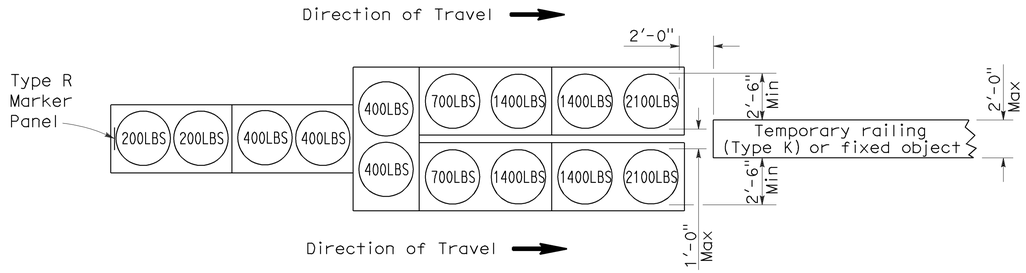

ARRAY 'TU14'

Approach speed 45 mph or more

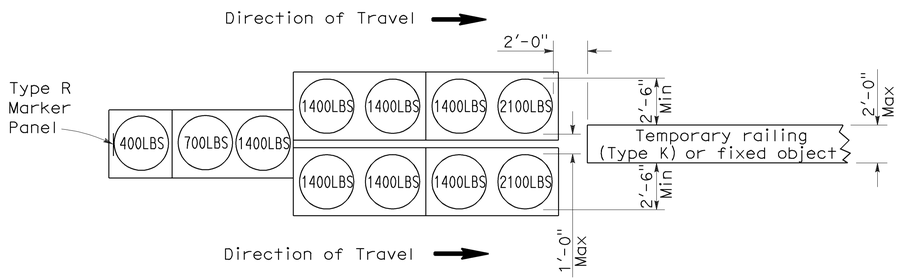

ARRAY 'TU11'

Approach speed less than 45 mph

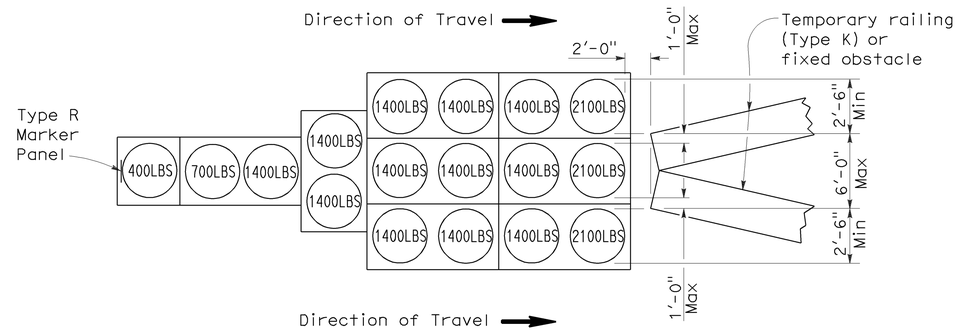

ARRAY 'TU17'

Approach speed less than 45 mph

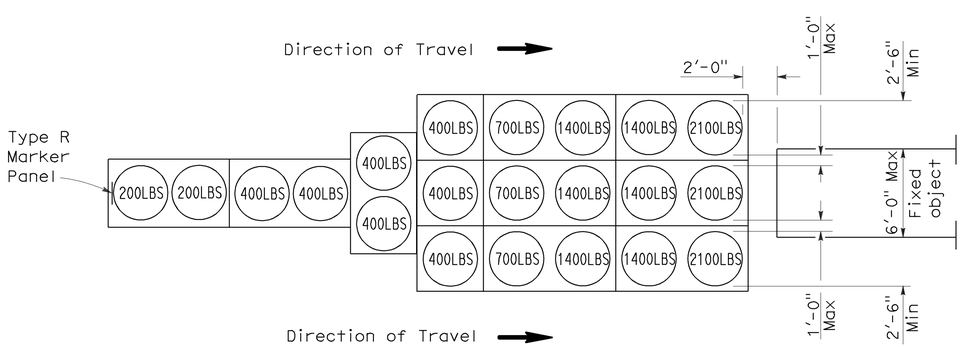

ARRAY 'TU21'

Approach speed 45 mph or more

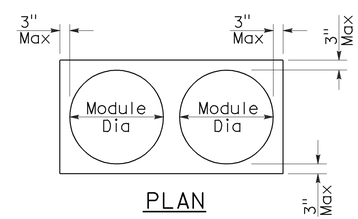

PLAN

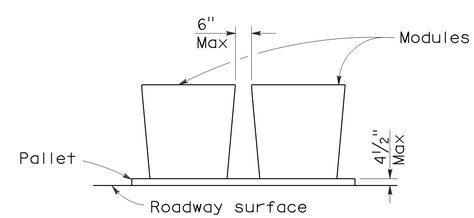

ELEVATION

CRASH CUSHION PALLET DETAIL

See Note 7

NOTES:

1. (XXX) Indicates sand filled module location and weight of sand in pounds for each module. Module spacing is based on the greater diameter of the module.
2. All sand weights are nominal.
3. Temporary crash cushion arrays shall not encroach on the traveled way.
4. Place the top of Type R marker panel 1" below the module lid.
5. Refer to Standard Plan A73B for marker details.
6. Approach speeds indicated conform to NCHRP 350 Report criteria.
7. Use of pallets is optional.

STATE OF CALIFORNIA
DEPARTMENT OF TRANSPORTATION

TEMPORARY CRASH CUSHION, SAND FILLED (UNIDIRECTIONAL)

NO SCALE

RSP T1A DATED JUNE 6, 2008 SUPERSEDES STANDARD PLAN T1A
DATED MAY 1, 2006 - PAGE 211 OF THE STANDARD PLANS BOOK DATED MAY 2006.

REVISED STANDARD PLAN RSP T1A

2006 REVISED STANDARD PLAN RSP T1A

5-15-08

DIST	COUNTY	ROUTE	POST MILES TOTAL PROJECT	SHEET NO.	TOTAL SHEETS
01	Hum	299	0.0/42.9	51	59

Randell D. Hiatt
REGISTERED CIVIL ENGINEER

June 6, 2008
PLANS APPROVAL DATE

REGISTERED PROFESSIONAL ENGINEER
Randell D. Hiatt
No. C50200
Exp. 6-30-09
CIVIL
STATE OF CALIFORNIA

The State of California or its officers or agents shall not be responsible for the accuracy or completeness of electronic copies of this plan sheet.

To accompany plans dated 8-27-12

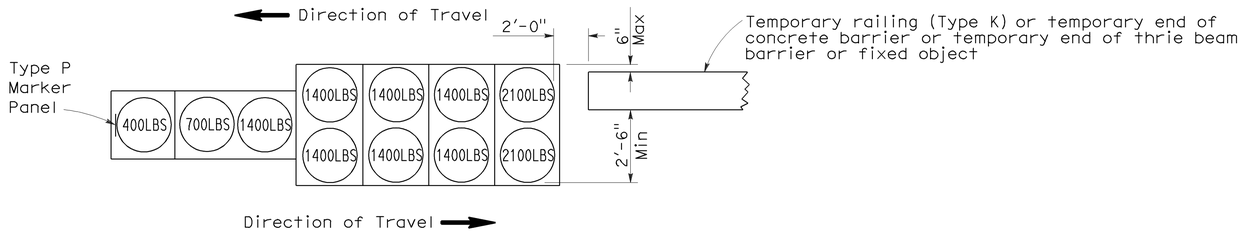

ARRAY 'TB11'

Approach speed less than 45 mph

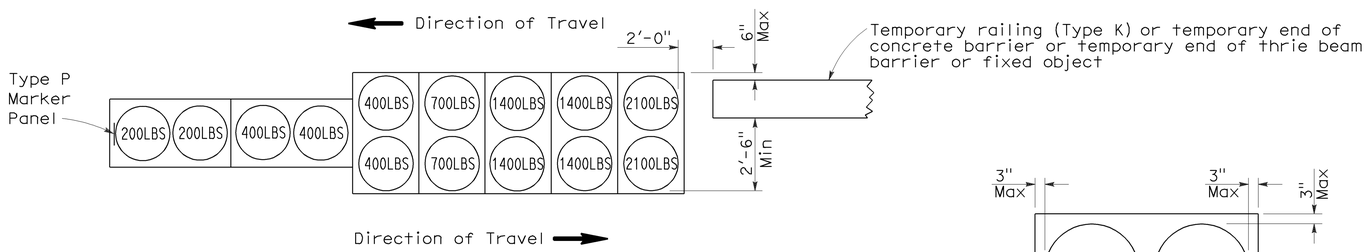

ARRAY 'TB14'

Approach speed 45 mph or more

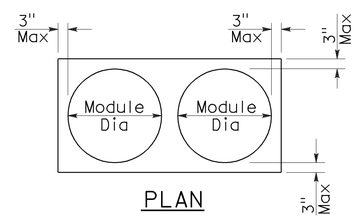

PLAN

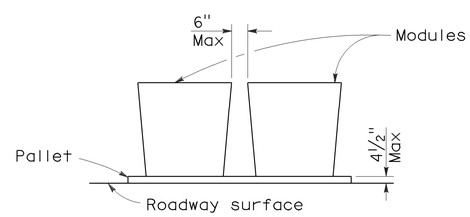

ELEVATION

CRASH CUSHION PALLET DETAIL

See Note 7

NOTES:

1. (XXX) Indicates sand filled module location and weight of sand in pounds for each module. Module spacing is based on the greater diameter of the module.
2. All sand weights are nominal.
3. Temporary crash cushion arrays shall not encroach on the traveled way.
4. Place the Type P marker panel so that the bottom of the panel rests upon the pallet.
5. Refer to Standard Plan A73B for marker details.
6. Approach speeds indicated conform to NCHRP 350 Report criteria.
7. Use of pallets is optional.

STATE OF CALIFORNIA
DEPARTMENT OF TRANSPORTATION

TEMPORARY CRASH CUSHION, SAND FILLED (BIDIRECTIONAL)

NO SCALE

RSP T1B DATED JUNE 6, 2008 SUPERSEDES STANDARD PLAN T1B
DATED MAY 1, 2006 - PAGE 212 OF THE STANDARD PLANS BOOK DATED MAY 2006.

REVISED STANDARD PLAN RSP T1B

2006 REVISED STANDARD PLAN RSP T1B

5-15-08

DIST	COUNTY	ROUTE	POST MILES TOTAL PROJECT	SHEET NO.	TOTAL SHEETS
01	Hum	299	0.0/42.9	52	59

Randell D. Hiatt
REGISTERED CIVIL ENGINEER

June 6, 2008
PLANS APPROVAL DATE

REGISTERED PROFESSIONAL ENGINEER
Randell D. Hiatt
No. C50200
Exp. 6-30-09
CIVIL
STATE OF CALIFORNIA

The State of California or its officers or agents shall not be responsible for the accuracy or completeness of electronic copies of this plan sheet.

To accompany plans dated 8-27-12

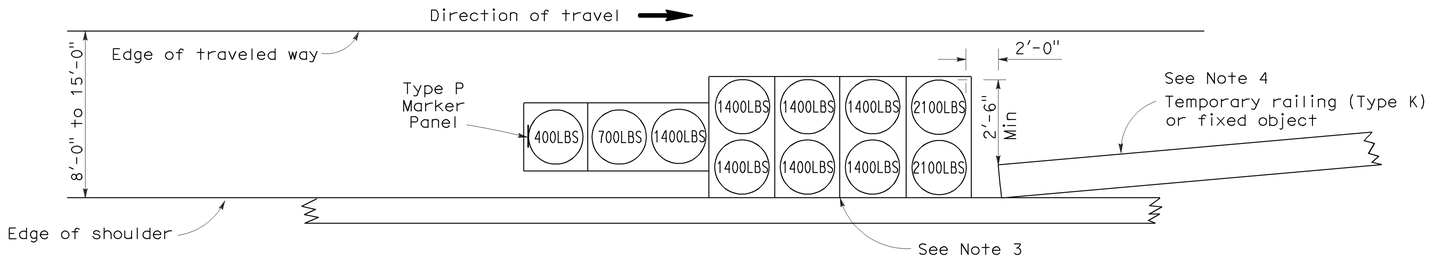

ARRAY 'TS11'

Approach speed less than 45 mph
See Note 9

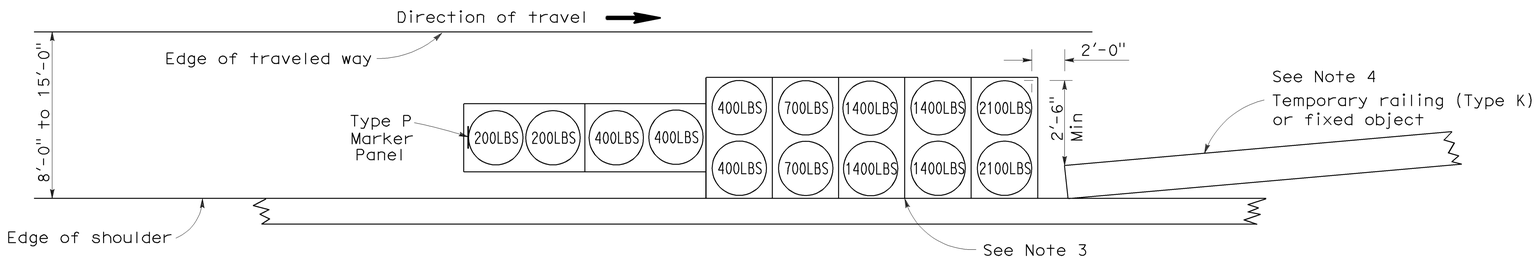

ARRAY 'TS14'

Approach speed 45 mph or more
See Note 9

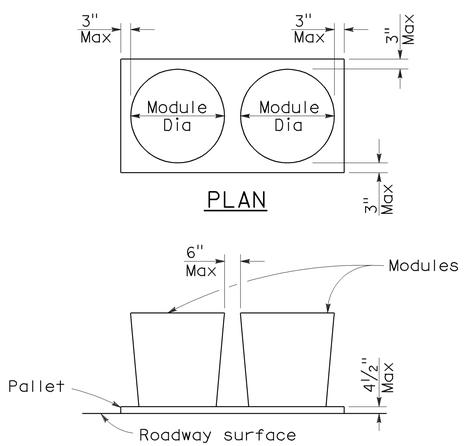

CRASH CUSHION PALLET DETAIL

See Note 11

NOTES:

1. (XXX) Indicates sand filled module location and weight of sand in pounds for each module. Module spacing is based on the greater diameter of the module.
2. All sand weights are nominal.
3. The temporary crash cushion arrays shown on this plan shall be used only in locations where there will be traffic on one side of the temporary crash cushion array.
4. If the fixed object or approach end of the temporary railing is less than 15'-0" from the edge of traveled way, a temporary crash cushion is required in a construction or work zone.
5. Temporary crash cushion arrays shall not encroach on the traveled way.
6. Arrays for median shoulders shall conform to details shown on this plan for outside shoulders.
7. Place the Type P marker panel so that the bottom of the panel rests upon the pallet and faces traffic.
8. Refer to Standard Plan A73B for marker details.
9. For shoulder widths less than 8'-0", appropriate approved crash cushion protection, other than sand filled modules, shall be provided at fixed objects and at approach ends of temporary railing. The specific type of crash cushion shall be as shown on the project plans or as specified in the Special Provisions, or if not shown on the project plans or specified in the Special Provisions, shall be as approved by the Engineer.
10. Approach speeds indicated conform to NCHRP 350 Report criteria.
11. Use of pallets is optional.

STATE OF CALIFORNIA
DEPARTMENT OF TRANSPORTATION

TEMPORARY CRASH CUSHION, SAND FILLED (SHOULDER INSTALLATIONS)

NO SCALE

RSP T2 DATED JUNE 6, 2008 SUPERSEDES STANDARD PLAN T2
DATED MAY 1, 2006 - PAGE 213 OF THE STANDARD PLANS BOOK DATED MAY 2006.

REVISED STANDARD PLAN RSP T2

2006 REVISED STANDARD PLAN RSP T2

5-15-08

DIST	COUNTY	ROUTE	POST MILES TOTAL PROJECT	SHEET NO.	TOTAL SHEETS
01	Hum	299	0.0/42.9	53	59

REGISTERED CIVIL ENGINEER

November 17, 2006
PLANS APPROVAL DATE

REGISTERED PROFESSIONAL ENGINEER — Greg W. Edwards — No. C36386 — Exp. 6-30-08 — CIVIL — STATE OF CALIFORNIA

The State of California or its officers or agents shall not be responsible for the accuracy or completeness of electronic copies of this plan sheet.

To accompany plans dated 8-27-12

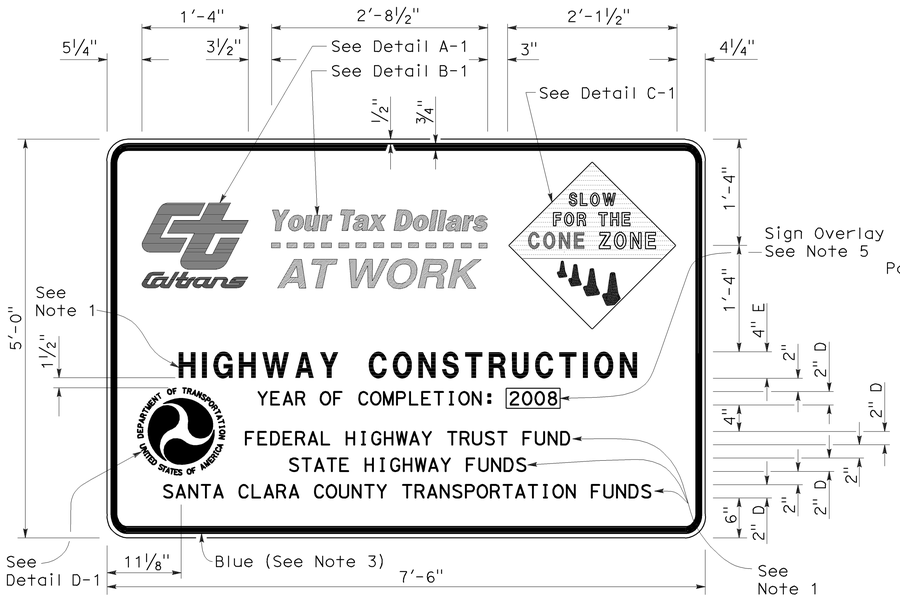

TYPE 1

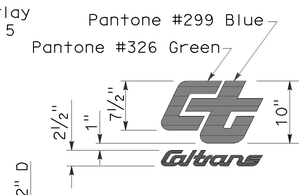

DETAIL A-1

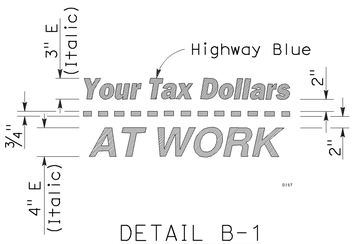

DETAIL B-1
(See Note 3)

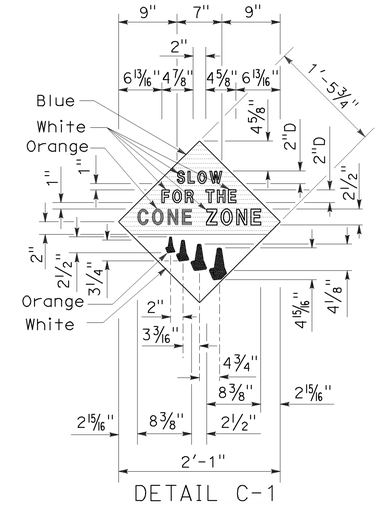

DETAIL C-1
(See Note 4)

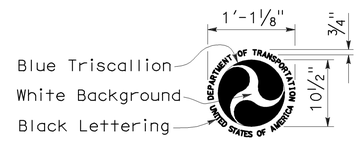

DETAIL D-1
(See Note 6)

NOTES:

1. The sign messages shown for type of project and fund types are examples only. See the Special Provisions for the applicable type of project and fund type messages to be used.
2. Except as otherwise shown, the legend of sign shall be black on a white background (non-reflective).
3. The border of the signs and details "B-1" and "B-2" shall be blue (non-reflective).
4. The diamond in details "C-1" and "C-2" shall be blue for the background of message, " SLOW FOR THE CONE ZONE", and white background for the orange cones. The color and type of font for the "SLOW FOR THE CONE ZONE" message shall be: "SLOW" white D; "FOR THE" white D; "CONE" orange Arial font; "ZONE" white Arial font.
5. Year of completion of project construction shown on the overlay is an example only. See the Special Provisions.
6. Use when the Project involves Federal Highway Trust Fund.

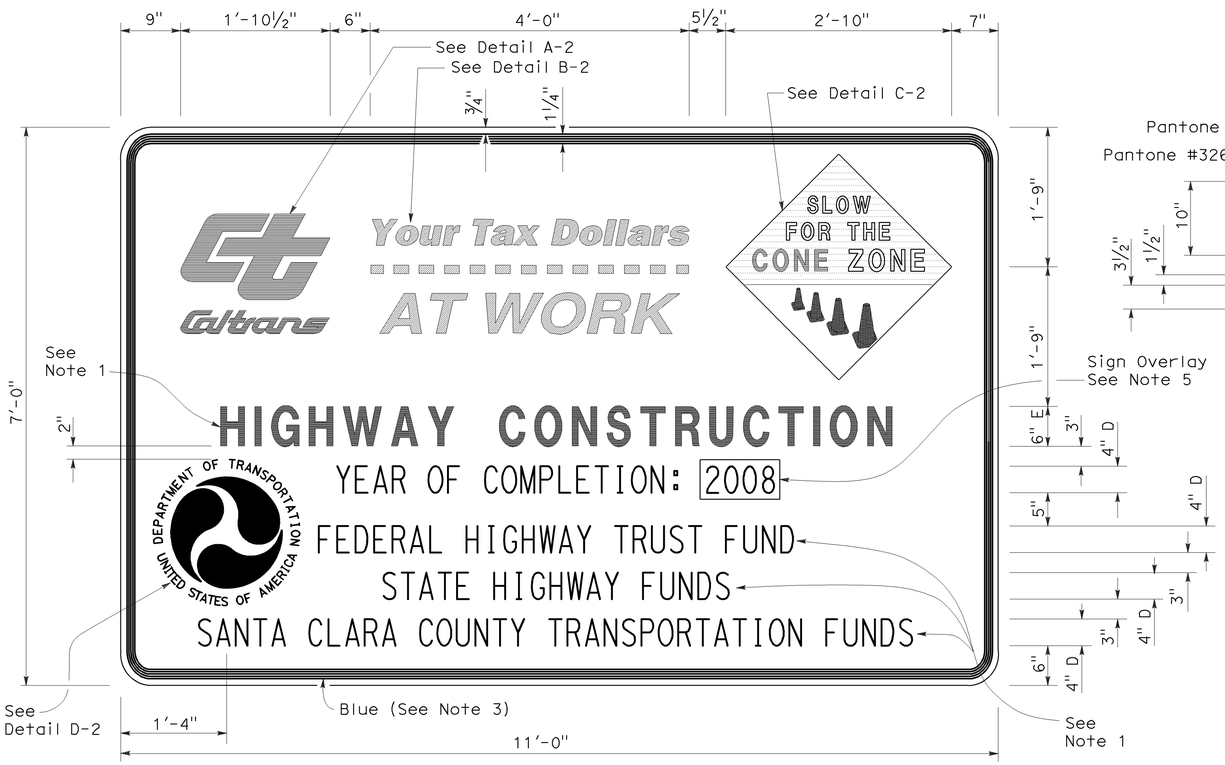

TYPE 2

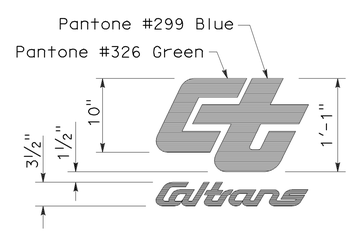

DETAIL A-2

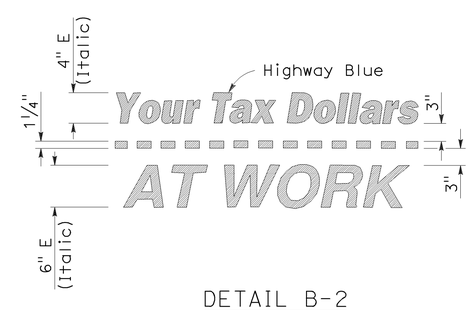

DETAIL B-2
(See Note 3)

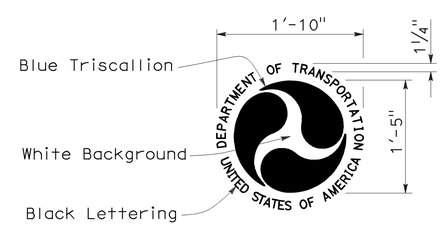

DETAIL D-2
(See Note 6)

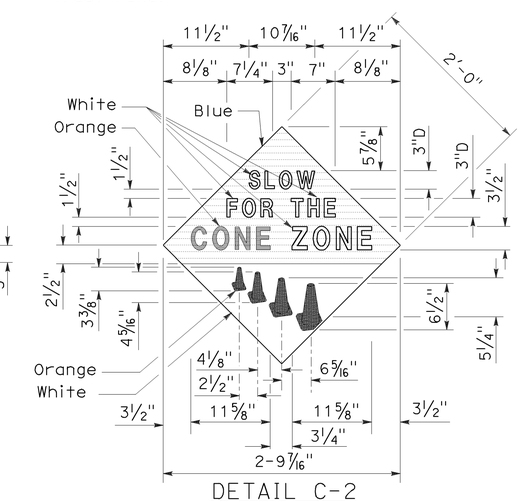

DETAIL C-2
(See Note 4)

STATE OF CALIFORNIA
DEPARTMENT OF TRANSPORTATION

CONSTRUCTION PROJECT FUNDING IDENTIFICATION SIGNS

NO SCALE

RSP T7 DATED NOVEMBER 17, 2006 SUPERSEDES STANDARD PLAN T7
DATED MAY 1, 2006 - PAGE 217 OF THE STANDARD PLANS BOOK DATED MAY 2006.

REVISED STANDARD PLAN RSP T7

2006 REVISED STANDARD PLAN RSP T7

9-7-06

DIST	COUNTY	ROUTE	POST MILES TOTAL PROJECT	SHEET NO.	TOTAL SHEETS
01	Hum	299	0.0/42.9	54	59

LICENSED LANDSCAPE ARCHITECT

April 3, 2009
PLANS APPROVAL DATE

The State of California or its officers or agents shall not be responsible for the accuracy or completeness of electronic copies of this plan sheet.

LICENSED LANDSCAPE ARCHITECT — Robert B. Schott 3635 — Registration Expires 11-30-10 Renewal Date — 2-25-09 Date — STATE OF CALIFORNIA

To accompany plans dated 8-27-12

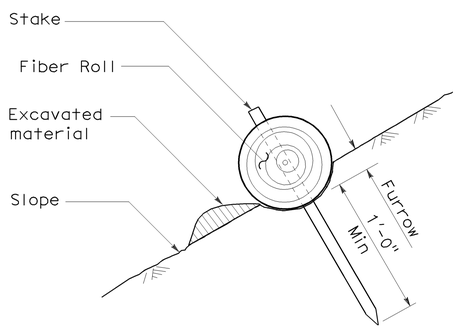

SECTION

TEMPORARY FIBER ROLL (TYPE 1)

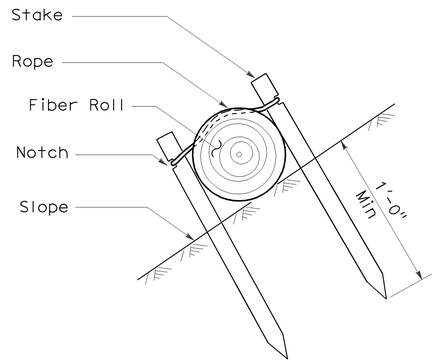

SECTION

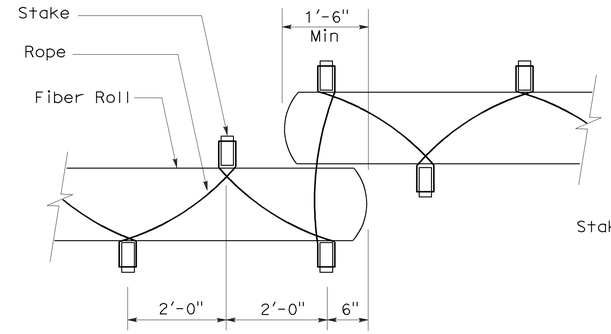

PLAN

TEMPORARY FIBER ROLL (TYPE 2)

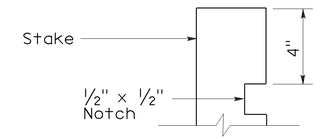

ELEVATION

STAKE NOTCH DETAIL

NOTES:

1. Temporary fiber roll spacing varies depending upon slope inclination.
2. Installations shown in the perspectives are for slope inclination of 10:1 and steeper.

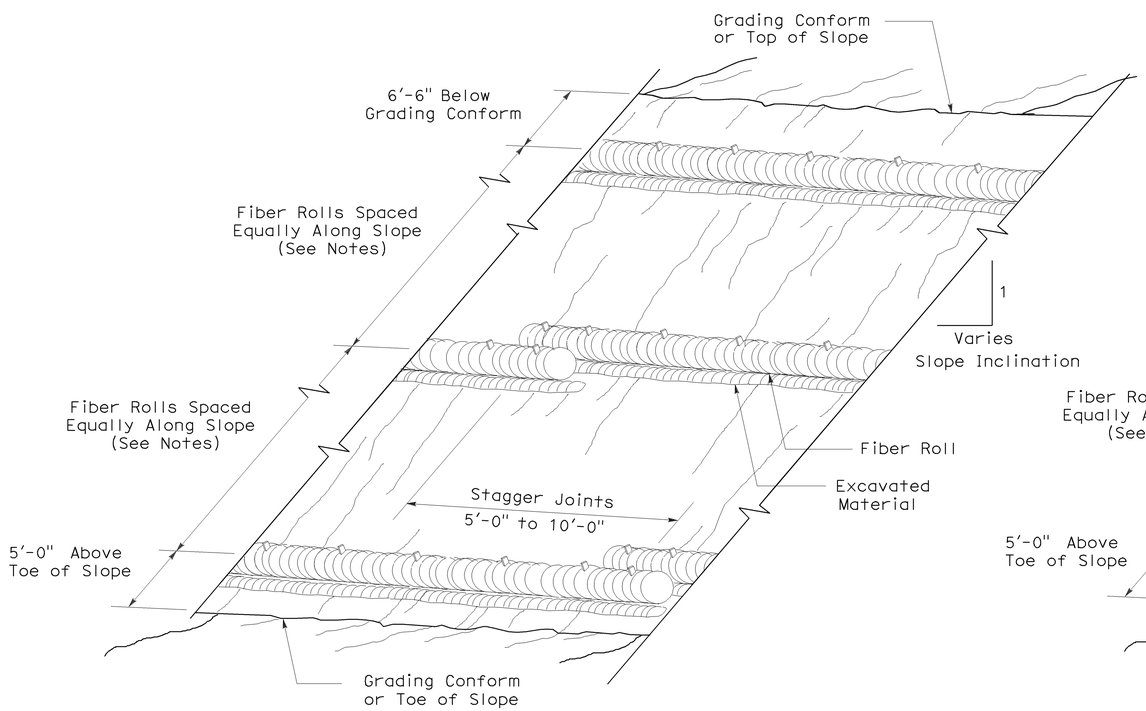

PERSPECTIVE

TEMPORARY FIBER ROLL (TYPE 1)

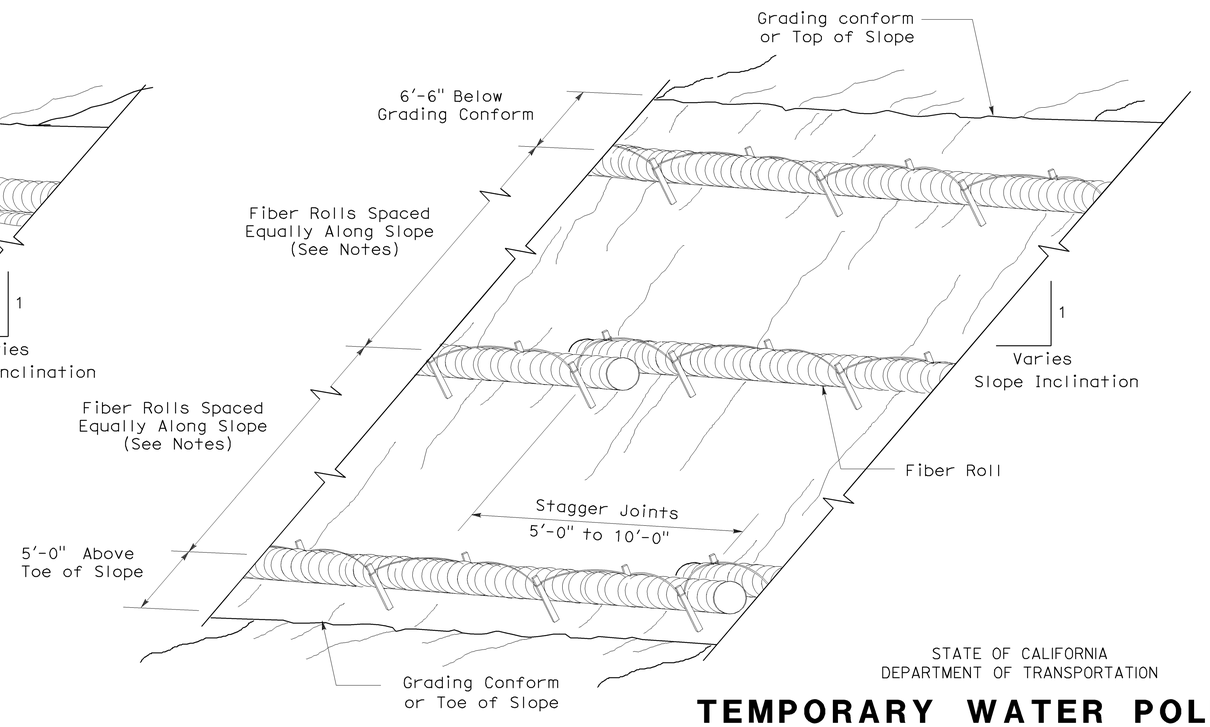

PERSPECTIVE

TEMPORARY FIBER ROLL (TYPE 2)

STATE OF CALIFORNIA
DEPARTMENT OF TRANSPORTATION

TEMPORARY WATER POLLUTION CONTROL DETAILS (TEMPORARY FIBER ROLL)

NO SCALE

RSP T56 DATED APRIL 3, 2009 SUPERSEDES STANDARD PLAN T56
DATED MAY 1, 2006 - PAGE 232 OF THE STANDARD PLANS BOOK DATED MAY 2006.

REVISED STANDARD PLAN RSP T56

2006 REVISED STANDARD PLAN RSP T56

Dist	COUNTY	ROUTE	POST MILES TOTAL PROJECT	SHEET No.	TOTAL SHEETS
01	Hum	299	0.0/42.9	55	59

Randell D. Hiatt
REGISTERED CIVIL ENGINEER

May 20, 2011
PLANS APPROVAL DATE

REGISTERED PROFESSIONAL ENGINEER
Randell D. Hiatt
No. C50200
Exp. 6-30-11
CIVIL
STATE OF CALIFORNIA

The State of California or its officers or agents shall not be responsible for the accuracy or completeness of electronic copies of this plan sheet.

To accompany plans dated 8-27-12

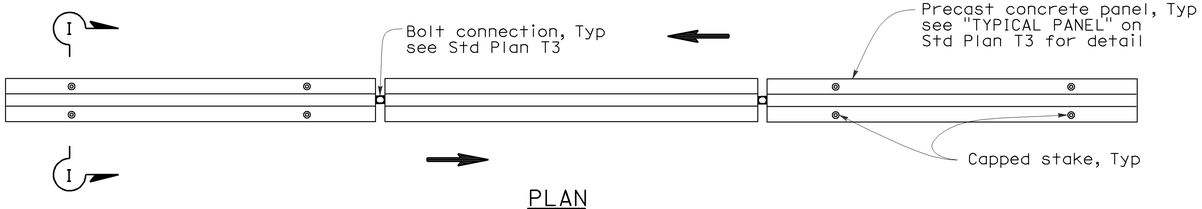

PLAN

RAILING STAKING CONFIGURATION FOR TWO-WAY TRAFFIC

See Note 1

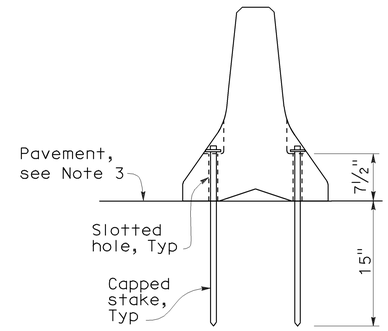

SECTION I-I

NOTES:

1. Where Type K Temporary Railing is placed as a temporary or long term barrier in two-way traffic on highways with less than 24" from the edge of traveled way, use four capped stakes per every other panel with end panels staked.
2. Where Type K Temporary Railing is placed 3" to 24" from the edge of an excavation on highways, use two capped stakes per panel along the traffic side.
3. Staked Type K Temporary Railing must be supported by at least 4" thick concrete, hot mix asphalt or existing asphalt concrete pavement.
4. The minimum yield strength for the washer must be 60,000 psi.
5. Direction of adjacent traffic indicated by ⟶.

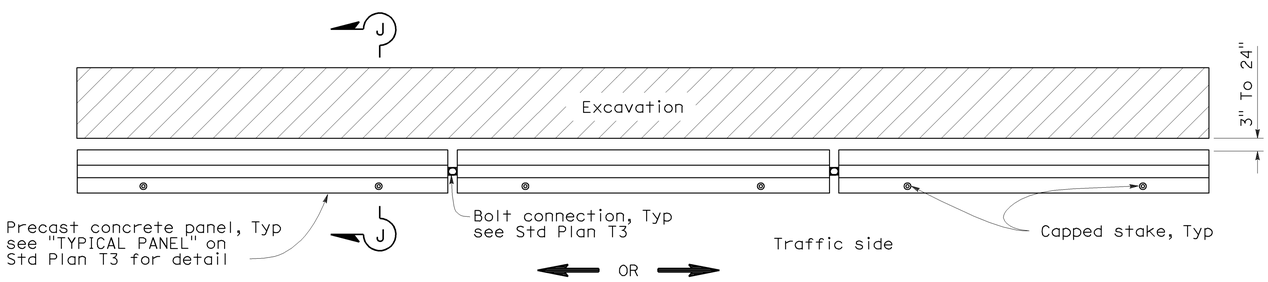

PLAN

RAILING STAKING CONFIGURATION ADJACENT TO AN EXCAVATION

See Note 2

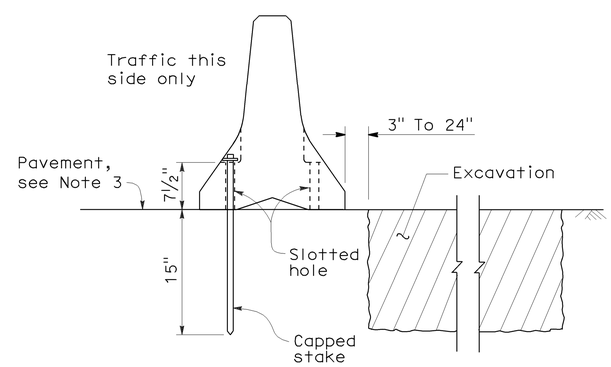

SECTION J-J

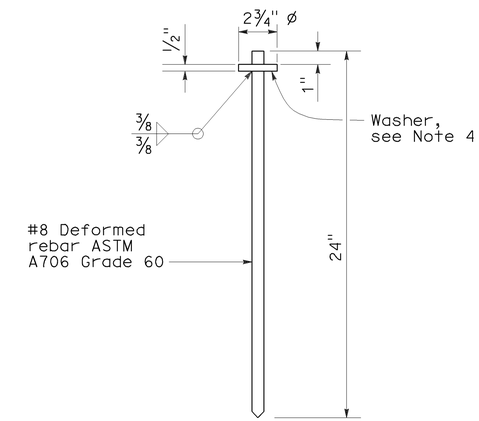

CAPPED STAKE DETAIL

STATE OF CALIFORNIA
DEPARTMENT OF TRANSPORTATION

TEMPORARY RAILING (TYPE K)

NO SCALE

NSP T3A DATED MAY 20, 2011 SUPPLEMENTS
THE STANDARD PLANS BOOK DATED MAY 2006.

NEW STANDARD PLAN NSP T3A

2006 NEW STANDARD PLAN NSP T3A

DIST	COUNTY	ROUTE	POST MILES TOTAL PROJECT	SHEET NO.	TOTAL SHEETS
01	Hum	299	0.0/42.9	56	59

LICENSED LANDSCAPE ARCHITECT

August 15, 2008
PLANS Approval DATE

The State of California or its officers or agents shall not be responsible for the accuracy or completeness of electronic copies of this plan sheet.

LICENSED LANDSCAPE ARCHITECT — Robert B. Schott 3825 — Signature — 11-04-08 Renewal Date — 08-11-08 Date — STATE OF CALIFORNIA

To accompany plans dated 8-27-12

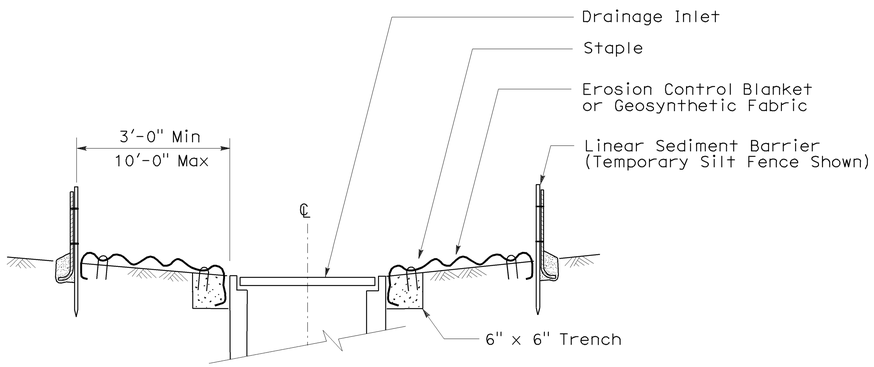

SECTION A-A

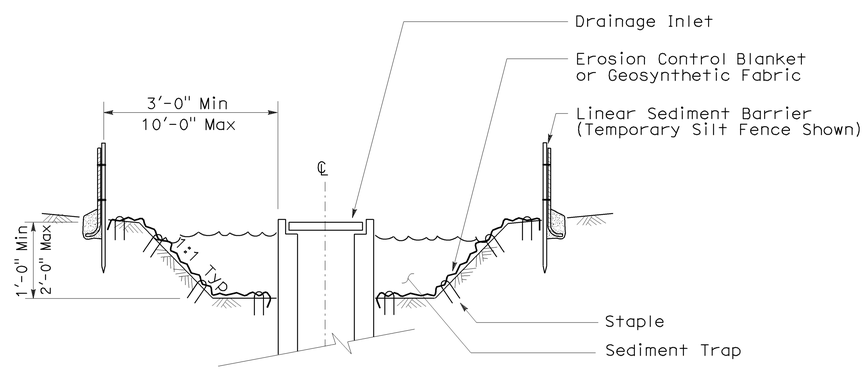

SECTION B-B

NOTES:

1. See Standard Plan T51 for Temporary Silt Fence.
2. Dimensions may vary to fit field conditions.

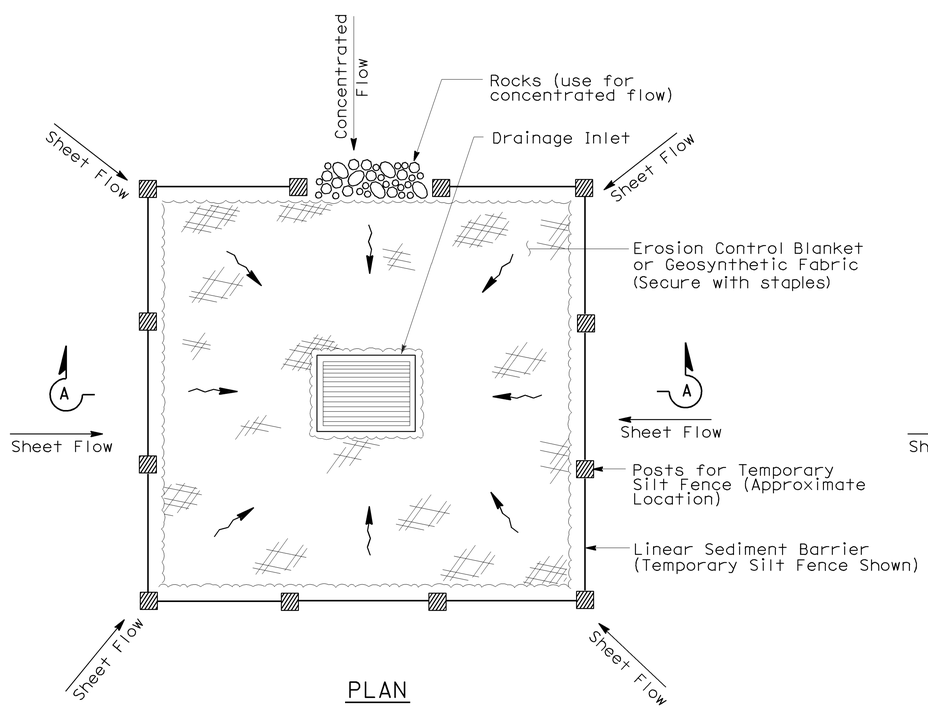

PLAN

TEMPORARY DRAINAGE INLET PROTECTION (TYPE 1)

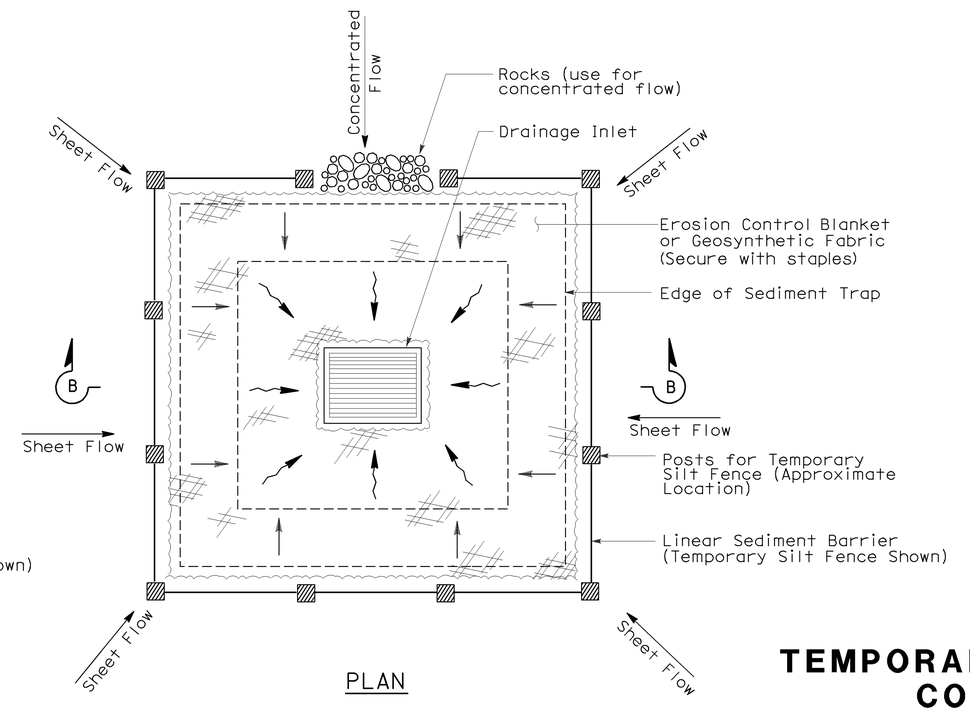

PLAN

TEMPORARY DRAINAGE INLET PROTECTION (TYPE 2) (EXCAVATED SEDIMENT TRAP)

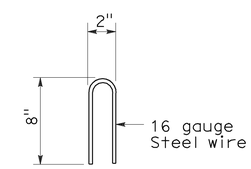

STAPLE DETAIL

STATE OF CALIFORNIA
DEPARTMENT OF TRANSPORTATION

TEMPORARY WATER POLLUTION CONTROL DETAILS (TEMPORARY DRAINAGE INLET PROTECTION)

NO SCALE

NSP T61 DATED AUGUST 15, 2008 SUPPLEMENTS THE STANDARD PLANS BOOK DATED MAY 2006.

NEW STANDARD PLAN NSP T61

2006 NEW STANDARD PLAN NSP T61

7-11-08

DIST	COUNTY	ROUTE	POST MILES TOTAL PROJECT	SHEET NO.	TOTAL SHEETS
01	Hum	299	0.0/42.9	57	59

LICENSED LANDSCAPE ARCHITECT

August 15, 2008
PLANS APPROVAL DATE

The State of California or its officers or agents shall not be responsible for the accuracy or completeness of electronic copies of this plan sheet.

LICENSED LANDSCAPE ARCHITECT — Robert B. Schott 3825 — Signature — 11-04-08 Renewal Date — 08-11-08 Date — STATE OF CALIFORNIA

To accompany plans dated 8-27-12

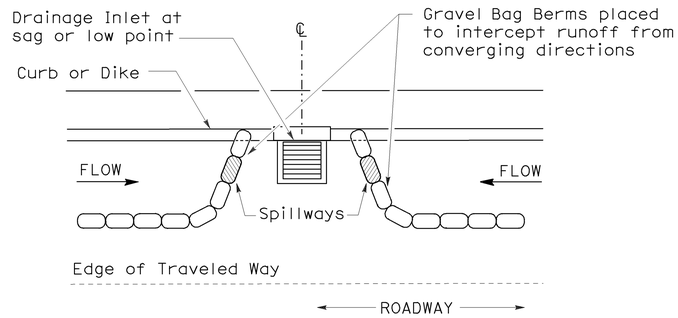

PLAN

CONFIGURATION FOR SAG POINT INLET (GRAVEL BAG BERM)

GRAVEL BAG BERM (TYPE 3A) SPACING TABLE

SLOPE OF ROADWAY (PERCENT)	1 to 3.9	4 to 5.9	6 to 7.9	8 to 10	10+
INTERVAL BETWEEN BERM	100′	75′	50′	25′	12′

For slope of less than 1%, install barriers only if erosion/sediment is prevalent

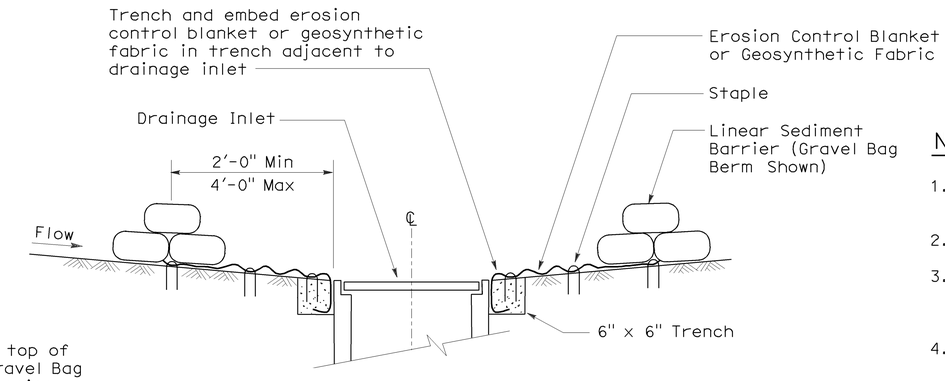

SECTION A-A

NOTES:

1. Place safety cones adjacent to drainage inlet protection.
2. Dimensions may vary to fit field conditions.
3. Install a minimum of 3 gravel bag berms upstream of each drainage inlet to be protected.
4. Position erosion control blanket or geosynthetic fabric at edge of concrete apron and secure in trench.
5. Erosion control blanket or geosynthetic fabric is not required if the area adjacent to the drainage inlet is vegetated or paved.

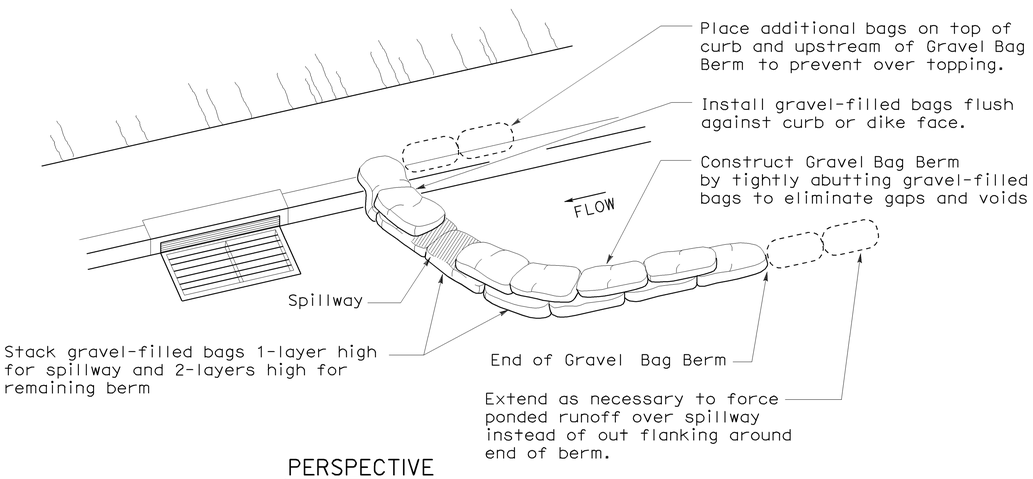

PERSPECTIVE

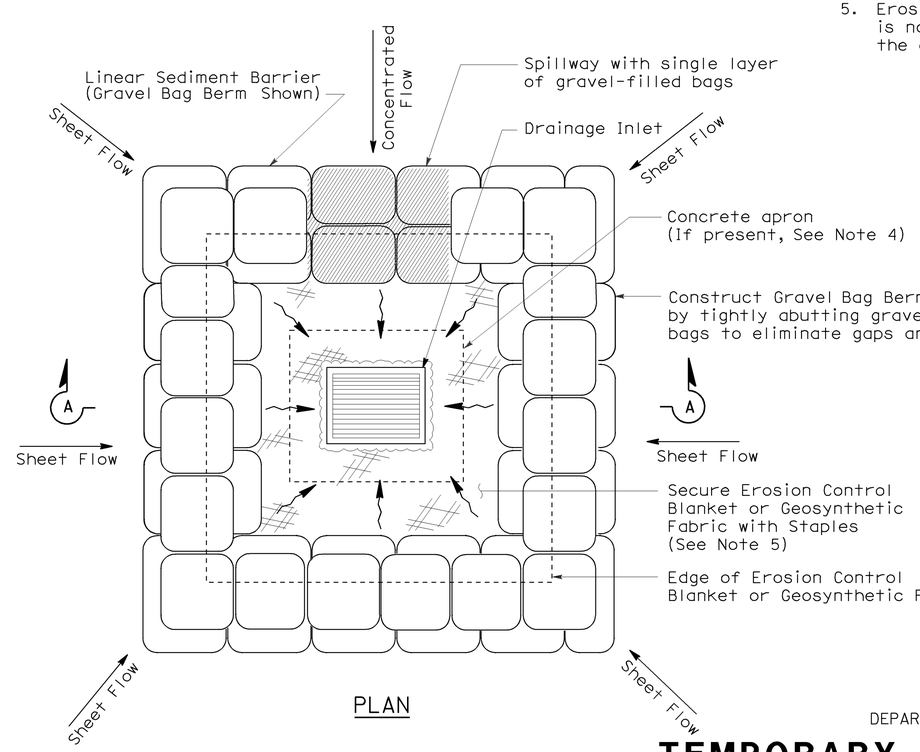

PLAN

TEMPORARY DRAINAGE INLET PROTECTION (TYPE 3B)

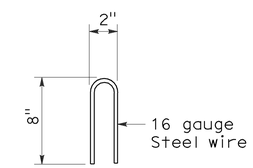

STAPLE DETAIL

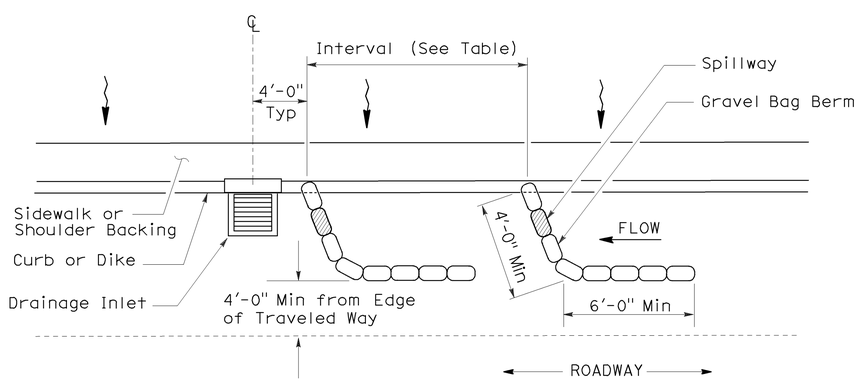

PLAN

TEMPORARY DRAINAGE INLET PROTECTION (TYPE 3A) (GRAVEL BAG BERM)

STATE OF CALIFORNIA
DEPARTMENT OF TRANSPORTATION

TEMPORARY WATER POLLUTION CONTROL DETAILS (TEMPORARY DRAINAGE INLET PROTECTION)

NO SCALE

NSP T62 DATED AUGUST 15, 2008 SUPPLEMENTS THE STANDARD PLANS BOOK DATED MAY 2006.

NEW STANDARD PLAN NSP T62

2006 NEW STANDARD PLAN NSP T62

7-11-08

DIST	COUNTY	ROUTE	POST MILES TOTAL PROJECT	SHEET NO.	TOTAL SHEETS
01	Hum	299	0.0/42.9	58	59

LICENSED LANDSCAPE ARCHITECT

August 15, 2008
PLANS APPROVAL DATE

The State of California or its officers or agents shall not be responsible for the accuracy or completeness of electronic copies of this plan sheet.

LICENSED LANDSCAPE ARCHITECT Robert B. Schott 3825 Signature 11-04-08 Renewal Date 08-11-08 Date STATE OF CALIFORNIA

To accompany plans dated 8-27-12

FLEXIBLE SEDIMENT BARRIER SPACING TABLE

SLOPE OF ROADWAY (PERCENT)	0 to 0.9	1 to 1.9	2 to 2.9	3 to 4	5+
INTERVAL BETWEEN BARRIERS	50′	35′	30′	25′	20′
ANGLE FROM FACE OF CURB	70°	70°	70°	45°	45°
SUGGESTED BARRIER LENGTH	6′	6′	6′	6′	6′

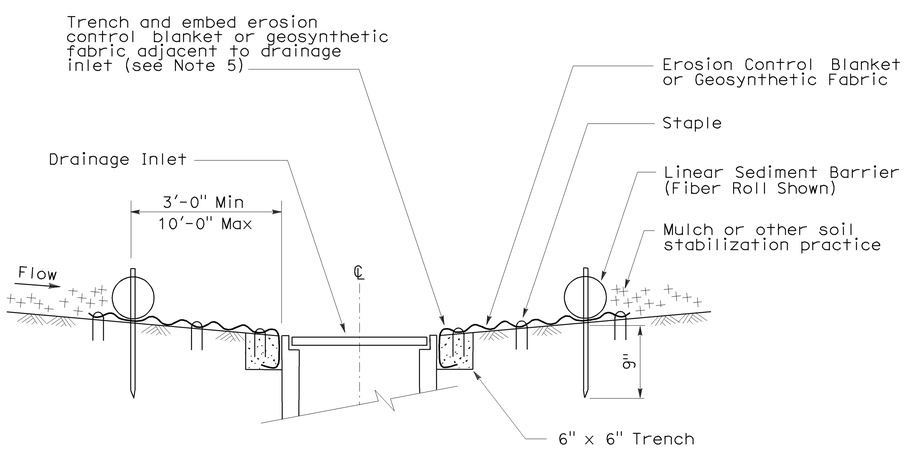

SECTION A-A

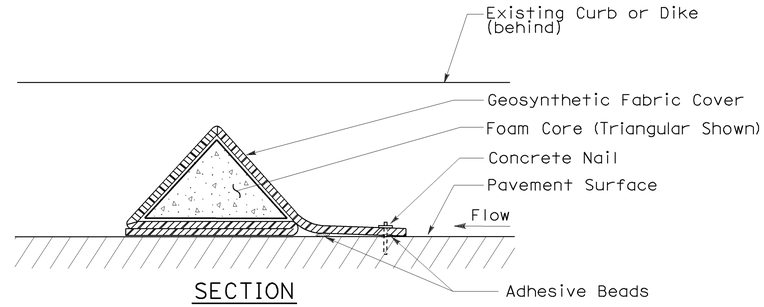

SECTION

FLEXIBLE SEDIMENT BARRIER DETAIL (FOAM BARRIER SHOWN)

NOTES:

1. See Standard Plan T51 for Temporary Silt Fence.
2. Dimensions may vary to fit field conditions.
3. Install a minimum of 3 flexible sediment barriers upstream of each drainage inlet to be protected.
4. Position erosion control blanket or geosynthetic fabric at edge of concrete apron and secure in trench.
5. Erosion control blanket or geosynthetic fabric is not required if the area adjacent to the drainage inlet is vegetated.

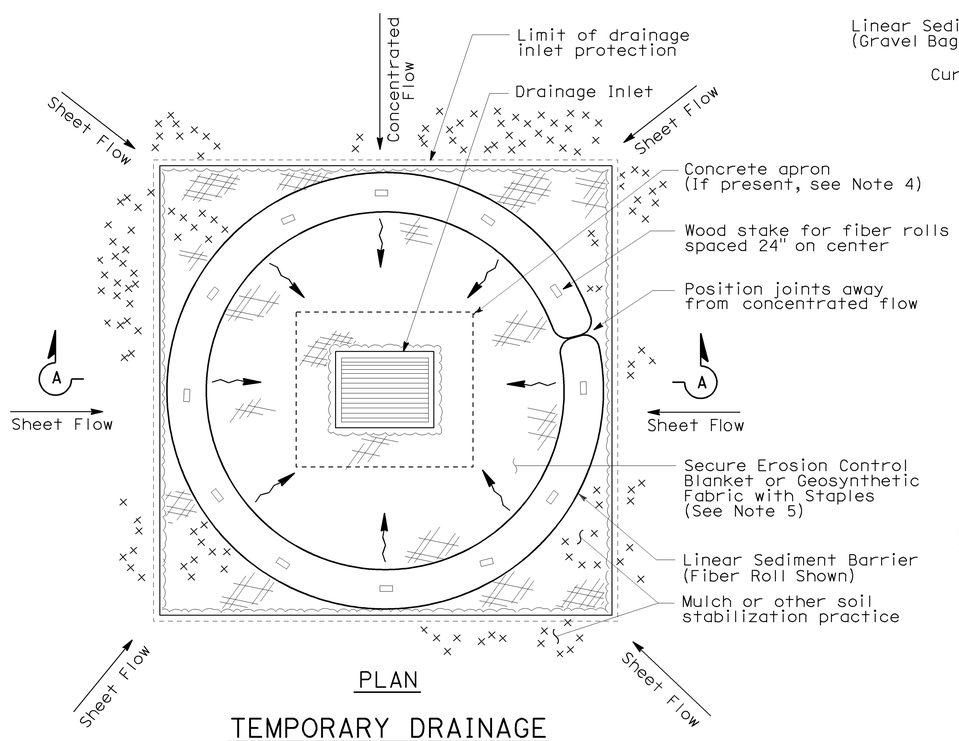

PLAN

TEMPORARY DRAINAGE INLET PROTECTION (TYPE 4A)

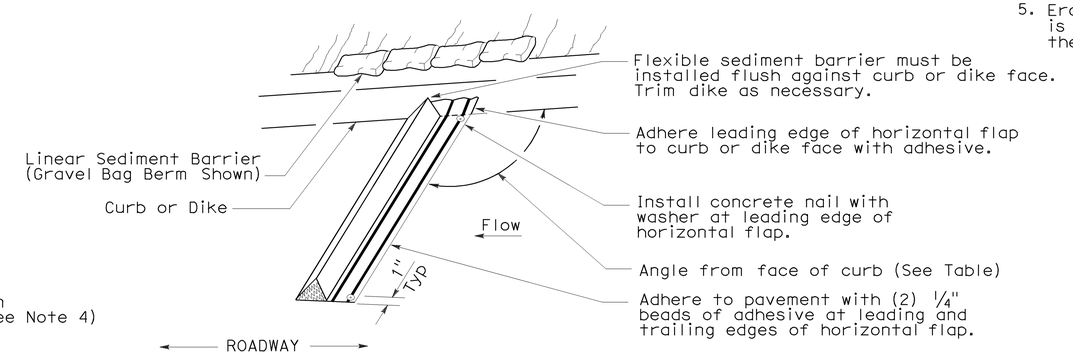

PERSPECTIVE

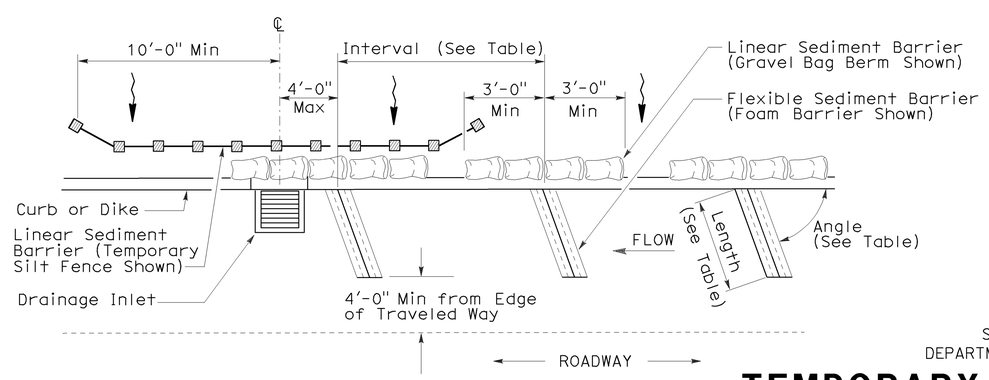

PLAN

TEMPORARY DRAINAGE INLET PROTECTION (TYPE 4B) FLEXIBLE SEDIMENT BARRIER

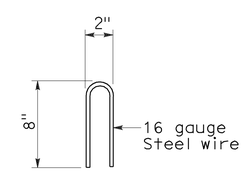

STAPLE DETAIL

STATE OF CALIFORNIA
DEPARTMENT OF TRANSPORTATION

TEMPORARY WATER POLLUTION CONTROL DETAILS (TEMPORARY DRAINAGE INLET PROTECTION)

NO SCALE

NSP T63 DATED AUGUST 15, 2008 SUPPLEMENTS THE STANDARD PLANS BOOK DATED MAY 2006.

NEW STANDARD PLAN NSP T63

2006 NEW STANDARD PLAN NSP T63

7-11-08

DIST	COUNTY	ROUTE	POST MILES TOTAL PROJECT	SHEET NO.	TOTAL SHEETS
01	Hum	299	0.0/42.9	59	59

LICENSED LANDSCAPE ARCHITECT

August 15, 2008
PLANS APPROVAL DATE

LICENSED LANDSCAPE ARCHITECT Robert B. Schott 3825 Expiration Date 11-04-08 Renewal Date 08-11-08 Date STATE OF CALIFORNIA

The State of California or its officers or agents shall not be responsible for the accuracy or completeness of electronic copies of this plan sheet.

To accompany plans dated 8-27-12

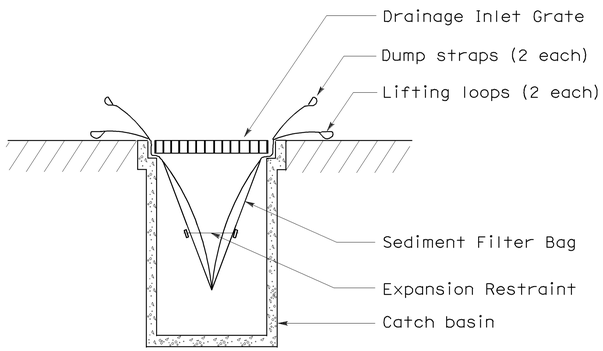

SECTION B-B

SEDIMENT FILTER BAG DETAIL

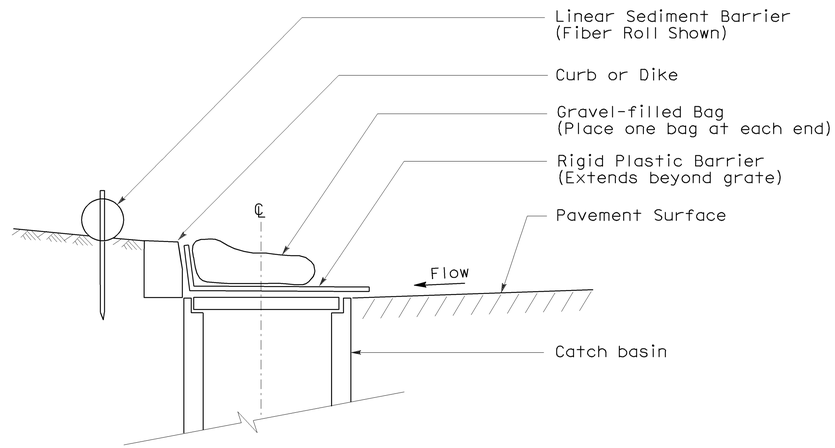

SECTION

TEMPORARY DRAINAGE INLET PROTECTION (TYPE 6A) (CATCH BASIN WITH GRATE)

NOTES:

1. See Standard Plan T51 for Temporary Silt Fence.
2. Dimensions may vary to fit field conditions.

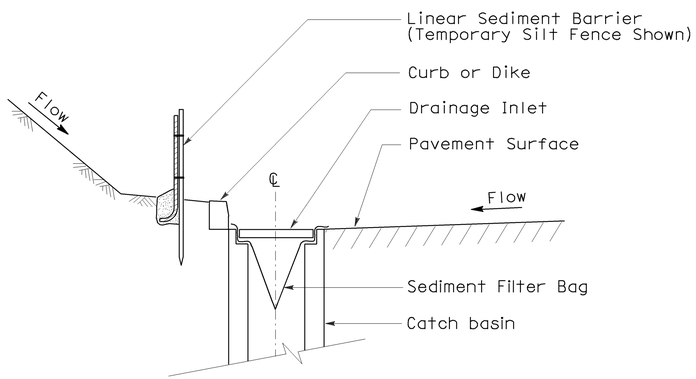

SECTION A-A

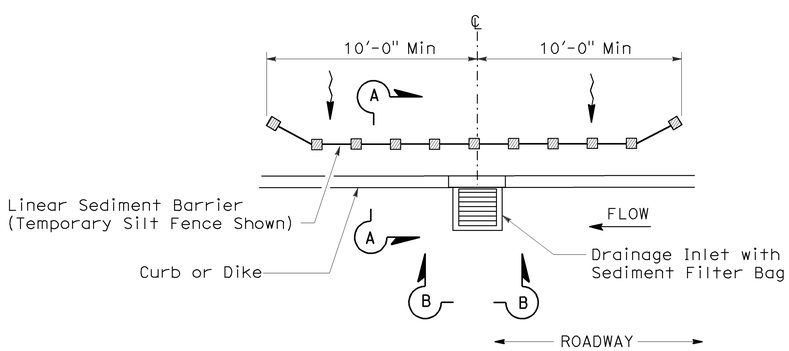

PLAN

TEMPORARY DRAINAGE INLET PROTECTION (TYPE 5) (SEDIMENT FILTER BAG)

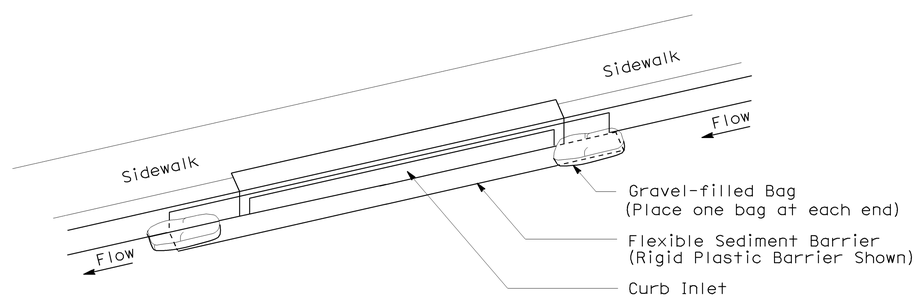

PERSPECTIVE

TEMPORARY DRAINAGE INLET PROTECTION (TYPE 6B) (CURB INLET WITHOUT GRATE)

STATE OF CALIFORNIA
DEPARTMENT OF TRANSPORTATION

TEMPORARY WATER POLLUTION CONTROL DETAILS (TEMPORARY DRAINAGE INLET PROTECTION)

NO SCALE

NSP T64 DATED AUGUST 15, 2008 SUPPLEMENTS THE STANDARD PLANS BOOK DATED MAY 2006.

NEW STANDARD PLAN NSP T64

2006 NEW STANDARD PLAN NSP T64

7-11-08