Dist	COUNTY	ROUTE	POST MILES TOTAL PROJECT	SHEET No.	TOTAL SHEETS
01	Hum	169	13.6/23.4	1	86

STATE OF CALIFORNIA

DEPARTMENT OF TRANSPORTATION

HSSTP-S169(006)E

PROJECT PLANS FOR CONSTRUCTION ON

STATE HIGHWAY

IN HUMBOLDT COUNTY
AT VARIOUS LOCATIONS FROM 0.8 MILE WEST OF PECWAN CREEK BRIDGE TO 1.0 MILE EAST OF CAPPELL CREEK BRIDGE

TO BE SUPPLEMENTED BY STANDARD PLANS DATED MAY 2010

INDEX OF PLANS

SHEET No.	DESCRIPTION
1	TITLE AND LOCATION MAP
2-5	TYPICAL CROSS SECTIONS
6-13	LAYOUTS
14-15	CONSTRUCTION DETAILS
16	EROSION CONTROL LEGEND
17-21	EROSION CONTROL PLANS AND QUANTITIES
22-29	DRAINAGE PROFILES, DETAILS AND QUANTITIES
30-31	CONSTRUCTION AREA SIGNS
32-36	TRAFFIC HANDLING PLANS, DETAILS AND QUANTITIES
37-41	PAVEMENT DELINEATION PLANS AND QUANTITIES
42-44	SUMMARY OF QUANTITIES
45-46	ELECTRICAL PLANS
47-53	REVISED STANDARD PLANS

STRUCTURE PLANS

54-59	RETAINING WALL AT PM 13.66 Br No. 04E0030
60-86	RETAINING WALL AT PM 23.28 Br No. 04E0031

THE STANDARD PLANS LIST APPLICABLE TO THIS CONTRACT IS INCLUDED IN THE NOTICE TO BIDDERS AND SPECIAL PROVISIONS BOOK.

LOCATION MAP

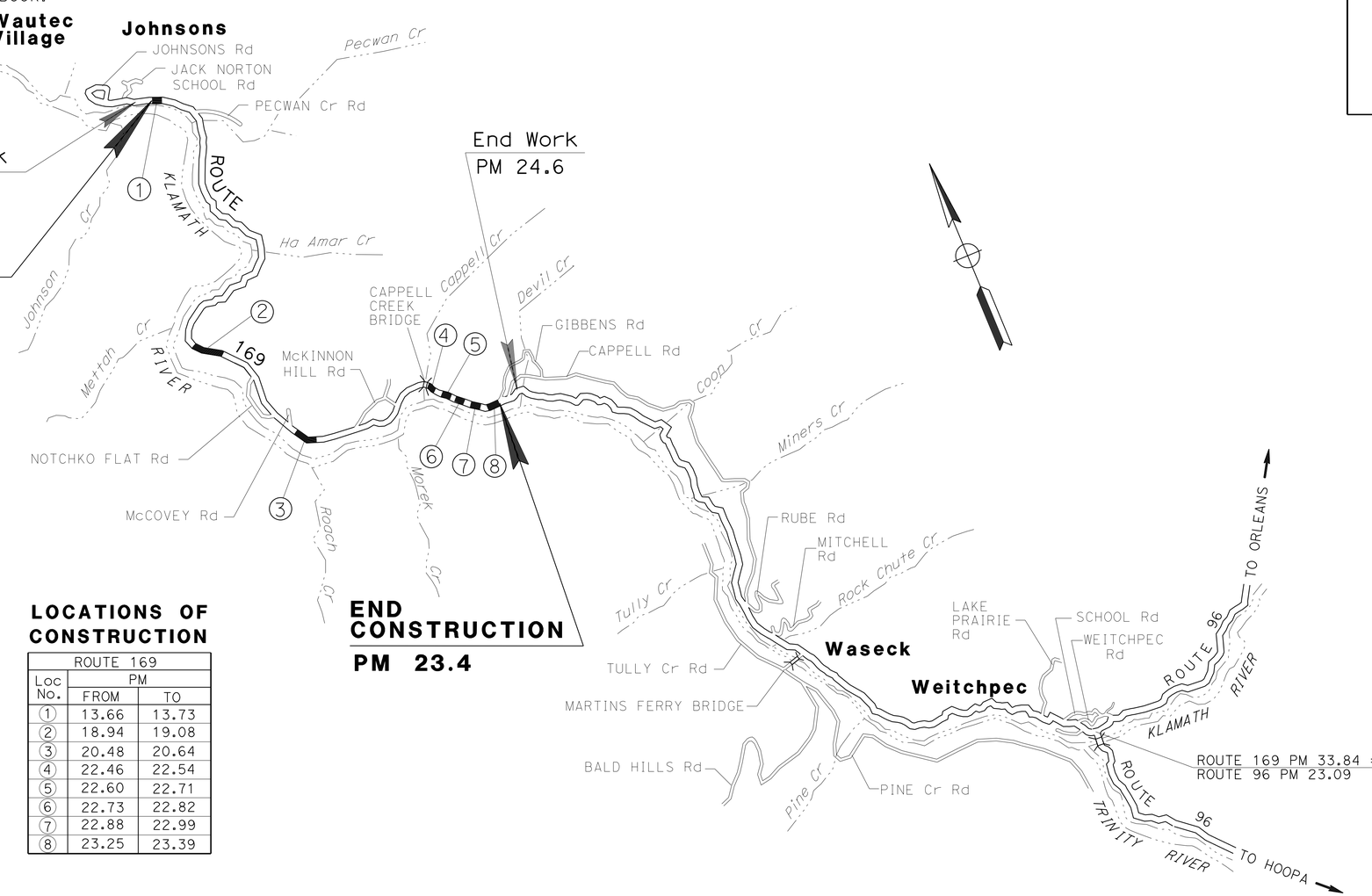

LOCATIONS OF CONSTRUCTION

Loc No.	ROUTE 169 PM FROM	TO
1	13.66	13.73
2	18.94	19.08
3	20.48	20.64
4	22.46	22.54
5	22.60	22.71
6	22.73	22.82
7	22.88	22.99
8	23.25	23.39

THE CONTRACTOR SHALL POSSESS THE CLASS (OR CLASSES) OF LICENSE AS SPECIFIED IN THE "NOTICE TO BIDDERS."

Lena R. Ashley 02/08/13
PROJECT ENGINEER DATE
REGISTERED CIVIL ENGINEER

June 17, 2013
PLANS APPROVAL DATE

REGISTERED PROFESSIONAL ENGINEER LENA R. ASHLEY No. 48764 Exp. 9-30-14 CIVIL STATE OF CALIFORNIA

THE STATE OF CALIFORNIA OR ITS OFFICERS OR AGENTS SHALL NOT BE RESPONSIBLE FOR THE ACCURACY OR COMPLETENESS OF SCANNED COPIES OF THIS PLAN SHEET.

CONTRACT No.	01-450904
PROJECT ID	0100000219

P:\PROJ\01\45090\drafting\0100000219\0100000219ab001.dgn

PROJECT MANAGER: RICHARD MULLEN
DESIGN ENGINEER: L.R. ASHLEY

LAST REVISION 02-06-13
DATE PLOTTED => 24-JUL-2013
TIME PLOTTED => 06:33

Dist	COUNTY	ROUTE	POST MILES TOTAL PROJECT	SHEET No.	TOTAL SHEETS
01	Hum	169	13.6/23.4	2	86

REGISTERED CIVIL ENGINEER 02/08/13 DATE

6-17-13
PLANS APPROVAL DATE

REGISTERED PROFESSIONAL ENGINEER LENA R. ASHLEY No. 48764 Exp. 9-30-14 CIVIL STATE OF CALIFORNIA

THE STATE OF CALIFORNIA OR ITS OFFICERS OR AGENTS SHALL NOT BE RESPONSIBLE FOR THE ACCURACY OR COMPLETENESS OF SCANNED COPIES OF THIS PLAN SHEET.

NOTES:

1. DIMENSIONS OF THE PAVEMENT STRUCTURES (STRUCTURAL SECTIONS) ARE SUBJECT TO TOLERANCES SPECIFIED IN THE STANDARD SPECIFICATIONS.
2. SUPERELEVATION AS SHOWN OR AS DIRECTED BY THE ENGINEER.

ABBREVIATIONS:

SR - SUPERELEVATION RATE
GPI - GEOSYNTHETIC PAVEMENT INTERLAYER (SEE DETAILS ON C-2)

DESIGN DESIGNATION (ROUTE 169)

(2012) ADT=380 D=60%
(2032) ADT=450 T=5%
TI_{20} 6.5 V=35 MPH

PAVEMENT CLIMATE REGION
LOW MOUNTAIN

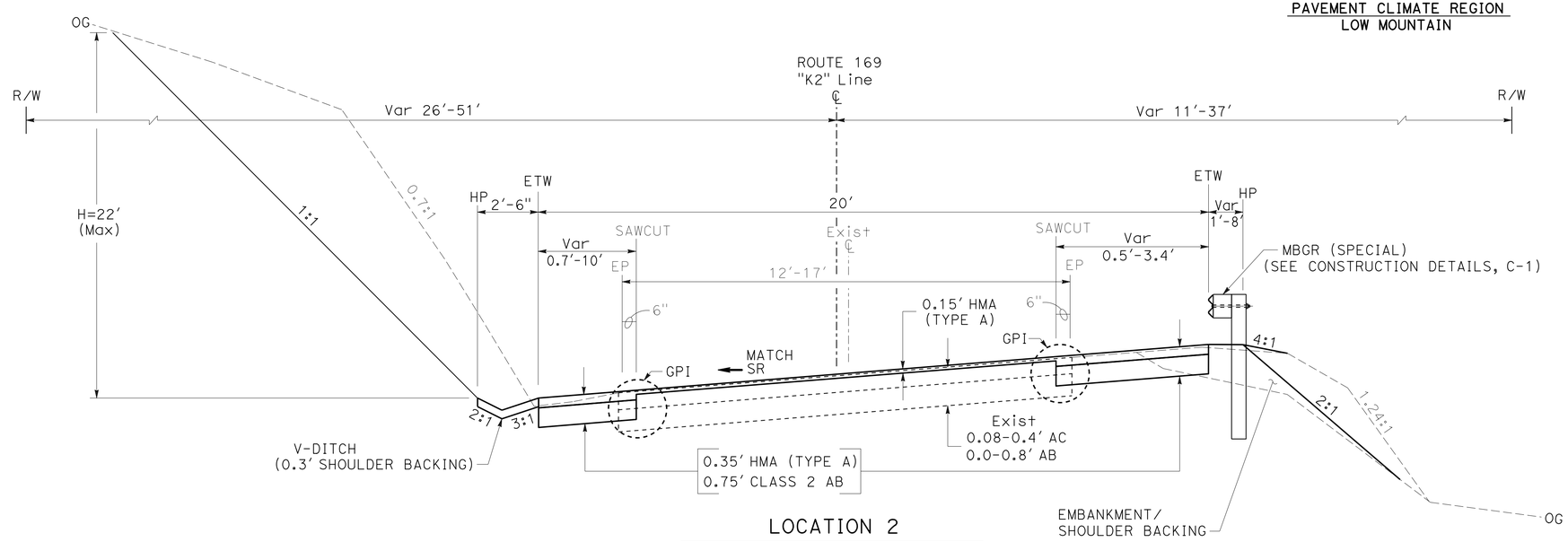

LOCATION 2

"K2" 21+50 TO "K2" 28+50

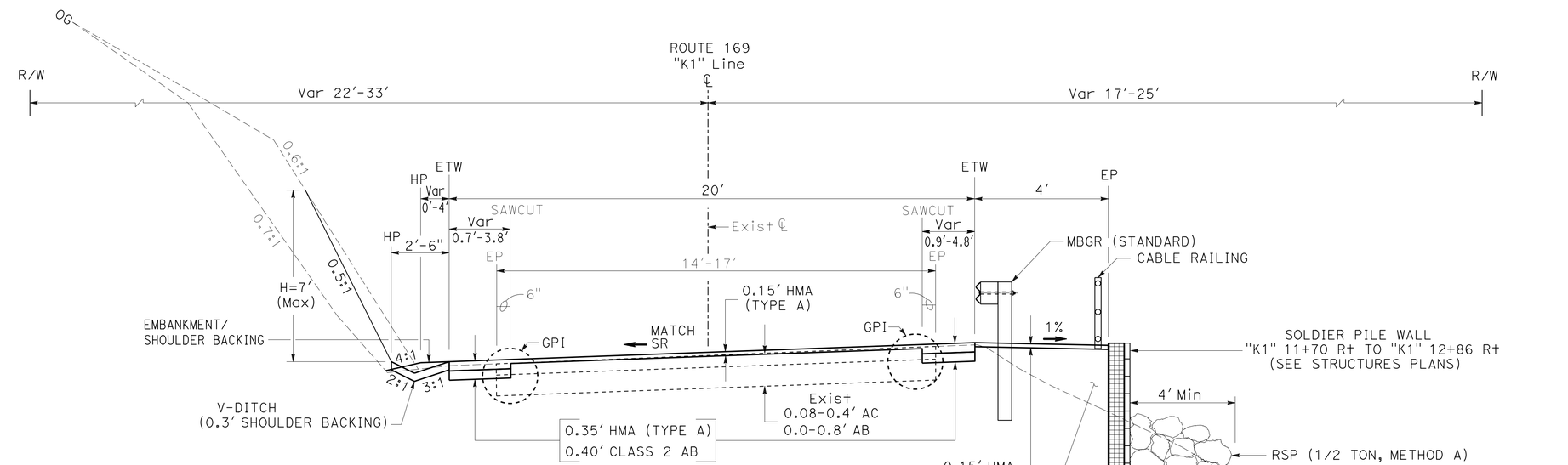

LOCATION 1

"K1" 10+95 TO "K1" 15+20

TYPICAL CROSS SECTIONS X-1

NO SCALE

REVISED BY | DATE REVISED
BIJAN SAMRAD | TODD LARK
CALCULATED-DESIGNED BY | CHECKED BY
FUNCTIONAL SUPERVISOR: L.R. ASHLEY

STATE OF CALIFORNIA - DEPARTMENT OF TRANSPORTATION
Caltrans® DESIGN

P:\PROJ\01\45930\drafting\01000219\0100000219ca001.dgn

LAST REVISION 02-06-13 | DATE PLOTTED => 18-JUN-2013 | TIME PLOTTED => 07:28

Dist	COUNTY	ROUTE	POST MILES TOTAL PROJECT	SHEET No.	TOTAL SHEETS
01	Hum	169	13.6/23.4	3	86

REGISTERED CIVIL ENGINEER 02/08/13 DATE

6-17-13
PLANS APPROVAL DATE

REGISTERED PROFESSIONAL ENGINEER LENA R. ASHLEY No. 48764 Exp. 9-30-14 CIVIL STATE OF CALIFORNIA

THE STATE OF CALIFORNIA OR ITS OFFICERS OR AGENTS SHALL NOT BE RESPONSIBLE FOR THE ACCURACY OR COMPLETENESS OF SCANNED COPIES OF THIS PLAN SHEET.

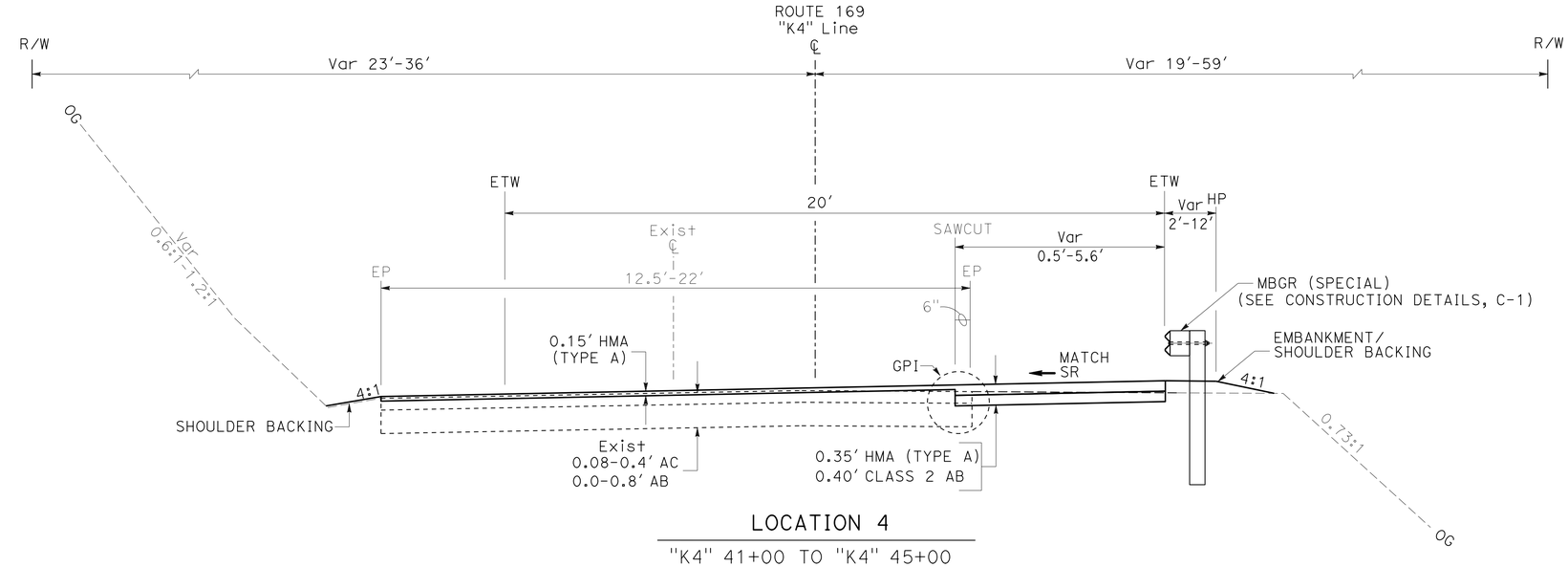

LOCATION 4

"K4" 41+00 TO "K4" 45+00

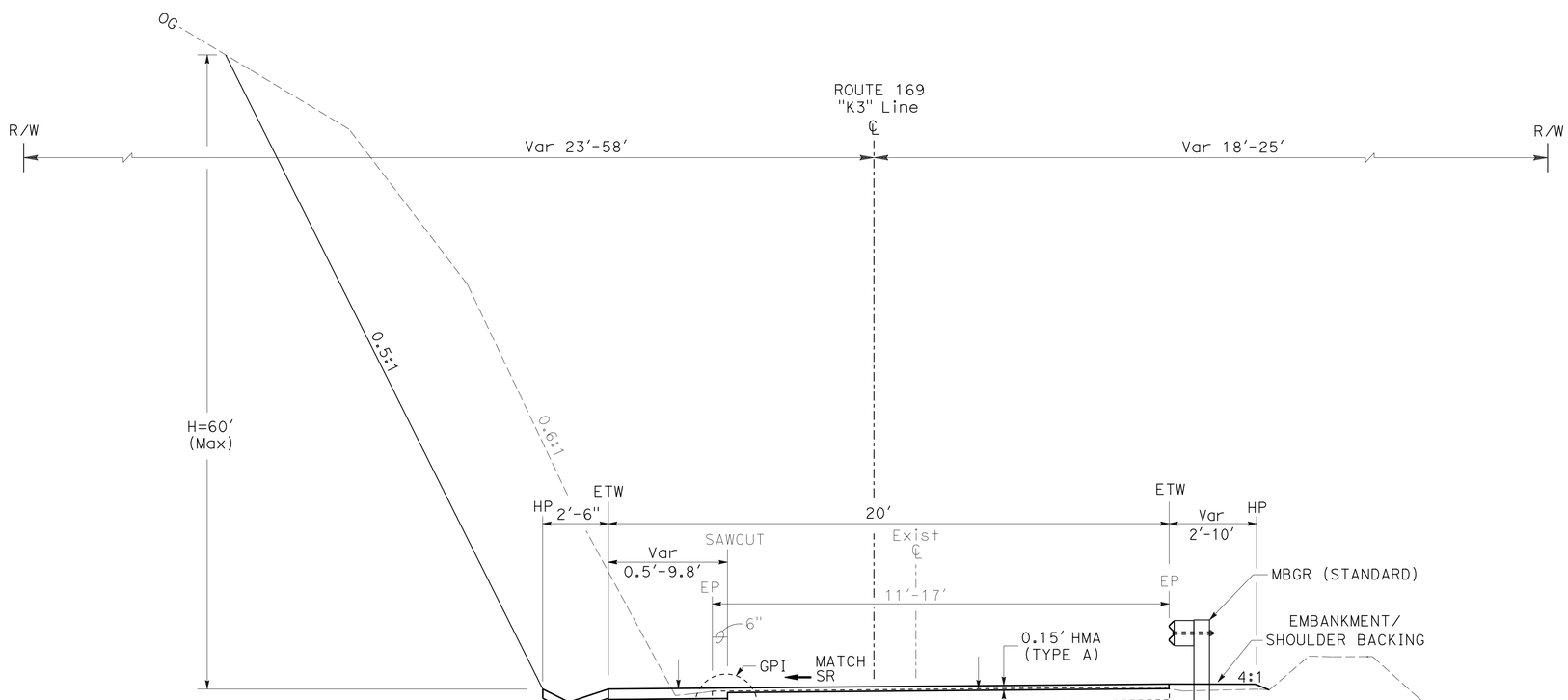

LOCATION 3

"K3" 30+00 TO "K3" 36+70

TYPICAL CROSS SECTIONS X-2

NO SCALE

STATE OF CALIFORNIA - DEPARTMENT OF TRANSPORTATION
Caltrans® DESIGN

FUNCTIONAL SUPERVISOR: L.R. ASHLEY
CALCULATED-DESIGNED BY: BIJAN SAMRAD
CHECKED BY: TODD LARK
REVISED BY / DATE REVISED

P:\PROJ\01\45030\drafting\010000219\010000219ca002.dgn

LAST REVISION 02-06-13
DATE PLOTTED => 18-JUN-2013
TIME PLOTTED => 07:29

Dist	COUNTY	ROUTE	POST MILES TOTAL PROJECT	SHEET No.	TOTAL SHEETS
01	Hum	169	13.6/23.4	4	86

REGISTERED CIVIL ENGINEER 02/08/13 DATE

6-17-13
PLANS APPROVAL DATE

REGISTERED PROFESSIONAL ENGINEER LENA R. ASHLEY No. 48764 Exp. 9-30-14 CIVIL STATE OF CALIFORNIA

THE STATE OF CALIFORNIA OR ITS OFFICERS OR AGENTS SHALL NOT BE RESPONSIBLE FOR THE ACCURACY OR COMPLETENESS OF SCANNED COPIES OF THIS PLAN SHEET.

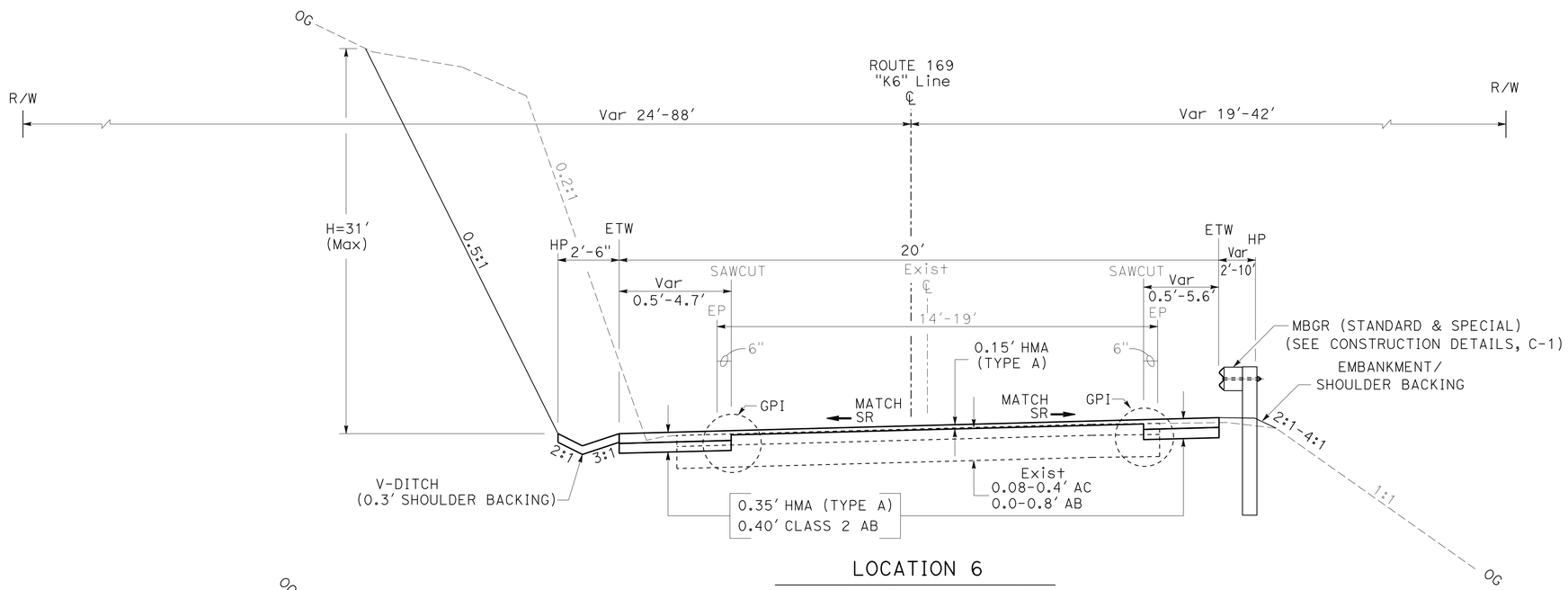

LOCATION 6

"K6" 60+20 TO "K6" 65+00

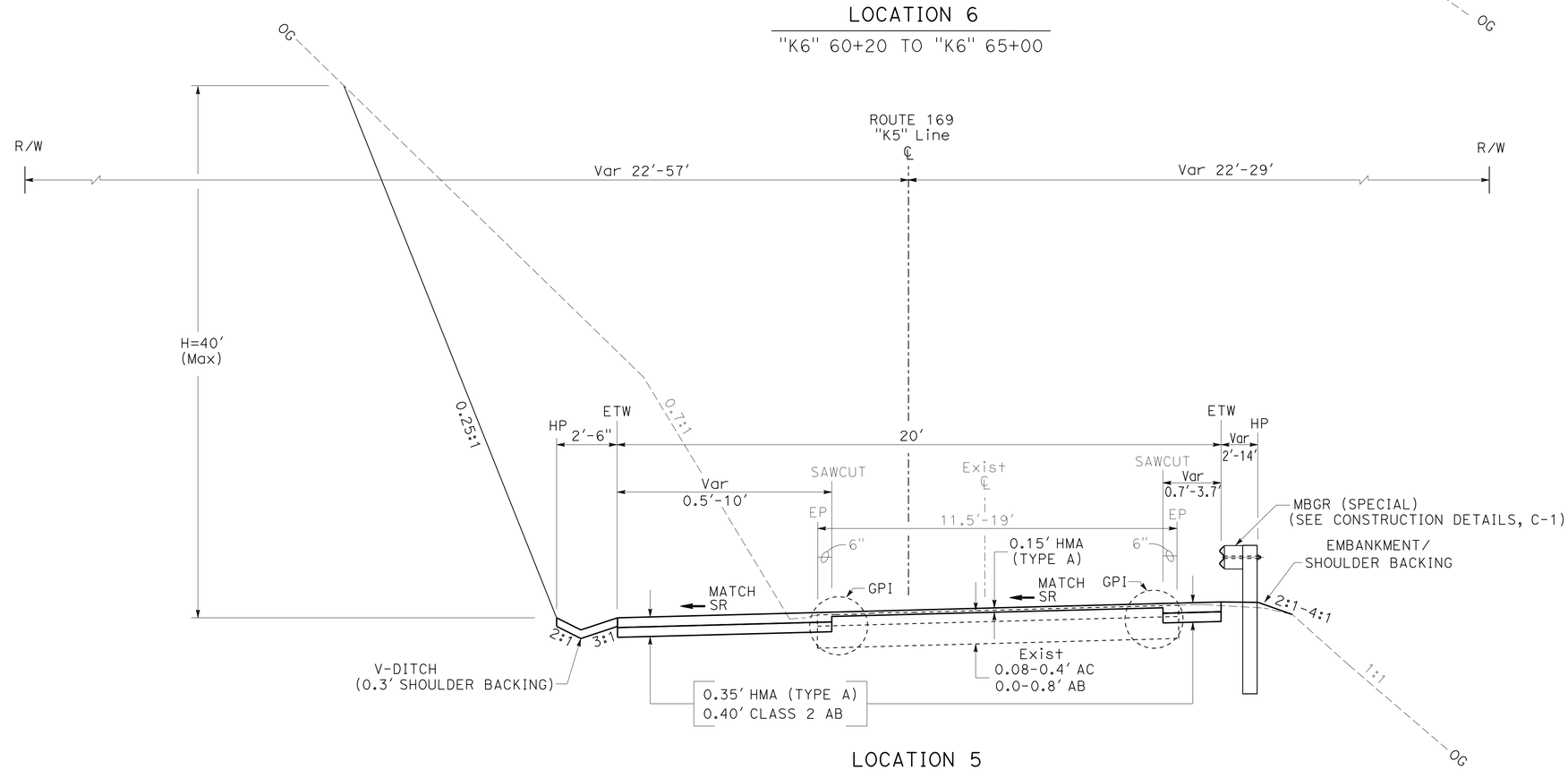

LOCATION 5

"K5" 50+40 TO "K5" 55+00

TYPICAL CROSS SECTIONS

NO SCALE

X-3

REVISED BY	DATE REVISED
BIJAN SAMRAD	TODD LARK
CALCULATED-DESIGNED BY	CHECKED BY
FUNCTIONAL SUPERVISOR	L.R. ASHLEY

STATE OF CALIFORNIA - DEPARTMENT OF TRANSPORTATION

Caltrans® DESIGN

P:\PROJ\01\45090\drafting\0100000219\0100000219ca003.dgn

LAST REVISION 02-06-13 DATE PLOTTED => 18-JUN-2013 TIME PLOTTED => 07:29

Dist	COUNTY	ROUTE	POST MILES TOTAL PROJECT	SHEET No.	TOTAL SHEETS
01	Hum	169	13.6/23.4	5	86

REGISTERED CIVIL ENGINEER 02/08/13 DATE

6-17-13
PLANS APPROVAL DATE

REGISTERED PROFESSIONAL ENGINEER LENA R. ASHLEY No. 48764 Exp. 9-30-14 CIVIL STATE OF CALIFORNIA

THE STATE OF CALIFORNIA OR ITS OFFICERS OR AGENTS SHALL NOT BE RESPONSIBLE FOR THE ACCURACY OR COMPLETENESS OF SCANNED COPIES OF THIS PLAN SHEET.

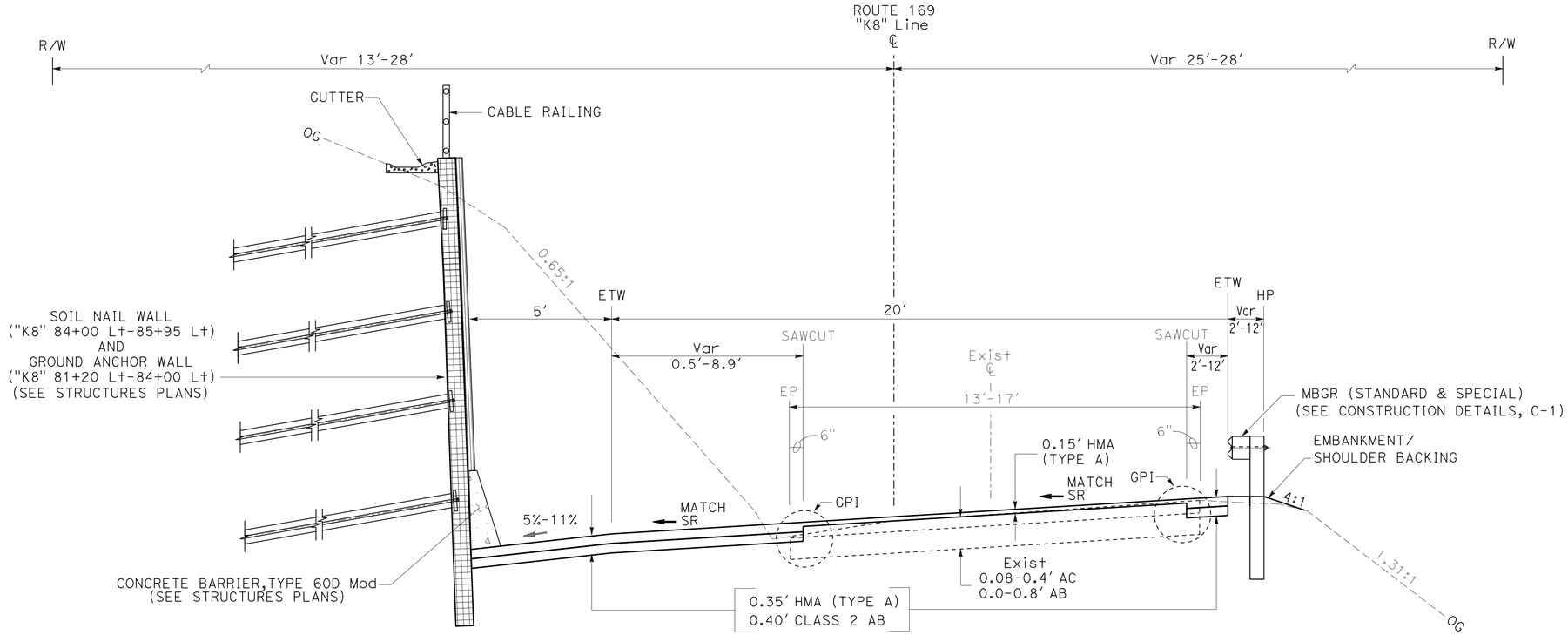

LOCATION 8

"K8" 80+00 TO "K8" 87+35

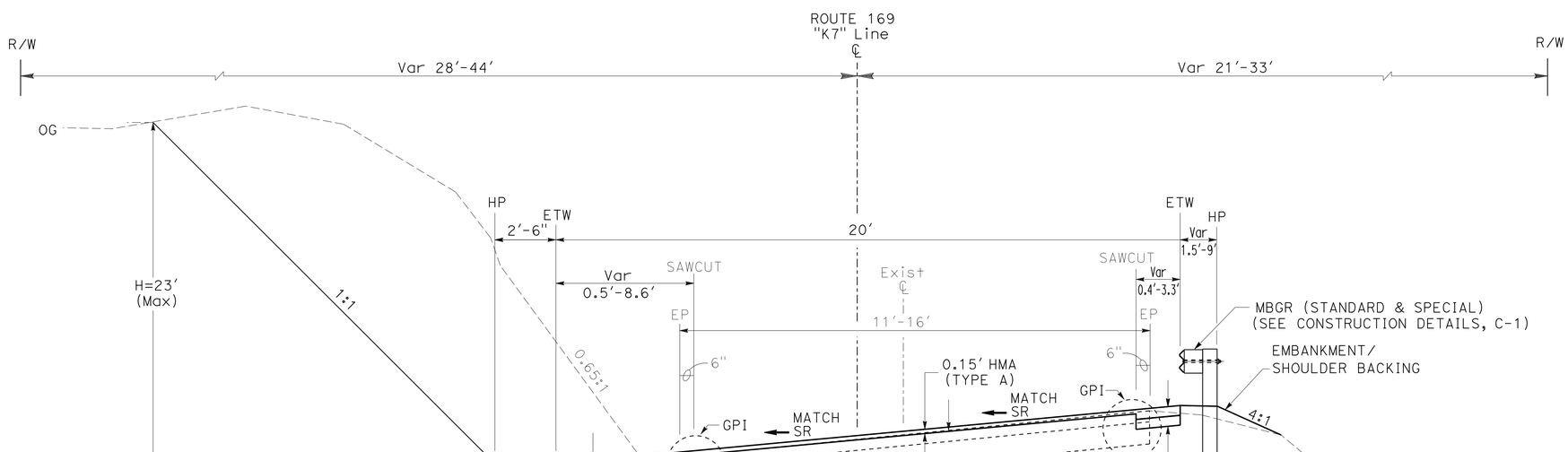

LOCATION 7

"K7" 70+00 TO "K7" 76+40

NO SCALE

TYPICAL CROSS SECTIONS

X-4

STATE OF CALIFORNIA - DEPARTMENT OF TRANSPORTATION

Caltrans DESIGN

FUNCTIONAL SUPERVISOR: L.R. ASHLEY

CALCULATED-DESIGNED BY: BIJAN SAMRAD

CHECKED BY: TODD LARK

REVISED BY / DATE REVISED

P:\PROJ\01\45090\drafting\01000002191\0100000219ca004.dgn

LAST REVISION 02-06-13 | DATE PLOTTED => 18-JUN-2013 | TIME PLOTTED => 07:29

BORDER LAST REVISED 7/2/2010 | USERNAME => s114937 | DGN FILE => 0100000219ca004.dgn | RELATIVE BORDER SCALE IS IN INCHES 0 1 2 3 | UNIT 0313 | PROJECT NUMBER & PHASE 01000002191

Dist	COUNTY	ROUTE	POST MILES TOTAL PROJECT	SHEET No.	TOTAL SHEETS
01	Hum	169	13.6/23.4	6	86

REGISTERED CIVIL ENGINEER 02/08/13 DATE

6-17-13
PLANS APPROVAL DATE

REGISTERED PROFESSIONAL ENGINEER LENA R. ASHLEY No. 48764 Exp. 9-30-14 CIVIL STATE OF CALIFORNIA

THE STATE OF CALIFORNIA OR ITS OFFICERS OR AGENTS SHALL NOT BE RESPONSIBLE FOR THE ACCURACY OR COMPLETENESS OF SCANNED COPIES OF THIS PLAN SHEET.

NOTES:

1. FOR ACCURATE RIGHT OF WAY DATA, CONTACT RIGHT OF WAY ENGINEERING AT THE DISTRICT OFFICE.
2. FOR WALL DETAILS NOT SHOWN SEE STRUCTURES PLANS.
3. OBLITERATE AREA OUTSIDE OF SAWCUT.
4. UTILITIES TO BE LOCATED PRIOR TO CONSTRUCTION.

CURVE DATA

No.	R	Δ	T	L	N	E
11	1000.00	1°45'44"	15.38	30.76	2379266.75	6048625.17
12	800.00	7°20'59"	51.38	102.63	2380667.15	6049756.29
13	160.00	52°12'46"	78.41	145.81	2380106.27	6049447.27
14	400.00	21°13'8"	74.93	148.14	2379610.62	6049717.30

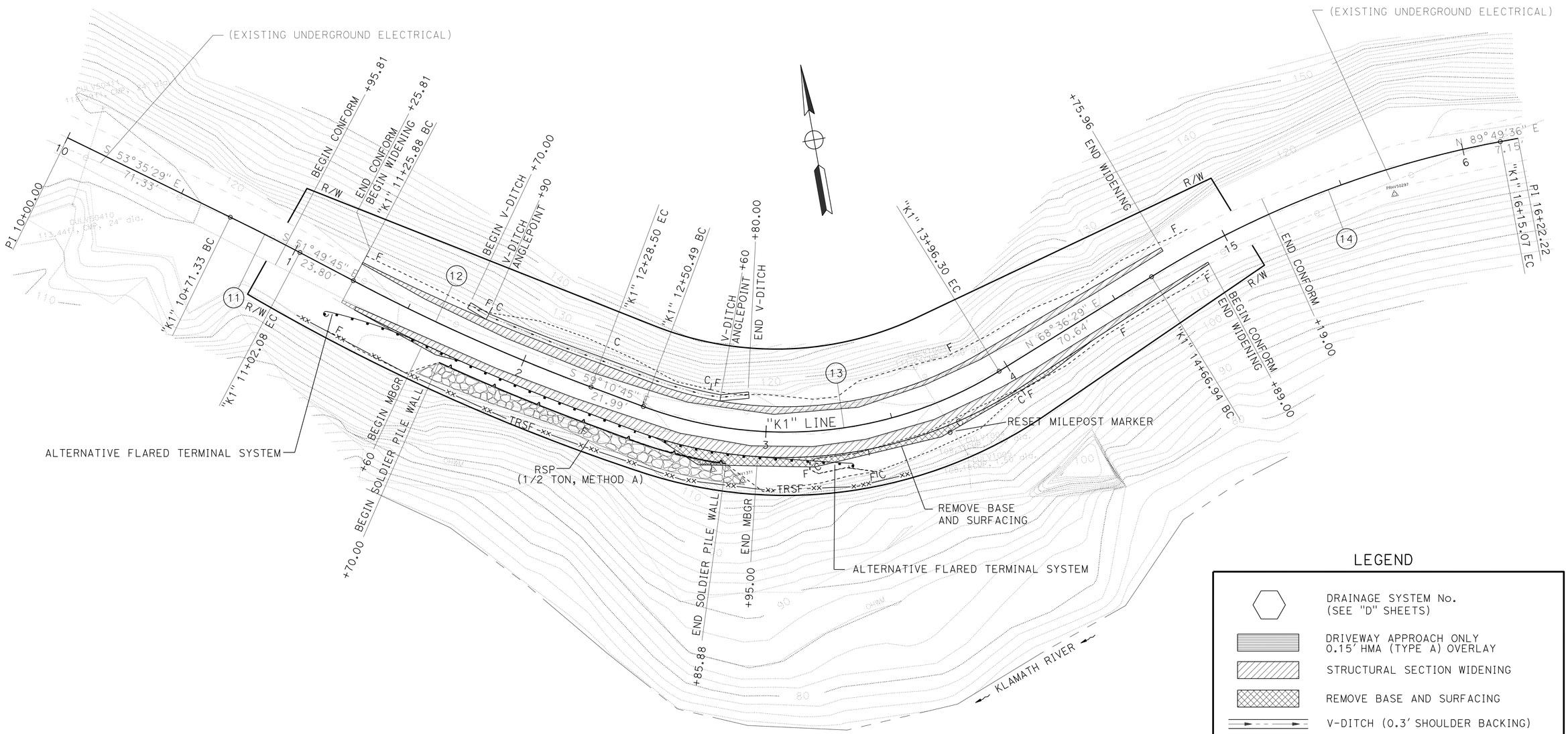

LOCATION 1

"K1" 10+95 TO "K1" 15+20
(PM: 13.66/13.73)

LEGEND

- DRAINAGE SYSTEM No. (SEE "D" SHEETS)
- DRIVEWAY APPROACH ONLY 0.15' HMA (TYPE A) OVERLAY
- STRUCTURAL SECTION WIDENING
- REMOVE BASE AND SURFACING
- V-DITCH (0.3' SHOULDER BACKING)
- SOLDIER PILE WALL/ SOIL NAIL WALL/ GROUND ANCHOR WALL
- -xx——TRSF——xx- Temp REINFORCED SILT FENCE (TRSF)

SCALE: 1" = 20'

LAYOUT L-1

STATE OF CALIFORNIA - DEPARTMENT OF TRANSPORTATION
Caltrans® DESIGN

BIJAN SAMRAD | REVISED BY
TODD LARK | DATE REVISED
CALCULATED-DESIGNED BY
CHECKED BY
FUNCTIONAL SUPERVISOR
L.R. ASHLEY

P:\PROJ\01\45090\drafting\01000219\01000002191ea001.dgn

LAST REVISION 02-06-13
DATE PLOTTED => 27-JUN-2013
TIME PLOTTED => 14:29

BORDER LAST REVISED 7/2/2010
USERNAME => s121614
DGN FILE => 01000002191ea001.dgn
RELATIVE BORDER SCALE IS IN INCHES 0 1 2 3
UNIT 0313
PROJECT NUMBER & PHASE 01000002191

Dist	COUNTY	ROUTE	POST MILES TOTAL PROJECT	SHEET No.	TOTAL SHEETS
01	Hum	169	13.6/23.4	7	86

REGISTERED CIVIL ENGINEER 02/08/13 DATE

6-17-13
PLANS APPROVAL DATE

REGISTERED PROFESSIONAL ENGINEER LENA R. ASHLEY No. 48764 Exp. 9-30-14 CIVIL STATE OF CALIFORNIA

THE STATE OF CALIFORNIA OR ITS OFFICERS OR AGENTS SHALL NOT BE RESPONSIBLE FOR THE ACCURACY OR COMPLETENESS OF SCANNED COPIES OF THIS PLAN SHEET.

CURVE DATA

No.	R	Δ	T	L	N	E
21	710.00	12°07′47″	75.44	150.31	2361811.05	6048551.52
22	190.00	-21°37′16″	36.28	71.69	2361967.30	6049440.07
23	250.00	-31°14′57″	69.92	136.35	2361918.12	6049549.04
24	650.00	11°55′34″	67.89	135.29	2361081.70	6049218.52
25	550.00	-3°52′41″	18.62	37.23	2362054.74	6049920.97

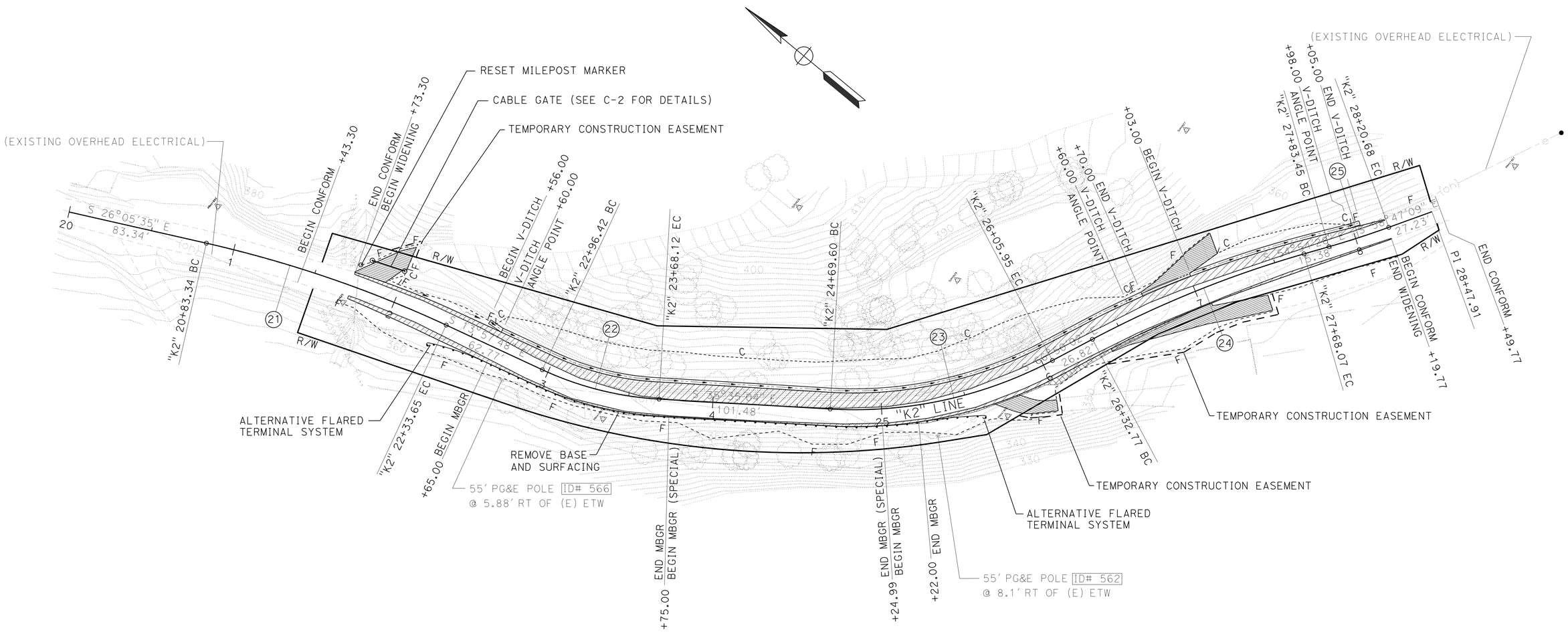

LOCATION 2

"K2" 21+50 TO "K2" 28+50
(PM: 18.94/19.08)

SCALE: 1" = 30′

LAYOUT L-2

REVISED BY	DATE REVISED

BIJAN SAMRAD — TODD LARK — CALCULATED-DESIGNED BY — CHECKED BY — FUNCTIONAL SUPERVISOR — L.R. ASHLEY

STATE OF CALIFORNIA - DEPARTMENT OF TRANSPORTATION — DESIGN

Caltrans

P:\PROJ\01\45030\drafting\01000219\01000002191ea002.dgn

LAST REVISION 02-06-13 — DATE PLOTTED => 18-JUN-2013 — TIME PLOTTED => 07:29

Dist	COUNTY	ROUTE	POST MILES TOTAL PROJECT	SHEET No.	TOTAL SHEETS
01	Hum	169	13.6/23.4	8	86

REGISTERED CIVIL ENGINEER 02/08/13 DATE

6-17-13
PLANS APPROVAL DATE

REGISTERED PROFESSIONAL ENGINEER LENA R. ASHLEY No. 48764 Exp. 9-30-14 CIVIL STATE OF CALIFORNIA

THE STATE OF CALIFORNIA OR ITS OFFICERS OR AGENTS SHALL NOT BE RESPONSIBLE FOR THE ACCURACY OR COMPLETENESS OF SCANNED COPIES OF THIS PLAN SHEET.

CURVE DATA

No.	R	Δ	T	L	N	E
31	130.00	12°18'58"	14.03	27.94	2355215.59	6052220.14
32	520.00	-5°5'39"	23.13	46.23	2355185.56	6052873.87
33	220.00	-24°20'31"	47.45	93.47	2355039.73	6052593.45
34	125.00	-57°58'43"	69.26	126.49	2354965.98	6052528.32
35	450.00	27°43'59"	111.09	217.82	2354392.37	6052590.67

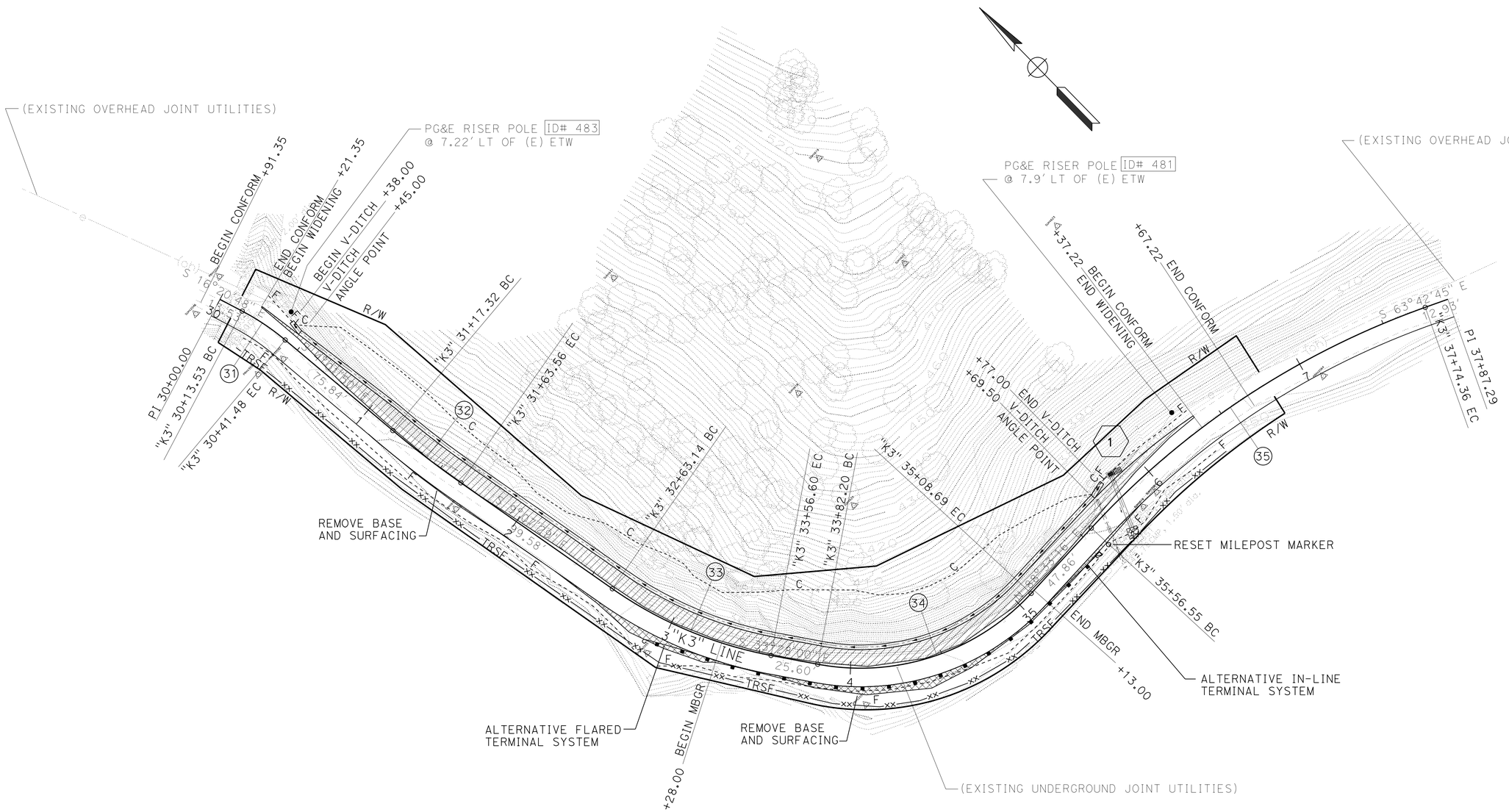

LOCATION 3

"K3" 30+00 TO "K3" 36+70
(PM: 20.48/20.62)

SCALE: 1" = 30'

LAYOUT L-3

REVISED BY	DATE REVISED
BIJAN SAMRAD	TODD LARK

CALCULATED-DESIGNED BY / CHECKED BY

FUNCTIONAL SUPERVISOR: L.R. ASHLEY

STATE OF CALIFORNIA - DEPARTMENT OF TRANSPORTATION
Caltrans
DESIGN

P:\PROJ\01\45090\drafting\01000002191\01000002191ea003.dgn

LAST REVISION 02-06-13 | DATE PLOTTED => 27-JUN-2013 | TIME PLOTTED => 14:29

Dist	COUNTY	ROUTE	POST MILES TOTAL PROJECT	SHEET No.	TOTAL SHEETS
01	Hum	169	13.6/23.4	9	86

REGISTERED CIVIL ENGINEER 02/08/13 DATE

6-17-13
PLANS APPROVAL DATE

REGISTERED PROFESSIONAL ENGINEER LENA R. ASHLEY No. 48764 Exp. 9-30-14 CIVIL STATE OF CALIFORNIA

THE STATE OF CALIFORNIA OR ITS OFFICERS OR AGENTS SHALL NOT BE RESPONSIBLE FOR THE ACCURACY OR COMPLETENESS OF SCANNED COPIES OF THIS PLAN SHEET.

CURVE DATA

No.	R	Δ	T	L	N	E
41	200.00	12°25'26"	21.77	43.37	2355683.04	6060684.31
42	80.00	-91°2'27"	81.47	127.12	2355453.81	6060929.25
43	185.00	34°0'35"	56.58	109.81	2355177.62	6060982.86

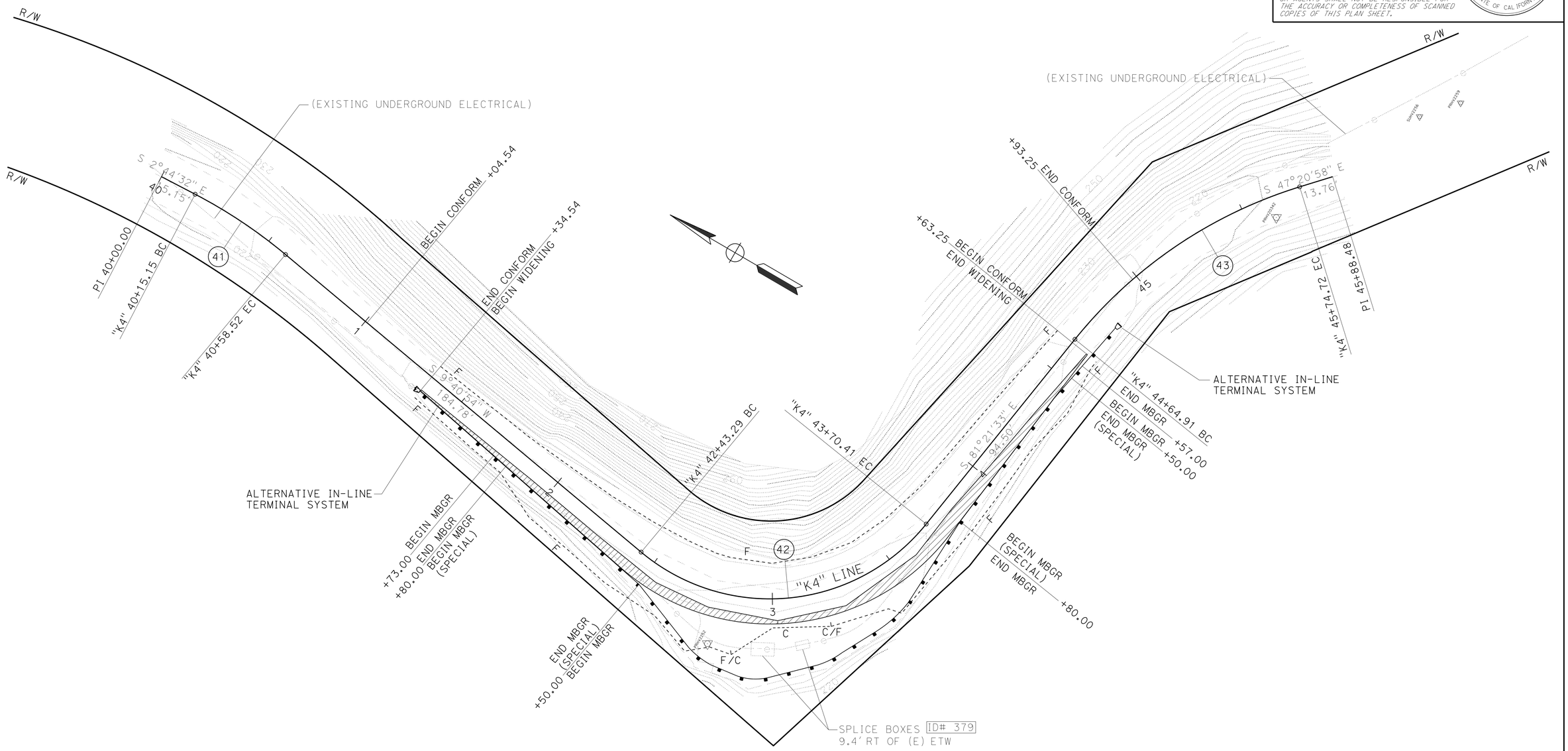

LOCATION 4

"K4" 41+00 TO "K4" 45+00
(PM: 22.46/22.54)

SCALE: 1" = 20'

LAYOUT L-4

REVISED BY	DATE REVISED
BIJAN SAMRAD	
TODD LARK	

CALCULATED-DESIGNED BY
CHECKED BY

FUNCTIONAL SUPERVISOR
L.R. ASHLEY

STATE OF CALIFORNIA - DEPARTMENT OF TRANSPORTATION
Caltrans
DESIGN

P:\PROJ\01\45090\drafting\0100000219\0100000219ea004.dgn

LAST REVISION 02-06-13
DATE PLOTTED => 18-JUN-2013
TIME PLOTTED => 08:07

Dist	COUNTY	ROUTE	POST MILES TOTAL PROJECT	SHEET No.	TOTAL SHEETS
01	Hum	169	13.6/23.4	10	86

REGISTERED CIVIL ENGINEER 02/08/13 DATE

6-17-13
PLANS APPROVAL DATE

REGISTERED PROFESSIONAL ENGINEER LENA R. ASHLEY No. 48764 Exp. 9-30-14 CIVIL STATE OF CALIFORNIA

THE STATE OF CALIFORNIA OR ITS OFFICERS OR AGENTS SHALL NOT BE RESPONSIBLE FOR THE ACCURACY OR COMPLETENESS OF SCANNED COPIES OF THIS PLAN SHEET.

CURVE DATA

No.	R	Δ	T	L	N	E
51	80.00	38°33'22"	27.98	53.83	2355111.09	6061283.45
52	120.00	-41°9'34"	45.06	86.20	2355094.46	6061513.64
53	250.00	40°33'26"	92.37	176.96	2354749.32	6061379.75

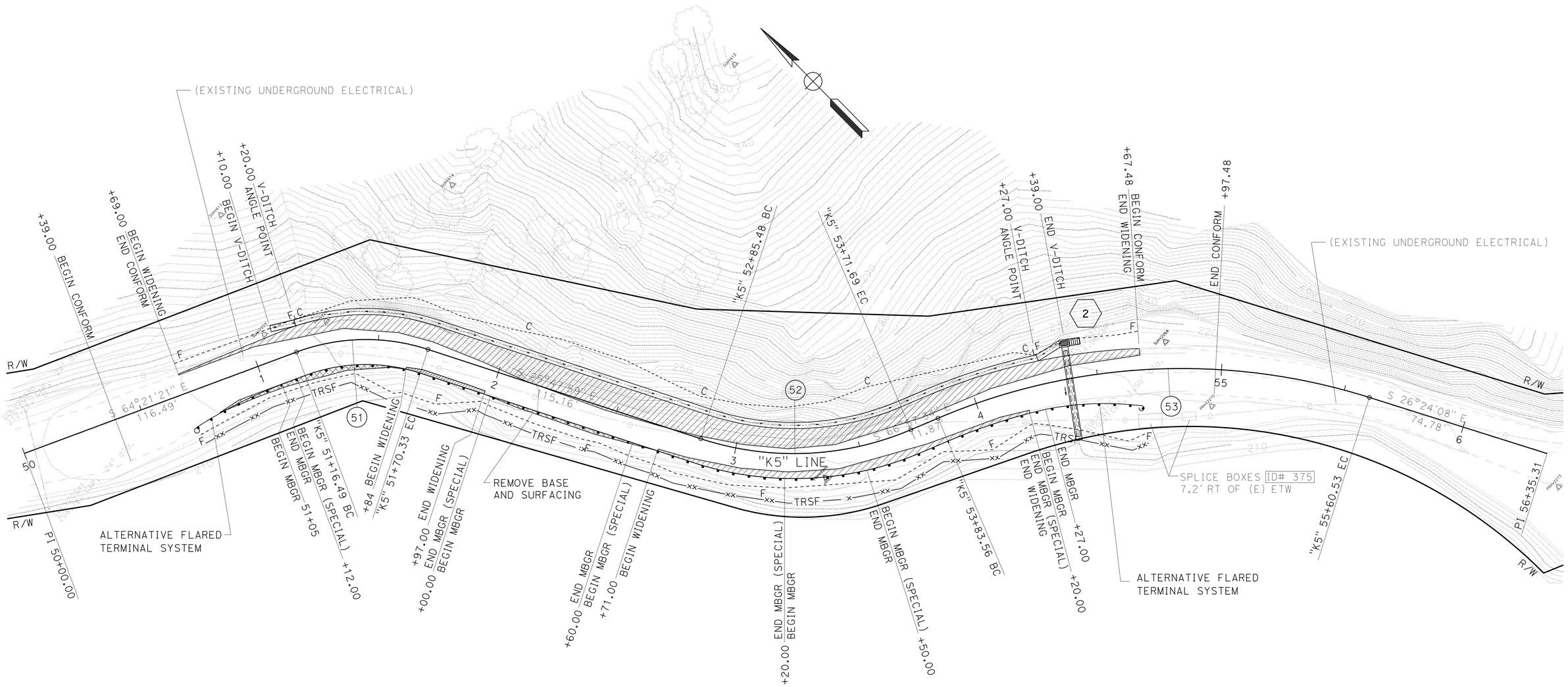

LOCATION 5

"K5" 50+40 TO "K5" 55+00
(PM: 22.60/22.71)

SCALE: 1" = 20'

LAYOUT L-5

REVISED BY	DATE REVISED
BIJAN SAMRAD	
TODD LARK	
CALCULATED-DESIGNED BY	
CHECKED BY	
FUNCTIONAL SUPERVISOR	
L.R. ASHLEY	

STATE OF CALIFORNIA - DEPARTMENT OF TRANSPORTATION
Caltrans
DESIGN

P:\PROJ\01\45930\drafting\01000219\0100000219ea005.dgn

LAST REVISION 02-06-13
DATE PLOTTED => 27-JUN-2013
TIME PLOTTED => 14:29

Dist	COUNTY	ROUTE	POST MILES TOTAL PROJECT	SHEET No.	TOTAL SHEETS
01	Hum	169	13.6/23.4	11	86

REGISTERED CIVIL ENGINEER 02/08/13 DATE

6-17-13
PLANS APPROVAL DATE

REGISTERED PROFESSIONAL ENGINEER LENA R. ASHLEY No. 48764 Exp. 9-30-14 CIVIL STATE OF CALIFORNIA

THE STATE OF CALIFORNIA OR ITS OFFICERS OR AGENTS SHALL NOT BE RESPONSIBLE FOR THE ACCURACY OR COMPLETENESS OF SCANNED COPIES OF THIS PLAN SHEET.

CURVE DATA

No.	R	Δ	T	L	N	E
61	550.00	-9°42'13"	46.69	93.15	2355230.92	6061958.87
62	80.00	39°46'37"	28.94	55.54	2354617.19	6061799.89
63	80.00	-39°21'54"	28.62	54.96	2354681.80	6061947.09
64	110.00	23°43'45"	23.11	45.56	2354491.12	6061912.99
65	600.00	-3°15'23"	17.06	34.10	2354949.75	6062458.30

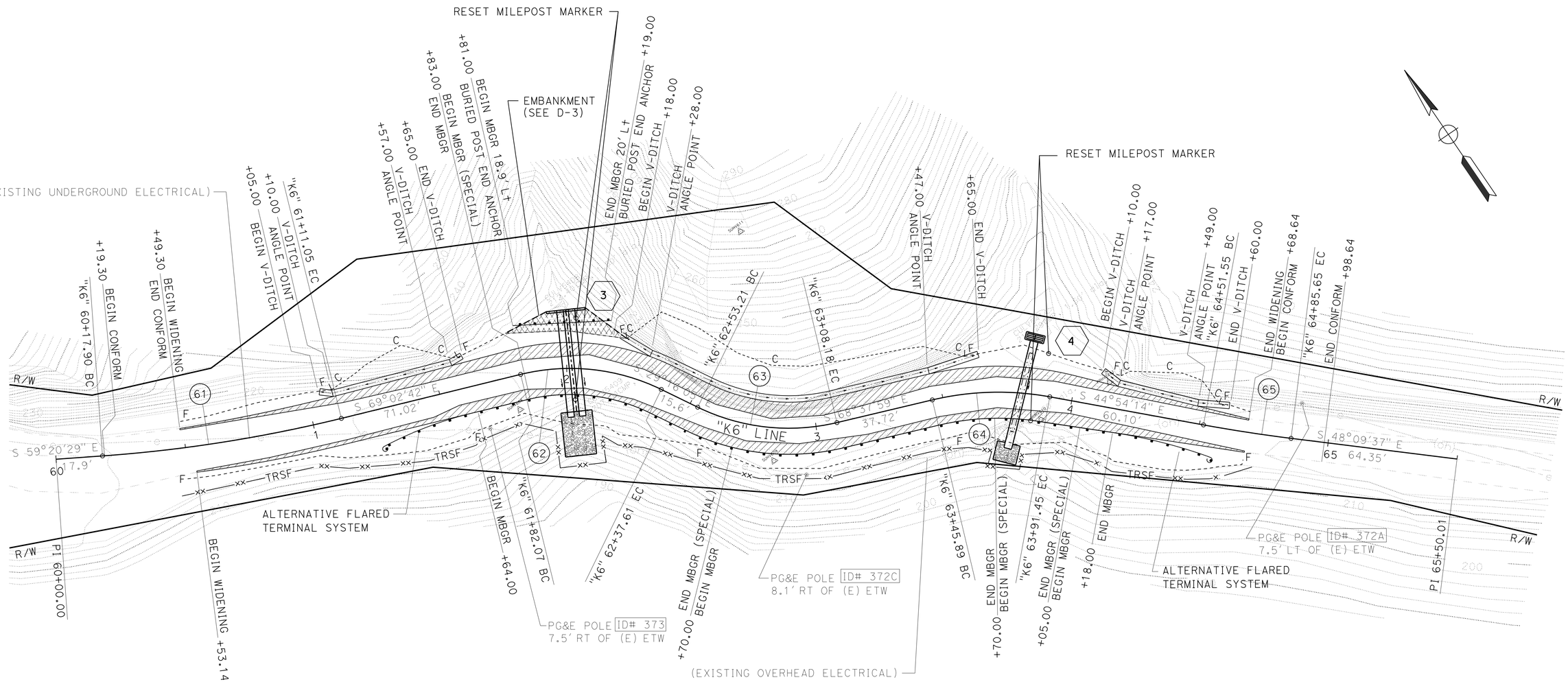

LOCATION 6

"K6" 60+20 TO "K6" 65+00
(PM: 22.73/22.82)

SCALE: 1" = 20'

LAYOUT L-6

REVISED BY	DATE REVISED
BIJAN SAMRAD	TODD LARK

CALCULATED-DESIGNED BY / CHECKED BY

FUNCTIONAL SUPERVISOR: L.R. ASHLEY

STATE OF CALIFORNIA - DEPARTMENT OF TRANSPORTATION
DESIGN

LAST REVISION 05-29-13 | DATE PLOTTED => 27-JUN-2013 | TIME PLOTTED => 14:29

P:\PROJ\01\4509\drafting\01000002191\0100000219ea006.dgn

Dist	COUNTY	ROUTE	POST MILES TOTAL PROJECT	SHEET No.	TOTAL SHEETS
01	Hum	169	13.6/23.4	12	86

REGISTERED CIVIL ENGINEER 02/08/13 DATE

6-17-13
PLANS APPROVAL DATE

REGISTERED PROFESSIONAL ENGINEER LENA R. ASHLEY No. 48764 Exp. 9-30-14 CIVIL STATE OF CALIFORNIA

THE STATE OF CALIFORNIA OR ITS OFFICERS OR AGENTS SHALL NOT BE RESPONSIBLE FOR THE ACCURACY OR COMPLETENESS OF SCANNED COPIES OF THIS PLAN SHEET.

CURVE DATA

No.	R	Δ	T	L	N	E
71	522.00	-6°51'58"	31.31	62.55	2354530.51	6062734.53
72	220.00	16°17'24"	31.49	62.55	2353997.02	6062218.20
73	170.00	-28°49'49"	43.70	85.54	2354136.03	6062585.68
74	330.00	-14°56'40"	43.28	86.07	2354253.80	6062697.65
75	610.00	13°41'28"	73.23	145.76	2353336.22	6062477.36

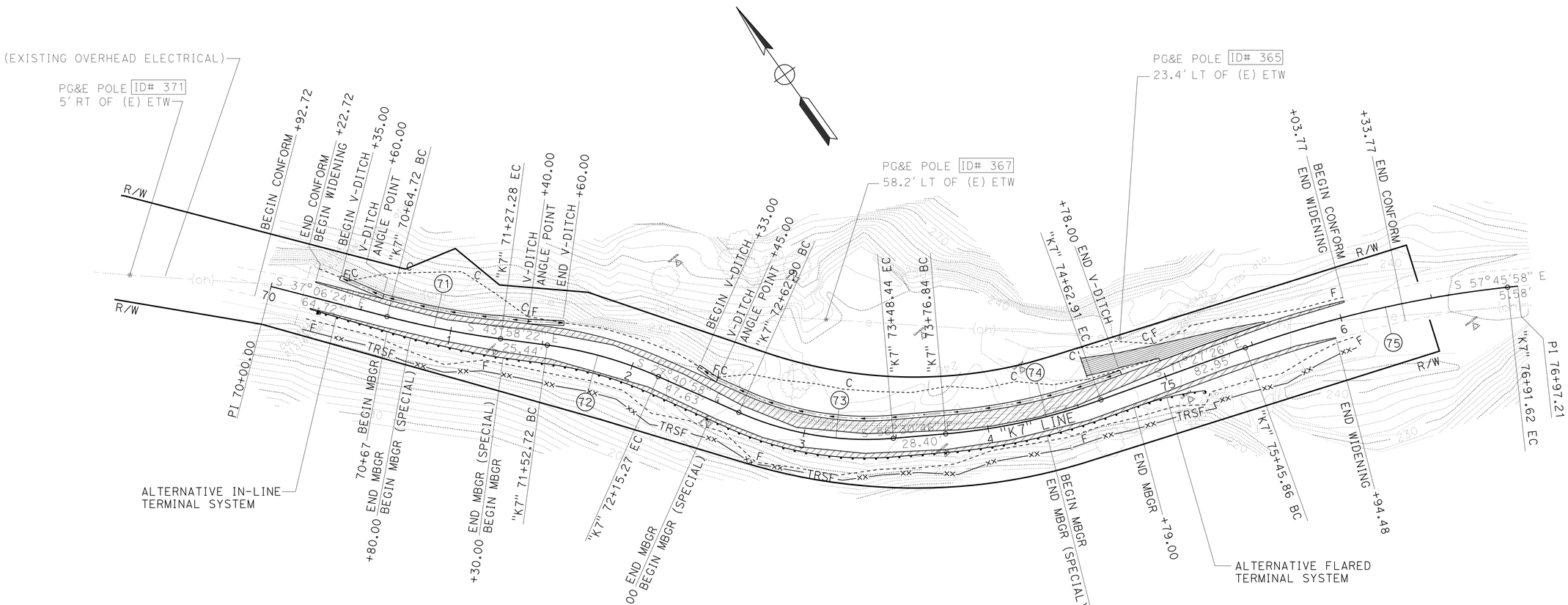

LOCATION 7

"K7" 70+00 TO "K7" 76+40
(PM: 22.88/22.99)

SCALE: 1" = 30'

LAYOUT L-7

REVISED BY	DATE REVISED

CALCULATED-DESIGNED BY: BIJAN SAMRAD
CHECKED BY: TODD LARK
FUNCTIONAL SUPERVISOR: L.R. ASHLEY

STATE OF CALIFORNIA - DEPARTMENT OF TRANSPORTATION
Caltrans
DESIGN

P:\PROJ\01\4590\drafting\01000002191\01000002191ea007.dgn

LAST REVISION 02-06-13 | DATE PLOTTED => 27-JUN-2013 | TIME PLOTTED => 14:29

Dist	COUNTY	ROUTE	POST MILES TOTAL PROJECT	SHEET No.	TOTAL SHEETS
01	Hum	169	13.6/23.4	13	86

REGISTERED CIVIL ENGINEER 02/08/13 DATE

6-17-13
PLANS APPROVAL DATE

REGISTERED PROFESSIONAL ENGINEER LENA R. ASHLEY No. 48764 Exp. 9-30-14 CIVIL STATE OF CALIFORNIA

THE STATE OF CALIFORNIA OR ITS OFFICERS OR AGENTS SHALL NOT BE RESPONSIBLE FOR THE ACCURACY OR COMPLETENESS OF SCANNED COPIES OF THIS PLAN SHEET.

CURVE DATA

No.	R	Δ	T	L	N	E
81	300.00	-6°39'59"	17.47	34.91	2353502.99	6063860.16
82	650.00	5°3'10"	28.68	57.32	2352542.20	6063863.44
83	380.00	-19°1'60"	63.70	126.23	2353528.20	6064168.86
84	130.00	-25°59'22"	30.00	58.97	2353279.72	6064196.61
85	190.00	19°32'25"	32.72	64.79	2353048.95	6064434.26
86	400.00	16°58'34"	59.69	118.52	2352846.34	6064490.99

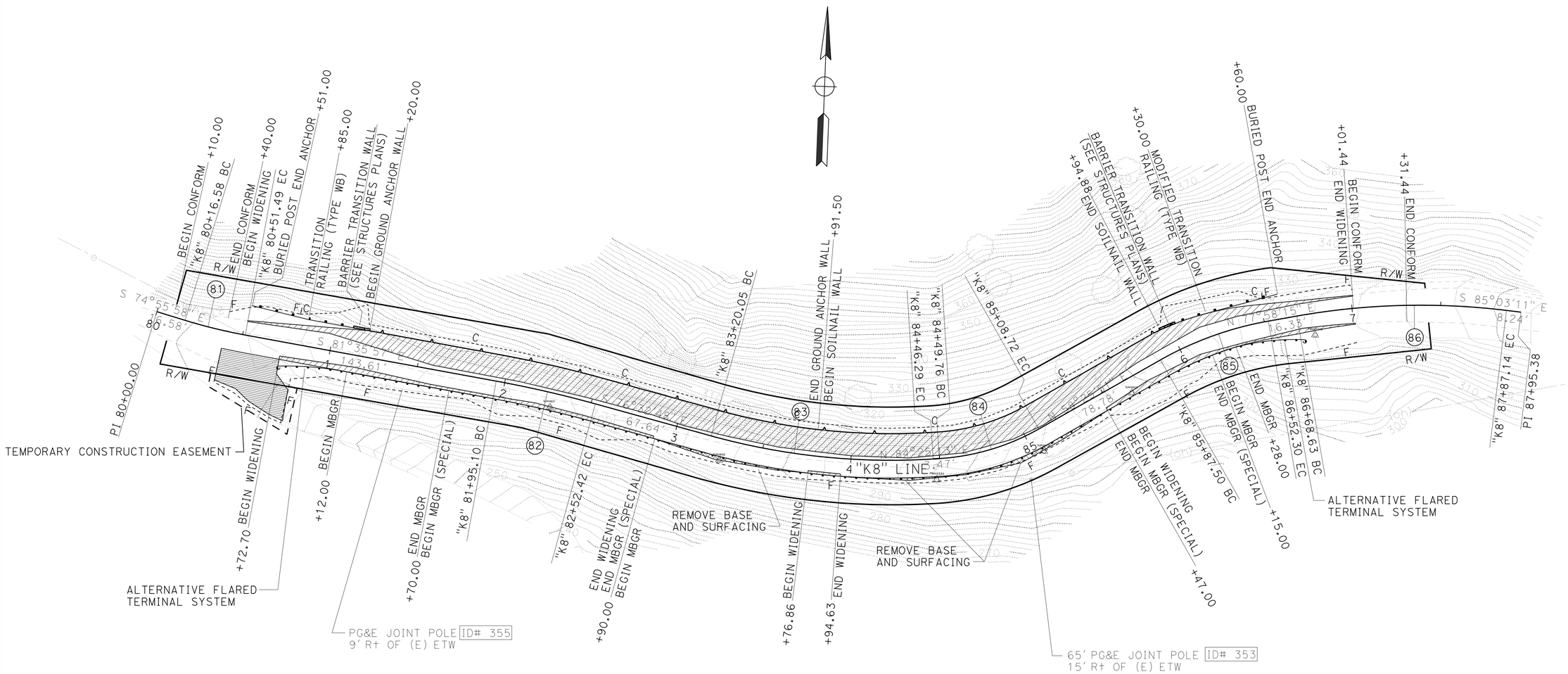

LOCATION 8

"K8" 80+20 TO "K8" 87+35
(PM: 23.25/23.39)

SCALE: 1" = 30'

LAYOUT L-8

REVISED BY	DATE REVISED
BIJAN SAMRAD	
TODD LARK	

CALCULATED-DESIGNED BY
CHECKED BY

FUNCTIONAL SUPERVISOR
L.R. ASHLEY

STATE OF CALIFORNIA - DEPARTMENT OF TRANSPORTATION
Caltrans
DESIGN

P:\PROJ\01\45030\drafting\0100002219\0100002219ea008.dgn

LAST REVISION 04-16-13
DATE PLOTTED => 18-JUN-2013
TIME PLOTTED => 08:08

Dist	COUNTY	ROUTE	POST MILES TOTAL PROJECT	SHEET No.	TOTAL SHEETS
01	Hum	169	13.6/23.4	14	86

REGISTERED CIVIL ENGINEER 02/08/13 DATE

6-17-13
PLANS APPROVAL DATE

REGISTERED PROFESSIONAL ENGINEER LENA R. ASHLEY No. 48764 Exp. 9-30-14 CIVIL STATE OF CALIFORNIA

THE STATE OF CALIFORNIA OR ITS OFFICERS OR AGENTS SHALL NOT BE RESPONSIBLE FOR THE ACCURACY OR COMPLETENESS OF SCANNED COPIES OF THIS PLAN SHEET.

NOTES:

1. APPROXIMATE EXCAVATION PER PRECAST CONCRETE BEAM IS 2.63 Feet.
2. SEE HARDWARE CHART FOR DIMENSIONS.
3. NEST ELEMENTS TO SECOND CONVENTIONAL POST.
4. MINIMUM 12" BELOW FINISH GRADE TO TOP OF PRECAST BEAM.

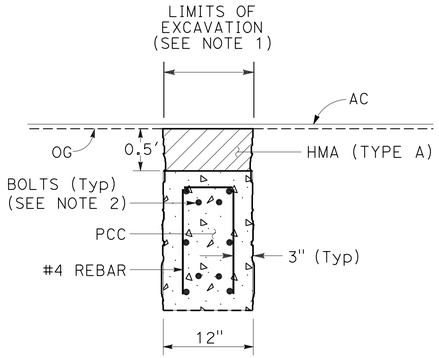

SECTION B-B

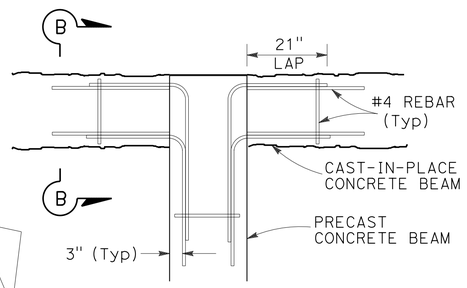

(CAST-IN-PLACE)

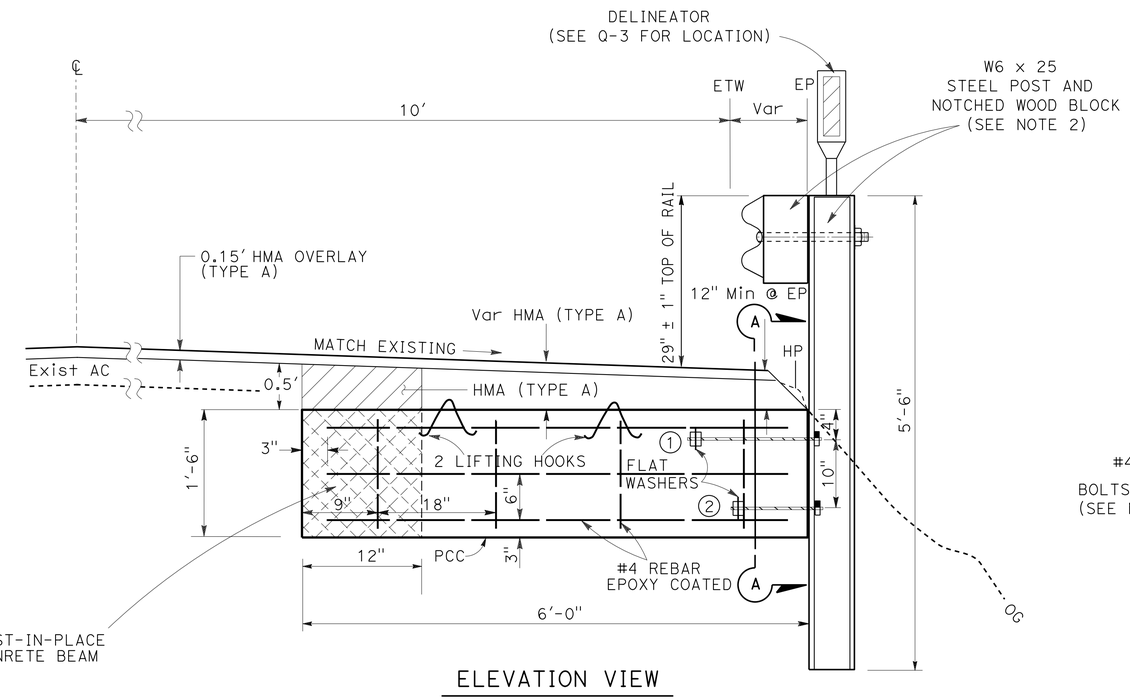

ELEVATION VIEW

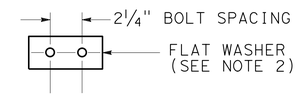

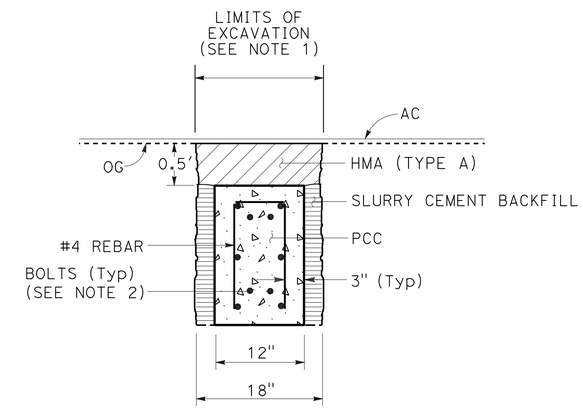

SECTION A-A

(PRECAST) CONCRETE BEAM

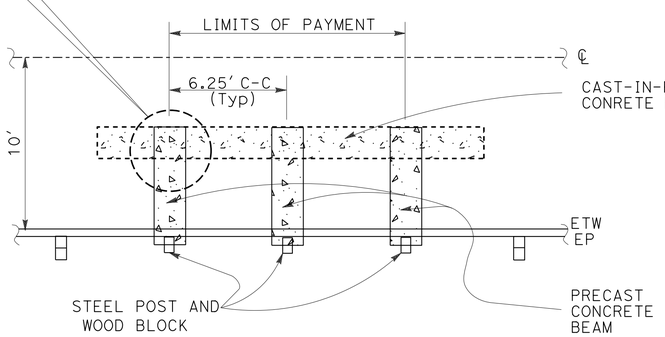

PLAN VIEW

(CAST-IN-PLACE) CONCRETE BEAM DETAIL

HARDWARE CHART FOR PRECAST CONCRETE BEAM

Case	Steel Post	Wood Block	①	②	Bolt Spacing
Precast Beam	W6 x 25	6" x 8" x 1'-2"	2 EA ¾" Dia x 1'-6" HS Bolts (Threaded Both Ends) With 3 EA Hex Nuts And 3" x 7" x ¼" Flat Washer.	2 EA ⅝" Dia x 1' HS Bolts (Threaded Both Ends) With 3 EA Hex Nuts And 3" x 7" x ¼" Flat Washer.	2¼"

MBGR (SPECIAL)

NO SCALE

CONSTRUCTION DETAILS
C-1

STATE OF CALIFORNIA - DEPARTMENT OF TRANSPORTATION
DESIGN
Caltrans
FUNCTIONAL SUPERVISOR: L.R. ASHLEY
CALCULATED-DESIGNED BY: BIJAN SAMRAD
CHECKED BY: TODD LARK
REVISED BY
DATE REVISED

P:\PROJ\01\45930\drafting\01000002191\0100000219ga001.dgn

LAST REVISION 02-06-13
DATE PLOTTED => 18-JUN-2013
TIME PLOTTED => 08:08

Dist	COUNTY	ROUTE	POST MILES TOTAL PROJECT	SHEET No.	TOTAL SHEETS
01	Hum	169	13.6/23.4	15	86

REGISTERED CIVIL ENGINEER 02/08/13 DATE

6-17-13
PLANS APPROVAL DATE

REGISTERED PROFESSIONAL ENGINEER LENA R. ASHLEY No. 48764 Exp. 9-30-14 CIVIL STATE OF CALIFORNIA

THE STATE OF CALIFORNIA OR ITS OFFICERS OR AGENTS SHALL NOT BE RESPONSIBLE FOR THE ACCURACY OR COMPLETENESS OF SCANNED COPIES OF THIS PLAN SHEET.

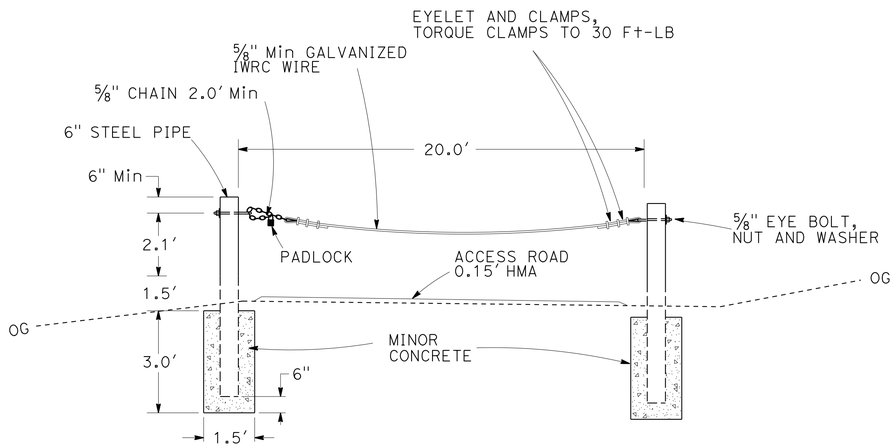

CABLE GATE

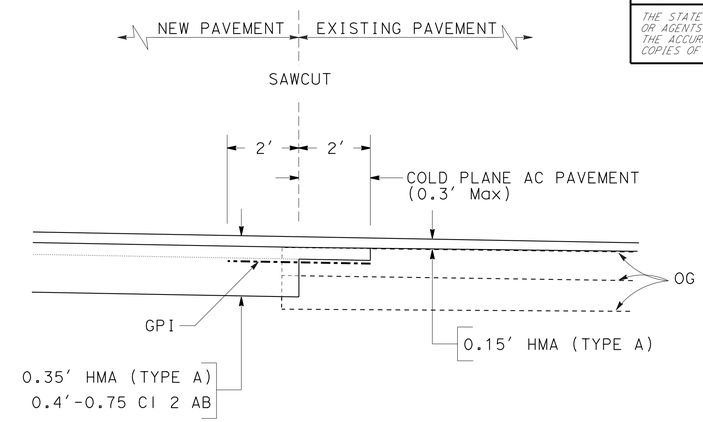

GEOSYNTHETIC PAVEMENT INTERLAYER (GPI)

LONGITUDINAL

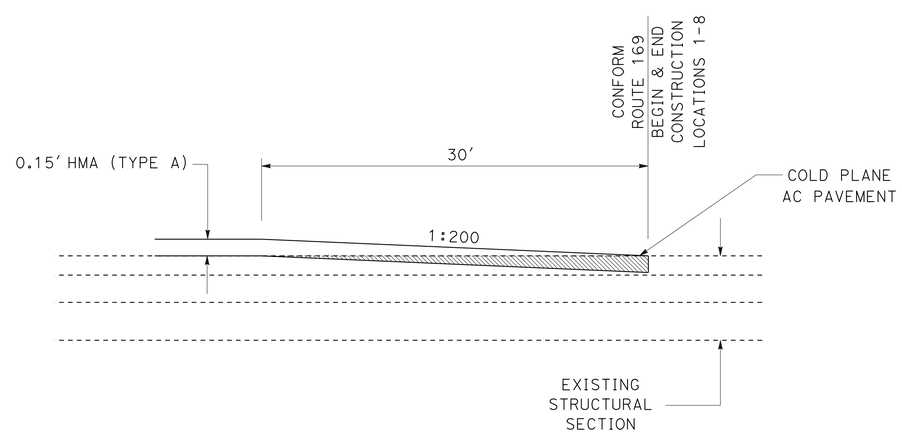

PAVING CONFORM TAPERS

TRANSVERSE

NO SCALE

CONSTRUCTION DETAILS

C-2

REVISED BY | DATE REVISED

BIJAN SAMRAD | TODD LARK

CALCULATED-DESIGNED BY | CHECKED BY

FUNCTIONAL SUPERVISOR: L.R. ASHLEY

STATE OF CALIFORNIA - DEPARTMENT OF TRANSPORTATION

Caltrans® **DESIGN**

P:\PROJ\01\45030\drafting\01000002191\0100000219ga002.dgn

LAST REVISION 02-06-13 | DATE PLOTTED => 18-JUN-2013 | TIME PLOTTED => 08:08

Dist	COUNTY	ROUTE	POST MILES TOTAL PROJECT	SHEET No.	TOTAL SHEETS
01	Hum	169	13.6/23.4	16	86

Laura Lazzarotto
LICENSED LANDSCAPE ARCHITECT

6-17-13
PLANS APPROVAL DATE

LICENSED LANDSCAPE ARCHITECT
Laura Lazzarotto
Expiration Date
8-31-13
Renewal Date
02/08/13
Date
STATE OF CALIFORNIA

THE STATE OF CALIFORNIA OR ITS OFFICERS OR AGENTS SHALL NOT BE RESPONSIBLE FOR THE ACCURACY OR COMPLETENESS OF SCANNED COPIES OF THIS PLAN SHEET.

SEED MIX

SEED	BOTANICAL NAME (COMMON NAME)	PERCENT GERMINATION (MINIMUM)	POUNDS PURE LIVE SEED PER ACRE (SLOPE MEASUREMENT)
MIX 1	ACHILLEA MILLEFOLIUM (WHITE YARROW)	40	1
	BROMUS CARINATUS 'REDDING'[1] (CALIFORNIA BROME, REDDING)	70	15
	ELYMUS MULTISETUS 'TEHAMA COUNTY'[1] (BIG SQUIRRELTAIL, TEHAMA COUNTY)	45	3
	FESTUCA CALIFORNICA 'NAPA'[1] (CALIFORNIA FESCUE, NAPA)	45	5
	FESTUCA IDAHOENSIS 'NATIVE'[1] (IDAHO FESCUE, NATIVE)	60	10
	HORDEUM VULGARE var. 'UC 603' (COMMON BARLEY)	85	70
	MELICA CALIFORNICA 'BUTTE COUNTY HILLS'[1] (CALIFORNIA MELIC, BUTTE COUNTY HILLS)	50	5

[1]SEED PRODUCED IN NORTHWEST CALIFORNIA ONLY.

LEGEND:

- HYDROSEED
- MULCH
- FR — FIBER ROLLS
- V-DITCH
- RETAINING WALL

FIBER ROLLS

SEQUENCE	ITEM	MATERIAL		REMARKS
		DESCRIPTION	TYPE	
Fiber Rolls must be installed before Erosion Control.	FIBER ROLLS	FIBER ROLL	TYPE B 8" TO 10" Dia	Type 1 Fiber Roll Installation

EROSION CONTROL TYPE 1

SEQUENCE	ITEM	MATERIAL		APPLICATION RATE
		DESCRIPTION	TYPE	
STEP 1	HYDROSEED	SEED	MIX 1	109 LB/ACRE
		FIBER	WOOD	1200 LB/ACRE
		TACKIFIER	PSYLLIUM	140 LB/ACRE

EROSION CONTROL TYPE 2

ITEM	MATERIAL		APPLICATION RATE
	DESCRIPTION	TYPE	
MULCH	BARK	MEDIUM	270 CY/ACRE

EROSION CONTROL TYPE 3

ITEM	MATERIAL	
	DESCRIPTION	TYPE
ROLLED EROSION CONTROL PRODUCT	EROSION CONTROL BLANKET	A

EROSION CONTROL LEGEND
ECL-1

REVISED BY | DATE REVISED
LAURA LAZZAROTTO | BIJAN SAMRAD
CALCULATED-DESIGNED BY | CHECKED BY
SENIOR LANDSCAPE ARCHITECT | RON FLORY

STATE OF CALIFORNIA - DEPARTMENT OF TRANSPORTATION
Caltrans® LANDSCAPE DESIGN

P:\PROJ\01\45090\drafting\01000002191\0100000219gf001.dgn

LAST REVISION 01-28-13 | DATE PLOTTED => 18-JUN-2013 | TIME PLOTTED => 08:08

Dist	COUNTY	ROUTE	POST MILES TOTAL PROJECT	SHEET No.	TOTAL SHEETS
01	Hum	169	13.6/23.4	17	86

Laura Lazzarotto
LICENSED LANDSCAPE ARCHITECT

6-17-13
PLANS APPROVAL DATE

LICENSED LANDSCAPE ARCHITECT
Laura Lazzarotto
Laura Lazzarotto
Signature
8-31-13
Renewal Date
02/08/13
Date
STATE OF CALIFORNIA

THE STATE OF CALIFORNIA OR ITS OFFICERS OR AGENTS SHALL NOT BE RESPONSIBLE FOR THE ACCURACY OR COMPLETENESS OF SCANNED COPIES OF THIS PLAN SHEET.

NOTE:

FOR ACCURATE RIGHT OF WAY DATA, CONTACT RIGHT OF WAY ENGINEERING AT THE DISTRICT OFFICE.

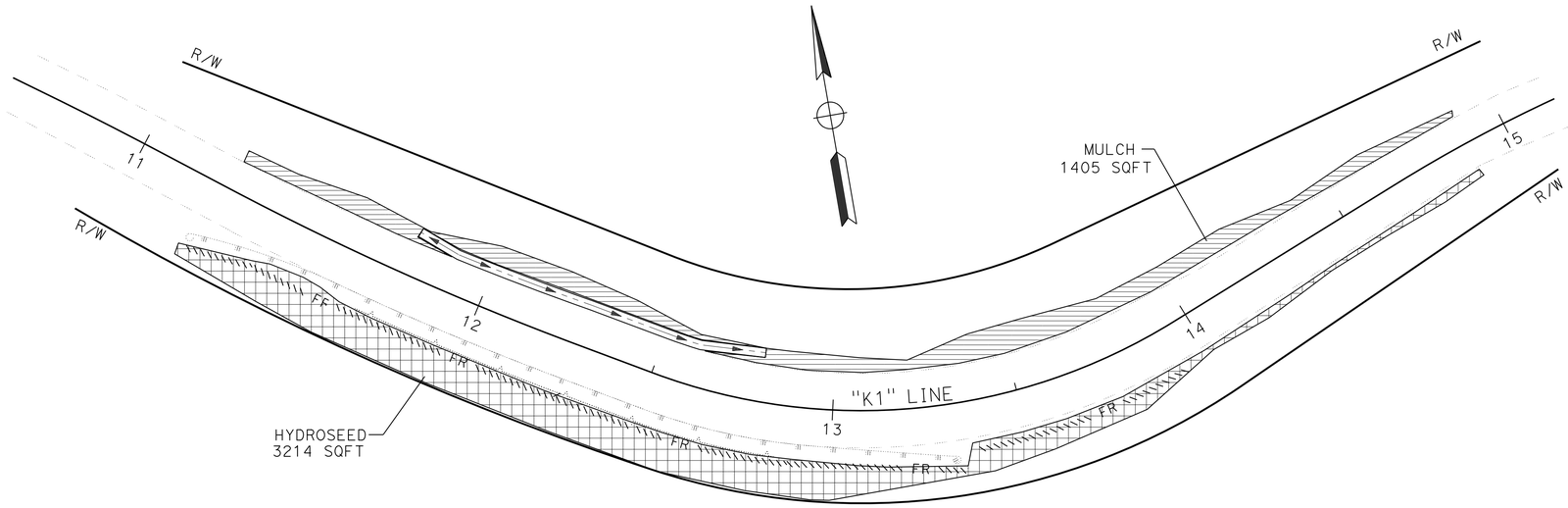

LOCATION 1

"K1" 10+95 TO "K1" 15+20
(PM: 13.66/13.73)

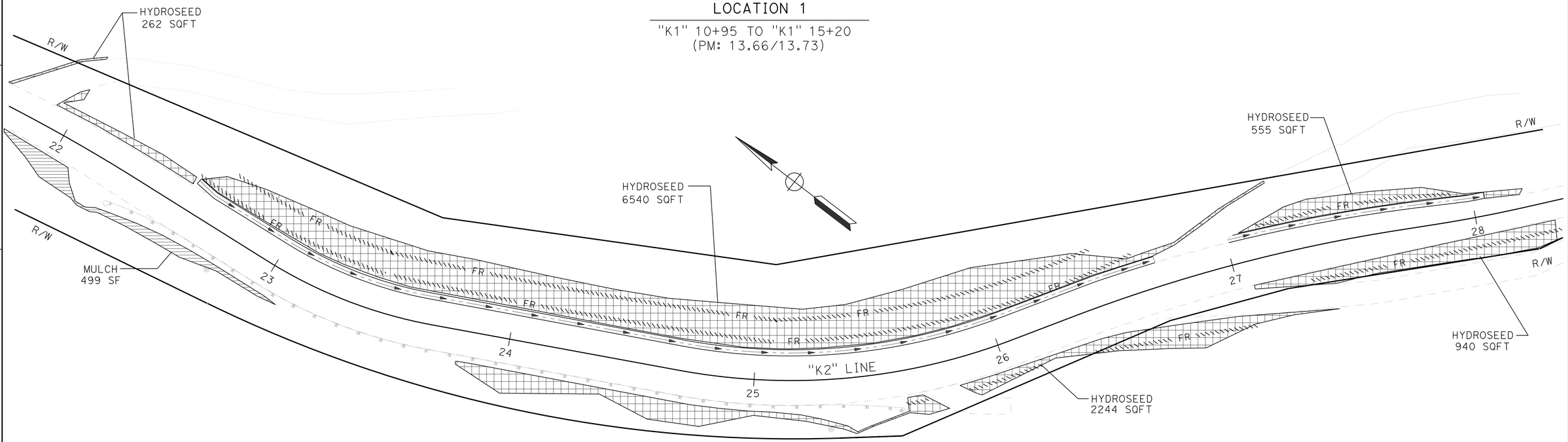

LOCATION 2

"K2" 21+50 TO "K2" 28+50
(PM: 18.94/19.08)

APPROVED FOR EROSION CONTROL WORK ONLY

SCALE: 1" = 20'

EROSION CONTROL PLAN
EC-1

REVISED BY | DATE REVISED
LAURA LAZZAROTTO | BIJAN SAMRAD
CALCULATED-DESIGNED BY | CHECKED BY
SENIOR LANDSCAPE ARCHITECT | RON FLORY

STATE OF CALIFORNIA - DEPARTMENT OF TRANSPORTATION
Caltrans® LANDSCAPE DESIGN

P:\PROJ\01\45090\drafting\01000219\01000002219ge001.dgn

LAST REVISION 01-28-13 | DATE PLOTTED => 18-JUN-2013 | TIME PLOTTED => 08:08

Dist	COUNTY	ROUTE	POST MILES TOTAL PROJECT	SHEET No.	TOTAL SHEETS
01	Hum	169	13.6/23.4	18	86

Laura Lazzarotto
LICENSED LANDSCAPE ARCHITECT

6-17-13
PLANS APPROVAL DATE

LICENSED LANDSCAPE ARCHITECT
Laura Lazzarotto
Expiration Date
8-31-13
Renewal Date
02/08/13
Date
STATE OF CALIFORNIA

THE STATE OF CALIFORNIA OR ITS OFFICERS OR AGENTS SHALL NOT BE RESPONSIBLE FOR THE ACCURACY OR COMPLETENESS OF SCANNED COPIES OF THIS PLAN SHEET.

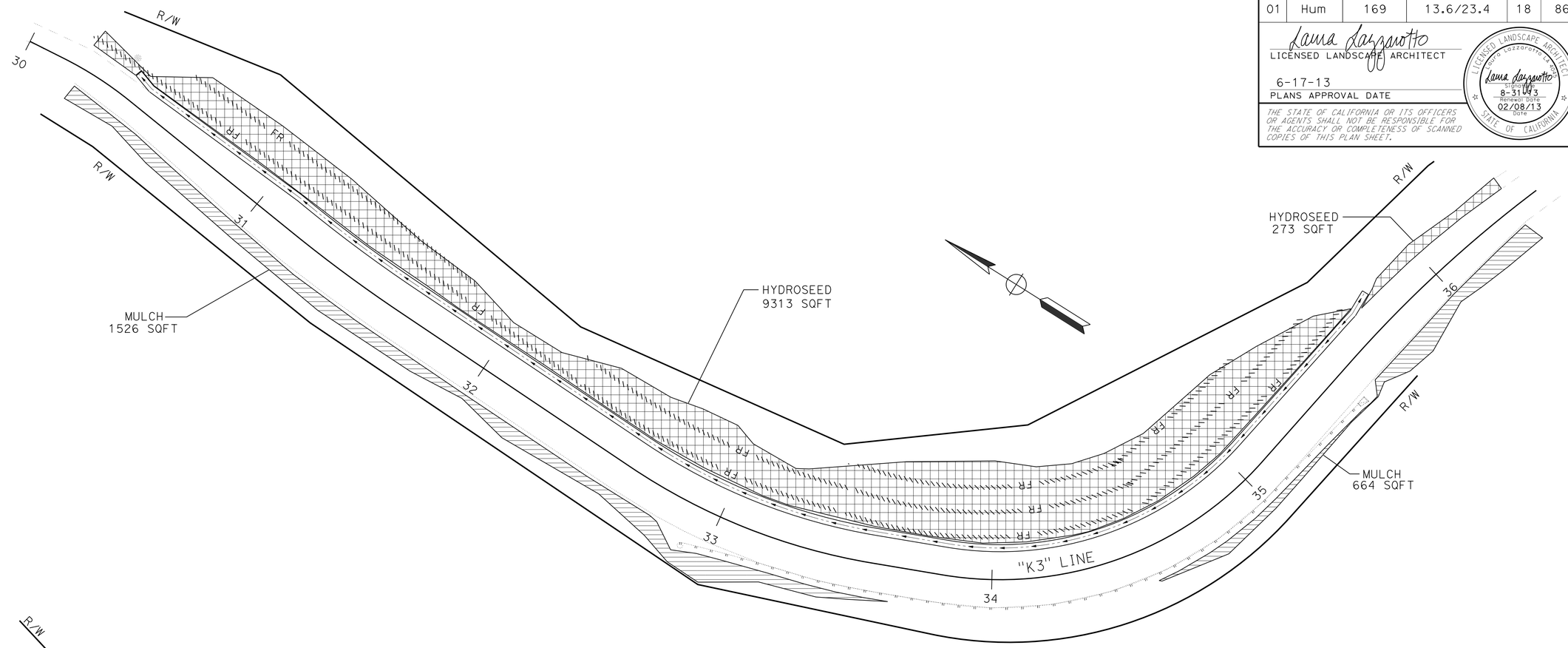

LOCATION 3

"K3" 30+00 TO "K3" 36+70
(PM: 20.48/20.62)

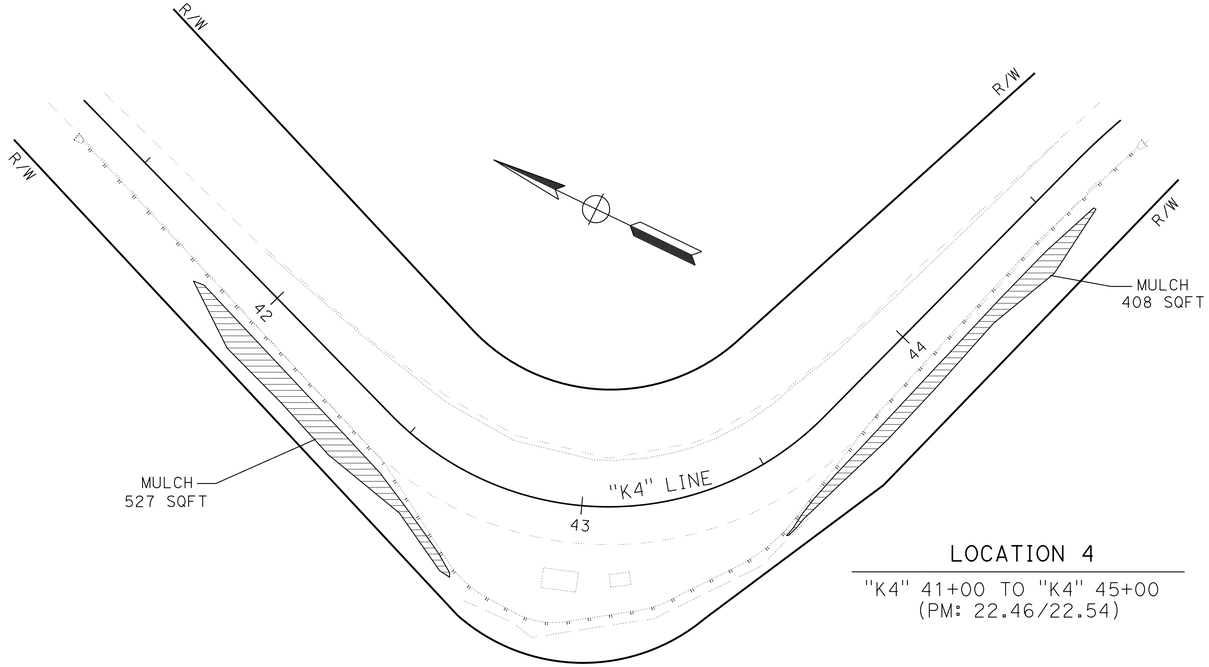

LOCATION 4

"K4" 41+00 TO "K4" 45+00
(PM: 22.46/22.54)

APPROVED FOR EROSION CONTROL WORK ONLY

SCALE: 1" = 20'

EROSION CONTROL PLAN
EC-2

STATE OF CALIFORNIA - DEPARTMENT OF TRANSPORTATION
Caltrans® LANDSCAPE DESIGN

SENIOR LANDSCAPE ARCHITECT: RON FLORY
CALCULATED-DESIGNED BY: LAURA LAZZAROTTO
CHECKED BY: BIJAN SAMRAD
REVISED BY
DATE REVISED

P:\PROJ\01\45090\drafting\01000002191\01000002191ge002.dgn

LAST REVISION 01-28-13
DATE PLOTTED => 18-JUN-2013
TIME PLOTTED => 08:08

Dist	COUNTY	ROUTE	POST MILES TOTAL PROJECT	SHEET No.	TOTAL SHEETS
01	Hum	169	13.6/23.4	19	86

Laura Lazzarotto
LICENSED LANDSCAPE ARCHITECT

6-17-13
PLANS APPROVAL DATE

LICENSED LANDSCAPE ARCHITECT
Laura Lazzarotto
Laura Lazzarotto
Signature
8-31-13
Renewal Date
02/08/13
Date
STATE OF CALIFORNIA

THE STATE OF CALIFORNIA OR ITS OFFICERS OR AGENTS SHALL NOT BE RESPONSIBLE FOR THE ACCURACY OR COMPLETENESS OF SCANNED COPIES OF THIS PLAN SHEET.

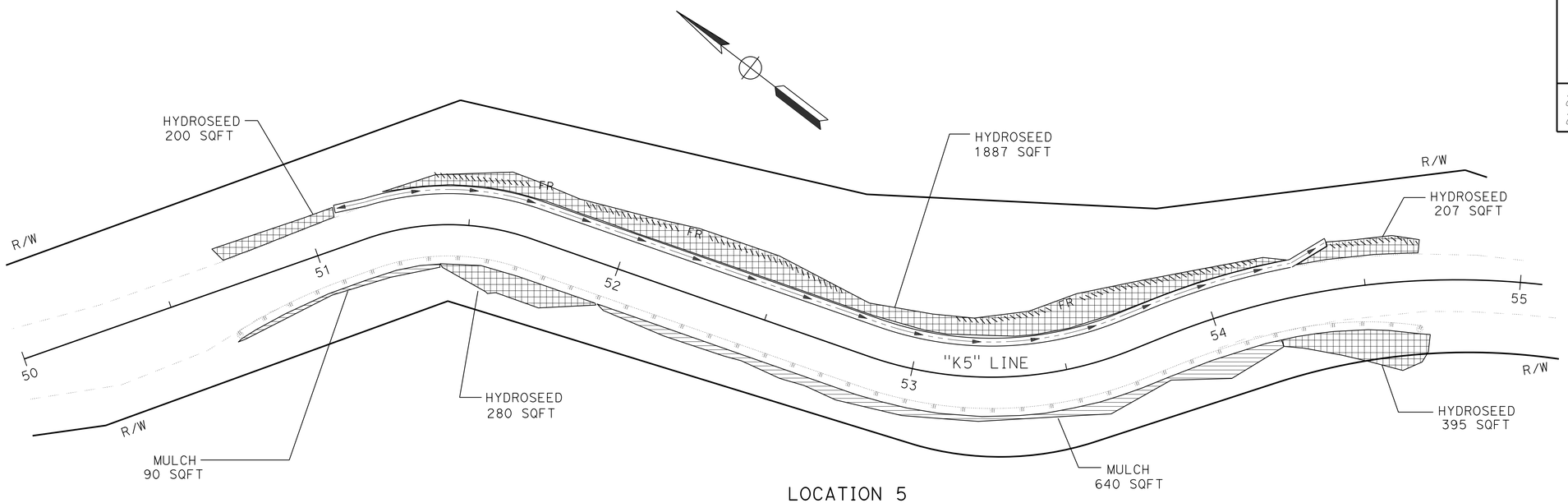

LOCATION 5

"K5" 50+40 TO "K5" 55+00
(PM: 22.60/22.71)

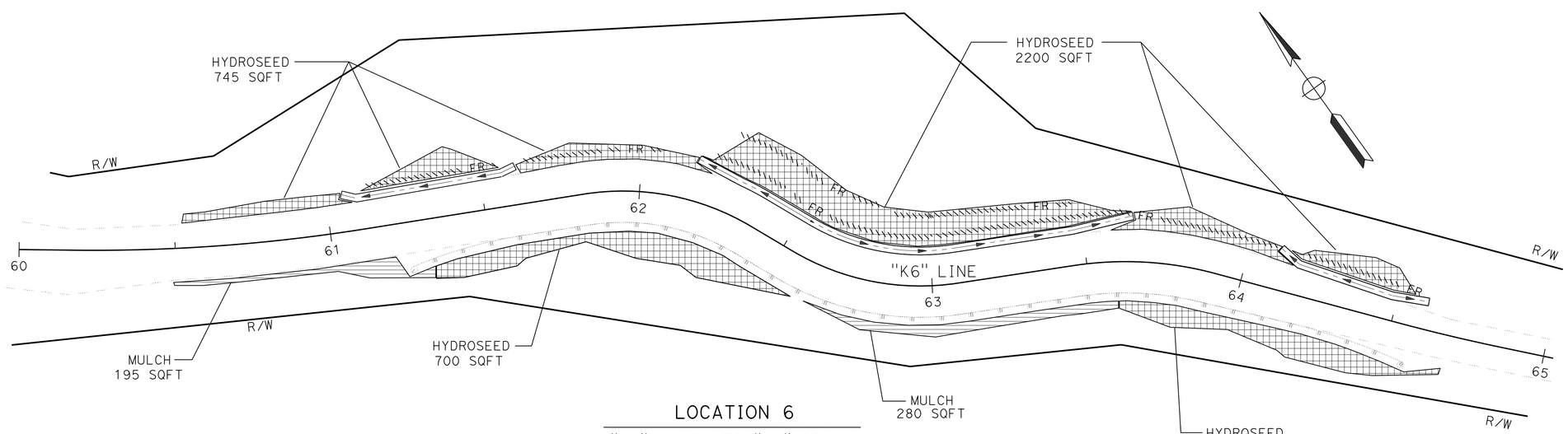

LOCATION 6

"K6" 60+20 TO "K6" 65+00
(PM: 22.73/22.82)

APPROVED FOR EROSION CONTROL WORK ONLY

SCALE: 1" = 20'

EROSION CONTROL PLAN
EC-3

REVISED BY | DATE REVISED
LAURA LAZZAROTTO | BIJAN SAMRAD
CALCULATED-DESIGNED BY | CHECKED BY
SENIOR LANDSCAPE ARCHITECT | RON FLORY

STATE OF CALIFORNIA - DEPARTMENT OF TRANSPORTATION
Caltrans® LANDSCAPE DESIGN

P:\PROJ\01\45090\drafting\01000002191\01000002191ge003.dgn

LAST REVISION 01-28-13
DATE PLOTTED => 18-JUN-2013
TIME PLOTTED => 08:08

BORDER LAST REVISED 7/2/2010
USERNAME => s109858
DGN FILE => 01000002191ge003.dgn
RELATIVE BORDER SCALE IS IN INCHES 0 1 2 3
UNIT 0313
PROJECT NUMBER & PHASE 01000002191

Dist	COUNTY	ROUTE	POST MILES TOTAL PROJECT	SHEET No.	TOTAL SHEETS
01	Hum	169	13.6/23.4	20	86

Laura Lazzarotto
LICENSED LANDSCAPE ARCHITECT

6-17-13
PLANS APPROVAL DATE

LICENSED LANDSCAPE ARCHITECT
Laura Lazzarotto
Expiration Date
8-31-13
Renewal Date
02/08/13
Date
STATE OF CALIFORNIA

THE STATE OF CALIFORNIA OR ITS OFFICERS OR AGENTS SHALL NOT BE RESPONSIBLE FOR THE ACCURACY OR COMPLETENESS OF SCANNED COPIES OF THIS PLAN SHEET.

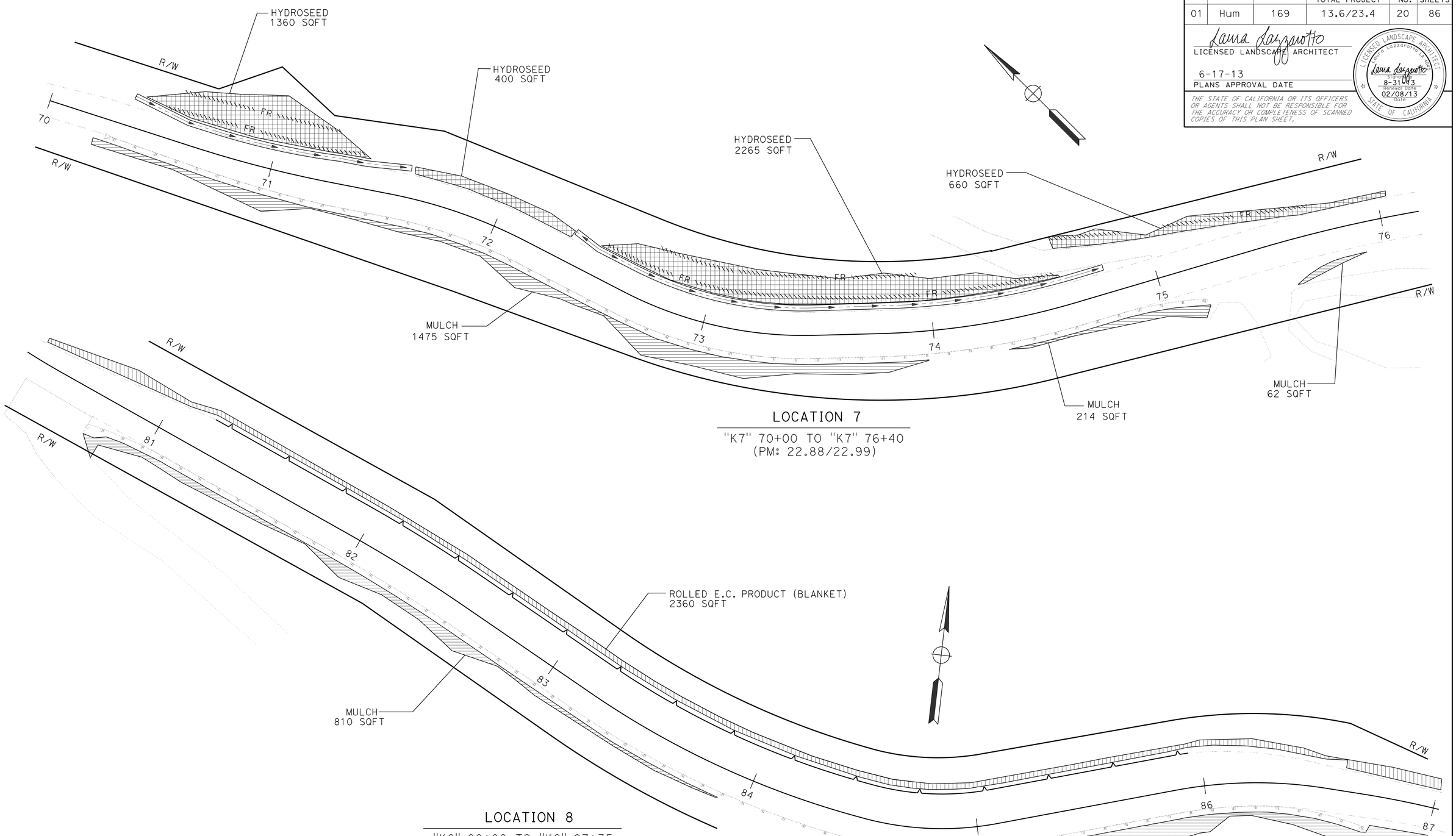

LOCATION 7

"K7" 70+00 TO "K7" 76+40
(PM: 22.88/22.99)

LOCATION 8

"K8" 80+00 TO "K8" 87+35
(PM: 23.25/23.39)

APPROVED FOR EROSION CONTROL WORK ONLY

SCALE: 1" = 20'

EROSION CONTROL PLAN
EC-4

REVISED BY | DATE REVISED
LAURA LAZZAROTTO | BIJAN SAMRAD
CALCULATED-DESIGNED BY | CHECKED BY
SENIOR LANDSCAPE ARCHITECT | RON FLORY

STATE OF CALIFORNIA - DEPARTMENT OF TRANSPORTATION
Caltrans® LANDSCAPE DESIGN

P:\PROJ\01\45090\drafting\01000219\01000002191ge004.dgn

LAST REVISION 01-28-13 | DATE PLOTTED => 18-JUN-2013 | TIME PLOTTED => 08:08

BORDER LAST REVISED 7/2/2010 | USERNAME => s109858 | DGN FILE => 01000002191ge004.dgn | RELATIVE BORDER SCALE IS IN INCHES 0 1 2 3 | UNIT 0313 | PROJECT NUMBER & PHASE 01000002191

Dist	COUNTY	ROUTE	POST MILES TOTAL PROJECT	SHEET No.	TOTAL SHEETS
01	Hum	169	13.6/23.4	21	86

Laura Lazzarotto
LICENSED LANDSCAPE ARCHITECT

6-17-13
PLANS APPROVAL DATE

LICENSED LANDSCAPE ARCHITECT
Laura Lazzarotto
Expiration Date
8-31-13
Renewal Date
02/08/13
Date
STATE OF CALIFORNIA

THE STATE OF CALIFORNIA OR ITS OFFICERS OR AGENTS SHALL NOT BE RESPONSIBLE FOR THE ACCURACY OR COMPLETENESS OF SCANNED COPIES OF THIS PLAN SHEET.

EROSION CONTROL QUANTITIES

LOCATION	L†	R†	EROSION CONTROL TYPE	FIBER ROLLS	HYDROSEED	MULCH	ROLLED EROSION CONTROL PRODUCT (BLANKET)	PURE LIVE SEED	FIBER	TACKIFIER	AREA
			(N)	LF	SQFT	CY	SQFT	LB (N)			SQFT (N)
1	X		TYPE 2			8.7					1405
		X	TYPE 1	270	3214			8.0	89	10.3	3214
2	X		TYPE 1	850	7360			18.4	203	23.7	7751
		X	TYPE 1	240	3184			8.0	88	10.2	3184
		X	TYPE 2			3.1					499
3	X		TYPE 1	820	9586			24.0	264	30.8	9586
		X	TYPE 2			13.5					2190
4	X		--								--
		X	TYPE 2			5.8					935
5	X		TYPE 1	160	1294			3.2	36	4.2	1294
		X	TYPE 1		675			1.7	19	2.2	675
		X	TYPE 2			4.5					730
6	X		TYPE 1	435	2945			7.4	81	9.5	2945
		X	TYPE 1		1270			3.2	35	4.1	1270
		X	TYPE 2			2.9					475
7	X		TYPE 1	600	4685			11.7	129	15.1	4685
		X	TYPE 2			10.8					1751
8	X		TYPE 3				2360				2360
		X	TYPE 2			10.7					1735
			TOTAL	3,375	34,213	60.0	2,360	85.6	943	110.0	46,293

(N) - NOT A SEPARATE PAY ITEM, FOR INFORMATION ONLY.

REVISED BY | DATE REVISED
LAURA LAZZAROTTO | BIJAN SAMRAD
CALCULATED-DESIGNED BY | CHECKED BY
SENIOR LANDSCAPE ARCHITECT
RON FLORY

STATE OF CALIFORNIA - DEPARTMENT OF TRANSPORTATION
Caltrans® LANDSCAPE DESIGN

P:\PROJ\01\45090\drafting\01000002191\01000002191gh001.dgn

EROSION CONTROL QUANTITIES
ECQ-1

LAST REVISION 01-28-13
DATE PLOTTED => 18-JUN-2013
TIME PLOTTED => 10:01

Dist	COUNTY	ROUTE	POST MILES TOTAL PROJECT	SHEET No.	TOTAL SHEETS
01	Hum	169	13.6/23.4	22	86

REGISTERED CIVIL ENGINEER 02/08/13 DATE

6-17-13
PLANS APPROVAL DATE

REGISTERED PROFESSIONAL ENGINEER LENA R. ASHLEY No. 48764 Exp. 9-30-14 CIVIL STATE OF CALIFORNIA

THE STATE OF CALIFORNIA OR ITS OFFICERS OR AGENTS SHALL NOT BE RESPONSIBLE FOR THE ACCURACY OR COMPLETENESS OF SCANNED COPIES OF THIS PLAN SHEET.

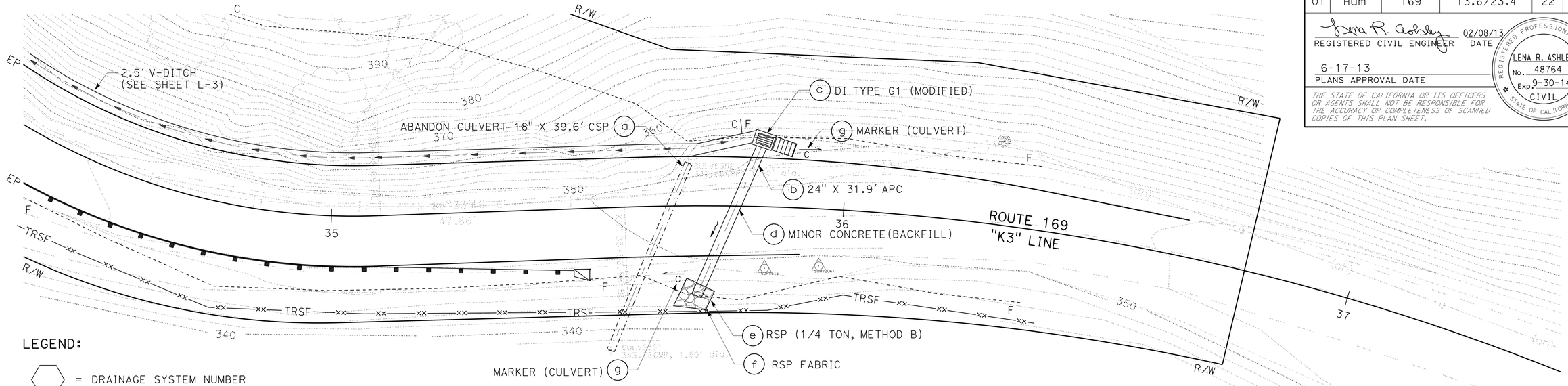

LEGEND:

- = DRAINAGE SYSTEM NUMBER
- = DRAINAGE UNIT
- C = MARKER (CULVERT)
- = MINOR CONCRETE (BACKFILL)
- = V-DITCH FLOW LINE
- -xx— TRSF —xx- = TEMPORARY SILT FENCE

PLAN

DRAINAGE SYSTEM No. 1
"K3" 35+76.5 PM 20.60
SKEW=22.6° Rt
SCALE: 1" = 10

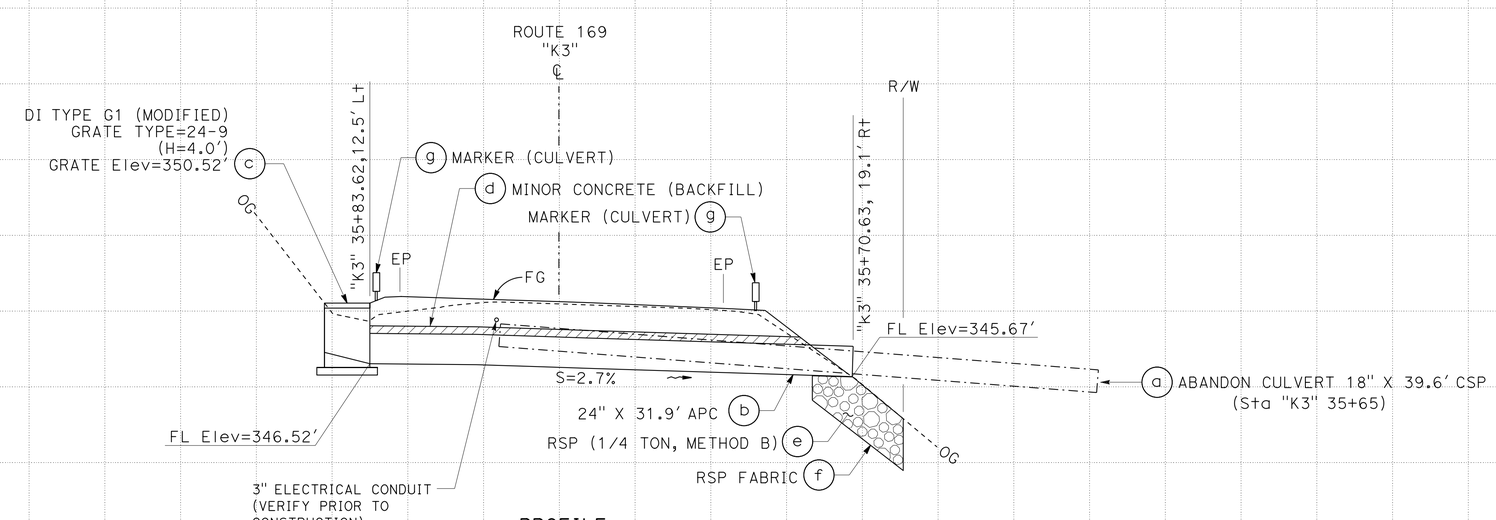

PROFILE

DRAINAGE SYSTEM No. 1
"K3" 35+76.5 PM 20.60
SKEW=22.6° Rt
SCALE: 1" = 5'

APPROVED FOR DRAINAGE WORK ONLY

SCALE: AS NOTED

DRAINAGE PLAN AND PROFILE D-1

REVISED BY | DATE REVISED
ELISA MEYER | BIJAN SAMRAD
CALCULATED-DESIGNED BY | CHECKED BY
FUNCTIONAL SUPERVISOR: L.R. ASHLEY

STATE OF CALIFORNIA - DEPARTMENT OF TRANSPORTATION
Caltrans DESIGN

P:\PROJ\01\45090\drafting\01000002191\01000002191ia001.dgn

LAST REVISION | DATE PLOTTED => 27-JUN-2013 | TIME PLOTTED => 14:29
02-06-13

BORDER LAST REVISED 7/2/2010 | USERNAME => s121614 | DGN FILE => 01000002191ia001.dgn | RELATIVE BORDER SCALE IS IN INCHES 0 1 2 3 | UNIT 0313 | PROJECT NUMBER & PHASE 01000002191

Dist	COUNTY	ROUTE	POST MILES TOTAL PROJECT	SHEET No.	TOTAL SHEETS
01	Hum	169	13.6/23.4	23	86

REGISTERED CIVIL ENGINEER 02/08/13 DATE

6-17-13
PLANS APPROVAL DATE

REGISTERED PROFESSIONAL ENGINEER LENA R. ASHLEY No. 48764 Exp. 9-30-14 CIVIL STATE OF CALIFORNIA

THE STATE OF CALIFORNIA OR ITS OFFICERS OR AGENTS SHALL NOT BE RESPONSIBLE FOR THE ACCURACY OR COMPLETENESS OF SCANNED COPIES OF THIS PLAN SHEET.

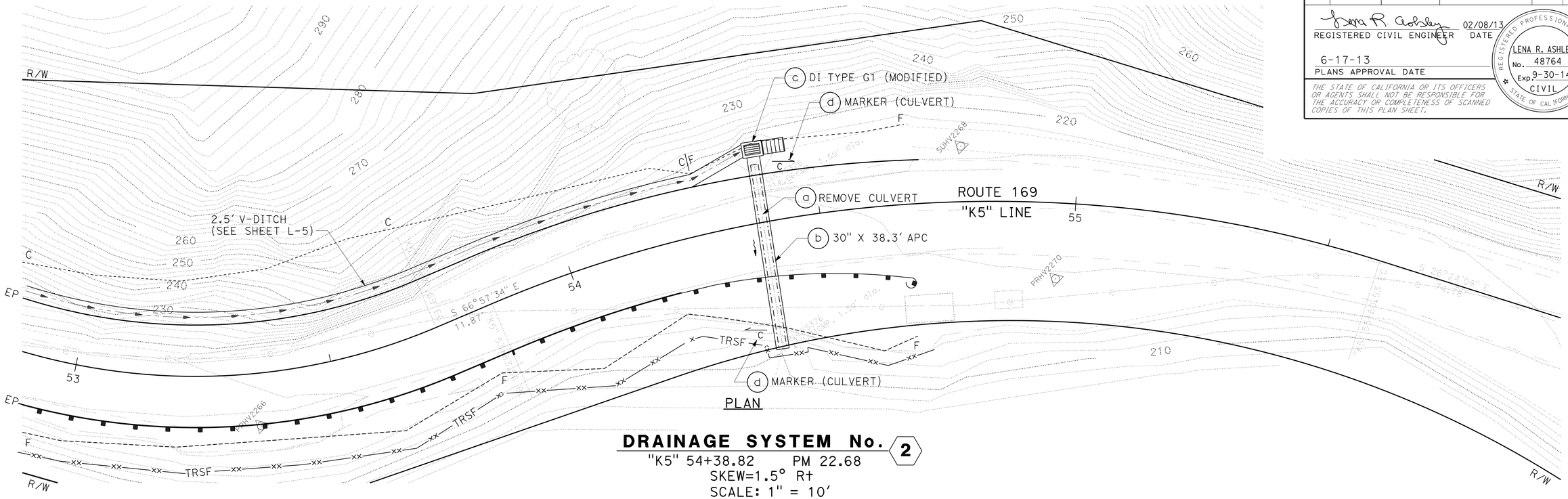

PLAN

DRAINAGE SYSTEM No. 2

"K5" 54+38.82 PM 22.68
SKEW=1.5° R+
SCALE: 1" = 10'

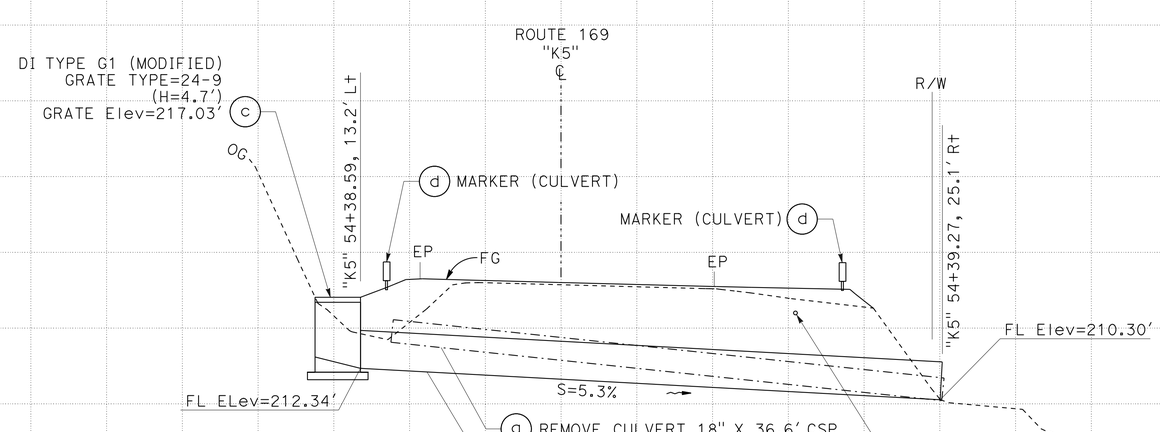

PROFILE

DRAINAGE SYSTEM No. 2

"K5" 54+38.82 PM 22.68
SKEW=1.5° R+
SCALE: 1" = 5'

APPROVED FOR DRAINAGE WORK ONLY

SCALE: AS NOTED

DRAINAGE PLAN AND PROFILE D-2

REVISED BY	DATE REVISED
ELISA MEYER	BIJAN SAMRAD

CALCULATED-DESIGNED BY | CHECKED BY

FUNCTIONAL SUPERVISOR: L.R. ASHLEY

STATE OF CALIFORNIA - DEPARTMENT OF TRANSPORTATION
Caltrans DESIGN

P:\PROJ\01\45090\drafting\01000002191\01000002191ia002.dgn

LAST REVISION | DATE PLOTTED => 27-JUN-2013 | TIME PLOTTED => 14:29
02-06-13

Dist	COUNTY	ROUTE	POST MILES TOTAL PROJECT	SHEET No.	TOTAL SHEETS
01	Hum	169	13.6/23.4	24	86

REGISTERED CIVIL ENGINEER 02/08/13 DATE

6-17-13
PLANS APPROVAL DATE

REGISTERED PROFESSIONAL ENGINEER LENA R. ASHLEY No. 48764 Exp. 9-30-14 CIVIL STATE OF CALIFORNIA

THE STATE OF CALIFORNIA OR ITS OFFICERS OR AGENTS SHALL NOT BE RESPONSIBLE FOR THE ACCURACY OR COMPLETENESS OF SCANNED COPIES OF THIS PLAN SHEET.

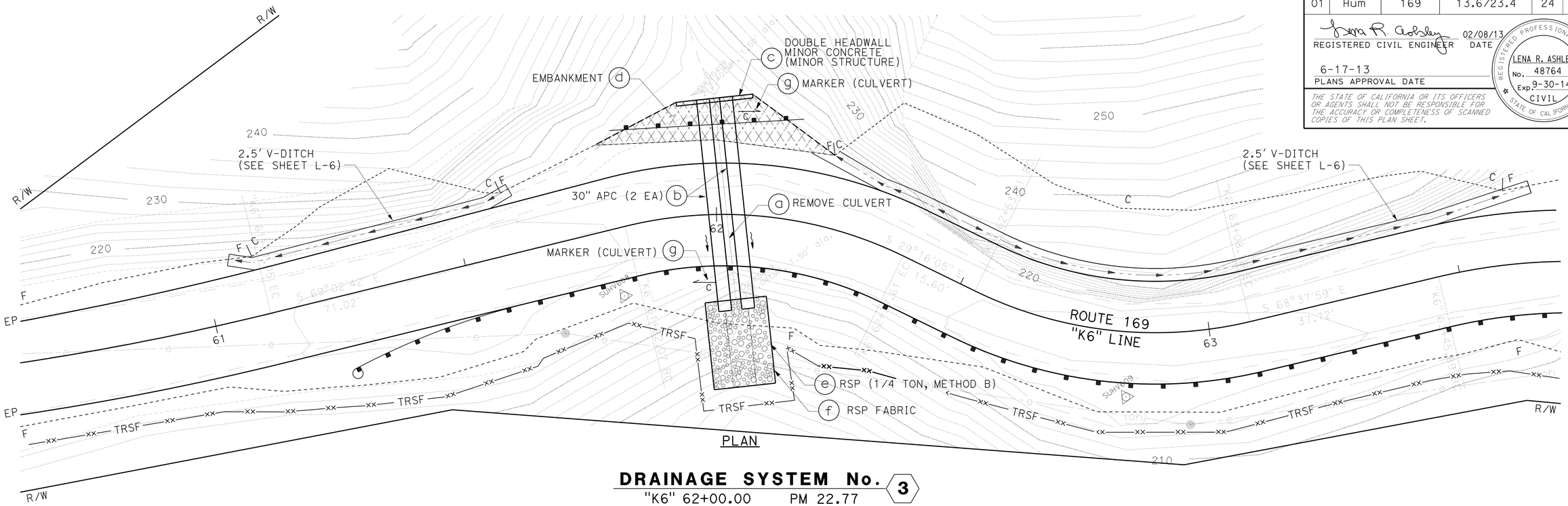

PLAN

DRAINAGE SYSTEM No. 3

"K6" 62+00.00 PM 22.77
SKEW=6.63° R†
SCALE: 1" = 10

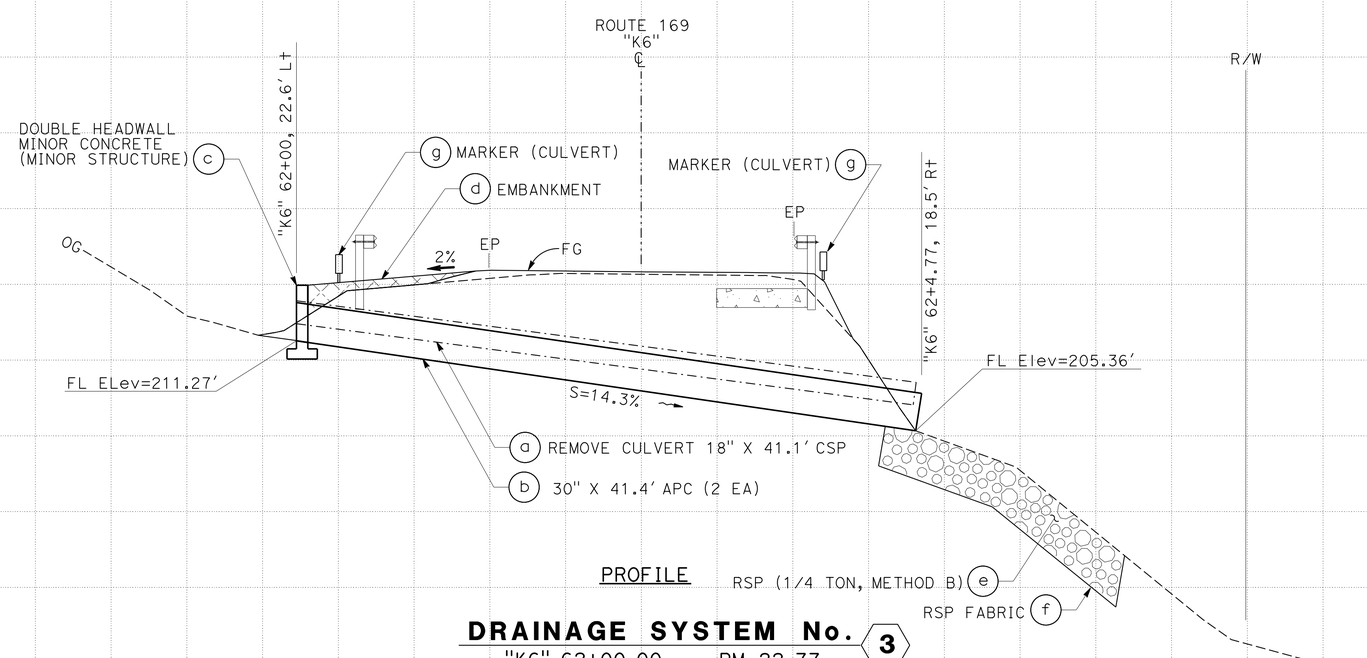

PROFILE

DRAINAGE SYSTEM No. 3

"K6" 62+00.00 PM 22.77
SKEW=6.63° R†
SCALE: 1" = 5'

APPROVED FOR DRAINAGE WORK ONLY

SCALE: AS NOTED

DRAINAGE PLAN AND PROFILE D-3

STATE OF CALIFORNIA - DEPARTMENT OF TRANSPORTATION
Caltrans
DESIGN

FUNCTIONAL SUPERVISOR: L.R. ASHLEY
CALCULATED-DESIGNED BY: ELISA MEYER
CHECKED BY: BIJAN SAMRAD
REVISED BY
DATE REVISED

P:\PROJ\01\45090\drafting\01000002191\01000002191ia003.dgn

LAST REVISION DATE PLOTTED => 27-JUN-2013
02-06-13 TIME PLOTTED => 14:29

BORDER LAST REVISED 7/2/2010
USERNAME => s121614
DGN FILE => 01000002191ia003.dgn
RELATIVE BORDER SCALE IS IN INCHES 0 1 2 3
UNIT 0313
PROJECT NUMBER & PHASE 01000002191

Dist	COUNTY	ROUTE	POST MILES TOTAL PROJECT	SHEET No.	TOTAL SHEETS
01	Hum	169	13.6/23.4	25	86

REGISTERED CIVIL ENGINEER 02/08/13 DATE

6-17-13
PLANS APPROVAL DATE

REGISTERED PROFESSIONAL ENGINEER LENA R. ASHLEY No. 48764 Exp. 9-30-14 CIVIL STATE OF CALIFORNIA

THE STATE OF CALIFORNIA OR ITS OFFICERS OR AGENTS SHALL NOT BE RESPONSIBLE FOR THE ACCURACY OR COMPLETENESS OF SCANNED COPIES OF THIS PLAN SHEET.

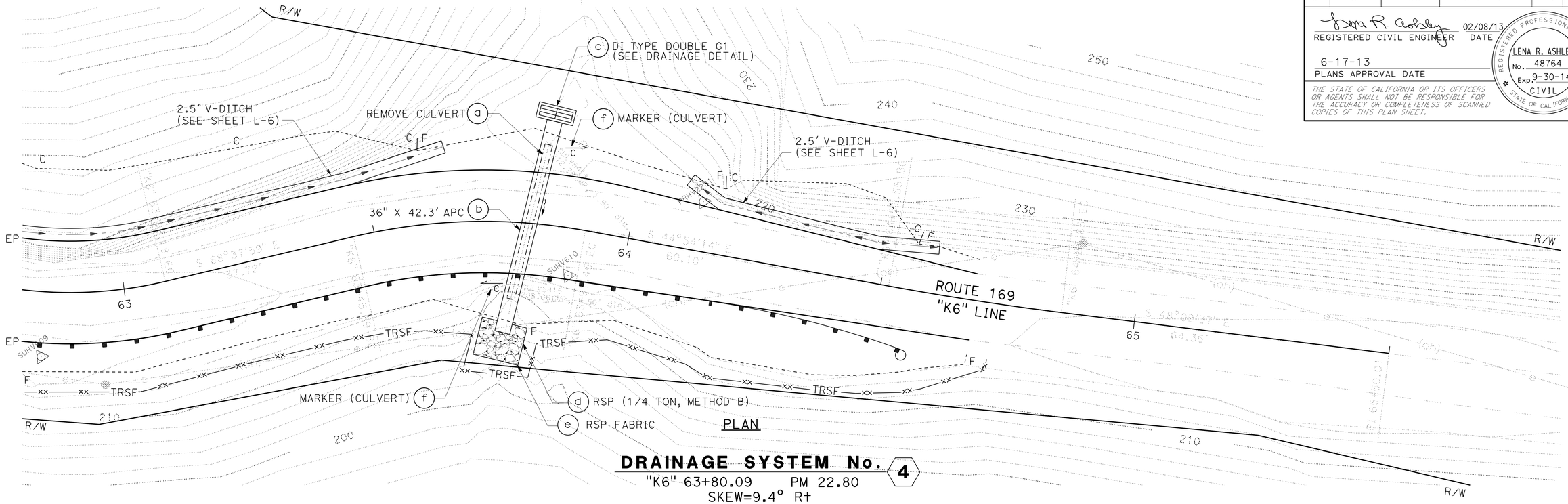

DRAINAGE SYSTEM No. 4
"K6" 63+80.09 PM 22.80
SKEW=9.4° Rt
SCALE: 1"=10'

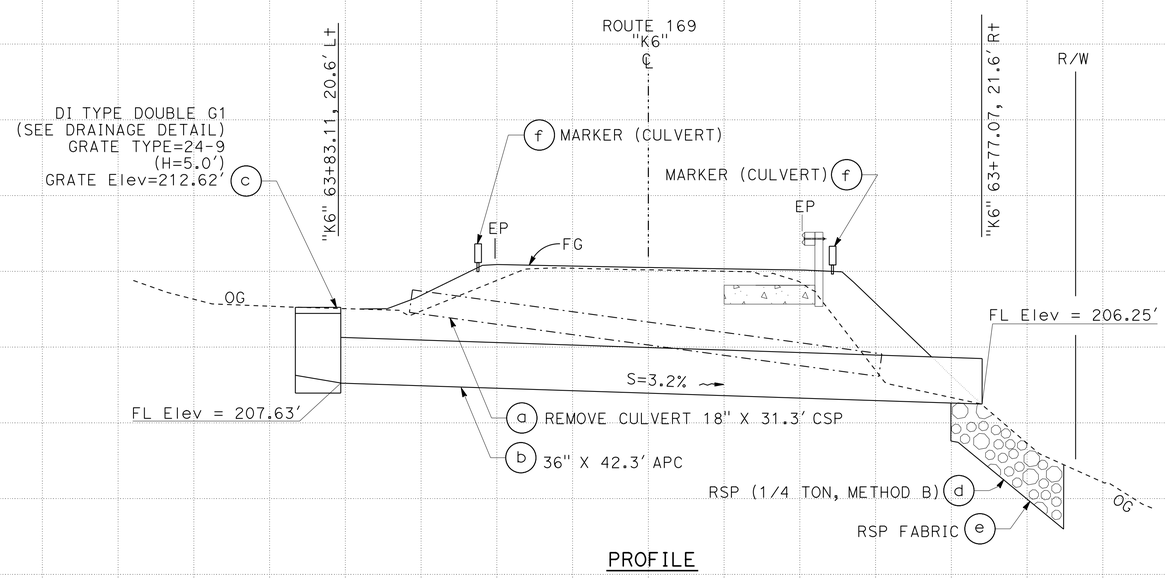

DRAINAGE SYSTEM No. 4
"K6" 63+80.09 PM 22.80
SKEW=9.4° Rt
SCALE: 1"=5'

APPROVED FOR DRAINAGE WORK ONLY

SCALE: AS NOTED

DRAINAGE PLAN AND PROFILE D-4

REVISED BY | DATE REVISED
ELISA MEYER | BIJAN SAMRAD
CALCULATED-DESIGNED BY | CHECKED BY
FUNCTIONAL SUPERVISOR: L.R. ASHLEY

STATE OF CALIFORNIA - DEPARTMENT OF TRANSPORTATION
Caltrans DESIGN

P:\PROJ\01\45090\drafting\01000002191\01000002191ia004.dgn

LAST REVISION 05-29-13 | DATE PLOTTED => 27-JUN-2013 | TIME PLOTTED => 14:37

Dist	COUNTY	ROUTE	POST MILES TOTAL PROJECT	SHEET No.	TOTAL SHEETS
01	Hum	169	13.6/23.4	26	86

REGISTERED CIVIL ENGINEER 02/08/13 DATE

6-17-13
PLANS APPROVAL DATE

REGISTERED PROFESSIONAL ENGINEER LENA R. ASHLEY No. 48764 Exp. 9-30-14 CIVIL STATE OF CALIFORNIA

THE STATE OF CALIFORNIA OR ITS OFFICERS OR AGENTS SHALL NOT BE RESPONSIBLE FOR THE ACCURACY OR COMPLETENESS OF SCANNED COPIES OF THIS PLAN SHEET.

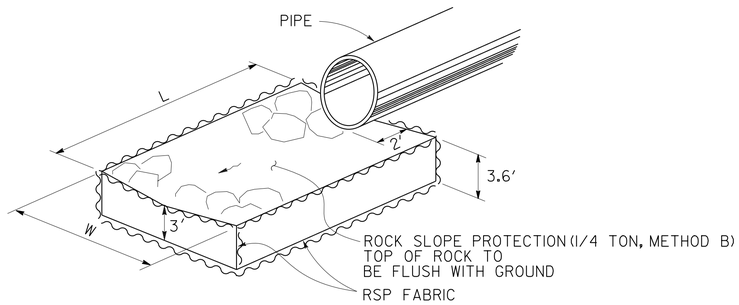

ROCK ENERGY DISSIPATOR (RED) AT DRAINAGE OUTLET

RED DIMENSIONS			
DRAINAGE SYSTEM No.	LOCATION (PM)	WIDTH	LENGTH
1	20.60	4'-6'	6'
3	22.77	17'	12'
4	22.80	6'	6'

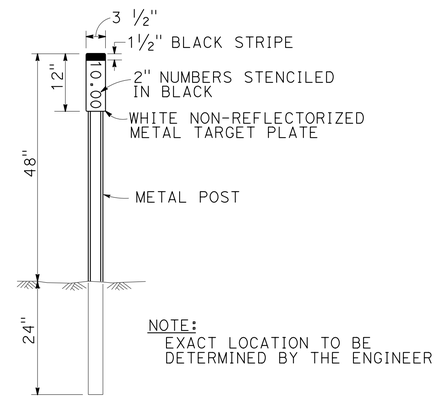

NOTE:
EXACT LOCATION TO BE DETERMINED BY THE ENGINEER

MARKER (CULVERT)
DRAINAGE SYSTEM No. 1 2 3 4

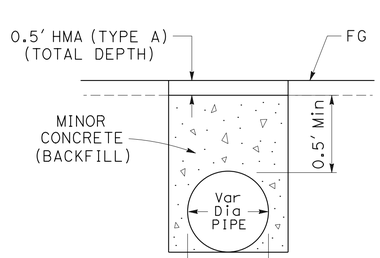

MINOR CONCRETE (BACKFILL)
DRAINAGE SYSTEM No. 1

NOTES:

1. STRUCTURE BACKFILL
   TRENCH WIDTH SHALL ALLOW 2' Min CLEARANCE BETWEEN EXCAVATION AND SIDES OF PIPE.
   SLURRY CEMENT BACKFILL
   TRENCH WIDTH SHALL ALLOW 0.5' Min CLEARANCE BETWEEN EXCAVATION AND SIDES OF PIPES UP TO AND INCLUDING 42" Dia. SEE Std Specs 19-3.062.
2. SEE Std PLAN A62F FOR EXCAVATION AND BACKFILL DETAILS.

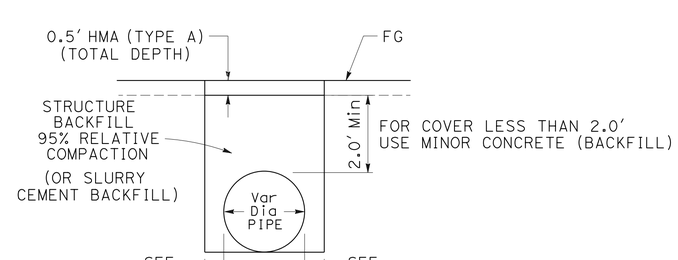

STRUCTURE BACKFILL OR SLURRY CEMENT BACKFILL
DRAINAGE SYSTEM No. 2 3 4

NO SCALE

DRAINAGE DETAILS
DD-1

STATE OF CALIFORNIA - DEPARTMENT OF TRANSPORTATION
Caltrans® DESIGN

REVISED BY	DATE REVISED
ELISA MEYER	BIJAN SAMRAD

CALCULATED-DESIGNED BY
CHECKED BY
FUNCTIONAL SUPERVISOR L.R. ASHLEY

P:\PROJ\01\45090\drafting\01000002191\01000002191ic001.dgn

LAST REVISION 02-06-13 DATE PLOTTED => 18-JUN-2013 TIME PLOTTED => 07:32

Dist	COUNTY	ROUTE	POST MILES TOTAL PROJECT	SHEET No.	TOTAL SHEETS
01	Hum	169	13.6/23.4	27	86

REGISTERED CIVIL ENGINEER 02/08/13 DATE

6-17-13
PLANS APPROVAL DATE

REGISTERED PROFESSIONAL ENGINEER
LENA R. ASHLEY
No. 48764
Exp. 9-30-14
CIVIL
STATE OF CALIFORNIA

THE STATE OF CALIFORNIA OR ITS OFFICERS OR AGENTS SHALL NOT BE RESPONSIBLE FOR THE ACCURACY OR COMPLETENESS OF SCANNED COPIES OF THIS PLAN SHEET.

NOTES:

1. FOR DETAILS NOT SHOWN, SEE STANDARD PLAN D73 FOR TYPE G1 DRAINAGE INLET.
2. FOR FRAME AND GRATE DETAILS, SEE STANDARD PLAN D77A.
3. SEE STD PLAN A62F FOR EXCAVATION AND BACKFILL DETAILS.

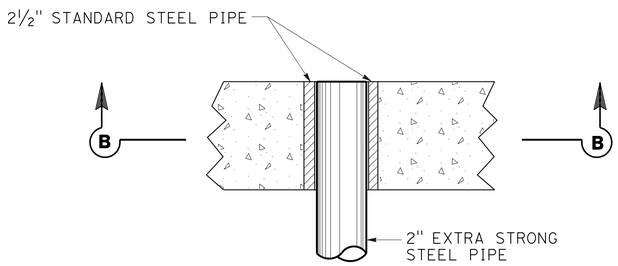

DETAIL "A"

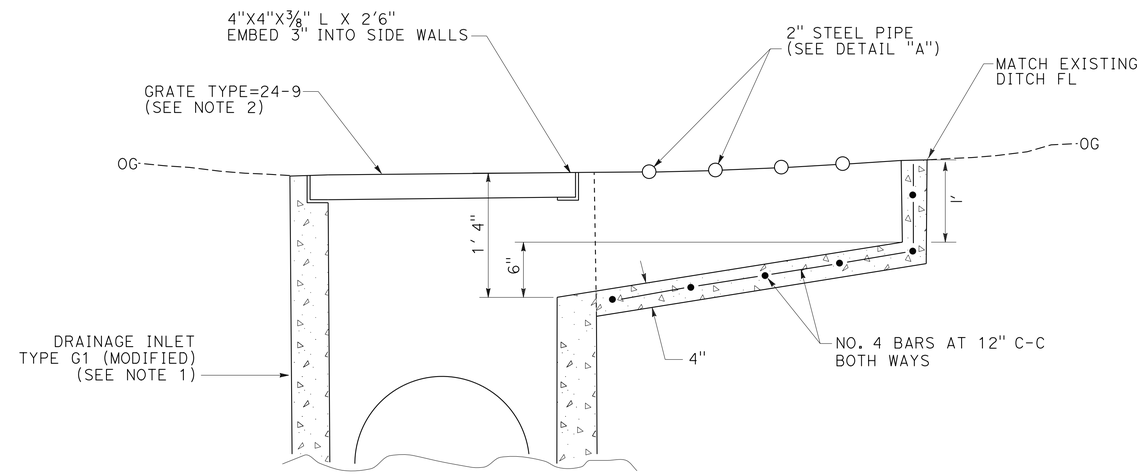

SECTION A-A

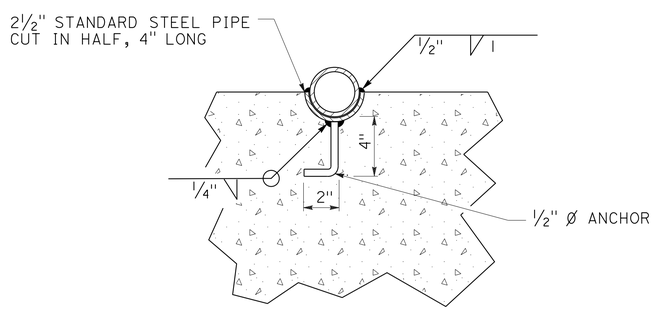

SECTION B-B

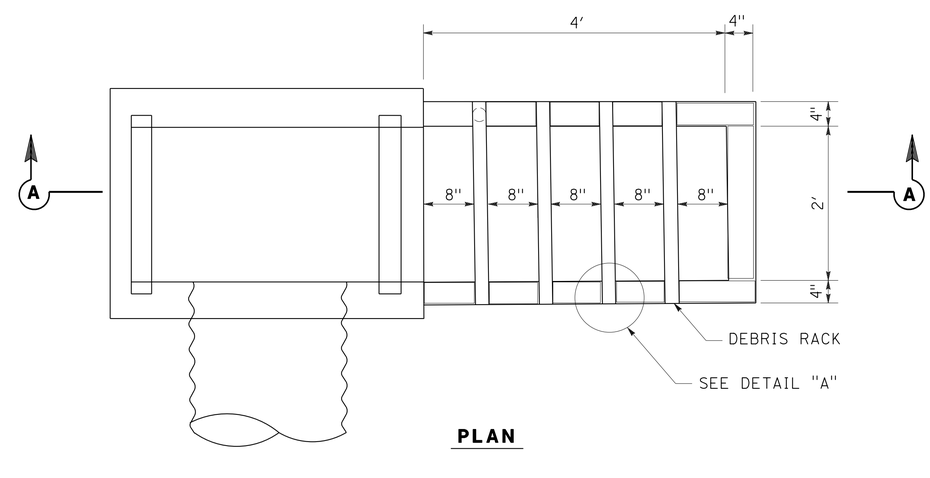

PLAN

DRAINAGE INLET TYPE G1 (MODIFIED)

PM 20.60 (1) **PM 22.68** (2)

NO SCALE

DRAINAGE DETAILS
DD-2

REVISED BY | DATE REVISED
ELISA MEYER | BIJAN SAMRAD
CALCULATED-DESIGNED BY | CHECKED BY
FUNCTIONAL SUPERVISOR
L.R. ASHLEY

STATE OF CALIFORNIA - DEPARTMENT OF TRANSPORTATION
Caltrans
DESIGN

P:\PROJ\01\45030\drafting\01000002191\01000002191ic002.dgn

LAST REVISION 02-06-13 | DATE PLOTTED => 18-JUN-2013 | TIME PLOTTED => 07:32

Dist	COUNTY	ROUTE	POST MILES TOTAL PROJECT	SHEET No.	TOTAL SHEETS
01	Hum	169	13.6/23.4	28	86

REGISTERED CIVIL ENGINEER 02/08/13 DATE

6-17-13
PLANS APPROVAL DATE

REGISTERED PROFESSIONAL ENGINEER
LENA R. ASHLEY
No. 48764
Exp. 9-30-14
CIVIL
STATE OF CALIFORNIA

THE STATE OF CALIFORNIA OR ITS OFFICERS OR AGENTS SHALL NOT BE RESPONSIBLE FOR THE ACCURACY OR COMPLETENESS OF SCANNED COPIES OF THIS PLAN SHEET.

NOTES:

1. FOR DETAILS NOT SHOWN, SEE STANDARD PLAN D73 FOR TYPE G1 DRAINAGE INLET.
2. FOR FRAME AND GRATE DETAILS, SEE STANDARD PLAN D77A.
3. SEE STD PLAN D74B FOR FRAME AND GRATES IN TANDEM.

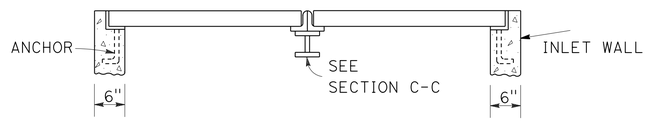

SECTION A-A

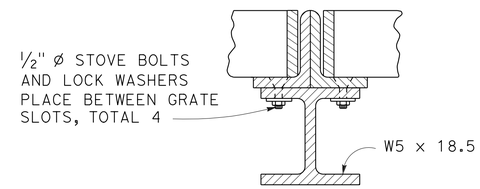

SECTION C-C

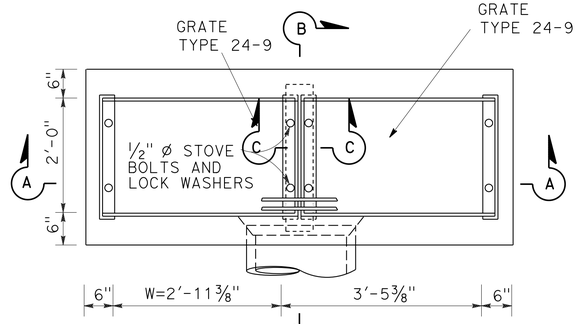

PLAN

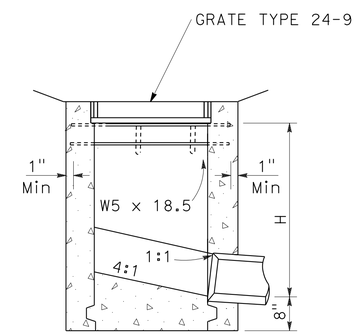

SECTION B-B

DRAINAGE INLET TYPE DOUBLE G1

PM 22.80 (4)

NO SCALE

DRAINAGE DETAILS
DD-3

REVISED BY	DATE REVISED
ELISA MEYER	BIJAN SAMRAD

CALCULATED-DESIGNED BY
CHECKED BY

FUNCTIONAL SUPERVISOR
L.R. ASHLEY

STATE OF CALIFORNIA - DEPARTMENT OF TRANSPORTATION
Caltrans®
DESIGN

P:\ARCHIVES\optical_disk\dgnpse\01_450901\resubmit\01000002191ic003.dgn

LAST REVISION 05-29-13
DATE PLOTTED => 18-JUN-2013
TIME PLOTTED => 07:32

NOTES:
1. ALL CULVERT JOINTS SHALL BE POSITIVE.
2. LENGTHS OF PIPES, DOWNDRAINS AND ANGLES OF ELBOWS SHALL BE VERIFIED IN THE FIELD BY THE CONTRACTOR.

Dist	COUNTY	ROUTE	POST MILES TOTAL PROJECT	SHEET No.	TOTAL SHEETS
01	Hum	169	13.6/23.4	29	86

REGISTERED CIVIL ENGINEER 02/08/13 DATE

6-17-13
PLANS APPROVAL DATE

REGISTERED PROFESSIONAL ENGINEER LENA R. ASHLEY No. 48764 Exp. 9-30-14 CIVIL STATE OF CALIFORNIA

THE STATE OF CALIFORNIA OR ITS OFFICERS OR AGENTS SHALL NOT BE RESPONSIBLE FOR THE ACCURACY OR COMPLETENESS OF SCANNED COPIES OF THIS PLAN SHEET.

DRAINAGE SUMMARY TABLE

LOCATION	POSTMILE	SYSTEM NUMBER	DRAINAGE UNIT	REMOVE CULVERT (EA)	ABANDON CULVERT (EA)	EMBANKMENT (CY)	24" APC (LF)	30" APC (LF)	36" APC (LF)	(N) INLET HEIGHT "H" (LF)	Misc IRON and STEEL (LB)	(N) MINOR CONCRETE (BACKFILL) (CY)	MINOR CONCRETE (MINOR STRUCTURE) (CY)	RSP (1/4 TON, METHOD B) (CY)	RSP FABRIC (CLASS 8) (SQYD)	MARKER (CULVERT) (EA)	REMARKS	SYSTEM NUMBER	DRAINAGE UNIT
3	(PM 20.60)	1	a		1												18" X 39.6' CSP	1	a
			b				31.9					1.5					24" X 31.9' APC		b
			c							4.0	305						PIPE INLET TYPE G1 (Mod) w/ GRATE COVER TYPE 24-9		c
			d									13							d
			e											4.4			ROCK ENERGY DISSIPATOR (SHEET DD-1)		e
			f												13.6		ROCK ENERGY DISSIPATOR (SHEET DD-1)		f
			g													2			g
5	(PM 22.68)	2	a	1													18" X 36.6' CSP	2	a
			b					38.3				1.7					30" X 38.3' APC		b
			c							4.7	305						PIPE INLET TYPE G1 (Mod) w/ GRATE COVER TYPE 24-9		c
			d													2			d
6	(PM 22.77)	3	a	1													18" X 41.1' CSP	3	a
			b					82.8									(2 EA) 30" X 41.4' APC		b
			c									2.2					DOUBLE CULVERT HEADWALL		c
			d			25.3													d
			e											24.9			ROCK ENERGY DISSIPATOR (SHEET DD-1)		e
			f												45.9		ROCK ENERGY DISSIPATOR (SHEET DD-1)		f
			g													2			g
	(PM 22.80)	4	a	1													18" X 31.3' CSP	4	a
			b						42.3								36" X 42.3' APC		b
			c							5.0	526		2.4				PIPE INLET TYPE DOUBLE G1 w/ GRATE COVER TYPE 24-9		c
			d											9.9			ROCK ENERGY DISSIPATOR (SHEET DD-1)		d
			e												23.4		ROCK ENERGY DISSIPATOR (SHEET DD-1)		e
			f													2			f
		TOTAL		3	1	25.3	31.9	121.1	42.3		1136	13	7.8	39.2	82.9	8			

(N) - NOT A SEPARATE PAY ITEM, FOR INFORMATION ONLY.

APC ALLOWABLE ALTERNATIVES

SYSTEM NUMBER	DRAINAGE UNIT	RCP	GALVANIZED CSP 0.138" (10 GA) THICK	GALVANIZED CSP POLYMERIC SHEET COATED 0.079" (14 GA) THICKNESS	REMARKS
1	b	X*	X	X	
2	b	X*	X	X	
3	b	X*	X	X	
4	b	X*	X	X	

* TYPE II MODIFIED OR TYPE IP CEMENT SHALL BE USED WITH A MAXIMUM WATER-TO-CEMENT RATIO OF 0.45

DRAINAGE QUANTITIES
DQ-1

REVISED BY | DATE REVISED
ELISA MEYER | BIJAN SAMRAD
CALCULATED-DESIGNED BY | CHECKED BY
FUNCTIONAL SUPERVISOR: L.R. ASHLEY

STATE OF CALIFORNIA - DEPARTMENT OF TRANSPORTATION
Caltrans
DESIGN

P:\PROJ\01\45090\drafting\01000002191\01000002191id001.dgn

LAST REVISION 05-29-13 | DATE PLOTTED => 18-JUN-2013 | TIME PLOTTED => 07:33

Dist	COUNTY	ROUTE	POST MILES TOTAL PROJECT	SHEET No.	TOTAL SHEETS
01	Hum	169	13.6/23.4	30	86

REGISTERED CIVIL ENGINEER 02/08/13 DATE

6-17-13
PLANS APPROVAL DATE

REGISTERED PROFESSIONAL ENGINEER LENA R. ASHLEY No. 48764 Exp. 9-30-14 CIVIL STATE OF CALIFORNIA

THE STATE OF CALIFORNIA OR ITS OFFICERS OR AGENTS SHALL NOT BE RESPONSIBLE FOR THE ACCURACY OR COMPLETENESS OF SCANNED COPIES OF THIS PLAN SHEET.

STATIONARY MOUNTED CONSTRUCTION AREA SIGNS

SIGN ◯	SIGN CODE	SIGN MESSAGE	PANEL SIZE (inches)	NUMBER OF POSTS AND SIZE	NUMBER OF SIGNS
A	W20-1	ROAD WORK AHEAD	36" x 36"	1- 4" x 6"	3, 1*
B	W11-1	BICYCLE SYMBOL	30" x 30"	1- 4" x 6"	5
	W16-1	SHARE THE ROAD	18" x 24"		5
C	G20-2	END ROAD WORK	36" x 18"	1- 4" x 4"	4
D	G20-1	ROAD WORK NEXT 6 MILES	60" x 36"	1- 4" x 6"	2
E	R1-1	STOP	36" x 36"	1- 4" x 6"	2
F	W3-1	STOP AHEAD SYMBOL	36" x 36"	1- 4" x 6"	2
G	W20-4	ONE LANE ROAD AHEAD	36" x 36"	1- 4" x 6"	2, 2*
H	R10-6	STOP HERE ON RED	24" x 36"	1- 4" x 6"	2
I	W3-3	SIGNAL AHEAD SYMBOL	36" x 36"		2*

NOTE: EXACT SIGN LOCATIONS TO BE DETERMINED BY THE ENGINEER.
* SIGN PANELS ARE MOUNTED ON THE FLASHING BEACON POLE.

CONSTRUCTION AREAS AND LOCATIONS

ROUTE 169			
AREA	Loc No.	PM FROM	PM TO
S1	1	13.66	13.73
S2	2	18.94	19.08
	3	20.48	20.64
	4	22.46	22.54
	5	22.60	22.71
	6	22.73	22.82
	7	22.88	22.99
	8	23.25	23.39

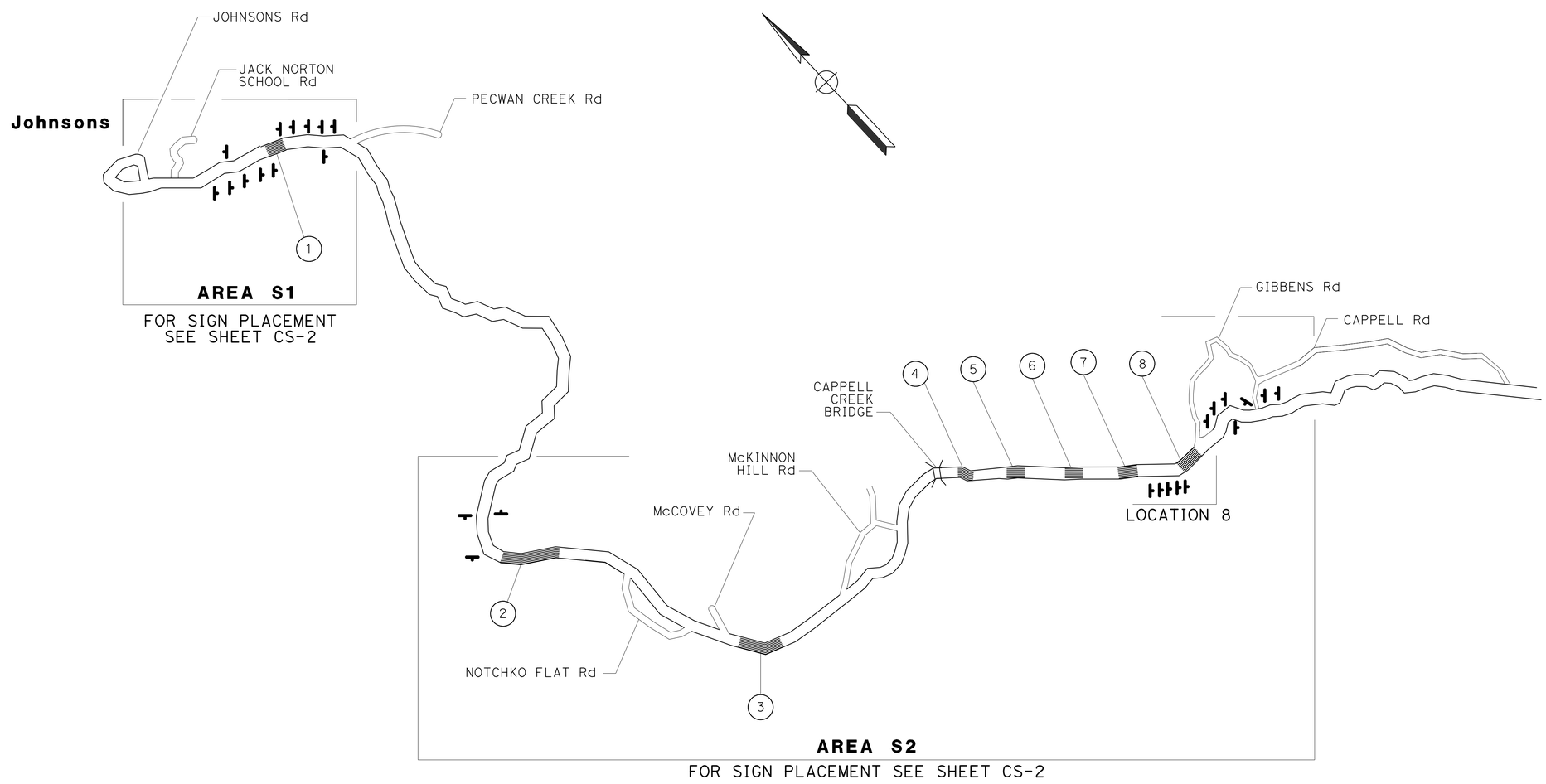

APPROVED FOR CONSTRUCTION AREA SIGN WORK ONLY

NO SCALE

CONSTRUCTION AREA SIGNS
CS-1

REVISED BY | DATE REVISED
BIJAN SAMRAD | TODD LARK
CALCULATED-DESIGNED BY | CHECKED BY
FUNCTIONAL SUPERVISOR: L.R. ASHLEY
STATE OF CALIFORNIA - DEPARTMENT OF TRANSPORTATION
Caltrans® DESIGN

P:\PROJ\01\45030\drafting\01000002191\01000002191a001.dgn

LAST REVISION 02-06-13 | DATE PLOTTED => 18-JUN-2013 | TIME PLOTTED => 07:33

Dist	COUNTY	ROUTE	POST MILES TOTAL PROJECT	SHEET No.	TOTAL SHEETS
01	Hum	169	13.6/23.4	31	86

REGISTERED CIVIL ENGINEER 02/08/13 DATE

6-17-13
PLANS APPROVAL DATE

REGISTERED PROFESSIONAL ENGINEER LENA R. ASHLEY No. 48764 Exp. 9-30-14 CIVIL STATE OF CALIFORNIA

THE STATE OF CALIFORNIA OR ITS OFFICERS OR AGENTS SHALL NOT BE RESPONSIBLE FOR THE ACCURACY OR COMPLETENESS OF SCANNED COPIES OF THIS PLAN SHEET.

NOTES:

1. EXACT LOCATION OF ALL SIGNS TO BE DETERMINED BY THE ENGINEER.
2. ALL SIGNS SHALL BE BLACK ON ORANGE EXCEPT C40 (CA), WHICH IS BLACK ON WHITE.
3. CALIFORNIA CODES ARE DESIGNATED BY (CA), OTHERWISE FEDERAL CODES ARE SHOWN.
4. SIGNS E, F, G, H & I SHALL BE COVERED WHEN TRAFFIC IS NOT BEING CONTROLLED BY STOP SIGNS AND/OR TRAFFIC SIGNAL.

LEGEND:

ONE POST STATIONARY MOUNTED SIGN.

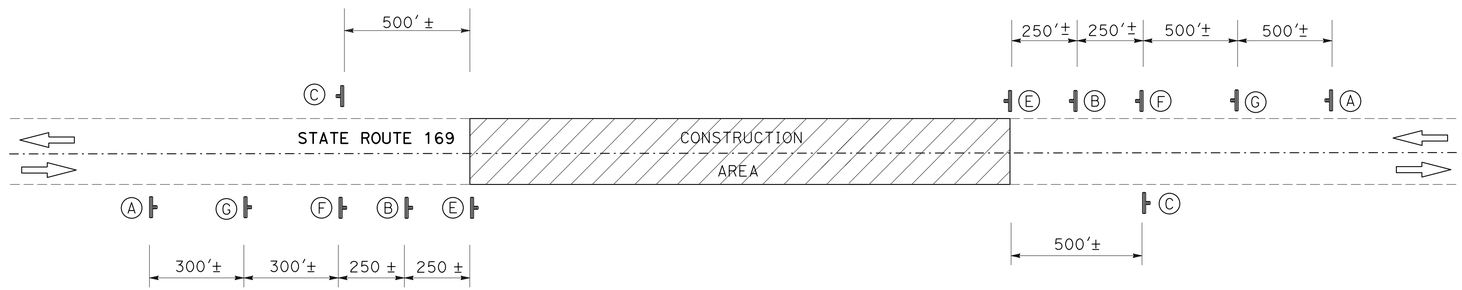

CONSTRUCTION AREA S1

PM 13.66 / PM 13.73

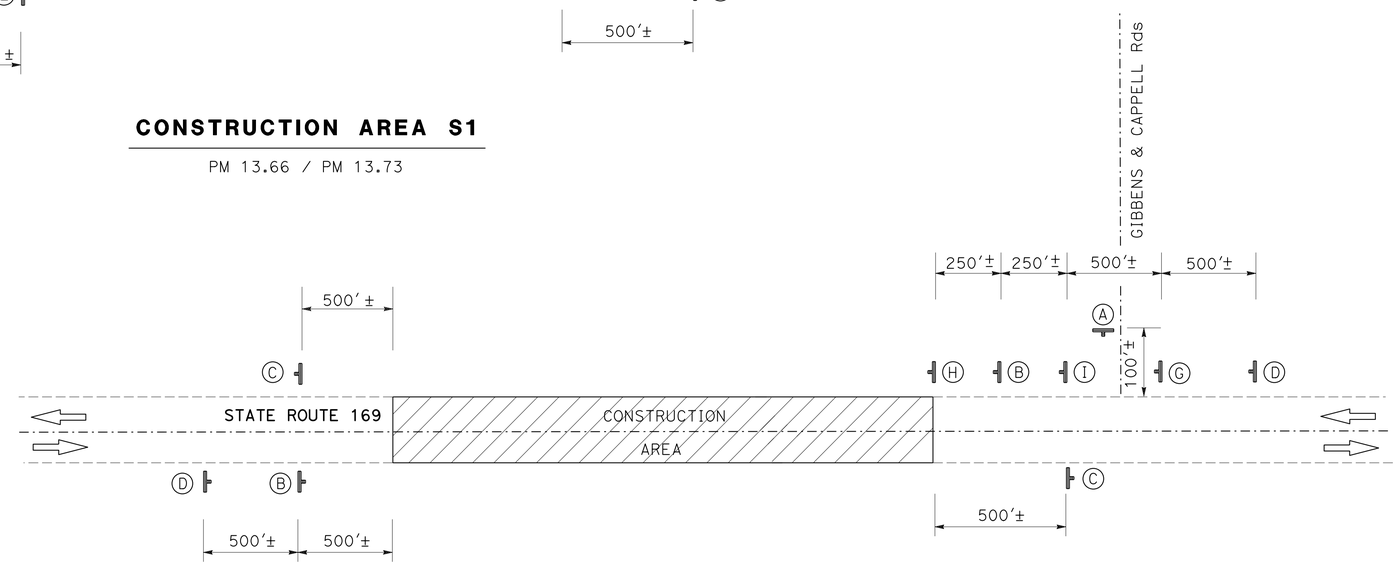

CONSTRUCTION AREA S2

PM 18.94 / PM 23.39

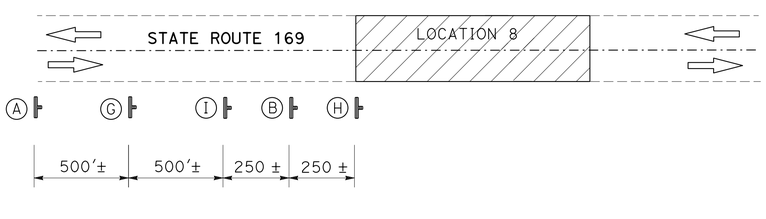

ADDITIONAL SIGNING REQUIRED AT LOCATION 8

PM 23.25 / PM 23.39

APPROVED FOR CONSTRUCTION AREA SIGN WORK ONLY

NO SCALE

CONSTRUCTION AREA SIGNS
CS-2

REVISED BY | DATE REVISED

BIJAN SAMRAD | TODD LARK

CALCULATED-DESIGNED BY | CHECKED BY

FUNCTIONAL SUPERVISOR: L.R. ASHLEY

STATE OF CALIFORNIA - DEPARTMENT OF TRANSPORTATION

Caltrans DESIGN

P:\PROJ\01\45690\drafting\01000002191\a002.dgn

LAST REVISION 02-06-13 | DATE PLOTTED => 18-JUN-2013 | TIME PLOTTED => 07:33

Dist	COUNTY	ROUTE	POST MILES TOTAL PROJECT	SHEET No.	TOTAL SHEETS
01	Hum	169	13.6/23.4	32	86

REGISTERED CIVIL ENGINEER 02/08/13 DATE

6-17-13
PLANS APPROVAL DATE

REGISTERED PROFESSIONAL ENGINEER LENA R. ASHLEY No. 48764 Exp. 9-30-14 CIVIL STATE OF CALIFORNIA

THE STATE OF CALIFORNIA OR ITS OFFICERS OR AGENTS SHALL NOT BE RESPONSIBLE FOR THE ACCURACY OR COMPLETENESS OF SCANNED COPIES OF THIS PLAN SHEET.

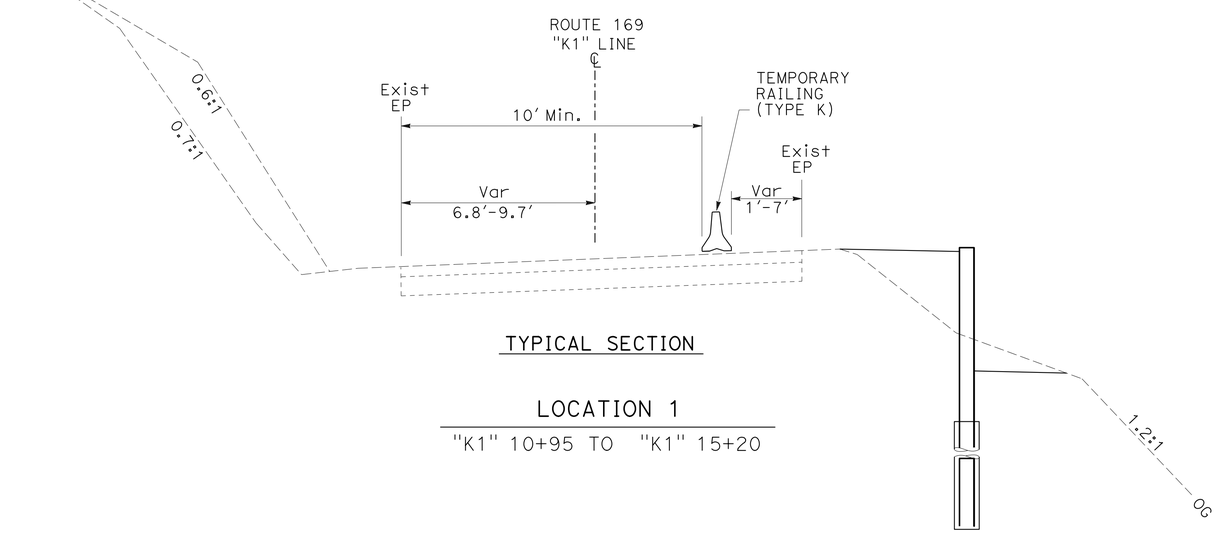

TYPICAL SECTION

LOCATION 1

"K1" 10+95 TO "K1" 15+20

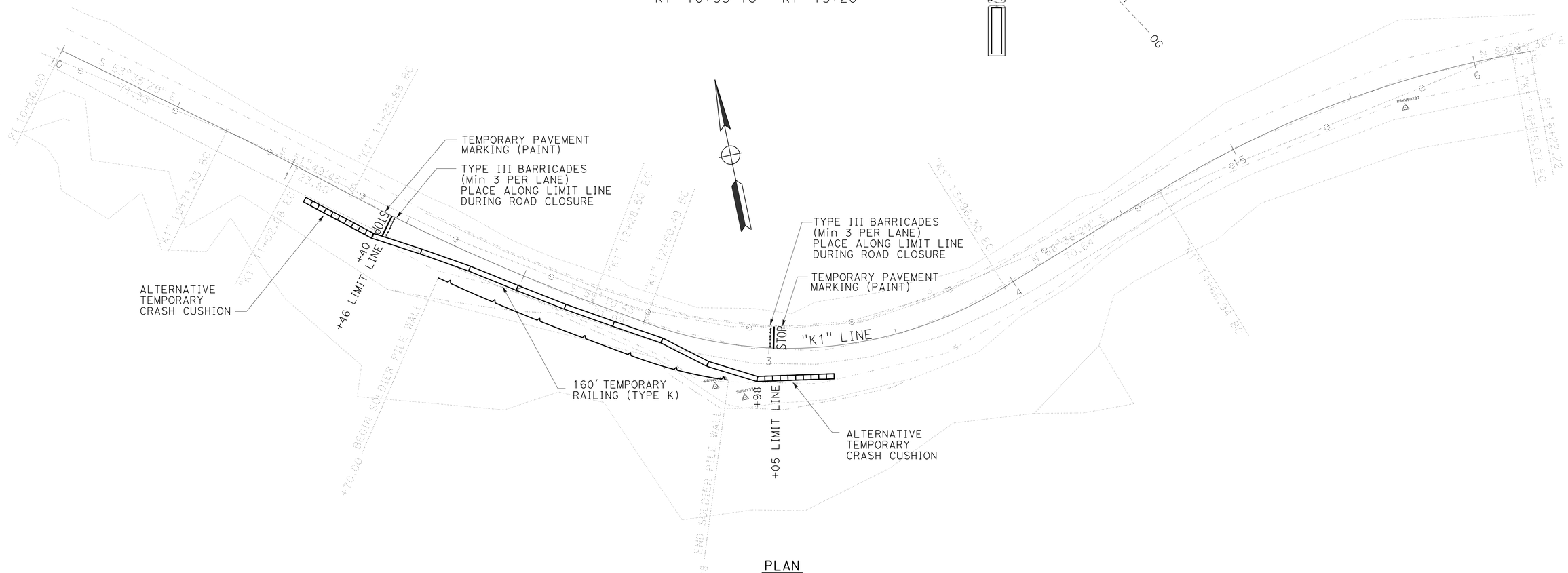

PLAN

LOCATION 1

"K1" 10+95 TO "K1" 15+20
(PM: 13.66/13.73)

TRAFFIC HANDLING PLAN

NO SCALE

TH-1

APPROVED FOR TRAFFIC HANDLING WORK ONLY

STATE OF CALIFORNIA - DEPARTMENT OF TRANSPORTATION
Caltrans® **DESIGN**

FUNCTIONAL SUPERVISOR: L.R. ASHLEY
CALCULATED-DESIGNED BY: BIJAN SAMRAD
CHECKED BY: TODD LARK
REVISED BY
DATE REVISED

P:\PROJ\01\4509\drafting\01000002191\0100000219md001.dgn

LAST REVISION 02-06-13
DATE PLOTTED => 18-JUN-2013
TIME PLOTTED => 08:16

Dist	COUNTY	ROUTE	POST MILES TOTAL PROJECT	SHEET No.	TOTAL SHEETS
01	Hum	169	13.6/23.4	33	86

REGISTERED CIVIL ENGINEER 02/08/13 DATE

6-17-13
PLANS APPROVAL DATE

REGISTERED PROFESSIONAL ENGINEER LENA R. ASHLEY No. 48764 Exp. 9-30-14 CIVIL STATE OF CALIFORNIA

THE STATE OF CALIFORNIA OR ITS OFFICERS OR AGENTS SHALL NOT BE RESPONSIBLE FOR THE ACCURACY OR COMPLETENESS OF SCANNED COPIES OF THIS PLAN SHEET.

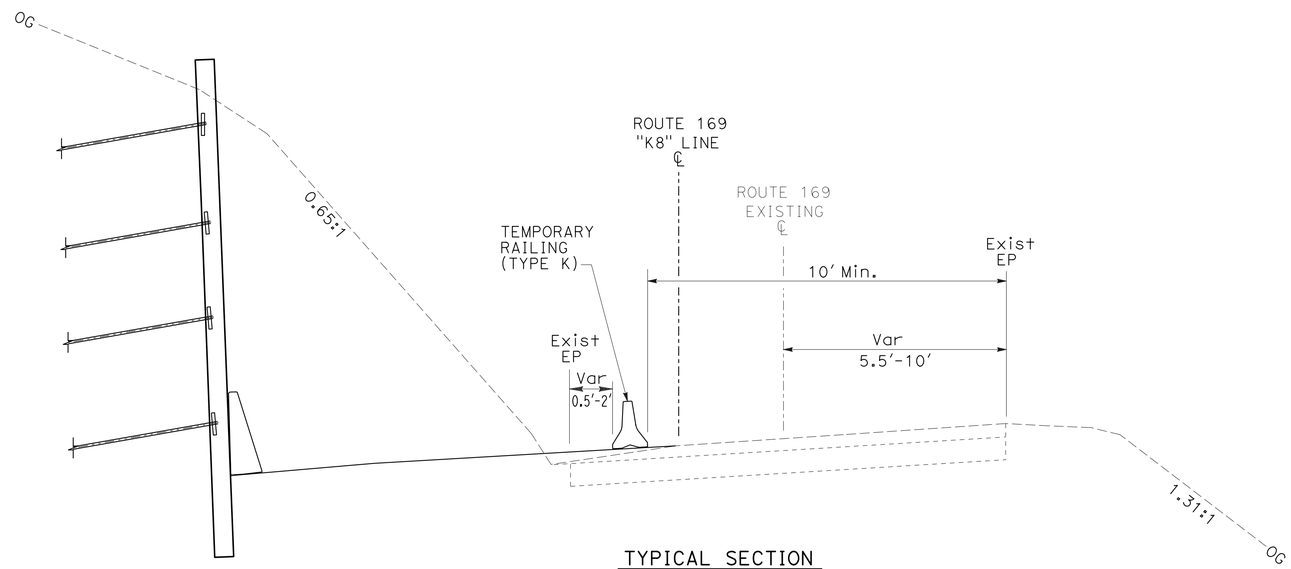

TYPICAL SECTION

LOCATION 8

"K8" 80+00 TO "K8" 87+35

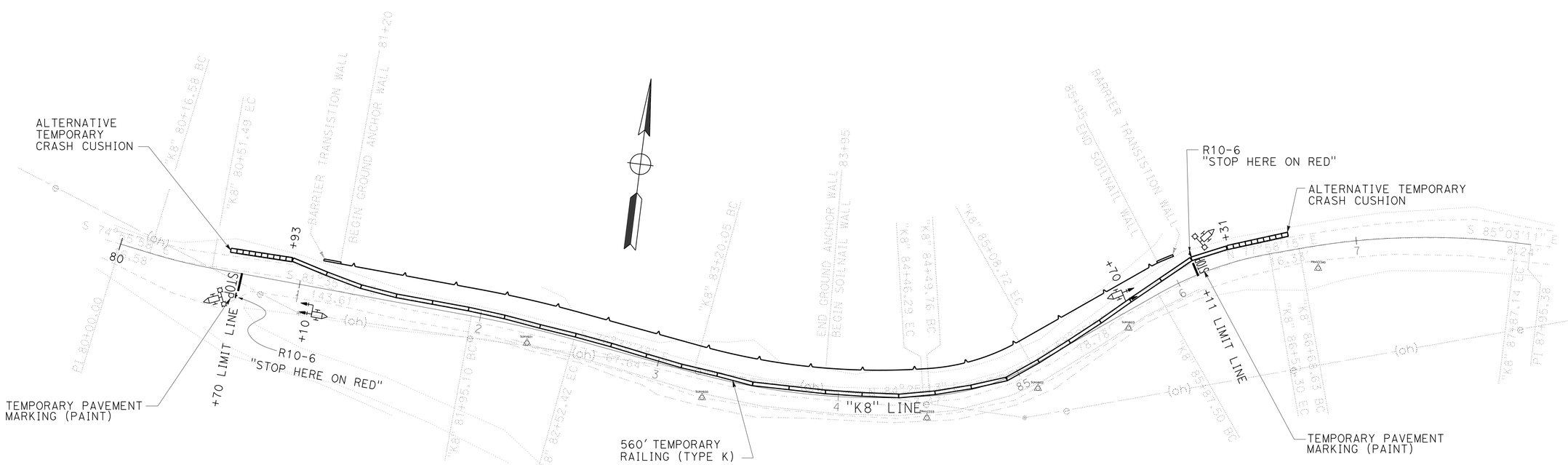

PLAN

LOCATION 8

"K8" 80+00 TO "K8" 87+35
(PM: 23.25/23.39)

TRAFFIC HANDLING PLAN
NO SCALE

TH-2

APPROVED FOR TRAFFIC HANDLING WORK ONLY

STATE OF CALIFORNIA - DEPARTMENT OF TRANSPORTATION
Caltrans
DESIGN

FUNCTIONAL SUPERVISOR: L.R. ASHLEY
CALCULATED-DESIGNED BY
CHECKED BY
REVISED BY
DATE REVISED
BIJAN SAMRAD
TODD LARK

P:\PROJ\01\45930\drafting\010000219\010000219md002.dgn

LAST REVISION 02-06-13
DATE PLOTTED => 18-JUN-2013
TIME PLOTTED => 08:16

Dist	COUNTY	ROUTE	POST MILES TOTAL PROJECT	SHEET No.	TOTAL SHEETS
01	Hum	169	13.6/23.4	34	86

REGISTERED CIVIL ENGINEER 02/08/13 DATE

6-17-13
PLANS APPROVAL DATE

REGISTERED PROFESSIONAL ENGINEER LENA R. ASHLEY No. 48764 Exp. 9-30-14 CIVIL STATE OF CALIFORNIA

THE STATE OF CALIFORNIA OR ITS OFFICERS OR AGENTS SHALL NOT BE RESPONSIBLE FOR THE ACCURACY OR COMPLETENESS OF SCANNED COPIES OF THIS PLAN SHEET.

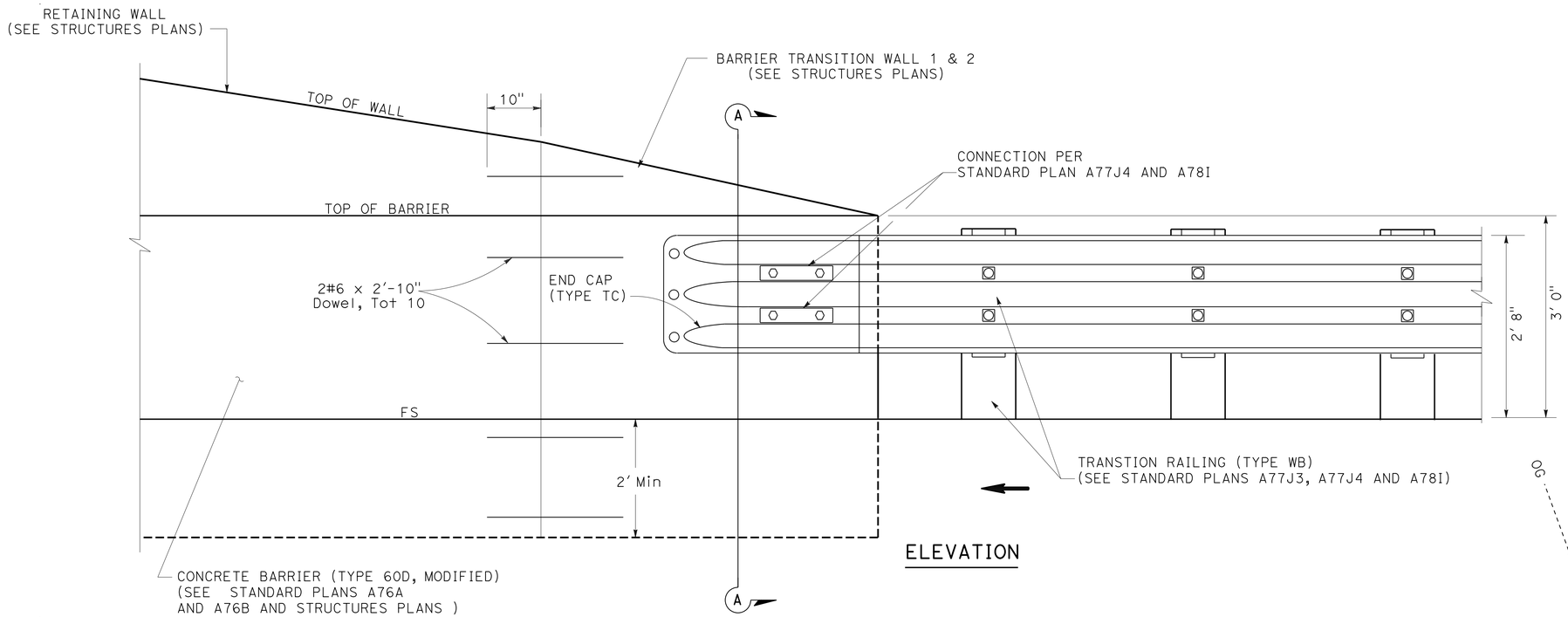

ELEVATION

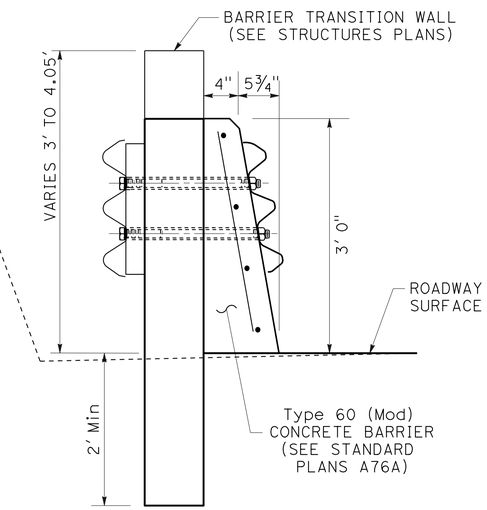

SECTION A-A

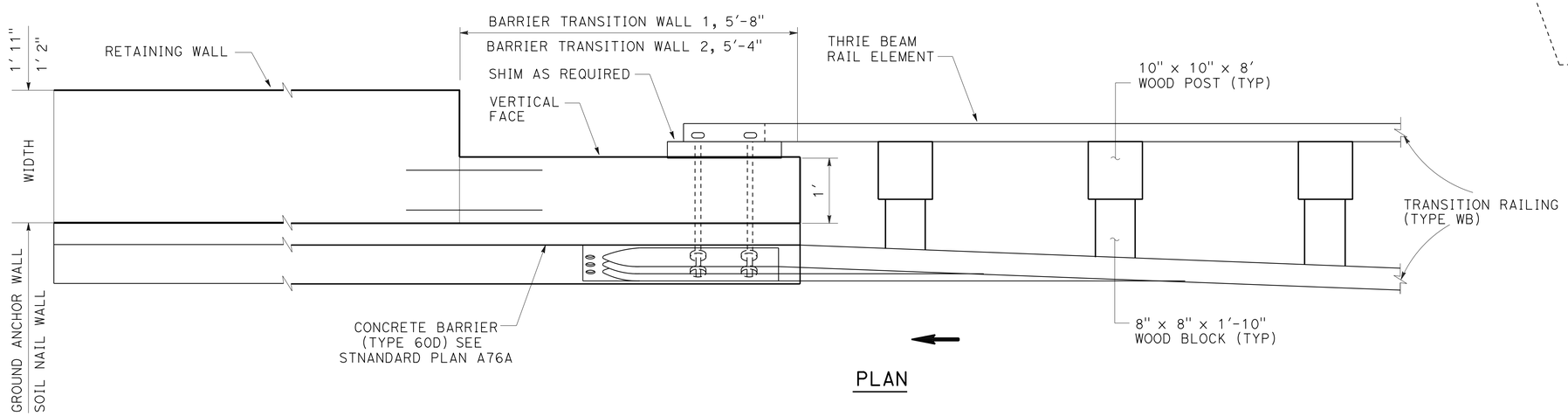

PLAN

LOCATION 8 MBGR TO CONCRETE BARRIER AND WALL CONNECTION DETAIL

(TRANSITION WALL 1: "K8" 81+14.33-81+20,
TRANSITION WALL 2: "K8" 85+94.88-85+99.83)

APPROVED FOR TRAFFIC HANDLING WORK ONLY

TRAFFIC HANDLING DETAILS

NO SCALE

THD-1

STATE OF CALIFORNIA - DEPARTMENT OF TRANSPORTATION
Caltrans
DESIGN
FUNCTIONAL SUPERVISOR: L.R. ASHLEY
CALCULATED-DESIGNED BY: BIJAN SAMRAD
CHECKED BY: TODD LARK
REVISED BY
DATE REVISED

P:\PROJ\01\45090\drafting\01000002191\0100000219me001.dgn

LAST REVISION 02-06-13
DATE PLOTTED => 18-JUN-2013
TIME PLOTTED => 08:16

Dist	COUNTY	ROUTE	POST MILES TOTAL PROJECT	SHEET No.	TOTAL SHEETS
01	Hum	169	13.6/23.4	35	86

REGISTERED CIVIL ENGINEER 02/08/13 DATE

6-17-13
PLANS APPROVAL DATE

REGISTERED PROFESSIONAL ENGINEER
LENA R. ASHLEY
No. 48764
Exp. 9-30-14
CIVIL
STATE OF CALIFORNIA

THE STATE OF CALIFORNIA OR ITS OFFICERS OR AGENTS SHALL NOT BE RESPONSIBLE FOR THE ACCURACY OR COMPLETENESS OF SCANNED COPIES OF THIS PLAN SHEET.

LEGEND:

PORTABLE SIGN

SIGN PANEL (BARRICADE MOUNTED)

TYPE III BARRICADE

NOTE:

FULL ROAD CLOSURE PORTABLE SIGNS & BARRICADES ARE INCLUDED IN "CONSTRUCTION AREA SIGN" LUMPSUM ESTIMATE.

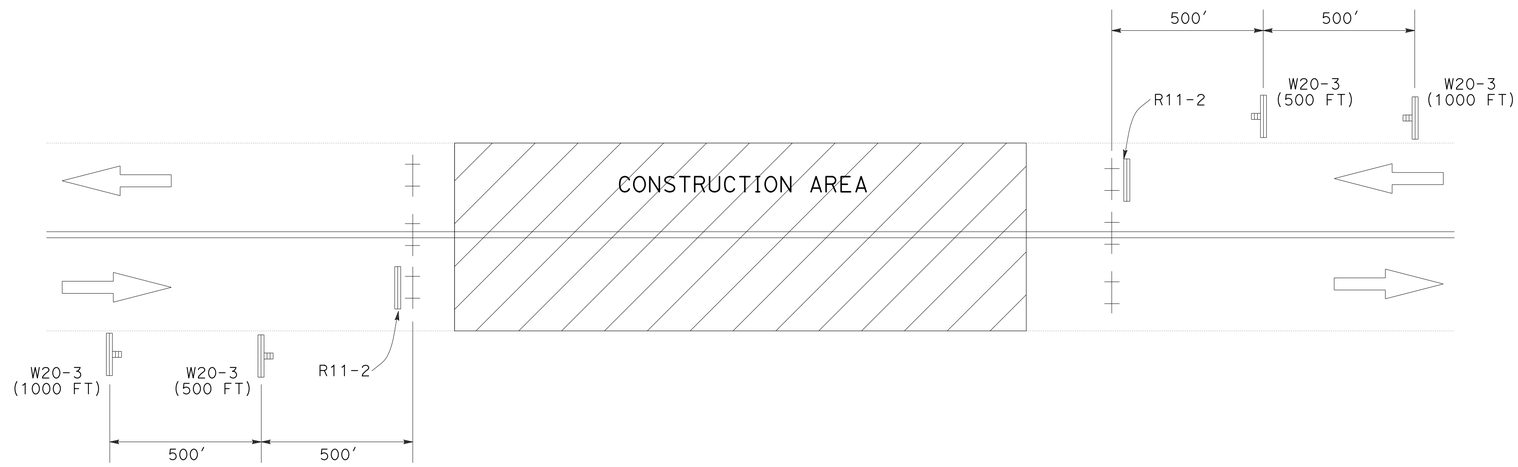

FULL ROAD CLOSURE DETAILS

APPROVED FOR TRAFFIC HANDLING WORK ONLY

TRAFFIC HANDLING DETAILS
NO SCALE

THD-2

REVISED BY | DATE REVISED
BIJAN SAMRAD | TODD LARK
CALCULATED-DESIGNED BY | CHECKED BY
FUNCTIONAL SUPERVISOR
L.R. ASHLEY

STATE OF CALIFORNIA - DEPARTMENT OF TRANSPORTATION
Caltrans
DESIGN

P:\PROJ\01\45930\drafting\0100000219\0100000219me002.dgn

LAST REVISION 02-06-13 | DATE PLOTTED => 18-JUN-2013 | TIME PLOTTED => 08:16

Dist	COUNTY	ROUTE	POST MILES TOTAL PROJECT	SHEET No.	TOTAL SHEETS
01	Hum	169	13.6/23.4	36	86

REGISTERED CIVIL ENGINEER 02/08/13 DATE

6-17-13
PLANS APPROVAL DATE

REGISTERED PROFESSIONAL ENGINEER
LENA R. ASHLEY
No. 48764
Exp. 9-30-14
CIVIL
STATE OF CALIFORNIA

THE STATE OF CALIFORNIA OR ITS OFFICERS OR AGENTS SHALL NOT BE RESPONSIBLE FOR THE ACCURACY OR COMPLETENESS OF SCANNED COPIES OF THIS PLAN SHEET.

TRAFFIC HANDLING

LOCATION	LINE DESIGNATION	STATION FROM	STATION TO	TEMPORARY PAVEMENT MARKING (PAINT) SQFT	TEMPORARY RAILING (TYPE K) LF	TEMPORARY ALTERNATIVE CRASH CUSHION EA	TYPE III BARRICADE EA
1	"K1"	11+10	11+40			1	
		11+40	12+98		160		
		11+46		34			3
		12+98	13+25			1	
		13+05		34			3
8	"K8"	80+31	80+61			1	
		80+40		34			
		80+63	80+93			1	
		80+74	86+32		560		
		86+11		34			
			TOTAL	136	720	4	6

TRAFFIC HANDLING QUANTITIES
THQ-1

STATE OF CALIFORNIA - DEPARTMENT OF TRANSPORTATION
Caltrans
DESIGN

FUNCTIONAL SUPERVISOR: L.R. ASHLEY
CALCULATED-DESIGNED BY: BIJAN SAMRAD
CHECKED BY: TODD LARK
REVISED BY
DATE REVISED

P:\PROJ\01\45930\drafting\01000002191\0100000219mf001.dgn

LAST REVISION 02-06-13 | DATE PLOTTED => 18-JUN-2013 | TIME PLOTTED => 08:16

Dist	COUNTY	ROUTE	POST MILES TOTAL PROJECT	SHEET No.	TOTAL SHEETS
01	Hum	169	13.6/23.4	37	86

REGISTERED CIVIL ENGINEER 02/08/13 DATE

6-17-13
PLANS APPROVAL DATE

REGISTERED PROFESSIONAL ENGINEER
LENA R. ASHLEY
No. 48764
Exp. 9-30-14
CIVIL
STATE OF CALIFORNIA

THE STATE OF CALIFORNIA OR ITS OFFICERS OR AGENTS SHALL NOT BE RESPONSIBLE FOR THE ACCURACY OR COMPLETENESS OF SCANNED COPIES OF THIS PLAN SHEET.

LEGEND:

TRAFFIC STRIPE DETAIL NUMBER

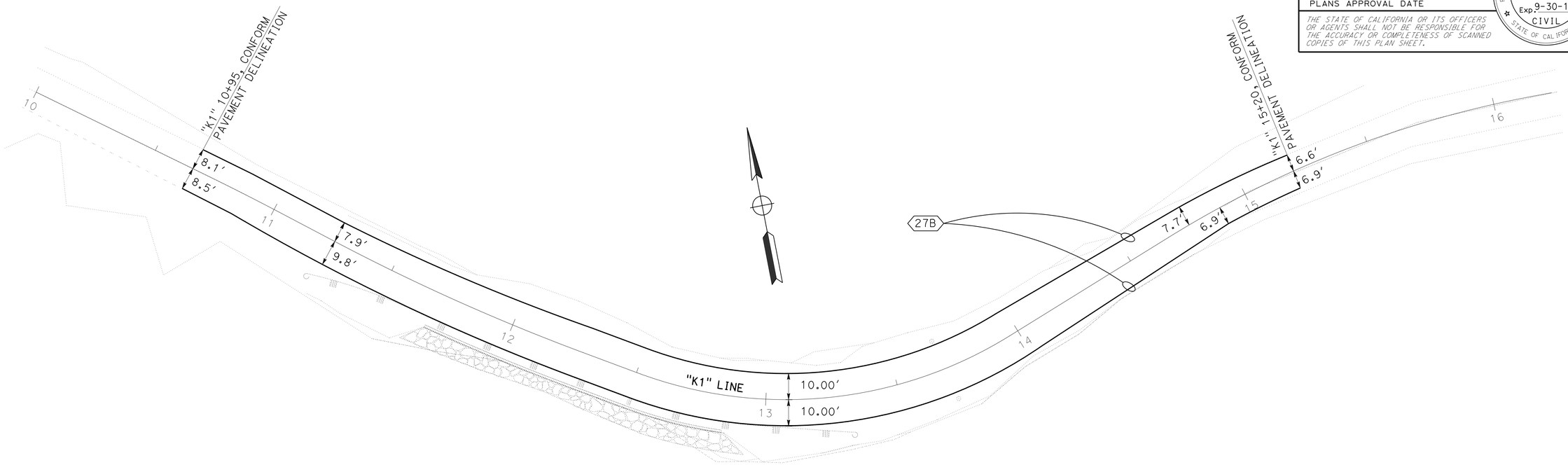

LOCATION 1

"K1" 10+95 TO "K1" 15+20
(PM: 13.66/13.73)

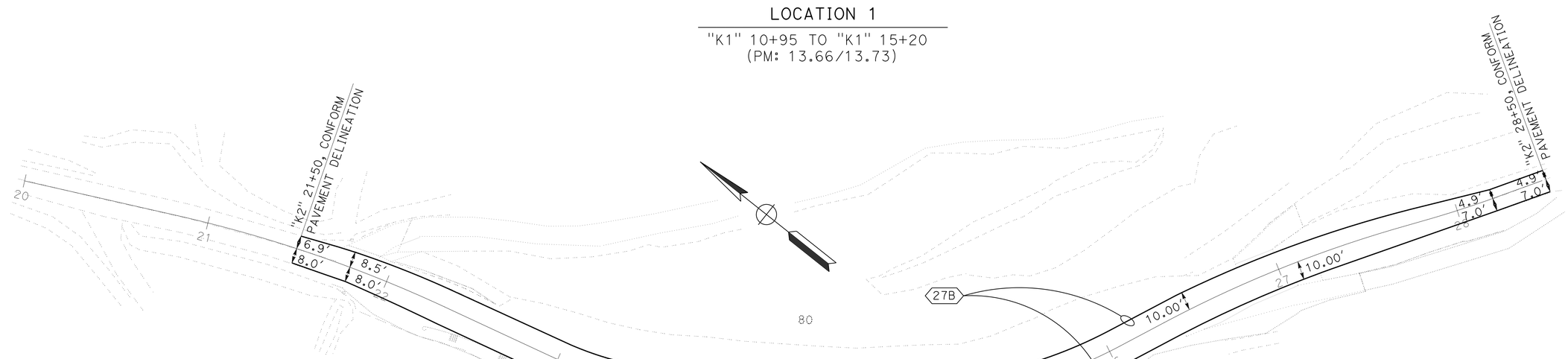

LOCATION 2

"K2" 21+50 TO "K2" 28+50
(PM: 18.94/19.08)

APPROVED FOR PAVEMENT DELINEATION WORK ONLY

PAVEMENT DELINEATION PLAN

NO SCALE

PD-1

REVISED BY | DATE REVISED
BIJAN SAMRAD | TODD LARK
CALCULATED-DESIGNED BY | CHECKED BY
FUNCTIONAL SUPERVISOR: L.R. ASHLEY

STATE OF CALIFORNIA - DEPARTMENT OF TRANSPORTATION
Caltrans
DESIGN

P:\PROJ\01\45930\drafting\01000219\01000002191na001.dgn

LAST REVISION 02-06-13 | DATE PLOTTED => 18-JUN-2013 | TIME PLOTTED => 08:16

BORDER LAST REVISED 7/2/2010 | USERNAME => s128843 | DGN FILE => 01000002191na001.dgn | RELATIVE BORDER SCALE IS IN INCHES 0 1 2 3 | UNIT 0313 | PROJECT NUMBER & PHASE 01000002191

Dist	COUNTY	ROUTE	POST MILES TOTAL PROJECT	SHEET No.	TOTAL SHEETS
01	Hum	169	13.6/23.4	38	86

REGISTERED CIVIL ENGINEER 02/08/13 DATE

6-17-13
PLANS APPROVAL DATE

REGISTERED PROFESSIONAL ENGINEER
LENA R. ASHLEY
No. 48764
Exp. 9-30-14
CIVIL
STATE OF CALIFORNIA

THE STATE OF CALIFORNIA OR ITS OFFICERS OR AGENTS SHALL NOT BE RESPONSIBLE FOR THE ACCURACY OR COMPLETENESS OF SCANNED COPIES OF THIS PLAN SHEET.

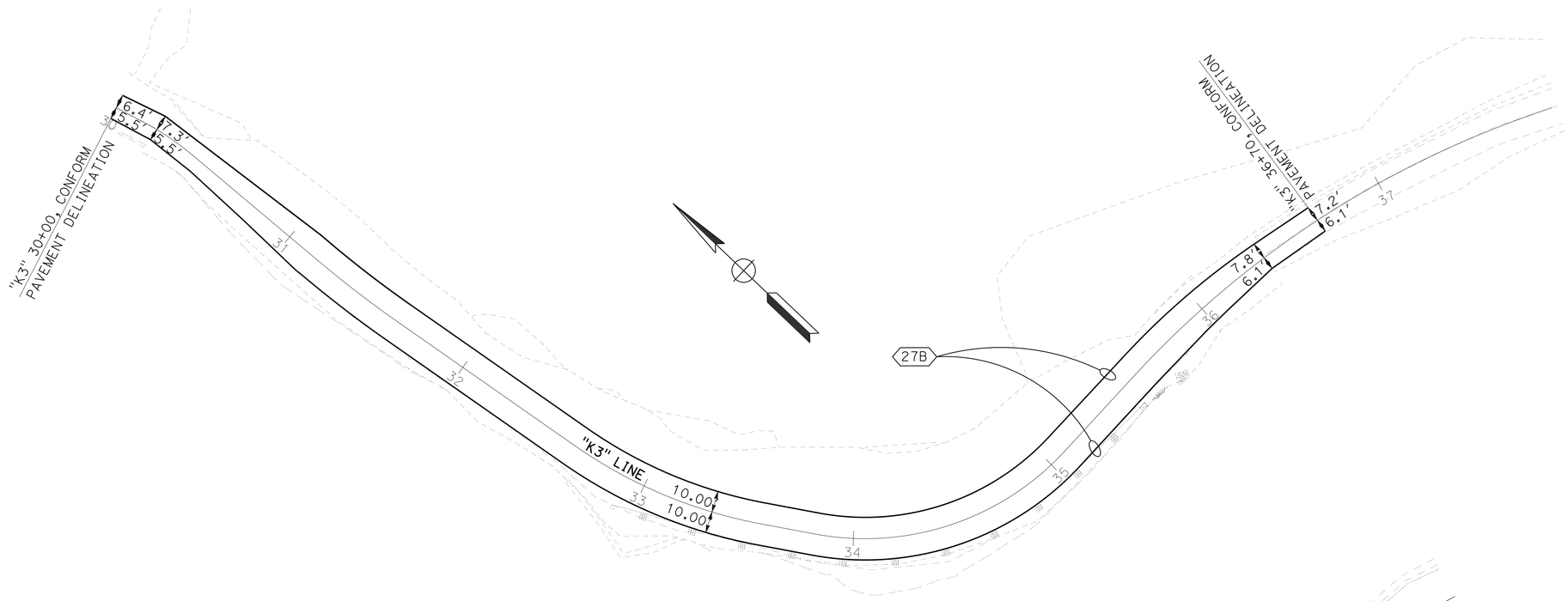

LOCATION 3

"K3" 30+00 TO "K3" 36+70
(PM: 20.48/20.62)

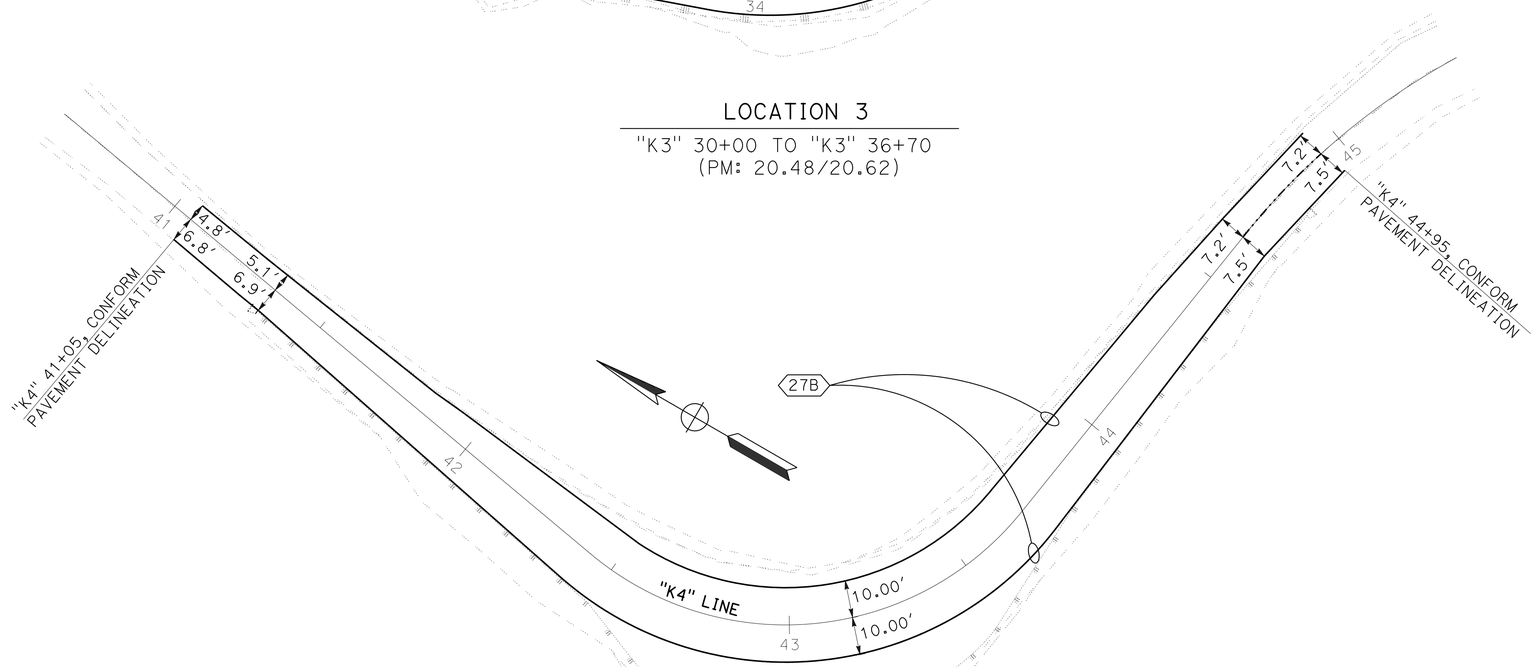

LOCATION 4

"K4" 41+00 TO "K4" 45+00
(PM: 22.46/22.54)

APPROVED FOR PAVEMENT DELINEATION WORK ONLY

PAVEMENT DELINEATION PLAN

NO SCALE

PD-2

LAST REVISION	DATE PLOTTED => 18-JUN-2013
02-06-13	TIME PLOTTED => 08:16

REVISED BY	DATE REVISED

CALCULATED-DESIGNED BY	BIJAN SAMRAD
CHECKED BY	TODD LARK
FUNCTIONAL SUPERVISOR	L.R. ASHLEY

STATE OF CALIFORNIA - DEPARTMENT OF TRANSPORTATION
Caltrans
DESIGN

P:\PROJ\01\4590\drafting\01000002191\0100000219na002.dgn

Dist	COUNTY	ROUTE	POST MILES TOTAL PROJECT	SHEET No.	TOTAL SHEETS
01	Hum	169	13.6/23.4	39	86

REGISTERED CIVIL ENGINEER 02/08/13 DATE

6-17-13
PLANS APPROVAL DATE

REGISTERED PROFESSIONAL ENGINEER
LENA R. ASHLEY
No. 48764
Exp. 9-30-14
CIVIL
STATE OF CALIFORNIA

THE STATE OF CALIFORNIA OR ITS OFFICERS OR AGENTS SHALL NOT BE RESPONSIBLE FOR THE ACCURACY OR COMPLETENESS OF SCANNED COPIES OF THIS PLAN SHEET.

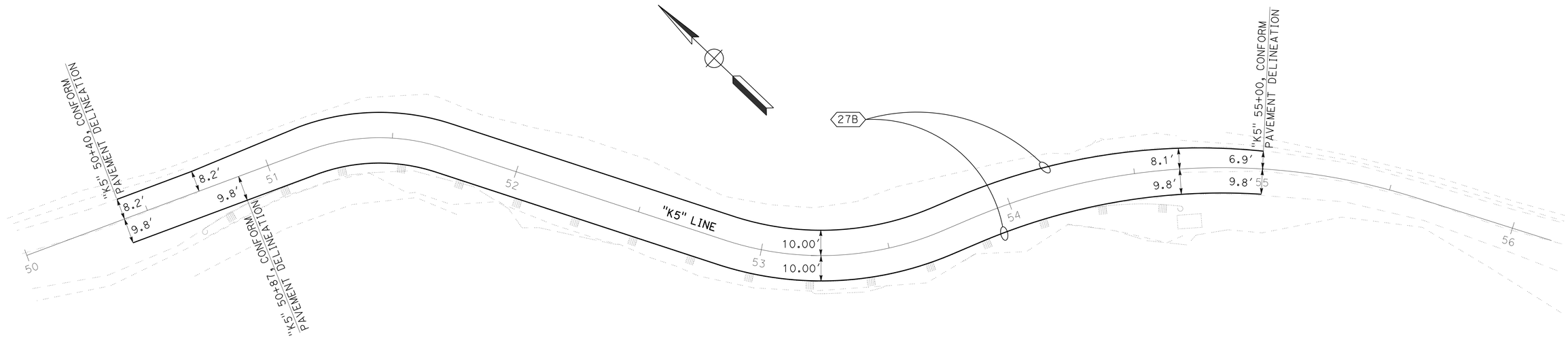

LOCATION 5

"K5" 50+40 TO "K5" 55+00
(PM: 22.60/22.71)

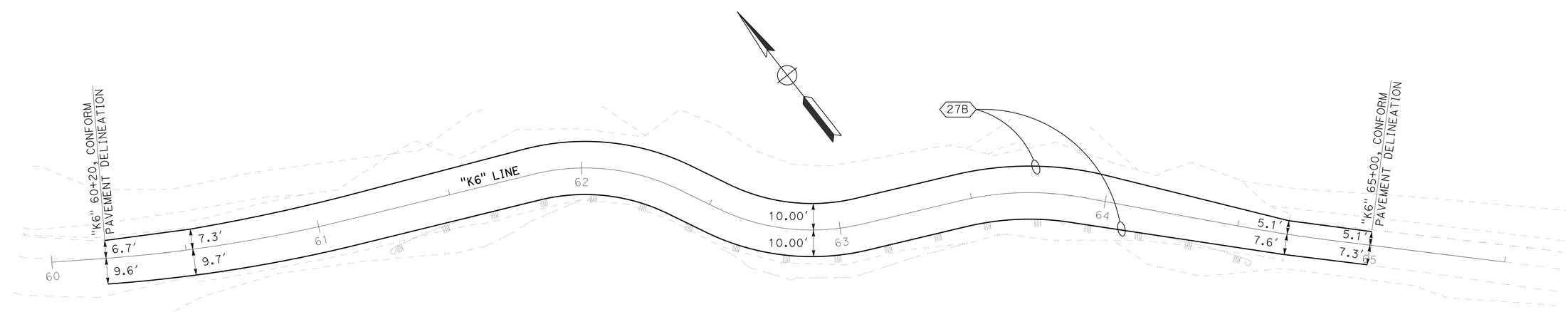

LOCATION 6

"K6" 60+20 TO "K6" 65+00
(PM: 22.73/22.82)

PAVEMENT DELINEATION PLAN

NO SCALE

PD-3

APPROVED FOR PAVEMENT DELINEATION WORK ONLY

REVISED BY	DATE REVISED
BIJAN SAMRAD	
TODD LARK	

CALCULATED-DESIGNED BY
CHECKED BY

FUNCTIONAL SUPERVISOR
L.R. ASHLEY

STATE OF CALIFORNIA - DEPARTMENT OF TRANSPORTATION
Caltrans®
DESIGN

P:\PROJ\01\4509\drafting\01000002191\01000002191na003.dgn

LAST REVISION 02-06-13 | DATE PLOTTED => 18-JUN-2013 | TIME PLOTTED => 08:16

Dist	COUNTY	ROUTE	POST MILES TOTAL PROJECT	SHEET No.	TOTAL SHEETS
01	Hum	169	13.6/23.4	40	86

REGISTERED CIVIL ENGINEER 02/08/13 DATE

6-17-13
PLANS APPROVAL DATE

REGISTERED PROFESSIONAL ENGINEER
LENA R. ASHLEY
No. 48764
Exp. 9-30-14
CIVIL
STATE OF CALIFORNIA

THE STATE OF CALIFORNIA OR ITS OFFICERS OR AGENTS SHALL NOT BE RESPONSIBLE FOR THE ACCURACY OR COMPLETENESS OF SCANNED COPIES OF THIS PLAN SHEET.

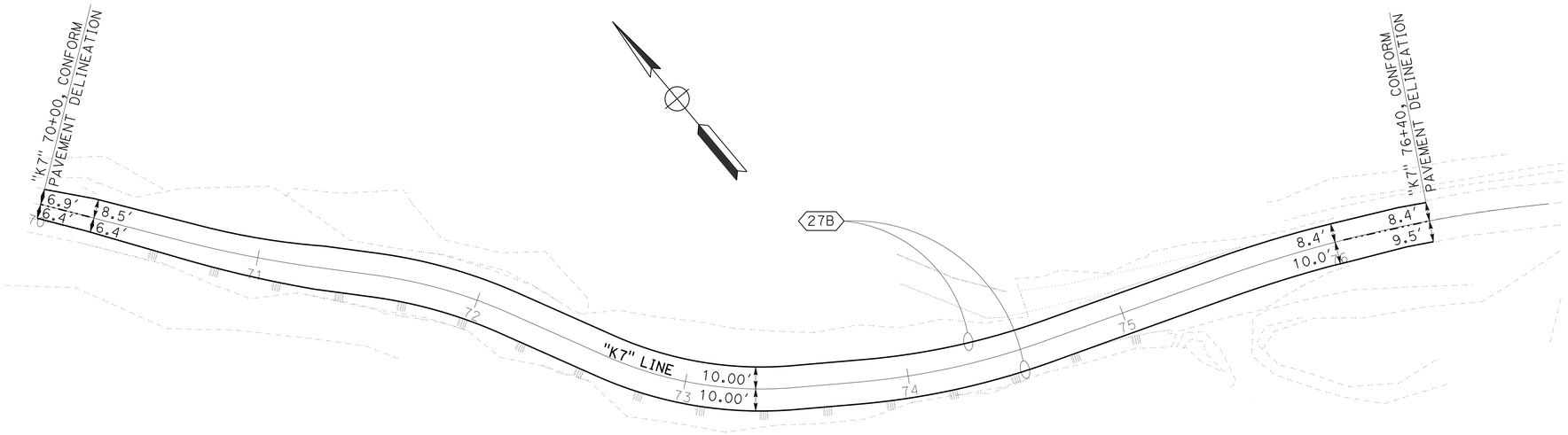

LOCATION 7

"K7" 70+00 TO "K7" 76+40
(PM: 22.88/22.99)

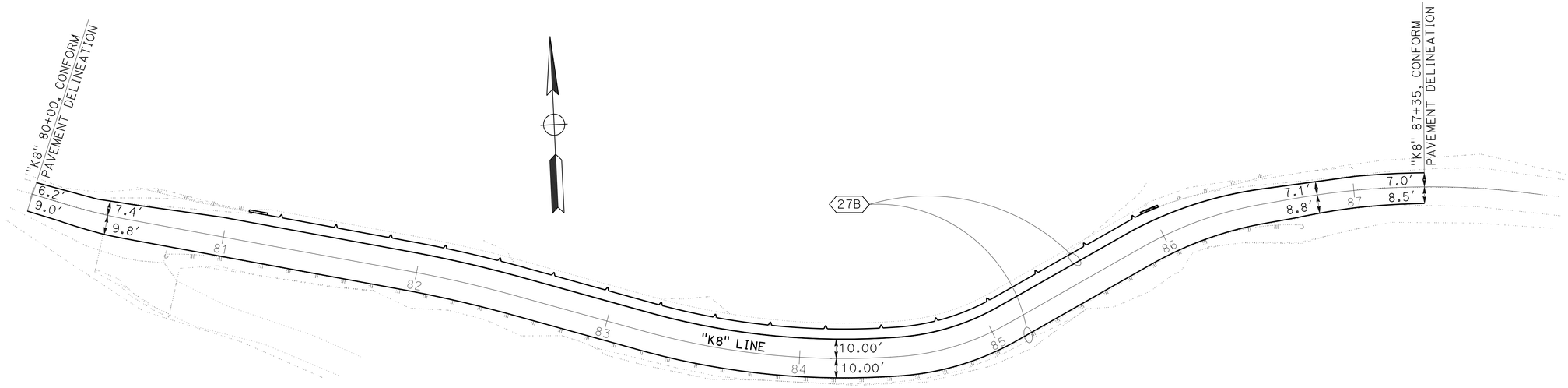

LOCATION 8

"K8" 80+00 TO "K8" 87+35
(PM: 23.25/23.39)

APPROVED FOR PAVEMENT DELINEATION WORK ONLY

PAVEMENT DELINEATION PLAN

NO SCALE

PD-4

REVISED BY	DATE REVISED

BIJAN SAMRAD — TODD LARK

CALCULATED-DESIGNED BY — CHECKED BY

FUNCTIONAL SUPERVISOR: L.R. ASHLEY

STATE OF CALIFORNIA - DEPARTMENT OF TRANSPORTATION
Caltrans
DESIGN

P:\PROJ\01\45g0\drafting\01000002191\0100000219na004.dgn

LAST REVISION 02-06-13 | DATE PLOTTED => 18-JUN-2013 | TIME PLOTTED => 08:16

BORDER LAST REVISED 7/2/2010 | USERNAME => s128843 | DGN FILE => 0100000219na004.dgn | RELATIVE BORDER SCALE IS IN INCHES 0 1 2 3 | UNIT 0313 | PROJECT NUMBER & PHASE 01000002191

Dist	COUNTY	ROUTE	POST MILES TOTAL PROJECT	SHEET No.	TOTAL SHEETS
01	Hum	169	13.6/23.4	41	86

REGISTERED CIVIL ENGINEER 02/08/13 DATE

6-17-13
PLANS APPROVAL DATE

REGISTERED PROFESSIONAL ENGINEER
LENA R. ASHLEY
No. 48764
Exp. 9-30-14
CIVIL
STATE OF CALIFORNIA

THE STATE OF CALIFORNIA OR ITS OFFICERS OR AGENTS SHALL NOT BE RESPONSIBLE FOR THE ACCURACY OR COMPLETENESS OF SCANNED COPIES OF THIS PLAN SHEET.

TRAFFIC STRIPE AND MARKER ITEMS

LOCATION	LINE DESIG-NATION	STATION		DIRECTION	DETAIL No.	THERMOPLASTIC TRAFFIC STRIPE
						4" SOLID WHITE
		FROM	TO			LF
1	"K1"	10+95	15+20	EB & WB	27B	850
2	"K2"	21+50	28+50	EB & WB	27B	1400
3	"K3"	30+00	36+70	EB & WB	27B	1340
4	"K4"	41+05	44+95	EB & WB	27B	780
5	"K5"	50+40	55+00	EB & WB	27B	920
6	"K6"	60+20	65+00	EB & WB	27B	960
7	"K7"	70+00	76+40	EB & WB	27B	1280
8	"K8"	80+00	87+35	EB & WB	27B	1470
					TOTAL	9000

PAVEMENT DELINEATION QUANTITIES
PDQ-1

REVISED BY | DATE REVISED
BIJAN SAMRAD | TODD LARK
CALCULATED-DESIGNED BY | CHECKED BY
FUNCTIONAL SUPERVISOR
L.R. ASHLEY

STATE OF CALIFORNIA - DEPARTMENT OF TRANSPORTATION
Caltrans
DESIGN

P:\PROJ\01\45030\drafting\01000002191\0100000219nc001.dgn

LAST REVISION 02-06-13 | DATE PLOTTED => 18-JUN-2013 | TIME PLOTTED => 08:16

Dist	COUNTY	ROUTE	POST MILES TOTAL PROJECT	SHEET No.	TOTAL SHEETS
01	Hum	169	13.6/23.4	42	86

REGISTERED CIVIL ENGINEER 02/08/13 DATE

6-17-13
PLANS APPROVAL DATE

REGISTERED PROFESSIONAL ENGINEER LENA R. ASHLEY No. 48764 Exp. 9-30-14 CIVIL STATE OF CALIFORNIA

THE STATE OF CALIFORNIA OR ITS OFFICERS OR AGENTS SHALL NOT BE RESPONSIBLE FOR THE ACCURACY OR COMPLETENESS OF SCANNED COPIES OF THIS PLAN SHEET.

ROADWAY QUANTITIES

LOCATION	LINE DESIGNATION	STATION FROM	STATION TO	ROADWAY EXCAVATION	(N) EMBANKMENT	CLASS 2 AGGREGATE BASE	REMOVE BASE AND SURFACING	ROCKSLOPE PROTECTION (1/2 TON, METHOD A)	HOT MIX ASPHALT (HMA) TYPE A	TACK COAT	PAVING ASPHALT (BINDER, GEOSYNTHETIC PAVEMENT INTERLAYER)	SHOULDER BACKING	V-DITCH SHOULDER BACKING	V-DITCH (N) DITCH	GEOSYNTHETIC PAVEMENT INTERLAYER (PAVING FABRIC)	COLD PLANE ASPHALT CONCRETE PAVEMENT	RESET MILE POST MARKER	CABLE GATE
				CY					TON					LF	SQYD		EA	EA
1	"K1"	11+25.81	14+89.00	58.6	40.3	32.4	13.6	140.0	133.4	0.56	0.37	4.1	7.1	102.0	315.1	264.8	1	
2	"K2"	21+73.30	28+19.77	1507.2	75.2	138.3	13.7		280.2	0.95	0.67	3.0	35.7	516.0	569.3	377.8	1	1
3	"K3"	30+21.35	36+37.22	3538.3	36.7	71.4	23.6		226.7	0.91	0.32	12.1	37.2	538.5	274.2	226.8	1	
4	"K4"	41+34.54	44+63.25	19.9	41.4	16.2			86.9	0.54	0.17	7.5			146.2	172.4		
5	"K5"	50+69.00	54+67.48	1115.4	73.8	44.8	5.4		154.7	0.63	0.31	3.3	22.7	328.8	258.2	275.8		
6	"K6"	60+49.30	64+68.64	689.3	76.1	42.4			151.6	0.65	0.44	2.2	17.9	260.0	371.3	298.2	4	
7	"K7"	70+22.72	76+03.77	1013.3	81.2	58.4			219.2	0.87	0.60	2.0	25.6	370.0	512.8	364.1		
8	"K8"	80+40.00	87+01.04	1254.3	60.4	111.2	7.0		342.3	0.97	0.54	6.5			462.2	356.1		
SUBTOTAL				9196.3	485.1	515.1	63.3	140.0	1595.0	6.08	3.42	40.7	146.2	2115.3	2909.3	2336	7	1
TOTAL				9196.3	485.1	515.1	63.3	140.0	1595.0	6.08	3.42	186.9		2115.3	2909.3	2336	7	1

(N) - NOT A SEPARATE PAY ITEM, FOR INFORMATION ONLY

TEMPORARY FENCE

LOCATIONS	LINE DESIGNATION	STATIONS FROM	STATIONS TO	WB/EB Lt/Rt	TEMPORARY REINFORCED SILT FENCE
					LF
1	"K1"	11+20	13+50	EB-Rt	230
3	"K3"	30+40	36+40	EB-Rt	600
5	"K5"	50+70	54+70	EB-Rt	400
6	"K6"	60+50	64+70	EB-Rt	420
7	"K7"	70+20	76+00	EB-Rt	580
				TOTAL	2230

SUMMARY OF QUANTITIES
Q-1

REVISED BY | DATE REVISED
BIJAN SAMRAD | TODD LARK
CALCULATED-DESIGNED BY | CHECKED BY
FUNCTIONAL SUPERVISOR: L.R. ASHLEY

STATE OF CALIFORNIA - DEPARTMENT OF TRANSPORTATION
Caltrans
DESIGN

P:\PROJ\01\45930\drafting\0100000219\0100000219pa001.dgn

LAST REVISION 02-06-13 | DATE PLOTTED => 26-JUN-2013 | TIME PLOTTED => 17:21

Dist	COUNTY	ROUTE	POST MILES TOTAL PROJECT	SHEET No.	TOTAL SHEETS
01	Hum	169	13.6/23.4	43	86

REGISTERED CIVIL ENGINEER 02/08/13 DATE

6-17-13
PLANS APPROVAL DATE

REGISTERED PROFESSIONAL ENGINEER LENA R. ASHLEY No. 48764 Exp. 9-30-14 CIVIL STATE OF CALIFORNIA

THE STATE OF CALIFORNIA OR ITS OFFICERS OR AGENTS SHALL NOT BE RESPONSIBLE FOR THE ACCURACY OR COMPLETENESS OF SCANNED COPIES OF THIS PLAN SHEET.

TEMPORARY WATER POLLUTION CONTROL

LOCATIONS	LINE DESIGNATION	STATIONS/ POST MILE FROM	STATIONS/ POST MILE TO	DIRECTION	SOIL STABILIZATION: TEMPORARY HYDRAULIC MULCH (BONDED FIBER MATRIX)	SOIL STABILIZATION: TEMPORARY COVER	SEDIMENT CONTROL: TEMPORARY FIBER ROLL	SEDIMENT CONTROL: TEMPORARY SILT FENCE	SEDIMENT CONTROL: TEMPORARY CHECK DAM	SEDIMENT CONTROL: TEMPORARY DRAINAGE INLET PROTECTION	TEMPORARY CONSTRUCTION ENTRANCE	COMMENTS
					SQYD		LF			EA	EA	
1	"K1"	11+25	14+90			48.4						
		11+50	14+80	L†&R†					50			
		11+70	12+86	EB/R†				120				
		11+60	13+00	WB/L†	222							
		11+60	13+00	EB/R†	289							
		12+60	14+75	EB/R†								
		PM 13.66	PM 13.73	EB/WB			210				2	
		PM 13.71		WB/L†						1		EXISTING CULVERT
2	"K2"	21+79	28+20			188.8						
		21+60	27+50	WB/L†	1667							
		21+60	27+50	EB/R†	400							
		22+00	28+00	L†&R†					90			
		PM 19.07		WB/L†						1		EXISTING CULVERT
3	"K3"	30+21	36+37			188.8						
		30+20	36+20	WB/L†					90			
		30+40	35+70	WB/L†	2944							
		PM 20.50		WB/L†						1		EXISTING CULVERT
		PM 20.60		WB/L†						1		CULVERT TO BE REPLACED
4	"K4"	41+34	44+63			38.7						
		41+80	42+50	EB/R†	39			70				
		43+80	44+60	EB/R†	44			80				
5	"K5"	50+71	54+68			82.3						
		50+80	54+60	EB/R†			160					EXCLUDED 220' FIBER ROLL
		51+10	52+00	EB/R†				90				
		52+60	53+20	EB/R†				60				
		52+60	53+20	EB/R†				70				
		51+20	54+40	WB/L†					50			
		PM 22.60	PM 22.71	EB/WB							2	
		PM 22.58		WB/L†						1		EXISTING CULVERT
		PM 22.68		WB/L†						1		CULVERT TO BE REPLACED
6	"K6"	60+53	64+69			87.1						
		60+70	65+00	EB/R†			430					
		61+50	64+50	WB/L†	1000							
		61+00	64+50	EB/R†	239							
		62+20	63+60	WB/L†					21			
		PM 22.77		WB/L†						1		CULVERT TO BE REPLACED
7	"K7"	70+22	76+04			130.7						
		70+40	71+40	WB/L†	333							
		70+40	71+40	WB/L†	567							
		72+50	74+30	EB/R†			180					
		70+30	71+40	WB/L†					15			
		72+40	71+70	WB/L†					9			
		PM 22.80		WB/L†						1		EXISTING CULVERT
		PM 22.98		WB/L†						1		EXISTING CULVERT
8	"K8"	80+51	87+01			145.2						
		81+00	86+00	EB/R†			500					
		81+20	86+60	L†&R†					81			
		PM 23.25	PM 23.40	EB/WB							2	
				TOTAL	7744	910	1480	490	406	9	6	

SUMMARY OF QUANTITIES
Q-2

REVISED BY | DATE REVISED
BIJAN SAMRAD | TODD LARK
CALCULATED-DESIGNED BY | CHECKED BY
FUNCTIONAL SUPERVISOR: L.R. ASHLEY

STATE OF CALIFORNIA - DEPARTMENT OF TRANSPORTATION
Caltrans® DESIGN

P:\PROJ\01\45090\drafting\01000002191\0100000219pa002.dgn

LAST REVISION 02-06-13 | DATE PLOTTED => 18-JUN-2013 | TIME PLOTTED => 08:16

Dist	COUNTY	ROUTE	POST MILES TOTAL PROJECT	SHEET No.	TOTAL SHEETS
01	Hum	169	13.6/23.4	44	86

REGISTERED CIVIL ENGINEER 02/08/13 DATE

6-17-13
PLANS APPROVAL DATE

REGISTERED PROFESSIONAL ENGINEER
LENA R. ASHLEY
No. 48764
Exp. 9-30-14
CIVIL
STATE OF CALIFORNIA

THE STATE OF CALIFORNIA OR ITS OFFICERS OR AGENTS SHALL NOT BE RESPONSIBLE FOR THE ACCURACY OR COMPLETENESS OF SCANNED COPIES OF THIS PLAN SHEET.

METAL BEAM GUARD RAILING

LOCATION	LINE DESIGNATION	STATION FROM	STATION TO	✳ MBGR	MBGR (SPECIAL)	STEEL POST (N) 6' (W6 X 9)	STEEL POST (N) 7' (W6 X 9)	STEEL POST (N) 5'-6" (W6 X 25)	TERMINAL SYSTEMS: ALTERNATIVE FLARED TERMINAL SYSTEM	TERMINAL SYSTEMS: ALTERNATIVE IN-LINE TERMINAL SYSTEM	TERMINAL SYSTEMS: TRANSISTION RAILING (TYPE WB)	TERMINAL SYSTEMS: (N) BURIED POST ANCHOR	TERMINAL SYSTEMS: (N) TERMINAL ANCHOR Assy (TYPE SFT)	GUARD RAILING DELINEATOR
				LF					EA					
1	"K1"	11+60 R†	12+95 R†	135			135		2				2	7
2	"K2"	22+65 R†	23+75 R†	110			110		1				1	6
		23+75 R†	24+99 R†		124			124						6
		24+99 R†	25+22 R†	23			33		1				1	1
3	"K3"	33+28 R†	35+13 R†	185			185		1	1			2	9
4	"K4"	41+73 R†	41+80 R†	7			7			1			1	
		41+80 R†	42+50 R†		70			70						4
		42+50 R†	43+80 R†	130			130						1	7
		43+80 R†	44+50 R†		70			70						4
		44+50 R†	44+57 R†	7			7			1			1	
5	"K5"	51+05 R†	51+12 R†	7			7		1				1	
		51+12 R†	52+00 R†		88			88						4
		52+00 R†	25+60 R†	60			60							3
		52+60 R†	53+20 R†		60			60						3
		53+20 R†	53+50 R†	30			30							2
		53+50 R†	54+20 R†		70			70						4
		54+20 R†	54+27 R†	7			7		1				1	
6	"K6"	61+64 R†	61+83 R†	19			19		1				1	1
		61+81 L†	62+19 L†	38		38						2		2
		61+83 R†	62+70 R†		87			87						4
		62+70 R†	63+70 R†	100			100							5
		62+70 R†	64+05 R†		35			35						2
		64+05 R†	64+18 R†	13			13		1				1	1
7	"K7"	70+67 R†	70+80 R†	13			13			1			1	1
		70+80 R†	71+30 R†		50			50						3
		71+30 R†	72+50 R†	120			120							6
		72+50 R†	74+30 R†		180			180						9
		74+30 R†	74+79 R†	49			49		1				1	2
8	"K8"	80+51 L†	80+85 L†	34		34					1	1		2
		81+12 R†	81+70 R†	58			58		1				1	3
		81+70 R†	82+90 R†		120			120						6
		82+90 R†	85+45 R†	255			255							13
		85+45 R†	86+15 R†		70			70						4
		86+15 R†	86+28 R†	13			13		1				1	1
		86+30 L†	86+60 L†	30		30					1	1		2
			TOTAL	1443	1024	102	1341	1024	12	4	2	4	17	127

(N) - NOT A SEPARATE PAY ITEM, FOR INFORMATION ONLY
✳ - LAST STANDARD RAIL ELEMNTS SECTION PRECEDING/LEADING THE SPECIAL MBGR SECTION, SHALL BE NESTED.

SUMMARY OF QUANTITIES
Q-3

REVISED BY | DATE REVISED
BIJAN SAMRAD | TODD LARK
CALCULATED-DESIGNED BY | CHECKED BY
FUNCTIONAL SUPERVISOR: L.R. ASHLEY
STATE OF CALIFORNIA - DEPARTMENT OF TRANSPORTATION
Caltrans DESIGN

P:\PROJ\01\45050\drafting\0100000219\0100000219pa003.dgn

LAST REVISION 02-06-13 | DATE PLOTTED => 18-JUN-2013 | TIME PLOTTED => 08:16

Dist	COUNTY	ROUTE	POST MILES TOTAL PROJECT	SHEET No.	TOTAL SHEETS
01	Hum	169	13.6/23.4	45	86

Brian T. Finck 02-08-13
REGISTERED ELECT ENGINEER DATE

6-17-13
PLANS APPROVAL DATE

REGISTERED PROFESSIONAL ENGINEER BRIAN T. FINCK No. 17756 Exp. 6-30-14 ELECT STATE OF CALIFORNIA

THE STATE OF CALIFORNIA OR ITS OFFICERS OR AGENTS SHALL NOT BE RESPONSIBLE FOR THE ACCURACY OR COMPLETENESS OF SCANNED COPIES OF THIS PLAN SHEET.

NOTES:

1. FOR ACCURATE RIGHT OF WAY DATA, CONTACT RIGHT OF WAY ENGINEERING AT THE DISTRICT OFFICE.
2. TRAFFIC MUST BE CONTROLLED WITH FLAGGERS WHENEVER CONSTRUCTION ACTIVITIES BLOCK THE LINE OF SIGHT BETWEEN THE LIMIT LINES.
3. FOR SIGN PANELS, SEE SHEET CS-1.

LEGEND:

- TEMPORARY PORTABLE TRAFFIC SIGNAL WITH CONTROLLER ASSEMBLY
- PORTABLE LIGHT TOWER WITH GENERATOR
- TEMPORARY SIGN AND FLASHING BEACON MOUNTED ON WOOD POLE WITH PHOTOVOLTAIC PANELS, EXACT LOCATIONS TO BE DETERMINED BY THE ENGINEER

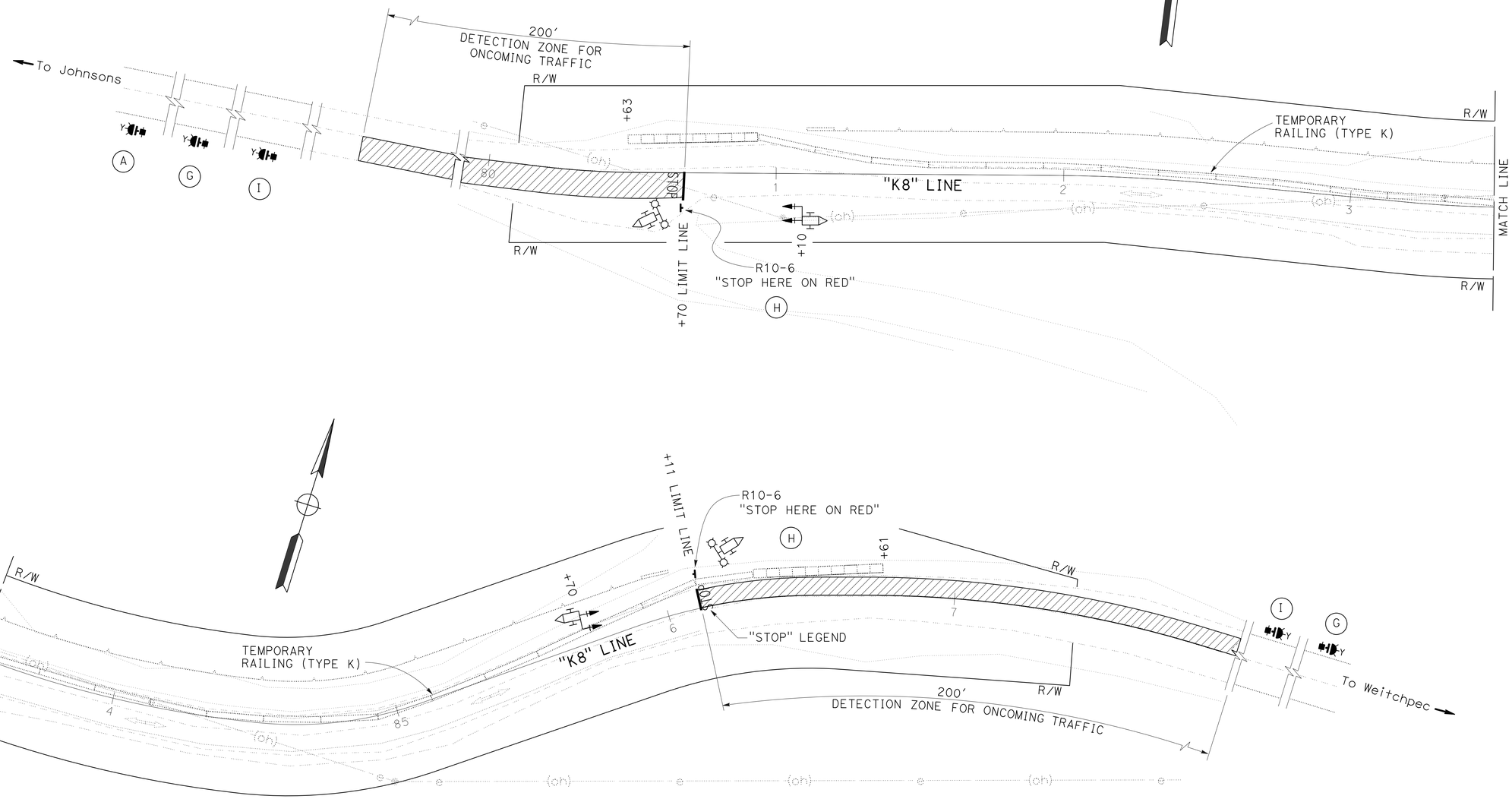

LOCATION 8

"K8" 80+20 TO "K8" 87+35
(PM: 23.25/23.39)

TEMPORARY PORTABLE SIGNAL SYSTEM

SCALE: 1" = 20'

E-1

APPROVED FOR ELECTRICAL WORK ONLY

REVISED BY	DATE REVISED
BRIAN FINCK	BIJAN SAMRAD
CALCULATED-DESIGNED BY	CHECKED BY
FUNCTIONAL SUPERVISOR	TROY ARSENEAU

STATE OF CALIFORNIA - DEPARTMENT OF TRANSPORTATION
Caltrans
ELECTRICAL

P:\PROJ\01\45090\drafting\01000219\0100000219ua001.dgn

LAST REVISION 01-28-13
DATE PLOTTED => 19-JUN-2013
TIME PLOTTED => 15:39

Dist	COUNTY	ROUTE	POST MILES TOTAL PROJECT	SHEET No.	TOTAL SHEETS
01	Hum	169	13.6/23.4	46	86

Brian T. Finck 02-08-13
REGISTERED ELECT ENGINEER DATE

6-17-13
PLANS APPROVAL DATE

REGISTERED PROFESSIONAL ENGINEER BRIAN T. FINCK No. 17756 Exp. 6-30-14 ELECT STATE OF CALIFORNIA

THE STATE OF CALIFORNIA OR ITS OFFICERS OR AGENTS SHALL NOT BE RESPONSIBLE FOR THE ACCURACY OR COMPLETENESS OF SCANNED COPIES OF THIS PLAN SHEET.

LEGEND:

A·h = AMPERE HOUR

NOTES: (THIS SHEET ONLY)

1. A HOOD MUST BE INSTALLED ON EACH FLASHER HEAD TO SHIELD THE MODULE FROM DIRECT EXPOSURE OF THE SOLAR RADIATION.
2. PHOTOVOLTAIC PANELS MUST BE LOCATED IN AN UNSHADED AREA. WOOD POLE WITH PHOTOVOLTAIC PANELS MUST BE LOCATED OUTSIDE THE CLEAR RECOVERY ZONE OR PROTECTED IN PLACE.

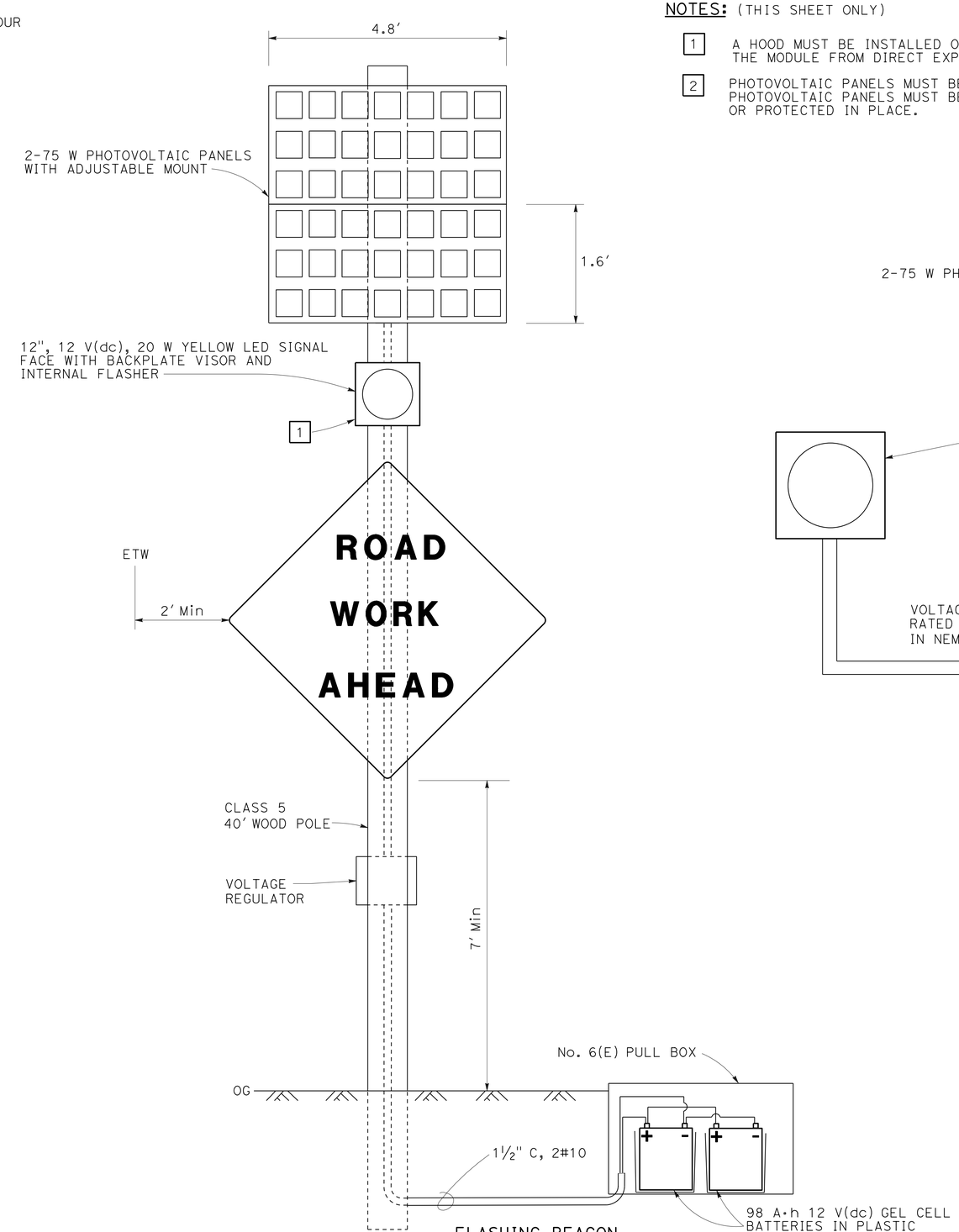

FLASHING BEACON
(PHOTOVOLTAIC POWERED)

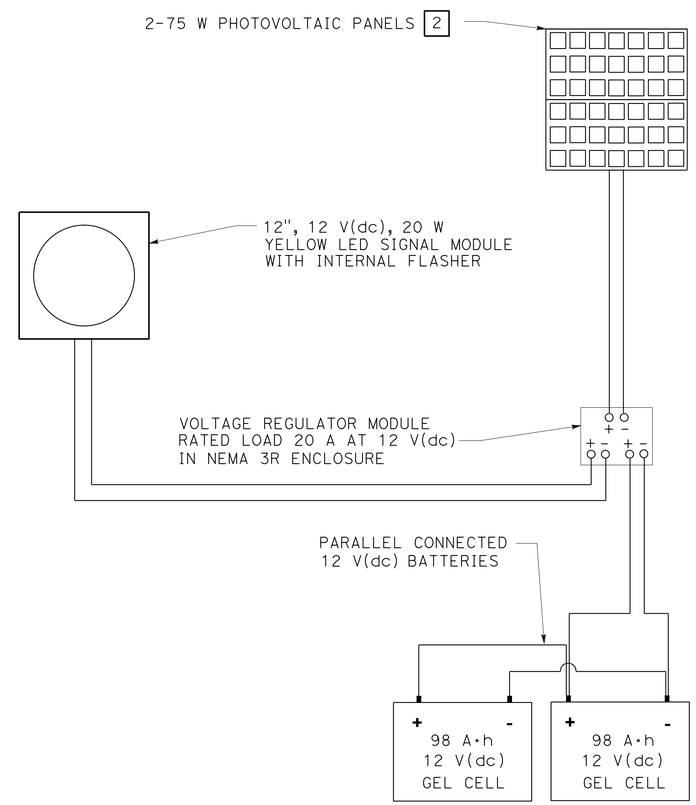

CONNECTION DIAGRAM

ELECTRICAL DETAILS

NO SCALE

E-2

REVISED BY	DATE REVISED

CALCULATED-DESIGNED BY	CHECKED BY	FUNCTIONAL SUPERVISOR
BRIAN FINCK	BIJAN SAMRAD	TROY ARSENEAU

STATE OF CALIFORNIA - DEPARTMENT OF TRANSPORTATION
Caltrans®
ELECTRICAL

P:\PROJ\01\45930\drafting\01000002191\01000002191ua002.dgn

LAST REVISION 01-28-13 | DATE PLOTTED => 19-JUN-2013 | TIME PLOTTED => 15:59

DIST	COUNTY	ROUTE	POST MILES TOTAL PROJECT	SHEET No.	TOTAL SHEETS
01	Hum	169	13.6/23.4	47	86

REGISTERED CIVIL ENGINEER

January 20, 2012
PLANS APPROVAL DATE

REGISTERED PROFESSIONAL ENGINEER
Cornelis M. Hakim
No. C55610
Exp. 12-31-12
CIVIL
STATE OF CALIFORNIA

THE STATE OF CALIFORNIA OR ITS OFFICERS OR AGENTS SHALL NOT BE RESPONSIBLE FOR THE ACCURACY OR COMPLETENESS OF SCANNED COPIES OF THIS PLAN SHEET.

TO ACCOMPANY PLANS DATED 6-17-13

ABBREVIATIONS:

SE SAFETY EDGE

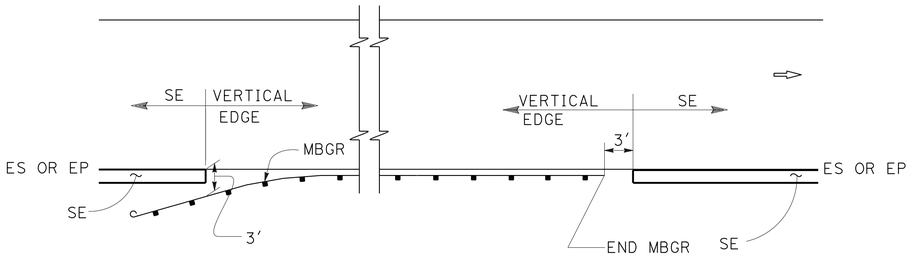

MBGR

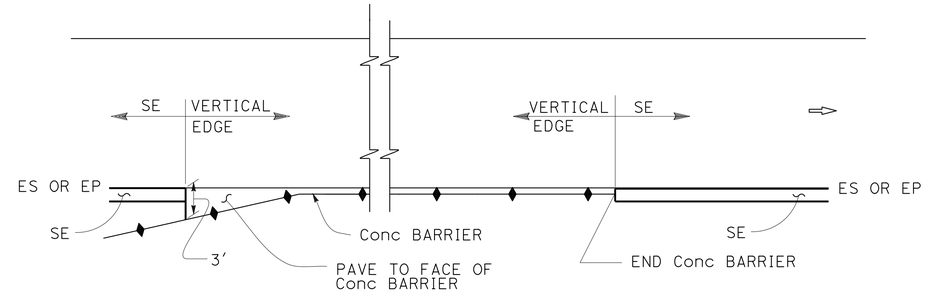

CONCRETE BARRIER

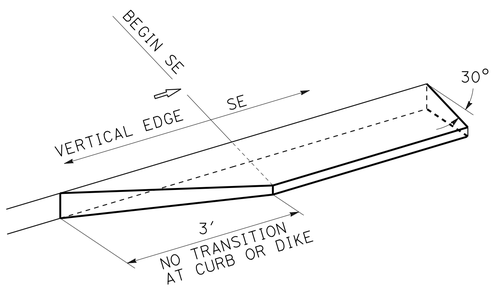

TRANSITION DETAIL
FOR CONCRETE ONLY

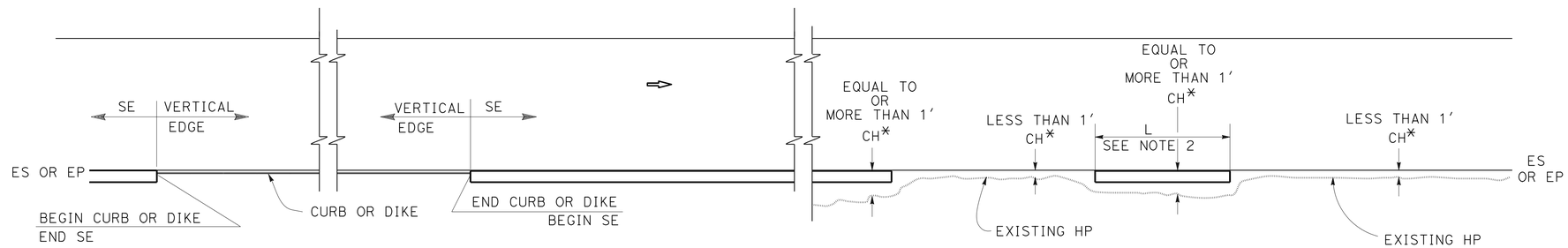

CURB OR DIKE

NARROW SIDE SLOPE

* CH = Distance from ES or EP to existing HP.

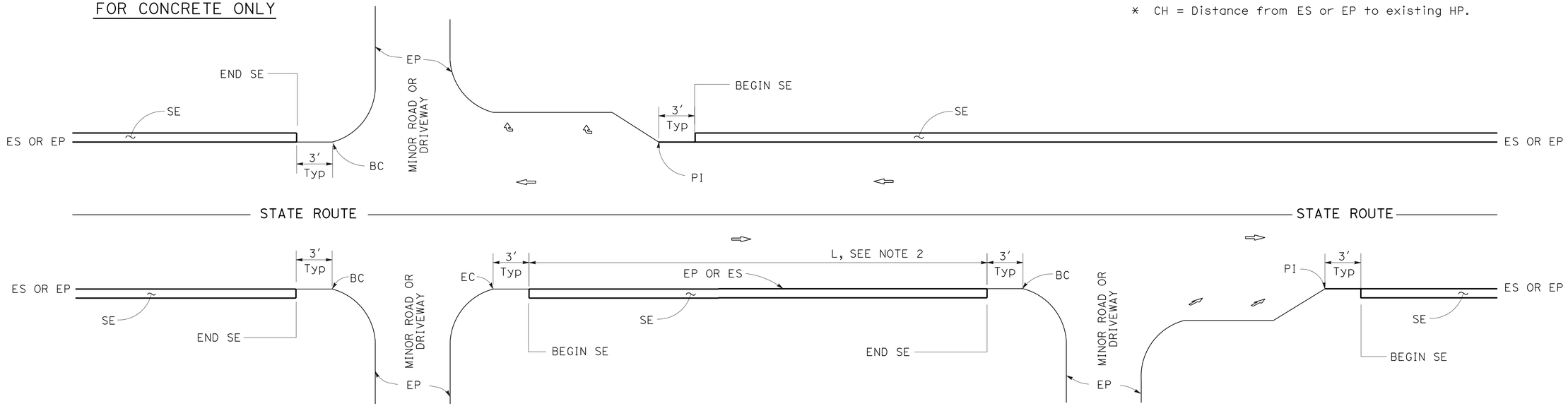

INTERSECTION

MINOR ROADWAY OR DRIVEWAY

DRIVEWAY AND INTERSECTION

NOTES:

1. For details not shown, see Revised Standard Plans RSP P75 and RSP P76.
2. Safety edge is optional when L is less than 30′.

STATE OF CALIFORNIA
DEPARTMENT OF TRANSPORTATION

PAVEMENT EDGE TREATMENTS

NO SCALE

RSP P74 DATED JANUARY 20, 2012 SUPPLEMENTS THE STANDARD PLANS BOOK DATED 2010.

REVISED STANDARD PLAN RSP P74

2010 REVISED STANDARD PLAN RSP P74

01-05-12

DIST	COUNTY	ROUTE	POST MILES TOTAL PROJECT	SHEET No.	TOTAL SHEETS
01	Hum	169	13.6/23.4	48	86

REGISTERED CIVIL ENGINEER

January 20, 2012
PLANS APPROVAL DATE

REGISTERED PROFESSIONAL ENGINEER
Cornelis M. Hakim
No. C55610
Exp. 12-31-12
CIVIL
STATE OF CALIFORNIA

THE STATE OF CALIFORNIA OR ITS OFFICERS OR AGENTS SHALL NOT BE RESPONSIBLE FOR THE ACCURACY OR COMPLETENESS OF SCANNED COPIES OF THIS PLAN SHEET.

TO ACCOMPANY PLANS DATED 6-17-13

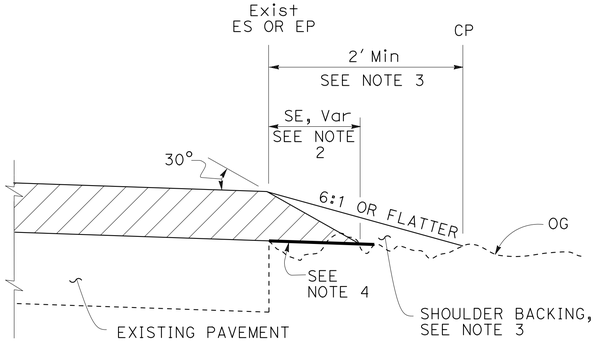

CASE A
Safety Edge

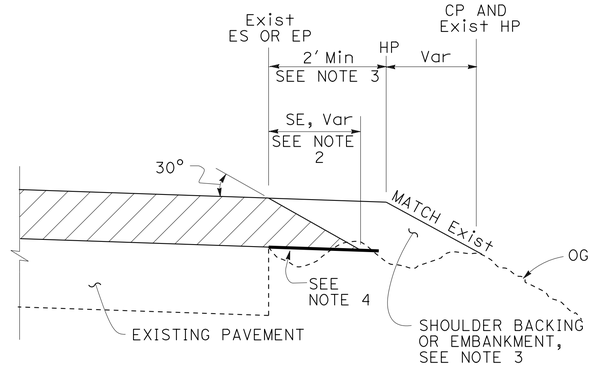

CASE B
Safety Edge

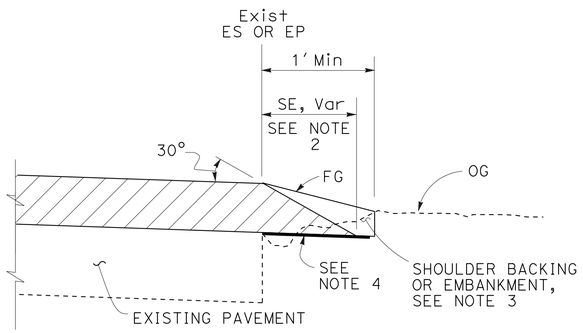

CASE C
Safety Edge

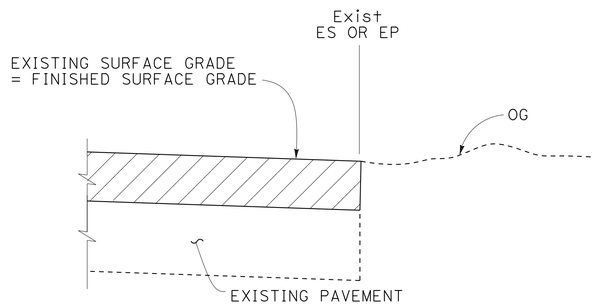

CASE D
Vertical Edge

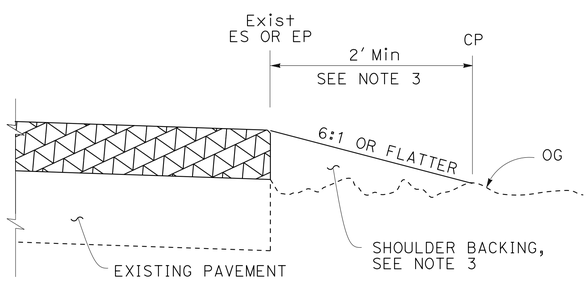

CASE E
Vertical Edge

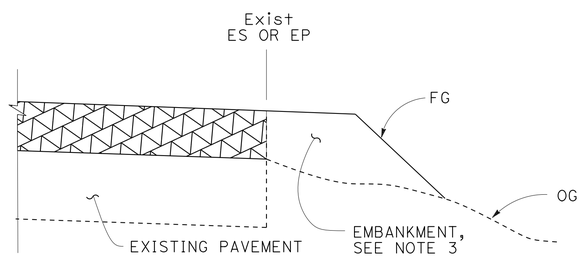

CASE F
Vertical Edge
* See Table A and Revised Std Plan RSP P74

LEGEND:

- HMA OVERLAY
- HMA OR CONCRETE OVERLAY
- CONCRETE OVERLAY

ABBREVIATIONS:

SE SAFETY EDGE
TT TOTAL THICKNESS OF SE

TABLE A
EDGE TREATMENT FOR VARIOUS OVERLAY THICKNESS AND CONDITIONS

	OVERLAY THICKNESS	
FIELD CONDITION	LESS THAN 0.15′	0.15′ OR MORE
Exist SLOPE 6:1 OR FLATTER	CASE E	CASE A
Exist SLOPE 3:1 TO 6:1	CASE E	CASE B
Exist SLOPE STEEPER THAN 3:1	CASE F	CASE F
CUT SECTION (REPLACE, COLD PLANE, MILL PAVEMENT)	CASE D	CASE C

ADDITIONAL HMA OR CONCRETE QUANTITIES FOR SE/SIDE/MILE

TYPICAL CROSS SECTION	TT	TOTAL ADDITIONAL MATERIAL FOR SE/SIDE/MILE		
		HMA (TON)	CONCRETE (CY)*	CONCRETE (CY)**
TT	0.15′	NA	NA	NA
	0.20′	13.7	NA	NA
	0.30′	30.9	NA	NA
	0.40′	54.9	NA	NA
	0.45′	69.4	NA	NA
TT 0.43′	0.50′	84.2	NA	NA
	0.60′	113.9	NA	NA
	0.70′	143.6	70.9	94.2
	0.80′	173.3	85.6	112.2
	0.90′	203.0	100.3	130.2
	1.00′	232.7	114.9	148.2
	1.10′	262.4	129.6	166.2
	1.20′	292.1	144.3	184.2

* For Detail "A"
** For Optional Detail "A"

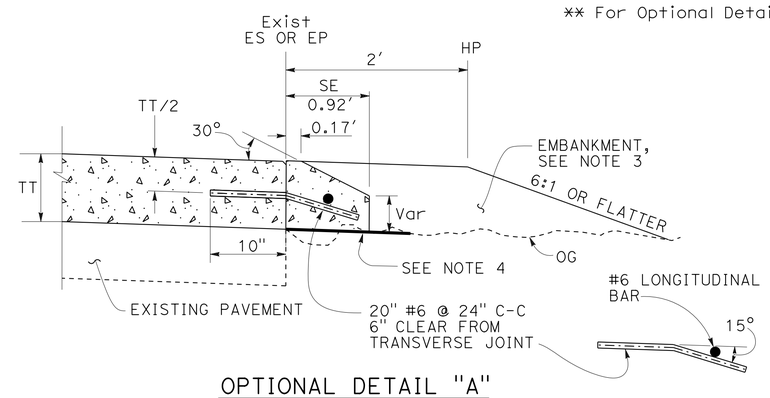

OPTIONAL DETAIL "A"
For concrete overlay
See Note 5

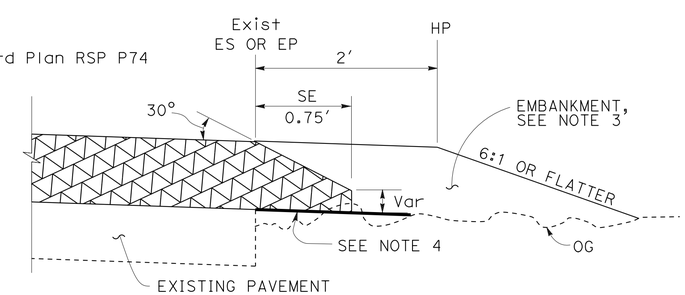

DETAIL "A"
For HMA overlay thickness more than 0.43′ or concrete overlay

NOTES:

1. For limits of safety edge and vertical edge treatments, see Revised Standard Plan RSP P74.
2. Details shown for HMA overlay thickness less than 0.43′. See Detail "A" for HMA overlay thickness more than 0.43′ or concrete overlay.
3. For locations and limits of shoulder backing or embankment see project plans.
4. Grade existing ground to place safety edge. 1′ minimum width
5. Safety edge transverse joint must match overlay transverse joint. End of #6 longitudinal bar must be 2" ±½" clear from transverse joint.
6. Safety edge is not needed in the area of MBGR, barrier, right turn lane and acceleration lane. See Revised Standard Plan RSP P74.

STATE OF CALIFORNIA
DEPARTMENT OF TRANSPORTATION

PAVEMENT EDGE TREATMENTS-OVERLAYS

NO SCALE

RSP P75 DATED JANUARY 20, 2012 SUPPLEMENTS THE STANDARD PLANS BOOK DATED 2010.

REVISED STANDARD PLAN RSP P75

2010 REVISED STANDARD PLAN RSP P75

TO ACCOMPANY PLANS DATED 6-17-13

Dist	COUNTY	ROUTE	POST MILES TOTAL PROJECT	SHEET No.	TOTAL SHEETS
01	Hum	169	13.6/23.4	49	86

REGISTERED CIVIL ENGINEER

October 19, 2012
PLANS APPROVAL DATE

REGISTERED PROFESSIONAL ENGINEER Glenn DeCou No. C34547 Exp. 9-30-13 CIVIL STATE OF CALIFORNIA

THE STATE OF CALIFORNIA OR ITS OFFICERS OR AGENTS SHALL NOT BE RESPONSIBLE FOR THE ACCURACY OR COMPLETENESS OF SCANNED COPIES OF THIS PLAN SHEET.

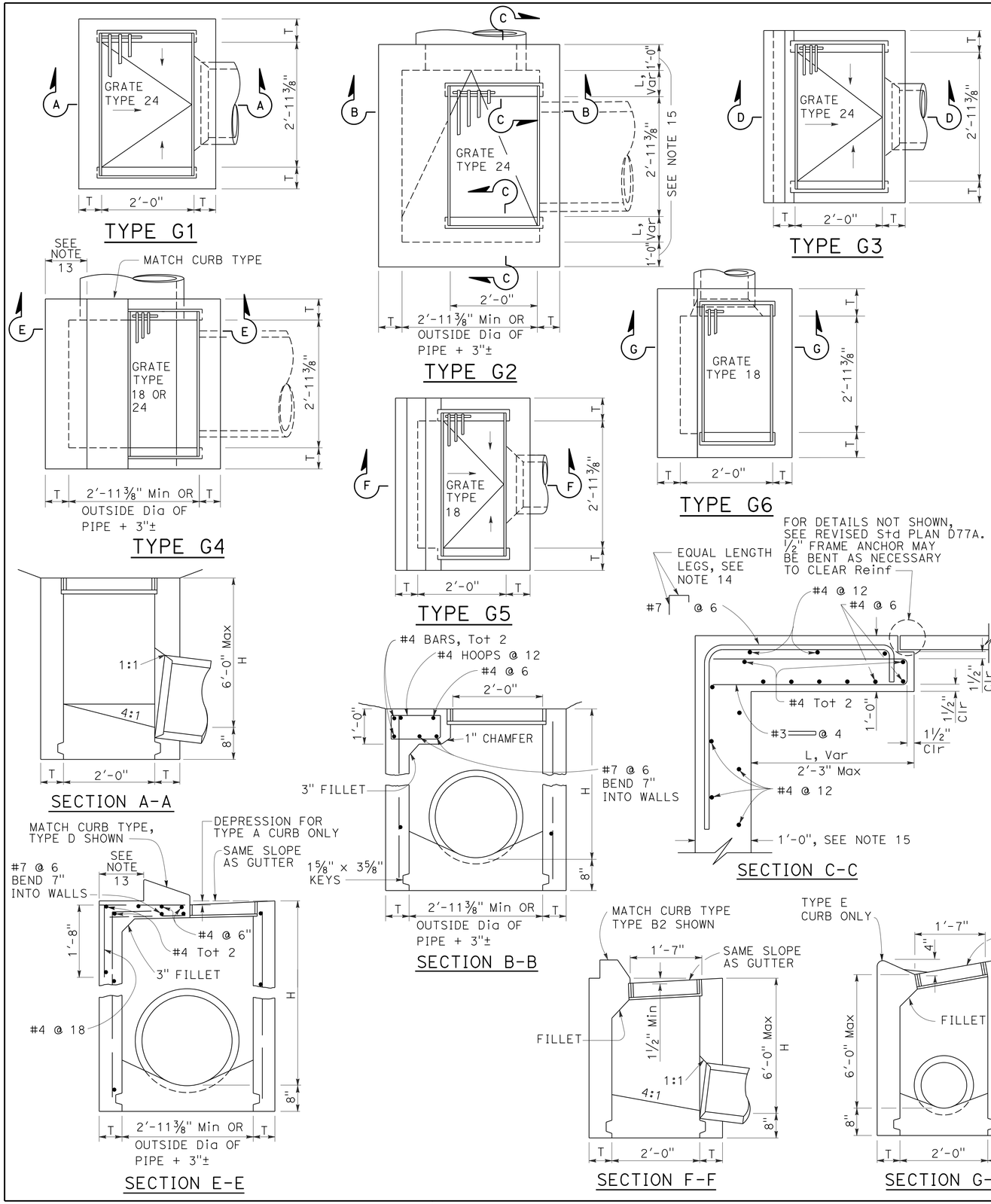

NOTES:

1. "H" is the difference in elevation between the outlet pipe flow line and the normal gutter grade line undepressed.
2. For "T" wall thickness, see Table A below.
3. Wall reinforcing not required when "H" is 8'-0" or less and the unsupported width or length is 7'-0" or less. Walls exceeding these limits shall be reinforced with #4 bars @ 1'-6" ± centers placed 1½" clear to inside of box unless otherwise shown.
4. Inlet bottom reinforcing not required. See Standard Plan D74C for alternative reinforced bottom and alternative half round bottom.
5. Steps-None required where "H" is less than 2'-6". Where "H" is 2'-6" or more, install steps with lowest rung 1'-0" above the floor and highest rung not more than 6" below top of inlet. The distance between steps shall not exceed 1'-0" and shall be uniform throughout the length of the wall. Place steps in the wall without an opening. Steps inserts may be substituted for the bar steps. Step inserts shall comply with State Industrial Safety requirements. See Standard Plan D74C for step details.
6. Details shown apply to both metal and concrete pipe.
7. Pipe(s) can be placed in any wall.
8. Curb section shall match adjacent curb.
9. Basin floors shall have wood trowel finish and a minimum slope of 12:3 from all directions toward outlet pipe.
10. Set inlet so that grate bars are parallel to direction of principal surface flow.
11. See Revised Standard Plans D77A and D77B for grate and frame details and weights of miscellaneous iron and steel.
12. See Standard Plan D78A for gutter depression details.
13. This dimenison will vary with different grates, curbs types, box width and wall thickness.
14. Bar may be rotated as necessary to clear opening. Where "L" is 6" or less, bar may be omitted.
15. Where "L" is 6" or less, wall thickness shall be as shown in Table A.
16. Cast-in-place inlets to be formed around all pipes/stubs intersecting the inlet, and concrete poured in one continuous operation. Precast inlets shall have mortared connections conforming to details for Type GCP Inlet shown on Standard Plan D75B. See Standard Specifications for mortar composition.

TABLE A

CONCRETE QUANTITIES				
TYPE	H=3'-0" TO 8'-0" (T=6")		H=8'-1" TO 20'-0" (T=8")	
	H=3'-0" (CY)	ADDITIONAL PCC PER FOOT (CY)	H=8'-1" (CY)	ADDITIONAL PCC PER FOOT (CY)
G-1	0.95	0.220	See Note A	SEE NOTE A
G-2*	1.31	0.255	3.50	0.357
G-3	1.03	0.220	See Note A	SEE NOTE A
G-4* (TYPE 24)	1.27	0.255	3.48	0.357
G-4* (TYPE 18)	1.30	0.255	3.50	0.357
G-5	1.02	0.220	SEE NOTE A	SEE NOTE A
G-6	1.04	0.220	SEE NOTE A	SEE NOTE A

TABLE BASED ON 8" FLOOR SLAB. NO DEDUCTIONS ARE TO BE MADE TO THESE QUANTITIES BECAUSE OF PIPE OPENINGS, DIFFERENT FLOOR ALTERNATIVES OR DIFFERENT CURB TYPES. * QUANTITIES FOR TYPE G-2 AND G-4 INLETS BASED ON THE MINIMUM INTERIOR DIMENSIONS.

NOTE A:

Maximum allowable height 6'-0".

STATE OF CALIFORNIA
DEPARTMENT OF TRANSPORTATION

DRAINAGE INLETS

NO SCALE

RSP D73 DATED OCTOBER 19, 2012 SUPERSEDES STANDARD PLAN D73 DATED MAY 20, 2011 - PAGE 156 OF THE STANDARD PLANS BOOK DATED 2010.

REVISED STANDARD PLAN RSP D73

2010 REVISED STANDARD PLAN RSP D73

7-19-12

Dist	COUNTY	ROUTE	POST MILES TOTAL PROJECT	SHEET No.	TOTAL SHEETS
01	Hum	169	13.6/23.4	50	86

Raymond Don Tsztoo
REGISTERED CIVIL ENGINEER

April 19, 2013
PLANS APPROVAL DATE

REGISTERED PROFESSIONAL ENGINEER Raymond Don Tsztoo No. C37332 Exp. 6-30-14 CIVIL STATE OF CALIFORNIA

THE STATE OF CALIFORNIA OR ITS OFFICERS OR AGENTS SHALL NOT BE RESPONSIBLE FOR THE ACCURACY OR COMPLETENESS OF SCANNED COPIES OF THIS PLAN SHEET.

TO ACCOMPANY PLANS DATED 6-17-13

2010 REVISED STANDARD PLAN RSP D77B

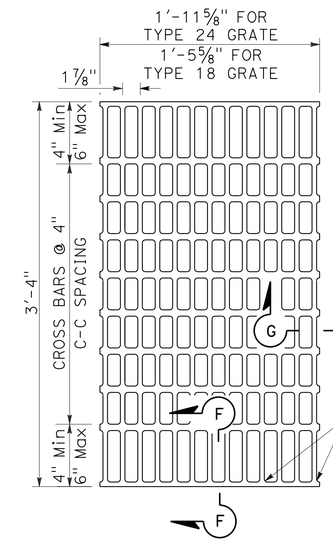

NOTES:

Bearing bars to be 3½" x ¼" bars on 1⅞" centers.

⅜"± ø Cross bars may be fillet welded, resistance welded or electroforged to bearing bars.

Weight of Type 24 grate = 141 LBS.

Weight of Type 18 grate = 107 LBS. (Type 24 grate shown).

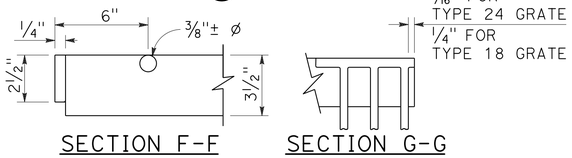

SECTION F-F SECTION G-G

TYPE 18-10 AND 24-13 GRATE

(Welded Steel)

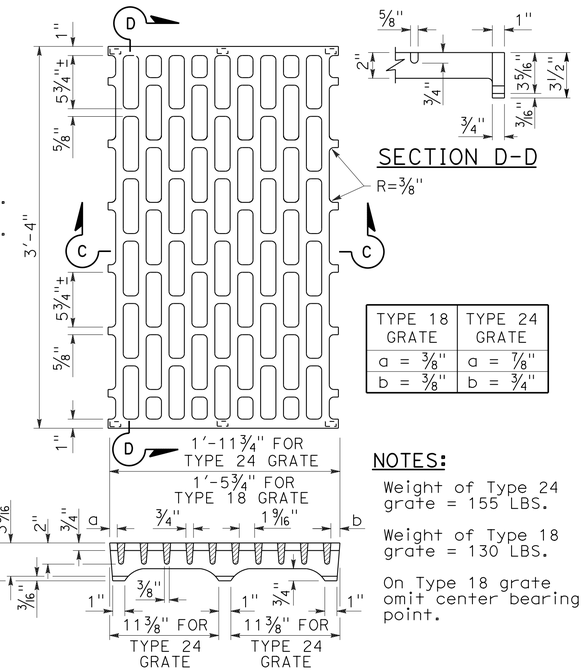

SECTION D-D

TYPE 18 GRATE	TYPE 24 GRATE
a = ⅜"	a = ⅞"
b = ⅜"	b = ¾"

NOTES:

Weight of Type 24 grate = 155 LBS.

Weight of Type 18 grate = 130 LBS.

On Type 18 grate omit center bearing point.

SECTION C-C

TYPE 18-8C AND 24-10C GRATE

(Cast ductile iron)

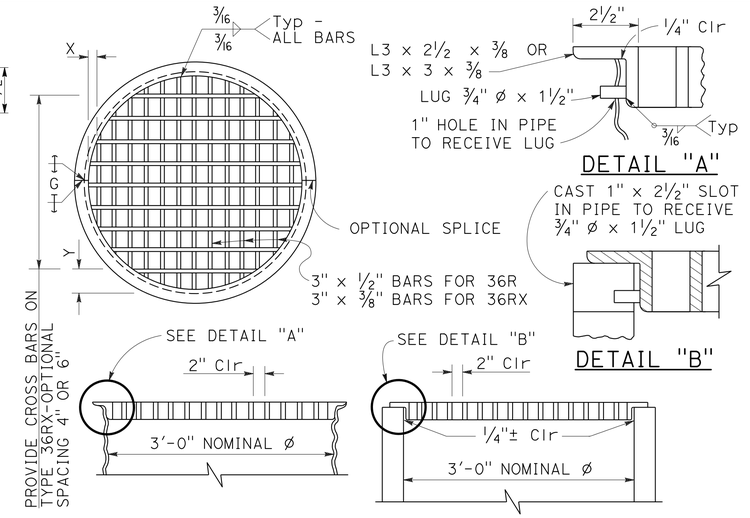

TYPE 36R AND 36RX GRATE DETAILS

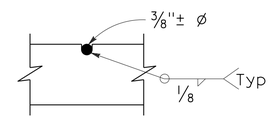

⅜"± ø Cross bars may be fillet welded, resistance welded or electroforged to bearing bars.

CROSS BAR DETAIL TYPE 36RX GRATE (WELDED STEEL)

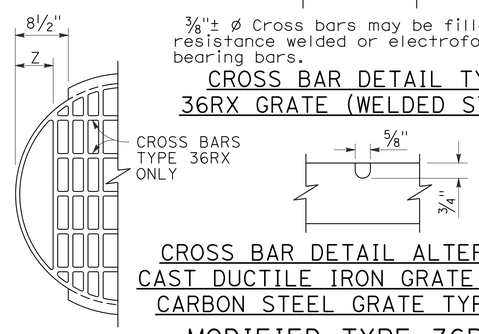

CROSS BAR DETAIL ALTERNATIVE CAST DUCTILE IRON GRATE OR CAST CARBON STEEL GRATE TYPE 36RX

MODIFIED TYPE 36R AND 36RX GRATE FOR ODI INLET

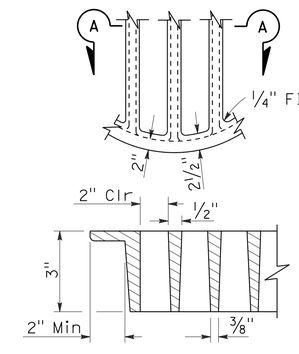

SECTION A-A

ALTERNATIVE CAST DUCTILE IRON GRATE OR CAST CARBON STEEL GRATE TYPE 36R AND 36RX

BASIS FOR Misc IRON AND STEEL FINAL PAY WEIGHTS FOR DRAINAGE INLETS

INLET TYPE	GRATE TYPE	No. OF GRATES	WEIGHT LB
GDO (SEE NOTE 4)	24-10C	2	391
	24-10S	2	456
	24-12X	2	473
	24-13	2	374
GO,GOL,G1,G2, G3,G4 (TYPE 24)	24-10C	1	202
	24-10S	1	229
	24-12X	1	239
	24-13	1	188
G4 (TYPE 18) G5,G6	18-8S	1	187
	18-9X	1	187
	18-10	1	149
GT1,GT2	18-8S	2	374
	18-9X	2	374
	18-10	2	298
GT3,GT4	24-10C	2	404
	24-10S	2	458
	24-12X	2	478
	24-13	2	376
ODI	36RX (Mod)	1	196
GMP,GCP,GCPI	36RX	1	215
ODI	36R (Mod)	1	220
GMP,GCP,GCPI	36R	1	236
TRASH RACK			22
GRATE CHAIN			3

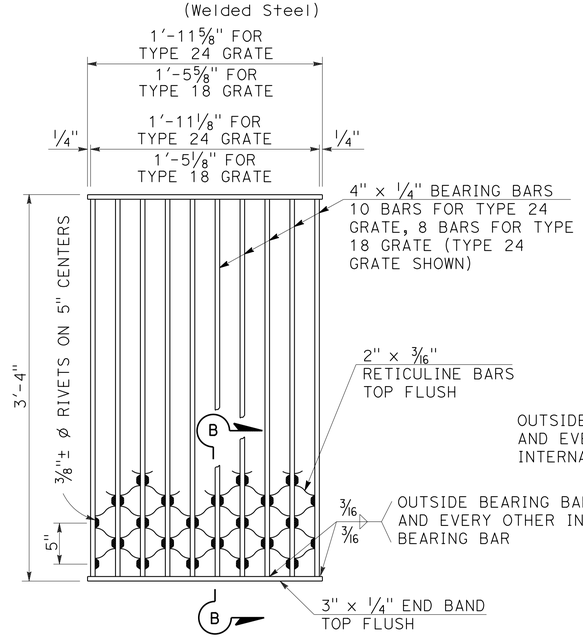

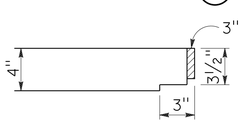

NOTES:

Weight of Type 24 grate = 182 LBS.
Weight of Type 18 grate = 145 LBS.

SECTION B-B

TYPE 18-8S AND 24-10S GRATE

(Welded Steel) Reticuline type

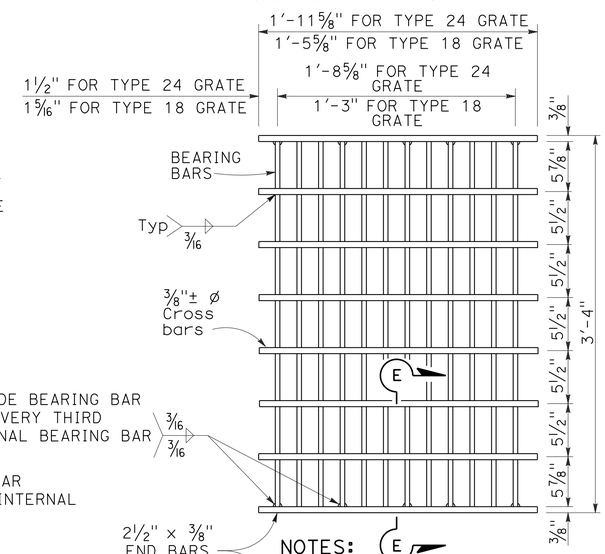

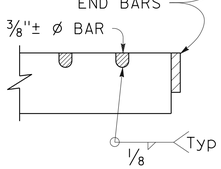

SECTION E-E

NOTES:

Bearing bars to be 3½" x ⅜" bars on 1⅞" centers.

12 Bars for Type 24 grate - 9 bars for Type 18 grates. (Type 24 grate shown).

Weight of Type 24 grate = 192 LBS.

Weight of Type 18 grate = 145 LBS.

⅜"± ø Cross bars may be fillet welded, resistance welded or electroforged to bearing bars.

TYPE 18-9X AND 24-12X GRATE

(Welded Steel)

NOTES:

1. When alternative grates are allowed - Final pay based on alternative with the lesser weight.
2. Use frame shown on Standard Plan D74A, D74B or RSP D77A as appropriate.
3. When Type 24-10S, 24-12X or 24-13 grates are used with GDO Inlets, a ¼" x 3½" x 3'-4⅞" steel bar shall be welded across the center of inlet frame to separate the individual grates.
4. See Revised Standard Plan RSP D77A for connecting chain to welded grate and frame. When chain is required, do not use cast ductile iron grate.

GRATE BAR SPACING TABLE

TYPE	No. OF BARS	CLEAR BAR SPACING	X	Y 4" SPACING	Y 6" SPACING	Z
36R	13	2"	2⅛"	-	-	-
36RX (STEEL)	15	2"	9/16"	3¾"	5¾"	-
36RX (CAST)	13	2"	2⅛"	3¾"	5¾"	-
36R Mod	12	2"	2⅛"	-	-	5"
36RX Mod (STEEL)	13	2"	9/16"	3¾"	5¾"	5 11/16"
36RX Mod (CAST)	12	2"	2⅛"	3¾"	5¾"	5"

STATE OF CALIFORNIA
DEPARTMENT OF TRANSPORTATION

GRATE DETAILS No. 2

NO SCALE

RSP D77B DATED APRIL 19, 2013 SUPERSEDES RSP D77B DATED JULY 20, 2012 AND STANDARD PLAN D77B DATED MAY 20, 2011 - PAGE 165 OF THE STANDARD PLANS BOOK DATED 2010.

REVISED STANDARD PLAN RSP D77B

4-4-13

Dist	COUNTY	ROUTE	POST MILES TOTAL PROJECT	SHEET No.	TOTAL SHEETS
01	Hum	169	13.6/23.4	51	86

REGISTERED CIVIL ENGINEER

April 19, 2013
PLANS APPROVAL DATE

REGISTERED PROFESSIONAL ENGINEER Gurinderpal Bhullar No. C48815 Exp. 9-30-14 CIVIL STATE OF CALIFORNIA

THE STATE OF CALIFORNIA OR ITS OFFICERS OR AGENTS SHALL NOT BE RESPONSIBLE FOR THE ACCURACY OR COMPLETENESS OF SCANNED COPIES OF THIS PLAN SHEET.

TO ACCOMPANY PLANS DATED 6-17-13

NOTES:

See Revised Standard Plan RSP T9 for tables.

Use cone spacing X for taper segment, Y for tangent segment or Z for conflict situations, as approriate, per Table 1, unless X, Y, or Z cone spacing is shown on this sheet.

Unless otherwise specified in the special provisions, all temporary warning signs shall have black legend on fluorescent orange background.

California codes are designated by (CA). Otherwise, Federal (MUTCD) codes are shown.

TYPICAL LANE CLOSURE WITH REVERSIBLE CONTROL

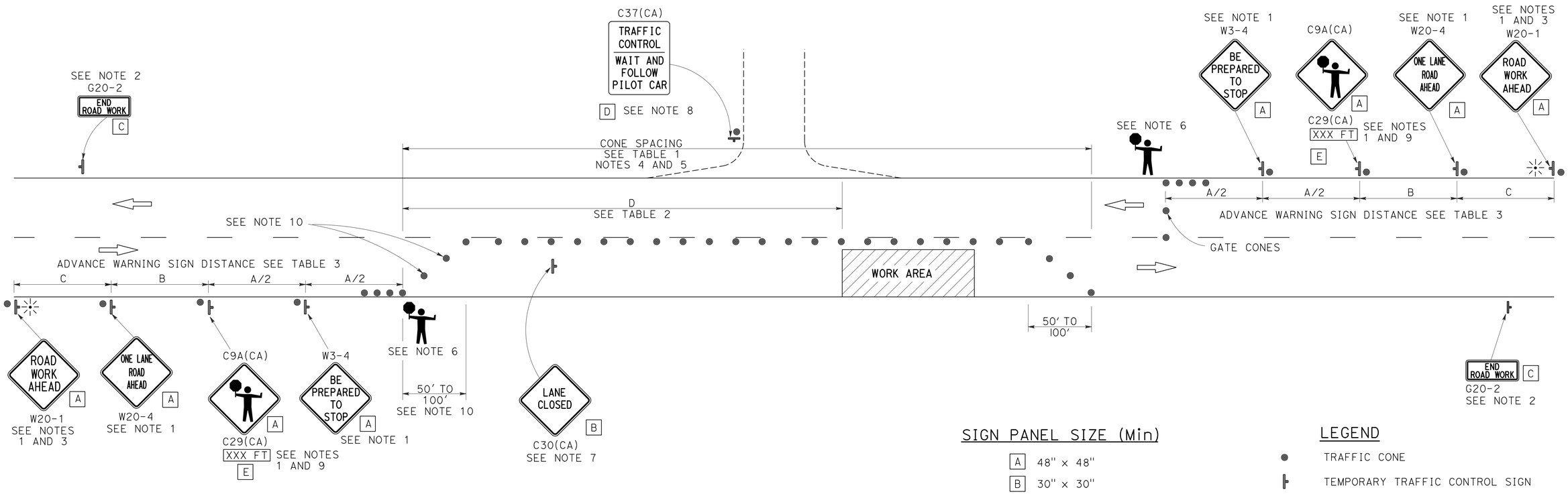

SIGN PANEL SIZE (Min)

A	48" x 48"
B	30" x 30"
C	36" x 18"
D	36" x 42"
E	20" x 7"

LEGEND

- TRAFFIC CONE
- TEMPORARY TRAFFIC CONTROL SIGN
- PORTABLE FLASHING BEACON
- FLAGGER

NOTES:

1. Each advance warning sign in each direction of travel shall be equipped with at least two flags for daytime closure. Each flag shall be at least 16" x 16" in size and shall be orange or fluorescent red-orange in color. Flashing beacons shall be placed at the locations indicated for lane closure during hours of darkness.
2. A G20-2 "END ROAD WORK" sign, as appropriate, shall be placed at the end of the lane control unless the end of work area is obvious, or ends within a larger project's limits.
3. If the W20-1 sign would follow within 2000' of a stationary W20-1 or G20-1 "ROAD WORK NEXT _____ MILES", use a W20-4 sign for the first advance warning sign.
4. All cones used for lane closures during the hours of darkness shall be fitted with retroreflective bands (or sleeves) as specified in the specifications.
5. Portable delineators, placed at one-half the spacing indicated for traffic cones, may be used instead of cones for daytime closures only.
6. Additional advance flaggers may be required. Flagger should stand in a conspicuous place, be visible to approaching traffic as well as approaching vehicles after the first vehicle has stopped. During the hours of darkness, the flagging-station and flagger shall be illuminated and clearly visible to approaching traffic. The illumination footprint of the lighting on the ground shall be at least 20' in diameter. Place a minimum of four cones at 50' intervals in advance of flagger station as shown.
7. Place C30(CA) "LANE CLOSED" sign at 500' to 1000' intervals throughout extended work areas. They are optional if the work area is visible from the flagger station.
8. When a pilot car is used, place a C37(CA) "TRAFFIC CONTROL-WAIT AND FOLLOW PILOT CAR" sign with black legend on white background at all intersections, driveways and alleys without a flagger within traffic control area. Signs shall be clean and visible at all times. Where traffic can not be effectively self-regulated, at least one flagger shall be used at each intersection within traffic control area.
9. An optional C29(CA) sign may be placed below the C9A(CA) sign.
10. Either traffic cones or barricades shall be placed on the taper. Barricades shall be Type I, II, or III.

STATE OF CALIFORNIA
DEPARTMENT OF TRANSPORTATION

TRAFFIC CONTROL SYSTEM FOR LANE CLOSURE ON TWO LANE CONVENTIONAL HIGHWAYS

NO SCALE

RSP T13 DATED APRIL 19, 2013 SUPERSEDES STANDARD PLAN T13 DATED MAY 20, 2011 - PAGE 241 OF THE STANDARD PLANS BOOK DATED 2010.

REVISED STANDARD PLAN RSP T13

2010 REVISED STANDARD PLAN RSP T13

4-2-13

Dist	COUNTY	ROUTE	POST MILES TOTAL PROJECT	SHEET No.	TOTAL SHEETS
01	Hum	169	13.6/23.4	52	86

REGISTERED CIVIL ENGINEER

October 21, 2011
PLANS APPROVAL DATE

REGISTERED PROFESSIONAL ENGINEER
Tillat Satter
No. C42892
Exp. 3-31-12
CIVIL
STATE OF CALIFORNIA

THE STATE OF CALIFORNIA OR ITS OFFICERS OR AGENTS SHALL NOT BE RESPONSIBLE FOR THE ACCURACY OR COMPLETENESS OF SCANNED COPIES OF THIS PLAN SHEET.

TO ACCOMPANY PLANS DATED 6-17-13

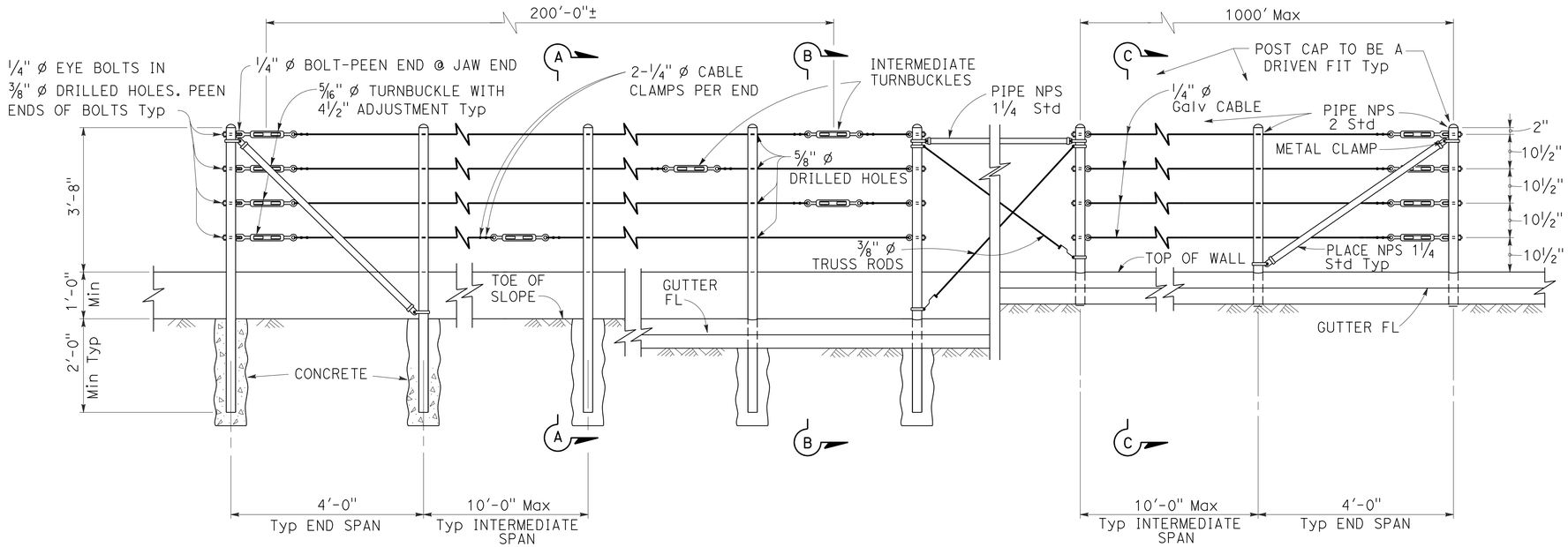

EXISTING WALL (WITHOUT GUTTER)
Existing

RETAINING WALL (WITH GUTTER)
Existing

RETAINING WALL (WITH GUTTER)
New construction

ELEVATION

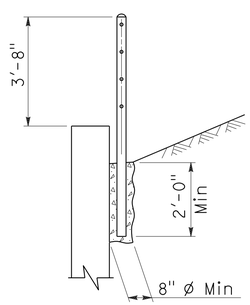

SECTION A-A
Existing

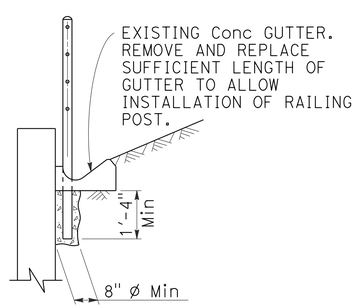

SECTION B-B
Existing

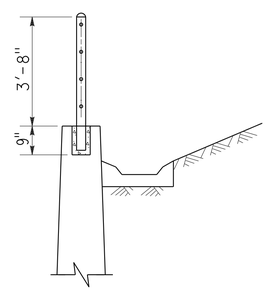

SECTION C-C
New construction

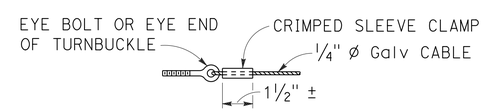

ALTERNATIVE CABLE CONNECTION

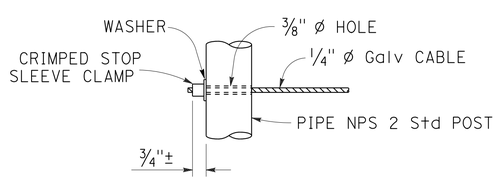

ALTERNATIVE DEAD END ANCHORAGE

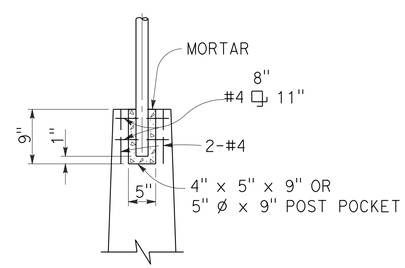

POST POCKET

NOTES:

1. Maximum distance between turnbuckles shall be 200'-0"±.
2. Intermediate turnbuckles to be placed in adjacent spans.
3. Cable shall not be spliced between intermediate turnbuckles and end posts.
4. Posts to be vertical.
5. Alignment of holes in posts may vary to conform to slope of top of retaining wall.
6. The Contractor shall verify all dependent dimensions in the field before ordering or fabricating any material.
7. Line posts shall be braced horizontally and trussed diagonally in both directions at intervals not to exceed 1000'.
8. Post pockets to be centered in top of wall.
9. Typical end spans, braced in both directions, shall be constructed at changes in line where the angle of deflection is 15° or more.
10. Provide thimbles at all cable loops.

STATE OF CALIFORNIA
DEPARTMENT OF TRANSPORTATION

CABLE RAILING

NO SCALE

RSP B11-47 DATED OCTOBER 21, 2011 SUPERSEDES STANDARD PLAN B11-47 DATED MAY 20, 2011 - PAGE 293 OF THE STANDARD PLANS BOOK DATED 2010.

REVISED STANDARD PLAN RSP B11-47

2010 REVISED STANDARD PLAN RSP B11-47

DIST	COUNTY	ROUTE	POST MILES TOTAL PROJECT	SHEET NO.	TOTAL SHEETS
01	Hum	169	13.6/23.4	53	86

REGISTERED ELECTRICAL ENGINEER

January 20, 2012
PLANS APPROVAL DATE

REGISTERED PROFESSIONAL ENGINEER
Jeffery G. McRae
No. E14512
Exp. 6-30-12
ELECTRICAL
STATE OF CALIFORNIA

THE STATE OF CALIFORNIA OR ITS OFFICERS OR AGENTS SHALL NOT BE RESPONSIBLE FOR THE ACCURACY OR COMPLETENESS OF SCANNED COPIES OF THIS PLAN SHEET.

TO ACCOMPANY PLANS DATED 6-17-13

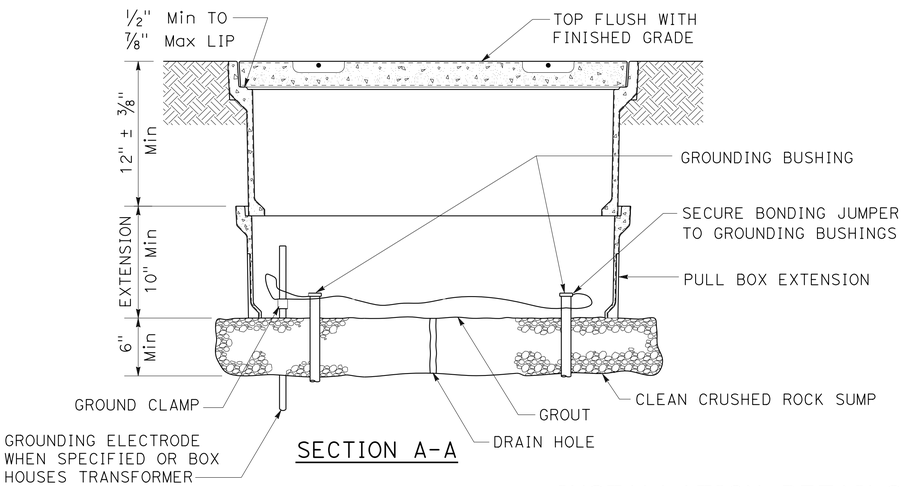

SECTION A-A

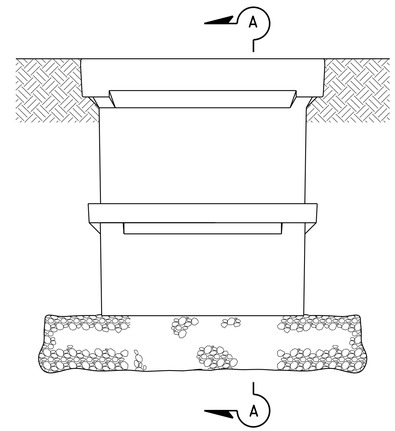

SIDE VIEW

INSTALLATION DETAILS

DETAIL A

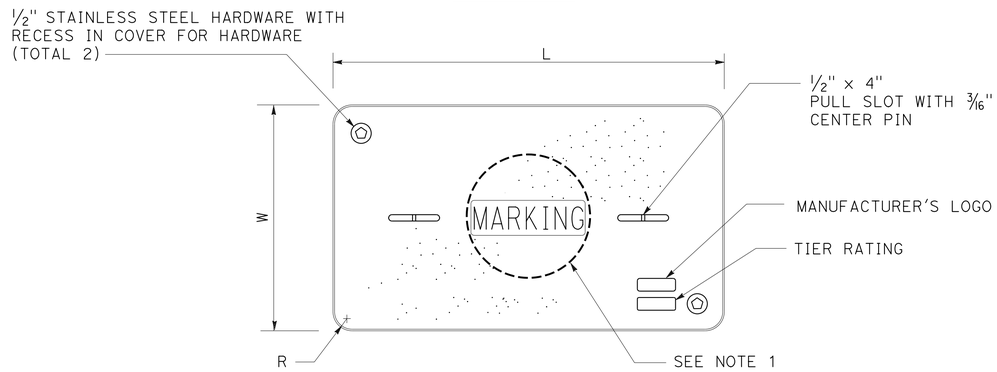

COVER TOP VIEW

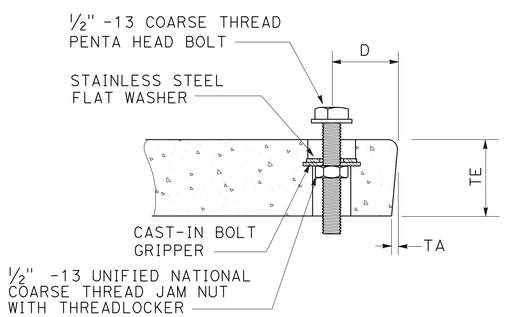

TYPICAL COVER CAPTIVE BOLT

OR SIMILAR

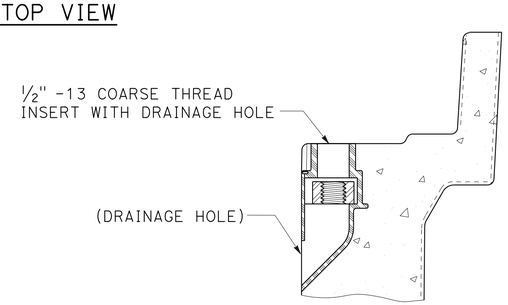

TYPICAL THREADED INSERT

OR SIMILAR

DIMENSION TABLE										
PULL BOX	PULL BOX			COVER						
	MINIMUM DEPTH BOX	MINIMUM DEPTH EXTENSION	MAXIMUM WEIGHT	L	W	R	TE	TA	D	MAXIMUM WEIGHT
No. 3 1/2	12"	N/A	40 lb	1' - 3 3/8"	10 1/8"	1 3/8"	2"	1/8"	1 3/4"	30 lb
No. 5	12"	10"	55 lb	1' - 11 1/4"	1' - 1 3/4"	1 3/8"	2"	1/8"	1 3/4"	60 lb
No. 6	12"	10"	70 lb	2' - 6 1/2"	1' - 5 1/2"	1 3/8"	2"	1/8"	2"	85 lb

NOTES ON PULL BOXES:

1. Pull box covers must be marked as follows: "SERVICE" Service circuits between service point and service disconnect; "SPRINKLER-CONTROL" sprinkler control circuits, 50 V or less; "CALTRANS" on all pull boxes, except pull boxes marked "SPRINKLER-CONTROL"; and "TELEPHONE" Telephone service;

   A) No. 3 1/2 pull box.
      1) "SIGNAL" - Traffic signal circuits with or without street or sign lighting circuits.
      2) "ST LIGHTING" - Street or sign lighting circuits where voltage is under 600 V.

   B) No. 5, 6, 9 or 9A pull box.
      1) "TRAFFIC SIGNAL" - Traffic signal circuits with or without street or sign lighting circuits.
      2) "STREET LIGHTING" - Street or sign lighting circuits where voltage is under 600 V.
      3) "STREET LIGHTING-HIGH VOLTAGE" - Street or sign lighting circuits where voltage is above 600 V.
      4) "IRRIGATION" - Circuits to irrigation controller 120 V or more.
      5) "RAMP METER" - Ramp meter circuits.
      6) "COUNT STATION" - Count or speed monitor circuits.
      7) "COMMUNICATIONS" - Communication circuits.
      8) "TOS COMMUNICATIONS" - TOS communication line.
      9) "TOS POWER" - TOS power.
      10) "TDC POWER" - Telephone demarcation cabinet power.
      11) "CCTV" - Closed circuit television circuits.
      12) "TMS" - Traffic monitoring station circuits.
      13) "CMS" - Changeable message sign circuits.
      14) "HAR" - Highway advisory radio circuits.

2. The nominal dimensions of the opening in which the cover sets must be the same as the cover dimensions (L and W) plus 1/8" or greater.

3. Covers and boxes must be interchangeable with California Standard. When interchanged with a standard, the top surfaces must be flush within 1/8". Top outside radius of covers and pull boxes must have a 1/8" radius.

4. Pull box extension may be another pull box as long as the bottom edge of the pull box can fit into the cover opening.

STATE OF CALIFORNIA
DEPARTMENT OF TRANSPORTATION

ELECTRICAL SYSTEMS (PULL BOX)

NO SCALE

RSP ES-8A DATED JANUARY 20, 2012 SUPPLEMENTS THE STANDARD PLANS BOOK DATED 2010.

REVISED STANDARD PLAN RSP ES-8A

2010 REVISED STANDARD PLAN RSP ES-8A

DIST	COUNTY	ROUTE	POST MILES TOTAL PROJECT	SHEET No.	TOTAL SHEETS
01	Hum	169	13.6/23.4	54	86

REGISTERED CIVIL ENGINEER — DATE 12-3-12

6-17-13
PLANS APPROVAL DATE

REGISTERED PROFESSIONAL ENGINEER — Quang H Nguyen — No. 65223 — Exp. 9-30-13 — CIVIL — STATE OF CALIFORNIA

The State of California or its officers or agents shall not be responsible for the accuracy or completeness of electronic copies of this plan sheet.

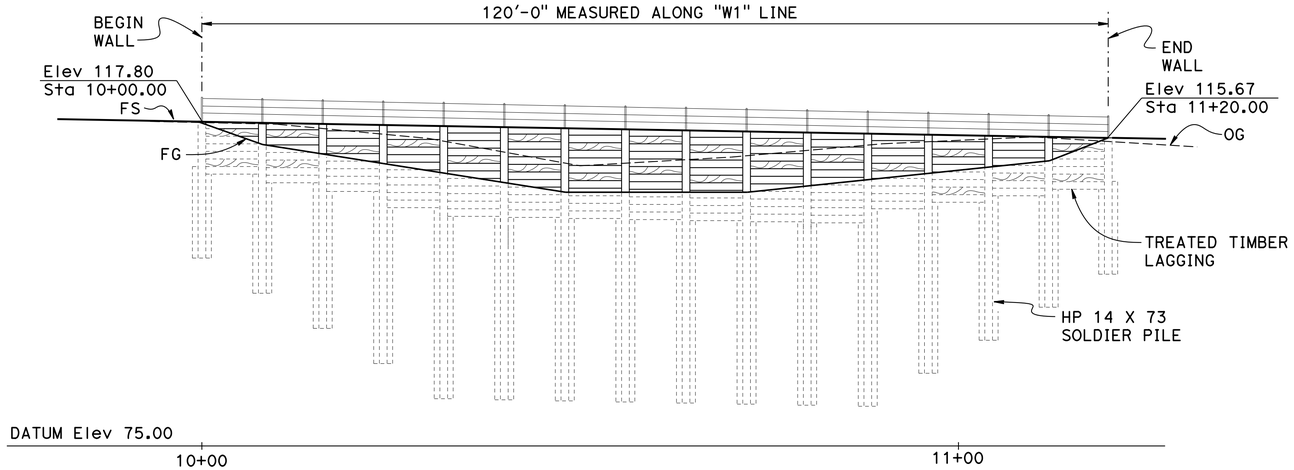

ELEVATION

1" = 10'

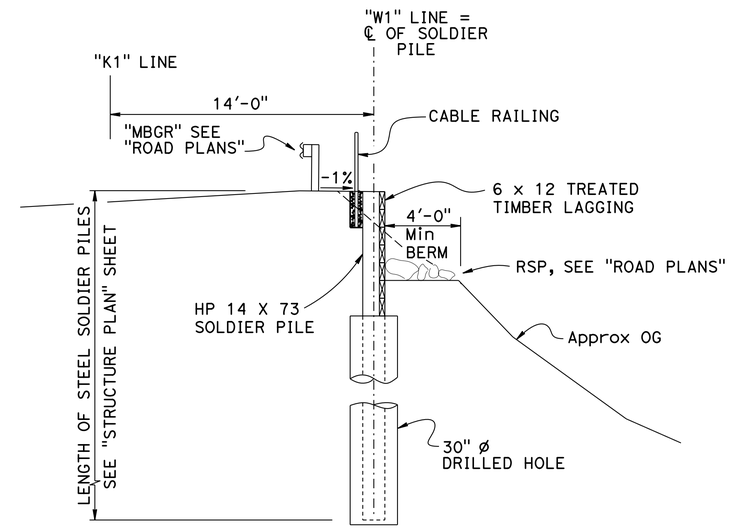

TYPICAL SECTION

¼" = 1'-0"

CURVE DATA

①	②	③	④
R = 800.00'	R = 160.00'	R = 814.00'	R = 174.00'
Δ = 7°21'00"	Δ = 52°12'46"	Δ = 4°11'24"	Δ = 12°21'23"
T = 51.38'	T = 78.40'	T = 29.78'	T = 18.84'
L = 102.62'	L = 145.81'	L = 59.53'	L = 37.52'

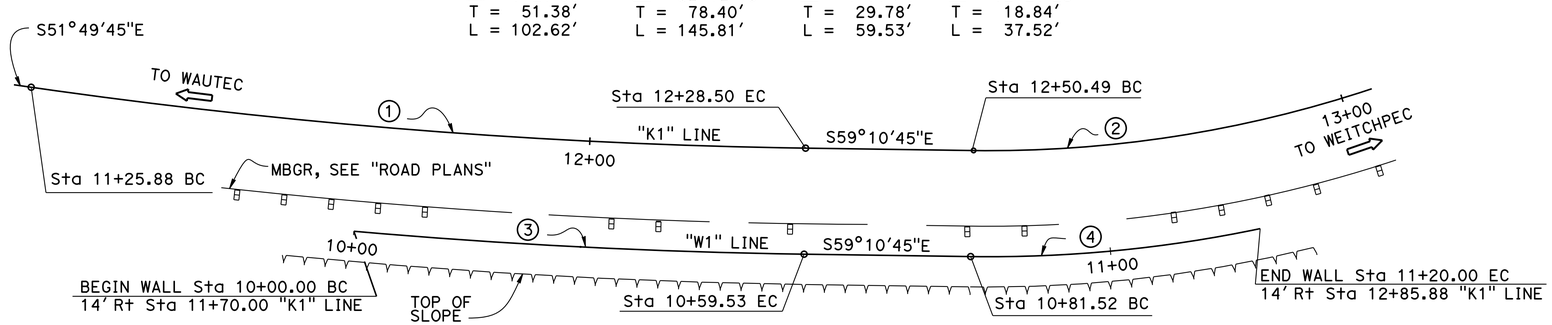

PLAN

1" = 10'

NOTE:

For "GENERAL NOTES" and "INDEX TO PLANS" see "INDEX TO PLANS" sheet

QUANTITIES

STRUCTURE EXCAVATION (SOLDIER PILE WALL)	38	CY
STRUCTURE BACKFILL (SOLDIER PILE WALL)	21	CY
CONCRETE BACKFILL (SOLDIER PILE WALL)	60	CY
LEAN CONCRETE BACKFILL	24	CY
STEEL SOLDIER PILE (HP 14 X 73)	490	LF
30" DRILLED HOLE	460	LF
TIMBER LAGGING	7	MFBM
CLEAN AND PAINT STEEL SOLDIER PILING	LUMP	SUM
CABLE RAILING	120	LF

Joseph E Downing
DESIGN ENGINEER

	BY	CHECKED			
DESIGN	Quang H Nguyen	Eric Burgeson	LOAD & RESISTANCE FACTOR DESIGN		
DETAILS	Janie Chlubna	Eric Burgeson	LAYOUT	Quang H Nguyen	Eric Burgeson
QUANTITIES	Michael Bergman	Quang H Nguyen	SPECIFICATIONS	Dave Klein	PLANS AND SPECS COMPARED: Dave Klein

ORIGINAL SCALE IN INCHES FOR REDUCED PLANS 0 1 2 3

STATE OF CALIFORNIA
DEPARTMENT OF TRANSPORTATION

DIVISION OF ENGINEERING SERVICES
STRUCTURE DESIGN
DESIGN BRANCH 3

BRIDGE NO. 04E0030
POST MILE 13.66

RETAINING WALL AT PM 13.66
GENERAL PLAN

UNIT: 3578
PROJECT NUMBER & PHASE: 0100000219
CONTRACT NO.: 01-450901

DISREGARD PRINTS BEARING EARLIER REVISION DATES
REVISION DATES: 12-2-10 | 11-30-11 | 4-10-13
SHEET 1 OF 6

STRUCTURES DESIGN GENERAL PLAN SHEET (ENGLISH) (REV.09-01-10)

FILE => 01-450901_04e0030-a-gp.dgn

USERNAME => s128843 DATE PLOTTED => 18-JUN-2013 TIME PLOTTED => 08:17

DIST	COUNTY	ROUTE	POST MILES TOTAL PROJECT	SHEET No.	TOTAL SHEETS
01	Hum	169	13.6/23.4	55	86

REGISTERED CIVIL ENGINEER 12-3-12 DATE

6-17-13
PLANS APPROVAL DATE

REGISTERED PROFESSIONAL ENGINEER Quang H Nguyen No. 65223 Exp. 9-30-13 CIVIL STATE OF CALIFORNIA

The State of California or its officers or agents shall not be responsible for the accuracy or completeness of electronic copies of this plan sheet.

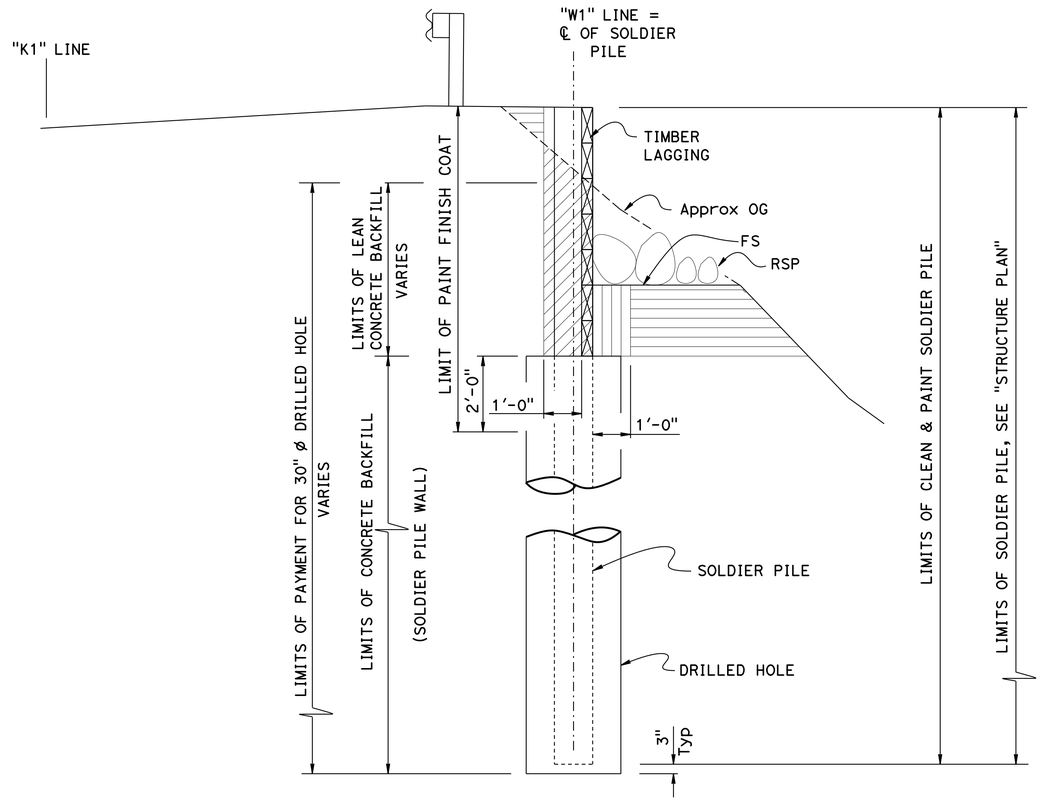

STRUCTURE EXCAVATION, SOLDIER PILE WALL

STRUCTURE BACKFILL, SOLDIER PILE WALL

ROADWAY BACKFILL, SEE "ROAD PLANS"

LIMITS OF PAYMENT

½" = 1'-0"

GENERAL NOTES

DESIGN: BRIDGE DESIGN SPECIFICATIONS - April 2000 (LFD)
(1996 AASHTO with interims and Revisions by CALTRANS)

SOIL PARAMETERS:

Layer	Depth (ft)	Parameters
1	0 - 29	γ = 120 lb/ft^3 ø = 33° C = 200 lb/ft^2
2	29 - 50	γ = 130 lb/ft^3 ø = 35° C = 2000 lb/ft^2

REINFORCED CONCRETE:

f'_c = 4.0 ksi
fy = 60 ksi

STRUCTURAL STEEL:

Fy = 50 ksi

STRUCTURAL TIMBER:

Treated Douglas Fir. Grade No. 1 or better
Timber to be full sawn

INDEX TO PLANS

SHEET NO.	TITLE
1	GENERAL PLAN
2	INDEX TO PLANS
3	STRUCTURE PLAN
4	FOUNDATION PLAN
5	WALL DETAILS
6	LOG OF TEST BORINGS

STANDARD PLANS DATED 2010

A10A	ABBREVIATIONS (SHEET 1 OF 2)
A10B	ABBREVIATIONS (SHEET 2 OF 2)
A10C	LINES AND SYMBOLS (SHEET 1 OF 3)
A10D	LINES AND SYMBOLS (SHEET 2 OF 3)
A10E	LINES AND SYMBOLS (SHEET 3 OF 3)
A10F	LEGEND - SOIL (SHEET 1 OF 2)
A10G	LEGEND - SOIL (SHEET 2 OF 2)
A10H	LEGEND - ROCK
A62B	LIMITS OF PAYMENT FOR EXCAVATION AND BACKFILL BRIDGE SURCHARGE AND WALL
RSP B11-47	CABLE RAILING

STANDARD PLAN SHEET NO.

DETAIL NO.

	BY	CHECKED
DESIGN	Quang H Nguyen	Eric Burgeson
DETAILS	Janie Chlubna	Eric Burgeson
QUANTITIES	Michael Bergman	Quang H Nguyen

STATE OF CALIFORNIA
DEPARTMENT OF TRANSPORTATION

DIVISION OF ENGINEERING SERVICES
STRUCTURE DESIGN
DESIGN BRANCH 3

BRIDGE NO. 04E0030
POST MILE 13.66

RETAINING WALL AT PM 13.66
INDEX TO PLANS

STRUCTURES DESIGN DETAIL SHEET (ENGLISH) (REV. 09-01-10)

ORIGINAL SCALE IN INCHES FOR REDUCED PLANS 0 1 2 3

UNIT: 3578
PROJECT NUMBER & PHASE: 0100000219
CONTRACT NO.: 01-450901

DISREGARD PRINTS BEARING EARLIER REVISION DATES

REVISION DATES: ~~12-2-10~~ ~~9-13-12~~ 6-10-13

SHEET 2 OF 6

FILE => 01-450901_04e0030-b-index.dgn

USERNAME => s128843 DATE PLOTTED => 18-JUN-2013 TIME PLOTTED => 08:17

DIST	COUNTY	ROUTE	POST MILES TOTAL PROJECT	SHEET No.	TOTAL SHEETS
01	Hum	169	13.6/23.4	56	86

Quang H Nguyen 12-3-12
REGISTERED CIVIL ENGINEER DATE

6-17-13
PLANS APPROVAL DATE

REGISTERED PROFESSIONAL ENGINEER Quang H Nguyen No. 65223 Exp. 9-30-13 CIVIL STATE OF CALIFORNIA

The State of California or its officers or agents shall not be responsible for the accuracy or completeness of electronic copies of this plan sheet.

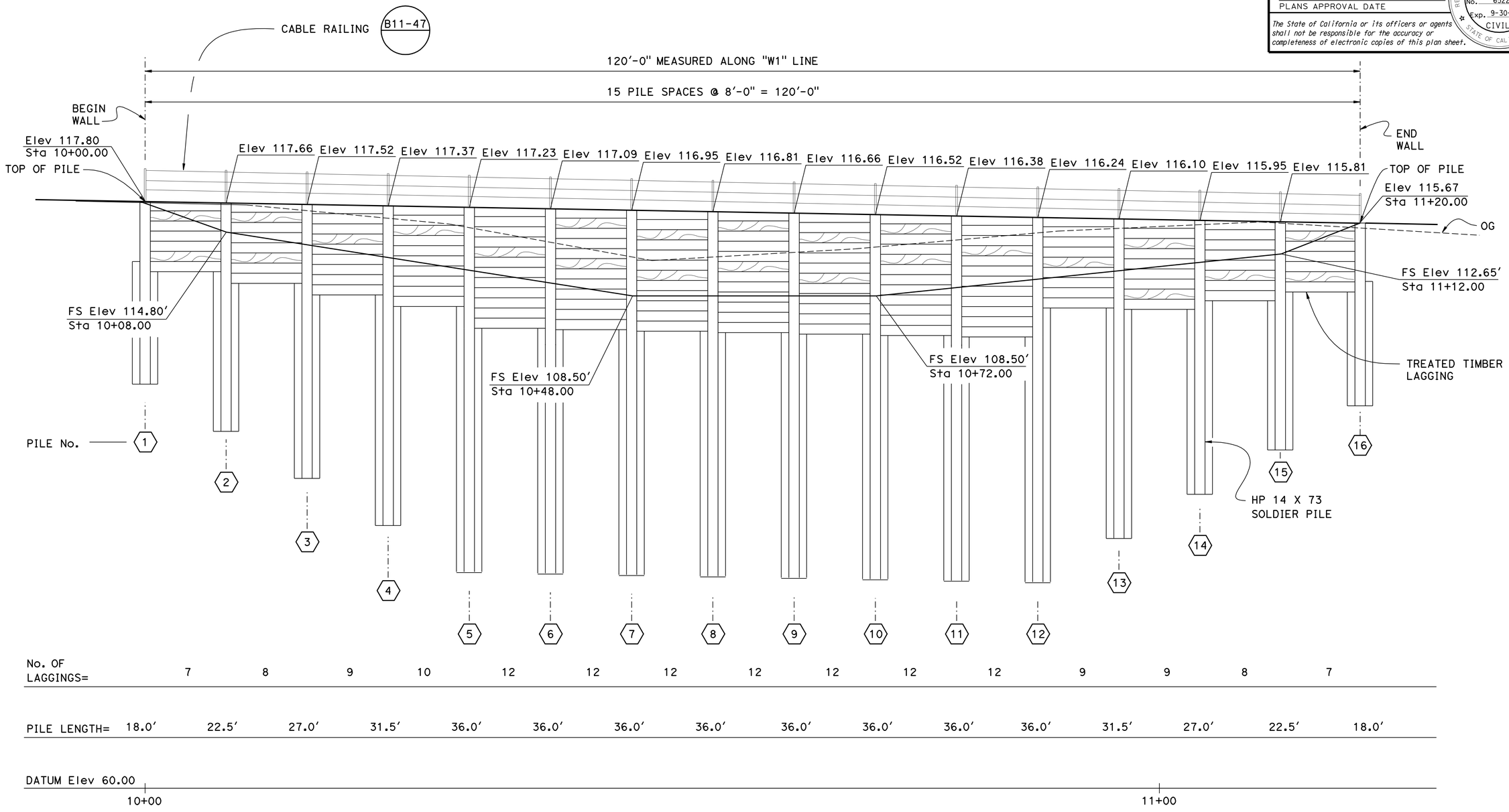

ELEVATION

1" = 5'

DESIGN	BY Quang H Nguyen	CHECKED Eric Burgeson	
DETAILS	BY Janie Chlubna	CHECKED Eric Burgeson	
QUANTITIES	BY Michael Bergman	CHECKED Quang Nguyen	

STATE OF CALIFORNIA
DEPARTMENT OF TRANSPORTATION

DIVISION OF ENGINEERING SERVICES
STRUCTURE DESIGN
DESIGN BRANCH 3

BRIDGE NO. 04E0030
POST MILE 13.66

RETAINING WALL AT PM 13.66
STRUCTURE PLAN

STRUCTURES DESIGN DETAIL SHEET (ENGLISH) (REV. 09-01-10)

ORIGINAL SCALE IN INCHES FOR REDUCED PLANS 0 1 2 3

UNIT: 3578
PROJECT NUMBER & PHASE: 0100000219
CONTRACT NO.: 01-450901

DISREGARD PRINTS BEARING EARLIER REVISION DATES

REVISION DATES: 12-2-10 8-8-11 8-31-11 4-10-13

SHEET 3 OF 6

FILE => 01-450901_04e0030-d-struct.dgn

USERNAME => s114640 DATE PLOTTED => 18-JUN-2013 TIME PLOTTED => 07:24

DIST	COUNTY	ROUTE	POST MILES TOTAL PROJECT	SHEET No.	TOTAL SHEETS
01	Hum	169	13.6/23.4	57	86

REGISTERED CIVIL ENGINEER — DATE 12-3-12

6-17-13
PLANS APPROVAL DATE

REGISTERED PROFESSIONAL ENGINEER — Quang H Nguyen — No. 65223 — Exp. 9-30-13 — CIVIL — STATE OF CALIFORNIA

The State of California or its officers or agents shall not be responsible for the accuracy or completeness of electronic copies of this plan sheet.

CURVE DATA

No.	R	Δ	T	L
A	814.00	04°11′24″	29.78	59.53
B	174.00	12°21′23″	18.84	37.52
C	1000.00	01°45′44″	15.38	30.76
D	800.00	07°21′00″	51.38	102.62
E	160.00	52°12′46″	78.40	145.81

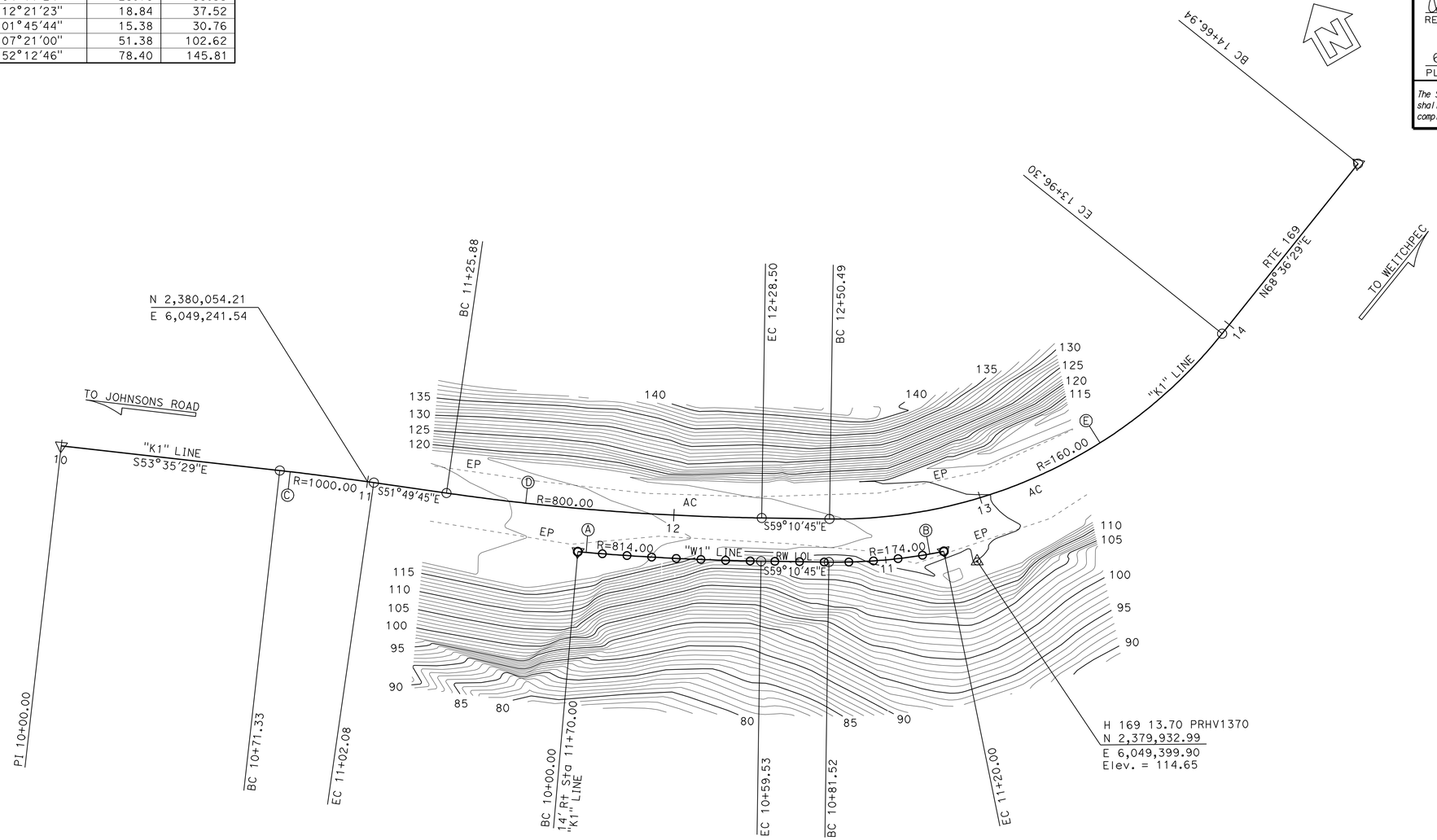

SURVEY CONTROL

H 169 13.70 (PRHV1370)

Fnd ½" Rebar & Cap
19.64 FT Rt. "K" Line Rte 169
Sta. 12+93.86
N 2,379,932.99
E 6,049,399.90
Elev. = 114.65

H 169 13.78 (PRHV1378)(Not Shown on Plan)

Fnd Caltrans Aluminum Cap & ⅝" Rebar Stamped "Cal Trans 2004 H-169-13.78"
88.15 FT N86°56′18″E "K" Line Rte 169
Sta. 16+22.22
N 2,380,015.34
E 6,049,811.26
Elev. = 116.17

LEGEND:

○ Indicates Drill Hole

PRELIMINARY INVESTIGATION SECTION

SCALE	VERT.DATUM NAVD88	PHOTOGRAMMETRY AS OF: X			
1"=20′	HORZ.DATUM NAD83 (1991.35)	SURVEYED	BY District	CHECKED	BY C. Fassett 03/2011
ALIGNMENT TIES Dist. Traverse Sheet		DRAFTED	BY L. Vasquez 03/2011	CHECKED	BY T. Zolnikov 03/2011

DESIGN	BY Quang H Nguyen	CHECKED Eric Burgeson
DETAILS	BY Janie Chlubna	CHECKED Eric Burgeson
QUANTITIES	BY Michael Bergman	CHECKED Quang H Nguyen

STATE OF CALIFORNIA
DEPARTMENT OF TRANSPORTATION

DIVISION OF ENGINEERING SERVICES
STRUCTURE DESIGN
DESIGN BRANCH 3

BRIDGE NO. 04E0030
POST MILE 13.66

RETAINING WALL AT PM 13.66
FOUNDATION PLAN

STRUCTURES FOUNDATION PLAN SHEET (ENGLISH) (REV. 09-01-10)

ORIGINAL SCALE IN INCHES FOR REDUCED PLANS 0 1 2 3

UNIT: 3578
PROJECT NUMBER & PHASE: 0100000219
CONTRACT NO.: 01-450901

DISREGARD PRINTS BEARING EARLIER REVISION DATES

REVISION DATES: 03/28/11 8-9-11 8-11-11

SHEET 4 OF 6

FILE => 01-450901_04e0030-e-fp.dgn

DIST	COUNTY	ROUTE	POST MILES TOTAL PROJECT	SHEET No.	TOTAL SHEETS
01	Hum	169	13.6/23.4	58	86

REGISTERED CIVIL ENGINEER 12-3-12 DATE

6-17-13
PLANS APPROVAL DATE

REGISTERED PROFESSIONAL ENGINEER Quang H Nguyen No. 65223 Exp. 9-30-13 CIVIL STATE OF CALIFORNIA

The State of California or its officers or agents shall not be responsible for the accuracy or completeness of electronic copies of this plan sheet.

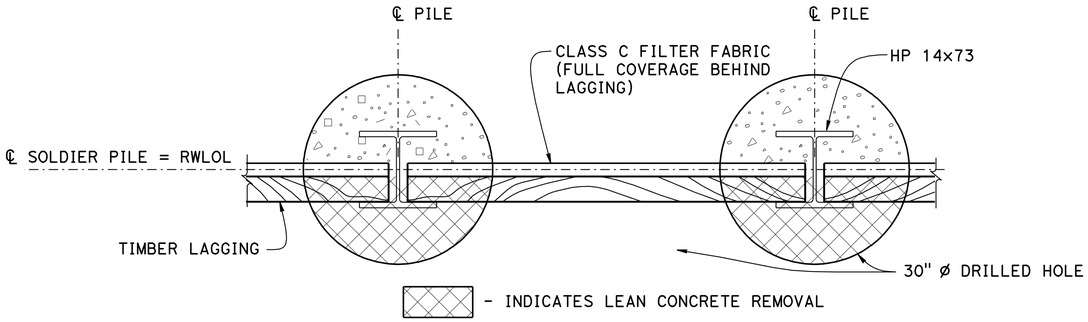

PART PLAN AT LAGGING

1" = 1'-0"

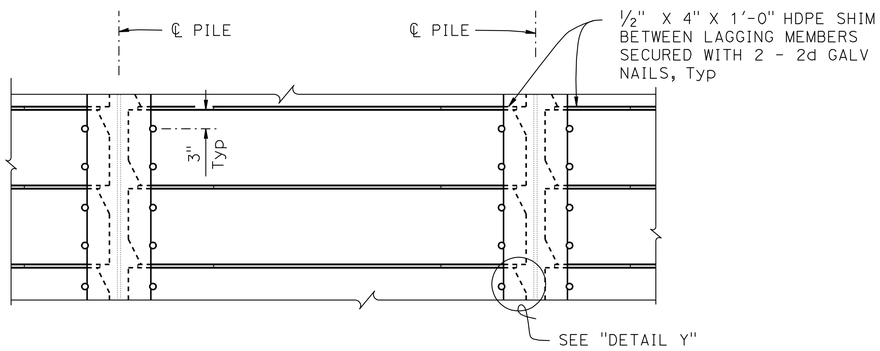

ELEVATION

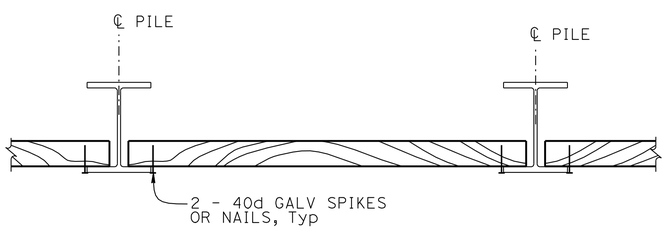

PLAN

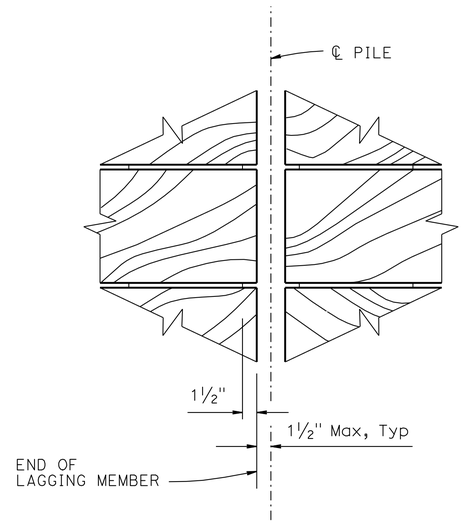

PART ELEVATION

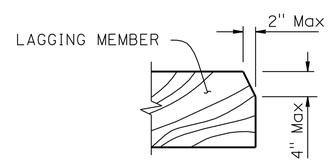

NOTE:

Diagonally opposite corners may be clipped to facilitate placement

DETAIL 'Y'

LAGGING DETAILS

NO SCALE

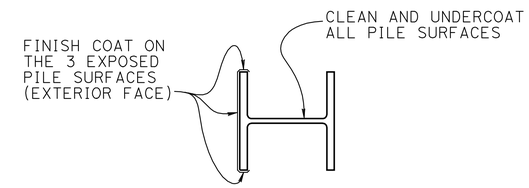

LIMITS OF CLEAN & PAINT STEEL SOLDIER PILE

1" = 1'-0"

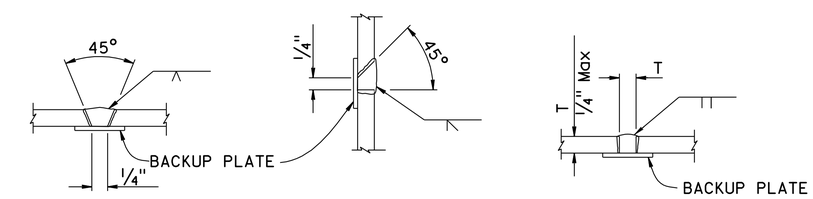

SINGLE VEE-GROOVE | SINGLE BEVEL-GROOVE | SQUARE GROOVE

PILE WELDING DETAIL-BUTT JOINTS

NOTES:

1. Single Vee-Groove and Square Groove permitted for all positions
2. Single Bevel-Groove permitted for horizontal joints only

DESIGN	BY Quang H Nguyen	CHECKED Eric Burgeson	
DETAILS	BY Janie Chlubna	CHECKED Eric Burgeson	
QUANTITIES	BY Michael Bergman	CHECKED Quang H Nguyen	

STATE OF CALIFORNIA DEPARTMENT OF TRANSPORTATION

DIVISION OF ENGINEERING SERVICES STRUCTURE DESIGN DESIGN BRANCH 3

BRIDGE NO. 04E0030 POST MILE 13.66

RETAINING WALL AT PM 13.66
WALL DETAILS

STRUCTURES DESIGN DETAIL SHEET (ENGLISH) (REV. 09-01-10)

ORIGINAL SCALE IN INCHES FOR REDUCED PLANS 0 1 2 3

UNIT: 3578
PROJECT NUMBER & PHASE: 0100000219
CONTRACT NO.: 01-450901

DISREGARD PRINTS BEARING EARLIER REVISION DATES

REVISION DATES: ~~12-2-10~~ ~~9-13-12~~ 12-3-12

SHEET 5 OF 6

FILE => 01-450901_04e0030-f-detail01.dgn

USERNAME => s114640 DATE PLOTTED => 18-JUN-2013 TIME PLOTTED => 07:24

DIST	COUNTY	ROUTE	POST MILES TOTAL PROJECT	SHEET No.	TOTAL SHEETS
01	Hum	169	13.6/23.4	59	86

Marietta James 10-10-12
REGISTERED CIVIL ENGINEER DATE

6-17-13
PLANS APPROVAL DATE

REGISTERED PROFESSIONAL ENGINEER
Marietta J. James
No. C55009
Exp. 6-30-14
CIVIL
STATE OF CALIFORNIA

The State of California or its officers or agents shall not be responsible for the accuracy or completeness of electronic copies of this plan sheet.

This LOTB sheet was prepared in accordance with the Caltrans Soil & Rock Logging, Classification, & Presentation Manual (2010 Edition).

See 2010 Standard Plans A10F and A10G for Soil Legend, and A10H for Rock Legend.

BENCH MARK

Fd Aluminum Cap and Rebar
N 2,380,015.879
E 6,049,811.265
Elev 115.117′
Vertical Datum NAVD88

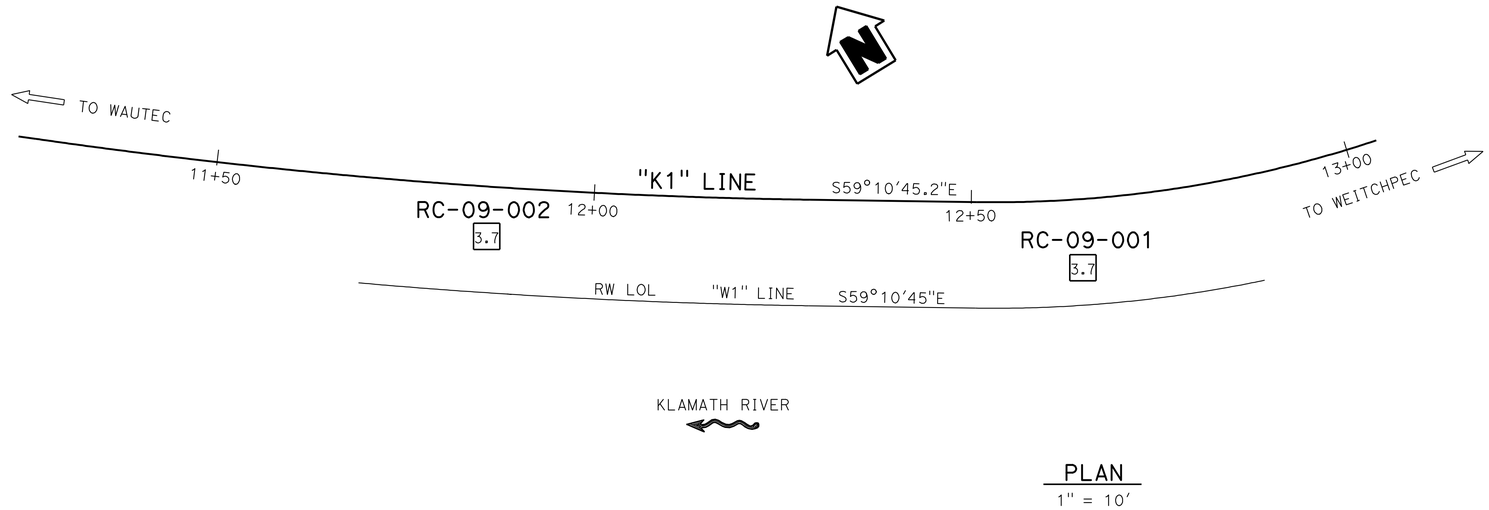

PLAN

1" = 10′

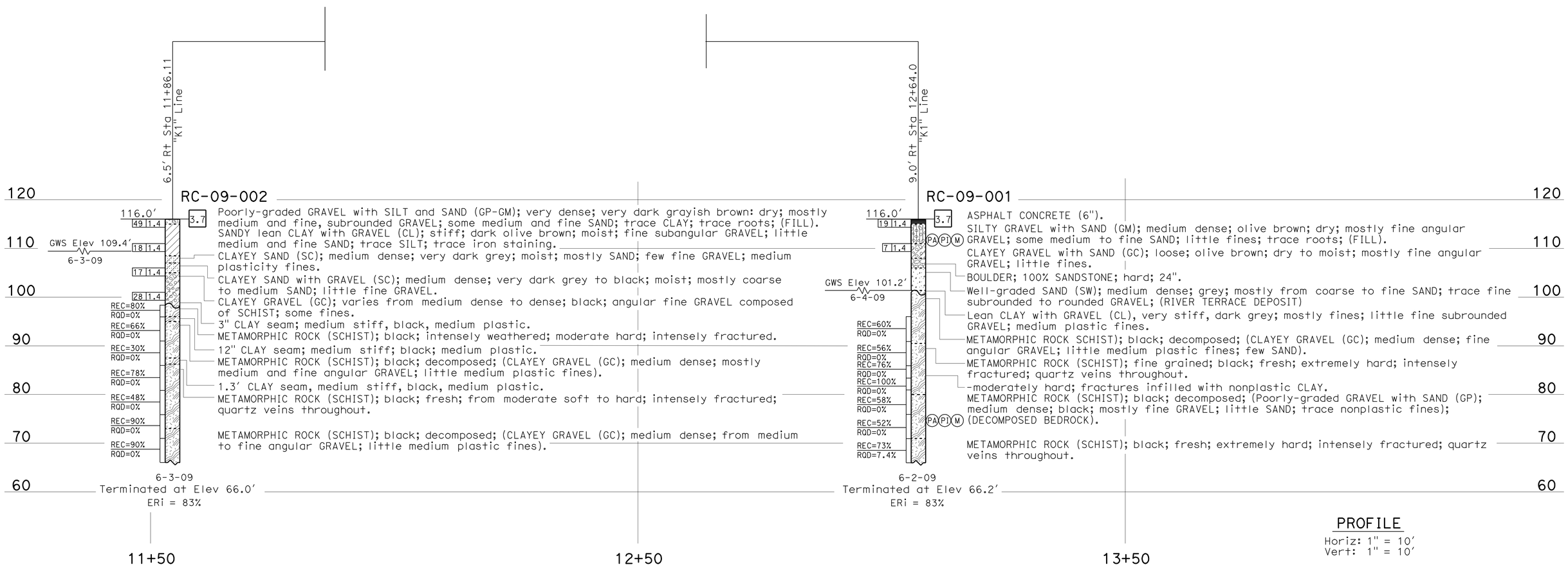

PROFILE

Horiz: 1" = 10′
Vert: 1" = 10′

ENGINEERING SERVICES	MATERIALS AND GEOTECHNICAL SERVICES	STATE OF CALIFORNIA DEPARTMENT OF TRANSPORTATION	DIVISION OF ENGINEERING SERVICES STRUCTURE DESIGN DESIGN BRANCH 3	BRIDGE NO. 04E0030 POST MILE 13.66	RETAINING WALL AT PM 13.66 LOG OF TEST BORINGS
FUNCTIONAL SUPERVISOR NAME: C. Narwold	DRAWN BY: W. Tang 07/12 CHECKED BY: R. Newman	FIELD INVESTIGATION BY: M. James			

OGS CIVIL LOG OF TEST BORINGS SHEET

ORIGINAL SCALE IN INCHES FOR REDUCED PLANS 0 1 2 3

UNIT: 3643
PROJECT NUMBER & PHASE: 01000002191 CONTRACT NO.: 01-450901

DISREGARD PRINTS BEARING EARLIER REVISION DATES

REVISION DATES: 08-28-12 10-08-12 10-08-12 SHEET 6 OF 6

FILE => 01-450901_04e0030-z-log.dgn

USERNAME => s114640 DATE PLOTTED => 18-JUN-2013 TIME PLOTTED => 07:25

DIST	COUNTY	ROUTE	POST MILES TOTAL PROJECT	SHEET No.	TOTAL SHEETS
01	Hum	169	13.6/23.4	60	86

REGISTERED CIVIL ENGINEER 12-3-12 DATE

6-17-13
PLANS APPROVAL DATE

REGISTERED PROFESSIONAL ENGINEER Quang H Nguyen No. 65223 Exp. 9-30-13 CIVIL STATE OF CALIFORNIA

The State of California or its officers or agents shall not be responsible for the accuracy or completeness of electronic copies of this plan sheet.

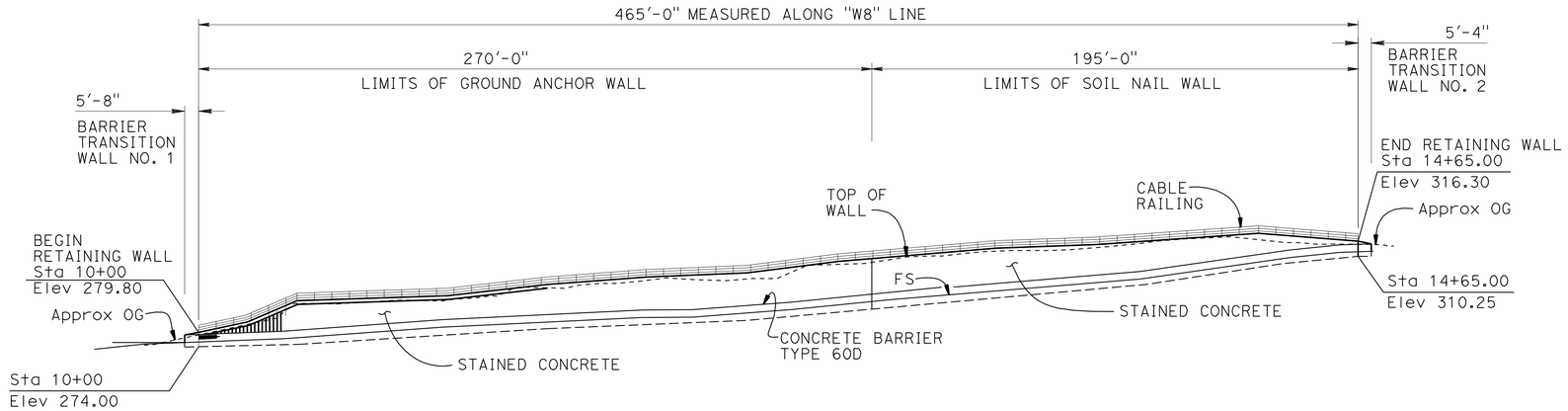

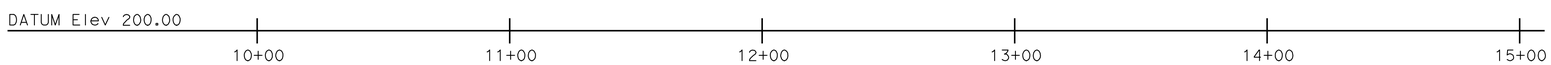

DEVELOPED ELEVATION

1" = 30'

NOTES:

1. For "TYPICAL SECTIONS", see "GENERAL PLAN NO. 2" sheet
2. For "GENERAL NOTES" and "INDEX TO PLANS", see "INDEX TO PLANS" sheet

QUANTITIES

STRUCTURE EXCAVATION (SOIL NAIL WALL)	230	CY
STRUCTURE EXCAVATION (GROUND ANCHOR WALL)	460	CY
STRUCTURE BACKFILL (GROUND ANCHOR WALL)	22	CY
STRUCTURE BACKFILL (SOIL NAIL WALL)	16	CY
GROUND ANCHOR (SUBHORIZONTAL)	78	EA
SOIL NAIL	2,570	LF
STRUCTURAL CONCRETE, RETAINING WALL	210	CY
WOOD GRAIN FACE TEXTURE	4,720	SQFT
BAR REINFORCING STEEL (RETAINING WALL)	87,750	LB
STRUCTURAL SHOTCRETE	230	CY
PREPARE AND STAIN CONCRETE	5,425	SQFT
GEOCOMPOSITE DRAIN	615	SQFT
MINOR CONCRETE (GUTTER) (LF)	465	LF
CABLE RAILING	465	LF
CONCRETE BARRIER (TYPE 60D MOD)	476	LF

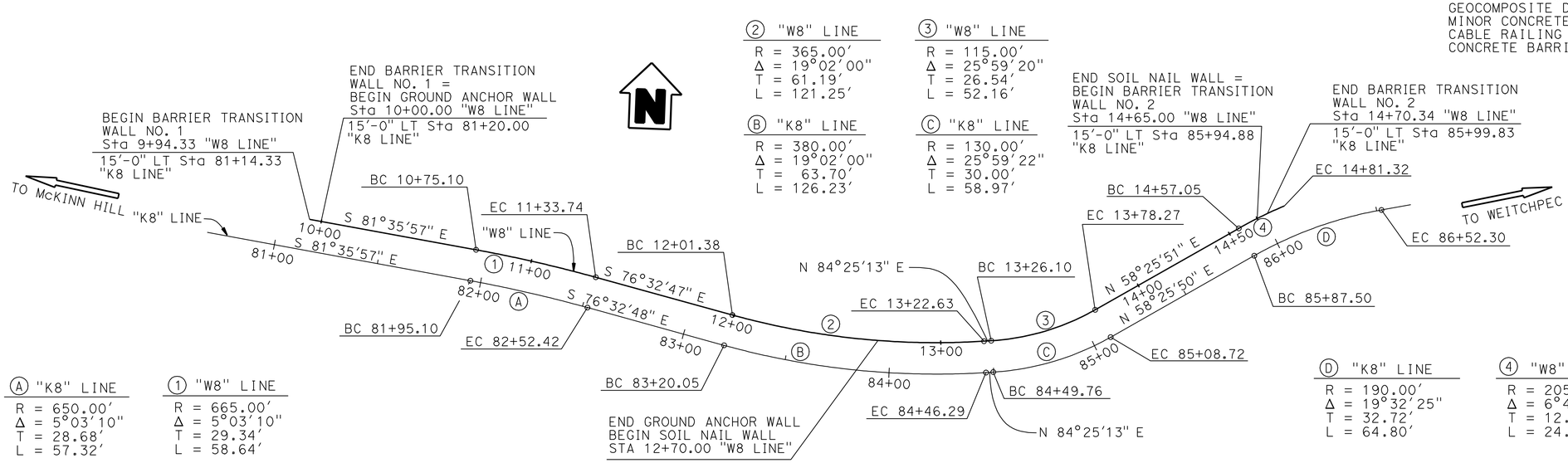

PLAN

1" = 30'

Joseph E Downing, DESIGN ENGINEER	DESIGN	BY Eric Burgeson	CHECKED Ashraf Ahmed	LOAD FACTOR DESIGN	
	DETAILS	BY Jay Reid	CHECKED Ashraf Ahmed	LAYOUT: BY Eric Burgeson	CHECKED Ashraf Ahmed
	QUANTITIES	BY Eric Burgeson	CHECKED Pyo Hong	SPECIFICATIONS: BY Dave Klein	PLANS AND SPECS COMPARED Dave Klein

ORIGINAL SCALE IN INCHES FOR REDUCED PLANS 0 1 2 3

STATE OF CALIFORNIA
DEPARTMENT OF TRANSPORTATION

DIVISION OF ENGINEERING SERVICES
STRUCTURE DESIGN
DESIGN BRANCH 3

BRIDGE NO. 04E0031
POST MILE 23.28

WALL AT PM 23.28
GENERAL PLAN NO. 1

UNIT: 3578
PROJECT NUMBER & PHASE: 01000002191
CONTRACT NO.: 01-450901

DISREGARD PRINTS BEARING EARLIER REVISION DATES

REVISION DATES: ~~9-14-10~~ ~~12-3-10~~ ~~7-13-12~~ 4-16-13

SHEET 1 OF 27

USERNAME => s114640 DATE PLOTTED => 18-JUN-2013 TIME PLOTTED => 07:25

STRUCTURES DESIGN GENERAL PLAN SHEET (ENGLISH) (REV.09-01-10)

FILE => 01-450901_04e0031-a-gp01_gp.dgn

DIST	COUNTY	ROUTE	POST MILES TOTAL PROJECT	SHEET No.	TOTAL SHEETS
01	Hum	169	13.6/23.4	61	86

REGISTERED CIVIL ENGINEER — DATE 12-3-12

6-17-13
PLANS APPROVAL DATE

REGISTERED PROFESSIONAL ENGINEER — Quang H Nguyen — No. 65223 — Exp. 9-30-13 — CIVIL — STATE OF CALIFORNIA

The State of California or its officers or agents shall not be responsible for the accuracy or completeness of electronic copies of this plan sheet.

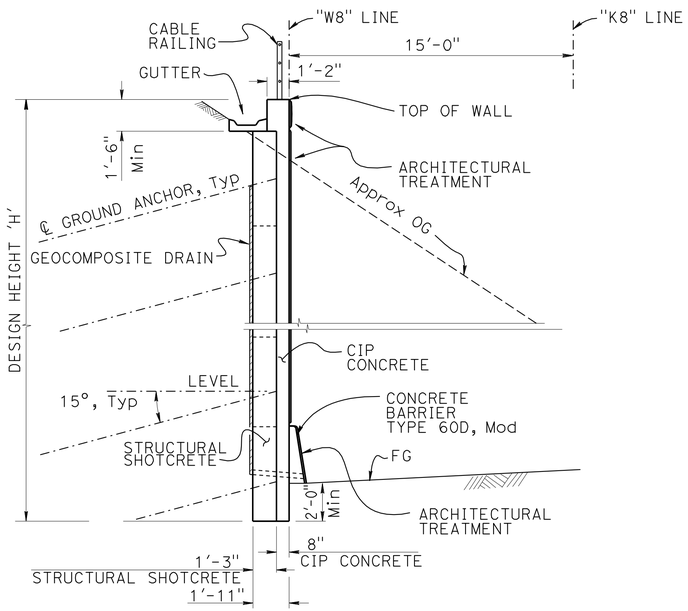

GROUND ANCHOR WALL
TYPICAL SECTION
1/4" = 1'-0"

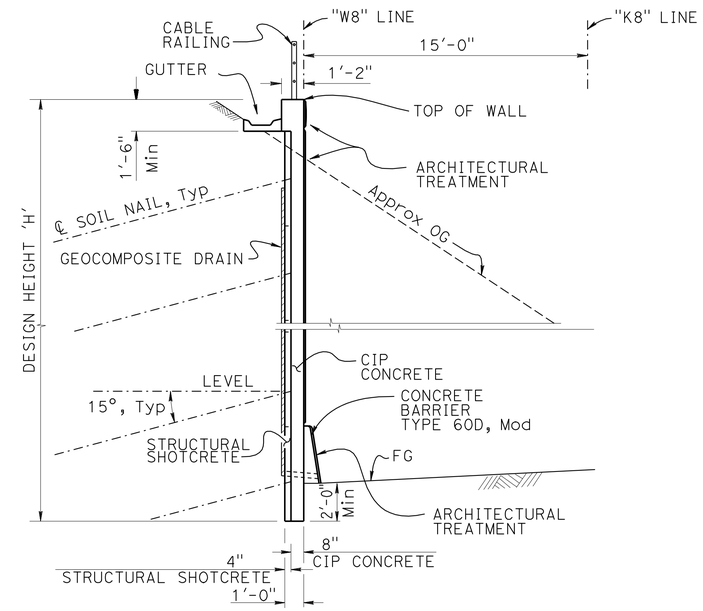

SOIL NAIL WALL
TYPICAL SECTION
1/4" = 1'-0"

Joseph E Downing
DESIGN ENGINEER

DESIGN	BY Eric Burgeson	CHECKED Ashraf Ahmed	LOAD FACTOR DESIGN		
DETAILS	BY Jay Reid	CHECKED Ashraf Ahmed	LAYOUT	BY Eric Burgeson	CHECKED Ashraf Ahmed
QUANTITIES	BY Eric Burgeson	CHECKED Pyo Hong	SPECIFICATIONS	BY Dave Klein	PLANS AND SPECS COMPARED Dave Klein

ORIGINAL SCALE IN INCHES FOR REDUCED PLANS 0 1 2 3

STATE OF CALIFORNIA
DEPARTMENT OF TRANSPORTATION

DIVISION OF ENGINEERING SERVICES
STRUCTURE DESIGN
DESIGN BRANCH 3

BRIDGE NO. 04E0031
POST MILE 23.28

WALL AT PM 23.28
GENERAL PLAN NO. 2

UNIT: 3578
PROJECT NUMBER & PHASE: 01000002191 CONTRACT NO.: 01-450901

DISREGARD PRINTS BEARING EARLIER REVISION DATES → 9-14-10 12-3-10 7-13-12 4-10-13

SHEET 2 OF 27

FILE => 01-450901_04e0031-a-gp02_gp.dgn

STRUCTURES DESIGN GENERAL PLAN SHEET (ENGLISH) (REV.09-01-10)

USERNAME => s114640 DATE PLOTTED => 18-JUN-2013 TIME PLOTTED => 07:25

DIST	COUNTY	ROUTE	POST MILES TOTAL PROJECT	SHEET No.	TOTAL SHEETS
01	Hum	169	13.6/23.4	62	86

REGISTERED CIVIL ENGINEER 12-3-12 DATE

6-17-13
PLANS APPROVAL DATE

REGISTERED PROFESSIONAL ENGINEER Quang H Nguyen No. 65223 Exp. 9-30-13 CIVIL STATE OF CALIFORNIA

The State of California or its officers or agents shall not be responsible for the accuracy or completeness of electronic copies of this plan sheet.

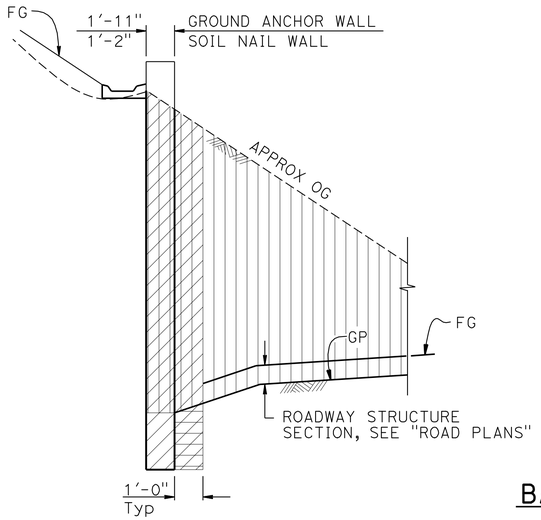

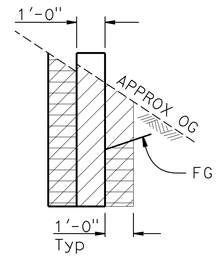

BARRIER TRANSITION WALL

LIMITS OF EXCAVATION AND BACKFILL

No Scale

Structure Excavation (Soil Nail Wall or Ground Anchor Wall)

Roadway Excavation See "ROAD PLANS"

Structure Backfill (Soil Nail Wall or Ground Anchor Wall)

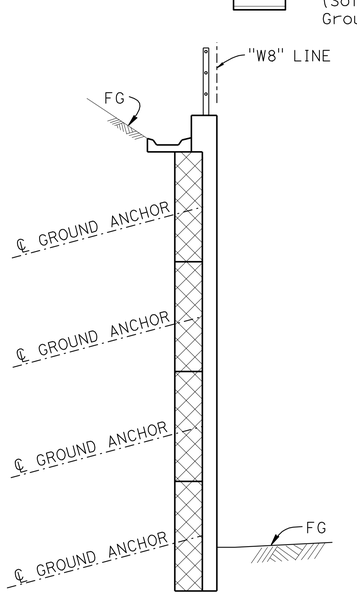

GROUND ANCHOR

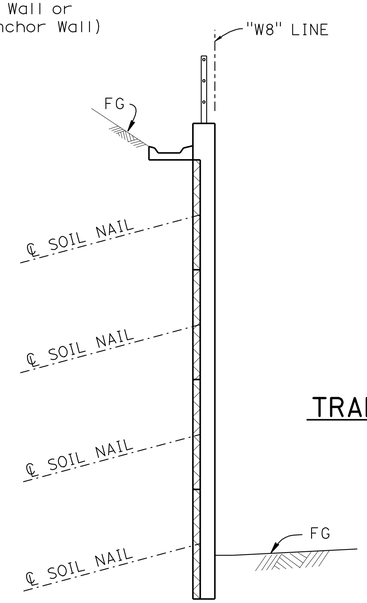

SOIL NAIL

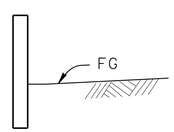

BARRIER TRANSITION WALL

CONCRETE STRENGTH & LIMITS

No Scale

Structural Concrete, Retaining Wall

Structural Shotcrete

GENERAL NOTES

DESIGN:

Bridge Design Specification LFD Version April 2000 (1996 AASHTO with Interims and Revisions by CALTRANS)

GEOTECHNICAL ENGINEERING CIRCULAR NO. 7, Soil Nail Walls (FHWAO-IF-03-017) March 2003

SOIL / ROCK PARAMETERS:

(For Determination of Lateral Earth Pressures)

GROUND ANCHOR WALL

ϕ = 34° γ = 125 pcf C = 300 psf @ 0' - 8'

ϕ = 36° γ = 135 pcf C = 200 psf @ 8' - 19'

ϕ = 38° γ = 135 pcf C = 100 psf @ 19' - 50'

SOIL NAIL WALL

ϕ = 34°

γ = 125 pcf

C = 300 psf

REINFORCED CONCRETE:

f'_c = 3.6 ksi

f_y = 60 ksi

STRUCTURAL SHOTCRETE:

f'_c = 3.6 ksi

f_y = 65 ksi (WELDED WIRE MESH)

f_y = 60 ksi (BAR REINFORCEMENT)

SOIL NAIL:

Design Pullout Resistance Q_d = 2710 lb/ft

Punching Shear = 40.0 kips

ASTM Designation: ASTM A706

f_y = 60 ksi

PRESTRESSING STEEL:

Strands - ASTM Designation: A416 (270 Ksi Low Relaxation Steel)
Bars - ASTM Designation: A722 Type II (150 ksi)

T = Design Force Per Ground Anchor T = 50 (kips)

fpu = Minimum Tensile Strength of Prestressing Steel (Ksi)

A_S (Min) = Minimum Cross Sectional Area of Prestressing Steel in Ground Anchor Tendon (square inches)

$$A_S \text{ (Min)} = \frac{1.50 * T}{0.75 * f_{pu}} \text{ (Strands)}$$

$$A_S \text{ (Min)} = \frac{1.50 * T}{0.80 * f_{pu}} \text{ (Bars)}$$

Unbonded Length = 35 Ft for all ground anchors

GENERAL NOTES

GROUT:

f'_C = 3.25 ksi at 28 Days

STRUCTURE STEEL (BEARING PLATES):

ASTM Designation: A709 / A709M

f_y = 36 ksi

INDEX TO PLANS

SHEET NO.	TITLE
1	GENERAL PLAN NO. 1
2	GENERAL PLAN NO. 2
3	INDEX TO PLANS
4	STRUCTURE PLAN NO. 1
5	STRUCTURE PLAN NO. 2
6	WALL ELEVATION TABLES
7	FOUNDATION PLAN
8	GROUND ANCHOR WALL DETAILS NO. 1
9	GROUND ANCHOR WALL DETAILS NO. 2
10	GROUND ANCHOR WALL DETAILS NO. 3
11	SOIL NAIL WALL DETAILS NO. 1
12	SOIL NAIL WALL DETAILS NO. 2
13	SOIL NAIL WALL DETAILS NO. 3
14	MISCELLANEOUS WALL DETAILS
15	DRAINAGE DETAILS
16	ARCHITECTURAL TREATMENT DETAILS NO. 1
17	ARCHITECTURAL TREATMENT DETAILS NO. 2
18	TEST NAILS DETAILS
19	WALL DRAIN DETAILS
20	SUB HORIZONTAL GROUND ANCHOR DETAILS
21	LOG OF TEST BORINGS 1 OF 7
22	LOG OF TEST BORINGS 2 OF 7
23	LOG OF TEST BORINGS 3 OF 7
24	LOG OF TEST BORINGS 4 OF 7
25	LOG OF TEST BORINGS 5 OF 7
26	LOG OF TEST BORINGS 6 OF 7
27	LOG OF TEST BORINGS 7 OF 7

STANDARD PLANS DATED 2010

A10A	ACRONYMS AND ABBREVIATIONS (SHEET 1 OF 2)
A10B	ACRONYMS AND ABBREVIATIONS (SHEET 2 OF 2)
A10C	LINES AND SYMBOLS (SHEET 1 OF 3)
A10D	LINES AND SYMBOLS (SHEET 2 OF 3)
A10E	LINES AND SYMBOLS (SHEET 3 OF 3)
A10F	LEGEND - SOIL (SHEET 1 OF 2)
A10G	LEGEND - SOIL (SHEET 2 OF 2)
A10H	LEGEND - ROCK
A76A	CONCRETE BARRIER TYPE 60
A77J3	METAL BEAM GUARD RAILING CONNECTIONS TO ABUTMENTS AND WALLS
B0-3	BRIDGE DETAILS
B3-6	RETAINING WALL DETAILS NO. 2
RSP B11-47	CABLE RAILING

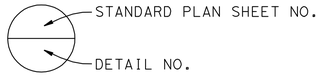

DESIGN	BY Eric Burgeson	CHECKED Ashraf Ahmed	
DETAILS	BY Jay Reid	CHECKED Ashraf Ahmed	
QUANTITIES	BY Eric Burgeson	CHECKED Pyo Hong	

STATE OF CALIFORNIA DEPARTMENT OF TRANSPORTATION

DIVISION OF ENGINEERING SERVICES STRUCTURE DESIGN DESIGN BRANCH 3

BRIDGE NO. 04E0031

POST MILE 23.28

WALL AT PM 23.28

INDEX TO PLANS

STRUCTURES DESIGN DETAIL SHEET (ENGLISH) (REV. 09-01-10)

ORIGINAL SCALE IN INCHES FOR REDUCED PLANS 0 1 2 3

UNIT: 3578
PROJECT NUMBER & PHASE: 01000002191 CONTRACT NO.: 01-450901

DISREGARD PRINTS BEARING EARLIER REVISION DATES

REVISION DATES 9-14-10 11-7-11 7-13-12 4-10-13

SHEET 3 OF 27

FILE => 01-450901_04e0031-a-idp_detail.dgn

USERNAME => s114640 DATE PLOTTED => 18-JUN-2013 TIME PLOTTED => 07:25

DIST	COUNTY	ROUTE	POST MILES TOTAL PROJECT	SHEET No.	TOTAL SHEETS
01	Hum	169	13.6/23.4	63	86

REGISTERED CIVIL ENGINEER — DATE 12-3-12

6-17-13
PLANS APPROVAL DATE

REGISTERED PROFESSIONAL ENGINEER — Quang H Nguyen — No. 65223 — Exp. 9-30-13 — CIVIL — STATE OF CALIFORNIA

The State of California or its officers or agents shall not be responsible for the accuracy or completeness of electronic copies of this plan sheet.

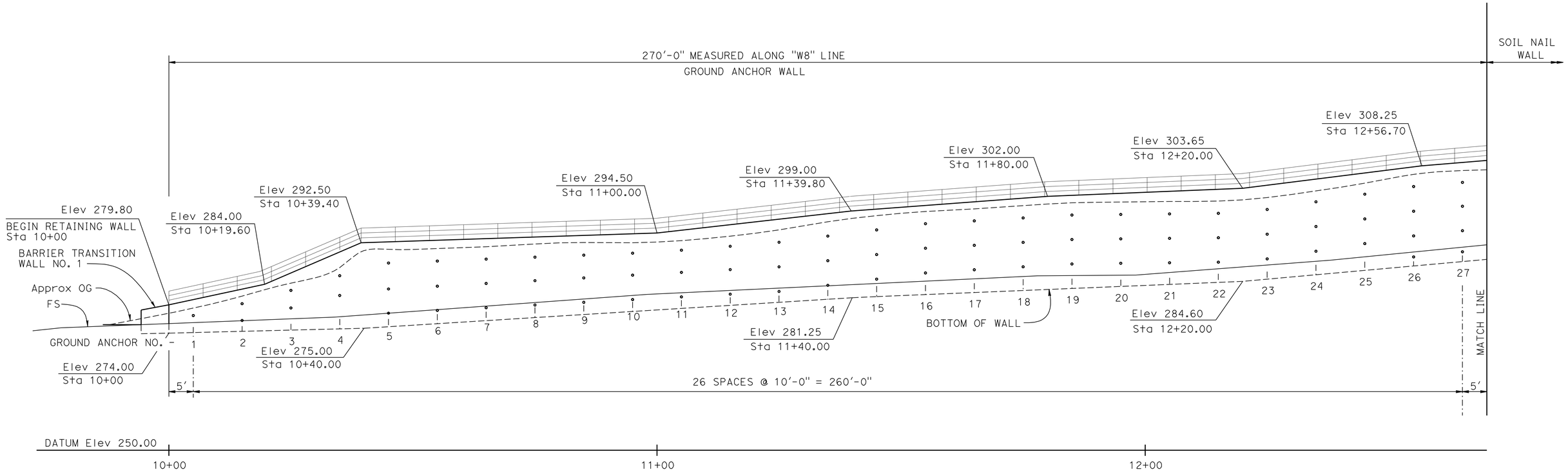

DEVELOPED ELEVATION

1" = 10'

LEGEND:

- ∘ Indicates Ground Anchor

NOTE:

For Ground Anchor and Soil Nail elevations, see "ELEVATION TABLES" sheet

Ground Anchor Unbonded Length = 35'-0"

DESIGN	BY Eric Burgeson	CHECKED Ashraf Ahmed	
DETAILS	BY Jay Reid	CHECKED Ashraf Ahmed	
QUANTITIES	BY Eric Burgeson	CHECKED Pyo Hong	

STATE OF CALIFORNIA
DEPARTMENT OF TRANSPORTATION

DIVISION OF ENGINEERING SERVICES
STRUCTURE DESIGN
DESIGN BRANCH 3

BRIDGE NO. 04E0031
POST MILE 23.28

WALL AT PM 23.28
STRUCTURE PLAN NO. 1

STRUCTURES DESIGN DETAIL SHEET (ENGLISH) (REV. 09-01-10)

ORIGINAL SCALE IN INCHES FOR REDUCED PLANS 0 1 2 3

UNIT: 3578
PROJECT NUMBER & PHASE: 01000002191
CONTRACT NO.: 01-450901

DISREGARD PRINTS BEARING EARLIER REVISION DATES

REVISION DATES: 9-14-10 11-7-11 7-13-12 4-10-13

SHEET 4 OF 27

FILE => 01-450901_04e0031-c-sp01_detail.dgn

USERNAME => s174640 DATE PLOTTED => 18-JUN-2013 TIME PLOTTED => 07:25

DIST	COUNTY	ROUTE	POST MILES TOTAL PROJECT	SHEET No.	TOTAL SHEETS
01	Hum	169	13.6/23.4	64	86

REGISTERED CIVIL ENGINEER 12-3-12 DATE

6-17-13
PLANS APPROVAL DATE

REGISTERED PROFESSIONAL ENGINEER Quang H Nguyen No. 65223 Exp. 9-30-13 CIVIL STATE OF CALIFORNIA

The State of California or its officers or agents shall not be responsible for the accuracy or completeness of electronic copies of this plan sheet.

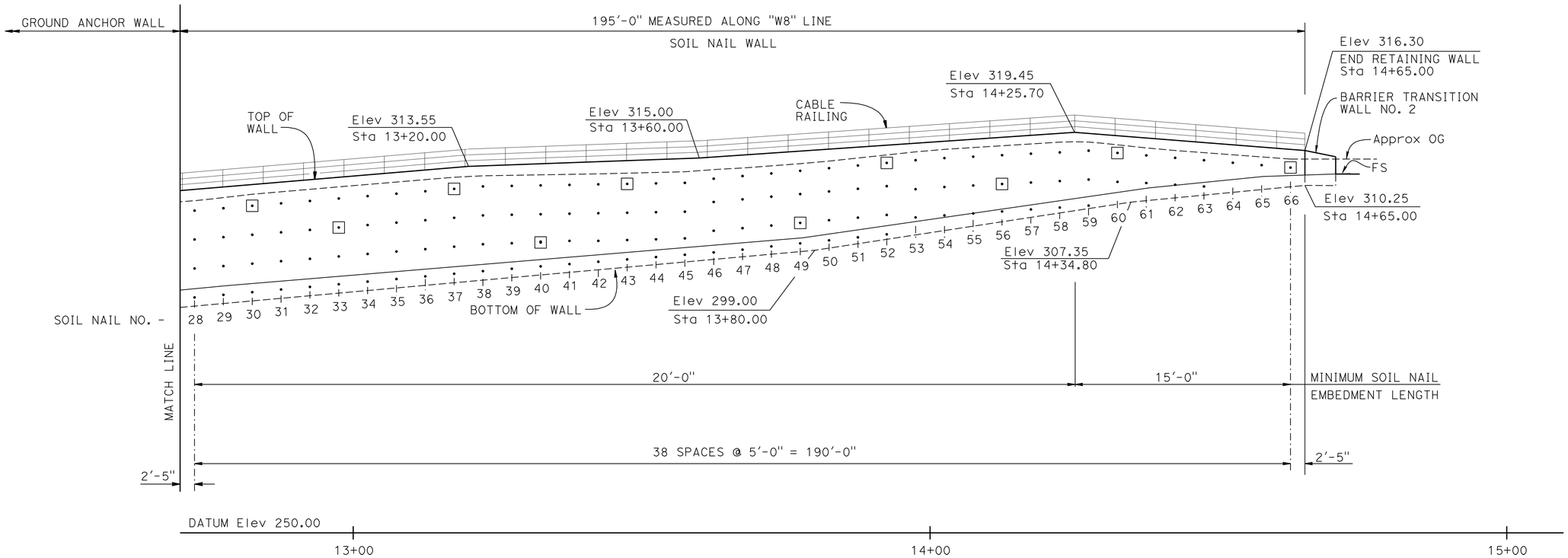

DEVELOPED ELEVATION

1" = 10'

LEGEND:

- • Indicates Soil Nail
- ⊡ Indicates proof test Soil Nails. Install adjacent to production nail.

NOTE:

For Ground Anchor and Soil Nail elevations, see "ELEVATION TABLES" sheet

DESIGN	BY Eric Burgeson	CHECKED Ashraf Ahmed	
DETAILS	BY Jay Reid	CHECKED Ashraf Ahmed	
QUANTITIES	BY Eric Burgeson	CHECKED Pyo Hong	

STATE OF CALIFORNIA
DEPARTMENT OF TRANSPORTATION

DIVISION OF ENGINEERING SERVICES
STRUCTURE DESIGN
DESIGN BRANCH 3

BRIDGE NO. 04E0031
POST MILE 23.28

WALL AT PM 23.28
STRUCTURE PLAN NO. 2

STRUCTURES DESIGN DETAIL SHEET (ENGLISH) (REV. 09-01-10)

ORIGINAL SCALE IN INCHES FOR REDUCED PLANS 0 1 2 3

UNIT: 3578
PROJECT NUMBER & PHASE: 01000002191 CONTRACT NO.: 01-450901

DISREGARD PRINTS BEARING EARLIER REVISION DATES → REVISION DATES 9-14-10 11-7-11 1-18-12 12-3-12

SHEET 5 OF 27

FILE => 01-450901_04e0031-c-sp02_detail-sheet.dgn

USERNAME => s114640 DATE PLOTTED => 18-JUN-2013 TIME PLOTTED => 07:25

DIST	COUNTY	ROUTE	POST MILES TOTAL PROJECT	SHEET No.	TOTAL SHEETS
01	Hum	169	13.6/23.4	65	86

Quang H Nguyen 12-3-12
REGISTERED CIVIL ENGINEER DATE

6-17-13
PLANS APPROVAL DATE

REGISTERED PROFESSIONAL ENGINEER
Quang H Nguyen
No. 65223
Exp. 9-30-13
CIVIL
STATE OF CALIFORNIA

The State of California or its officers or agents shall not be responsible for the accuracy or completeness of electronic copies of this plan sheet.

GROUND ANCHOR ELEVATION TABLE

NO.	1st LIFT	2nd LIFT	3rd LIFT	4th LIFT
1	277.59	———	———	———
2	280.02	276.58	———	———
3	282.74	279.14	———	———
4	285.75	281.70	———	———
5	288.34	283.03	278.08	———
6	288.75	283.60	278.64	———
7	289.15	284.16	279.19	———
8	289.55	284.73	279.75	———
9	289.96	285.29	280.30	———
10	290.36	285.86	280.86	———
11	290.97	286.43	281.41	———
12	291.78	286.99	281.97	———
13	292.59	287.56	282.52	———
14	293.86	288.82	283.78	———
15	295.12	290.08	285.04	———
16	296.39	291.38	286.31	———
17	296.98	291.97	286.96	———
18	297.58	292.57	287.56	———
19	298.17	293.16	288.15	———
20	298.29	293.29	288.29	———
21	298.40	293.40	288.40	———
22	298.52	293.52	288.52	———
23	299.31	294.25	289.19	———
24	300.88	295.82	290.76	———
25	302.44	297.38	292.32	———
26	304.01	298.95	293.89	289.59
27	304.85	299.97	294.96	290.64

SOIL NAIL ELEVATION TABLES

NO.	1st LIFT	2nd LIFT	3rd LIFT	4th LIFT
28	305.88	300.86	295.85	290.83
29	306.30	301.28	296.26	291.28
30	306.72	301.70	296.69	291.74
31	307.14	302.12	297.11	292.20
32	307.56	302.54	297.52	292.65
33	307.98	302.96	297.94	293.11
34	308.40	303.38	298.37	293.57
35	308.82	303.80	298.79	294.02
36	309.24	304.22	299.20	294.48
37	309.66	304.64	299.63	294.94
38	310.08	305.06	300.05	295.39
39	310.17	305.17	300.22	295.80
40	310.26	305.26	300.36	296.21
41	310.35	305.35	300.50	296.61
42	310.44	305.43	300.64	297.02
43	310.52	305.52	300.79	297.42
44	310.61	305.61	300.91	297.83
45	310.70	305.70	301.07	298.23
46	311.42	307.38	302.39	298.64
47	311.88	307.84	302.84	299.11
48	312.33	308.30	303.30	299.68
49	312.79	308.75	303.76	300.21
50	313.25	309.21	304.22	300.73

NO.	1st LIFT	2nd LIFT	3rd LIFT	4th LIFT
51	313.71	309.67	304.67	301.25
52	314.16	310.13	305.13	301.77
53	314.62	309.60	304.71	———
54	314.99	309.98	305.05	———
55	315.24	310.24	305.39	———
56	315.50	310.50	305.74	———
57	315.76	310.76	306.08	———
58	315.98	311.01	306.42	———
59	316.28	311.27	306.76	———
60	315.89	310.87	———	———
61	315.46	310.67	———	———
62	315.04	310.37	———	———
63	314.62	310.07	———	———
64	314.19	———	———	———
65	313.77	———	———	———
66	313.35	———	———	———

	BY	CHECKED
DESIGN	Eric Burgeson	Ashraf Ahmed
DETAILS	Jay Reid	Ashraf Ahmed
QUANTITIES	Eric Burgeson	Pyo Hong

STATE OF CALIFORNIA
DEPARTMENT OF TRANSPORTATION

DIVISION OF ENGINEERING SERVICES
STRUCTURE DESIGN
DESIGN BRANCH 3

BRIDGE NO. 04E0031
POST MILE 23.28

WALL AT PM 23.28
WALL ELEVATION TABLES

STRUCTURES DESIGN DETAIL SHEET (ENGLISH) (REV. 09-01-10)

ORIGINAL SCALE IN INCHES FOR REDUCED PLANS 0 1 2 3

UNIT: 3578
PROJECT NUMBER & PHASE: 01000002191
CONTRACT NO.: 01-450901

DISREGARD PRINTS BEARING EARLIER REVISION DATES

REVISION DATES: 9-14-10 11-7-11 7-13-12 12-3-12

SHEET 6 OF 27

FILE => 01-450901_04e0031-d-01_detail.dgn

USERNAME => s114640 DATE PLOTTED => 18-JUN-2013 TIME PLOTTED => 07:25

DIST	COUNTY	ROUTE	POST MILES TOTAL PROJECT	SHEET No.	TOTAL SHEETS
01	Hum	169	13.6/23.4	66	86

Quang H Nguyen 12-3-12
REGISTERED CIVIL ENGINEER DATE

6-17-13
PLANS APPROVAL DATE

REGISTERED PROFESSIONAL ENGINEER Quang H Nguyen No. 65223 Exp. 9-30-13 CIVIL STATE OF CALIFORNIA

The State of California or its officers or agents shall not be responsible for the accuracy or completeness of electronic copies of this plan sheet.

CURVE DATA

No.	R	Δ	T	L
A	650.00	05°03'10"	28.68	57.32
B	380.00	19°01'60"	63.70	126.23
C	130.00	25°59'22"	30.00	58.97
D	190.00	19°32'25"	32.72	64.80
1	665.00	05°03'10"	29.34	58.64
2	365.00	19°02'00"	61.19	121.25
3	115.00	25°59'20"	26.54	52.16
4	205.00	06°47'05"	12.15	24.27

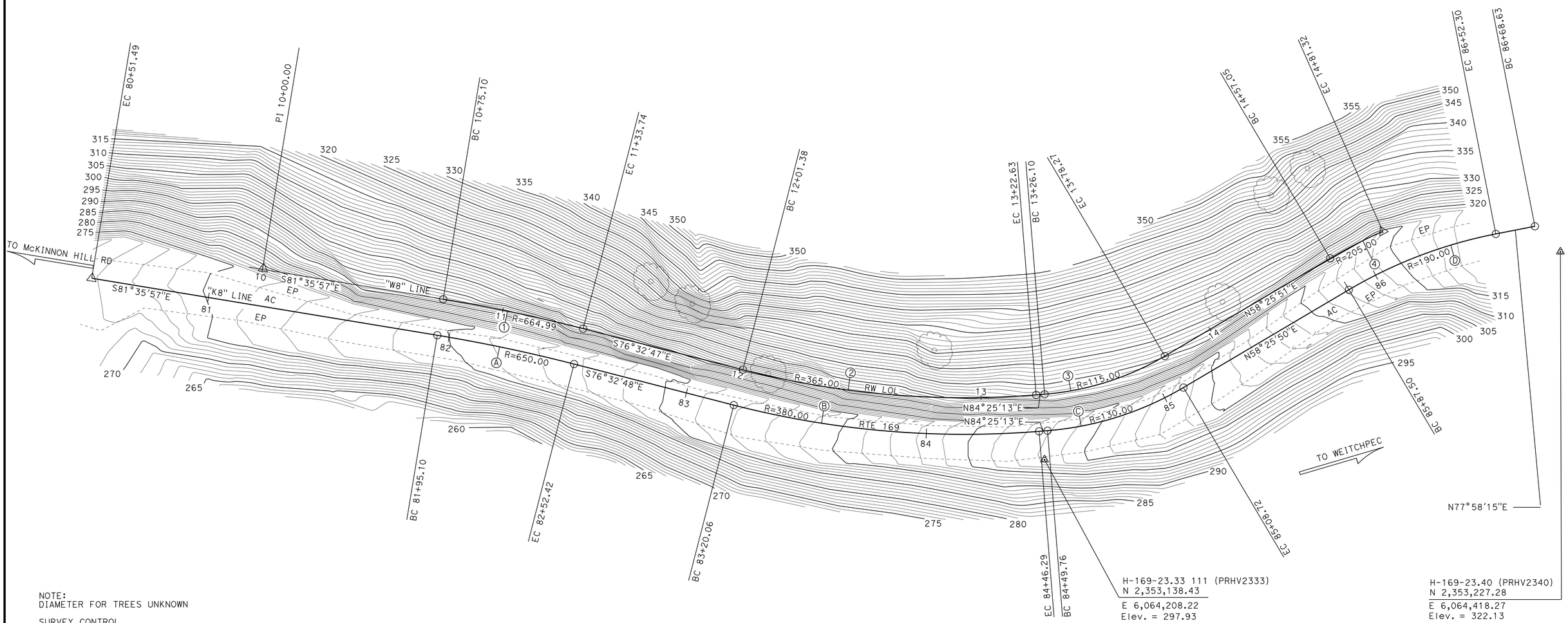

NOTE:
DIAMETER FOR TREES UNKNOWN

SURVEY CONTROL

H-169-20 111 (PRHV2333)
Fnd CDOT 2¼" Brass Disk
11.76 FT Rt. "K" Line Rte 169
Sta. 84+47.56
N 2,353,138.43
E 6,064,208.22
Elev. = 297.93

H-169-23.40 (PRHV2340)
Fnd Caltrans Aluminum Cap & ⅝" rebar Stamped "H-169-23.40 2004"
12.18 FT Rt. "K" Line Rte 169
Sta. 86+77.15
N 2,353,227.28
E 6,064,418.27
Elev. = 322.12

PRELIMINARY INVESTIGATION SECTION

SCALE	VERT.DATUM NAVD88	PHOTOGRAMMETRY AS OF: X			
1"=20'	HORZ.DATUM NAD83 (1991.35)	SURVEYED	BY District	CHECKED	BY C. Fassett 03/2011
ALIGNMENT TIES Dist. Traverse Sheet		DRAFTED	BY L. Vasquez 03/2011	CHECKED	BY T. Zolnikov 03/2011

DESIGN	BY Eric Burgeson	CHECKED Ashraf Ahmed
DETAILS	BY J. Reid/J. Chlubna	CHECKED Ashraf Ahmed
QUANTITIES	BY Eric Burgeson	CHECKED Pyo Hong

STATE OF CALIFORNIA
DEPARTMENT OF TRANSPORTATION

DIVISION OF ENGINEERING SERVICES
STRUCTURE DESIGN
DESIGN BRANCH 3

BRIDGE NO. 04E0031
POST MILE 23.28

WALL AT PM 23.28
FOUNDATION PLAN

STRUCTURES FOUNDATION PLAN SHEET (ENGLISH) (REV. 09-01-10)

ORIGINAL SCALE IN INCHES FOR REDUCED PLANS 0 1 2 3

UNIT: 3646
PROJECT NUMBER & PHASE: 01000002191 CONTRACT NO.: 01-450901

DISREGARD PRINTS BEARING EARLIER REVISION DATES

REVISION DATES: 03/28/11 8-5-11 3-28-12 4-16-13

SHEET 7 OF 27

FILE => 01-450901_04e0031-d-fp.dgn

DIST	COUNTY	ROUTE	POST MILES TOTAL PROJECT	SHEET No.	TOTAL SHEETS
01	Hum	169	13.6/23.4	67	86

REGISTERED CIVIL ENGINEER 12-3-12 DATE

6-17-13
PLANS APPROVAL DATE

REGISTERED PROFESSIONAL ENGINEER Quang H Nguyen No. 65223 Exp. 9-30-13 CIVIL STATE OF CALIFORNIA

The State of California or its officers or agents shall not be responsible for the accuracy or completeness of electronic copies of this plan sheet.

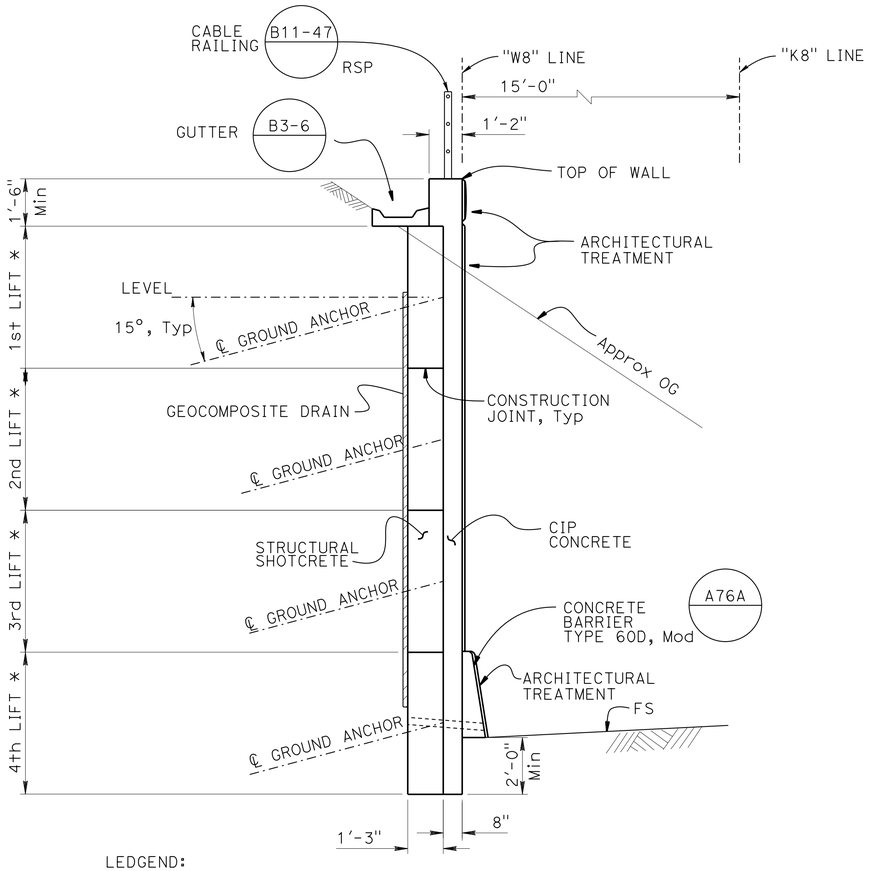

LEDGEND:

* Total number of lifts vary at locations.
Maximum lift excavation depth of 5'-0" of soil

NOTE:

For "GEOCOMPOSITE DRAIN", see "DRAINAGE DETAILS NO. 1 & NO. 2" sheets

TYPICAL LIFT SECTION

3/8" = 1'-0"

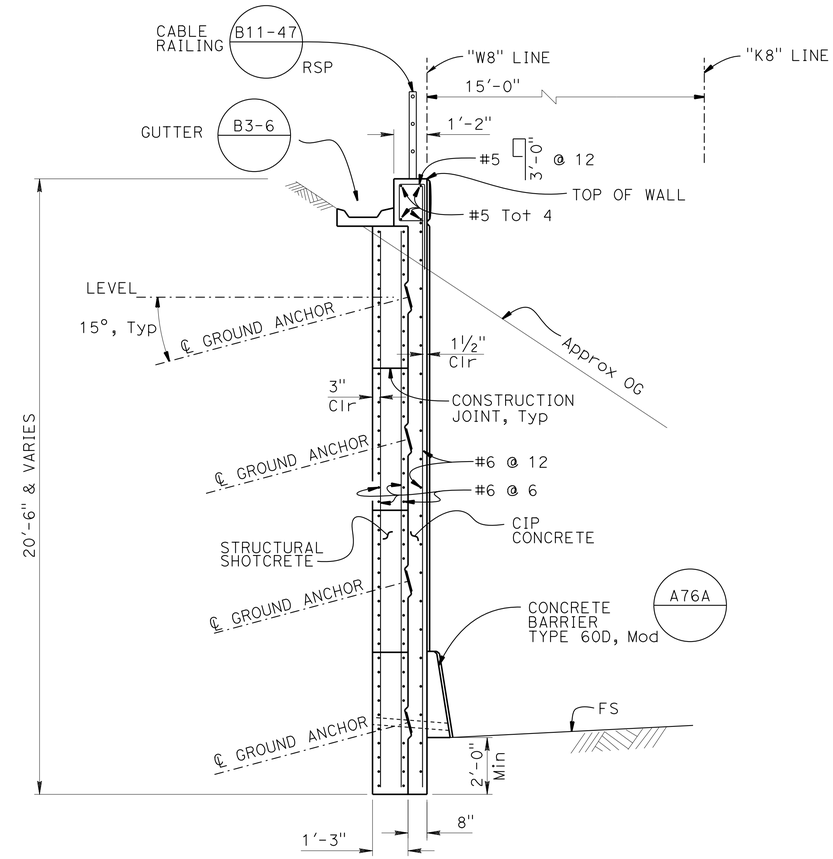

NOTES:

1. Architectural treatment not shown
2. For details not shown see "TYPICAL LIFT SECTION"

TYPICAL SECTION

3/8" = 1'-0"

DESIGN	BY Eric Burgeson	CHECKED Ashraf Ahmed	
DETAILS	BY Jay Reid	CHECKED Ashraf Ahmed	
QUANTITIES	BY Eric Burgeson	CHECKED Pyo Hong	

STATE OF CALIFORNIA
DEPARTMENT OF TRANSPORTATION

DIVISION OF ENGINEERING SERVICES
STRUCTURE DESIGN
DESIGN BRANCH 3

BRIDGE NO. 04E0031
POST MILE 23.28

WALL AT PM 23.28
GROUND ANCHOR WALL DETAILS NO. 1

STRUCTURES DESIGN DETAIL SHEET (ENGLISH) (REV. 09-01-10)

ORIGINAL SCALE IN INCHES FOR REDUCED PLANS 0 1 2 3

UNIT: 3578
PROJECT NUMBER & PHASE: 01000002191
CONTRACT NO.: 01-450901

DISREGARD PRINTS BEARING EARLIER REVISION DATES

REVISION DATES: 9-14-10 11-2-11 7-13-12 4-10-13

SHEET 8 OF 27

FILE => 01-450901_04e0031-g-garwdt01_detail.dgn

USERNAME => s179571 DATE PLOTTED => 18-JUN-2013 TIME PLOTTED => 07:11

DIST	COUNTY	ROUTE	POST MILES TOTAL PROJECT	SHEET No.	TOTAL SHEETS
01	Hum	169	13.6/23.4	68	86

REGISTERED CIVIL ENGINEER 12-3-12 DATE

6-17-13
PLANS APPROVAL DATE

REGISTERED PROFESSIONAL ENGINEER Quang H Nguyen No. 65223 Exp. 9-30-13 CIVIL STATE OF CALIFORNIA

The State of California or its officers or agents shall not be responsible for the accuracy or completeness of electronic copies of this plan sheet.

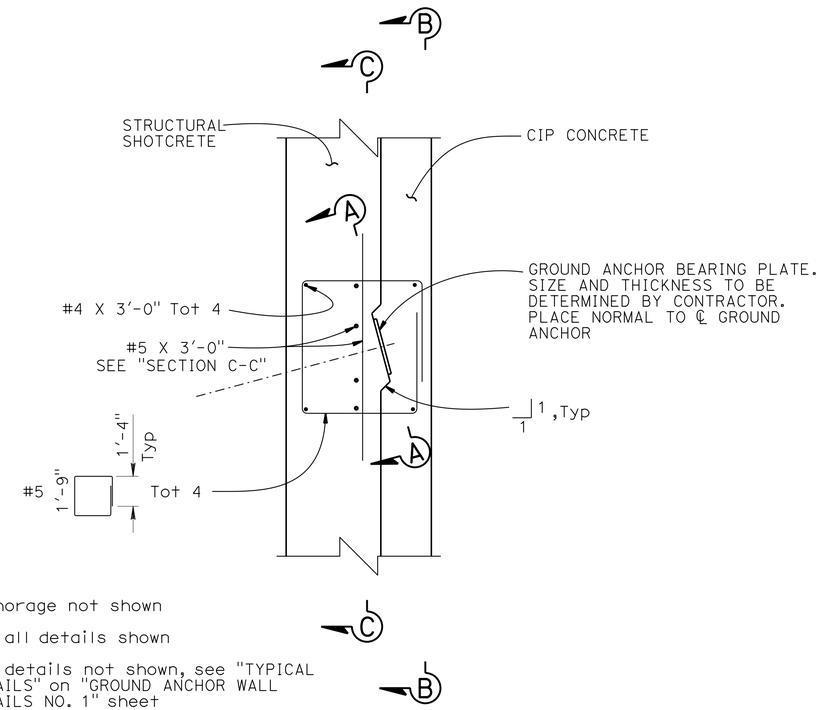

NOTES:

1. Anchorage not shown
2. Not all details shown
3. For details not shown, see "TYPICAL DETAILS" on "GROUND ANCHOR WALL DETAILS NO. 1" sheet

PART TYPICAL SECTION

1" = 1'-0"

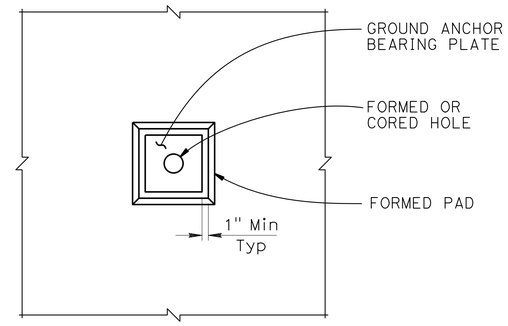

NOTE:

Wall Reinforcing not shown

SECTION A-A

1" = 1'-0"

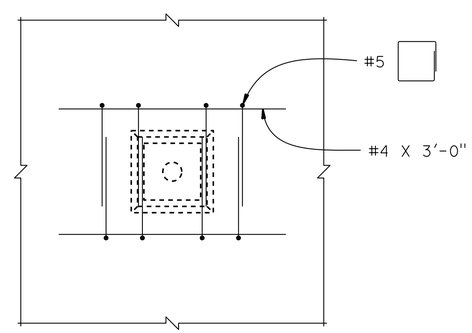

NOTES:

1. Wall Reinforcing not shown
2. For details not shown, see "SECTION A-A"

SECTION B-B

1" = 1'-0"

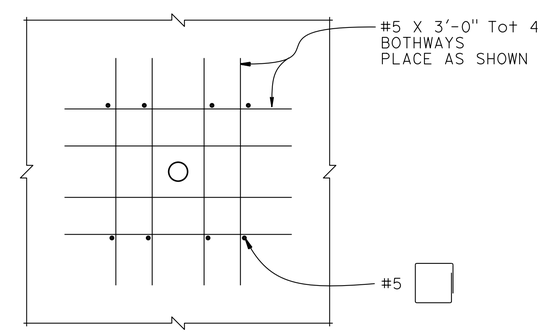

NOTES:

1. Wall Reinforcing not shown
2. For details not shown, see "SECTION A-A"

SECTION C-C

1" = 1'-0"

	BY	CHECKED
DESIGN	Eric Burgeson	Ashraf Ahmed
DETAILS	Jay Reid	Ashraf Ahmed
QUANTITIES	Eric Burgeson	Pyo Hong

STATE OF CALIFORNIA DEPARTMENT OF TRANSPORTATION

DIVISION OF ENGINEERING SERVICES STRUCTURE DESIGN DESIGN BRANCH 3

BRIDGE NO. 04E0031
POST MILE 23.28

WALL AT PM 23.28
GROUND ANCHOR WALL DETAILS NO. 2

STRUCTURES DESIGN DETAIL SHEET (ENGLISH) (REV. 09-01-10)

ORIGINAL SCALE IN INCHES FOR REDUCED PLANS 0 1 2 3

UNIT: 3578
PROJECT NUMBER & PHASE: 01000002191 CONTRACT NO.: 01-450901

DISREGARD PRINTS BEARING EARLIER REVISION DATES → REVISION DATES 9-14-10 11-7-11 1-13-12 12-3-12

SHEET 9 OF 27

FILE => 01-450901_04e0031-g-garwdt02_detail.dgn

USERNAME => s119571 DATE PLOTTED => 18-JUN-2013 TIME PLOTTED => 07:11

DIST	COUNTY	ROUTE	POST MILES TOTAL PROJECT	SHEET No.	TOTAL SHEETS
01	Hum	169	13.6/23.4	69	86

REGISTERED CIVIL ENGINEER 12-3-12 DATE

6-17-13
PLANS APPROVAL DATE

REGISTERED PROFESSIONAL ENGINEER Quang H Nguyen No. 65223 Exp. 9-30-13 CIVIL STATE OF CALIFORNIA

The State of California or its officers or agents shall not be responsible for the accuracy or completeness of electronic copies of this plan sheet.

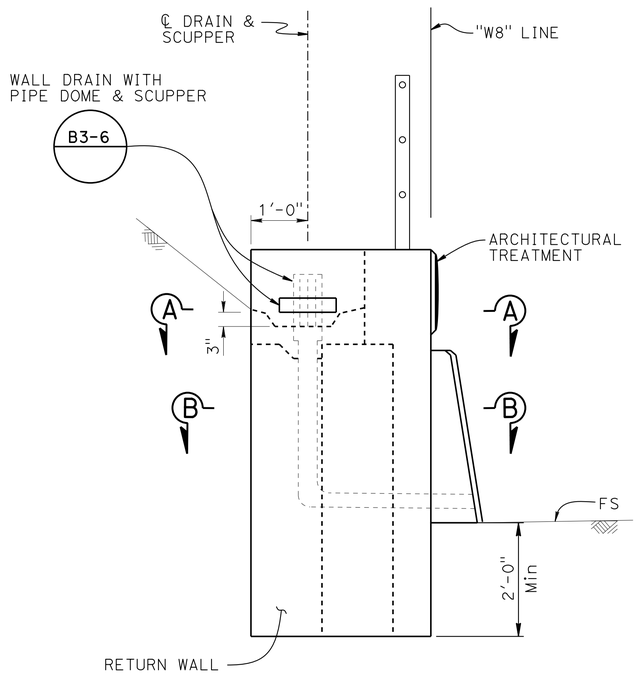

NOTE:
Barrier transition wall not shown

GROUND ANCHOR WALL END DETAIL
3/4" = 1'-0"

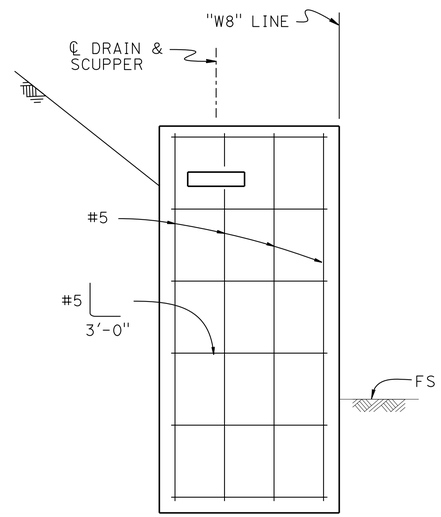

NOTE:
Barrier and architectural treatment not shown

RETURN WALL ELEVATION
3/4" = 1'-0"

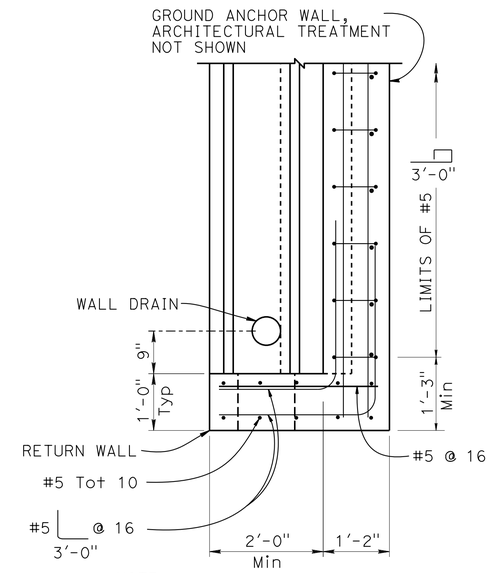

NOTE:
Barrier transition wall not shown

SECTION A-A
3/4" = 1'-0"

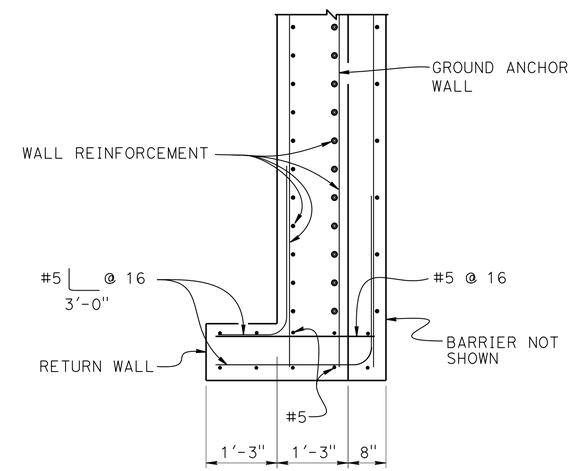

NOTE:
Barrier transition wall not shown

SECTION B-B
3/4" = 1'-0"

NOTES:

1. For details not shown see "END SOIL NAIL WALL DETAIL"
2. Not all reinforcing shown

DESIGN	BY Eric Burgeson	CHECKED Ashraf Ahmed	
DETAILS	BY Jay Reid	CHECKED Ashraf Ahmed	
QUANTITIES	BY Eric Burgeson	CHECKED Pyo Hong	

STATE OF CALIFORNIA
DEPARTMENT OF TRANSPORTATION

DIVISION OF ENGINEERING SERVICES
STRUCTURE DESIGN
DESIGN BRANCH 3

BRIDGE NO. 04E0031
POST MILE 23.28

WALL AT PM 23.28
GROUND ANCHOR WALL DETAILS NO. 3

STRUCTURES DESIGN DETAIL SHEET (ENGLISH) (REV. 09-01-10)

ORIGINAL SCALE IN INCHES FOR REDUCED PLANS 0 1 2 3

UNIT: 3578
PROJECT NUMBER & PHASE: 01000002191
CONTRACT NO.: 01-450901

DISREGARD PRINTS BEARING EARLIER REVISION DATES

REVISION DATES: 9-14-10 11-7-11 7-13-12 12-3-12

SHEET 10 OF 27

FILE => 01-450901_04e0031-g-garwdt03_detail.dgn

USERNAME => s119571 DATE PLOTTED => 18-JUN-2013 TIME PLOTTED => 07:11

DIST	COUNTY	ROUTE	POST MILES TOTAL PROJECT	SHEET No.	TOTAL SHEETS
01	Hum	169	13.6/23.4	70	86

REGISTERED CIVIL ENGINEER 12-3-12 DATE

6-17-13
PLANS APPROVAL DATE

REGISTERED PROFESSIONAL ENGINEER Quang H Nguyen No. 65223 Exp. 9-30-13 CIVIL STATE OF CALIFORNIA

The State of California or its officers or agents shall not be responsible for the accuracy or completeness of electronic copies of this plan sheet.

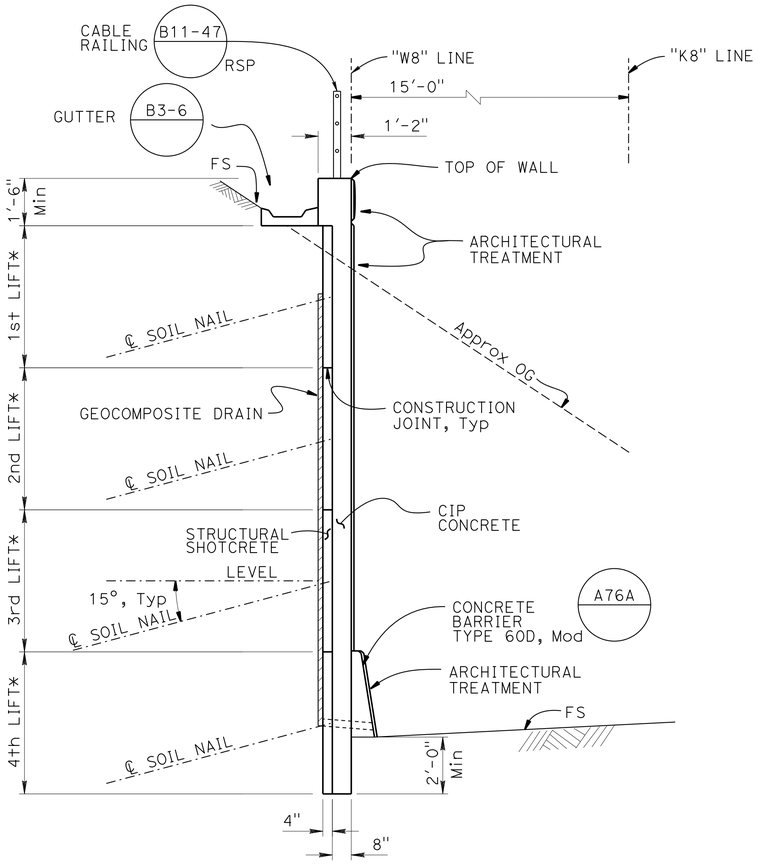

LEDGEND:

* Total number of lifts vary at locations.
Maximum lift excavation depth of 5'-0" of soil

NOTE:

For "GEOCOMPOSITE DRAIN", see "DRAINAGE DETAILS NO. 1 & NO. 2" sheets

TYPICAL LIFT SECTION

3/8" = 1'-0"

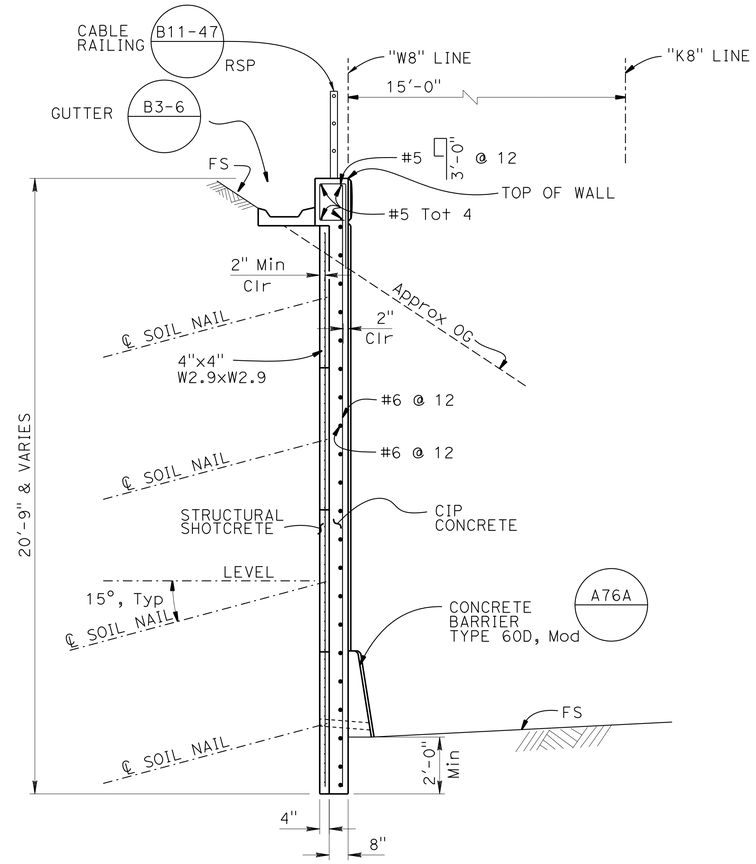

NOTES:

1. Architectural treatment not shown
2. For details not shown see "TYPICAL LIFT SECTION"

TYPICAL SECTION

3/8" = 1'-0"

DESIGN	BY Eric Burgeson	CHECKED Ashraf Ahmed	
DETAILS	BY Jay Reid	CHECKED Ashraf Ahmed	
QUANTITIES	BY Eric Burgeson	CHECKED Pyo Hong	

STATE OF CALIFORNIA
DEPARTMENT OF TRANSPORTATION

DIVISION OF ENGINEERING SERVICES
STRUCTURE DESIGN
DESIGN BRANCH 3

BRIDGE NO. 04E0031
POST MILE 23.28

WALL AT PM 23.28
SOIL NAIL WALL DETAILS NO. 1

STRUCTURES DESIGN DETAIL SHEET (ENGLISH) (REV. 09-01-10)

ORIGINAL SCALE IN INCHES FOR REDUCED PLANS 0 1 2 3

UNIT: 3578
PROJECT NUMBER & PHASE: 01000002191
CONTRACT NO.: 01-450901

DISREGARD PRINTS BEARING EARLIER REVISION DATES

REVISION DATES: 9-14-10 11-2-11 7-13-12 4-10-13

SHEET 11 OF 27

FILE => 01-450901_04e0031-h-snrwdt01_detail.dgn

USERNAME => s119571 DATE PLOTTED => 18-JUN-2013 TIME PLOTTED => 07:21

DIST	COUNTY	ROUTE	POST MILES TOTAL PROJECT	SHEET No.	TOTAL SHEETS
01	Hum	169	13.6/23.4	71	86

REGISTERED CIVIL ENGINEER — DATE 12-3-12

6-17-13
PLANS APPROVAL DATE

REGISTERED PROFESSIONAL ENGINEER — Quang H Nguyen — No. 65223 — Exp. 9-30-13 — CIVIL — STATE OF CALIFORNIA

The State of California or its officers or agents shall not be responsible for the accuracy or completeness of electronic copies of this plan sheet.

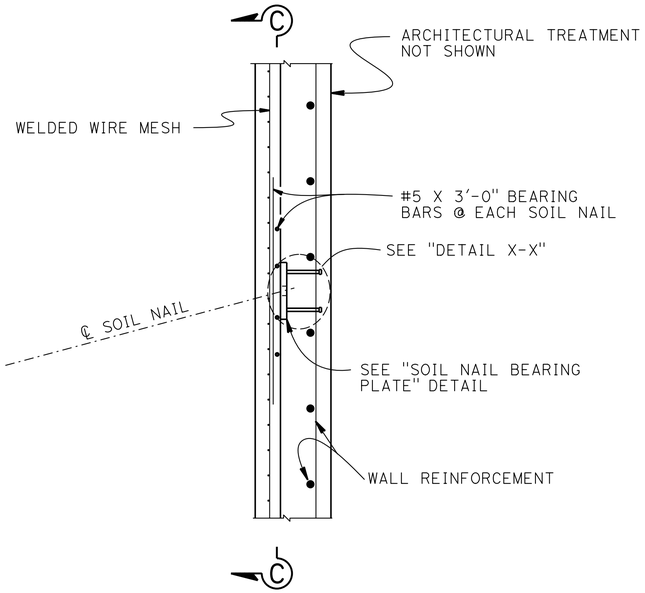

PART TYPICAL SECTION

1" = 1'-0"

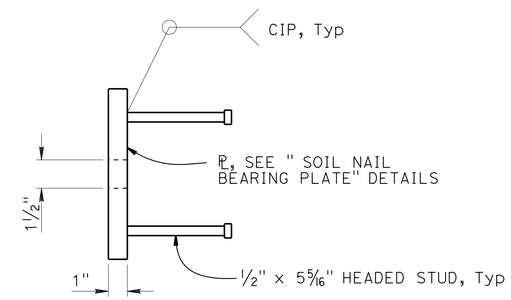

DETAIL X-X

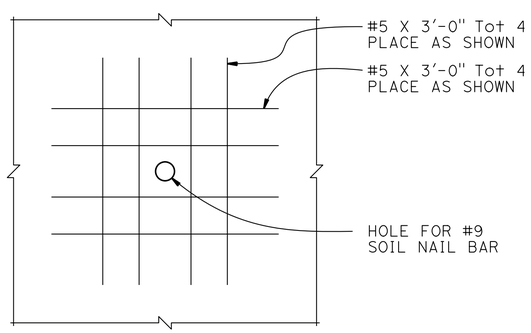

NOTE:

Wall Reinforcing not shown

SECTION C-C

1" = 1'-0"

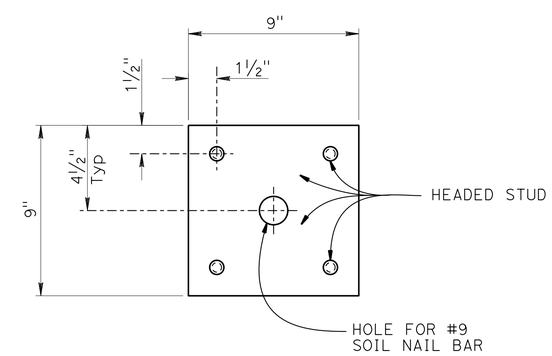

SOIL NAIL BEARING PLATE

3" = 1'-0"

DESIGN	BY Eric Burgeson	CHECKED Ashraf Ahmed	
DETAILS	BY Jay Reid	CHECKED Ashraf Ahmed	
QUANTITIES	BY Eric Burgeson	CHECKED Pyo Hong	

STATE OF CALIFORNIA
DEPARTMENT OF TRANSPORTATION

DIVISION OF ENGINEERING SERVICES
STRUCTURE DESIGN
DESIGN BRANCH 3

BRIDGE NO. 04E0031
POST MILE 23.28

WALL AT PM 23.28
SOIL NAIL WALL DETAILS NO. 2

STRUCTURES DESIGN DETAIL SHEET (ENGLISH) (REV. 09-01-10)

ORIGINAL SCALE IN INCHES FOR REDUCED PLANS 0 1 2 3

UNIT: 3578
PROJECT NUMBER & PHASE: 01000002191
CONTRACT NO.: 01-450901

DISREGARD PRINTS BEARING EARLIER REVISION DATES

REVISION DATES: 9-14-10 | 11-2-11 | 7-13-12 | 12-3-12

SHEET 12 OF 27

FILE => 01-450901_04e0031-h-snrwdt02_detail.dgn

USERNAME => s119571 DATE PLOTTED => 18-JUN-2013 TIME PLOTTED => 07:22

DIST	COUNTY	ROUTE	POST MILES TOTAL PROJECT	SHEET No.	TOTAL SHEETS
01	Hum	169	13.6/23.4	72	86

REGISTERED CIVIL ENGINEER 12-3-12 DATE

6-17-13
PLANS APPROVAL DATE

REGISTERED PROFESSIONAL ENGINEER Quang H Nguyen No. 65223 Exp. 9-30-13 CIVIL STATE OF CALIFORNIA

The State of California or its officers or agents shall not be responsible for the accuracy or completeness of electronic copies of this plan sheet.

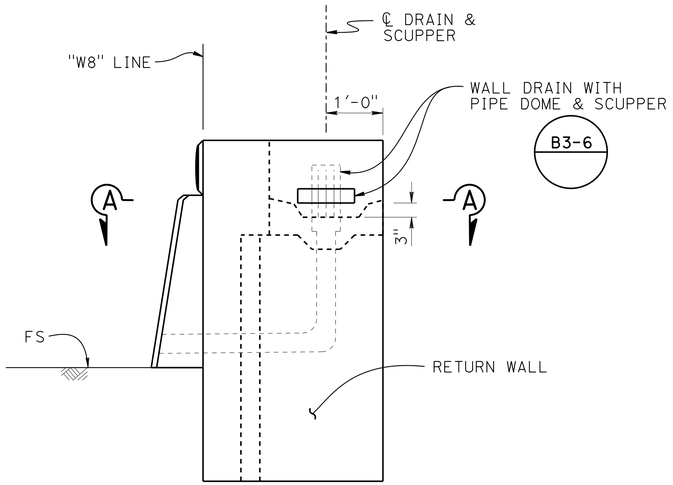

NOTE:
Barrier transition wall not shown

SOIL NAIL WALL END DETAIL
3/4" = 1'-0"

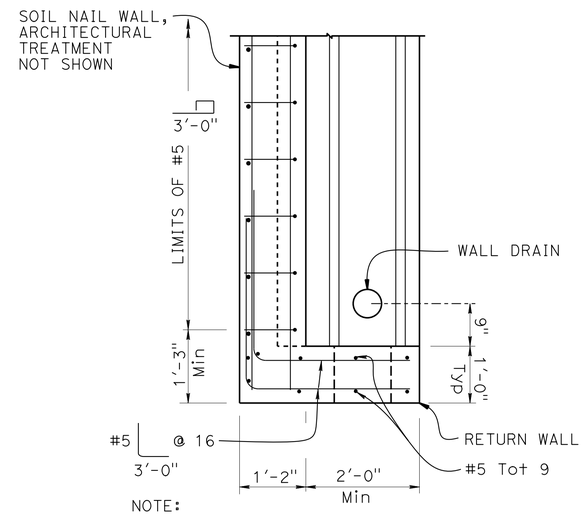

NOTE:
Barrier transition wall not shown

SECTION A-A
3/4" = 1'-0"

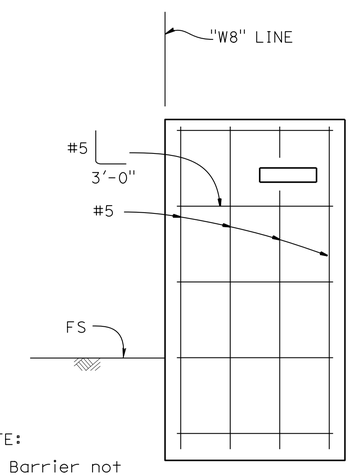

NOTE:
Barrier not shown

RETURN WALL ELEVATION
3/4" = 1'-0"

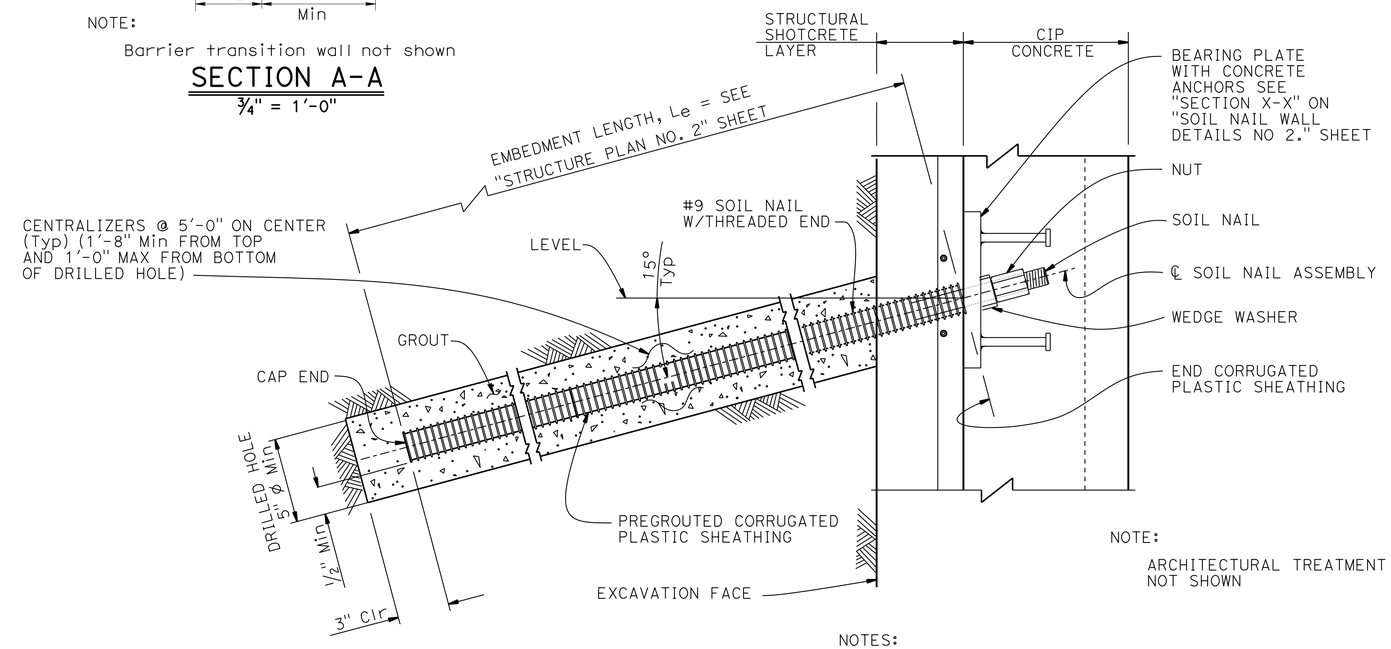

NOTE:
ARCHITECTURAL TREATMENT NOT SHOWN

SOIL NAIL AND BEARING PLATE DETAILS
NO SCALE

NOTES:

1. Wall facing reinforcement not shown
2. The centralizer should be made from a plastic material to be attached to the nail in a way that will not impead the free flow of grout, and be sized to position the nail tendon within approx 1" of the center of the drilled hole
3. For Wall Reinforcing Details, see "SOIL NAIL WALL DETAILS NO. 1" sheet
4. For Test Soil Nail Details see " TEST NAIL DETAILS" sheet

	BY	CHECKED
DESIGN	Eric Burgeson	Ashraf Ahmed
DETAILS	Jay Reid	Ashraf Ahmed
QUANTITIES	Eric Burgeson	Pyo Hong

STATE OF CALIFORNIA
DEPARTMENT OF TRANSPORTATION

DIVISION OF ENGINEERING SERVICES
STRUCTURE DESIGN
DESIGN BRANCH 3

BRIDGE NO. 04E0031
POST MILE 23.28

WALL AT PM 23.28
SOIL NAIL WALL DETAILS NO. 3

STRUCTURES DESIGN DETAIL SHEET (ENGLISH) (REV. 09-01-10)

ORIGINAL SCALE IN INCHES FOR REDUCED PLANS 0 1 2 3

UNIT: 3578
PROJECT NUMBER & PHASE: 01000002191
CONTRACT NO.: 01-450901

DISREGARD PRINTS BEARING EARLIER REVISION DATES

REVISION DATES: 9-14-10 11-7-11 7-13-12 12-3-12

SHEET 13 OF 27

FILE => 01-450901_04e0031-h-snrwdt03_detail.dgn

USERNAME => s119571 DATE PLOTTED => 18-JUN-2013 TIME PLOTTED => 07:22

DIST	COUNTY	ROUTE	POST MILES TOTAL PROJECT	SHEET No.	TOTAL SHEETS
01	Hum	169	13.6/23.4	73	86

REGISTERED CIVIL ENGINEER 12-3-12 DATE

6-17-13
PLANS APPROVAL DATE

REGISTERED PROFESSIONAL ENGINEER Quang H Nguyen No. 65223 Exp. 9-30-13 CIVIL STATE OF CALIFORNIA

The State of California or its officers or agents shall not be responsible for the accuracy or completeness of electronic copies of this plan sheet.

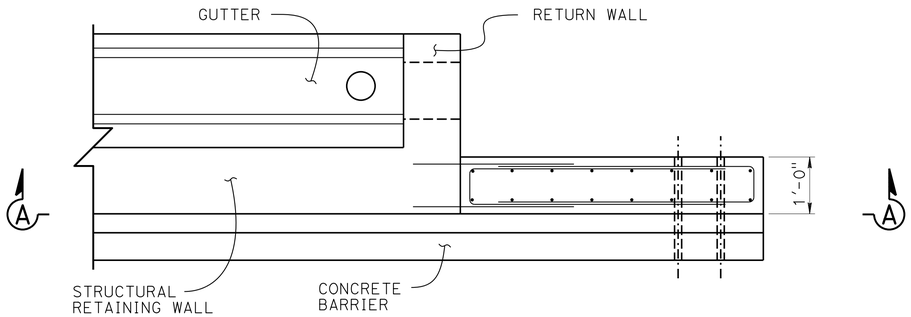

TRANSITION WALL PLAN (A77J3)

3/4" = 1'-0"

NOTES:

1. For details not shown see "GROUND ANCHOR WALL DETAILS NO. 3" and "SOIL NAIL WALL DETAILS NO. 3" sheets
2. For MBGR connections see "ROAD PLANS"
3. Transition "WALL NO. 2" shown Transition "WALL NO. 1" similar

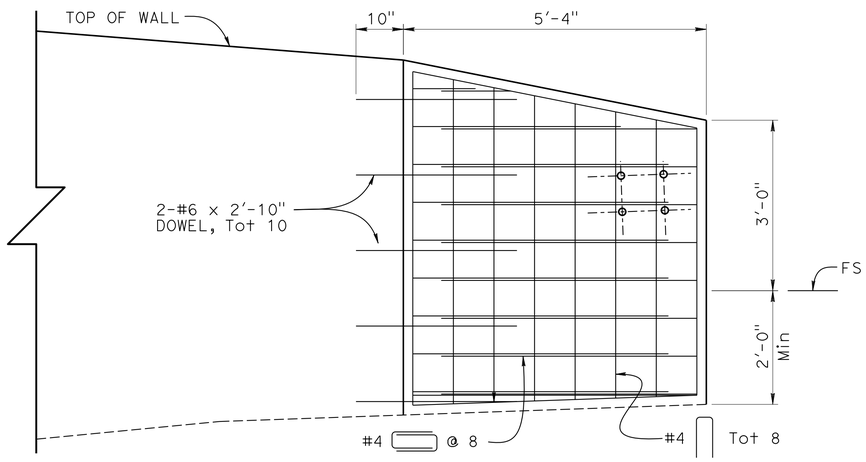

NOTE:

Wall reinforcing not shown

SECTION A-A (A77J3)

3/4" = 1'-0"

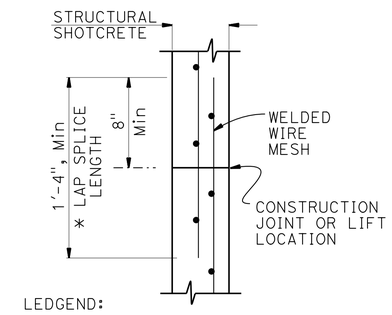

LEDGEND:

* Dimensions same for all other splices not at a construction joint

SOIL NAIL WALL WELDED WIRE MESH LAP SPLICE

NO SCALE

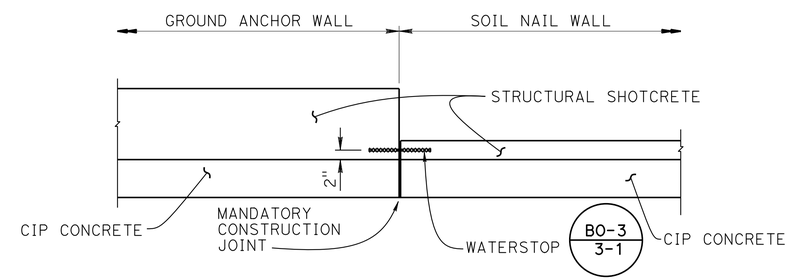

NOTE:

Architectural treatment not shown

JOINT AT WALL TYPE LIMITS PLAN VIEW

3/4" = 1'-0"

	BY	CHECKED
DESIGN	Eric Burgeson	Ashraf Ahmed
DETAILS	Jay Reid	Ashraf Ahmed
QUANTITIES	Eric Burgeson	Pyo Hong

STATE OF CALIFORNIA DEPARTMENT OF TRANSPORTATION

DIVISION OF ENGINEERING SERVICES STRUCTURE DESIGN DESIGN BRANCH 3

BRIDGE NO. 04E0031 POST MILE 23.28

WALL AT PM 23.28
MISCELLANEOUS WALL DETAILS

STRUCTURES DESIGN DETAIL SHEET (ENGLISH) (REV. 09-01-10)

ORIGINAL SCALE IN INCHES FOR REDUCED PLANS 0 1 2 3

UNIT: 3578
PROJECT NUMBER & PHASE: 01000002191 CONTRACT NO.: 01-450901

DISREGARD PRINTS BEARING EARLIER REVISION DATES

REVISION DATES 9-14-10 11-2-11 7-13-12 12-3-12 SHEET 14 OF 27

FILE => 01-450901_04e0031-i-misc_detail.dgn

USERNAME => s119571 DATE PLOTTED => 18-JUN-2013 TIME PLOTTED => 07:22

DIST	COUNTY	ROUTE	POST MILES TOTAL PROJECT	SHEET No.	TOTAL SHEETS
01	Hum	169	13.6/23.4	74	86

REGISTERED CIVIL ENGINEER 12-3-12 DATE

6-17-13
PLANS APPROVAL DATE

REGISTERED PROFESSIONAL ENGINEER Quang H Nguyen No. 65223 Exp. 9-30-13 CIVIL STATE OF CALIFORNIA

The State of California or its officers or agents shall not be responsible for the accuracy or completeness of electronic copies of this plan sheet.

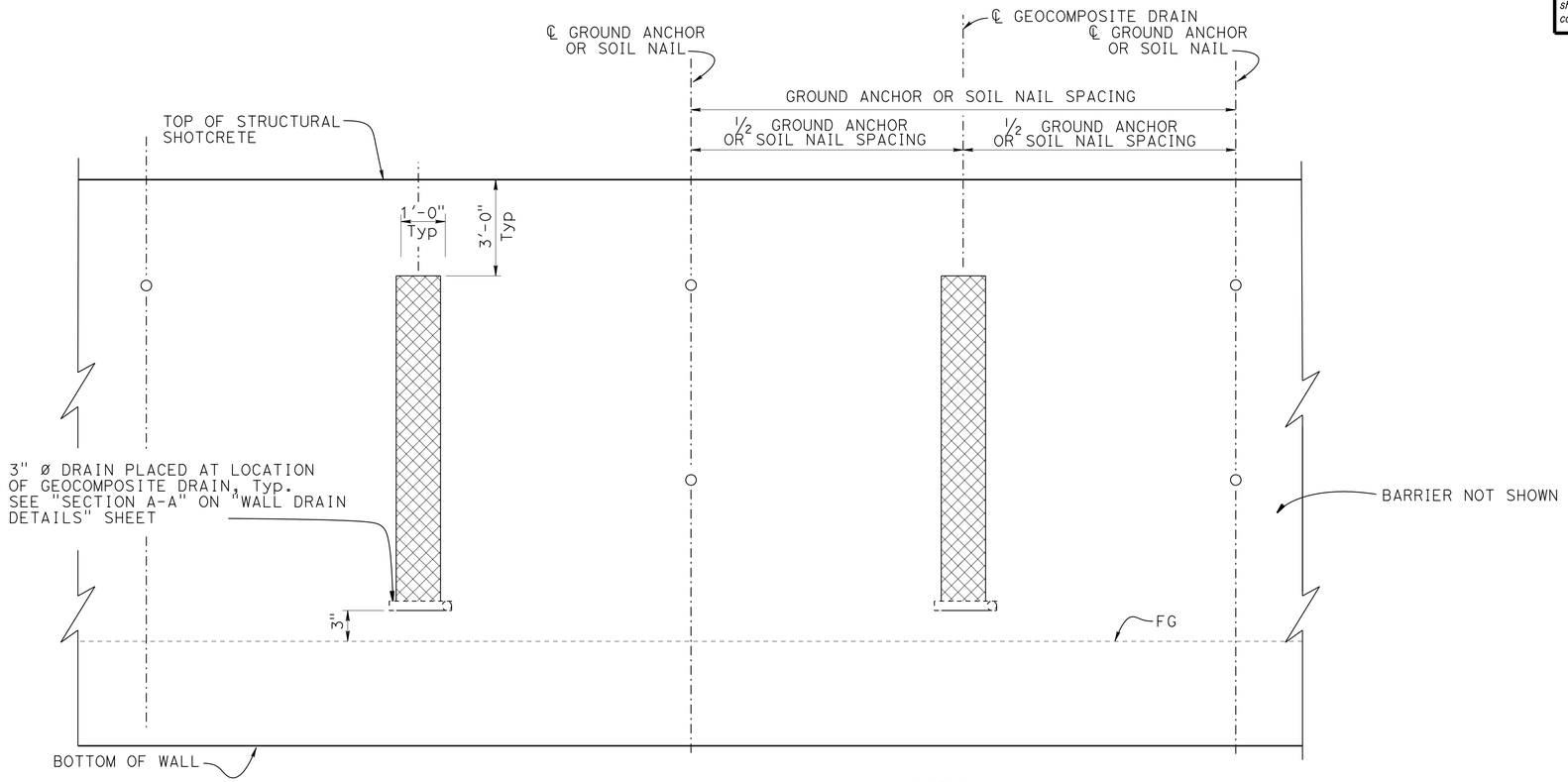

LEDGEND:

O Ground anchor or soil nail

DRAINAGE PART ELEVATION

No Scale

NOTE:

For Wall Drain Drain Details see "WALL DRAIN DETAILS" sheet

DESIGN	BY Eric Burgeson	CHECKED Ashraf Ahmed	
DETAILS	BY Jay Reid	CHECKED Ashraf Ahmed	
QUANTITIES	BY Eric Burgeson	CHECKED Pyo Hong	

STATE OF CALIFORNIA DEPARTMENT OF TRANSPORTATION

DIVISION OF ENGINEERING SERVICES STRUCTURE DESIGN DESIGN BRANCH 3

BRIDGE NO. 04E0031
POST MILE 23.28

WALL AT PM 23.28
DRAINAGE DETAILS

STRUCTURES DESIGN DETAIL SHEET (ENGLISH) (REV. 09-01-10)

ORIGINAL SCALE IN INCHES FOR REDUCED PLANS 0 1 2 3

UNIT: 3578
PROJECT NUMBER & PHASE: 01000002191 CONTRACT NO.: 01-450901

DISREGARD PRINTS BEARING EARLIER REVISION DATES

REVISION DATES: 9-14-10 11-7-11 7-13-12 12-3-12

SHEET 15 OF 27

FILE => 01-450901_04e0031-j-drain-01_detail.dgn

USERNAME => s119571 DATE PLOTTED => 18-JUN-2013 TIME PLOTTED => 07:22

DIST	COUNTY	ROUTE	POST MILES TOTAL PROJECT	SHEET No.	TOTAL SHEETS
01	Hum	169	13.6/23.4	75	86

REGISTERED CIVIL ENGINEER 12-3-12 DATE

6-17-13
PLANS APPROVAL DATE

REGISTERED PROFESSIONAL ENGINEER Quang H Nguyen No. 65223 Exp. 9-30-13 CIVIL STATE OF CALIFORNIA

The State of California or its officers or agents shall not be responsible for the accuracy or completeness of electronic copies of this plan sheet.

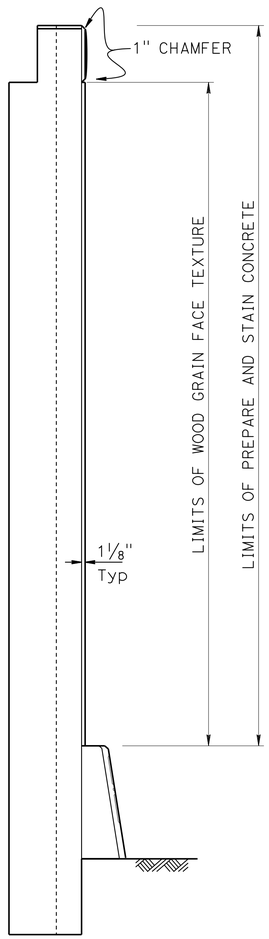

NOTE:

Cable railing and gutter not shown

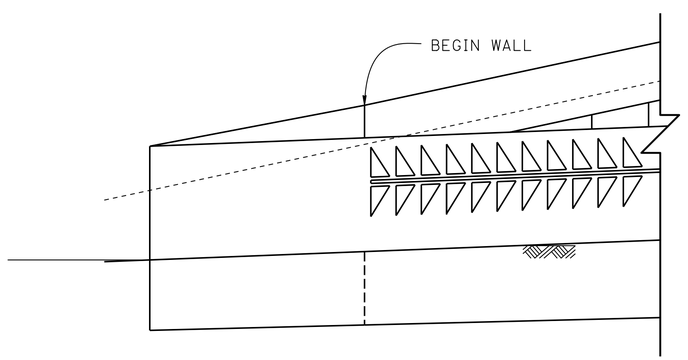

NOTE:

Ground Anchor Wall shown, Soil Nail Wall similar

SECTION W-W

½" = 1'-0"

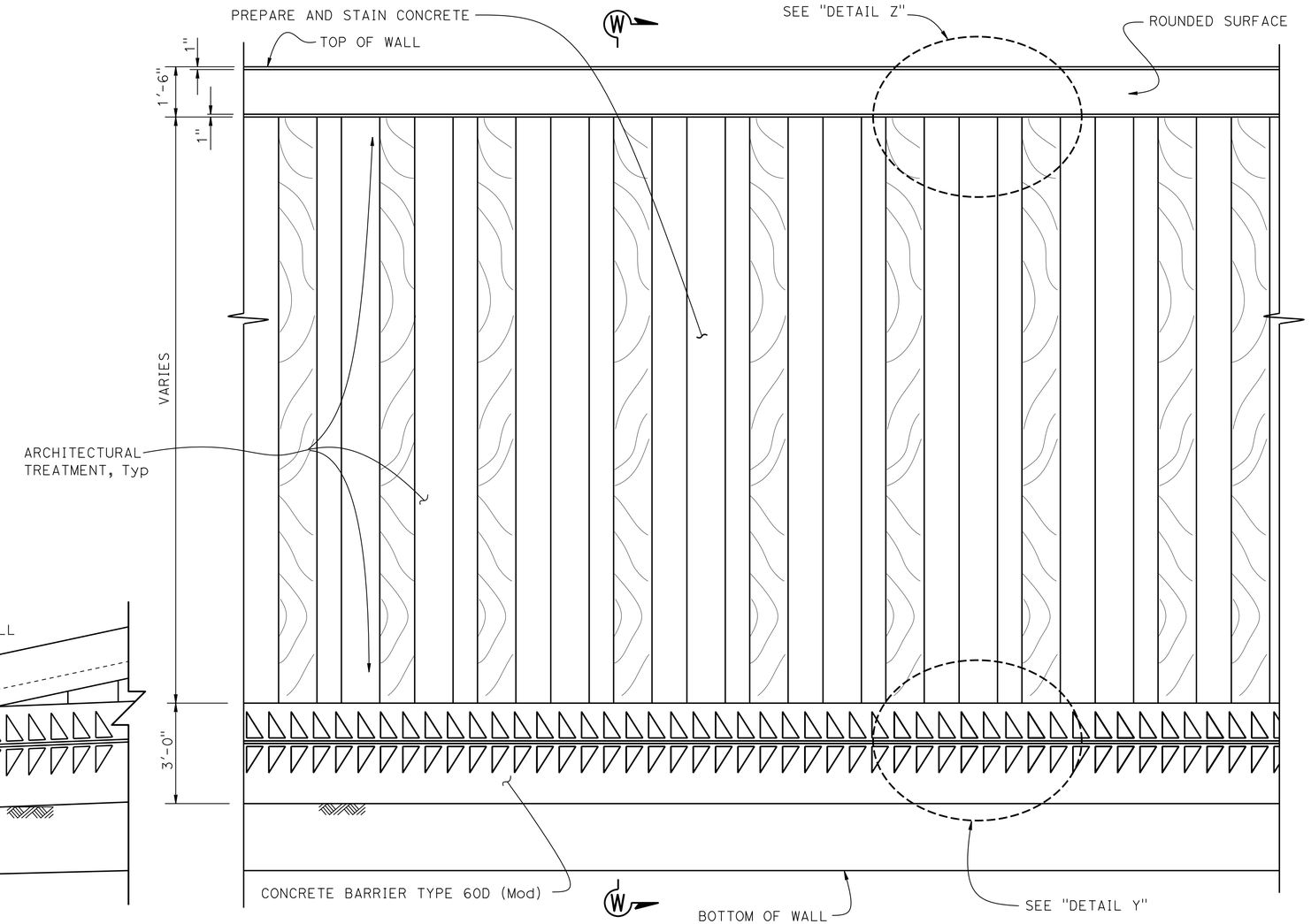

NOTE:

For details not shown,"DETAIL Y" and "DETAIL Z", see "ARCHITECTURAL TREATMENT DETAILS NO. 2" sheet

PART ELEVATION

½" = 1'-0"

	BY	CHECKED
DESIGN	Eric Burgeson	Ashraf Ahmed
DETAILS	Jay Reid	Ashraf Ahmed
QUANTITIES	Eric Burgeson	Pyo Hong

STATE OF CALIFORNIA DEPARTMENT OF TRANSPORTATION

DIVISION OF ENGINEERING SERVICES STRUCTURE DESIGN DESIGN BRANCH 3

BRIDGE NO. 04E0031
POST MILE 23.28

WALL AT PM 23.28
ARCHITECTURAL TREATMENT DETAILS NO. 1

STRUCTURES DESIGN DETAIL SHEET (ENGLISH) (REV. 09-01-10)

ORIGINAL SCALE IN INCHES FOR REDUCED PLANS 0 1 2 3

UNIT: 3578
PROJECT NUMBER & PHASE: 01000002191 CONTRACT NO.: 01-450901

DISREGARD PRINTS BEARING EARLIER REVISION DATES

REVISION DATES 9-14-10 11-7-11 7-13-12 4-10-13

SHEET 16 OF 27

FILE => 01-450901_04e0031-k-arch-01_detail.dgn

USERNAME => s113571 DATE PLOTTED => 18-JUN-2013 TIME PLOTTED => 07:22

DIST	COUNTY	ROUTE	POST MILES TOTAL PROJECT	SHEET No.	TOTAL SHEETS
01	Hum	169	13.6/23.4	76	86

REGISTERED CIVIL ENGINEER — DATE 12-3-12

6-17-13
PLANS APPROVAL DATE

REGISTERED PROFESSIONAL ENGINEER — Quang H Nguyen — No. 65223 — Exp. 9-30-13 — CIVIL — STATE OF CALIFORNIA

The State of California or its officers or agents shall not be responsible for the accuracy or completeness of electronic copies of this plan sheet.

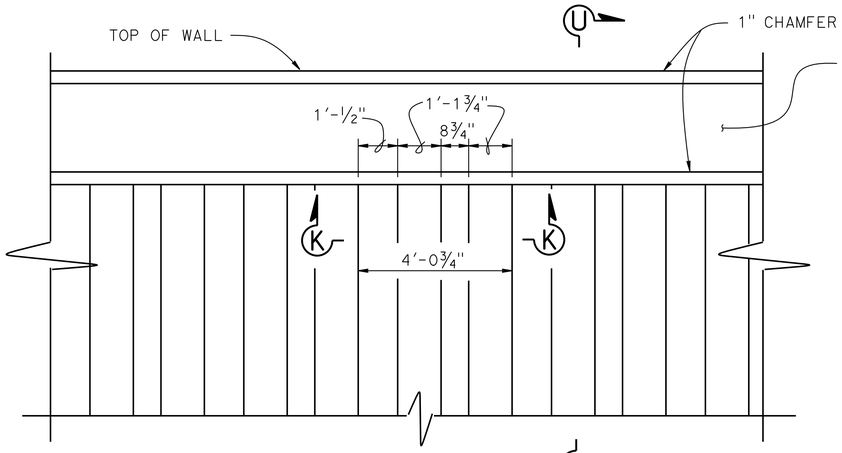

DETAIL Z
1/2" = 1'-0"

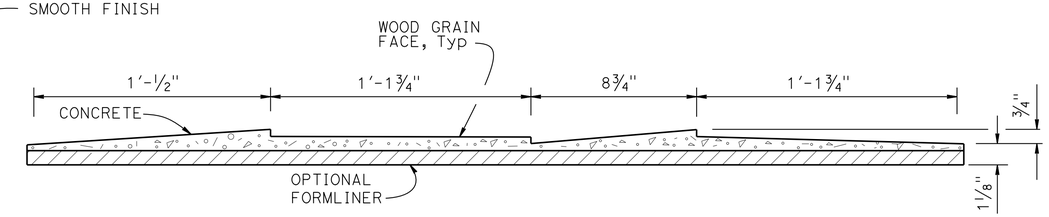

SECTION K-K
3" = 1'-0"

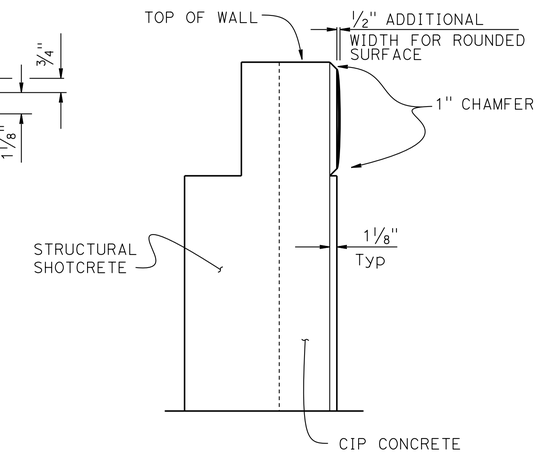

SECTION U-U
1" = 1'-0"

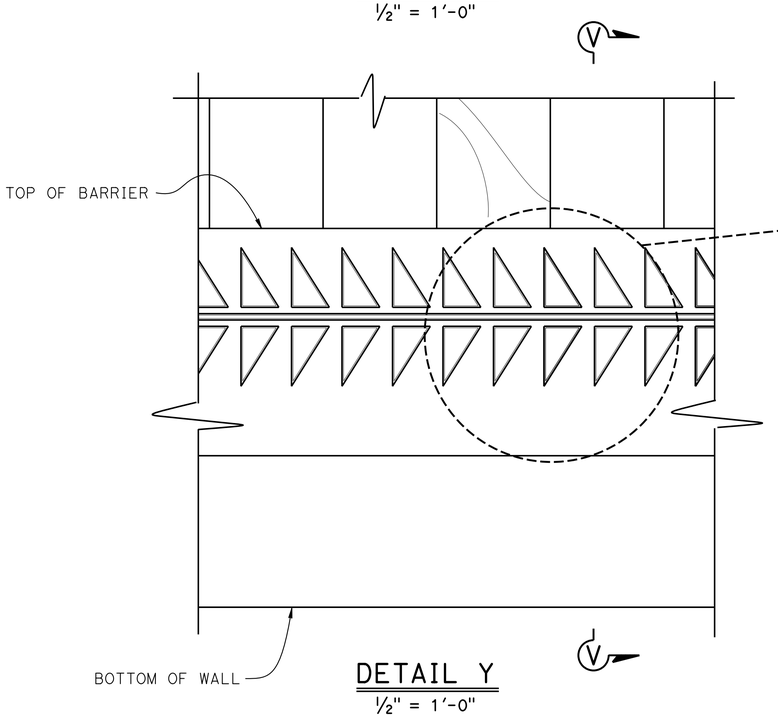

DETAIL Y
1/2" = 1'-0"

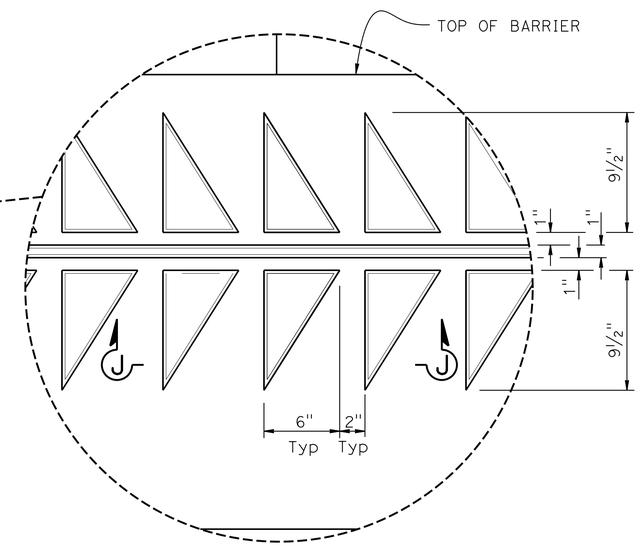

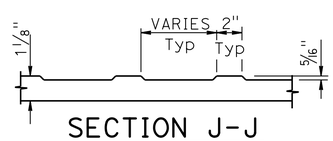

SECTION J-J
NO SCALE

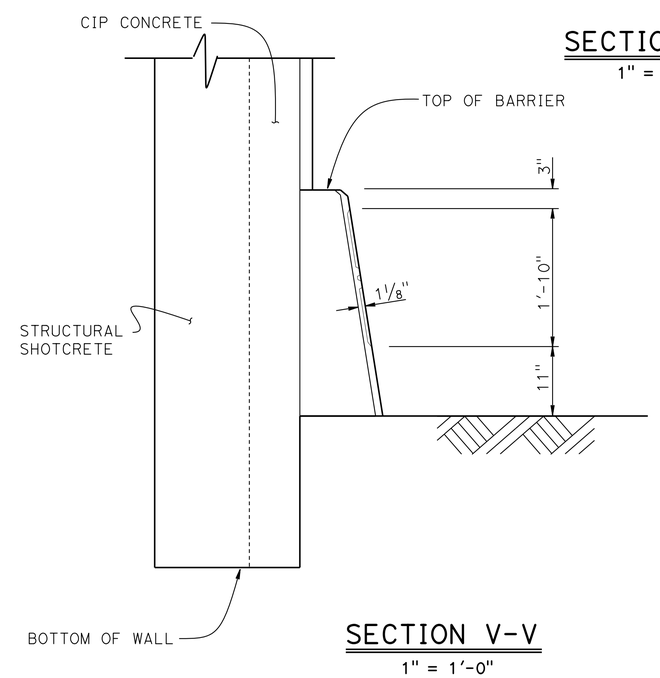

SECTION V-V
1" = 1'-0"

NOTE:

For location of "DETAIL Y" and "DETAIL Z", see "ARCHITECTURAL TREATMENT DETAILS NO. 1" sheet

DESIGN	BY Eric Burgeson	CHECKED Ashraf Ahmed	
DETAILS	BY Jay Reid	CHECKED Ashraf Ahmed	
QUANTITIES	BY Eric Burgeson	CHECKED Pyo Hong	

STATE OF CALIFORNIA
DEPARTMENT OF TRANSPORTATION

DIVISION OF ENGINEERING SERVICES
STRUCTURE DESIGN
DESIGN BRANCH 3

BRIDGE NO. 04E0031
POST MILE 23.28

WALL AT PM 23.28
ARCHITECTURAL TREATMENT DETAILS NO. 2

STRUCTURES DESIGN DETAIL SHEET (ENGLISH) (REV. 09-01-10)

ORIGINAL SCALE IN INCHES FOR REDUCED PLANS 0 1 2 3

UNIT: 3578
PROJECT NUMBER & PHASE: 01000002191
CONTRACT NO.: 01-450901

DISREGARD PRINTS BEARING EARLIER REVISION DATES

REVISION DATES: 9-14-10 11-7-11 7-13-12 4-10-13

SHEET 17 OF 27

FILE => 01-450901_04e0031-k-arch-02_detail.dgn

USERNAME => s119571 DATE PLOTTED => 18-JUN-2013 TIME PLOTTED => 07:22

DIST	COUNTY	ROUTE	POST MILES TOTAL PROJECT	SHEET No.	TOTAL SHEETS
01	Hum	169	13.6/23.4	77	86

REGISTERED CIVIL ENGINEER 12-3-12 DATE

6-17-13
PLANS APPROVAL DATE

REGISTERED PROFESSIONAL ENGINEER
Kathryn Griswell
No. C55599
Exp. 12-31-12
CIVIL
STATE OF CALIFORNIA

The State of California or its officers or agents shall not be responsible for the accuracy or completeness of electronic copies of this plan sheet.

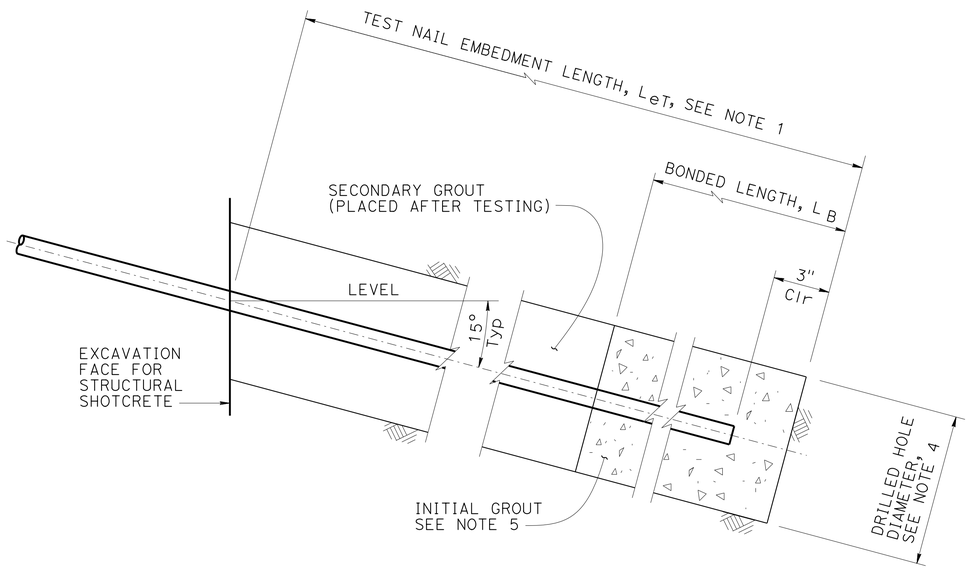

TEST NAIL DETAIL

3" = 1'-0

NOTES:

1. The test nail embedment length LeT, shall be equal to 2/3 of the embedment length, Le, of adjacent production soil nail assemblies, but not less than 12'-0".
2. The total length of the test nail assembly equals the embedment length plus the length required for jacking equipment.
3. For location of proof test nail see "STRUCTURE PLAN" sheets. Additional proof test nails will be installed and tested per special provisions.
4. Contractor to determine drilled hole diameter.
5. Finished grout surface to be normal to the bar.

STANDARD DRAWING

FILE NO. xs12-020

APPROVAL DATE July 2011

STATE OF CALIFORNIA
DEPARTMENT OF TRANSPORTATION

DIVISION OF ENGINEERING SERVICES

BRIDGE NO. 04E0031

POST MILE 23.28

WALL AT PM 23.28

TEST NAIL DETAILS

DS OSD 2147A (ENGLISH STANDARD DRAWING "XS" BORDER REV. (02-02-11)

ORIGINAL SCALE IN INCHES FOR REDUCED PLANS 0 1 2 3

UNIT: 3578
PROJECT NUMBER & PHASE: 01000002191
CONTRACT NO.: 01-450901

DISREGARD PRINTS BEARING EARLIER REVISION DATES

REVISION DATES 11-7-11 3-28-12 9-20-12

SHEET 18 OF 27

FILE => 01-450901_04e0031-x-xs12-020_xs-border-sheet.dgn

USERNAME => s103858 DATE PLOTTED => 18-JUN-2013 TIME PLOTTED => 08:56

DIST	COUNTY	ROUTE	POST MILES TOTAL PROJECT	SHEET No.	TOTAL SHEETS
01	Hum	169	13.6/23.4	78	86

REGISTERED CIVIL ENGINEER 12-3-12 DATE

6-17-13
PLANS APPROVAL DATE

REGISTERED PROFESSIONAL ENGINEER Kathryn Griswell No. C55599 Exp. 12-31-12 CIVIL STATE OF CALIFORNIA

The State of California or its officers or agents shall not be responsible for the accuracy or completeness of electronic copies of this plan sheet.

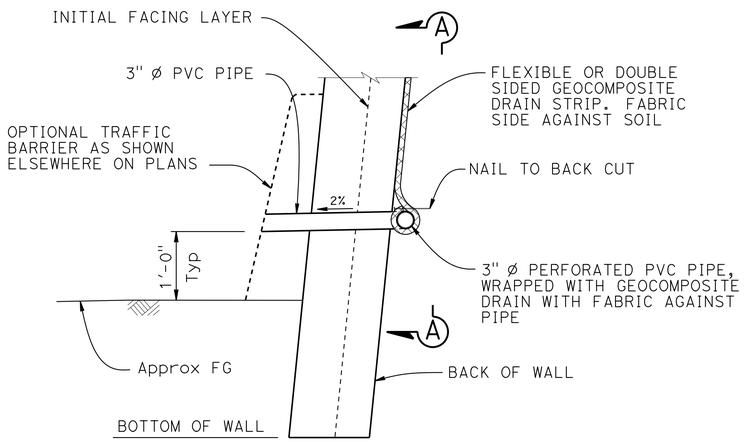

WALL DRAIN DETAIL AT WEEPHOLE
OPTION A
No scale

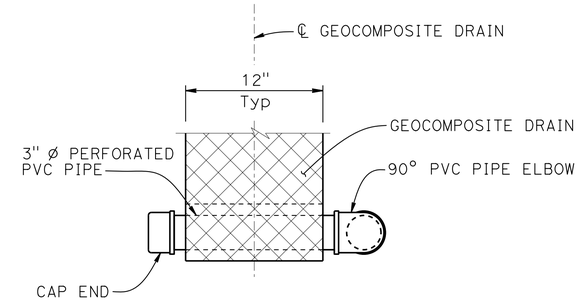

VIEW A-A
No scale

NOTES:

1. Geocomposite drain strip per Section 88 Geosynthetics of the Standard Specifications
2. Elevation of drains and weepholes as shown elsewhere on plans

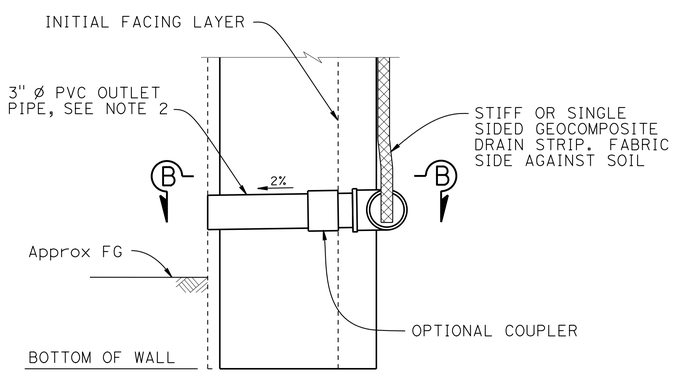

WALL DRAIN DETAIL AT WEEPHOLE
OPTION B
No scale

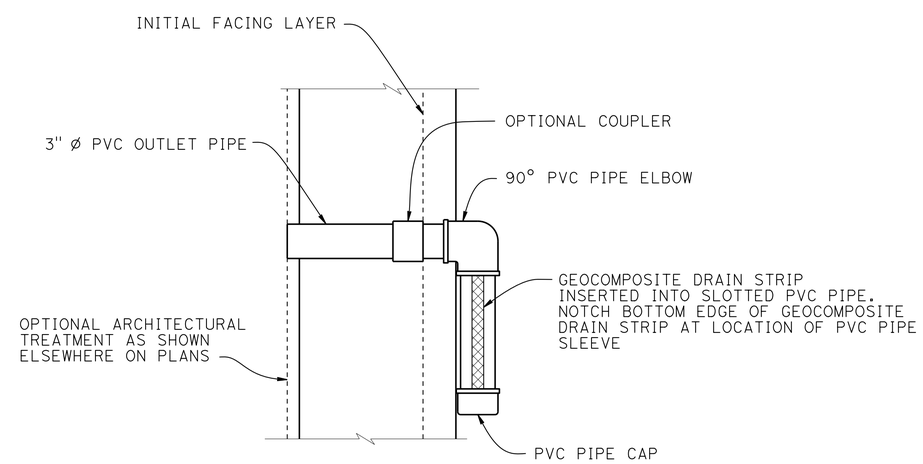

SECTION B-B
No Scale

STANDARD DRAWING

FILE NO. **xs12-021**

APPROVAL DATE July 2011

DS OSD 2147A (ENGLISH STANDARD DRAWING "XS" BORDER REV. (02-02-11)

ORIGINAL SCALE IN INCHES FOR REDUCED PLANS 0 1 2 3

STATE OF **CALIFORNIA** DEPARTMENT OF TRANSPORTATION

DIVISION OF ENGINEERING SERVICES

BRIDGE NO. 04E0031

POST MILE 23.28

WALL AT PM 23.28
WALL DRAIN DETAILS

UNIT: 3578
PROJECT NUMBER & PHASE: 01000002191 CONTRACT NO.: 01-450901

DISREGARD PRINTS BEARING EARLIER REVISION DATES

REVISION DATES 11-7-11 3-28-12 9-20-12

SHEET 19 OF 27

FILE => 01-450901_04e0031-x-xs12-021_xs-border-sheet.dgn

USERNAME => s109858 DATE PLOTTED => 18-JUN-2013 TIME PLOTTED => 08:56

DIST	COUNTY	ROUTE	POST MILES TOTAL PROJECT	SHEET No.	TOTAL SHEETS
01	Hum	169	13.6/23.4	79	86

REGISTERED CIVIL ENGINEER 12-3-12 DATE

6-17-13
PLANS APPROVAL DATE

REGISTERED PROFESSIONAL ENGINEER Gerrard Hight No. C52364 Exp. 12-31-12 CIVIL STATE OF CALIFORNIA

The State of California or its officers or agents shall not be responsible for the accuracy or completeness of electronic copies of this plan sheet.

GENERAL NOTES

DESIGN:

AASHTO LRFD Bridge Design Specifications, 4th Edition with California Amendments. (1)

PRESTRESSING STEEL:

Bars - ASTM Designation: A722 Type II (150 ksi)

Strand Tendons-ASTM Designation: A416 (270 Ksi Low Relaxation steel)

FTL = Factored Test Load per anchor (Kips)

fpu = Minimum tensile strength of prestressing steel

As = Minimum cross sectional area of prestressing steel in ground anchor (square inch)

$$As(Min) = \frac{1.0\ FTL}{0.75\ fpu} \quad \text{(Strands)}$$

$$As(Min) = \frac{1.0\ FTL}{0.80\ fpu} \quad \text{(Bars)}$$

NOTES:

(A) Level of initial grouting for drilled hole 6" in diameter or smaller

(B) Level of secondary grouting

(C) Level of initial grouting inside corrugated sheathing

(D) Bonded length shall be determined by the contractor

(E) For unbonded length, see PROJECT PLANS

(F) For inclination, see PROJECT PLANS

(G) Face of Wall Excavation

NOTES:

1. Anchorage enclosure shall only be used when anchor head assembly is not enclosed in concrete.
2. Anchorage enclosure shall have provisions to allow injecting grout at low end and venting at high end. Galvanize after fabrication.
3. Silicone sealant to cover full width of flange.
4. Steel tube (Min thickness = 1/4") welded to bearing plate. Galvanize assembly after fabrication
5. Steel tube welded to bearing plate. Inside diameter of steel tube (Min thickness = 1/4") to be 1" greater than outside diameter of smooth sheathing.
6. Galvanize assembly after fabrication.
7. For other wall details, see PROJECT PLANS.

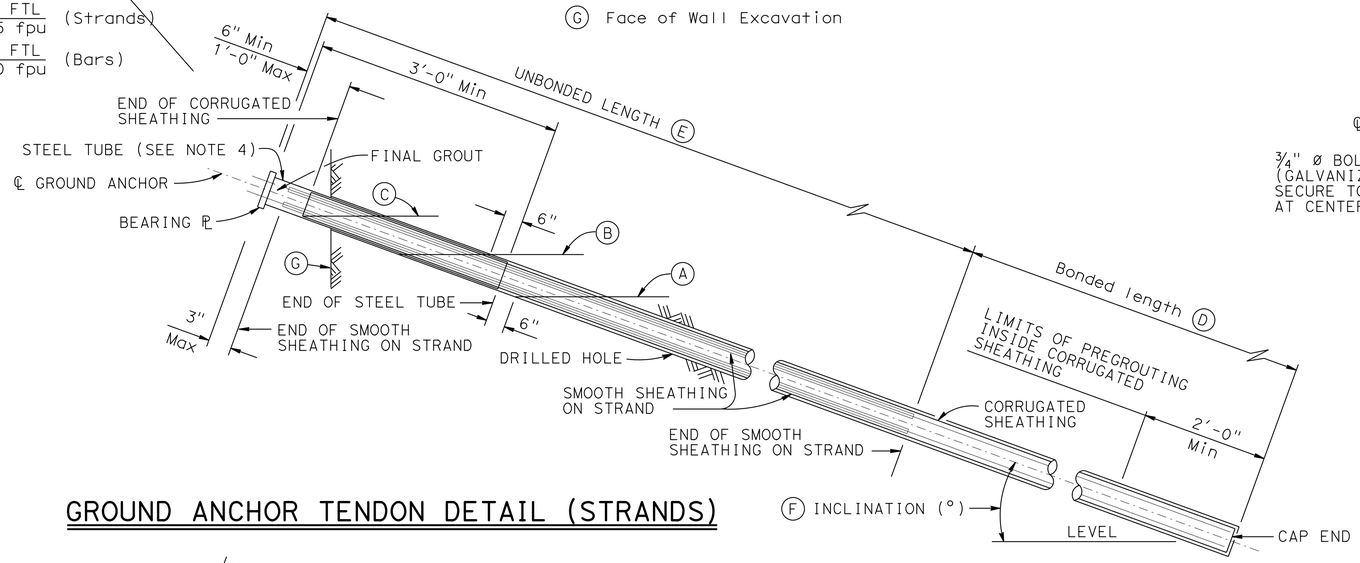

GROUND ANCHOR TENDON DETAIL (STRANDS)

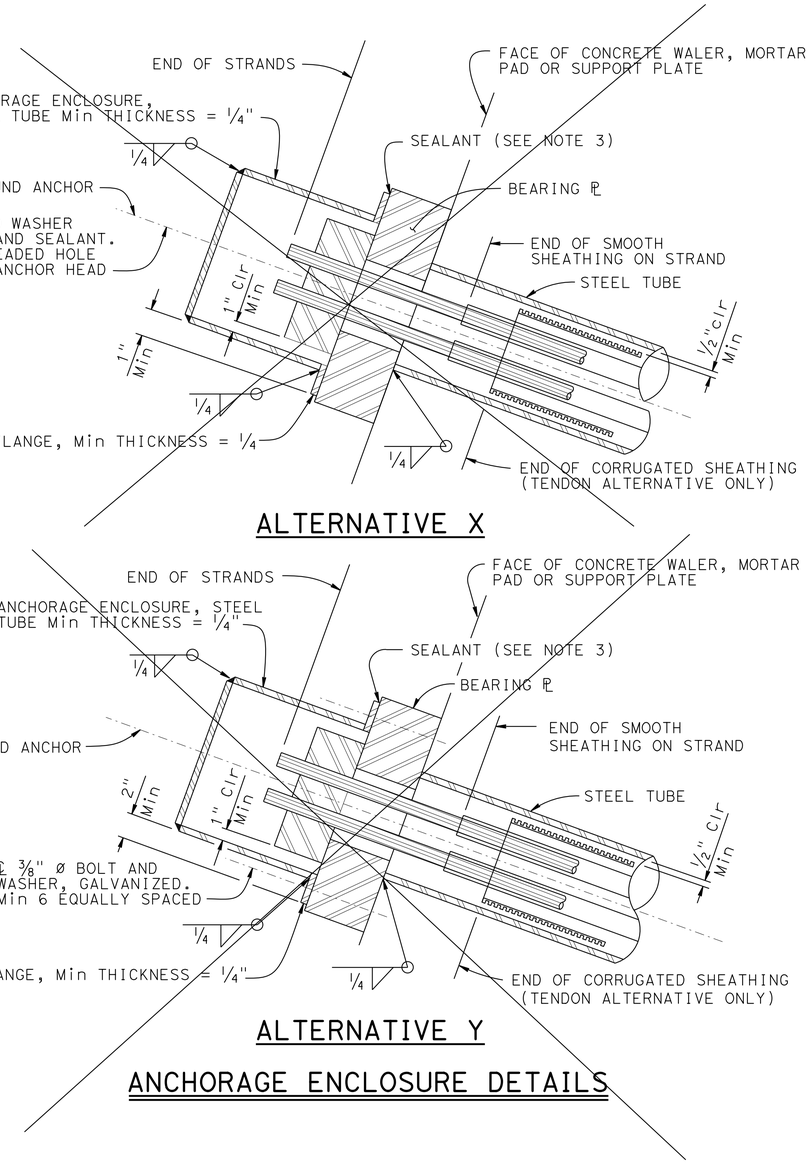

ANCHORAGE ENCLOSURE DETAILS

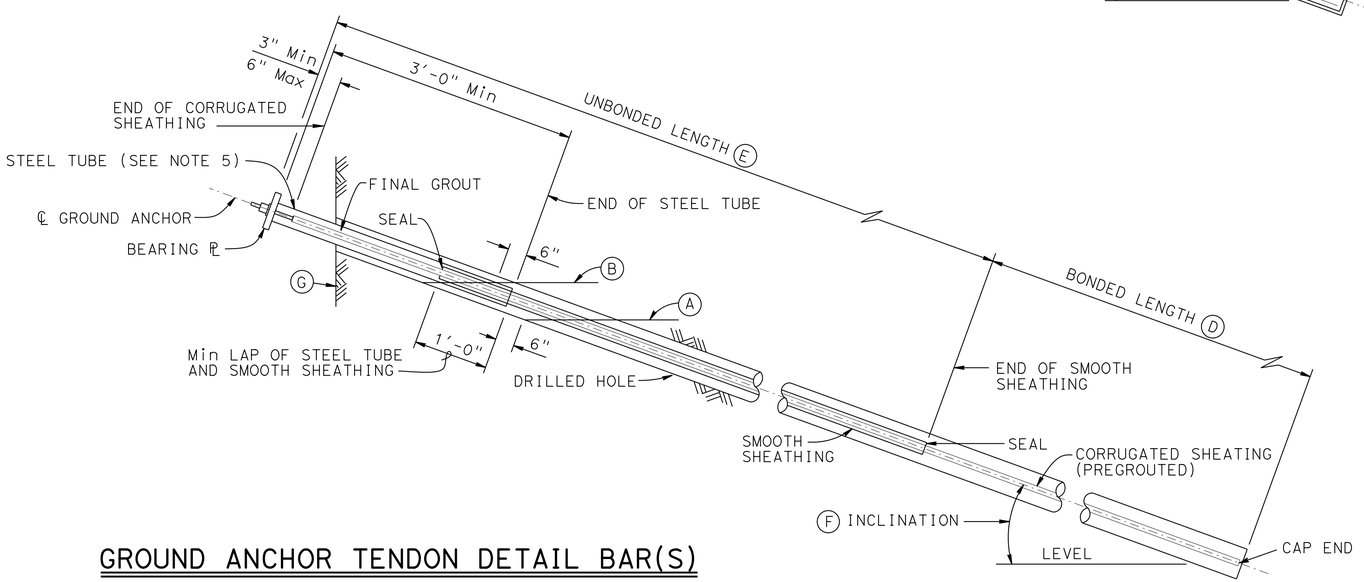

GROUND ANCHOR TENDON DETAIL BAR(S)

NO SCALE

REVISED STANDARD DRAWING

FILE NO. xs12-040

APPROVAL DATE January 2012

(1) Notes deleted

STATE OF CALIFORNIA DEPARTMENT OF TRANSPORTATION

DIVISION OF ENGINEERING SERVICES

BRIDGE NO. 04E0031

POST MILE 23.28

WALL AT PM 23.28

SUB HORIZONTAL GROUND ANCHOR DETAILS

DS OSD 2147A (ENGLISH STANDARD DRAWING "XS" BORDER REV. (02-02-11)

ORIGINAL SCALE IN INCHES FOR REDUCED PLANS 0 1 2 3

UNIT: 3578
PROJECT NUMBER & PHASE: 01000002191 CONTRACT NO.: 01-450901

DISREGARD PRINTS BEARING EARLIER REVISION DATES

REVISION DATES 2-13-12 3-28-12 9-20-12

SHEET 20 OF 27

FILE => 01-450901_04e0031-x-xs12-040_xs-border-sheet.dgn

USERNAME => s109858 DATE PLOTTED => 18-JUN-2013 TIME PLOTTED => 08:56

DIST	COUNTY	ROUTE	POST MILES TOTAL PROJECT	SHEET No.	TOTAL SHEETS
01	Hum	169	13.6/23.4	80	86

Marietta James 10-10-12
REGISTERED CIVIL ENGINEER DATE

6-17-13
PLANS APPROVAL DATE

REGISTERED PROFESSIONAL ENGINEER Marietta J. James No. C55009 Exp. 6-30-14 CIVIL STATE OF CALIFORNIA

The State of California or its officers or agents shall not be responsible for the accuracy or completeness of electronic copies of this plan sheet.

This LOTB sheet was prepared in accordance with the Caltrans Soil & Rock Logging, Classification, & Presentation Manual (2010 Edition).

See 2010 Standard Plans A10F and A10G for Soil Legend, and A10H for Rock Legend.

Note the following exception:
Type code for all horizontal holes reported as RH. (Holes are RC per section 2.4 of 2010 manual).

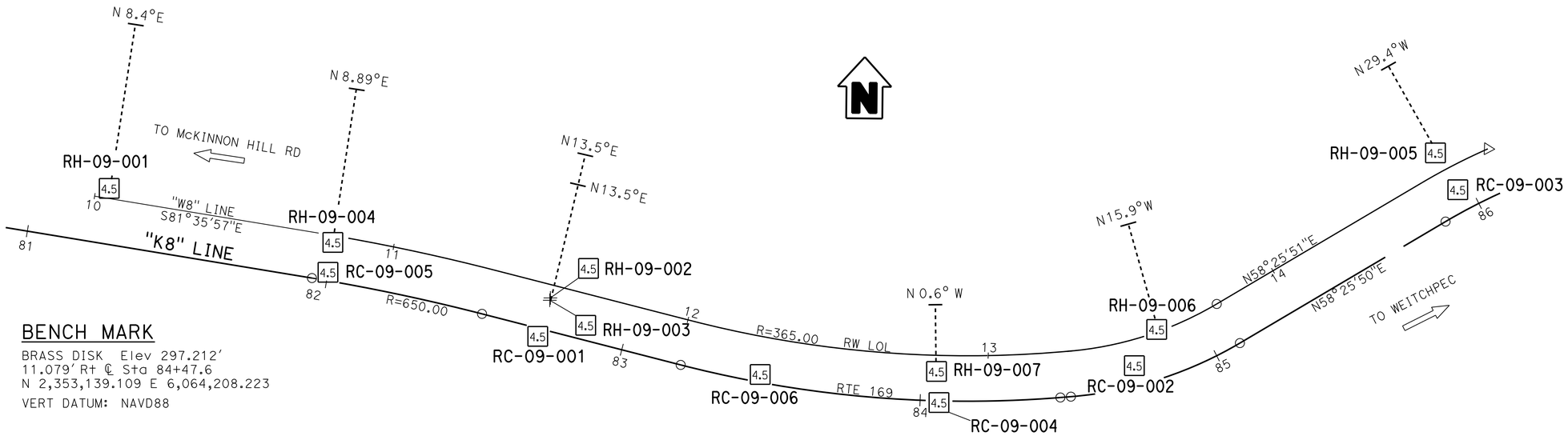

BENCH MARK

BRASS DISK Elev 297.212′
11.079′ Rt ℄ Sta 84+47.6
N 2,353,139.109 E 6,064,208.223

VERT DATUM: NAVD88

PLAN

1" = 20′

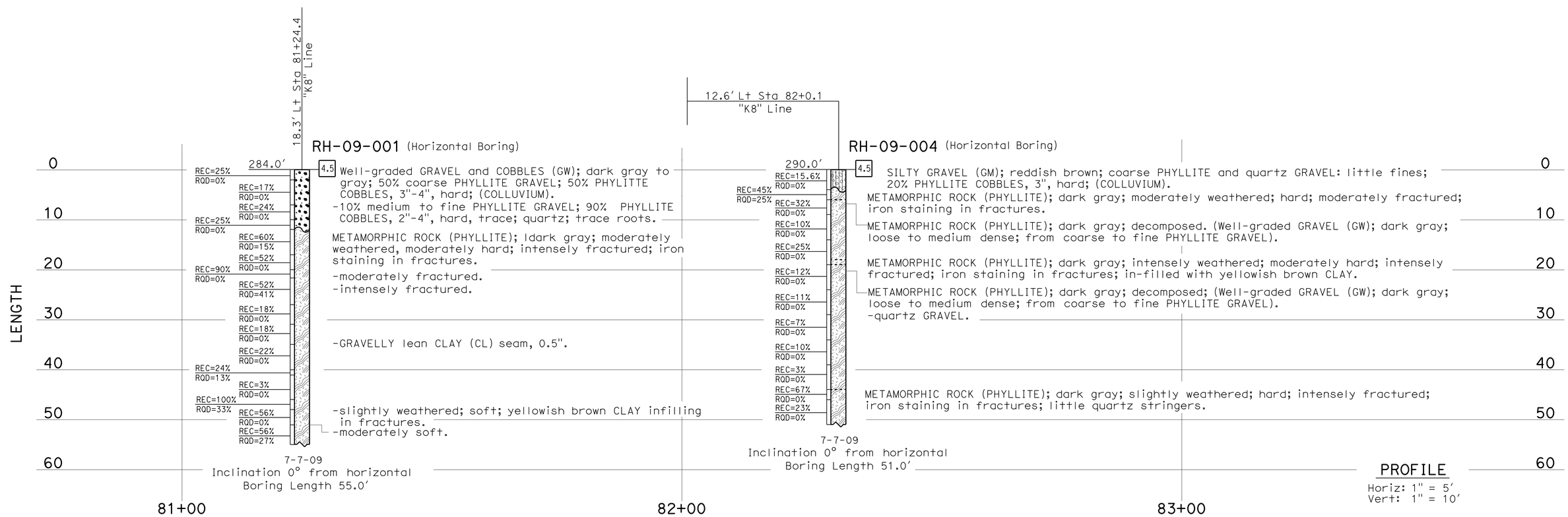

PROFILE

Horiz: 1" = 5′
Vert: 1" = 10′

ENGINEERING SERVICES	MATERIALS AND GEOTECHNICAL SERVICES	STATE OF CALIFORNIA DEPARTMENT OF TRANSPORTATION	DIVISION OF ENGINEERING SERVICES STRUCTURE DESIGN DESIGN BRANCH 3	BRIDGE NO. 04E0031 POST MILE 23.28	WALL AT PM 23.28 LOG OF TEST BORINGS 1 OF 7
FUNCTIONAL SUPERVISOR NAME: C. Narwold	DRAWN BY: W. Tang 07/12, I.G-Remmen CHECKED BY: R. Newman	FIELD INVESTIGATION BY: M. James			

OGS CIVIL LOG OF TEST BORINGS SHEET

ORIGINAL SCALE IN INCHES FOR REDUCED PLANS 0 1 2 3

UNIT: 3643
PROJECT NUMBER & PHASE: 01000002191 CONTRACT NO.: 01-450901

DISREGARD PRINTS BEARING EARLIER REVISION DATES → REVISION DATES 10-05-12 10-09-12 SHEET 21 OF 27

FILE => 01-450901_04e0031-z-rw-pm23.28-1.dgn

USERNAME => s109858 DATE PLOTTED => 18-JUN-2013 TIME PLOTTED => 08:56

DIST	COUNTY	ROUTE	POST MILES TOTAL PROJECT	SHEET No	TOTAL SHEETS
01	Hum	169	13.6/23.4	81	86

Dawn McGuire 10-10-12
CERTIFIED ENGINEERING GEOLOGIST

6-17-13
PLANS APPROVAL DATE

PROFESSIONAL GEOLOGIST
Dawn Jeanine McGuire
No. 2280
Exp. 4-30-14
CERTIFIED ENGINEERING GEOLOGIST
STATE OF CALIFORNIA

The State of California or its officers or agents shall not be responsible for the accuracy or completeness of electronic copies of this plan sheet.

This LOTB sheet was prepared in accordance with the Caltrans Soil & Rock Logging, Classification, & Presentation Manual (2010 Edition).

See 2010 Standard Plans A10F and A10G for Soil Legend, and A10H for Rock Legend.

Note the following exception:

Type code for all horizontal holes reported as RH. (Holes are RC per section 2.4 of 2010 manual).

FOR PLAN VIEW, SEE
"LOG OF TEST BORINGS 1 OF 7"

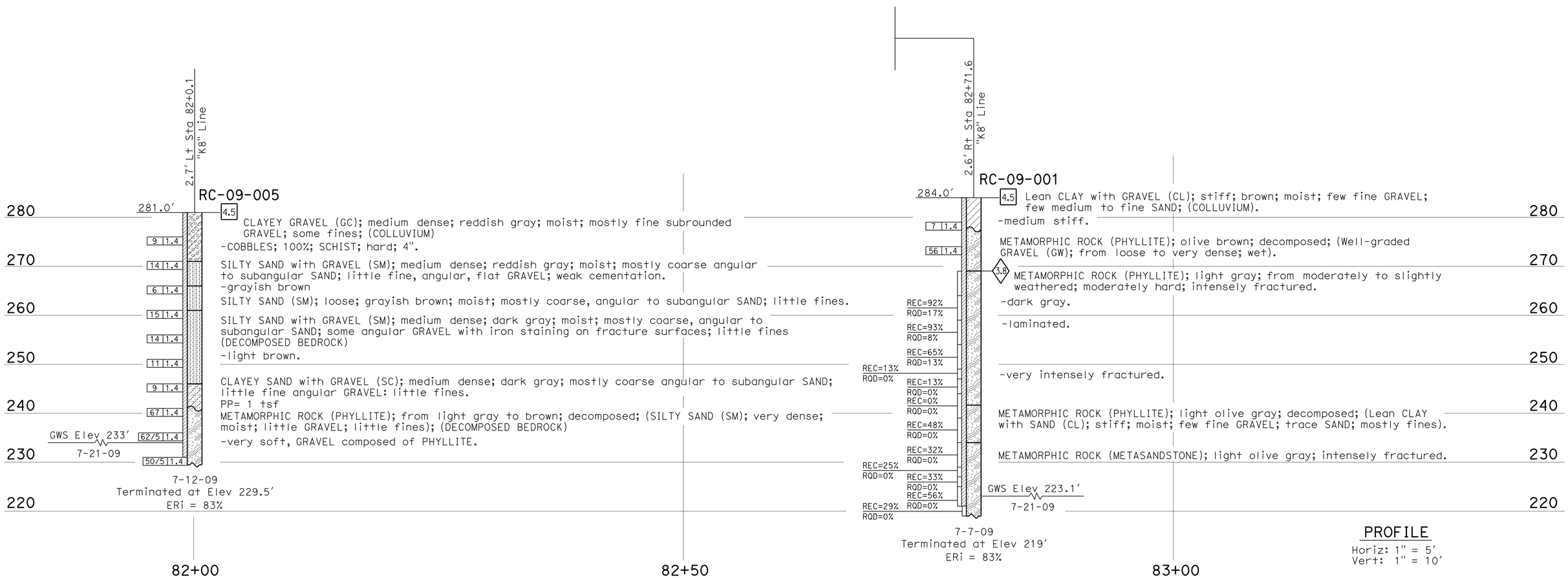

PROFILE
Horiz: 1" = 5'
Vert: 1" = 10'

ENGINEERING SERVICES	MATERIALS AND GEOTECHNICAL SERVICES	STATE OF CALIFORNIA DEPARTMENT OF TRANSPORTATION	DIVISION OF ENGINEERING SERVICES STRUCTURE DESIGN DESIGN BRANCH 3	BRIDGE NO. 04E0031 POST MILE 23.28	WALL AT PM 23.28 LOG OF TEST BORINGS 2 OF 7
FUNCTIONAL SUPERVISOR NAME: C. Narwold	DRAWN BY: I.G-Remmen CHECKED BY: R. Newman	FIELD INVESTIGATION BY: D. McGuire			

OGS CIVIL LOG OF TEST BORINGS SHEET

ORIGINAL SCALE IN INCHES FOR REDUCED PLANS 0 1 2 3

UNIT: 3643
PROJECT NUMBER & PHASE: 01000002191 CONTRACT NO.: 01-450901

DISREGARD PRINTS BEARING EARLIER REVISION DATES → REVISION DATES 10-09-12 10-09-12 SHEET 22 OF 27

FILE => 01-450901_04e0031-z-rw-pm23.28-2.dgn

USERNAME => s109858 DATE PLOTTED => 18-JUN-2013 TIME PLOTTED => 08:56

DIST	COUNTY	ROUTE	POST MILES TOTAL PROJECT	SHEET No.	TOTAL SHEETS
01	Hum	169	13.6/23.4	82	86

Marietta James 10-10-12
REGISTERED CIVIL ENGINEER DATE

6-17-13
PLANS APPROVAL DATE

REGISTERED PROFESSIONAL ENGINEER
Marietta J. James
No. C55009
Exp. 6-30-14
CIVIL
STATE OF CALIFORNIA

The State of California or its officers or agents shall not be responsible for the accuracy or completeness of electronic copies of this plan sheet.

This LOTB sheet was prepared in accordance with the Caltrans Soil & Rock Logging, Classification, & Presentation Manual (2010 Edition).

See 2010 Standard Plans A10F and A10G for Soil Legend, and A10H for Rock Legend.

Note the following exception:

Type code for all horizontal holes reported as RH. (Holes are RC per section 2.4 of 2010 manual).

FOR PLAN VIEW, SEE
"LOG OF TEST BORINGS 1 OF 7"

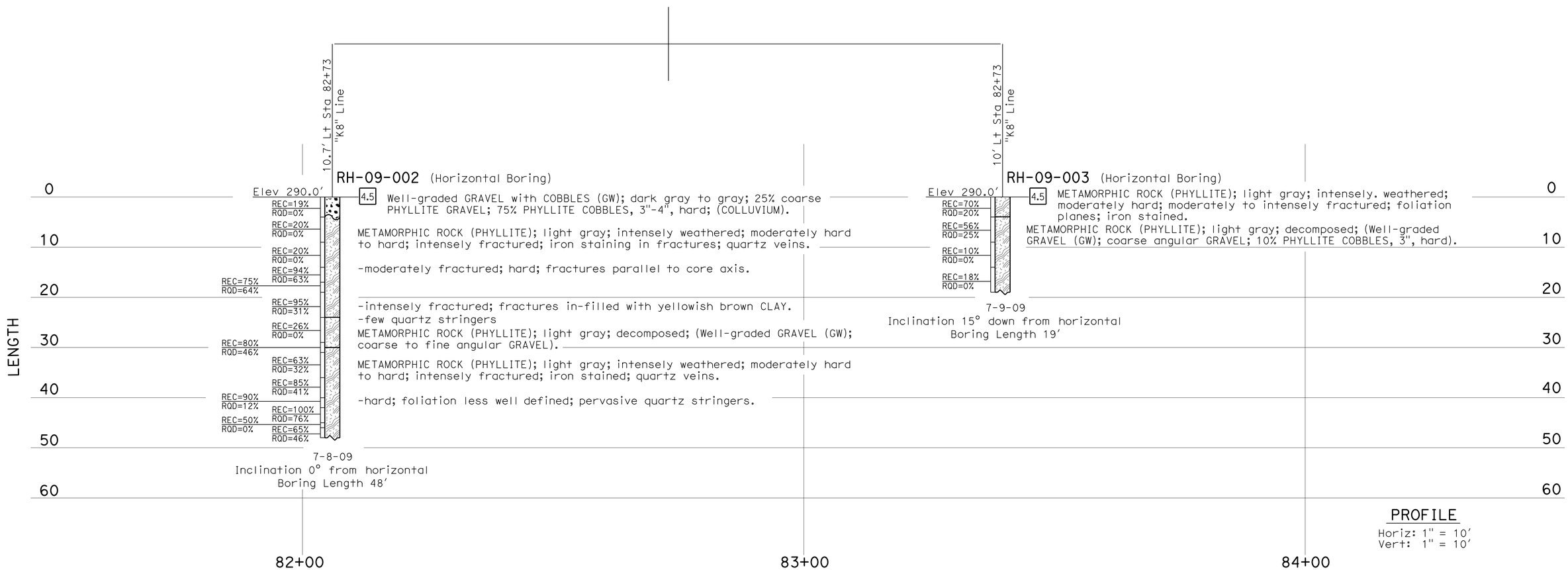

ENGINEERING SERVICES	MATERIALS AND GEOTECHNICAL SERVICES	STATE OF CALIFORNIA DEPARTMENT OF TRANSPORTATION	DIVISION OF ENGINEERING SERVICES STRUCTURE DESIGN DESIGN BRANCH 3	BRIDGE NO. 04E0031 POST MILE 23.28	WALL AT PM 23.28 LOG OF TEST BORINGS 3 OF 7
FUNCTIONAL SUPERVISOR NAME: C. Narwold	DRAWN BY: I.G-Remmen CHECKED BY: R. Newman	FIELD INVESTIGATION BY: M. James			

OGS CIVIL LOG OF TEST BORINGS SHEET

ORIGINAL SCALE IN INCHES FOR REDUCED PLANS 0 1 2 3

UNIT: 3643
PROJECT NUMBER & PHASE: 01000002191 CONTRACT NO.: 01-450901

DISREGARD PRINTS BEARING EARLIER REVISION DATES

REVISION DATES: 10-09-12 10-09-12

SHEET 23 OF 27

FILE => 01-450901_04e0031-z-rw-pm23.28-3.dgn

USERNAME => s19571 DATE PLOTTED => 18-JUN-2013 TIME PLOTTED => 07:31

DIST	COUNTY	ROUTE	POST MILES TOTAL PROJECT	SHEET No	TOTAL SHEETS
01	Hum	169	13.6/23.4	83	86

Dawn McGuire 10-10-12
CERTIFIED ENGINEERING GEOLOGIST

6-17-13
PLANS APPROVAL DATE

PROFESSIONAL GEOLOGIST
Dawn Jeanine McGuire
No. 2280
Exp. 4-30-14
CERTIFIED ENGINEERING GEOLOGIST
STATE OF CALIFORNIA

The State of California or its officers or agents shall not be responsible for the accuracy or completeness of electronic copies of this plan sheet.

This LOTB sheet was prepared in accordance with the Caltrans Soil & Rock Logging, Classification, & Presentation Manual (2010 Edition).

See 2010 Standard Plans A10F and A10G for Soil Legend, and A10H for Rock Legend.

Note the following exception:

Type code for all horizontal holes reported as RH. (Holes are RC per section 2.4 of 2010 manual).

FOR PLAN VIEW, SEE
"LOG OF TEST BORINGS 1 OF 7"

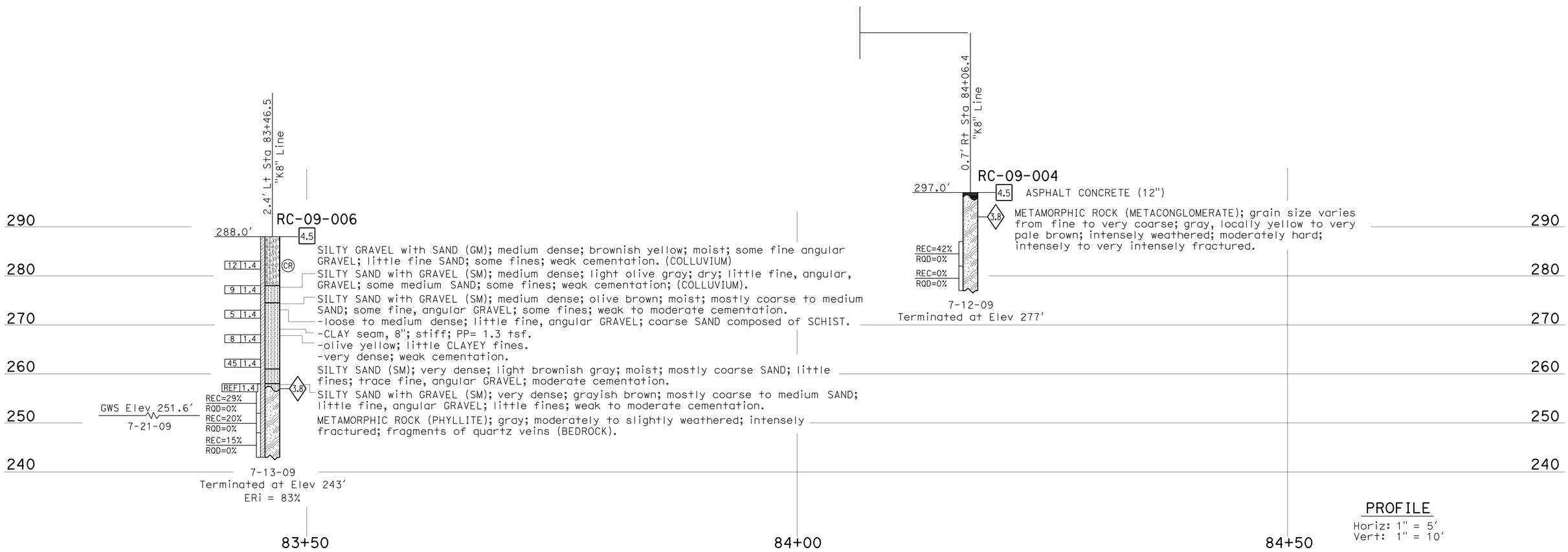

ENGINEERING SERVICES	MATERIALS AND GEOTECHNICAL SERVICES	STATE OF CALIFORNIA DEPARTMENT OF TRANSPORTATION	DIVISION OF ENGINEERING SERVICES STRUCTURE DESIGN DESIGN BRANCH 3	BRIDGE NO. 04E0031 POST MILE 23.28	WALL AT PM 23.28 LOG OF TEST BORINGS 4 OF 7
FUNCTIONAL SUPERVISOR NAME: C. Narwold	DRAWN BY: I.G-Remmen CHECKED BY: R. Newman	FIELD INVESTIGATION BY: D. McGuire			

OGS CIVIL LOG OF TEST BORINGS SHEET

ORIGINAL SCALE IN INCHES FOR REDUCED PLANS 0 1 2 3

UNIT: 3643
PROJECT NUMBER & PHASE: 01000002191 CONTRACT NO.: 01-450901

DISREGARD PRINTS BEARING EARLIER REVISION DATES 10-05-12

REVISION DATES | SHEET 24 | OF 27

FILE => 01-450901_04e0031-z-rw-pm23.28-4.dgn

USERNAME => s119571 DATE PLOTTED => 18-JUN-2013 TIME PLOTTED => 07:31

DIST	COUNTY	ROUTE	POST MILES TOTAL PROJECT	SHEET No.	TOTAL SHEETS
01	Hum	169	13.6/23.4	84	86

Marietta James 10-10-12
REGISTERED CIVIL ENGINEER DATE

6-17-13
PLANS APPROVAL DATE

REGISTERED PROFESSIONAL ENGINEER
Marietta J. James
No. C55009
Exp. 6-30-14
CIVIL
STATE OF CALIFORNIA

The State of California or its officers or agents shall not be responsible for the accuracy or completeness of electronic copies of this plan sheet.

This LOTB sheet was prepared in accordance with the Caltrans Soil & Rock Logging, Classification, & Presentation Manual (2010 Edition).

See 2010 Standard Plans A10F and A10G for Soil Legend, and A10H for Rock Legend.

Note the following exception:

Type code for all horizontal holes reported as RH. (Holes are RC per section 2.4 of 2010 manual).

FOR PLAN VIEW, SEE
"LOG OF TEST BORINGS 1 OF 7"

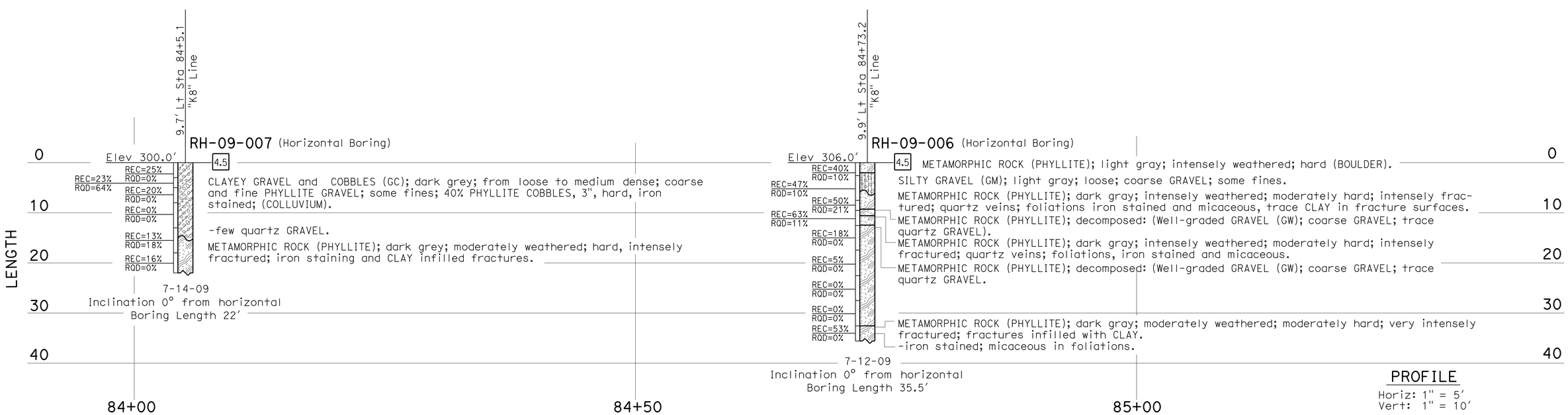

ENGINEERING SERVICES	MATERIALS AND GEOTECHNICAL SERVICES	STATE OF CALIFORNIA DEPARTMENT OF TRANSPORTATION	DIVISION OF ENGINEERING SERVICES STRUCTURE DESIGN DESIGN BRANCH 3	BRIDGE NO. 04E0031 POST MILE 23.28	WALL AT PM 23.28 LOG OF TEST BORINGS 5 OF 7
FUNCTIONAL SUPERVISOR NAME: C. Narwold	DRAWN BY: I.G-Remmen CHECKED BY: R. Newman	FIELD INVESTIGATION BY: M. James			

OGS CIVIL LOG OF TEST BORINGS SHEET

ORIGINAL SCALE IN INCHES FOR REDUCED PLANS 0 1 2 3

UNIT: 3643
PROJECT NUMBER & PHASE: 01000002191 CONTRACT NO.: 01-450901

DISREGARD PRINTS BEARING EARLIER REVISION DATES → REVISION DATES 10-09-12 10-09-12

SHEET 25 OF 27

FILE => 01-450901_04e0031-z-rw-pm23.28-5.dgn

USERNAME => s119571 DATE PLOTTED => 18-JUN-2013 TIME PLOTTED => 07:31

DIST	COUNTY	ROUTE	POST MILES TOTAL PROJECT	SHEET No	TOTAL SHEETS
01	Hum	169	13.6/23.4	85	86

Dawn McGuire 10-10-12
CERTIFIED ENGINEERING GEOLOGIST

6-17-13
PLANS APPROVAL DATE

PROFESSIONAL GEOLOGIST
Dawn Jeanine McGuire
No. 2280
Exp. 4-30-14
CERTIFIED ENGINEERING GEOLOGIST
STATE OF CALIFORNIA

The State of California or its officers or agents shall not be responsible for the accuracy or completeness of electronic copies of this plan sheet.

This LOTB sheet was prepared in accordance with the Caltrans Soil & Rock Logging, Classification, & Presentation Manual (2010 Edition).

See 2010 Standard Plans A10F and A10G for Soil Legend, and A10H for Rock Legend.

Note the following exception:

Type code for all horizontal holes reported as RH. (Holes are RC per section 2.4 of 2010 manual).

FOR PLAN VIEW, SEE
"LOG OF TEST BORINGS 1 OF 7"

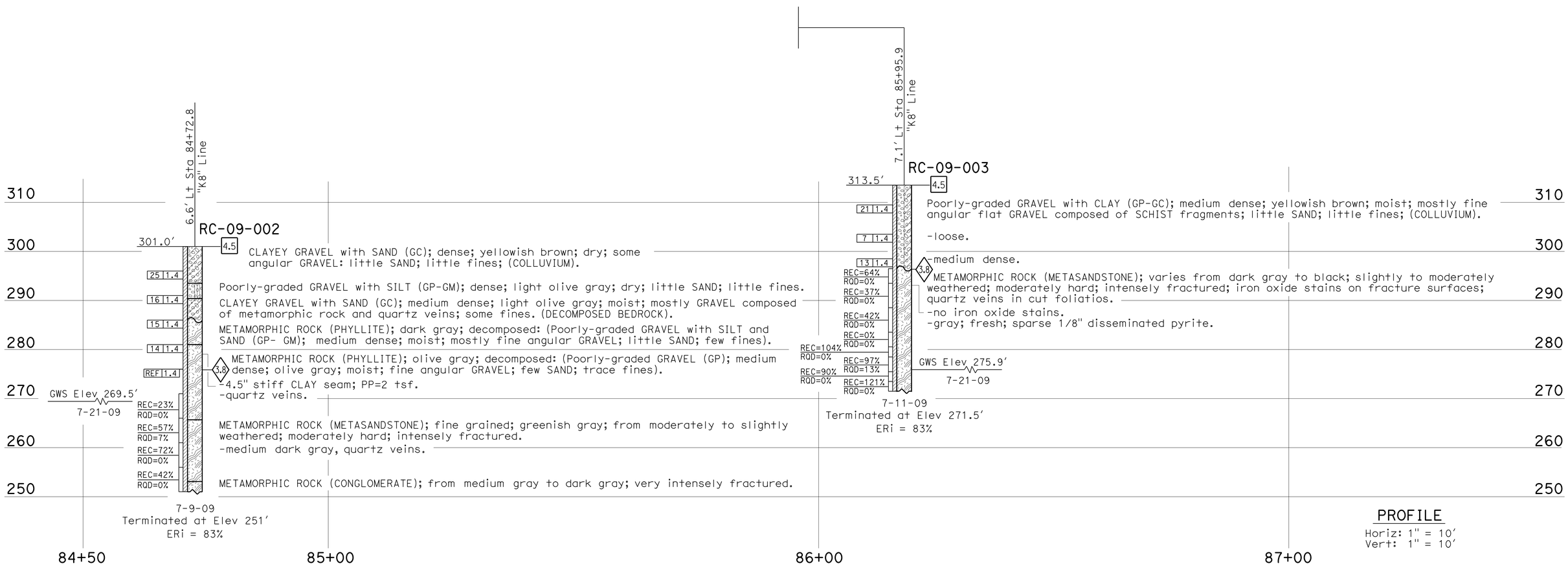

PROFILE
Horiz: 1" = 10'
Vert: 1" = 10'

ENGINEERING SERVICES	MATERIALS AND GEOTECHNICAL SERVICES	STATE OF CALIFORNIA DEPARTMENT OF TRANSPORTATION	DIVISION OF ENGINEERING SERVICES STRUCTURE DESIGN DESIGN BRANCH 3	BRIDGE NO. 04E0031 POST MILE 23.28	WALL AT PM 23.28 LOG OF TEST BORINGS 6 OF 7
FUNCTIONAL SUPERVISOR NAME: C. Narwold	DRAWN BY: I.G-Remmen CHECKED BY: R. Newman	FIELD INVESTIGATION BY: D. McGuire			

OGS CIVIL LOG OF TEST BORINGS SHEET

ORIGINAL SCALE IN INCHES FOR REDUCED PLANS 0 1 2 3

UNIT: 3643
PROJECT NUMBER & PHASE: 01000002191 CONTRACT NO.: 01-450901

DISREGARD PRINTS BEARING EARLIER REVISION DATES

REVISION DATES: ~~10-05-12~~ 10-09-12 | SHEET 26 OF 27

FILE => 01-450901_04e0031-z-rw-pm23.28-6.dgn

USERNAME => s119571 DATE PLOTTED => 18-JUN-2013 TIME PLOTTED => 07:31

DIST	COUNTY	ROUTE	POST MILES TOTAL PROJECT	SHEET No.	TOTAL SHEETS
01	Hum	169	13.6/23.4	86	86

Marietta James 10-10-12
REGISTERED CIVIL ENGINEER DATE

6-17-13
PLANS APPROVAL DATE

REGISTERED PROFESSIONAL ENGINEER
Marietta J. James
No. C55009
Exp. 6-30-14
CIVIL
STATE OF CALIFORNIA

The State of California or its officers or agents shall not be responsible for the accuracy or completeness of electronic copies of this plan sheet.

This LOTB sheet was prepared in accordance with the Caltrans Soil & Rock Logging, Classification, & Presentation Manual (2010 Edition).

See 2010 Standard Plans A10F and A10G for Soil Legend, and A10H for Rock Legend.

Note the following exception:

Type code for all horizontal holes reported as RH. (Holes are RC per section 2.4 of 2010 manual).

FOR PLAN VIEW, SEE
"LOG OF TEST BORINGS 1 OF 7"

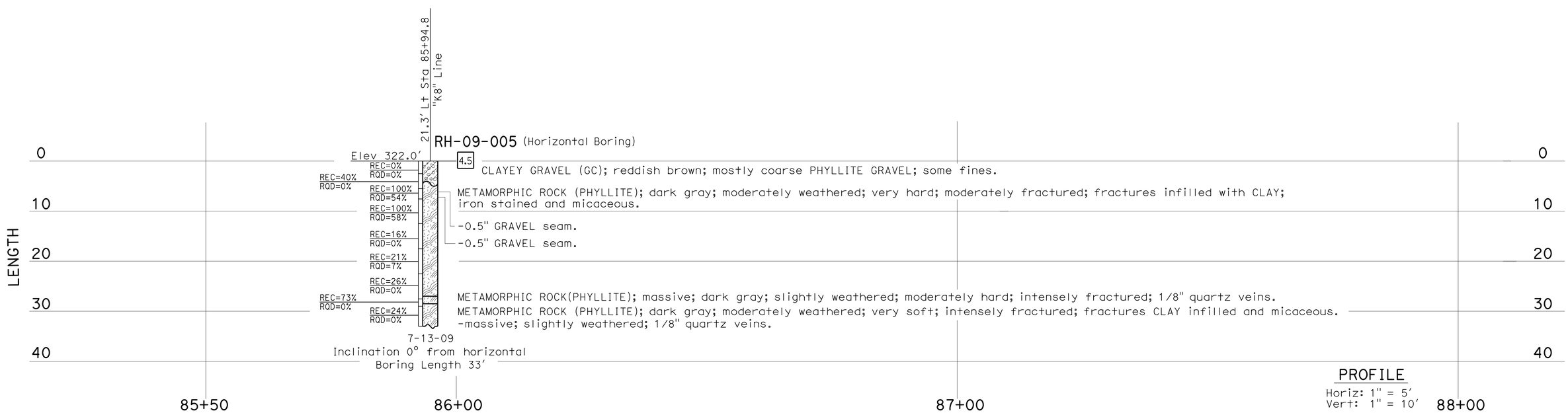

ENGINEERING SERVICES	MATERIALS AND GEOTECHNICAL SERVICES	STATE OF CALIFORNIA DEPARTMENT OF TRANSPORTATION	DIVISION OF ENGINEERING SERVICES STRUCTURE DESIGN DESIGN BRANCH 3	BRIDGE NO. 04E0031 POST MILE 23.28	WALL AT PM 23.28 LOG OF TEST BORINGS 7 OF 7
FUNCTIONAL SUPERVISOR NAME: C. Narwold	DRAWN BY: I.G-Remmen CHECKED BY: R. Newman	FIELD INVESTIGATION BY: M. James			

OGS CIVIL LOG OF TEST BORINGS SHEET

ORIGINAL SCALE IN INCHES FOR REDUCED PLANS 0 1 2 3

UNIT: 3643
PROJECT NUMBER & PHASE: 01000002191 CONTRACT NO.: 01-450901

DISREGARD PRINTS BEARING EARLIER REVISION DATES

REVISION DATES 10-09-12 10-09-12

SHEET 27 OF 27

FILE => 01-450901_04e0031-z-rw-pm23.28-7.dgn

USERNAME => s119571 DATE PLOTTED => 18-JUN-2013 TIME PLOTTED => 07:31