Dist	COUNTY	ROUTE	POST MILES TOTAL PROJECT	SHEET No.	TOTAL SHEETS
01	Hum	101, 254	Var	1	28

INDEX OF PLANS

SHEET No	DESCRIPTION
1	TITLE AND LOCATION MAP
2	TEMPORARY WATER POLLUTION CONTROL QUANTITIES
3-14	DRAINAGE PLAN, PROFILE, DETAILS AND QUANITIES
5-28	NEW OR REVISED STANDARD PLANS

THE STANDARD PLANS LIST APPLICABLE TO THIS CONTRACT IS INCLUDED IN THE NOTICE TO BIDDERS AND SPECIAL PROVISIONS BOOK.

STATE OF CALIFORNIA

DEPARTMENT OF TRANSPORTATION

PROJECT PLANS FOR CONSTRUCTION ON STATE HIGHWAY

IN HUMBOLDT COUNTY AT VARIOUS LOCATIONS

TO BE SUPPLEMENTED BY STANDARD PLANS DATED MAY 2006

LOCATION MAP

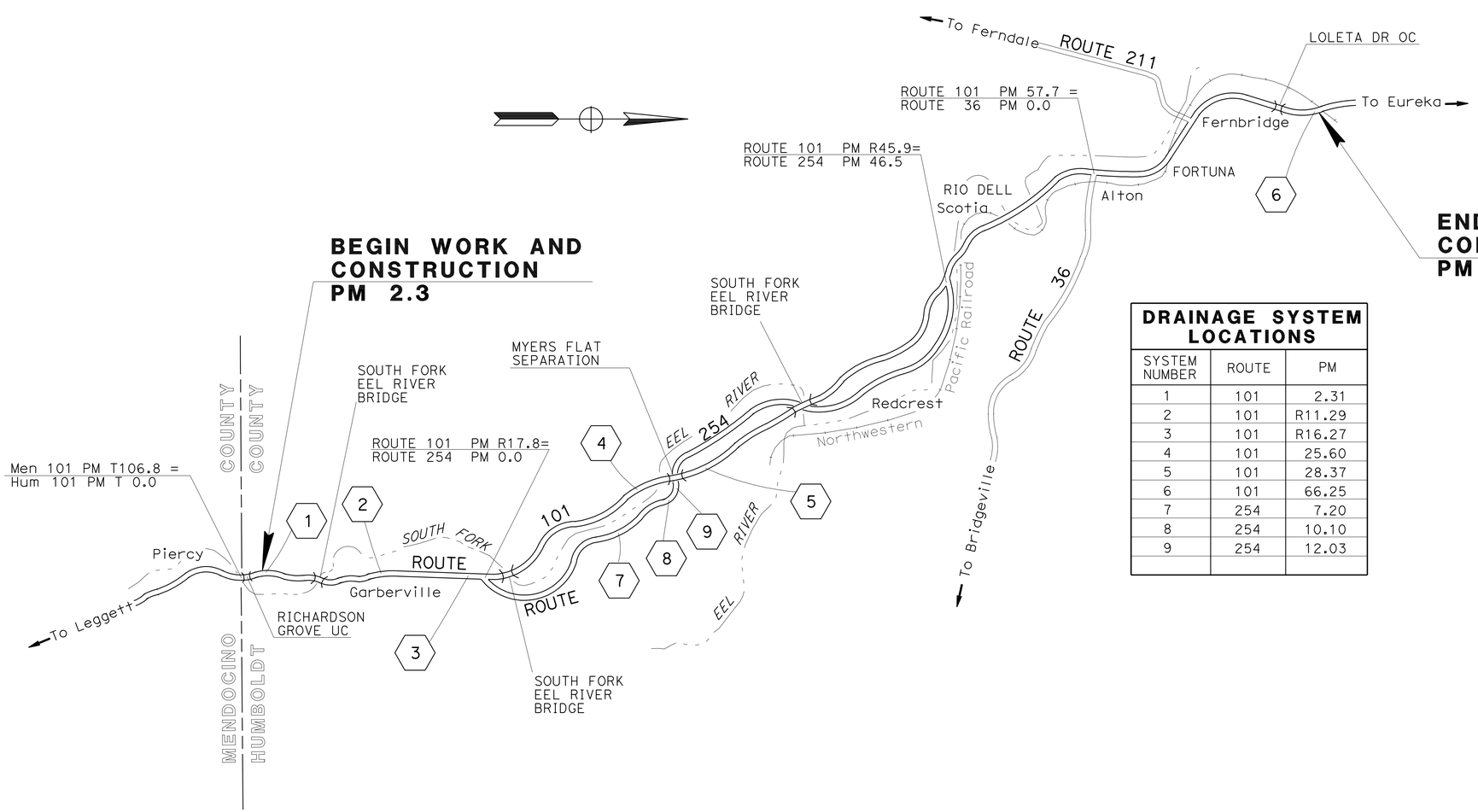

DRAINAGE SYSTEM LOCATIONS

SYSTEM NUMBER	ROUTE	PM
1	101	2.31
2	101	R11.29
3	101	R16.27
4	101	25.60
5	101	28.37
6	101	66.25
7	254	7.20
8	254	10.10
9	254	12.03

Kemset Moore 1/11/12
PROJECT ENGINEER DATE
REGISTERED CIVIL ENGINEER

January 11, 2012
PLANS APPROVAL DATE

REGISTERED PROFESSIONAL ENGINEER
Kemset K. Moore
No. 64494
Exp. 6/30/13
CIVIL
STATE OF CALIFORNIA

THE STATE OF CALIFORNIA OR ITS OFFICERS OR AGENTS SHALL NOT BE RESPONSIBLE FOR THE ACCURACY OR COMPLETENESS OF SCANNED COPIES OF THIS PLAN SHEET.

PROJECT MANAGER Richard Mullen
DESIGN ENGINEER Lucy Kostrzewa

THE CONTRACTOR SHALL POSSESS THE CLASS (OR CLASSES) OF LICENSE AS SPECIFIED IN THE "NOTICE TO BIDDERS."

NO SCALE

CONTRACT No.	01-431704
PROJECT ID	0100000188

LAST REVISION 00-00-00
DATE PLOTTED => 12-JAN-2012
TIME PLOTTED => 08:38

Dist	COUNTY	ROUTE	POST MILES TOTAL PROJECT	SHEET No.	TOTAL SHEETS
01	Hum	101, 254	Var	2	28

Kemset Moore 1/11/12
REGISTERED CIVIL ENGINEER DATE

January 11, 2012
PLANS APPROVAL DATE

REGISTERED PROFESSIONAL ENGINEER
Kemset K. Moore
No. 64494
Exp. 6/30/13
CIVIL
STATE OF CALIFORNIA

THE STATE OF CALIFORNIA OR ITS OFFICERS OR AGENTS SHALL NOT BE RESPONSIBLE FOR THE ACCURACY OR COMPLETENESS OF SCANNED COPIES OF THIS PLAN SHEET.

TEMPORARY WATER POLLUTION CONTROL

SYSTEM No.	FIBER ROLL	SILT FENCE	CHECK DAM	COVER	DI PROTECTION
	LF			SQYD	EA
1		10		6	
2	140			251	1
3	15			33	1
4			20		1
5	40	10		67	1
6	80	10		144	1
7	10			22	1
8	10	10			1
9	40	10		100	1
TOTAL	335	50	20	623	8

EROSION CONTROL

DRAINAGE SYSTEM No.	COMPOST BLANKET	AREA (N)
	CY	SQFT
1	0.7	155
2	7.0	1520
3	0.9	190
4	2.4	515
5	1.1	244
6	1.5	324
7	0.7	144
8	0.9	198
9	1.1	245
TOTAL	16.3	3535

(N) - NOT A SEPARATE PAY ITEM, FOR INFORMATION ONLY.

TEMPORARY FENCE (TYPE ESA)

DRAINAGE SYSTEM No.	SIDE	LENGTH
		LF
1	R† & L†	200
5	L†	200
7	L†	70
9	L†	180
	TOTAL	650

TEMPORARY WATER POLUTION CONTROL QUANTITIES
WPCQ-1

REVISED BY | DATE REVISED
Kemset Moore | Kemset Moore
CALCULATED-DESIGNED BY | CHECKED BY
FUNCTIONAL SUPERVISOR: Lucy Kostrzewa
STATE OF CALIFORNIA - DEPARTMENT OF TRANSPORTATION
Caltrans DESIGN

LAST REVISION 00-00-00 | DATE PLOTTED => 12-JAN-2012 | TIME PLOTTED => 08:38

Dist	COUNTY	ROUTE	POST MILES TOTAL PROJECT	SHEET No.	TOTAL SHEETS
01	Hum	101, 254	Var	3	28

Kemset Moore 1/11/12
REGISTERED CIVIL ENGINEER DATE

January 11, 2012
PLANS APPROVAL DATE

REGISTERED PROFESSIONAL ENGINEER Kemset K. Moore No. 64494 Exp. 6/30/13 CIVIL STATE OF CALIFORNIA

THE STATE OF CALIFORNIA OR ITS OFFICERS OR AGENTS SHALL NOT BE RESPONSIBLE FOR THE ACCURACY OR COMPLETENESS OF SCANNED COPIES OF THIS PLAN SHEET.

FOR COMPLETE RIGHT OF WAY DATA, SEE RIGHT OF WAY RECORD MAPS AT DISTRICT OFFICE.

LEGEND

- (X) DRAINAGE SYSTEM NUMBER
- (a) DRAINAGE UNIT
- DIRECTION OF TRAFFIC
- TFESA — TEMPORARY FENCE (TYPE ESA)

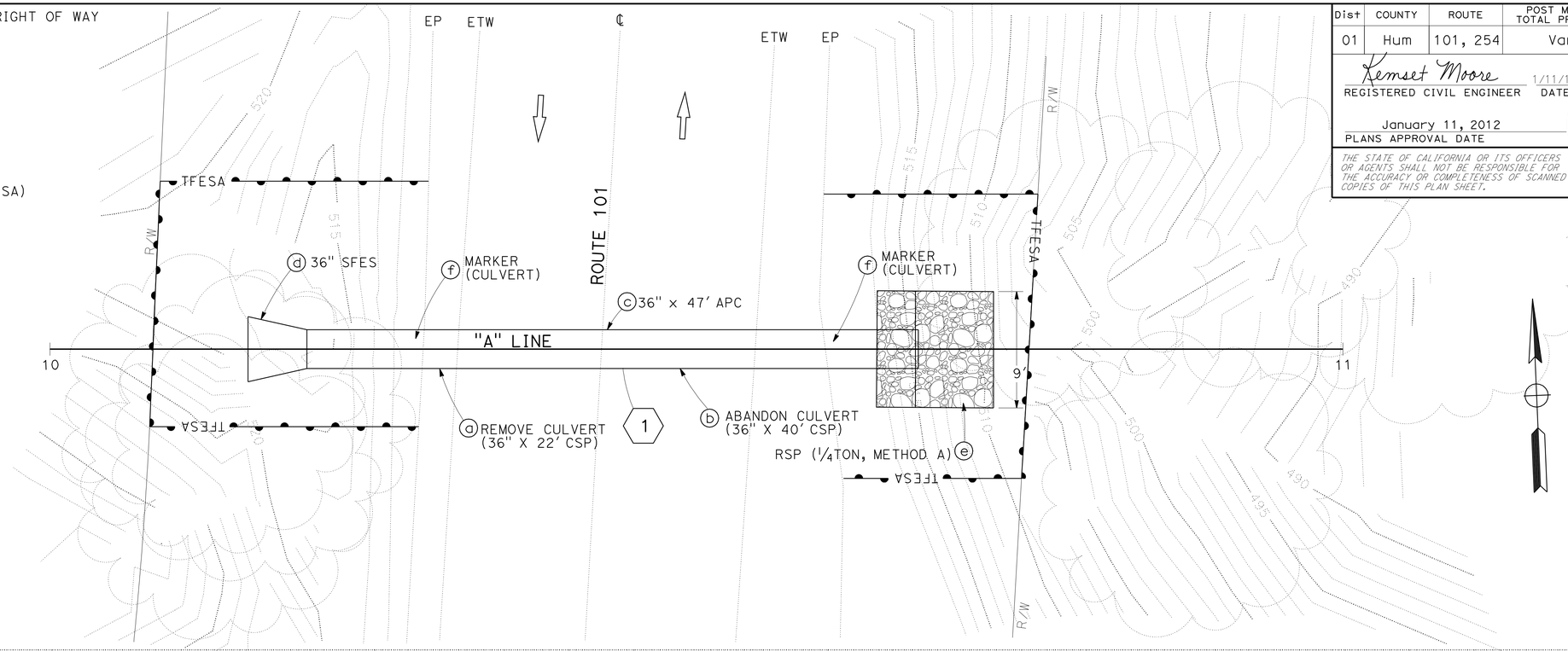

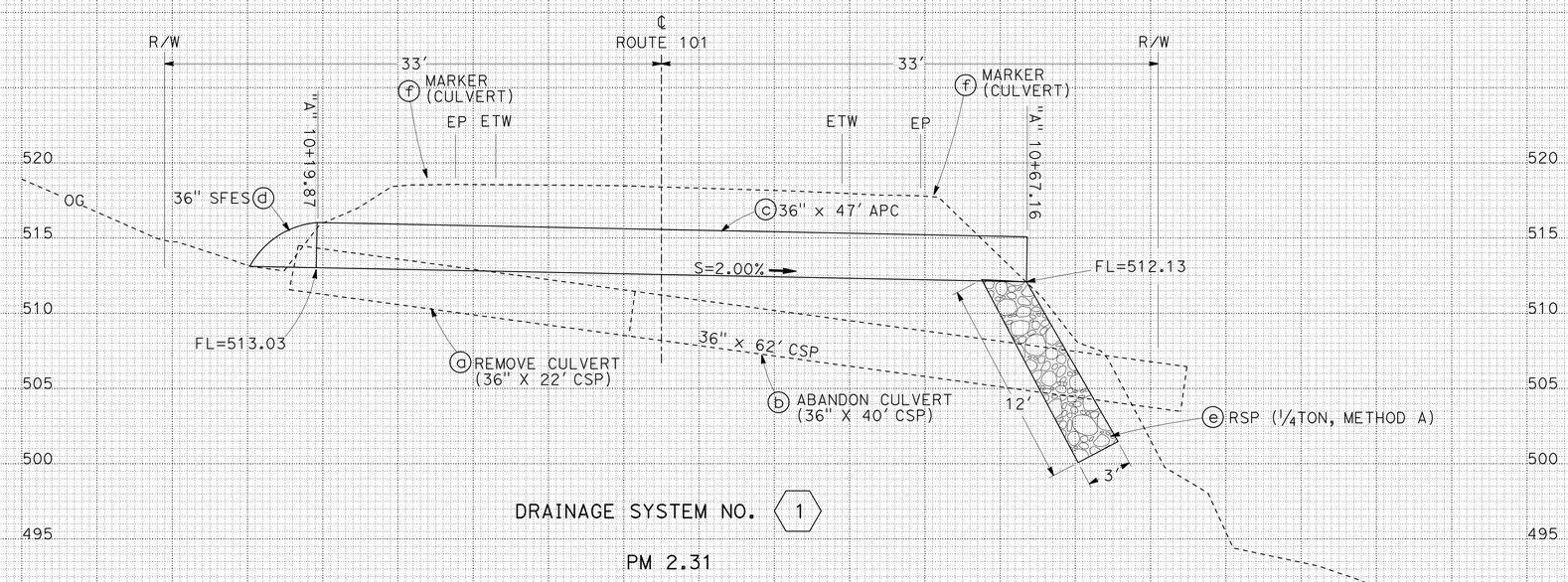

DRAINAGE SYSTEM NO. (1)

PM 2.31

THIS PLAN ACCURATE FOR DRAINAGE WORK ONLY

DRAINAGE PLAN AND PROFILE D-1

SCALE 1"=5'

STATE OF CALIFORNIA - DEPARTMENT OF TRANSPORTATION
Caltrans
DESIGN

FUNCTIONAL SUPERVISOR: Lucy Kostrzewa

CALCULATED-DESIGNED BY: Kemset Moore
CHECKED BY: Kemset Moore

REVISED BY | DATE REVISED

LAST REVISION 00-00-00 | DATE PLOTTED => 12-JAN-2012 | TIME PLOTTED => 08:38

FOR COMPLETE RIGHT OF WAY DATA, SEE RIGHT OF WAY RECORD MAPS AT DISTRICT OFFICE.

Dist	COUNTY	ROUTE	POST MILES TOTAL PROJECT	SHEET No.	TOTAL SHEETS
01	Hum	101, 254	Var	4	28

Kemset Moore 1/11/12
REGISTERED CIVIL ENGINEER DATE

January 11, 2012
PLANS APPROVAL DATE

REGISTERED PROFESSIONAL ENGINEER Kemset K. Moore No. 64494 Exp. 6/30/13 CIVIL STATE OF CALIFORNIA

THE STATE OF CALIFORNIA OR ITS OFFICERS OR AGENTS SHALL NOT BE RESPONSIBLE FOR THE ACCURACY OR COMPLETENESS OF SCANNED COPIES OF THIS PLAN SHEET.

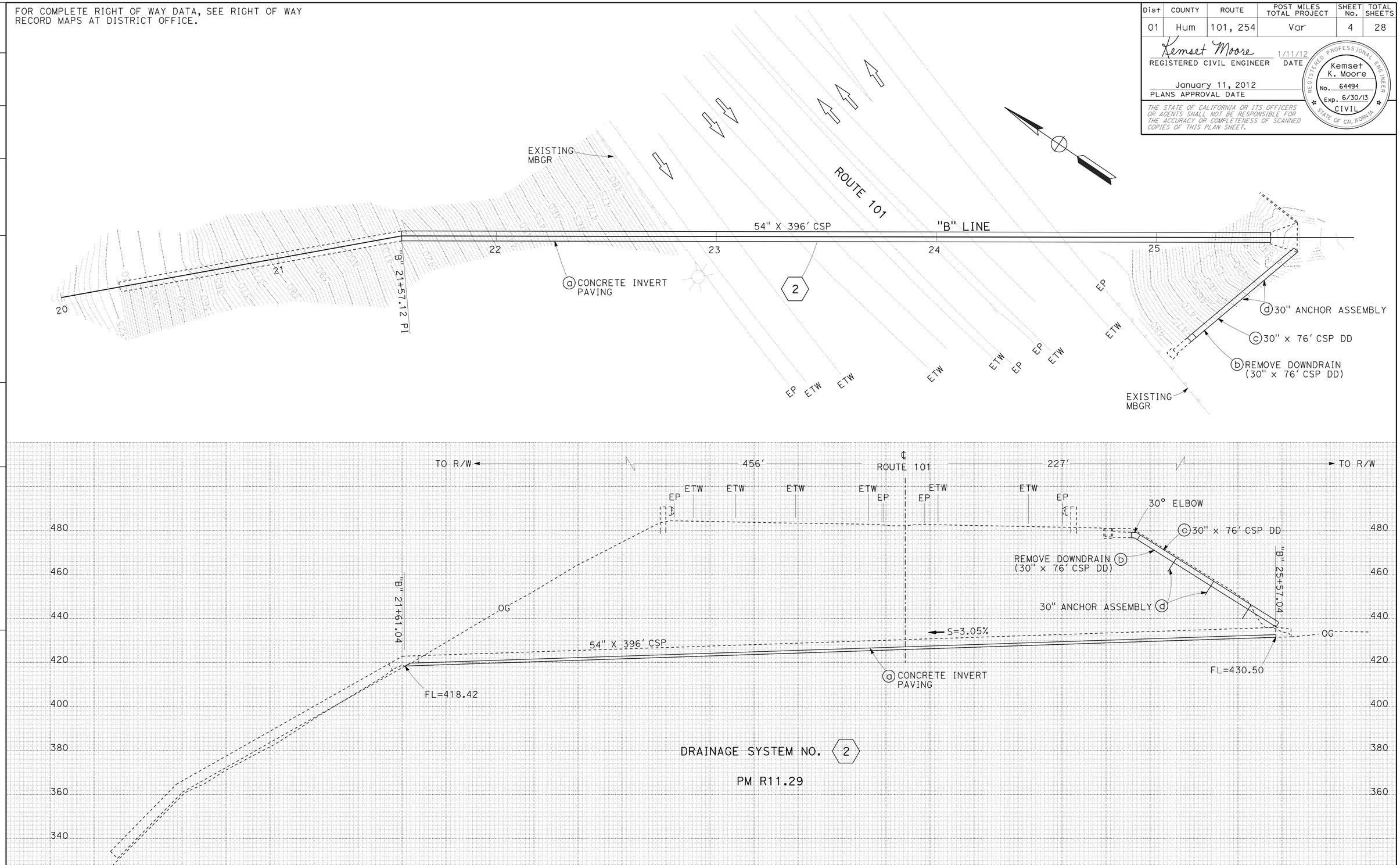

DRAINAGE SYSTEM NO. 2

PM R11.29

THIS PLAN ACCURATE FOR DRAINAGE WORK ONLY

DRAINAGE PLAN AND PROFILE D-2

SCALE 1"=20'

REVISED BY	DATE REVISED
Kemset Moore	Kemset Moore
CALCULATED-DESIGNED BY	CHECKED BY

FUNCTIONAL SUPERVISOR: Lucy Kostrzewa

STATE OF CALIFORNIA - DEPARTMENT OF TRANSPORTATION
Caltrans
DESIGN

LAST REVISION 00-00-00 | DATE PLOTTED => 12-JAN-2012 | TIME PLOTTED => 08:38

FOR COMPLETE RIGHT OF WAY DATA, SEE RIGHT OF WAY RECORD MAPS AT DISTRICT OFFICE.

Dist	COUNTY	ROUTE	POST MILES TOTAL PROJECT	SHEET No.	TOTAL SHEETS
01	Hum	101, 254	Var	5	28

Kemset Moore 1/11/12
REGISTERED CIVIL ENGINEER DATE

January 11, 2012
PLANS APPROVAL DATE

REGISTERED PROFESSIONAL ENGINEER Kemset K. Moore No. 64494 Exp. 6/30/13 CIVIL STATE OF CALIFORNIA

THE STATE OF CALIFORNIA OR ITS OFFICERS OR AGENTS SHALL NOT BE RESPONSIBLE FOR THE ACCURACY OR COMPLETENESS OF SCANNED COPIES OF THIS PLAN SHEET.

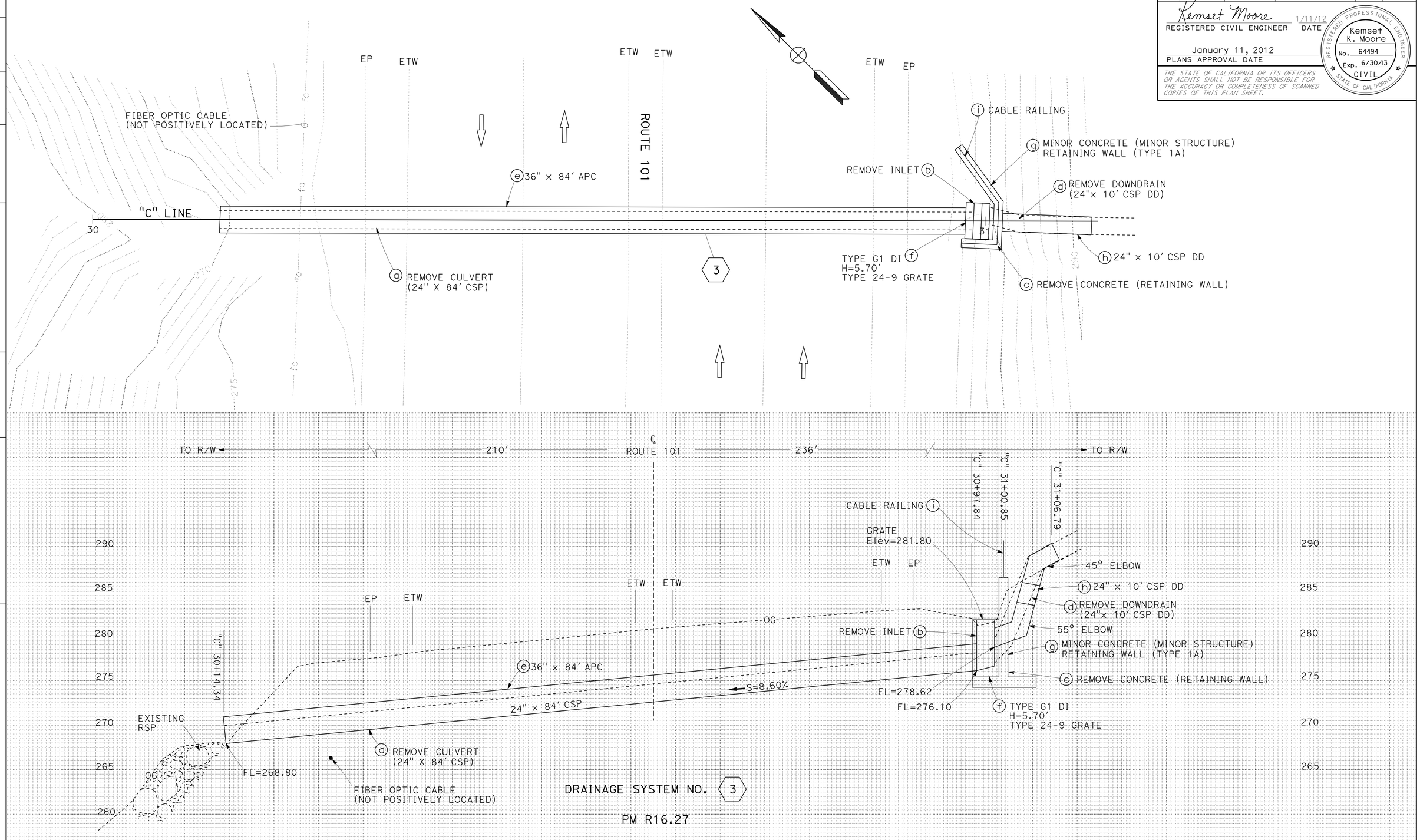

DRAINAGE SYSTEM NO. 3

PM R16.27

THIS PLAN ACCURATE FOR DRAINAGE WORK ONLY

DRAINAGE PLAN AND PROFILE D-3

SCALE 1"=5'

STATE OF CALIFORNIA - DEPARTMENT OF TRANSPORTATION
Caltrans
DESIGN

FUNCTIONAL SUPERVISOR: Lucy Kostrzewa

CALCULATED-DESIGNED BY: Kemset Moore
CHECKED BY: Kemset Moore

REVISED BY | DATE REVISED

LAST REVISION 00-00-00 | DATE PLOTTED => 12-JAN-2012 | TIME PLOTTED => 08:38

FOR COMPLETE RIGHT OF WAY DATA, SEE RIGHT OF WAY RECORD MAPS AT DISTRICT OFFICE.

Dist	COUNTY	ROUTE	POST MILES TOTAL PROJECT	SHEET No.	TOTAL SHEETS
01	Hum	101, 254	Var	6	28

Kemset Moore 1/11/12
REGISTERED CIVIL ENGINEER DATE

January 11, 2012
PLANS APPROVAL DATE

REGISTERED PROFESSIONAL ENGINEER Kemset K. Moore No. 64494 Exp. 6/30/13 CIVIL STATE OF CALIFORNIA

THE STATE OF CALIFORNIA OR ITS OFFICERS OR AGENTS SHALL NOT BE RESPONSIBLE FOR THE ACCURACY OR COMPLETENESS OF SCANNED COPIES OF THIS PLAN SHEET.

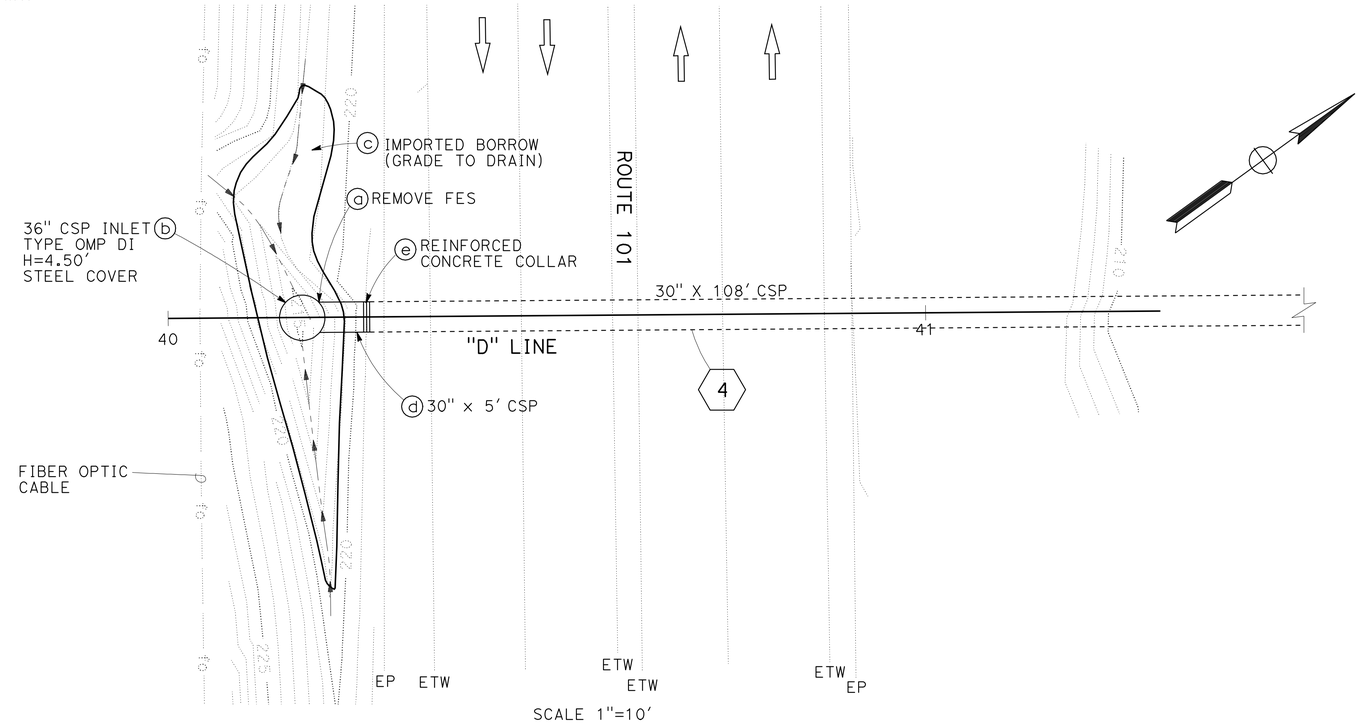

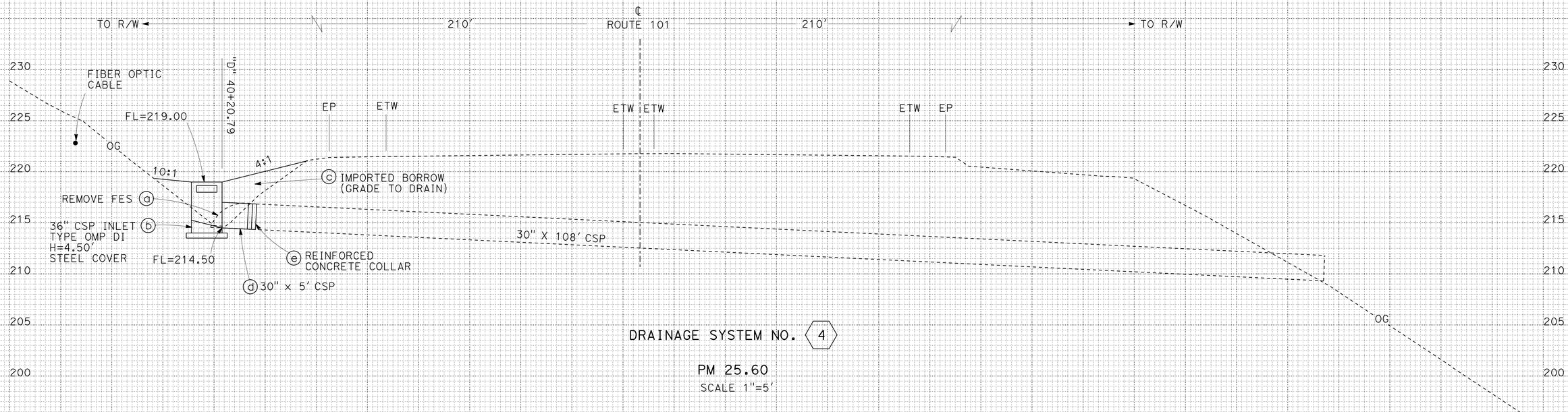

DRAINAGE SYSTEM NO. 4

PM 25.60
SCALE 1"=5′

THIS PLAN ACCURATE FOR DRAINAGE WORK ONLY

DRAINAGE PLAN AND PROFILE D-4

SCALE AS SHOWN

REVISED BY	DATE REVISED

CALCULATED-DESIGNED BY: Kemset Moore
CHECKED BY: Kemset Moore

FUNCTIONAL SUPERVISOR: Lucy Kostrzewa

STATE OF CALIFORNIA - DEPARTMENT OF TRANSPORTATION
Caltrans
DESIGN

LAST REVISION 00-00-00
DATE PLOTTED => 12-JAN-2012
TIME PLOTTED => 08:38

FOR COMPLETE RIGHT OF WAY DATA, SEE RIGHT OF WAY RECORD MAPS AT DISTRICT OFFICE.

Dist	COUNTY	ROUTE	POST MILES TOTAL PROJECT	SHEET No.	TOTAL SHEETS
01	Hum	101, 254	Var	7	28

Kemset Moore 1/11/12
REGISTERED CIVIL ENGINEER DATE

January 11, 2012
PLANS APPROVAL DATE

REGISTERED PROFESSIONAL ENGINEER Kemset K. Moore No. 64494 Exp. 6/30/13 CIVIL STATE OF CALIFORNIA

THE STATE OF CALIFORNIA OR ITS OFFICERS OR AGENTS SHALL NOT BE RESPONSIBLE FOR THE ACCURACY OR COMPLETENESS OF SCANNED COPIES OF THIS PLAN SHEET.

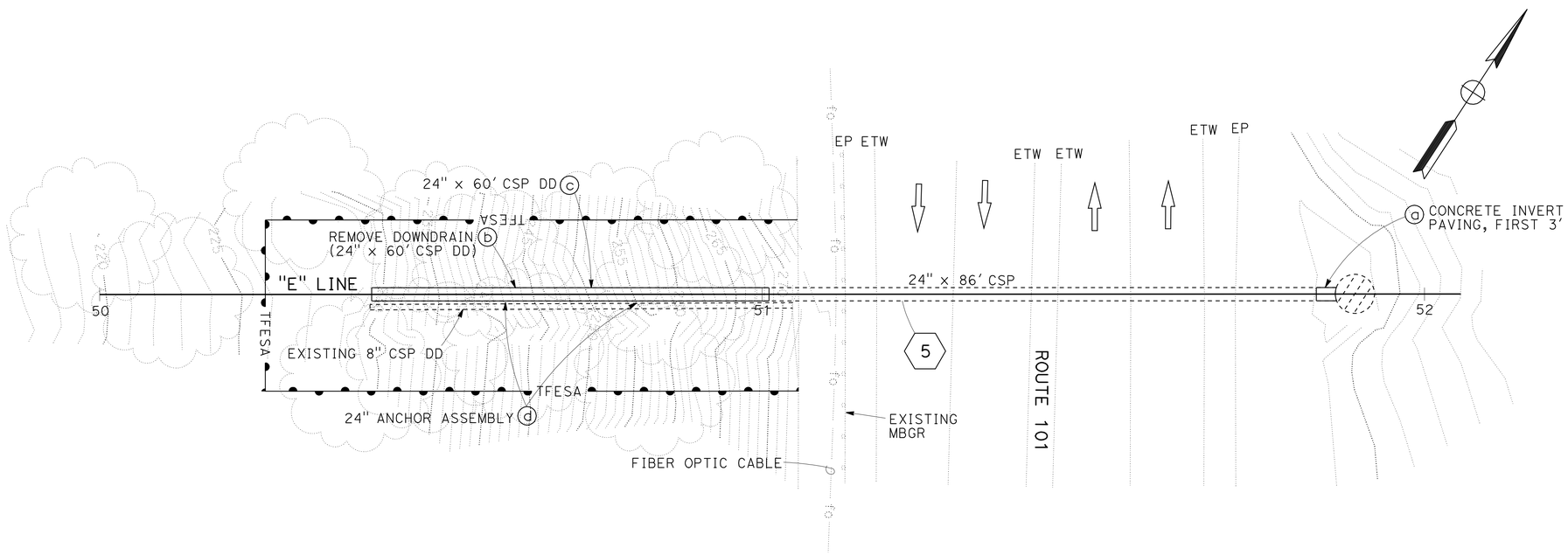

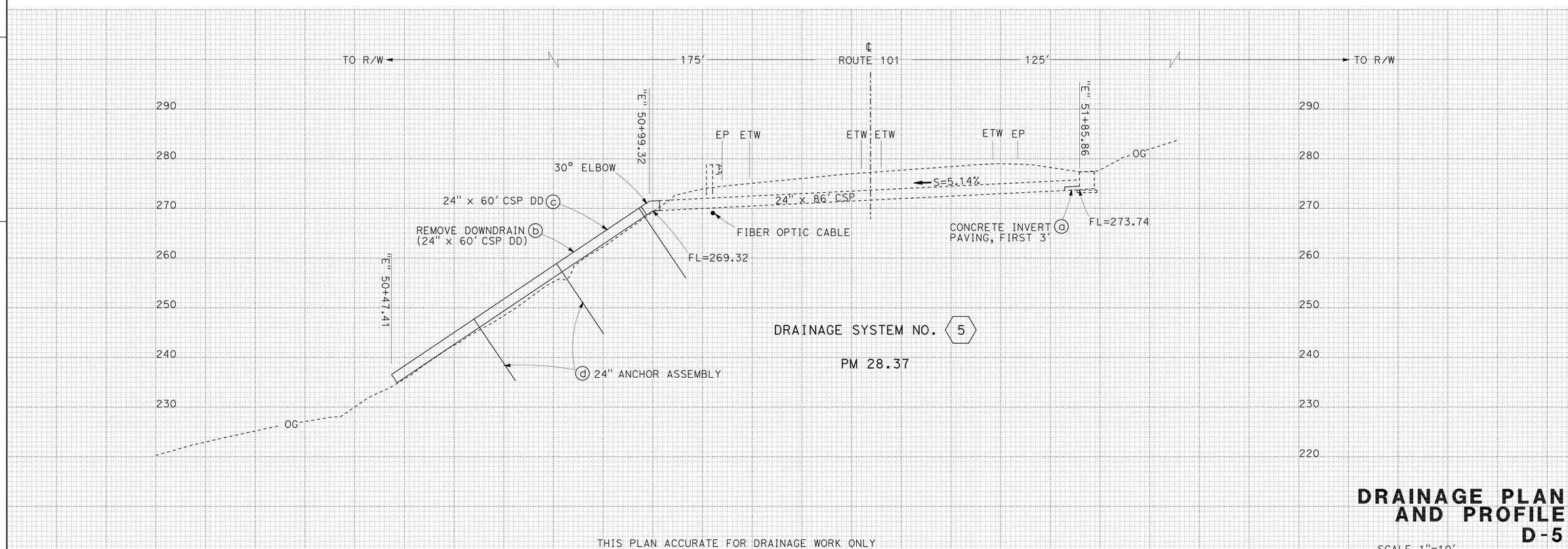

THIS PLAN ACCURATE FOR DRAINAGE WORK ONLY

DRAINAGE PLAN AND PROFILE D-5

SCALE 1"=10'

STATE OF CALIFORNIA - DEPARTMENT OF TRANSPORTATION
Caltrans DESIGN

FUNCTIONAL SUPERVISOR: Lucy Kostrzewa
CALCULATED-DESIGNED BY: Kemset Moore
CHECKED BY: Kemset Moore
REVISED BY
DATE REVISED

LAST REVISION 00-00-00
DATE PLOTTED => 12-JAN-2012
TIME PLOTTED => 08:38

FOR COMPLETE RIGHT OF WAY DATA, SEE RIGHT OF WAY RECORD MAPS AT DISTRICT OFFICE.

Dist	COUNTY	ROUTE	POST MILES TOTAL PROJECT	SHEET No.	TOTAL SHEETS
01	Hum	101, 254	Var	8	28

Kemset Moore 1/11/12
REGISTERED CIVIL ENGINEER DATE

January 11, 2012
PLANS APPROVAL DATE

REGISTERED PROFESSIONAL ENGINEER Kemset K. Moore No. 64494 Exp. 6/30/13 CIVIL STATE OF CALIFORNIA

THE STATE OF CALIFORNIA OR ITS OFFICERS OR AGENTS SHALL NOT BE RESPONSIBLE FOR THE ACCURACY OR COMPLETENESS OF SCANNED COPIES OF THIS PLAN SHEET.

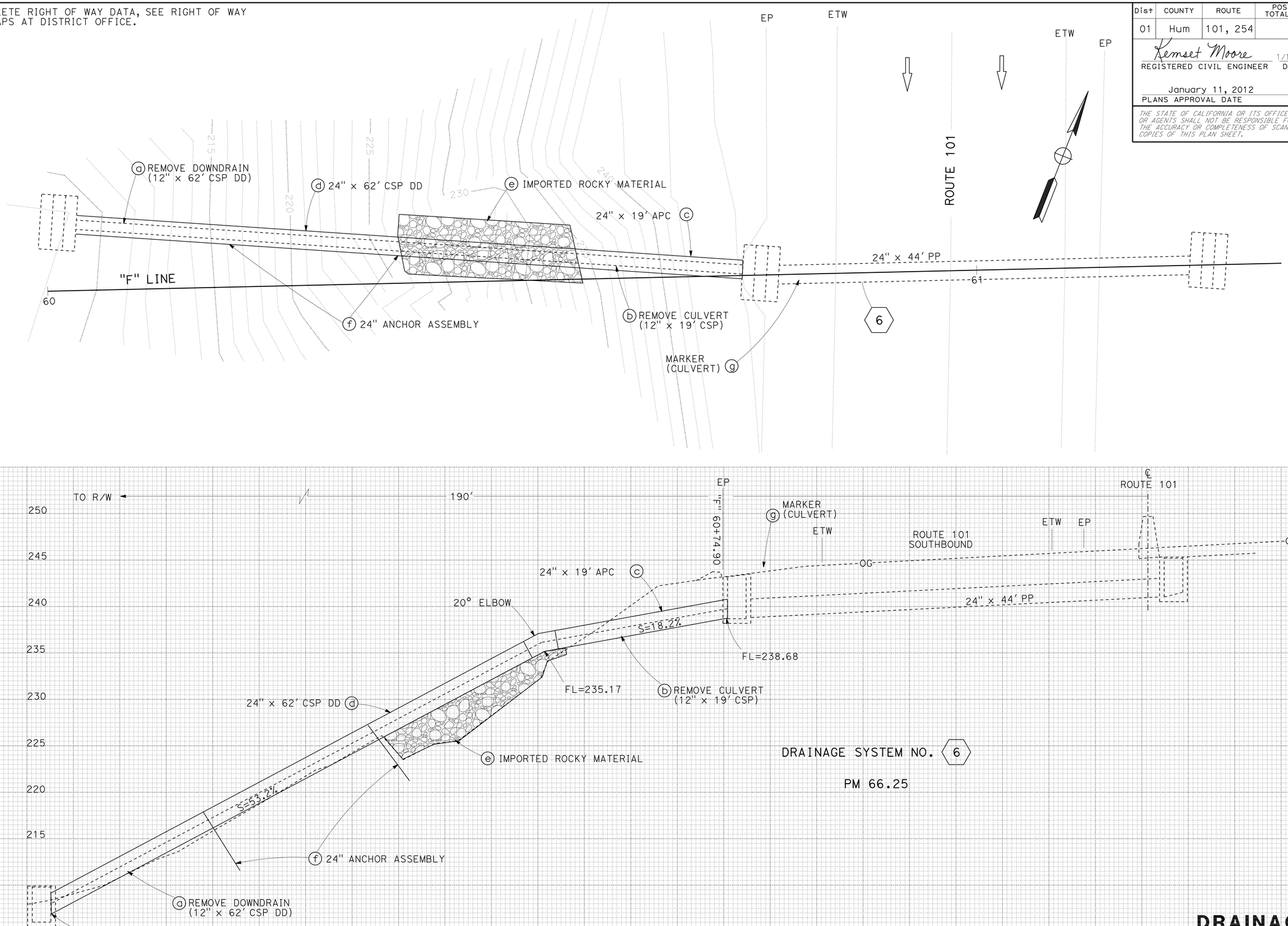

THIS PLAN ACCURATE FOR DRAINAGE WORK ONLY

DRAINAGE PLAN AND PROFILE D-6

SCALE 1"=5'

STATE OF CALIFORNIA - DEPARTMENT OF TRANSPORTATION
DESIGN

FUNCTIONAL SUPERVISOR: Lucy Kostrzewa
CALCULATED-DESIGNED BY: Kemset Moore
CHECKED BY: Kemset Moore
REVISED BY
DATE REVISED

LAST REVISION 00-00-00
DATE PLOTTED => 12-JAN-2012
TIME PLOTTED => 08:38

FOR COMPLETE RIGHT OF WAY DATA, SEE RIGHT OF WAY RECORD MAPS AT DISTRICT OFFICE.

Dist	COUNTY	ROUTE	POST MILES TOTAL PROJECT	SHEET No.	TOTAL SHEETS
01	Hum	101, 254	Var	9	28

Kemset Moore 1/11/12
REGISTERED CIVIL ENGINEER DATE

January 11, 2012
PLANS APPROVAL DATE

REGISTERED PROFESSIONAL ENGINEER Kemset K. Moore No. 64494 Exp. 6/30/13 CIVIL STATE OF CALIFORNIA

THE STATE OF CALIFORNIA OR ITS OFFICERS OR AGENTS SHALL NOT BE RESPONSIBLE FOR THE ACCURACY OR COMPLETENESS OF SCANNED COPIES OF THIS PLAN SHEET.

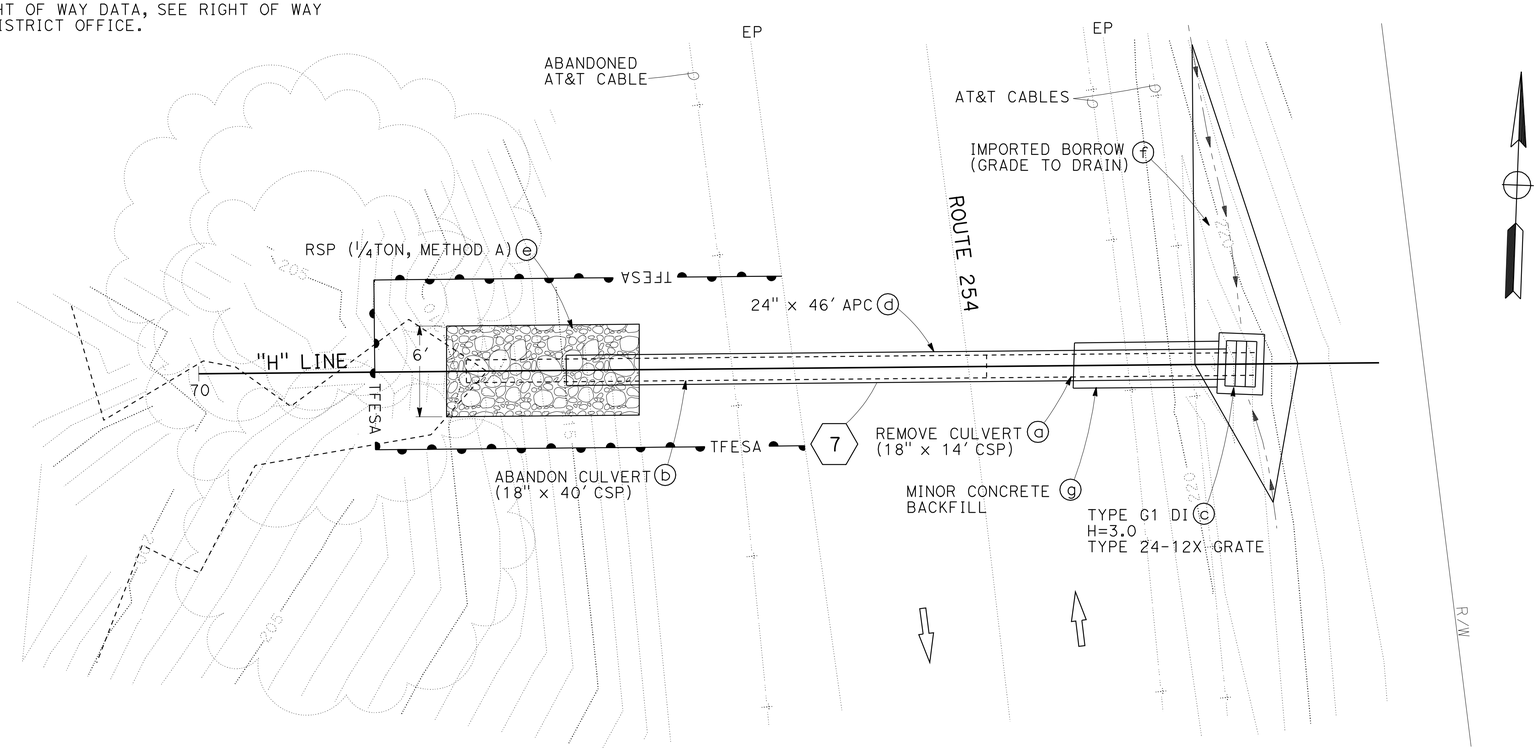

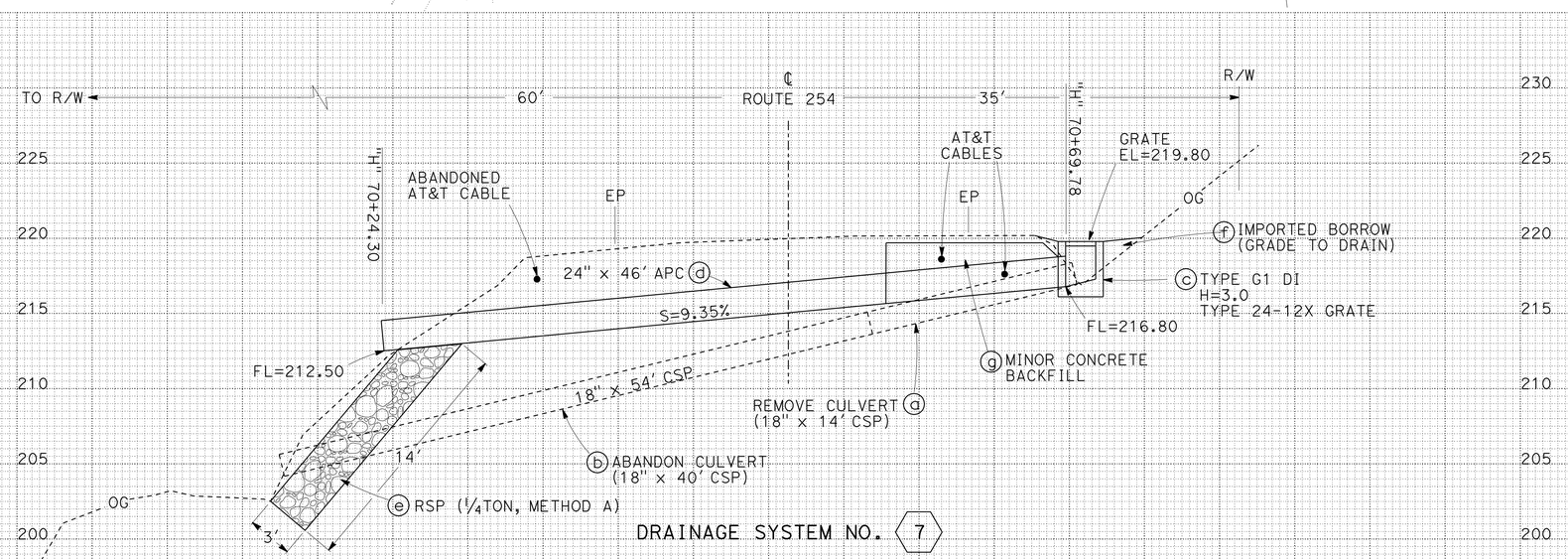

DRAINAGE SYSTEM NO. 7

PM 7.20

THIS PLAN ACCURATE FOR DRAINAGE WORK ONLY

DRAINAGE PLAN AND PROFILE D-7

SCALE 1"=5'

STATE OF CALIFORNIA - DEPARTMENT OF TRANSPORTATION
Caltrans® DESIGN

FUNCTIONAL SUPERVISOR: Lucy Kostrzewa
CALCULATED-DESIGNED BY: Kemset Moore
CHECKED BY: Kemset Moore
REVISED BY
DATE REVISED

LAST REVISION 00-00-00
DATE PLOTTED => 12-JAN-2012
TIME PLOTTED => 08:38

FOR COMPLETE RIGHT OF WAY DATA, SEE RIGHT OF WAY RECORD MAPS AT DISTRICT OFFICE.

Dist	COUNTY	ROUTE	POST MILES TOTAL PROJECT	SHEET No.	TOTAL SHEETS
01	Hum	101, 254	Var	10	28

Kemset Moore 1/11/12
REGISTERED CIVIL ENGINEER DATE

January 11, 2012
PLANS APPROVAL DATE

REGISTERED PROFESSIONAL ENGINEER Kemset K. Moore No. 64494 Exp. 6/30/13 CIVIL STATE OF CALIFORNIA

THE STATE OF CALIFORNIA OR ITS OFFICERS OR AGENTS SHALL NOT BE RESPONSIBLE FOR THE ACCURACY OR COMPLETENESS OF SCANNED COPIES OF THIS PLAN SHEET.

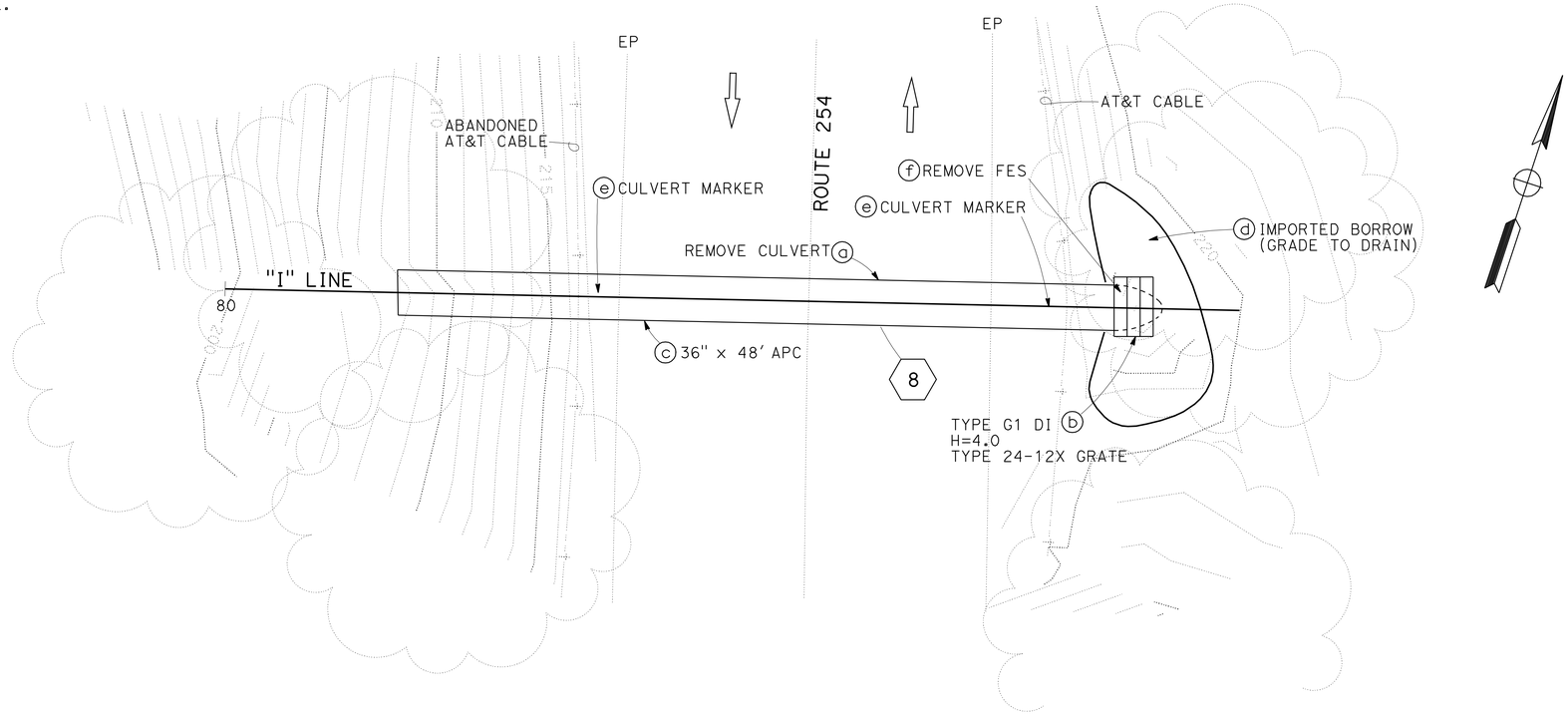

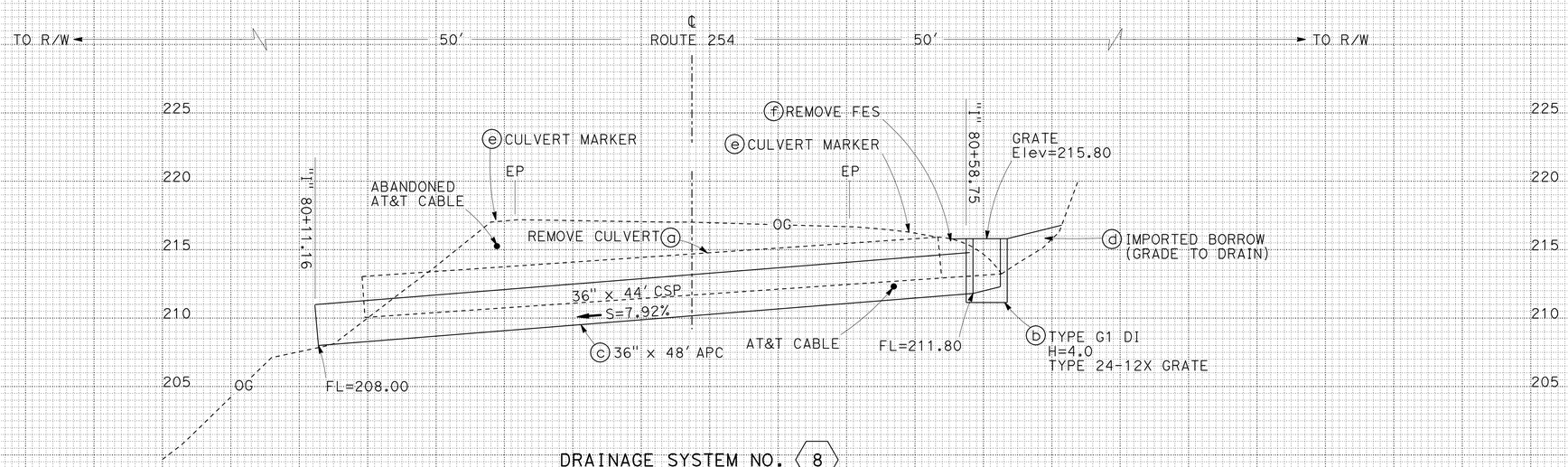

DRAINAGE SYSTEM NO. 8

PM 10.10

THIS PLAN ACCURATE FOR DRAINAGE WORK ONLY

SCALE 1"=5'

DRAINAGE PLAN AND PROFILE
D-8

STATE OF CALIFORNIA - DEPARTMENT OF TRANSPORTATION
Caltrans
DESIGN

FUNCTIONAL SUPERVISOR: Lucy Kostrzewa
CALCULATED-DESIGNED BY: Kemset Moore
CHECKED BY: Kemset Moore
REVISED BY
DATE REVISED

LAST REVISION 00-00-00
DATE PLOTTED => 12-JAN-2012
TIME PLOTTED => 08:38

Dist	COUNTY	ROUTE	POST MILES TOTAL PROJECT	SHEET No.	TOTAL SHEETS
01	Hum	101, 254	Var	11	28

Kemset Moore 1/11/12
REGISTERED CIVIL ENGINEER DATE

January 11, 2012
PLANS APPROVAL DATE

REGISTERED PROFESSIONAL ENGINEER Kemset K. Moore No. 64494 Exp. 6/30/13 CIVIL STATE OF CALIFORNIA

THE STATE OF CALIFORNIA OR ITS OFFICERS OR AGENTS SHALL NOT BE RESPONSIBLE FOR THE ACCURACY OR COMPLETENESS OF SCANNED COPIES OF THIS PLAN SHEET.

FOR COMPLETE RIGHT OF WAY DATA, SEE RIGHT OF WAY RECORD MAPS AT DISTRICT OFFICE.

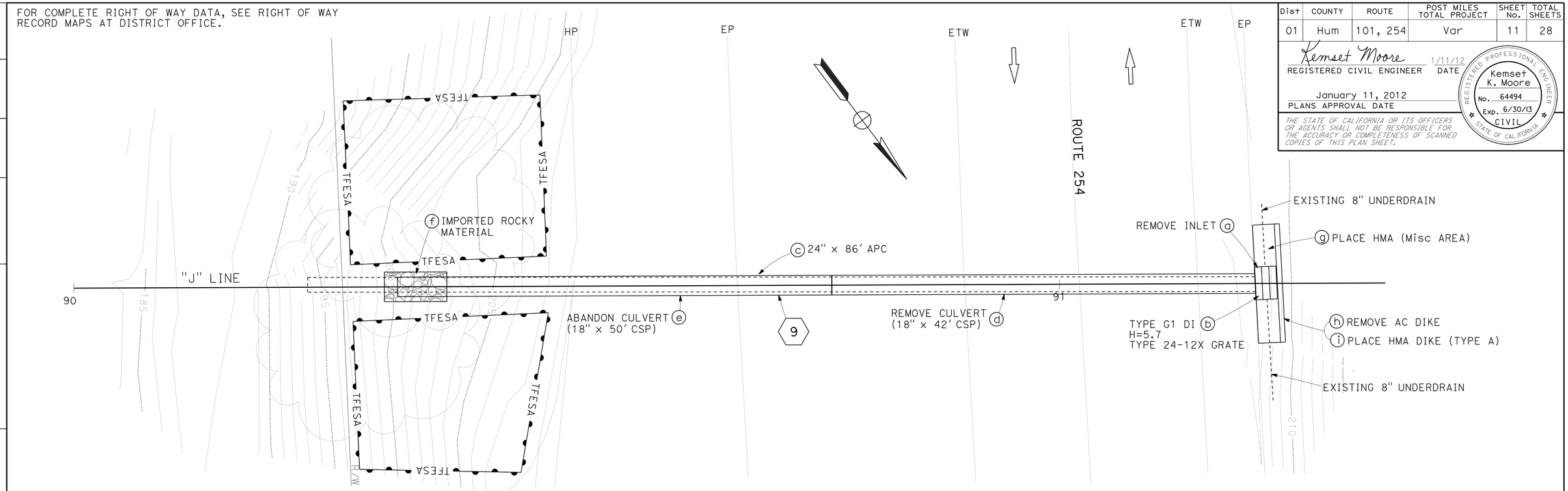

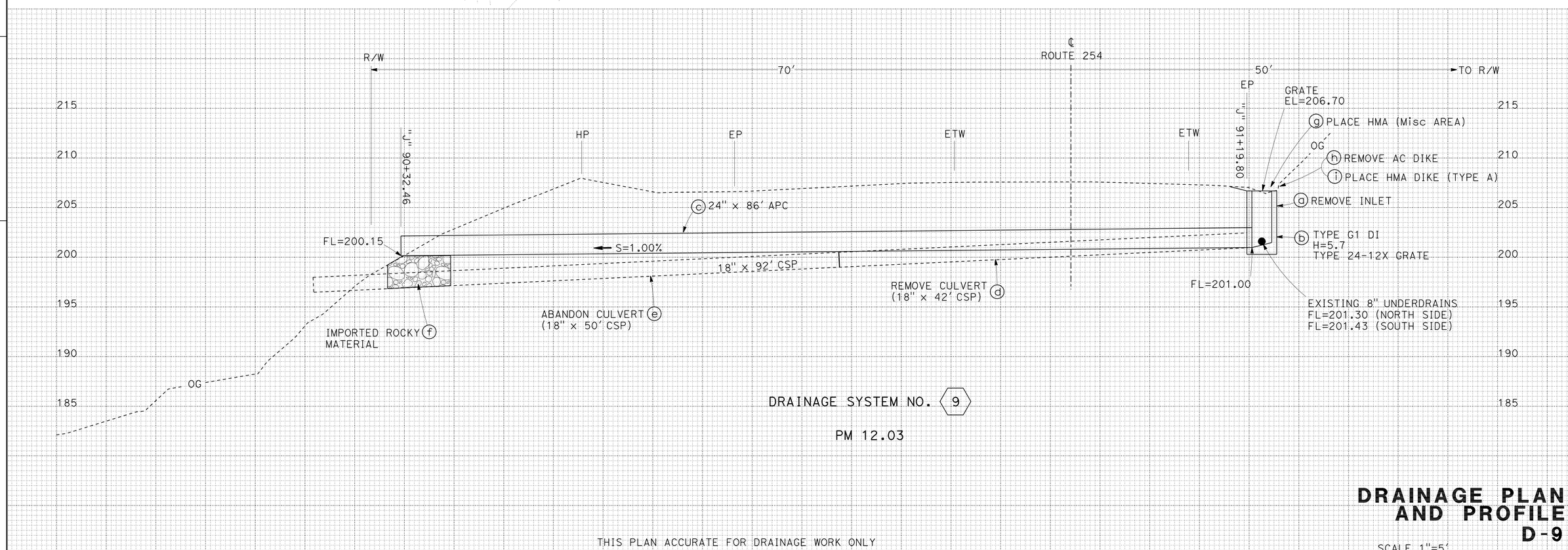

THIS PLAN ACCURATE FOR DRAINAGE WORK ONLY

DRAINAGE PLAN AND PROFILE
D-9

SCALE 1"=5'

STATE OF CALIFORNIA - DEPARTMENT OF TRANSPORTATION
Caltrans®
DESIGN

FUNCTIONAL SUPERVISOR: Lucy Kostrzewa
CALCULATED-DESIGNED BY: Kemset Moore
CHECKED BY: Kemset Moore
REVISED BY
DATE REVISED

LAST REVISION 00-00-00
DATE PLOTTED => 12-JAN-2012
TIME PLOTTED => 08:38

Dist	COUNTY	ROUTE	POST MILES TOTAL PROJECT	SHEET No.	TOTAL SHEETS
01	Hum	101, 254	Var	12	28

Kemset Moore 1/11/12
REGISTERED CIVIL ENGINEER DATE

January 11, 2012
PLANS APPROVAL DATE

REGISTERED PROFESSIONAL ENGINEER Kemset K. Moore No. 64494 Exp. 6/30/13 CIVIL STATE OF CALIFORNIA

THE STATE OF CALIFORNIA OR ITS OFFICERS OR AGENTS SHALL NOT BE RESPONSIBLE FOR THE ACCURACY OR COMPLETENESS OF SCANNED COPIES OF THIS PLAN SHEET.

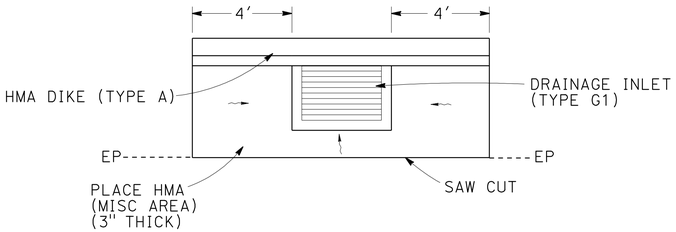

PLACE HMA (MISC AREA)

9

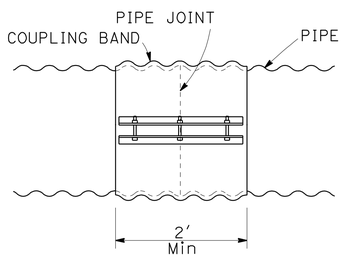

PIPE JOINT COUPLING BAND

SEE STD PLAN D87A FOR DETAILS NOT SHOWN

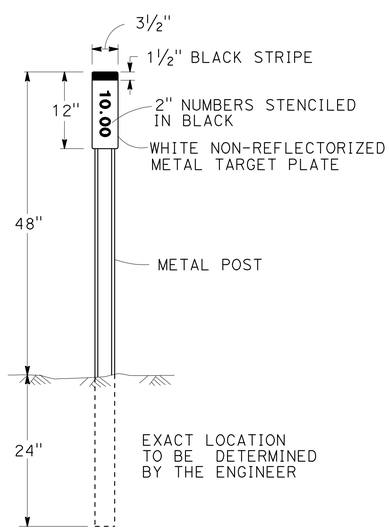

MARKER (CULVERT)

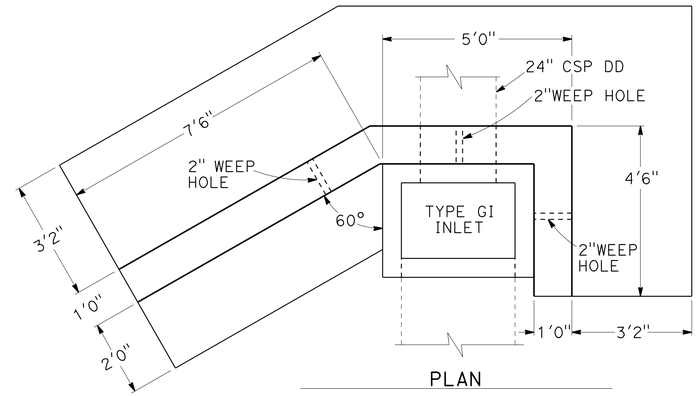

PLAN

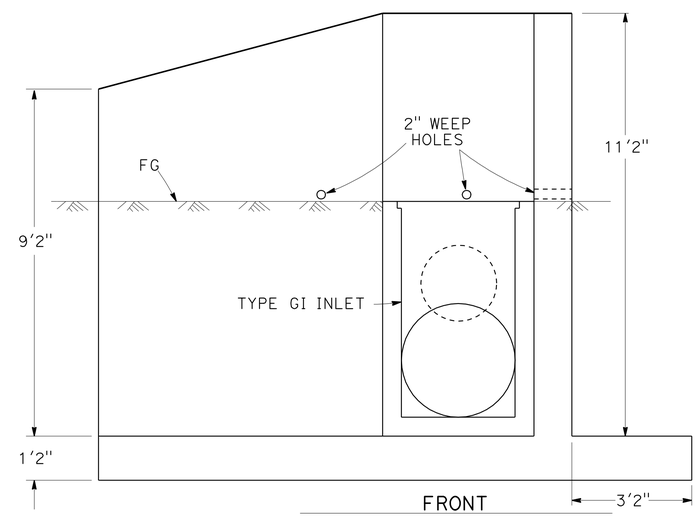

FRONT

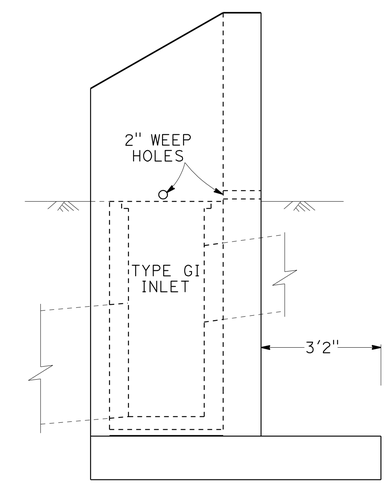

SIDE

NOTES:
1. MODIFY DIMENSIONS TO FIT ACTUAL FIELD CONDITIONS.
2. FOR ADDITIONAL INFORMATION SEE STANDARD PLANS A62-B, B3-3, B6-10 (DETAIL U-12) AND D73.

RETAINING WALL TYPE 1A

3

DRAINAGE DETAILS
DD-1

NO SCALE

STATE OF CALIFORNIA - DEPARTMENT OF TRANSPORTATION
Caltrans® DESIGN

FUNCTIONAL SUPERVISOR: Lucy Kostrzewa
CALCULATED-DESIGNED BY: Kemset Moore
CHECKED BY: Kemset Moore
REVISED BY
DATE REVISED

LAST REVISION 00-00-00
DATE PLOTTED => 12-JAN-2012
TIME PLOTTED => 08:38

Dist	COUNTY	ROUTE	POST MILES TOTAL PROJECT	SHEET No.	TOTAL SHEETS
01	Hum	101, 254	Var	13	28

Kemset Moore 1/11/12
REGISTERED CIVIL ENGINEER DATE

January 11, 2012
PLANS APPROVAL DATE

REGISTERED PROFESSIONAL ENGINEER Kemset K. Moore No. 64494 Exp. 6/30/13 CIVIL STATE OF CALIFORNIA

THE STATE OF CALIFORNIA OR ITS OFFICERS OR AGENTS SHALL NOT BE RESPONSIBLE FOR THE ACCURACY OR COMPLETENESS OF SCANNED COPIES OF THIS PLAN SHEET.

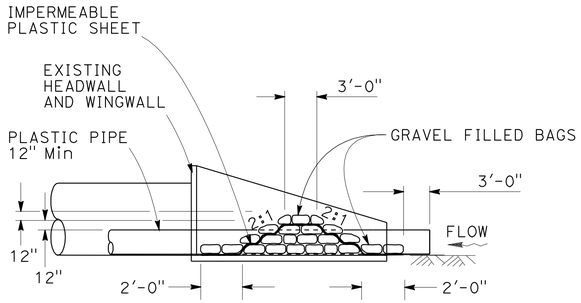

SECTION A-A

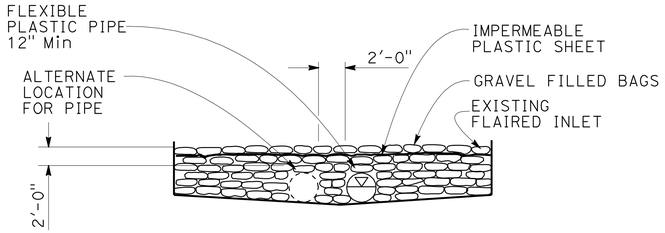

SECTION B-B

NOTE
1. EXACT LOCATION OF THE PLASTIC PIPE TO BE DETERMINED BY THE ENGINEER.
2. GRAVEL FILLED BAG ANCHORS TO BE PLACED AT INTERMEDIATE LOCATIONS AS DETERMINED BY THE ENGINEER.
3. USE FLEXIBLE PIPE WITH WATER TIGHT JOINTS.

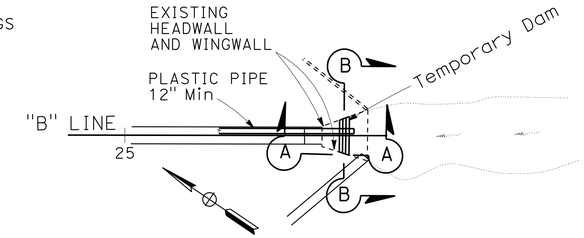

PLAN

TEMPORARY CREEK DIVERSION SYSTEM

2

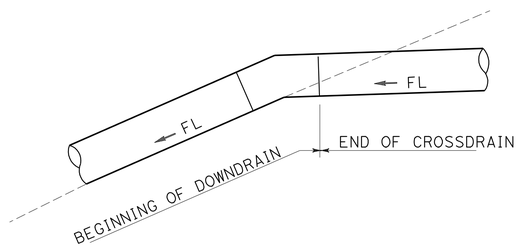

LIMITS OF MEASUREMENT FOR PAYMENT DOWNDRAIN

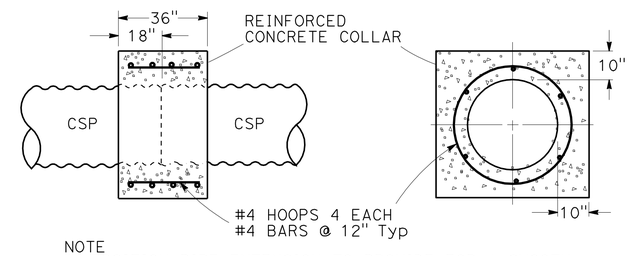

NOTE
1. POSITION PIPE EXTENSION TO PROVIDE FOR A SMOOTH TRANSITION AT THE PIPE FLOWLINE.
2. PLACE INTERIOR FORM TO PREVENT CONCRETE INTRUSION INTO PIPE INTERIOR.

REINFORCED CONCRETE COLLAR

4

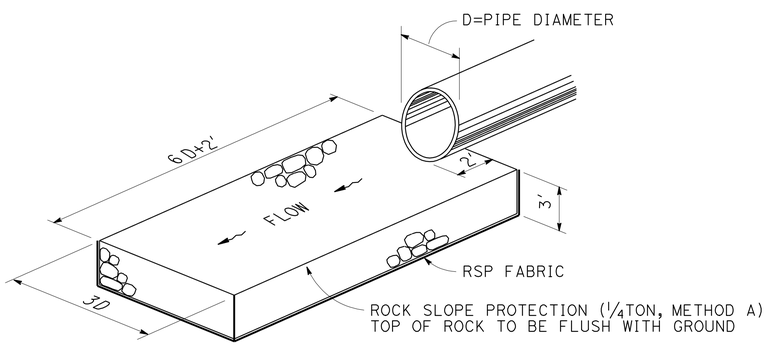

DIMENSIONS AS SHOWN OR AS DIRECTED BY THE ENGINEER.

ROCK ENERGY DISSIPATOR AT DRAINAGE OUTLET

7

DRAINAGE SYSTEM #	T
2	4"
5	2"

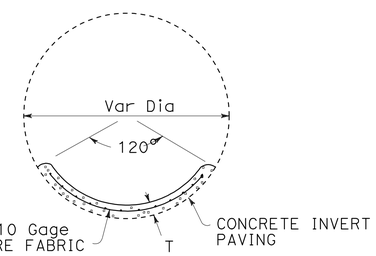

NOTE
1. AT INLET, ROUND INVERT PAVING WITH 3" RADIUS
2. Min 2" CONCRETE COVER OVER TOP OF PIPE CORRUGATIONS
3. WIRE MESH TO BE OMITTED FOR DRAINAGE SYSTEM # 5

CONCRETE INVERT PAVING

2 5

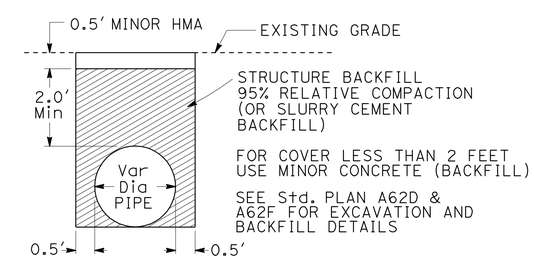

STRUCTURE BACKFILL UNDER EXISTING PAVEMENT

DRAINAGE DETAILS DD-2

NO SCALE

STATE OF CALIFORNIA - DEPARTMENT OF TRANSPORTATION
Caltrans DESIGN
FUNCTIONAL SUPERVISOR: Lucy Kostrzewa
CALCULATED-DESIGNED BY: Kemset Moore
CHECKED BY: Kemset Moore
REVISED BY
DATE REVISED

LAST REVISION 00-00-00
DATE PLOTTED => 12-JAN-2012
TIME PLOTTED => 08:38

Dist	COUNTY	ROUTE	POST MILES TOTAL PROJECT	SHEET No.	TOTAL SHEETS
01	Hum	101, 254	Var	14	28

Kemset Moore 1/11/12
REGISTERED CIVIL ENGINEER DATE

January 11, 2012
PLANS APPROVAL DATE

REGISTERED PROFESSIONAL ENGINEER Kemset K. Moore No. 64494 Exp. 6/30/13 CIVIL STATE OF CALIFORNIA

THE STATE OF CALIFORNIA OR ITS OFFICERS OR AGENTS SHALL NOT BE RESPONSIBLE FOR THE ACCURACY OR COMPLETENESS OF SCANNED COPIES OF THIS PLAN SHEET.

APC ALLOWABLE ALTERNATIVES

SYSTEM No.	GALVANIZED CSP 0.079" THICK	GALVANIZED CSP 0.138" THICK	GALVANIZED CSP 0.168" THICK	PLASTIC PIPE 0.050" THICK	RCP
1				X	X
3			X	X	X
5				X	X
6			X		
7		X		X	X
8				X	X
9				X	

NOTES

1. (N) NOT A SEPARATE PAY ITEM, FOR INFORMATION ONLY.
2. ALL CULVERT JOINTS SHALL BE POSITIVE.
3. THE JOINT CLASSIFICATION FOR DOWNDRAIN SHALL BE DOWNDRAIN.
4. LENGTH OF PIPES AND ANGLE OF ELBOWS SHALL BE VERIFIED IN THE FIELD BY THE CONTRACTOR.
5. FOR MINIMUM ALLOWABLE CLASS OF RCP SEE STANDARD PLAN A62D.
6. ALL PLASTIC PIPE SHALL BE SMOOTH INTERIOR WALL TYPE.

DRAINAGE QUANTITIES

ABANDON CULVERT (EA)	REMOVE FES (EA)	REMOVE INLET (EA)	REMOVE CULVERT (EA)	REMOVE DOWNDRAIN (EA)	REMOVE CONCRETE (CY)	24" ALTERNATIVE PIPE CULVERT (LF)	36" ALTERNATIVE PIPE CULVERT (LF)	30" CSP (0.138" THICK) (LF)	24" CSP DD (0.138" THICK) (LF)	30" CSP DD (0.138" THICK) (LF)	36" CSP INLET (0.138" THICK) (LF)	CONCRETE INVERT PAVING (CY)	24" ANCHOR ASSEMBLY (EA)	30" ANCHOR ASSEMBLY (EA)	36" SFES (EA)	REMOVE AC DIKE (LF)	PLACE HMA DIKE (TYPE A) (LF)	HMA (TYPE A) (TON)	IMPORTED BORROW (CY)	IMPORTED ROCKY MATERIAL (CY)	SAND BACKFILL (CY)	MINOR CONCRETE (MINOR STRUCTURE) (CY)	RSP (1/4TON, METHOD A) (CY)	MINOR CONCRETE (BACKFILL) (CY)	PLACE HMA (Misc AREA) (SQYD)	RSP FABRIC (SQYD)	CABLE RAILING (LF)	MISC IRON AND STEEL (LB)	MARKER (CULVERT) (EA)	(N) HEIGHT OF INLET "H" (LF)	(N) TYPE OF INLET	(N) TYPE OF GRATE	REMARKS	LOCATION	DRAINAGE UNIT	DRAINAGE SYSTEM NO.
			1																														36" x 22' CSP	PM 2.31	a	1
1																					10.5												36" x 40' CSP		b	
							47																												c	
															1																				d	
																							12			30							ROCK ENERGY DISSIPATOR		e	
																													2				LABEL "PM 2.31"		f	
												23.0																					54" x 396' CSP	PM R11.26	a	2
				1																													30" x 76' CSP DD		b	
										76																									c	
														3																					d	
			1																														24" x 84' CSP	PM R16.27	a	3
		1																																	b	
					1.54																												RETAINING WALL		c	
				1																													24" x 10' CSP DD		d	
							84																												e	
																						1.55						263		5.7	G1	24-9			f	
																						9.44											RETAINING WALL TYPE 1A		g	
									10																								45° & 55° ELBOWS		h	
																											17.2								i	
	1																																	PM 25.60	a	4
											5.0											0.36						177		4.5	OMP	PLATE		b	
																			47																c	
								5																											d	
																						0.40											FIELD CAST		e	
												0.1																					24" x 86' CSP	PM 28.37	a	5
				1																													24" x 60' CSP DD		b	
									60																								30° ELBOW		c	
													3																						d	
				1																													12" x 62' CSP DD	PM 66.25	a	6
			1																														12" x 19' CSP		b	
						19																													c	
									62																								20° ELBOW		d	
																				36													FILL SCOUR HOLE		e	
													2																						f	
																													1				LABEL "PM 66.25"		g	
			1																														18" x 14' CSP	PM 7.2	a	7
1																					2.7												18" x 40' CSP		b	
																						0.95						239		3	G1	24-12X			c	
						46																													d	
																							10			27							ROCK ENERGY DISSIPATOR		e	
																			2																f	
																								7.5											g	
			1																														36" x 44' CSP	PM 10.1	a	8
																						1.17						239		4	G1	24-12X			b	
							48																												c	
																			5																d	
																													2				LABEL "PM 10.10"		e	
	1																																		f	
		1																																PM 12.03	a	9
																						1.55						239		5.7	G1	24-12X			b	
						86																													c	
			1																														18" x 42' CSP		d	
1																					3.3												18" x 50' CSP		e	
																				2															f	
																		1.5							2.7										g	
																12																			h	
																	12	0.3																	i	
3	2	2	6	4	1.54	151	179	5	132	76	5.0	23.1	5	3	1	12	12	1.8	54	38	16.5	15.42	22	7.5	2.7	57	17.2	1157	5	TOTAL						

DRAINAGE QUANTITIES DQ-1

STATE OF CALIFORNIA - DEPARTMENT OF TRANSPORTATION
Caltrans DESIGN

FUNCTIONAL SUPERVISOR: Lucy Kostrzewa
CALCULATED-DESIGNED BY: Kemset Moore
CHECKED BY: Kemset Moore
REVISED BY / DATE REVISED

LAST REVISION 00-00-00 | DATE PLOTTED => 12-JAN-2012 | TIME PLOTTED => 08:38

DIST	COUNTY	ROUTE	POST MILES TOTAL PROJECT	SHEET NO.	TOTAL SHEETS
01	Hum	101, 254	var	15	28

REGISTERED CIVIL ENGINEER

November 17, 2006
PLANS APPROVAL DATE

REGISTERED PROFESSIONAL ENGINEER Dallas Forester No. C37765 Exp. 12-31-06 CIVIL STATE OF CALIFORNIA

The State of California or its officers or agents shall not be responsible for the accuracy or completeness of electronic copies of this plan sheet.

To accompany plans dated January 11, 2012

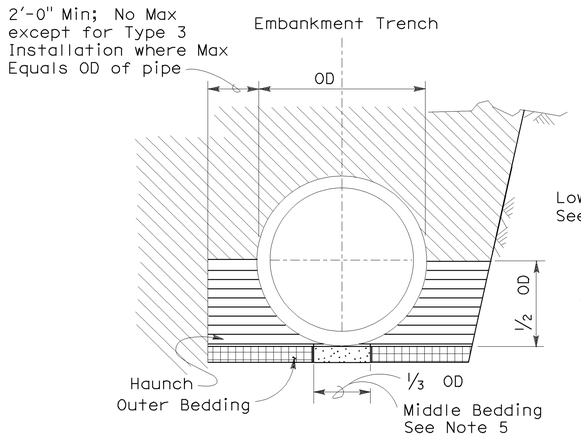

BACKFILL

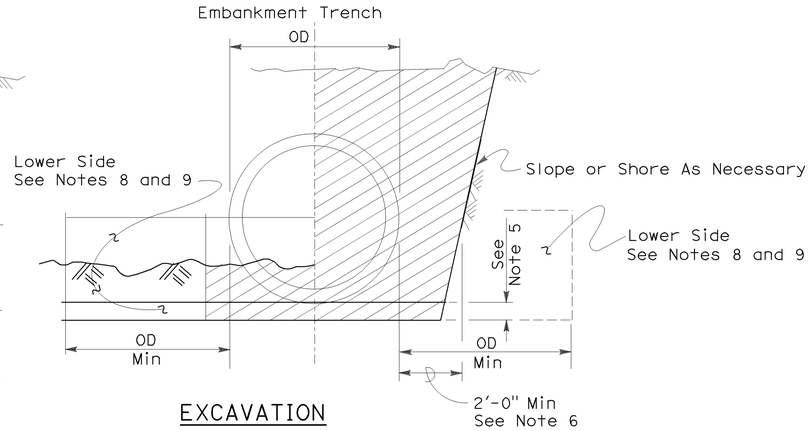

EXCAVATION

Roadway Embankment

Structure Backfill (Culvert) See Note 6

Structure Backfill (Culvert) See Note 6

Loose Backfill

Excavation Structure (Culvert)

TYPE 1 INSTALLATION:

The haunch and outer bedding shall be compacted to a minimum 90 percent relative compaction. In addition, the minimum sand equivalent in these areas shall be 30 and the maximum percentage passing the 75 μm sieve size shall be 12.

TYPE 2 INSTALLATION:

The haunch and outer bedding shall be compacted to a minimum 90 percent relative compaction. In addition, the minimum sand equivalent in these areas shall be 25.

TYPE 3 INSTALLATION:

The haunch and outer bedding shall be compacted to a minimum 85 percent relative compaction. 90 percent relative compaction will be required where the fill over the pipe is less than 4'-0" or 1/2 OD.

NOTES:

1. Unless otherwise shown on the plans or specified in the special provision, the Contractor shall have the option of selecting the class of RCP and the type of installation to be used, provided the height of cover does not exceed the value shown for the RCP selected.
   Example: 24" RCP culvert with maximum cover of 19'-0" the options are:
   a) Class III or stronger with Installation Type 1.
   b) Class III Special or stronger with Installation Type 2.
   c) Class IV Special or stronger with Installation Type 3.
   Cover is defined as the maximum vertical distance from top of the pipe to finished grade within the length of any given culvert.
2. The class of RCP and Installation Type selected shall be the same throughout the length of any given culvert.
3. The "length of any culvert" is defined as the culvert between:
   a) Successive drainage structure (inlets, junction boxes, headwalls, etc.).
   b) A drainage structure and the inlet or outlet end of the culvert.
   c) The inlet and outlet end of the culvert when there are no intervening drainage structures.
4. Oval and arch shaped RCP shall not be used.
5. 1/25 OD Min, not less than 3".
6. Slurry cement backfill may be substituted for backfill in the outer bedding and haunch areas. If slurry is used the outer and middle beddings shall be omitted. Prior to installation the soil under the middle 1/3 of the outside diameter of the pipe shall be softened by scarifying or other means to a minimum depth of 1/25 OD, but not less than 3". Where slurry cement backfill is used clear distance to trench wall may be reduced as set forth in Section 19-3.062 of the Standard Specifications.
7. Backfill shall be placed full width of excavation except where dimensions are shown for backfill width or thickness. Dimensions shown are minimums.
8. Lower side shall be suitable material as determined by the Engineer. Otherwise it shall be considered unsuitable as set forth in Section 19-2.02 of the Standard Specifications. See Note 9.
9. Where the pipe is placed in a trench, if the trench walls are sloped at 5 vertical to 1 horizontal or steeper for at least 90 percent of the trench height or up to not less than 12" from the grading plane, the firmness of the soil in the lower side need not be considered.
10. Non-reinforced precast concrete pipe sizes 3'-0" or smaller may be placed under installation Types 1, 2 or 3.

INSTALLATION TYPE 1

MINIMUM CLASS AND D-LOAD	COVER	
	108" Dia AND SMALLER	OVER 108" Dia
Class II 1000D	14.9'	12.9'
Class III 1350D	15.0' - 20.9'	13.0' - 18.9'
Class III Special 1700D	21.0' - 26.9'	19.0' - 24.9'
Class IV 2000D	27.0' - 31.9'	25.0' - 29.9'
Class IV Special 2500D	32.0' - 40.9'	30.0' - 38.9'
Class V 3000D	41.0' - 49.9'	39.0' - 46.9'
Class V Special 3600D	50.0' - 59.0'	47.0' - 58.0'

INSTALLATION TYPE 2

MINIMUM CLASS AND D-LOAD	COVER
Class II 1000D	9.9'
Class III 1350D	10.0'- 14.9'
Class III Special 1700D	15.0' - 19.9'
Class IV 2000D	20.0' - 24.9'
Class IV Special 2500D	25.0' - 31.9'
Class V 3000D	32.0' - 38.9'
Class V Special 3600D	39.0' - 47.0'

INSTALLATION TYPE 3

MINIMUM CLASS AND D-LOAD	COVER	
	48" Dia AND SMALLER	OVER 48" Dia
Class II 1000D	7.9'	5.9'
Class III 1350D	8.0' - 10.9'	6.0' - 8.9'
Class III Special 1700D	11.0' - 14.9'	9.0' - 12.9'
Class IV 2000D	15.0' - 17.9'	13.0' - 15.9'
Class IV Special 2500D	18.0' - 21.9'	16.0' - 19.9'
Class V 3000D	22.0' - 26.9'	20.0' - 24.9'
Class V Special 3600D	30.0' - 33.0'	25.0' - 31.0'

STATE OF CALIFORNIA
DEPARTMENT OF TRANSPORTATION

EXCAVATION AND BACKFILL CONCRETE PIPE CULVERTS

NO SCALE

RSP A62DA DATED NOVEMBER 17, 2006 SUPERSEDES STANDARD PLAN A62DA DATED MAY 1, 2006 - PAGE 20 OF THE STANDARD PLANS BOOK DATED MAY 2006.

REVISED STANDARD PLAN RSP A62DA

2006 REVISED STANDARD PLAN RSP A62DA

10-26-06

DIST	COUNTY	ROUTE	POST MILES TOTAL PROJECT	SHEET NO.	TOTAL SHEETS
01	Hum	101, 254	var	16	28

REGISTERED CIVIL ENGINEER

June 6, 2008
PLANS APPROVAL DATE

REGISTERED PROFESSIONAL ENGINEER Raymond Don Tsztoo No. C37332 Exp. 6-30-08 CIVIL STATE OF CALIFORNIA

The State of California or its officers or agents shall not be responsible for the accuracy or completeness of electronic copies of this plan sheet.

To accompany plans dated January 11, 2012

ANNULAR AND HELICAL PROFILE

COUPLING TYPE	PIPE CORRUGATION	PIPE SIZE	W OR A	PIPE WALL THICKNESS CSP	PIPE WALL THICKNESS CAP	BAND THICKNESS CSP	BAND THICKNESS CAP	BAR AND STRAP (CSP ONLY) STRAP THICKNESS	BOLTS Dia	BAR Dia	BAR YIELD STRENGTH	ANGLE DIMENSIONS CSP	ANGLE DIMENSIONS CAP	BOLTS (No. - Dia) CSP	BOLTS (No. - Dia) CAP	RIVETS ANGLE TO BAND CSP	RIVETS ANGLE TO BAND CAP	SPOT WELDS ANGLE TO BAND CSP
TWO PIECE INTEGRAL FLANGE	1½" × ¼"	6"-10"	7"	0.064"-0.079"	0.060"	0.064"	0.060"							2-⅜"	2-⅜"			
	2⅔" × ½"	12"-24"	12"		0.060"-0.105"		0.060"								3-½"			
UNIVERSAL	2⅔" × ½"	THROUGH 36"	12"	0.064"-0.138"	0.060"-0.135"	0.064"	0.060"	0.079"	½"	⅞"	32 ksi	2" × 2" × 3/16"	2" × 2" × 3/16"	3-½"	3-½"	3-⅜"	3-⅜"	5-½"
		42"-60"	16¼"	0.064"-0.168"	0.060"-0.164"	0.064"	0.060"	DOUBLE 0.079"	½"	⅞"	32 ksi	2" × 2" × ¼"	2" × 2" × ¼"	4-½"	4-½"	5-⅜"	5-⅜"	
ANNULAR	2⅔" × ½"	THROUGH 36"	12"	0.064"-0.138"	0.060"-0.135"	0.064"	0.060"					2" × 2" × 3/16"	2" × 2" × 3/16"	3-½"	3-½"	3-⅜"	3-⅜"	5-½"
		42"-60"	12"	0.064"-0.079"		0.064"						2" × 2" × 3/16"		3-½"		3-⅜"		5-½"
		42"-60"	12"	0.109"-0.168"	0.135"-0.164"	0.064"	0.075"					2" × 2" × ¼"	2" × 2" × ¼"	3-½"	3-½"	5-⅜"	5-⅜"	
		66"-72"	24"		0.164"		0.105"						2" × 2" × ¼"		5-½"		5-½"	
		66"-84"	24"	0.109"-0.168"		0.064"						2" × 2" × ¼"		5-½"		7-⅜"		
		42"-54"	12"		0.060"-0.105"		0.060"						2" × 2" × 3/16"		3-½"		3-⅜"	
	3" × 1"	48"-60"	14"	0.064"-0.079"		0.064"						2" × 2" × 3/16"		3-½"		3-⅜"		5-½"
		48"-60"	14"	0.109"		0.064"						2" × 2" × 3/16"		3-½"		5-⅜"		
		66"-120"	25"	0.064"-0.109"		0.064"						2" × 2" × 3/16"		5-½"		9-⅜"		
		42"-60"	14"		0.060"-0.105"		0.060"						2" × 2" × 3/16"		3-½"		5-⅜"	
		42"-60"	14"		0.135"		0.075"						2" × 2" × ¼"		3-½"		5-⅜"	
		66"-96"	25"		0.060"-0.135"		0.060"						2" × 2" × ¼"		5-½"		7-⅜"	
		96"-108"	25"		0.135"		0.075"						2" × 2" × ¼"		5-½"		7-⅜"	
HELICAL	2⅔" × ½"	THROUGH 36"	12"	0.064"-0.138"	0.060"-0.135"	0.064"	0.060"					2" × 2" × 3/16"	2" × 2" × 3/16"	3-½"	3-½"	3-⅜"	3-⅜"	5-½"
		42"-54"	12"		0.060"-0.105"		0.060"						2" × 2" × 3/16"		3-½"		3-⅜"	
		42"-60"	12"	0.064"-0.079"		0.064"						2" × 2" × 3/16"		3-½"		3-⅜"		5-½"
		42"-60"	12"	0.109"-0.168"	0.135"-0.164"	0.064"	0.075"					2" × 2" × ¼"	2" × 2" × ¼"	3-½"	3-½"	5-⅜"	5-⅜"	
		66'-84"	24"	0.109"-0.168"		0.064"						2" × 2" × ¼"		5-½"		7-⅜"		
		66"-72"	24"		0.164"		0.105"						2" × 2" × ¼"		5-½"		5-⅜"	
	3" × 1"	48"-60"	14"	0.064"-0.079"		0.064"						2" × 2" × 3/16"		3-½"		3-⅜"		5-½"
		48"-60"	14"	0.109"		0.064"						2" × 2" × 3/16"		3-½"		5-⅜"		
		66"-120"	25"	0.064"-0.109"		0.064"						2" × 2" × 3/16"		5-½"		9-⅜"		
		42"-60"	14"		0.060"-0.105"		0.060"						2" × 2" × 3/16"		3-½"		5-⅜"	
		42"-60"	14"		0.135"		0.075"						2" × 2" × ¼"		3-½"		5-⅜"	
		66"-96"	25"		0.060"-0.135"		0.060"						2" × 2" × ¼"		5-½"		7-⅜"	
		96"-108"	25"		0.135"		0.075"						2" × 2" × ¼"		5-½"		7-⅜"	
HUGGER	2⅔" × ½" REROLLED END	THROUGH 48"	10½"	0.109"		0.064"		0.079"	½"	⅞"	32 ksi							
		54"- 66"	10½"	0.109"		0.064"		DOUBLE 0.079"	½"	⅞"	32 ksi							
		THROUGH 54"	10½"	0.064"-0.079"		0.064"		0.079"	½"	⅞"	32 ksi							
		THROUGH 60"	10½"	0.138"		0.079"		DOUBLE 0.079"	½"	⅞"	32 ksi							
		66"-72"	10½"	0.138"		0.109"		DOUBLE 0.079"	½"	⅞"	32 ksi							
		THROUGH 72"	10½"	0.168"		0.109"		DOUBLE 0.109"	½"	⅞"	45 ksi							
	3" × 1" REROLLED END	48"-84"	10½"	0.109"		0.079"		DOUBLE 0.079"	½"	⅞"	32 ksi							
		48"-90"	10½"	0.064"-0.079"		0.064"		DOUBLE 0.079"	½"	⅞"	32 ksi							
		96"-102"	10½"	0.079"		0.079"		DOUBLE 0.079"	½"	⅞"	32 ksi							
		90"-120"	10½"	0.109"		0.109"		DOUBLE 0.109"	½"	⅞"	45 ksi							

SPIRAL RIB PROFILE

COUPLING TYPE	PIPE CORRUGATION	PIPE SIZE	W	PIPE WALL THICKNESS SSRP	PIPE WALL THICKNESS ASRP	BAND THICKNESS SSRP	BAND THICKNESS ASRP	BAR AND STRAP (SSRP ONLY) STRAP THICKNESS	BOLTS Dia	BAR Dia	BAR YIELD STRENGTH	ANGLE DIMENSIONS SSRP	ANGLE DIMENSIONS ASRP	BOLTS (No.- Dia) SSRP	BOLTS (No.- Dia) ASRP	RIVETS ANGLE TO BAND SSRP	RIVETS ANGLE TO BAND ASRP	SPOT WELDS ANGLE TO BAND SSRP
ANNULAR	2⅔" × ½" * REROLLED END	24"-36"	12"	0.064"-0.109"	0.060"-0.105"	0.064"	0.060"	0.079"	½"	⅞"	32 ksi	2" × 2" × 3/16"	2" × 2" × 3/16"	3-½"	3-½"	3-⅜"	3-⅜"	5-½"
		42"-60"	12"	0.064"-0.079"	0.075"-0.105"	0.064"	0.075"	0.079"	½"	⅞"	32 ksi	2" × 2" × 3/16"	2" × 2" × 3/16"	3-½"	3-½"	3-⅜"	3-⅜"	5-½"
		42"-60"	12"	0.109"		0.064"		0.079"	½"	⅞"	32 ksi	2" × 2" × ¼"		3-½"		5-⅜"		
		66"-84"	24"	0.109"		0.064"		0.079"	½"	⅞"	32 ksi	2" × 2" × ¼"		5-½"		7-⅜"		
HUGGER	2⅔" × ½" * REROLLED END	24"-54"	10½"	0.064"-0.079"		0.064"		0.079"	½"	⅞"	32 ksi							
		24"-48"	10½"	0.109"		0.064"		0.079"	½"	⅞"	32 ksi							
		54"-66"	10½"	0.109"		0.064"		Double 0.079"	½"	⅞"	32 ksi							

* See Note 13.

NOTES:

1. All ferrous metal coupling band connection hardware shall be galvanized or electroplated in accordance with the Standard Specifications.
2. For helically corrugated coupling bands, the connection angles may be oriented parallel to the pipe axis, provided connecting holes are slotted lengthwise sufficiently to allow adjustment for the helix angle.
3. Tension strap may be connected to band with either spot welds or fillet welds that develop minimum required strength of strap.
4. Use 1¼" gage line dimension on attached angle leg for rivets and spot welds.
5. Band thickness shall not be less than:
   a. 3 standard thicknesses lighter than the thickness of the pipe for Corrugated Steel Pipe.
   b. 2 standard thicknesses lighter than the thickness of the pipe and in no case lighter than 0.060" for Corrugated Aluminum Pipe.
6. Dimensions, thicknesses and strengths shown are minimum.
7. For pipe arches use same width band as for round pipe of equal periphery.
8. Fillet welds of equivalent strength may be substituted for spot welds or rivets.
9. Spot welds shall develop minimum required strength of strap.
10. Pipe with rerolled ends having at least two 2⅔" × ½" annular corrugations at each end with or without an upturned flange may be connected with any of the annular coupling bands shown for pipe of the same diameter and wall thickness and having 2⅔" × ½" corrugations.
11. In the case of H-12 huggerbands, two piece bands are required for diameters through 96" and three piece bands are required for diameters 102" through 120".
12. Two piece bands are required for pipes greater than 42" diameter.
13. All profiles of Spiral Rib Pipe (¾" × ¾" ribs at 7½" pitch and ¾" × 1" ribs at 11½" pitch in both steel and aluminum and ¾" × 1" ribs at 8½" pitch in steel only) shall be manufactured with rerolled ends. Corrugation profile of the rerolled ends shall be 2⅔" × ½" annual corrugations with a minimum of two full corrugations at each end.

STATE OF CALIFORNIA
DEPARTMENT OF TRANSPORTATION

CORRUGATED METAL PIPE COUPLING DETAILS No. 6 POSITIVE JOINT

NO SCALE

RSP D97F DATED JUNE 6, 2008 SUPERSEDES STANDARD PLAN D97F
DATED MAY 1, 2006 - PAGE 188 OF THE STANDARD PLANS BOOK DATED MAY 2006.

REVISED STANDARD PLAN RSP D97F

2006 REVISED STANDARD PLAN RSP D97F

4-2-08

DIST	COUNTY	ROUTE	POST MILES TOTAL PROJECT	SHEET NO.	TOTAL SHEETS
01	Hum	101, 254	var	17	28

Raymond Don Tsztoo
REGISTERED CIVIL ENGINEER

June 6, 2008
PLANS APPROVAL DATE

REGISTERED PROFESSIONAL ENGINEER
Raymond Don Tsztoo
No. C37332
Exp. 6-30-08
CIVIL
STATE OF CALIFORNIA

The State of California or its officers or agents shall not be responsible for the accuracy or completeness of electronic copies of this plan sheet.

To accompany plans dated January 11, 2012

ANNULAR AND HELICAL PROFILE

COUPLING TYPE	PIPE CORRUGATION	PIPE SIZE	W OR A	PIPE WALL THICKNESS		BAND THICKNESS		BAR AND STRAP (CSP ONLY)			ANGLE						
											DIMENSIONS		BOLTS (No.- Dia)		RIVETS ANGLE TO BAND		SPOT WELDS ANGLE TO BAND
				CSP	CAP	CSP	CAP	STRAP THICKNESS	BOLTS Dia	BAR Dia	CSP	CAP	CSP	CAP	CSP	CAP	CSP
TWO PIECE INTEGRAL FLANGE	1½′ × ¼″	6″	7″	0.064″-0.168″		0.052″							3-⅜″				
	1½′ × ¼″	8″-10″	7″	0.064″-0.168″	0.060″-0.164″	0.064″	0.060″						3-⅜″	3-⅜″			
ANNULAR	2⅔″ × ½″	THROUGH 24″	12″	0.064″-0.168″	0.060″-0.164″	0.064″	0.060″				2″ × 2″ × 3/16″	2″ × 2″ × 3/16″	3-½″	3-½″	3-⅜″	3-⅜″	3-½″
HUGGER	2⅔″ × ½″ REROLLED END	THROUGH 24″	10½″	0.064″-0.168″		0.064″		0.079″	½″	⅞″							

SPIRAL RIB PROFILE

COUPLING TYPE	PIPE CORRUGATION	PIPE SIZE	W	PIPE WALL THICKNESS		BAND THICKNESS		BAR AND STRAP (SSRP ONLY)			ANGLE						
											DIMENSIONS		BOLTS (No.- Dia)		RIVETS ANGLE TO BAND		SPOT WELDS ANGLE TO BAND
				SSRP	ASRP	SSRP	ASRP	STRAP THICKNESS	BOLTS Dia	BAR Dia	SSRP	ASRP	SSRP	ASRP	SSRP	ASRP	SSRP
ANNULAR	2⅔″ × ½″ * REROLLED END	24″	12″	0.064″-0.168″	0.060″-0.164″	0.064″	0.060″				2″ × 2″ × 3/16″	2″ × 2″ × 3/16″	3-½″	3-½″	3-⅜″	3-⅜″	3-½″
HUGGER	2⅔″ × ½″ * REROLLED END	24″	10½″	0.064″-0.168″		0.064″		0.079″	½″	⅞″							

* See Note 12.

NOTES:

1. All ferrous metal coupling band connection hardware shall be galvanized or electro-plated in accordance with the Standard Specifications.
2. For helically corrugated coupling bands, the connection angles may be oriented parallel to the pipe axis, provided connecting holes are slotted lengthwise sufficiently to allow adjustment for the helix angle.
3. Tension strap may be connected to band with either spot welds or fillet welds that develop minimum required strength of strap.
4. Use 1¼″ gage line dimension on attached angle leg for rivets and spot welds.
5. Band thickness shall not be less than:
   a. 3 standard thicknesses lighter than the thickness of the pipe for Corrugated Steel Pipe.
   b. 2 standard thicknesses lighter than the thickness of the pipe and in no case lighter than 0.060″ for Corrugated Aluminum Pipe.
6. Dimensions, thicknesses and strengths shown are minimum.
7. For pipe arches use same width band as for round pipe of equal periphery.
8. Fillet welds of equivalent strenght may be substituted for spot welds or rivets.
9. Spot welds shall develop minimum required strength of strap.
10. Pipe with rerolled ends having at least two 2⅔″ × ½″ annular corrugations at each end with or without an upturned flange may be connected with any of the annular coupling bands shown for pipe of the same diameter and wall thickness and having 2⅔″ × ½″ corrugations.
11. For downdrain applications, two piece integral flange couplers shall have factory applied sleeve type rubber gaskets with a minimum length of 7″ measured along the length of the pipe.
12. All profiles of Spiral Rib Pipe (¾″ × ¾″ ribs at 7½″ pitch and ¾″ × 1″ ribs at 11½″ pitch in both steel and aluminum and ¾″ × 1″ ribs at 8½″ pitch in steel only) shall be manufactured with rerolled ends. Corrugation profile of the rerolled ends shall be 2⅔″ × ½″ annual corrugations with a minimum of two full corrugations at each end.

STATE OF CALIFORNIA
DEPARTMENT OF TRANSPORTATION

CORRUGATED METAL PIPE COUPLING DETAILS No. 7 DOWNDRAIN

NO SCALE

RSP D97G DATED JUNE 6, 2008 SUPERSEDES STANDARD PLAN D97G
DATED MAY 1, 2006 - PAGE 189 OF THE STANDARD PLANS BOOK DATED MAY 2006.

REVISED STANDARD PLAN RSP D97G

2006 REVISED STANDARD PLAN RSP D97G

4-4-08

DIST	COUNTY	ROUTE	POST MILES TOTAL PROJECT	SHEET NO.	TOTAL SHEETS
01	Hum	101, 254	var	18	28

Randell D. Hiatt
REGISTERED CIVIL ENGINEER

June 6, 2008
PLANS APPROVAL DATE

REGISTERED PROFESSIONAL ENGINEER
Randell D. Hiatt
No. C50200
Exp. 6-30-09
CIVIL
STATE OF CALIFORNIA

The State of California or its officers or agents shall not be responsible for the accuracy or completeness of electronic copies of this plan sheet.

To accompany plans dated January 11, 2012

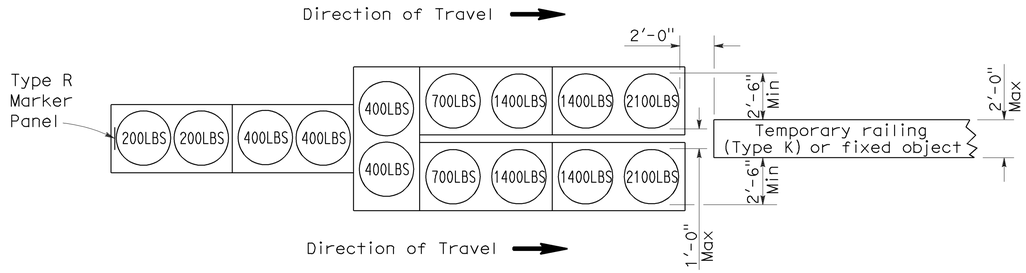

ARRAY 'TU14'

Approach speed 45 mph or more

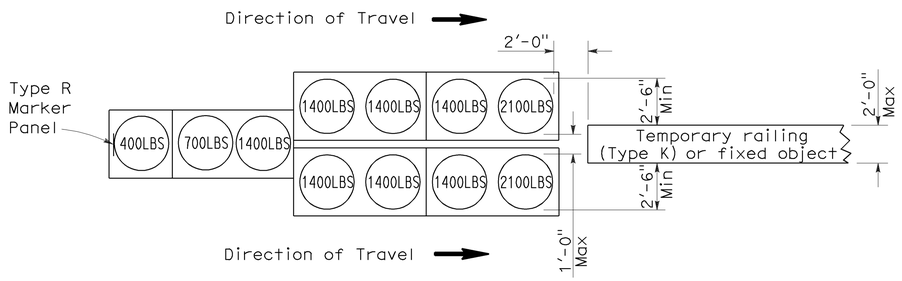

ARRAY 'TU11'

Approach speed less than 45 mph

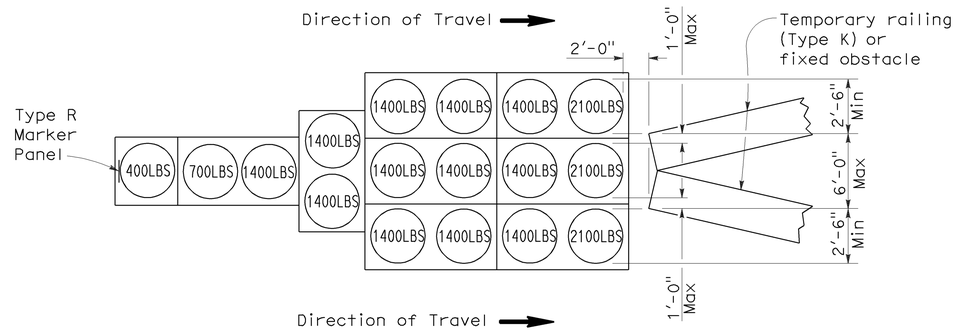

ARRAY 'TU17'

Approach speed less than 45 mph

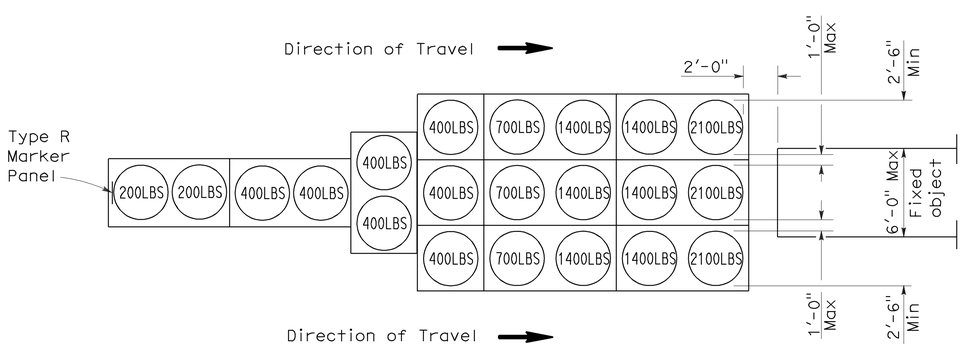

ARRAY 'TU21'

Approach speed 45 mph or more

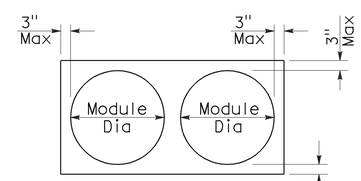

PLAN

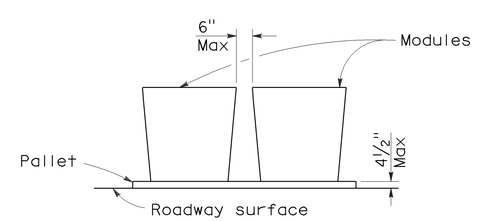

ELEVATION

CRASH CUSHION PALLET DETAIL

See Note 7

NOTES:

1. (XXX) Indicates sand filled module location and weight of sand in pounds for each module. Module spacing is based on the greater diameter of the module.
2. All sand weights are nominal.
3. Temporary crash cushion arrays shall not encroach on the traveled way.
4. Place the top of Type R marker panel 1" below the module lid.
5. Refer to Standard Plan A73B for marker details.
6. Approach speeds indicated conform to NCHRP 350 Report criteria.
7. Use of pallets is optional.

STATE OF CALIFORNIA
DEPARTMENT OF TRANSPORTATION

TEMPORARY CRASH CUSHION, SAND FILLED (UNIDIRECTIONAL)

NO SCALE

RSP T1A DATED JUNE 6, 2008 SUPERSEDES STANDARD PLAN T1A
DATED MAY 1, 2006 - PAGE 211 OF THE STANDARD PLANS BOOK DATED MAY 2006.

REVISED STANDARD PLAN RSP T1A

2006 REVISED STANDARD PLAN RSP T1A

DIST	COUNTY	ROUTE	POST MILES TOTAL PROJECT	SHEET NO.	TOTAL SHEETS
01	Hum	101, 254	var	19	28

Randell D. Hiatt
REGISTERED CIVIL ENGINEER

June 6, 2008
PLANS APPROVAL DATE

REGISTERED PROFESSIONAL ENGINEER
Randell D. Hiatt
No. C50200
Exp. 6-30-09
CIVIL
STATE OF CALIFORNIA

The State of California or its officers or agents shall not be responsible for the accuracy or completeness of electronic copies of this plan sheet.

To accompany plans dated January 11, 2012

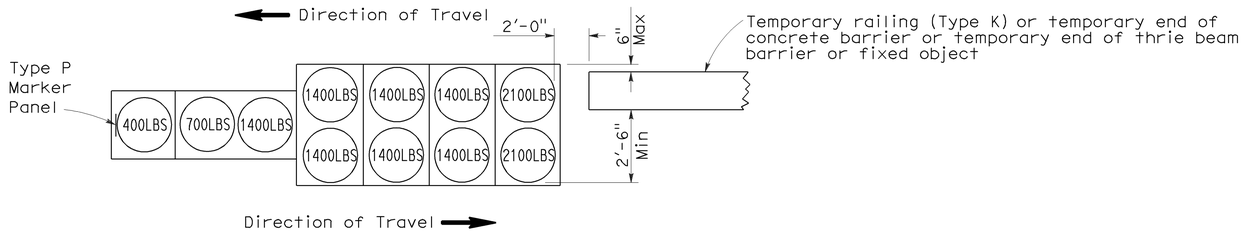

ARRAY 'TB11'

Approach speed less than 45 mph

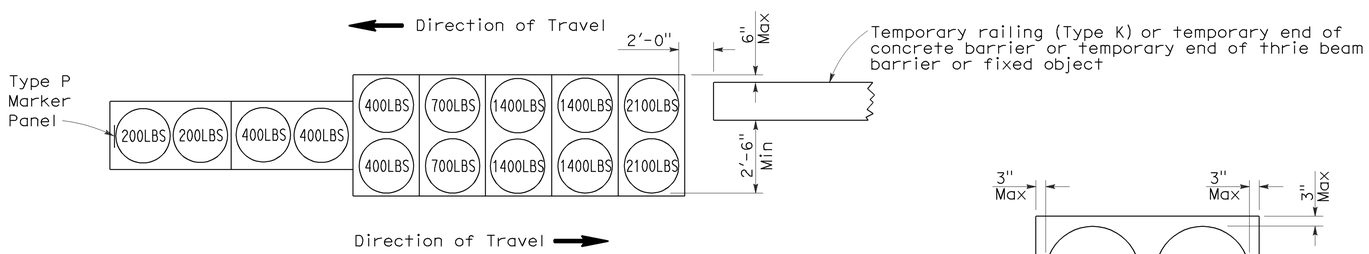

ARRAY 'TB14'

Approach speed 45 mph or more

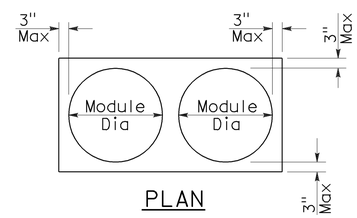

PLAN

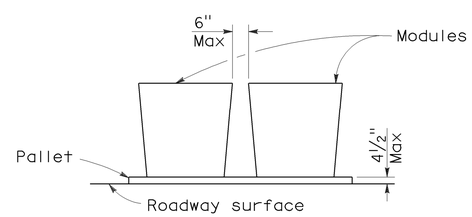

ELEVATION

CRASH CUSHION PALLET DETAIL

See Note 7

NOTES:

1. (XXX) Indicates sand filled module location and weight of sand in pounds for each module. Module spacing is based on the greater diameter of the module.
2. All sand weights are nominal.
3. Temporary crash cushion arrays shall not encroach on the traveled way.
4. Place the Type P marker panel so that the bottom of the panel rests upon the pallet.
5. Refer to Standard Plan A73B for marker details.
6. Approach speeds indicated conform to NCHRP 350 Report criteria.
7. Use of pallets is optional.

STATE OF CALIFORNIA
DEPARTMENT OF TRANSPORTATION

TEMPORARY CRASH CUSHION, SAND FILLED (BIDIRECTIONAL)

NO SCALE

RSP T1B DATED JUNE 6, 2008 SUPERSEDES STANDARD PLAN T1B
DATED MAY 1, 2006 - PAGE 212 OF THE STANDARD PLANS BOOK DATED MAY 2006.

REVISED STANDARD PLAN RSP T1B

2006 REVISED STANDARD PLAN RSP T1B

5-15-08

DIST	COUNTY	ROUTE	POST MILES TOTAL PROJECT	SHEET NO.	TOTAL SHEETS
01	Hum	101, 254	var	20	28

Randell D. Hiatt
REGISTERED CIVIL ENGINEER

June 6, 2008
PLANS APPROVAL DATE

REGISTERED PROFESSIONAL ENGINEER
Randell D. Hiatt
No. C50200
Exp. 6-30-09
CIVIL
STATE OF CALIFORNIA

The State of California or its officers or agents shall not be responsible for the accuracy or completeness of electronic copies of this plan sheet.

To accompany plans dated January 11, 2012

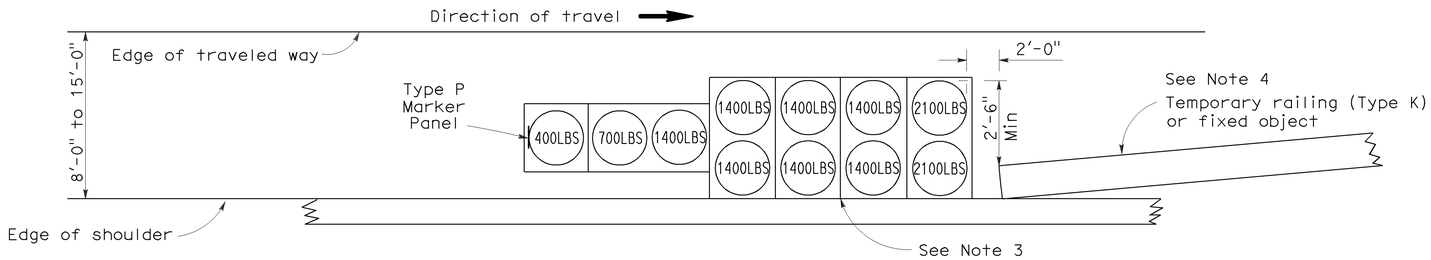

ARRAY 'TS11'

Approach speed less than 45 mph
See Note 9

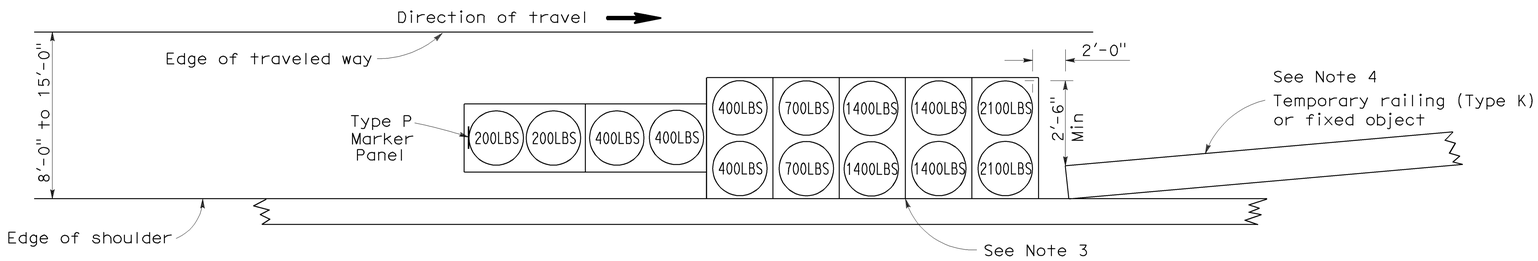

ARRAY 'TS14'

Approach speed 45 mph or more
See Note 9

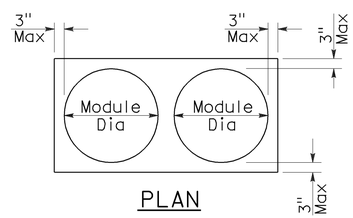

PLAN

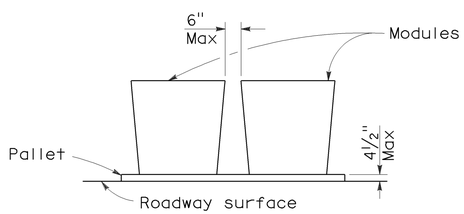

ELEVATION

CRASH CUSHION PALLET DETAIL

See Note 11

NOTES:

1. (XXX) Indicates sand filled module location and weight of sand in pounds for each module. Module spacing is based on the greater diameter of the module.
2. All sand weights are nominal.
3. The temporary crash cushion arrays shown on this plan shall be used only in locations where there will be traffic on one side of the temporary crash cushion array.
4. If the fixed object or approach end of the temporary railing is less than 15'-0" from the edge of traveled way, a temporary crash cushion is required in a construction or work zone.
5. Temporary crash cushion arrays shall not encroach on the traveled way.
6. Arrays for median shoulders shall conform to details shown on this plan for outside shoulders.
7. Place the Type P marker panel so that the bottom of the panel rests upon the pallet and faces traffic.
8. Refer to Standard Plan A73B for marker details.
9. For shoulder widths less than 8'-0", appropriate approved crash cushion protection, other than sand filled modules, shall be provided at fixed objects and at approach ends of temporary railing. The specific type of crash cushion shall be as shown on the project plans or as specified in the Special Provisions, or if not shown on the project plans or specified in the Special Provisions, shall be as approved by the Engineer.
10. Approach speeds indicated conform to NCHRP 350 Report criteria.
11. Use of pallets is optional.

STATE OF CALIFORNIA
DEPARTMENT OF TRANSPORTATION

TEMPORARY CRASH CUSHION, SAND FILLED (SHOULDER INSTALLATIONS)

NO SCALE

RSP T2 DATED JUNE 6, 2008 SUPERSEDES STANDARD PLAN T2
DATED MAY 1, 2006 - PAGE 213 OF THE STANDARD PLANS BOOK DATED MAY 2006.

REVISED STANDARD PLAN RSP T2

2006 REVISED STANDARD PLAN RSP T2

5-15-08

Dist	COUNTY	ROUTE	POST MILES TOTAL PROJECT	SHEET No.	TOTAL SHEETS
01	Hum	101, 254	var	21	28

Randell D. Hiatt
REGISTERED CIVIL ENGINEER

May 20, 2011
PLANS APPROVAL DATE

REGISTERED PROFESSIONAL ENGINEER
Randell D. Hiatt
No. C50200
Exp. 6-30-11
CIVIL
STATE OF CALIFORNIA

The State of California or its officers or agents shall not be responsible for the accuracy or completeness of electronic copies of this plan sheet.

To accompany plans dated January 11, 2012

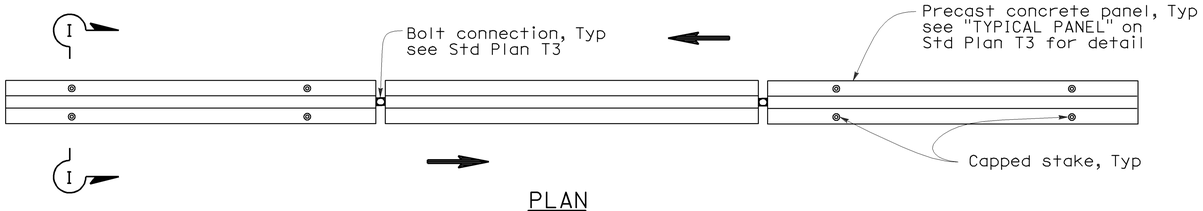

PLAN

RAILING STAKING CONFIGURATION FOR TWO-WAY TRAFFIC

See Note 1

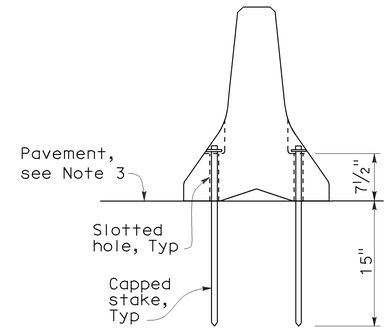

SECTION I-I

NOTES:

1. Where Type K Temporary Railing is placed as a temporary or long term barrier in two-way traffic on highways with less than 24" from the edge of traveled way, use four capped stakes per every other panel with end panels staked.
2. Where Type K Temporary Railing is placed 3" to 24" from the edge of an excavation on highways, use two capped stakes per panel along the traffic side.
3. Staked Type K Temporary Railing must be supported by at least 4" thick concrete, hot mix asphalt or existing asphalt concrete pavement.
4. The minimum yield strength for the washer must be 60,000 psi.
5. Direction of adjacent traffic indicated by ⟹.

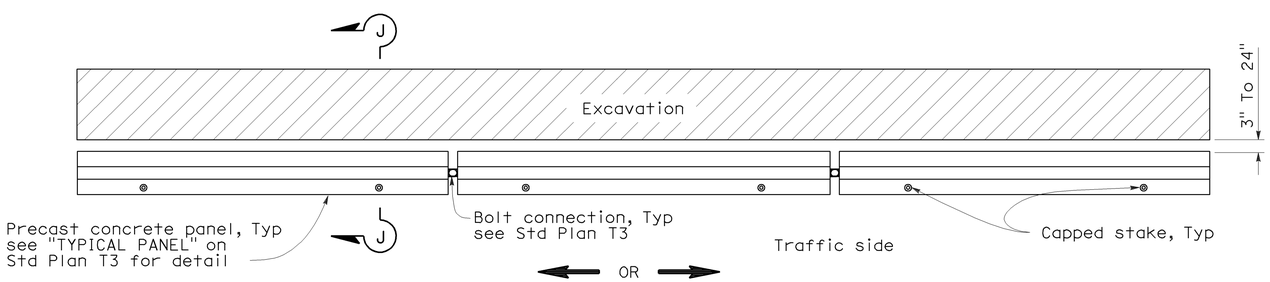

PLAN

RAILING STAKING CONFIGURATION ADJACENT TO AN EXCAVATION

See Note 2

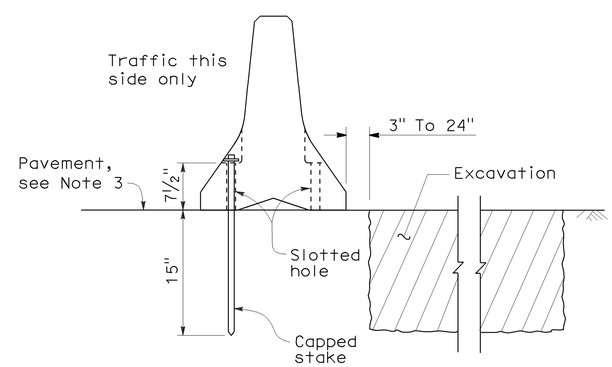

SECTION J-J

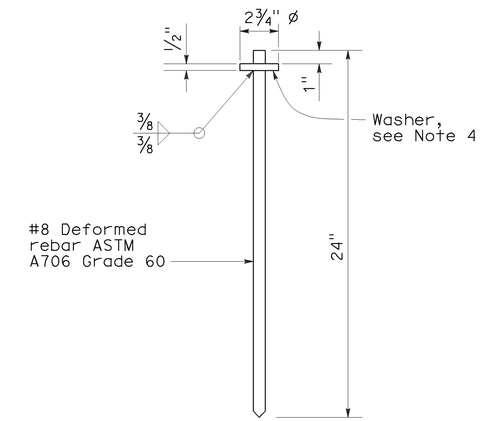

CAPPED STAKE DETAIL

STATE OF CALIFORNIA
DEPARTMENT OF TRANSPORTATION

TEMPORARY RAILING (TYPE K)

NO SCALE

NSP T3A DATED MAY 20, 2011 SUPPLEMENTS
THE STANDARD PLANS BOOK DATED MAY 2006.

NEW STANDARD PLAN NSP T3A

2006 NEW STANDARD PLAN NSP T3A

DIST	COUNTY	ROUTE	POST MILES TOTAL PROJECT	SHEET NO.	TOTAL SHEETS
01	Hum	101, 254	var	22	28

Robert B Schott
LICENSED LANDSCAPE ARCHITECT

April 3, 2009
PLANS APPROVAL DATE

The State of California or its officers or agents shall not be responsible for the accuracy or completeness of electronic copies of this plan sheet.

LICENSED LANDSCAPE ARCHITECT
Robert B. Schott 3635
Robert B Schott
11-30-10
Renewal Date
2-25-09
Date
STATE OF CALIFORNIA

To accompany plans dated January 11, 2012

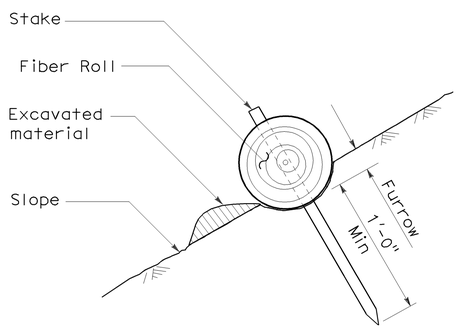

SECTION

TEMPORARY FIBER ROLL (TYPE 1)

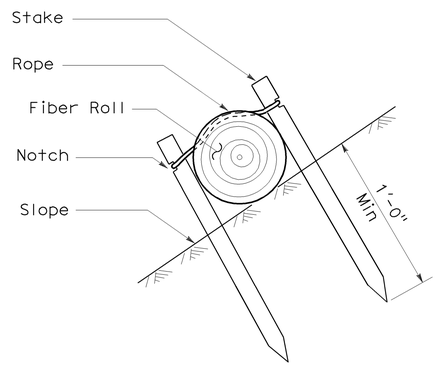

SECTION

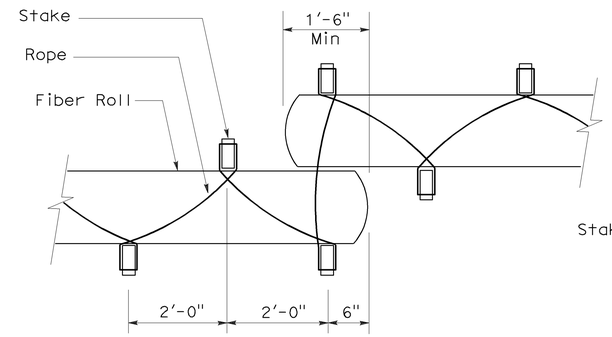

PLAN

TEMPORARY FIBER ROLL (TYPE 2)

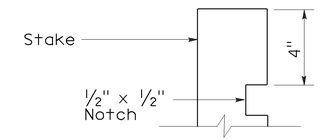

ELEVATION

STAKE NOTCH DETAIL

NOTES:

1. Temporary fiber roll spacing varies depending upon slope inclination.
2. Installations shown in the perspectives are for slope inclination of 10:1 and steeper.

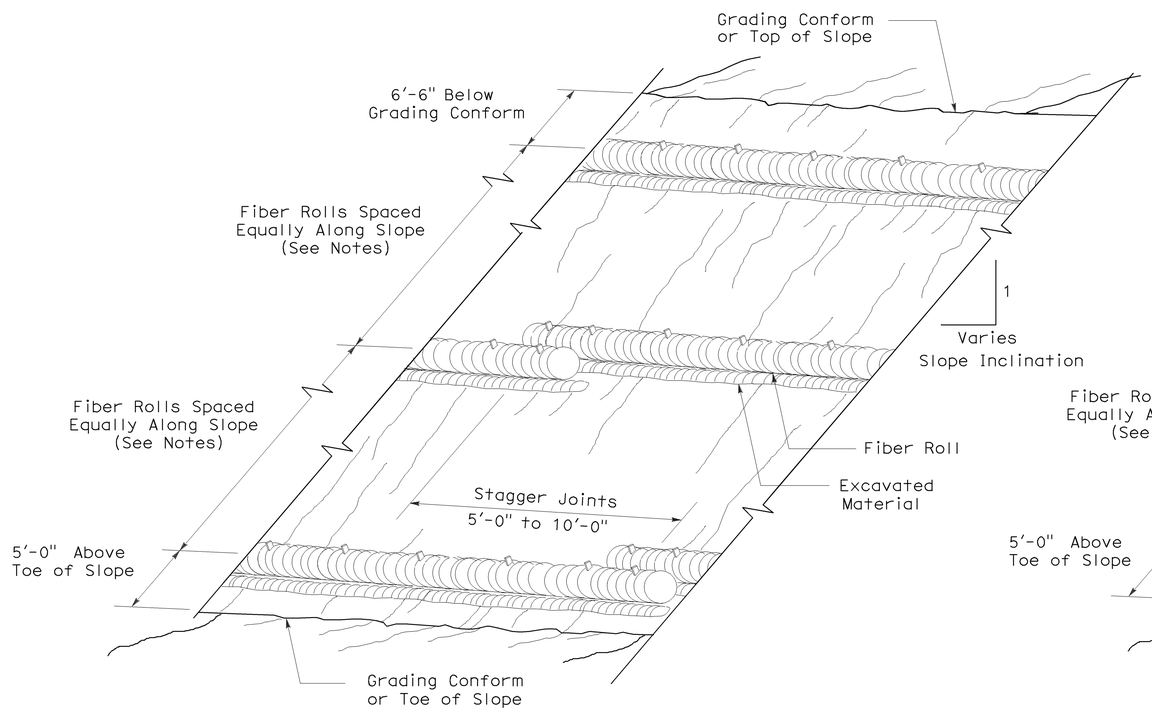

PERSPECTIVE

TEMPORARY FIBER ROLL (TYPE 1)

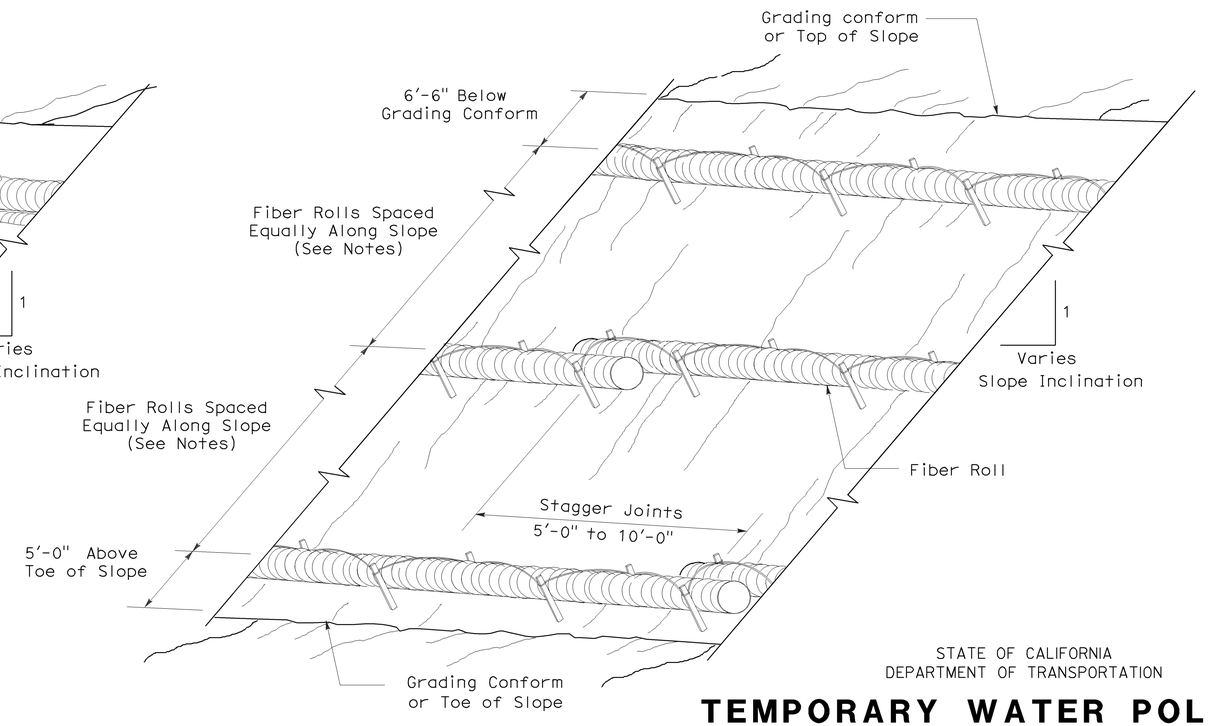

PERSPECTIVE

TEMPORARY FIBER ROLL (TYPE 2)

STATE OF CALIFORNIA
DEPARTMENT OF TRANSPORTATION

TEMPORARY WATER POLLUTION CONTROL DETAILS (TEMPORARY FIBER ROLL)

NO SCALE

RSP T56 DATED APRIL 3, 2009 SUPERSEDES STANDARD PLAN T56
DATED MAY 1, 2006 - PAGE 232 OF THE STANDARD PLANS BOOK DATED MAY 2006.

REVISED STANDARD PLAN RSP T56

2006 REVISED STANDARD PLAN RSP T56

232

2-23-09

DIST	COUNTY	ROUTE	POST MILES TOTAL PROJECT	SHEET NO.	TOTAL SHEETS
01	Hum	101, 254	var	23	28

Robert B Schott
LICENSED LANDSCAPE ARCHITECT

August 15, 2008
PLANS Approval DATE

LICENSED LANDSCAPE ARCHITECT
Robert B. Schott 3685
Robert B Schott
Signature
11-04-08
Renewal Date
08-11-08
Date
STATE OF CALIFORNIA

The State of California or its officers or agents shall not be responsible for the accuracy or completeness of electronic copies of this plan sheet.

To accompany plans dated January 11, 2012

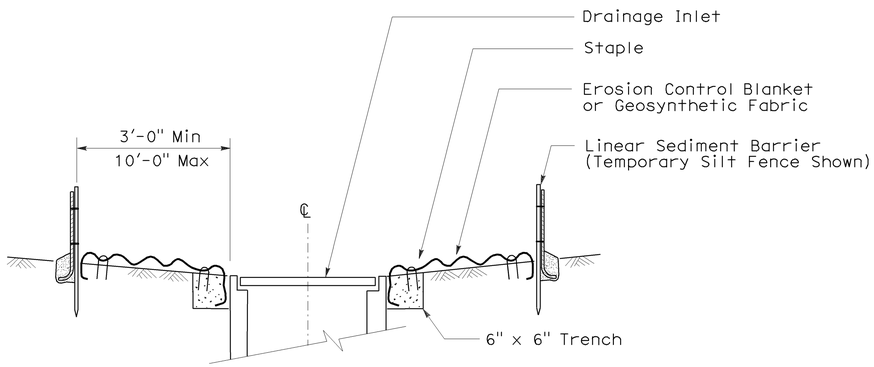

SECTION A-A

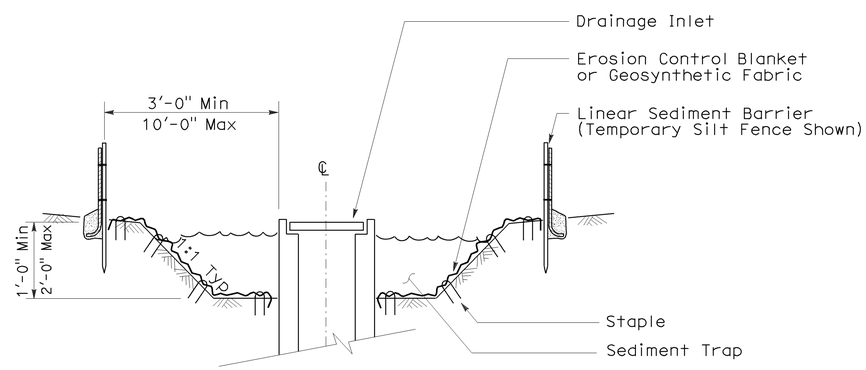

SECTION B-B

NOTES:

1. See Standard Plan T51 for Temporary Silt Fence.
2. Dimensions may vary to fit field conditions.

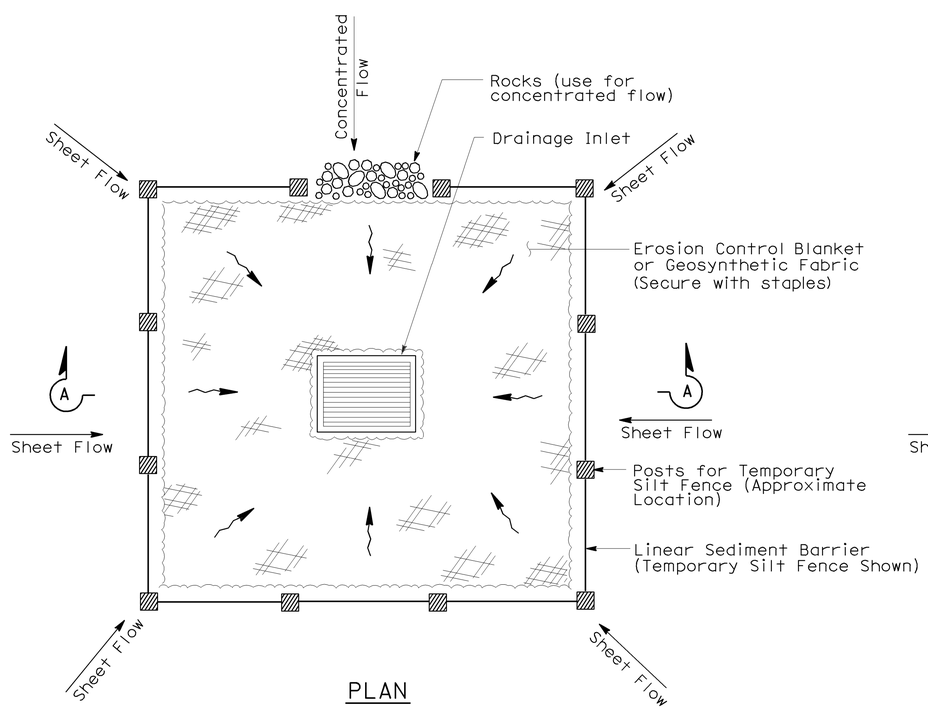

PLAN

TEMPORARY DRAINAGE
INLET PROTECTION (TYPE 1)

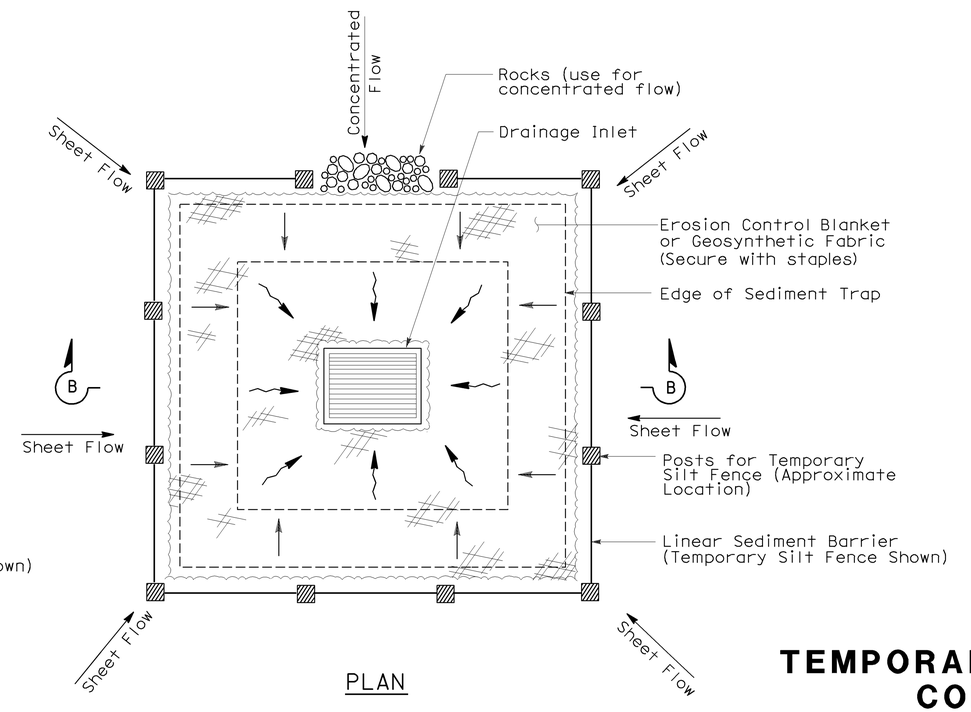

PLAN

TEMPORARY DRAINAGE
INLET PROTECTION (TYPE 2)
(EXCAVATED SEDIMENT TRAP)

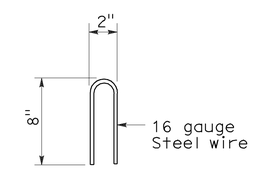

STAPLE DETAIL

STATE OF CALIFORNIA
DEPARTMENT OF TRANSPORTATION

TEMPORARY WATER POLLUTION CONTROL DETAILS (TEMPORARY DRAINAGE INLET PROTECTION)

NO SCALE

Nsp t61 dated august 15, 2008 supplements
the standard plans book dated may 2006.

NEW STANDARD PLAN NSP T61

2006 NEW STANDARD PLAN NSP T61

7-11-08

DIST	COUNTY	ROUTE	POST MILES TOTAL PROJECT	SHEET NO.	TOTAL SHEETS
01	Hum	101, 254	var	24	28

LICENSED LANDSCAPE ARCHITECT

August 15, 2008
PLANS APPROVAL DATE

The State of California or its officers or agents shall not be responsible for the accuracy or completeness of electronic copies of this plan sheet.

LICENSED LANDSCAPE ARCHITECT — Robert B. Schott 3685 — Signature — 11-04-08 Renewal Date — 08-11-08 Date — STATE OF CALIFORNIA

To accompany plans dated January 11, 2012

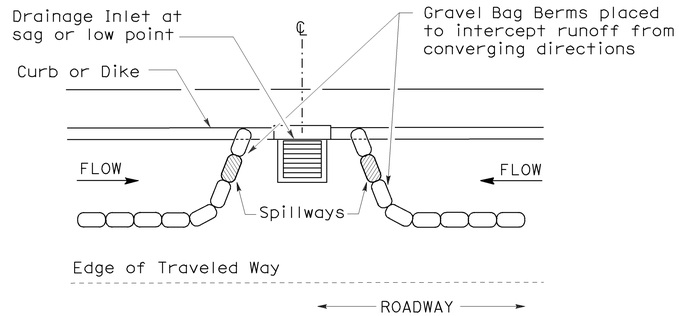

PLAN

CONFIGURATION FOR SAG POINT INLET (GRAVEL BAG BERM)

GRAVEL BAG BERM (TYPE 3A) SPACING TABLE

SLOPE OF ROADWAY (PERCENT)	1 to 3.9	4 to 5.9	6 to 7.9	8 to 10	10+
INTERVAL BETWEEN BERM	100′	75′	50′	25′	12′

For slope of less than 1%, install barriers only if erosion/sediment is prevalent

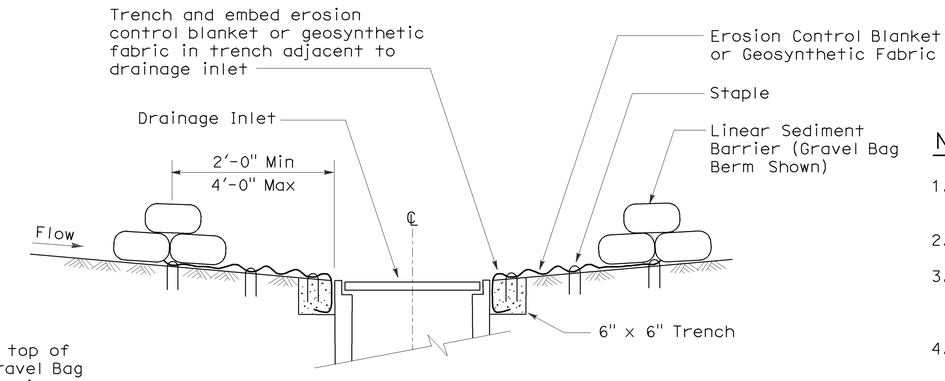

SECTION A-A

NOTES:

1. Place safety cones adjacent to drainage inlet protection.
2. Dimensions may vary to fit field conditions.
3. Install a minimum of 3 gravel bag berms upstream of each drainage inlet to be protected.
4. Position erosion control blanket or geosynthetic fabric at edge of concrete apron and secure in trench.
5. Erosion control blanket or geosynthetic fabric is not required if the area adjacent to the drainage inlet is vegetated or paved.

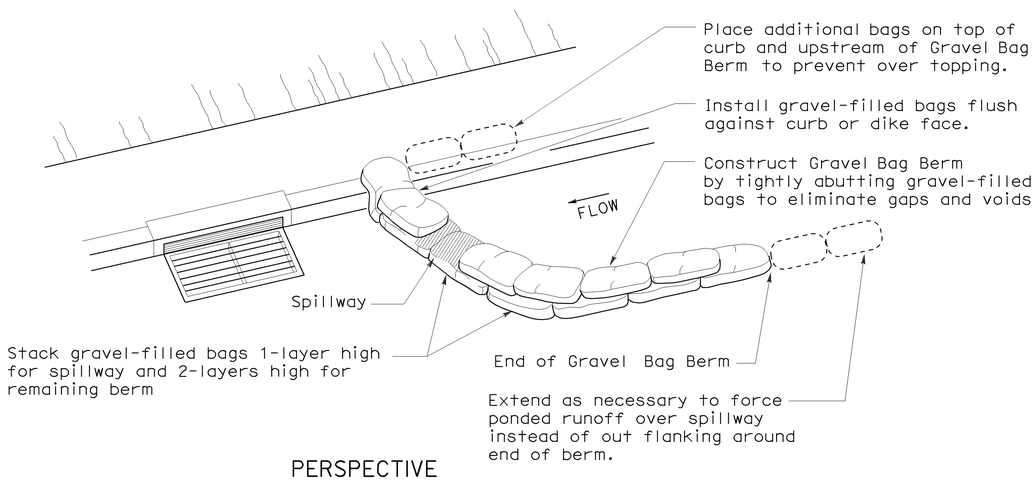

PERSPECTIVE

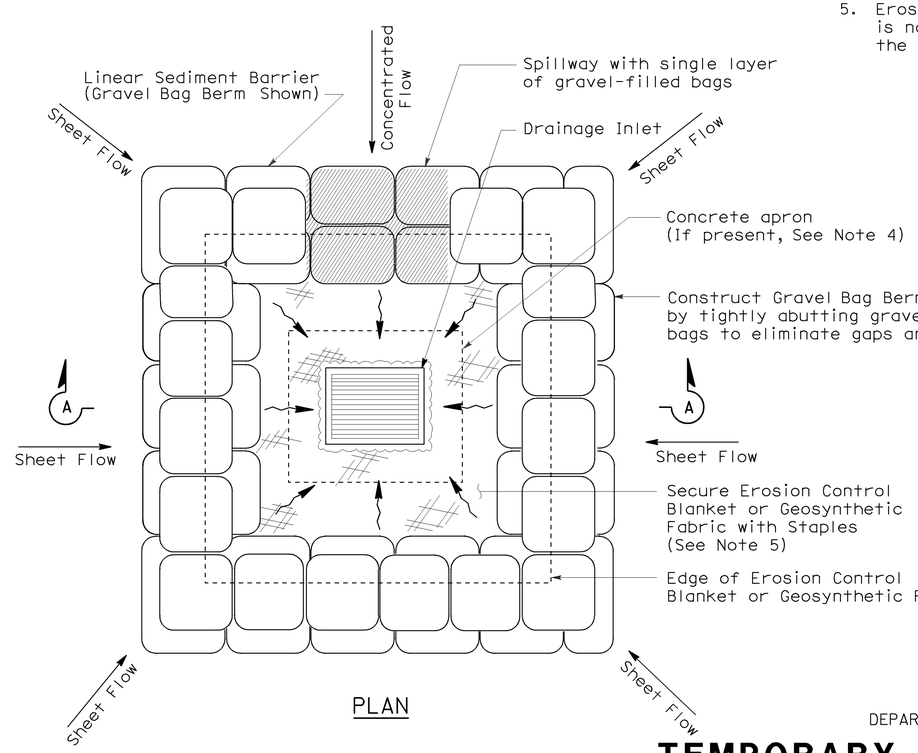

PLAN

TEMPORARY DRAINAGE INLET PROTECTION (TYPE 3B)

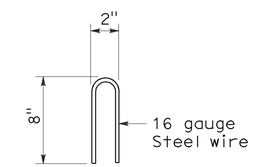

STAPLE DETAIL

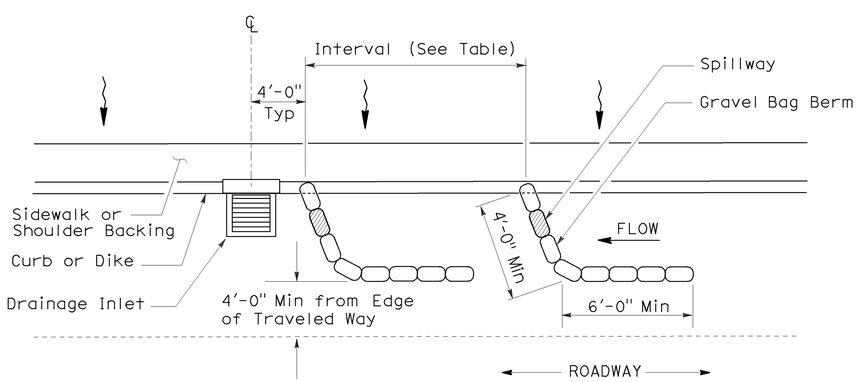

PLAN

TEMPORARY DRAINAGE INLET PROTECTION (TYPE 3A) (GRAVEL BAG BERM)

STATE OF CALIFORNIA
DEPARTMENT OF TRANSPORTATION

TEMPORARY WATER POLLUTION CONTROL DETAILS (TEMPORARY DRAINAGE INLET PROTECTION)

NO SCALE

NSP T62 DATED AUGUST 15, 2008 SUPPLEMENTS THE STANDARD PLANS BOOK DATED MAY 2006.

NEW STANDARD PLAN NSP T62

2006 NEW STANDARD PLAN NSP T62

7-11-08

DIST	COUNTY	ROUTE	POST MILES TOTAL PROJECT	SHEET NO.	TOTAL SHEETS
01	Hum	101, 254	var	25	28

Robert B. Schott
LICENSED LANDSCAPE ARCHITECT

August 15, 2008
PLANS APPROVAL DATE

LICENSED LANDSCAPE ARCHITECT Robert B. Schott 3685 Signature 11-04-08 Renewal Date 08-11-08 Date STATE OF CALIFORNIA

The State of California or its officers or agents shall not be responsible for the accuracy or completeness of electronic copies of this plan sheet.

To accompany plans dated January 11, 2012

FLEXIBLE SEDIMENT BARRIER SPACING TABLE

SLOPE OF ROADWAY (PERCENT)	0 to 0.9	1 to 1.9	2 to 2.9	3 to 4	5+
INTERVAL BETWEEN BARRIERS	50′	35′	30′	25′	20′
ANGLE FROM FACE OF CURB	70°	70°	70°	45°	45°
SUGGESTED BARRIER LENGTH	6′	6′	6′	6′	6′

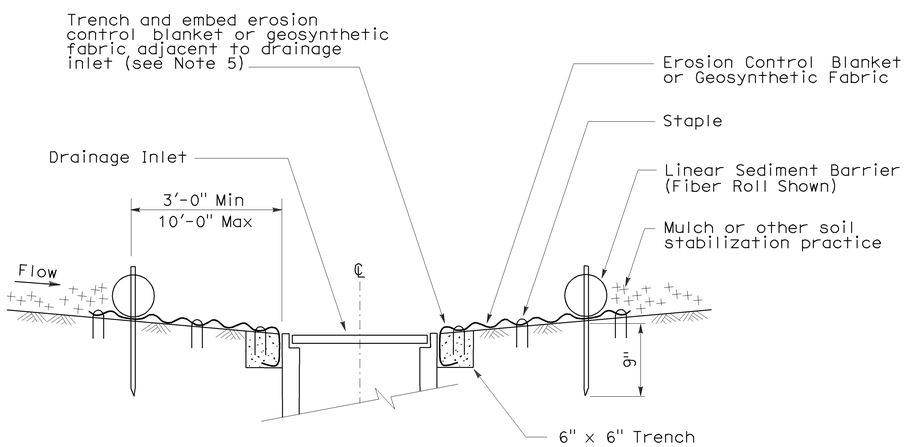

SECTION A-A

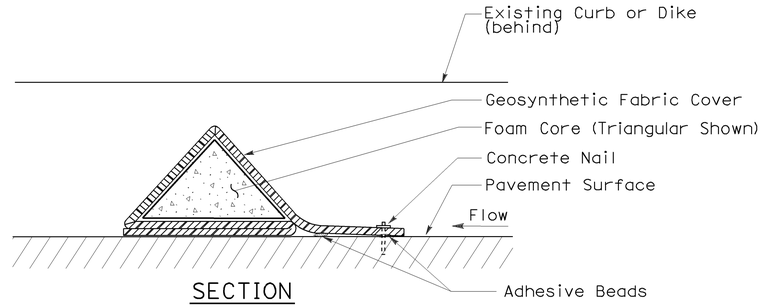

SECTION

FLEXIBLE SEDIMENT BARRIER DETAIL (FOAM BARRIER SHOWN)

NOTES:

1. See Standard Plan T51 for Temporary Silt Fence.
2. Dimensions may vary to fit field conditions.
3. Install a minimum of 3 flexible sediment barriers upstream of each drainage inlet to be protected.
4. Position erosion control blanket or geosynthetic fabric at edge of concrete apron and secure in trench.
5. Erosion control blanket or geosynthetic fabric is not required if the area adjacent to the drainage inlet is vegetated.

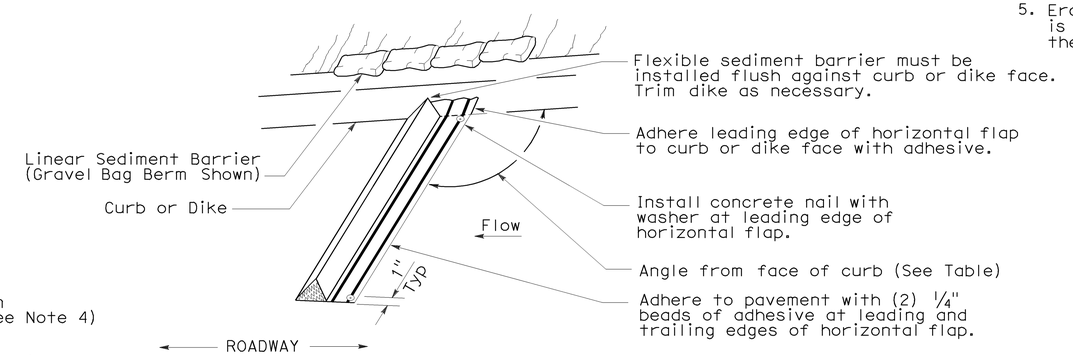

PERSPECTIVE

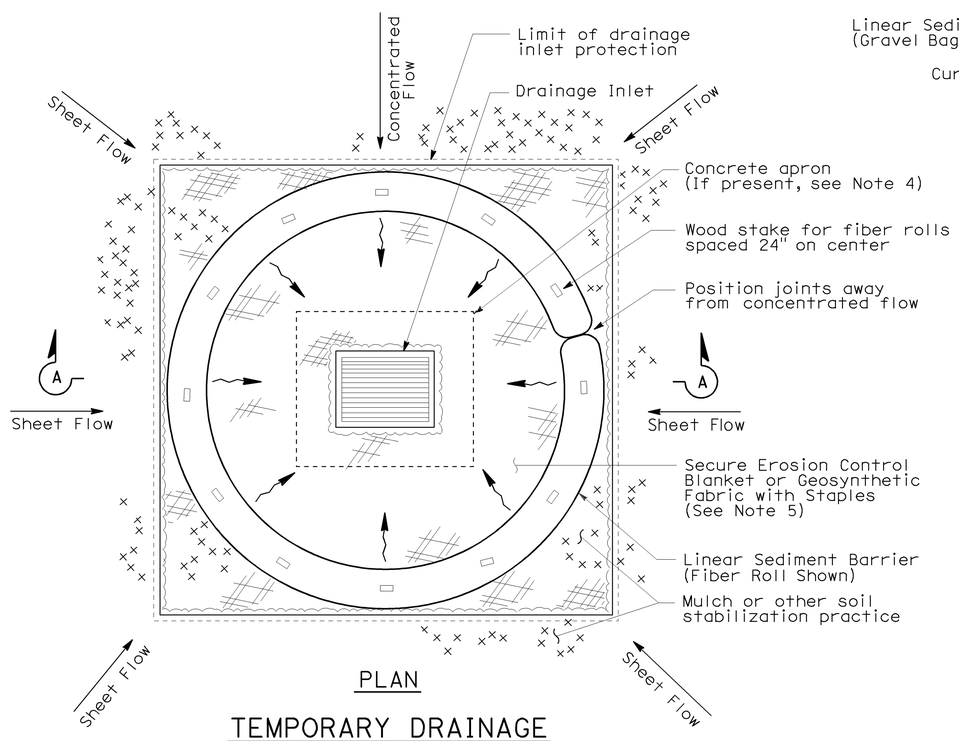

PLAN

TEMPORARY DRAINAGE INLET PROTECTION (TYPE 4A)

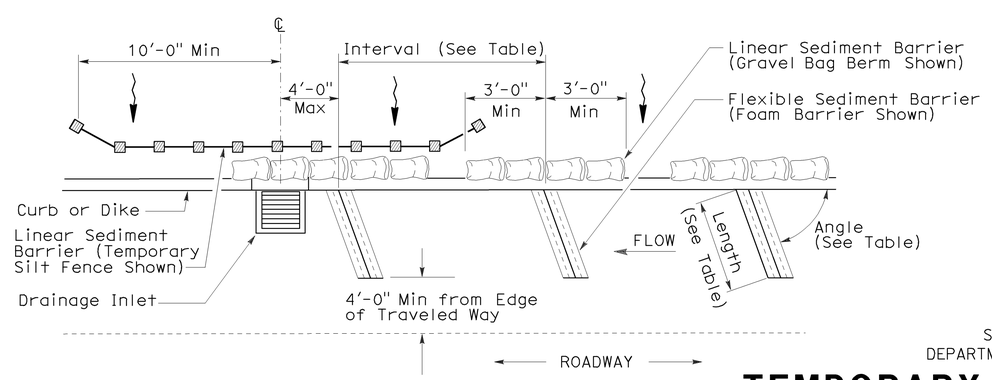

PLAN

TEMPORARY DRAINAGE INLET PROTECTION (TYPE 4B) FLEXIBLE SEDIMENT BARRIER

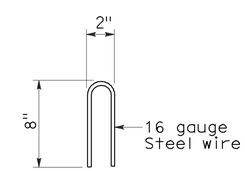

STAPLE DETAIL

STATE OF CALIFORNIA
DEPARTMENT OF TRANSPORTATION

TEMPORARY WATER POLLUTION CONTROL DETAILS (TEMPORARY DRAINAGE INLET PROTECTION)

NO SCALE

NSP T63 DATED AUGUST 15, 2008 SUPPLEMENTS THE STANDARD PLANS BOOK DATED MAY 2006.

NEW STANDARD PLAN NSP T63

2006 NEW STANDARD PLAN NSP T63

7-11-08

DIST	COUNTY	ROUTE	POST MILES TOTAL PROJECT	SHEET NO.	TOTAL SHEETS
01	Hum	101, 254	var	26	28

LICENSED LANDSCAPE ARCHITECT

August 15, 2008
PLANS APPROVAL DATE

LICENSED LANDSCAPE ARCHITECT
Robert B. Schott 3685
Signature
11-04-08
Renewal Date
08-11-08
Date
STATE OF CALIFORNIA

The State of California or its officers or agents shall not be responsible for the accuracy or completeness of electronic copies of this plan sheet.

To accompany plans dated January 11, 2012

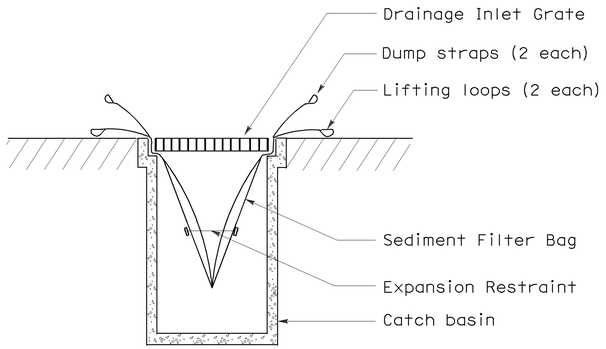

SECTION B-B

SEDIMENT FILTER BAG DETAIL

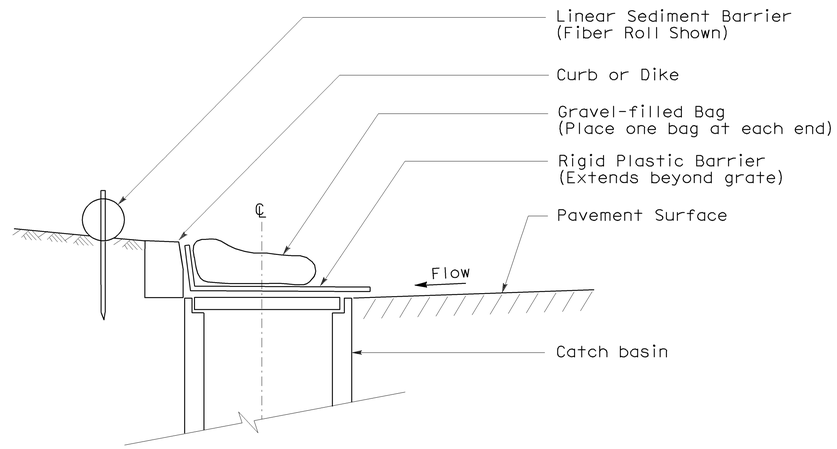

SECTION

TEMPORARY DRAINAGE INLET PROTECTION (TYPE 6A) (CATCH BASIN WITH GRATE)

NOTES:

1. See Standard Plan T51 for Temporary Silt Fence.
2. Dimensions may vary to fit field conditions.

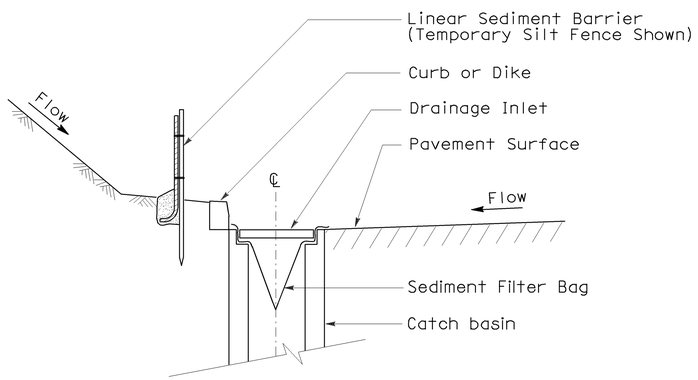

SECTION A-A

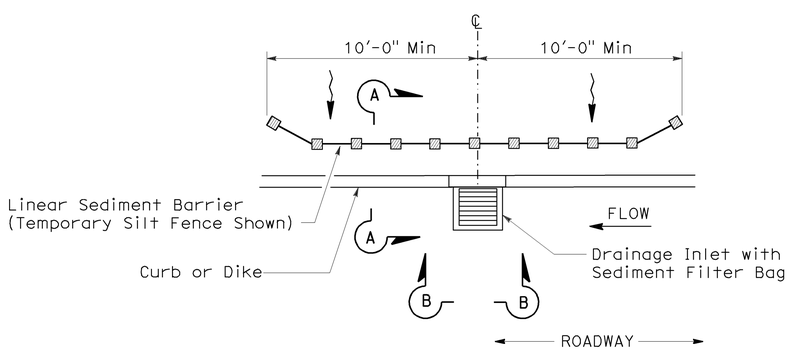

PLAN

TEMPORARY DRAINAGE INLET PROTECTION (TYPE 5) (SEDIMENT FILTER BAG)

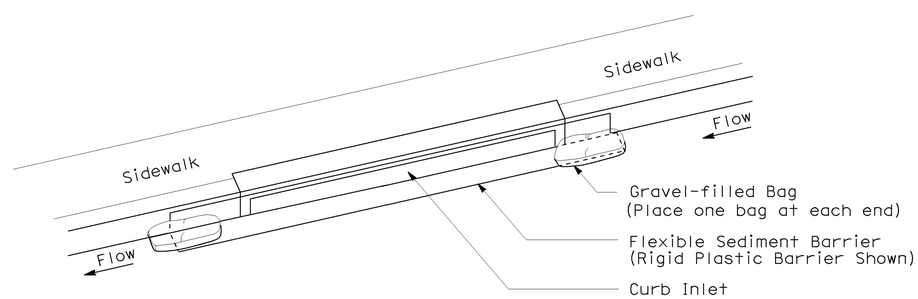

PERSPECTIVE

TEMPORARY DRAINAGE INLET PROTECTION (TYPE 6B) (CURB INLET WITHOUT GRATE)

STATE OF CALIFORNIA
DEPARTMENT OF TRANSPORTATION

TEMPORARY WATER POLLUTION CONTROL DETAILS (TEMPORARY DRAINAGE INLET PROTECTION)

NO SCALE

NSP T64 DATED AUGUST 15, 2008 SUPPLEMENTS
THE STANDARD PLANS BOOK DATED MAY 2006.

NEW STANDARD PLAN NSP T64

2006 NEW STANDARD PLAN NSP T64

7-11-08

DIST	COUNTY	ROUTE	POST MILES TOTAL PROJECT	SHEET NO.	TOTAL SHEETS
01	Hum	101, 254	var	27	28

LICENSED LANDSCAPE ARCHITECT

April 3, 2009
PLANS APPROVAL DATE

LICENSED LANDSCAPE ARCHITECT Robert B. Schott 3635 Signature 11-30-10 Renewal Date 2-25-09 Date STATE OF CALIFORNIA

The State of California or its officers or agents shall not be responsible for the accuracy or completeness of electronic copies of this plan sheet.

To accompany plans dated January 11, 2012

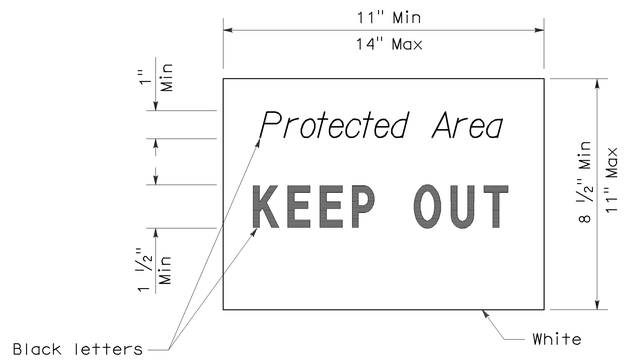

SIGN DETAIL

NOTE:

1. Temporary silt fence and temporary straw bale barrier shown for reference purposes only.

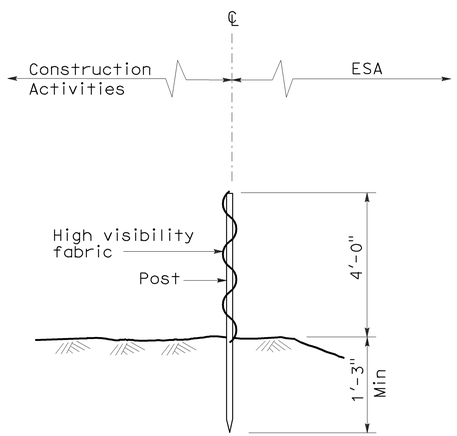

SECTION
TEMPORARY FENCE (TYPE ESA)

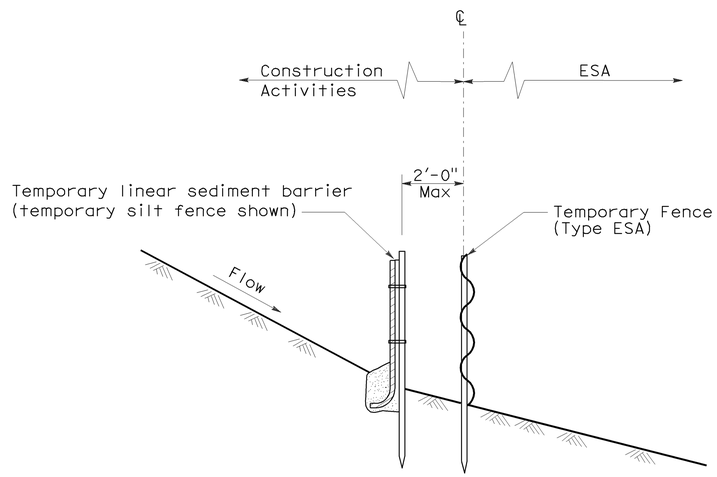

SECTION
PLACEMENT DETAIL
FOR TEMPORARY LINEAR SEDIMENT BARRIER
USED WITH TEMPORARY
FENCE (TYPE ESA)
(See Note 1)

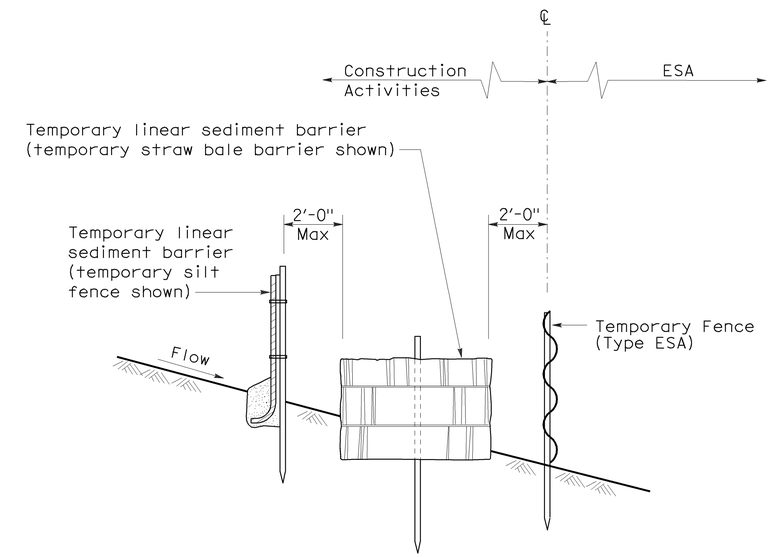

SECTION
PLACEMENT DETAIL
FOR TEMPORARY SILT FENCE
AND TEMPORARY STRAW BALE BARRIER
USED WITH TEMPORARY FENCE (TYPE ESA)
(See Note 1)

STATE OF CALIFORNIA
DEPARTMENT OF TRANSPORTATION

TEMPORARY WATER POLLUTION CONTROL DETAILS [TEMPORARY FENCE (TYPE ESA)]

NO SCALE

NSP T65 DATED APRIL 3, 2009 SUPPLEMENTS
THE STANDARD PLANS BOOK DATED MAY 2006.

NEW STANDARD PLAN NSP T65

2006 NEW STANDARD PLAN NSP T65

DIST	COUNTY	ROUTE	POST MILES TOTAL PROJECT	SHEET NO.	TOTAL SHEETS
01	Hum	101, 254	var	28	28

REGISTERED CIVIL ENGINEER

October 21, 2011
PLANS APPROVAL DATE

REGISTERED PROFESSIONAL ENGINEER Tillat Satter No. C42892 Exp. 3-31-12 CIVIL STATE OF CALIFORNIA

The State of California or its officers or agents shall not be responsible for the accuracy or completeness of electronic copies of this plan sheet.

To accompany plans dated January 11, 2012

2006 REVISED STANDARD PLAN RSP B11-47

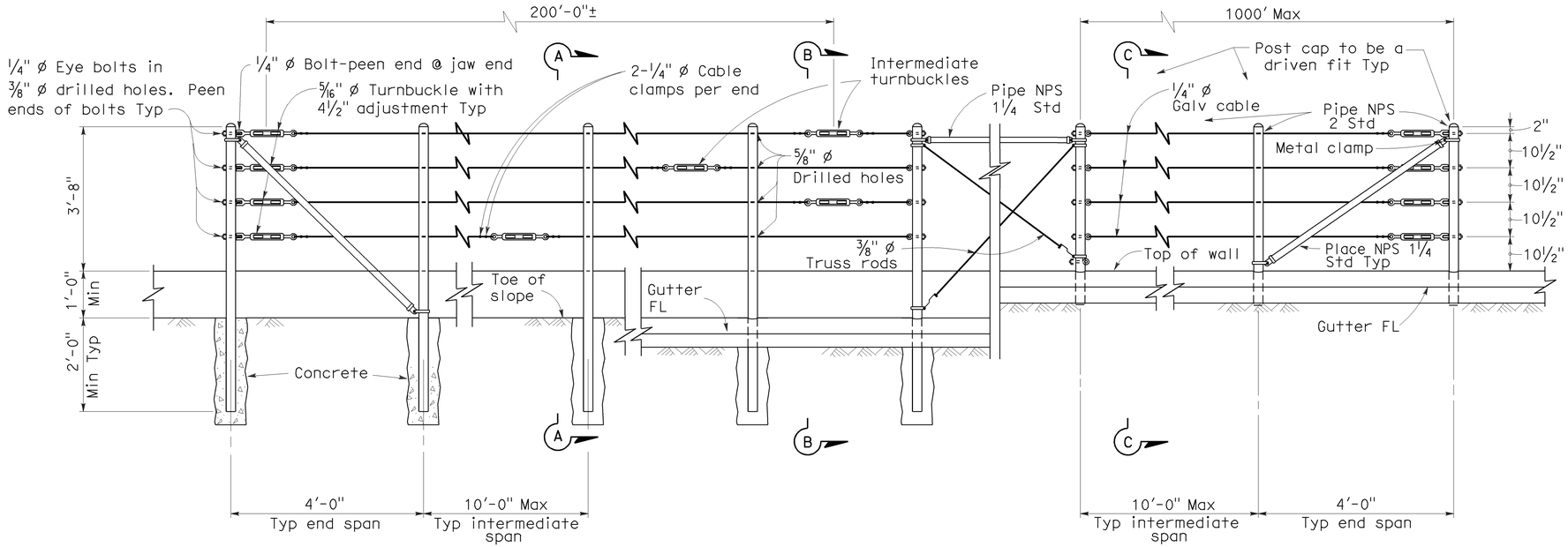

EXISTING WALL (WITHOUT GUTTER)
Existing

RETAINING WALL (WITH GUTTER)
Existing

RETAINING WALL (WITH GUTTER)
New construction

ELEVATION

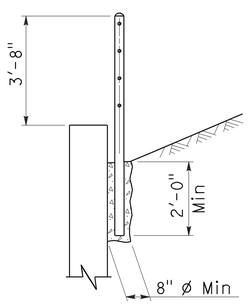

SECTION A-A
Existing

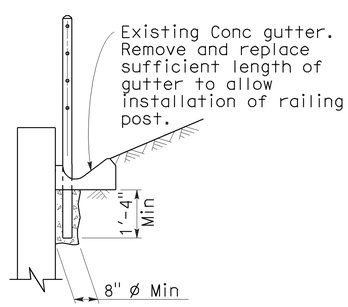

SECTION B-B
Existing

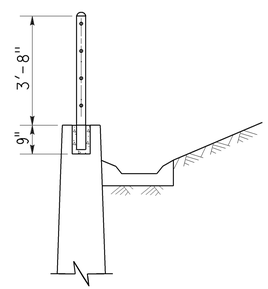

SECTION C-C
New construction

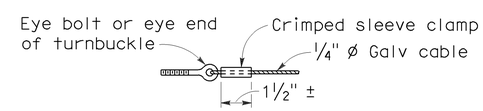

ALTERNATIVE CABLE CONNECTION

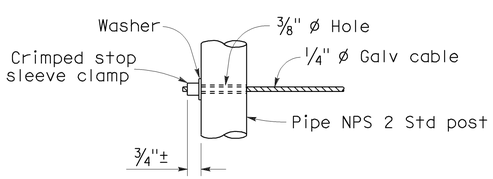

ALTERNATIVE DEAD END ANCHORAGE

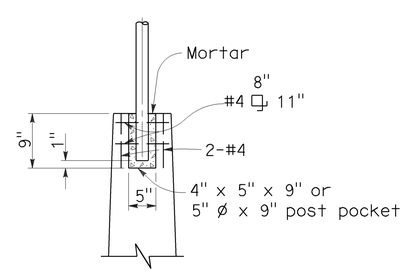

POST POCKET

NOTES:

1. Maximum distance between turnbuckles shall be 200'-0"±.
2. Intermediate turnbuckles to be placed in adjacent spans.
3. Cable shall not be spliced between intermediate turnbuckles and end posts.
4. All posts, cable, and hardware to be galvanized.
5. Posts to be vertical.
6. Alignment of holes in posts may vary to conform to slope of top of retaining wall.
7. The Contractor shall verify all dependent dimensions in the field before ordering or fabricating any material.
8. Alternative details may be submitted by the Contractor for approval by the Engineer.
9. Line posts shall be braced horizontally and trussed diagonally in both directions at intervals not to exceed 1000'.
10. Post pockets to be centered in top of wall.
11. Typical end spans, braced in both directions, shall be constructed at changes in line where the angle of deflection is 15° or more.
12. Provide thimbles at all cable loops.

STATE OF CALIFORNIA
DEPARTMENT OF TRANSPORTATION

CABLE RAILING

NO SCALE

RSP B11-47 DATED OCTOBER 21, 2011 SUPERSEDES STANDARD PLAN B11-47 DATED MAY 1, 2006 - PAGE 268 OF THE STANDARD PLANS BOOK DATED MAY 2006.

REVISED STANDARD PLAN RSP B11-47

9-19-11