Dist	COUNTY	ROUTE	POST MILES TOTAL PROJECT	SHEET No.	TOTAL SHEETS
01	Men	101	64.7/69.3, 74.8/81.4	2	28

REGISTERED CIVIL ENGINEER 6-09-14 DATE

June 13, 2014
PLANS APPROVAL DATE

REGISTERED PROFESSIONAL ENGINEER ERIC D. SHADA No. 82121 Exp. 3-31-16 CIVIL STATE OF CALIFORNIA

THE STATE OF CALIFORNIA OR ITS OFFICERS OR AGENTS SHALL NOT BE RESPONSIBLE FOR THE ACCURACY OR COMPLETENESS OF SCANNED COPIES OF THIS PLAN SHEET.

NOTES:

1. DIMENSIONS OF THE PAVEMENT STRUCTURES (STRUCTURAL SECTION) ARE SUBJECT TO TOLERANCES SPECIFIED IN THE STANDARD SPECIFICATIONS.
2. FOR ACCURATE RIGHT OF WAY DATA, CONTACT RIGHT OF WAY ENGINEERING AT THE DISTRICT OFFICE.
3. SEE CONSTRUCTION DETAIL SHEET C-1 FOR EXISTING EP TREATMENT.
4. SUPERELEVATION AS SHOWN OR AS DIRECTED BY THE ENGINEER.
5. EXISTING UTILITIES HAVE NOT BEEN PLOTTED ON THESE PLANS.

DESIGN DESIGNATION (Men-101-64.7/69.3)

2012 ADT = 6600 D = 60% T = 9%
2024 ADT = 6860 V = 65 MPH
2012 DHV = 810 TI_{10} = 10.0
2024 DHV = 840 TI_{20} = 10.5

PAVEMENT REGION

LOW MOUNTAIN

ABBREVIATIONS:

LL	LANE LINE
RHMA-G	RUBBERIZED HOT MIX ASPHALT (GAP GRADED)
RHMA-O	RUBBERIZED HOT MIX ASPHALT - OPEN GRADE (BONDED WEARING COURSE)

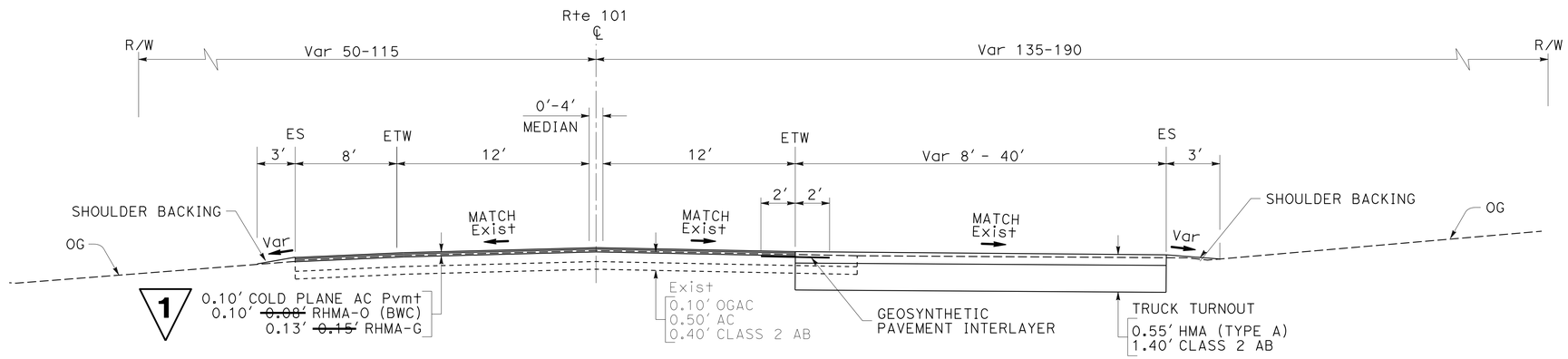

PM 64.72 TO 64.83

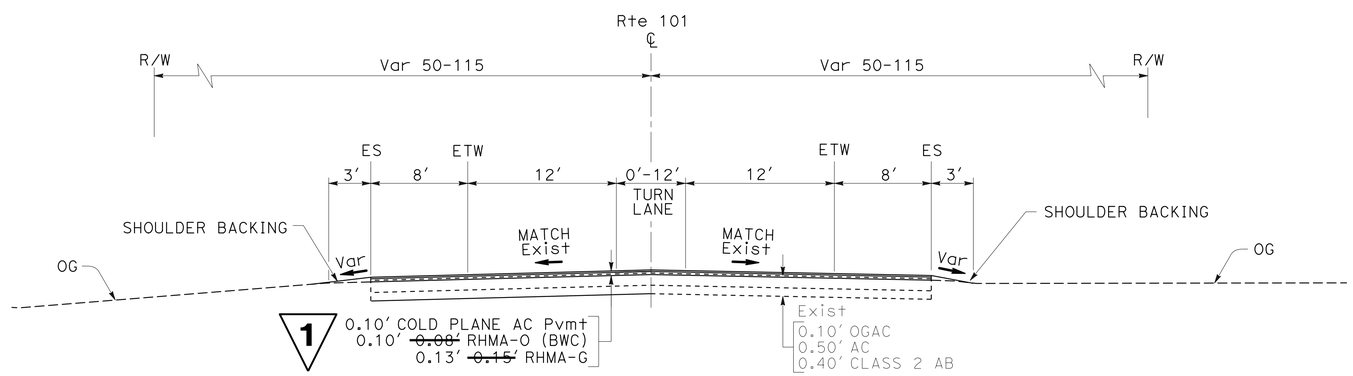

PM 64.83 TO 69.30
PM 64.70 TO 64.72

ROUTE 101

1 **REPLACED PER ADDENDUM No.1 DATED OCTOBER 23, 2014**

TYPICAL CROSS SECTIONS
NO SCALE

X-1

REVISED BY | DATE REVISED
ERIC SHADA | MATTHEW A. SMITH
CALCULATED-DESIGNED BY | CHECKED BY
FUNCTIONAL SUPERVISOR: KELLY B. TIMMONS
STATE OF CALIFORNIA - DEPARTMENT OF TRANSPORTATION
Caltrans® DESIGN
P:\PROJ\01\41540\drafting\Addendum\0114000088ca001.dgn

LAST REVISION 00-00-00 | DATE PLOTTED => 22-OCT-2014 | TIME PLOTTED => 11:10

Dist	COUNTY	ROUTE	POST MILES TOTAL PROJECT	SHEET No.	TOTAL SHEETS
01	Men	101	64.7/69.3, 74.8/81.4	3	28

REGISTERED CIVIL ENGINEER — DATE 6-09-14

June 13, 2014
PLANS APPROVAL DATE

REGISTERED PROFESSIONAL ENGINEER ERIC D. SHADA No. 82121 Exp. 3-31-16 CIVIL STATE OF CALIFORNIA

THE STATE OF CALIFORNIA OR ITS OFFICERS OR AGENTS SHALL NOT BE RESPONSIBLE FOR THE ACCURACY OR COMPLETENESS OF SCANNED COPIES OF THIS PLAN SHEET.

1

DESIGN DESIGNATION (Men-101-74.8/81.4)

2012 ADT = 6000
2024 ADT = 7080
2012 DHV = 770
2024 DHV = 910

D = 60% T = 13%
V = 65 MPH
TI_{10} = 10.0
TI_{20} = 11.0

PAVEMENT REGION

LOW MOUNTAIN

*SHOULDER BACKING (SEE SHEET Q-1 FOR LOCATIONS)

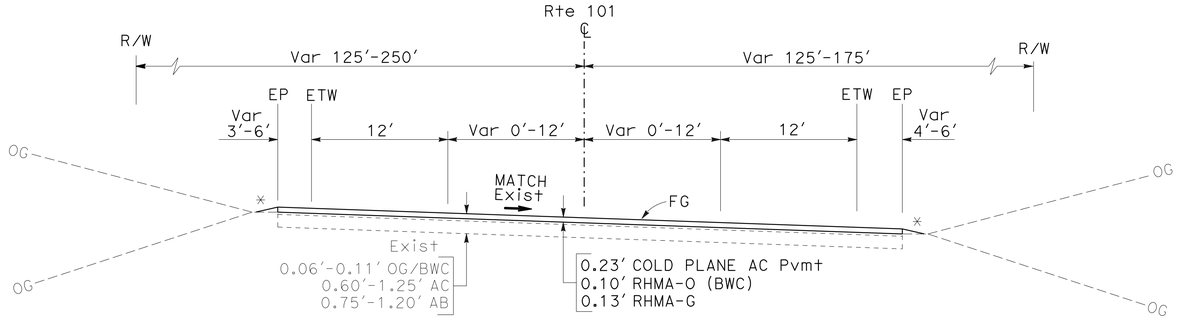

PM 75.02 - PM 75.25

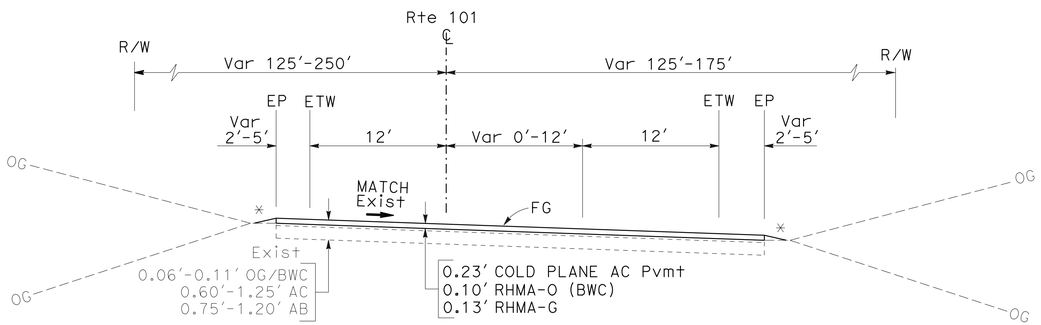

PM 74.81 - PM 75.02

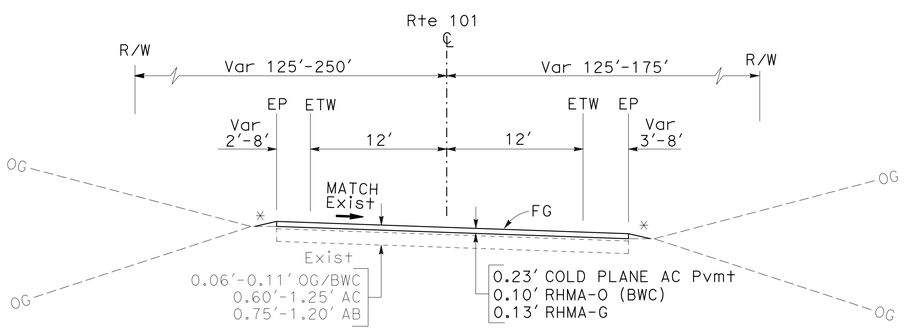

PM 78.19 - PM 81.40
PM 75.72 - PM 76.07
PM 74.80 - PM 74.81

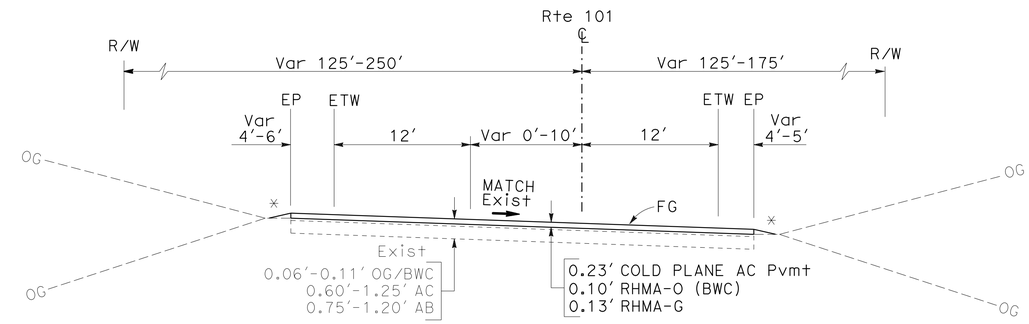

PM 76.07 - PM 76.49

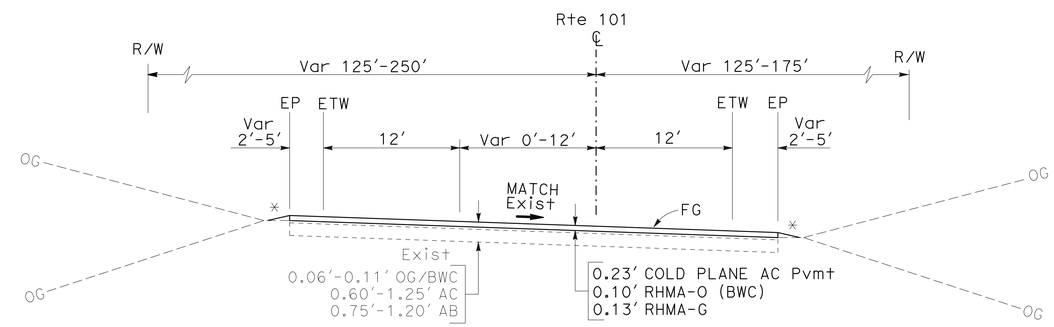

PM 75.25 - PM 75.72

1 **REPLACED PER ADDENDUM No.1 DATED OCTOBER 23, 2014**

ROUTE 101

TYPICAL CROSS SECTIONS

NO SCALE

X-2

REVISED BY	DATE REVISED

CALCULATED-DESIGNED BY: ERIC SHADA
CHECKED BY: MATTHEW A. SMITH
FUNCTIONAL SUPERVISOR: KELLY B. TIMMONS

STATE OF CALIFORNIA - DEPARTMENT OF TRANSPORTATION
Caltrans
DESIGN

P:\PROJ\01\41540\drafting\Addendum\0114000088ca002.dgn

LAST REVISION 00-00-00
DATE PLOTTED => 22-OCT-2014
TIME PLOTTED => 11:10

Dist	COUNTY	ROUTE	POST MILES TOTAL PROJECT	SHEET No.	TOTAL SHEETS
01	Men	101	64.7/69.3, 74.8/81.4	5	28

REGISTERED CIVIL ENGINEER 6-09-14 DATE

June 13, 2014
PLANS APPROVAL DATE

REGISTERED PROFESSIONAL ENGINEER ERIC D. SHADA No. 82121 Exp. 3-31-16 CIVIL STATE OF CALIFORNIA

THE STATE OF CALIFORNIA OR ITS OFFICERS OR AGENTS SHALL NOT BE RESPONSIBLE FOR THE ACCURACY OR COMPLETENESS OF SCANNED COPIES OF THIS PLAN SHEET.

LEGEND

REPLACE AC SURFACING

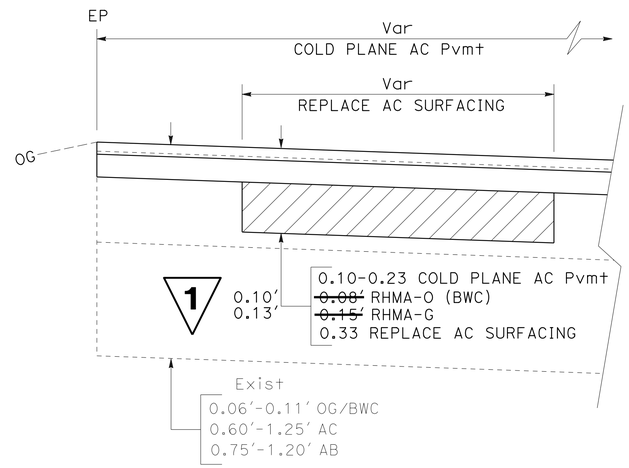

REPLACE AC SURFACING

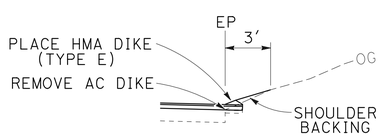

REPLACE DIKE

PM 68.33 - PM 68.35 Rt
PM 68.64 - PM 68.71 Rt
PM 68.65 - PM 68.70 Lt

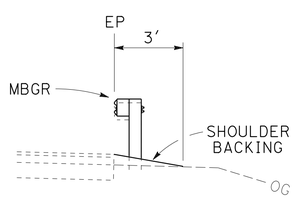

RECONSTRUCT MBGR

PM 64.96 - PM 65.01 Rt
PM 65.16 - PM 65.28 Rt
PM 66.49 - PM 66.51 Rt
PM 66.49 - PM 66.51 Lt
PM 67.33 - PM R67.36 Lt
PM 67.37 - PM R67.44 Lt

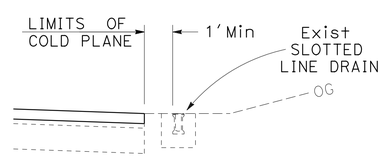

Exist SLOTTED LINE DRAIN

PM 76.73 - PM 76.78 Rt

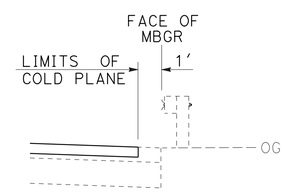

Exist MBGR

PM 74.81 - PM 74.87 Lt
PM 75.04 - PM 75.15 Lt
PM 75.81 - PM 75.91 Lt
PM 76.28 - PM 76.33 Lt
PM 77.86 - PM 78.05 Lt
PM 76.87 - PM 77.02 Rt
PM 77.86 - PM 78.05 Lt
PM 77.91 - PM 77.97 Rt
PM 78.35 - PM 78.40 Rt
PM 79.24 - PM 79.25 Rt
PM 80.32 - PM 80.42 Lt
PM 80.42 - PM 80.47 Lt

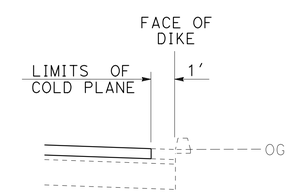

Exist DIKE

PM 74.84 - PM 75.04 Rt
PM 75.07 - PM 75.25 Rt
PM 75.26 - PM 75.42 Lt
PM 75.50 - PM 75.55 Rt
PM 75.70 - PM 75.71 Rt
PM 75.78 - PM 75.80 Rt
PM 76.06 - PM 76.15 Rt
PM 76.16 - PM 76.23 Lt
PM 76.23 - PM 76.30 Rt
PM 76.47 - PM 76.53 Rt
PM 76.72 - PM 76.73 Rt
PM 76.80 - PM 76.84 Rt
PM 77.03 - PM 77.26 Rt
PM 77.52 - PM 77.56 Rt
PM 77.52 - PM 77.56 Lt
PM 77.58 - PM 77.63 Lt
PM 77.59 - PM 77.68 Rt
PM 77.77 - PM 77.78 Rt
PM 79.20 - PM 79.28 Lt
PM 79.35 - PM 79.43 Lt
PM 79.94 - PM 80.10 Lt

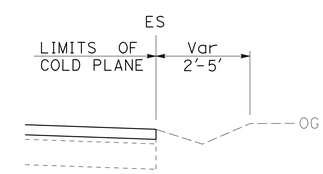

Exist DITCH

PM 74.81 - PM 74.87 Lt
PM 75.04 - PM 75.15 Lt
PM 75.58 - PM 75.62 Lt
PM 75.81 - PM 75.91 Lt
PM 76.28 - PM 76.33 Lt
PM 76.87 - PM 77.02 Rt
PM 77.86 - PM 78.05 Lt
PM 77.91 - PM 77.97 Rt
PM 78.35 - PM 78.40 Rt
PM 79.24 - PM 79.25 Rt
PM 80.32 - PM 80.42 Lt
PM 80.42 - PM 80.47 Lt

EXISTING SHOULDER FEATURES

1 REPLACED PER ADDENDUM No.1 DATED OCTOBER 23, 2014

CONSTRUCTION DETAILS

NO SCALE

C-1

REVISED BY | DATE REVISED
ERIC SHADA | MATTHEW A. SMITH
CALCULATED-DESIGNED BY | CHECKED BY
FUNCTIONAL SUPERVISOR | KELLY B. TIMMONS

STATE OF CALIFORNIA - DEPARTMENT OF TRANSPORTATION
Caltrans DESIGN

P:\PROJ\01\41540\drafting\Addendum\0114000088ga001.dgn

LAST REVISION 00-00-00 | DATE PLOTTED => 22-OCT-2014 | TIME PLOTTED => 11:10

Dist	COUNTY	ROUTE	POST MILES TOTAL PROJECT	SHEET No.	TOTAL SHEETS
01	Men	101	64.7/69.3, 74.8/81.4	7	28

REGISTERED CIVIL ENGINEER 6-09-14 DATE

June 13, 2014
PLANS APPROVAL DATE

REGISTERED PROFESSIONAL ENGINEER ERIC D. SHADA No. 82121 Exp. 3-31-16 CIVIL STATE OF CALIFORNIA

THE STATE OF CALIFORNIA OR ITS OFFICERS OR AGENTS SHALL NOT BE RESPONSIBLE FOR THE ACCURACY OR COMPLETENESS OF SCANNED COPIES OF THIS PLAN SHEET.

NOTES:

1. EXISTING UTILITY FACILITIES HAVE NOT BEEN PLOTTED ON THESE PLANS.

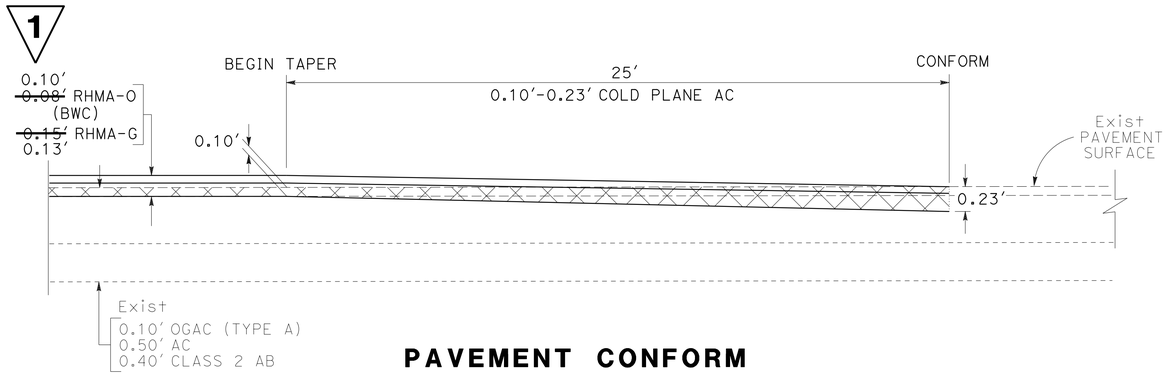

PAVEMENT CONFORM

PM 69.3

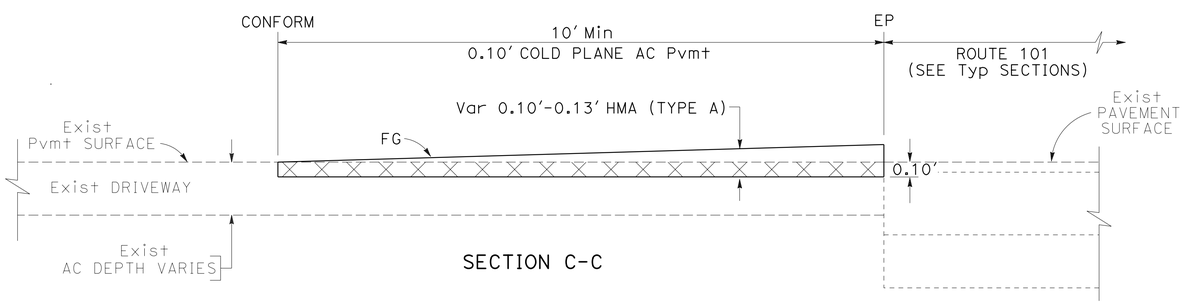

SECTION C-C

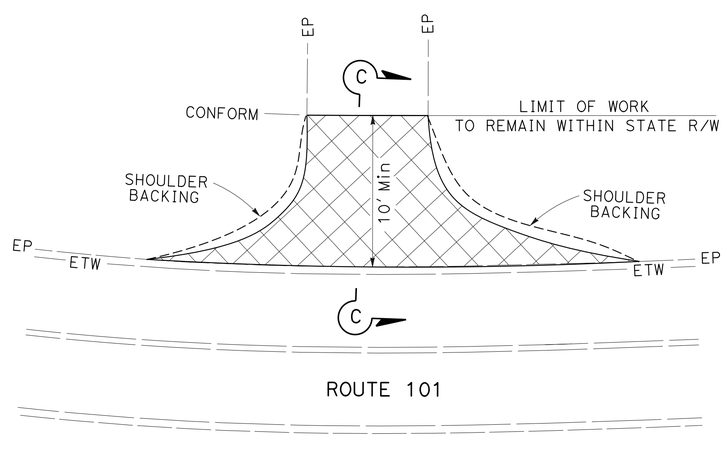

PLAN VIEW

DRIVEWAY CONFORM

(SEE QUANTITIES)

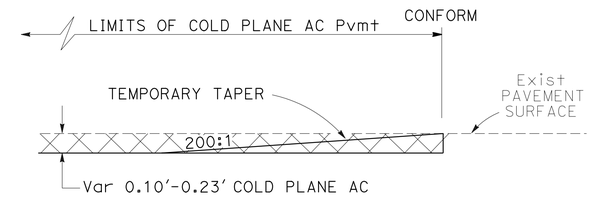

TEMPORARY PAVEMENT CONFORM

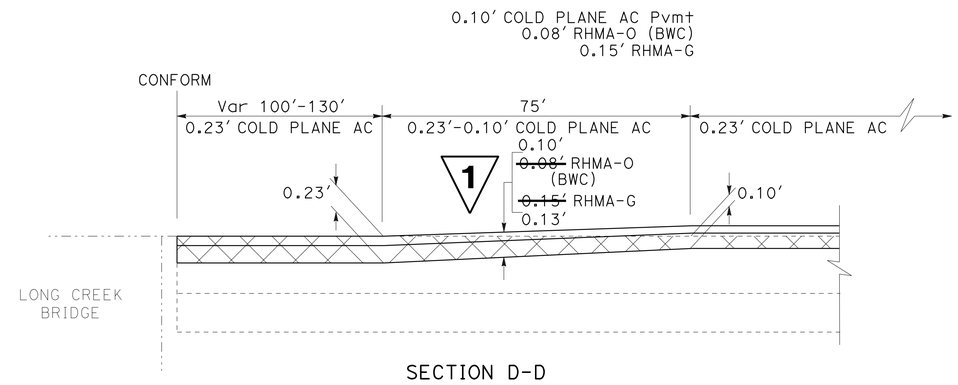

SECTION D-D

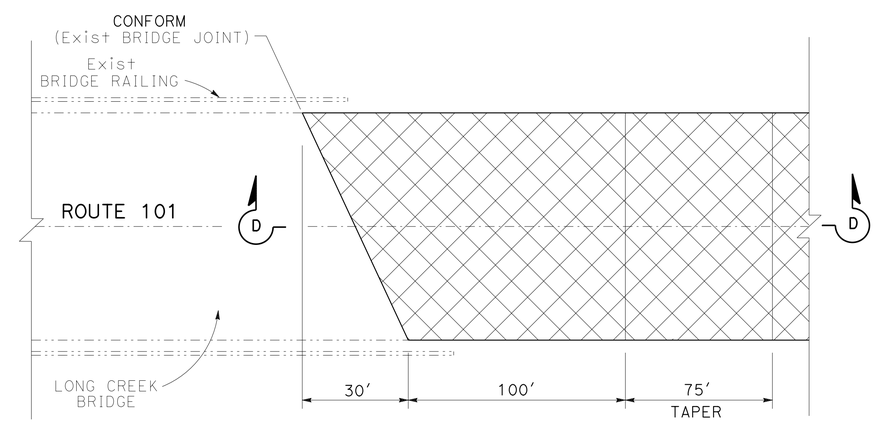

PLAN VIEW

PAVEMENT CONFORM AT BRIDGE

LONG CREEK BRIDGE (PM 64.73)

1 REPLACED PER ADDENDUM No.1 DATED OCTOBER 23, 2014

CONSTRUCTION DETAILS

NO SCALE

C-3

STATE OF CALIFORNIA - DEPARTMENT OF TRANSPORTATION
Caltrans DESIGN

FUNCTIONAL SUPERVISOR: KELLY B. TIMMONS
CALCULATED-DESIGNED BY: ERIC SHADA
CHECKED BY: MATTHEW A. SMITH
REVISED BY / DATE REVISED

P:\PROJ\01\41540\drafting\Addendum\0114000088ga003.dgn

LAST REVISION 00-00-00 | DATE PLOTTED => 22-OCT-2014 | TIME PLOTTED => 11:10

Dist	COUNTY	ROUTE	POST MILES TOTAL PROJECT	SHEET No.	TOTAL SHEETS
01	Men	101	64.7/69.3, 74.8/81.4	15	28

REGISTERED CIVIL ENGINEER 6-09-14 DATE

June 13, 2014
PLANS APPROVAL DATE

REGISTERED PROFESSIONAL ENGINEER ERIC D. SHADA No. 82121 Exp. 3-31-16 CIVIL STATE OF CALIFORNIA

THE STATE OF CALIFORNIA OR ITS OFFICERS OR AGENTS SHALL NOT BE RESPONSIBLE FOR THE ACCURACY OR COMPLETENESS OF SCANNED COPIES OF THIS PLAN SHEET.

1

GUARDRAIL QUANTITIES

LOCATION PM FROM	LOCATION PM TO	R+/L+	RECONSTRUCT MBGR	REMOVE MBGR	MBGR (WOOD POST)	ALTERNATIVE IN-LINE TERMINAL SYSTEM	VEGETATION CONTROL (MINOR CONCRETE)	TREATED WOOD WASTE	RECONSTRUCT TERMINAL SYSTEM	REMARKS
			LF			EA	SQYD	LB	EA	
64.96	65.01	R+	225.0						2	FLEAT 350
65.16	65.28	R+	637.5							
66.49	66.51	R+	87.5						1	FLEAT 350
66.49	66.51	L+	87.5						1	FLEAT 350
67.33	R67.36	L+	187.5							
67.37	R67.44	L+	387.5							
76.28	76.36	L+					187.8	3900		
76.28	76.33	L+	250.0							
76.33	76.34	L+		37.5						
76.33	76.35	L+			87.5					
76.35	76.36	L+				1				
TOTALS			1862.5	37.5	87.5	1	187.8	3900		

ROADWAY QUANTITIES

LOCATION PM FROM	LOCATION PM TO	L+/R+	COLD PLANE AC	COLD PLANE DEPTH (N)	TACK COAT	RHMA, (GAP GRADED)	ASPHALTIC EMULSION MEMBRANE	RHMA-O (BWC)	HOT MIX ASPHALT (TYPE A)	SHOULDER BACKING	REMOVE AC DIKE	PLACE HMA DIKE (TYPE E)	CLASS II AGGREGATE BASE	GEOSYNTHETIC PAVEMENT INTERLAYER (PAVING FABRIC)	PAVING ASPHALT (BINDER, GEOSYTHETIC PAVEMENT INTERLAYER)	ROADWAY EXCAVATION	REMARKS
			SQYD		TON						LF		CY	SQFT	TON	CY	
64.70	69.30	L+								423.5							
64.70	69.30	R+								423.5							
64.73	64.83		2862.9	0.10′	0.72	251.2	1.31	193.3									2-LANE Hwy WITH TRUCK TURNOUT
64.73	64.83	R+			0.06				671.9				874	258.1	0.3	1220	TRUCK TURNOUT
64.83	68.90		95,509.3	0.10′	23.90	8380.9	43.81	6484.4									2-LANE CONVENTIONAL Hwy
68.33	68.35	R+							3.8		148	148					
68.64	68.71	R+							9.2		360	360					
68.65	68.70	L+							6.9		270	270					
68.90	69.30		12,202.7	0.10′	3.05	1070.8	5.60	823.6									2-LANE Hwy WITH MIDDLE TURN Ln
74.80	74.81		187.7	0.23′	0.05	16.5	0.09	12.9									2-LANE CONVENTIONAL Hwy
74.81	75.02		5420.8	0.23′	1.36	475.7	2.49	365.9									2-LANE Hwy WITH R+ PASSING Ln
75.02	75.25		7556.3	0.23′	1.89	663.1	3.47	510.0									4-LANE UNDIVIDED Hwy
75.04	75.07	R+								4.0							
75.14	75.15	L+								1.3							
75.25	75.33	R+								10.7							
75.25	75.72		12,132.3	0.23′	3.04	1064.6	5.57	818.9									2-LANE Hwy WITH L+ PASSING Ln
75.36	75.49	R+								17.4							
75.42	75.55	L+								17.4							
75.62	75.70	R+								11.4							
75.71	75.77	R+								8.0							
75.72	76.07		6776.0	0.23′	1.70	594.6	3.11	457.4									2-LANE CONVENTIONAL Hwy
75.78	75.82	L+								5.3							
76.07	76.49		10,472.0	0.23′	2.62	918.9	4.80	706.9									2-LANE DIVIDED Hwy
76.49	77.44		24,522.7	0.15′	6.14	2482.9											2-LANE Hwy WITH R+ PASSING Ln
76.78	76.88	L+								13.4							
77.44	77.75		10,366.4	0.15′	2.59	1049.6											4-LANE UNDIVIDED Hwy
77.75	78.19		11,099.7	0.15′	2.78	1123.8											2-LANE Hwy WITH L+ PASSING Ln
78.00	78.06	R+								8.0							
78.07	78.13	R+								7.4							
78.19	81.21		57,581.3	0.23	14.40	5052.8	26.41	3886.8									2-LANE CONVENTIONAL Hwy
78.27	78.29	L+								2.7							
78.92	78.96	R+								5.3							
79.07	79.14	R+								9.4							
79.55	79.59	R+								5.3							
79.63	79.64	R+								1.3							
79.67	79.69	R+								2.7							
80.59	80.64	L+								6.7							
FROM Co Rd QUANTITIES			1544.0		0.39	186.9			186.9								SEE SHEET Q-2
FROM DRIVEWAY QUANTITIES			7236.0		1.81	471.8			471.8								SEE SHEET Q-2
TOTALS			265,470.1		66.50	23,804.1	96.66	14,259.8	1350.5	984.7	778	778	874	258.1	0.3	1220	

1 REPLACED PER ADDENDUM No.1 DATED OCTOBER 23, 2014

SUMMARY OF QUANTITIES

Q-1

REVISED BY | DATE REVISED
ERIC SHADA | MATTHEW A. SMITH
CALCULATED-DESIGNED BY | CHECKED BY
FUNCTIONAL SUPERVISOR | KELLY B. TIMMONS

STATE OF CALIFORNIA - DEPARTMENT OF TRANSPORTATION
Caltrans DESIGN

P:\PROJ\01\41540\drafting\Addendum\0114000088pa001.dgn

LAST REVISION 00-00-00 | DATE PLOTTED => 22-OCT-2014 | TIME PLOTTED => 11:10