INDEX OF PLANS

SHEET No.	DESCRIPTION
1	TITLE AND LOCATION MAP
2	LOCATIONS OF CONSTRUCTION
3	TEMPORARY WATER POLLUTION CONTROL QUANTITIES
4-54	DRAINAGE PLAN AND PROFILE
55-59	DRAINAGE DETAILS
60-68	DRAINAGE QUANTITIES
69	CONSTRUCTION AREA SIGNS
70	TRAFFIC HANDLING PLANS
71	PAVEMENT DELINEATION QUANTITIES
72-73	SUMMARY OF QUANTITIES
74-85	EROSION CONTROL LEGEND, PLANS AND QUANTITIES
86-98	REVISED STANDARD PLANS

THE STANDARD PLANS LIST APPLICABLE TO THIS CONTRACT IS INCLUDED IN THE NOTICE TO BIDDERS AND SPECIAL PROVISIONS BOOK.

STATE OF CALIFORNIA

DEPARTMENT OF TRANSPORTATION

ACSTP-P128(056)E

Dist	COUNTY	ROUTE	POST MILES TOTAL PROJECT	SHEET No.	TOTAL SHEETS
01	Men	128	2.8/11.1	1	98

PROJECT PLANS FOR CONSTRUCTION ON

STATE HIGHWAY

IN MEDOCINO COUNTY
NEAR NAVARRO
AT VARIOUS LOCATIONS
FROM 2.8 MILES EAST OF ROUTE 1
TO 0.5 MILE WEST OF FLYNN CREEK ROAD

TO BE SUPPLEMENTED BY STANDARD PLANS DATED 2010

LOCATION MAP

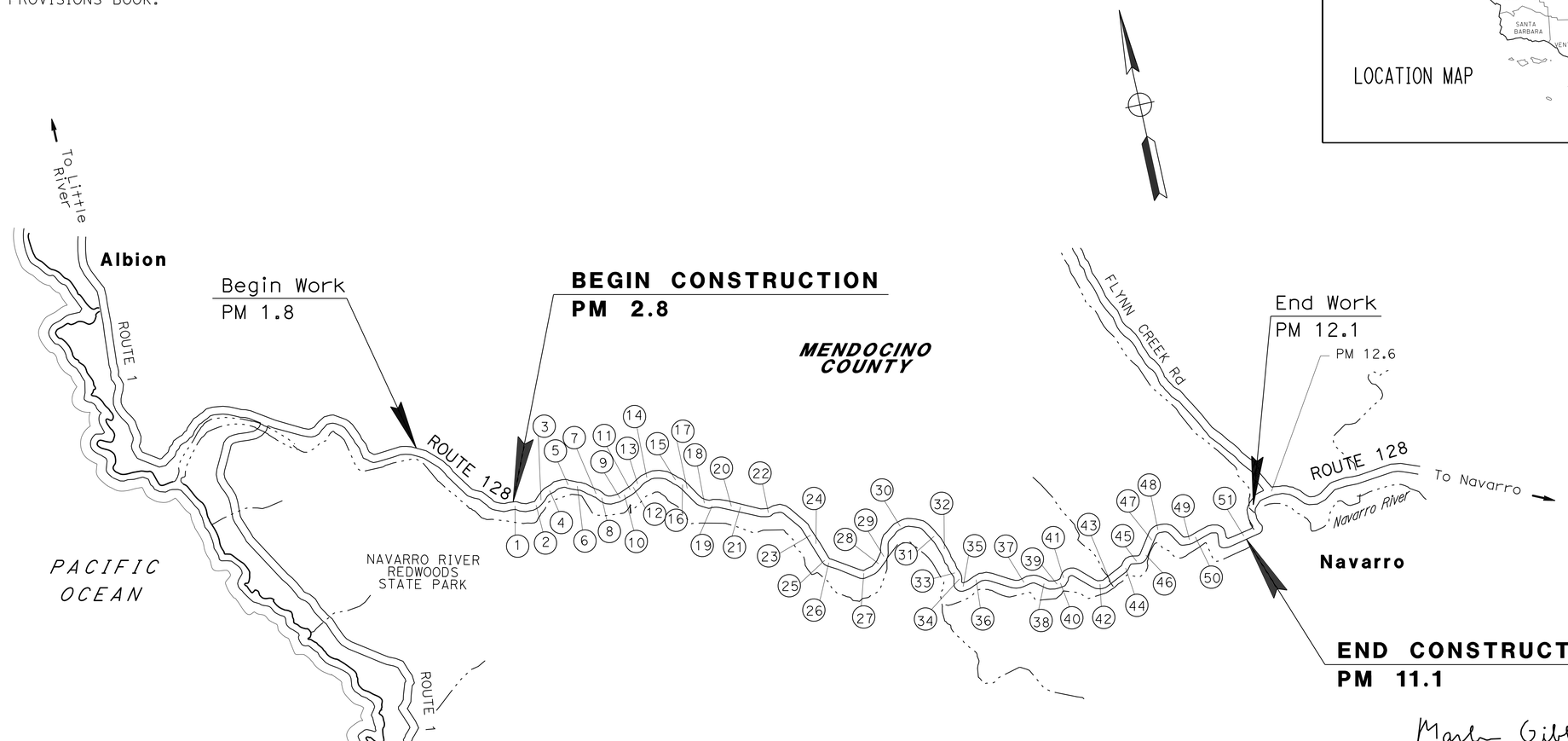

NOTE:

LOCATIONS OF CONSTRUCTION TABLE IS SHOWN ON THE LOCATIONS OF CONSTRUCTION SHEET.

NO SCALE

Marlene Gibb 6-15-15
PROJECT ENGINEER DATE
REGISTERED CIVIL ENGINEER

June 15, 2015
PLANS APPROVAL DATE

REGISTERED PROFESSIONAL ENGINEER
MARLENE E. GIBB
No. C 51513
Exp. 06-30-16
CIVIL
STATE OF CALIFORNIA

THE STATE OF CALIFORNIA OR ITS OFFICERS OR AGENTS SHALL NOT BE RESPONSIBLE FOR THE ACCURACY OR COMPLETENESS OF SCANNED COPIES OF THIS PLAN SHEET.

PROJECT MANAGER: SEBASTIAN COHEN
DESIGN MANAGER: ROBERT E. POLGAR

THE CONTRACTOR SHALL POSSESS THE CLASS (OR CLASSES) OF LICENSE AS SPECIFIED IN THE "NOTICE TO BIDDERS."

CONTRACT No.	01-378174
PROJECT ID	0100000137

LAST REVISION: DATE PLOTTED => 31-AUG-2015 TIME PLOTTED => 09:35 00-00-00

Dist	COUNTY	ROUTE	POST MILES TOTAL PROJECT	SHEET No.	TOTAL SHEETS
01	Men	128	2.8/11.1	2	98

Marlene Gibb 6-15-15
REGISTERED CIVIL ENGINEER DATE

6-15-15
PLANS APPROVAL DATE

REGISTERED PROFESSIONAL ENGINEER
MARLENE E. GIBB
No. C 51513
Exp. 06-30-16
CIVIL
STATE OF CALIFORNIA

THE STATE OF CALIFORNIA OR ITS OFFICERS OR AGENTS SHALL NOT BE RESPONSIBLE FOR THE ACCURACY OR COMPLETENESS OF SCANNED COPIES OF THIS PLAN SHEET.

LOCATIONS OF CONSTRUCTION

Loc	COUNTY	ROUTE	PM
1	Men	128	2.81
2	Men	128	3.01
3	Men	128	3.08
4	Men	128	3.20
5	Men	128	3.36
6	Men	128	3.46
7	Men	128	3.66
8	Men	128	3.71
9	Men	128	3.89
10	Men	128	3.92
11	Men	128	4.02
12	Men	128	4.05
13	Men	128	4.08
14	Men	128	4.17
15	Men	128	4.45
16	Men	128	4.50
17	Men	128	4.55

Loc	COUNTY	ROUTE	PM
18	Men	128	4.78
19	Men	128	4.83
20	Men	128	5.03
21	Men	128	5.08
22	Men	128	5.36
23	Men	128	5.82
24	Men	128	5.92
25	Men	128	6.08
26	Men	128	6.11
27	Men	128	6.48
28	Men	128	6.66
29	Men	128	6.74
30	Men	128	7.07
31	Men	128	7.40
32	Men	128	7.51
33	Men	128	7.76
34	Men	128	7.81

Loc	COUNTY	ROUTE	PM
35	Men	128	7.95
36	Men	128	8.08
37	Men	128	8.55
38	Men	128	8.75
39	Men	128	8.87
40	Men	128	8.91
41	Men	128	8.95
42	Men	128	9.34
43	Men	128	9.44
44	Men	128	9.61
45	Men	128	9.73
46	Men	128	9.85
47	Men	128	9.99
48	Men	128	10.08
49	Men	128	10.43
50	Men	128	10.47
51	Men	128	11.07

CALCULATED-DESIGNED BY: MARLENE GIBB
CHECKED BY: MARTIN GARCIA
REVISED BY: M. GIBB
DATE REVISED: 01-23-12
FUNCTIONAL SUPERVISOR: ROBERT E. POLGAR

STATE OF CALIFORNIA - DEPARTMENT OF TRANSPORTATION
Caltrans®
03-DESIGN

P:\proj\01\378\7\drafting\0100000137ba001.dgn

LAST REVISION: DATE PLOTTED => 31-AUG-2015
00-00-00 TIME PLOTTED => 09:35

LOCATIONS OF CONSTRUCTION

LC-1

BORDER LAST REVISED 7/2/2010
USERNAME => s130875
DGN FILE => 0100000137ba001.dgn
RELATIVE BORDER SCALE IS IN INCHES 0 1 2 3
UNIT 0306
PROJECT NUMBER & PHASE 01000001371

Dist	COUNTY	ROUTE	POST MILES TOTAL PROJECT	SHEET No.	TOTAL SHEETS
01	Men	128	2.8/11.1	3	98

Marlene Gibb 6-15-15
REGISTERED CIVIL ENGINEER DATE

6-15-15
PLANS APPROVAL DATE

REGISTERED PROFESSIONAL ENGINEER
MARLENE E. GIBB
No. C 51513
Exp. 06-30-16
CIVIL
STATE OF CALIFORNIA

THE STATE OF CALIFORNIA OR ITS OFFICERS OR AGENTS SHALL NOT BE RESPONSIBLE FOR THE ACCURACY OR COMPLETENESS OF SCANNED COPIES OF THIS PLAN SHEET.

TEMPORARY WATER POLLUTION CONTROL

DRAINAGE SYSTEM No. ⬡	LOCATION (PM)	Temp DI PROTECTION	Temp CHECK DAM	Temp FIBER ROLL	Temp SILT FENCE	Temp COVER	Temp HYDRAULIC MULCH	MOVE IN/ MOVE OUT (Temp EROSION CONTROL)
		EA	LF			SQYD		EA
1	2.81		6	40	20	15	15	
2	3.01	1	6	30	20	22	22	
3	3.08	1	6	30	20	14	14	
4	3.20		6	50	20	20	20	
5	3.36	1	6	30	20	18	18	
6	3.46		6	30	20	31	31	
7	3.66		6	40	20	18	18	
8	3.71		6	40	20	16	16	
9	3.89	1	6	30	20	17	17	
10	3.92		6	40	20	13	13	
11	4.02		6	30	20	15	15	
12	4.05	1	6	30	20	12	12	
13	4.08		6	50	20	18	18	
14	4.17	1	6	40	20	18	18	2
15	4.45		6	50	20	16	16	
16	4.50		6	50	20	14	14	
17	4.55		6	40	20	14	14	
18	4.78		6	40	20	11	11	
19	4.83	1	6	30	20	13	13	
20	5.03		6	40	20	16	16	
21	5.08		6	50	20	17	17	
22	5.36	1	6	30	20	16	16	
23	5.82	1	6	30	20	11	11	
24	5.92		6	50	20	13	13	
25	6.08	1	6	30	20	14	14	
26	6.11	1	6	30	20	14	14	
1-26 SUBTOTAL		11	156	980	520	416	416	2

DRAINAGE SYSTEM No. ⬡	LOCATION (PM)	Temp DI PROTECTION	Temp CHECK DAM	Temp FIBER ROLL	Temp SILT FENCE	Temp COVER	Temp HYDRAULIC MULCH	MOVE IN/ MOVE OUT (Temp EROSION CONTROL)
		EA	LF			SQYD		EA
27	6.48		6	40	20	10	10	
28	6.66		6	50	20	14	14	
29	6.74	1	6	40	20	18	18	
30	7.07		6	30	20	19	19	
31	7.40		6	50	20	13	13	
32	7.51		6	40	20	18	18	
33	7.76		6	30	20	14	14	
34	7.81		6	30	20	16	16	
35	7.95		6	40	20	21	21	
36	8.08	1	6	30	20	13	13	
37	8.55	1	6	40	20	17	17	
38	8.75		6	40	20	14	14	
39	8.87		6	50	20	17	17	
40	8.91	1	6	30	20	16	16	2
41	8.95	1	6	30	20	14	14	
42	9.34		6	50	20	15	15	
43	9.44		6	40	20	14	14	
44	9.61		6	50	20	15	15	
45	9.73		6	40	20	15	15	
46	9.85		6	50	20	18	18	
47	9.99		6	40	20	10	10	
48	10.08		6	40	20	12	12	
49	10.43		6	40	20	9	9	
50	10.47		6	50	20	20	20	
51	11.07		6	50	20	17	17	
1-26 SUBTOTAL		11	156	980	520	416	416	2
27-51 SUBTOTAL		5	150	1020	500	379	379	2
TOTAL		16	306	2000	1020	795	795	4

TEMPORARY WATER POLLUTION CONTROL QUANTITIES

WPCQ-1

CALCULATED-DESIGNED BY	MARLENE GIBB	REVISED BY	M. GIBB
CHECKED BY	MARTIN GARCIA	DATE REVISED	01-23-12

FUNCTIONAL SUPERVISOR: ROBERT E. POLGAR

STATE OF CALIFORNIA - DEPARTMENT OF TRANSPORTATION

03-DESIGN

Caltrans

LAST REVISION 00-00-00
DATE PLOTTED => 31-AUG-2015
TIME PLOTTED => 09:35

P:\proj4\01\378x7\drafting\0100000137gd001.dgn

BORDER LAST REVISED 7/2/2010

USERNAME => s130875
DGN FILE => 0100000137gd001.dgn

RELATIVE BORDER SCALE IS IN INCHES 0 1 2 3

UNIT 0306

PROJECT NUMBER & PHASE 01000001371

Dist	COUNTY	ROUTE	POST MILES TOTAL PROJECT	SHEET No.	TOTAL SHEETS
01	Men	128	2.8/11.1	4	98

Marlene Gibb 6-15-15
REGISTERED CIVIL ENGINEER DATE

6-15-15
PLANS APPROVAL DATE

REGISTERED PROFESSIONAL ENGINEER
MARLENE E. GIBB
No. C 51513
Exp. 06-30-16
CIVIL
STATE OF CALIFORNIA

THE STATE OF CALIFORNIA OR ITS OFFICERS OR AGENTS SHALL NOT BE RESPONSIBLE FOR THE ACCURACY OR COMPLETENESS OF SCANNED COPIES OF THIS PLAN SHEET.

T15N R17W MDB&M
SECTION 11

NOTES:

1. FOR ACCURATE RIGHT OF WAY DATA, CONTACT RIGHT OF WAY ENGINEERING AT THE DISTRICT OFFICE
2. LOCATIONS OF UTILITY FACILITIES SHOWN ON THESE PLANS ARE APPROXIMATE AND SHALL BE VERIFIED BY THE CONTRACTOR PRIOR TO CONSTRUCTION.
3. UTILITY OWNERSHIP ON THIS PROJECT:
   ELECTRICAL - PACIFIC GAS & ELECTRIC (PG&E Elect)
   TELEPHONE - AMERICAN TELEPHONE & TELEGRAPH (AT&T Tel)
   FIBER OPTIC - AMERICAN TELEPHONE & TELEGRAPH (AT&T FO)
   - LEVEL 3 COMMUNICATIONS (L3 FO)
4. FG FLUSH WITH TOP OF HEAD WALL AT ALL LOCATIONS.
5. FOR ROCK SLOPE PROTECTION DETAILS SEE DRAINAGE DETAIL SHEETS.
6. INLET AND/OR OUTLET STRUCTURE SKEW ANGLE IS MEASURED FROM A LINE PERPENDICULAR TO THE CULVERT ALIGNMENT.

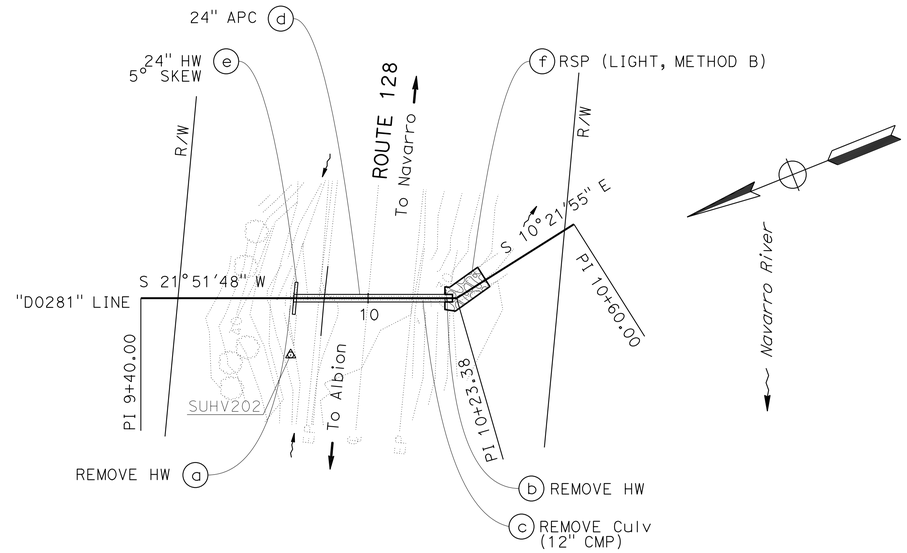

LEGEND:

- ROCK SLOPE PROTECTION
- Temp FENCE (TYPE ESA)
- Temp FENCE @ TREES (TYPE ESA)
- RECONSTRUCT MBGR
- RECONSTRUCT FENCE (TYPE WM)
- ◎ FDR, FOUND PT RECORD
- △SUHV, HORIZONTAL AND VERTICAL CONTROL POINT

DRAINAGE SYSTEM No. 1

ROUTE 128
PM 2.81

PLAN

SCALE: 1" = 20'

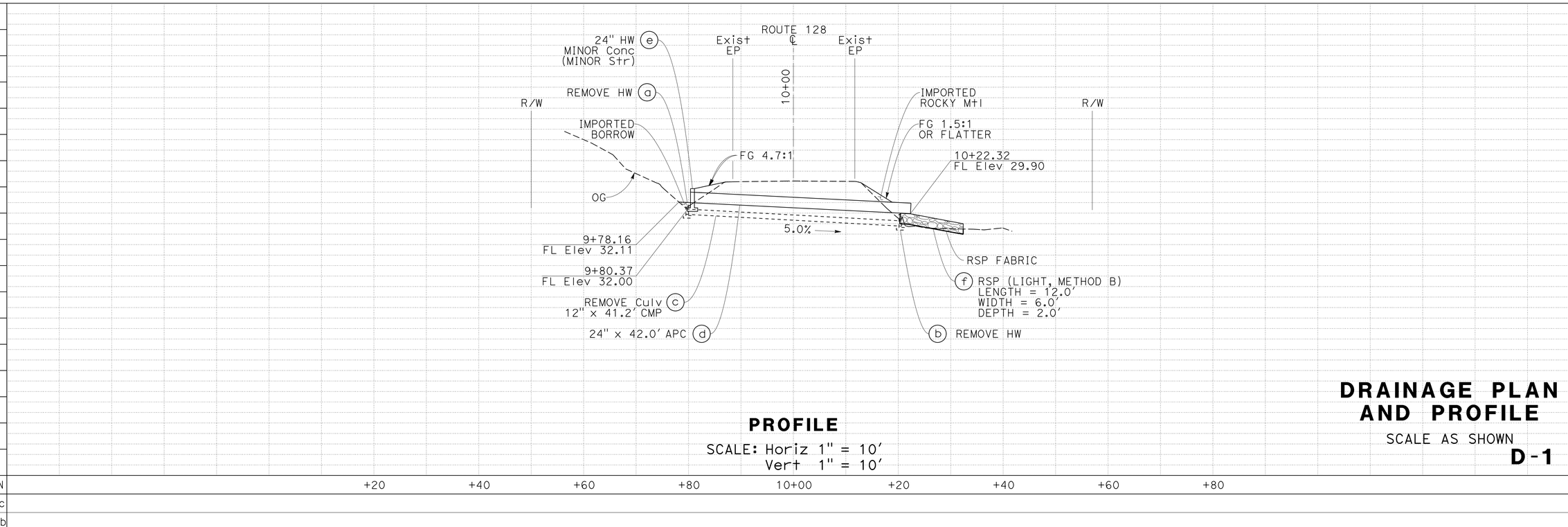

PROFILE

SCALE: Horiz 1" = 10'
Vert 1" = 10'

DRAINAGE PLAN AND PROFILE

SCALE AS SHOWN

D-1

STATE OF CALIFORNIA - DEPARTMENT OF TRANSPORTATION
Caltrans
03-DESIGN

FUNCTIONAL SUPERVISOR: ROBERT E. POLGAR
CALCULATED-DESIGNED BY: MARTIN GARCIA
CHECKED BY: MARLENE GIBB
REVISED BY
DATE REVISED

P:\proj4\01\378x7\drafting\01000001371a001.dgn

DATE PLOTTED => 31-AUG-2015
TIME PLOTTED => 09:35
LAST REVISION

BORDER LAST REVISED 7/2/2010
USERNAME => s130875
DGN FILE => 01000001371a001.dgn
RELATIVE BORDER SCALE IS IN INCHES 0 1 2 3
UNIT 0306
PROJECT NUMBER & PHASE 01000001371

Dist	COUNTY	ROUTE	POST MILES TOTAL PROJECT	SHEET No.	TOTAL SHEETS
01	Men	128	2.8/11.1	5	98

Marlene Gibb 6-15-15
REGISTERED CIVIL ENGINEER DATE

6-15-15
PLANS APPROVAL DATE

REGISTERED PROFESSIONAL ENGINEER
MARLENE E. GIBB
No. C 51513
Exp. 06-30-16
CIVIL
STATE OF CALIFORNIA

THE STATE OF CALIFORNIA OR ITS OFFICERS OR AGENTS SHALL NOT BE RESPONSIBLE FOR THE ACCURACY OR COMPLETENESS OF SCANNED COPIES OF THIS PLAN SHEET.

T15N R17W MDB&M
SECTION 12

NOTES:

1. FOR ACCURATE RIGHT OF WAY DATA, CONTACT RIGHT OF WAY ENGINEERING AT THE DISTRICT OFFICE
2. FOR ROCK SLOPE PROTECTION DETAILS SEE DRAINAGE DETAIL SHEETS.
3. FOR HMA APRON AND HMA DIKE (TYPE A) DETAILS SEE DRAINAGE DETAIL SHEETS.
4. INLET AND/OR OUTLET STRUCTURE SKEW ANGLE IS MEASURED FROM A LINE PERPENDICULAR TO THE CULVERT ALIGNMENT.
5. EXPECT EXITING CULVERT TO BE ENCASED IN CONCRETE BACKFILL THROUGHOUT TRENCH LENGTH.

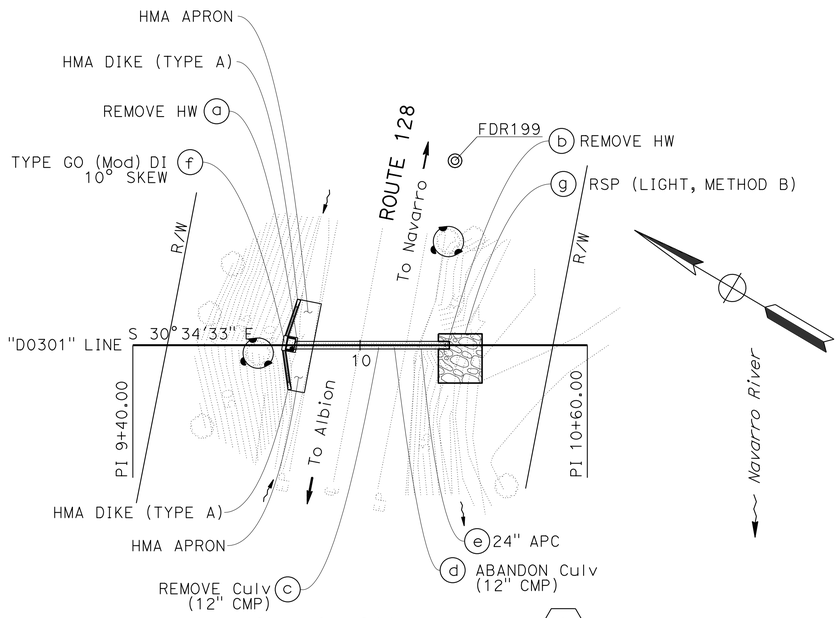

DRAINAGE SYSTEM No. 2

ROUTE 128
PM 3.01

PLAN

SCALE: 1" = 20'

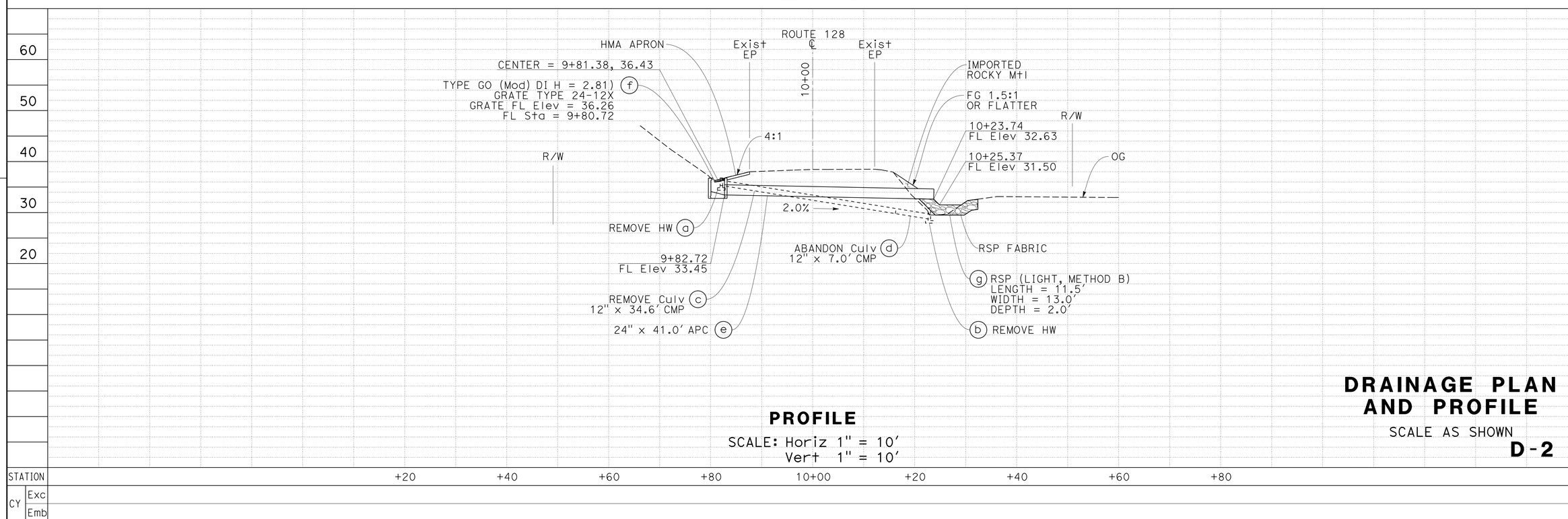

PROFILE

SCALE: Horiz 1" = 10'
Vert 1" = 10'

DRAINAGE PLAN AND PROFILE

SCALE AS SHOWN

D-2

STATE OF CALIFORNIA - DEPARTMENT OF TRANSPORTATION
Caltrans
03-DESIGN

FUNCTIONAL SUPERVISOR: ROBERT E. POLGAR
CALCULATED-DESIGNED BY: MARTIN GARCIA
CHECKED BY: MARLENE GIBB
REVISED BY
DATE REVISED

DATE PLOTTED => 31-AUG-2015
TIME PLOTTED => 09:35
LAST REVISION

P:\proj4\01\378x7\drafting\01000001371a002.dgn

Dist	COUNTY	ROUTE	POST MILES TOTAL PROJECT	SHEET No.	TOTAL SHEETS
01	Men	128	2.8/11.1	6	98

Marlene Gibb 6-15-15
REGISTERED CIVIL ENGINEER DATE

6-15-15
PLANS APPROVAL DATE

REGISTERED PROFESSIONAL ENGINEER
MARLENE E. GIBB
No. C 51513
Exp. 06-30-16
CIVIL
STATE OF CALIFORNIA

THE STATE OF CALIFORNIA OR ITS OFFICERS OR AGENTS SHALL NOT BE RESPONSIBLE FOR THE ACCURACY OR COMPLETENESS OF SCANNED COPIES OF THIS PLAN SHEET.

T15N R17W MDB&M
SECTION 12

NOTES:

1. FOR ACCURATE RIGHT OF WAY DATA, CONTACT RIGHT OF WAY ENGINEERING AT THE DISTRICT OFFICE
2. FOR HMA APRON AND HMA DIKE (TYPE A) DETAILS SEE DRAINAGE DETAIL SHEETS.
3. FOR ROCK SLOPE PROTECTION DETAILS SEE DRAINAGE DETAIL SHEETS.
4. INLET AND/OR OUTLET STRUCTURE SKEW ANGLE IS MEASURED FROM A LINE PERPENDICULAR TO THE CULVERT ALIGNMENT.
5. EXPECT EXITING CULVERT TO BE ENCASED IN CONCRETE BACKFILL THROUGHOUT TRENCH LENGTH.

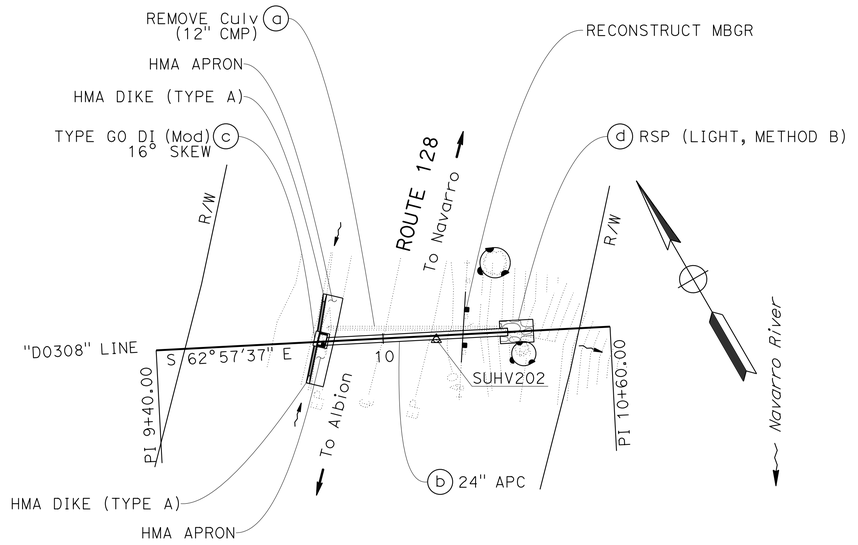

DRAINAGE SYSTEM No. 3

ROUTE 128
PM 3.08

PLAN

SCALE: 1" = 20'

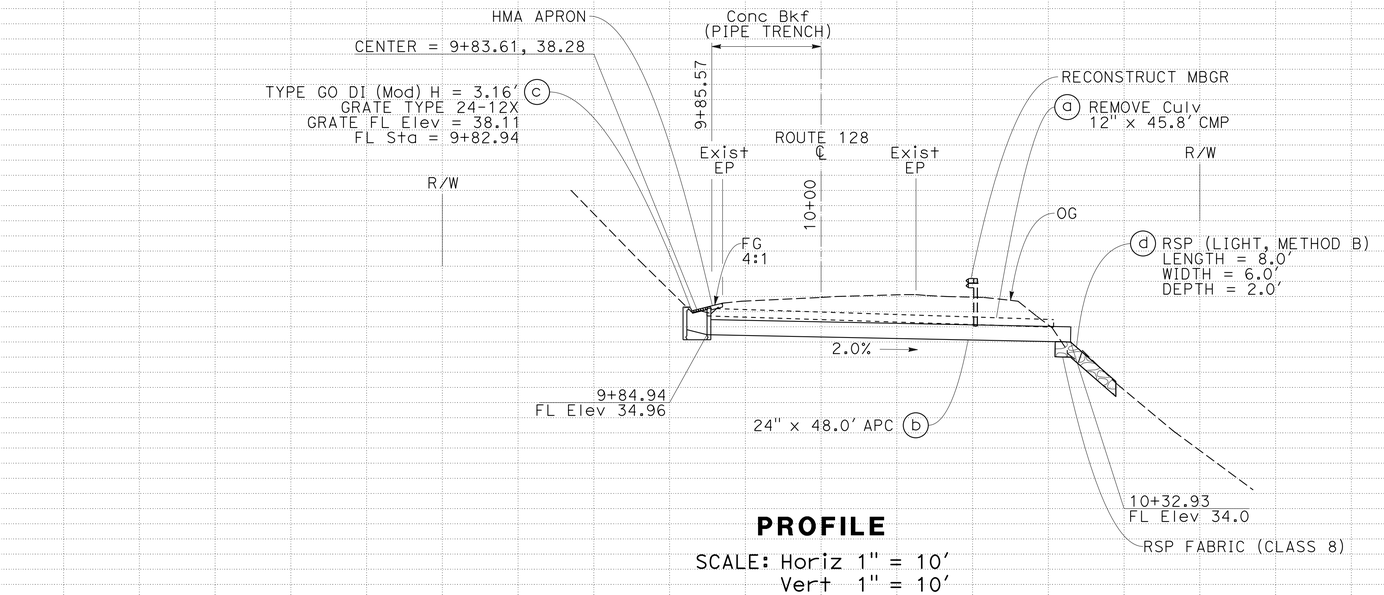

PROFILE

SCALE: Horiz 1" = 10'
Vert 1" = 10'

DRAINAGE PLAN AND PROFILE

SCALE AS SHOWN

D-3

STATION	+20	+40	+60	+80	10+00	+20	+40	+60	+80	TOTAL
CY Exc										
CY Emb										

REVISED BY | DATE REVISED
MARTIN GARCIA | MARLENE GIBB
CALCULATED-DESIGNED BY | CHECKED BY
FUNCTIONAL SUPERVISOR: ROBERT E. POLGAR

STATE OF CALIFORNIA - DEPARTMENT OF TRANSPORTATION
03-DESIGN
Caltrans

LAST REVISION | DATE PLOTTED => 31-AUG-2015 | TIME PLOTTED => 09:35

P:\proj4\01\378X7\drafting\01000001371ia003.dgn

BORDER LAST REVISED 7/2/2010
USERNAME => s130875
DGN FILE => 01000001371ia003.dgn
RELATIVE BORDER SCALE IS IN INCHES 0 1 2 3
UNIT 0306
PROJECT NUMBER & PHASE 01000001371

Dist	COUNTY	ROUTE	POST MILES TOTAL PROJECT	SHEET No.	TOTAL SHEETS
01	Men	128	2.8/11.1	7	98

Marlene Gibb 6-15-15
REGISTERED CIVIL ENGINEER DATE

6-15-15
PLANS APPROVAL DATE

REGISTERED PROFESSIONAL ENGINEER
MARLENE E. GIBB
No. C 51513
Exp. 06-30-16
CIVIL
STATE OF CALIFORNIA

THE STATE OF CALIFORNIA OR ITS OFFICERS OR AGENTS SHALL NOT BE RESPONSIBLE FOR THE ACCURACY OR COMPLETENESS OF SCANNED COPIES OF THIS PLAN SHEET.

NOTES:

1. FOR ACCURATE RIGHT OF WAY DATA, CONTACT RIGHT OF WAY ENGINEERING AT THE DISTRICT OFFICE
2. FOR ROCK SLOPE PROTECTION DETAILS SEE DRAINAGE DETAIL SHEETS.
3. FG FLUSH WITH TOP OF HEAD WALL AT ALL LOCATIONS.

T15N R17W MDB&M
SECTION 12

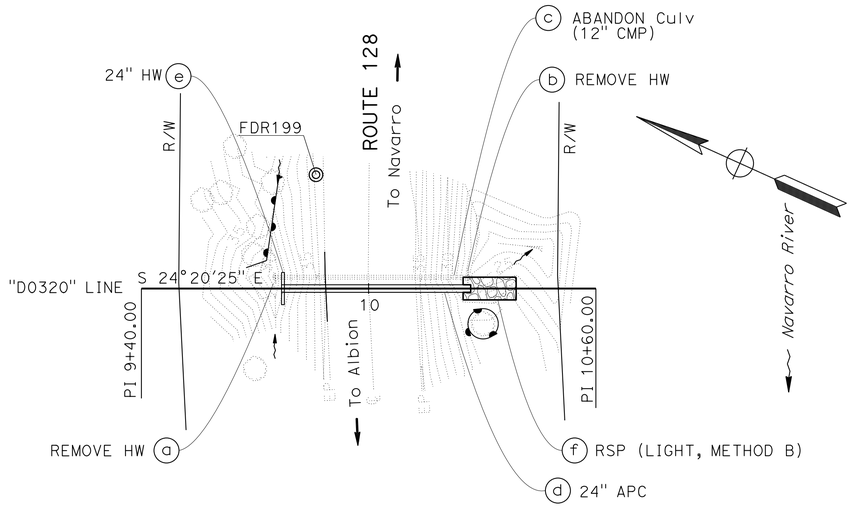

DRAINAGE SYSTEM No. 4

ROUTE 128
PM 3.20

PLAN

SCALE: 1" = 20'

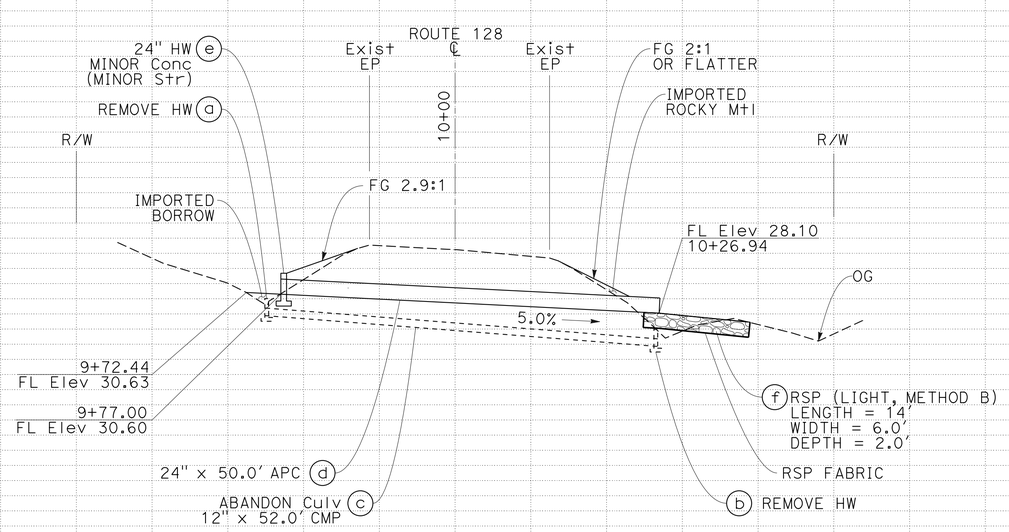

PROFILE

SCALE: Horiz 1" = 10'
Vert 1" = 10'

DRAINAGE PLAN AND PROFILE

SCALE AS SHOWN

D-4

STATION	+20	+40	+60	+80	10+00	+20	+40	+60	+80	TOTAL
CY Exc										
CY Emb										

STATE OF CALIFORNIA - DEPARTMENT OF TRANSPORTATION
Caltrans
03-DESIGN

FUNCTIONAL SUPERVISOR: ROBERT E. POLGAR
CALCULATED-DESIGNED BY: MARTIN GARCIA
CHECKED BY: MARLENE GIBB
REVISED BY
DATE REVISED

P:\proj4\01\378x7\drafting\01000001371a004.dgn

LAST REVISION
DATE PLOTTED => 31-AUG-2015
TIME PLOTTED => 09:35

Dist	COUNTY	ROUTE	POST MILES TOTAL PROJECT	SHEET No.	TOTAL SHEETS
01	Men	128	2.8/11.1	8	98

Marlene Gibb 6-15-15
REGISTERED CIVIL ENGINEER DATE

6-15-15
PLANS APPROVAL DATE

REGISTERED PROFESSIONAL ENGINEER
MARLENE E. GIBB
No. C 51513
Exp. 06-30-16
CIVIL
STATE OF CALIFORNIA

THE STATE OF CALIFORNIA OR ITS OFFICERS OR AGENTS SHALL NOT BE RESPONSIBLE FOR THE ACCURACY OR COMPLETENESS OF SCANNED COPIES OF THIS PLAN SHEET.

T15N R17W MDB&M
SECTION 12

NOTES:

1. FOR ACCURATE RIGHT OF WAY DATA, CONTACT RIGHT OF WAY ENGINEERING AT THE DISTRICT OFFICE
2. FOR ROCK SLOPE PROTECTION DETAILS SEE DRAINAGE DETAIL SHEETS.
3. FOR HMA APRON AND HMA DIKE (TYPE A) DETAILS SEE DRAINAGE DETAIL SHEETS.
4. INLET AND/OR OUTLET STRUCTURE SKEW ANGLE IS MEASURED FROM A LINE PERPENDICULAR TO THE CULVERT ALIGNMENT.
5. EXPECT EXITING CULVERT TO BE ENCASED IN CONCRETE BACKFILL THROUGHOUT TRENCH LENGTH.

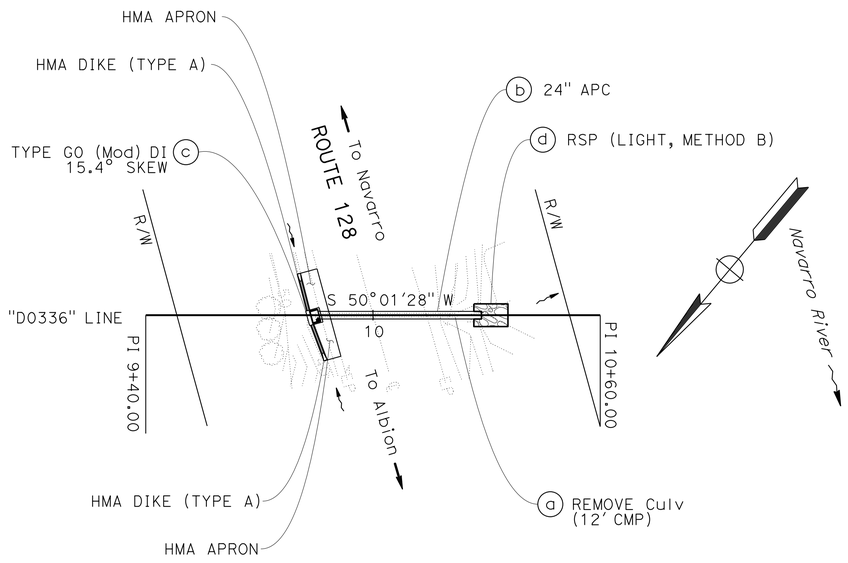

DRAINAGE SYSTEM No. 5

ROUTE 128
PM 3.36

PLAN

SCALE: 1" = 20'

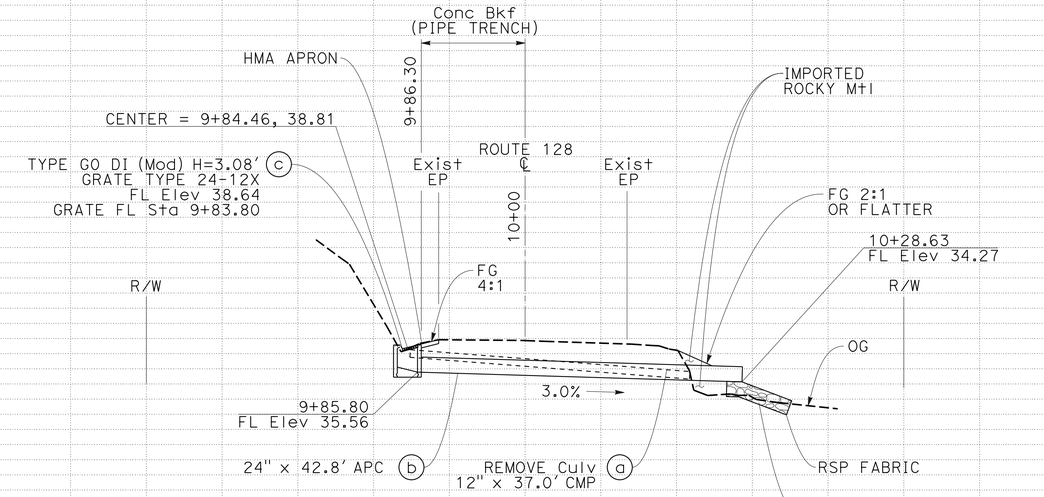

PROFILE

SCALE: Horiz 1" = 10'
Vert 1" = 10'

DRAINAGE PLAN AND PROFILE

SCALE AS SHOWN

D-5

STATION		+20	+40	+60	+80	10+00	+20	+40	+60	+80	TOTAL
CY	Exc										
	Emb										

REVISED BY | DATE REVISED
MARTIN GARCIA | MARLENE GIBB
CALCULATED-DESIGNED BY | CHECKED BY
FUNCTIONAL SUPERVISOR: ROBERT E. POLGAR
STATE OF CALIFORNIA - DEPARTMENT OF TRANSPORTATION
03-DESIGN
Caltrans

LAST REVISION | DATE PLOTTED => 31-AUG-2015 | TIME PLOTTED => 09:35

P:\proj4\01\37\8x7\drafting\01000001371a005.dgn

BORDER LAST REVISED 7/2/2010 | USERNAME => s130875 | DGN FILE => 01000001371a005.dgn | RELATIVE BORDER SCALE IS IN INCHES 0 1 2 3 | UNIT 0306 | PROJECT NUMBER & PHASE 01000001371

Dist	COUNTY	ROUTE	POST MILES TOTAL PROJECT	SHEET No.	TOTAL SHEETS
01	Men	128	2.8/11.1	9	98

Marlene Gibb 6-15-15
REGISTERED CIVIL ENGINEER DATE

6-15-15
PLANS APPROVAL DATE

REGISTERED PROFESSIONAL ENGINEER — MARLENE E. GIBB No. C 51513 Exp. 06-30-16 CIVIL — STATE OF CALIFORNIA

THE STATE OF CALIFORNIA OR ITS OFFICERS OR AGENTS SHALL NOT BE RESPONSIBLE FOR THE ACCURACY OR COMPLETENESS OF SCANNED COPIES OF THIS PLAN SHEET.

T15N R17W MDB&M
SECTION 12

NOTES:

1. FOR ACCURATE RIGHT OF WAY DATA, CONTACT RIGHT OF WAY ENGINEERING AT THE DISTRICT OFFICE
2. FOR ROCK SLOPE PROTECTION DETAILS SEE DRAINAGE DETAIL SHEETS.
3. FG FLUSH WITH TOP OF HEAD WALL AT ALL LOCATIONS.
4. INLET AND/OR OUTLET STRUCTURE SKEW ANGLE IS MEASURED FROM A LINE PERPENDICULAR TO THE CULVERT ALIGNMENT.

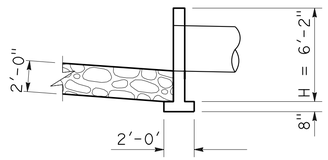

MODIFIED 36" PIPE HW
NO SCALE

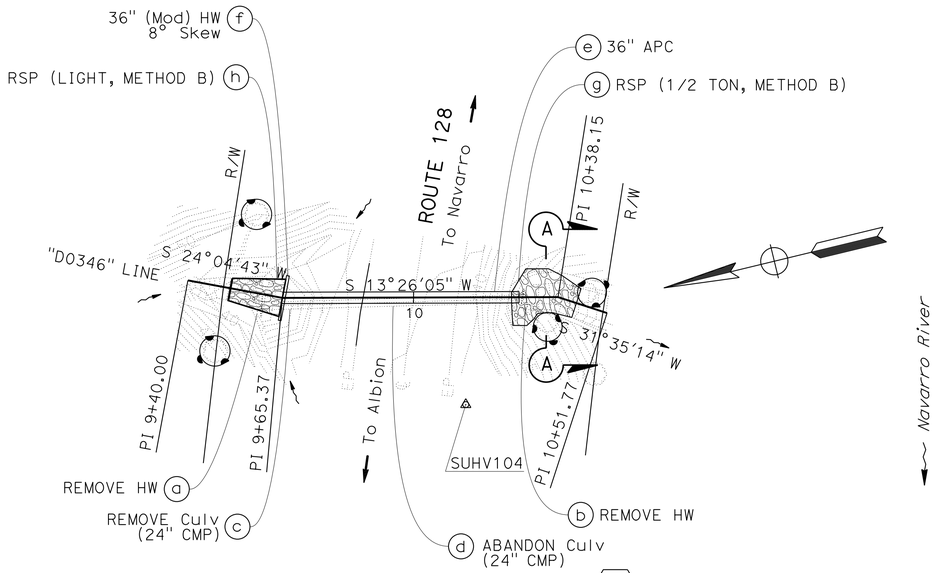

DRAINAGE SYSTEM No. 6

ROUTE 128
PM 3.46

PLAN

SCALE: 1" = 20'

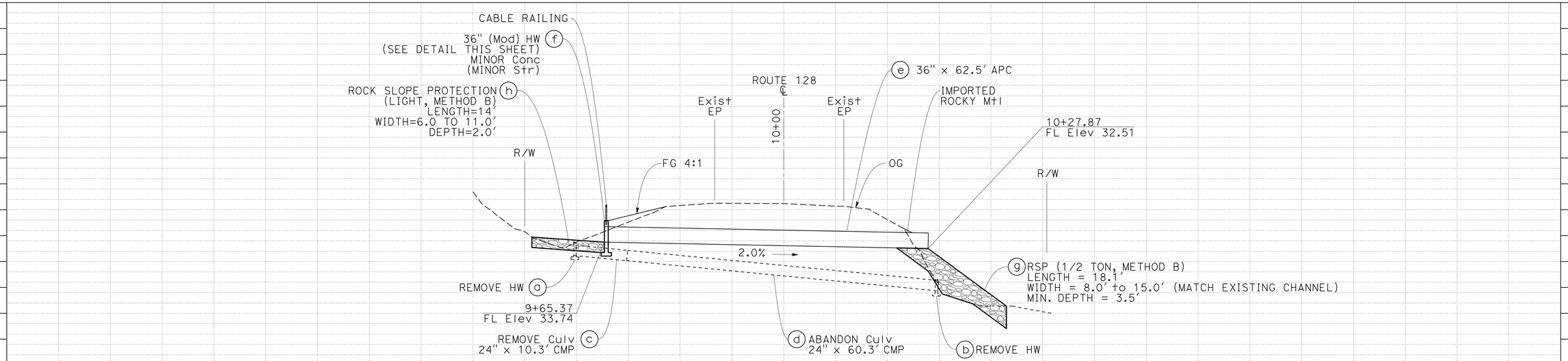

PROFILE

SCALE: Horiz 1" = 10'
Vert 1" = 10'

DRAINAGE PLAN AND PROFILE

SCALE AS SHOWN

D-6

STATION	+20	+40	+60	+80	10+00	+20	+40	+60	+80	TOTAL
CY Exc										
CY Emb										

REVISED BY | DATE REVISED
CALCULATED-DESIGNED BY: MARTIN GARCIA
CHECKED BY: MARLENE GIBB
FUNCTIONAL SUPERVISOR: ROBERT E. POLGAR
STATE OF CALIFORNIA - DEPARTMENT OF TRANSPORTATION
03-DESIGN
Caltrans

LAST REVISION | DATE PLOTTED => 31-AUG-2015 | TIME PLOTTED => 09:35

P:\proj4\01\378x7\drafting\01000001371a006.dgn

BORDER LAST REVISED 7/2/2010
USERNAME => s130875
DGN FILE => 01000001371a006.dgn
RELATIVE BORDER SCALE IS IN INCHES 0 1 2 3
UNIT 0306
PROJECT NUMBER & PHASE 01000001371

Dist	COUNTY	ROUTE	POST MILES TOTAL PROJECT	SHEET No.	TOTAL SHEETS
01	Men	128	2.8/11.1	10	98

Marlene Gibb 6-15-15
REGISTERED CIVIL ENGINEER DATE

6-15-15
PLANS APPROVAL DATE

REGISTERED PROFESSIONAL ENGINEER
MARLENE E. GIBB
No. C 51513
Exp. 06-30-16
CIVIL
STATE OF CALIFORNIA

THE STATE OF CALIFORNIA OR ITS OFFICERS OR AGENTS SHALL NOT BE RESPONSIBLE FOR THE ACCURACY OR COMPLETENESS OF SCANNED COPIES OF THIS PLAN SHEET.

T15N R17W MDB&M
SECTION 12

NOTES:

1. FOR ACCURATE RIGHT OF WAY DATA, CONTACT RIGHT OF WAY ENGINEERING AT THE DISTRICT OFFICE
2. FOR ROCK SLOPE PROTECTION DETAILS SEE DRAINAGE DETAIL SHEETS.
3. FG FLUSH WITH TOP OF HEAD WALL AT ALL LOCATIONS.
5. EXPECT EXITING CULVERT TO BE ENCASED IN CONCRETE BACKFILL THROUGHOUT TRENCH LENGTH.

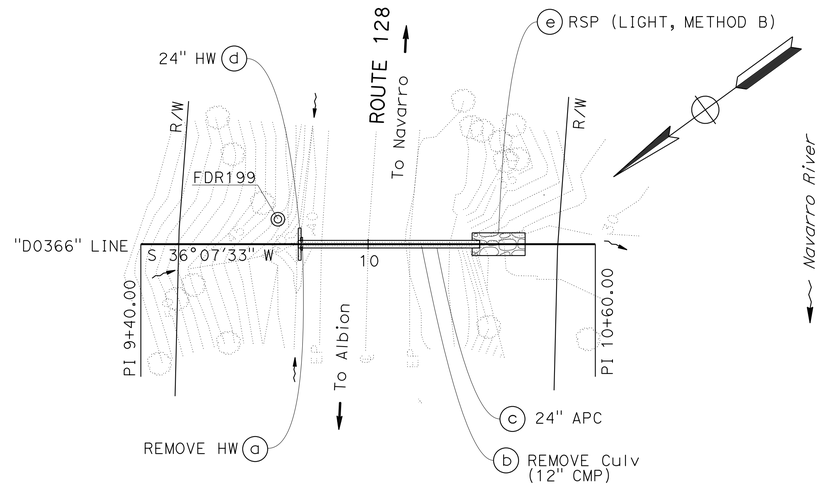

DRAINAGE SYSTEM No. 7

ROUTE 128
PM 3.66

PLAN

SCALE: 1" = 20'

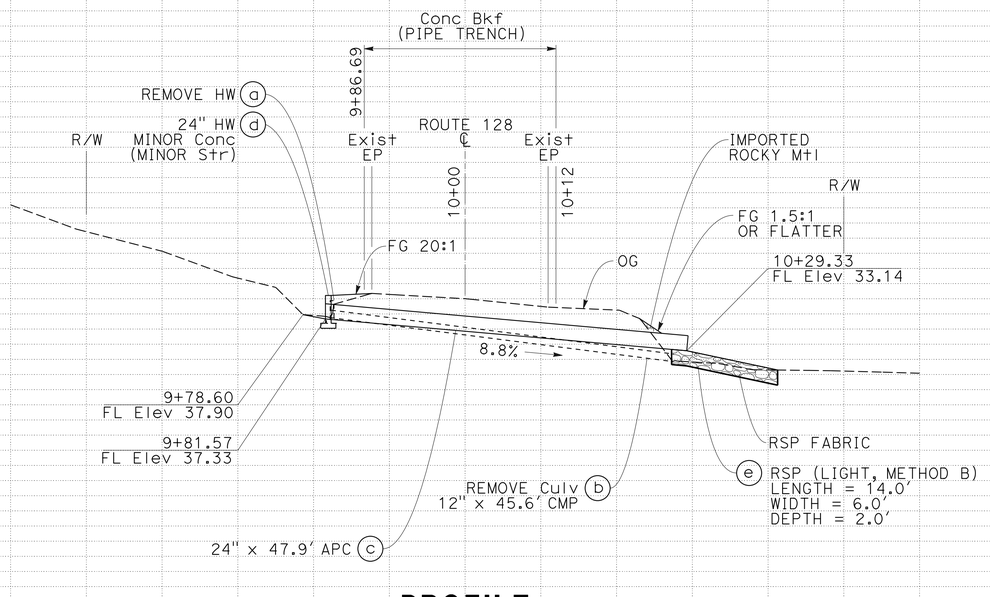

PROFILE

SCALE: Horiz 1" = 10'
Vert 1" = 10'

DRAINAGE PLAN AND PROFILE

SCALE AS SHOWN

D-7

STATION	+20	+40	+60	+80	10+00	+20	+40	+60	+80	TOTAL
CY Exc										
CY Emb										

STATE OF CALIFORNIA - DEPARTMENT OF TRANSPORTATION
03-DESIGN
Caltrans®

CALCULATED-DESIGNED BY	CHECKED BY	FUNCTIONAL SUPERVISOR	REVISED BY	DATE REVISED
MARTIN GARCIA	MARLENE GIBB	ROBERT E. POLGAR		

LAST REVISION
DATE PLOTTED => 31-AUG-2015
TIME PLOTTED => 09:35

P:\proj4\01\3787\X\drafting\01000001371a007.dgn

BORDER LAST REVISED 7/2/2010
USERNAME => s130875
DGN FILE => 01000001371a007.dgn
RELATIVE BORDER SCALE IS IN INCHES 0 1 2 3
UNIT 0306
PROJECT NUMBER & PHASE 01000001371

Dist	COUNTY	ROUTE	POST MILES TOTAL PROJECT	SHEET No.	TOTAL SHEETS
01	Men	128	2.8/11.1	11	98

Marlene Gibb 6-15-15
REGISTERED CIVIL ENGINEER DATE

6-15-15
PLANS APPROVAL DATE

REGISTERED PROFESSIONAL ENGINEER
MARLENE E. GIBB
No. C 51513
Exp. 06-30-16
CIVIL
STATE OF CALIFORNIA

THE STATE OF CALIFORNIA OR ITS OFFICERS OR AGENTS SHALL NOT BE RESPONSIBLE FOR THE ACCURACY OR COMPLETENESS OF SCANNED COPIES OF THIS PLAN SHEET.

T15N R17W MDB&M
SECTION 12

NOTES:

1. FOR ACCURATE RIGHT OF WAY DATA, CONTACT RIGHT OF WAY ENGINEERING AT THE DISTRICT OFFICE
2. FOR ROCK SLOPE PROTECTION DETAILS SEE DRAINAGE DETAIL SHEETS.
3. FG FLUSH WITH TOP OF HEAD WALL AT ALL LOCATIONS.
4. INLET AND/OR OUTLET STRUCTURE SKEW ANGLE IS MEASURED FROM A LINE PERPENDICULAR TO THE CULVERT ALIGNMENT.

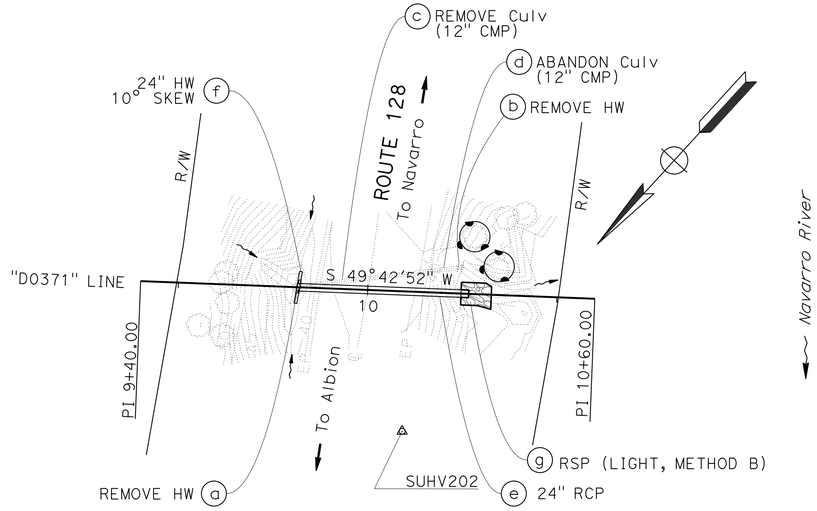

DRAINAGE SYSTEM No. 8

ROUTE 128
PM 3.71

PLAN

SCALE: 1" = 20'

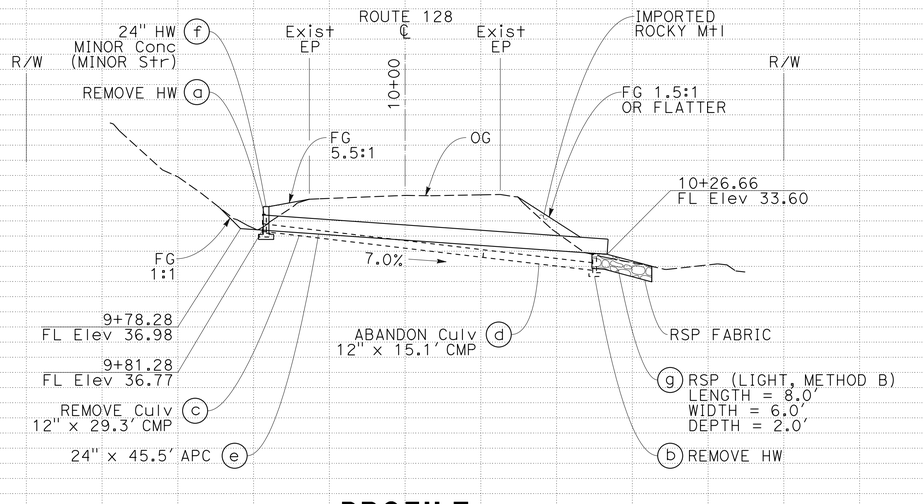

PROFILE

SCALE: Horiz 1" = 10'
Vert 1" = 10'

DRAINAGE PLAN AND PROFILE

SCALE AS SHOWN

D-8

STATION		+20	+40	+60	+80	10+00	+20	+40	+60	+80	TOTAL
CY	Exc										
	Emb										

REVISED BY | DATE REVISED
MARTIN GARCIA | MARLENE GIBB
CALCULATED-DESIGNED BY | CHECKED BY
FUNCTIONAL SUPERVISOR: ROBERT E. POLGAR
STATE OF CALIFORNIA - DEPARTMENT OF TRANSPORTATION
03-DESIGN
Caltrans

LAST REVISION | DATE PLOTTED => 31-AUG-2015 | TIME PLOTTED => 09:35

P:\proj4\01\378x7\drafting\01000001371a008.dgn

BORDER LAST REVISED 7/2/2010
USERNAME => s130875
DGN FILE => 01000001371a008.dgn
RELATIVE BORDER SCALE IS IN INCHES 0 1 2 3
UNIT 0306
PROJECT NUMBER & PHASE 01000001371

Dist	COUNTY	ROUTE	POST MILES TOTAL PROJECT	SHEET No.	TOTAL SHEETS
01	Men	128	2.8/11.1	12	98

Marlene Gibb 6-15-15
REGISTERED CIVIL ENGINEER DATE

6-15-15
PLANS APPROVAL DATE

REGISTERED PROFESSIONAL ENGINEER
MARLENE E. GIBB
No. C 51513
Exp. 06-30-16
CIVIL
STATE OF CALIFORNIA

THE STATE OF CALIFORNIA OR ITS OFFICERS OR AGENTS SHALL NOT BE RESPONSIBLE FOR THE ACCURACY OR COMPLETENESS OF SCANNED COPIES OF THIS PLAN SHEET.

T15N R17W MDB&M
SECTION 12

NOTES:

1. FOR ACCURATE RIGHT OF WAY DATA, CONTACT RIGHT OF WAY ENGINEERING AT THE DISTRICT OFFICE
2. REMOVE HEADWALL PORTION AS NEEDED, WILL BE PAID AS REMOVED HW.
3. BACKFILL BACK OF DI WITH Conc Bkf (PIPE TRENCH), QUANTITY INCLUDED IN QUANTITY SUMMARY SHEET.
4. FOR ROCK SLOPE PROTECTION DETAILS SEE DRAINAGE DETAIL SHEETS.
5. FOR HMA APRON AND HMA DIKE (TYPE A) DETAILS SEE DRAINAGE DETAIL SHEETS.
6. INLET AND/OR OUTLET STRUCTURE SKEW ANGLE IS MEASURED FROM A LINE PERPENDICULAR TO THE CULVERT ALIGNMENT.
7. EXPECT EXITING CULVERT TO BE ENCASED IN CONCRETE BACKFILL THROUGHOUT TRENCH LENGTH.
8. EXPECT EXITING CULVERT TO BE ENCASED IN CONCRETE BACKFILL THROUGHOUT TRENCH LENGTH.

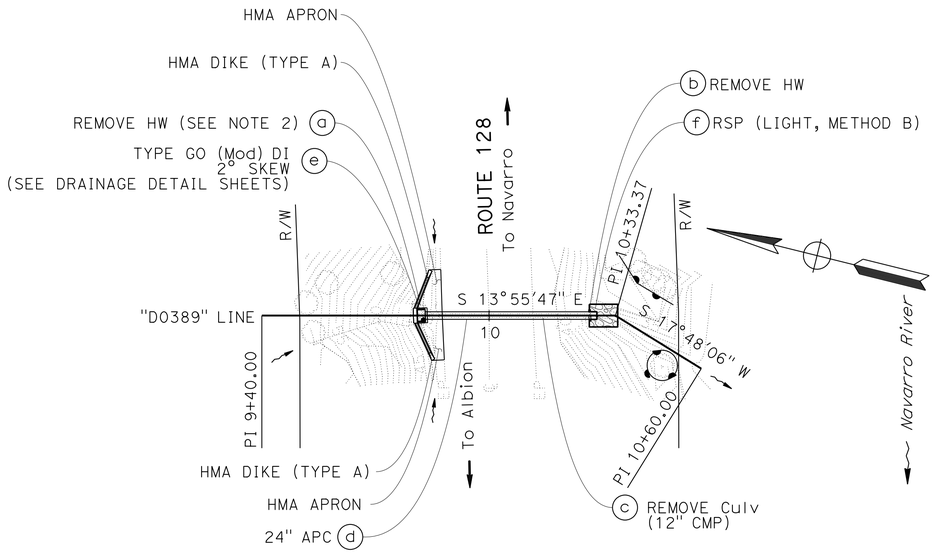

DRAINAGE SYSTEM No. 9

ROUTE 128
PM 3.89

PLAN

SCALE: 1" = 20'

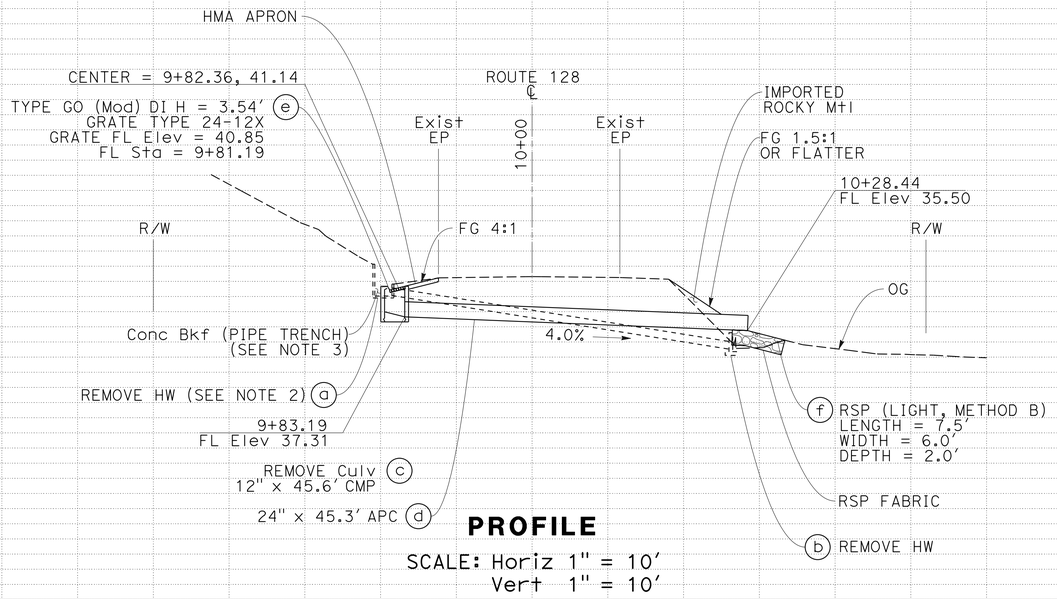

PROFILE

SCALE: Horiz 1" = 10'
Vert 1" = 10'

DRAINAGE PLAN AND PROFILE

SCALE AS SHOWN

D-9

STATION	+20	+40	+60	+80	10+00	+20	+40	+60	+80	TOTAL
CY Exc										
CY Emb										

REVISED BY | DATE REVISED
MARTIN GARCIA | MARLENE GIBB
CALCULATED-DESIGNED BY | CHECKED BY
FUNCTIONAL SUPERVISOR: ROBERT E. POLGAR
STATE OF CALIFORNIA - DEPARTMENT OF TRANSPORTATION
03-DESIGN
Caltrans

LAST REVISION | DATE PLOTTED => 31-AUG-2015 | TIME PLOTTED => 09:35

P:\proj4\01\378x7\drafting\01000001371a009.dgn

BORDER LAST REVISED 7/2/2010
USERNAME => s130875
DGN FILE => 01000001371a009.dgn
RELATIVE BORDER SCALE IS IN INCHES 0 1 2 3
UNIT 0306
PROJECT NUMBER & PHASE 01000001371

Dist	COUNTY	ROUTE	POST MILES TOTAL PROJECT	SHEET No.	TOTAL SHEETS
01	Men	128	2.8/11.1	13	98

Marlene Gibb 6-15-15
REGISTERED CIVIL ENGINEER DATE

6-15-15
PLANS APPROVAL DATE

REGISTERED PROFESSIONAL ENGINEER
MARLENE E. GIBB
No. C 51513
Exp. 06-30-16
CIVIL
STATE OF CALIFORNIA

THE STATE OF CALIFORNIA OR ITS OFFICERS OR AGENTS SHALL NOT BE RESPONSIBLE FOR THE ACCURACY OR COMPLETENESS OF SCANNED COPIES OF THIS PLAN SHEET.

T15N R17W MDB&M
SECTION 12

NOTES:

1. FOR ACCURATE RIGHT OF WAY DATA, CONTACT RIGHT OF WAY ENGINEERING AT THE DISTRICT OFFICE
2. FG FLUSH WITH TOP OF HEAD WALL AT ALL LOCATIONS.
3. INLET AND/OR OUTLET STRUCTURE SKEW ANGLE IS MEASURED FROM A LINE PERPENDICULAR TO THE CULVERT ALIGNMENT.

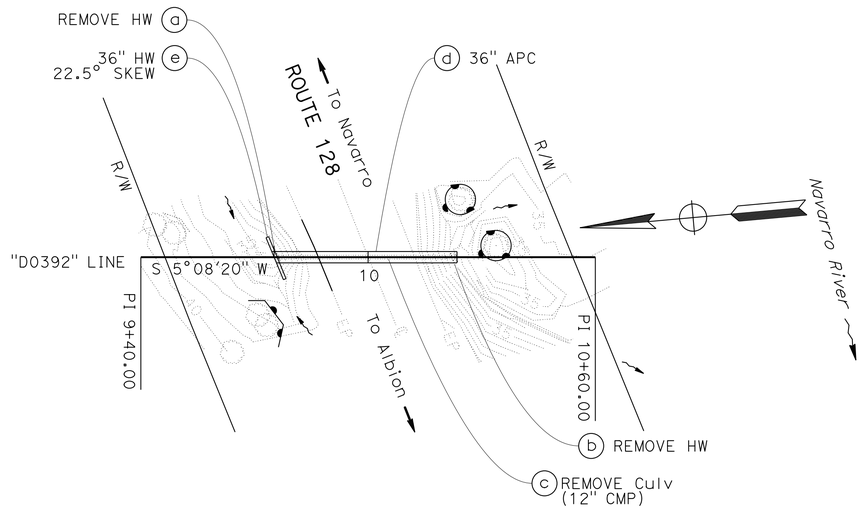

DRAINAGE SYSTEM No. 10

ROUTE 128
PM 3.92

PLAN

SCALE: 1" = 20'

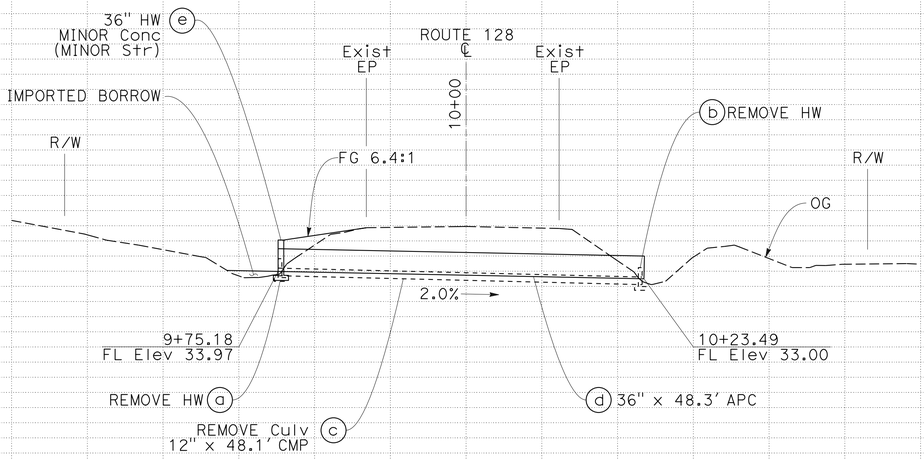

PROFILE

SCALE: Horiz 1" = 10'
Vert 1" = 10'

DRAINAGE PLAN AND PROFILE

SCALE AS SHOWN

D-10

STATION		+20	+40	+60	+80	10+00	+20	+40	+60	+80	TOTAL
CY	Exc										
	Emb										

REVISED BY | DATE REVISED
MARTIN GARCIA | MARLENE GIBB
CALCULATED-DESIGNED BY | CHECKED BY
FUNCTIONAL SUPERVISOR: ROBERT E. POLGAR
STATE OF CALIFORNIA - DEPARTMENT OF TRANSPORTATION
03-DESIGN
Caltrans

LAST REVISION | DATE PLOTTED => 31-AUG-2015 | TIME PLOTTED => 09:35

P:\proj4\01\37\8x7\drafting\01000001371a010.dgn

BORDER LAST REVISED 7/2/2010 | USERNAME => s130875 | DGN FILE => 01000001371a010.dgn | RELATIVE BORDER SCALE IS IN INCHES 0 1 2 3 | UNIT 0306 | PROJECT NUMBER & PHASE 01000001371

Dist	COUNTY	ROUTE	POST MILES TOTAL PROJECT	SHEET No.	TOTAL SHEETS
01	Men	128	2.8/11.1	14	98

Marlene Gibb 6-15-15
REGISTERED CIVIL ENGINEER DATE

6-15-15
PLANS APPROVAL DATE

REGISTERED PROFESSIONAL ENGINEER
MARLENE E. GIBB
No. C 51513
Exp. 06-30-16
CIVIL
STATE OF CALIFORNIA

THE STATE OF CALIFORNIA OR ITS OFFICERS OR AGENTS SHALL NOT BE RESPONSIBLE FOR THE ACCURACY OR COMPLETENESS OF SCANNED COPIES OF THIS PLAN SHEET.

T15N R17W MDB&M
SECTION 12

NOTES:

1. FOR ACCURATE RIGHT OF WAY DATA, CONTACT RIGHT OF WAY ENGINEERING AT THE DISTRICT OFFICE
2. FOR ROCK SLOPE PROTECTION DETAILS SEE DRAINAGE DETAIL SHEETS.
3. FG FLUSH WITH TOP OF HEAD WALL AT ALL LOCATIONS.
4. EXPECT EXITING CULVERT TO BE ENCASED IN CONCRETE BACKFILL THROUGHOUT TRENCH LENGTH.

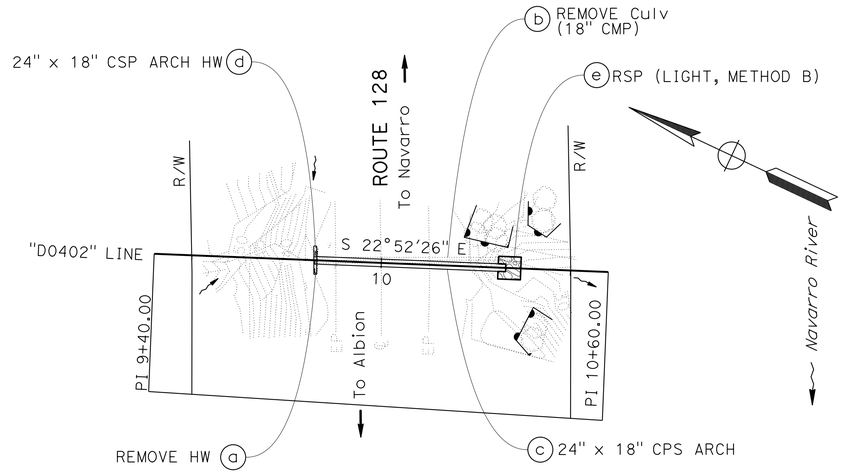

DRAINAGE SYSTEM No. 11

ROUTE 128
PM 4.02

PLAN

SCALE: 1" = 20'

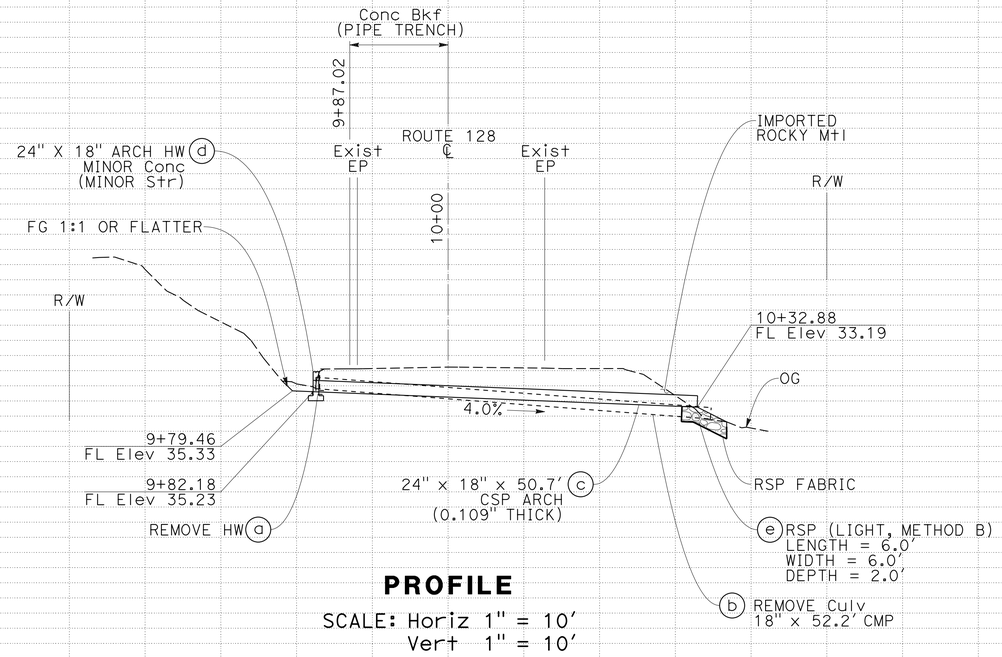

PROFILE

SCALE: Horiz 1" = 10'
Vert 1" = 10'

DRAINAGE PLAN AND PROFILE

SCALE AS SHOWN

D-11

STATION		+20	+40	+60	+80	10+00	+20	+40	+60	+80	TOTAL
CY	Exc										
	Emb										

CALCULATED-DESIGNED BY: MARTIN GARCIA
CHECKED BY: MARLENE GIBB
FUNCTIONAL SUPERVISOR: ROBERT E. POLGAR
REVISED BY | DATE REVISED

STATE OF CALIFORNIA - DEPARTMENT OF TRANSPORTATION
03-DESIGN
Caltrans

LAST REVISION | DATE PLOTTED => 31-AUG-2015 | TIME PLOTTED => 09:35

P:\proj4\01\378x7\drafting\01000001371a011.dgn

BORDER LAST REVISED 7/2/2010
USERNAME => s130875
DGN FILE => 01000001371a011.dgn
RELATIVE BORDER SCALE IS IN INCHES 0 1 2 3
UNIT 0306
PROJECT NUMBER & PHASE 01000001371

Dist	COUNTY	ROUTE	POST MILES TOTAL PROJECT	SHEET No.	TOTAL SHEETS
01	Men	128	2.8/11.1	15	98

Marlene Gibb 6-15-15
REGISTERED CIVIL ENGINEER DATE

6-15-15
PLANS APPROVAL DATE

REGISTERED PROFESSIONAL ENGINEER
MARLENE E. GIBB
No. C 51513
Exp. 06-30-16
CIVIL
STATE OF CALIFORNIA

THE STATE OF CALIFORNIA OR ITS OFFICERS OR AGENTS SHALL NOT BE RESPONSIBLE FOR THE ACCURACY OR COMPLETENESS OF SCANNED COPIES OF THIS PLAN SHEET.

NOTES:

1. FOR ACCURATE RIGHT OF WAY DATA, CONTACT RIGHT OF WAY ENGINEERING AT THE DISTRICT OFFICE
2. FOR HMA APRON AND HMA DIKE (TYPE A) DETAILS SEE DRAINAGE DETAIL SHEETS.
3. INLET AND/OR OUTLET STRUCTURE SKEW ANGLE IS MEASURED FROM A LINE PERPENDICULAR TO THE CULVERT ALIGNMENT.
4. EXPECT EXITING CULVERT TO BE ENCASED IN CONCRETE BACKFILL THROUGHOUT TRENCH LENGTH.

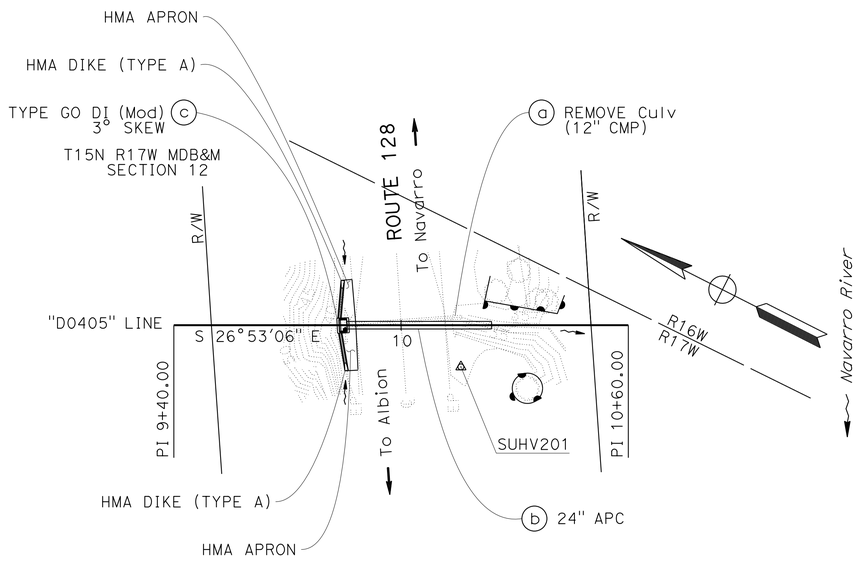

DRAINAGE SYSTEM No. 12

ROUTE 128
PM 4.05

PLAN

SCALE: 1" = 20'

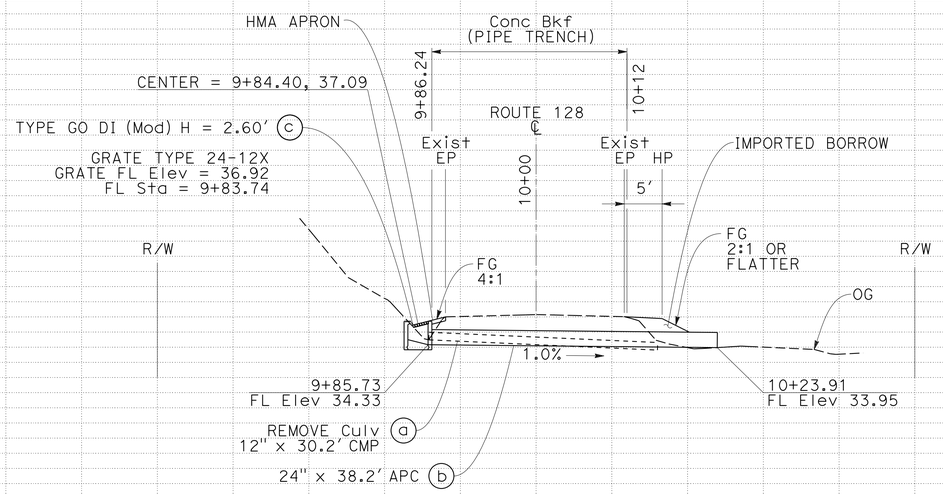

PROFILE

SCALE: Horiz 1" = 10'
Vert 1" = 10'

DRAINAGE PLAN AND PROFILE

SCALE AS SHOWN

D-12

STATION		+20	+40	+60	+80	10+00	+20	+40	+60	+80	TOTAL
CY	Exc										
	Emb										

REVISED BY | DATE REVISED
MARTIN GARCIA | MARLENE GIBB
CALCULATED-DESIGNED BY | CHECKED BY
FUNCTIONAL SUPERVISOR: ROBERT E. POLGAR
STATE OF CALIFORNIA - DEPARTMENT OF TRANSPORTATION
03-DESIGN
Caltrans

LAST REVISION | DATE PLOTTED => 31-AUG-2015 | TIME PLOTTED => 09:35

P:\proj4\01\378x7\drafting\01000001371a012.dgn

BORDER LAST REVISED 7/2/2010 | USERNAME => s130875 | DGN FILE => 01000001371a012.dgn | RELATIVE BORDER SCALE IS IN INCHES 0 1 2 3 | UNIT 0306 | PROJECT NUMBER & PHASE 01000001371

Dist	COUNTY	ROUTE	POST MILES TOTAL PROJECT	SHEET No.	TOTAL SHEETS
01	Men	128	2.8/11.1	16	98

Marlene Gibb 6-15-15
REGISTERED CIVIL ENGINEER DATE

6-15-15
PLANS APPROVAL DATE

REGISTERED PROFESSIONAL ENGINEER
MARLENE E. GIBB
No. C 51513
Exp. 06-30-16
CIVIL
STATE OF CALIFORNIA

THE STATE OF CALIFORNIA OR ITS OFFICERS OR AGENTS SHALL NOT BE RESPONSIBLE FOR THE ACCURACY OR COMPLETENESS OF SCANNED COPIES OF THIS PLAN SHEET.

T15N R16W MDB&M
SECTION 7

NOTES:

1. FOR ACCURATE RIGHT OF WAY DATA, CONTACT RIGHT OF WAY ENGINEERING AT THE DISTRICT OFFICE
2. FOR ROCK SLOPE PROTECTION DETAILS SEE DRAINAGE DETAIL SHEETS.
3. FG FLUSH WITH TOP OF HEAD WALL AT ALL LOCATIONS.

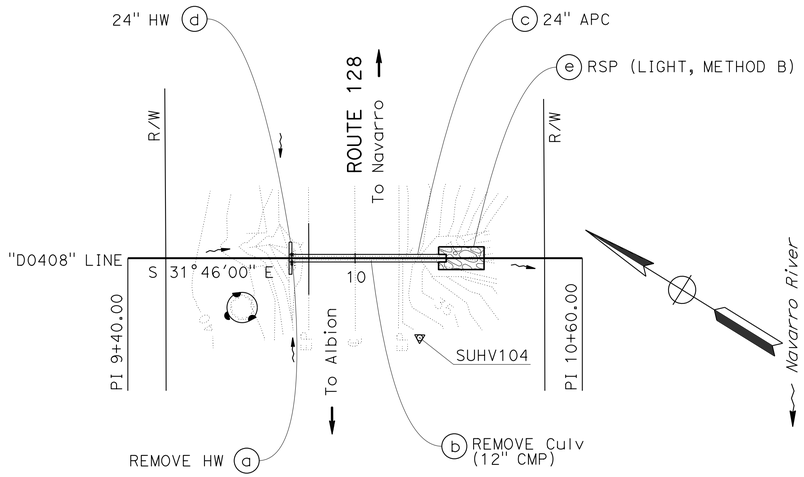

DRAINAGE SYSTEM No. 13

ROUTE 128
PM 4.08

PLAN

SCALE: 1" = 20'

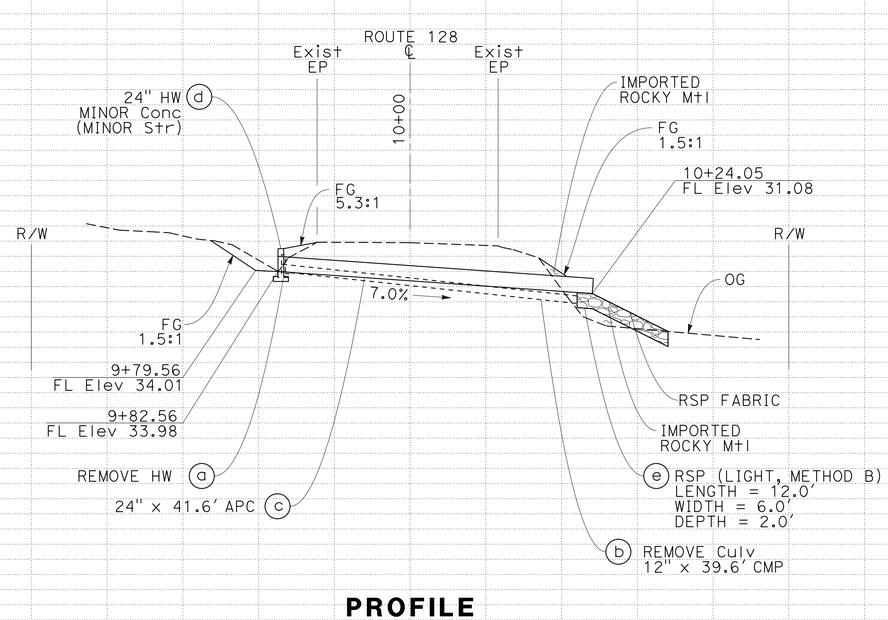

PROFILE

SCALE: Horiz 1" = 10'
Vert 1" = 10'

DRAINAGE PLAN AND PROFILE

SCALE AS SHOWN

D-13

STATION		+20	+40	+60	+80	10+00	+20	+40	+60	+80	TOTAL
CY	Exc										
	Emb										

REVISED BY | DATE REVISED
MARTIN GARCIA | MARLENE GIBB
CALCULATED-DESIGNED BY | CHECKED BY
FUNCTIONAL SUPERVISOR: ROBERT E. POLGAR
STATE OF CALIFORNIA - DEPARTMENT OF TRANSPORTATION
03-DESIGN
Caltrans

LAST REVISION | DATE PLOTTED => 31-AUG-2015 | TIME PLOTTED => 09:35

P:\proj4\01\378x7\drafting\01000001371a013.dgn

BORDER LAST REVISED 7/2/2010
USERNAME => s130875
DGN FILE => 01000001371a013.dgn
RELATIVE BORDER SCALE IS IN INCHES 0 1 2 3
UNIT 0306
PROJECT NUMBER & PHASE 01000001371

Dist	COUNTY	ROUTE	POST MILES TOTAL PROJECT	SHEET No.	TOTAL SHEETS
01	Men	128	2.8/11.1	17	98

Marlene Gibb 6-15-15
REGISTERED CIVIL ENGINEER DATE

6-15-15
PLANS APPROVAL DATE

REGISTERED PROFESSIONAL ENGINEER
MARLENE E. GIBB
No. C 51513
Exp. 06-30-16
CIVIL
STATE OF CALIFORNIA

THE STATE OF CALIFORNIA OR ITS OFFICERS OR AGENTS SHALL NOT BE RESPONSIBLE FOR THE ACCURACY OR COMPLETENESS OF SCANNED COPIES OF THIS PLAN SHEET.

T15N R16W MDB&M
SECTION 7

NOTES:

1. FOR ACCURATE RIGHT OF WAY DATA, CONTACT RIGHT OF WAY ENGINEERING AT THE DISTRICT OFFICE
2. REMOVE HEADWALL PORTION AS NEEDED, WILL BE PAID AS REMOVED HW.
3. FOR HMA APRON AND HMA DIKE (TYPE A) DETAILS SEE DRAINAGE DETAIL SHEETS.
4. BACKFILL OF DI WITH Conc Bkf (PIPE TRENCH), QUANTITY INCLUDED IN QUANTITY SUMMARY SHEET.
5. FOR ROCK SLOPE PROTECTION DETAILS SEE DRAINAGE DETAIL SHEETS.

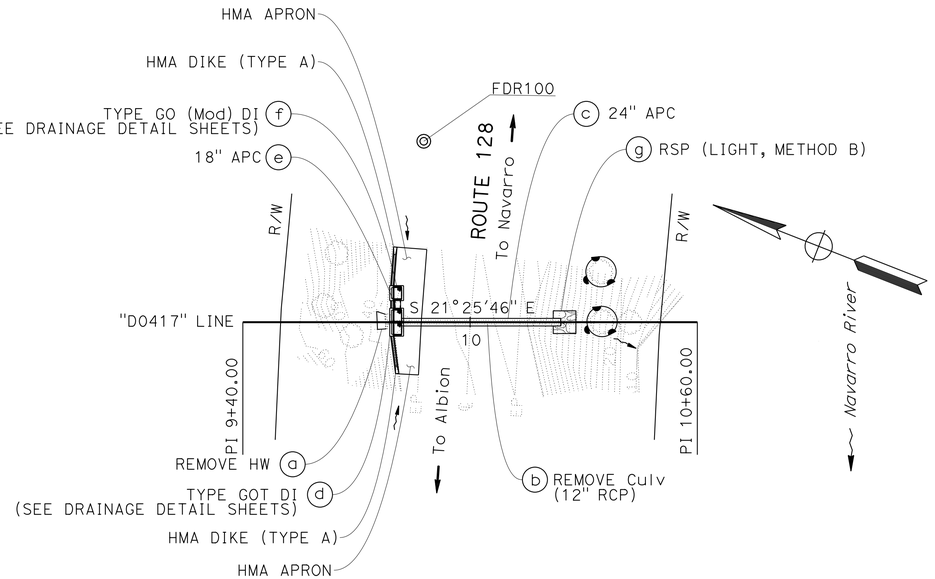

DRAINAGE SYSTEM No. 14

ROUTE 128
PM 4.17

PLAN

SCALE: 1" = 20'

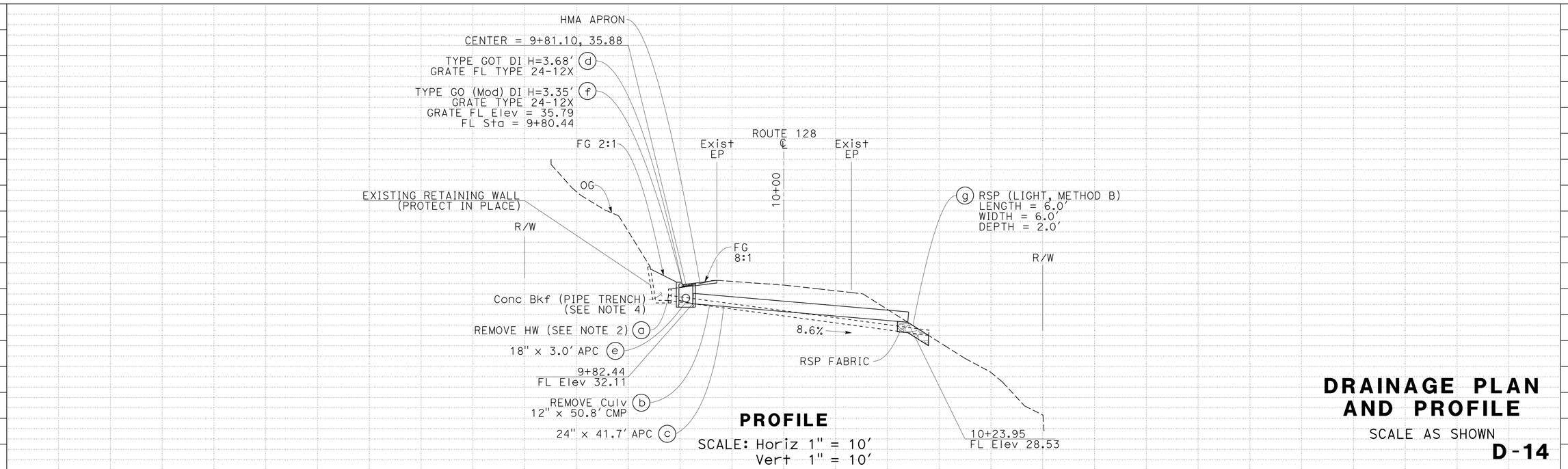

PROFILE

SCALE: Horiz 1" = 10'
Vert 1" = 10'

DRAINAGE PLAN AND PROFILE

SCALE AS SHOWN

D-14

DATE PLOTTED => 31-AUG-2015
TIME PLOTTED => 09:35

LAST REVISION

STATE OF CALIFORNIA - DEPARTMENT OF TRANSPORTATION
03-DESIGN
FUNCTIONAL SUPERVISOR: ROBERT E. POLGAR
CALCULATED-DESIGNED BY: MARLENE GIBB
CHECKED BY: MARTIN GARCIA
REVISED BY
DATE REVISED

P:\proj4\01\3787\drafting\01000001371a014.dgn

BORDER LAST REVISED 7/2/2010
USERNAME => s130875
DGN FILE => 01000001371a014.dgn
RELATIVE BORDER SCALE IS IN INCHES 0 1 2 3
UNIT 0306
PROJECT NUMBER & PHASE 01000001371

Dist	COUNTY	ROUTE	POST MILES TOTAL PROJECT	SHEET No.	TOTAL SHEETS
01	Men	128	2.8/11.1	18	98

Marlene Gibb 6-15-15
REGISTERED CIVIL ENGINEER DATE

6-15-15
PLANS APPROVAL DATE

REGISTERED PROFESSIONAL ENGINEER
MARLENE E. GIBB
No. C 51513
Exp. 06-30-16
CIVIL
STATE OF CALIFORNIA

THE STATE OF CALIFORNIA OR ITS OFFICERS OR AGENTS SHALL NOT BE RESPONSIBLE FOR THE ACCURACY OR COMPLETENESS OF SCANNED COPIES OF THIS PLAN SHEET.

T15N R16W MDB&M
SECTION 7

NOTES:

1. FOR ACCURATE RIGHT OF WAY DATA, CONTACT RIGHT OF WAY ENGINEERING AT THE DISTRICT OFFICE
2. INLET AND/OR OUTLET STRUCTURE SKEW ANGLE IS MEASURED FROM A LINE PERPENDICULAR TO THE CULVERT ALIGNMENT.
3. FG FLUSH WITH TOP OF HEAD WALL AT ALL LOCATIONS.
4. EXPECT EXITING CULVERT TO BE ENCASED IN CONCRETE BACKFILL THROUGHOUT TRENCH LENGTH.

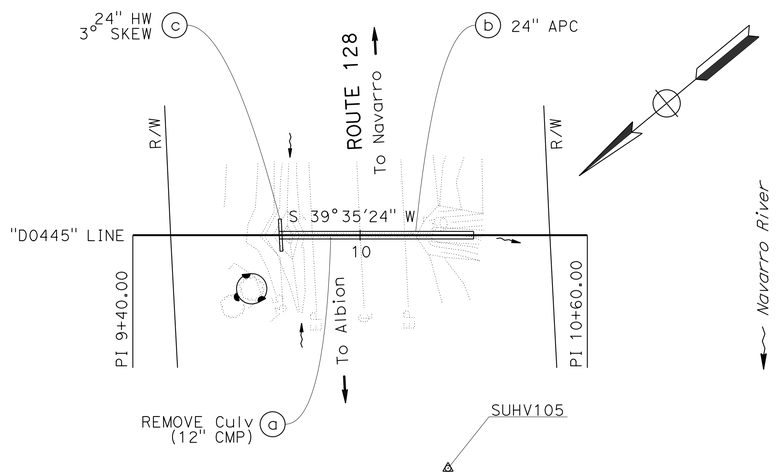

DRAINAGE SYSTEM No. 15

ROUTE 128
PM 4.45

PLAN

SCALE: 1" = 20'

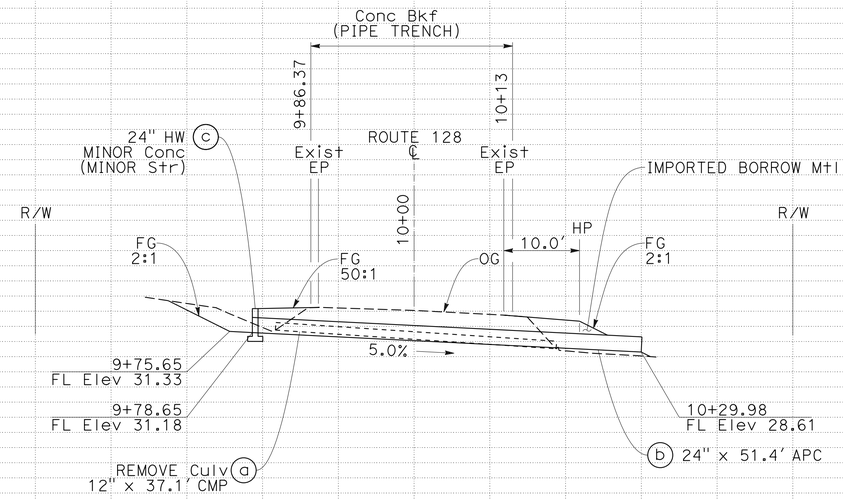

PROFILE

SCALE: Horiz 1" = 10'
Vert 1" = 10'

DRAINAGE PLAN AND PROFILE

SCALE AS SHOWN

D-15

STATION		+20	+40	+60	+80	10+00	+20	+40	+60	+80	TOTAL
CY	Exc										
	Emb										

STATE OF CALIFORNIA - DEPARTMENT OF TRANSPORTATION
Caltrans
03-DESIGN
FUNCTIONAL SUPERVISOR: ROBERT E. POLGAR
CALCULATED-DESIGNED BY: MARTIN GARCIA
CHECKED BY: MARLENE GIBB
REVISED BY | DATE REVISED

LAST REVISION | DATE PLOTTED => 31-AUG-2015 | TIME PLOTTED => 09:35

P:\proj4\01\378x7\drafting\01000001371a015.dgn

BORDER LAST REVISED 7/2/2010
USERNAME => s130875
DGN FILE => 01000001371a015.dgn
RELATIVE BORDER SCALE IS IN INCHES 0 1 2 3
UNIT 0306
PROJECT NUMBER & PHASE 01000001371

Dist	COUNTY	ROUTE	POST MILES TOTAL PROJECT	SHEET No.	TOTAL SHEETS
01	Men	128	2.8/11.1	19	98

Marlene Gibb 6-15-15
REGISTERED CIVIL ENGINEER DATE

6-15-15
PLANS APPROVAL DATE

REGISTERED PROFESSIONAL ENGINEER
MARLENE E. GIBB
No. C 51513
Exp. 06-30-16
CIVIL
STATE OF CALIFORNIA

THE STATE OF CALIFORNIA OR ITS OFFICERS OR AGENTS SHALL NOT BE RESPONSIBLE FOR THE ACCURACY OR COMPLETENESS OF SCANNED COPIES OF THIS PLAN SHEET.

T15N R16W MDB&M
SECTION 7

NOTES:

1. FOR ACCURATE RIGHT OF WAY DATA, CONTACT RIGHT OF WAY ENGINEERING AT THE DISTRICT OFFICE
2. FG FLUSH WITH TOP OF HEAD WALL AT ALL LOCATIONS.
3. INLET AND/OR OUTLET STRUCTURE SKEW ANGLE IS MEASURED FROM A LINE PERPENDICULAR TO THE CULVERT ALIGNMENT.
4. EXPECT EXITING CULVERT TO BE ENCASED IN CONCRETE BACKFILL THROUGHOUT TRENCH LENGTH.

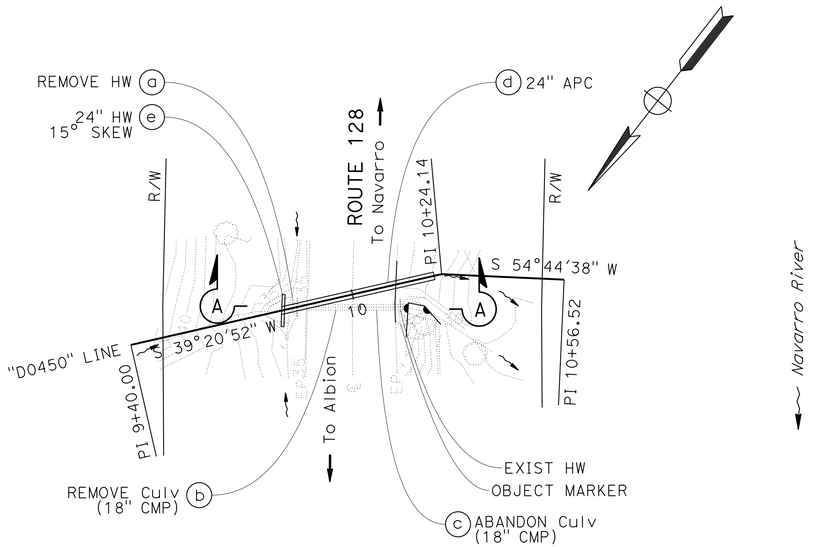

DRAINAGE SYSTEM No. 16

ROUTE 128
PM 4.50

PLAN

SCALE: 1" = 20'

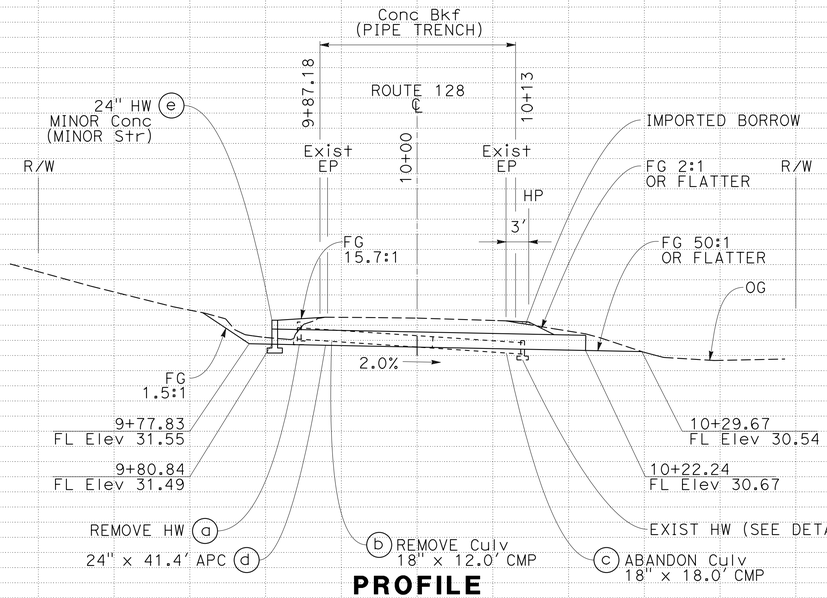

PROFILE

SCALE: Horiz 1" = 10'
Vert 1" = 10'

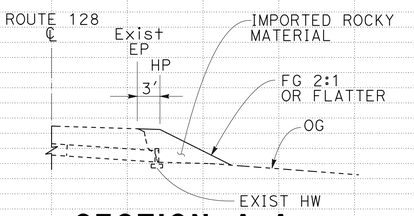

SECTION A-A

ABANDON CULVERT DETAIL @ EXIST HW
SCALE: 1" = 10'

DRAINAGE PLAN AND PROFILE

SCALE AS SHOWN

D-16

STATION		+20	+40	+60	+80	10+00	+20	+40	+60	+80	TOTAL
CY	Exc										
	Emb										

CALCULATED-DESIGNED BY: MARTIN GARCIA
CHECKED BY: MARLENE GIBB
FUNCTIONAL SUPERVISOR: ROBERT E. POLGAR
REVISED BY | DATE REVISED

STATE OF CALIFORNIA - DEPARTMENT OF TRANSPORTATION
03-DESIGN
Caltrans

LAST REVISION | DATE PLOTTED => 31-AUG-2015 | TIME PLOTTED => 09:35

P:\proj4\01\378x7\drafting\01000001371ia016.dgn

BORDER LAST REVISED 7/2/2010 | USERNAME => s130875 | DGN FILE => 01000001371ia016.dgn | RELATIVE BORDER SCALE IS IN INCHES 0 1 2 3 | UNIT 0306 | PROJECT NUMBER & PHASE 01000001371

Dist	COUNTY	ROUTE	POST MILES TOTAL PROJECT	SHEET No.	TOTAL SHEETS
01	Men	128	2.8/11.1	20	98

Marlene Gibb 6-15-15
REGISTERED CIVIL ENGINEER DATE

MARLENE E. GIBB No. C 51513 Exp. 06-30-16 CIVIL — REGISTERED PROFESSIONAL ENGINEER — STATE OF CALIFORNIA

6-15-15
PLANS APPROVAL DATE

THE STATE OF CALIFORNIA OR ITS OFFICERS OR AGENTS SHALL NOT BE RESPONSIBLE FOR THE ACCURACY OR COMPLETENESS OF SCANNED COPIES OF THIS PLAN SHEET.

NOTES:

1. FOR ACCURATE RIGHT OF WAY DATA, CONTACT RIGHT OF WAY ENGINEERING AT THE DISTRICT OFFICE
2. FG FLUSH WITH TOP OF HEAD WALL AT ALL LOCATIONS.
3. INLET AND/OR OUTLET STRUCTURE SKEW ANGLE IS MEASURED FROM A LINE PERPENDICULAR TO THE CULVERT ALIGNMENT.
4. EXPECT EXITING CULVERT TO BE ENCASED IN CONCRETE BACKFILL THROUGHOUT TRENCH LENGTH.

T15N R16W MDB&M
SECTION 7

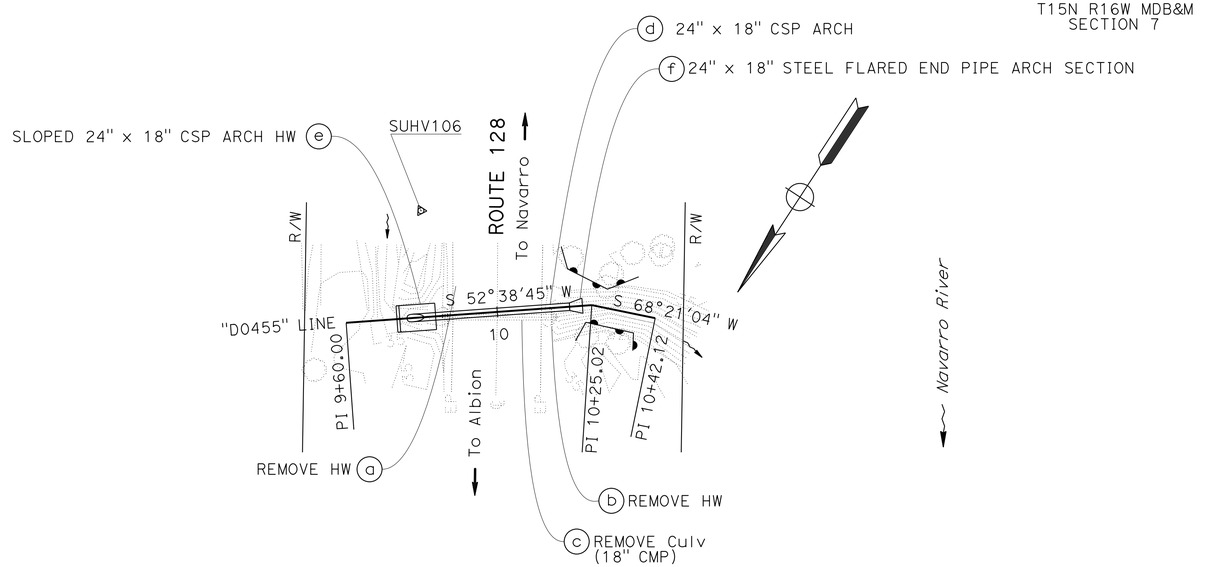

DRAINAGE SYSTEM No. 17

ROUTE 128
PM 4.55

PLAN

SCALE: 1" = 20'

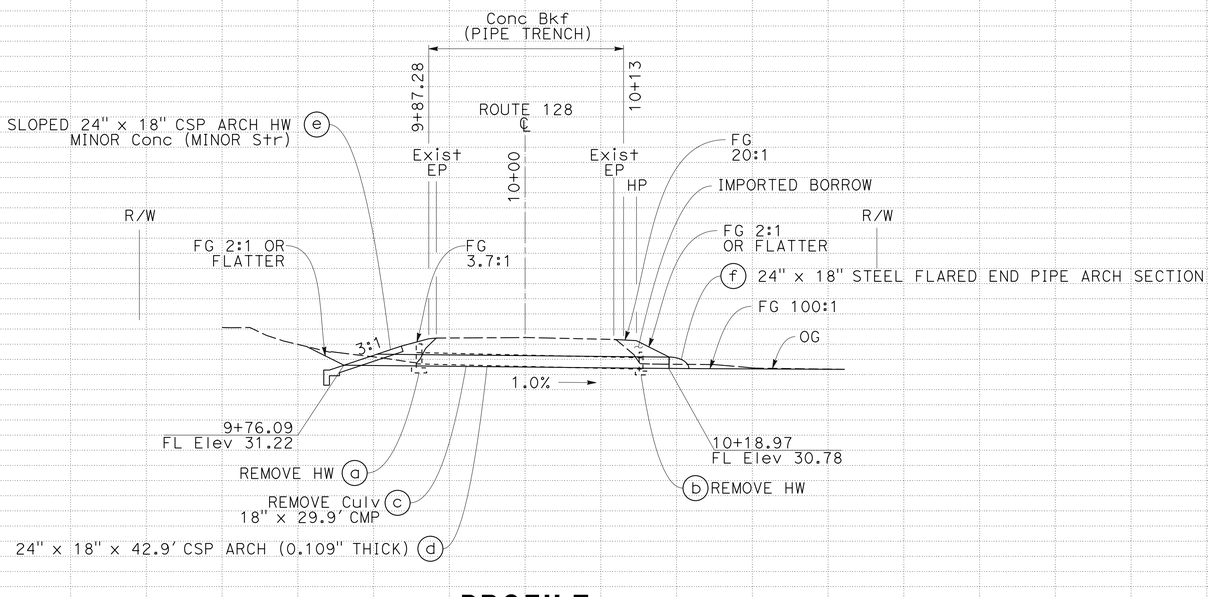

PROFILE

SCALE: Horiz 1" = 10'
Vert 1" = 10'

DRAINAGE PLAN AND PROFILE

SCALE AS SHOWN

D-17

STATION		+20	+40	+60	+80	10+00	+20	+40	+60	+80	TOTAL
CY	Exc										
	Emb										

STATE OF CALIFORNIA - DEPARTMENT OF TRANSPORTATION
03-DESIGN
Caltrans®

FUNCTIONAL SUPERVISOR: ROBERT E. POLGAR
CALCULATED-DESIGNED BY: MARLENE GIBB
CHECKED BY: MARTIN GARCIA
REVISED BY / DATE REVISED

LAST REVISION — DATE PLOTTED => 31-AUG-2015 TIME PLOTTED => 09:35

P:\proj4\01\3787\drafting\01000001371d017.dgn

BORDER LAST REVISED 7/2/2010
USERNAME => s130875
DGN FILE => 01000001371d017.dgn
RELATIVE BORDER SCALE IS IN INCHES 0 1 2 3
UNIT 0306
PROJECT NUMBER & PHASE 01000001371

Dist	COUNTY	ROUTE	POST MILES TOTAL PROJECT	SHEET No.	TOTAL SHEETS
01	Men	128	2.8/11.1	21	98

Martin Gibb 6-15-15
REGISTERED CIVIL ENGINEER DATE

6-15-15
PLANS APPROVAL DATE

REGISTERED PROFESSIONAL ENGINEER
MARLENE E. GIBB
No. C 51513
Exp. 06-30-16
CIVIL
STATE OF CALIFORNIA

THE STATE OF CALIFORNIA OR ITS OFFICERS OR AGENTS SHALL NOT BE RESPONSIBLE FOR THE ACCURACY OR COMPLETENESS OF SCANNED COPIES OF THIS PLAN SHEET.

T15N R16W MDB&M
SECTION 7

NOTES:

1. FOR ACCURATE RIGHT OF WAY DATA, CONTACT RIGHT OF WAY ENGINEERING AT THE DISTRICT OFFICE
2. FG FLUSH WITH TOP OF HEAD WALL AT ALL LOCATIONS.
3. EXPECT EXITING CULVERT TO BE ENCASED IN CONCRETE BACKFILL THROUGHOUT TRENCH LENGTH.

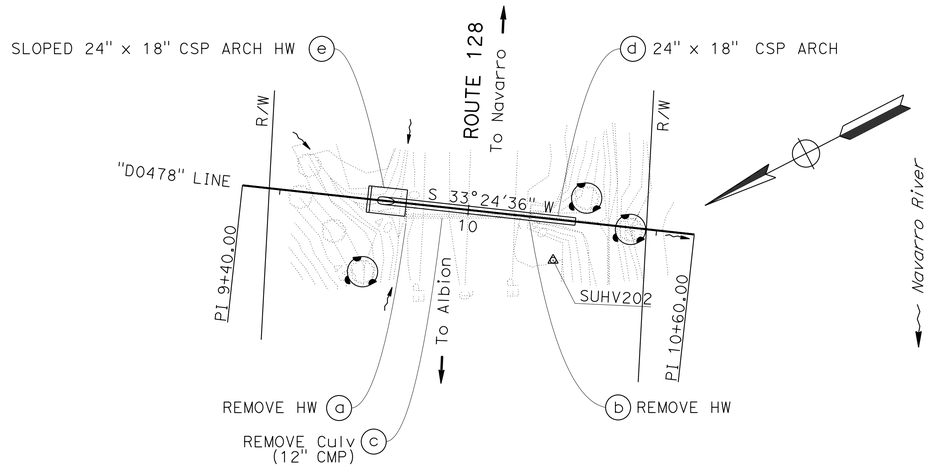

DRAINAGE SYSTEM No. 18

ROUTE 128
PM 4.78

PLAN

SCALE: 1" = 20'

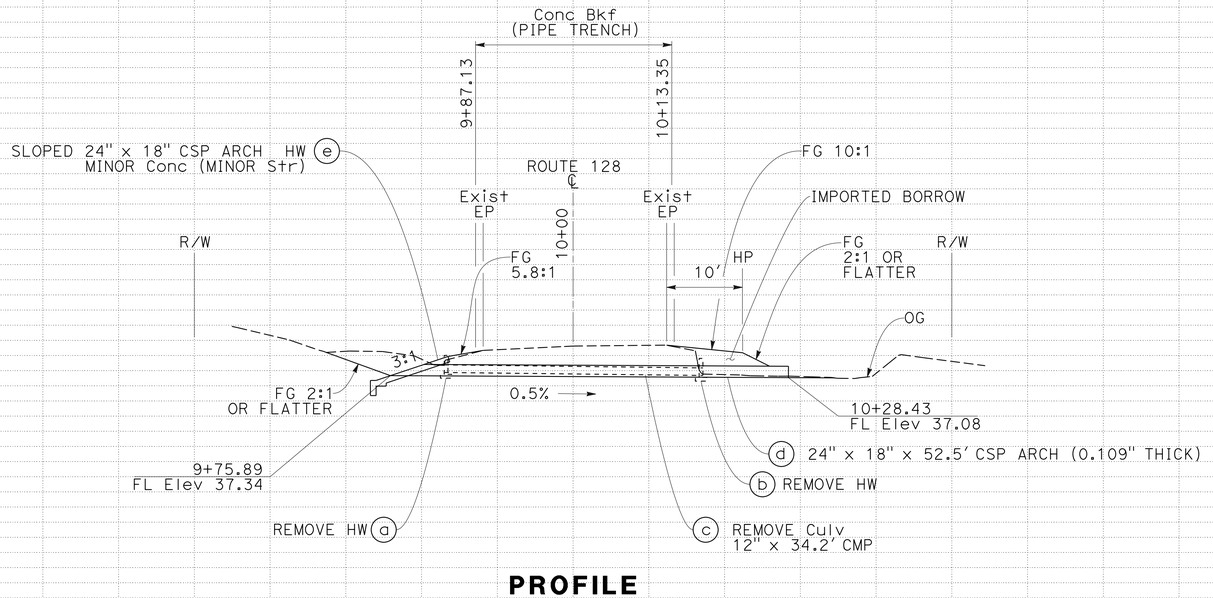

PROFILE

SCALE: Horiz 1" = 10'
Vert 1" = 10'

DRAINAGE PLAN AND PROFILE

SCALE AS SHOWN

D-18

STATION	+20	+40	+60	+80	10+00	+20	+40	+60	+80	TOTAL
CY Exc										
CY Emb										

STATE OF CALIFORNIA - DEPARTMENT OF TRANSPORTATION
Caltrans
03-DESIGN
FUNCTIONAL SUPERVISOR: ROBERT E. POLGAR
CALCULATED-DESIGNED BY: MARLENE GIBB
CHECKED BY: MARTIN GARCIA
REVISED BY | DATE REVISED

LAST REVISION | DATE PLOTTED => 31-AUG-2015 | TIME PLOTTED => 09:35

P:\proj4\01\378x7\drafting\01000001371a018.dgn

BORDER LAST REVISED 7/2/2010
USERNAME => s130875
DGN FILE => 01000001371a018.dgn
RELATIVE BORDER SCALE IS IN INCHES 0 1 2 3
UNIT 0306
PROJECT NUMBER & PHASE 01000001371

Dist	COUNTY	ROUTE	POST MILES TOTAL PROJECT	SHEET No.	TOTAL SHEETS
01	Men	128	2.8/11.1	22	98

Marlene Gibb 6-15-15
REGISTERED CIVIL ENGINEER DATE

6-15-15
PLANS APPROVAL DATE

REGISTERED PROFESSIONAL ENGINEER
MARLENE E. GIBB
No. C 51513
Exp. 06-30-16
CIVIL
STATE OF CALIFORNIA

THE STATE OF CALIFORNIA OR ITS OFFICERS OR AGENTS SHALL NOT BE RESPONSIBLE FOR THE ACCURACY OR COMPLETENESS OF SCANNED COPIES OF THIS PLAN SHEET.

T15N R16W MDB&M
SECTION 7

NOTES:

1. FOR ACCURATE RIGHT OF WAY DATA, CONTACT RIGHT OF WAY ENGINEERING AT THE DISTRICT OFFICE
2. FOR HMA APRON AND HMA DIKE (TYPE A) DETAILS SEE DRAINAGE DETAIL SHEETS.
3. INLET AND/OR OUTLET STRUCTURE SKEW ANGLE IS MEASURED FROM A LINE PERPENDICULAR TO THE CULVERT ALIGNMENT.
4. EXPECT EXITING CULVERT TO BE ENCASED IN CONCRETE BACKFILL THROUGHOUT TRENCH LENGTH.

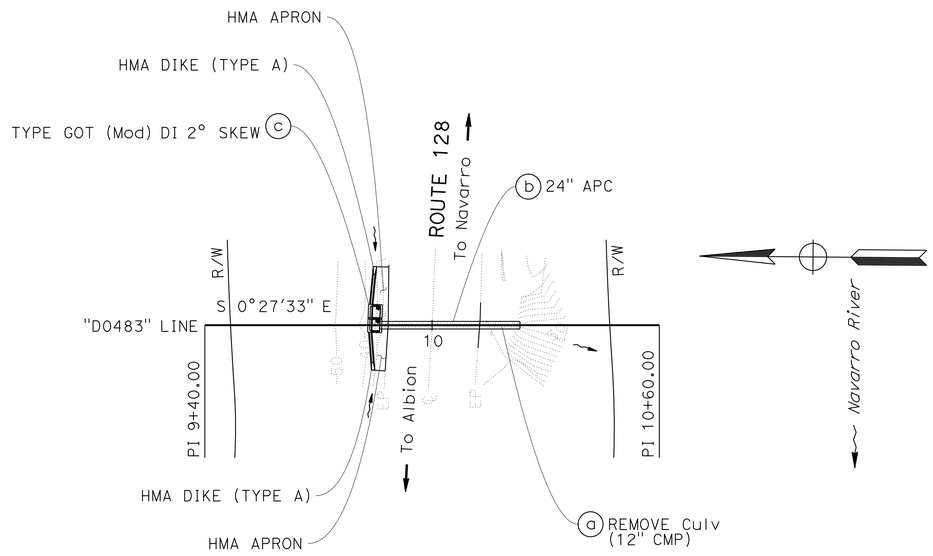

DRAINAGE SYSTEM No. 19

ROUTE 128
PM 4.83

PLAN

SCALE: 1" = 20'

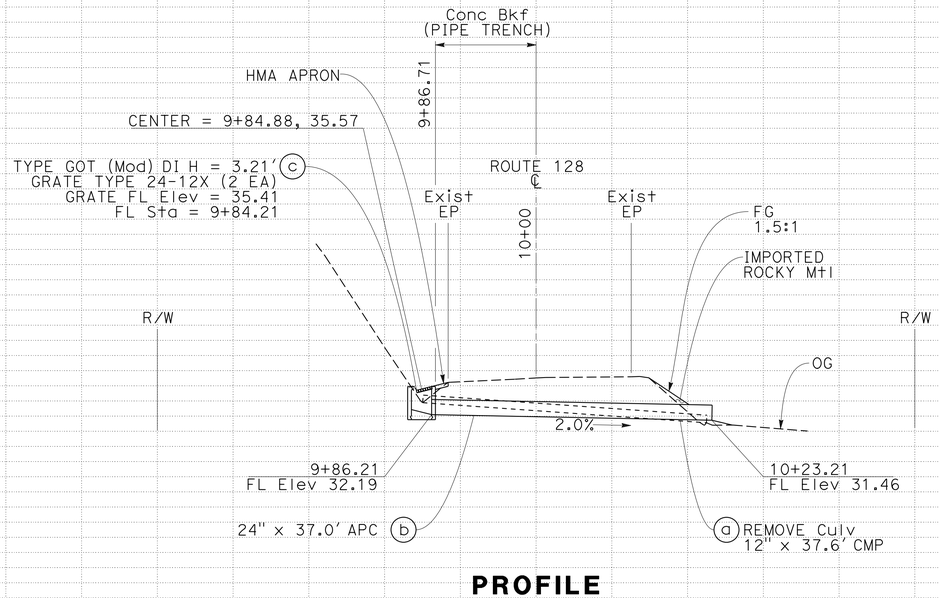

PROFILE

SCALE: Horiz 1" = 10'
Vert 1" = 10'

DRAINAGE PLAN AND PROFILE

SCALE AS SHOWN

D-19

STATION		+20	+40	+60	+80	10+00	+20	+40	+60	+80	TOTAL
CY	Exc										
	Emb										

REVISED BY | DATE REVISED
MARTIN GARCIA | MARLENE GIBB
CALCULATED-DESIGNED BY | CHECKED BY
FUNCTIONAL SUPERVISOR: ROBERT E. POLGAR
STATE OF CALIFORNIA - DEPARTMENT OF TRANSPORTATION
03-DESIGN
Caltrans

LAST REVISION | DATE PLOTTED => 31-AUG-2015 | TIME PLOTTED => 09:35

P:\proj4\01\37\8x7\drafting\01000001371a019.dgn

BORDER LAST REVISED 7/2/2010 | USERNAME => s130875 | DGN FILE => 01000001371a019.dgn | RELATIVE BORDER SCALE IS IN INCHES 0 1 2 3 | UNIT 0306 | PROJECT NUMBER & PHASE 01000001371

Dist	COUNTY	ROUTE	POST MILES TOTAL PROJECT	SHEET No.	TOTAL SHEETS
01	Men	128	2.8/11.1	23	98

Marlene Gibb 6-15-15
REGISTERED CIVIL ENGINEER DATE

6-15-15
PLANS APPROVAL DATE

REGISTERED PROFESSIONAL ENGINEER
MARLENE E. GIBB
No. C 51513
Exp. 06-30-16
CIVIL
STATE OF CALIFORNIA

THE STATE OF CALIFORNIA OR ITS OFFICERS OR AGENTS SHALL NOT BE RESPONSIBLE FOR THE ACCURACY OR COMPLETENESS OF SCANNED COPIES OF THIS PLAN SHEET.

NOTES:

1. FOR ACCURATE RIGHT OF WAY DATA, CONTACT RIGHT OF WAY ENGINEERING AT THE DISTRICT OFFICE
2. FG FLUSH WITH TOP OF HEAD WALL AT ALL LOCATIONS.
3. EXPECT EXITING CULVERT TO BE ENCASED IN CONCRETE BACKFILL THROUGHOUT TRENCH LENGTH.

T15N R16W MDB&M
SECTION 7

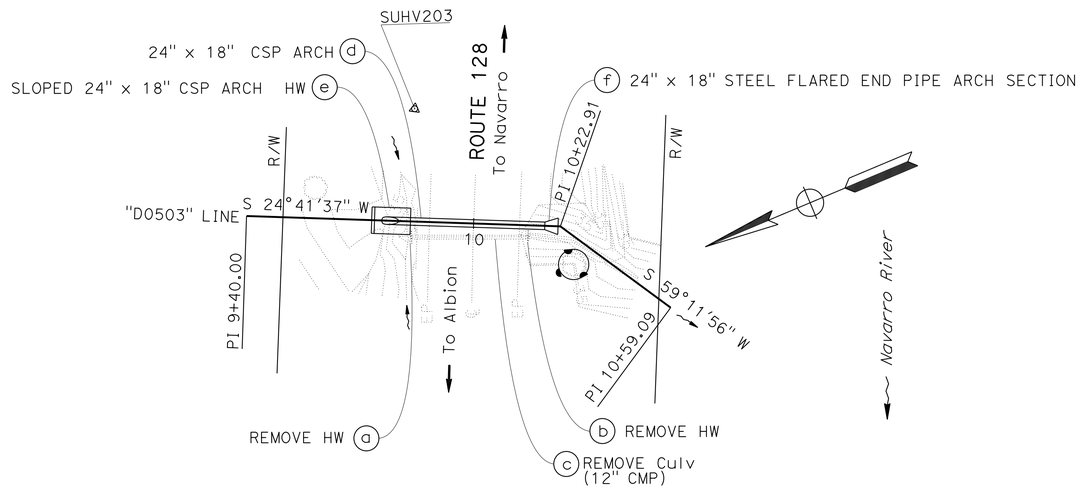

DRAINAGE SYSTEM No. 20

ROUTE 128
PM 5.03

PLAN

SCALE: 1" = 20'

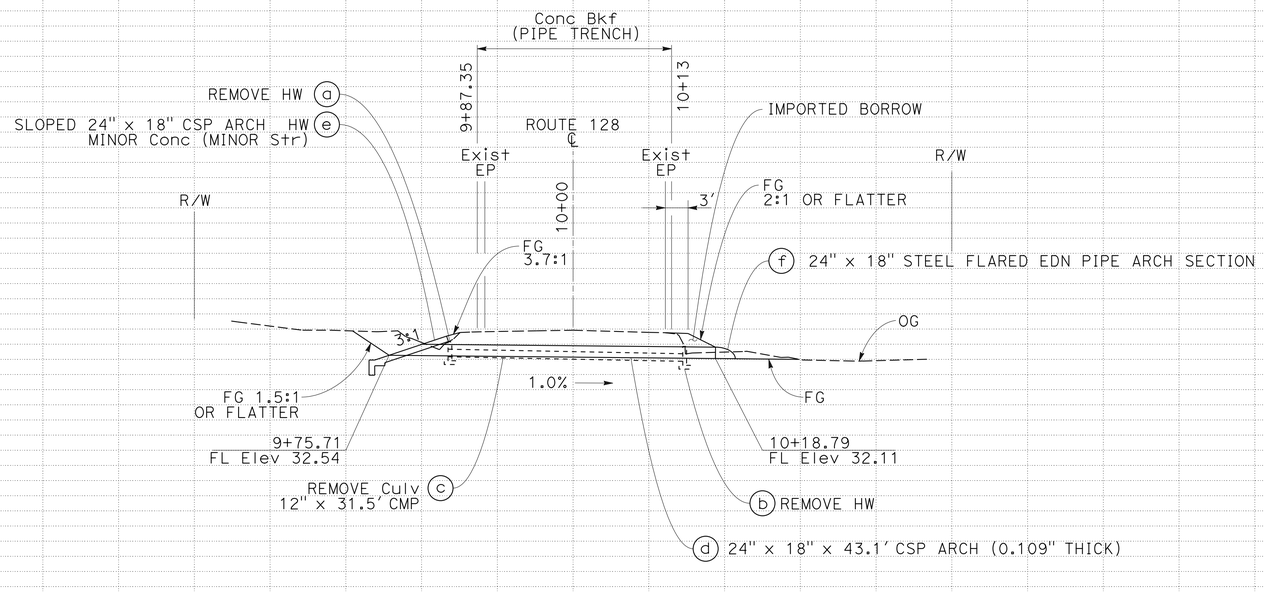

PROFILE

SCALE: Horiz 1" = 10'
Vert 1" = 10'

DRAINAGE PLAN AND PROFILE

SCALE AS SHOWN

D-20

STATION		+20	+40	+60	+80	10+00	+20	+40	+60	+80	TOTAL
CY	Exc										
	Emb										

REVISED BY | DATE REVISED
MARTIN GARCIA | MARLENE GIBB
CALCULATED-DESIGNED BY | CHECKED BY
FUNCTIONAL SUPERVISOR: ROBERT E. POLGAR
STATE OF CALIFORNIA - DEPARTMENT OF TRANSPORTATION
03-DESIGN
Caltrans

LAST REVISION | DATE PLOTTED => 31-AUG-2015 | TIME PLOTTED => 09:35

P:\proj4\01\378x7\drafting\01000001371a020.dgn

BORDER LAST REVISED 7/2/2010 | USERNAME => s130875 | DGN FILE => 01000001371a020.dgn | RELATIVE BORDER SCALE IS IN INCHES 0 1 2 3 | UNIT 0306 | PROJECT NUMBER & PHASE 01000001371

Dist	COUNTY	ROUTE	POST MILES TOTAL PROJECT	SHEET No.	TOTAL SHEETS
01	Men	128	2.8/11.1	24	98

Marlene Gibb 6-15-15
REGISTERED CIVIL ENGINEER DATE

6-15-15
PLANS APPROVAL DATE

REGISTERED PROFESSIONAL ENGINEER
MARLENE E. GIBB
No. C 51513
Exp. 06-30-16
CIVIL
STATE OF CALIFORNIA

THE STATE OF CALIFORNIA OR ITS OFFICERS OR AGENTS SHALL NOT BE RESPONSIBLE FOR THE ACCURACY OR COMPLETENESS OF SCANNED COPIES OF THIS PLAN SHEET.

T15N R16W MDB&M
SECTION 7

NOTES:

1. FOR ACCURATE RIGHT OF WAY DATA, CONTACT RIGHT OF WAY ENGINEERING AT THE DISTRICT OFFICE
2. FG FLUSH WITH TOP OF HEAD WALL AT ALL LOCATIONS.
3. INLET AND/OR OUTLET STRUCTURE SKEW ANGLE IS MEASURED FROM A LINE PERPENDICULAR TO THE CULVERT ALIGNMENT.
4. EXPECT EXITING CULVERT TO BE ENCASED IN CONCRETE BACKFILL THROUGHOUT TRENCH LENGTH.

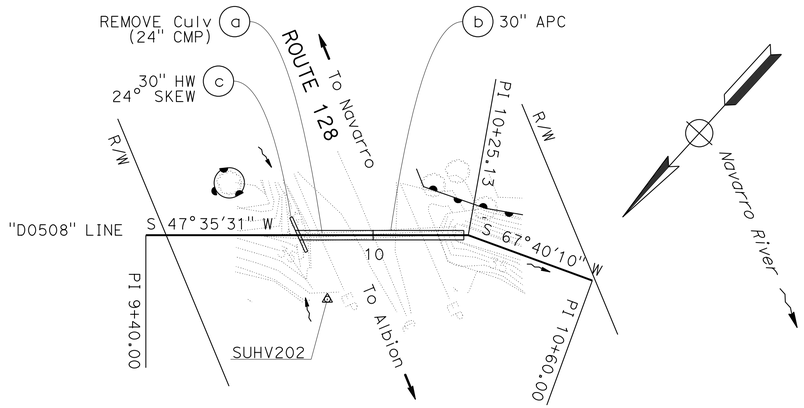

DRAINAGE SYSTEM No. 21

ROUTE 128
PM 5.08

PLAN

SCALE: 1" = 20'

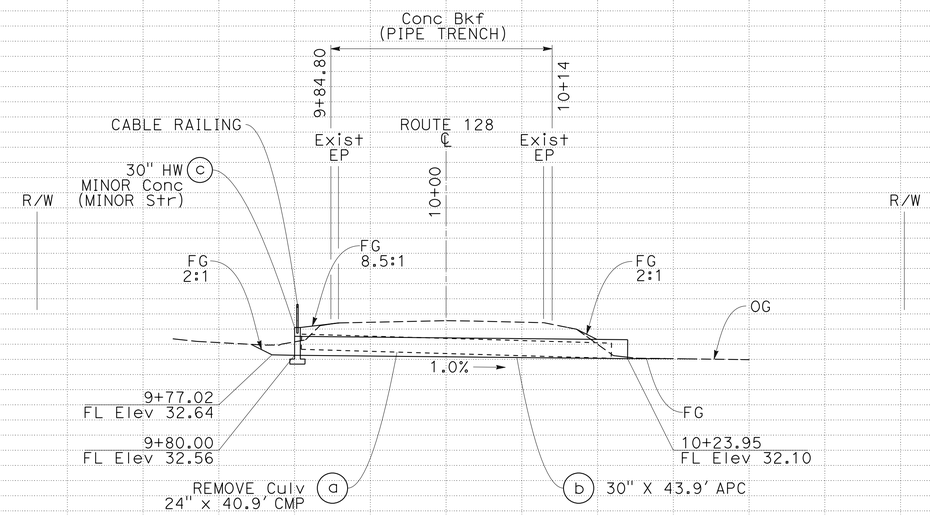

PROFILE

SCALE: Horiz 1" = 10'
Vert 1" = 10'

DRAINAGE PLAN AND PROFILE

SCALE AS SHOWN

D-21

STATION		+20	+40	+60	+80	10+00	+20	+40	+60	+80	TOTAL
CY	Exc										
	Emb										

STATE OF CALIFORNIA - DEPARTMENT OF TRANSPORTATION
03-DESIGN
Caltrans®

FUNCTIONAL SUPERVISOR: ROBERT E. POLGAR
CALCULATED-DESIGNED BY: MARLENE GIBB
CHECKED BY: MARTIN GARCIA

REVISED BY	DATE REVISED

LAST REVISION
DATE PLOTTED => 31-AUG-2015
TIME PLOTTED => 09:35

P:\proj4\01\3780\7\drafting\01000001371ia021.dgn

BORDER LAST REVISED 7/2/2010
USERNAME => s130875
DGN FILE => 01000001371ia021.dgn
RELATIVE BORDER SCALE IS IN INCHES 0 1 2 3
UNIT 0306
PROJECT NUMBER & PHASE 01000001371

Dist	COUNTY	ROUTE	POST MILES TOTAL PROJECT	SHEET No.	TOTAL SHEETS
01	Men	128	2.8/11.1	25	98

Marlene Gibb 6-15-15
REGISTERED CIVIL ENGINEER DATE

6-15-15
PLANS APPROVAL DATE

REGISTERED PROFESSIONAL ENGINEER MARLENE E. GIBB No. C 51513 Exp. 06-30-16 CIVIL STATE OF CALIFORNIA

THE STATE OF CALIFORNIA OR ITS OFFICERS OR AGENTS SHALL NOT BE RESPONSIBLE FOR THE ACCURACY OR COMPLETENESS OF SCANNED COPIES OF THIS PLAN SHEET.

T15N R16W MDB&M
SECTION 7

NOTES:

1. FOR ACCURATE RIGHT OF WAY DATA, CONTACT RIGHT OF WAY ENGINEERING AT THE DISTRICT OFFICE
2. FOR HMA APRON AND HMA DIKE (TYPE A) DETAILS SEE DRAINAGE DETAIL SHEETS.
3. EXPECT EXITING CULVERT TO BE ENCASED IN CONCRETE BACKFILL THROUGHOUT TRENCH LENGTH.

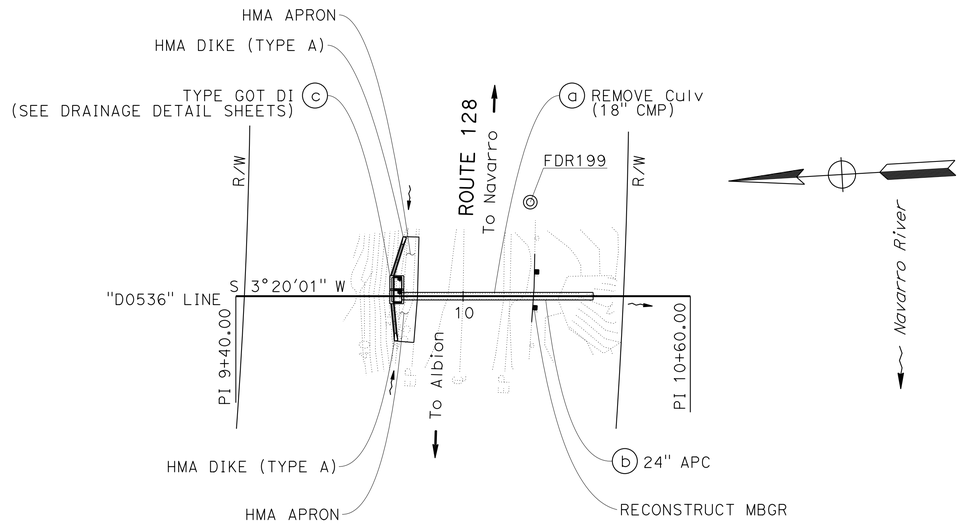

DRAINAGE SYSTEM No. 22

ROUTE 128
PM 5.36

PLAN

SCALE: 1" = 20'

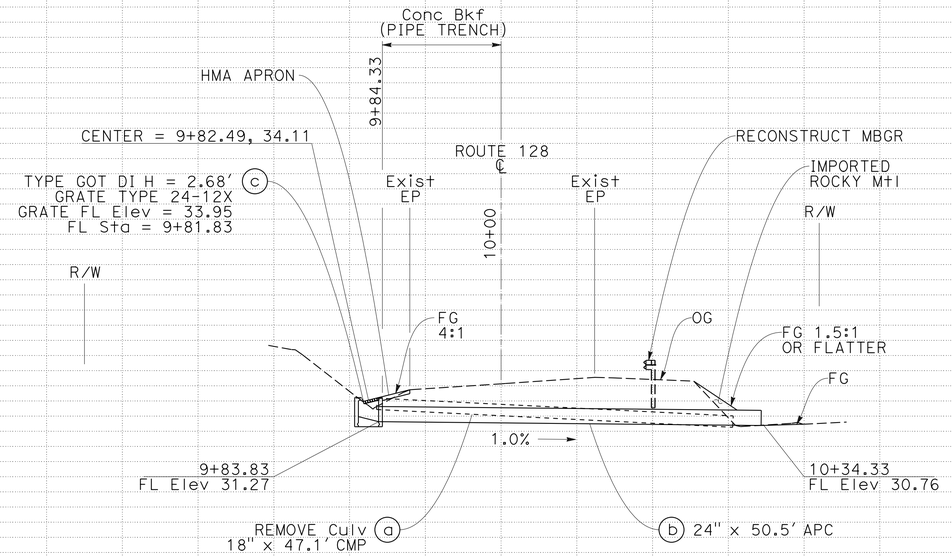

PROFILE

SCALE: Horiz 1" = 10'
Vert 1" = 10'

DRAINAGE PLAN AND PROFILE

SCALE AS SHOWN

D-22

STATION	+20	+40	+60	+80	10+00	+20	+40	+60	+80	TOTAL
CY Exc										
CY Emb										

STATE OF CALIFORNIA - DEPARTMENT OF TRANSPORTATION
Caltrans
03-DESIGN
FUNCTIONAL SUPERVISOR: ROBERT E. POLGAR
CALCULATED-DESIGNED BY: MARTIN GARCIA
CHECKED BY: MARLENE GIBB
REVISED BY
DATE REVISED

P:\proj4\01\378x7\drafting\01000001371a022.dgn

DATE PLOTTED => 31-AUG-2015
TIME PLOTTED => 09:35
LAST REVISION

Dist	COUNTY	ROUTE	POST MILES TOTAL PROJECT	SHEET No.	TOTAL SHEETS
01	Men	128	2.8/11.1	26	98

Marlene Gibb 6-15-15
REGISTERED CIVIL ENGINEER DATE

6-15-15
PLANS APPROVAL DATE

REGISTERED PROFESSIONAL ENGINEER
MARLENE E. GIBB
No. C 51513
Exp. 06-30-16
CIVIL
STATE OF CALIFORNIA

THE STATE OF CALIFORNIA OR ITS OFFICERS OR AGENTS SHALL NOT BE RESPONSIBLE FOR THE ACCURACY OR COMPLETENESS OF SCANNED COPIES OF THIS PLAN SHEET.

T15N R16W MDB&M
SECTION 8

NOTES:

1. FOR ACCURATE RIGHT OF WAY DATA, CONTACT RIGHT OF WAY ENGINEERING AT THE DISTRICT OFFICE
2. FOR HMA APRON AND HMA DIKE (TYPE A) DETAILS SEE DRAINAGE DETAIL SHEETS.
3. EXPECT EXITING CULVERT TO BE ENCASED IN CONCRETE BACKFILL THROUGHOUT TRENCH LENGTH.

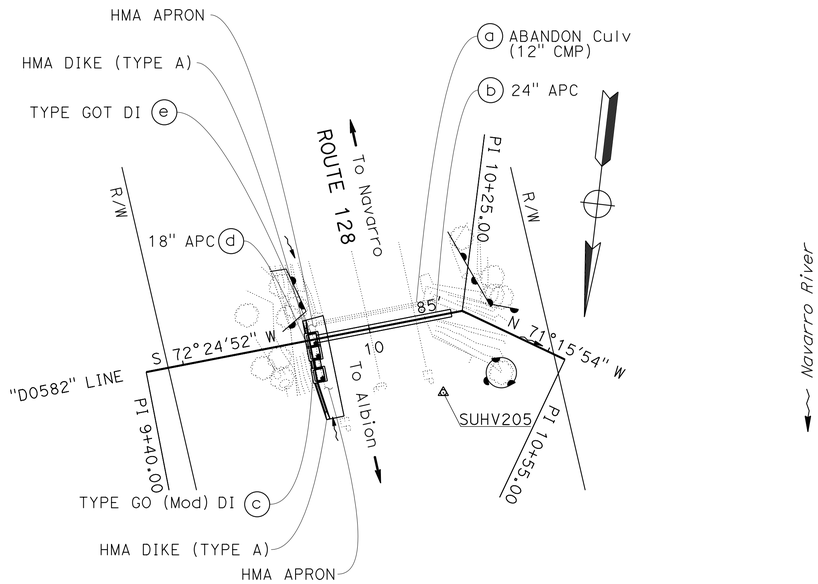

DRAINAGE SYSTEM No. 23

ROUTE 128
PM 5.82

PLAN

SCALE: 1" = 20'

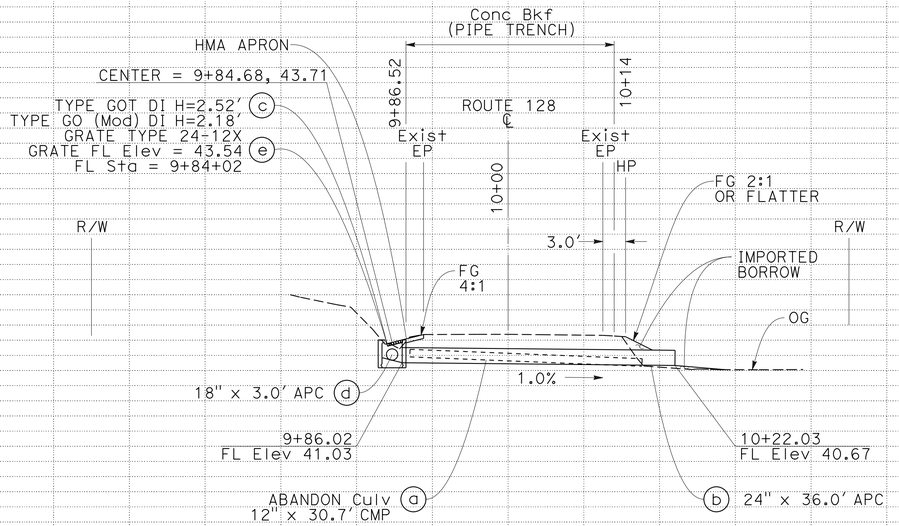

PROFILE

SCALE: Horiz 1" = 10'
Vert 1" = 10'

DRAINAGE PLAN AND PROFILE

SCALE AS SHOWN

D-23

STATION		+20	+40	+60	+80	10+00	+20	+40	+60	+80	TOTAL
CY	Exc										
	Emb										

STATE OF CALIFORNIA - DEPARTMENT OF TRANSPORTATION
03-DESIGN
FUNCTIONAL SUPERVISOR: ROBERT E. POLGAR
CALCULATED-DESIGNED BY: MARTIN GARCIA
CHECKED BY: MARLENE GIBB
REVISED BY
DATE REVISED
LAST REVISION
DATE PLOTTED => 31-AUG-2015
TIME PLOTTED => 09:35

P:\proj4\01378k7\drafting\01000001371ia023.dgn

BORDER LAST REVISED 7/2/2010
USERNAME => s130875
DGN FILE => 01000001371ia023.dgn
RELATIVE BORDER SCALE IS IN INCHES 0 1 2 3
UNIT 0306
PROJECT NUMBER & PHASE 01000001371

Dist	COUNTY	ROUTE	POST MILES TOTAL PROJECT	SHEET No.	TOTAL SHEETS
01	Men	128	2.8/11.1	27	98

Marlene Gibb 6-15-15
REGISTERED CIVIL ENGINEER DATE

6-15-15
PLANS APPROVAL DATE

REGISTERED PROFESSIONAL ENGINEER
MARLENE E. GIBB
No. C 51513
Exp. 06-30-16
CIVIL
STATE OF CALIFORNIA

THE STATE OF CALIFORNIA OR ITS OFFICERS OR AGENTS SHALL NOT BE RESPONSIBLE FOR THE ACCURACY OR COMPLETENESS OF SCANNED COPIES OF THIS PLAN SHEET.

T15N R16W MDB&M
SECTION 17

NOTES:

1. FOR ACCURATE RIGHT OF WAY DATA, CONTACT RIGHT OF WAY ENGINEERING AT THE DISTRICT OFFICE
2. FG FLUSH WITH TOP OF HEAD WALL AT ALL LOCATIONS.
3. FOR ROCK SLOPE PROTECTION DETAILS SEE DRAINAGE DETAIL SHEETS.
4. EXPECT EXITING CULVERT TO BE ENCASED IN CONCRETE BACKFILL THROUGHOUT TRENCH LENGTH.

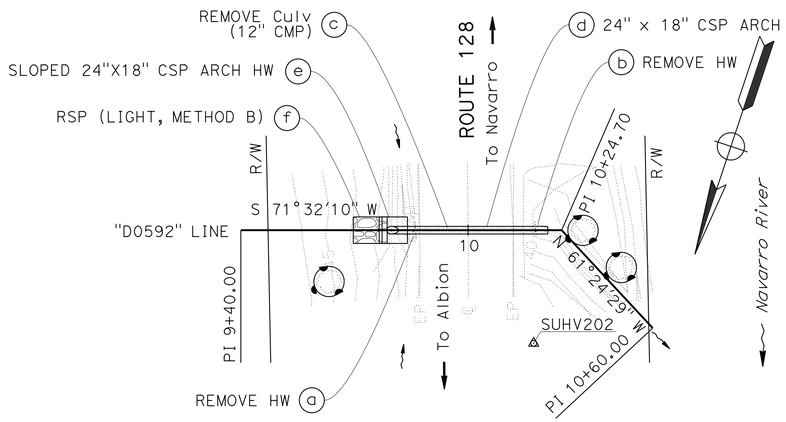

DRAINAGE SYSTEM No. 24

ROUTE 128
PM 5.92

PLAN

SCALE: 1" = 20'

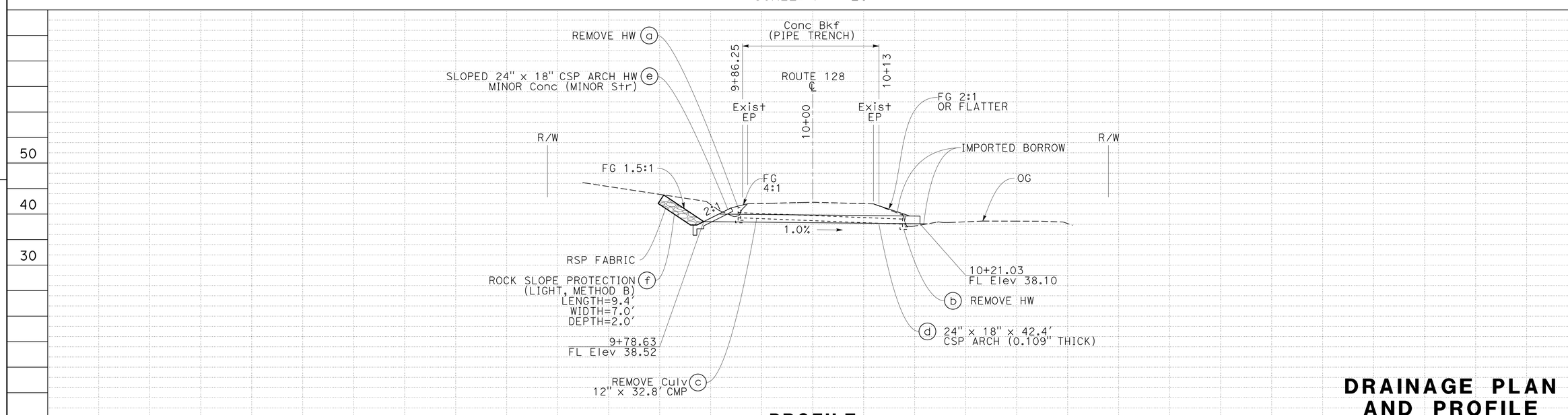

PROFILE

SCALE: Horiz 1" = 10'
Vert 1" = 10'

DRAINAGE PLAN AND PROFILE

SCALE AS SHOWN

D-24

STATE OF CALIFORNIA - DEPARTMENT OF TRANSPORTATION
Caltrans
03-DESIGN

FUNCTIONAL SUPERVISOR: ROBERT E. POLGAR
CALCULATED-DESIGNED BY: MARTIN GARCIA
CHECKED BY: MARLENE GIBB
REVISED BY
DATE REVISED

P:\proj4\01\378x7\drafting\0100000137ia024.dgn

DATE PLOTTED => 31-AUG-2015
TIME PLOTTED => 09:35
LAST REVISION

Dist	COUNTY	ROUTE	POST MILES TOTAL PROJECT	SHEET No.	TOTAL SHEETS
01	Men	128	2.8/11.1	28	98

Marlene Gibb 6-15-15
REGISTERED CIVIL ENGINEER DATE

6-15-15
PLANS APPROVAL DATE

REGISTERED PROFESSIONAL ENGINEER
MARLENE E. GIBB
No. C 51513
Exp. 06-30-16
CIVIL
STATE OF CALIFORNIA

THE STATE OF CALIFORNIA OR ITS OFFICERS OR AGENTS SHALL NOT BE RESPONSIBLE FOR THE ACCURACY OR COMPLETENESS OF SCANNED COPIES OF THIS PLAN SHEET.

T15N R16W MDB&M
SECTION 17

NOTES:

1. FOR ACCURATE RIGHT OF WAY DATA, CONTACT RIGHT OF WAY ENGINEERING AT THE DISTRICT OFFICE
2. FOR HMA APRON AND HMA DIKE (TYPE A) DETAILS SEE DRAINAGE DETAIL SHEETS.
3. EXPECT EXITING CULVERT TO BE ENCASED IN CONCRETE BACKFILL THROUGHOUT TRENCH LENGTH.

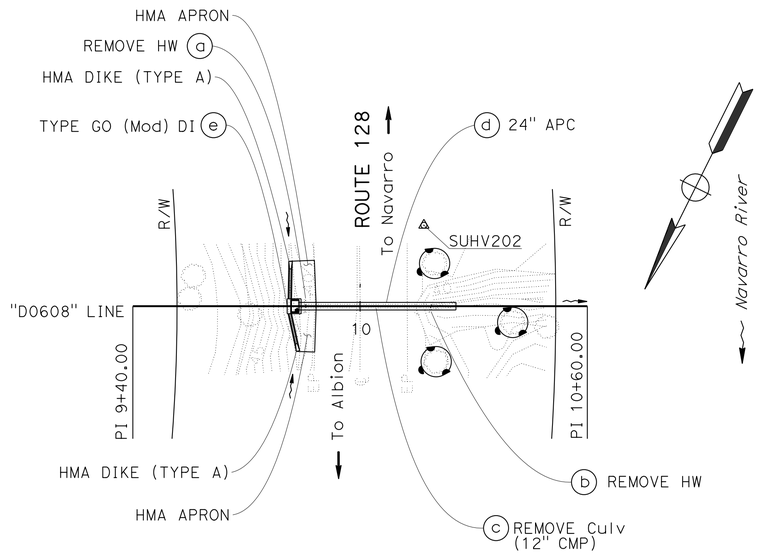

DRAINAGE SYSTEM No. 25

ROUTE 128
PM 6.08

PLAN

SCALE: 1" = 20'

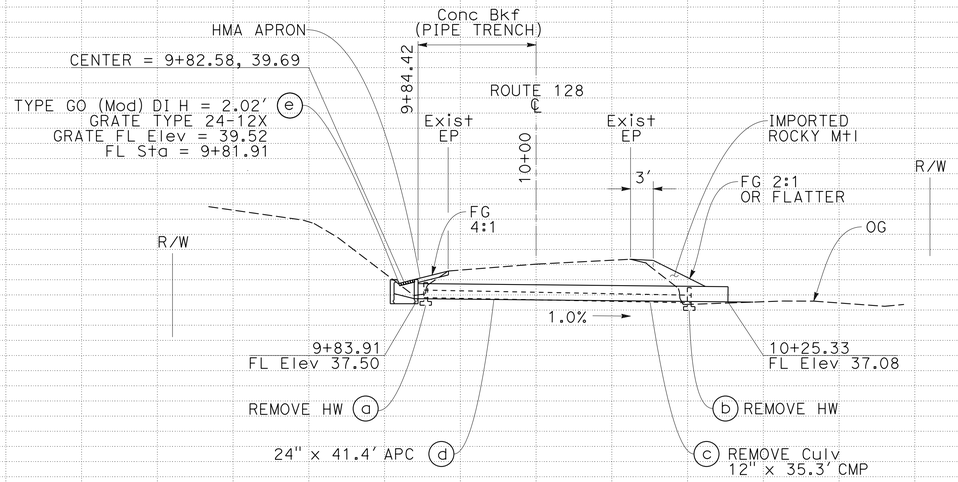

PROFILE

SCALE: Horiz 1" = 10'
Vert 1" = 10'

DRAINAGE PLAN AND PROFILE

SCALE AS SHOWN

D-25

STATION		+20	+40	+60	+80	10+00	+20	+40	+60	+80	TOTAL
CY	Exc										
	Emb										

REVISED BY | DATE REVISED
MARTIN GARCIA | MARLENE GIBB
CALCULATED-DESIGNED BY | CHECKED BY
FUNCTIONAL SUPERVISOR: ROBERT E. POLGAR
STATE OF CALIFORNIA - DEPARTMENT OF TRANSPORTATION
03-DESIGN
Caltrans

LAST REVISION | DATE PLOTTED => 31-AUG-2015 | TIME PLOTTED => 09:35

P:\proj4\01\378x7\drafting\01000001371a025.dgn

BORDER LAST REVISED 7/2/2010
USERNAME => s130875
DGN FILE => 01000001371a025.dgn
RELATIVE BORDER SCALE IS IN INCHES 0 1 2 3
UNIT 0306
PROJECT NUMBER & PHASE 01000001371

Dist	COUNTY	ROUTE	POST MILES TOTAL PROJECT	SHEET No.	TOTAL SHEETS
01	Men	128	2.8/11.1	29	98

Marlene Gibb 6-15-15
REGISTERED CIVIL ENGINEER DATE

6-15-15
PLANS APPROVAL DATE

REGISTERED PROFESSIONAL ENGINEER
MARLENE E. GIBB
No. C 51513
Exp. 06-30-16
CIVIL
STATE OF CALIFORNIA

THE STATE OF CALIFORNIA OR ITS OFFICERS OR AGENTS SHALL NOT BE RESPONSIBLE FOR THE ACCURACY OR COMPLETENESS OF SCANNED COPIES OF THIS PLAN SHEET.

T15N R16W MDB&M
SECTION 17

NOTES:

1. FOR ACCURATE RIGHT OF WAY DATA, CONTACT RIGHT OF WAY ENGINEERING AT THE DISTRICT OFFICE
2. FOR HMA APRON AND HMA DIKE (TYPE A) DETAILS SEE DRAINAGE DETAIL SHEETS.
3. EXPECT EXITING CULVERT TO BE ENCASED IN CONCRETE BACKFILL THROUGHOUT TRENCH LENGTH.

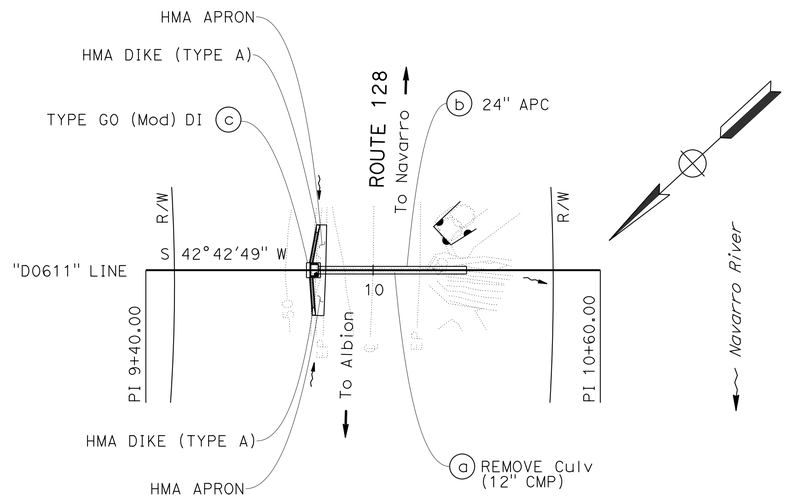

DRAINAGE SYSTEM No. 26

ROUTE 128
PM 6.11

PLAN

SCALE: 1" = 20'

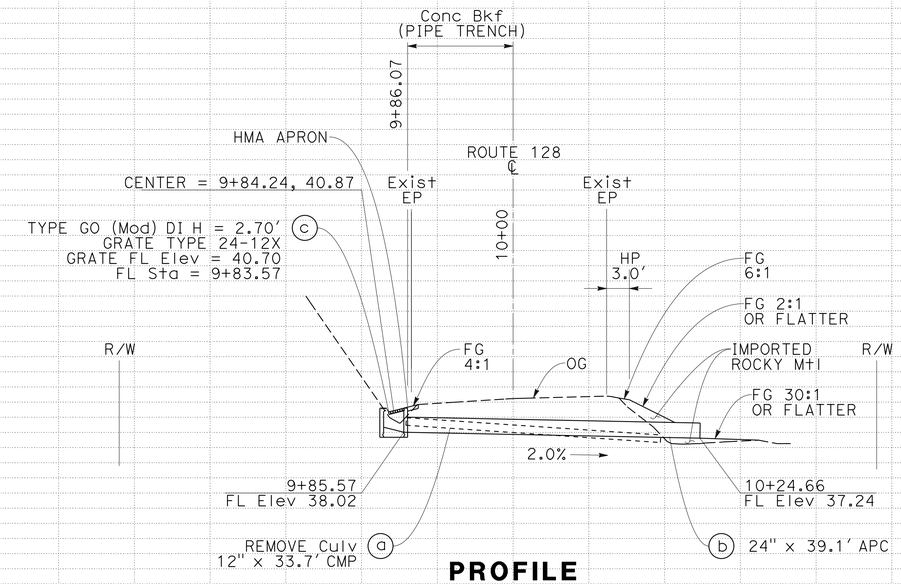

PROFILE

SCALE: Horiz 1" = 10'
Vert 1" = 10'

DRAINAGE PLAN AND PROFILE

SCALE AS SHOWN

D-26

STATION		+20	+40	+60	+80	10+00	+20	+40	+60	+80	TOTAL
CY	Exc										
	Emb										

STATE OF CALIFORNIA - DEPARTMENT OF TRANSPORTATION
Caltrans
03-DESIGN
FUNCTIONAL SUPERVISOR: ROBERT E. POLGAR
CALCULATED-DESIGNED BY: MARLENE GIBB
CHECKED BY: MARTIN GARCIA
REVISED BY | DATE REVISED

LAST REVISION
DATE PLOTTED => 31-AUG-2015
TIME PLOTTED => 09:35

P:\proj4\01\3787\X\drafting\01000001371a026.dgn

BORDER LAST REVISED 7/2/2010
USERNAME => s130875
DGN FILE => 01000001371a026.dgn
RELATIVE BORDER SCALE IS IN INCHES 0 1 2 3
UNIT 0306
PROJECT NUMBER & PHASE 01000001371

Dist	COUNTY	ROUTE	POST MILES TOTAL PROJECT	SHEET No.	TOTAL SHEETS
01	Men	128	2.8/11.1	30	98

Marlene Gibb 6-15-15
REGISTERED CIVIL ENGINEER DATE

6-15-15
PLANS APPROVAL DATE

MARLENE E. GIBB No. C 51513 Exp. 06-30-16 CIVIL — REGISTERED PROFESSIONAL ENGINEER — STATE OF CALIFORNIA

THE STATE OF CALIFORNIA OR ITS OFFICERS OR AGENTS SHALL NOT BE RESPONSIBLE FOR THE ACCURACY OR COMPLETENESS OF SCANNED COPIES OF THIS PLAN SHEET.

T15N R16W MDB&M
SECTION 17

NOTES:

1. FOR ACCURATE RIGHT OF WAY DATA, CONTACT RIGHT OF WAY ENGINEERING AT THE DISTRICT OFFICE
2. FG FLUSH WITH TOP OF HEAD WALL AT ALL LOCATIONS.
3. INLET AND/OR OUTLET STRUCTURE SKEW ANGLE IS MEASURED FROM A LINE PERPENDICULAR TO THE CULVERT ALIGNMENT.

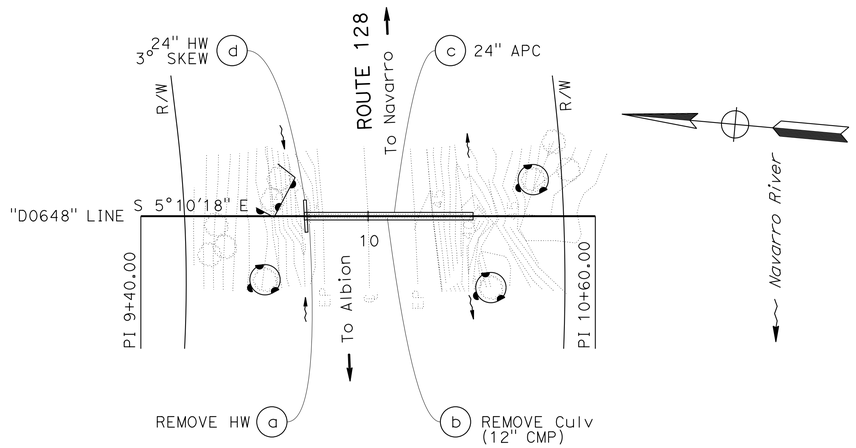

DRAINAGE SYSTEM No. 27

ROUTE 128
PM 6.48

PLAN

SCALE: 1" = 20'

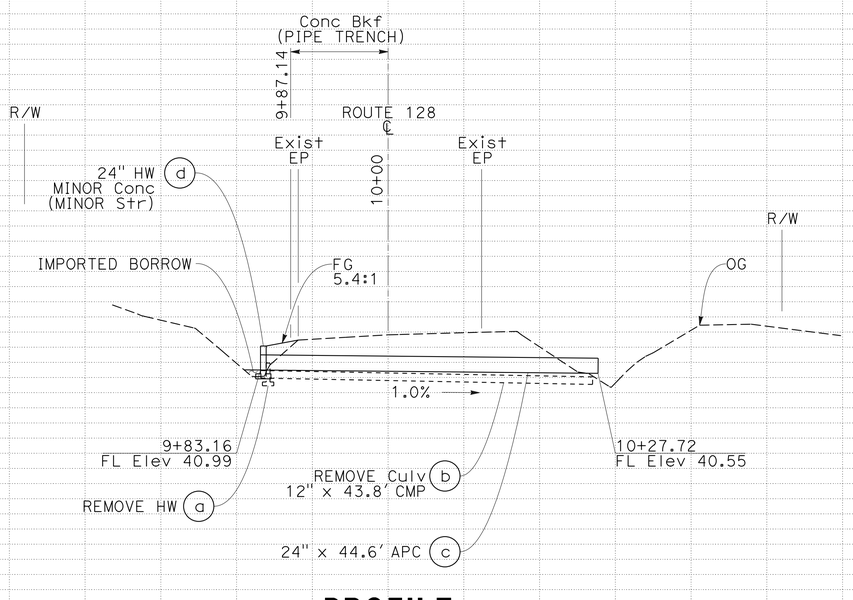

PROFILE

SCALE: Horiz 1" = 10'
Vert 1" = 10'

DRAINAGE PLAN AND PROFILE

SCALE AS SHOWN

D-27

STATION		+20	+40	+60	+80	10+00	+20	+40	+60	+80	TOTAL
CY	Exc										
	Emb										

STATE OF CALIFORNIA - DEPARTMENT OF TRANSPORTATION
03-DESIGN
FUNCTIONAL SUPERVISOR: ROBERT E. POLGAR
CALCULATED-DESIGNED BY: MARLENE GIBB
CHECKED BY: MARTIN GARCIA
REVISED BY | DATE REVISED

LAST REVISION
DATE PLOTTED => 31-AUG-2015
TIME PLOTTED => 09:35

P:\proj4\01\378x7\drafting\01000001371ia027.dgn

BORDER LAST REVISED 7/2/2010
USERNAME => s130875
DGN FILE => 01000001371ia027.dgn
RELATIVE BORDER SCALE IS IN INCHES 0 1 2 3
UNIT 0306
PROJECT NUMBER & PHASE 01000001371

Dist	COUNTY	ROUTE	POST MILES TOTAL PROJECT	SHEET No.	TOTAL SHEETS
01	Men	128	2.8/11.1	31	98

Marlene Gibb 6-15-15
REGISTERED CIVIL ENGINEER DATE

6-15-15
PLANS APPROVAL DATE

REGISTERED PROFESSIONAL ENGINEER
MARLENE E. GIBB
No. C 51513
Exp. 06-30-16
CIVIL
STATE OF CALIFORNIA

THE STATE OF CALIFORNIA OR ITS OFFICERS OR AGENTS SHALL NOT BE RESPONSIBLE FOR THE ACCURACY OR COMPLETENESS OF SCANNED COPIES OF THIS PLAN SHEET.

T15N R16W MDB&M
SECTION 17

NOTES:

1. FOR ACCURATE RIGHT OF WAY DATA, CONTACT RIGHT OF WAY ENGINEERING AT THE DISTRICT OFFICE
2. FG FLUSH WITH TOP OF HEAD WALL AT ALL LOCATIONS.
3. EXPECT EXITING CULVERT TO BE ENCASED IN CONCRETE BACKFILL THROUGHOUT TRENCH LENGTH.

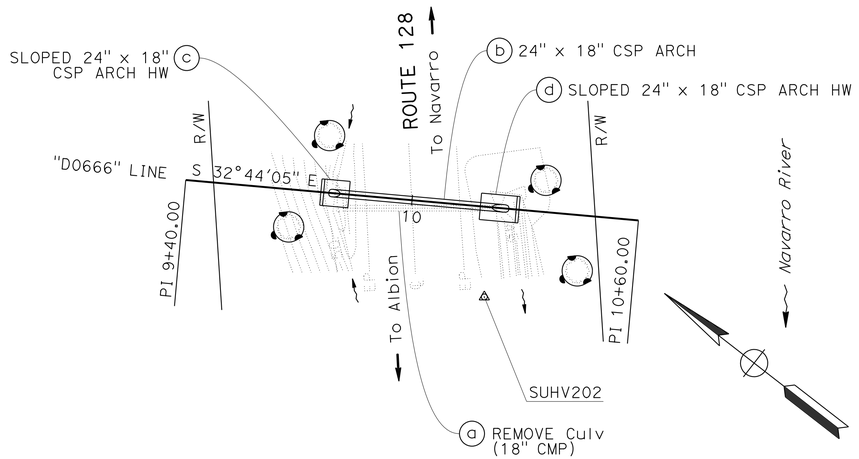

DRAINAGE SYSTEM No. 28

ROUTE 128
PM 6.66

PLAN

SCALE: 1" = 20'

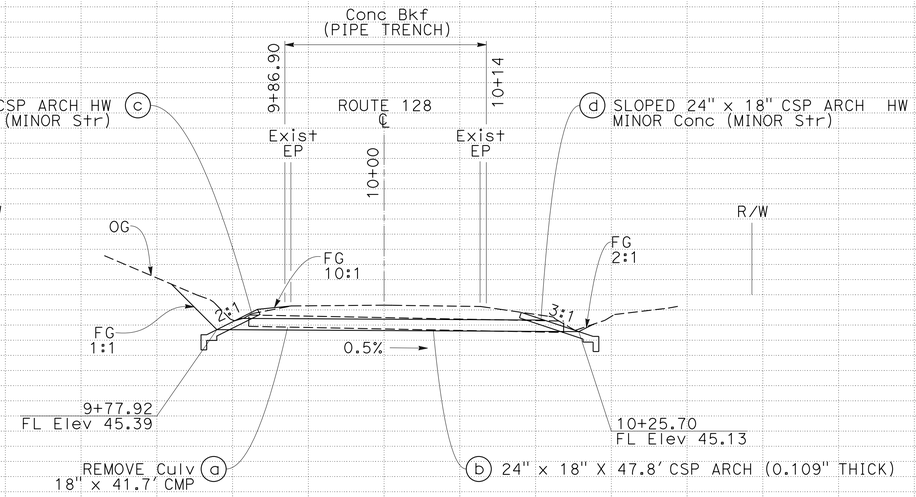

PROFILE

SCALE: Horiz 1" = 10'
Vert 1" = 10'

DRAINAGE PLAN AND PROFILE

SCALE AS SHOWN

D-28

STATION		+20	+40	+60	+80	10+00	+20	+40	+60	+80	TOTAL
CY	Exc										
	Emb										

STATE OF CALIFORNIA - DEPARTMENT OF TRANSPORTATION
03-DESIGN
Caltrans
FUNCTIONAL SUPERVISOR: ROBERT E. POLGAR
CALCULATED-DESIGNED BY: MARLENE GIBB
CHECKED BY: MARTIN GARCIA
REVISED BY | DATE REVISED

LAST REVISION | DATE PLOTTED => 31-AUG-2015 | TIME PLOTTED => 09:35

P:\proj4\01\378x7\drafting\01000001371a028.dgn

BORDER LAST REVISED 7/2/2010
USERNAME => s130875
DGN FILE => 01000001371a028.dgn
RELATIVE BORDER SCALE IS IN INCHES 0 1 2 3
UNIT 0306
PROJECT NUMBER & PHASE 01000001371

Dist	COUNTY	ROUTE	POST MILES TOTAL PROJECT	SHEET No.	TOTAL SHEETS
01	Men	128	2.8/11.1	32	98

Marlene Gibb 6-15-15
REGISTERED CIVIL ENGINEER DATE

6-15-15
PLANS APPROVAL DATE

REGISTERED PROFESSIONAL ENGINEER
MARLENE E. GIBB
No. C 51513
Exp. 06-30-16
CIVIL
STATE OF CALIFORNIA

THE STATE OF CALIFORNIA OR ITS OFFICERS OR AGENTS SHALL NOT BE RESPONSIBLE FOR THE ACCURACY OR COMPLETENESS OF SCANNED COPIES OF THIS PLAN SHEET.

NOTES:

1. FOR ACCURATE RIGHT OF WAY DATA, CONTACT RIGHT OF WAY ENGINEERING AT THE DISTRICT OFFICE
2. FOR HMA APRON AND HMA DIKE (TYPE A) DETAILS SEE DRAINAGE DETAIL SHEETS.
3. EXPECT EXITING CULVERT TO BE ENCASED IN CONCRETE BACKFILL THROUGHOUT TRENCH LENGTH.

T15N R16W MDB&M
SECTION 17

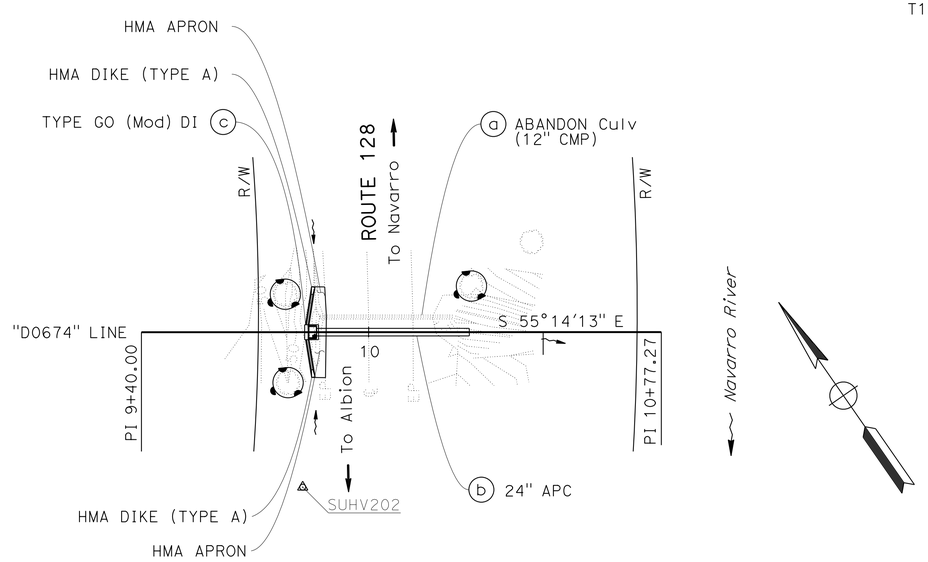

DRAINAGE SYSTEM No. 29

ROUTE 128
PM 6.74

PLAN

SCALE: 1" = 20'

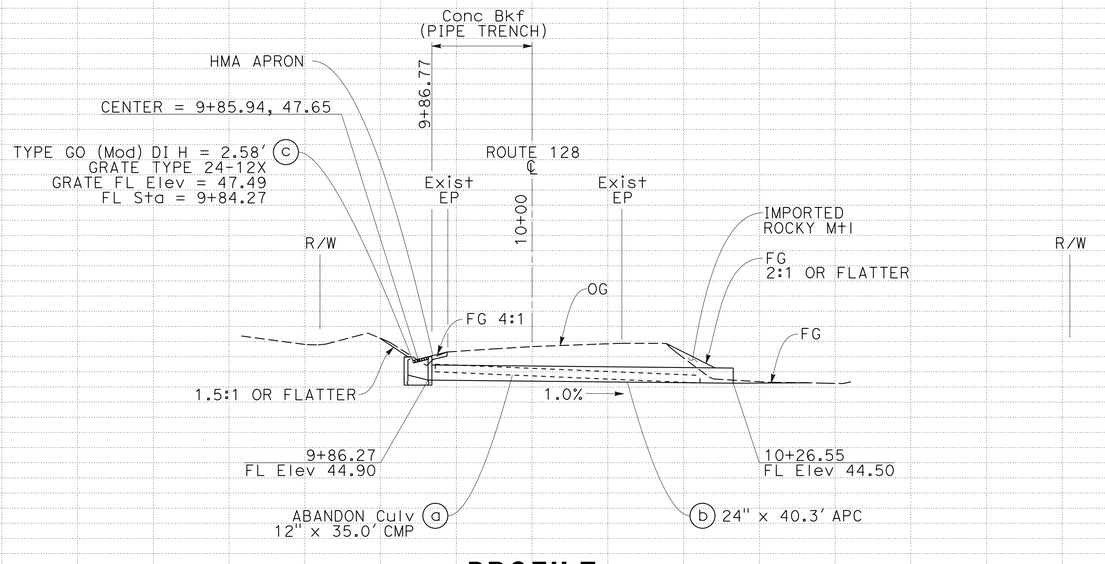

PROFILE

SCALE: Horiz 1" = 10'
Vert 1" = 10'

DRAINAGE PLAN AND PROFILE

SCALE AS SHOWN

D-29

STATION	+20	+40	+60	+80	10+00	+20	+40	+60	+80	TOTAL
CY Exc										
CY Emb										

STATE OF CALIFORNIA - DEPARTMENT OF TRANSPORTATION
Caltrans
03-DESIGN

FUNCTIONAL SUPERVISOR: ROBERT E. POLGAR
CALCULATED-DESIGNED BY: MARTIN GARCIA
CHECKED BY: MARLENE GIBB
REVISED BY
DATE REVISED

P:\proj4\01\378x7\drafting\01000001371a029.dgn

DATE PLOTTED => 31-AUG-2015
TIME PLOTTED => 09:36
LAST REVISION

Dist	COUNTY	ROUTE	POST MILES TOTAL PROJECT	SHEET No.	TOTAL SHEETS
01	Men	128	2.8/11.1	33	98

Marlene Gibb 6-15-15
REGISTERED CIVIL ENGINEER DATE

6-15-15
PLANS APPROVAL DATE

REGISTERED PROFESSIONAL ENGINEER
MARLENE E. GIBB
No. C 51513
Exp. 06-30-16
CIVIL
STATE OF CALIFORNIA

THE STATE OF CALIFORNIA OR ITS OFFICERS OR AGENTS SHALL NOT BE RESPONSIBLE FOR THE ACCURACY OR COMPLETENESS OF SCANNED COPIES OF THIS PLAN SHEET.

T15N R16W MDB&M
SECTION 17

NOTES:

1. FOR ACCURATE RIGHT OF WAY DATA, CONTACT RIGHT OF WAY ENGINEERING AT THE DISTRICT OFFICE
2. FG FLUSH WITH TOP OF HEAD WALL AT ALL LOCATIONS.
3. FOR ROCK SLOPE PROTECTION DETAILS SEE DRAINAGE DETAIL SHEETS.
4. EXPECT EXITING CULVERT TO BE ENCASED IN CONCRETE BACKFILL THROUGHOUT TRENCH LENGTH.

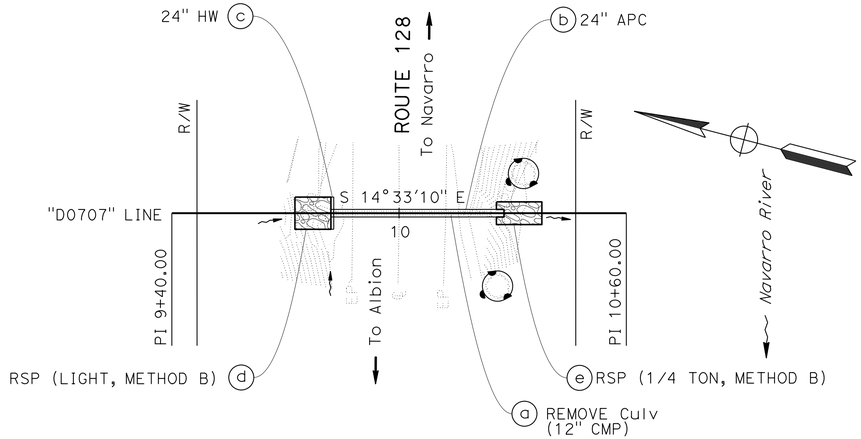

DRAINAGE SYSTEM No. 30

ROUTE 128
PM 7.07

PLAN

SCALE: 1" = 20'

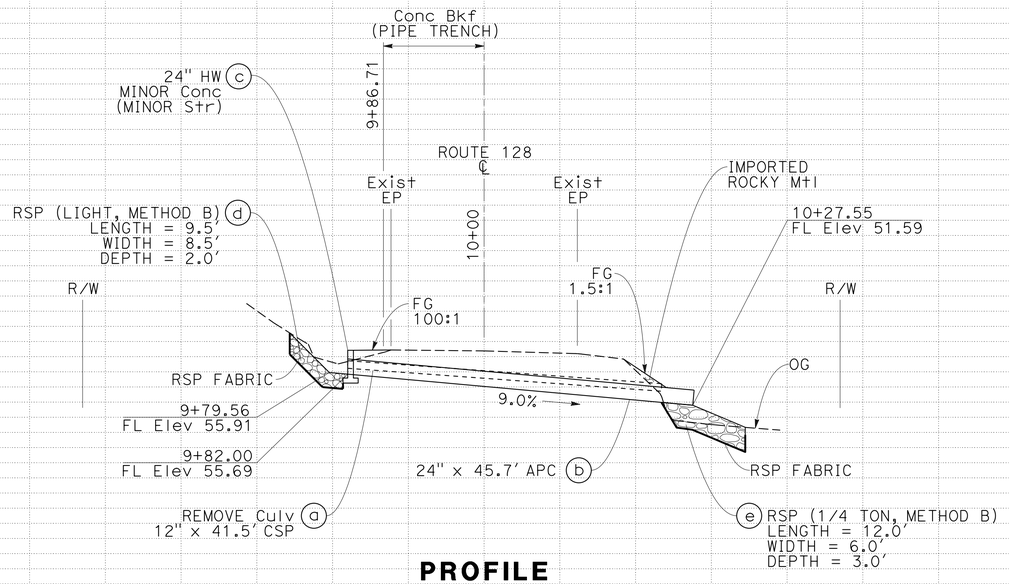

PROFILE

SCALE: Horiz 1" = 10'
Vert 1" = 10'

DRAINAGE PLAN AND PROFILE

SCALE AS SHOWN

D-30

STATION		+20	+40	+60	+80	10+00	+20	+40	+60	+80	TOTAL
CY	Exc										
	Emb										

REVISED BY | DATE REVISED
MARTIN GARCIA | MARLENE GIBB
CALCULATED-DESIGNED BY | CHECKED BY
FUNCTIONAL SUPERVISOR: ROBERT E. POLGAR
STATE OF CALIFORNIA - DEPARTMENT OF TRANSPORTATION
03-DESIGN
Caltrans

LAST REVISION | DATE PLOTTED => 31-AUG-2015 | TIME PLOTTED => 09:36

P:\proj4\01\378x7\drafting\01000001371a030.dgn

BORDER LAST REVISED 7/2/2010 | USERNAME => s130875 | DGN FILE => 01000001371a030.dgn | RELATIVE BORDER SCALE IS IN INCHES 0 1 2 3 | UNIT 0306 | PROJECT NUMBER & PHASE 01000001371

Dist	COUNTY	ROUTE	POST MILES TOTAL PROJECT	SHEET No.	TOTAL SHEETS
01	Men	128	2.8/11.1	34	98

Marlene Gibb 6-15-15
REGISTERED CIVIL ENGINEER DATE

6-15-15
PLANS APPROVAL DATE

REGISTERED PROFESSIONAL ENGINEER
MARLENE E. GIBB
No. C 51513
Exp. 06-30-16
CIVIL
STATE OF CALIFORNIA

THE STATE OF CALIFORNIA OR ITS OFFICERS OR AGENTS SHALL NOT BE RESPONSIBLE FOR THE ACCURACY OR COMPLETENESS OF SCANNED COPIES OF THIS PLAN SHEET.

T15N R16W MDB&M
SECTION 16

NOTES:

1. FOR ACCURATE RIGHT OF WAY DATA, CONTACT RIGHT OF WAY ENGINEERING AT THE DISTRICT OFFICE
2. FG FLUSH WITH TOP OF HEAD WALL AT ALL LOCATIONS.
3. INLET AND/OR OUTLET STRUCTURE SKEW ANGLE IS MEASURED FROM A LINE PERPENDICULAR TO THE CULVERT ALIGNMENT.
4. EXPECT EXITING CULVERT TO BE ENCASED IN CONCRETE BACKFILL THROUGHOUT TRENCH LENGTH.

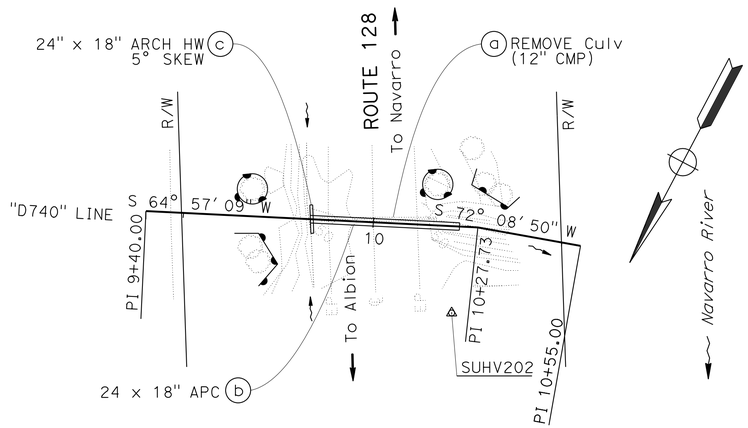

DRAINAGE SYSTEM No. 31

ROUTE 128
PM 7.40

PLAN

SCALE: 1" = 20'

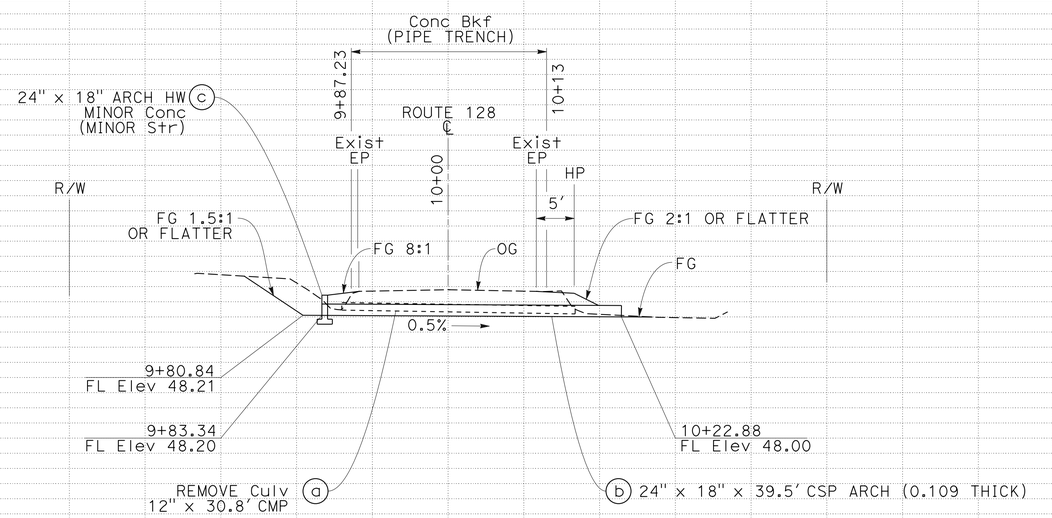

PROFILE

SCALE: Horiz 1" = 10'
Vert 1" = 10'

DRAINAGE PLAN AND PROFILE

SCALE AS SHOWN

D-31

STATION	+20	+40	+60	+80	10+00	+20	+40	+60	+80	TOTAL
CY Exc										
CY Emb										

STATE OF CALIFORNIA - DEPARTMENT OF TRANSPORTATION
Caltrans
03-DESIGN

FUNCTIONAL SUPERVISOR: ROBERT E. POLGAR
CALCULATED-DESIGNED BY: MARTIN GARCIA
CHECKED BY: MARLENE GIBB
REVISED BY
DATE REVISED

P:\proj4\01\378x7\drafting\01000001371a031.dgn

DATE PLOTTED => 31-AUG-2015
TIME PLOTTED => 09:36
LAST REVISION

Dist	COUNTY	ROUTE	POST MILES TOTAL PROJECT	SHEET No.	TOTAL SHEETS
01	Men	128	2.8/11.1	35	98

Marlene Gibb 6-15-15
REGISTERED CIVIL ENGINEER DATE

6-15-15
PLANS APPROVAL DATE

REGISTERED PROFESSIONAL ENGINEER
MARLENE E. GIBB
No. C 51513
Exp. 06-30-16
CIVIL
STATE OF CALIFORNIA

THE STATE OF CALIFORNIA OR ITS OFFICERS OR AGENTS SHALL NOT BE RESPONSIBLE FOR THE ACCURACY OR COMPLETENESS OF SCANNED COPIES OF THIS PLAN SHEET.

NOTES:

1. FOR ACCURATE RIGHT OF WAY DATA, CONTACT RIGHT OF WAY ENGINEERING AT THE DISTRICT OFFICE
2. FG FLUSH WITH TOP OF HEAD WALL AT ALL LOCATIONS.
3. INLET AND/OR OUTLET STRUCTURE SKEW ANGLE IS MEASURED FROM A LINE PERPENDICULAR TO THE CULVERT ALIGNMENT.
4. FOR ROCK SLOPE PROTECTION DETAILS SEE DRAINAGE DETAIL SHEETS.
5. EXPECT EXITING CULVERT TO BE ENCASED IN CONCRETE BACKFILL THROUGHOUT TRENCH LENGTH.

T15N R16W MDB&M
SECTION 16

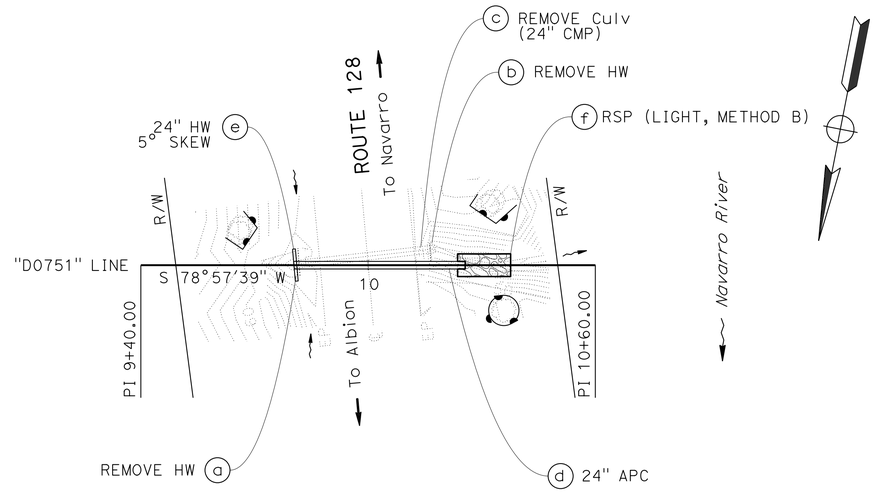

DRAINAGE SYSTEM No. 32

ROUTE 128
PM 7.51

PLAN

SCALE: 1" = 20'

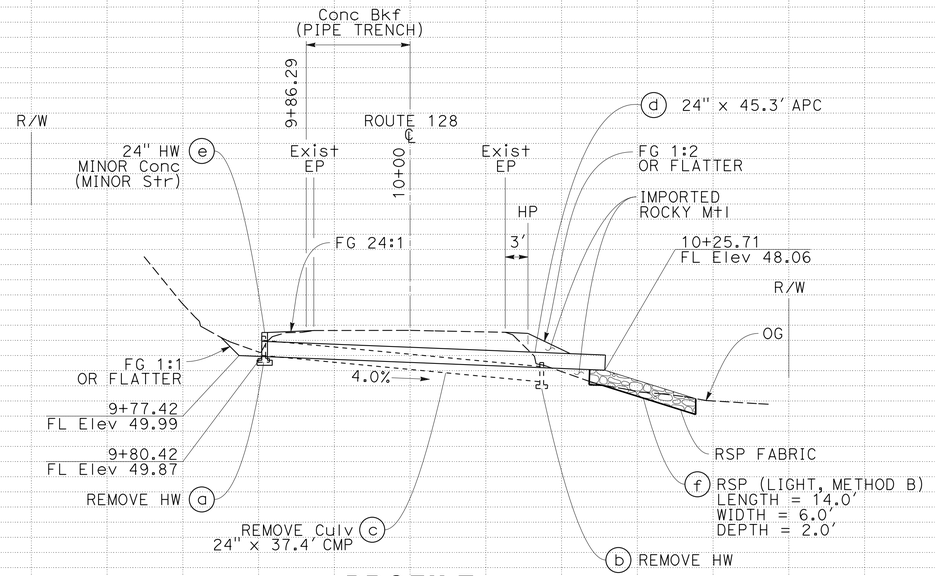

PROFILE

SCALE: Horiz 1" = 10'
Vert 1" = 10'

DRAINAGE PLAN AND PROFILE

SCALE AS SHOWN

D-32

STATION	+20	+40	+60	+80	10+00	+20	+40	+60	+80	TOTAL
CY Exc										
CY Emb										

REVISED BY | DATE REVISED
MARTIN GARCIA | MARLENE GIBB
CALCULATED-DESIGNED BY | CHECKED BY
FUNCTIONAL SUPERVISOR: ROBERT E. POLGAR
STATE OF CALIFORNIA - DEPARTMENT OF TRANSPORTATION
03-DESIGN
Caltrans

LAST REVISION | DATE PLOTTED => 31-AUG-2015 | TIME PLOTTED => 09:36

P:\proj4\01\378x7\drafting\01000001371a032.dgn

BORDER LAST REVISED 7/2/2010
USERNAME => s130875
DGN FILE => 01000001371a032.dgn
RELATIVE BORDER SCALE IS IN INCHES 0 1 2 3
UNIT 0306
PROJECT NUMBER & PHASE 01000001371

Dist	COUNTY	ROUTE	POST MILES TOTAL PROJECT	SHEET No.	TOTAL SHEETS
01	Men	128	2.8/11.1	36	98

Marlene Gibb 6-15-15
REGISTERED CIVIL ENGINEER DATE

6-15-15
PLANS APPROVAL DATE

REGISTERED PROFESSIONAL ENGINEER
MARLENE E. GIBB
No. C 51513
Exp. 06-30-16
CIVIL
STATE OF CALIFORNIA

THE STATE OF CALIFORNIA OR ITS OFFICERS OR AGENTS SHALL NOT BE RESPONSIBLE FOR THE ACCURACY OR COMPLETENESS OF SCANNED COPIES OF THIS PLAN SHEET.

T15N R16W MDB&M
SECTION 16

NOTES:

1. FOR ACCURATE RIGHT OF WAY DATA, CONTACT RIGHT OF WAY ENGINEERING AT THE DISTRICT OFFICE
2. FG FLUSH WITH TOP OF HEAD WALL AT ALL LOCATIONS.
3. EXPECT EXITING CULVERT TO BE ENCASED IN CONCRETE BACKFILL THROUGHOUT TRENCH LENGTH.

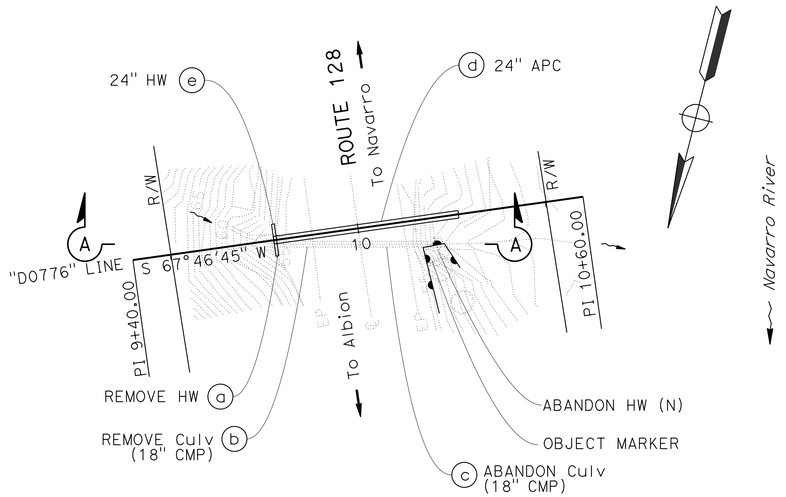

DRAINAGE SYSTEM No. 33

ROUTE 128
PM 7.76

PLAN

SCALE: 1" = 20'

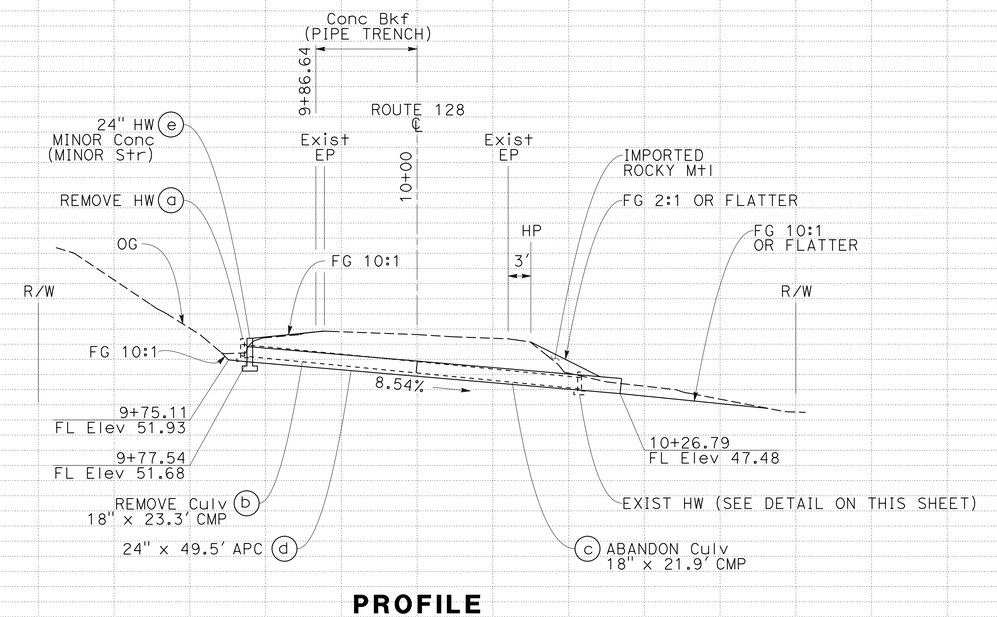

PROFILE

SCALE: Horiz 1" = 10'
Vert 1" = 10'

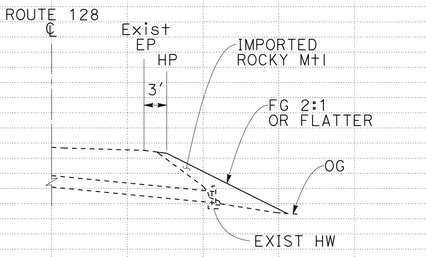

SECTION A-A

ABANDON CULVERT DETAIL @ EXIST HW
SCALE: 1" = 10'

DRAINAGE PLAN AND PROFILE

SCALE AS SHOWN

D-33

STATION		+20	+40	+60	+80	10+00	+20	+40	+60	+80	TOTAL
CY	Exc										
	Emb										

REVISED BY	DATE REVISED

CALCULATED-DESIGNED BY: MARTIN GARCIA
CHECKED BY: MARLENE GIBB
FUNCTIONAL SUPERVISOR: ROBERT E. POLGAR

STATE OF CALIFORNIA - DEPARTMENT OF TRANSPORTATION
03-DESIGN

LAST REVISION
DATE PLOTTED => 31-AUG-2015
TIME PLOTTED => 09:36

P:\proj4\01\378x7\drafting\01000001371ia033.dgn

BORDER LAST REVISED 7/2/2010
USERNAME => s130875
DGN FILE => 01000001371ia033.dgn
RELATIVE BORDER SCALE IS IN INCHES 0 1 2 3
UNIT 0306
PROJECT NUMBER & PHASE 01000001371

Dist	COUNTY	ROUTE	POST MILES TOTAL PROJECT	SHEET No.	TOTAL SHEETS
01	Men	128	2.8/11.1	37	98

Marlene Gibb 6-15-15
REGISTERED CIVIL ENGINEER DATE

6-15-15
PLANS APPROVAL DATE

REGISTERED PROFESSIONAL ENGINEER
MARLENE E. GIBB
No. C 51513
Exp. 06-30-16
CIVIL
STATE OF CALIFORNIA

THE STATE OF CALIFORNIA OR ITS OFFICERS OR AGENTS SHALL NOT BE RESPONSIBLE FOR THE ACCURACY OR COMPLETENESS OF SCANNED COPIES OF THIS PLAN SHEET.

T15N R16W MDB&M
SECTION 16

NOTES:

1. FOR ACCURATE RIGHT OF WAY DATA, CONTACT RIGHT OF WAY ENGINEERING AT THE DISTRICT OFFICE
2. FOR ROCK SLOPE PROTECTION DETAILS SEE DRAINAGE DETAIL SHEETS.
3. FG FLUSH WITH TOP OF HEAD WALL AT ALL LOCATIONS.

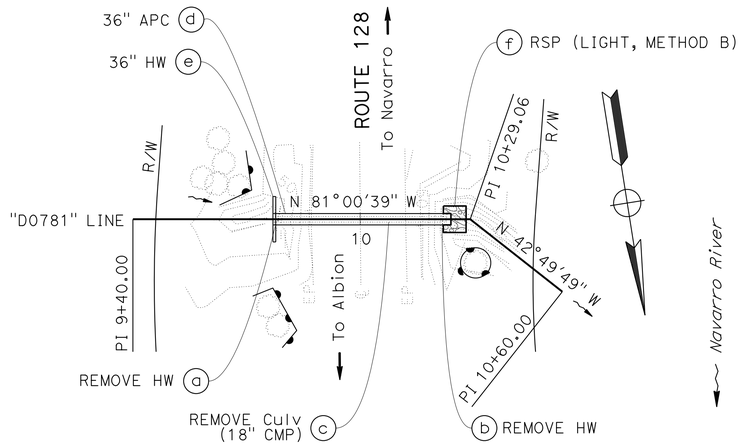

DRAINAGE SYSTEM No. 34

ROUTE 128
PM 7.81

PLAN

SCALE: 1" = 20'

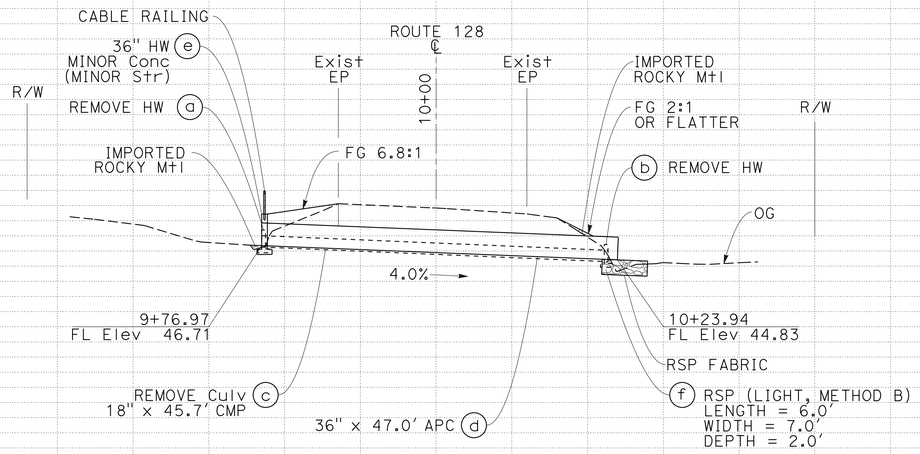

PROFILE

SCALE: Horiz 1" = 10'
Vert 1" = 10'

DRAINAGE PLAN AND PROFILE

SCALE AS SHOWN

D-34

STATION		+20	+40	+60	+80	10+00	+20	+40	+60	+80	TOTAL
CY	Exc										
	Emb										

REVISED BY | DATE REVISED
MARTIN GARCIA | MARLENE GIBB
CALCULATED-DESIGNED BY | CHECKED BY
FUNCTIONAL SUPERVISOR: ROBERT E. POLGAR
STATE OF CALIFORNIA - DEPARTMENT OF TRANSPORTATION
03-DESIGN
Caltrans

LAST REVISION | DATE PLOTTED => 31-AUG-2015 | TIME PLOTTED => 09:36

P:\proj4\01\378x7\drafting\01000001371a034.dgn

BORDER LAST REVISED 7/2/2010
USERNAME => s130875
DGN FILE => 01000001371a034.dgn
RELATIVE BORDER SCALE IS IN INCHES 0 1 2 3
UNIT 0306
PROJECT NUMBER & PHASE 01000001371

Dist	COUNTY	ROUTE	POST MILES TOTAL PROJECT	SHEET No.	TOTAL SHEETS
01	Men	128	2.8/11.1	38	98

Marlene Gibb 6-15-15
REGISTERED CIVIL ENGINEER DATE

6-15-15
PLANS APPROVAL DATE

REGISTERED PROFESSIONAL ENGINEER
MARLENE E. GIBB
No. C 51513
Exp. 06-30-16
CIVIL
STATE OF CALIFORNIA

THE STATE OF CALIFORNIA OR ITS OFFICERS OR AGENTS SHALL NOT BE RESPONSIBLE FOR THE ACCURACY OR COMPLETENESS OF SCANNED COPIES OF THIS PLAN SHEET.

T15N R16W MDB&M
SECTION 16

NOTES:

1. FOR ACCURATE RIGHT OF WAY DATA, CONTACT RIGHT OF WAY ENGINEERING AT THE DISTRICT OFFICE
2. COORDINATE WITH CALIFORNIA STATE PARKS 72 HOURS PRIOR TO CONSTRUCTION TO HAVE 3" WATER LINE SHUT OFF.
3. FG FLUSH WITH TOP OF HEAD WALL AT ALL LOCATIONS.

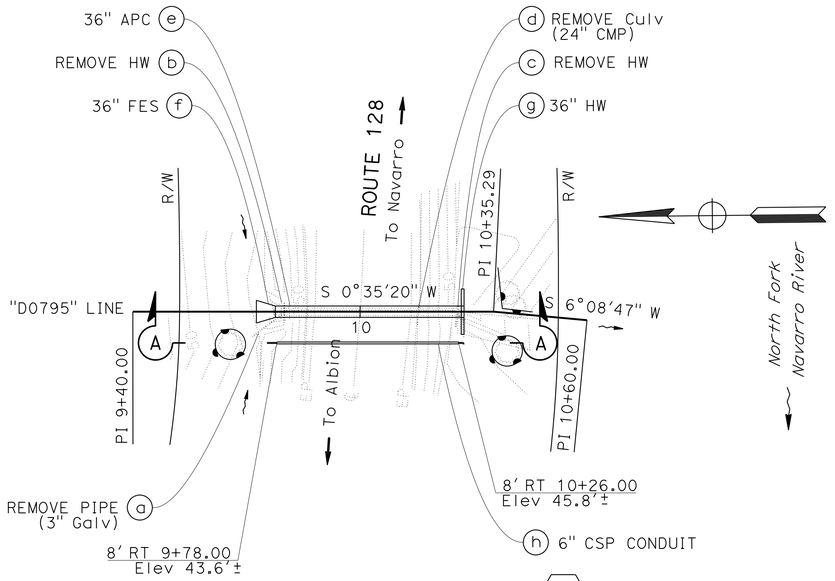

DRAINAGE SYSTEM No. 35

ROUTE 128
PM 7.95

PLAN

SCALE: 1" = 20'

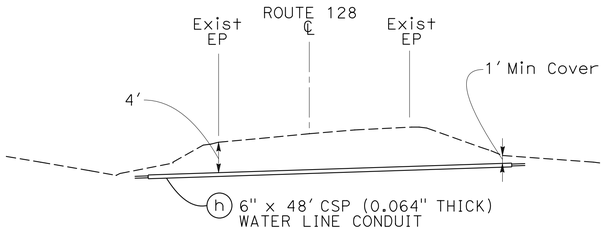

SECTION A-A
SCALE: 1"=10'

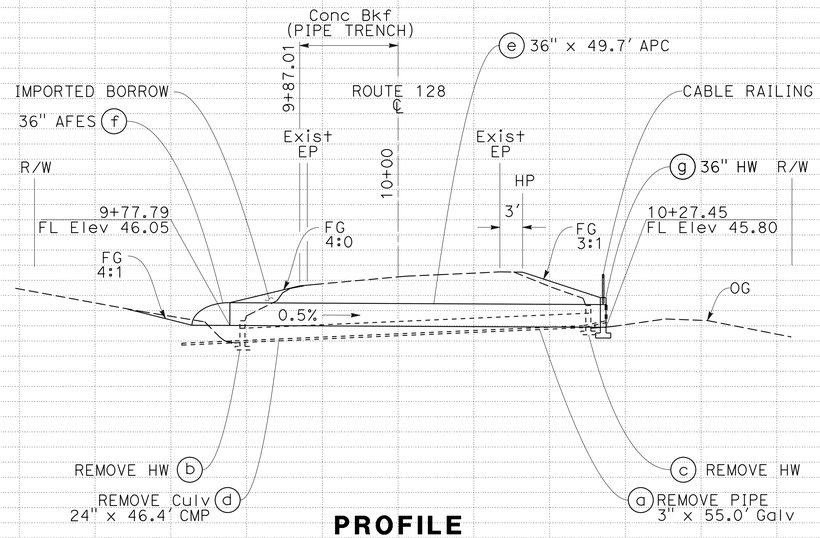

PROFILE

SCALE: Horiz 1" = 10'
Vert 1" = 10'

DRAINAGE PLAN AND PROFILE

SCALE AS SHOWN

D-35

STATION: +20 +40 +60 +80 10+00 +20 +40 +60 +80 TOTAL

CY Exc
CY Emb

STATE OF CALIFORNIA - DEPARTMENT OF TRANSPORTATION
03-DESIGN
Caltrans®

FUNCTIONAL SUPERVISOR: ROBERT E. POLGAR

CALCULATED-DESIGNED BY: MARLENE GIBB
CHECKED BY: MARTIN GARCIA

REVISED BY | DATE REVISED

LAST REVISION
DATE PLOTTED => 31-AUG-2015
TIME PLOTTED => 09:36

P:\proj4\01\378x7\drafting\01000001371a035.dgn

BORDER LAST REVISED 7/2/2010
USERNAME => s130875
DGN FILE => 01000001371a035.dgn
RELATIVE BORDER SCALE IS IN INCHES 0 1 2 3
UNIT 0306
PROJECT NUMBER & PHASE 01000001371

Dist	COUNTY	ROUTE	POST MILES TOTAL PROJECT	SHEET No.	TOTAL SHEETS
01	Men	128	2.8/11.1	39	98

Marlene Gibb 6-15-15
REGISTERED CIVIL ENGINEER DATE

6-15-15
PLANS APPROVAL DATE

MARLENE E. GIBB No. C 51513 Exp. 06-30-16 CIVIL — REGISTERED PROFESSIONAL ENGINEER — STATE OF CALIFORNIA

THE STATE OF CALIFORNIA OR ITS OFFICERS OR AGENTS SHALL NOT BE RESPONSIBLE FOR THE ACCURACY OR COMPLETENESS OF SCANNED COPIES OF THIS PLAN SHEET.

T15N R16W MDB&M
SECTION 16

NOTES:

1. FOR ACCURATE RIGHT OF WAY DATA, CONTACT RIGHT OF WAY ENGINEERING AT THE DISTRICT OFFICE
2. FOR HMA APRON AND HMA DIKE (TYPE A) DETAILS SEE DRAINAGE DETAIL SHEETS.
3. EXPECT EXITING CULVERT TO BE ENCASED IN CONCRETE BACKFILL THROUGHOUT TRENCH LENGTH.

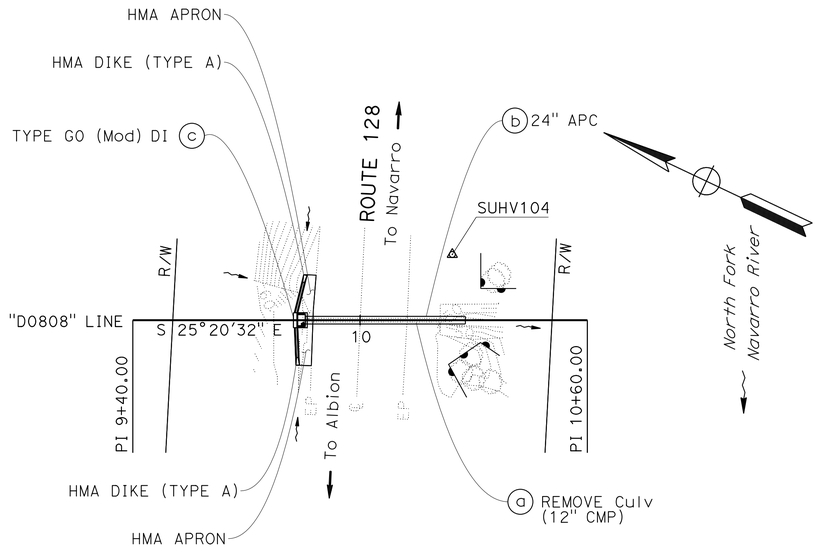

DRAINAGE SYSTEM No. 36

ROUTE 128
PM 8.08

PLAN

SCALE: 1" = 20'

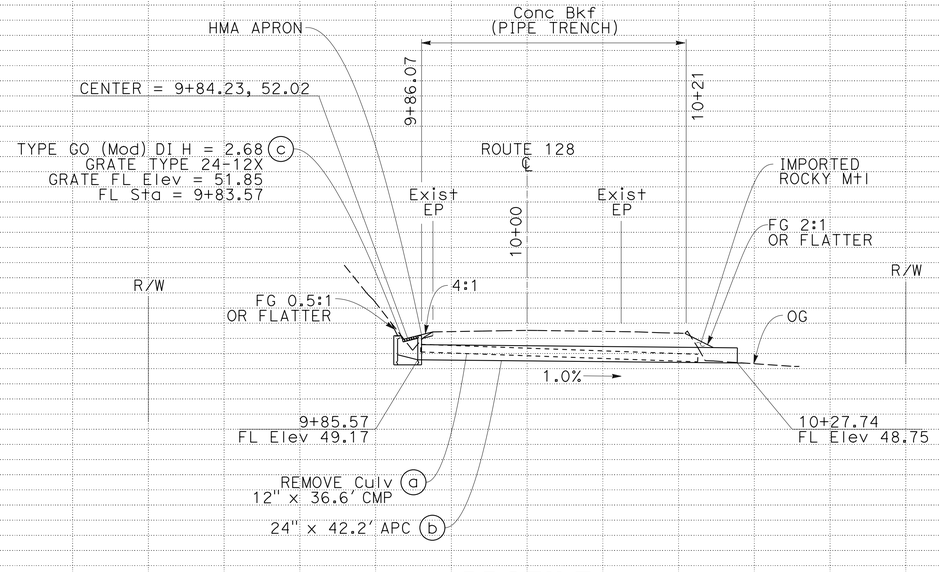

PROFILE

SCALE: Horiz 1" = 10'
Vert 1" = 10'

DRAINAGE PLAN AND PROFILE

SCALE AS SHOWN

D-36

STATION		+20	+40	+60	+80	10+00	+20	+40	+60	+80	TOTAL
CY	Exc										
	Emb										

STATE OF CALIFORNIA - DEPARTMENT OF TRANSPORTATION
03-DESIGN
FUNCTIONAL SUPERVISOR: ROBERT E. POLGAR
CALCULATED-DESIGNED BY: MARTIN GARCIA
CHECKED BY: MARLENE GIBB
REVISED BY | DATE REVISED

LAST REVISION | DATE PLOTTED => 31-AUG-2015 | TIME PLOTTED => 09:36

P:\proj4\01\37847\drafting\01000001371a036.dgn

BORDER LAST REVISED 7/2/2010 | USERNAME => s130875 | DGN FILE => 01000001371a036.dgn | RELATIVE BORDER SCALE IS IN INCHES 0 1 2 3 | UNIT 0306 | PROJECT NUMBER & PHASE 01000001371

Dist	COUNTY	ROUTE	POST MILES TOTAL PROJECT	SHEET No.	TOTAL SHEETS
01	Men	128	2.8/11.1	40	98

Marlene Gibb 6-15-15
REGISTERED CIVIL ENGINEER DATE

6-15-15
PLANS APPROVAL DATE

REGISTERED PROFESSIONAL ENGINEER
MARLENE E. GIBB
No. C 51513
Exp. 06-30-16
CIVIL
STATE OF CALIFORNIA

THE STATE OF CALIFORNIA OR ITS OFFICERS OR AGENTS SHALL NOT BE RESPONSIBLE FOR THE ACCURACY OR COMPLETENESS OF SCANNED COPIES OF THIS PLAN SHEET.

T15N R16W MDB&M
SECTION 16

NOTES:

1. FOR ACCURATE RIGHT OF WAY DATA, CONTACT RIGHT OF WAY ENGINEERING AT THE DISTRICT OFFICE
2. FOR HMA APRON AND HMA DIKE (TYPE A) DETAILS SEE DRAINAGE DETAIL SHEETS.
3. INLET AND/OR OUTLET STRUCTURE SKEW ANGLE IS MEASURED FROM A LINE PERPENDICULAR TO THE CULVERT ALIGNMENT.
4. EXPECT EXITING CULVERT TO BE ENCASED IN CONCRETE BACKFILL THROUGHOUT TRENCH LENGTH.

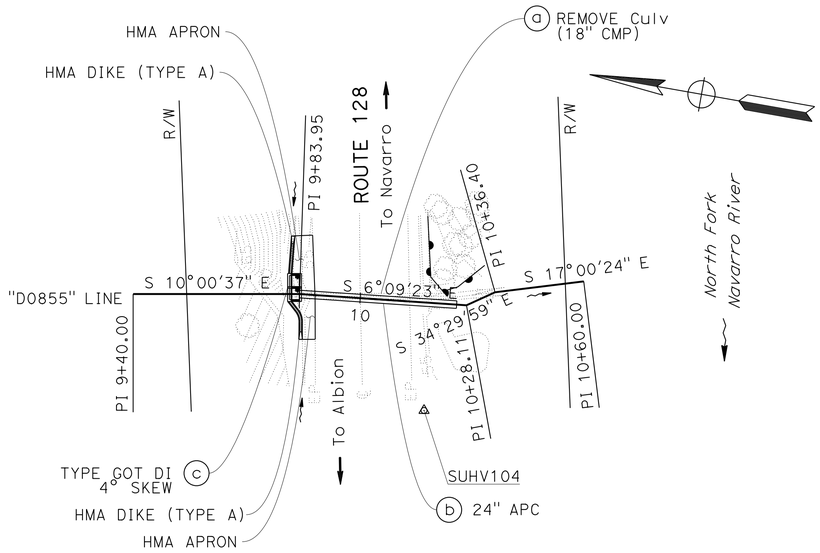

DRAINAGE SYSTEM No. 37

ROUTE 128
PM 8.55

PLAN

SCALE: 1" = 20'

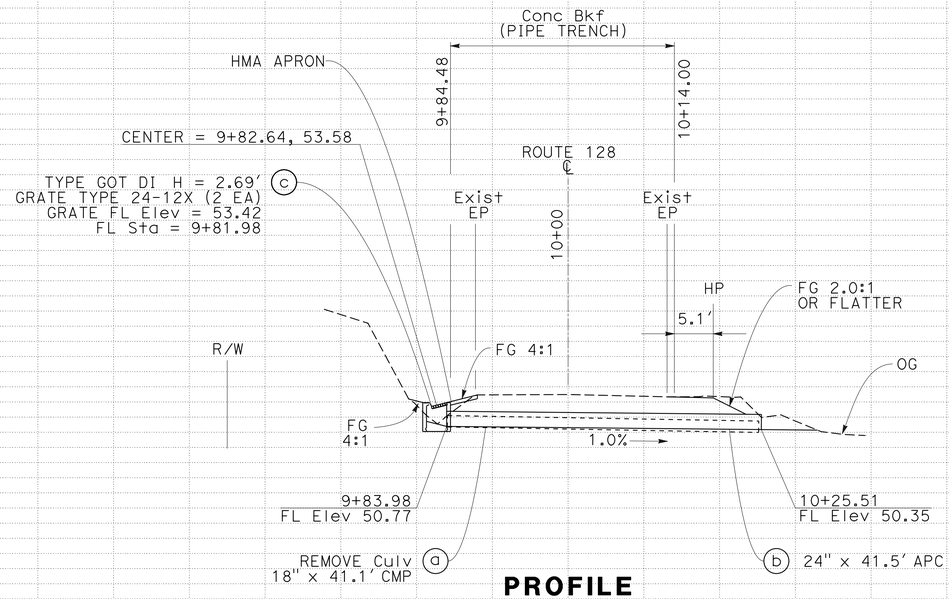

PROFILE

SCALE: Horiz 1" = 10'
Vert 1" = 10'

DRAINAGE PLAN AND PROFILE

SCALE AS SHOWN

D-37

STATION	+20	+40	+60	+80	10+00	+20	+40	+60	+80	TOTAL
CY Exc										
CY Emb										

STATE OF CALIFORNIA - DEPARTMENT OF TRANSPORTATION
03-DESIGN
Caltrans

CALCULATED-DESIGNED BY	CHECKED BY	FUNCTIONAL SUPERVISOR	REVISED BY	DATE REVISED
MARTIN GARCIA	MARLENE GIBB	ROBERT E. POLGAR		

LAST REVISION
DATE PLOTTED => 31-AUG-2015
TIME PLOTTED => 09:36

P:\proj4\01\378x7\drafting\01000001371ia037.dgn

BORDER LAST REVISED 7/2/2010
USERNAME => s130875
DGN FILE => 01000001371ia037.dgn
RELATIVE BORDER SCALE IS IN INCHES 0 1 2 3
UNIT 0306
PROJECT NUMBER & PHASE 01000001371

Dist	COUNTY	ROUTE	POST MILES TOTAL PROJECT	SHEET No.	TOTAL SHEETS
01	Men	128	2.8/11.1	41	98

Marlene Gibb 6-15-15
REGISTERED CIVIL ENGINEER DATE

6-15-15
PLANS APPROVAL DATE

REGISTERED PROFESSIONAL ENGINEER
MARLENE E. GIBB
No. C 51513
Exp. 06-30-16
CIVIL
STATE OF CALIFORNIA

THE STATE OF CALIFORNIA OR ITS OFFICERS OR AGENTS SHALL NOT BE RESPONSIBLE FOR THE ACCURACY OR COMPLETENESS OF SCANNED COPIES OF THIS PLAN SHEET.

T15N R16W MDB&M
SECTION 15

NOTES:

1. FOR ACCURATE RIGHT OF WAY DATA, CONTACT RIGHT OF WAY ENGINEERING AT THE DISTRICT OFFICE

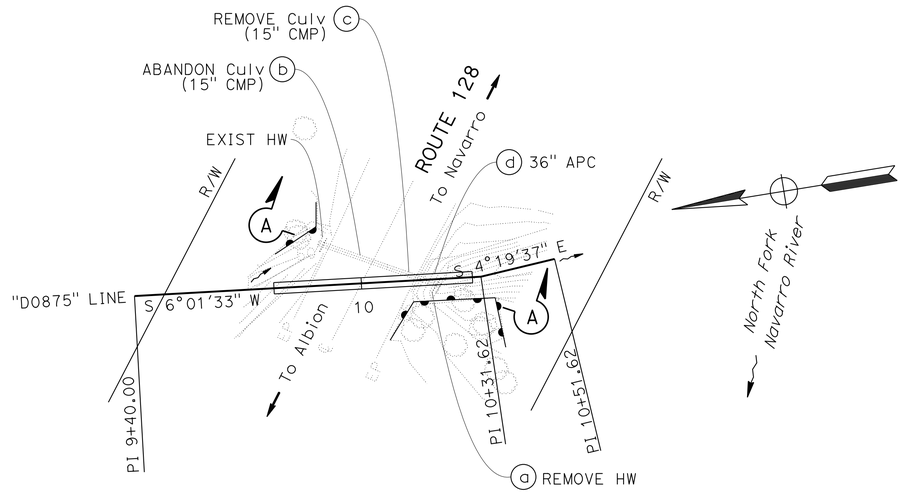

DRAINAGE SYSTEM No. 38

ROUTE 128
PM 8.75

PLAN

SCALE: 1" = 20'

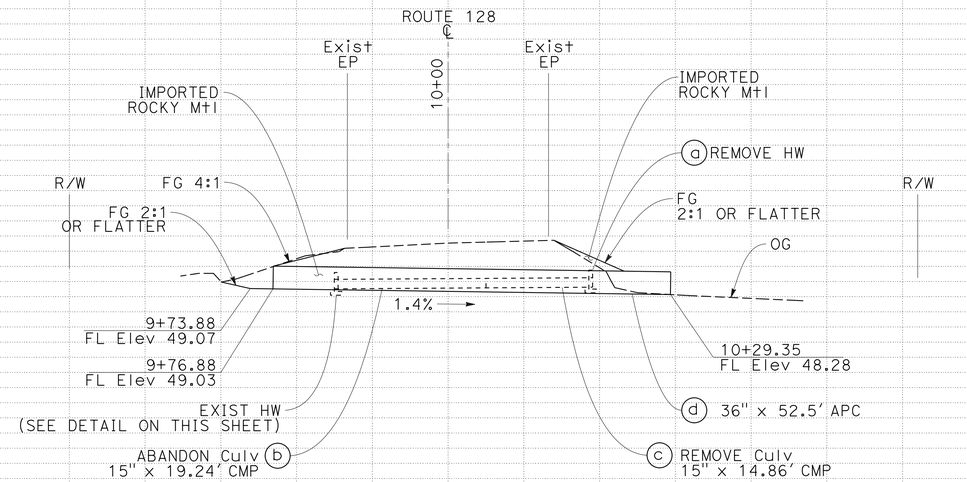

PROFILE

SCALE: Horiz 1" = 10'
Vert 1" = 10'

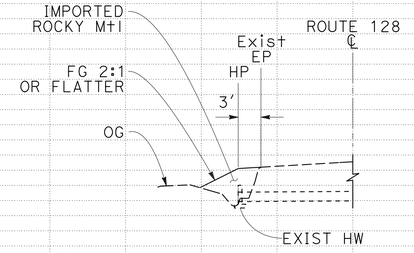

SECTION A-A

ABANDON CULVERT DETAIL @ EXIST HW
SCALE: 1" = 10'

DRAINAGE PLAN AND PROFILE

SCALE AS SHOWN

D-38

STATION		+20	+40	+60	+80	10+00	+20	+40	+60	+80	TOTAL
CY	Exc										
	Emb										

CALCULATED-DESIGNED BY: MARTIN GARCIA
CHECKED BY: MARLENE GIBB
REVISED BY / DATE REVISED
FUNCTIONAL SUPERVISOR: ROBERT E. POLGAR
STATE OF CALIFORNIA - DEPARTMENT OF TRANSPORTATION
03-DESIGN
Caltrans

LAST REVISION
DATE PLOTTED => 31-AUG-2015
TIME PLOTTED => 09:36

P:\proj4\01\378x7\drafting\01000001371a038.dgn

BORDER LAST REVISED 7/2/2010
USERNAME => s130875
DGN FILE => 01000001371a038.dgn
RELATIVE BORDER SCALE IS IN INCHES 0 1 2 3
UNIT 0306
PROJECT NUMBER & PHASE 01000001371

Dist	COUNTY	ROUTE	POST MILES TOTAL PROJECT	SHEET No.	TOTAL SHEETS
01	Men	128	2.8/11.1	42	98

Marlene Gibb 6-15-15
REGISTERED CIVIL ENGINEER DATE

6-15-15
PLANS APPROVAL DATE

REGISTERED PROFESSIONAL ENGINEER
MARLENE E. GIBB
No. C 51513
Exp. 06-30-16
CIVIL
STATE OF CALIFORNIA

THE STATE OF CALIFORNIA OR ITS OFFICERS OR AGENTS SHALL NOT BE RESPONSIBLE FOR THE ACCURACY OR COMPLETENESS OF SCANNED COPIES OF THIS PLAN SHEET.

T15N R16W MDB&M
SECTION 15

NOTES:

1. FOR ACCURATE RIGHT OF WAY DATA, CONTACT RIGHT OF WAY ENGINEERING AT THE DISTRICT OFFICE
2. FG FLUSH WITH TOP OF HEAD WALL AT ALL LOCATIONS.
3. INLET AND/OR OUTLET STRUCTURE SKEW ANGLE IS MEASURED FROM A LINE PERPENDICULAR TO THE CULVERT ALIGNMENT.
4. EXPECT EXITING CULVERT TO BE ENCASED IN CONCRETE BACKFILL THROUGHOUT TRENCH LENGTH.

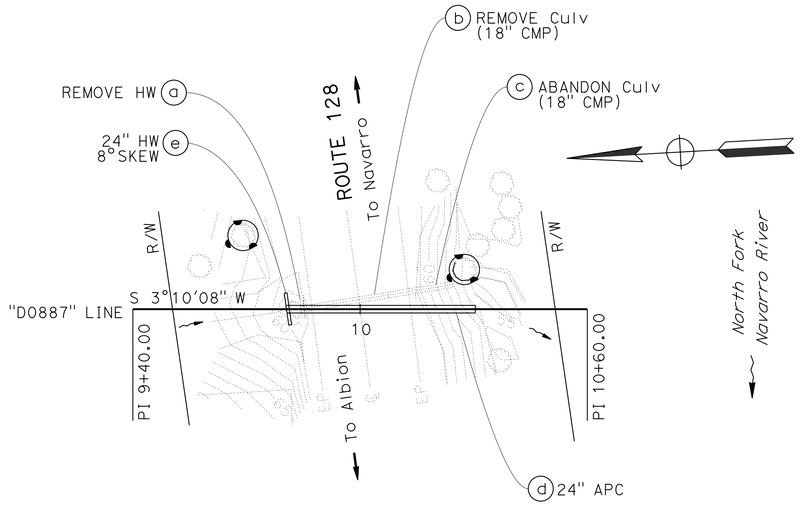

DRAINAGE SYSTEM No. 39

ROUTE 128
PM 8.87

PLAN

SCALE: 1" = 20'

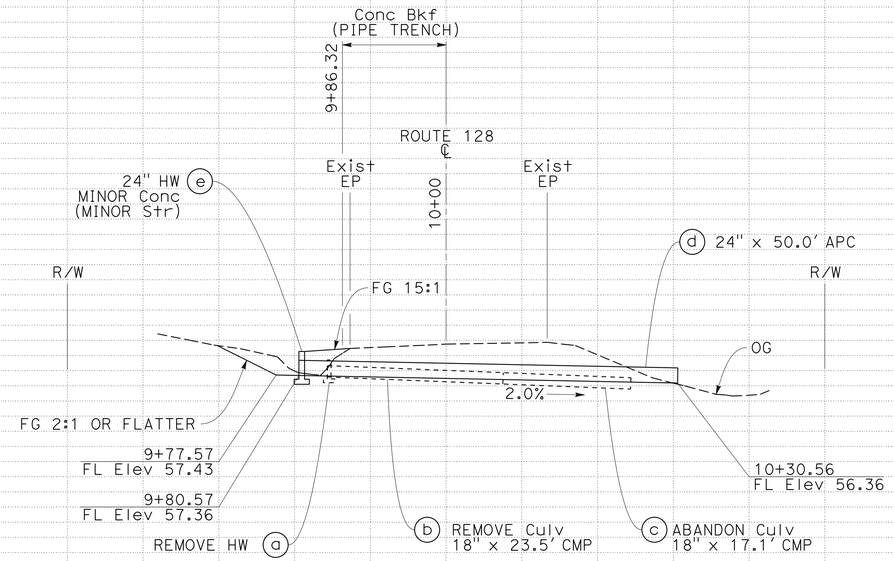

PROFILE

SCALE: Horiz 1" = 10'
Vert 1" = 10'

DRAINAGE PLAN AND PROFILE

SCALE AS SHOWN

D-39

STATION		+20	+40	+60	+80	10+00	+20	+40	+60	+80	TOTAL
CY	Exc										
	Emb										

STATE OF CALIFORNIA - DEPARTMENT OF TRANSPORTATION
03-DESIGN
Caltrans®

CALCULATED-DESIGNED BY: MARTIN GARCIA
CHECKED BY: MARLENE GIBB
FUNCTIONAL SUPERVISOR: ROBERT E. POLGAR

REVISED BY | DATE REVISED

LAST REVISION
DATE PLOTTED => 31-AUG-2015
TIME PLOTTED => 09:36

P:\proj4\01\378x7\drafting\01000001371a039.dgn

BORDER LAST REVISED 7/2/2010
USERNAME => s130875
DGN FILE => 01000001371a039.dgn
RELATIVE BORDER SCALE IS IN INCHES 0 1 2 3
UNIT 0306
PROJECT NUMBER & PHASE 01000001371

Dist	COUNTY	ROUTE	POST MILES TOTAL PROJECT	SHEET No.	TOTAL SHEETS
01	Men	128	2.8/11.1	43	98

Marlene Gibb 6-15-15
REGISTERED CIVIL ENGINEER DATE

6-15-15
PLANS APPROVAL DATE

REGISTERED PROFESSIONAL ENGINEER
MARLENE E. GIBB
No. C 51513
Exp. 06-30-16
CIVIL
STATE OF CALIFORNIA

THE STATE OF CALIFORNIA OR ITS OFFICERS OR AGENTS SHALL NOT BE RESPONSIBLE FOR THE ACCURACY OR COMPLETENESS OF SCANNED COPIES OF THIS PLAN SHEET.

T15N R16W MDB&M
SECTION 15

NOTES:

1. FOR ACCURATE RIGHT OF WAY DATA, CONTACT RIGHT OF WAY ENGINEERING AT THE DISTRICT OFFICE
2. FOR HMA APRON AND HMA DIKE (TYPE A) DETAILS SEE DRAINAGE DETAIL SHEETS.
3. INLET AND/OR OUTLET STRUCTURE SKEW ANGLE IS MEASURED FROM A LINE PERPENDICULAR TO THE CULVERT ALIGNMENT.
4. EXPECT EXITING CULVERT TO BE ENCASED IN CONCRETE BACKFILL THROUGHOUT TRENCH LENGTH.

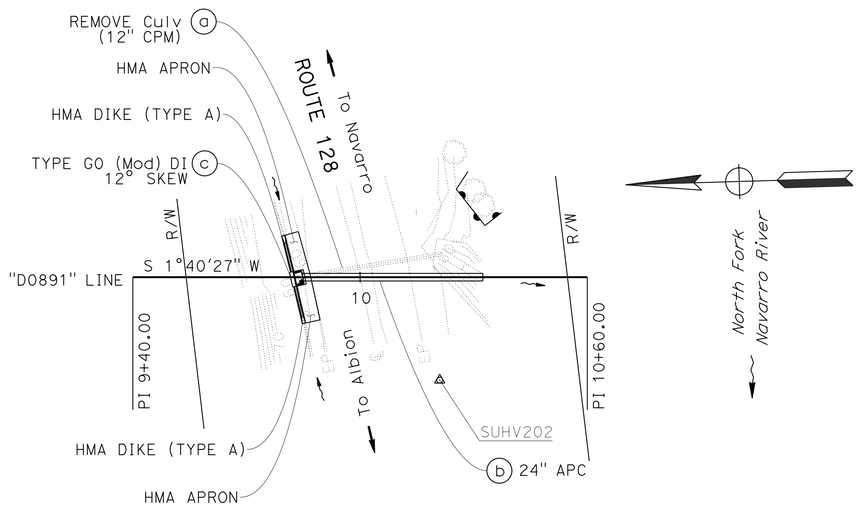

DRAINAGE SYSTEM No. 40

ROUTE 128
PM 8.91

PLAN

SCALE: 1" = 20'

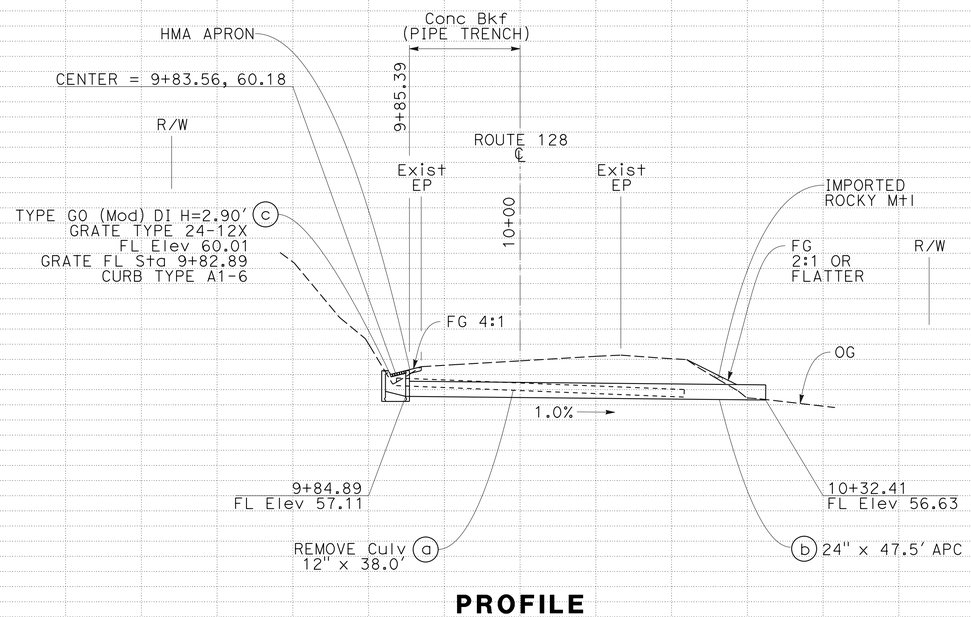

PROFILE

SCALE: Horiz 1" = 10'
Vert 1" = 10'

DRAINAGE PLAN AND PROFILE

SCALE AS SHOWN

D-40

STATION	+20	+40	+60	+80	10+00	+20	+40	+60	+80	TOTAL
CY Exc										
CY Emb										

REVISED BY | DATE REVISED
MARTIN GARCIA | MARLENE GIBB
CALCULATED-DESIGNED BY | CHECKED BY
FUNCTIONAL SUPERVISOR: ROBERT E. POLGAR

STATE OF CALIFORNIA - DEPARTMENT OF TRANSPORTATION
03-DESIGN
Caltrans

LAST REVISION | DATE PLOTTED => 31-AUG-2015 | TIME PLOTTED => 09:36

P:\proj4\01\378x7\drafting\01000001371d040.dgn

BORDER LAST REVISED 7/2/2010
USERNAME => s130875
DGN FILE => 01000001371d040.dgn
RELATIVE BORDER SCALE IS IN INCHES 0 1 2 3
UNIT 0306
PROJECT NUMBER & PHASE 01000001371

Dist	COUNTY	ROUTE	POST MILES TOTAL PROJECT	SHEET No.	TOTAL SHEETS
01	Men	128	2.8/11.1	44	98

Marlene Gibb 6-15-15
REGISTERED CIVIL ENGINEER DATE

6-15-15
PLANS APPROVAL DATE

REGISTERED PROFESSIONAL ENGINEER
MARLENE E. GIBB
No. C 51513
Exp. 06-30-16
CIVIL
STATE OF CALIFORNIA

THE STATE OF CALIFORNIA OR ITS OFFICERS OR AGENTS SHALL NOT BE RESPONSIBLE FOR THE ACCURACY OR COMPLETENESS OF SCANNED COPIES OF THIS PLAN SHEET.

T15N R16W MDB&M
SECTION 15

NOTES:

1. FOR ACCURATE RIGHT OF WAY DATA, CONTACT RIGHT OF WAY ENGINEERING AT THE DISTRICT OFFICE
2. FOR HMA APRON AND HMA DIKE (TYPE A) DETAILS SEE DRAINAGE DETAIL SHEETS.
3. EXPECT EXITING CULVERT TO BE ENCASED IN CONCRETE BACKFILL THROUGHOUT TRENCH LENGTH.

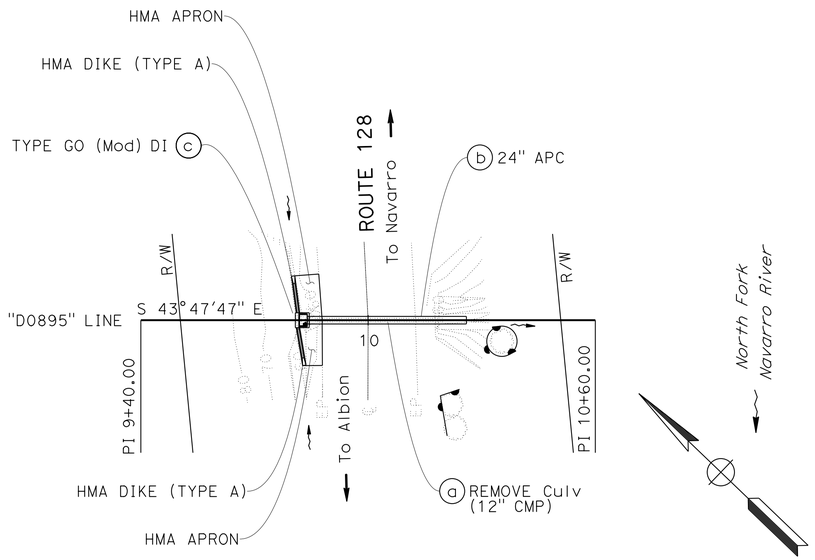

DRAINAGE SYSTEM No. 41

ROUTE 128
PM 8.95

PLAN

SCALE: 1" = 20'

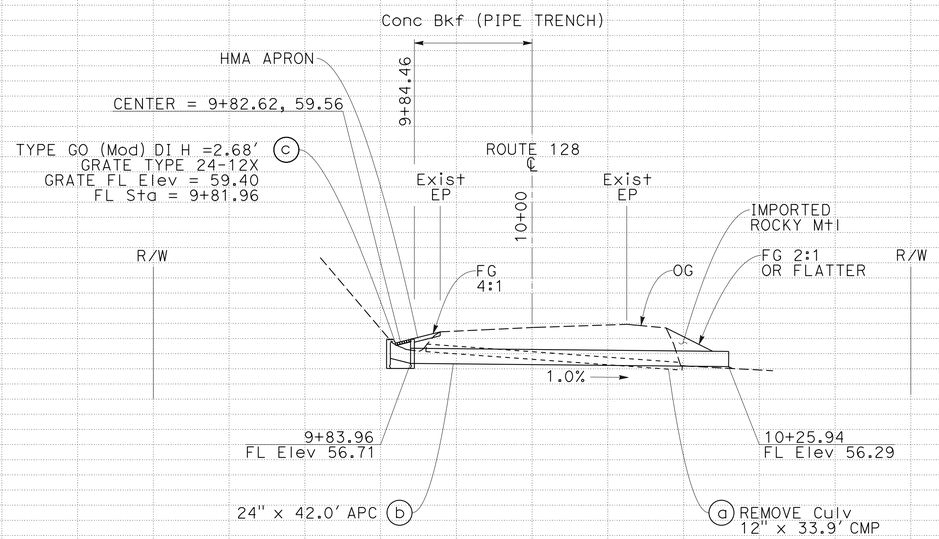

PROFILE

SCALE: Horiz 1" = 10'
Vert 1" = 10'

DRAINAGE PLAN AND PROFILE

SCALE AS SHOWN

D-41

STATION	+20	+40	+60	+80	10+00	+20	+40	+60	+80	TOTAL
CY Exc										
CY Emb										

STATE OF CALIFORNIA - DEPARTMENT OF TRANSPORTATION
Caltrans
03-DESIGN

FUNCTIONAL SUPERVISOR: ROBERT E. POLGAR
CALCULATED-DESIGNED BY: MARTIN GARCIA
CHECKED BY: MARLENE GIBB
REVISED BY
DATE REVISED

P:\proj4\01\378x7\drafting\01000001371a041.dgn

DATE PLOTTED => 31-AUG-2015
TIME PLOTTED => 09:36
LAST REVISION

Dist	COUNTY	ROUTE	POST MILES TOTAL PROJECT	SHEET No.	TOTAL SHEETS
01	Men	128	2.8/11.1	45	98

Marlene Gibb 6-15-15
REGISTERED CIVIL ENGINEER DATE

6-15-15
PLANS APPROVAL DATE

REGISTERED PROFESSIONAL ENGINEER
MARLENE E. GIBB
No. C 51513
Exp. 06-30-16
CIVIL
STATE OF CALIFORNIA

THE STATE OF CALIFORNIA OR ITS OFFICERS OR AGENTS SHALL NOT BE RESPONSIBLE FOR THE ACCURACY OR COMPLETENESS OF SCANNED COPIES OF THIS PLAN SHEET.

T15N R16W MDB&M
SECTION 15

NOTES:

1. FOR ACCURATE RIGHT OF WAY DATA, CONTACT RIGHT OF WAY ENGINEERING AT THE DISTRICT OFFICE
2. FG FLUSH WITH TOP OF HEAD WALL AT ALL LOCATIONS.
3. INLET AND/OR OUTLET STRUCTURE SKEW ANGLE IS MEASURED FROM A LINE PERPENDICULAR TO THE CULVERT ALIGNMENT.
4. EXPECT EXITING CULVERT TO BE ENCASED IN CONCRETE BACKFILL THROUGHOUT TRENCH LENGTH.

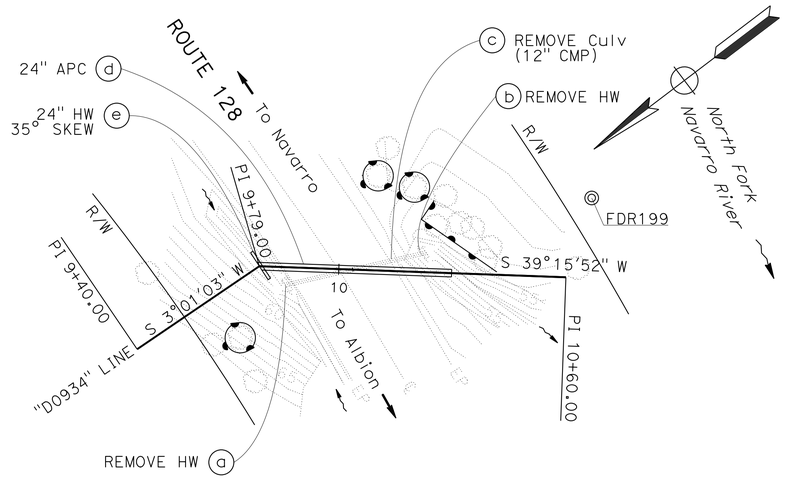

DRAINAGE SYSTEM No. 42

ROUTE 128
PM 9.34

PLAN

SCALE: 1" = 20'

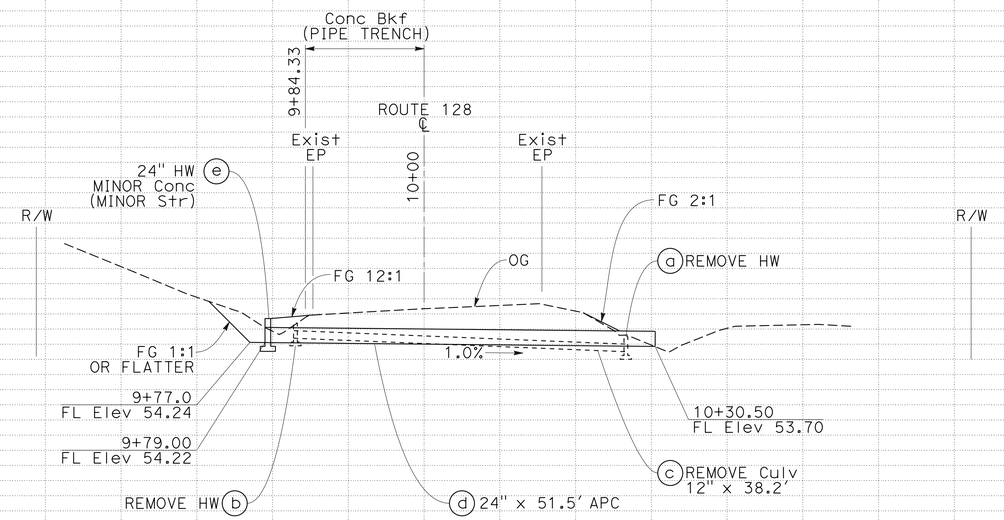

PROFILE

SCALE: Horiz 1" = 10'
Vert 1" = 10'

DRAINAGE PLAN AND PROFILE

SCALE AS SHOWN

D-42

STATION		+20	+40	+60	+80	10+00	+20	+40	+60	+80	TOTAL
CY	Exc										
	Emb										

STATE OF CALIFORNIA - DEPARTMENT OF TRANSPORTATION
03-DESIGN
Caltrans
FUNCTIONAL SUPERVISOR: ROBERT E. POLGAR
CALCULATED-DESIGNED BY: MARLENE GIBB
CHECKED BY: MARTIN GARCIA
REVISED BY | DATE REVISED

LAST REVISION
DATE PLOTTED => 31-AUG-2015
TIME PLOTTED => 09:36

P:\proj4\01\378x7\drafting\01000001371d042.dgn

BORDER LAST REVISED 7/2/2010
USERNAME => s130875
DGN FILE => 01000001371d042.dgn
RELATIVE BORDER SCALE IS IN INCHES 0 1 2 3
UNIT 0306
PROJECT NUMBER & PHASE 01000001371

Dist	COUNTY	ROUTE	POST MILES TOTAL PROJECT	SHEET No.	TOTAL SHEETS
01	Men	128	2.8/11.1	46	98

Marlene Gibb 6-15-15
REGISTERED CIVIL ENGINEER DATE

6-15-15
PLANS APPROVAL DATE

REGISTERED PROFESSIONAL ENGINEER
MARLENE E. GIBB
No. C 51513
Exp. 06-30-16
CIVIL
STATE OF CALIFORNIA

THE STATE OF CALIFORNIA OR ITS OFFICERS OR AGENTS SHALL NOT BE RESPONSIBLE FOR THE ACCURACY OR COMPLETENESS OF SCANNED COPIES OF THIS PLAN SHEET.

T15N R16W MDB&M
SECTION 15

NOTES:

1. FOR ACCURATE RIGHT OF WAY DATA, CONTACT RIGHT OF WAY ENGINEERING AT THE DISTRICT OFFICE
2. FG FLUSH WITH TOP OF HEADWALL AT ALL LOCATIONS.
3. INLET AND/OR OUTLET STRUCTURE SKEW ANGLE IS MEASURED FROM A LINE PERPENDICULAR TO THE CULVERT ALIGNMENT.

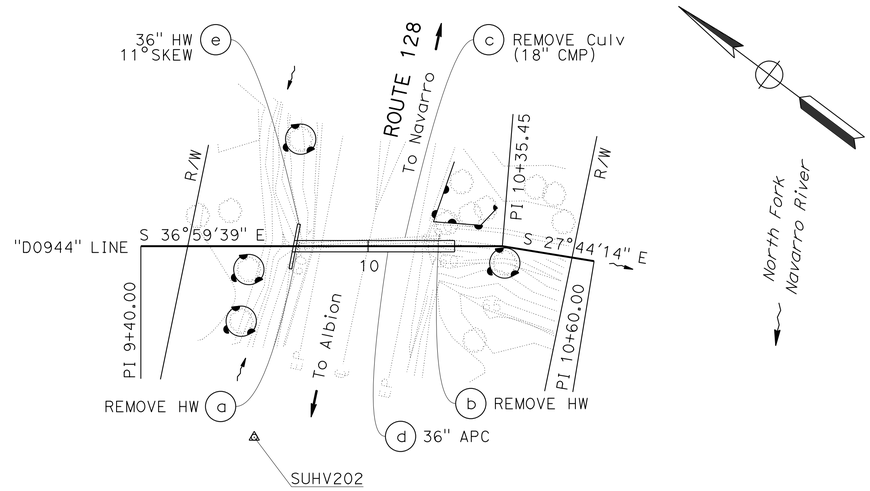

DRAINAGE SYSTEM No. 43

ROUTE 128
PM 9.44

PLAN

SCALE: 1" = 20'

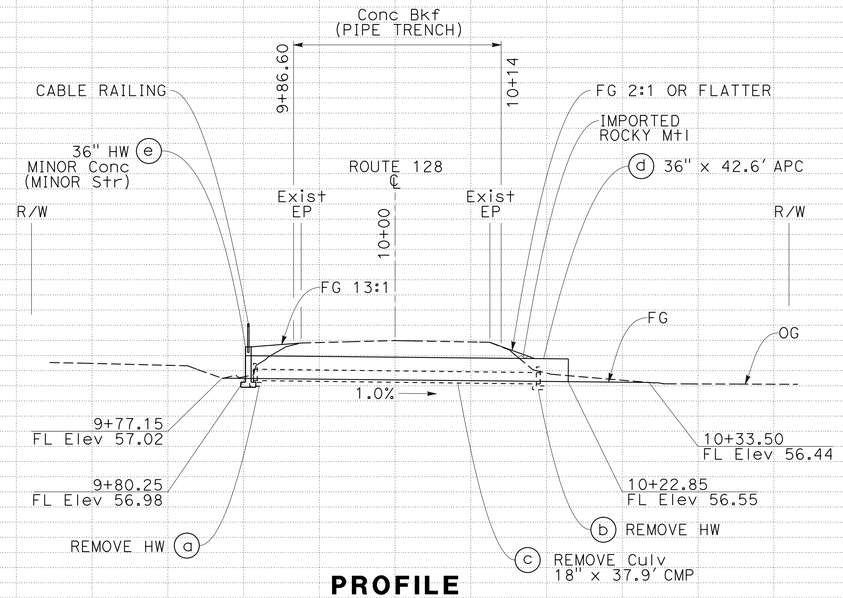

PROFILE

SCALE: Horiz 1" = 10'
Vert 1" = 10'

DRAINAGE PLAN AND PROFILE

SCALE AS SHOWN

D-43

STATION	+20	+40	+60	+80	10+00	+20	+40	+60	+80	TOTAL
CY Exc										
CY Emb										

STATE OF CALIFORNIA - DEPARTMENT OF TRANSPORTATION
03-DESIGN
Caltrans
FUNCTIONAL SUPERVISOR: ROBERT E. POLGAR
CALCULATED-DESIGNED BY: MARTIN GARCIA
CHECKED BY: MARLENE GIBB
REVISED BY | DATE REVISED

LAST REVISION
DATE PLOTTED => 31-AUG-2015
TIME PLOTTED => 09:36

P:\proj4\01\3787\drafting\01000001371da043.dgn

BORDER LAST REVISED 7/2/2010
USERNAME => s130875
DGN FILE => 01000001371da043.dgn
RELATIVE BORDER SCALE IS IN INCHES 0 1 2 3
UNIT 0306
PROJECT NUMBER & PHASE 01000001371

Dist	COUNTY	ROUTE	POST MILES TOTAL PROJECT	SHEET No.	TOTAL SHEETS
01	Men	128	2.8/11.1	47	98

Marlene Gibb 6-15-15
REGISTERED CIVIL ENGINEER DATE

6-15-15
PLANS APPROVAL DATE

REGISTERED PROFESSIONAL ENGINEER
MARLENE E. GIBB
No. C 51513
Exp. 06-30-16
CIVIL
STATE OF CALIFORNIA

THE STATE OF CALIFORNIA OR ITS OFFICERS OR AGENTS SHALL NOT BE RESPONSIBLE FOR THE ACCURACY OR COMPLETENESS OF SCANNED COPIES OF THIS PLAN SHEET.

T15N R16W MDB&M
SECTION 15

NOTES:

1. FOR ACCURATE RIGHT OF WAY DATA, CONTACT RIGHT OF WAY ENGINEERING AT THE DISTRICT OFFICE
2. FG FLUSH WITH TOP OF HEAD WALL AT ALL LOCATIONS.

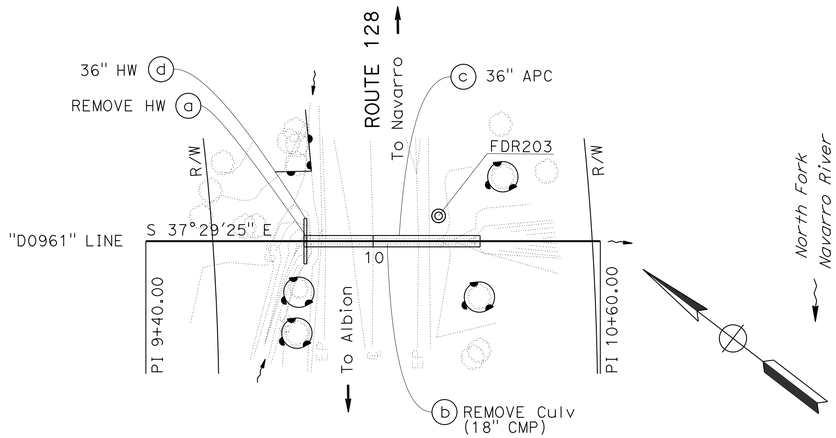

DRAINAGE SYSTEM No. 44

ROUTE 128
PM 9.61

PLAN

SCALE: 1" = 20'

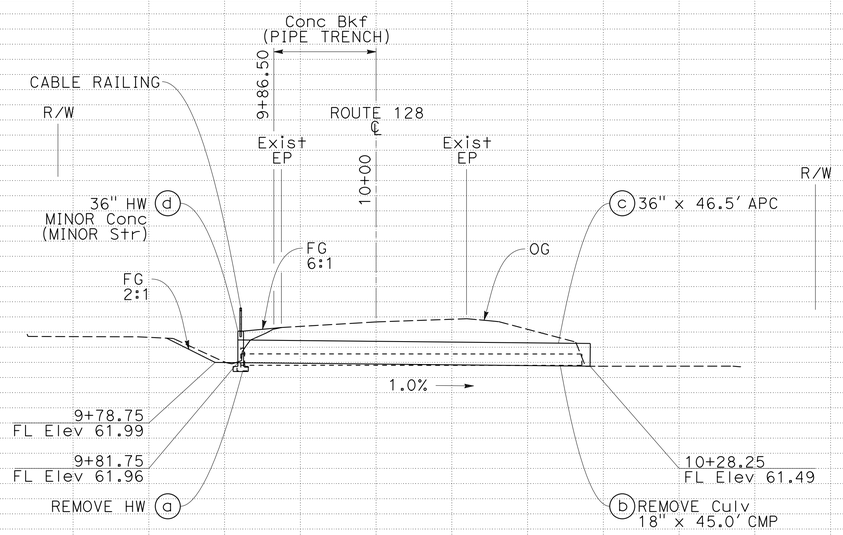

PROFILE

SCALE: Horiz 1" = 10'
Vert 1" = 10'

DRAINAGE PLAN AND PROFILE

SCALE AS SHOWN

D-44

STATION		+20	+40	+60	+80	10+00	+20	+40	+60	+80	TOTAL
CY	Exc										
	Emb										

STATE OF CALIFORNIA - DEPARTMENT OF TRANSPORTATION
03-DESIGN
Caltrans
FUNCTIONAL SUPERVISOR: ROBERT E. POLGAR
CALCULATED-DESIGNED BY: MARTIN GARCIA
CHECKED BY: MARLENE GIBB
REVISED BY | DATE REVISED

LAST REVISION | DATE PLOTTED => 31-AUG-2015 | TIME PLOTTED => 09:36

P:\proj4\01\3788\7\drafting\01000001371a044.dgn

BORDER LAST REVISED 7/2/2010
USERNAME => s130875
DGN FILE => 01000001371a044.dgn
RELATIVE BORDER SCALE IS IN INCHES 0 1 2 3
UNIT 0306
PROJECT NUMBER & PHASE 01000001371

Dist	COUNTY	ROUTE	POST MILES TOTAL PROJECT	SHEET No.	TOTAL SHEETS
01	Men	128	2.8/11.1	48	98

Marlene Gibb 6-15-15
REGISTERED CIVIL ENGINEER DATE

6-15-15
PLANS APPROVAL DATE

REGISTERED PROFESSIONAL ENGINEER
MARLENE E. GIBB
No. C 51513
Exp. 06-30-16
CIVIL
STATE OF CALIFORNIA

THE STATE OF CALIFORNIA OR ITS OFFICERS OR AGENTS SHALL NOT BE RESPONSIBLE FOR THE ACCURACY OR COMPLETENESS OF SCANNED COPIES OF THIS PLAN SHEET.

T15N R16W MDB&M
SECTION 15

NOTES:

1. FOR ACCURATE RIGHT OF WAY DATA, CONTACT RIGHT OF WAY ENGINEERING AT THE DISTRICT OFFICE
2. FG FLUSH WITH TOP OF HEAD WALL AT ALL LOCATIONS.
3. INLET AND/OR OUTLET STRUCTURE SKEW ANGLE IS MEASURED FROM A LINE PERPENDICULAR TO THE CULVERT ALIGNMENT.

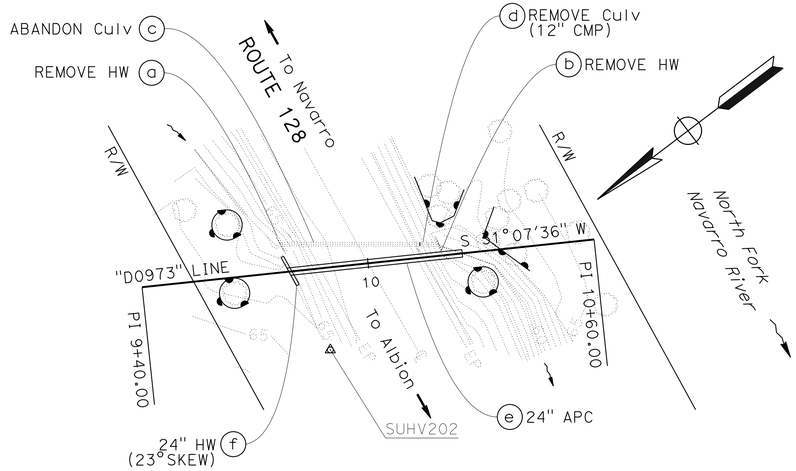

DRAINAGE SYSTEM No. 45

ROUTE 128
PM 9.73

PLAN

SCALE: 1" = 20'

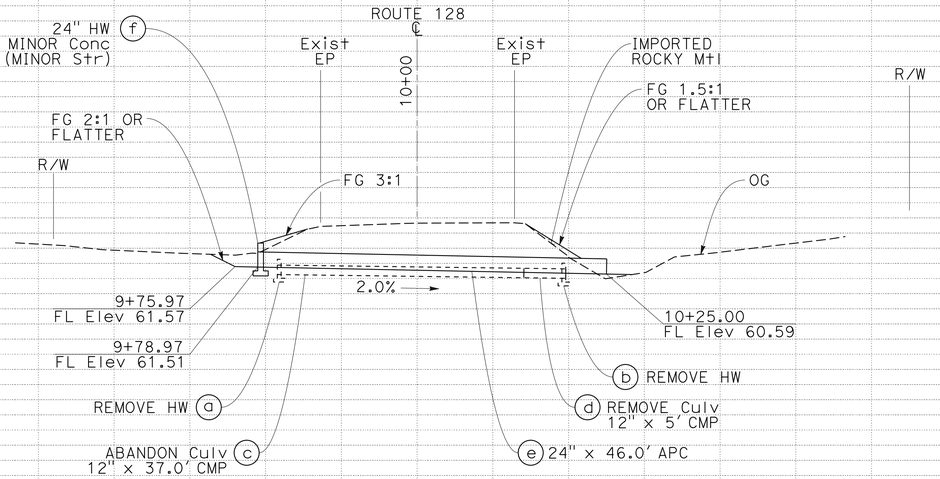

PROFILE

SCALE: Horiz 1" = 10'
Vert 1" = 10'

DRAINAGE PLAN AND PROFILE

SCALE AS SHOWN

D-45

STATION	+20	+40	+60	+80	10+00	+20	+40	+60	+80	TOTAL
CY Exc										
CY Emb										

CALCULATED-DESIGNED BY: MARTIN GARCIA
CHECKED BY: MARLENE GIBB
FUNCTIONAL SUPERVISOR: ROBERT E. POLGAR
REVISED BY | DATE REVISED

STATE OF CALIFORNIA - DEPARTMENT OF TRANSPORTATION
03-DESIGN
Caltrans

LAST REVISION | DATE PLOTTED => 31-AUG-2015 | TIME PLOTTED => 09:36

P:\proj4\01\378x7\drafting\01000001371a045.dgn

BORDER LAST REVISED 7/2/2010
USERNAME => s130875
DGN FILE => 01000001371a045.dgn
RELATIVE BORDER SCALE IS IN INCHES 0 1 2 3
UNIT 0306
PROJECT NUMBER & PHASE 01000001371

Dist	COUNTY	ROUTE	POST MILES TOTAL PROJECT	SHEET No.	TOTAL SHEETS
01	Men	128	2.8/11.1	49	98

Marlene Gibb 6-15-15
REGISTERED CIVIL ENGINEER DATE

6-15-15
PLANS APPROVAL DATE

REGISTERED PROFESSIONAL ENGINEER
MARLENE E. GIBB
No. C 51513
Exp. 06-30-16
CIVIL
STATE OF CALIFORNIA

THE STATE OF CALIFORNIA OR ITS OFFICERS OR AGENTS SHALL NOT BE RESPONSIBLE FOR THE ACCURACY OR COMPLETENESS OF SCANNED COPIES OF THIS PLAN SHEET.

T15N R16W MDB&M
SECTION 14

NOTES:

1. FOR ACCURATE RIGHT OF WAY DATA, CONTACT RIGHT OF WAY ENGINEERING AT THE DISTRICT OFFICE
2. FOR ROCK SLOPE PROTECTION DETAILS SEE DRAINAGE DETAIL SHEETS.
3. FG FLUSH WITH TOP OF HEAD WALL AT ALL LOCATIONS.
4. INLET AND/OR OUTLET STRUCTURE SKEW ANGLE IS MEASURED FROM A LINE PERPENDICULAR TO THE CULVERT ALIGNMENT.
5. EXPECT EXITING CULVERT TO BE ENCASED IN CONCRETE BACKFILL THROUGHOUT TRENCH LENGTH.

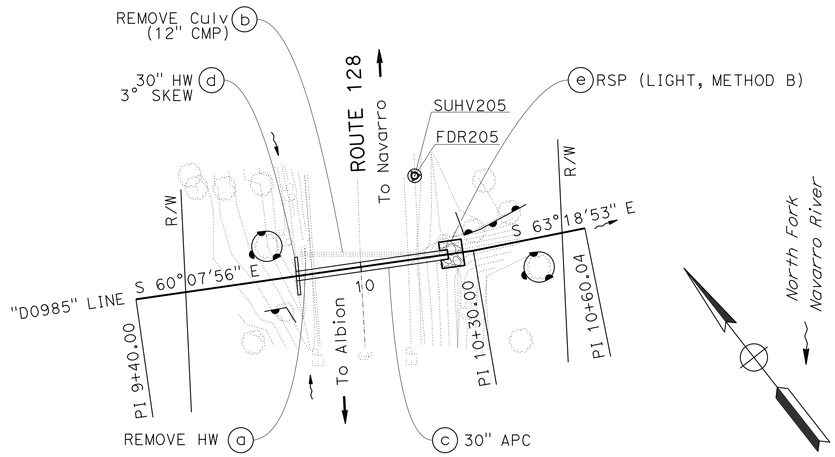

DRAINAGE SYSTEM No. 46

ROUTE 128
PM 9.85

PLAN

SCALE: 1" = 20'

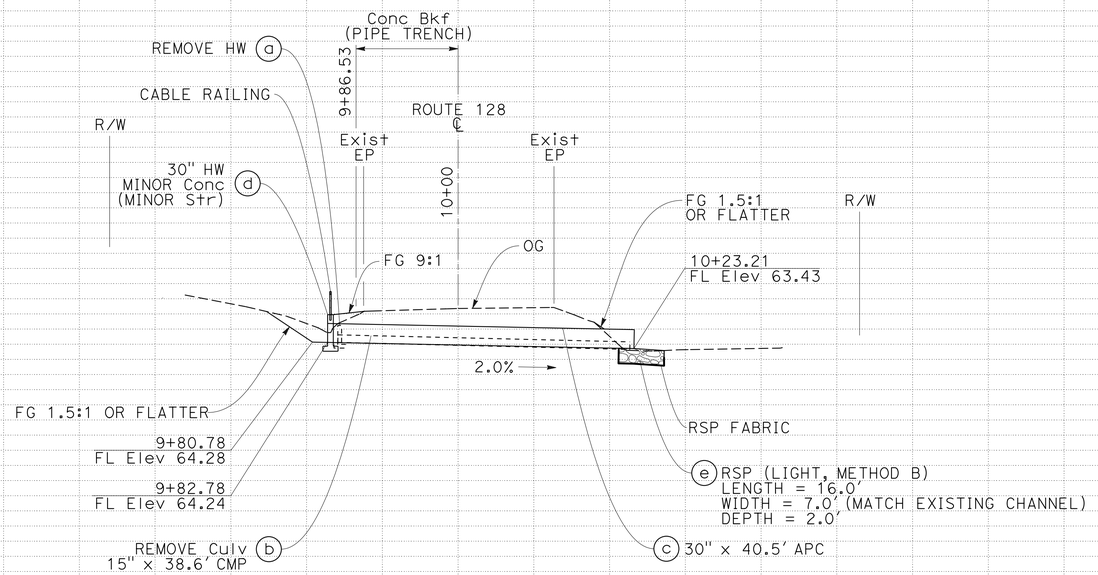

PROFILE

SCALE: Horiz 1" = 10'
Vert 1" = 10'

DRAINAGE PLAN AND PROFILE

SCALE AS SHOWN

D-46

STATION		+20	+40	+60	+80	10+00	+20	+40	+60	+80	TOTAL
CY	Exc										
	Emb										

REVISED BY | DATE REVISED
MARTIN GARCIA | MARLENE GIBB
CALCULATED-DESIGNED BY | CHECKED BY
FUNCTIONAL SUPERVISOR: ROBERT E. POLGAR
STATE OF CALIFORNIA - DEPARTMENT OF TRANSPORTATION
03-DESIGN
Caltrans

LAST REVISION | DATE PLOTTED => 31-AUG-2015 | TIME PLOTTED => 09:36

P:\proj4\01\378x7\drafting\01000001371a046.dgn

BORDER LAST REVISED 7/2/2010
USERNAME => s130875
DGN FILE => 01000001371a046.dgn
RELATIVE BORDER SCALE IS IN INCHES 0 1 2 3
UNIT 0306
PROJECT NUMBER & PHASE 01000001371

Dist	COUNTY	ROUTE	POST MILES TOTAL PROJECT	SHEET No.	TOTAL SHEETS
01	Men	128	2.8/11.1	50	98

Marlene Gibb 6-15-15
REGISTERED CIVIL ENGINEER DATE

6-15-15
PLANS APPROVAL DATE

REGISTERED PROFESSIONAL ENGINEER
MARLENE E. GIBB
No. C 51513
Exp. 06-30-16
CIVIL
STATE OF CALIFORNIA

THE STATE OF CALIFORNIA OR ITS OFFICERS OR AGENTS SHALL NOT BE RESPONSIBLE FOR THE ACCURACY OR COMPLETENESS OF SCANNED COPIES OF THIS PLAN SHEET.

T15N R16W MDB&M
SECTION 14

NOTES:

1. FOR ACCURATE RIGHT OF WAY DATA, CONTACT RIGHT OF WAY ENGINEERING AT THE DISTRICT OFFICE
2. FG FLUSH WITH TOP OF HEAD WALL AT ALL LOCATIONS.
3. INLET AND/OR OUTLET STRUCTURE SKEW ANGLE IS MEASURED FROM A LINE PERPENDICULAR TO THE CULVERT ALIGNMENT.
4. EXPECT EXITING CULVERT TO BE ENCASED IN CONCRETE BACKFILL THROUGHOUT TRENCH LENGTH.

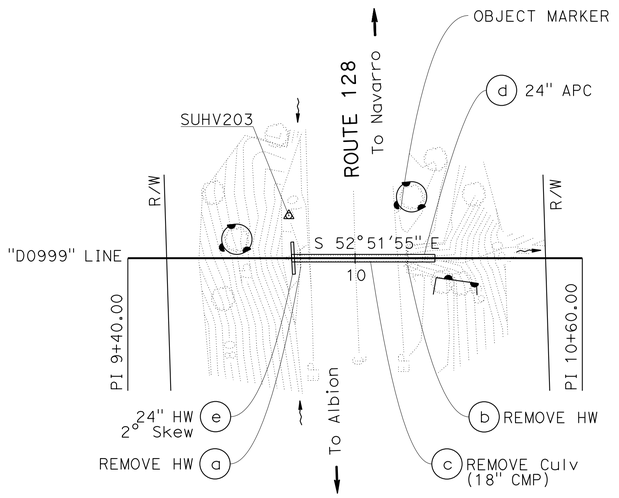

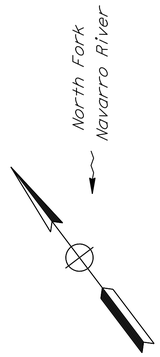

DRAINAGE SYSTEM No. 47

ROUTE 128
PM 9.99

PLAN

SCALE: 1" = 20'

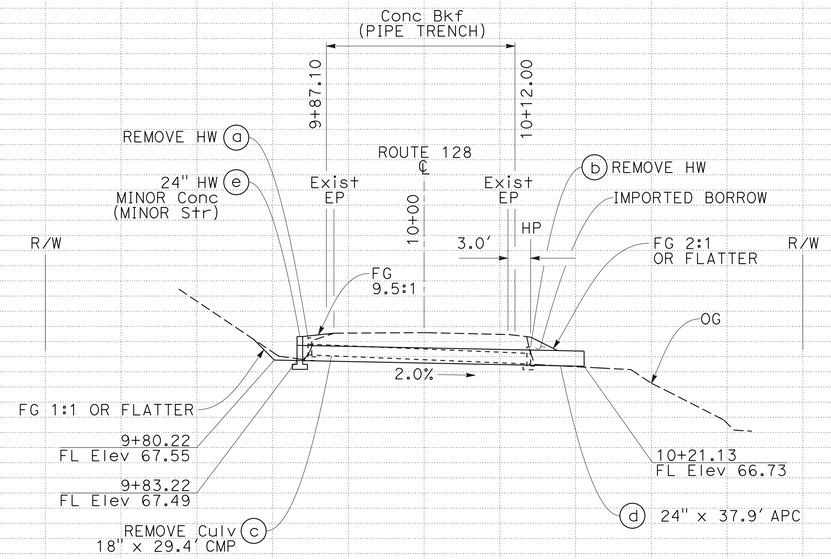

PROFILE

SCALE: Horiz 1" = 10'
Vert 1" = 10'

DRAINAGE PLAN AND PROFILE

SCALE AS SHOWN

D-47

STATION		+20	+40	+60	+80	10+00	+20	+40	+60	+80	TOTAL
CY	Exc										
	Emb										

REVISED BY | DATE REVISED
MARTIN GARCIA | MARLENE GIBB
CALCULATED-DESIGNED BY | CHECKED BY
FUNCTIONAL SUPERVISOR: ROBERT E. POLGAR
STATE OF CALIFORNIA - DEPARTMENT OF TRANSPORTATION
03-DESIGN
Caltrans

LAST REVISION | DATE PLOTTED => 31-AUG-2015 | TIME PLOTTED => 09:36

P:\proj4\01\378x7\drafting\01000001371a047.dgn

BORDER LAST REVISED 7/2/2010 | USERNAME => s130875 | DGN FILE => 01000001371a047.dgn | RELATIVE BORDER SCALE IS IN INCHES 0 1 2 3 | UNIT 0306 | PROJECT NUMBER & PHASE 01000001371

Dist	COUNTY	ROUTE	POST MILES TOTAL PROJECT	SHEET No.	TOTAL SHEETS
01	Men	128	2.8/11.1	51	98

Marlene Gibb 6-15-15
REGISTERED CIVIL ENGINEER DATE

6-15-15
PLANS APPROVAL DATE

REGISTERED PROFESSIONAL ENGINEER
MARLENE E. GIBB
No. C 51513
Exp. 06-30-16
CIVIL
STATE OF CALIFORNIA

THE STATE OF CALIFORNIA OR ITS OFFICERS OR AGENTS SHALL NOT BE RESPONSIBLE FOR THE ACCURACY OR COMPLETENESS OF SCANNED COPIES OF THIS PLAN SHEET.

T15N R16W MDB&M
SECTION 14

NOTES:

1. FOR ACCURATE RIGHT OF WAY DATA, CONTACT RIGHT OF WAY ENGINEERING AT THE DISTRICT OFFICE
2. MAY REMOVE PORTION AS NEEDED DO NOT DISTURB NEARBY LIVE TREE ROOTS.
3. FOR ROCK SLOPE PROTECTION DETAILS SEE DRAINAGE DETAIL SHEETS.
4. FG FLUSH WITH TOP OF HEAD WALL AT ALL LOCATIONS.
5. INLET AND/OR OUTLET STRUCTURE SKEW ANGLE IS MEASURED FROM A LINE PERPENDICULAR TO THE CULVERT ALIGNMENT.

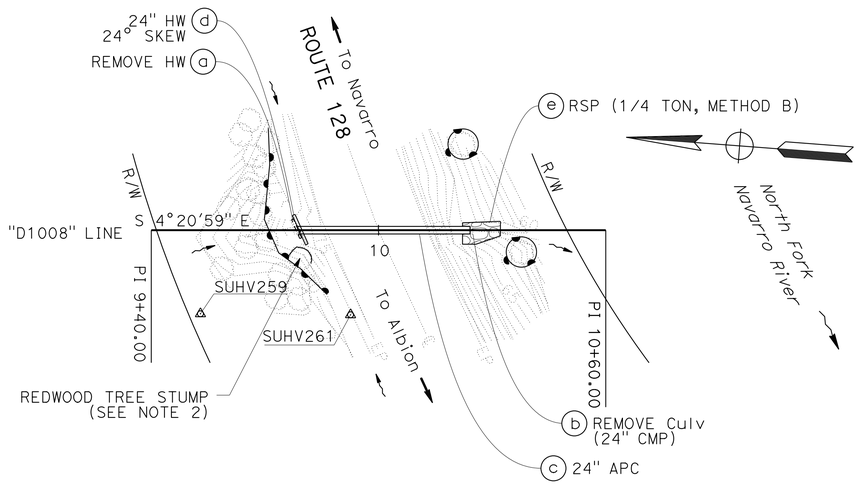

DRAINAGE SYSTEM No. 48

ROUTE 128
PM 10.08

PLAN

SCALE: 1" = 20'

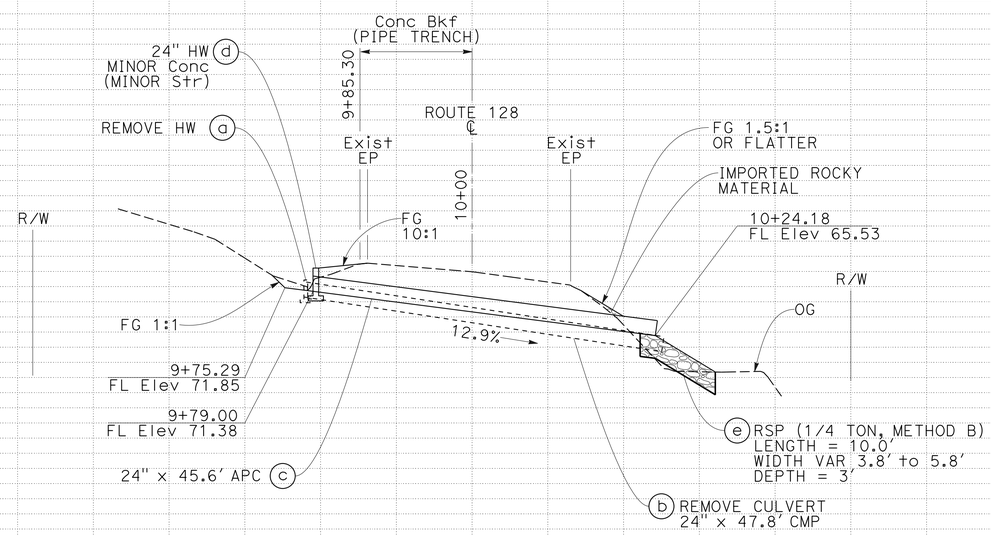

PROFILE

SCALE: Horiz 1" = 10'
Vert 1" = 10'

DRAINAGE PLAN AND PROFILE

SCALE AS SHOWN

D-48

STATION		+20	+40	+60	+80	10+00	+20	+40	+60	+80	TOTAL
CY	Exc										
	Emb										

STATE OF CALIFORNIA - DEPARTMENT OF TRANSPORTATION
Caltrans
03-DESIGN
FUNCTIONAL SUPERVISOR: ROBERT E. POLGAR
CALCULATED-DESIGNED BY: MARTIN GARCIA
CHECKED BY: MARLENE GIBB
REVISED BY | DATE REVISED

LAST REVISION | DATE PLOTTED => 31-AUG-2015 | TIME PLOTTED => 09:36

P:\proj4\01\378x7\drafting\01000001371a048.dgn

BORDER LAST REVISED 7/2/2010
USERNAME => s130875
DGN FILE => 01000001371a048.dgn
RELATIVE BORDER SCALE IS IN INCHES 0 1 2 3
UNIT 0306
PROJECT NUMBER & PHASE 01000001371

Dist	COUNTY	ROUTE	POST MILES TOTAL PROJECT	SHEET No.	TOTAL SHEETS
01	Men	128	2.8/11.1	52	98

Marlene Gibb 6-15-15
REGISTERED CIVIL ENGINEER DATE

6-15-15
PLANS APPROVAL DATE

REGISTERED PROFESSIONAL ENGINEER
MARLENE E. GIBB
No. C 51513
Exp. 06-30-16
CIVIL
STATE OF CALIFORNIA

THE STATE OF CALIFORNIA OR ITS OFFICERS OR AGENTS SHALL NOT BE RESPONSIBLE FOR THE ACCURACY OR COMPLETENESS OF SCANNED COPIES OF THIS PLAN SHEET.

T15N R16W MDB&M
SECTION 14

NOTES:

1. FOR ACCURATE RIGHT OF WAY DATA, CONTACT RIGHT OF WAY ENGINEERING AT THE DISTRICT OFFICE
2. FG FLUSH WITH TOP OF HEAD WALL AT ALL LOCATIONS.
3. MAY REMOVE PORTION AS NEEDED DO NOT DISTURB NEARBY LIVE TREE ROOTS.
4. EXPECT EXITING CULVERT TO BE ENCASED IN CONCRETE BACKFILL THROUGHOUT TRENCH LENGTH.

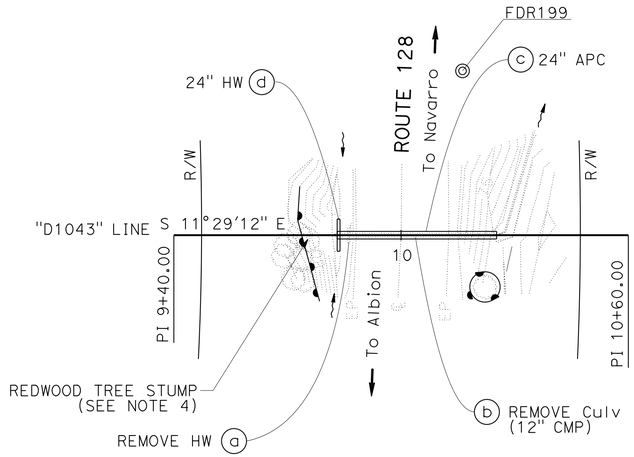

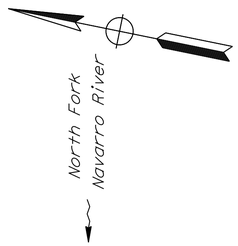

DRAINAGE SYSTEM No. 49

ROUTE 128
PM 10.43

PLAN

SCALE: 1" = 20'

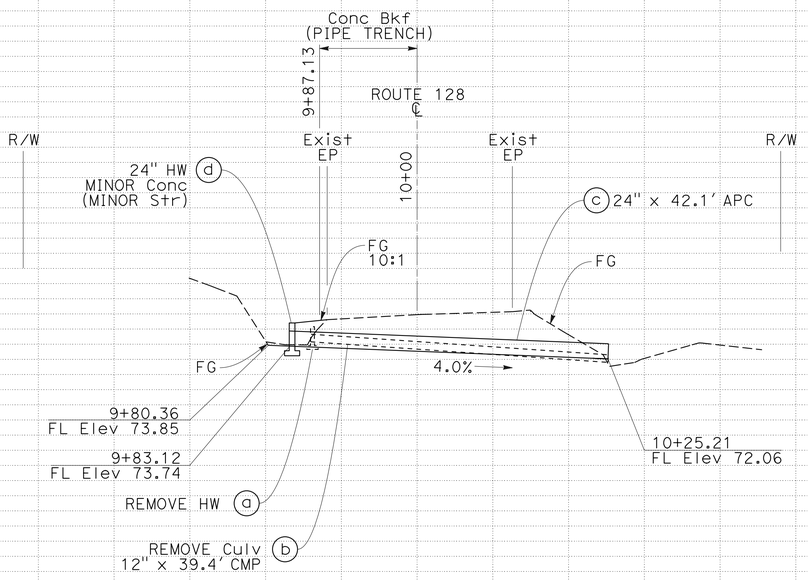

PROFILE

SCALE: Horiz 1" = 10'
Vert 1" = 10'

DRAINAGE PLAN AND PROFILE

SCALE AS SHOWN

D-49

STATION		+20	+40	+60	+80	10+00	+20	+40	+60	+80	TOTAL
CY	Exc										
	Emb										

STATE OF CALIFORNIA - DEPARTMENT OF TRANSPORTATION
03-DESIGN
FUNCTIONAL SUPERVISOR: ROBERT E. POLGAR
CALCULATED-DESIGNED BY: MARLENE GIBB
CHECKED BY: MARTIN GARCIA
REVISED BY | DATE REVISED

LAST REVISION | DATE PLOTTED => 31-AUG-2015 | TIME PLOTTED => 09:36

P:\proj4\01\3788\drafting\01000001371a049.dgn

BORDER LAST REVISED 7/2/2010
USERNAME => s130875
DGN FILE => 01000001371a049.dgn
RELATIVE BORDER SCALE IS IN INCHES 0 1 2 3
UNIT 0306
PROJECT NUMBER & PHASE 01000001371

Dist	COUNTY	ROUTE	POST MILES TOTAL PROJECT	SHEET No.	TOTAL SHEETS
01	Men	128	2.8/11.1	53	98

Marlene Gibb 6-15-15
REGISTERED CIVIL ENGINEER DATE

6-15-15
PLANS APPROVAL DATE

REGISTERED PROFESSIONAL ENGINEER
MARLENE E. GIBB
No. C 51513
Exp. 06-30-16
CIVIL
STATE OF CALIFORNIA

THE STATE OF CALIFORNIA OR ITS OFFICERS OR AGENTS SHALL NOT BE RESPONSIBLE FOR THE ACCURACY OR COMPLETENESS OF SCANNED COPIES OF THIS PLAN SHEET.

T15N R16W MDB&M
SECTION 14

NOTES:

1. FOR ACCURATE RIGHT OF WAY DATA, CONTACT RIGHT OF WAY ENGINEERING AT THE DISTRICT OFFICE
2. FG FLUSH WITH TOP OF HEAD WALL AT ALL LOCATIONS.
3. INLET AND/OR OUTLET STRUCTURE SKEW ANGLE IS MEASURED FROM A LINE PERPENDICULAR TO THE CULVERT ALIGNMENT.

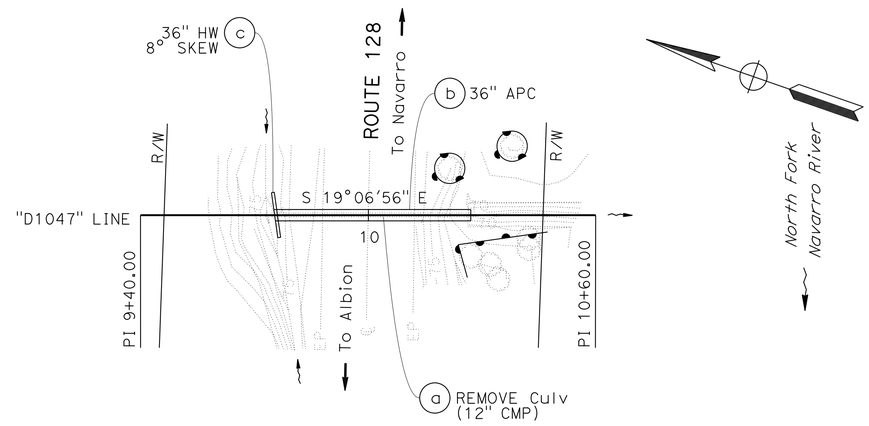

DRAINAGE SYSTEM No. 50

ROUTE 128
PM 10.47

PLAN

SCALE: 1" = 20'

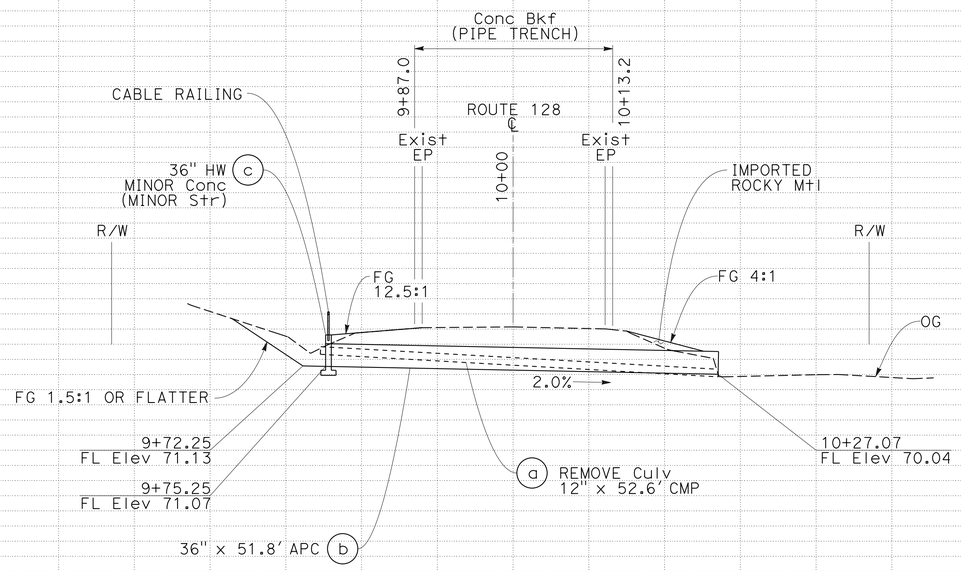

PROFILE

SCALE: Horiz 1" = 10'
Vert 1" = 10'

DRAINAGE PLAN AND PROFILE

SCALE AS SHOWN

D-50

STATION		+20	+40	+60	+80	10+00	+20	+40	+60	+80	TOTAL
CY	Exc										
	Emb										

STATE OF CALIFORNIA - DEPARTMENT OF TRANSPORTATION
Caltrans
03-DESIGN
FUNCTIONAL SUPERVISOR: ROBERT E. POLGAR
CALCULATED-DESIGNED BY: MARLENE GIBB
CHECKED BY: MARTIN GARCIA
REVISED BY | DATE REVISED

P:\proj4\01\378x7\drafting\01000001371a050.dgn

DATE PLOTTED => 31-AUG-2015
TIME PLOTTED => 09:36

BORDER LAST REVISED 7/2/2010
USERNAME => s130875
DGN FILE => 01000001371a050.dgn
RELATIVE BORDER SCALE IS IN INCHES 0 1 2 3
UNIT 0306
PROJECT NUMBER & PHASE 01000001371

Dist	COUNTY	ROUTE	POST MILES TOTAL PROJECT	SHEET No.	TOTAL SHEETS
01	Men	128	2.8/11.1	54	98

Marlene Gibb 6-15-15
REGISTERED CIVIL ENGINEER DATE

6-15-15
PLANS APPROVAL DATE

REGISTERED PROFESSIONAL ENGINEER
MARLENE E. GIBB
No. C 51513
Exp. 06-30-16
CIVIL
STATE OF CALIFORNIA

THE STATE OF CALIFORNIA OR ITS OFFICERS OR AGENTS SHALL NOT BE RESPONSIBLE FOR THE ACCURACY OR COMPLETENESS OF SCANNED COPIES OF THIS PLAN SHEET.

T15N R16W MDB&M
SECTION 14

NOTES:

1. FOR ACCURATE RIGHT OF WAY DATA, CONTACT RIGHT OF WAY ENGINEERING AT THE DISTRICT OFFICE
2. FG FLUSH WITH TOP OF HEAD WALL AT ALL LOCATIONS.
3. EXPECT EXITING CULVERT TO BE ENCASED IN CONCRETE BACKFILL THROUGHOUT TRENCH LENGTH.

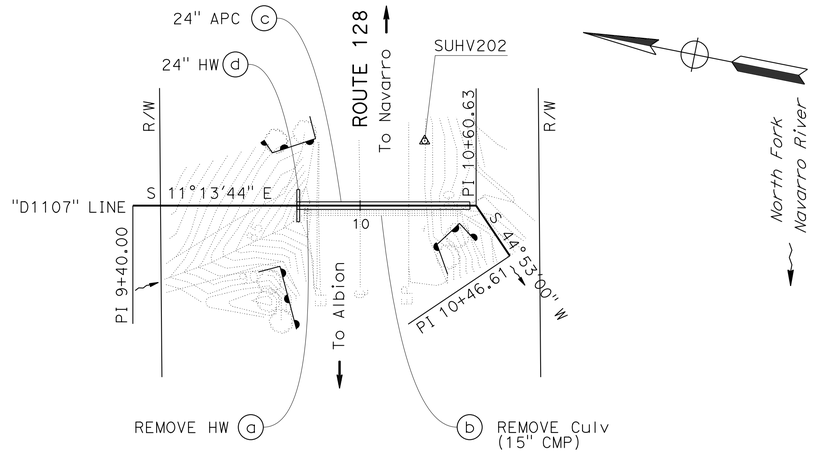

DRAINAGE SYSTEM No. 51

ROUTE 128
PM 11.07

PLAN

SCALE: 1" = 20'

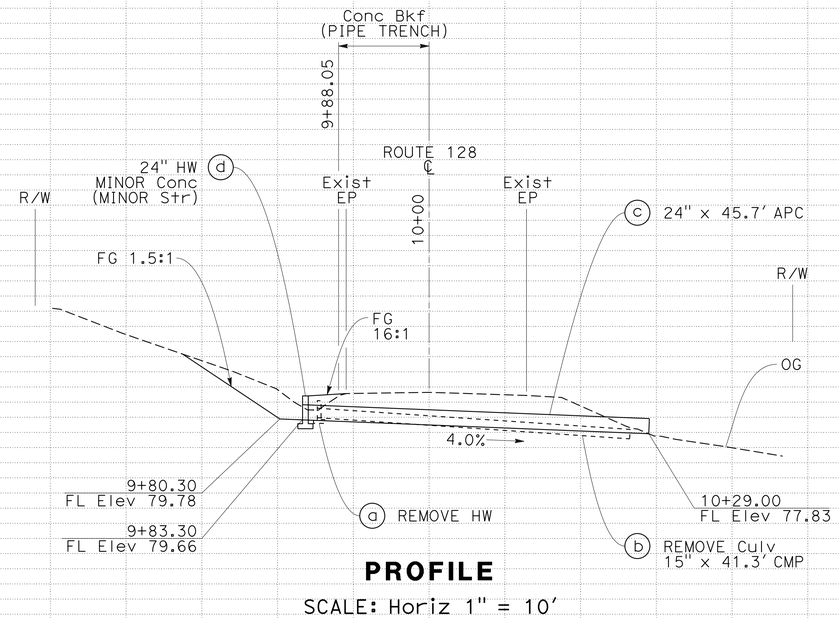

PROFILE

SCALE: Horiz 1" = 10'
Vert 1" = 10'

DRAINAGE PLAN AND PROFILE

SCALE AS SHOWN

D-51

STATION +20 +40 +60 +80 10+00 +20 +40 +60 +80 TOTAL

CY Exc
CY Emb

STATE OF CALIFORNIA - DEPARTMENT OF TRANSPORTATION
03-DESIGN
Caltrans

FUNCTIONAL SUPERVISOR: ROBERT E. POLGAR
CALCULATED-DESIGNED BY: MARTIN GARCIA
CHECKED BY: MARLENE GIBB
REVISED BY
DATE REVISED

LAST REVISION
DATE PLOTTED => 31-AUG-2015
TIME PLOTTED => 09:36

P:\proj4\01\378x7\drafting\01000001371a051.dgn

BORDER LAST REVISED 7/2/2010
USERNAME => s130875
DGN FILE => 01000001371a051.dgn
RELATIVE BORDER SCALE IS IN INCHES 0 1 2 3
UNIT 0306
PROJECT NUMBER & PHASE 01000001371

Dist	COUNTY	ROUTE	POST MILES TOTAL PROJECT	SHEET No.	TOTAL SHEETS
01	Men	128	2.8/11.1	55	98

Marlene Gibb 6-15-15
REGISTERED CIVIL ENGINEER DATE

6-15-15
PLANS APPROVAL DATE

REGISTERED PROFESSIONAL ENGINEER
MARLENE E. GIBB
No. C 51513
Exp. 06-30-16
CIVIL
STATE OF CALIFORNIA

THE STATE OF CALIFORNIA OR ITS OFFICERS OR AGENTS SHALL NOT BE RESPONSIBLE FOR THE ACCURACY OR COMPLETENESS OF SCANNED COPIES OF THIS PLAN SHEET.

NOTE:

1. SEE STANDARD PLANS FOR BEDDING DETAILS.
2. PLACE MARKER MIN 2.0' AND MAX 12.0' FROM EP, EXACT LOCATION TO BE DETERMINED BY THE ENGINEER.
3. SEE STANDARD PLANS FOR COUPLING DETAILS NOT SHOWN.

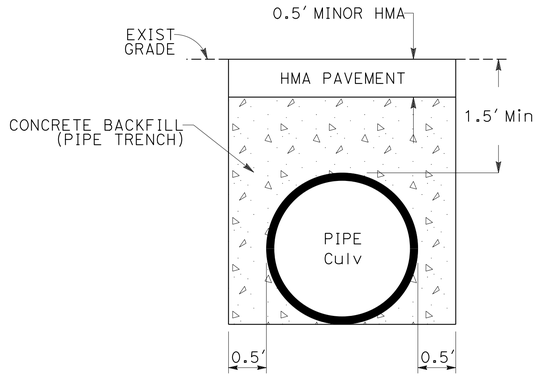

CONCRETE BACKFILL (PIPE TRENCH)

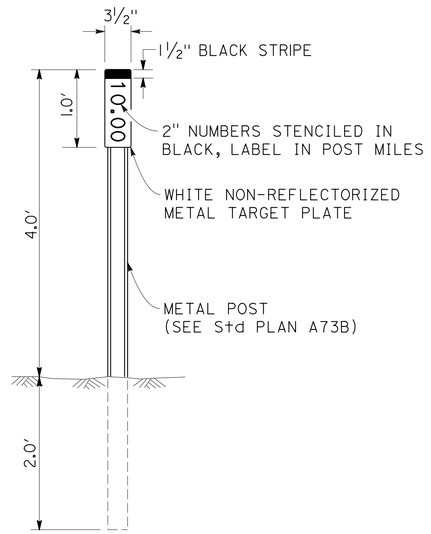

MARKER (CULVERT)

DRAINAGE SYSTEM No.	LOCATION PM	SIDE Lt/Rt
3	3.08	Lt
5	3.36	Lt
7	3.66	Lt/Rt
11	4.02	Lt
12	4.05	Lt/Rt
15	4.45	Lt/Rt
16	4.50	Lt/Rt
17	4.55	Lt/Rt
18	4.78	Lt/Rt
19	4.83	Lt
20	5.03	Lt/Rt
21	5.08	Lt/Rt
22	5.36	Lt
23	5.82	Lt/Rt
24	5.92	Lt/Rt
25	6.08	Lt
26	6.11	Lt
27	6.48	Lt
28	6.66	Lt/Rt
29	6.74	Lt

DRAINAGE SYSTEM No.	LOCATION PM	SIDE Lt/Rt
30	7.07	Lt
31	7.40	Lt/Rt
32	7.51	Lt
33	7.76	Lt
35	7.95	Lt
36	8.08	Lt/Rt
37	8.55	Lt/Rt
39	8.87	Lt
40	8.91	Lt
41	8.95	Lt
42	9.34	Lt
43	9.44	Lt/Rt
44	9.61	Lt
46	9.85	Lt
47	9.99	Lt/Rt
48	10.08	Lt
49	10.43	Lt
50	10.47	Lt/Rt
51	11.07	Lt

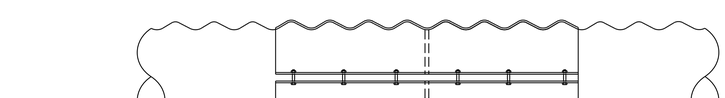

CMP AND PLASTIC PIPE JOINT COUPLING BAND

DRAINAGE DETAILS

NO SCALE

DD-1

STATE OF CALIFORNIA - DEPARTMENT OF TRANSPORTATION
Caltrans
03-DESIGN

FUNCTIONAL SUPERVISOR: ROBERT E. POLGAR
CALCULATED-DESIGNED BY: MARLENE GIBB
CHECKED BY: MARTIN GARCIA
REVISED BY: M. GIBB
DATE REVISED: 01-23-12

P:\proj4\01\378x7\drafting\0100000137ic001.dgn

LAST REVISION 00-00-00
DATE PLOTTED => 31-AUG-2015
TIME PLOTTED => 09:36

Dist	COUNTY	ROUTE	POST MILES TOTAL PROJECT	SHEET No.	TOTAL SHEETS
01	Men	128	2.8/11.1	56	98

Marlene Gibb 6-15-15
REGISTERED CIVIL ENGINEER DATE

6-15-15
PLANS APPROVAL DATE

REGISTERED PROFESSIONAL ENGINEER
MARLENE E. GIBB
No. C 51513
Exp. 06-30-16
CIVIL
STATE OF CALIFORNIA

THE STATE OF CALIFORNIA OR ITS OFFICERS OR AGENTS SHALL NOT BE RESPONSIBLE FOR THE ACCURACY OR COMPLETENESS OF SCANNED COPIES OF THIS PLAN SHEET.

NOTE:

1. FOR LENGTH, WIDTH, AND THICKNESS OF RSP SEE DRAINAGE PLAN AND PROFILE SHEETS.
2. FOR CULVERT DIAMETER, SEE DRAINAGE PLAN AND PROFILE SHEETS.

ABBREVIATIONS:

L - LENGTH OF RSP
W - WIDTH OF RSP
T - DEPTH OF RSP
D - CULVERT DIAMETER

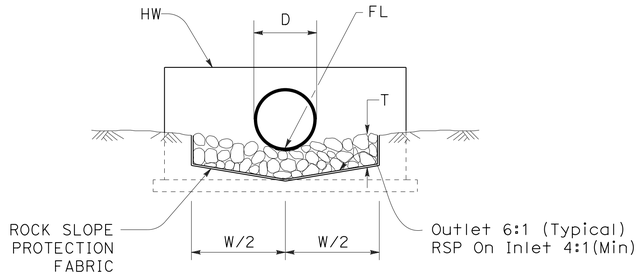

SECTION B-B

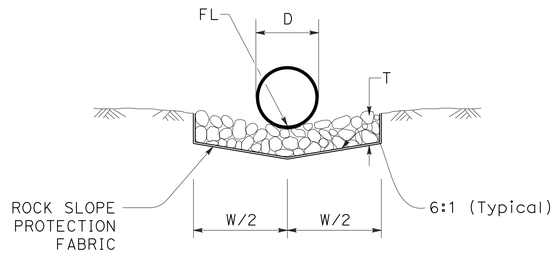

SECTION D-D

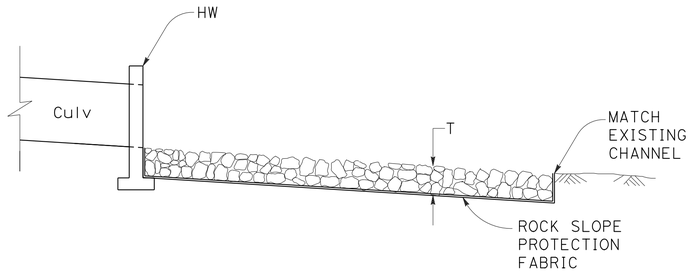

SECTION A-A

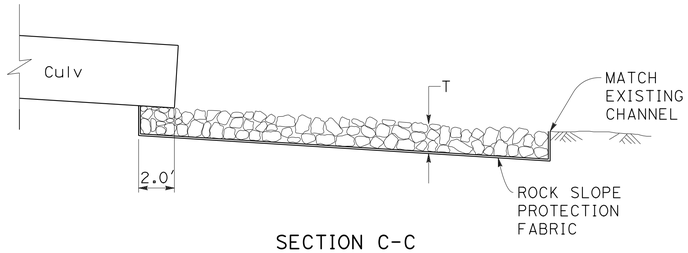

SECTION C-C

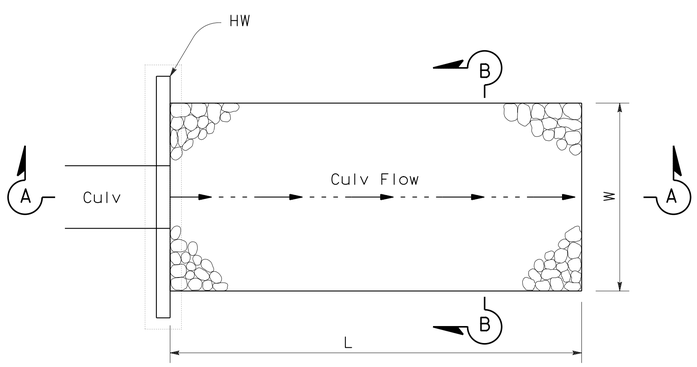

PLAN

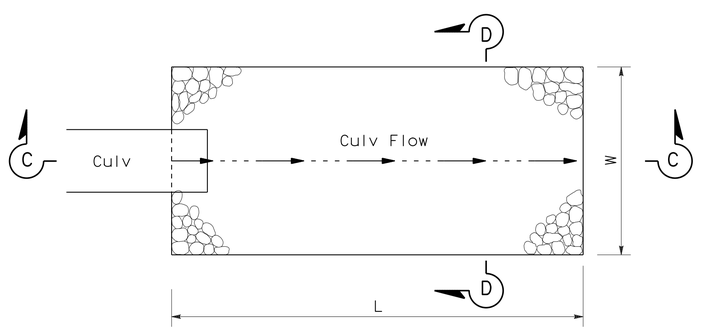

PLAN

ROCK SLOPE PROTECTION WITH HW

ROCK SLOPE PROTECTION WITHOUT END TREATMENT

DRAINAGE DETAILS

NO SCALE

DD-2

STATE OF CALIFORNIA - DEPARTMENT OF TRANSPORTATION
Caltrans
03-DESIGN

FUNCTIONAL SUPERVISOR: ROBERT E. POLGAR
CALCULATED-DESIGNED BY: MARLENE GIBB
CHECKED BY: MARTIN GARCIA
REVISED BY: M. GIBB
DATE REVISED: 01-23-12

LAST REVISION
DATE PLOTTED => 31-AUG-2015
TIME PLOTTED => 09:36
00-00-00

P:\proj4\01\378x\drafting\0100000137ic002.dgn

BORDER LAST REVISED 7/2/2010
USERNAME => s130875
DGN FILE => 0100000137ic002.dgn
RELATIVE BORDER SCALE IS IN INCHES 0 1 2 3
UNIT 0306
PROJECT NUMBER & PHASE 01000001371

Dist	COUNTY	ROUTE	POST MILES TOTAL PROJECT	SHEET No.	TOTAL SHEETS
01	Men	128	2.8/11.1	57	98

Marlene Gibb 6-15-15
REGISTERED CIVIL ENGINEER DATE

6-15-15
PLANS APPROVAL DATE

REGISTERED PROFESSIONAL ENGINEER
MARLENE E. GIBB
No. C 51513
Exp. 06-30-16
CIVIL
STATE OF CALIFORNIA

THE STATE OF CALIFORNIA OR ITS OFFICERS OR AGENTS SHALL NOT BE RESPONSIBLE FOR THE ACCURACY OR COMPLETENESS OF SCANNED COPIES OF THIS PLAN SHEET.

NOTES:

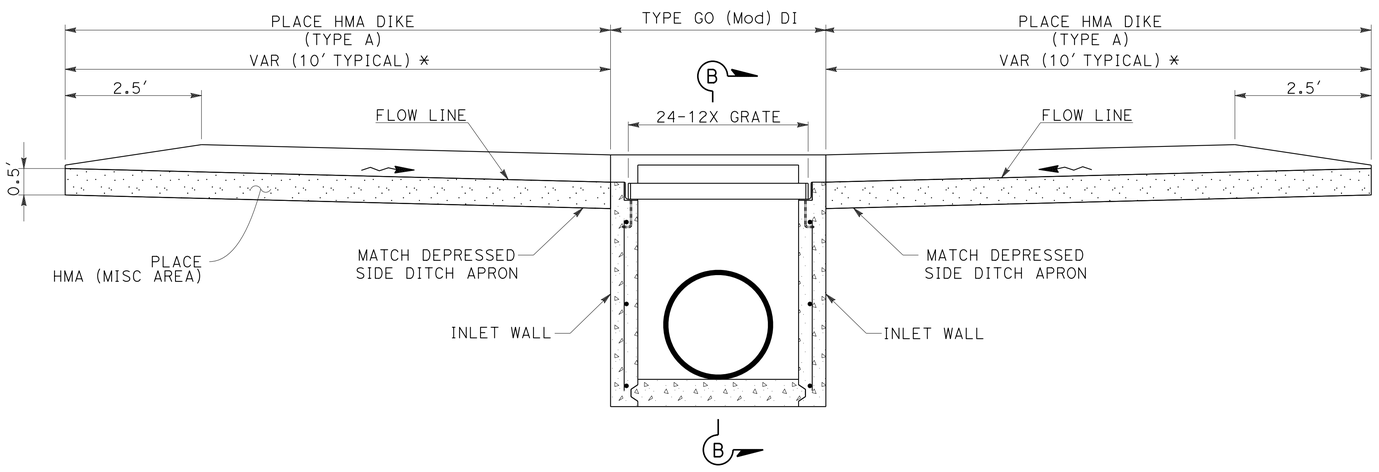

SECTION A-A

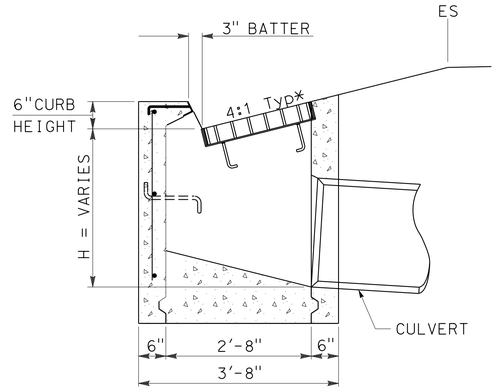

SECTION B-B

DRAINAGE INLET TYPE GO (Mod)

* 4:1 GRATE SLOPE AT ALL DI LOCATIONS EXCEPT DS7 & DS38 (8:1 GRATE SLOPES)

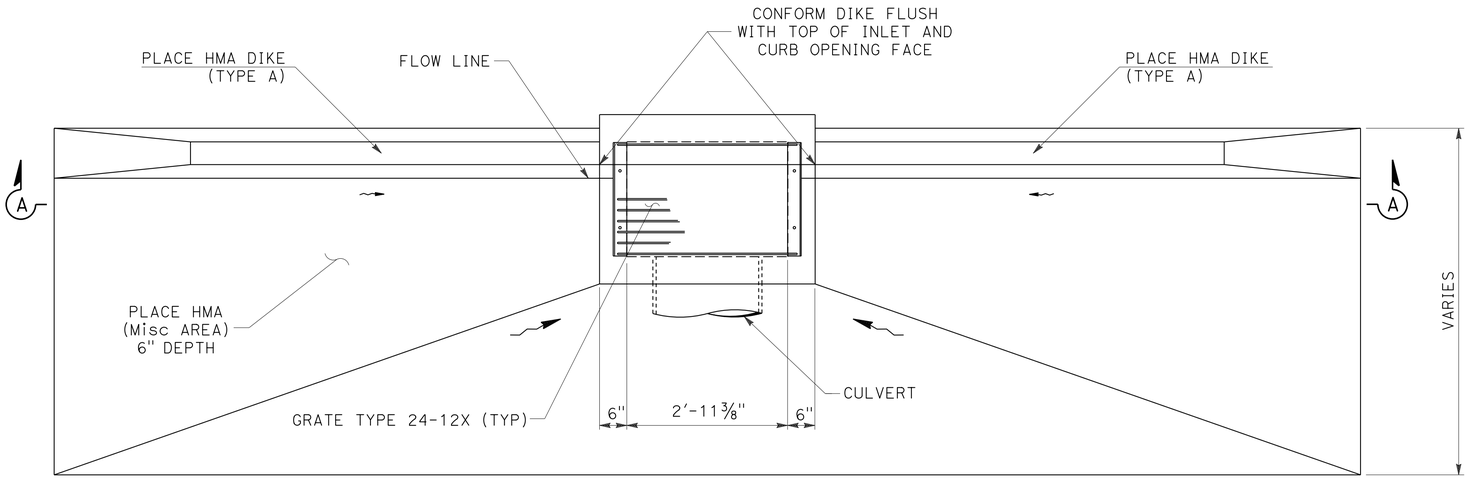

PLAN

PAVED APRON

DRAINAGE SYSTEM No.	LOCATION (PM)	PROPOSED INLET (TYPE)	GRATE & FRAME	FACE ANCHOR	BAR STEP	W5 X 18.5	TOTAL *
			LB	LB	LB	LB	LB
2	3.01	GO (Mod) DI	239	14	7	-	260
3	3.08	GO (Mod) DI	239	14	7	-	260
5	3.36	GO (Mod) DI	239	14	7	-	260
9	3.89	GO (Mod) DI	239	14	7	-	260
12	4.05	GO (Mod) DI	239	14	7	-	260
14	4.17	GOT (Tandem) + GO (Mod) DI	717	47	14	69	847
19	4.83	GOT (Tandem) DI	478	33	7	69	587
22	5.36	GOT (Tandem) DI	478	33	7	69	587
23	5.82	GOT (Tandem) + GO (Mod) DI	717	47	7	69	840
25	6.08	GO (Mod) DI	239	14	-	-	253
26	6.11	GO (Mod) DI	239	14	7	-	260
29	6.74	GO (Mod) DI	239	14	7	-	260
36	8.08	GO (Mod) DI	239	14	7	-	260
37	8.55	GOT (Tandem) DI	478	33	7	69	587
40	8.91	GO (Mod) DI	239	14	7	-	260
41	8.95	GO (Mod) DI	239	14	7	-	260

MISCELLANEOUS IRON AND STEEL

* TOTALS INCLUDED IN DRAINAGE QUANTITY SHEETS

* 10' (TYPICAL) PAVED APRON AND DIKE FOR GO (Mod) DI AND GOT (Tandem) DI AND WHEN GO CONNECTED TO GOT DI.

DRAINAGE DETAILS

NO SCALE

DD-3

REVISED BY	DATE REVISED
M. GIBB	01-23-12

CALCULATED-DESIGNED BY: MARLENE GIBB
CHECKED BY: MARTIN GARCIA
FUNCTIONAL SUPERVISOR: ROBERT E. POLGAR

STATE OF CALIFORNIA - DEPARTMENT OF TRANSPORTATION
03-DESIGN
Caltrans

P:\proj4\01\37847\drafting\01000001371ic003.dgn

LAST REVISION 00-00-00
DATE PLOTTED => 31-AUG-2015
TIME PLOTTED => 09:36

BORDER LAST REVISED 7/2/2010
USERNAME => s130875
DGN FILE => 01000001371ic003.dgn
RELATIVE BORDER SCALE IS IN INCHES 0 1 2 3
UNIT 0306
PROJECT NUMBER & PHASE 01000001371

Dist	COUNTY	ROUTE	POST MILES TOTAL PROJECT	SHEET No.	TOTAL SHEETS
01	Men	128	2.8/11.1	58	98

Marlene Gibb 6-15-15
REGISTERED CIVIL ENGINEER DATE

6-15-15
PLANS APPROVAL DATE

REGISTERED PROFESSIONAL ENGINEER
MARLENE E. GIBB
No. C 51513
Exp. 06-30-16
CIVIL
STATE OF CALIFORNIA

THE STATE OF CALIFORNIA OR ITS OFFICERS OR AGENTS SHALL NOT BE RESPONSIBLE FOR THE ACCURACY OR COMPLETENESS OF SCANNED COPIES OF THIS PLAN SHEET.

NOTES:

1. SEE STD PLANS D74A AND D74B FOR DETAILS NOT SHOWN.

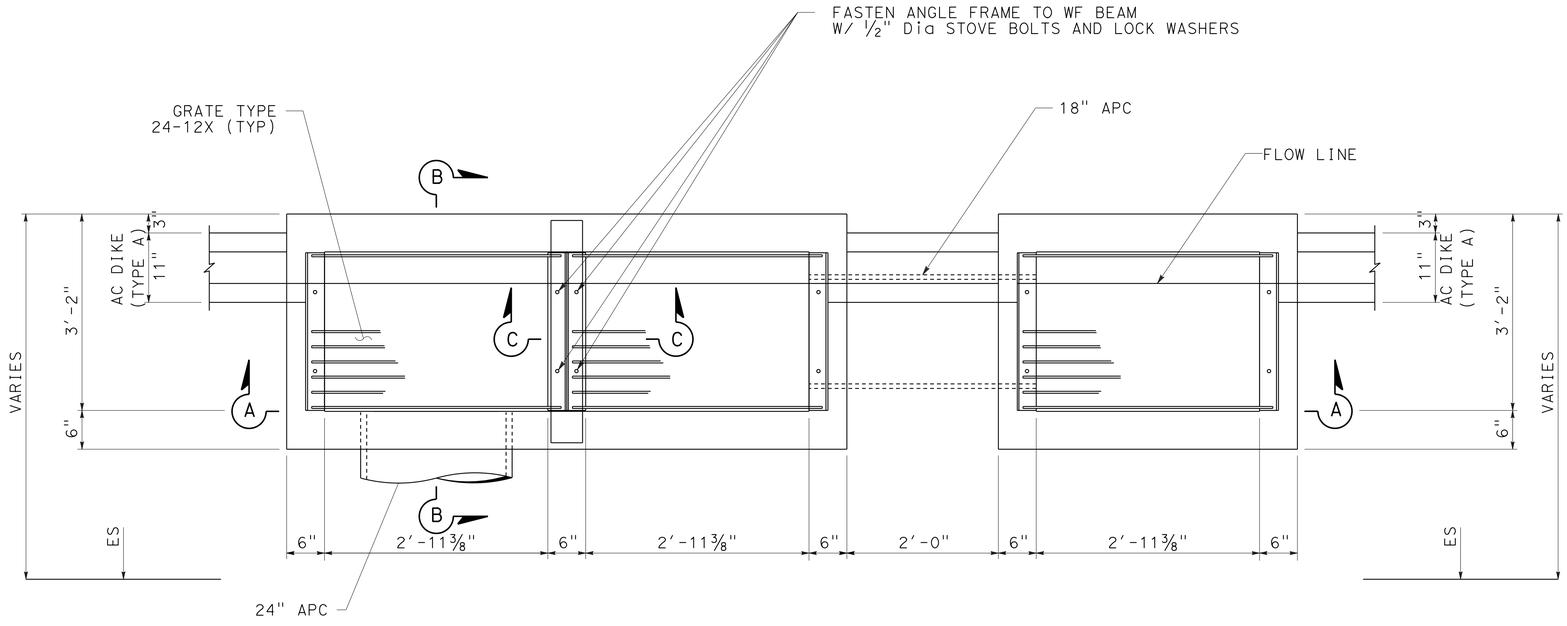

PLAN

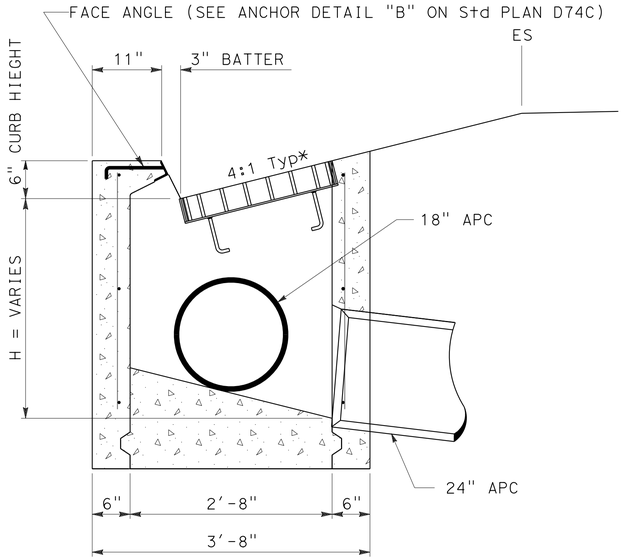

SECTION B-B

DRAINAGE INLET
TYPE GO (Mod) OR GOT (TANDEM)

(SEE STANDARD PLAN SHEET D74B FOR IMFORMATION NOT SHOWN)

* 4:1 GRATE SLOPE AT ALL DI LOCATIONS EXCEPT DS14, PM 4.17 (8:1 GRATE SLOPE)

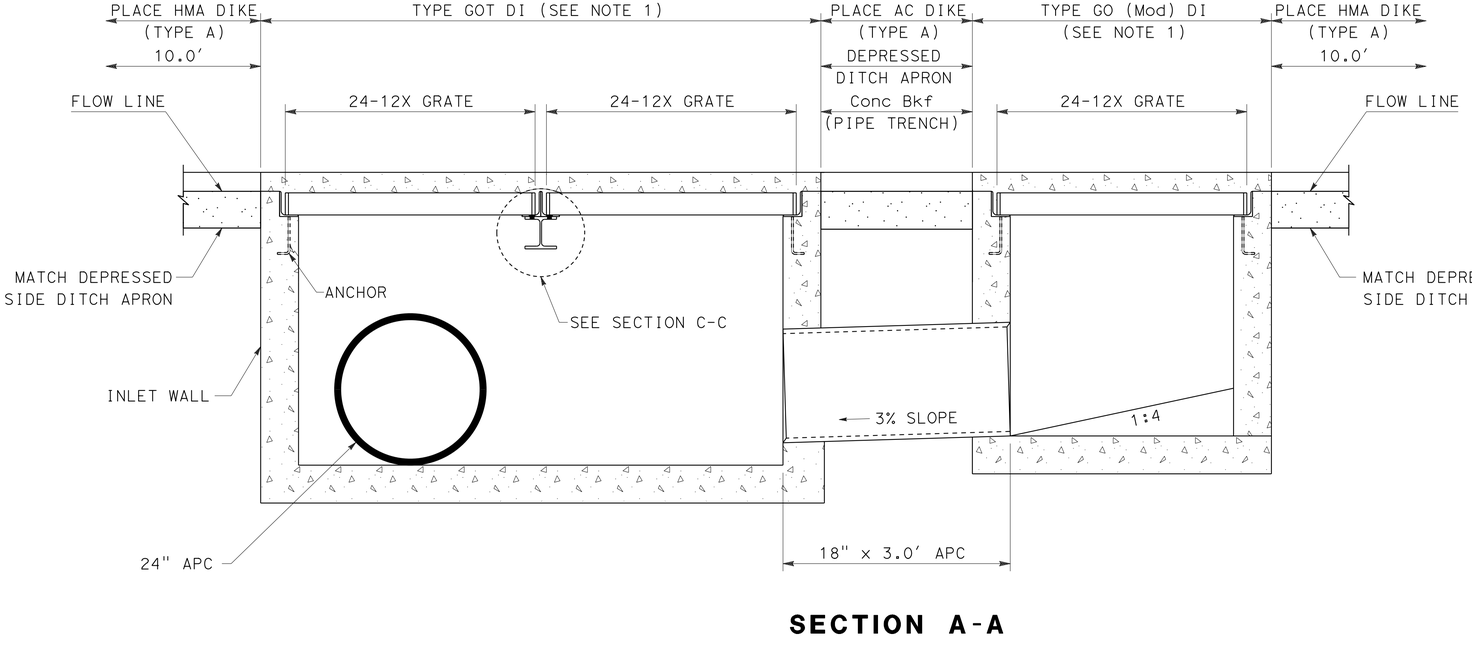

SECTION A-A

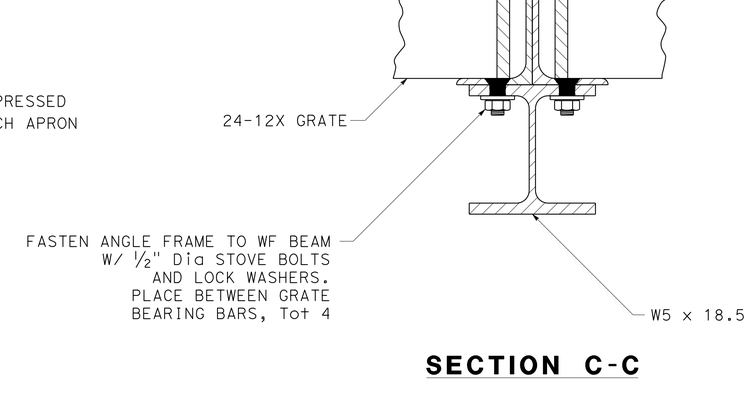

SECTION C-C

DRAINAGE DETAILS

NO SCALE

DD-4

STATE OF CALIFORNIA - DEPARTMENT OF TRANSPORTATION
03-DESIGN
FUNCTIONAL SUPERVISOR: ROBERT E. POLGAR
CALCULATED-DESIGNED BY: MARLENE GIBB
CHECKED BY: MARTIN GARCIA
REVISED BY: M. GIBB
DATE REVISED: 01-23-12

LAST REVISION | DATE PLOTTED => 31-AUG-2015
00-00-00 | TIME PLOTTED => 09:36

P:\proj4\01\37\87\drafting\01000001371ic004.dgn

BORDER LAST REVISED 7/2/2010 | USERNAME => s130875 | DGN FILE => 01000001371ic004.dgn | RELATIVE BORDER SCALE IS IN INCHES 0 1 2 3 | UNIT 0306 | PROJECT NUMBER & PHASE 01000001371

Dist	COUNTY	ROUTE	POST MILES TOTAL PROJECT	SHEET No.	TOTAL SHEETS
01	Men	128	2.8/11.1	59	98

Marlene Gibb 6-15-15
REGISTERED CIVIL ENGINEER DATE

6-15-15
PLANS APPROVAL DATE

REGISTERED PROFESSIONAL ENGINEER
MARLENE E. GIBB
No. C 51513
Exp. 06-30-16
CIVIL
STATE OF CALIFORNIA

THE STATE OF CALIFORNIA OR ITS OFFICERS OR AGENTS SHALL NOT BE RESPONSIBLE FOR THE ACCURACY OR COMPLETENESS OF SCANNED COPIES OF THIS PLAN SHEET.

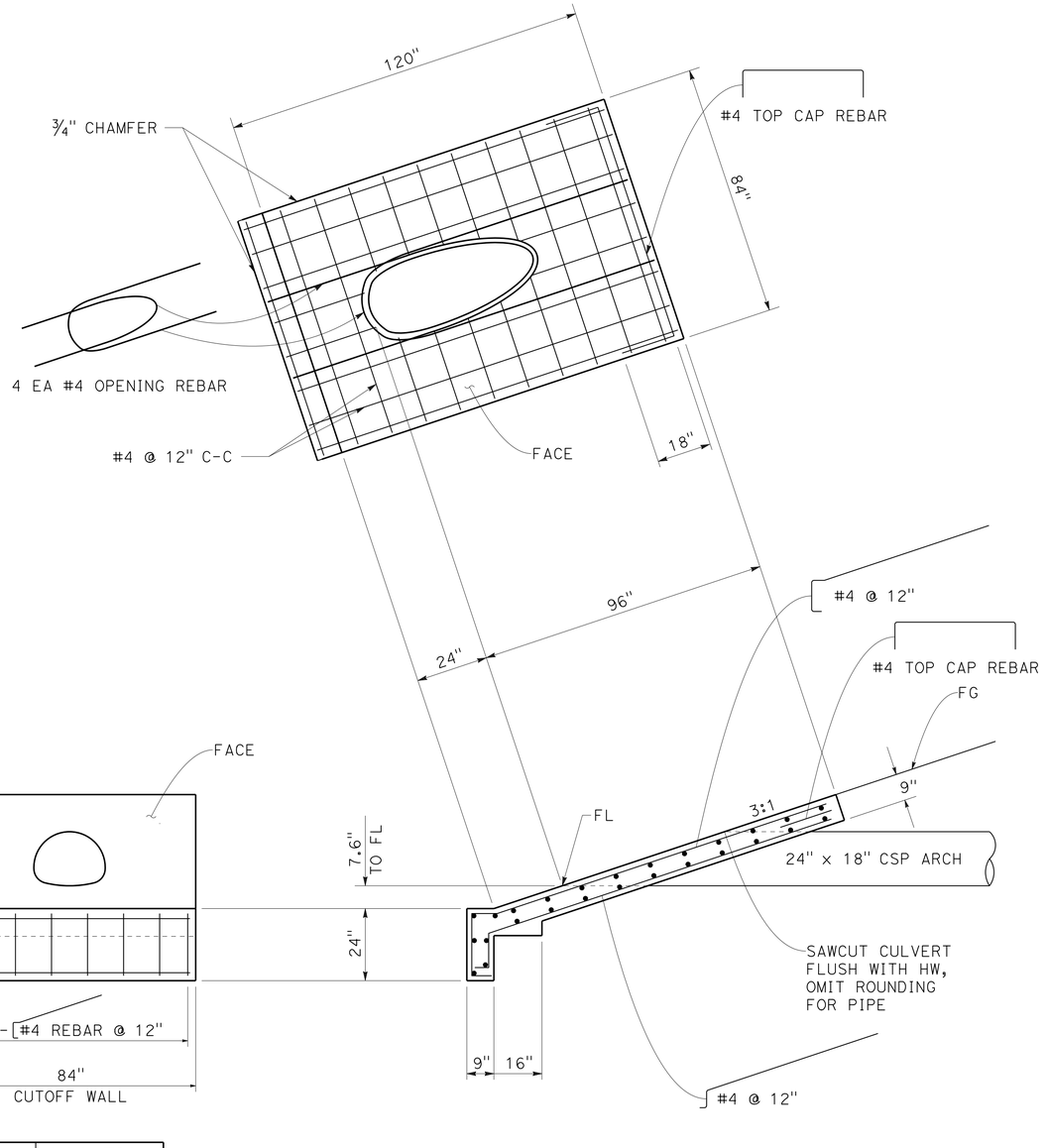

DRAINAGE SYSTEM No.	LOCATION 3:1 SLOPE	
	ROUTE	PM
17	128	4.55
18	128	4.78
20	128	5.03
28	128	6.66

3:1 SLOPED
24" X 18" CSP ARCH HW
TYPICAL SECTION

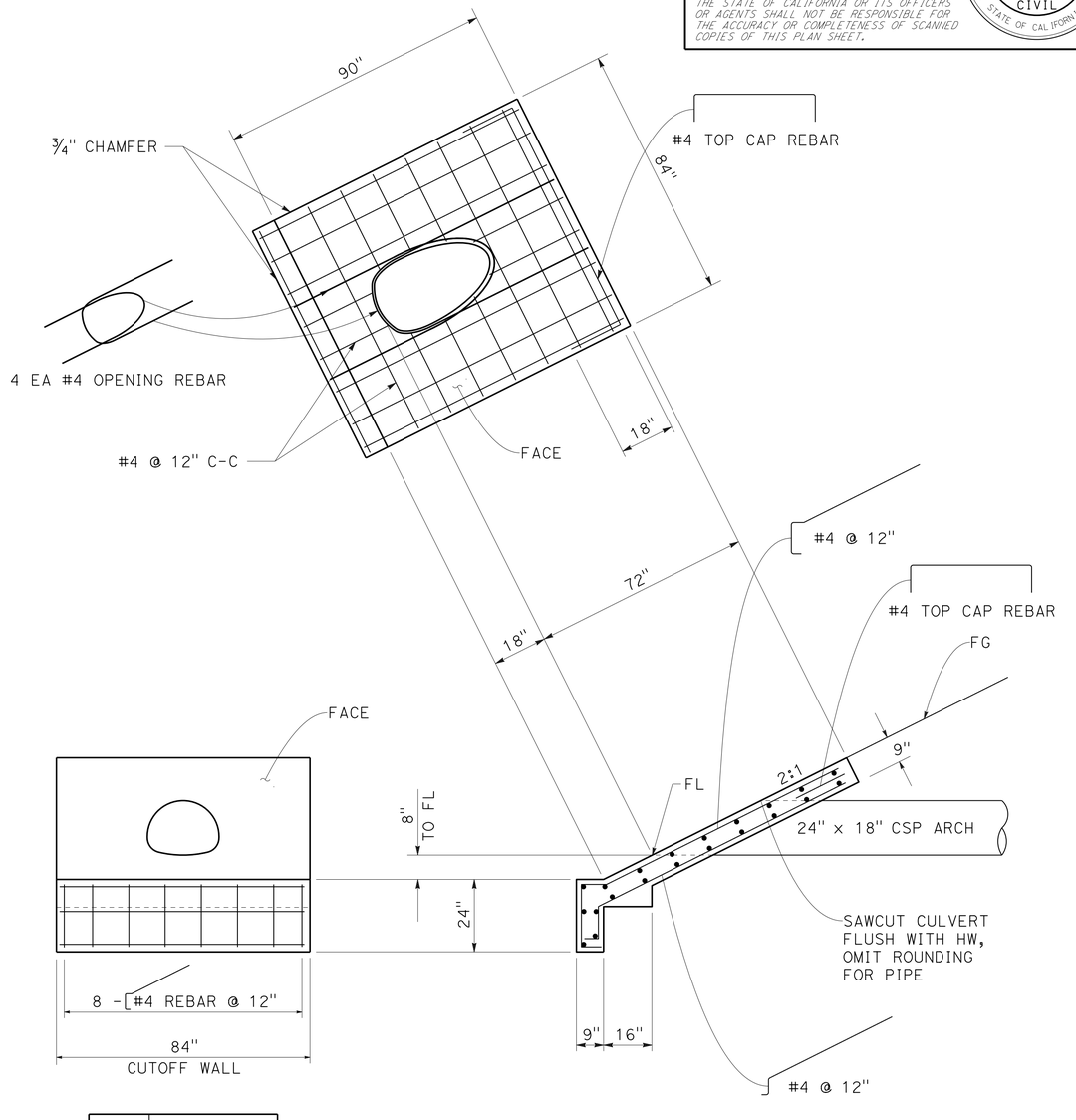

DRAINAGE SYSTEM No.	LOCATION 2:1 SLOPE	
	ROUTE	PM
24	128	5.92
28	128	6.66

2:1 SLOPED
24" X 18" CSP ARCH HW
TYPICAL SECTION

SLOPED HEADWALLS

DRAINAGE DETAILS

NO SCALE

DD-5

STATE OF CALIFORNIA - DEPARTMENT OF TRANSPORTATION
03-DESIGN
Caltrans
FUNCTIONAL SUPERVISOR: ROBERT E. POLGAR
CALCULATED-DESIGNED BY: MARLENE GIBB
CHECKED BY: MARTIN GARCIA
REVISED BY: M. GIBB
DATE REVISED: 01-23-12

LAST REVISION | DATE PLOTTED => 31-AUG-2015
00-00-00 | TIME PLOTTED => 09:36

P:\proj4\01\37\87\drafting\01000001371ic005.dgn

BORDER LAST REVISED 7/2/2010
USERNAME => s130875
DGN FILE => 01000001371ic005.dgn
RELATIVE BORDER SCALE IS IN INCHES 0 1 2 3
UNIT 0306
PROJECT NUMBER & PHASE 01000001371

Dist	COUNTY	ROUTE	POST MILES TOTAL PROJECT	SHEET No.	TOTAL SHEETS
01	Men	128	2.8/11.1	60	98

Marlene Gibb 6-15-15
REGISTERED CIVIL ENGINEER DATE

6-15-15
PLANS APPROVAL DATE

REGISTERED PROFESSIONAL ENGINEER
MARLENE E. GIBB
No. C 51513
Exp. 06-30-16
CIVIL
STATE OF CALIFORNIA

THE STATE OF CALIFORNIA OR ITS OFFICERS OR AGENTS SHALL NOT BE RESPONSIBLE FOR THE ACCURACY OR COMPLETENESS OF SCANNED COPIES OF THIS PLAN SHEET.

NOTES:

1. DOWNDRAINS AND FLARED END SECTIONS SHALL BE SAME MATERIAL AS CULVERT.
2. ALL CULVERT PIPE JOINTS ARE POSITIVE JOINT TYPE.
3. THE JOINT CLASSIFICATION FOR DOWNDRAINS SHALL BE DOWNDRAIN.
4. LENGTHS OF PIPES AND ANGLES OF ELBOWS SHALL BE VERIFIED IN THE FIELD BY THE CONTRACTOR.
5. FOR MINIMUM ALLOWABLE CLASS OF RCP, SEE STANDARD PLAN A62D.

ABBREVIATIONS:

HDPE - HIGH DENSITY POLYETHYLENE

ALTERNATIVE PIPE CULVERT (APC) AND FLARED END SECTION (AFES) ALLOWABLE PIPE MATERIAL AND PROTECTION

DRAINAGE SYSTEM No.	PM	Galv CSP 0.138" (10 Ga) THICK	Galv CSP 0.169" (8 Ga) THICK	Galv CSP POLYMERIC Sht COATED 0.109" (12 Ga) THICK	Galv CSP POLYMERIC Sht COATED 0.138" (10 Ga) THICK	CAP 0.079" (14 Ga)	RCP	HDPE (TYPE S)
1	2.81			X		X	*	X
2	3.01	X		X		X	*	X
3	3.08	X		X		X	*	X
4	3.20	X		X		X	*	X
5	3.36	X		X		X	*	X
6	3.46	X		X		X	*	X
7	3.66	X		X		X	*	X
8	3.71			X		X	*	X
9	3.89	X		X		X	*	X
10	3.92	X		X		X	*	X
11	4.02							
12	4.05			X		X	*	X
13	4.08	X		X		X	*	X
14	4.17	X		X		X	*	X
15	4.45	X		X		X	*	X
16	4.50	X		X		X	*	X
17	4.55							
18	4.78							
19	4.83	X		X		X	*	X
20	5.03							
21	5.08	X		X		X	*	X
22	5.36	X		X		X	*	X
23	5.82	X		X		X	*	X
24	5.92							
25	6.08	X		X		X	*	X
26	6.11	X		X		X	*	X

DRAINAGE SYSTEM No.	PM	Galv CSP 0.138" (10 Ga) THICK	Galv CSP 0.169" (8 Ga) THICK	Galv CSP POLYMERIC Sht COATED 0.109" (12 Ga) THICK	Galv CSP POLYMERIC Sht COATED 0.138" (10 Ga) THICK	CAP 0.079" (14 Ga)	RCP	HDPE (TYPE S)
27	6.48	X		X		X	*	X
28	6.66							
29	6.74	X		X		X	*	X
30	7.07	X		X		X	*	X
31	7.40							
32	7.51	X		X		X	*	X
33	7.76	X		X		X	*	X
34	7.81	X		X		X	*	X
35	7.95		X		X	X	*	X
36	8.08	X		X		X	*	X
37	8.55	X		X		X	*	X
38	8.75		X		X		**	X
39	8.87			X		X	*	X
40	8.91			X		X	*	X
41	8.95			X		X	*	X
42	9.34	X		X		X	*	X
43	9.44	X		X		X	*	X
44	9.61	X		X		X	*	X
45	9.73			X		X	*	X
46	9.85			X		X	*	X
47	9.99	X		X		X	*	X
48	10.08	X		X		X	*	X
49	10.43	X		X		X	*	X
50	10.47		X		X	X	*	X
51	11.07	X		X		X	*	X

DRAINAGE QUANTITIES

DQ-1

CALCULATED-DESIGNED BY
CHECKED BY

M. GIBB — REVISED BY
01-23-12 — DATE REVISED

MARLENE GIBB
MARTIN GARCIA

FUNCTIONAL SUPERVISOR
ROBERT E. POLGAR

STATE OF CALIFORNIA - DEPARTMENT OF TRANSPORTATION
Caltrans
03-DESIGN

LAST REVISION 00-00-00
DATE PLOTTED => 31-AUG-2015
TIME PLOTTED => 10:00

P:\proj4\01\378x\drafting\0100000137id001.dgn

BORDER LAST REVISED 7/2/2010
USERNAME => s130875
DGN FILE => 0100000137id001.dgn
RELATIVE BORDER SCALE IS IN INCHES 0 1 2 3
UNIT 0306
PROJECT NUMBER & PHASE 01000001371

Dist	COUNTY	ROUTE	POST MILES TOTAL PROJECT	SHEET No.	TOTAL SHEETS
01	Men	128	2.8/11.1	61	98

Marlene Gibb 6-15-15
REGISTERED CIVIL ENGINEER DATE

6-15-15
PLANS APPROVAL DATE

REGISTERED PROFESSIONAL ENGINEER
MARLENE E. GIBB
No. C 51513
Exp. 06-30-16
CIVIL
STATE OF CALIFORNIA

THE STATE OF CALIFORNIA OR ITS OFFICERS OR AGENTS SHALL NOT BE RESPONSIBLE FOR THE ACCURACY OR COMPLETENESS OF SCANNED COPIES OF THIS PLAN SHEET.

DRAINAGE QUANTITIES

DRAINAGE SYSTEM No.	DRAINAGE UNIT No.	DRAINAGE Sht No.	LOCATION (PM)	REMOVE			ABANDON Culv	SAND BACKFILL	APC				CSP		AFES	24" x 18" STEEL FLARED END PIPE ARCH SECTION	RSP (METHOD B)			ROCK SLOPE PROTECTION FABRIC (CLASS 8)	MINOR CONCRETE (MINOR STRUCTURE)	Misc IRON & STEEL	(N) H OF INLET	(N) Max COVER	DESCRIPTION	DRAINAGE SYSTEM No.	DRAINAGE UNIT No.	DRAINAGE Sht No.
				Culv	HW	PIPE			18"	24"	30"	36"	24" x 18" CSP ARCH (0.109" THICK)	6" CSP CONDUIT (0.064")	36"		(LIGHT)	(1/4 TON)	(1/2 TON)										
				EA	EA	EA	EA	CY	LF	LF	LF	LF	LF	LF	EA	EA	CY	CY	CY	SQYD	CY	LB	LF	LF				
1	a	D-1	2.81		1																				REMOVE HEADWALL	1	a	D-1
	b				1																				REMOVE HEADWALL		b	
	c			1																					REMOVE CULVERT (12" x 41.2' CMP)		c	
	d									42.0														3.61	24" ALTERNATIVE PIPE CULVERT		d	
	e																				1.20				24" HEADWALL		e	
	f																5.3			16.0					RSP (LIGHT, METHOD B)		f	
2	a	D-2	3.01		1																				REMOVE HEADWALL	2	a	D-2
	b				1																				REMOVE HEADWALL		b	
	c			1																					REMOVE CULVERT (12" x 34.6' CMP)		c	
	d						1	0.20																	ABANDON CULVERT (12" x 7.0' CMP), SAND BACKFILL		d	
	e									41.0														3.63	24" ALTERNATIVE PIPE CULVERT		e	
	f																				1.24	260	2.81		TYPE GO (Mod) DI W/ 24-12X GRATE		f	
	g																11.1			27.5					RSP (LIGHT, METHOD B)		g	
3	a	D-3	3.08	1																					REMOVE CULVERT 12" x 45.8' CMP	3	a	D-3
	b									48.0														3.84	24" ALTERNATIVE PIPE CULVERT		b	
	c																				1.28	260	3.16		TYPE GO (Mod) DI W/ 24-12X GRATE		c	
	d																3.6			11.6					RSP (LIGHT, METHOD B)		d	
4	a	D-4	3.20		1																				REMOVE HEADWALL	4	a	D-4
	b				1																						b	
	c						1	1.51																	ABANDON CULVERT (12" x 52.0' CMP), SAND BACKFILL		c	
	d									50.0														5.07	24" ALTERNATIVE PIPE CULVERT		d	
	e																				1.20				24" HEADWALL		e	
	f																6.2			18.2					RSP (LIGHT, METHOD B)		f	
5	a	D-5	3.36	1																					REMOVE CULVERT (12" x 37.0' CMP)	5	a	D-5
	b									42.8														2.60	24" ALTERNATIVE PIPE CULVERT		b	
	c																				1.28	260	3.08		TYPE GO (Mod) DI W/ 24-12X GRATE		c	
	d																4.0			12.7					RSP (LIGHT, METHOD B)		d	
6	a	D-6	3.46		1																				REMOVE HEADWALL	6	a	D-6
	b				1																				REMOVE HEADWALL		b	
	c			1																					REMOVE CULVERT (24" x 10.3' CMP)		c	
	d						1	7.02																	ABANDON CULVERT (24" x 60.3' CMP), SAND BACKFILL		d	
	e											62.5												5.13	36" ALTERNATIVE PIPE CULVERT		e	
	f																				2.45				36" (Mod) HEADWALL		f	
	g																	35.2							RSP (1/2 TON, METHOD B)		g	
	h																11.4								RSP (LIGHT, METHOD B)		h	
Sht DQ-2 TOTALS				5	8		3	8.73		223.8		62.5					41.6		35.2	86.0	8.65	780						

DRAINAGE QUANTITIES

DQ-2

CALCULATED-DESIGNED BY: M. GIBB
CHECKED BY: MARLENE GIBB / MARTIN GARCIA
REVISED BY / DATE REVISED: 01-23-12
FUNCTIONAL SUPERVISOR: ROBERT E. POLGAR
STATE OF CALIFORNIA - DEPARTMENT OF TRANSPORTATION
03-DESIGN
Caltrans

P:\proj4\01371867\drafting\01000001371id002.dgn

LAST REVISION | DATE PLOTTED => 31-AUG-2015
00-00-00 | TIME PLOTTED => 10:00

BORDER LAST REVISED 7/2/2010 | USERNAME => s130875 | DGN FILE => 01000001371id002.dgn | RELATIVE BORDER SCALE IS IN INCHES 0 1 2 3 | UNIT 0306 | PROJECT NUMBER & PHASE 01000001371

Dist	COUNTY	ROUTE	POST MILES TOTAL PROJECT	SHEET No.	TOTAL SHEETS
01	Men	128	2.8/11.1	62	98

Marlene Gibb 6-15-15
REGISTERED CIVIL ENGINEER DATE

6-15-15
PLANS APPROVAL DATE

REGISTERED PROFESSIONAL ENGINEER
MARLENE E. GIBB
No. C 51513
Exp. 06-30-16
CIVIL
STATE OF CALIFORNIA

THE STATE OF CALIFORNIA OR ITS OFFICERS OR AGENTS SHALL NOT BE RESPONSIBLE FOR THE ACCURACY OR COMPLETENESS OF SCANNED COPIES OF THIS PLAN SHEET.

DRAINAGE QUANTITIES

DRAINAGE SYSTEM No.	DRAINAGE UNIT No.	DRAINAGE Sht No.	LOCATION (PM)	REMOVE			ABANDON Culv	SAND BACKFILL	APC				CSP		AFES	24" x 18" STEEL FLARED END PIPE ARCH SECTION	RSP (METHOD B)			ROCK SLOPE PROTECTION FABRIC (CLASS 8)	MINOR CONCRETE (MINOR STRUCTURE)	Misc IRON & STEEL	(N) H OF INLET	(N) Max COVER	DESCRIPTION	DRAINAGE SYSTEM No.	DRAINAGE UNIT No.	DRAINAGE Sht No.
				Culv	HW	PIPE			18"	24"	30"	36"	24" x 18" CSP ARCH (0.109" THICK)	6" CSP CONDUIT (0.064")	36"		(LIGHT)	(1/4 TON)	(1/2 TON)										
				EA	EA	EA	EA	CY	LF	LF	LF	LF	LF	LF	EA	EA	CY	CY	CY	SQYD	CY	LB	LF	LF				
7	a	D-7	3.66		1																				REMOVE HEADWALL	7	a	D-7
	b			1																					REMOVE CULVERT (12" x 45.6' CMP)		b	
	c									47.9														2.29	24" ALTERNATIVE PIPE CULVERT		c	
	d																				1.20				24" HEADWALL		d	
	e																6.2			18.2					RSP (LIGHT, METHOD B)		e	
8	a	D-8	3.71		1																				REMOVE HEADWALL	8	a	D-8
	b				1																				REMOVE HEADWALL		b	
	c			1																					REMOVE CULVERT (12" x 29.3' CMP)		c	
	d						1	0.44																	ABANDON CULVERT (12" x 15.1' CMP), SAND BACKFILL		d	
	e									45.5														4.89	24" ALTERNATIVE PIPE CULVERT		e	
	f																				1.20				24" HEADWALL		f	
	g																3.6			11.6					RSP (LIGHT, METHOD B)		g	
9	a	D-9	3.89		1																				REMOVE HEADWALL (SEE NOTE 3)	9	a	D-9
	b				1																				REMOVE HEADWALL		b	
	c			1																					REMOVE CULVERT (12" x 45.6' CMP)		c	
	d									45.3														4.32	24" ALTERNATIVE PIPE CULVERT		d	
	e																				1.37	260	3.54		TYPE GO (Mod) DI W/ 24-12X GRATE		e	
	f																3.3			11.0					RSP (LIGHT, METHOD B)		f	
10	a	D-10	3.92		1																				REMOVE HEADWALL	10	a	D-10
	b				1																				REMOVE HEADWALL		b	
	c			1																					REMOVE CULVERT (12" x 48.1' CMP)		c	
	d										48.3													4.43	36" ALTERNATIVE PIPE CULVERT		d	
	e																				1.95				36" HEADWALL		e	
11	a	D-11	4.02		1																				REMOVE HEADWALL	11	a	D-11
	b			1																					REMOVE CULVERT (18" x 52.2' CMP)		b	
	c												50.7											2.83	24" x 18" CSP ARCH (0.109 THICK)		c	
	d																				0.96				24" x 18" ARCH HEADWALL		d	
	e																2.7			9.3					RSP (LIGHT, METHOD B)		e	
12	a	D-12	4.05	1																					REMOVE CULVERT (12" x 30.2' CMP)	12	a	D-12
	b									38.2														2.12	24" ALTERNATIVE PIPE CULVERT		b	
	c																				1.24	260	2.60		TYPE GO (Mod) DI W/ 24-12X GRATE		c	
Sht DQ-3 TOTALS				6	8		1	0.44		176.9		48.3	50.7				15.8			50.1	7.92	520						

DRAINAGE QUANTITIES

DQ-3

STATE OF CALIFORNIA - DEPARTMENT OF TRANSPORTATION
03-DESIGN
Caltrans

FUNCTIONAL SUPERVISOR: ROBERT E. POLGAR
CALCULATED-DESIGNED BY: MARLENE GIBB
CHECKED BY: MARTIN GARCIA
REVISED BY: M. GIBB
DATE REVISED: 01-23-12

P:\proj4\01\37\87\drafting\01000001371id003.dgn

LAST REVISION DATE PLOTTED => 31-AUG-2015
TIME PLOTTED => 10:00
00-00-00

BORDER LAST REVISED 7/2/2010
USERNAME => s130875
DGN FILE => 01000001371id003.dgn
RELATIVE BORDER SCALE IS IN INCHES 0 1 2 3
UNIT 0306
PROJECT NUMBER & PHASE 01000001371

Dist	COUNTY	ROUTE	POST MILES TOTAL PROJECT	SHEET No.	TOTAL SHEETS
01	Men	128	2.8/11.1	63	98

Marlene Gibb 6-15-15
REGISTERED CIVIL ENGINEER DATE

6-15-15
PLANS APPROVAL DATE

REGISTERED PROFESSIONAL ENGINEER
MARLENE E. GIBB
No. C 51513
Exp. 06-30-16
CIVIL
STATE OF CALIFORNIA

THE STATE OF CALIFORNIA OR ITS OFFICERS OR AGENTS SHALL NOT BE RESPONSIBLE FOR THE ACCURACY OR COMPLETENESS OF SCANNED COPIES OF THIS PLAN SHEET.

DRAINAGE QUANTITIES

DRAINAGE SYSTEM No.	DRAINAGE UNIT No.	DRAINAGE Sht No.	LOCATION (PM)	REMOVE			ABANDON Culv	SAND BACKFILL	APC				CSP		AFES	24" x 18" STEEL FLARED END PIPE ARCH SECTION	RSP (METHOD B)			ROCK SLOPE PROTECTION FABRIC (CLASS 8)	MINOR CONCRETE (MINOR STRUCTURE)	Misc IRON & STEEL	(N) H OF INLET	(N) Max COVER	DESCRIPTION	DRAINAGE SYSTEM No.	DRAINAGE UNIT No.	DRAINAGE Sht No.
				Culv	HW	PIPE			18"	24"	30"	36"	24" x 18" CSP ARCH (0.109" THICK)	6" CSP CONDUIT (0.064")	36"		(LIGHT)	(1/4 TON)	(1/2 TON)										
				EA	EA	EA	EA	CY	LF	LF	LF	LF	LF	LF	EA	EA	CY	CY	CY	SQYD	CY	LB	LF	LF				
13	a	D-13	4.08		1																				REMOVE HEADWALL	13	a	D-13
	b			1																					REMOVE CULVERT (12" x 39.6' CMP)		b	
	c									41.6														3.41	24" ALTERNATIVE PIPE CULVERT		c	
	d																				1.20				24" HEADWALL		d	
	e																5.3			16.0					RSP (LIGHT, METHOD B)		e	
14	a	D-14	4.17		1																				REMOVE HEADWALL	14	a	D-14
	b			1																					REMOVE CULVERT (12" x 50.8' CMP)		b	
	c									41.7														3.11	24" ALTERNATIVE PIPE CULVERT		c	
	d																				2.44	587	3.68		TYPE GOT DI W/ 24-12X GRATES (2 EA)		d	
	e								3.0																18" ALTERNATIVE PIPE CULVERT		e	
	f																				1.33	260	3.35		TYPE GO (Mod) DI W/ 24-12X GRATE		f	
	g																2.7			9.3					RSP (LIGHT, METHOD B)		g	
15	a	D-15	4.45	1																					REMOVE CULVERT (12" x 37.1' CMP)	15	a	D-15
	b									51.4														1.99	24" ALTERNATIVE PIPE CULVERT		b	
	c																				1.20				24" HEADWALL		c	
16	a	D-16	4.50		1																				REMOVE HEADWALL	16	a	D-16
	b			1																					REMOVE CULVERT (18" x 12.0' CMP)		b	
	c						1	1.18																	ABANDON CULVERT (18" x 18.0' CMP), SAND BACKFILL		c	
	d									41.4														1.83	24" ALTERNATIVE PIPE CULVERT		d	
	e																				1.20				24" HEADWALL		e	
17	a	D-17	4.55		1																				REMOVE HEADWALL	17	a	D-17
	b				1																				REMOVE HEADWALL		b	
	c			1																					REMOVE CULVERT (18" x 29.9' CMP)		c	
	d												42.9											2.39	24" x 18" CSP ARCH (0.109" THICK)		d	
	e																				3.5				24" x 18" (3:1) SLOPED CSP ARCH HEADWALL		e	
	f															1									24" x 18" STEEL FLARED END PIPE ARCH SECTION		f	
18	a	D-18	4.78		1																				REMOVE HEADWALL	18	a	D-18
	b				1																				REMOVE HEADWALL		b	
	c			1																					REMOVE CULVERT (12" x 34.2' CMP)		c	
	d												52.5											2.71	24" x 18" CSP ARCH (0.109" THICK)		d	
	e																				3.5				24" x 18" (3:1) SLOPED CSP ARCH HEADWALL		e	
19	a	D-19	4.83	1																					REMOVE CULVERT (12" x 37.6' CMP)	19	a	D-19
	b									37.0														3.52	24" ALTERNATIVE PIPE CULVERT		b	
	c																				2.26	587	3.21		TYPE GOT DI W/ 24-12X GRATES (2 EA)		c	
Sht DQ-4 TOTALS				7	7		1	1.18	3.0	213.1			95.4			1	8.0			25.3	16.63	1434						

DRAINAGE QUANTITIES
DQ-4

CALCULATED-DESIGNED BY					
CHECKED BY					
MARLENE GIBB	M. GIBB	01-23-12			
MARTIN GARCIA	REVISED BY	DATE REVISED			
FUNCTIONAL SUPERVISOR					
ROBERT E. POLGAR					

STATE OF CALIFORNIA - DEPARTMENT OF TRANSPORTATION
Caltrans
03-DESIGN

LAST REVISION | DATE PLOTTED => 31-AUG-2015
00-00-00 | TIME PLOTTED => 10:00

P:\proj4\01371867\drafting\01000001371id004.dgn

BORDER LAST REVISED 7/2/2010 | USERNAME => s130875 | DGN FILE => 01000001371id004.dgn | RELATIVE BORDER SCALE IS IN INCHES 0 1 2 3 | UNIT 0306 | PROJECT NUMBER & PHASE 01000001371

Dist	COUNTY	ROUTE	POST MILES TOTAL PROJECT	SHEET No.	TOTAL SHEETS
01	Men	128	2.8/11.1	64	98

Marlene Gibb 6-15-15
REGISTERED CIVIL ENGINEER DATE

6-15-15
PLANS APPROVAL DATE

REGISTERED PROFESSIONAL ENGINEER
MARLENE E. GIBB
No. C 51513
Exp. 06-30-16
CIVIL
STATE OF CALIFORNIA

THE STATE OF CALIFORNIA OR ITS OFFICERS OR AGENTS SHALL NOT BE RESPONSIBLE FOR THE ACCURACY OR COMPLETENESS OF SCANNED COPIES OF THIS PLAN SHEET.

DRAINAGE QUANTITIES

DRAINAGE SYSTEM No.	DRAINAGE UNIT No.	DRAINAGE Sht No.	LOCATION (PM)	REMOVE			ABANDON Culv	SAND BACKFILL	APC				CSP		AFES	24" x 18" STEEL FLARED END PIPE ARCH SECTION	RSP (METHOD B)			ROCK SLOPE PROTECTION FABRIC (CLASS 8)	MINOR CONCRETE (MINOR STRUCTURE)	Misc IRON & STEEL	(N) H OF INLET	(N) Max COVER	DESCRIPTION	DRAINAGE SYSTEM No.	DRAINAGE UNIT No.	DRAINAGE Sht No.
				Culv	HW	PIPE			18"	24"	30"	36"	24" x 18" CSP ARCH (0.109" THICK)	6" CSP CONDUIT (0.064")	36"		(LIGHT)	(1/4 TON)	(1/2 TON)										
				EA	EA	EA	EA	CY	LF	LF	LF	LF	LF	LF	EA	EA	CY	CY	CY	SQYD	CY	LB	LF	LF				
20	a	D-20	5.03		1																			REMOVE HEADWALL	20	a	D-20
	b				1																			REMOVE HEADWALL		b	
	c			1																				REMOVE CULVERT (12" x 31.5' CMP)		c	
	d												43.1										2.05	24" x 18" CSP ARCH (0.109" THICK)		d	
	e																				3.5			24" x 18" (3:1) SLOPED CSP ARCH HEADWALL		e	
	f															1								24" x 18" STEEL FLARED END PIPE ARCH SECTION		f	
21	a	D-21	5.08	1							43.9													REMOVE CULVERT (24" x 40.9' CMP)	21	a	D-21
	b																						2.27	30" ALTERNATIVE PIPE CULVERT		b	
	c																				1.52			30" HEADWALL		c	
22	a	D-22	5.36	1																				REMOVE CULVERT (18" x 47.1' CMP)	22	a	D-22
	b									50.5													4.13	24" ALTERNATIVE PIPE CULVERT		b	
	c																				2.26	587	2.68	TYPE GOT DI W/ 24-12X GRATES (2 EA)		c	
23	a	D-23	5.82				1	0.89																ABANDON CULVERT (12" x 30.7' CMP)	23	a	D-23
	b									36.0													1.89	24" ALTERNATIVE PIPE CULVERT		b	
	c																				2.18	587	2.52	TYPE GOT DI W/ 24-12X GRATES (2 EA)		c	
	d								3.0															18" ALTERNATIVE PIPE CULVERT		d	
	e																				1.24	253	2.18	TYPE GO (Mod) DI W/ 24-12X GRATE		e	
24	a	D-24	5.92		1																			REMOVE HEADWALL	24	a	D-24
	b				1																			REMOVE HEADWALL		b	
	c			1																				REMOVE CULVERT (12" x 32.8' CMP)		c	
	d												42.4										2.51	24" x 18" CSP ARCH (0.109" THICK)		d	
	e																				3.6			24" x 18" (2:1) SLOPED CSP ARCH HEADWALL		e	
	f																4.9			14.6				RSP (LIGHT, METHOD B)		f	
25	a	D-25	6.08		1																			REMOVE HEADWALL	25	a	D-25
	b				1																			REMOVE HEADWALL		b	
	c			1																				REMOVE CULVERT (12" x 35.3' CMP)		c	
	d									41.4													3.49	24" ALTERNATIVE PIPE CULVERT		d	
	e																				1.24	253	2.02	TYPE GO (Mod) DI W/ 24-12X GRATE		e	
26	a	D-26	6.11	1																				REMOVE CULVERT (12" x 33.7' CMP)	26	a	D-26
	b									39.1													3.30	24" ALTERNATIVE PIPE CULVERT		b	
	c																				1.24	260	2.70	TYPE GO (Mod) DI W/ 24-12X GRATE		c	
Sht DQ-5 TOTALS				6	6		1	0.89	3.0	167.0	43.9		85.5			1	4.9			14.6	16.78	1940						

DRAINAGE QUANTITIES

DQ-5

MARLENE GIBB	M. GIBB	01-23-12		
MARTIN GARCIA	REVISED BY	DATE REVISED		
CALCULATED-DESIGNED BY	CHECKED BY			
ROBERT E. POLGAR	FUNCTIONAL SUPERVISOR			
STATE OF CALIFORNIA - DEPARTMENT OF TRANSPORTATION	03-DESIGN			

LAST REVISION: DATE PLOTTED => 31-AUG-2015
00-00-00 TIME PLOTTED => 10:00

P:\proj4\01\378\7\drafting\01000001371d005.dgn

BORDER LAST REVISED 7/2/2010 | USERNAME => s130875 DGN FILE => 01000001371d005.dgn | RELATIVE BORDER SCALE IS IN INCHES 0 1 2 3 | UNIT 0306 | PROJECT NUMBER & PHASE 01000001371

Dist	COUNTY	ROUTE	POST MILES TOTAL PROJECT	SHEET No.	TOTAL SHEETS
01	Men	128	2.8/11.1	65	98

Marlene Gibb 6-15-15
REGISTERED CIVIL ENGINEER DATE

6-15-15
PLANS APPROVAL DATE

REGISTERED PROFESSIONAL ENGINEER
MARLENE E. GIBB
No. C 51513
Exp. 06-30-16
CIVIL
STATE OF CALIFORNIA

THE STATE OF CALIFORNIA OR ITS OFFICERS OR AGENTS SHALL NOT BE RESPONSIBLE FOR THE ACCURACY OR COMPLETENESS OF SCANNED COPIES OF THIS PLAN SHEET.

DRAINAGE QUANTITIES

DRAINAGE SYSTEM No.	DRAINAGE UNIT No.	DRAINAGE Sht No.	LOCATION (PM)	REMOVE			ABANDON Culv	SAND BACKFILL	APC				CSP		AFES	24" x 18" STEEL FLARED END PIPE ARCH SECTION	RSP (METHOD B)			ROCK SLOPE PROTECTION FABRIC (CLASS 8)	MINOR CONCRETE (MINOR STRUCTURE)	Misc IRON & STEEL	(N) H OF INLET	(N) Max COVER	DESCRIPTION	DRAINAGE SYSTEM No.	DRAINAGE UNIT No.	DRAINAGE Sht No.
				Culv	HW	PIPE			18"	24"	30"	36"	24" x 18" CSP ARCH (0.109" THICK)	6" CSP CONDUIT (0.064")	36"		(LIGHT)	(1/4 TON)	(1/2 TON)										
				EA	EA	EA	EA	CY	LF	LF	LF	LF	LF	LF	EA	EA	CY	CY	CY	SQYD	CY	LB	LF	LF				
27	a	D-27	6.48		1																				REMOVE HEADWALL	27	a	D-27
	b			1																					REMOVE CULVERT (12" x 43.8' CMP)		b	
	c									44.6														3.42	24" ALTERNATIVE PIPE CULVERT		c	
	d																				1.20				24" HEADWALL		d	
28	a	D-28	6.66	1																					REMOVE CULVERT (18" x 41.7' CMP)	28	a	D-28
	b												47.8											1.86	24" x 18" CSP ARCH (0.109" THICK)		b	
	c																				3.5				24" x 18" (3:1) SLOPED CSP ARCH HEADWALL		c	
																					3.6				24" x 18" (2:1) SLOPED CSP ARCH HEADWALL		d	
29	a	D-29	6.74				1	1.02																	ABANDON CULVERT (12" x 35.0' CMP)	29	a	D-29
	b									40.3														3.12	24" ALTERNATIVE PIPE CULVERT		b	
	c																				1.24	260	2.58		TYPE GO (Mod) DI W/ 24-12X GRATE		c	
30	a	D-30	7.07	1																					REMOVE CULVERT (12" x 41.5' CMP)	30	a	D-30
	b									45.7														3.41	24" ALTERNATIVE PIPE CULVERT		b	
	c																				1.20				24" HEADWALL		c	
	d																6.0			17.0					RSP (LIGHT, METHOD B)		d	
	e																	8.0		20.0					RSP (1/4 TON, METHOD B)		e	
31	a	D-31	7.40	1																					REMOVE CULVERT (12" x 30.8' CMP)	31	a	D-31
	b												39.5											1.97	24" x 18" CSP ARCH		b	
	c																				0.96				24" x 18" ARCH HEADWALL		c	
32	a	D-32	7.51		1																				REMOVE HEADWALL	32	a	D-32
	b				1																				REMOVE HEADWALL		b	
	c			1																					REMOVE CULVERT (24" x 37.4' CMP)		c	
	d									45.3														2.48	24" ALTERNATIVE PIPE CULVERT		d	
	e																				1.20				24" HEADWALL		e	
	f																6.2			18.2					RSP (LIGHT, METHOD B)		f	
33	a	D-33	7.76		1																				REMOVE HEADWALL	33	a	D-33
	b																								ABANDON HEADWALL		b	
	c			1																					REMOVE CULVERT (18" x 23.3' CMP)		c	
	d						1	1.43																	ABANDON CULVERT (18" x 21.9' CMP)		d	
	e									49.5														3.96	24" ALTERNATIVE PIPE CULVERT		e	
	f																				1.20				24" HEADWALL		f	
Sht DQ-6 TOTALS				6	4		2	2.45		225.4			87.3				12.2	8.0		55.2	14.10	260						

DRAINAGE QUANTITIES

DQ-6

REVISED BY	M. GIBB	CALCULATED-DESIGNED BY	MARLENE GIBB	FUNCTIONAL SUPERVISOR	ROBERT E. POLGAR	STATE OF CALIFORNIA - DEPARTMENT OF TRANSPORTATION	03-DESIGN
DATE REVISED	01-23-12	CHECKED BY	MARTIN GARCIA			Caltrans	

P:\proj4\01\37837\drafting\01000001371d006.dgn

LAST REVISION => 00-00-00
DATE PLOTTED => 31-AUG-2015
TIME PLOTTED => 10:00

BORDER LAST REVISED 7/2/2010 | USERNAME => s130875 | DGN FILE => 01000001371d006.dgn | RELATIVE BORDER SCALE IS IN INCHES 0 1 2 3 | UNIT 0306 | PROJECT NUMBER & PHASE 01000001371

Dist	COUNTY	ROUTE	POST MILES TOTAL PROJECT	SHEET No.	TOTAL SHEETS
01	Men	128	2.8/11.1	66	98

Mark Gibb 6-15-15
REGISTERED CIVIL ENGINEER DATE

6-15-15
PLANS APPROVAL DATE

REGISTERED PROFESSIONAL ENGINEER
MARLENE E. GIBB
No. C 51513
Exp. 06-30-16
CIVIL
STATE OF CALIFORNIA

THE STATE OF CALIFORNIA OR ITS OFFICERS OR AGENTS SHALL NOT BE RESPONSIBLE FOR THE ACCURACY OR COMPLETENESS OF SCANNED COPIES OF THIS PLAN SHEET.

DRAINAGE QUANTITIES

DRAINAGE SYSTEM No.	DRAINAGE UNIT No.	DRAINAGE Sht No.	LOCATION (PM)	REMOVE			ABANDON Culv	SAND BACKFILL	APC				CSP		AFES	24" x 18" STEEL FLARED END PIPE ARCH SECTION	RSP (METHOD B)			ROCK SLOPE PROTECTION FABRIC (CLASS 8)	MINOR CONCRETE (MINOR STRUCTURE)	Misc IRON & STEEL	(N) H OF INLET	(N) Max COVER	DESCRIPTION	DRAINAGE SYSTEM No.	DRAINAGE UNIT No.	DRAINAGE Sht No.
				Culv	HW	PIPE			18"	24"	30"	36"	24" x 18" CSP ARCH (0.109" THICK)	6" CSP CONDUIT (0.064")	36"		(LIGHT)	(1/4 TON)	(1/2 TON)										
				EA	EA	EA	EA	CY	LF	LF	LF	LF	LF	LF	EA	EA	CY	CY	CY	SQYD	CY	LB	LF	LF				
34	a	D-34	7.81		1																				REMOVE HEADWALL	34	a	D-34
	b				1																				REMOVE HEADWALL		b	
	c			1																					REMOVE CULVERT (18" x 45.7' CMP)		c	
	d											47.0												2.94	36" ALTERNATIVE PIPE CULVERT		d	
	e																				1.95				36" HEADWALL		e	
	f																3.1			10.4					RSP (LIGHT, METHOD B)		f	
35	a	D-35	7.95			1																			REMOVE Pipe (3" x 55.0' Galv)	35	a	D-35
	b				1																				REMOVE HEADWALL		b	
	c				1																				REMOVE HEADWALL		c	
	d			1																					REMOVE CULVERT (24" x 46.4' CMP)		d	
	e											49.7												4.25	36" ALTERNATIVE PIPE CULVERT		e	
	f														1										36" ALTERNATIVE FLARED END SECTION		f	
	g																				1.95				36" HEADWALL		g	
	h													48.0											6" CSP CONDUIT (0.064" THICK)		h	
36	a	D-36	8.08	1																					REMOVE CULVERT (12" x 36.6' CMP)	36	a	D-36
	b									42.2														2.03	24" ALTERNATIVE PIPE CULVERT		b	
	c																				1.24	260	2.68		TYPE GO (Mod) DI W/ 24-12X GRATE		c	
37	a	D-37	8.55	1																					REMOVE CULVERT (18" x 41.1' CMP)	37	a	D-37
	b									41.5														2.38	24" ALTERNATIVE PIPE CULVERT		b	
	c																				2.18	587	2.69		TYPE GOT DI W/ 24-12X GRATE (2 EA)		c	
38	a	D-38	8.75																						ABANDON HEADWALL	38	a	D-38
	b				1																				REMOVE HEADWALL		b	
	c						1	0.87																	ABANDON CULVERT (15" x 19.24' CMP), SAND BACKFILL		c	
	d			1																					REMOVE CULVERT (15" x 14.86' CMP)		d	
	e											52.5												3.94	36" ALTERNATIVE PIPE CULVERT		e	
39	a	D-39	8.87		1																				REMOVE HEADWALL	39	a	D-39
	b			1																					REMOVE CULVERT (18" x 23.5' CMP)		b	
	c						1	1.12																	ABANDON CULVERT (18" x 17.1' CMP), SAND BACKFILL		c	
	d									50.0														3.03	24" ALTERNATIVE PIPE CULVERT		d	
	e																				1.20				24" HEADWALL		e	
40	a	D-40	8.91	1																					REMOVE CULVERT (12" x 38.0' CMP)	40	a	D-40
	b									47.5														3.73	24" ALTERNATIVE PIPE CULVERT		b	
	c																				1.24	260	2.90		TYPE GO (Mod) DI W/ 24-12X GRATE		c	
Sht DQ-7 TOTALS				7	6	1	2	1.99		181.2		149.2		48.0	1		3.1			10.4	9.76	1107						

DRAINAGE QUANTITIES

DQ-7

CALCULATED-DESIGNED BY	MARLENE GIBB	REVISED BY	M. GIBB
CHECKED BY	MARTIN GARCIA	DATE REVISED	01-23-12
FUNCTIONAL SUPERVISOR	ROBERT E. POLGAR		

STATE OF CALIFORNIA - DEPARTMENT OF TRANSPORTATION
Caltrans
03-DESIGN

P:\proj4\01\37\87\drafting\01000001371id007.dgn

LAST REVISION DATE PLOTTED => 31-AUG-2015
TIME PLOTTED => 10:00
00-00-00

BORDER LAST REVISED 7/2/2010 | USERNAME => s130875 | DGN FILE => 01000001371id007.dgn | RELATIVE BORDER SCALE IS IN INCHES 0 1 2 3 | UNIT 0306 | PROJECT NUMBER & PHASE 01000001371

Dist	COUNTY	ROUTE	POST MILES TOTAL PROJECT	SHEET No.	TOTAL SHEETS
01	Men	128	2.8/11.1	67	98

Marlene Gibb 6-15-15
REGISTERED CIVIL ENGINEER DATE

6-15-15
PLANS APPROVAL DATE

REGISTERED PROFESSIONAL ENGINEER
MARLENE E. GIBB
No. C 51513
Exp. 06-30-16
CIVIL
STATE OF CALIFORNIA

THE STATE OF CALIFORNIA OR ITS OFFICERS OR AGENTS SHALL NOT BE RESPONSIBLE FOR THE ACCURACY OR COMPLETENESS OF SCANNED COPIES OF THIS PLAN SHEET.

DRAINAGE QUANTITIES

DRAINAGE SYSTEM No.	DRAINAGE UNIT No.	DRAINAGE Sht No.	LOCATION (PM)	REMOVE			ABANDON Culv	SAND BACKFILL	APC				CSP		AFES	24" x 18" STEEL FLARED END PIPE ARCH SECTION	RSP (METHOD B)			ROCK SLOPE PROTECTION FABRIC (CLASS 8)	MINOR CONCRETE (MINOR STRUCTURE)	Misc IRON & STEEL	(N) H OF INLET	(N) Max COVER	DESCRIPTION	DRAINAGE SYSTEM No.	DRAINAGE UNIT No.	DRAINAGE Sht No.
				Culv	HW	PIPE			18"	24"	30"	36"	24" x 18" CSP ARCH (0.109" THICK)	6" CSP CONDUIT (0.064")	36"		(LIGHT)	(1/4 TON)	(1/2 TON)										
				EA	EA	EA	EA	CY	LF	LF	LF	LF	LF	LF	EA	EA	CY	CY	CY	SQYD	CY	LB	LF	LF				
41	a	D-41	8.95	1																					REMOVE CULVERT (12" x 33.9' CMP)	41	a	D-41
	b									42.0													3.44	24" ALTERNATIVE PIPE CULVERT		b	
	c																				1.24	260	2.68		TYPE GO (Mod) DI W/ 24-12X GRATE		c	
42	a	D-42	9.34		1																				REMOVE HEADWALL	42	a	D-42
	b				1																				REMOVE HEADWALL		b	
	c			1																					REMOVE CULVERT (12" x 38.2' CMP)		c	
	d									51.5													3.50	24" ALTERNATIVE PIPE CULVERT		d	
	e																				1.20				24" HEADWALL		e	
43	a	D-43	9.44		1																				REMOVE HEADWALL	43	a	D-43
	b				1																				REMOVE HEADWALL		b	
	c			1																					REMOVE CULVERT (18" x 37.9' CMP)		c	
	d											42.6											2.19	36" ALTERNATIVE PIPE CULVERT		d	
	e																				1.95				36" HEADWALL		e	
44	a	D-44	9.61		1																				REMOVE HEADWALL	44	a	D-44
	b			1																					REMOVE CULVERT (18" x 45.0' CMP)		b	
	c											46.5											3.10	36" ALTERNATIVE PIPE CULVERT		c	
	d																				1.95				36" HEADWALL		d	
45	a	D-45	9.73		1																				REMOVE HEADWALL	45	a	D-45
	b				1																				REMOVE HEADWALL		b	
	c						1	1.68																	ABANDON CULVERT (12" x 37.0' CMP), SAND BACKFILL		c	
	d			1																					REMOVE CULVERT (12" x 5.0' CMP)		d	
	e									46.0													4.52	24" ALTERNATIVE PIPE CULVERT		e	
	f																				1.20				24" HEADWALL		f	
46	a	D-46	9.85		1																				REMOVE HEADWALL	46	a	D-46
	b			1																					REMOVE CULVERT (12" x 38.6' CMP)		b	
	c										40.5												2.32	30" ALTERNATIVE PIPE CULVERT		c	
	d																				1.52				30" HEADWALL		d	
	e																8.3			22.7					RSP (LIGHT, METHOD B)		e	
Sht DQ-8 TOTALS				6	8		1	1.68		139.5	40.5	89.1					8.3			22.7	9.06	260						

DRAINAGE QUANTITIES

DQ-8

CALCULATED-DESIGNED BY
CHECKED BY
FUNCTIONAL SUPERVISOR
ROBERT E. POLGAR
MARLENE GIBB
MARTIN GARCIA
M. GIBB
01-23-12
REVISED BY
DATE REVISED

STATE OF CALIFORNIA - DEPARTMENT OF TRANSPORTATION
03-DESIGN
Caltrans

P:\proj4\01\37\87\drafting\0100000137id008.dgn

LAST REVISION | DATE PLOTTED => 31-AUG-2015
00-00-00 | TIME PLOTTED => 10:00

BORDER LAST REVISED 7/2/2010
USERNAME => s130875
DGN FILE => 0100000137id008.dgn
RELATIVE BORDER SCALE IS IN INCHES 0 1 2 3
UNIT 0306
PROJECT NUMBER & PHASE 01000001371

Dist	COUNTY	ROUTE	POST MILES TOTAL PROJECT	SHEET No.	TOTAL SHEETS
01	Men	128	2.8/11.1	68	98

Marlene Gibb 6-15-15
REGISTERED CIVIL ENGINEER DATE

6-15-15
PLANS APPROVAL DATE

REGISTERED PROFESSIONAL ENGINEER
MARLENE E. GIBB
No. C 51513
Exp. 06-30-16
CIVIL
STATE OF CALIFORNIA

THE STATE OF CALIFORNIA OR ITS OFFICERS OR AGENTS SHALL NOT BE RESPONSIBLE FOR THE ACCURACY OR COMPLETENESS OF SCANNED COPIES OF THIS PLAN SHEET.

DRAINAGE QUANTITIES

DRAINAGE SYSTEM No.	DRAINAGE UNIT No.	DRAINAGE Sht No.	LOCATION (PM)	REMOVE			ABANDON Culv	SAND BACKFILL	APC				CSP		AFES	24" x 18" STEEL FLARED END PIPE ARCH SECTION	RSP (METHOD B)			ROCK SLOPE PROTECTION FABRIC (CLASS 8)	MINOR CONCRETE (MINOR STRUCTURE)	Misc IRON & STEEL	(N) H OF INLET	(N) Max COVER	DESCRIPTION	DRAINAGE SYSTEM No.	DRAINAGE UNIT No.	DRAINAGE Sht No.
				Culv	HW	PIPE			18"	24"	30"	36"	24" x 18" CSP ARCH (0.109" THICK)	6" CSP CONDUIT (0.064")	36"		(LIGHT)	(1/4 TON)	(1/2 TON)										
				EA	EA	EA	EA	CY	LF	LF	LF	LF	LF	LF	EA	EA	CY	CY	CY	SQYD	CY	LB	LF	LF				
47	a	D-47	9.99		1																				REMOVE HEADWALL	47	a	D-47
	b				1																				REMOVE HEADWALL		b	
	c			1																					REMOVE CULVERT (18" x 29.4' CMP)		c	
	d									37.9														2.02	24" ALTERNATIVE PIPE CULVERT		d	
	e																				1.20				24" HEADWALL		e	
48	a	D-48	10.08		1																				REMOVE HEADWALL	48	a	D-48
	b			1																					REMOVE CULVERT (24" x 47.8' CMP)		b	
	c									45.6														3.29	24" ALTERNATIVE PIPE CULVERT		c	
	d																				1.20				24" HEADWALL		d	
	e																	6.4							RSP (1/4 TON, METHOD B)		e	
49	a	D-49	10.43		1																				REMOVE HEADWALL	49	a	D-49
	b			1																					REMOVE CULVERT (12" x 39.4' CMP)		b	
	c									42.1														2.83	24" ALTERNATIVE PIPE CULVERT		c	
	d																				1.20				24" HEADWALL		d	
50	a	D-50	10.47	1																					REMOVE CULVERT (12" x 52.6' CMP)	50	a	D-50
	b											51.8												2.70	36" ALTERNATIVE PIPE CULVERT		b	
	c																				1.95				36" HW		c	
51	a	D-51	11.07		1																				REMOVE HEADWALL	51	a	D-51
	b			1																					REMOVE CULVERT (15" x 41.3' CMP)		b	
	c									45.7														2.40	24" ALTERNATIVE PIPE CULVERT		c	
	d																				1.20				24" HW		d	
Sht DQ-2 TOTALS				5	8		3	8.73		223.8		62.5					41.6		35.2	86.0	8.65	780						
Sht DQ-3 TOTALS				6	8		1	0.44		176.9		48.3	50.7				15.8			50.1	7.92	520						
Sht DQ-4 TOTALS				7	7		1	1.18	3.0	213.1			95.4			1	8.0			25.3	16.63	1434						
Sht DQ-5 TOTALS				6	6		1	0.89	3.0	167.0	43.9		85.5			1	4.9			14.6	16.78	1940						
Sht DQ-6 TOTALS				6	4		2	2.45		225.4			87.3				12.2	8.0		55.2	14.10	260						
Sht DQ-7 TOTALS				7	6	1	2	1.99		181.2		149.2		48.0	1		3.1			10.4	9.76	1107						
Sht DQ-8 TOTALS				6	8		1	1.68		139.5	40.5	89.1					8.3	8.0		22.7	9.06	260						
Sht DQ-9 TOTALS				5	5					171.3		51.8						6.4			6.75							
GRAND TOTALS				48	52	1	11	17.36	6.0	1498.2	84.4	400.9	318.9	48.0	1	2	93.9	14.4	35.2	264.3	89.65	6301						

(N) NOT A SEPARATE PAY ITEM, FOR INFORMATION ONLY

DRAINAGE QUANTITIES

DQ-9

STATE OF CALIFORNIA - DEPARTMENT OF TRANSPORTATION
03-DESIGN
Caltrans

FUNCTIONAL SUPERVISOR: ROBERT E. POLGAR
CALCULATED-DESIGNED BY: MARLENE GIBB
CHECKED BY: MARTIN GARCIA
REVISED BY: M. GIBB
DATE REVISED: 01-23-12

P:\proj4\01\37\87\drafting\01000001371id009.dgn

LAST REVISION DATE PLOTTED => 31-AUG-2015
TIME PLOTTED => 10:00
00-00-00

BORDER LAST REVISED 7/2/2010
USERNAME => s130875
DGN FILE => 01000001371id009.dgn
RELATIVE BORDER SCALE IS IN INCHES 0 1 2 3
UNIT 0306
PROJECT NUMBER & PHASE 01000001371

Dist	COUNTY	ROUTE	POST MILES TOTAL PROJECT	SHEET No.	TOTAL SHEETS
01	Men	128	2.8/11.1	69	98

Marlene Gibb 6-15-15
REGISTERED CIVIL ENGINEER DATE

6-15-15
PLANS APPROVAL DATE

REGISTERED PROFESSIONAL ENGINEER
MARLENE E. GIBB
No. C 51513
Exp. 06-30-16
CIVIL
STATE OF CALIFORNIA

THE STATE OF CALIFORNIA OR ITS OFFICERS OR AGENTS SHALL NOT BE RESPONSIBLE FOR THE ACCURACY OR COMPLETENESS OF SCANNED COPIES OF THIS PLAN SHEET.

NOTES:

1. THIS PLAN ACCURATE FOR CONSTRUCTION AREA SIGN WORK ONLY.
2. C23B(CA) SHAL HAVE BLACK LETTERS ON ORANGE BACKGROUND.
3. EXACT SIGN LOCATIONS TO BE DETERMINED BY THE ENGINEER.

LEGEND:

- CONSTRUCTION AREA SIGN SINGLE POST
- CONSTRUCTION AREA SIGN TWO POST

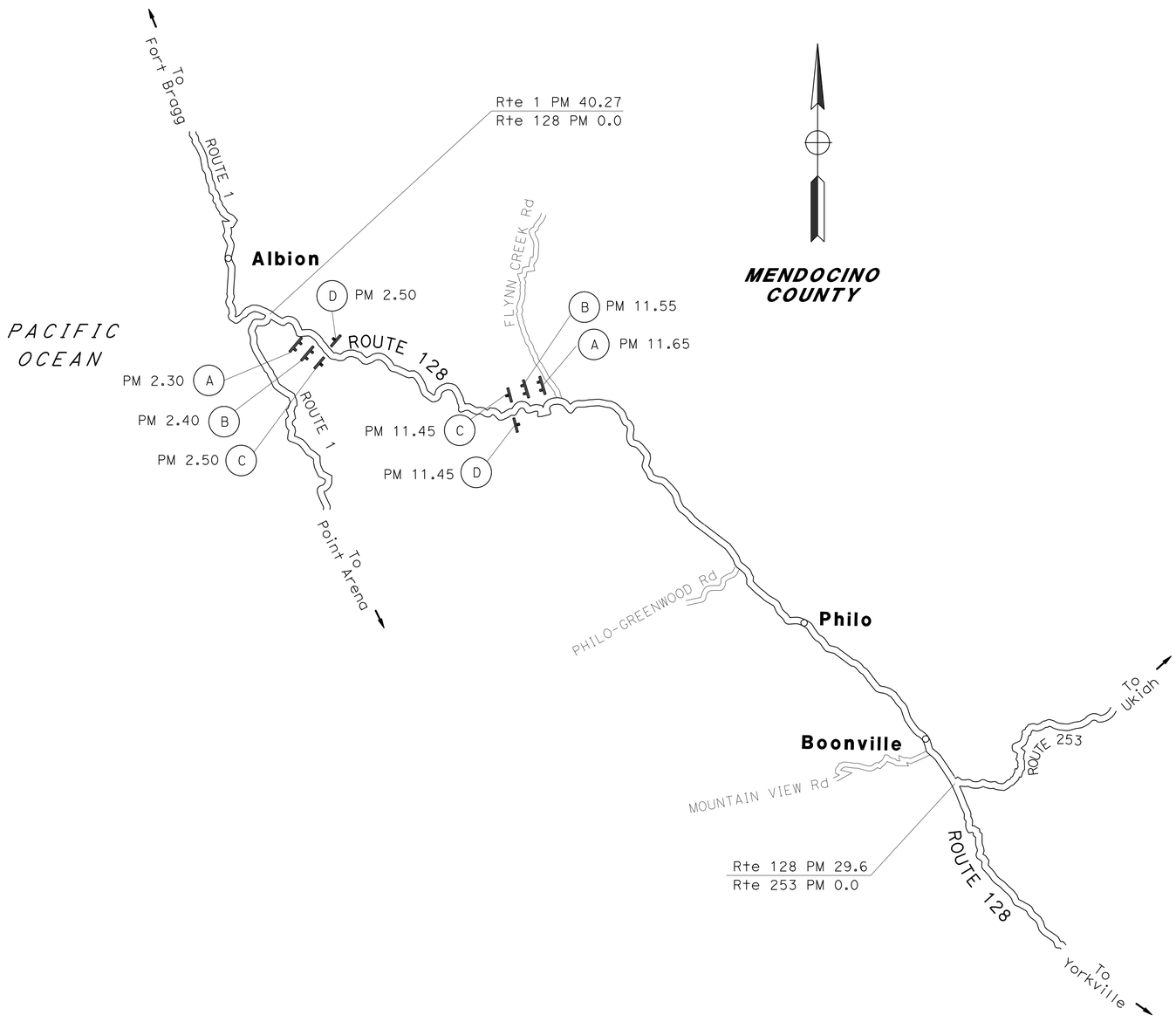

STATIONARY MOUNTED CONSTRUCTION AREA SIGNS

SIGN LETTER	SIGN CODE	SIGN MESSAGE	PANEL SIZE	No. OF POSTS AND SIZE	No. OF SIGNS
A	C40(CA)	TRAFFIC FINES DOUBLED IN CONSTRUCTION ZONES	108" x 42"	2 - 6" x 6"	2
B	G20-1	ROAD WORK NEXT 9 MILES	60" x 36"	2 - 4" x 6"	2
	C23B(CA)	DRAINAGE REHABILITATION	60" x 18"		
C	W11-1		36" x 36"	1 - 4" x 6"	2
	W16-1	SHARE THE ROAD	24" x 30"		
D	G20-2	END ROAD WORK	36" x 18"	1 - 4" x 4"	2

CONSTRUCTION AREA SIGNS

NO SCALE

CS-1

STATE OF CALIFORNIA - DEPARTMENT OF TRANSPORTATION
Caltrans
03-DESIGN

FUNCTIONAL SUPERVISOR: ROBERT E. POLGAR
CALCULATED-DESIGNED BY: MARLENE GIBB
CHECKED BY: MARTIN GARCIA
REVISED BY: M. GIBB
DATE REVISED: 01-23-12

P:\proj4\01\378x7\drafting\01000001371a001.dgn

LAST REVISION 00-00-00
DATE PLOTTED => 31-AUG-2015
TIME PLOTTED => 09:36

Dist	COUNTY	ROUTE	POST MILES TOTAL PROJECT	SHEET No.	TOTAL SHEETS
01	Men	128	2.8/11.1	70	98

Sheri M. Rodriguez 3-5-15
REGISTERED CIVIL ENGINEER DATE

SHERI M. RODRIGUEZ No. C66861 Exp. 9-30-16 CIVIL — REGISTERED PROFESSIONAL ENGINEER — STATE OF CALIFORNIA

6-15-15
PLANS APPROVAL DATE

THE STATE OF CALIFORNIA OR ITS OFFICERS OR AGENTS SHALL NOT BE RESPONSIBLE FOR THE ACCURACY OR COMPLETENESS OF SCANNED COPIES OF THIS PLAN SHEET.

NOTES:

1. CALIFORNIA CODES ARE DESIGNATED BY (CA). OTHERWISE, FEDERAL (MUTCD) CODES ARE SHOWN.
2. ALL SIGNS SHALL HAVE A BLACK LEGEND ON FLUORESCENT ORANGE BACKGROUND AND SHALL BE EQUIPPED WITH AT LEAST TWO 16" x 16" ORANGE FLAGS FOR DAYTIME CLOSURE OR FLASHING BEACONS FOR LANE CLOSURE DURING HOURS OF DARKNESS.
3. ALL CONES USED FOR LANE CLOSURES DURING THE HOURS OF DARKNESS SHALL BE FITTED WITH RETROREFLECTIVE BANDS OR SLEEVES.
4. WHEN A PILOT CAR IS USED, PLACE A C37 (CA) SIGN AT ALL INTERSECTIONS WITHIN TRAFFIC CONTROL AREA. WHERE VEHICULAR TRAFFIC CAN NOT EFFECTIVELY SELF-REGULATE, AT LEAST ONE FLAGGER SHALL BE USED AT EACH INTERSECTION WITHIN THE TRAFFIC CONTROL AREA.
5. FLAGGER SHOULD STAND IN A CONSPICUOUS PLACE, FACING TRAFFIC AT ALL TIMES, BE VISIBLE TO APPROACHING TRAFFIC AS WELL AS APPROACHING VEHICLES AFTER THE FIRST VEHICLE HAS STOPPED.
6. ADDITIONAL ADVANCE FLAGGERS ARE REQUIRED.
7. WHEN FLAGGER IS NOT VISIBLE FROM THIS LOCATION PLACE A C29 (CA) SIGN BELOW THE C9A (CA) SIGN.

LEGEND

- TRAFFIC CONE
- TEMPORARY SIGN
- DIRECTION OF TRAVEL
- PORTABLE FLASHING BEACON
- FLAGGER

SIGN PANEL SIZE (MINIMUM)

- [A] 48" x 48" - SPEED OF 45 mph OR MORE; 36" x 36" - SPEED LESS THAN 45 mph
- [B] 30" x 30"
- [C] UNUSED
- [D] UNUSED
- [E] 20" x 7"

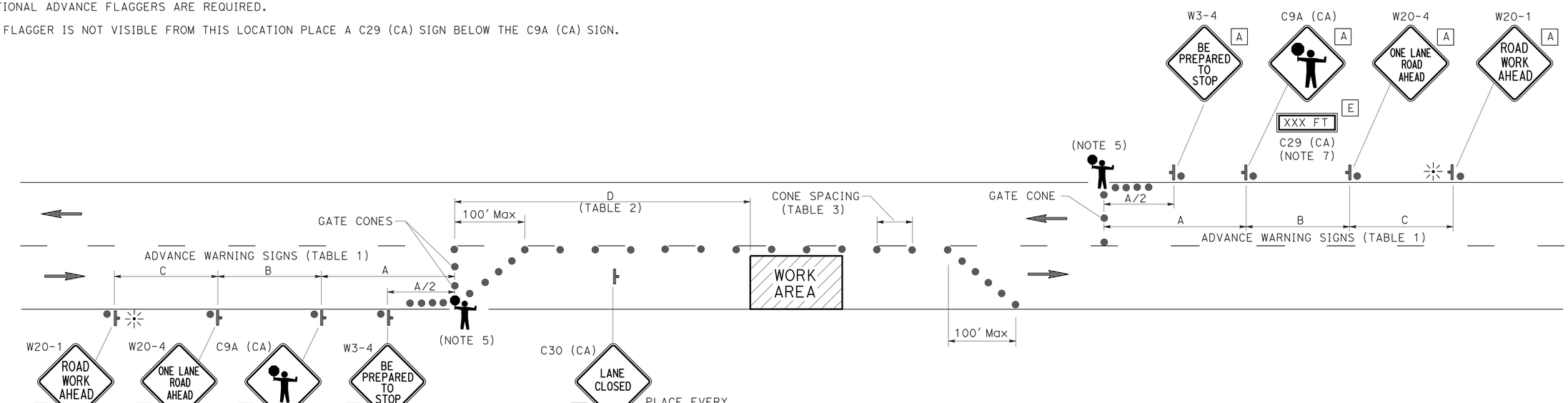

TYPICAL LANE CLOSURE WITH REVERSIBLE CONTROL

TABLE 1

ADVANCE WARNING SIGN SPACING

ROAD TYPE	Min A	Min B	Min C
	ft		
URBAN (25 mph OR LESS)	100	100	100
URBAN (30 mph TO 40 mph)	250	250	250
URBAN (MORE THAN 40 mph)	350	350	350
RURAL	500	500	500
EXPRESSWAY / FREEWAY	1000	1500	2640

TABLE 2

BUFFER SPACE

APPROACH SPEED	Min D	DOWNGRADE Min D		
		-3%*	-6%*	-9%*
mph	ft			
25 & BELOW	155	158	165	173
30	200	205	215	227
35	250	257	271	287
40	305	315	333	354
45	360	378	400	427
50	425	446	474	507
55	495	520	553	593
60	570	598	638	686
65	645	682	728	785

* USE ON SUSTAINED DOWNGRADE STEEPER THAN -3 PERCENT AND LONGER THAN 1 MILE.

TABLE 3

Max CONE SPACING

POSTED SPEED	TAPER	TANGENT	CONFLICT*
mph	ft		
20	20	40	10
25	25	50	12
30	30	60	15
35	35	70	17
40	40	80	20
45	45	90	22
50	50	100	25
55	55	110	27
60	60	120	30
65	65	130	32

* USE WHERE THERE IS A CONFLICT BETWEEN EXISTING PAVEMENT MARKINGS AND CHANNELIZERS.

TRAFFIC HANDLING PLAN

NO SCALE

APPROVED FOR TRAFFIC HANDLING WORK ONLY

TH-1

REVISED BY | DATE REVISED
SHERI M. RODRIGUEZ | TROY A. ARSENEAU
CALCULATED-DESIGNED BY | CHECKED BY
FUNCTIONAL SUPERVISOR: RICHARD MULLEN

STATE OF CALIFORNIA - DEPARTMENT OF TRANSPORTATION
Caltrans® TRAFFIC OPERATIONS

P:\proj4\01\37817\drafting\0100000137me001.dgn

LAST REVISION | DATE PLOTTED => 31-AUG-2015
00-00-00 | TIME PLOTTED => 09:36

BORDER LAST REVISED 7/2/2010 | USERNAME => s130875 | DGN FILE => 0100000137me001.dgn | RELATIVE BORDER SCALE IS IN INCHES 0 1 2 3 | UNIT 0306 | PROJECT NUMBER & PHASE 01000001371

Dist	COUNTY	ROUTE	POST MILES TOTAL PROJECT	SHEET No.	TOTAL SHEETS
01	Men	128	2.8/11.1	71	98

Marlene Gibb 6-15-15
REGISTERED CIVIL ENGINEER DATE

6-15-15
PLANS APPROVAL DATE

REGISTERED PROFESSIONAL ENGINEER
MARLENE E. GIBB
No. C 51513
Exp. 06-30-16
CIVIL
STATE OF CALIFORNIA

THE STATE OF CALIFORNIA OR ITS OFFICERS OR AGENTS SHALL NOT BE RESPONSIBLE FOR THE ACCURACY OR COMPLETENESS OF SCANNED COPIES OF THIS PLAN SHEET.

PAINT TRAFFIC STRIPE (1-COAT) AND PAVEMENT MAKER (RETROREFLECTIVE)

DRAINAGE SYSTEM No.	LOCATION (PM)	PAINT TRAFFIC STRIPE (1 COAT)			PAVEMENT MARKER (RETROREFLECTIVE)		
		DETAIL NUMBER			DETAIL NUMBER		
		19	22	27B	19 TYPE D	19 TYPE H	22 TYPE D
		LF			EACH		
1	2.81		7	14			2
2	3.01		7	14			2
3	3.08		7	14			2
4	3.20		7	14			2
5	3.36		7	14			2
6	3.46		9	18			2
7	3.66		7	14			2
8	3.71		9	19			2
9	3.89		7	14			2
10	3.92		7	14			2
11	4.02		7	14			2
12	4.05		8	15			2
13	4.08		7	14			2
14	4.17		7	14			2
15	4.45		7	14			2
16	4.50		11	20			2
17	4.55		9	17			2
18	4.78		7	14			2
19	4.83		7	14			2
20	5.03	10		21	1	1	
21	5.08	8		17	1	1	
22	5.36		7	14			2
23	5.82		7	14			2
24	5.92		7	14			2
25	6.08		7	14			2
26	6.11		7	14			2
1-26 SUBTOTAL		18	179	393	2	2	48

DRAINAGE SYSTEM No.	LOCATION (PM)	PAINT TRAFFIC STRIPE (1 COAT)			PAVEMENT MARKER (RETROREFLECTIVE)		
		DETAIL NUMBER			DETAIL NUMBER		
		19	22	27B	19 TYPE D	19 TYPE H	22 TYPE D
		LF			EACH		
27	6.48		7	14			2
28	6.66		9	18			2
29	6.74		11	22			2
30	7.07		7	14			2
31	7.40		8	15			2
32	7.51		10	19			2
33	7.76		9	18			2
34	7.81		8	16			2
35	7.95		15	30			2
36	8.08		7	14			2
37	8.55		9	17			2
38	8.75		11	23			2
39	8.87		10	19			2
40	8.91		9	19			2
41	8.95		7	14			2
42	9.34		9	24			2
43	9.44		9	17			2
44	9.61		8	16			2
45	9.73		8	17			2
46	9.85		11	21			2
47	9.99		7	14			2
48	10.08		7	14			2
49	10.43		7	14			2
50	10.47		8	16			2
51	11.07		9	18			2
1-26 SUBTOTAL		18	179	393	2	2	48
27-51 SUBTOTAL		0	220	443	0	0	50
TOTAL		18	399	836	2	2	98
GRAND TOTAL		1253			102		

PAVEMENT DELINEATION QUANTITIES

PDQ-1

REVISED BY	DATE REVISED
M. GIBB	01-23-12

CALCULATED-DESIGNED BY: MARLENE GIBB
CHECKED BY: MARTIN GARCIA
FUNCTIONAL SUPERVISOR: ROBERT E. POLGAR

STATE OF CALIFORNIA - DEPARTMENT OF TRANSPORTATION
Caltrans
03-DESIGN

LAST REVISION 00-00-00
DATE PLOTTED => 31-AUG-2015
TIME PLOTTED => 09:36

P:\proj4\01\378\drafting\0100000137nc001.dgn

BORDER LAST REVISED 7/2/2010
USERNAME => s130875
DGN FILE => 0100000137nc001.dgn
RELATIVE BORDER SCALE IS IN INCHES 0 1 2 3
UNIT 0306
PROJECT NUMBER & PHASE 01000001371

Dist	COUNTY	ROUTE	POST MILES TOTAL PROJECT	SHEET No.	TOTAL SHEETS
01	Men	128	2.8/11.1	72	98

Marlene Gibb 6-15-15
REGISTERED CIVIL ENGINEER DATE

6-15-15
PLANS APPROVAL DATE

REGISTERED PROFESSIONAL ENGINEER
MARLENE E. GIBB
No. C 51513
Exp. 06-30-16
CIVIL
STATE OF CALIFORNIA

THE STATE OF CALIFORNIA OR ITS OFFICERS OR AGENTS SHALL NOT BE RESPONSIBLE FOR THE ACCURACY OR COMPLETENESS OF SCANNED COPIES OF THIS PLAN SHEET.

ROADWAY QUANTITIES

DRAINAGE SYSTEM No.	PM	(N) ROADWAY EXCAVATION *	IMPORTED ROCKY MATERIAL	IMPORTED BORROW	CONC BACKFILL (PIPE TRENCH)	(N) MINOR HMA *	MINOR HMA		PLACE HMA (Misc AREA)	PLACE HMA DIKE (TYPE A)
							HMA APRON	DIKE		
		CY				TON	TON		SQYD	LF
1	2.81	-	3.74	0.59	-	5.24	-	-	-	-
2	3.01	-	3.64	-	-	5.52	5.60	0.50	16.58	20.67
3	3.08	-	1.84	-	5.07	5.67	3.92	0.50	11.62	19.97
4	3.20	-	2.44	1.29	-	5.35	-	-	-	-
5	3.36	-	8.03	-	4.23	5.74	4.33	0.50	12.84	20.05
6	3.46	-	2.59	-	-	6.95	-	-	-	-
7	3.66	0.21	2.25	-	7.13	5.24	-	-	-	-
8	3.71	0.80	4.70	-	-	6.26	-	-	-	-
9	3.89	-	4.24	-	0.20	5.39	4.59	0.50	13.61	21.74
10	3.92	-	-	1.73	-	5.73	-	-	-	-
11	4.02	-	2.23	1.21	2.84	5.57	-	-	-	-
12	4.05	-	-	7.49	6.84	5.31	3.21	0.50	9.50	20.12
13	4.08	3.35	6.45	-	-	5.37	-	-	-	-
14	4.17	-	6.90	-	2.58	5.84	8.62	0.55	25.53	22.25
15	4.45	6.16	-	14.55	7.02	5.50	-	-	-	-
16	4.50	6.96	9.46	0.34	6.35	5.93	-	-	-	-
17	4.55	3.49	-	3.82	6.40	5.48	-	-	-	-
18	4.78	1.72	-	10.73	4.67	4.98	-	-	-	-
19	4.83	-	2.73	-	4.53	5.44	3.80	0.50	11.25	20.03
20	5.03	9.35	-	2.92	6.54	6.78	-	-	-	-
21	5.08	3.60	-	-	10.25	6.58	-	-	-	-
22	5.36	0.31	3.68	-	5.12	5.49	5.00	0.50	14.82	20.26
23	5.82	-	-	4.31	6.92	5.33	4.19	0.39	12.41	20.03
24	5.92		-	1.47	7.17	5.55	-	-	-	-
25	6.08	-	7.10	-	4.14	5.42	5.53	0.50	16.38	20.08
26	6.11	-	8.20	-	4.02	5.59	2.89	0.50	8.56	20.13
27	6.48	-	-	0.52	4.03	5.46	-	-	-	-
28	6.66	4.53	-	-	5.11	6.30	-	-	-	-
29	6.74	1.36	2.89	-	3.68	5.16	3.70	0.50	10.96	20.25
30	7.07	-	3.15	-	3.85	5.53	-	-	-	-
1-30 SUBTOTAL		41.84	86.26	50.97	118.69	169.70	55.38	5.94	164.06	245.58

DRAINAGE SYSTEM No.	PM	(N) ROADWAY EXCAVATION *	IMPORTED ROCKY MATERIAL	IMPORTED BORROW	CONC BACKFILL (PIPE TRENCH)	(N) MINOR HMA *	MINOR HMA		PLACE HMA (Misc AREA)	PLACE HMA DIKE (TYPE A)
							HMA APRON	DIKE		
		CY				TON	TON		SQYD	LF
31	7.40	9.48	-	-	5.10	5.30	-	-	-	-
32	7.51	1.67	9.21	-	3.65	6.72	-	-	-	-
33	7.76	6.76	13.16	-	5.40	7.71	-	-	-	-
34	7.81	-	1.36	-	-	6.53	-	-	-	-
35	7.95	1.23	-	7.82	6.98	6.66	-	-	-	-
36	8.08	0.31	2.65	-	9.18	5.59	3.43	0.50	10.17	20.25
37	8.55	6.08	-	-	8.81	5.64	5.12	0.52	15.16	20.86
38	8.75	4.02	13.73	-	-	7.65	-	_	-	-
39	8.87	5.19	-	-	3.84	5.87	-	_	-	-
40	8.91	-	2.04	-	4.50	7.26	3.82	0.50	11.31	19.83
41	8.95	-	7.05	-	4.88	5.55	5.37	0.50	15.92	19.86
42	9.34	5.51	-	-	4.55	7.26	-	_	-	-
43	9.44	1.84	2.14	-	11.20	6.53	-	_	-	-
44	9.61	1.35	-	-	5.65	6.42	-	_	-	-
45	9.73	2.87	2.78	-	-	5.76	-	_	-	-
46	9.85	3.92	-	-	4.50	7.18	-	_	-	-
47	9.99	1.03	-	5.09	6.55	5.21	-	_	-	-
48	10.08	1.16	2.28	-	5.59	6.01	-	_	-	-
49	10.43	0.37	-	-	3.81	5.50	-	_	-	-
50	10.47	7.45	2.87	-	12.92	6.37	-	_	-	-
51	11.07	12.41	-	-	3.25	5.47	-	_	-	-
1-30 SUBTOTAL		41.84	86.26	50.97	118.69	169.70	55.38	5.94	164.06	245.58
31-51 SUBTOTAL		72.65	59.27	12.91	110.34	132.19	17.74	2.02	52.56	80.80
GRAND TOTALS		114.49	145.53	63.88	229.03	301.89	73.12	7.96	216.62	326.38
							81.08			

* ROADWAY EXCAVATION, MINOR HMA AND TACK COAT ARE ACCOUNTED FOR UNDER ALTERNATIVE PIPE CULVERT

(N) NOT A SEPARATE PAY ITEM, FOR INFORMATION ONLY

CABLE RAILING

DRAINAGE SYSTEM No.	PM	LENGTH
		LF
6	3.46	12
21	5.08	12
34	7.81	12
35	7.95	12
43	9.44	12
44	9.61	12
46	9.85	12
50	10.47	12
TOTAL		96

RECONSTRUCT GUARDRAIL

DRAINAGE SYSTEM No.	PM	R†/L†	LENGTH
			LF
3	3.08	L†	12.5
22	5.36	R†	12.5
TOTAL			25.0

SUMMARY OF QUANTITIES

Q-1

CALCULATED-DESIGNED BY	REVISED BY	FUNCTIONAL SUPERVISOR	STATE OF CALIFORNIA - DEPARTMENT OF TRANSPORTATION
MARTIN GARCIA	M. GIBB	ROBERT E. POLGAR	03-DESIGN
JOSE LOPEZ	01-23-12		Caltrans
CHECKED BY	DATE REVISED		

LAST REVISION 00-00-00
DATE PLOTTED => 31-AUG-2015
TIME PLOTTED => 09:36

BORDER LAST REVISED 7/2/2010 | USERNAME => s130875 | DGN FILE => 0100000137pa001.dgn | RELATIVE BORDER SCALE IS IN INCHES 0 1 2 3 | UNIT 0306 | PROJECT NUMBER & PHASE 01000001371

Dist	COUNTY	ROUTE	POST MILES TOTAL PROJECT	SHEET No.	TOTAL SHEETS
01	Men	128	2.8/11.1	73	98

Marlene Gibb 6-15-15
REGISTERED CIVIL ENGINEER DATE

6-15-15
PLANS APPROVAL DATE

REGISTERED PROFESSIONAL ENGINEER
MARLENE E. GIBB
No. C 51513
Exp. 06-30-16
CIVIL
STATE OF CALIFORNIA

THE STATE OF CALIFORNIA OR ITS OFFICERS OR AGENTS SHALL NOT BE RESPONSIBLE FOR THE ACCURACY OR COMPLETENESS OF SCANNED COPIES OF THIS PLAN SHEET.

TEMPORARY FENCE (TYPE ESA)

DRAINAGE SYSTEM No.	PM	Temp FENCE (TYPE ESA) LF
1	2.81	-
2	3.01	50.26
3	3.08	50.26
4	3.20	53.57
5	3.36	-
6	3.46	100.52
7	3.66	-
8	3.71	50.26
9	3.89	45.03
10	3.92	68.77
11	4.02	65.17
12	4.05	31.45
13	4.08	25.13
14	4.17	50.26
15	4.45	25.13
16	4.50	20.04
17	4.55	49.96
18	4.78	75.39
19	4.83	-
20	5.03	25.13
21	5.08	57.59
22	5.36	-
23	5.82	79.82
24	5.92	75.39
25	6.08	75.39
26	6.11	24.35
1-26 SUBTOTAL		1,098.87

DRAINAGE SYSTEM No.	PM	Temp FENCE (TYPE ESA) LF
27	6.48	98.52
28	6.66	100.52
29	6.74	75.39
30	7.07	50.26
31	7.40	93.75
32	7.51	62.64
33	7.76	31.29
34	7.81	69.58
35	7.95	69.23
36	8.08	45.00
37	8.55	34.31
38	8.75	66.39
39	8.87	50.26
40	8.91	23.43
41	8.95	25.13
42	9.34	105.70
43	9.44	136.25
44	9.61	126.54
45	9.73	125.37
46	9.85	85.71
47	9.99	68.70
48	10.08	100.86
49	10.43	56.24
50	10.47	83.11
51	11.07	67.94
1-26 SUBTOTAL		1,098.87
27-51 SUBTOTAL		1,852.12
TOTAL		2,951

MARKER (CULVERT)

DRAINAGE SYSTEM No.	PM	MARKER (CULVERT) EA	
1	0.18	2	R†/L†
2	0.40	2	R†/L†
3	0.43	2	R†/L†
4	0.50	2	R†/L†
5	0.59	2	R†/L†
6	0.66	2	R†/L†
7	0.71	2	R†/L†
8	0.73	2	R†/L†
9	0.79	2	R†/L†
10	0.82	2	R†/L†
11	0.96	2	R†/L†
12	1.02	2	R†/L†
13	1.10	2	R†/L†
14	1.15	2	R†/L†
15	1.29	2	R†/L†
16	1.34	2	R†/L†
17	1.38	2	R†/L†
18	1.94	2	R†/L†
19	1.99	2	R†/L†
20	2.03	2	R†/L†
21	2.11	2	R†/L†
22	2.43	2	R†/L†
23	2.59	2	R†/L†
24	2.63	2	R†/L†
25	6.08	2	R†/L†
26	6.11	2	R†/L†
1-26 SUBTOTAL		52	

DRAINAGE SYSTEM No.	PM	MARKER (CULVERT) EA	
27	6.48	2	R†/L†
28	6.66	2	R†/L†
29	6.74	2	R†/L†
30	7.07	2	R†/L†
31	7.40	2	R†/L†
32	7.51	2	R†/L†
33	7.76	2	R†/L†
34	7.81	2	R†/L†
35	7.95	2	R†/L†
36	8.08	2	R†/L†
37	8.55	2	R†/L†
38	8.75	2	R†/L†
39	8.87	2	R†/L†
40	8.91	2	R†/L†
41	8.95	2	R†/L†
42	9.34	2	R†/L†
43	9.44	2	R†/L†
44	9.61	2	R†/L†
45	9.73	2	R†/L†
46	9.85	2	R†/L†
47	9.99	2	R†/L†
48	10.08	2	R†/L†
49	10.43	2	R†/L†
50	10.47	2	R†/L†
51	11.07	2	R†/L†
1-26 SUBTOTAL		52	
27-51 SUBTOTAL		50	
GRAND TOTALS		102	

OBJECT MARKER

DRAINAGE SYSTEM No.	PM	QUANTITY EA
16	4.50	1
33	7.76	1
47	9.99	1
TOTAL		3

REMOVE MARKER

DRAINAGE SYSTEM No.	LOCATION (PM)	TYPE CULVER† EA	TYPE OBJECT MARKER EA
1	0.18	2	
2	0.40	2	
3	0.43	2	
4	0.50	2	
5	0.59	2	
6	0.66	2	
7	0.71	2	
8	0.73	2	
9	0.79	2	
10	0.82	2	
11	0.96	2	
12	1.02	2	
13	1.10	2	
14	1.15	2	
15	1.29	2	
16	1.34	2	1
17	1.38	2	
18	1.94	2	
19	1.99	2	
20	2.03	2	
21	2.11	2	
22	2.43	2	
23	2.59	2	
24	2.63	2	
25	6.08	2	
26	6.11	2	
1-26 SUBTOTAL		52	1

CULVER† DRAINAGE SYSTEM No.	LOCATION (PM)	TYPE CULVER† EA	TYPE OBJECT MARKER EA
27	6.48	2	
28	6.66	2	
29	6.74	2	
30	7.07	2	
31	7.40	2	
32	7.51	2	
33	7.76	2	1
34	7.81	2	
35	7.95	2	
36	8.08	2	
37	8.55	2	
38	8.75	2	
39	8.87	2	
40	8.91	2	
41	8.95	2	
42	9.34	2	
43	9.44	2	
44	9.61	2	
45	9.73	2	
46	9.85	2	
47	9.99	2	1
48	10.08	2	
49	10.43	2	
50	10.47	2	
51	11.07	2	
1-26 SUBTOTAL		52	1
27-51 SUBTOTAL		50	2
TOTALS		102	3
GRAND TOTALS		105	

SUMMARY OF QUANTITIES

Q-2

REVISED BY	DATE REVISED
M. GIBB	01-23-12

CALCULATED-DESIGNED BY: MARLENE GIBB
CHECKED BY: MARTIN GARCIA
FUNCTIONAL SUPERVISOR: ROBERT E. POLGAR

STATE OF CALIFORNIA - DEPARTMENT OF TRANSPORTATION
Caltrans® 03-DESIGN

P:\proj4\01\378\Tdrafting\0100000137pa002.dgn

LAST REVISION 00-00-00
DATE PLOTTED => 31-AUG-2015
TIME PLOTTED => 09:36

BORDER LAST REVISED 7/2/2010
USERNAME => s130875
DGN FILE => 0100000137pa002.dgn
RELATIVE BORDER SCALE IS IN INCHES 0 1 2 3
UNIT 0306
PROJECT NUMBER & PHASE 01000001371

Dist	COUNTY	ROUTE	POST MILES TOTAL PROJECT	SHEET No.	TOTAL SHEETS
01	Men	128	2.8/11.1	74	98

Laura Lazzarotto
LICENSED LANDSCAPE ARCHITECT

6-15-15
PLANS APPROVAL DATE

LICENSED LANDSCAPE ARCHITECT
Laura Lazzarotto
Signature
8-31-05
Renewal Date
6-15-15
Date
STATE OF CALIFORNIA

THE STATE OF CALIFORNIA OR ITS OFFICERS OR AGENTS SHALL NOT BE RESPONSIBLE FOR THE ACCURACY OR COMPLETENESS OF SCANNED COPIES OF THIS PLAN SHEET.

FIBER ROLLS

SEQUENCE	ITEM	MATERIAL		REMARKS
		DESCRIPTION	TYPE	
FIBER ROLLS MUST BE INSTALLED BEFORE EROSION CONTROL	FIBER ROLLS	FIBER ROLL	TYPE B 8" TO 10" Dia	TYPE 1 FIBER ROLL INSTALLATION

EROSION CONTROL TYPE 1

ITEM	REMARKS
DUFF	DUFF TO BE REMOVED AND REPLACED AT SAME LOCATION ONLY

EROSION CONTROL TYPE 2

ITEM	MATERIAL	
	DESCRIPTION	TYPE
ROLLED EROSION CONTROL PRODUCT	EROSION CONTROL BLANKET	A

EROSION CONTROL TYPE 3

SEQUENCE	ITEM	MATERIAL		APPLICATION RATE
		DESCRIPTION	TYPE	
STEP 1	WOOD MULCH	WALK-ON BARK	FIR	269 CY/ACRE

LEGEND

- X — DRAINAGE SYSTEM No.
- ⊗ — DRAINAGE UNIT
- ROCK SLOPE PROTECTION
- Temp FENCE (TYPE ESA)
- EC TYPE 1
- EC TYPE 2
- EC TYPE 3

EROSION CONTROL LEGEND
ECL-1

REVISED BY | DATE REVISED
LAURA LAZZAROTTO | RON FLORY
CALCULATED-DESIGNED BY | CHECKED BY
SENIOR LANDSCAPE ARCHITECT | RON FLORY
STATE OF CALIFORNIA - DEPARTMENT OF TRANSPORTATION
Caltrans® LANDSCAPE

P:\proj4\01\87817\drafting\10000013?tc001.dgn

LAST REVISION | DATE PLOTTED => 31-AUG-2015
00-00-00 | TIME PLOTTED => 09:36

BORDER LAST REVISED 7/2/2010 | USERNAME => $USERID | DGN FILE => 0100000137tc001.dgn | RELATIVE BORDER SCALE IS IN INCHES 0 1 2 3 | UNIT 0314 | PROJECT NUMBER & PHASE 01000001371

Dist	COUNTY	ROUTE	POST MILES TOTAL PROJECT	SHEET No.	TOTAL SHEETS
01	Men	128	2.8/11.1	75	98

Laura Lazzarotto
LICENSED LANDSCAPE ARCHITECT

6-15-15
PLANS APPROVAL DATE

THE STATE OF CALIFORNIA OR ITS OFFICERS OR AGENTS SHALL NOT BE RESPONSIBLE FOR THE ACCURACY OR COMPLETENESS OF SCANNED COPIES OF THIS PLAN SHEET.

LICENSED LANDSCAPE ARCHITECT — Laura Lazzarotto — Signature — 8-31-05 Renewal Date — 6-15-15 Date — STATE OF CALIFORNIA

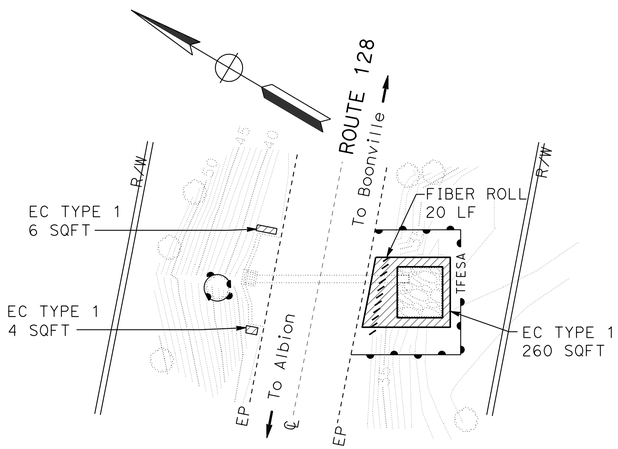

DRAINAGE SYSTEM No. 2

ROUTE 128
PM 3.01

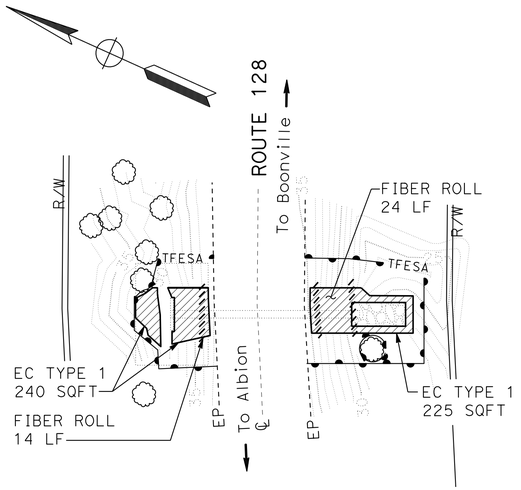

DRAINAGE SYSTEM No. 4

ROUTE 128
PM 3.20

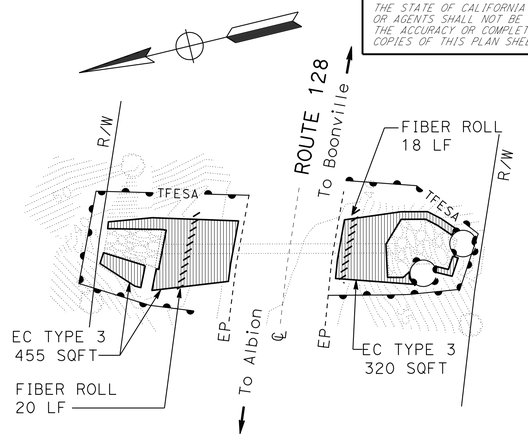

DRAINAGE SYSTEM No. 6

ROUTE 128
PM 3.46

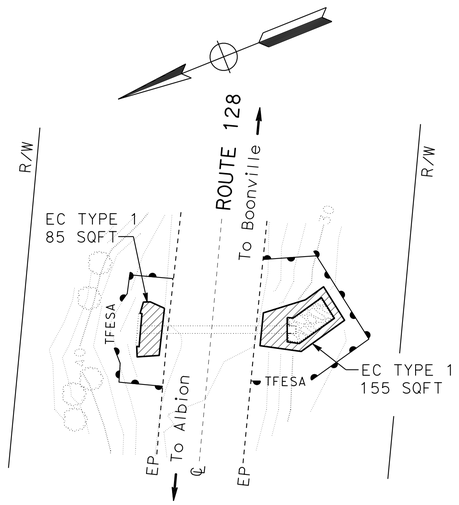

DRAINAGE SYSTEM No. 1

ROUTE 128
PM 2.81

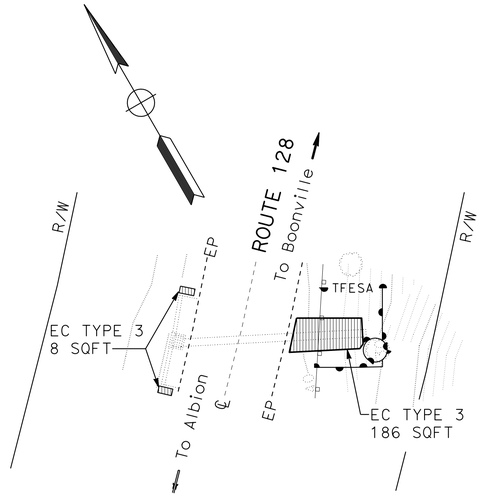

DRAINAGE SYSTEM No. 3

ROUTE 128
PM 3.08

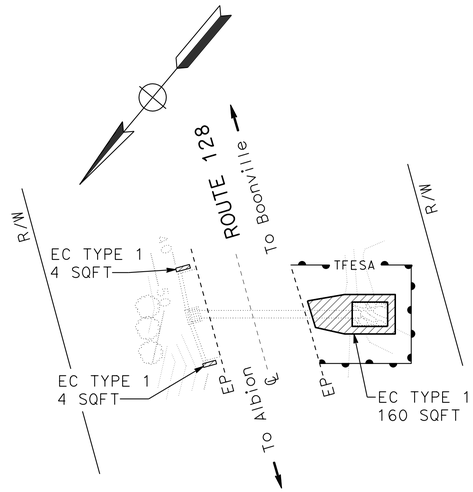

DRAINAGE SYSTEM No. 5

ROUTE 128
PM 3.36

EROSION CONTROL PLAN

SCALE: 1" = 20′ **EC-1**

STATE OF CALIFORNIA - DEPARTMENT OF TRANSPORTATION
LANDSCAPE
SENIOR LANDSCAPE ARCHITECT: RON FLORY
CALCULATED-DESIGNED BY
CHECKED BY: RON FLORY
REVISED BY
DATE REVISED
LAURA LAZZAROTTO

LAST REVISION 00-00-00
DATE PLOTTED => 31-AUG-2015
TIME PLOTTED => 09:36

P:\proj4\01\378x7\drafting\10000137te001.dgn

BORDER LAST REVISED 7/2/2010
USERNAME => $USERID
DGN FILE => 0100000137te001.dgn
RELATIVE BORDER SCALE IS IN INCHES 0 1 2 3
UNIT 0314
PROJECT NUMBER & PHASE 01000001371

Dist	COUNTY	ROUTE	POST MILES TOTAL PROJECT	SHEET No.	TOTAL SHEETS
01	Men	128	2.8/11.1	76	98

Laura Lazzarotto
LICENSED LANDSCAPE ARCHITECT

6-15-15
PLANS APPROVAL DATE

THE STATE OF CALIFORNIA OR ITS OFFICERS OR AGENTS SHALL NOT BE RESPONSIBLE FOR THE ACCURACY OR COMPLETENESS OF SCANNED COPIES OF THIS PLAN SHEET.

LICENSED LANDSCAPE ARCHITECT — Laura Lazzarotto — Signature 8-31-15 — Renewal Date 6-15-15 — Date — STATE OF CALIFORNIA

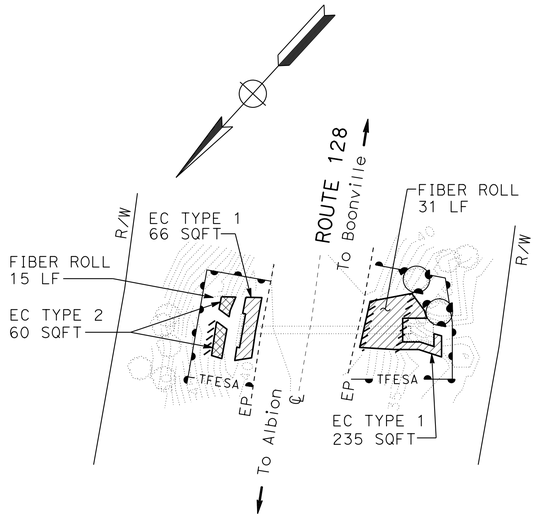

DRAINAGE SYSTEM No. 8

ROUTE 128
PM 3.71

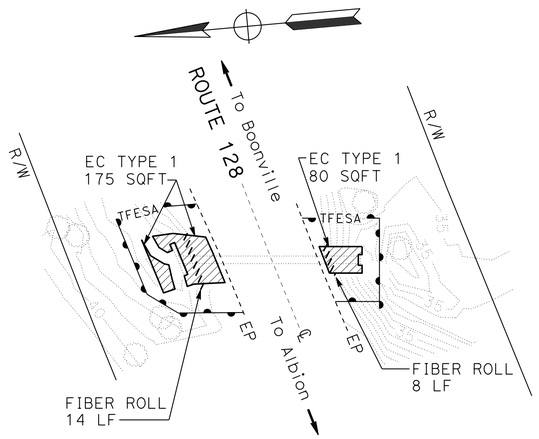

DRAINAGE SYSTEM No. 10

ROUTE 128
PM 3.92

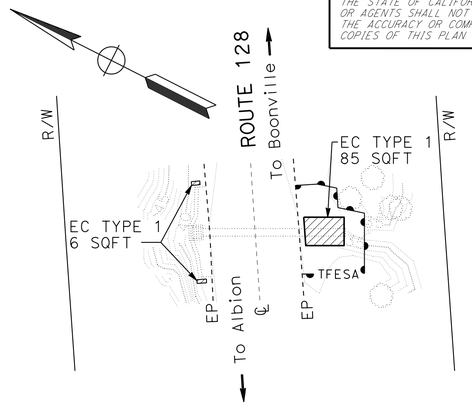

DRAINAGE SYSTEM No. 12

ROUTE 128
PM 4.05

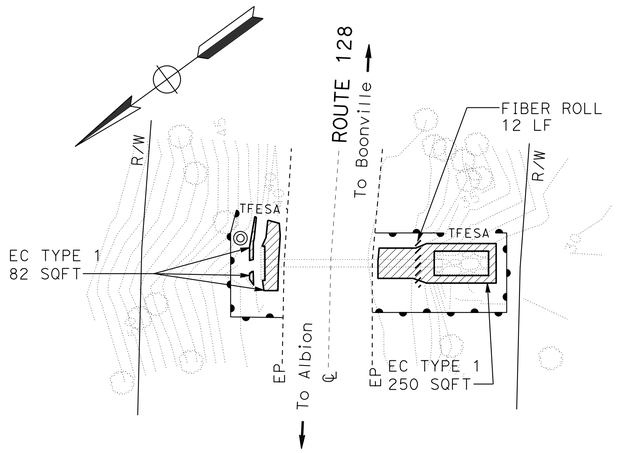

DRAINAGE SYSTEM No. 7

ROUTE 128
PM 3.66

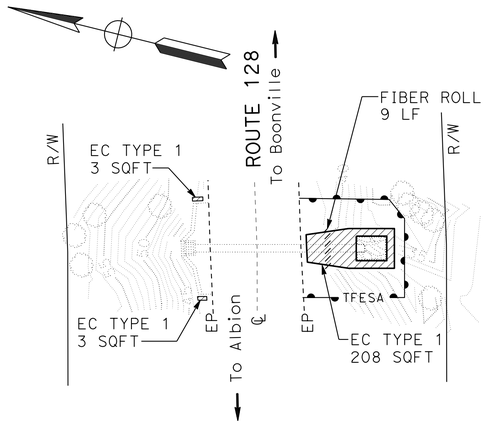

DRAINAGE SYSTEM No. 9

ROUTE 128
PM 3.89

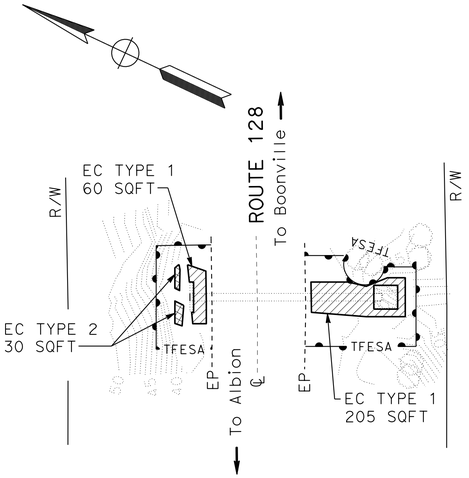

DRAINAGE SYSTEM No. 11

ROUTE 128
PM 4.02

EROSION CONTROL PLAN

SCALE: 1" = 20′ **EC-2**

STATE OF CALIFORNIA - DEPARTMENT OF TRANSPORTATION
Caltrans®
LANDSCAPE
SENIOR LANDSCAPE ARCHITECT: RON FLORY
CALCULATED-DESIGNED BY: LAURA LAZZAROTTO
CHECKED BY: RON FLORY
REVISED BY
DATE REVISED

P:\proj4\01\07817\drafting\01000001371te002.dgn

LAST REVISION 00-00-00
DATE PLOTTED => 31-AUG-2015
TIME PLOTTED => 09:36

BORDER LAST REVISED 7/2/2010
USERNAME => $USERID
DGN FILE => 01000001371te002.dgn
RELATIVE BORDER SCALE IS IN INCHES 0 1 2 3
UNIT 0314
PROJECT NUMBER & PHASE 01000001371

Dist	COUNTY	ROUTE	POST MILES TOTAL PROJECT	SHEET No.	TOTAL SHEETS
01	Men	128	2.8/11.1	77	98

Laura Lazzarotto
LICENSED LANDSCAPE ARCHITECT

6-15-15
PLANS APPROVAL DATE

THE STATE OF CALIFORNIA OR ITS OFFICERS OR AGENTS SHALL NOT BE RESPONSIBLE FOR THE ACCURACY OR COMPLETENESS OF SCANNED COPIES OF THIS PLAN SHEET.

LICENSED LANDSCAPE ARCHITECT — Laura Lazzarotto — Signature 8-31-15 Renewal Date 6-15-15 Date — STATE OF CALIFORNIA

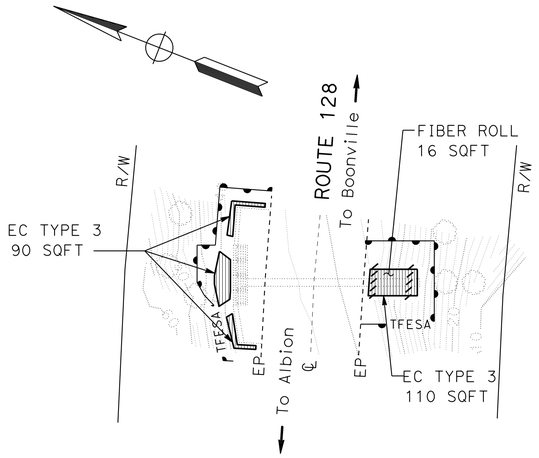

DRAINAGE SYSTEM No. 14

ROUTE 128
PM 4.17

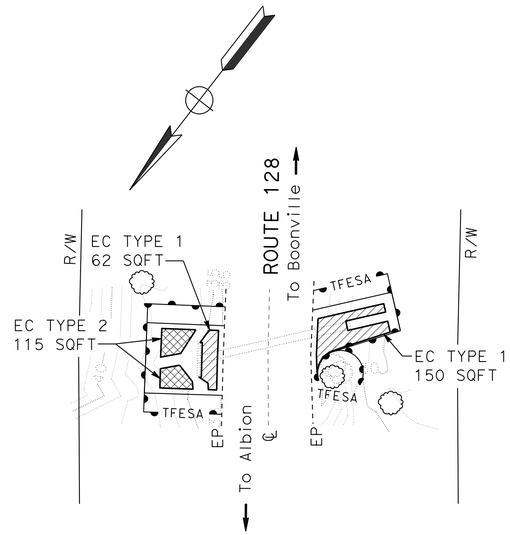

DRAINAGE SYSTEM No. 16

ROUTE 128
PM 4.50

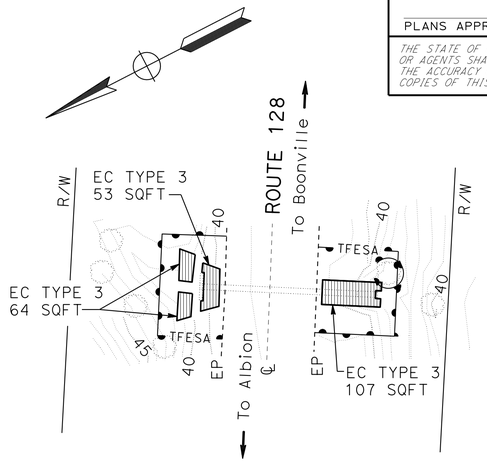

DRAINAGE SYSTEM No. 18

ROUTE 128
PM 4.78

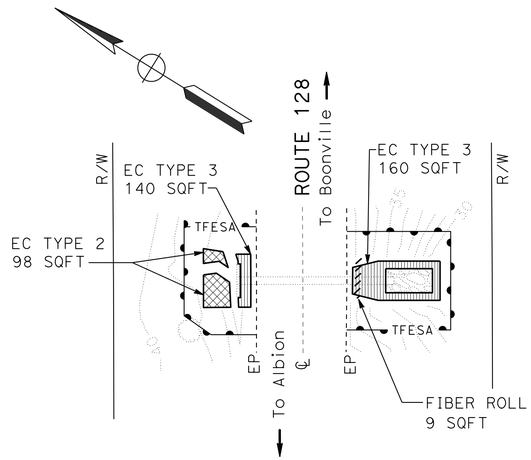

DRAINAGE SYSTEM No. 13

ROUTE 128
PM 4.08

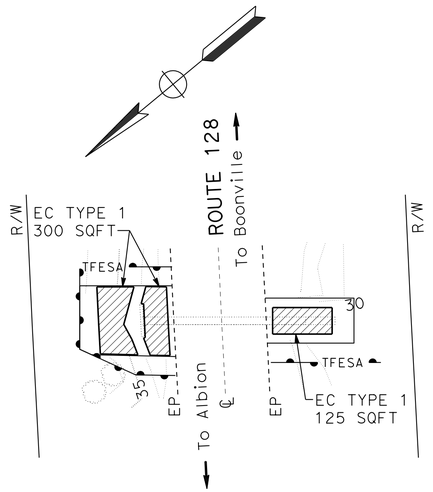

DRAINAGE SYSTEM No. 15

ROUTE 128
PM 4.55

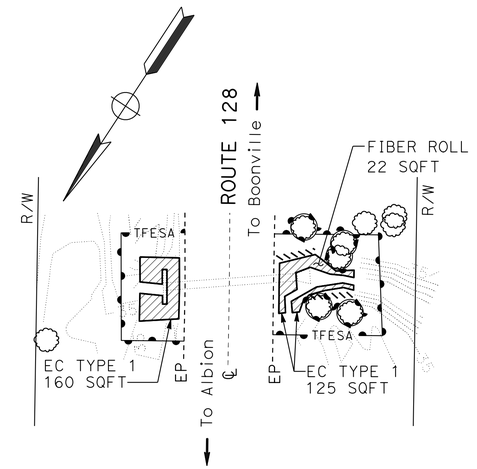

DRAINAGE SYSTEM No. 17

ROUTE 128
PM 4.55

EROSION CONTROL PLAN

SCALE: 1" = 20′ **EC-3**

STATE OF CALIFORNIA - DEPARTMENT OF TRANSPORTATION
LANDSCAPE
Caltrans®

CALCULATED-DESIGNED BY
CHECKED BY
SENIOR LANDSCAPE ARCHITECT
RON FLORY
LAURA LAZZAROTTO
RON FLORY

REVISED BY	DATE REVISED

P:\proj4\01\07817\drafting\01000001371te003.dgn

LAST REVISION 00-00-00
DATE PLOTTED => 31-AUG-2015
TIME PLOTTED => 09:36

BORDER LAST REVISED 7/2/2010
USERNAME => $USERID
DGN FILE => 01000001371te003.dgn
RELATIVE BORDER SCALE IS IN INCHES 0 1 2 3
UNIT 0314
PROJECT NUMBER & PHASE 01000001371

Dist	COUNTY	ROUTE	POST MILES TOTAL PROJECT	SHEET No.	TOTAL SHEETS
01	Men	128	2.8/11.1	78	98

Laura Lazzarotto
LICENSED LANDSCAPE ARCHITECT

6-15-15
PLANS APPROVAL DATE

THE STATE OF CALIFORNIA OR ITS OFFICERS OR AGENTS SHALL NOT BE RESPONSIBLE FOR THE ACCURACY OR COMPLETENESS OF SCANNED COPIES OF THIS PLAN SHEET.

LICENSED LANDSCAPE ARCHITECT — Laura Lazzarotto — Signature — 8-31-05 Renewal Date — 6-15-15 Date — STATE OF CALIFORNIA

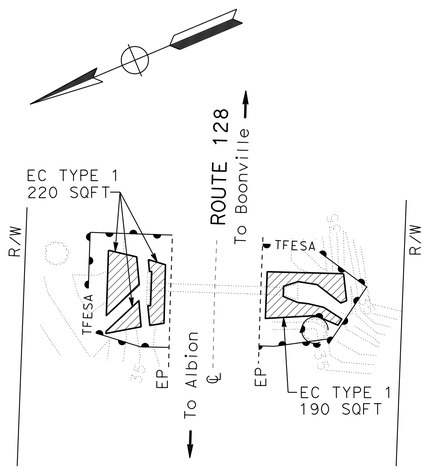

DRAINAGE SYSTEM No. 20

ROUTE 128
PM 5.03

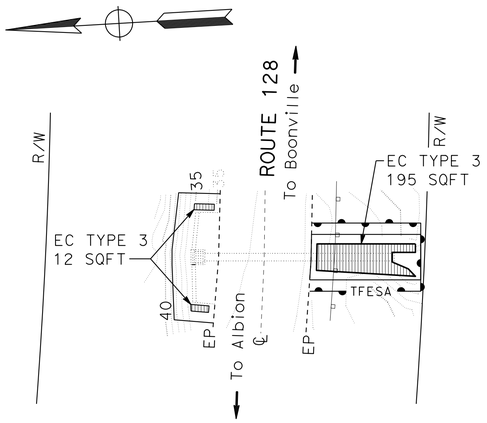

DRAINAGE SYSTEM No. 22

ROUTE 128
PM 5.36

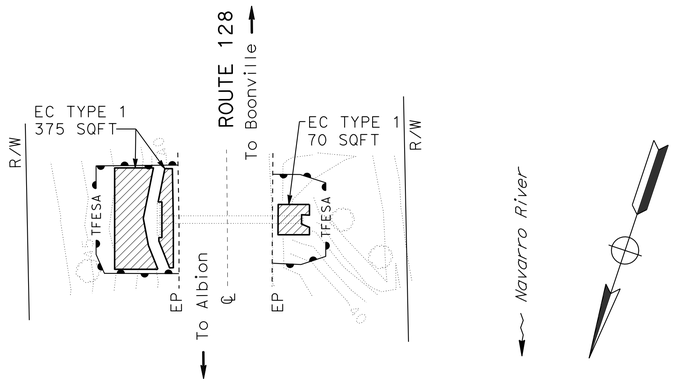

DRAINAGE SYSTEM No. 24

ROUTE 128
PM 5.92

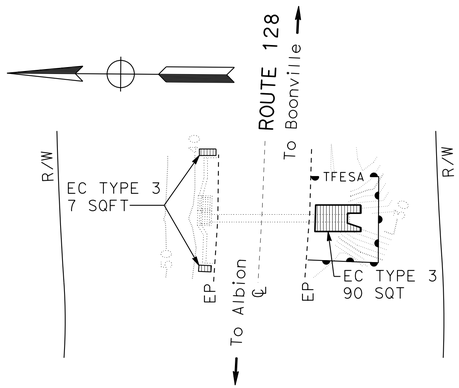

DRAINAGE SYSTEM No. 19

ROUTE 128
PM 4.83

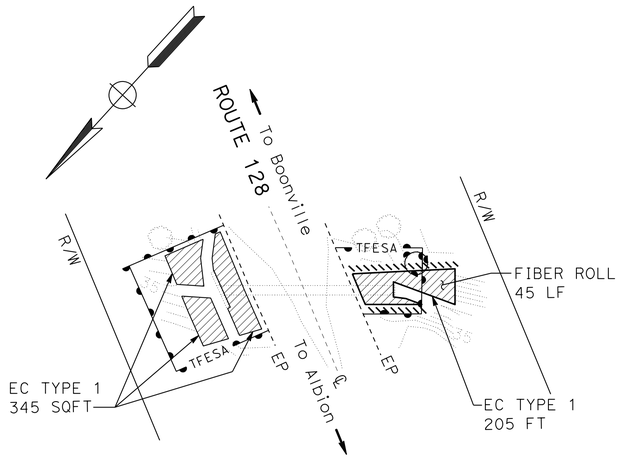

DRAINAGE SYSTEM No. 21

ROUTE 128
PM 5.08

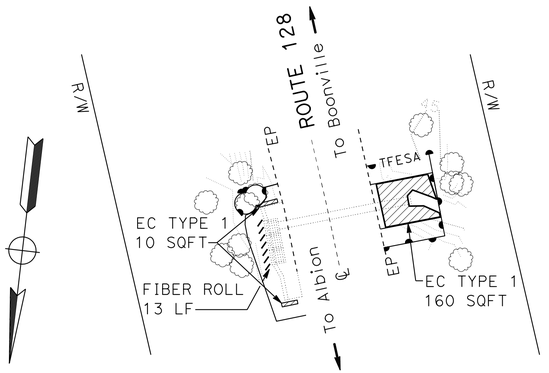

DRAINAGE SYSTEM No. 23

ROUTE 128
PM 5.82

EROSION CONTROL PLAN

SCALE: 1" = 20′ **EC-4**

STATE OF CALIFORNIA - DEPARTMENT OF TRANSPORTATION
LANDSCAPE
Caltrans®
SENIOR LANDSCAPE ARCHITECT: RON FLORY
CALCULATED-DESIGNED BY: LAURA LAZZAROTTO
CHECKED BY: RON FLORY
REVISED BY
DATE REVISED

P:\proj4\01\07817\drafting\01000001371te004.dgn

LAST REVISION 00-00-00
DATE PLOTTED => 31-AUG-2015
TIME PLOTTED => 09:36

BORDER LAST REVISED 7/2/2010
USERNAME => $USERID
DGN FILE => 01000001371te004.dgn
RELATIVE BORDER SCALE IS IN INCHES 0 1 2 3
UNIT 0314
PROJECT NUMBER & PHASE 01000001371

Dist	COUNTY	ROUTE	POST MILES TOTAL PROJECT	SHEET No.	TOTAL SHEETS
01	Men	128	2.8/11.1	79	98

Laura Lazzarotto
LICENSED LANDSCAPE ARCHITECT

6-15-15
PLANS APPROVAL DATE

LICENSED LANDSCAPE ARCHITECT — Laura Lazzarotto — Signature — 8-31-05 Renewal Date — 6-15-15 Date — STATE OF CALIFORNIA

THE STATE OF CALIFORNIA OR ITS OFFICERS OR AGENTS SHALL NOT BE RESPONSIBLE FOR THE ACCURACY OR COMPLETENESS OF SCANNED COPIES OF THIS PLAN SHEET.

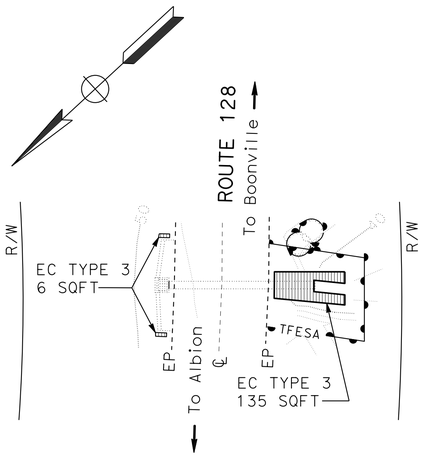

DRAINAGE SYSTEM No. 26

ROUTE 128
PM 6.11

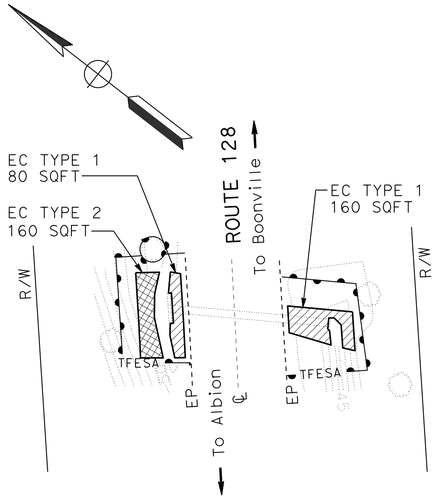

DRAINAGE SYSTEM No. 28

ROUTE 128
PM 6.66

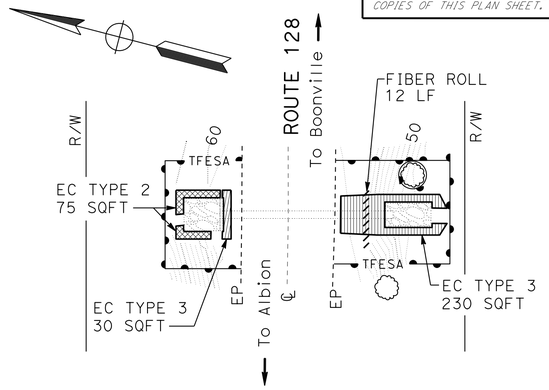

DRAINAGE SYSTEM No. 30

ROUTE 128
PM 7.07

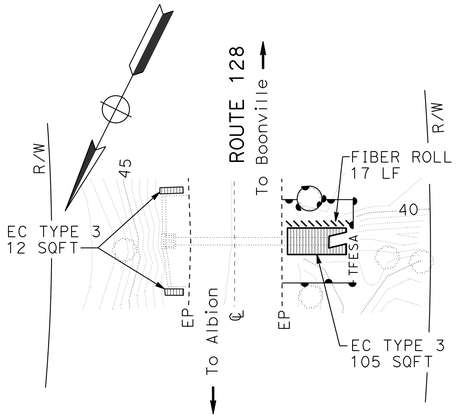

DRAINAGE SYSTEM No. 25

ROUTE 128
PM 6.08

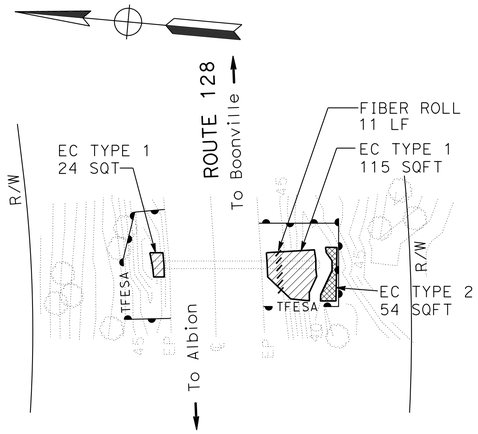

DRAINAGE SYSTEM No. 27

ROUTE 128
PM 6.48

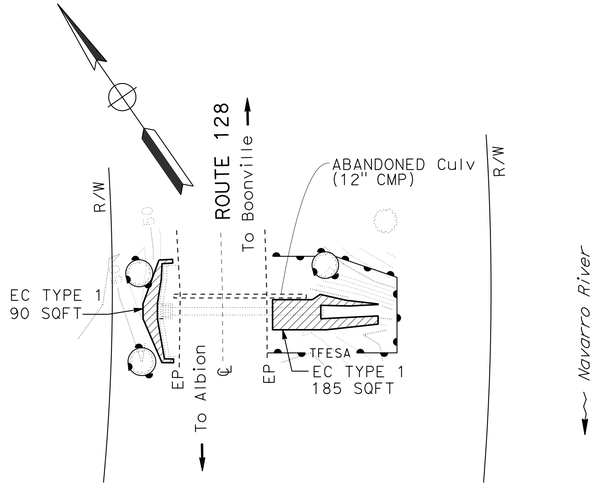

DRAINAGE SYSTEM No. 29

ROUTE 128
PM 6.74

EROSION CONTROL PLAN

SCALE: 1" = 20′ **EC-5**

CALCULATED-DESIGNED BY
CHECKED BY
LAURA LAZZAROTTO
RON FLORY
REVISED BY
DATE REVISED

SENIOR LANDSCAPE ARCHITECT
RON FLORY

STATE OF CALIFORNIA - DEPARTMENT OF TRANSPORTATION
Caltrans®
LANDSCAPE

P:\proj4\01\378x7\drafting\10000013?te005.dgn

LAST REVISION 00-00-00
DATE PLOTTED => 31-AUG-2015
TIME PLOTTED => 09:36

BORDER LAST REVISED 7/2/2010
USERNAME => s130875
DGN FILE => 0100000137te005.dgn
RELATIVE BORDER SCALE IS IN INCHES 0 1 2 3
UNIT 0314
PROJECT NUMBER & PHASE 01000001371

Dist	COUNTY	ROUTE	POST MILES TOTAL PROJECT	SHEET No.	TOTAL SHEETS
01	Men	128	2.8/11.1	80	98

Laura Lazzarotto
LICENSED LANDSCAPE ARCHITECT

6-15-15
PLANS APPROVAL DATE

THE STATE OF CALIFORNIA OR ITS OFFICERS OR AGENTS SHALL NOT BE RESPONSIBLE FOR THE ACCURACY OR COMPLETENESS OF SCANNED COPIES OF THIS PLAN SHEET.

LICENSED LANDSCAPE ARCHITECT — Laura Lazzarotto — Signature 8-31-05 Renewal Date 6-15-15 Date — STATE OF CALIFORNIA

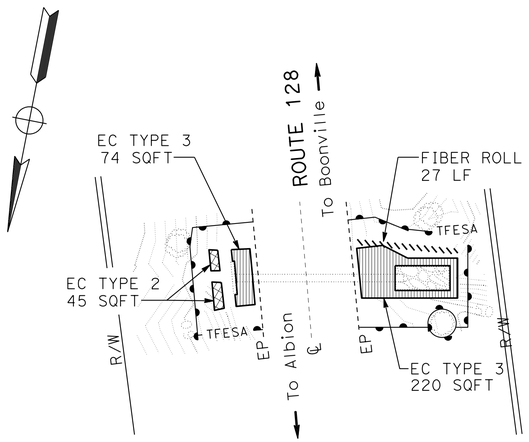

DRAINAGE SYSTEM No. 32

ROUTE 128
PM 7.51

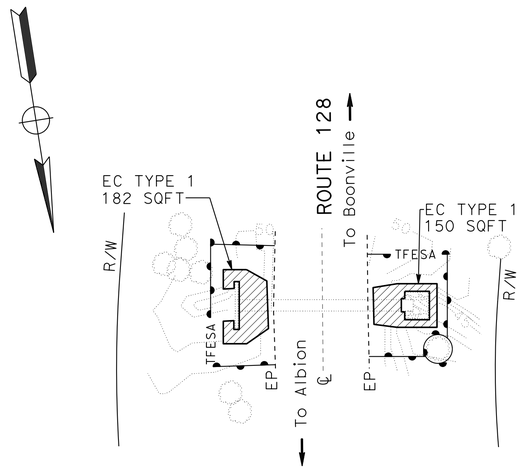

DRAINAGE SYSTEM No. 34

ROUTE 128
PM 7.81

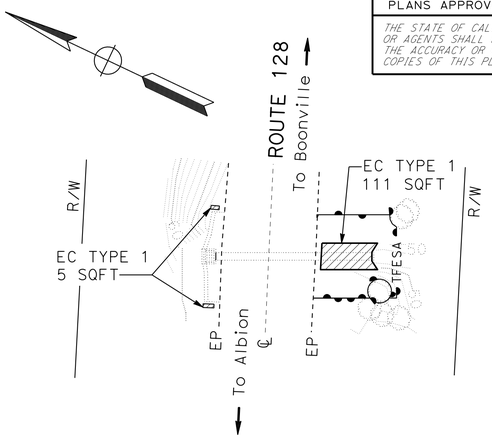

DRAINAGE SYSTEM No. 36

ROUTE 128
PM 8.08

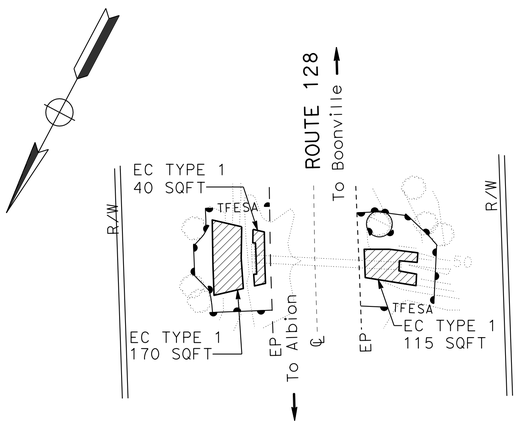

DRAINAGE SYSTEM No. 31

ROUTE 128
PM 7.40

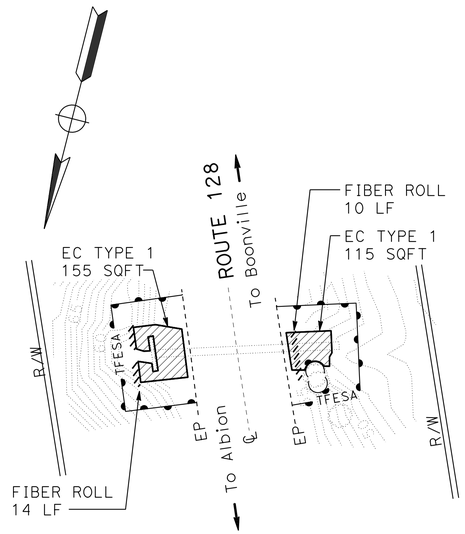

DRAINAGE SYSTEM No. 33

ROUTE 128
PM 7.76

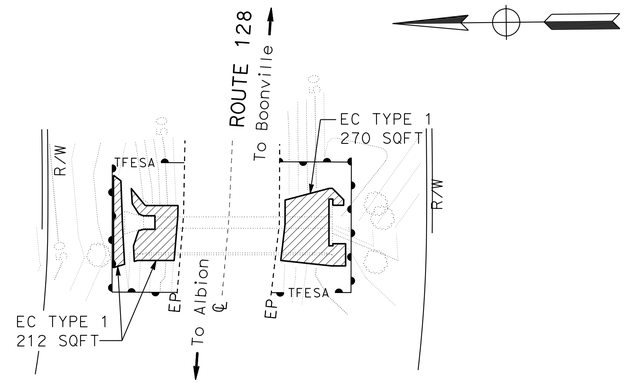

DRAINAGE SYSTEM No. 35

ROUTE 128
PM 7.95

EROSION CONTROL PLAN

SCALE: 1" = 20′ **EC-6**

STATE OF CALIFORNIA - DEPARTMENT OF TRANSPORTATION
LANDSCAPE
SENIOR LANDSCAPE ARCHITECT: RON FLORY
CALCULATED-DESIGNED BY: LAURA LAZZAROTTO
CHECKED BY: RON FLORY
REVISED BY | DATE REVISED

P:\proj4\01\37⊠7\drafting\0100000137te006.dgn

LAST REVISION DATE PLOTTED => 31-AUG-2015
00-00-00 TIME PLOTTED => 09:37

BORDER LAST REVISED 7/2/2010 | USERNAME => s130875 | DGN FILE => 0100000137te006.dgn | RELATIVE BORDER SCALE IS IN INCHES 0 1 2 3 | UNIT 0314 | PROJECT NUMBER & PHASE 01000001371

Dist	COUNTY	ROUTE	POST MILES TOTAL PROJECT	SHEET No.	TOTAL SHEETS
01	Men	128	2.8/11.1	81	98

Laura Lazzarotto
LICENSED LANDSCAPE ARCHITECT

6-15-15
PLANS APPROVAL DATE

THE STATE OF CALIFORNIA OR ITS OFFICERS OR AGENTS SHALL NOT BE RESPONSIBLE FOR THE ACCURACY OR COMPLETENESS OF SCANNED COPIES OF THIS PLAN SHEET.

LICENSED LANDSCAPE ARCHITECT Laura Lazzarotto LA 4054 Signature 8-31-05 Renewal Date 6-15-15 Date STATE OF CALIFORNIA

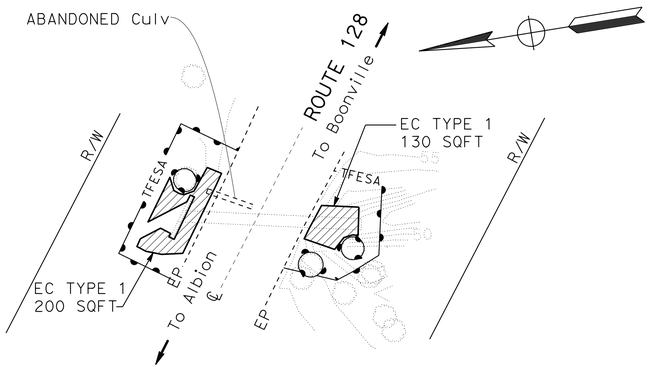

DRAINAGE SYSTEM No. 38
ROUTE 128
PM 8.75

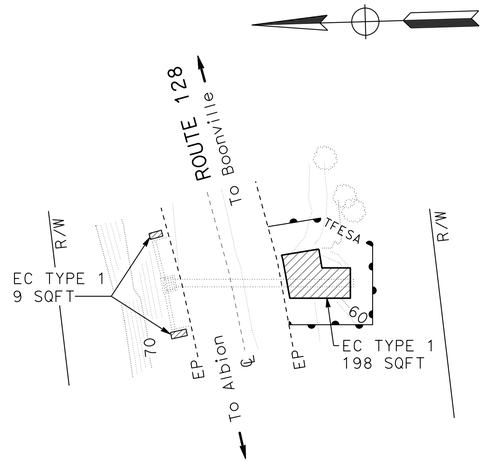

DRAINAGE SYSTEM No. 40
ROUTE 128
PM 8.91

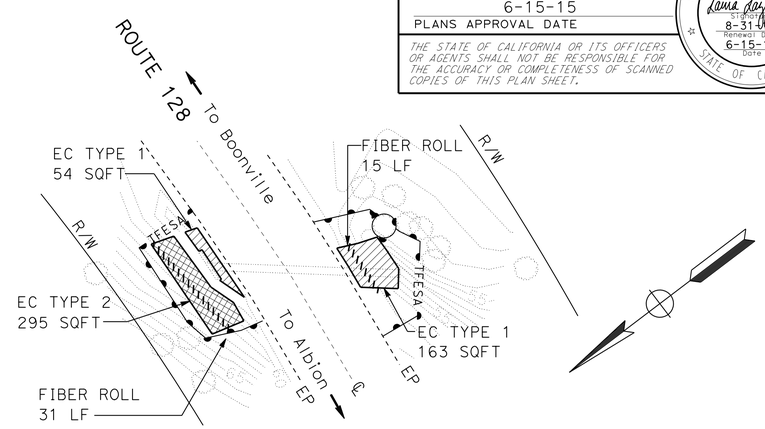

DRAINAGE SYSTEM No. 42
ROUTE 128
PM 9.34

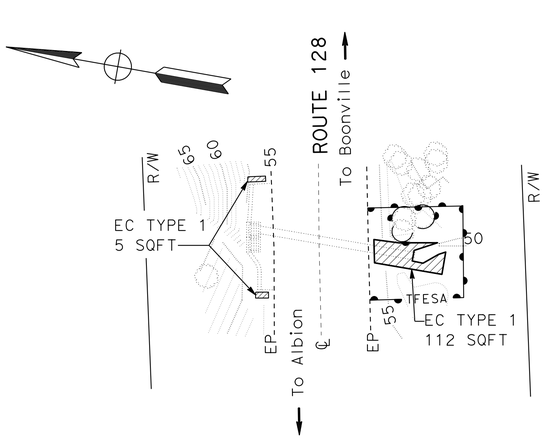

DRAINAGE SYSTEM No. 37
ROUTE 128
PM 8.55

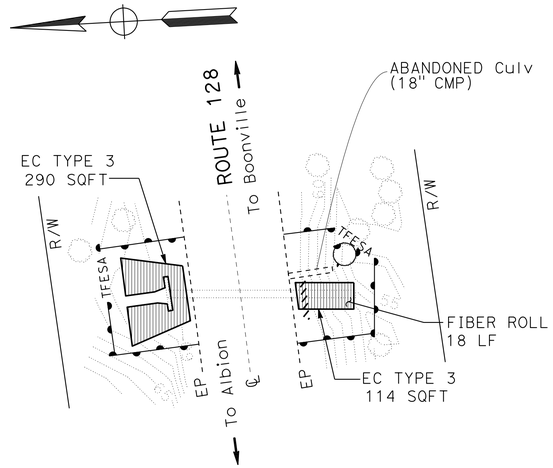

DRAINAGE SYSTEM No. 39
ROUTE 128
PM 8.87

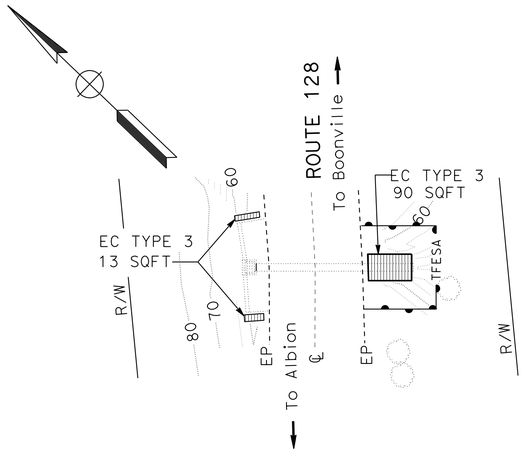

DRAINAGE SYSTEM No. 41
ROUTE 128
PM 8.95

EROSION CONTROL PLAN

SCALE: 1" = 20'

EC-7

STATE OF CALIFORNIA - DEPARTMENT OF TRANSPORTATION
Caltrans
LANDSCAPE

SENIOR LANDSCAPE ARCHITECT: RON FLORY
CALCULATED-DESIGNED BY: LAURA LAZZAROTTO
CHECKED BY: RON FLORY
REVISED BY
DATE REVISED

P:\proj4\01\378X7\drafting\100000137te007.dgn

LAST REVISION 00-00-00
DATE PLOTTED => 31-AUG-2015
TIME PLOTTED => 09:37

Dist	COUNTY	ROUTE	POST MILES TOTAL PROJECT	SHEET No.	TOTAL SHEETS
01	Men	128	2.8/11.1	82	98

Laura Lazzarotto
LICENSED LANDSCAPE ARCHITECT

6-15-15
PLANS APPROVAL DATE

THE STATE OF CALIFORNIA OR ITS OFFICERS OR AGENTS SHALL NOT BE RESPONSIBLE FOR THE ACCURACY OR COMPLETENESS OF SCANNED COPIES OF THIS PLAN SHEET.

LICENSED LANDSCAPE ARCHITECT — Laura Lazzarotto — Signature — 8-31-15 Renewal Date — 6-15-15 Date — STATE OF CALIFORNIA

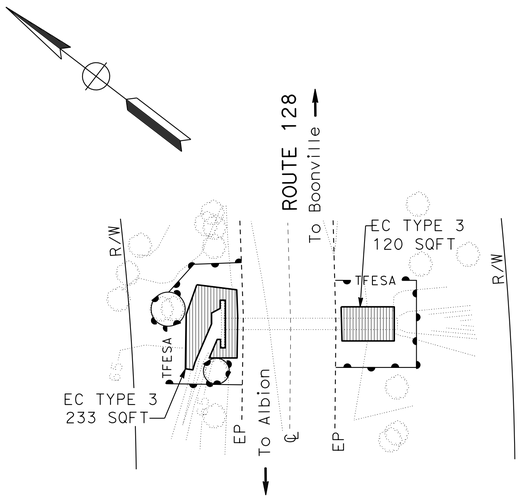

DRAINAGE SYSTEM No. 44

ROUTE 128
PM 9.61

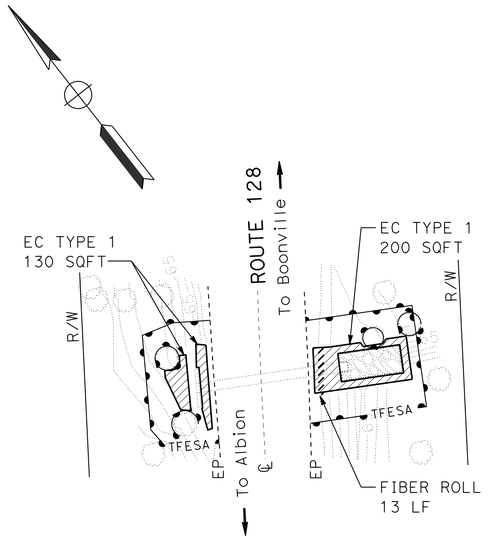

DRAINAGE SYSTEM No. 46

ROUTE 128
PM 9.85

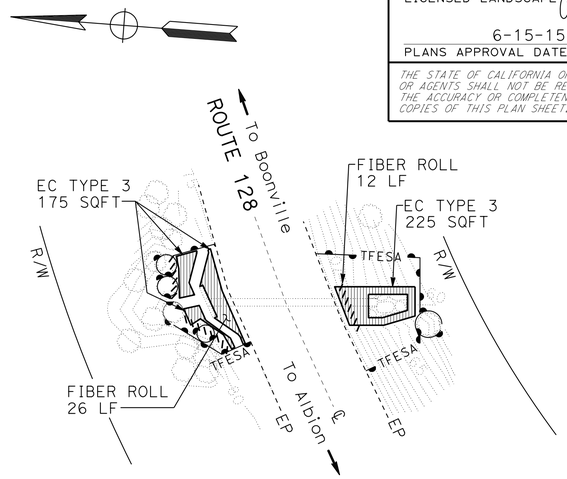

DRAINAGE SYSTEM No. 48

ROUTE 128
PM10.08

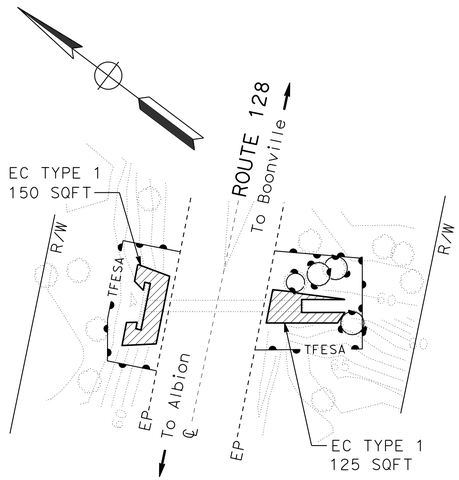

DRAINAGE SYSTEM No. 43

ROUTE 128
PM 9.44

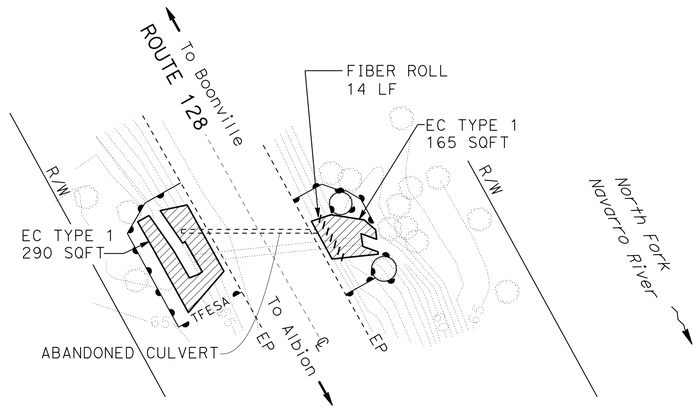

DRAINAGE SYSTEM No. 45

ROUTE 128
PM 9.73

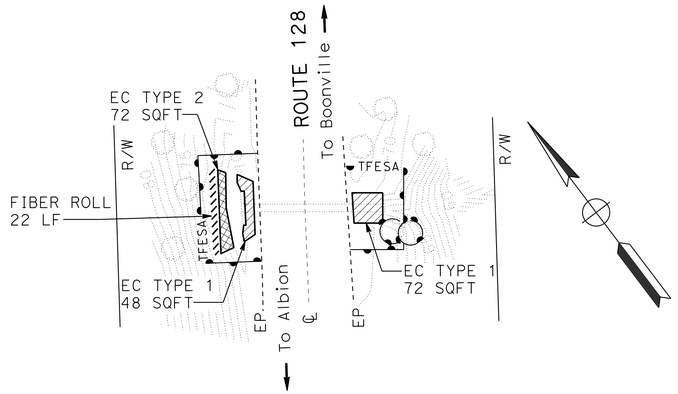

DRAINAGE SYSTEM No. 47

ROUTE 128
PM 9.99

EROSION CONTROL PLAN

SCALE: 1" = 20′ **EC-8**

REVISED BY	DATE REVISED

CALCULATED-DESIGNED BY
CHECKED BY

LAURA LAZZAROTTO
RON FLORY

SENIOR LANDSCAPE ARCHITECT
RON FLORY

STATE OF CALIFORNIA - DEPARTMENT OF TRANSPORTATION
Caltrans®
LANDSCAPE

P:\proj4\01\378x7\drafting\0100000137te008.dgn

LAST REVISION 00-00-00
DATE PLOTTED => 31-AUG-2015
TIME PLOTTED => 09:37

BORDER LAST REVISED 7/2/2010

USERNAME => s130875
DGN FILE => 0100000137te008.dgn

RELATIVE BORDER SCALE IS IN INCHES 0 1 2 3

UNIT 0314

PROJECT NUMBER & PHASE 01000001371

Dist	COUNTY	ROUTE	POST MILES TOTAL PROJECT	SHEET No.	TOTAL SHEETS
01	Men	128	2.8/11.1	83	98

Laura Lazzarotto
LICENSED LANDSCAPE ARCHITECT

6-15-15
PLANS APPROVAL DATE

LICENSED LANDSCAPE ARCHITECT
Laura Lazzarotto
Signature
8-31-05
Renewal Date
6-15-15
Date
STATE OF CALIFORNIA

THE STATE OF CALIFORNIA OR ITS OFFICERS OR AGENTS SHALL NOT BE RESPONSIBLE FOR THE ACCURACY OR COMPLETENESS OF SCANNED COPIES OF THIS PLAN SHEET.

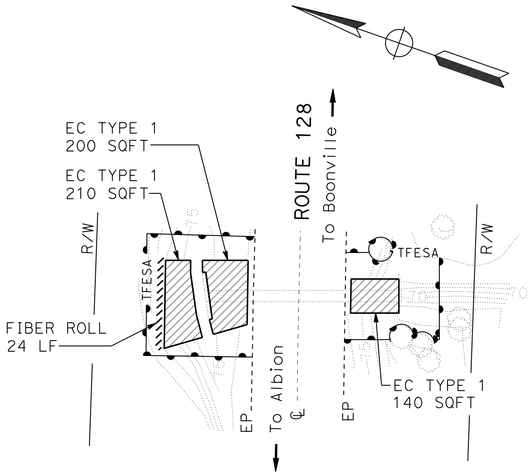

DRAINAGE SYSTEM No. 50

ROUTE 128
PM 10.47

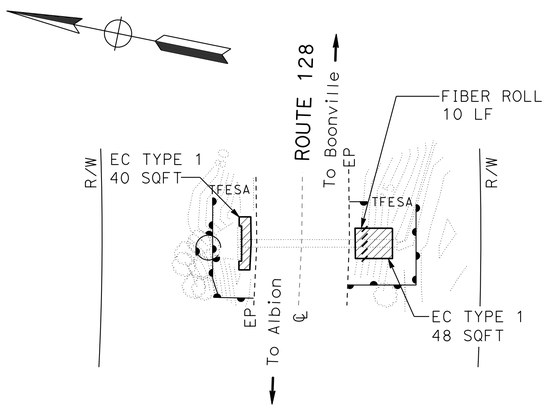

DRAINAGE SYSTEM No. 49

ROUTE 128
PM 10.43

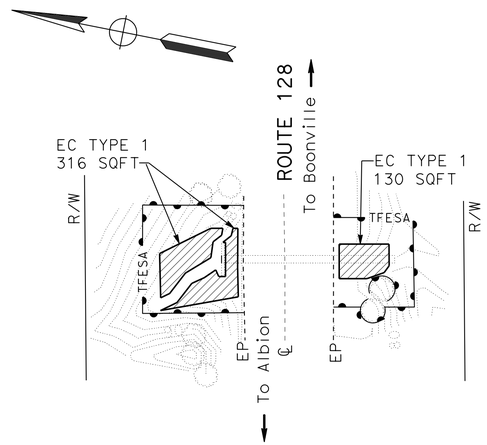

DRAINAGE SYSTEM No. 51

ROUTE 128
PM 11.07

EROSION CONTROL PLAN

SCALE: 1" = 20′ **EC-9**

STATE OF CALIFORNIA - DEPARTMENT OF TRANSPORTATION
LANDSCAPE
Caltrans

SENIOR LANDSCAPE ARCHITECT: RON FLORY
CALCULATED-DESIGNED BY:
CHECKED BY: RON FLORY
REVISED BY:
DATE REVISED:
LAURA LAZZAROTTO

P:\proj4\01\378x7\drafting\0100000137te009.dgn

LAST REVISION: DATE PLOTTED => 31-AUG-2015
00-00-00 TIME PLOTTED => 09:37

BORDER LAST REVISED 7/2/2010
USERNAME => s130875
DGN FILE => 0100000137te009.dgn
RELATIVE BORDER SCALE IS IN INCHES 0 1 2 3
UNIT 0314
PROJECT NUMBER & PHASE 0100000137-1

Dist	COUNTY	ROUTE	POST MILES TOTAL PROJECT	SHEET No.	TOTAL SHEETS
01	Men	128	2.8/11.1	84	98

Laura Lazzarotto
LICENSED LANDSCAPE ARCHITECT

6-15-15
PLANS APPROVAL DATE

LICENSED LANDSCAPE ARCHITECT — Laura Lazzarotto — Signature — 8-31-15 Renewal Date — 6-15-15 Date — STATE OF CALIFORNIA

THE STATE OF CALIFORNIA OR ITS OFFICERS OR AGENTS SHALL NOT BE RESPONSIBLE FOR THE ACCURACY OR COMPLETENESS OF SCANNED COPIES OF THIS PLAN SHEET.

EROSION CONTROL QUANTITIES

DRAINAGE SYSTEM NO.	MEN 128 PM	(N) AREA SQFT	(N) AREA SQFT L†	(N) AREA SQFT R†	DESCRIPTION	WOOD MULCH (CY)	DUFF (SQFT)	ROLLED EROSION CONTROL PRODUCT (BLANKET) SQFT	FIBER ROLLS LF	(N) WOOD MULCH (SQFT)	EROSION CONTROL MOVE-IN MOVE-OUT EA
1	2.81	240	85	155	EC TYPE 1	—	240	—	—	—	
2	3.01	270	10	260	EC TYPE 1	—	270	—	20	—	
3	3.08	194	8	186	EC TYPE 3	1.20	—	—	—	194	
4	3.20	465	240	225	EC TYPE 1	—	465	—	38	—	
5	3.36	168	8	160	EC TYPE 1	—	168	—	—	—	
6	3.46	775	455	320	EC TYPE 3	4.79	—	—	38	775	
7	3.66	332	82	250	EC TYPE 1	—	250	—	12	—	
8	3.71	361	66	235	EC TYPE 1	—	301	—	46	—	
			60	—	EC TYPE 2	—	—	60		—	
9	3.89	214	6	208	EC TYPE 1	—	214	—	9	—	
10	3.92	255	175	80	EC TYPE 1	—	255	—	22	—	
11	4.02	295	60	205	EC TYPE 1	—	265	—	—	—	
			30	—	EC TYPE 2	—	—	30	—	—	
12	4.05	91	6	85	EC TYPE 1	—	91	—	—	—	
13	4.08	398	140	160	EC TYPE 1	—	300	—	9	—	
			98	—	EC TYPE 2	—	—	98		—	
14	4.17	200	90	110	EC TYPE 3	1.24	—	—	16	200	
15	4.45	425	300	125	EC TYPE 1	—	425	—	—	—	
16	4.50	327	62	150	EC TYPE 1	—	212	—	—	—	
			—	115	EC TYPE 2	—	—	115		—	
17	4.55	285	160	125	EC TYPE 1	—	285	—	22	—	
18	4.78	224	117	107	EC TYPE 3	1.38	—	—	—	224	
19	4.83	97	7	90	EC TYPE 3	0.60	—	—	—	97	4
20	5.03	410	220	190	EC TYPE 1	—	410	—	—	—	
21	5.08	550	345	205	EC TYPE 1	—	550	—	45	—	
22	5.36	207	12	195	EC TYPE 3	1.28	—	—	—	207	
23	5.82	170	10	160	EC TYPE 1	—	170	—	13	—	
24	5.92	445	375	70	EC TYPE 1	—	445	—	—	—	
25	6.08	117	12	105	EC TYPE 3	0.72	—	—	17	117	
26	6.11	141	6	135	EC TYPE 3	0.87	—	—	—	141	
27	6.48	193	24	115	EC TYPE 1	—	139	—	11	—	
			—	54	EC TYPE 2	—	—	54		—	
28	6.66	400	80	160	EC TYPE 1	—	—	160	—	—	
			160	—	EC TYPE 2	—	240	—	—	—	
29	6.74	275	90	185	EC TYPE 1	—	275	—	—	—	
30	7.07	335	30	230	EC TYPE 1	—	260	—	12	—	
			—	75	EC TYPE 2	—	—	75		—	
31	7.40	325	210	115	EC TYPE 1	—	325	—	—	—	
32	7.51	339	45	—	EC TYPE 2	—	—	45	27		
			74	220	EC TYPE 3	0.91	294	—		—	
33	7.76	270	155	115	EC TYPE 1	—	270	—	24	—	
34	7.81	332	182	150	EC TYPE 1	—	332	—	—	—	
35	7.95	482	212	270	EC TYPE 1	—	482	—	—	—	
36	8.08	116	5	111	EC TYPE 1	—	116	—	—	—	
					SUBTOTAL ECQ-1	12.99	8049	637	381	1955	4

(N) DENOTES NON PAY ITEM, FOR INFORMATION ONLY

EROSION CONTROL QUANTITIES
ECQ-1

REVISED BY | DATE REVISED
LAURA LAZZAROTTO | RON FLORY
CALCULATED-DESIGNED BY | CHECKED BY
SENIOR LANDSCAPE ARCHITECT | RON FLORY
STATE OF CALIFORNIA - DEPARTMENT OF TRANSPORTATION
Caltrans® LANDSCAPE

LAST REVISION: DATE PLOTTED => 31-AUG-2015 TIME PLOTTED => 09:37
00-00-00

P:\proj4\01\37@7\drafting\01000001371g001.dgn

BORDER LAST REVISED 7/2/2010 | USERNAME => s130875 DGN FILE => 0100000137tg001.dgn | RELATIVE BORDER SCALE IS IN INCHES 0 1 2 3 | UNIT 0314 | PROJECT NUMBER & PHASE 01000001371

Dist	COUNTY	ROUTE	POST MILES TOTAL PROJECT	SHEET No.	TOTAL SHEETS
01	Men	128	2.8/11.1	85	98

Laura Lazzarotto
LICENSED LANDSCAPE ARCHITECT

6-15-15
PLANS APPROVAL DATE

LICENSED LANDSCAPE ARCHITECT
Laura Lazzarotto
Signature
8-31-05
Renewal Date
6-15-15
Date
STATE OF CALIFORNIA

THE STATE OF CALIFORNIA OR ITS OFFICERS OR AGENTS SHALL NOT BE RESPONSIBLE FOR THE ACCURACY OR COMPLETENESS OF SCANNED COPIES OF THIS PLAN SHEET.

EROSION CONTROL QUANTITIES

DRAINAGE SYSTEM NO.	MEN 128 PM	(N) AREA SQFT	(N) AREA SQFT L†	(N) AREA SQFT R†	DESCRIPTION	WOOD MULCH (CY)	DUFF (SQFT)	ROLLED EROSION CONTROL PRODUCT (BLANKET) SQFT	FIBER ROLLS LF	(N) WOOD MULCH (SQFT)	EROSION CONTROL MOVE-IN MOVE-OUT EA
37	8.55	117	5	112	EC TYPE 3	0.72	117	—	—	—	2
38	8.75	330	200	130	EC TYPE 1	—	330	—	—	—	
39	8.87	404	290	114	EC TYPE 3	2.49	—	—	18	404	
40	8.91	207	9	198	EC TYPE 1	—	207	—	—	—	
41	8.95	103	13	90	EC TYPE 3	0.64	—	—	—	103	
42	9.34	512	54	163	EC TYPE 1	—	217	—	46	—	
			295	—	EC TYPE 2	—	—	295		—	
43	9.44	275	150	125	EC TYPE 1	—	275	—	—	—	
44	9.61	353	233	120	EC TYPE 3	2.18	—	—	—	353	
45	9.73	455	290	165	EC TYPE 1	—	455	—	14	—	
46	9.85	330	130	200	EC TYPE 1	—	330	—	13	—	
47	9.99	192	120	—	EC TYPE 1	—	120	—	22	—	
			—	72	EC TYPE 2	—	—	72		—	
48	10.08	400	175	225	EC TYPE 3	2.47	—	—	38	400	
49	10.43	88	40	48	EC TYPE 1	—	88	—	10	—	
50	10.47	550	410	140	EC TYPE 1	—	550	—	24	—	
51	11.07	446	316	130	EC TYPE 1	—	446	—	—	—	
					SUBTOTAL ECQ-1	12.99	8049	637	381	1955	4
					SUBTOTAL ECQ-2	8.50	3135	367	185	1260	2
					TOTAL	21.49	10,855	1004	566	3626	6

(N) DENOTES NON PAY ITEM, FOR INFORMATION ONLY

STATE OF CALIFORNIA - DEPARTMENT OF TRANSPORTATION
Caltrans®
LANDSCAPE

SENIOR LANDSCAPE ARCHITECT: RON FLORY
CALCULATED-DESIGNED BY: LAURA LAZZAROTTO
CHECKED BY: RON FLORY
REVISED BY
DATE REVISED

P:\proj4\01\378x7\drafting\100000137tg002.dgn

EROSION CONTROL QUANTITIES
ECQ-2

LAST REVISION 00-00-00
DATE PLOTTED => 31-AUG-2015
TIME PLOTTED => 09:37

M

Maint	MAINTENANCE
Max	MAXIMUM
MB	METAL BEAM
MBB	METAL BEAM BARRIER
MBGR	METAL BEAM GUARD RAILING
Med	MEDIAN
MGS	MIDWEST GUARDRAIL SYSTEM
MH	MANHOLE
Min	MINIMUM
Misc	MISCELLANEOUS
Misc I & S	MISCELLANEOUS IRON AND STEEL
Mkr	MARKER
Mod	MODIFIED, MODIFY
Mon	MONUMENT
MP	METAL PLATE
MPGR	METAL PLATE GUARD RAILING
MR	MOVEMENT RATING
MSE	MECHANICALLY STABILIZED EMBANKMENT
Mt	MOUNTAIN, MOUNT
Mtl	MATERIAL
MVP	MAINTENANCE VEHICLE PULLOUT

N

N	NORTH
NB	NORTHBOUND
No.	NUMBER (MUST HAVE PERIOD)
Nos.	NUMBERS (MUST HAVE PERIOD)
NPS	NOMINAL PIPE SIZE
NS	NEAR SIDE
NSP	NEW STANDARD PLAN
NTS	NOT TO SCALE

O

Oblr	OBLITERATE
OC	OVERCROSSING
OD	OUTSIDE DIAMETER
OF	OUTSIDE FACE
OG	ORIGINAL GROUND
OGAC	OPEN GRADED ASPHALT CONCRETE
OGFC	OPEN GRADED FRICTION COURSE
OH	OVERHEAD
OHWM	ORDINARY HIGH WATER MARK
O-O	OUT TO OUT
Opp	OPPOSITE
OSD	OVERSIDE DRAIN

P

P	PAGE
PAP	PERFORATED ALUMINUM PIPE
PB	PULL BOX
PC	POINT OF CURVATURE, PRECAST
PCC	POINT OF COMPOUND CURVE, PORTLAND CEMENT CONCRETE
PCMS	PORTABLE CHANGEABLE MESSAGE SIGN
PCP	PERFORATED CONCRETE PIPE, PRESTRESSED CONCRETE PIPE
PCVC	POINT OF COMPOUND VERTICAL CURVE
PEC	PERMIT TO ENTER AND CONSTRUCT
Ped	PEDESTRIAN
Ped OC	PEDESTRIAN OVERCROSSING
Ped UC	PEDESTRIAN UNDERCROSSING
Perm Mtl	PERMEABLE MATERIAL

P continued

PG	PROFILE GRADE
PI	POINT OF INTERSECTION
PJP	PARTIAL JOINT PENETRATION
Pkwy	PARKWAY
℄,PL	PLATE
P/L	PROPERTY LINE
PM	POST MILE, TIME FROM NOON TO MIDNIGHT
PN	PAVING NOTCH
POC	POINT OF HORIZONTAL CURVE
POT	POINT OF TANGENT
POVC	POINT OF VERTICAL CURVE
PP	PIPE PILE, PLASTIC PIPE, POWER POLE
PPL	PREFORMED PERMEABLE LINER
PPP	PERFORATED PLASTIC PIPE
PRC	POINT OF REVERSE CURVE
PRF	PAVEMENT REINFORCING FABRIC
PRVC	POINT OF REVERSE VERTICAL CURVE
PS&E	PLANS, SPECIFICATIONS AND ESTIMATES
PS, P/S	PRESTRESSED
PSP	PERFORATED STEEL PIPE
PT	POINT OF TANGENCY
PVC	POLYVINYL CHLORIDE
Pvmt	PAVEMENT

Q

Qty	QUANTITY

R

R	RADIUS
R & D	REMOVE AND DISPOSE
R & S	REMOVE AND SALVAGE
R/C	RATE OF CHANGE
RCA	REINFORCED CONCRETE ARCH
RCB	REINFORCED CONCRETE BOX
RCP	REINFORCED CONCRETE PIPE
RCPA	REINFORCED CONCRETE PIPE ARCH
Rd	ROAD
Reinf	REINFORCED, REINFORCEMENT, REINFORCING
Rel	RELOCATE
Repl	REPLACEMENT
Ret	RETAINING
Rev	REVISED, REVISION
Rdwy	ROADWAY
RHMA	RUBBERIZED HOT MIX ASPHALT
Riv	RIVER
RM	ROAD-MIXED
RP	RADIUS POINT, REFERENCE POINT
RR	RAILROAD
RSP	ROCK SLOPE PROTECTION, REVISED STANDARD PLAN
Rt	RIGHT
Rte	ROUTE
RW	REDWOOD, RETAINING WALL
R/W	RIGHT OF WAY
Rwy	RAILWAY

S

S	SOUTH, SUPPLEMENT
SAE	STRUCTURE APPROACH EMBANKMENT
Salv	SALVAGE
SAPP	STRUCTURAL ALUMINUM PLATE PIPE
SB	SOUTHBOUND
SC	SAND CUSHION
SCSP	SLOTTED CORRUGATED STEEL PIPE
SD	STORM DRAIN
Sec	SECOND, SECTION
Sep	SEPARATION
SG	SUBGRADE
Shld	SHOULDER
Sht	SHEET
Sim	SIMILAR
℄	STATION LINE
SM	SELECTED MATERIAL
Spec	SPECIAL, SPECIFICATIONS
SPP	SLOTTED PLASTIC PIPE
SS	SLOPE STAKE
SSBM	STRAP AND SADDLE BRACKET METHOD
SSD	STRUCTURAL SECTION DRAIN
SSPA	STRUCTURAL STEEL PLATE ARCH
SSPP	STRUCTURAL STEEL PLATE PIPE
SSPPA	STRUCTURAL STEEL PLATE PIPE ARCH
SSRP	STEEL SPIRAL RIB PIPE
St	STREET
Sta	STATION
STBB	SINGLE THRIE BEAM BARRIER
Std	STANDARD
Str	STRUCTURE
Surf	SURFACING
SW	SIDEWALK, SOUND WALL
Swr	SEWER
Sym	SYMMETRICAL
S4S	SURFACE 4 SIDES

T

T	SEMI-TANGENT
Tan	TANGENT
TBB	THRIE BEAM BARRIER
Tbr	TIMBER
TC	TOP OF CURB
TCB	TRAFFIC CONTROL BOX
TCE	TEMPORARY CONSTRUCTION EASEMENT
Tel	TELEPHONE
Temp	TEMPORARY
TG	TOP OF GRADE
Tot	TOTAL
TP	TELEPHONE POLE
TPB	TREATED PERMEABLE BASE
TPM	TREATED PERMEABLE MATERIAL
Trans	TRANSITION

T continued

TS	TRANSVERSE, TRAFFIC SIGNAL, TUBULAR STEEL
Typ	TYPICAL

U

UC	UNDERCROSSING
UD	UNDERDRAIN
UG	UNDERGROUND
UON	UNLESS OTHERWISE NOTED
UP	UNDERPASS

V

V	VALVE, DESIGN SPEED
Var	VARIABLE, VARIES
VC	VERTICAL CURVE
VCP	VITRIFIED CLAY PIPE
Vert	VERTICAL
Via	VIADUCT
Vol	VOLUME

W

W	WEST, WIDTH
WB	WESTBOUND
WH	WEEP HOLE
WM	WIRE MESH
WS	WATER SURFACE
WSP	WELDED STEEL PIPE
Wt	WEIGHT
WV	WATER VALVE
WW	WINGWALL
WWLOL	WINGWALL LAYOUT LINE

X

X Sec	CROSS SECTION
Xing	CROSSING

Y

Yr	YEAR
Yrs	YEARS

Dist	COUNTY	ROUTE	POST MILES TOTAL PROJECT	SHEET No.	TOTAL SHEETS
01	Men	128	2.8/11.1	86	98

Grace M. Tsushima
REGISTERED CIVIL ENGINEER

July 19, 2013
PLANS APPROVAL DATE

REGISTERED PROFESSIONAL ENGINEER — Grace M. Tsushima — No. C49814 — Exp. 9-30-14 — CIVIL — STATE OF CALIFORNIA

THE STATE OF CALIFORNIA OR ITS OFFICERS OR AGENTS SHALL NOT BE RESPONSIBLE FOR THE ACCURACY OR COMPLETENESS OF SCANNED COPIES OF THIS PLAN SHEET.

TO ACCOMPANY PLANS DATED 6-15-15

UNIT OF MEASUREMENT SYMBOLS:

Some of the symbols used in the project plan quantity tables and in the Bid Item List are:

TABLE A

SYMBOL USED	DEFINITIONS
ACRE	ACRE
CF	CUBIC FOOT
CY	CUBIC YARD
EA	EACH
GAL	GALLON
LB	POUND
LF	LINEAR FOOT
SQFT	SQUARE FOOT
SQYD	SQUARE YARD
STA	100 FEET
TAB	TABLET
TON	2,000 POUNDS

Some of the symbols used in the plans other than in the project plan quantity tables are:

TABLE B

SYMBOL USED	DEFINITIONS
ksi	KIPS PER SQUARE INCH
ksf	KIPS PER SQUARE FOOT
psi	POUNDS PER SQUARE INCH
psf	POUNDS PER SQUARE FOOT
lb/ft^3, pcf	POUNDS PER CUBIC FOOT
tsf	TONS PER SQUARE FOOT
mph, MPH *	MILES PER HOUR
ø	NOMINAL DIAMETER
oz	OUNCE
lb	POUND
kip	1,000 POUNDS
cal	CALORIE
ft	FOOT OR FEET
gal	GALLON

* For use on a sign panel only

STATE OF CALIFORNIA
DEPARTMENT OF TRANSPORTATION

ABBREVIATIONS (SHEET 2 OF 2)

NO SCALE

RSP A10B DATED JULY 19, 2013 SUPERSEDES STANDARD PLAN A10B DATED MAY 20, 2011 - PAGE 2 OF THE STANDARD PLANS BOOK DATED 2010.

REVISED STANDARD PLAN RSP A10B

2010 REVISED STANDARD PLAN RSP A10B

6-7-13

Dist	COUNTY	ROUTE	POST MILES TOTAL PROJECT	SHEET No.	TOTAL SHEETS
01	Men	128	2.8/11.1	87	98

REGISTERED CIVIL ENGINEER

July 18, 2014
PLANS APPROVAL DATE

REGISTERED PROFESSIONAL ENGINEER
Carl M. Duan
No. C59976
Exp. 6-30-16
CIVIL
STATE OF CALIFORNIA

THE STATE OF CALIFORNIA OR ITS OFFICERS OR AGENTS SHALL NOT BE RESPONSIBLE FOR THE ACCURACY OR COMPLETENESS OF SCANNED COPIES OF THIS PLAN SHEET.

TO ACCOMPANY PLANS DATED 6-15-15

DESIGN NOTES:

Design: AASHTO LRFD Bridge Design Specifications, 4th edition with California Amendments. ACPA DESIGN DATA 1, October 2007. INDIRECT DESIGN METHOD

Soil: w Fe = 162 pcf Installation Type 1
w Fe = 168 pcf Installation Types 2 & 3
w = Unit weight of soil (pcf)
Fe = Soil-structure interaction factor

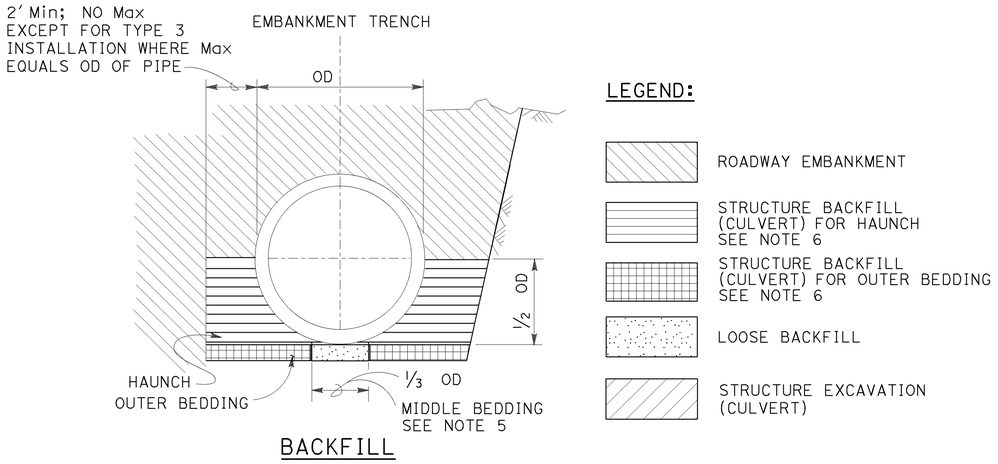

BACKFILL

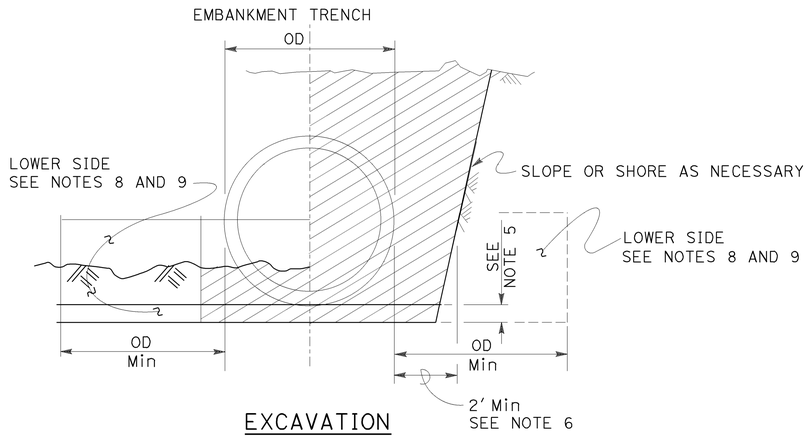

EXCAVATION

INSTALLATION TYPE 1:

The haunch and outer bedding shall be compacted to a minimum 90 percent relative compaction. In addition, the minimum sand equivalent in these areas shall be 30 and the maximum percentage passing the No. 200 sieve size shall be 12.

INSTALLATION TYPE 2:

The haunch and outer bedding shall be compacted to a minimum 90 percent relative compaction. In addition, the minimum sand equivalent in these areas shall be 25.

INSTALLATION TYPE 3:

The haunch and outer bedding shall be compacted to a minimum 85 percent relative compaction. 90 percent relative compaction will be required where the fill over the pipe is less than 4′-0" or ½ OD. In addition, the minimum sand equivalent in these areas shall be 25 and the material shall not contain rocks, broken concrete, or other solid material exceeding 3" in greatest dimension.

INSTALLATION TYPE 1

MINIMUM CLASS AND D-LOAD	COVER	
	60" Dia AND SMALLER	OVER 60" Dia TO 120" Dia Max
CLASS II 1000D	14.9′	12.9′
CLASS III 1350D	15.0′ - 21.9′	13.0′ - 18.9′
CLASS III SPECIAL 1700D	22.0′ - 27.9′	19.0′ - 24.9′
CLASS IV 2000D	28.0′ - 32.9′	25.0′ - 29.9′
CLASS IV SPECIAL 2500D	33.0′ - 41.9′	30.0′ - 38.9′
CLASS V 3000D	42.0′ - 49.9′	39.0′ - 46.9′
CLASS V SPECIAL 3600D	50.0′ - 60.0′	47.0′ - 58.0′

INSTALLATION TYPE 2

MINIMUM CLASS AND D-LOAD	COVER	
	60" Dia AND SMALLER	OVER 60" Dia TO 120" Dia Max
CLASS II 1000D	11.9′	9.9′
CLASS III 1350D	12.0′ - 15.9′	10.0′ - 14.9′
CLASS III SPECIAL 1700D	16.0′ - 20.9′	15.0′ - 19.9′
CLASS IV 2000D	21.0′ - 24.9′	20.0′ - 23.9′
CLASS IV SPECIAL 2500D	25.0′ - 31.9′	24.0′ - 30.9′
CLASS V 3000D	32.0′ - 37.9′	31.0′ - 37.9′
CLASS V SPECIAL 3600D	38.0′ - 46.0′	38.0′ - 46.0′

INSTALLATION TYPE 3

MINIMUM CLASS AND D-LOAD	COVER	
	60" Dia AND SMALLER	OVER 60" Dia TO 120" Dia Max
CLASS II 1000D	8.9′	5.9′
CLASS III 1350D	9.0′ - 11.9′	6.0′ - 10.9′
CLASS III SPECIAL 1700D	12.0′ - 15.9′	11.0′ - 13.9′
CLASS IV 2000D	16.0′ - 18.9′	14.0′ - 17.9′
CLASS IV SPECIAL 2500D	19.0′ - 24.9′	18.0′ - 22.9′
CLASS V 3000D	25.0′ - 29.9′	23.0′ - 28.9′
CLASS V SPECIAL 3600D	30.0′ - 36.0′	29.0′ - 35.0′

NOTES:

1. Unless otherwise shown on the plans or specified in the special provision, the Contractor shall have the option of selecting the class of RCP and the type of installation to be used, provided the height of cover does not exceed the value shown for the RCP selected.
   Example: 24" RCP culvert with maximum cover of 24′-0" the options are:
   a) Class III Special or stronger with Installation Type 1.
   b) Class IV or stronger with Installation Type 2.
   c) Class IV Special or stronger with Installation Type 3.
   Cover is defined as the maximum vertical distance from top of the pipe to finished grade within the length of any given culvert.
2. The class of RCP and Installation Type selected shall be the same throughout the length of any given culvert.
3. The "length of any culvert" is defined as the culvert between:
   a) Successive drainage structure (inlets, junction boxes, headwalls, etc.).
   b) A drainage structure and the inlet or outlet end of the culvert.
   c) The inlet and outlet end of the culvert when there are no intervening drainage structures.
4. Oval and arch shaped RCP shall not be used.
5. Bedding depth: ⅛ OD Min, not less than 3".
6. Slurry cement backfill may be substituted for backfill in the outer bedding and haunch areas. If slurry is used, the outer and middle beddings shall be omitted. Prior to installation, the soil under the middle ⅓ of the outside diameter of the pipe shall be softened by scarifying or other means to a minimum depth of ⅛ OD, but not less than 3". Where slurry cement backfill is used, clear distance to trench wall may be reduced as set forth in the Standard Specifications.
7. Backfill shall be placed full width of excavation except where dimensions are shown for backfill width or thickness. Dimensions shown are minimum.
8. Lower side shall be suitable material as determined by the Engineer. Otherwise it shall be considered unsuitable as set forth in of the Standard Specifications. See Note 9.
9. Where the pipe is placed in a trench, if the trench walls are sloped at 5 vertical to 1 horizontal or steeper for at least 90 percent of the trench height or up to not less than 12" from the grading plane, the firmness of the soil in the lower side need not be considered.
10. Non-reinforced precast concrete pipe sizes 3′-0" or smaller may be placed under installation Types 1, 2 or 3.

STATE OF CALIFORNIA
DEPARTMENT OF TRANSPORTATION

EXCAVATION AND BACKFILL CONCRETE PIPE CULVERTS INDIRECT DESIGN METHOD

NO SCALE

RSP A62DA DATED JULY 18, 2014 SUPERSEDES STANDARD PLAN A62DA DATED MAY 20, 2011 - PAGE 24 OF THE STANDARD PLANS BOOK DATED 2010.

REVISED STANDARD PLAN RSP A62DA

2010 REVISED STANDARD PLAN RSP A62DA

5-13-14

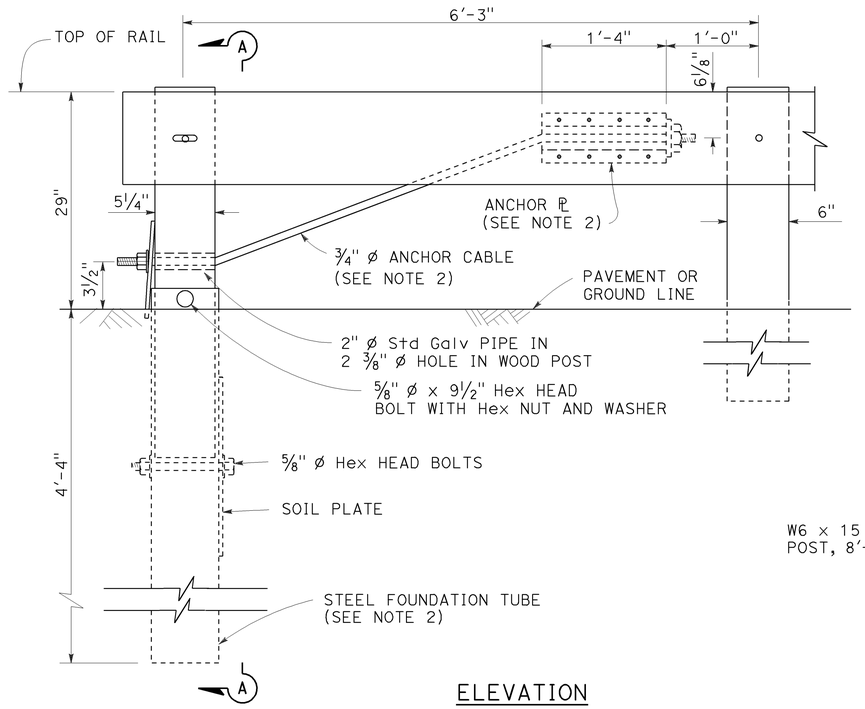

ELEVATION
END ANCHOR
ASSEMBLY (TYPE SFT)

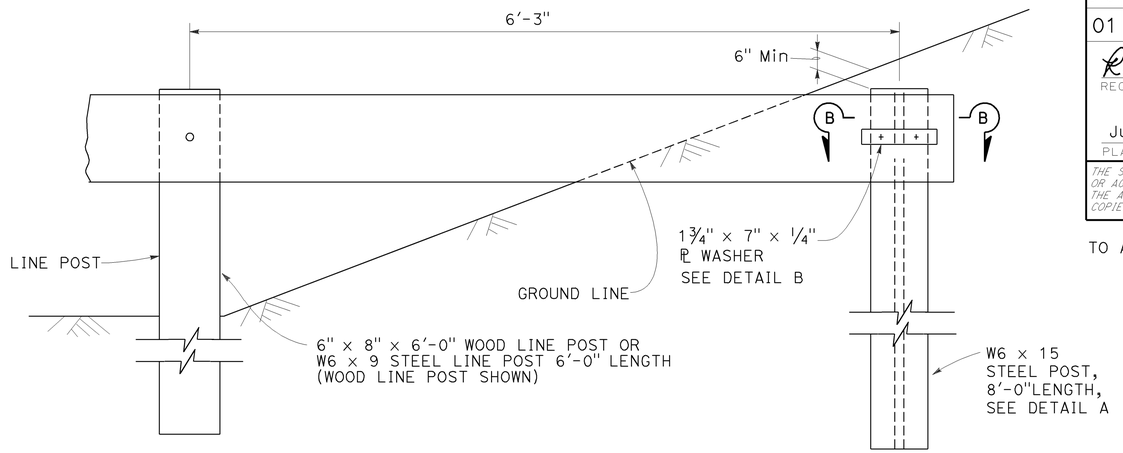

BURIED POST END ANCHOR

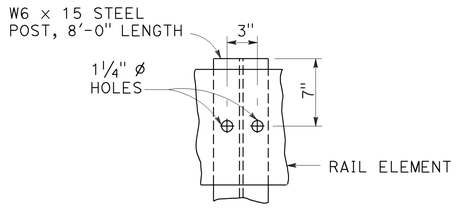

DETAIL A

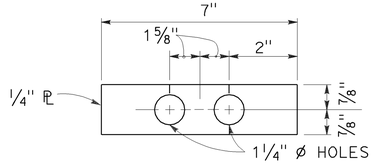

DETAIL B

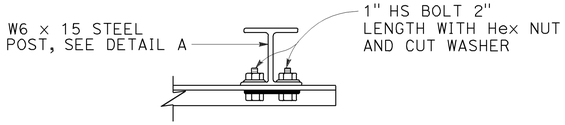

SECTION B-B

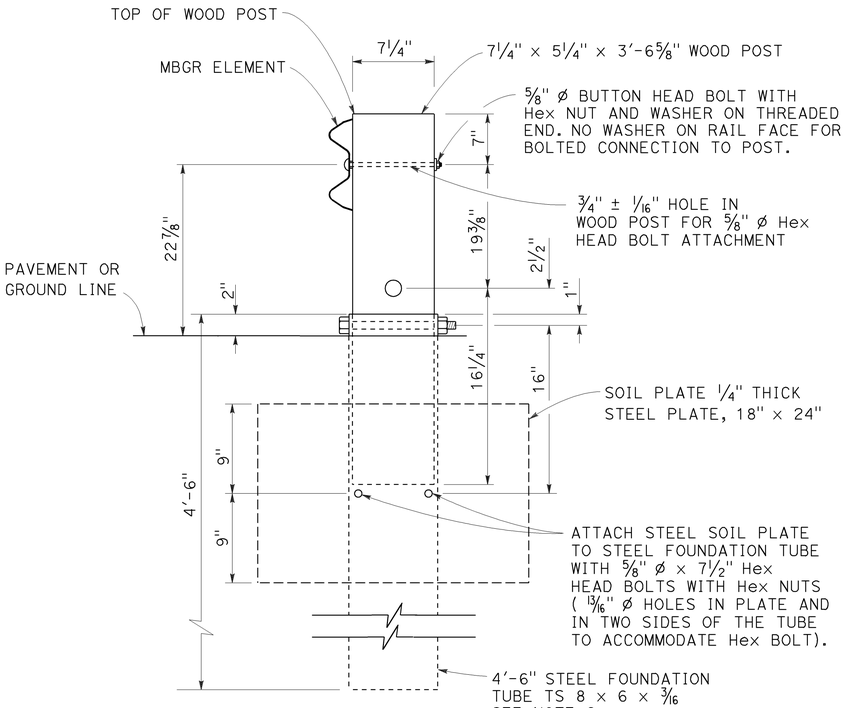

SECTION A-A

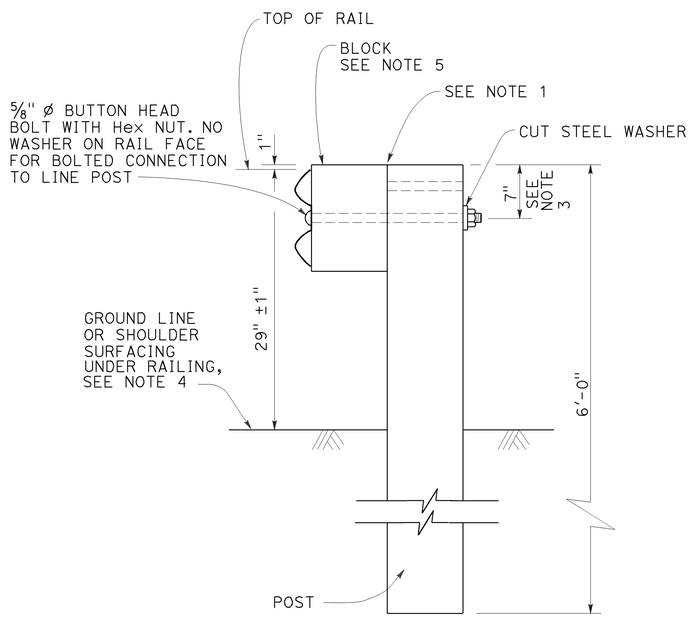

TYPICAL LINE
POST INSTALLATION

NOTES:

1. For wood post and wood block, toenail with 2-16d Galv nails in top of block. For steel post and notched wood or plastic block, notched face of block faces steel post.
2. A 6'-0" Length steel foundation tube, TS 8 x 6 x 3/16, without a soil plate, may be furnished and installed in place of the 4'-6" length steel foundation tube and soil plate shown, Minimum embadment of the 6'-0" length tube shall be 5'-9". A 5/8" ø Hex head bolt and nut shall be installed in the hole in the 6'-0" length tube to keep the wood post from dropping into the tube.
3. To connect railing to 27" terminal system end treatment, transition the top of railing height at a ratio of 120:1 to terminal system end treatment height plus one 12'-6" standard railing section at the transitioned height for a horizontal connection to the end treatment.
4. Install posts in soil.
5. See Revised Standard Plans RSP A77N1 and RSP A77N2 for details.
6. Holes excavation in the slope to construct the buried post end anchor shall be backfilled with selected earth, placed in layers approximately 1'-0" thick. Each layer shall be moistened and thoroughly compacted.

Dist	COUNTY	ROUTE	POST MILES TOTAL PROJECT	SHEET No.	TOTAL SHEETS
01	Men	128	2.8/11.1	88	98

Randell D. Hiatt
REGISTERED CIVIL ENGINEER

July 19, 2013
PLANS APPROVAL DATE

REGISTERED PROFESSIONAL ENGINEER
Randell D. Hiatt
No. C50200
Exp. 6-30-15
CIVIL
STATE OF CALIFORNIA

THE STATE OF CALIFORNIA OR ITS OFFICERS OR AGENTS SHALL NOT BE RESPONSIBLE FOR THE ACCURACY OR COMPLETENESS OF SCANNED COPIES OF THIS PLAN SHEET.

TO ACCOMPANY PLANS DATED 6-15-15

STATE OF CALIFORNIA
DEPARTMENT OF TRANSPORTATION

METAL BEAM GUARD RAILING RECONSTRUCT INSTALLATION

NO SCALE

RSP A77L3 DATED JULY 19, 2013 SUPPLEMENTS THE STANDARD PLANS BOOK DATED 2010.

REVISED STANDARD PLAN RSP A77L3

2010 REVISED STANDARD PLAN RSP A77L3

7-16-13

Dist	COUNTY	ROUTE	POST MILES TOTAL PROJECT	SHEET No.	TOTAL SHEETS
01	Men	128	2.8/11.1	89	98

Randell D. Hiatt
REGISTERED CIVIL ENGINEER

July 19, 2013
PLANS APPROVAL DATE

REGISTERED PROFESSIONAL ENGINEER
Randell D. Hiatt
No. C50200
Exp. 6-30-15
CIVIL
STATE OF CALIFORNIA

THE STATE OF CALIFORNIA OR ITS OFFICERS OR AGENTS SHALL NOT BE RESPONSIBLE FOR THE ACCURACY OR COMPLETENESS OF SCANNED COPIES OF THIS PLAN SHEET.

TO ACCOMPANY PLANS DATED 6-15-15

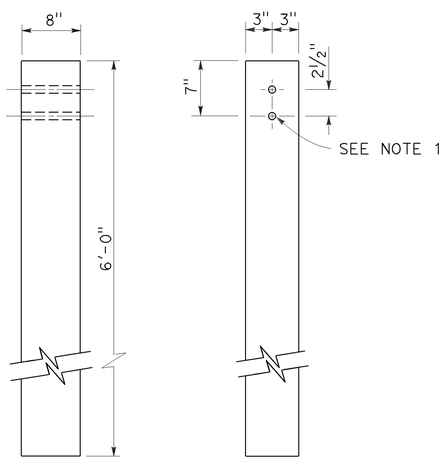

SIDE FRONT

6" x 8" WOOD POST
See Note 3

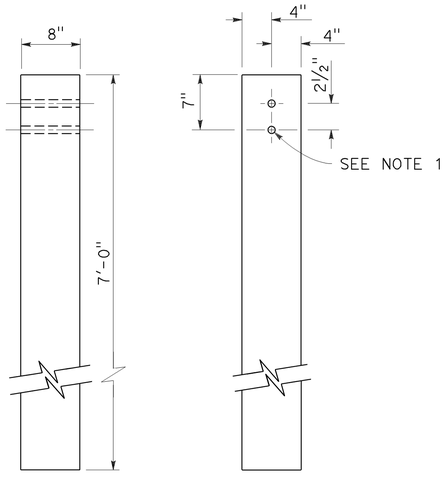

SIDE FRONT

8" x 8" WOOD POST
See Note 4

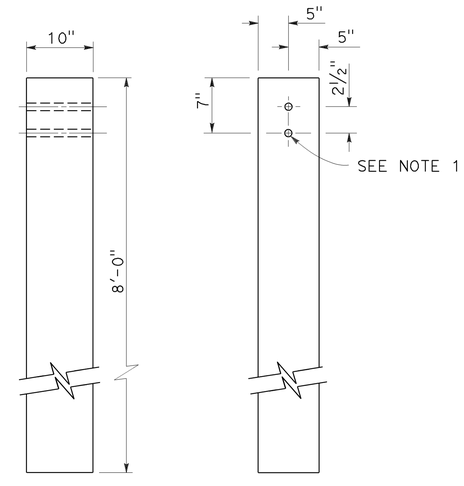

SIDE FRONT

10" x 10" WOOD POST
See Note 5

NOTES:

1. All holes in wood posts and blocks shall be ¾" Dia ± 1/16".
2. Dimensions shown for wood post are nominal.
3. This post and block combination used for standard line post sections of MGS.
4. This post and 8" x 12" block combination used for line post sections of MGS on narrow roadways.
5. This post and 8" x 12" block combination is typically used where strengthened line post sections of MGS are warranted to shield fixed objects.
6. See Revised Standard Plan RSP A77L3 for use of 6" x 8" and 8" x 8" wood blocks.

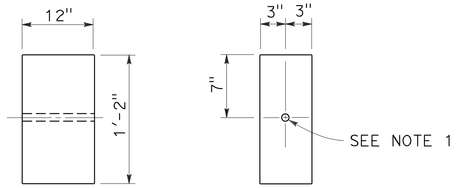

SIDE FRONT

6" x 12" WOOD BLOCK
See Note 3

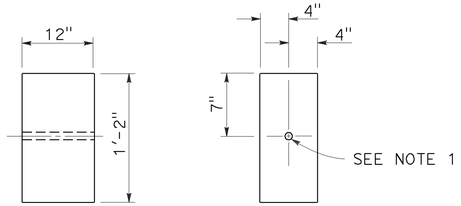

SIDE FRONT

8" x 12" WOOD BLOCK

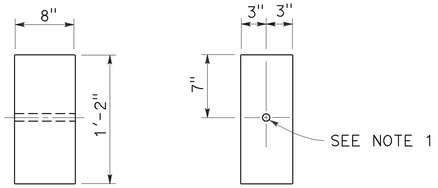

SIDE FRONT

6" x 8" WOOD BLOCK
Only for use with metal beam guard rail see Note 6

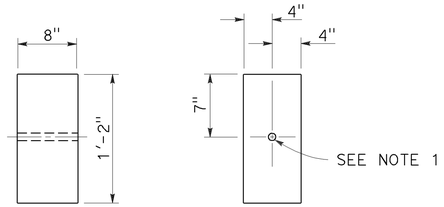

SIDE FRONT

8" x 8" WOOD BLOCK
Only for use with metal beam guard rail see Note 6

STATE OF CALIFORNIA
DEPARTMENT OF TRANSPORTATION

MIDWEST GUARDRAIL SYSTEM WOOD POST AND WOOD BLOCK DETAILS

NO SCALE

RSP A77N1 DATED JULY 19, 2013 SUPPLEMENTS THE STANDARD PLANS BOOK DATED 2010.

REVISED STANDARD PLAN RSP A77N1

2010 REVISED STANDARD PLAN RSP A77N1

7-3-13

Dist	COUNTY	ROUTE	POST MILES TOTAL PROJECT	SHEET No.	TOTAL SHEETS
01	Men	128	2.8/11.1	90	98

Randell D. Hiatt
REGISTERED CIVIL ENGINEER

November 15, 2013
PLANS APPROVAL DATE

REGISTERED PROFESSIONAL ENGINEER
Randell D. Hiatt
No. C50200
Exp. 6-30-15
CIVIL
STATE OF CALIFORNIA

THE STATE OF CALIFORNIA OR ITS OFFICERS OR AGENTS SHALL NOT BE RESPONSIBLE FOR THE ACCURACY OR COMPLETENESS OF SCANNED COPIES OF THIS PLAN SHEET.

TO ACCOMPANY PLANS DATED 6-15-15

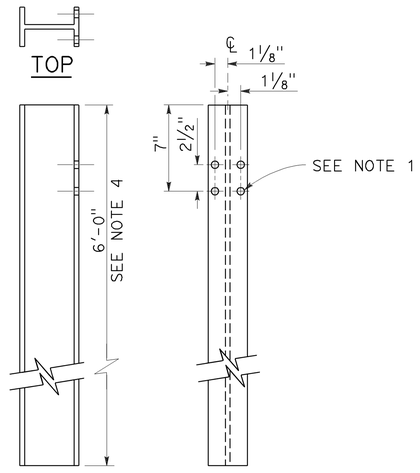

W6 x 9 OR W6 x 8.5
STEEL POST
See Note 4

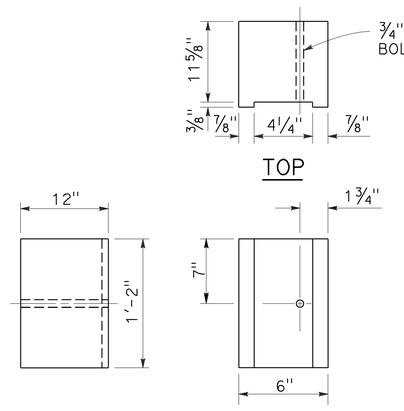

6" x 12"
NOTCHED WOOD BLOCK
See Notes 2 and 3

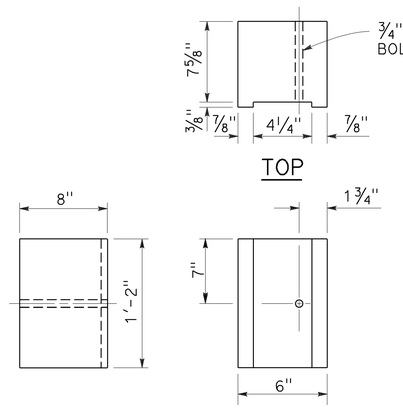

6" x 8"
NOTCHED WOOD BLOCK
Only for use with metal beam guard railing. See Note 5

NOTES:

1. All holes in steel post shall be 13/16" Dia maximum.
2. Dimensions shown for wood block are nominal.
3. Notched face of block faces steel post.
4. 6'-0" length posts to be used for typical roadway installation. See Revised Standard Plan RSP A77N3.
5. See Revised Standard Plan RSP A77L3 for use of 6" x 8" and 8" x 8" notched wood blocks.
6. This post and 8" x 12" block combination to be used for line post sections of MGS on narrow roadways and where strengthened line post sections of MGS are warranted to shield fixed objects.

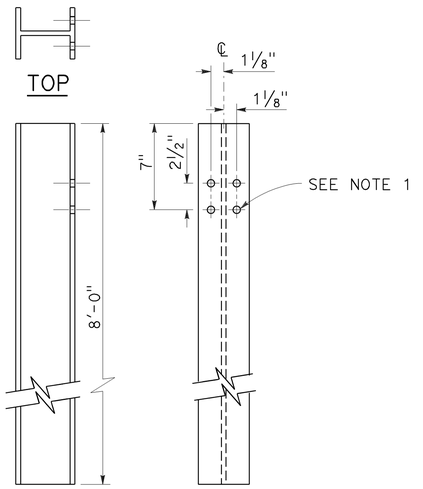

W6 x 15
STEEL POST
See Note 6

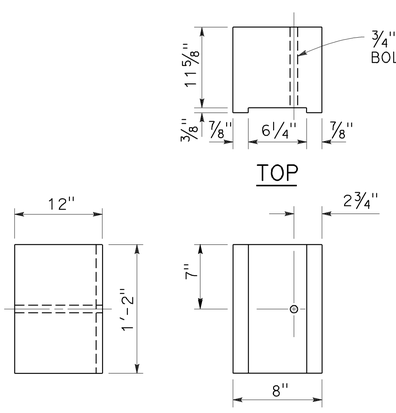

8" x 12"
NOTCHED WOOD BLOCK
See Notes 2 and 3

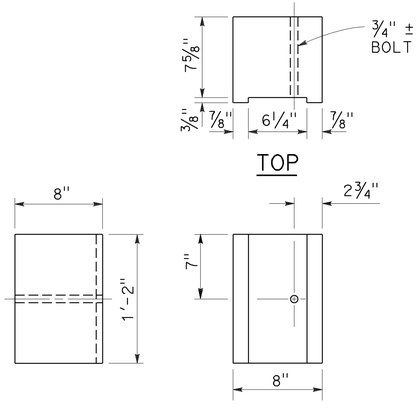

8" x 8"
NOTCHED WOOD BLOCK
Only for use with metal beam guard railing. See Note 5

STATE OF CALIFORNIA
DEPARTMENT OF TRANSPORTATION

MIDWEST GUARDRAIL SYSTEM STEEL POST AND NOTCHED WOOD BLOCK DETAILS

NO SCALE

RSP A77N2 DATED NOVEMBER 15, 2013 SUPERSEDES RSP A77N2
DATED JULY 19, 2013 THAT SUPPLEMENTS THE STANDARD PLANS BOOK DATED 2010.

REVISED STANDARD PLAN RSP A77N2

2010 REVISED STANDARD PLAN RSP A77N2

10-29-13

Dist	COUNTY	ROUTE	POST MILES TOTAL PROJECT	SHEET No.	TOTAL SHEETS
01	Men	128	2.8/11.1	91	98

REGISTERED CIVIL ENGINEER

July 19, 2013
PLANS APPROVAL DATE

Michael Janzen
No. 44788
Exp. 03-31-14
CIVIL
REGISTERED PROFESSIONAL ENGINEER
STATE OF CALIFORNIA

THE STATE OF CALIFORNIA OR ITS OFFICERS OR AGENTS SHALL NOT BE RESPONSIBLE FOR THE ACCURACY OR COMPLETENESS OF SCANNED COPIES OF THIS PLAN SHEET.

TO ACCOMPANY PLANS DATED 6-15-15

2010 REVISED STANDARD PLAN RSP A87B

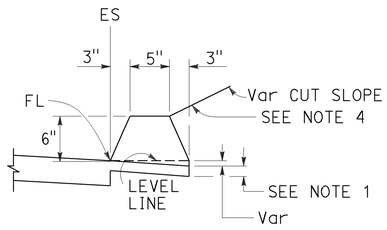

TYPE A
See Note 3

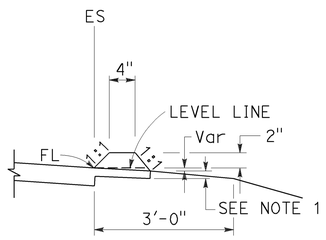

TYPE C

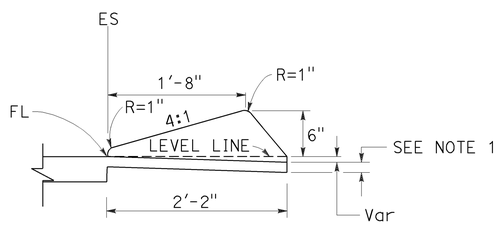

TYPE D

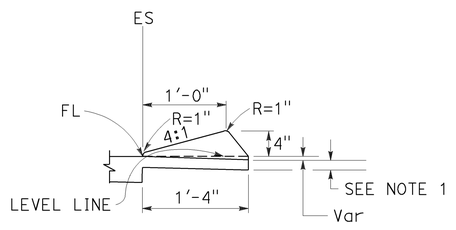

TYPE E

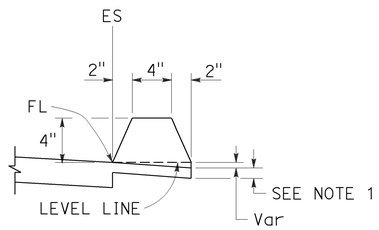

TYPE F
See Note 5

DIKES

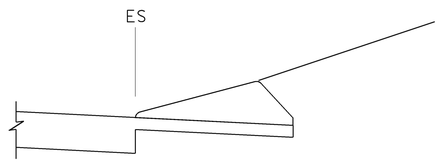

CASE C-1
Cut Slope

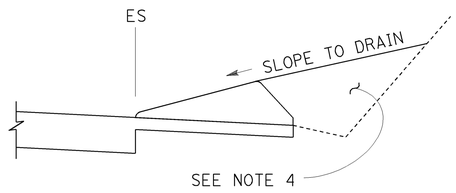

CASE C-2
Cut Slope

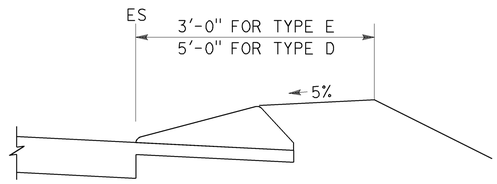

CASE F

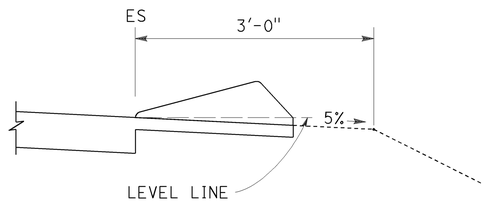

CASE R
See Note 2

TYPE D AND E BACKFILL DETAILS

NOTES:

1. For HMA shoulders only, extend top layer of HMA placed on the shoulder under dike with no joint at the ES. For projects with OGFC shoulders, do not extend OGFC under dike. See project plans for modified dike detail.
2. Case R applies to retrofit only projects where restrictive conditions do not provide enough width for Case F backfill.
3. Type A dike only to be used where restrictive slope conditions do not provide enough width to use Type D or Type E dike.
4. Fill and compact with excavated material to top of dike.
5. Use Type F dike, where dike is required with guard railing installations. See Revised Standard Plan RSP A77N4 for dike positioning details.

DIKE QUANTITIES

TYPE	CUBIC YARDS PER LINEAR FOOT
A	0.0135
C	0.0038
D	0.0293
E	0.0130
F	0.0066

Quantities based on 5% cross slope.

STATE OF CALIFORNIA
DEPARTMENT OF TRANSPORTATION

HOT MIX ASPHALT DIKES

NO SCALE

RSP A87B DATED JULY 19, 2013 SUPERSEDES STANDARD PLAN A87B
DATED MAY 20, 2011 - PAGE 120 OF THE STANDARD PLANS BOOK DATED 2010.

REVISED STANDARD PLAN RSP A87B

6-27-13

Dist	COUNTY	ROUTE	POST MILES TOTAL PROJECT	SHEET No.	TOTAL SHEETS
01	Men	128	2.8/11.1	92	98

REGISTERED CIVIL ENGINEER

October 21, 2011
PLANS APPROVAL DATE

REGISTERED PROFESSIONAL ENGINEER
Tillat Satter
No. C42892
Exp. 3-31-12
CIVIL
STATE OF CALIFORNIA

THE STATE OF CALIFORNIA OR ITS OFFICERS OR AGENTS SHALL NOT BE RESPONSIBLE FOR THE ACCURACY OR COMPLETENESS OF SCANNED COPIES OF THIS PLAN SHEET.

TO ACCOMPANY PLANS DATED 6-15-15

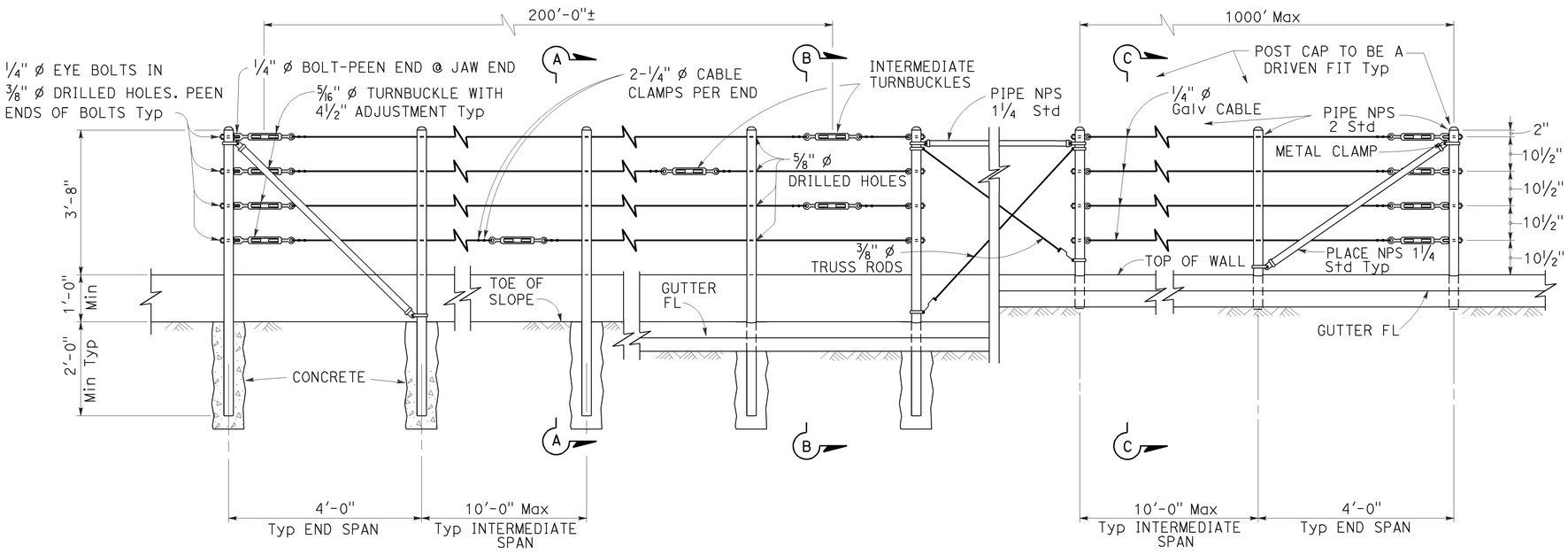

EXISTING WALL (WITHOUT GUTTER)
Existing

RETAINING WALL (WITH GUTTER)
Existing

RETAINING WALL (WITH GUTTER)
New construction

ELEVATION

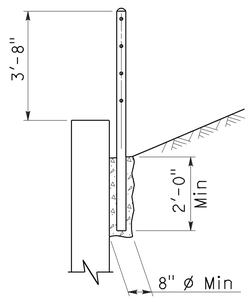

SECTION A-A
Existing

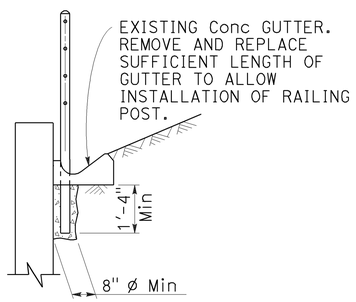

SECTION B-B
Existing

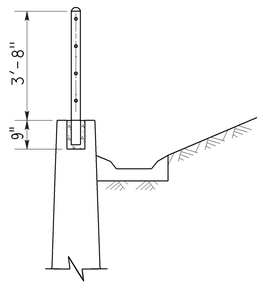

SECTION C-C
New construction

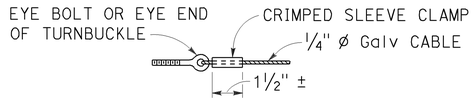

ALTERNATIVE CABLE CONNECTION

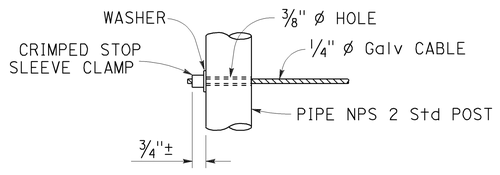

ALTERNATIVE DEAD END ANCHORAGE

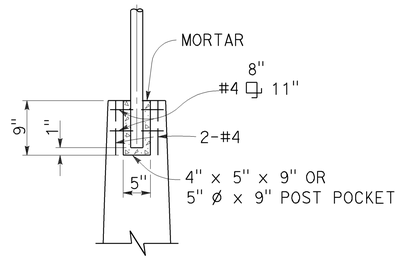

POST POCKET

NOTES:

1. Maximum distance between turnbuckles shall be 200'-0"±.
2. Intermediate turnbuckles to be placed in adjacent spans.
3. Cable shall not be spliced between intermediate turnbuckles and end posts.
4. Posts to be vertical.
5. Alignment of holes in posts may vary to conform to slope of top of retaining wall.
6. The Contractor shall verify all dependent dimensions in the field before ordering or fabricating any material.
7. Line posts shall be braced horizontally and trussed diagonally in both directions at intervals not to exceed 1000'.
8. Post pockets to be centered in top of wall.
9. Typical end spans, braced in both directions, shall be constructed at changes in line where the angle of deflection is 15° or more.
10. Provide thimbles at all cable loops.

STATE OF CALIFORNIA
DEPARTMENT OF TRANSPORTATION

CABLE RAILING

NO SCALE

RSP B11-47 DATED OCTOBER 21, 2011 SUPERSEDES STANDARD PLAN B11-47 DATED MAY 20, 2011 - PAGE 293 OF THE STANDARD PLANS BOOK DATED 2010.

REVISED STANDARD PLAN RSP B11-47

2010 REVISED STANDARD PLAN RSP B11-47

9-14-11

TO ACCOMPANY PLANS DATED 6-15-15

Dist	COUNTY	ROUTE	POST MILES TOTAL PROJECT	SHEET No.	TOTAL SHEETS
01	Men	128	2.8/11.1	93	98

Glenn DeCou
REGISTERED CIVIL ENGINEER

October 19, 2012
PLANS APPROVAL DATE

REGISTERED PROFESSIONAL ENGINEER — Glenn DeCou — No. C34547 — Exp. 9-30-13 — CIVIL — STATE OF CALIFORNIA

THE STATE OF CALIFORNIA OR ITS OFFICERS OR AGENTS SHALL NOT BE RESPONSIBLE FOR THE ACCURACY OR COMPLETENESS OF SCANNED COPIES OF THIS PLAN SHEET.

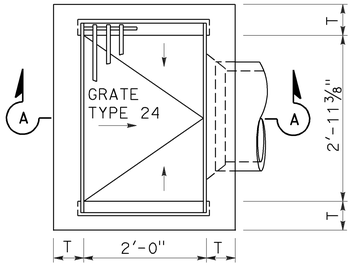

TYPE G1

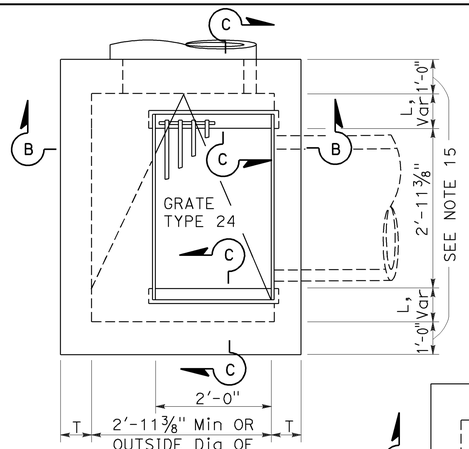

TYPE G2

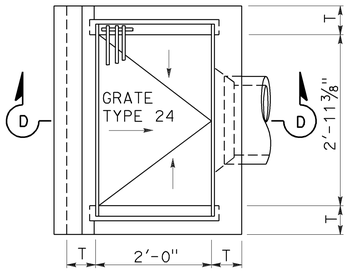

TYPE G3

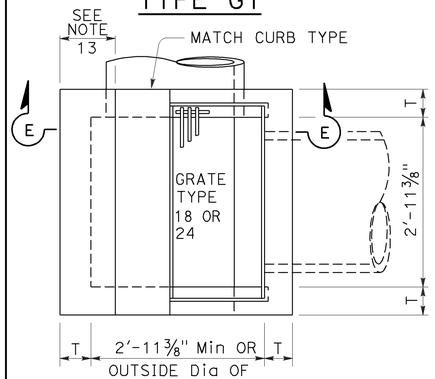

TYPE G4

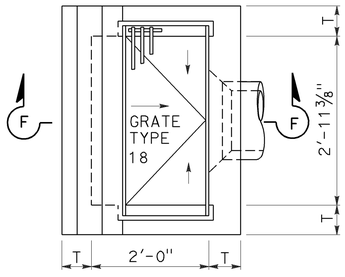

TYPE G6

TYPE G5

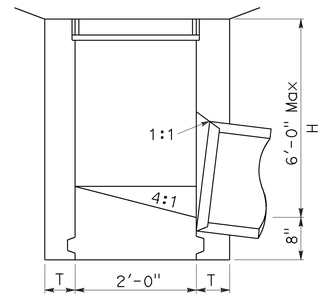

SECTION A-A

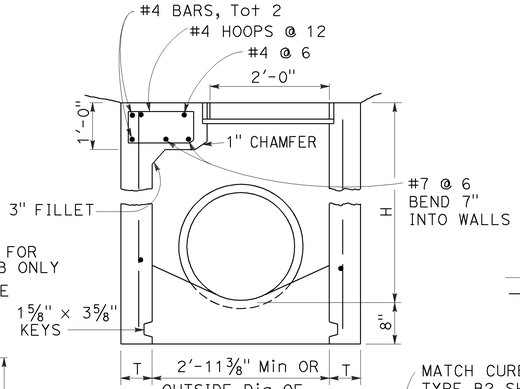

SECTION B-B

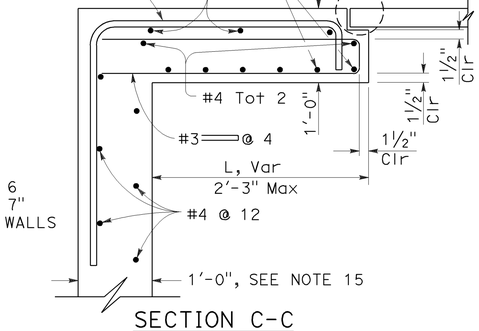

SECTION C-C

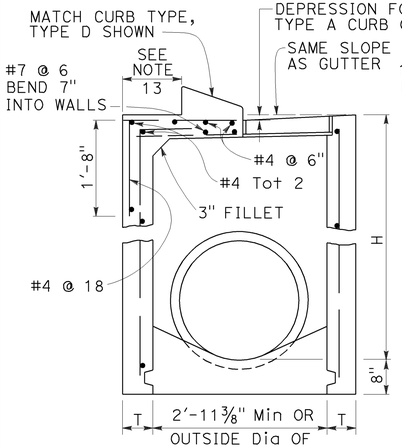

SECTION E-E

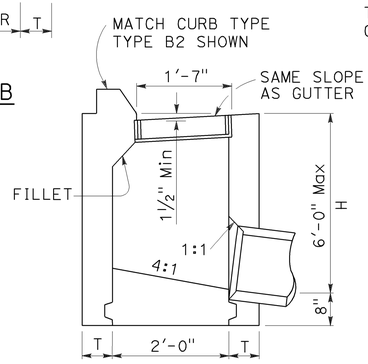

SECTION F-F

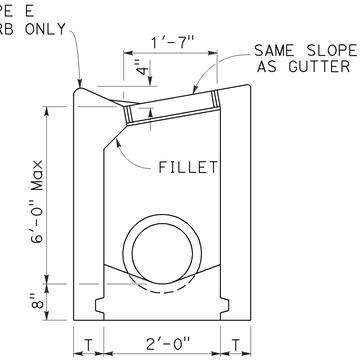

SECTION G-G

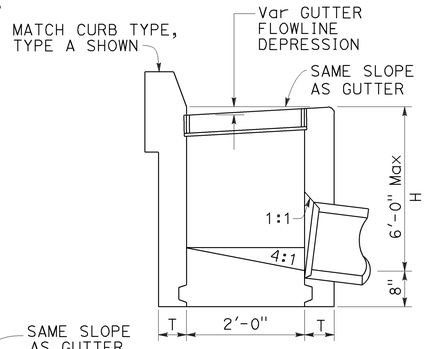

SECTION D-D

NOTES:

1. "H" is the difference in elevation between the outlet pipe flow line and the normal gutter grade line undepressed.
2. For "T" wall thickness, see Table A below.
3. Wall reinforcing not required when "H" is 8'-0" or less and the unsupported width or length is 7'-0" or less. Walls exceeding these limits shall be reinforced with #4 bars @ 1'-6" ± centers placed 1½" clear to inside of box unless otherwise shown.
4. Inlet bottom reinforcing not required. See Standard Plan D74C for alternative reinforced bottom and alternative half round bottom.
5. Steps-None required where "H" is less than 2'-6". Where "H" is 2'-6" or more, install steps with lowest rung 1'-0" above the floor and highest rung not more than 6" below top of inlet. The distance between steps shall not exceed 1'-0" and shall be uniform throughout the length of the wall. Place steps in the wall without an opening. Steps inserts may be substituted for the bar steps. Step inserts shall comply with State Industrial Safety requirements. See Standard Plan D74C for step details.
6. Details shown apply to both metal and concrete pipe.
7. Pipe(s) can be placed in any wall.
8. Curb section shall match adjacent curb.
9. Basin floors shall have wood trowel finish and a minimum slope of 12:3 from all directions toward outlet pipe.
10. Set inlet so that grate bars are parallel to direction of principal surface flow.
11. See Revised Standard Plans D77A and D77B for grate and frame details and weights of miscellaneous iron and steel.
12. See Standard Plan D78A for gutter depression details.
13. This dimenison will vary with different grates, curbs types, box width and wall thickness.
14. Bar may be rotated as necessary to clear opening. Where "L" is 6" or less, bar may be omitted.
15. Where "L" is 6" or less, wall thickness shall be as shown in Table A.
16. Cast-in-place inlets to be formed around all pipes/stubs intersecting the inlet, and concrete poured in one continuous operation. Precast inlets shall have mortared connections conforming to details for Type GCP Inlet shown on Standard Plan D75B. See Standard Specifications for mortar composition.

TABLE A

TYPE	CONCRETE QUANTITIES H=3'-0" TO 8'-0" (T=6")		H=8'-1" TO 20'-0" (T=8")	
	H=3'-0" (CY)	ADDITIONAL PCC PER FOOT (CY)	H=8'-1" (CY)	ADDITIONAL PCC PER FOOT (CY)
G-1	0.95	0.220	See Note A	SEE NOTE A
G-2*	1.31	0.255	3.50	0.357
G-3	1.03	0.220	See Note A	SEE NOTE A
G-4* (TYPE 24)	1.27	0.255	3.48	0.357
G-4* (TYPE 18)	1.30	0.255	3.50	0.357
G-5	1.02	0.220	SEE NOTE A	SEE NOTE A
G-6	1.04	0.220	SEE NOTE A	SEE NOTE A

TABLE BASED ON 8" FLOOR SLAB. NO DEDUCTIONS ARE TO BE MADE TO THESE QUANTITIES BECAUSE OF PIPE OPENINGS, DIFFERENT FLOOR ALTERNATIVES OR DIFFERENT CURB TYPES. * QUANTITIES FOR TYPE G-2 AND G-4 INLETS BASED ON THE MINIMUM INTERIOR DIMENSIONS.

NOTE A:

Maximum allowable height 6'-0".

STATE OF CALIFORNIA
DEPARTMENT OF TRANSPORTATION

DRAINAGE INLETS

NO SCALE

RSP D73 DATED OCTOBER 19, 2012 SUPERSEDES STANDARD PLAN D73 DATED MAY 20, 2011 - PAGE 156 OF THE STANDARD PLANS BOOK DATED 2010.

REVISED STANDARD PLAN RSP D73

2010 REVISED STANDARD PLAN RSP D73

7-19-12

Dist	COUNTY	ROUTE	POST MILES TOTAL PROJECT	SHEET No.	TOTAL SHEETS
01	Men	128	2.8/11.1	94	98

Raymond Don Tsztoo
REGISTERED CIVIL ENGINEER

April 19, 2013
PLANS APPROVAL DATE

Raymond Don Tsztoo No. C37332 Exp. 6-30-14 CIVIL — REGISTERED PROFESSIONAL ENGINEER — STATE OF CALIFORNIA

THE STATE OF CALIFORNIA OR ITS OFFICERS OR AGENTS SHALL NOT BE RESPONSIBLE FOR THE ACCURACY OR COMPLETENESS OF SCANNED COPIES OF THIS PLAN SHEET.

TO ACCOMPANY PLANS DATED 6-15-15

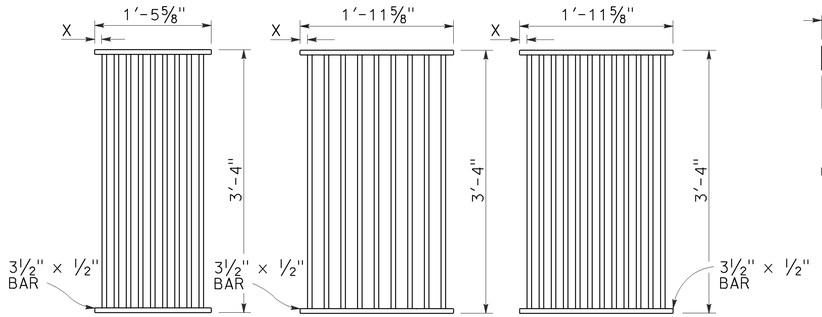

TYPE 18-9

1⅜" Clear spacing. Use within the roadbed on highways where bicycles and pedestrians are excluded.

TYPE 24-9

2" Clear spacing. Use in locations off the roadbed on all types of highways.

TYPE 24-12

1⅜" Clear spacing. Use within the roadbed on highways where bicycles and pedestrians are excluded.

RECTANGULAR GRATE DETAILS

(See table below)

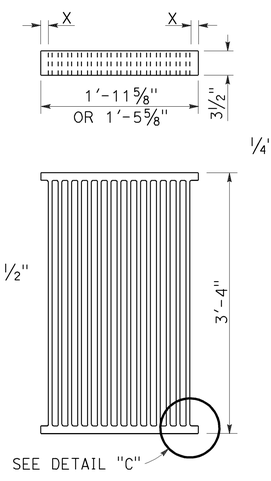

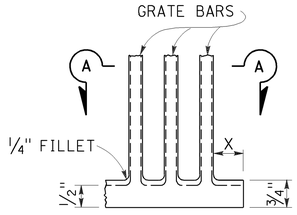

DETAIL "C"

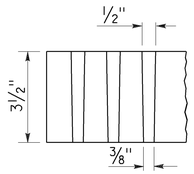

SECTION A-A

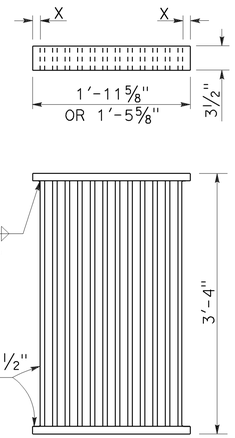

ALTERNATIVE CAST DUCTILE IRON GRATE OR CAST CARBON STEEL GRATE

ALTERNATIVE WELDED GRATE

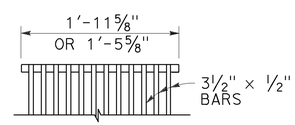

CAST END BLOCK

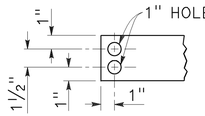

END OF BAR

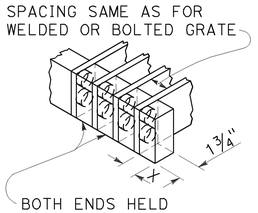

ALTERNATIVE CAST DUCTILE IRON OR CAST CARBON STEEL END BLOCK GRATE

NOTES:

1. Grate type numbers refer to approximate width of grate in inches and number of bars, respectively.
2. Contractor has the option of using cast ductile iron, cast carbon steel, welded, bolted, or cast end block grate.
3. Rounded top of bars optional on all grates.
4. Pipe inlets with a grate shall be placed so that bars parallel direction of principle surface flow.
5. Complete joint penetration butt welds may be substituted for the fillet welds on all anchors.
6. Standard square, hexagon, round or equivalent headed anchors may be substituted for the right angle hooks on the anchors shown on this plan.
7. Grate and frame weights are based on welded grates (weights of face angles, steps, protection bars, etc. are not included).
8. Connect chain to grate and frame only at locations shown on the plans. When chain is required, do not use cast ductile iron grates.

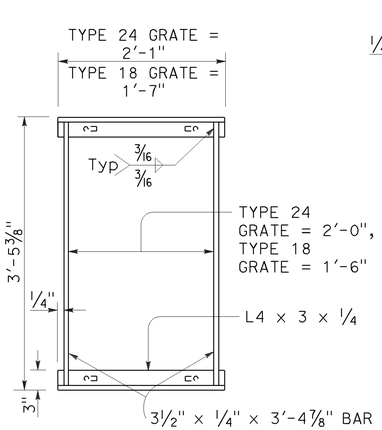

TYPICAL FRAME

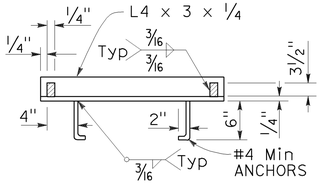

CROSS SECTION

(Thru frame)

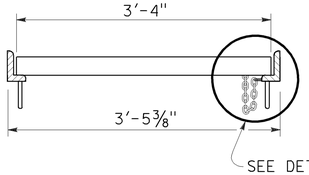

LONGITUDINAL SECTION

(Thru frame and grate)

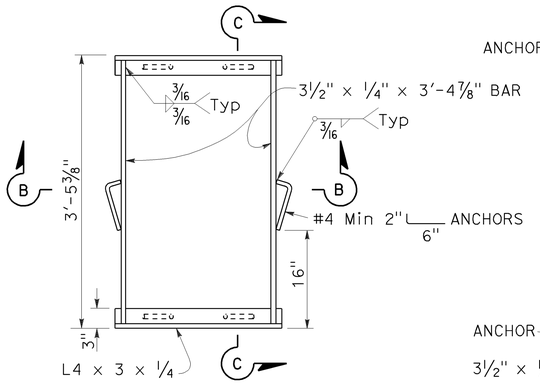

TYPICAL FRAME

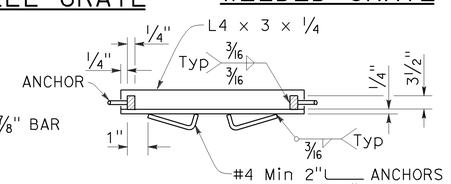

SECTION B-B

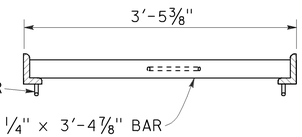

SECTION C-C

ALTERNATIVE ANCHOR FOR RECTANGULAR FRAME

(For details not shown, See Rectangular Frame Details)

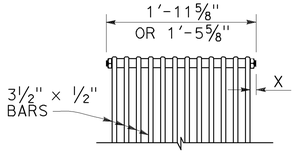

BOLTED END BLOCK

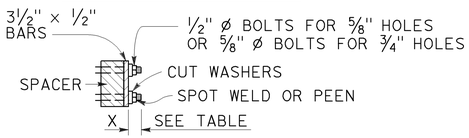

BOLTING DETAIL

ALTERNATIVE BOLTED GRATE

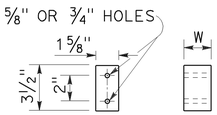

BAR SPACER

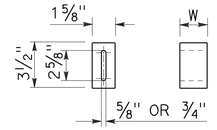

ALTERNATIVE SPACER

W = 1⅜" or 2"

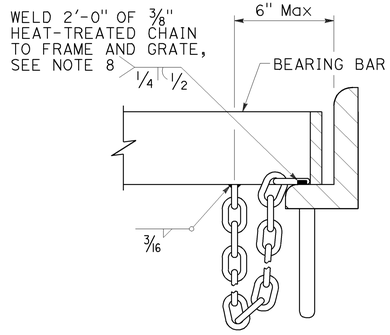

DETAIL "D"

(Steel grates only)

GRATE BAR SPACING TABLE

TYPE	No. OF BARS	CLEAR BAR SPACING	X
18-9	9	1⅜"	1 1⁄16"
24-9	9	2"	1 9⁄16"
24-12	12	1⅜"	1¼"

INLET TYPE	COVER TYPE	WEIGHT LB
OS	PLATE	174
OL-7	PLATE	170
OL-10	PLATE	170
OL-14	PLATE	170
OL-21	PLATE	170
OCP	PLATE	112
OCPI	PLATE	112
OCPI	REDWOOD	42
OMP	PLATE	177
OMPI	PLATE	177

INLET TYPE	GRATE TYPE	No. OF GRATES	WEIGHT LB
GDO	24-12	2	634
GOL-7	24-12	1	326
GOL-10	24-12	1	326
GO,G1,G2,G3,G4 (TYPE 24)	24-9	1	263
	24-12	1	326
G4 (TYPE 18),G5,G6	18-9	1	249
GT1	18-9	2	498
GT2	18-9	2	498
GT3	24-12	2	652
GT4	24-12	2	652
TRASH RACK			22
GRATE CHAIN			3

BASIS FOR Misc IRON & STEEL FINAL PAY WEIGHTS FOR DRAINAGE INLETS

(See Note 7)

RECTANGULAR FRAME DETAILS

(For all rectangular grates)

STATE OF CALIFORNIA
DEPARTMENT OF TRANSPORTATION

GRATE DETAILS No. 1

NO SCALE

RSP D77A DATED APRIL 19, 2013 SUPERSEDES RSP D77A DATED JULY 20, 2012 AND STANDARD PLAN D77A DATED MAY 20, 2011 - PAGE 164 OF THE STANDARD PLANS BOOK DATED 2010.

REVISED STANDARD PLAN RSP D77A

2010 REVISED STANDARD PLAN RSP D77A

4-4-13

Dist	COUNTY	ROUTE	POST MILES TOTAL PROJECT	SHEET No.	TOTAL SHEETS
01	Men	128	2.8/11.1	95	98

Raymond Don Tsztoo
REGISTERED CIVIL ENGINEER

April 19, 2013
PLANS APPROVAL DATE

REGISTERED PROFESSIONAL ENGINEER — Raymond Don Tsztoo — No. C37332 — Exp. 6-30-14 — CIVIL — STATE OF CALIFORNIA

THE STATE OF CALIFORNIA OR ITS OFFICERS OR AGENTS SHALL NOT BE RESPONSIBLE FOR THE ACCURACY OR COMPLETENESS OF SCANNED COPIES OF THIS PLAN SHEET.

TO ACCOMPANY PLANS DATED 6-15-15

2010 REVISED STANDARD PLAN RSP D77B

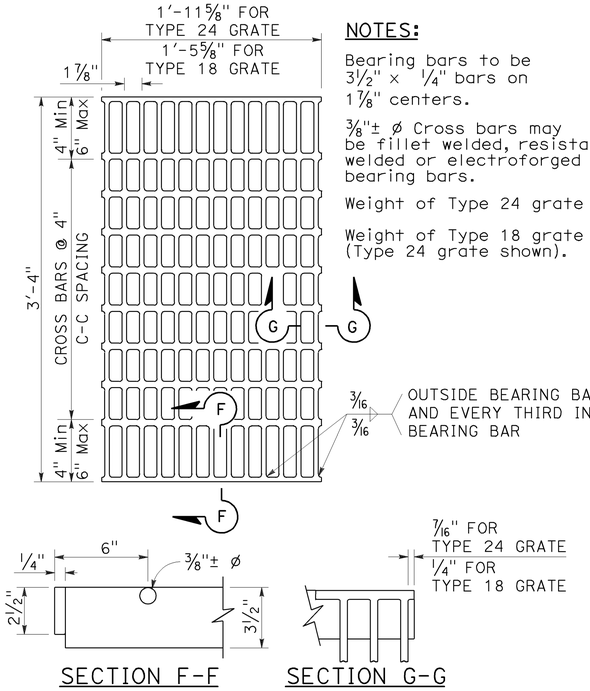

NOTES:

Bearing bars to be 3½" × ¼" bars on 1⅞" centers.

⅜"± ø Cross bars may be fillet welded, resistance welded or electroforged to bearing bars.

Weight of Type 24 grate = 141 LBS.

Weight of Type 18 grate = 107 LBS. (Type 24 grate shown).

SECTION F-F

SECTION G-G

TYPE 18-10 AND 24-13 GRATE

(Welded Steel)

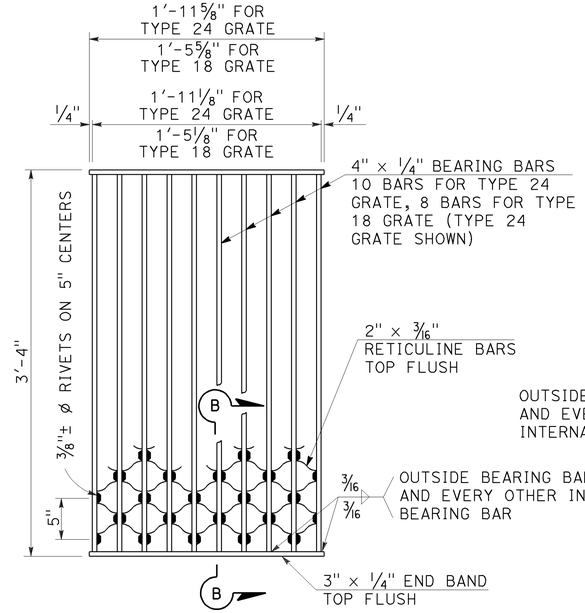

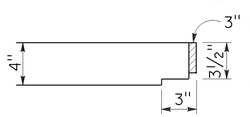

SECTION B-B

NOTES:

Weight of Type 24 grate = 182 LBS.
Weight of Type 18 grate = 145 LBS.

TYPE 18-8S AND 24-10S GRATE

(Welded Steel) Reticuline type

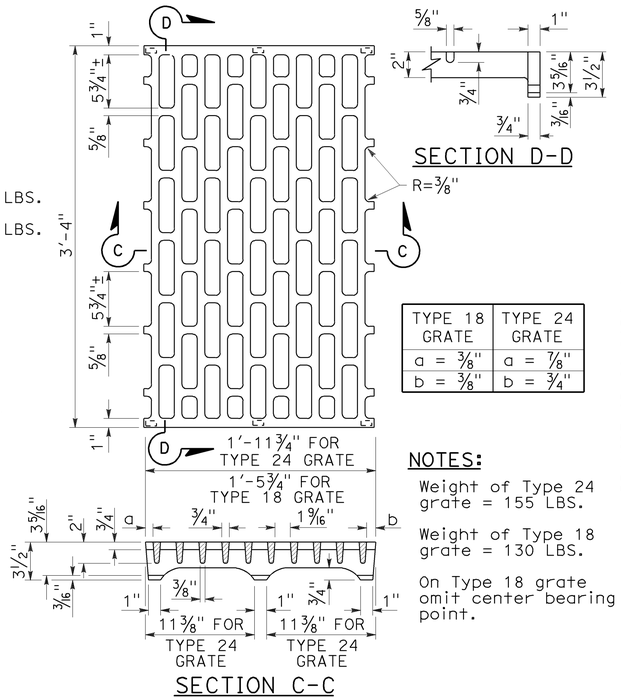

SECTION C-C

SECTION D-D

TYPE 18 GRATE	TYPE 24 GRATE
a = ⅜"	a = ⅞"
b = ⅜"	b = ¾"

NOTES:

Weight of Type 24 grate = 155 LBS.

Weight of Type 18 grate = 130 LBS.

On Type 18 grate omit center bearing point.

TYPE 18-8C AND 24-10C GRATE

(Cast ductile iron)

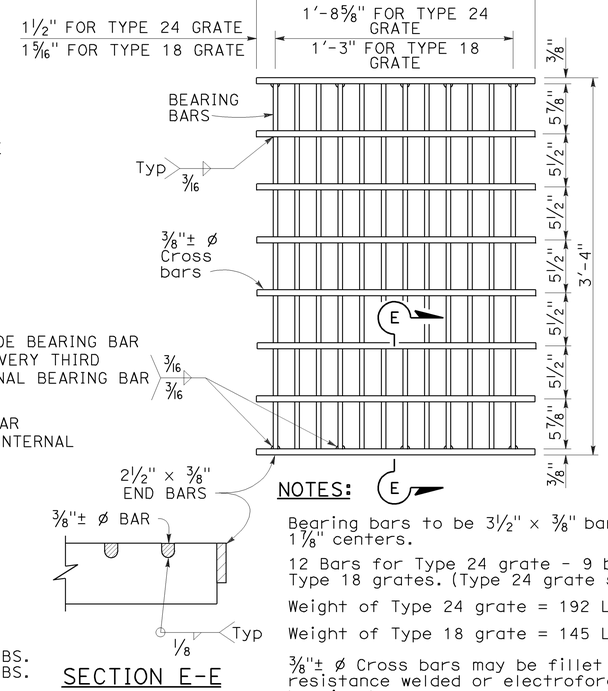

SECTION E-E

NOTES:

Bearing bars to be 3½" × ⅜" bars on 1⅛" centers.

12 Bars for Type 24 grate - 9 bars for Type 18 grates. (Type 24 grate shown).

Weight of Type 24 grate = 192 LBS.

Weight of Type 18 grate = 145 LBS.

⅜"± ø Cross bars may be fillet welded, resistance welded or electroforged to bearing bars.

TYPE 18-9X AND 24-12X GRATE

(Welded Steel)

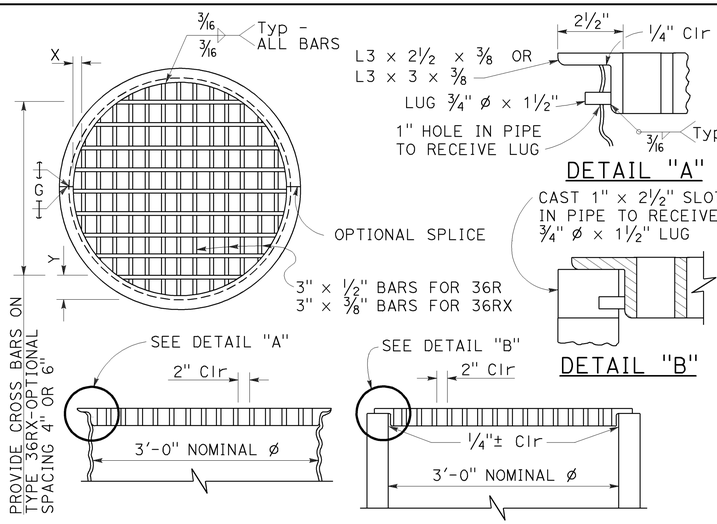

DETAIL "A"

DETAIL "B"

TYPE 36R AND 36RX GRATE DETAILS

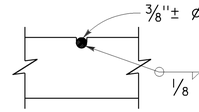

⅜"± ø Cross bars may be fillet welded, resistance welded or electroforged to bearing bars.

CROSS BAR DETAIL TYPE 36RX GRATE (WELDED STEEL)

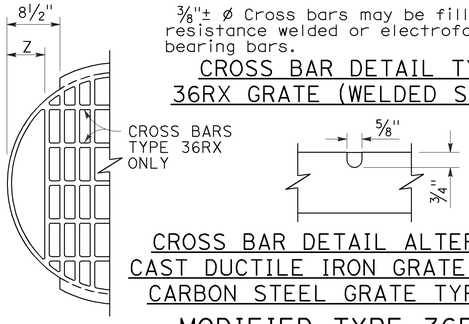

CROSS BAR DETAIL ALTERNATIVE CAST DUCTILE IRON GRATE OR CAST CARBON STEEL GRATE TYPE 36RX

MODIFIED TYPE 36R AND 36RX GRATE FOR ODI INLET

NOTES:

1. When alternative grates are allowed - Final pay based on alternative with the lesser weight.
2. Use frame shown on Standard Plan D74A, D74B or RSP D77A as appropriate.
3. When Type 24-10S, 24-12X or 24-13 grates are used with GDO Inlets, a ¼" × 3½" × 3'-4⅞" steel bar shall be welded across the center of inlet frame to separate the individual grates.
4. See Revised Standard Plan RSP D77A for connecting chain to welded grate and frame. When chain is required, do not use cast ductile iron grate.

GRATE BAR SPACING TABLE

TYPE	No. OF BARS	CLEAR BAR SPACING	X	Y		Z
				4" SPACING	6" SPACING	
36R	13	2"	2⅛"	-	-	-
36RX (STEEL)	15	2"	9/16"	3¾"	5¾"	-
36RX (CAST)	13	2"	2⅛"	3¾"	5¾"	-
36R Mod	12	2"	2⅛"	-	-	5"
36RX Mod (STEEL)	13	2"	9/16"	3¾"	5¾"	5 11/16"
36RX Mod (CAST)	12	2"	2⅛"	3¾"	5¾"	5"

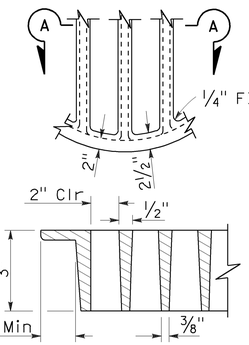

SECTION A-A

ALTERNATIVE CAST DUCTILE IRON GRATE OR CAST CARBON STEEL GRATE TYPE 36R AND 36RX

BASIS FOR Misc IRON AND STEEL FINAL PAY WEIGHTS FOR DRAINAGE INLETS

INLET TYPE	GRATE TYPE	No. OF GRATES	WEIGHT LB
GDO (SEE NOTE 4)	24-10C	2	391
	24-10S	2	456
	24-12X	2	473
	24-13	2	374
G0,G0L,G1,G2, G3,G4 (TYPE 24)	24-10C	1	202
	24-10S	1	229
	24-12X	1	239
	24-13	1	188
G4 (TYPE 18) G5,G6	18-8S	1	187
	18-9X	1	187
	18-10	1	149
GT1,GT2	18-8S	2	374
	18-9X	2	374
	18-10	2	298
GT3,GT4	24-10C	2	404
	24-10S	2	458
	24-12X	2	478
	24-13	2	376
ODI	36RX (Mod)	1	196
GMP,GCP,GCPI	36RX	1	215
ODI	36R (Mod)	1	220
GMP,GCP,GCPI	36R	1	236
TRASH RACK			22
GRATE CHAIN			3

STATE OF CALIFORNIA
DEPARTMENT OF TRANSPORTATION

GRATE DETAILS No. 2

NO SCALE

RSP D77B DATED APRIL 19, 2013 SUPERSEDES RSP D77B DATED JULY 20, 2012 AND STANDARD PLAN D77B DATED MAY 20, 2011 - PAGE 165 OF THE STANDARD PLANS BOOK DATED 2010.

REVISED STANDARD PLAN RSP D77B

4-4-13

Dist	COUNTY	ROUTE	POST MILES TOTAL PROJECT	SHEET No.	TOTAL SHEETS
01	Men	128	2.8/11.1	96	98

LICENSED LANDSCAPE ARCHITECT

July 19, 2013
PLANS APPROVAL DATE

Gregory A. Balzer 2015
01 Effective Date
2-28-15
Renewal Date
7-19-13
Date
LICENSED LANDSCAPE ARCHITECT
STATE OF CALIFORNIA

THE STATE OF CALIFORNIA OR ITS OFFICERS OR AGENTS SHALL NOT BE RESPONSIBLE FOR THE ACCURACY OR COMPLETENESS OF SCANNED COPIES OF THIS PLAN SHEET.

TO ACCOMPANY PLANS DATED 6-15-15

A

AB	AGGREGATE BASE
ABS	ACRYLONITRILE-BUTADIENE-STYRENE
AC	ASPHALT CONCRETE
ACC	ARMOR-CLAD CONDUCTORS
Adj	ADJACENT/ADJUSTABLE
AIC	AUXILIARY IRRIGATION CONTROLLER
Alt	ALTERNATIVE
AMEND	AMENDMENT
ARV	AIR RELEASE VALVE
AUTO	AUTOMATIC
AUX	AUXILIARY
AVB	ATMOSPHERIC VACUUM BREAKER

B

B&B	BALLED AND BURLAPPED
B/B	BRASS/BRONZE
B/B/PL	BRASS/BRONZE/PLASTIC
B/PL	BRASS/PLASTIC
BFM	BONDED FIBER MATRIX
Bit Ctd	BITUMINOUS COATED
BP	BOOSTER PUMP
BPA	BACKFLOW PREVENTER ASSEMBLY
BPE	BACKFLOW PREVENTER ENCLOSURE
BV	BALL VALVE

C

C	CONDUIT
CAP	CORRUGATED ALUMINUM PIPE
CARV	COMBINATION AIR RELEASE VALVE
CB	COUPLING BAND
CCA	CAM COUPLER ASSEMBLY
CEC	CONTROLLER ENCLOSURE CABINET
CHDPE	CORRUGATED HIGH DENSITY POLYETHYLENE
CL	CHAIN LINK
CNC	CONTROL AND NEUTRAL CONDUCTORS
Conc	CONCRETE
CP	COPPER PIPE
CS	COMPOST SOCK
CSP	CORRUGATED STEEL PIPE
CST	CENTER STRIP
CV	CHECK VALVE

D

Dia	DIAMETER
DIP	DUCTILE IRON PIPE
DIT	DRIP IRRIGATION TUBING
DG	DECOMPOSED GRANITE
DN	DIAMETER NOMINAL
DVA	DRIP VALVE ASSEMBLY

E

EC	EROSION CONTROL
ECTC	EROSION CONTROL TECHNOLOGY COUNCIL
Elect	ELECTRIC/ELECTRICAL
Elev	ELEVATION
ELL	ELBOW
ENCL	ENCLOSURE
EP	EDGE OF PAVEMENT
ES	EDGE OF SHOULDER
EST	END STRIP
ESTB	ESTABLISHMENT
ETW	EDGE OF TRAVELED WAY

F

F	FULL CIRCLE
F/P	FULL/PART CIRCLE
FCV	FLOW CONTROL VALVE
FERT	FERTILIZER
FG	FINISHED GRADE
FH	FLEXIBLE HOSE
FIPT	FEMALE IRON PIPE THREAD
FIS	FERTILIZER INJECTOR SYSTEM
FL	FLOW LINE
FR	FIBER ROLL
FS	FLOW SENSOR
FSC	FLOW SENSOR CABLE
FV	FLUSH VALVE

G

Galv	GALVANIZED
GARV	GARDEN VALVE
GARVA	GARDEN VALVE ASSEMBLY
GM	GRAVEL MULCH
GPH	GALLONS PER HOUR
GPM	GALLONS PER MINUTE
GSP	GALVANIZED STEEL PIPE
GV	GATE VALVE

H

H	HALF CIRCLE
HDPE	HIGH DENSITY POLYETHYLENE
HP	HORSEPOWER/HINGE POINT
HPL	HIGH PRESSURE LINE
Hwy	HIGHWAY

I

IC	IRRIGATION CONTROLLER
ICC	IRRIGATION CONTROLLER(S) IN CONTROLLER ENCLOSURE CABINET
ID	INSIDE DIAMETER
IFS	IRRIGATION FILTRATION SYSTEM
IPS	IRON PIPE SIZE
IPT	IRON PIPE THREAD
Irr	IRRIGATION

L

L	LENGTH

M

Max	MAXIMUM
MBGR	METAL BEAM GUARD RAILING
MCV	MANUAL CONTROL VALVE
MIC	MASTER IRRIGATION CONTROLLER
Min	MINIMUM
MIPT	MALE IRON PIPE THREAD
Misc	MISCELLANEOUS
Mtl	MATERIAL
MVP	MAINTENANCE VEHICLE PULLOUT

N

NCN	NO COMMON NAME
NL	NOZZLE LINE
No.	NUMBER
NPT	NATIONAL PIPE THREAD

O

O/C	ON CENTER
OD	OUTSIDE DIAMETER
OL	OVERLAP

P

P	PART CIRCLE
PB	PULL BOX
PCC	PORTLAND CEMENT CONCRETE
PE	POLYETHYLENE
Pkt	PACKET
PL	PLASTIC
PLS	PURE LIVE SEED
PLT	PLANT/PLANTING
PLT ESTB	PLANT ESTABLISHMENT
PM	POST MILE
PR	PRESSURE RATED
PRLV	PRESSURE RELIEF VALVE
PRV	PRESSURE REGULATING VALVE
PVC	POLYVINYL CHLORIDE
Pvmt	PAVEMENT

Q

Q	QUARTER CIRCLE
QCV	QUICK COUPLING VALVE

NOTE:
For additional abbreviations, see Standard Plans A10A and A10B.

R

R	RADIUS
RCP	REINFORCED CONCRETE PIPE
RCV	REMOTE CONTROL VALVE
RCVM	REMOTE CONTROL VALVE (MASTER)
RCVMF	REMOTE CONTROL VALVE (MASTER) W/FLOW SENSOR
RCVP	REMOTE CONTROL VALVE W/PRESSURE REGULATOR
RCW	RECYCLED WATER
RECP	ROLLED EROSION CONTROL PRODUCT
REQ	REQUIRED
RICS	REMOTE IRRIGATION CONTROL SYSTEM
R/W	RIGHT OF WAY

S

S	SLIP
SCH	SCHEDULE
SF	STATE-FURNISHED
Shld	SHOULDER
Sq	SQUARE
SST	SIDE STRIP
Sta	STATION
Std	STANDARD
SW	SIDEWALK/SOUND WALL

T

T	THIRD CIRCLE/THREAD
TLS	TRUCK LOADING STANDPIPE
TQ	THREE QUARTER CIRCLE
TRM	TURF REINFORCEMENT MAT
TT	TWO-THIRDS CIRCLE
TWSA	TREE WELL SPRINKLER ASSEMBLY
Typ	TYPICAL

U

UG	UNDERGROUND

W

W	WIDTH
W/	WITH
WM	WATER METER
WS	WYE STRAINER
WSA	WYE STRAINER ASSEMBLY
WSP	WELDED STEEL PIPE
WWM	WELDED WIRE MESH

STATE OF CALIFORNIA
DEPARTMENT OF TRANSPORTATION

LANDSCAPE AND EROSION CONTROL ABBREVIATIONS

NO SCALE

RSP H1 DATED JULY 19, 2013 SUPERSEDES STANDARD PLAN H1
DATED MAY 20, 2011 - PAGE 218 OF THE STANDARD PLANS BOOK DATED 2010.

REVISED STANDARD PLAN RSP H1

2010 REVISED STANDARD PLAN RSP H1

6-28-13

Dist	COUNTY	ROUTE	POST MILES TOTAL PROJECT	SHEET No.	TOTAL SHEETS
01	Men	128	2.8/11.1	97	98

REGISTERED CIVIL ENGINEER

July 19, 2013
PLANS APPROVAL DATE

Gurinderpal Bhullar
No. C48815
Exp. 9-30-14
CIVIL
REGISTERED PROFESSIONAL ENGINEER
STATE OF CALIFORNIA

THE STATE OF CALIFORNIA OR ITS OFFICERS OR AGENTS SHALL NOT BE RESPONSIBLE FOR THE ACCURACY OR COMPLETENESS OF SCANNED COPIES OF THIS PLAN SHEET.

TO ACCOMPANY PLANS DATED 6-15-15

TABLE 1

TAPER LENGTH CRITERIA AND CHANNELIZING DEVICE SPACING

SPEED (S)	MINIMUM TAPER LENGTH * FOR WIDTH OF OFFSET 12 FEET (W)				MAXIMUM CHANNELIZING DEVICE SPACING		
					X	Y	Z **
	TANGENT 2L	MERGING L	SHIFTING L/2	SHOULDER L/3	TAPER	TANGENT	CONFLICT
mph	ft	ft	ft	ft	ft	ft	ft
20	160	80	40	27	20	40	10
25	250	125	63	42	25	50	12
30	360	180	90	60	30	60	15
35	490	245	123	82	35	70	17
40	640	320	160	107	40	80	20
45	1080	540	270	180	45	90	22
50	1200	600	300	200	50	100	25
55	1320	660	330	220	55	110	27
60	1440	720	360	240	60	120	30
65	1560	780	390	260	65	130	32
70	1680	840	420	280	70	140	35

* - For other offsets, use the following merging taper length formula for L:
For speed of 40 mph or less, $L = WS^2/60$
For speed of 45 mph or more, $L = WS$

Where: L = Taper length in feet
W = Width of offset in feet
S = Posted speed limit, off-peak 85th-percentile speed prior to work starting, or the anticipated operating speed in mph

** - Use for taper and tangent sections where there are no pavement markings or where there is a conflict between existing pavement markings and channelizers (CA).

TABLE 2

LONGITUDINAL BUFFER SPACE AND FLAGGER STATION SPACING

SPEED *	Min D **	DOWNGRADE Min D ***		
		-3%	-6%	-9%
mph	ft	ft	ft	ft
20	115	116	120	126
25	155	158	165	173
30	200	205	215	227
35	250	257	271	287
40	305	315	333	354
45	360	378	400	427
50	425	446	474	507
55	495	520	553	593
60	570	598	638	686
65	645	682	728	785
70	730	771	825	891

* - Speed is posted speed limit, off-peak 85th-percentile speed prior to work starting, or the anticipated operating speed in mph

** - Longitudinal buffer space or flagger station spacing

*** - Use on sustained downgrade steeper than -3 percent and longer than 1 mile.

TABLE 3

ADVANCE WARNING SIGN SPACING

ROAD TYPE	DISTANCE BETWEEN SIGNS *		
	A	B	C
	ft	ft	ft
URBAN - 25 mph OR LESS	100	100	100
URBAN - MORE THAN 25 mph TO 40 mph	250	250	250
URBAN - MORE THAN 40 mph	350	350	350
RURAL	500	500	500
EXPRESSWAY / FREEWAY	1000	1500	2640

* - The distances are approximate, are intended for guidance purposes only, and should be applied with engineering judgment. These distances should be adjusted by the Engineer for field conditions, if necessary, by increasing or decreasing the recommmended distances.

2010 REVISED STANDARD PLAN RSP T9

STATE OF CALIFORNIA
DEPARTMENT OF TRANSPORTATION

TRAFFIC CONTROL SYSTEM TABLES FOR LANE AND RAMP CLOSURES

NO SCALE

RSP T9 DATED JULY 19, 2013 SUPERSEDES RSP T9 DATED APRIL 19, 2013 THAT SUPPLEMENTS THE STANDARD PLANS BOOK DATED 2010.

REVISED STANDARD PLAN RSP T9

4-30-13

Dist	COUNTY	ROUTE	POST MILES TOTAL PROJECT	SHEET No.	TOTAL SHEETS
01	Men	128	2.8/11.1	98	98

REGISTERED CIVIL ENGINEER

April 19, 2013
PLANS APPROVAL DATE

REGISTERED PROFESSIONAL ENGINEER
Gurinderpal Bhullar
No. C48815
Exp. 9-30-14
CIVIL
STATE OF CALIFORNIA

THE STATE OF CALIFORNIA OR ITS OFFICERS OR AGENTS SHALL NOT BE RESPONSIBLE FOR THE ACCURACY OR COMPLETENESS OF SCANNED COPIES OF THIS PLAN SHEET.

TO ACCOMPANY PLANS DATED 6-15-15

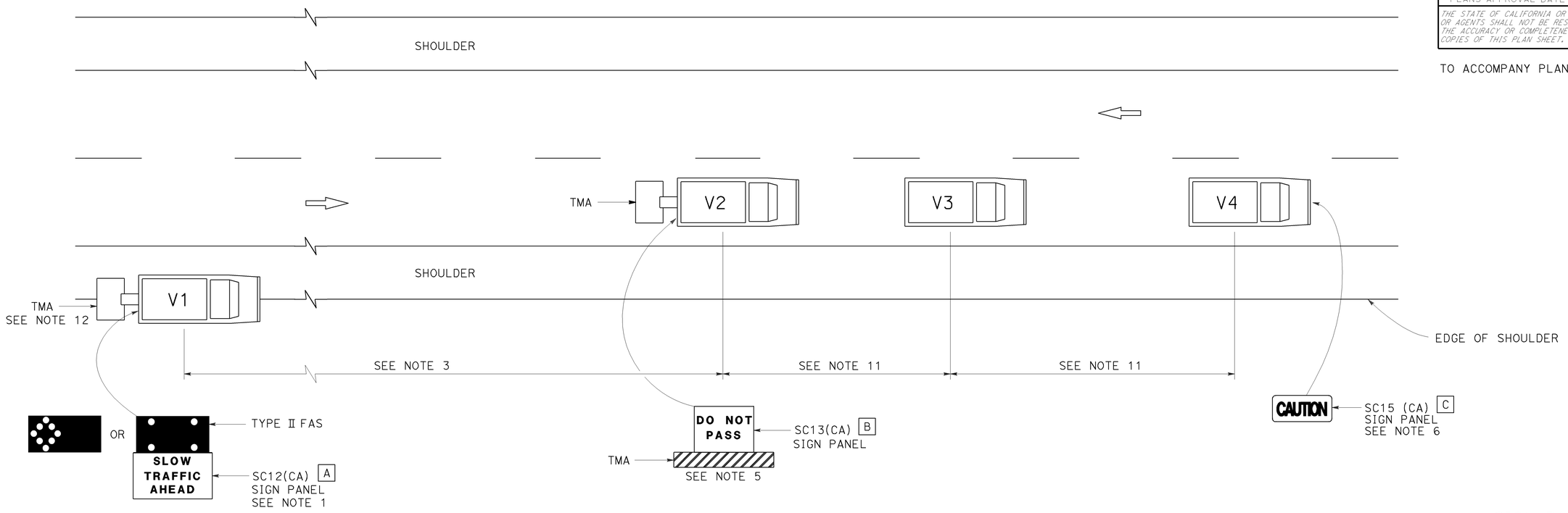

NOTES:

1. Either a changeable message sign or a SC12(CA) "SLOW TRAFFIC AHEAD" sign shall be mounted on the rear of sign vehicle V1. The changeable message sign shall be sequenced to show the "CAUTION" message first, follow by the "SLOW TRAFFIC AHEAD" message. A Type II flashing arrow sign may be used with the SC12(CA) sign panel.
2. Sign vehicle V1 should be positioned where highly visible when shoulders are not available.
3. If traffic queues develop, sign vehicle V1 should be positioned upstream from the end of queue.
4. Vehicle-mounted sign panels shall have Type III or above retroreflective sheeting, black on white, or black on fluorescent orange, with 6" minimum series D letters per Caltrans sign specifications.
5. Shadow vehicle shall be equipped with a truck-mounted attenuator. The sign panel shown shall be mounted on the rear of shadow vehicle V2. The message "LANE CLOSED" may be used in place of the "DO NOT PASS" message.
6. The sign panel shown shall be mounted on the front of sign vehicle V4, facing opposing traffic.
7. All vehicles shall be equipped with flashing or rotating amber lights.
8. Sign vehicle V4 will not be required when the work and vehicles V2 and V3 are 2' or more from the centerline of the highway during the work or application operations.
9. All vehicles used for lane closures shall be equipped with two-way radios and the vehicle operators shall maintain communication during the work or application operation.
10. This plan shall not be used where workers would be on foot in the work area. Use a stationary type lane closure (Revised Standard Plan T13) for this condition.
11. Minimize spacing between vehicles V2 and V3 and vehicles V3 and V4 to deter road users from driving in between them.
12. If sign vehicle V1 encroaches into the traffic lane due to insufficient shoulder width, sign vehicle V1 shall be equipped with a truck-mounted attenuator. Sign vehicle V1 shall stay as close to the edge of shoulder as practicable.

LEGEND

V1	SIGN VEHICLE
V2	SHADOW VEHICLE
V3	WORK/APPLICATION VEHICLE
V4	SIGN VEHICLE
TMA	TRUCK-MOUNTED ATTENUATOR
	FLASHING ARROW SIGN (FAS) IN FLASHING CAUTION MODE
	FLASHING ARROW SIGN (FAS) IN ALTERNATING DIAMOND CAUTION

SIGN PANEL SIZE (Min)

A	72" x 42"
B	54" x 42"
C	54" x 24"

STATE OF CALIFORNIA
DEPARTMENT OF TRANSPORTATION

TRAFFIC CONTROL SYSTEM FOR MOVING LANE CLOSURE ON TWO LANE HIGHWAYS

NO SCALE

RSP T17 DATED APRIL 19, 2013 SUPERSEDES STANDARD PLAN T17
DATED MAY 20, 2011 - PAGE 245 OF THE STANDARD PLANS BOOK DATED 2010.

REVISED STANDARD PLAN RSP T17

2010 REVISED STANDARD PLAN RSP T17

12-18-12