Dist	COUNTY	ROUTE	POST MILES TOTAL PROJECT	SHEET No.	TOTAL SHEETS
01	Men	128	Var	1	50

STATE OF CALIFORNIA

DEPARTMENT OF TRANSPORTATION

PROJECT PLANS FOR CONSTRUCTION ON

STATE HIGHWAY

IN MENDOCINO COUNTY AT VARIOUS LOCATIONS

TO BE SUPPLEMENTED BY STANDARD PLANS DATED 2010

INDEX OF PLANS

SHEET No.	DESCRIPTION
1	TITLE AND LOCATION MAP
2	TEMPORARY WATER POLLUTION CONTROL QUANTITIES
3-23	DRAINAGE PLAN AND PROFILE
24-27	DRAINAGE DETAILS
28-32	DRAINAGE QUANTITIES
33	CONSTRUCTION AREA SIGNS
34	TRAFFIC HANDLING DETAILS
35	PAVEMENT DELINEATION QUANTITIES
36	SUMMARY OF QUANTITIES
37	EROSION CONTROL LEGEND AND QUANTITIES
38-41	EROSION CONTROL PLANS
42-50	REVISED STANDARD PLANS

THE STANDARD PLANS LIST APPLICABLE TO THIS CONTRACT IS INCLUDED IN THE NOTICE TO BIDDERS AND SPECIAL PROVISIONS BOOK.

NO SCALE

LOCATIONS OF CONSTRUCTION

Loc	PM	DESCRIPTION
1	10.58	ADJACENT TO STATE PARK
2	10.73	ADJACENT TO STATE PARK
3	11.00	ADJACENT TO STATE PARK
4	11.13	ADJACENT TO STATE PARK
5	11.17	ADJACENT TO STATE PARK
6	11.54	ADJACENT TO STATE PARK
7	12.12	ADJACENT TO STATE PARK
8	14.91	
9	15.19	
10	15.52	
11	15.56	
12	16.11	
13	16.50	
14	16.99	
15	17.02	
16	17.26	
17	17.45	
18	18.97	
19	19.94	
20	22.34	
21	23.30	

Marlene Gibb 1-27-15
PROJECT ENGINEER DATE
REGISTERED CIVIL ENGINEER

February 2, 2015
PLANS APPROVAL DATE

REGISTERED PROFESSIONAL ENGINEER
MARLENE E. GIBB
No. C 51513
Exp. 06-30-16
CIVIL
STATE OF CALIFORNIA

THE STATE OF CALIFORNIA OR ITS OFFICERS OR AGENTS SHALL NOT BE RESPONSIBLE FOR THE ACCURACY OR COMPLETENESS OF SCANNED COPIES OF THIS PLAN SHEET.

PROJECT MANAGER SEBASTIAN COHEN

DESIGN MANAGER ROBERT E. POLGAR

THE CONTRACTOR SHALL POSSESS THE CLASS (OR CLASSES) OF LICENSE AS SPECIFIED IN THE "NOTICE TO BIDDERS."

CONTRACT No.	01-378144
PROJECT ID	0100000134

LAST REVISION 00-00-00 DATE PLOTTED => 06-APR-2015 TIME PLOTTED => 08:57

Dist	COUNTY	ROUTE	POST MILES TOTAL PROJECT	SHEET No.	TOTAL SHEETS
01	Men	128	Var	2	50

REGISTERED CIVIL ENGINEER 1-27-15 DATE

2-2-15
PLANS APPROVAL DATE

REGISTERED PROFESSIONAL ENGINEER
MARLENE E. GIBB
No. C 51513
Exp. 06-30-16
CIVIL
STATE OF CALIFORNIA

THE STATE OF CALIFORNIA OR ITS OFFICERS OR AGENTS SHALL NOT BE RESPONSIBLE FOR THE ACCURACY OR COMPLETENESS OF SCANNED COPIES OF THIS PLAN SHEET.

TEMPORARY WATER POLLUTION CONTROL

DRAINAGE SYSTEM No.	LOCATION (PM)	Temp DI PROTECTION	Temp CHECK DAM	Temp FIBER ROLL	Temp SILT FENCE	Temp COVER	Temp HYDRAULIC MULCH	MOVE IN/ MOVE OUT (Temp EROSION CONTROL)
		EA	LF			SQYD		EA
1	10.58		6	40	20	25	25	
2	10.73		6	30	20	23	23	
3	11.00	1	6	20	20	16	16	
4	11.13		6	30	20	29	29	
5	11.17	1	6	30	20	20	20	
6	11.54		6	40	20	45	45	
7	12.12	1	6	50	20	49	49	
8	14.91		6	40	20	23	23	
9	15.19		6	40	20	40	40	
10	15.52		6	40	20	32	32	
11	15.56		6	40	20	34	34	1
12	16.11	1	6	20	20	16	16	
13	16.50		6	30	20	29	29	
14	16.99	1	6	30	20	34	34	
15	17.02		6	30	20	49	49	
16	17.26		6	30	20	45	45	
17	17.45		6	50	20	52	52	
18	18.97	1	6	90	20	105	105	
19	19.94	1	6	40	20	34	34	
20	22.34	1	6	40	20	49	49	
21	23.30		6	60	20	69	69	
TOTAL		8	126	820	420	818	818	1

TEMPORARY WATER POLLUTION CONTROL QUANTITIES

WPCQ-1

STATE OF CALIFORNIA - DEPARTMENT OF TRANSPORTATION
Caltrans
03-DESIGN

FUNCTIONAL SUPERVISOR: ROBERT E. POLGAR
CALCULATED-DESIGNED BY: STEVE D. PENDLEY
CHECKED BY: MARTIN GARCIA
REVISED BY
DATE REVISED

LAST REVISION 00-00-00
DATE PLOTTED => 06-APR-2015
TIME PLOTTED => 08:57

Dist	COUNTY	ROUTE	POST MILES TOTAL PROJECT	SHEET No.	TOTAL SHEETS
01	Men	128	Var	3	50

Marlene Gibb 1-27-15
REGISTERED CIVIL ENGINEER DATE

2-2-15
PLANS APPROVAL DATE

REGISTERED PROFESSIONAL ENGINEER
MARLENE E. GIBB
No. C 51513
Exp. 06-30-16
CIVIL
STATE OF CALIFORNIA

THE STATE OF CALIFORNIA OR ITS OFFICERS OR AGENTS SHALL NOT BE RESPONSIBLE FOR THE ACCURACY OR COMPLETENESS OF SCANNED COPIES OF THIS PLAN SHEET.

T15N R16W MDB&M
SECTION 14

NOTES:

1. FOR ACCURATE RIGHT OF WAY DATA, CONTACT RIGHT OF WAY ENGINEERING AT DISTRICT OFFICE.
2. FOR CONCRETE BACKFILL (PIPE TRENCH) DETAILS SEE DRAINAGE DETAIL SHEETS.
3. FOR HMA APRON AND HMA DIKE (TYPE A) DETAILS SEE DRAINAGE DETAIL SHEETS.
4. INLET AND/OR OUTLET STRUCTURE SKEW ANGLE IS MEASURED FROM A LINE PERPENDICULAR TO THE CULVERT ALIGNMENT.
5. FOR ROCK SLOPE PROTECTION DETAILS SEE DRAINAGE DETAIL SHEETS.
6. THE ANGLE OF EACH ELBOW IS APPROXIMATE. THE EXACT ANGLE WILL BE DETERMINED IN THE FIELD BY THE CONTRACTOR.
7. LOCATIONS OF UTILITY FACILITIES SHOWN ON THESE PLANS ARE APPROXIMATE AND SHALL BE VERIFIED BY THE CONTRACTOR PRIOR TO CONSTRUCTION.
8. UTILITY OWNERSHIP ON THIS PROJECT:
   TELEPHONE - AMERICAN TELEPHONE & TELEGRAPH (AT&T Tel)

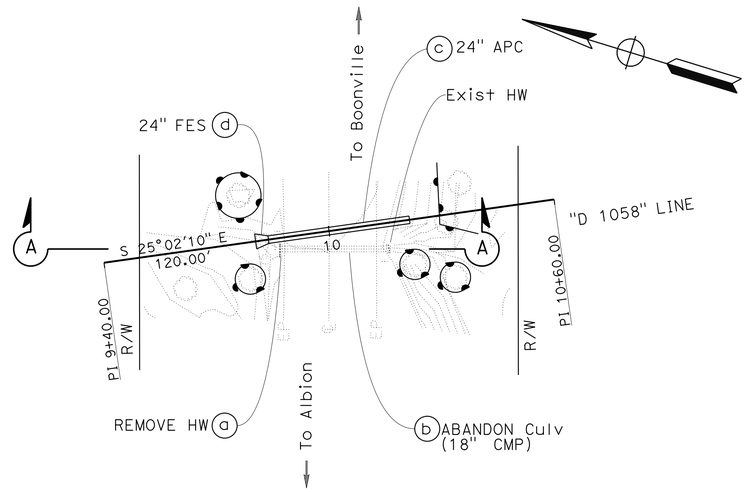

DRAINAGE SYSTEM No. 1

ROUTE 128
PM 10.58

PLAN

SCALE: 1" = 20'

LEGEND:

- ROCK SLOPE PROTECTION
- Temp FENCE (TYPE ESA)
- Temp FENCE @ TREES (TYPE ESA)
- Conc Bkf (PIPE TRENCH)
- FDR, FOUND PT. RECORD
- SUHV, HORIZONTAL AND VERTICAL CONTROL POINT

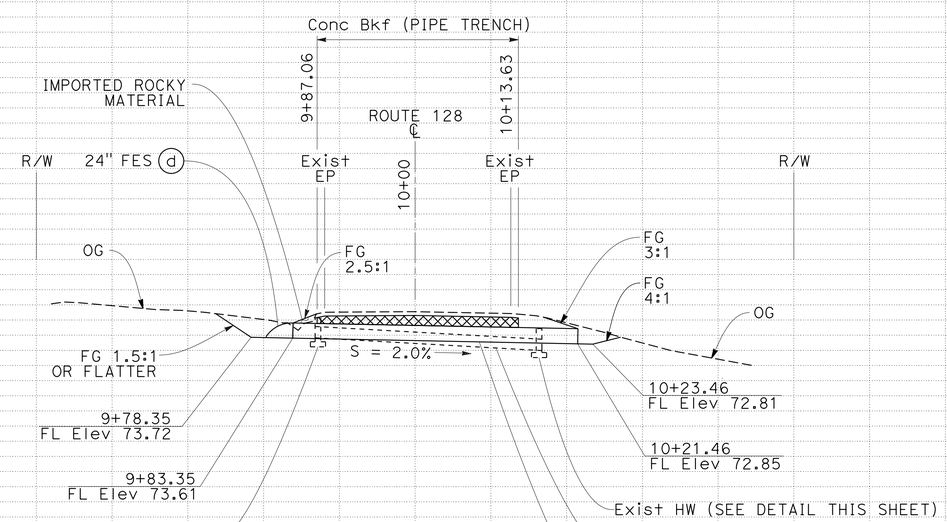

PROFILE

SCALE: Horiz 1" = 10'
Vert 1" = 10'

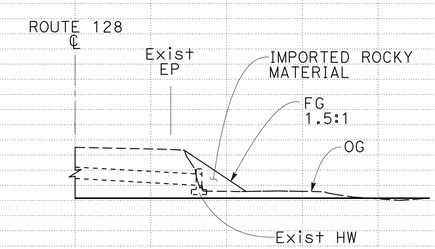

SECTION A-A

ABANDON CULVERT DETAIL @ Exist HW
SCALE: 1" = 10'

STATION		+20	+40	+60	+80	10+00	+20	+40	+60	+80	TOTAL
CY	Exc										
	Emb										

DRAINAGE PLAN AND PROFILE

SCALE AS SHOWN

D-1

REVISED BY	DATE REVISED

CALCULATED-DESIGNED BY	MARTIN GARCIA
CHECKED BY	MARLENE E. GIBB
FUNCTIONAL SUPERVISOR	ROBERT E. POLGAR

STATE OF CALIFORNIA - DEPARTMENT OF TRANSPORTATION
Caltrans
03-DESIGN

DATE PLOTTED => 06-APR-2015
TIME PLOTTED => 08:57

Dist	COUNTY	ROUTE	POST MILES TOTAL PROJECT	SHEET No.	TOTAL SHEETS
01	Men	128	Var	4	50

Marlene Gibb 1-27-15
REGISTERED CIVIL ENGINEER DATE

2-2-15
PLANS APPROVAL DATE

REGISTERED PROFESSIONAL ENGINEER
MARLENE E. GIBB
No. C 51513
Exp. 06-30-16
CIVIL
STATE OF CALIFORNIA

THE STATE OF CALIFORNIA OR ITS OFFICERS OR AGENTS SHALL NOT BE RESPONSIBLE FOR THE ACCURACY OR COMPLETENESS OF SCANNED COPIES OF THIS PLAN SHEET.

NOTES:

1. FOR ACCURATE RIGHT OF WAY DATA, CONTACT RIGHT OF WAY ENGINEERING AT DISTRICT OFFICE.
2. MAY CUT STUMP TO GROUND LEVEL FOR ACCESS.

T15N R16W MDB&M
SECTION 14

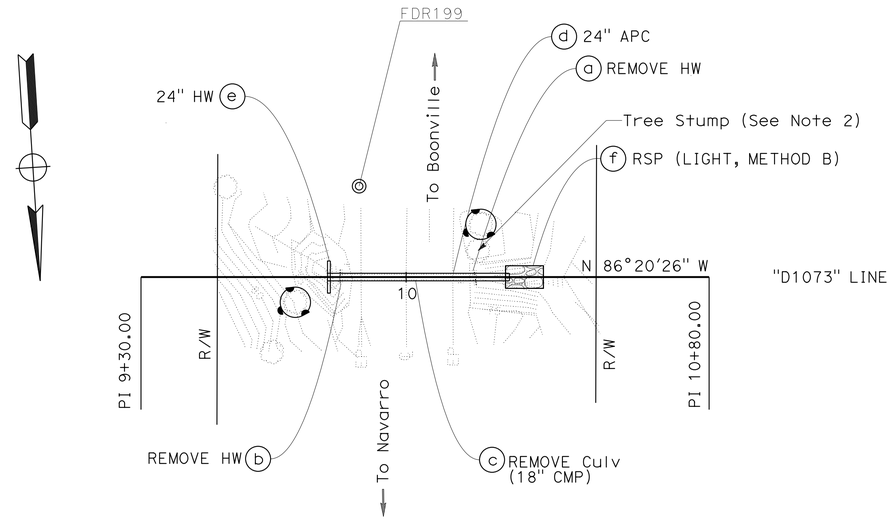

DRAINAGE SYSTEM No. 2

ROUTE 128
PM 10.73

PLAN

SCALE: 1" = 20'

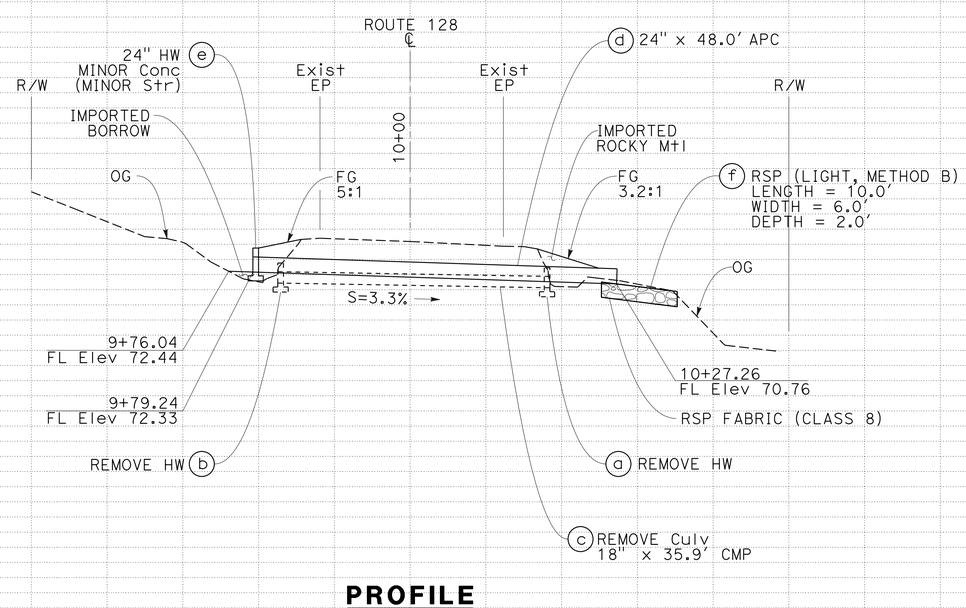

PROFILE

SCALE: Horiz 1" = 10'
Vert 1" = 10'

DRAINAGE PLAN AND PROFILE

SCALE AS SHOWN

D-2

STATION		+20	+40	+60	+80	10+00	+20	+40	+60	+80	TOTAL
CY	Exc										
	Emb										

STATE OF CALIFORNIA - DEPARTMENT OF TRANSPORTATION
Caltrans
03-DESIGN
FUNCTIONAL SUPERVISOR: ROBERT E. POLGAR
CALCULATED-DESIGNED BY: MARTIN GARCIA
CHECKED BY: MARLENE E. GIBB
REVISED BY
DATE REVISED

LAST REVISION
DATE PLOTTED => 06-APR-2015
TIME PLOTTED => 08:57

Dist	COUNTY	ROUTE	POST MILES TOTAL PROJECT	SHEET No.	TOTAL SHEETS
01	Men	128	Var	5	50

Marlene Gibb 1-27-15
REGISTERED CIVIL ENGINEER DATE

2-2-15
PLANS APPROVAL DATE

REGISTERED PROFESSIONAL ENGINEER
MARLENE E. GIBB
No. C 51513
Exp. 06-30-16
CIVIL
STATE OF CALIFORNIA

THE STATE OF CALIFORNIA OR ITS OFFICERS OR AGENTS SHALL NOT BE RESPONSIBLE FOR THE ACCURACY OR COMPLETENESS OF SCANNED COPIES OF THIS PLAN SHEET.

T15N R16W MDB&M
SECTION 14

NOTES:

1. FOR ACCURATE RIGHT OF WAY DATA, CONTACT RIGHT OF WAY ENGINEERING AT DISTRICT OFFICE.
2. FOR CONCRETE BACKFILL (PIPE TRENCH) DETAILS SEE DRAINAGE DETAIL SHEETS.
3. FOR HMA APRON AND PLACE HMA DIKE (TYPE A) DETAILS SEE DRAINAGE DETAIL SHEETS.

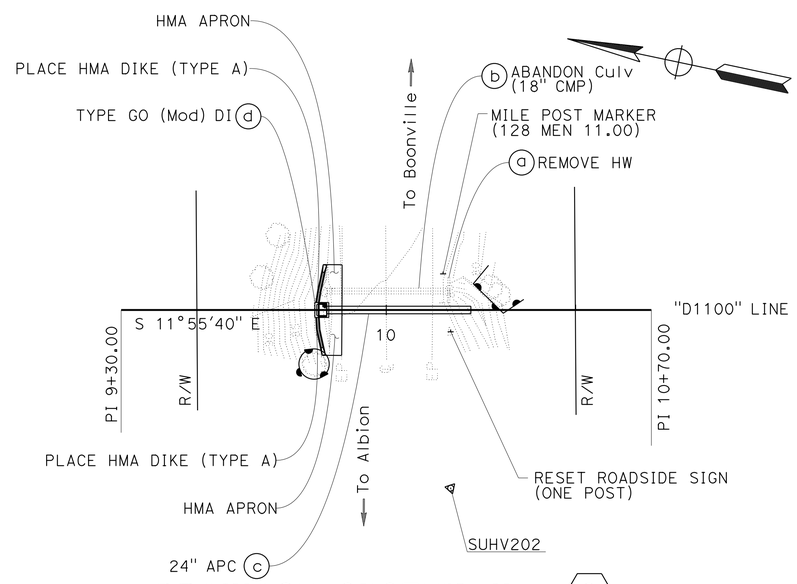

DRAINAGE SYSTEM No. 3

ROUTE 128
PM 11.00

PLAN

SCALE: 1" = 20'

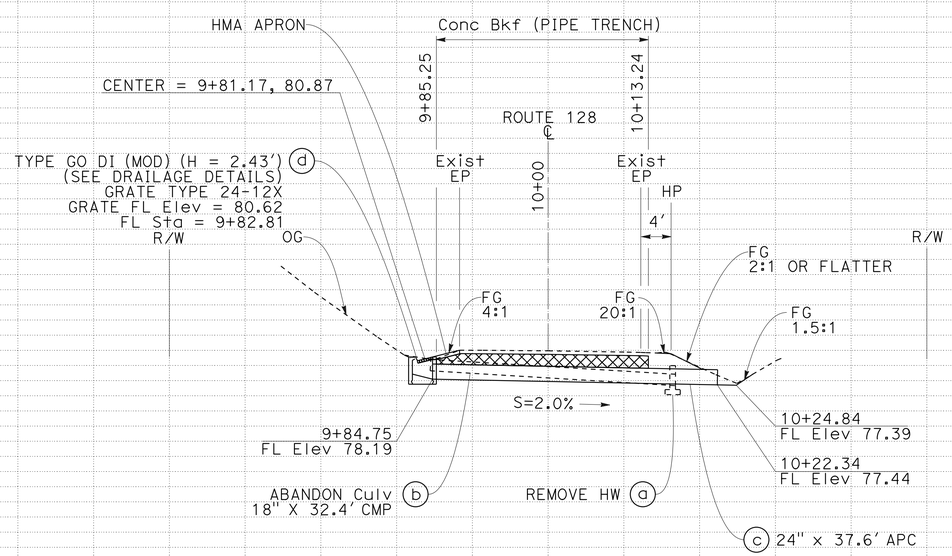

PROFILE

SCALE: Horiz 1" = 10'
Vert 1" = 10'

DRAINAGE PLAN AND PROFILE

SCALE AS SHOWN

D-3

STATION		+20	+40	+60	+80	10+00	+20	+40	+60	+80	TOTAL
CY	Exc										
	Emb										

REVISED BY | DATE REVISED
MARTIN GARCIA | MARLENE E. GIBB
CALCULATED-DESIGNED BY | CHECKED BY
FUNCTIONAL SUPERVISOR: ROBERT E. POLGAR
STATE OF CALIFORNIA - DEPARTMENT OF TRANSPORTATION
03-DESIGN
Caltrans

LAST REVISION | DATE PLOTTED => 06-APR-2015 | TIME PLOTTED => 08:57

Dist	COUNTY	ROUTE	POST MILES TOTAL PROJECT	SHEET No.	TOTAL SHEETS
01	Men	128	Var	6	50

T15N R16W MDB&M
SECTION 13

Marlene Gibb 1-27-15
REGISTERED CIVIL ENGINEER DATE

2-2-15
PLANS APPROVAL DATE

REGISTERED PROFESSIONAL ENGINEER
MARLENE E. GIBB
No. C 51513
Exp. 06-30-16
CIVIL
STATE OF CALIFORNIA

THE STATE OF CALIFORNIA OR ITS OFFICERS OR AGENTS SHALL NOT BE RESPONSIBLE FOR THE ACCURACY OR COMPLETENESS OF SCANNED COPIES OF THIS PLAN SHEET.

NOTES:

1. FOR ACCURATE RIGHT OF WAY DATA, CONTACT RIGHT OF WAY ENGINEERING AT DISTRICT OFFICE.
2. INLET AND/OR OUTLET STRUCTURE SKEW ANGLE IS MEASURED FROM A LINE PERPENDICULAR TO THE CULVERT ALIGNMENT.

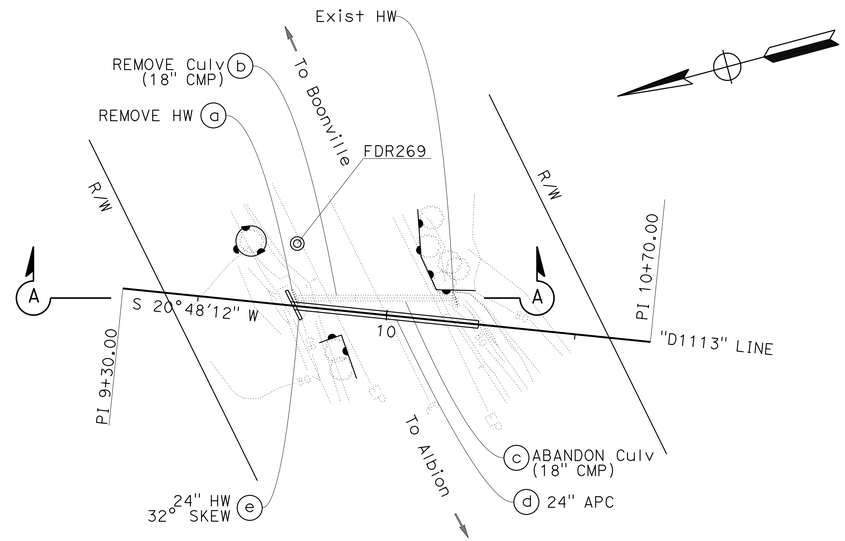

DRAINAGE SYSTEM No. 4

ROUTE 128
PM 11.13

PLAN

SCALE: 1" = 20'

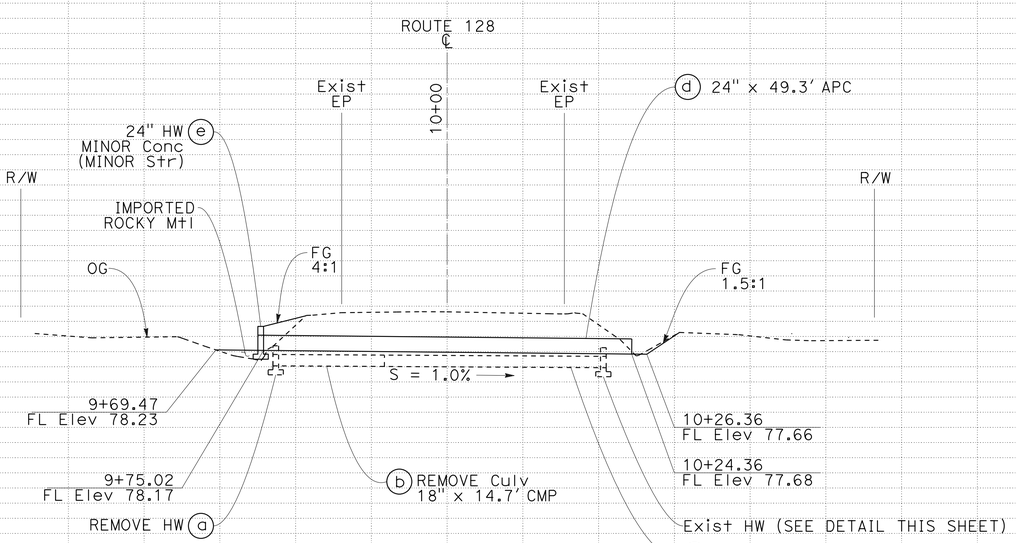

PROFILE

SCALE: Horiz 1" = 10'
Vert 1" = 10'

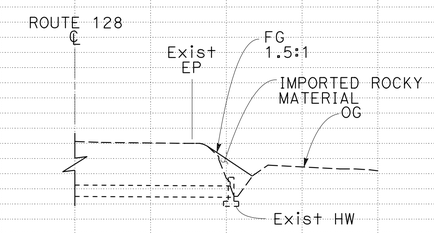

SECTION A-A

ABANDON CULVERT DETAIL @ Exist HW
SCALE: 1" = 10'

DRAINAGE PLAN AND PROFILE

SCALE AS SHOWN

D-4

STATION		+20	+40	+60	+80	10+00	+20	+40	+60	+80	TOTAL
CY	Exc										
	Emb										

STATE OF CALIFORNIA - DEPARTMENT OF TRANSPORTATION
Caltrans
03-DESIGN
FUNCTIONAL SUPERVISOR: ROBERT E. POLGAR
CALCULATED-DESIGNED BY: MARTIN GARCIA
CHECKED BY: MARLENE E. GIBB
REVISED BY
DATE REVISED

LAST REVISION
DATE PLOTTED => 06-APR-2015
TIME PLOTTED => 08:57

Dist	COUNTY	ROUTE	POST MILES TOTAL PROJECT	SHEET No.	TOTAL SHEETS
01	Men	128	Var	7	50

Marlene Gibb 1-27-15
REGISTERED CIVIL ENGINEER DATE

2-2-15
PLANS APPROVAL DATE

REGISTERED PROFESSIONAL ENGINEER
MARLENE E. GIBB
No. C 51513
Exp. 06-30-16
CIVIL
STATE OF CALIFORNIA

THE STATE OF CALIFORNIA OR ITS OFFICERS OR AGENTS SHALL NOT BE RESPONSIBLE FOR THE ACCURACY OR COMPLETENESS OF SCANNED COPIES OF THIS PLAN SHEET.

T15N R16W MDB&M
SECTION 13

NOTES:

1. FOR ACCURATE RIGHT OF WAY DATA, CONTACT RIGHT OF WAY ENGINEERING AT DISTRICT OFFICE.
2. FOR CONCRETE BACKFILL (PIPE TRENCH) DETAILS SEE DRAINAGE DETAIL SHEETS.
3. FOR HMA APRON AND PLACE HMA DIKE (TYPE A) DETAILS SEE DRAINAGE DETAIL SHEETS.

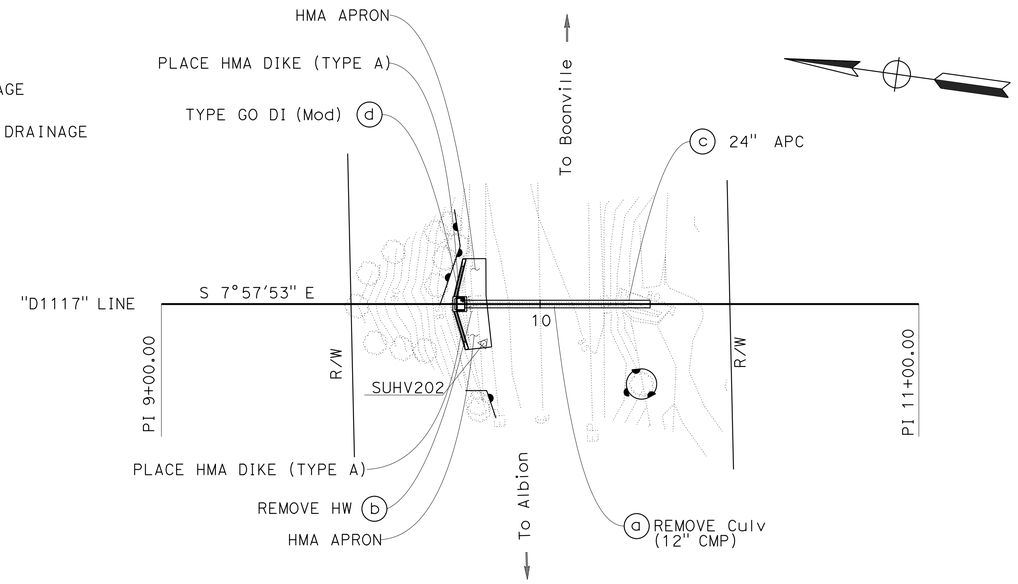

DRAINAGE SYSTEM No. 5

ROUTE 128
PM 11.17

PLAN

SCALE: 1" = 20'

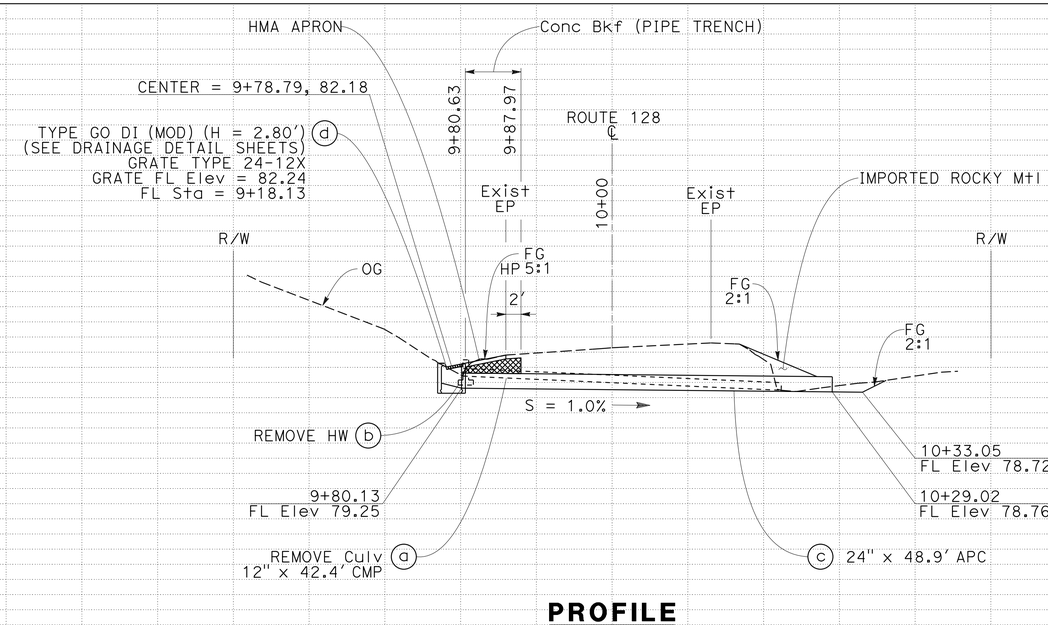

PROFILE

SCALE: Horiz 1" = 10'
Vert 1" = 10'

DRAINAGE PLAN AND PROFILE

SCALE AS SHOWN

D-5

STATION		+20	+40	+60	+80	10+00	+20	+40	+60	+80	TOTAL
CY	Exc										
	Emb										

REVISED BY	DATE REVISED

CALCULATED-DESIGNED BY	MARTIN GARCIA
CHECKED BY	MARLENE E. GIBB

FUNCTIONAL SUPERVISOR: ROBERT E. POLGAR

STATE OF CALIFORNIA - DEPARTMENT OF TRANSPORTATION
03-DESIGN
Caltrans

LAST REVISION
DATE PLOTTED => 06-APR-2015
TIME PLOTTED => 08:57

Dist	COUNTY	ROUTE	POST MILES TOTAL PROJECT	SHEET No.	TOTAL SHEETS
01	Men	128	Var	8	50

Marlene Gibb 1-27-15
REGISTERED CIVIL ENGINEER DATE

2-2-15
PLANS APPROVAL DATE

REGISTERED PROFESSIONAL ENGINEER
MARLENE E. GIBB
No. C 51513
Exp. 06-30-16
CIVIL
STATE OF CALIFORNIA

THE STATE OF CALIFORNIA OR ITS OFFICERS OR AGENTS SHALL NOT BE RESPONSIBLE FOR THE ACCURACY OR COMPLETENESS OF SCANNED COPIES OF THIS PLAN SHEET.

T15N R16W MDB&M
SECTION 13

NOTES:

1. FOR ACCURATE RIGHT OF WAY DATA, CONTACT RIGHT OF WAY ENGINEERING AT DISTRICT OFFICE.

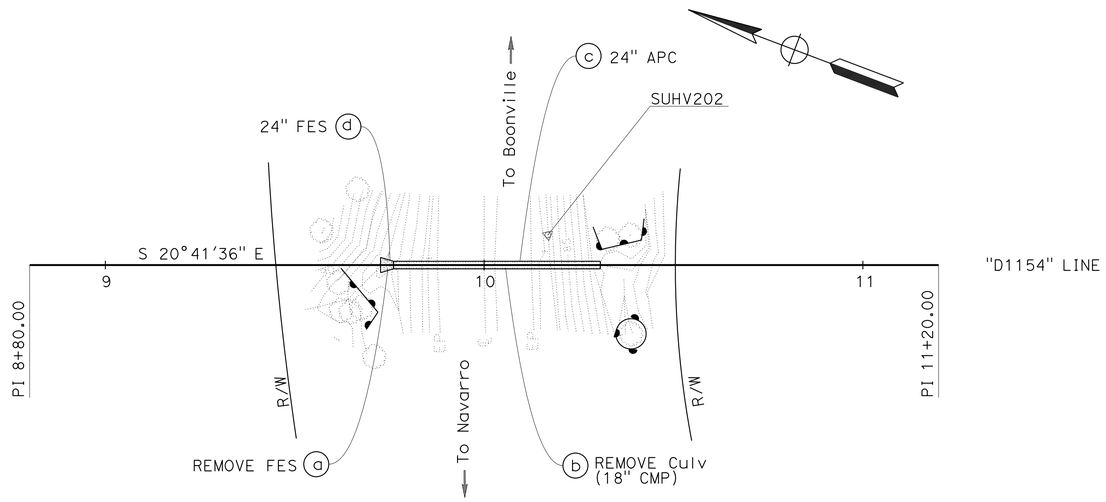

DRAINAGE SYSTEM No. 6

ROUTE 128
PM 11.54

PLAN

SCALE: 1" = 20'

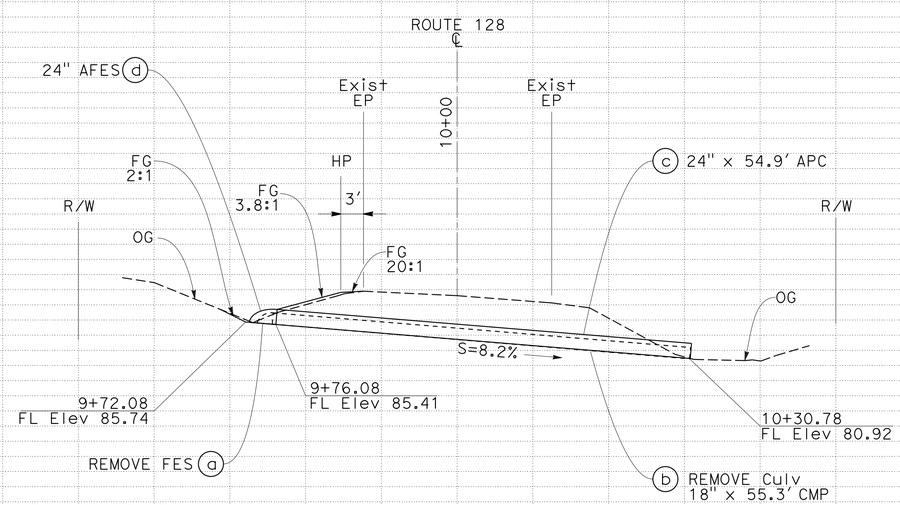

PROFILE

SCALE: Horiz 1" = 10'
Vert 1" = 10'

DRAINAGE PLAN AND PROFILE

SCALE AS SHOWN

D-6

STATION		+20	+40	+60	+80	10+00	+20	+40	+60	+80	TOTAL
CY	Exc										
	Emb										

REVISED BY | DATE REVISED
MARTIN GARCIA | MARLENE E. GIBB
CALCULATED-DESIGNED BY | CHECKED BY
FUNCTIONAL SUPERVISOR: ROBERT E. POLGAR

STATE OF CALIFORNIA - DEPARTMENT OF TRANSPORTATION
Caltrans
03-DESIGN

LAST REVISION | DATE PLOTTED => 06-APR-2015 | TIME PLOTTED => 08:57

Dist	COUNTY	ROUTE	POST MILES TOTAL PROJECT	SHEET No.	TOTAL SHEETS
01	Men	128	Var	9	50

Marlene Gibb 1-27-15
REGISTERED CIVIL ENGINEER DATE

2-2-15
PLANS APPROVAL DATE

REGISTERED PROFESSIONAL ENGINEER
MARLENE E. GIBB
No. C 51513
Exp. 06-30-16
CIVIL
STATE OF CALIFORNIA

THE STATE OF CALIFORNIA OR ITS OFFICERS OR AGENTS SHALL NOT BE RESPONSIBLE FOR THE ACCURACY OR COMPLETENESS OF SCANNED COPIES OF THIS PLAN SHEET.

NOTES:

1. FOR ACCURATE RIGHT OF WAY DATA, CONTACT RIGHT OF WAY ENGINEERING AT DISTRICT OFFICE.
2. FOR CONCRETE BACKFILL (PIPE TRENCH) DETAILS SEE DRAINAGE DETAIL SHEETS.
3. FOR HMA APRON AND PLACE HMA DIKE (TYPE A) DETAILS SEE DRAINAGE DETAIL SHEETS.
4. INLET AND/OR OUTLET STRUCTURE SKEW ANGLE IS MEASURED FROM A LINE PERPENDICULAR TO THE CULVERT ALIGNMENT.
5. THE ANGLE OF EACH ELBOW IS APPROXIMATE. THE EXACT ANGLE WILL BE DETERMINED IN THE FIELD BY THE CONTRACTOR.

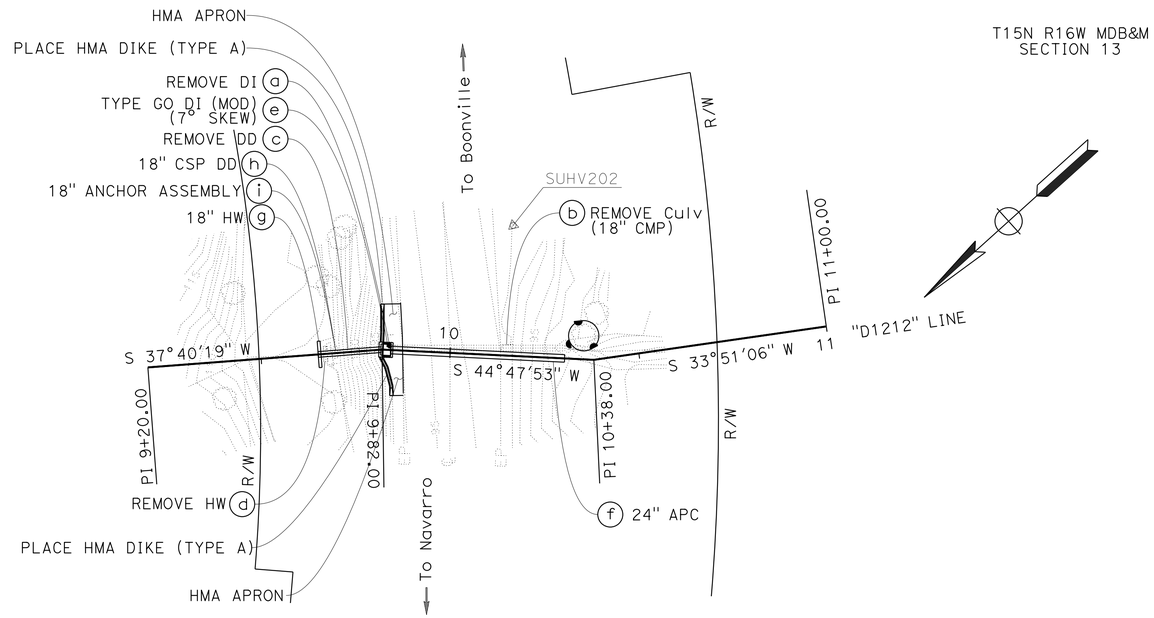

DRAINAGE SYSTEM No. 7

ROUTE 128
PM 12.12

PLAN

SCALE: 1" = 20'

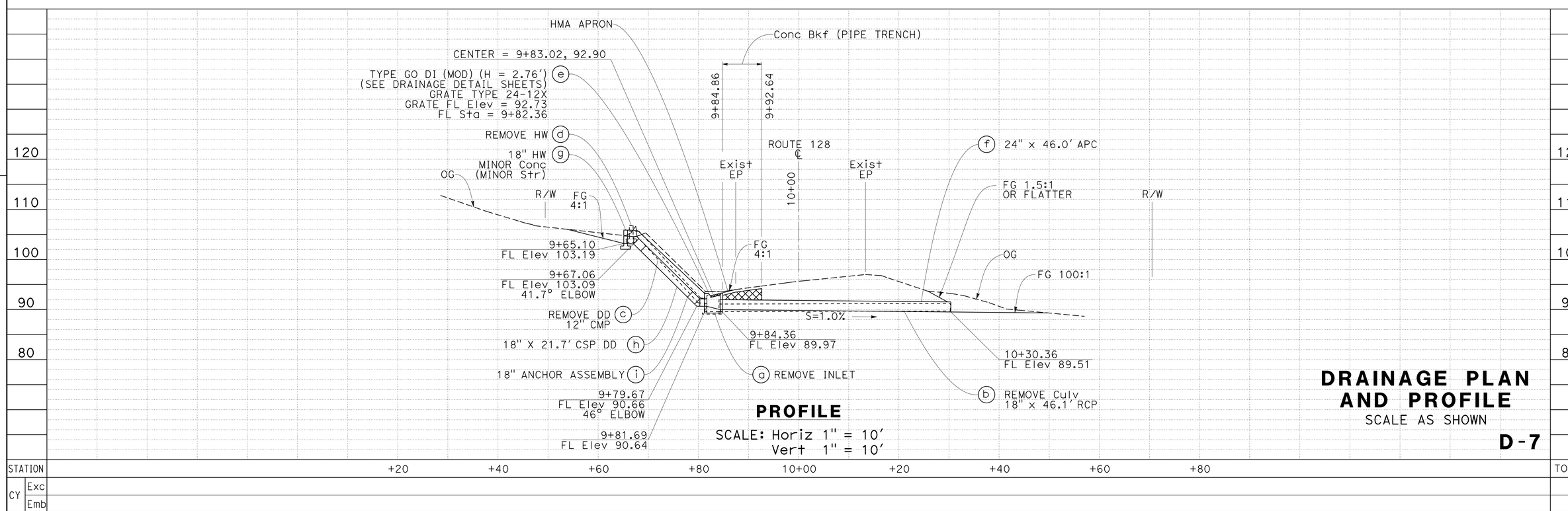

PROFILE

SCALE: Horiz 1" = 10'
Vert 1" = 10'

DRAINAGE PLAN AND PROFILE

SCALE AS SHOWN

D-7

REVISED BY	DATE REVISED

CALCULATED-DESIGNED BY: MARTIN GARCIA
CHECKED BY: MARLENE E. GIBB
FUNCTIONAL SUPERVISOR: ROBERT E. POLGAR

STATE OF CALIFORNIA - DEPARTMENT OF TRANSPORTATION
03-DESIGN
Caltrans

LAST REVISION
DATE PLOTTED => 06-APR-2015
TIME PLOTTED => 08:57

Dist	COUNTY	ROUTE	POST MILES TOTAL PROJECT	SHEET No.	TOTAL SHEETS
01	Men	128	Var	10	50

Marlene Gibb 1-27-15
REGISTERED CIVIL ENGINEER DATE

2-2-15
PLANS APPROVAL DATE

REGISTERED PROFESSIONAL ENGINEER
MARLENE E. GIBB
No. C 51513
Exp. 06-30-16
CIVIL
STATE OF CALIFORNIA

THE STATE OF CALIFORNIA OR ITS OFFICERS OR AGENTS SHALL NOT BE RESPONSIBLE FOR THE ACCURACY OR COMPLETENESS OF SCANNED COPIES OF THIS PLAN SHEET.

T15N R15W MDB&M
SECTION 20

NOTES:

1. FOR ACCURATE RIGHT OF WAY DATA, CONTACT RIGHT OF WAY ENGINEERING AT DISTRICT OFFICE.
2. FOR CONCRETE BACKFILL (PIPE TRENCH) DETAILS SEE DRAINAGE DETAIL SHEETS.
3. FOR ROCK SLOPE PROTECTION DETAILS SEE DRAINAGE DETAIL SHEETS.
4. LOCATIONS OF UTILITY FACILITIES SHOWN ON THESE PLANS ARE APPROXIMATE AND SHALL BE VERIFIED BY THE CONTRACTOR PRIOR TO CONSTRUCTION.
5. UTILITY OWNERSHIP ON THIS PROJECT:
   TELEPHONE - AMERICAN TELEPHONE & TELEGRAPH (AT&T Tel)

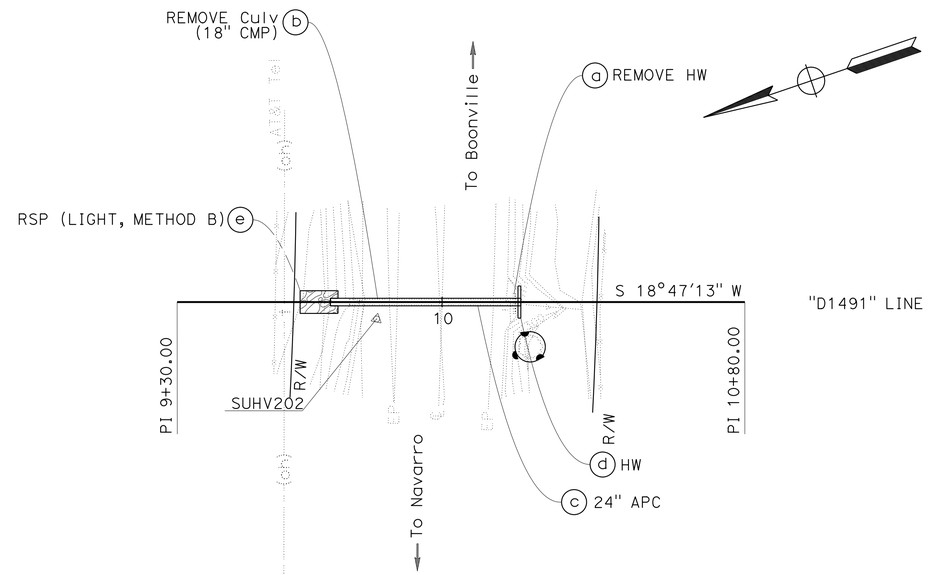

DRAINAGE SYSTEM No. 8

ROUTE 128
PM 14.91

PLAN

SCALE: 1" = 20'

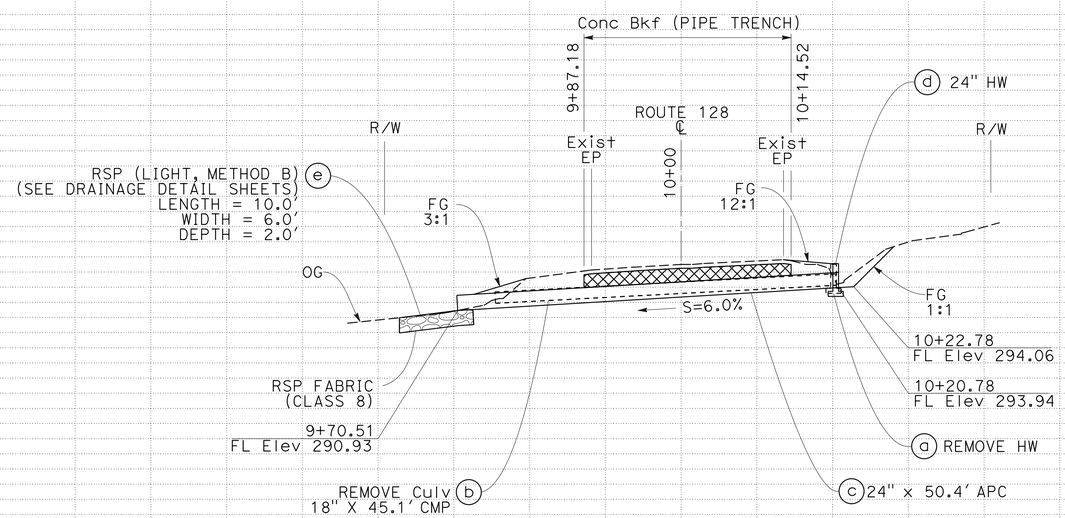

PROFILE

SCALE: Horiz 1" = 10'
Vert 1" = 10'

STATION		+20	+40	+60	+80	10+00	+20	+40	+60	+80	TOTAL
CY	Exc										
	Emb										

DRAINAGE PLAN AND PROFILE

SCALE AS SHOWN

D-8

REVISED BY | DATE REVISED
MARTIN GARCIA | MARLENE E. GIBB
CALCULATED-DESIGNED BY | CHECKED BY
FUNCTIONAL SUPERVISOR | ROBERT E. POLGAR

STATE OF CALIFORNIA - DEPARTMENT OF TRANSPORTATION
Caltrans
03-DESIGN

LAST REVISION | DATE PLOTTED => 06-APR-2015 | TIME PLOTTED => 08:57

Dist	COUNTY	ROUTE	POST MILES TOTAL PROJECT	SHEET No.	TOTAL SHEETS
01	Men	128	Var	11	50

T15N R15W MDB&M
SECTION 20

Marlene Gibb 1-27-15
REGISTERED CIVIL ENGINEER DATE

2-2-15
PLANS APPROVAL DATE

REGISTERED PROFESSIONAL ENGINEER
MARLENE E. GIBB
No. C 51513
Exp. 06-30-16
CIVIL
STATE OF CALIFORNIA

THE STATE OF CALIFORNIA OR ITS OFFICERS OR AGENTS SHALL NOT BE RESPONSIBLE FOR THE ACCURACY OR COMPLETENESS OF SCANNED COPIES OF THIS PLAN SHEET.

NOTES:

1. FOR ACCURATE RIGHT OF WAY DATA, CONTACT RIGHT OF WAY ENGINEERING AT DISTRICT OFFICE.

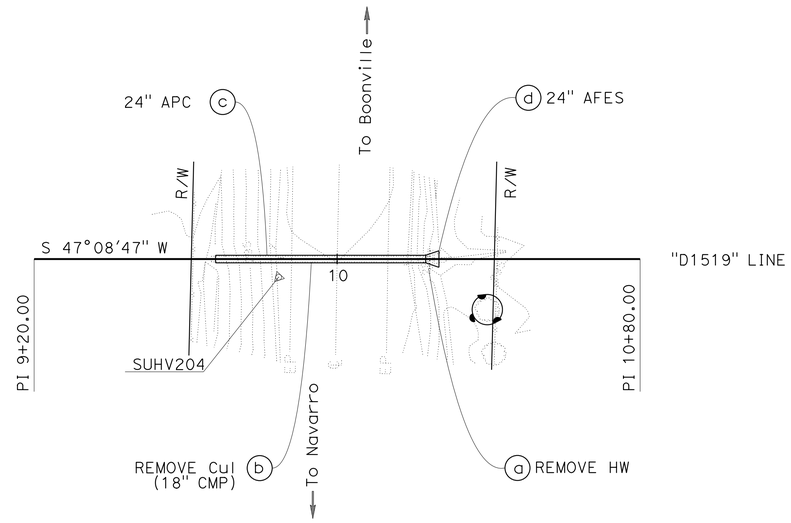

DRAINAGE SYSTEM No. 9

ROUTE 128
PM 15.19

PLAN

SCALE: 1" = 20'

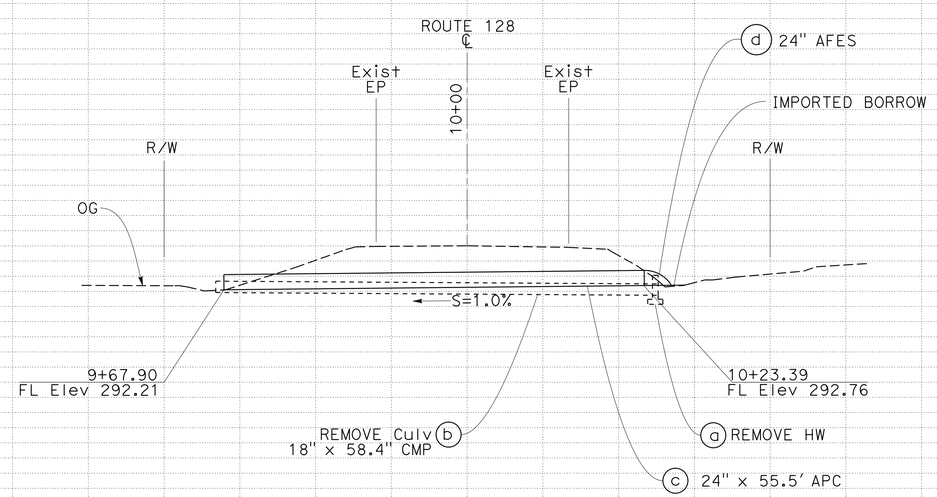

PROFILE

SCALE: Horiz 1" = 10'
Vert 1" = 10'

DRAINAGE PLAN AND PROFILE

SCALE AS SHOWN

D-9

STATION		+20	+40	+60	+80	10+00	+20	+40	+60	+80	TOTAL
CY	Exc										
	Emb										

310 300 290 280

REVISED BY | DATE REVISED
MARTIN GARCIA | MARLENE E. GIBB
CALCULATED-DESIGNED BY | CHECKED BY
FUNCTIONAL SUPERVISOR
ROBERT E. POLGAR

STATE OF CALIFORNIA - DEPARTMENT OF TRANSPORTATION
Caltrans
03-DESIGN

LAST REVISION | DATE PLOTTED => 06-APR-2015 | TIME PLOTTED => 08:57

Dist	COUNTY	ROUTE	POST MILES TOTAL PROJECT	SHEET No.	TOTAL SHEETS
01	Men	128	Var	12	50

Marlene Gibb 1-27-15
REGISTERED CIVIL ENGINEER DATE

2-2-15
PLANS APPROVAL DATE

REGISTERED PROFESSIONAL ENGINEER
MARLENE E. GIBB
No. C 51513
Exp. 06-30-16
CIVIL
STATE OF CALIFORNIA

THE STATE OF CALIFORNIA OR ITS OFFICERS OR AGENTS SHALL NOT BE RESPONSIBLE FOR THE ACCURACY OR COMPLETENESS OF SCANNED COPIES OF THIS PLAN SHEET.

T15N R15W MDB&M
SECTION 29

NOTES:

1. FOR ACCURATE RIGHT OF WAY DATA, CONTACT RIGHT OF WAY ENGINEERING AT DISTRICT OFFICE.
2. FOR ROCK SLOPE PROTECTION DETAILS SEE DRAINAGE DETAIL SHEETS.

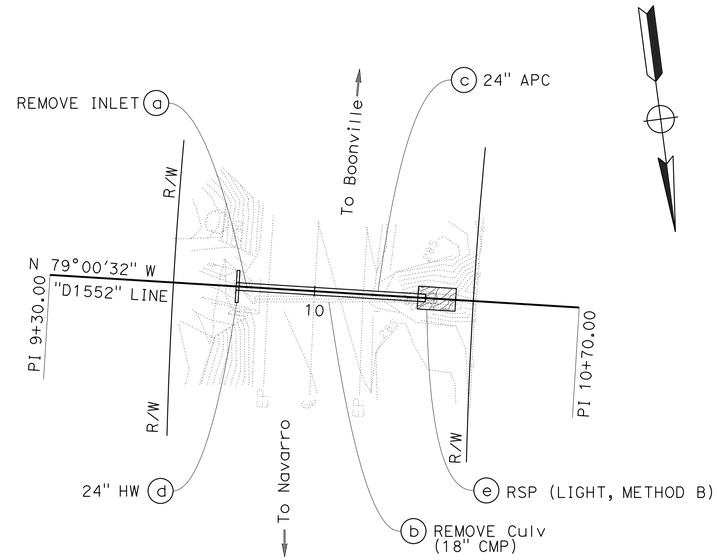

DRAINAGE SYSTEM No. 10

ROUTE 128
PM 15.52

PLAN

SCALE: 1" = 20'

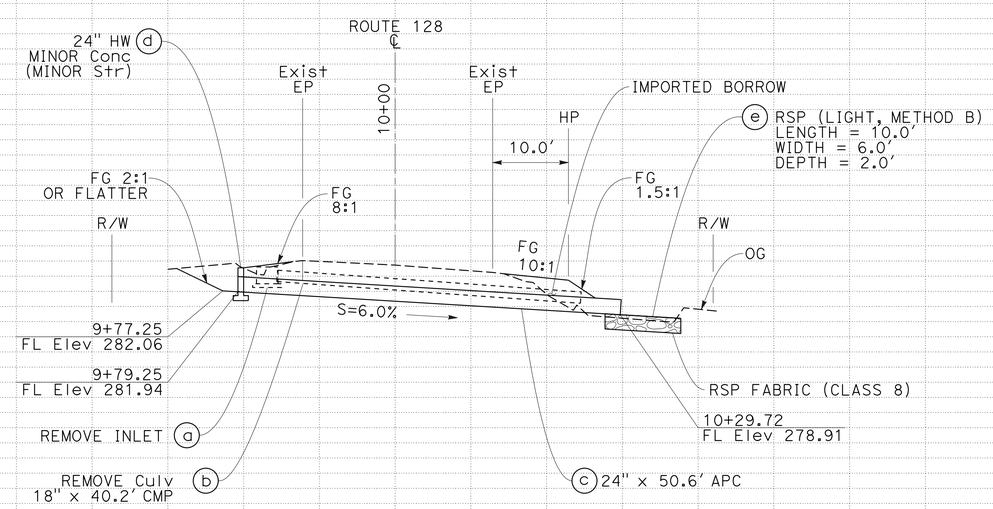

PROFILE

SCALE: Horiz 1" = 10'
Vert 1" = 10'

DRAINAGE PLAN AND PROFILE

SCALE AS SHOWN

D-10

STATION		+20	+40	+60	+80	10+00	+20	+40	+60	+80	TOTAL
CY	Exc										
	Emb										

300 290 280 270 260

STATE OF CALIFORNIA - DEPARTMENT OF TRANSPORTATION
Caltrans
03-DESIGN
FUNCTIONAL SUPERVISOR: ROBERT E. POLGAR
CALCULATED-DESIGNED BY: MARTIN GARCIA
CHECKED BY: MARLENE E. GIBB
REVISED BY
DATE REVISED

LAST REVISION
DATE PLOTTED => 06-APR-2015
TIME PLOTTED => 08:57

Dist	COUNTY	ROUTE	POST MILES TOTAL PROJECT	SHEET No.	TOTAL SHEETS
01	Men	128	Var	13	50

T15N R15W MDB&M
SECTION 29

Marlene Gibb 1-27-15
REGISTERED CIVIL ENGINEER DATE

2-2-15
PLANS APPROVAL DATE

REGISTERED PROFESSIONAL ENGINEER
MARLENE E. GIBB
No. C 51513
Exp. 06-30-16
CIVIL
STATE OF CALIFORNIA

THE STATE OF CALIFORNIA OR ITS OFFICERS OR AGENTS SHALL NOT BE RESPONSIBLE FOR THE ACCURACY OR COMPLETENESS OF SCANNED COPIES OF THIS PLAN SHEET.

NOTES:

1. FOR ACCURATE RIGHT OF WAY DATA, CONTACT RIGHT OF WAY ENGINEERING AT DISTRICT OFFICE.
2. INLET AND/OR OUTLET STRUCTURE SKEW ANGLE IS MEASURED FROM A LINE PERPENDICULAR TO THE CULVERT ALIGNMENT.

POINT	STATION	OFFSET
1	10+41.81	13.07′ R+
2	10+43.88	13.19′ L+
3	10+53.66	12.63′ L+
4	10+52.23	13.62′ R+

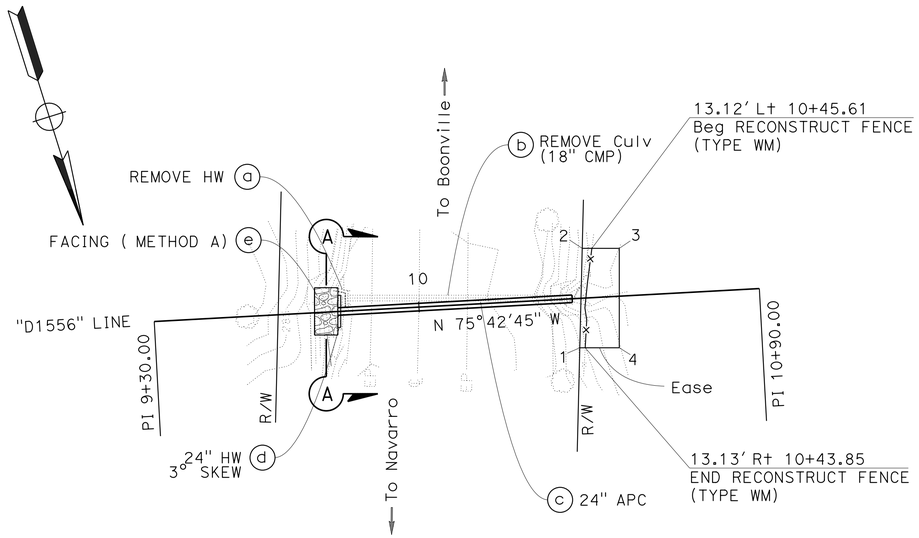

DRAINAGE SYSTEM No. 11

ROUTE 128
PM 15.56

PLAN

SCALE: 1" = 20′

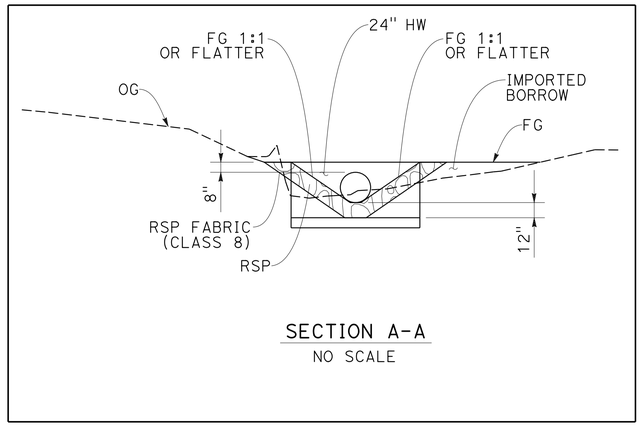

SECTION A-A
NO SCALE

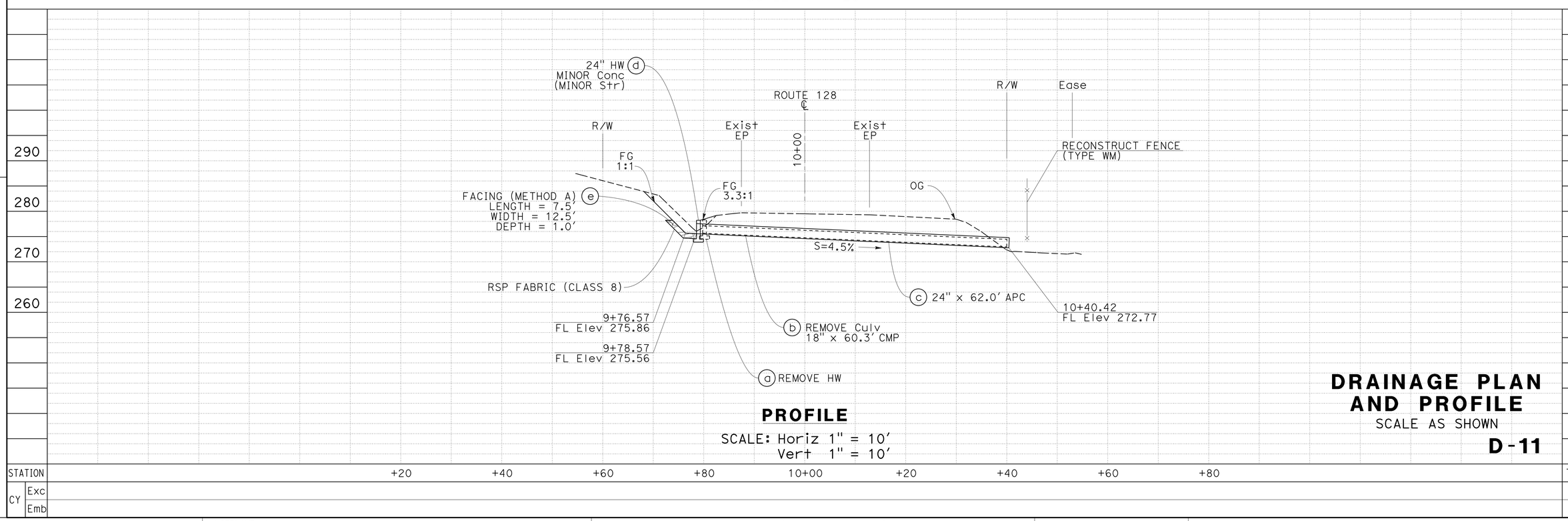

PROFILE

SCALE: Horiz 1" = 10′
Vert 1" = 10′

DRAINAGE PLAN AND PROFILE

SCALE AS SHOWN

D-11

REVISED BY | DATE REVISED
MARTIN GARCIA | MARLENE E. GIBB
CALCULATED-DESIGNED BY | CHECKED BY
FUNCTIONAL SUPERVISOR
ROBERT E. POLGAR

STATE OF CALIFORNIA - DEPARTMENT OF TRANSPORTATION
Caltrans
03-DESIGN

LAST REVISION | DATE PLOTTED => 06-APR-2015 | TIME PLOTTED => 08:57

Dist	COUNTY	ROUTE	POST MILES TOTAL PROJECT	SHEET No.	TOTAL SHEETS
01	Men	128	Var	14	50

Marlene Gibb 1-27-15
REGISTERED CIVIL ENGINEER DATE

2-2-15
PLANS APPROVAL DATE

REGISTERED PROFESSIONAL ENGINEER
MARLENE E. GIBB
No. C 51513
Exp. 06-30-16
CIVIL
STATE OF CALIFORNIA

THE STATE OF CALIFORNIA OR ITS OFFICERS OR AGENTS SHALL NOT BE RESPONSIBLE FOR THE ACCURACY OR COMPLETENESS OF SCANNED COPIES OF THIS PLAN SHEET.

1. FOR ACCURATE RIGHT OF WAY DATA, CONTACT RIGHT OF WAY ENGINEERING AT DISTRICT OFFICE.
2. FOR CONCRETE BACKFILL (PIPE TRENCH) DETAILS SEE DRAINAGE DETAIL SHEETS.
3. FOR HMA APRON AND HMA DIKE (TYPE A) DETAILS SEE DRAINAGE DETAIL SHEETS.

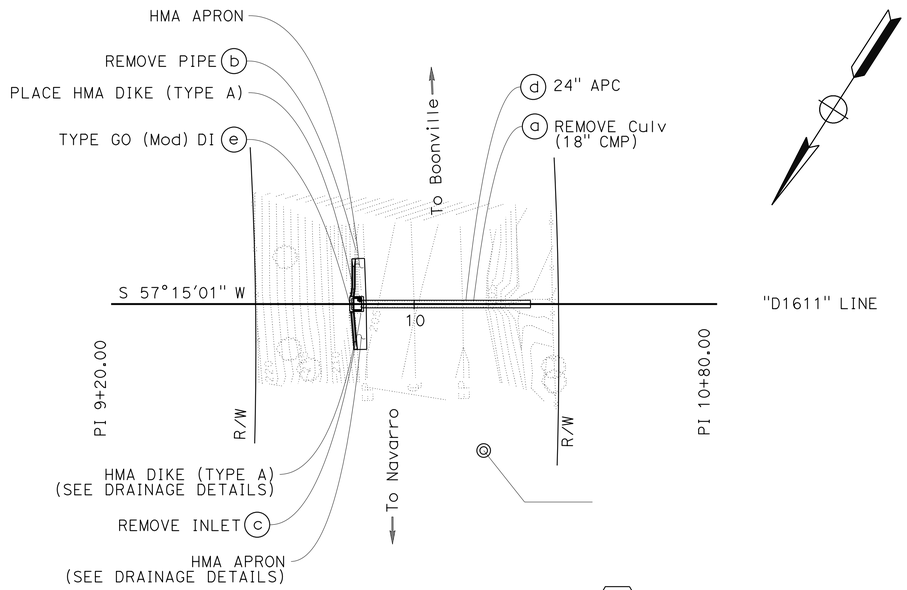

T15N R15W MDB&M
SECTION 29

DRAINAGE SYSTEM No. 12

ROUTE 128
PM 16.11

PLAN

SCALE: 1" = 20'

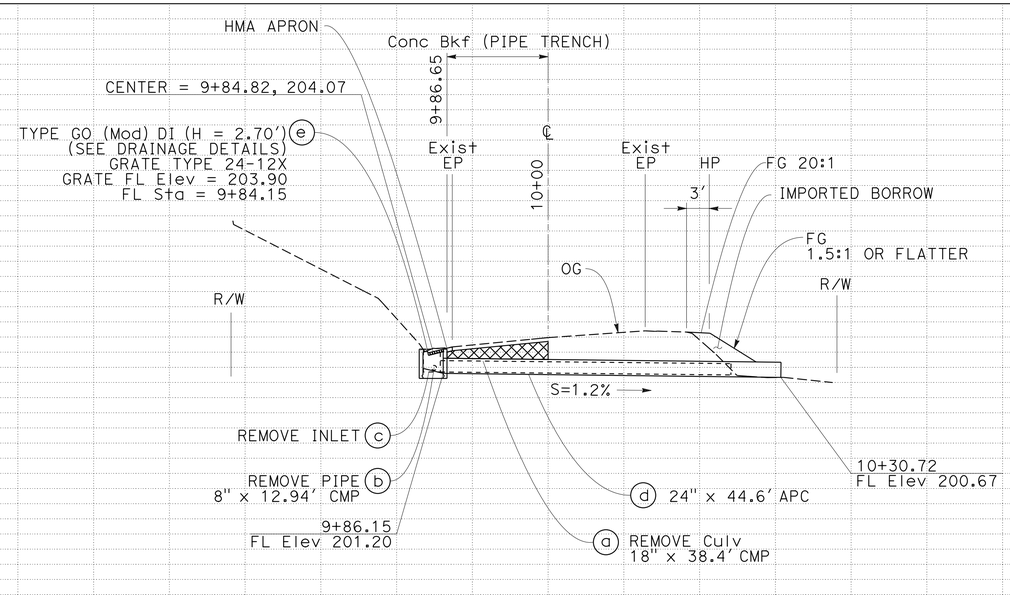

PROFILE

SCALE: Horiz 1" = 10'
Vert 1" = 10'

DRAINAGE PLAN AND PROFILE

SCALE AS SHOWN

D-12

STATION	+20	+40	+60	+80	10+00	+20	+40	+60	+80	TOTAL
CY Exc										
CY Emb										

230 220 210 200 190

REVISED BY | DATE REVISED
MARTIN GARCIA | MARLENE E. GIBB
CALCULATED-DESIGNED BY | CHECKED BY
FUNCTIONAL SUPERVISOR: ROBERT E. POLGAR

STATE OF CALIFORNIA - DEPARTMENT OF TRANSPORTATION
Caltrans
03-DESIGN

LAST REVISION | DATE PLOTTED => 06-APR-2015 | TIME PLOTTED => 08:57

Dist	COUNTY	ROUTE	POST MILES TOTAL PROJECT	SHEET No.	TOTAL SHEETS
01	Men	128	Var	15	50

Marlene Gibb 1-27-15
REGISTERED CIVIL ENGINEER DATE

2-2-15
PLANS APPROVAL DATE

REGISTERED PROFESSIONAL ENGINEER
MARLENE E. GIBB
No. C 51513
Exp. 06-30-16
CIVIL
STATE OF CALIFORNIA

THE STATE OF CALIFORNIA OR ITS OFFICERS OR AGENTS SHALL NOT BE RESPONSIBLE FOR THE ACCURACY OR COMPLETENESS OF SCANNED COPIES OF THIS PLAN SHEET.

T15N R15W MDB&M
SECTION 28

NOTES:

1. FOR ACCURATE RIGHT OF WAY DATA, CONTACT RIGHT OF WAY ENGINEERING AT DISTRICT OFFICE.
2. FOR CONCRETE BACKFILL (PIPE TRENCH) DETAILS SEE DRAINAGE DETAIL SHEETS.
3. FOR ROCK SLOPE PROTECTION DETAILS SEE DRAINAGE DETAIL SHEETS.

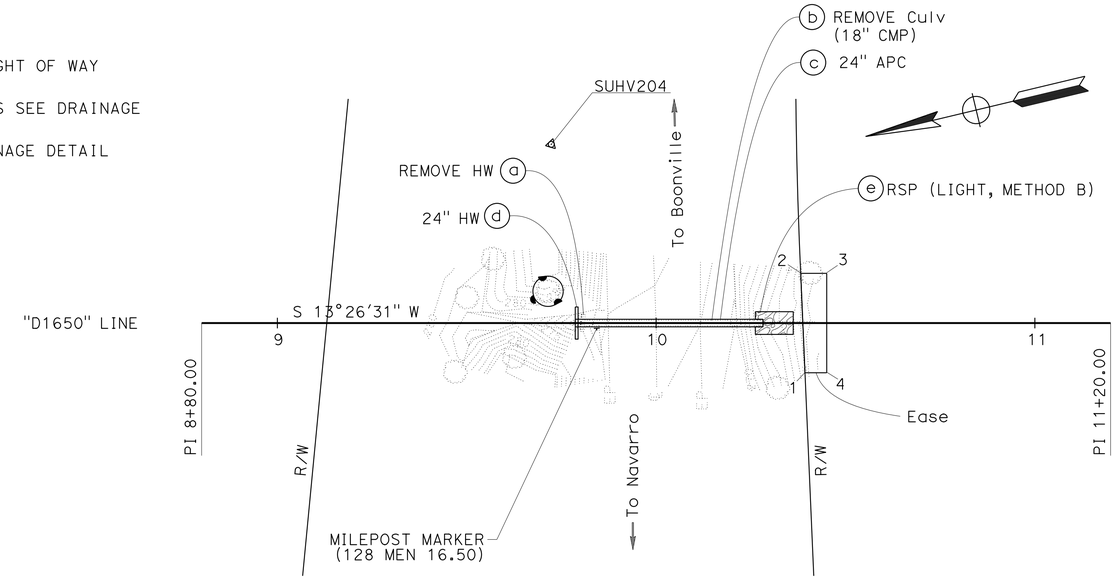

POINT	STATION	OFFSET
1	10+39.30	13.12' Rt
2	10+38.17	13.12' Lt
3	10+45.05	13.13' Lt
4	10+45.05	13.13' Rt

DRAINAGE SYSTEM No. 13

ROUTE 128
PM 16.50

PLAN

SCALE: 1" = 20'

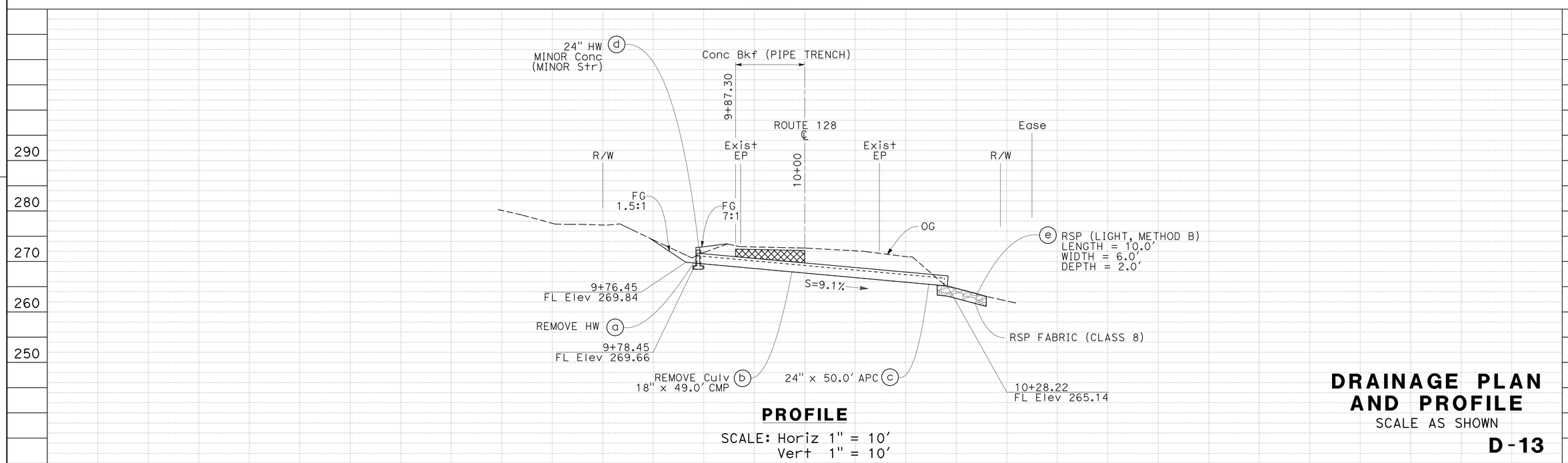

PROFILE

SCALE: Horiz 1" = 10'
Vert 1" = 10'

DRAINAGE PLAN AND PROFILE

SCALE AS SHOWN

D-13

REVISED BY | DATE REVISED
MARTIN GARCIA | MARLENE E. GIBB
CALCULATED-DESIGNED BY | CHECKED BY
FUNCTIONAL SUPERVISOR | ROBERT E. POLGAR

STATE OF CALIFORNIA - DEPARTMENT OF TRANSPORTATION
Caltrans
03-DESIGN

LAST REVISION | DATE PLOTTED => 06-APR-2015 | TIME PLOTTED => 08:57

Dist	COUNTY	ROUTE	POST MILES TOTAL PROJECT	SHEET No.	TOTAL SHEETS
01	Men	128	Var	16	50

REGISTERED CIVIL ENGINEER 1-27-15 DATE

2-2-15
PLANS APPROVAL DATE

REGISTERED PROFESSIONAL ENGINEER MARLENE E. GIBB No. C 51513 Exp. 06-30-16 CIVIL STATE OF CALIFORNIA

THE STATE OF CALIFORNIA OR ITS OFFICERS OR AGENTS SHALL NOT BE RESPONSIBLE FOR THE ACCURACY OR COMPLETENESS OF SCANNED COPIES OF THIS PLAN SHEET.

T15N R15W MDB&M
SECTION 33

NOTES:

1. FOR ACCURATE RIGHT OF WAY DATA, CONTACT RIGHT OF WAY ENGINEERING AT DISTRICT OFFICE.
2. FOR CONCRETE BACKFILL (PIPE TRENCH) DETAILS SEE DRAINAGE DETAIL SHEETS.
3. FOR HMA APRON AND PLACE HMA DIKE (TYPE A) DETAILS SEE DRAINAGE DETAIL SHEETS.

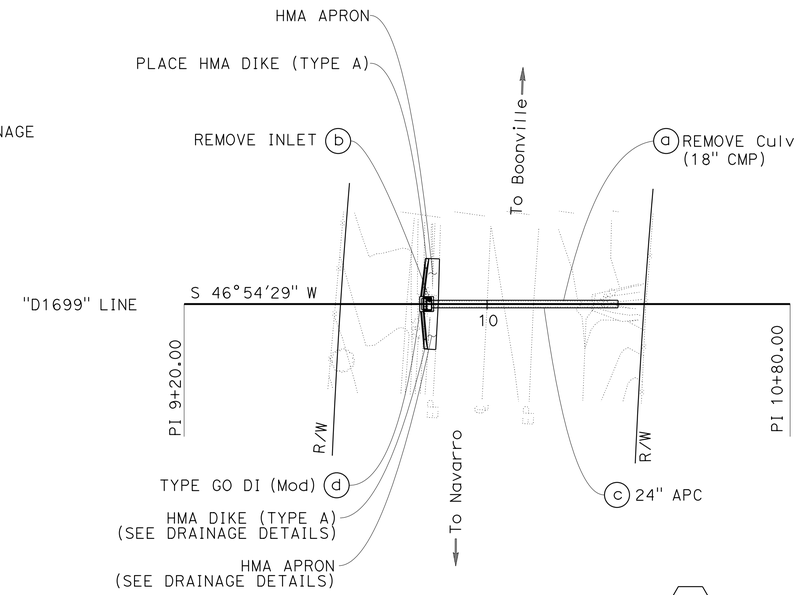

DRAINAGE SYSTEM No. 14

ROUTE 128
PM 16.99

PLAN

SCALE: 1" = 20'

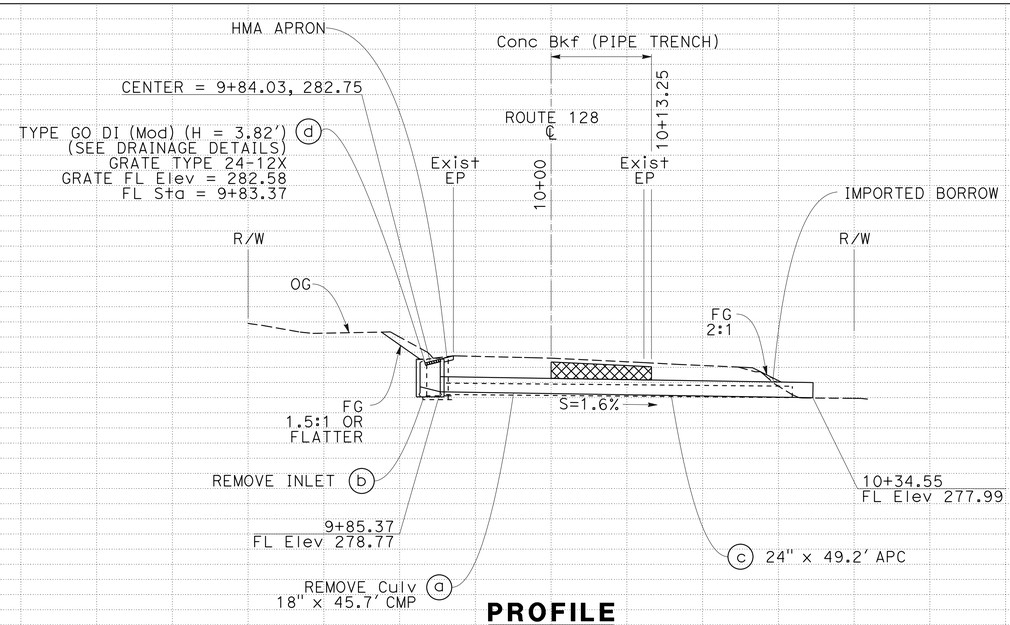

PROFILE

SCALE: Horiz 1" = 10'
Vert 1" = 10'

DRAINAGE PLAN AND PROFILE

SCALE AS SHOWN

D-14

STATION		+20	+40	+60	+80	10+00	+20	+40	+60	+80	TOTAL
CY	Exc										
	Emb										

STATE OF CALIFORNIA - DEPARTMENT OF TRANSPORTATION
Caltrans
03-DESIGN

FUNCTIONAL SUPERVISOR: ROBERT E. POLGAR

CALCULATED-DESIGNED BY: MARTIN GARCIA
CHECKED BY: MARLENE E. GIBB

REVISED BY | DATE REVISED

LAST REVISION | DATE PLOTTED => 06-APR-2015 | TIME PLOTTED => 08:57

Dist	COUNTY	ROUTE	POST MILES TOTAL PROJECT	SHEET No.	TOTAL SHEETS
01	Men	128	Var	17	50

REGISTERED CIVIL ENGINEER 1-27-15 DATE

2-2-15
PLANS APPROVAL DATE

REGISTERED PROFESSIONAL ENGINEER MARLENE E. GIBB No. C 51513 Exp. 06-30-16 CIVIL STATE OF CALIFORNIA

THE STATE OF CALIFORNIA OR ITS OFFICERS OR AGENTS SHALL NOT BE RESPONSIBLE FOR THE ACCURACY OR COMPLETENESS OF SCANNED COPIES OF THIS PLAN SHEET.

NOTES:

1. FOR ACCURATE RIGHT OF WAY DATA, CONTACT RIGHT OF WAY ENGINEERING AT DISTRICT OFFICE.
2. FOR CONCRETE BACKFILL (PIPE TRENCH) DETAILS SEE DRAINAGE DETAIL SHEETS.

T15N R15W MDB&M
SECTION 33

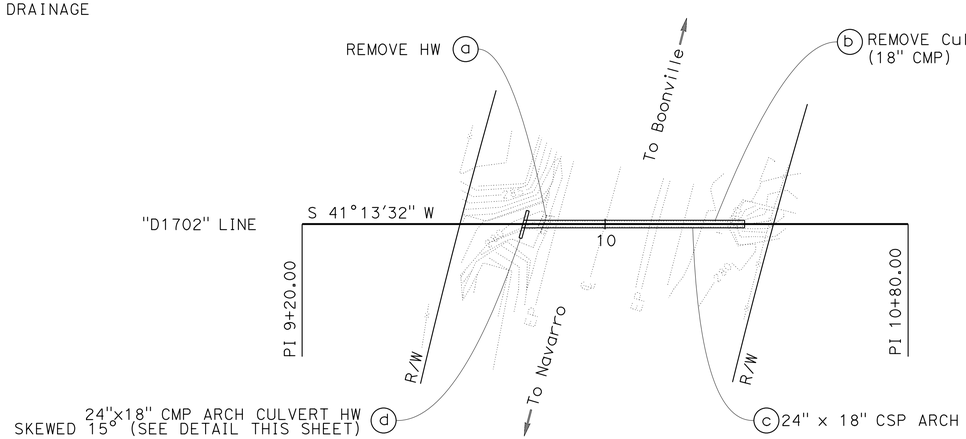

DRAINAGE SYSTEM No. 15

ROUTE 128
PM 17.02

PLAN

SCALE: 1" = 20'

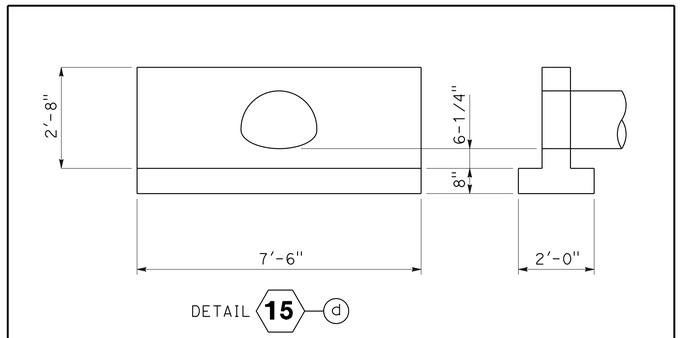

CMP SKEWED ARCH CULVERT HEADWALL

(FOR DETAILS NOT SHOWN, SEE STANDARD PLAN D89)
NO SCALE

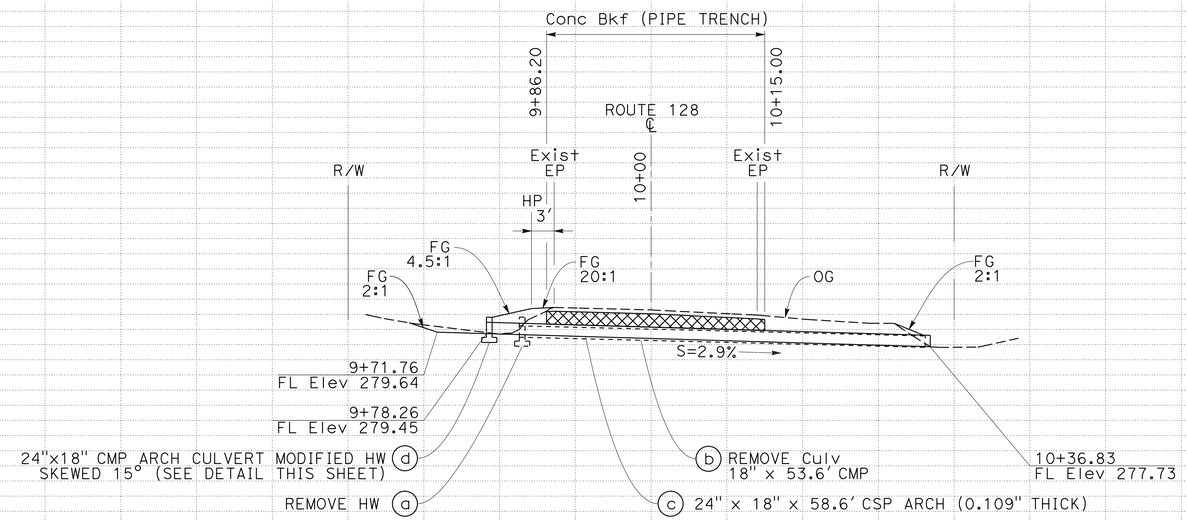

PROFILE

SCALE: Horiz 1" = 10'
Vert 1" = 10'

DRAINAGE PLAN AND PROFILE

SCALE AS SHOWN

D-15

STATION		+20	+40	+60	+80	10+00	+20	+40	+60	+80	TOTAL
CY	Exc										
	Emb										

STATE OF CALIFORNIA - DEPARTMENT OF TRANSPORTATION
Caltrans
03-DESIGN
FUNCTIONAL SUPERVISOR: ROBERT E. POLGAR
CALCULATED-DESIGNED BY: MARTIN GARCIA
CHECKED BY: MARLENE E. GIBB
REVISED BY
DATE REVISED

LAST REVISION
DATE PLOTTED => 06-APR-2015
TIME PLOTTED => 08:57

Dist	COUNTY	ROUTE	POST MILES TOTAL PROJECT	SHEET No.	TOTAL SHEETS
01	Men	128	Var	18	50

Marlene Gibb 1-27-15
REGISTERED CIVIL ENGINEER DATE

2-2-15
PLANS APPROVAL DATE

REGISTERED PROFESSIONAL ENGINEER MARLENE E. GIBB No. C 51513 Exp. 06-30-16 CIVIL STATE OF CALIFORNIA

THE STATE OF CALIFORNIA OR ITS OFFICERS OR AGENTS SHALL NOT BE RESPONSIBLE FOR THE ACCURACY OR COMPLETENESS OF SCANNED COPIES OF THIS PLAN SHEET.

NOTES:

1. FOR ACCURATE RIGHT OF WAY DATA, CONTACT RIGHT OF WAY ENGINEERING AT DISTRICT OFFICE.
2. FOR CONCRETE BACKFILL (PIPE TRENCH) DETAILS SEE DRAINAGE DETAIL SHEETS.

T15N R15W MDB&M
SECTION 33

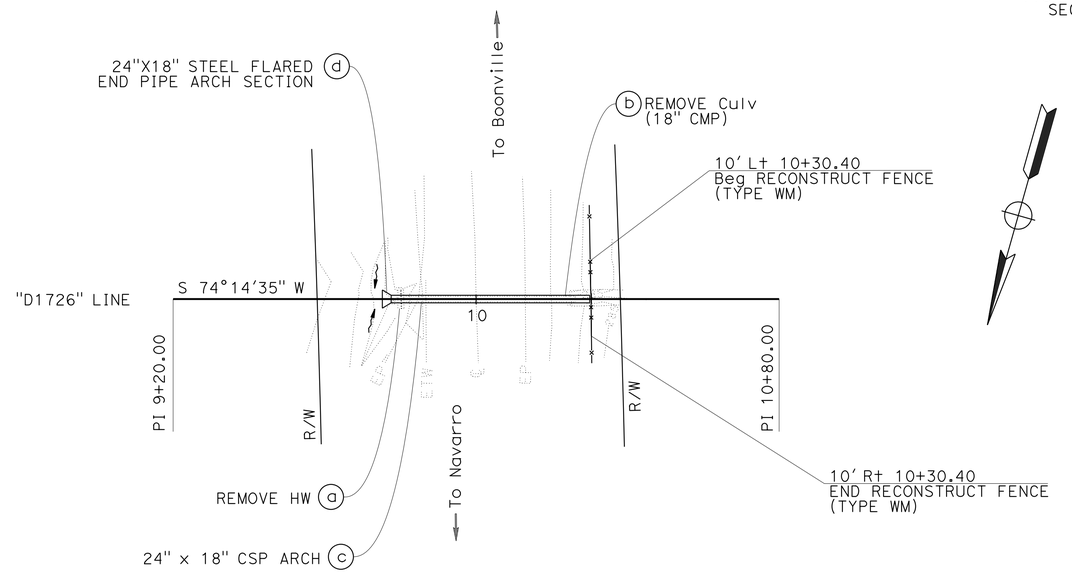

DRAINAGE SYSTEM No. 16

ROUTE 128
PM 17.26

PLAN

SCALE: 1" = 20'

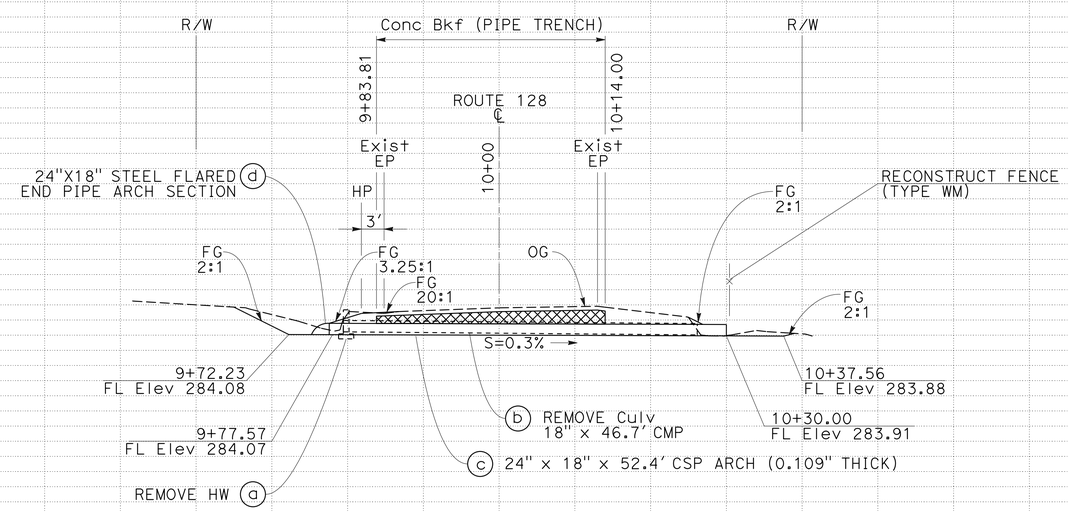

PROFILE

SCALE: Horiz 1" = 10'
Vert 1" = 10'

STATION		+20	+40	+60	+80	10+00	+20	+40	+60	+80	TOTAL
CY	Exc										
	Emb										

DRAINAGE PLAN AND PROFILE

SCALE AS SHOWN

D-16

REVISED BY	DATE REVISED

CALCULATED-DESIGNED BY: MARTIN GARCIA
CHECKED BY: MARLENE E. GIBB
FUNCTIONAL SUPERVISOR: ROBERT E. POLGAR

STATE OF CALIFORNIA - DEPARTMENT OF TRANSPORTATION
Caltrans 03-DESIGN

LAST REVISION
DATE PLOTTED => 06-APR-2015
TIME PLOTTED => 08:57

Dist	COUNTY	ROUTE	POST MILES TOTAL PROJECT	SHEET No.	TOTAL SHEETS
01	Men	128	Var	19	50

REGISTERED CIVIL ENGINEER 1-27-15 DATE

2-2-15
PLANS APPROVAL DATE

REGISTERED PROFESSIONAL ENGINEER MARLENE E. GIBB No. C 51513 Exp. 06-30-16 CIVIL STATE OF CALIFORNIA

THE STATE OF CALIFORNIA OR ITS OFFICERS OR AGENTS SHALL NOT BE RESPONSIBLE FOR THE ACCURACY OR COMPLETENESS OF SCANNED COPIES OF THIS PLAN SHEET.

NOTES:

1. FOR ACCURATE RIGHT OF WAY DATA, CONTACT RIGHT OF WAY ENGINEERING AT DISTRICT OFFICE.
2. FOR CONCRETE BACKFILL (PIPE TRENCH) DETAILS SEE DRAINAGE DETAIL SHEETS.

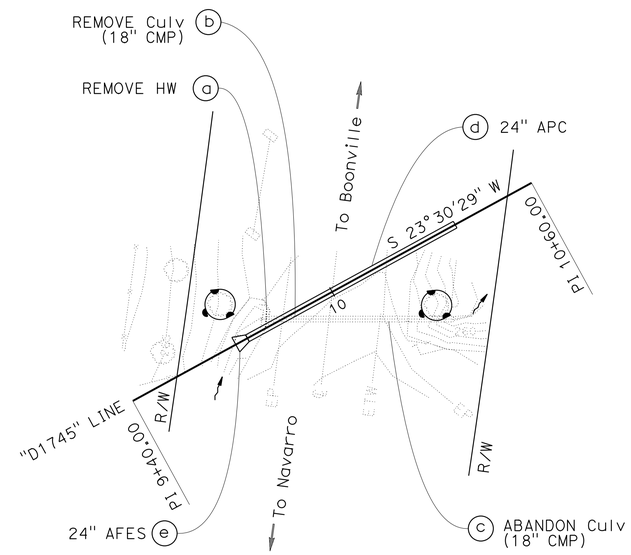

T15N R15W MDB&M
SECTION 33

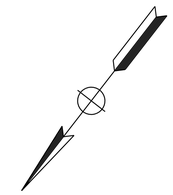

DRAINAGE SYSTEM No. 17

ROUTE 128
PM 17.45

PLAN

SCALE: 1" = 20'

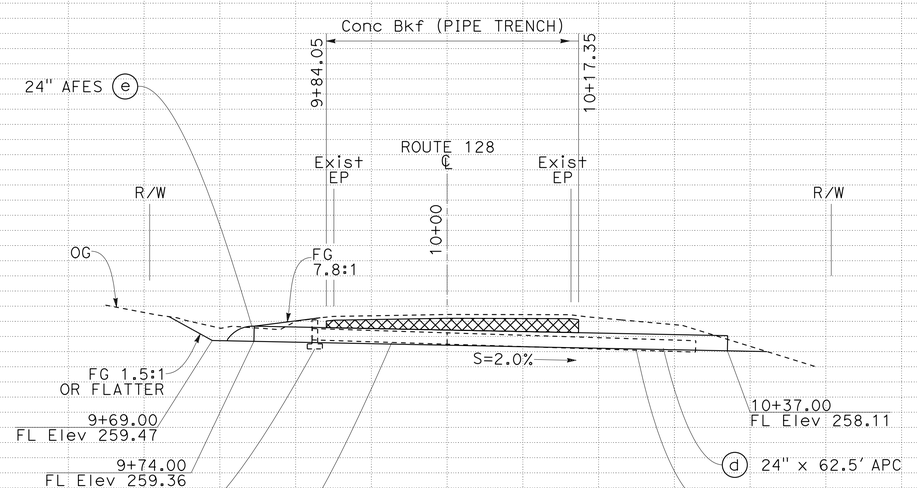

PROFILE

SCALE: Horiz 1" = 10'
Vert 1" = 10'

DRAINAGE PLAN AND PROFILE

SCALE AS SHOWN

D-17

STATION		+20	+40	+60	+80	10+00	+20	+40	+60	+80	TOTAL
CY	Exc										
	Emb										

STATE OF CALIFORNIA - DEPARTMENT OF TRANSPORTATION
Caltrans
03-DESIGN

FUNCTIONAL SUPERVISOR: ROBERT E. POLGAR
CALCULATED-DESIGNED BY: MARTIN GARCIA
CHECKED BY: MARLENE E. GIBB
REVISED BY
DATE REVISED

LAST REVISION
DATE PLOTTED => 06-APR-2015
TIME PLOTTED => 08:57

Dist	COUNTY	ROUTE	POST MILES TOTAL PROJECT	SHEET No.	TOTAL SHEETS
01	Men	128	Var	20	50

REGISTERED CIVIL ENGINEER 1-27-15 DATE

2-2-15
PLANS APPROVAL DATE

REGISTERED PROFESSIONAL ENGINEER MARLENE E. GIBB No. C 51513 Exp. 06-30-16 CIVIL STATE OF CALIFORNIA

THE STATE OF CALIFORNIA OR ITS OFFICERS OR AGENTS SHALL NOT BE RESPONSIBLE FOR THE ACCURACY OR COMPLETENESS OF SCANNED COPIES OF THIS PLAN SHEET.

NOTES:

1. FOR ACCURATE RIGHT OF WAY DATA, CONTACT RIGHT OF WAY ENGINEERING AT DISTRICT OFFICE.

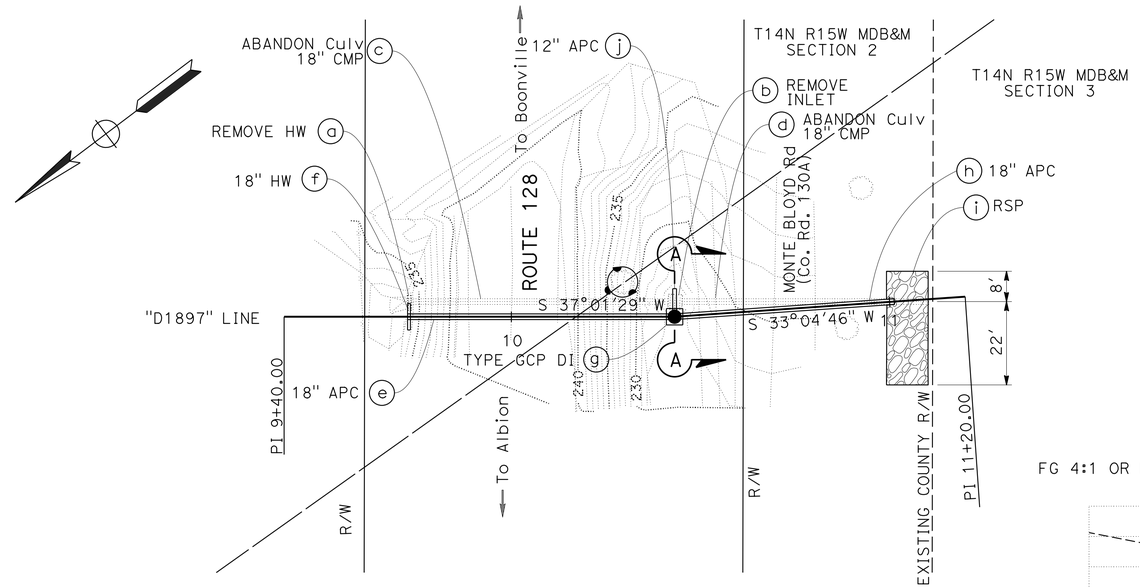

DRAINAGE SYSTEM No. 18

ROUTE 128
PM 18.97

PLAN

SCALE: 1" = 20'

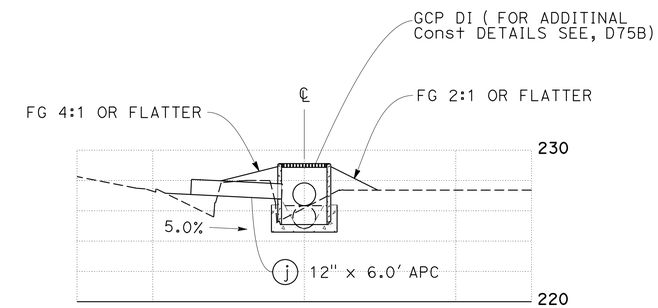

SECTION Sta 10+43.10

SECTION A-A

SCALE: 1"=5'

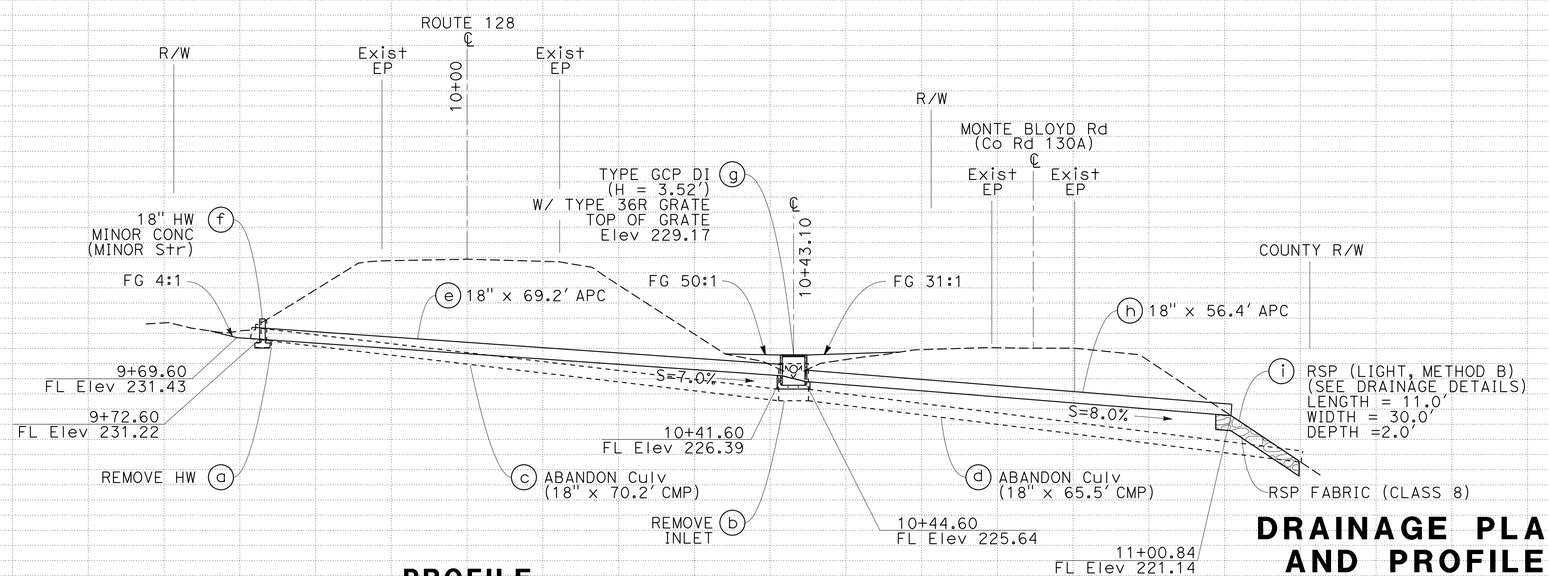

PROFILE

SCALE: Horiz 1" = 10'
Vert 1" = 10'

DRAINAGE PLAN AND PROFILE

SCALE AS SHOWN

D-18

REVISED BY	DATE REVISED

CALCULATED-DESIGNED BY: MARTIN GARCIA
CHECKED BY: MARLENE E. GIBB
FUNCTIONAL SUPERVISOR: ROBERT E. POLGAR

STATE OF CALIFORNIA - DEPARTMENT OF TRANSPORTATION
Caltrans
03-DESIGN

LAST REVISION
DATE PLOTTED => 06-APR-2015
TIME PLOTTED => 08:57

Dist	COUNTY	ROUTE	POST MILES TOTAL PROJECT	SHEET No.	TOTAL SHEETS
01	Men	128	Var	21	50

REGISTERED CIVIL ENGINEER 1-27-15 DATE

2-2-15
PLANS APPROVAL DATE

REGISTERED PROFESSIONAL ENGINEER MARLENE E. GIBB No. C 51513 Exp. 06-30-16 CIVIL STATE OF CALIFORNIA

THE STATE OF CALIFORNIA OR ITS OFFICERS OR AGENTS SHALL NOT BE RESPONSIBLE FOR THE ACCURACY OR COMPLETENESS OF SCANNED COPIES OF THIS PLAN SHEET.

NOTES:

1. FOR ACCURATE RIGHT OF WAY DATA, CONTACT RIGHT OF WAY ENGINEERING AT DISTRICT OFFICE.
2. FOR CONCRETE BACKFILL (PIPE TRENCH) DETAILS SEE DRAINAGE DETAIL SHEETS.
3. SEE STANDARD PLANS FOR FENCE DETAILS NOT SHOWN

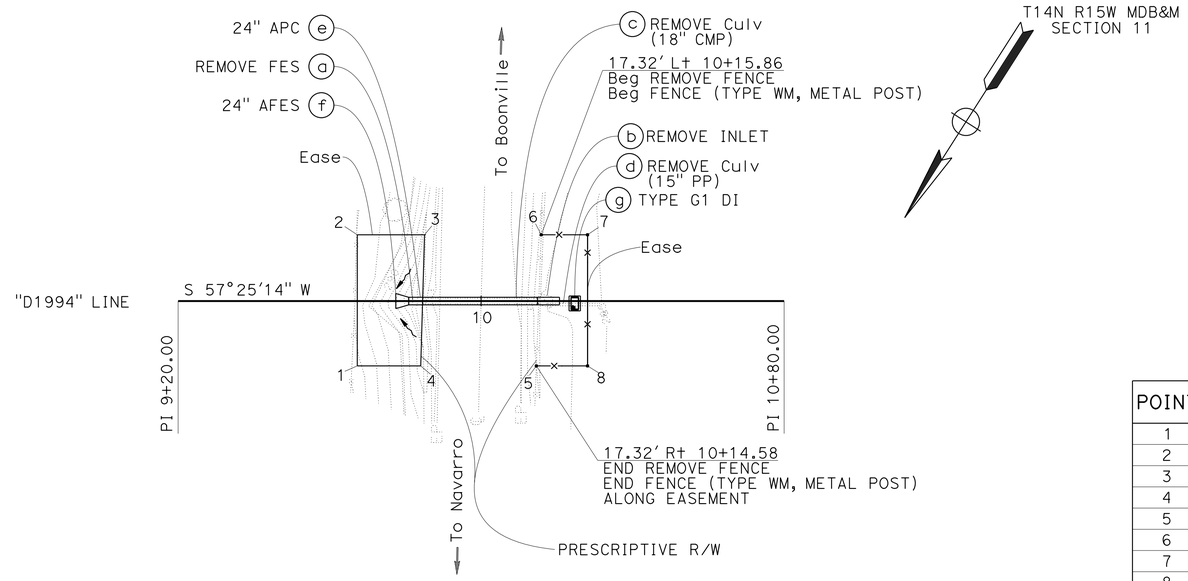

POINT	STATION	OFFSET
1	9+67.30	17.12' R+
2	9+67.30	17.49' L+
3	9+85.06	17.49' L+
4	9+84.06	17.12' R+
5	10+14.59	17.12' R+
6	10+15.86	17.50' L+
7	10+28.10	17.50' L+
8	10+28.10	17.12' R+

DRAINAGE SYSTEM No. 19

ROUTE 128
PM 19.94

PLAN

SCALE: 1" = 20'

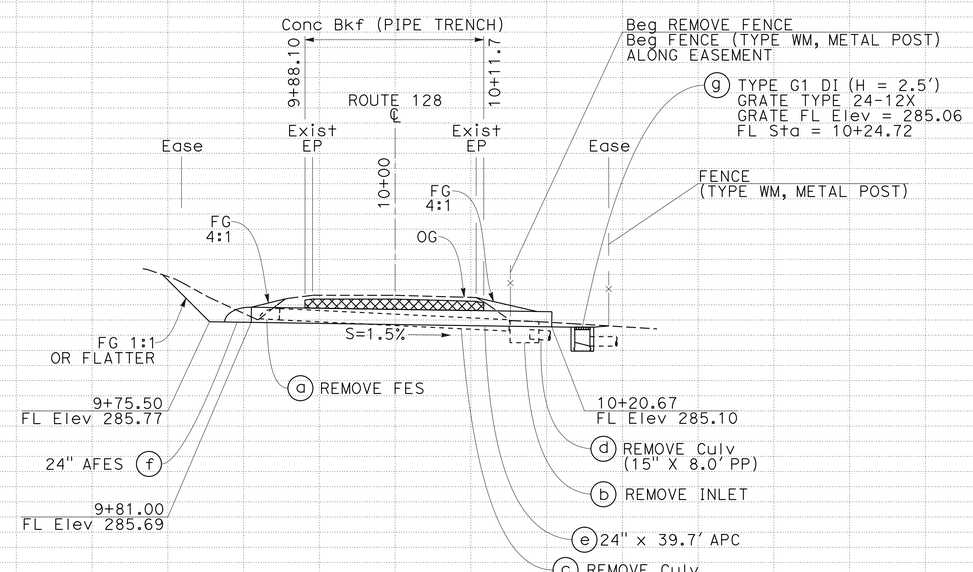

PROFILE

SCALE: Horiz 1" = 10'
Vert 1" = 10'

DRAINAGE PLAN AND PROFILE

SCALE AS SHOWN

D-19

STATION		+20	+40	+60	+80	10+00	+20	+40	+60	+80	TOTAL
CY	Exc										
	Emb										

STATE OF CALIFORNIA - DEPARTMENT OF TRANSPORTATION
03-DESIGN
Caltrans
FUNCTIONAL SUPERVISOR: ROBERT E. POLGAR
CALCULATED-DESIGNED BY: MARTIN GARCIA
CHECKED BY: MARLENE E. GIBB
REVISED BY
DATE REVISED

LAST REVISION
DATE PLOTTED => 06-APR-2015
TIME PLOTTED => 08:58

Dist	COUNTY	ROUTE	POST MILES TOTAL PROJECT	SHEET No.	TOTAL SHEETS
01	Men	128	Var	22	50

REGISTERED CIVIL ENGINEER 1-27-15 DATE

2-2-15
PLANS APPROVAL DATE

REGISTERED PROFESSIONAL ENGINEER MARLENE E. GIBB No. C 51513 Exp. 06-30-16 CIVIL STATE OF CALIFORNIA

THE STATE OF CALIFORNIA OR ITS OFFICERS OR AGENTS SHALL NOT BE RESPONSIBLE FOR THE ACCURACY OR COMPLETENESS OF SCANNED COPIES OF THIS PLAN SHEET.

NOTES:

1. FOR ACCURATE RIGHT OF WAY DATA, CONTACT RIGHT OF WAY ENGINEERING AT DISTRICT OFFICE.
2. FOR CONCRETE BACKFILL (PIPE TRENCH) DETAILS SEE DRAINAGE DETAIL SHEETS.
3. FOR HMA APRON AND PLACE HMA DIKE (TYPE A) DETAILS SEE DRAINAGE DETAIL SHEETS.
4. INLET AND/OR OUTLET STRUCTURE SKEW ANGLE IS MEASURED FROM A LINE PERPENDICULAR TO THE CULVERT ALIGNMENT.

T14N R14W MDB&M
SECTION 18

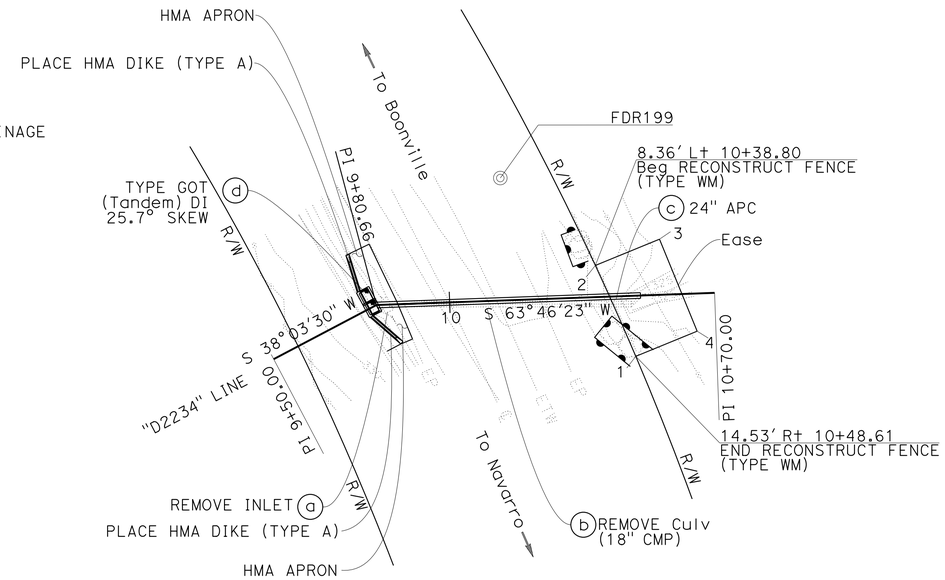

POINT	STATION	OFFSET
1	10+48.60	16.00' Rt
2	10+38.80	8.36' Lt
3	10+55.97	14.68' Lt
4	10+65.04	9.95' Rt

DRAINAGE SYSTEM No. 20

ROUTE 128
PM 22.34

PLAN

SCALE: 1" = 20'

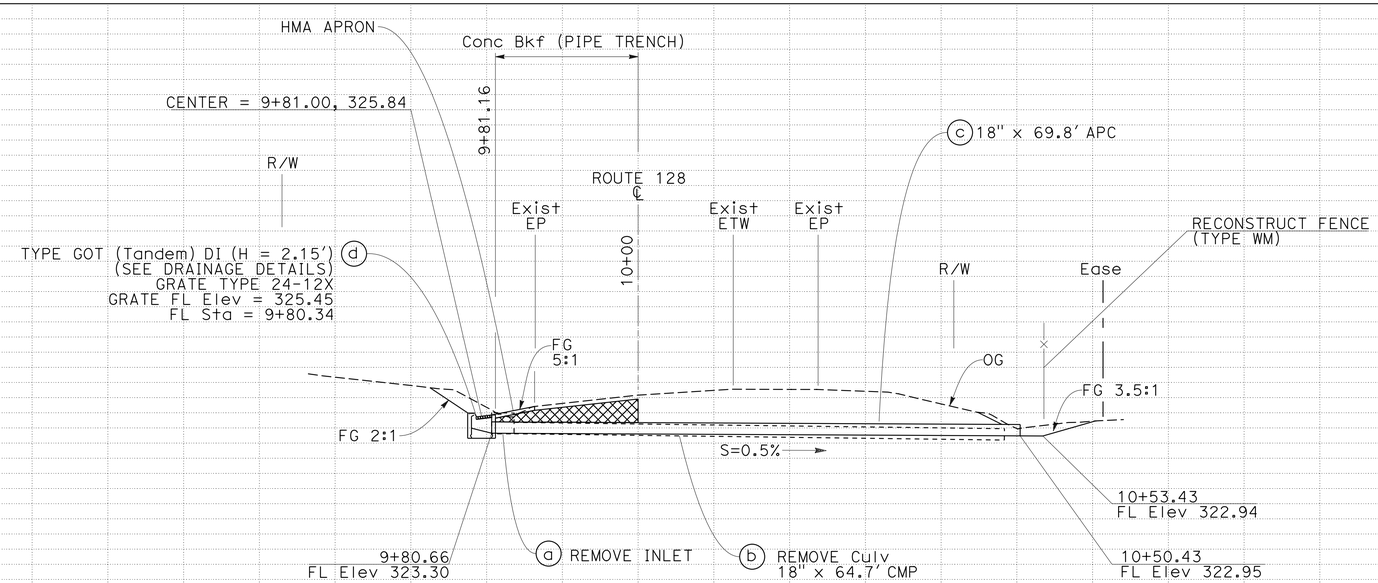

PROFILE

SCALE: Horiz 1" = 10'
Vert 1" = 10'

DRAINAGE PLAN AND PROFILE

SCALE AS SHOWN

D-20

STATION		+20	+40	+60	+80	10+00	+20	+40	+60	+80	TOTAL
CY	Exc										
	Emb										

STATE OF CALIFORNIA - DEPARTMENT OF TRANSPORTATION
Caltrans
03-DESIGN
FUNCTIONAL SUPERVISOR: ROBERT E. POLGAR
CALCULATED-DESIGNED BY: MARTIN GARCIA
CHECKED BY: MARLENE E. GIBB
REVISED BY
DATE REVISED

LAST REVISION
DATE PLOTTED => 06-APR-2015
TIME PLOTTED => 08:58

Dist	COUNTY	ROUTE	POST MILES TOTAL PROJECT	SHEET No.	TOTAL SHEETS
01	Men	128	Var	23	50

REGISTERED CIVIL ENGINEER 1-27-15 DATE

2-2-15
PLANS APPROVAL DATE

REGISTERED PROFESSIONAL ENGINEER MARLENE E. GIBB No. C 51513 Exp. 06-30-16 CIVIL STATE OF CALIFORNIA

THE STATE OF CALIFORNIA OR ITS OFFICERS OR AGENTS SHALL NOT BE RESPONSIBLE FOR THE ACCURACY OR COMPLETENESS OF SCANNED COPIES OF THIS PLAN SHEET.

NOTES:

1. FOR ACCURATE RIGHT OF WAY DATA, CONTACT RIGHT OF WAY ENGINEERING AT DISTRICT OFFICE.

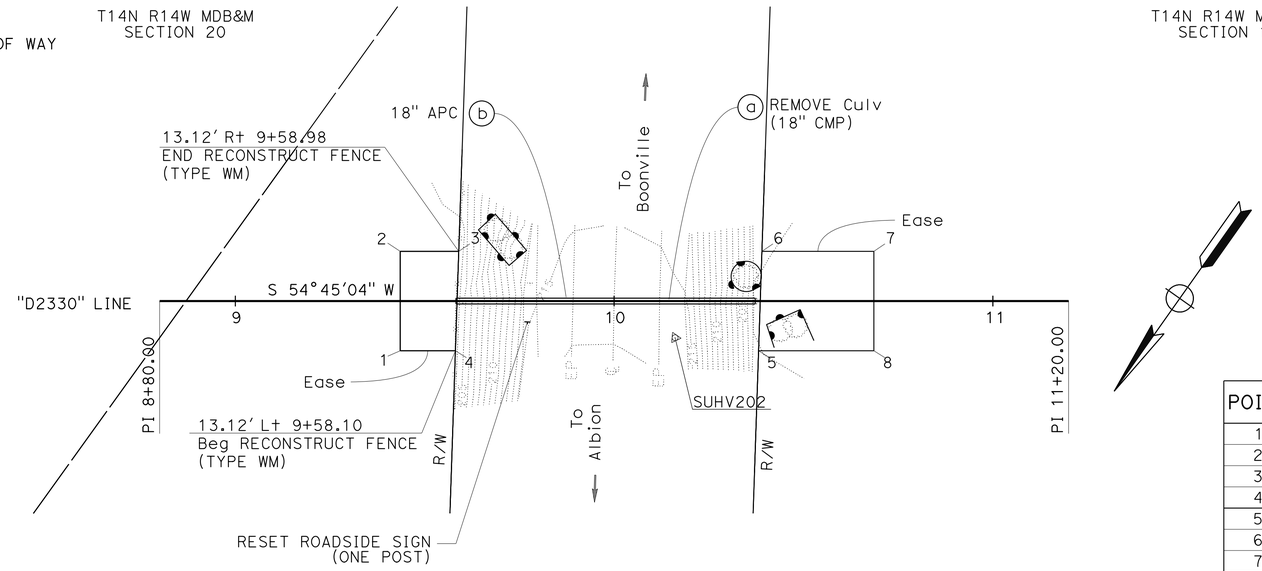

POINT	STATION	OFFSET
1	9+43.53	13.12' R+
2	9+43.53	13.12' L+
3	9+58.98	13.12' L+
4	9+58.10	13.12' R+
5	10+38.14	13.12' R+
6	10+39.02	13.12' L+
7	10+68.58	13.12' L+
8	10+68.58	13.12' R+

DRAINAGE SYSTEM No. 21

ROUTE 128
PM 23.30

PLAN

SCALE: 1" = 20'

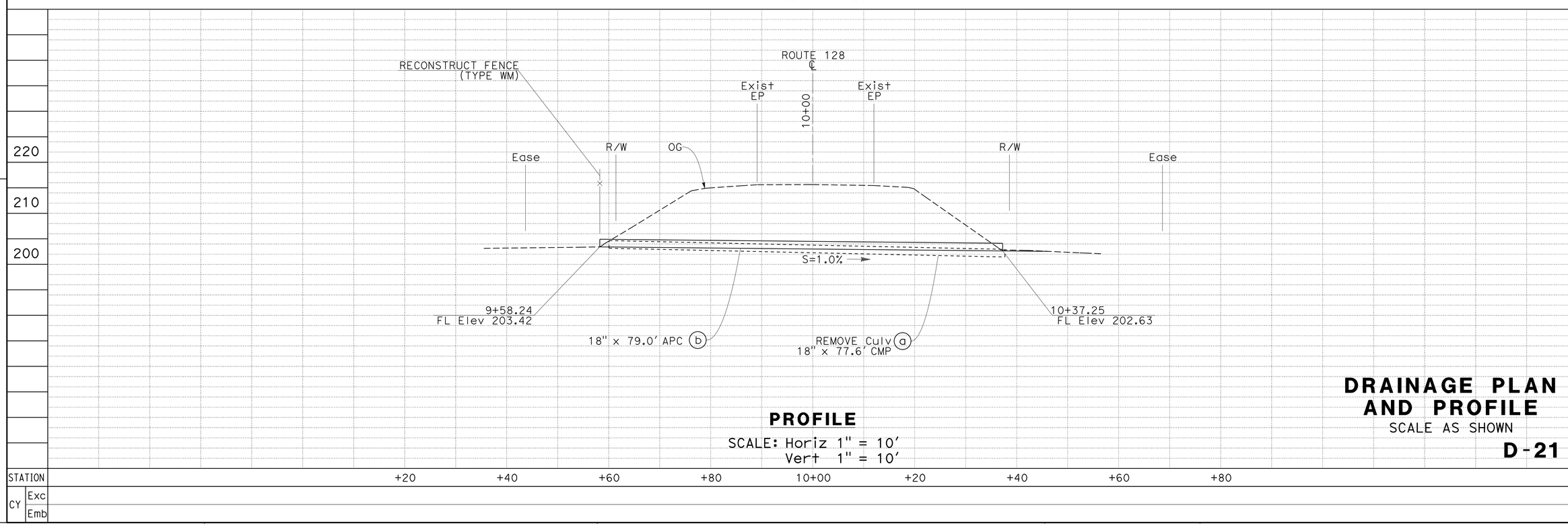

PROFILE

SCALE: Horiz 1" = 10'
Vert 1" = 10'

DRAINAGE PLAN AND PROFILE

SCALE AS SHOWN

D-21

REVISED BY | DATE REVISED
MARTIN GARCIA | MARLENE E. GIBB
CALCULATED-DESIGNED BY | CHECKED BY
FUNCTIONAL SUPERVISOR | ROBERT E. POLGAR
STATE OF CALIFORNIA - DEPARTMENT OF TRANSPORTATION
03-DESIGN
Caltrans

LAST REVISION | DATE PLOTTED => 06-APR-2015 | TIME PLOTTED => 08:58

Dist	COUNTY	ROUTE	POST MILES TOTAL PROJECT	SHEET No.	TOTAL SHEETS
01	Men	128	Var	24	50

REGISTERED CIVIL ENGINEER 1-27-15 DATE

2-2-15
PLANS APPROVAL DATE

REGISTERED PROFESSIONAL ENGINEER MARLENE E. GIBB No. C 51513 Exp. 06-30-16 CIVIL STATE OF CALIFORNIA

THE STATE OF CALIFORNIA OR ITS OFFICERS OR AGENTS SHALL NOT BE RESPONSIBLE FOR THE ACCURACY OR COMPLETENESS OF SCANNED COPIES OF THIS PLAN SHEET.

NOTES:

1. SEE STANDARD PLANS FOR BEDDING DETAILS.
2. PLACE MARKER MINIMUM 2.0′ AND MAXIMUM 12.0′ FROM EP, EXACT LOCATION TO BE DETERMINED BY THE ENGINEER.
3. SEE STANDARD PLANS FOR COUPLING DETAILS NOT SHOWN.

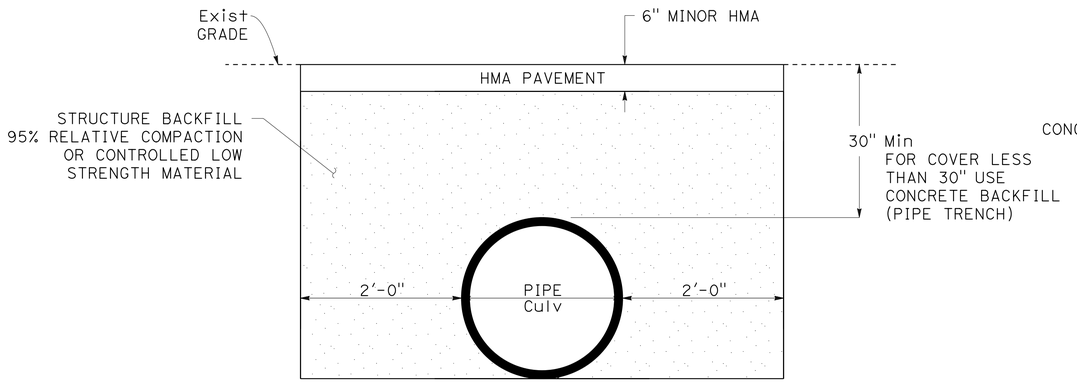

STRUCTURE BACKFILL UNDER PAVEMENT

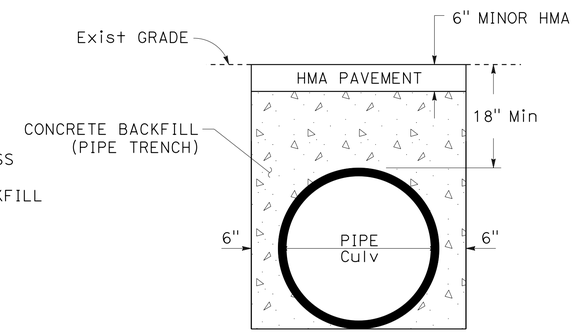

CONCRETE BACKFILL (PIPE TRENCH)

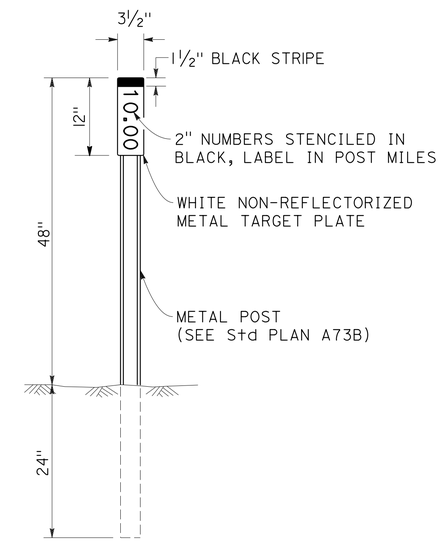

MARKER (CULVERT)

DRAINAGE SYSTEM No.	LOCATION (PM)
2	10.73
4	11.13
5	11.17
6	11.54
7	12.12
9	15.19
10	15.52
11	15.56
12	16.11
13	16.50
14	16.99
18	18.97
20	22.34
21	23.30

DRAINAGE SYSTEM No.	LOCATION (PM)
1	10.58
3	11.00
5	11.17
7	12.12
8	14.91
12	16.11
13	16.50
14	16.99
15	17.02
16	17.26
17	17.45
19	19.94
20	22.34

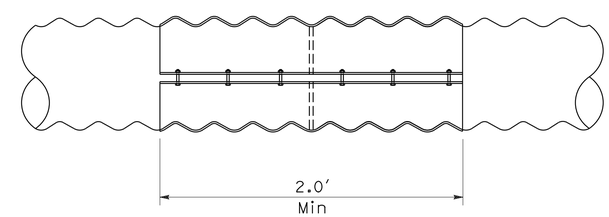

CMP AND PLASTIC PIPE JOINT COUPLING BAND

DRAINAGE DETAILS

NO SCALE

DD-1

STATE OF CALIFORNIA - DEPARTMENT OF TRANSPORTATION
Caltrans
03-DESIGN
FUNCTIONAL SUPERVISOR: ROBERT E. POLGAR
CALCULATED-DESIGNED BY: MARTIN GARCIA
CHECKED BY: MARLENE E. GIBB
REVISED BY
DATE REVISED

LAST REVISION 00-00-00
DATE PLOTTED => 06-APR-2015
TIME PLOTTED => 08:58

Dist	COUNTY	ROUTE	POST MILES TOTAL PROJECT	SHEET No.	TOTAL SHEETS
01	Men	128	Var	25	50

REGISTERED CIVIL ENGINEER 1-27-15 DATE

2-2-15
PLANS APPROVAL DATE

REGISTERED PROFESSIONAL ENGINEER MARLENE E. GIBB No. C 51513 Exp. 06-30-16 CIVIL STATE OF CALIFORNIA

THE STATE OF CALIFORNIA OR ITS OFFICERS OR AGENTS SHALL NOT BE RESPONSIBLE FOR THE ACCURACY OR COMPLETENESS OF SCANNED COPIES OF THIS PLAN SHEET.

NOTE:

1. FOR LENGTH, WIDTH, AND THICKNESS OF RSP SEE DRAINAGE PLAN AND PROFILE SHEETS.

ABBREVIATIONS:

L - LENGTH OF RSP
W - WIDTH OF RSP
T - THICKNESS OF RSP

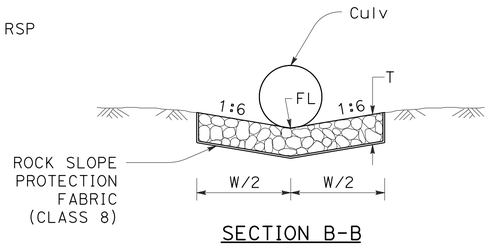

SECTION B-B

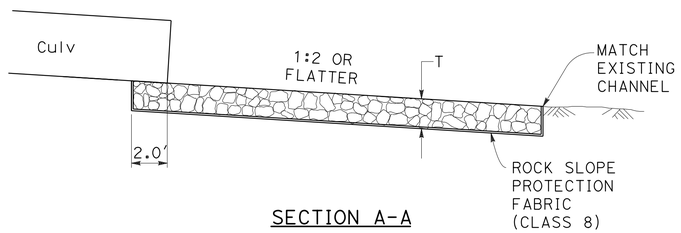

SECTION A-A

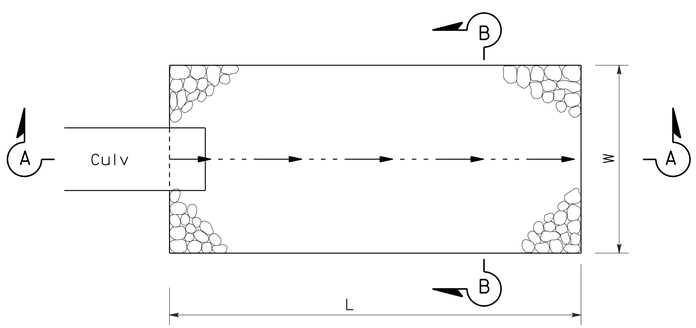

PLAN

ROCK SLOPE PROTECTION WITHOUT END TREATMENT

DRAINAGE SYSTEM (8)
PM 14.91
DRAINAGE SYSTEM (10)
PM 15.52
DRAINAGE SYSTEM (18)
PM 18.97

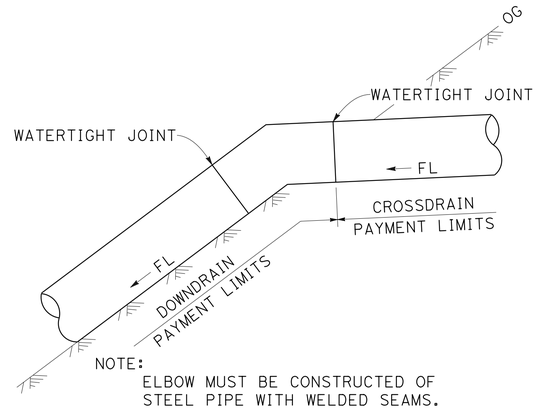

NOTE:
ELBOW MUST BE CONSTRUCTED OF STEEL PIPE WITH WELDED SEAMS.

DOWNDRAIN DETAILS

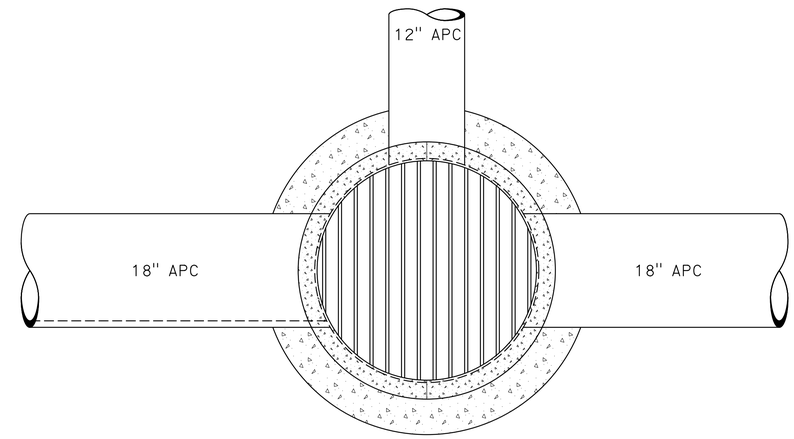

PLAN

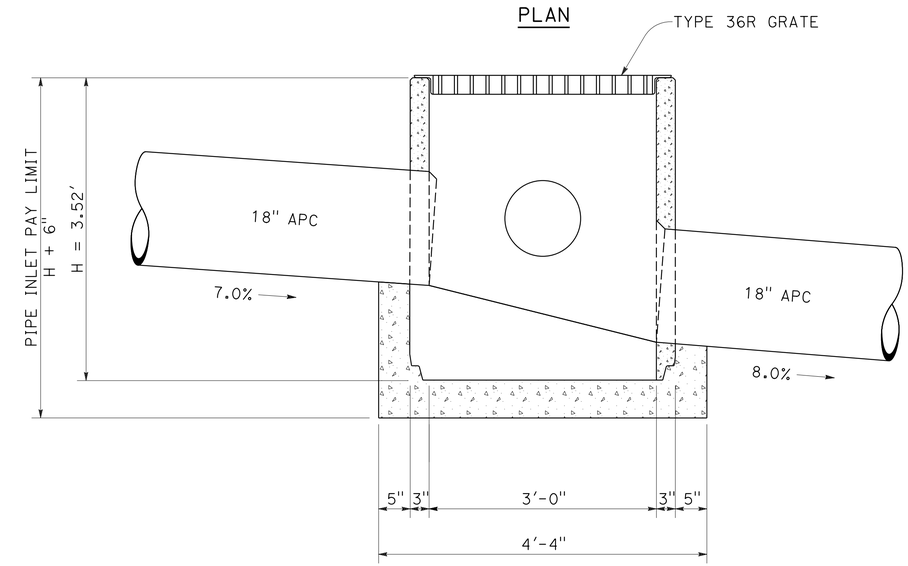

SECTION A-A
TYPE GCP INLET

DRAINAGE SYSTEM (18)
PM 18.97

DRAINAGE DETAILS

NO SCALE

DD-2

STATE OF CALIFORNIA - DEPARTMENT OF TRANSPORTATION
Caltrans
03-DESIGN
FUNCTIONAL SUPERVISOR: ROBERT E. POLGAR
CALCULATED-DESIGNED BY: MARTIN GARCIA
CHECKED BY: MARLENE E. GIBB
REVISED BY
DATE REVISED

LAST REVISION 00-00-00
DATE PLOTTED => 06-APR-2015
TIME PLOTTED => 08:58

Dist	COUNTY	ROUTE	POST MILES TOTAL PROJECT	SHEET No.	TOTAL SHEETS
01	Men	128	Var	26	50

Marlene Gibb 1-27-15
REGISTERED CIVIL ENGINEER DATE

2-2-15
PLANS APPROVAL DATE

REGISTERED PROFESSIONAL ENGINEER
MARLENE E. GIBB
No. C 51513
Exp. 06-30-16
CIVIL
STATE OF CALIFORNIA

THE STATE OF CALIFORNIA OR ITS OFFICERS OR AGENTS SHALL NOT BE RESPONSIBLE FOR THE ACCURACY OR COMPLETENESS OF SCANNED COPIES OF THIS PLAN SHEET.

NOTE:

1. SEE STANDARD PLAN SHEET D75A FOR INLET OPENING DETAILS.

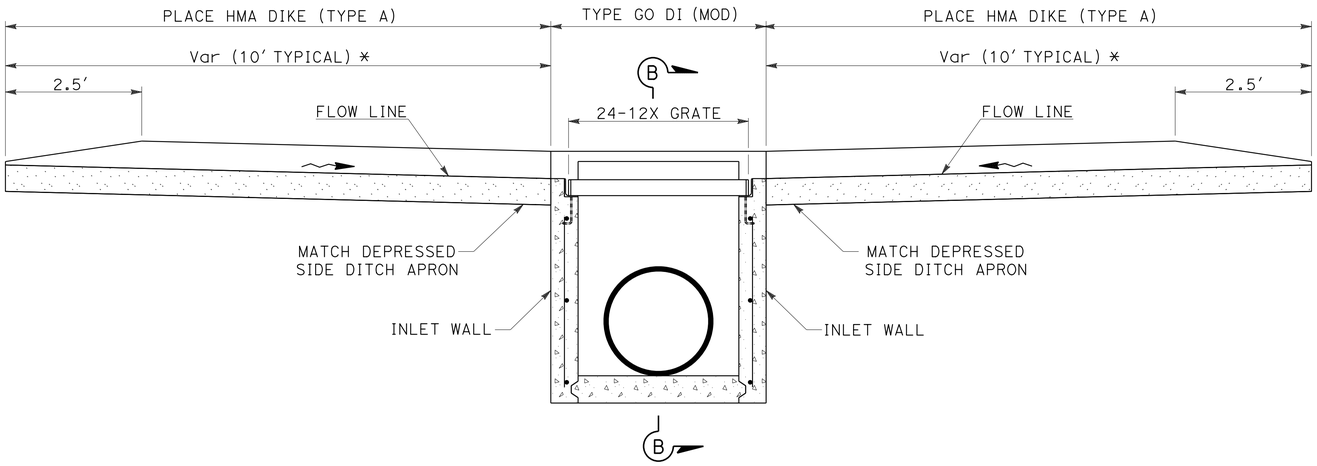

SECTION A-A

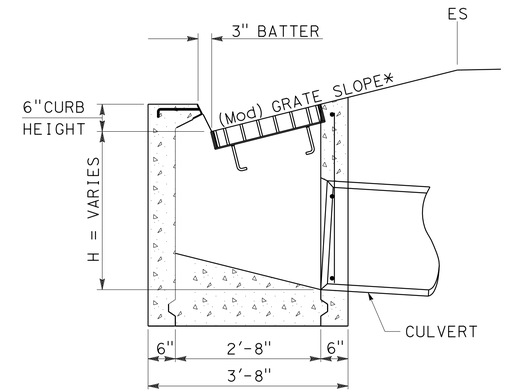

SECTION B-B

DRAINAGE INLET TYPE GO (MOD)

* (Mod) GRATE SLOPES IN TABLE BELOW

DRAINAGE SYSTEM No.	LOCATION (PM)	INLET (TYPE)	GRATE SLOPE
3	11.00	GO DI (Mod)	4:1
5	11.17	GO DI (Mod)	5:1
7	12.12	GO DI (Mod)	4:1
12	16.11	GO DI (Mod)	4:1
14	16.99	GO DI (Mod)	4:1

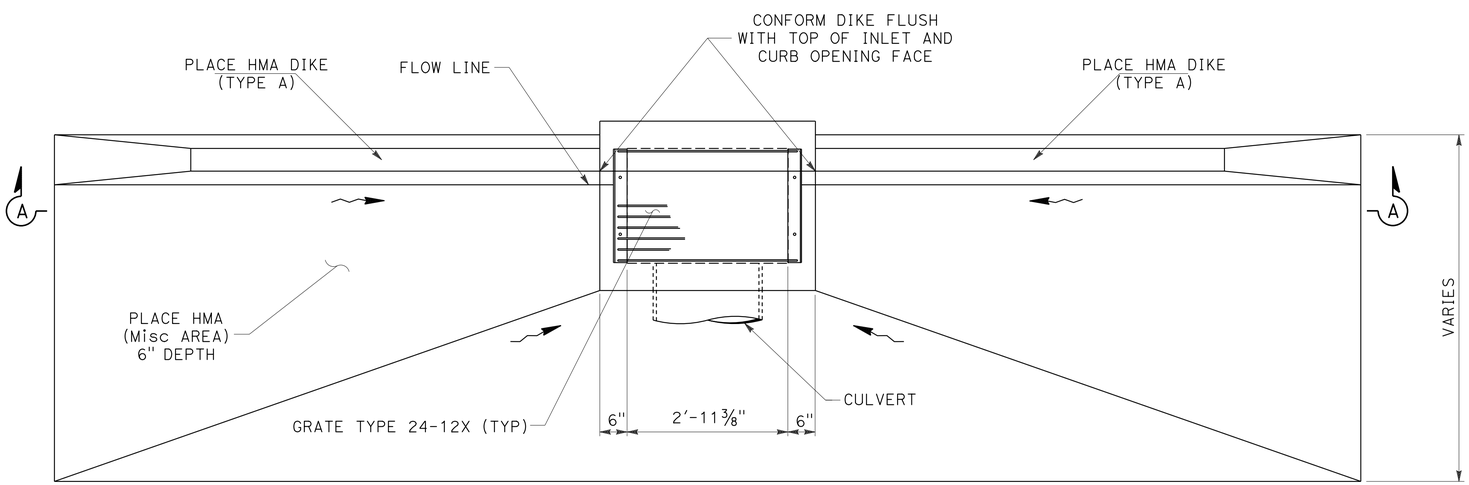

PLAN

PAVED APRON

* 10' (TYPPICAL) PAVED APRON AND DIKE FOR GO DI AND GOT (Tandem) DI.

DRAINAGE DETAILS

NO SCALE

DD-3

REVISED BY | DATE REVISED
MARTIN GARCIA | MARLENE E. GIBB
CALCULATED-DESIGNED BY | CHECKED BY
FUNCTIONAL SUPERVISOR | ROBERT E. POLGAR
STATE OF CALIFORNIA - DEPARTMENT OF TRANSPORTATION
03-DESIGN
Caltrans

LAST REVISION 00-00-00 | DATE PLOTTED => 06-APR-2015 | TIME PLOTTED => 08:58

Dist	COUNTY	ROUTE	POST MILES TOTAL PROJECT	SHEET No.	TOTAL SHEETS
01	Men	128	Var	27	50

Marlene Gibb 1-27-15
REGISTERED CIVIL ENGINEER DATE

2-2-15
PLANS APPROVAL DATE

REGISTERED PROFESSIONAL ENGINEER MARLENE E. GIBB No. C 51513 Exp. 06-30-16 CIVIL STATE OF CALIFORNIA

THE STATE OF CALIFORNIA OR ITS OFFICERS OR AGENTS SHALL NOT BE RESPONSIBLE FOR THE ACCURACY OR COMPLETENESS OF SCANNED COPIES OF THIS PLAN SHEET.

DRAINAGE SYSTEM No.	LOCATION (PM)	INLET TYPE
20	22.34	GOT (Mod) (Tandem) DI

NOTE:

1. SEE STD PLANS D74A AND D74B FOR DETAILS NOT SHOWN.

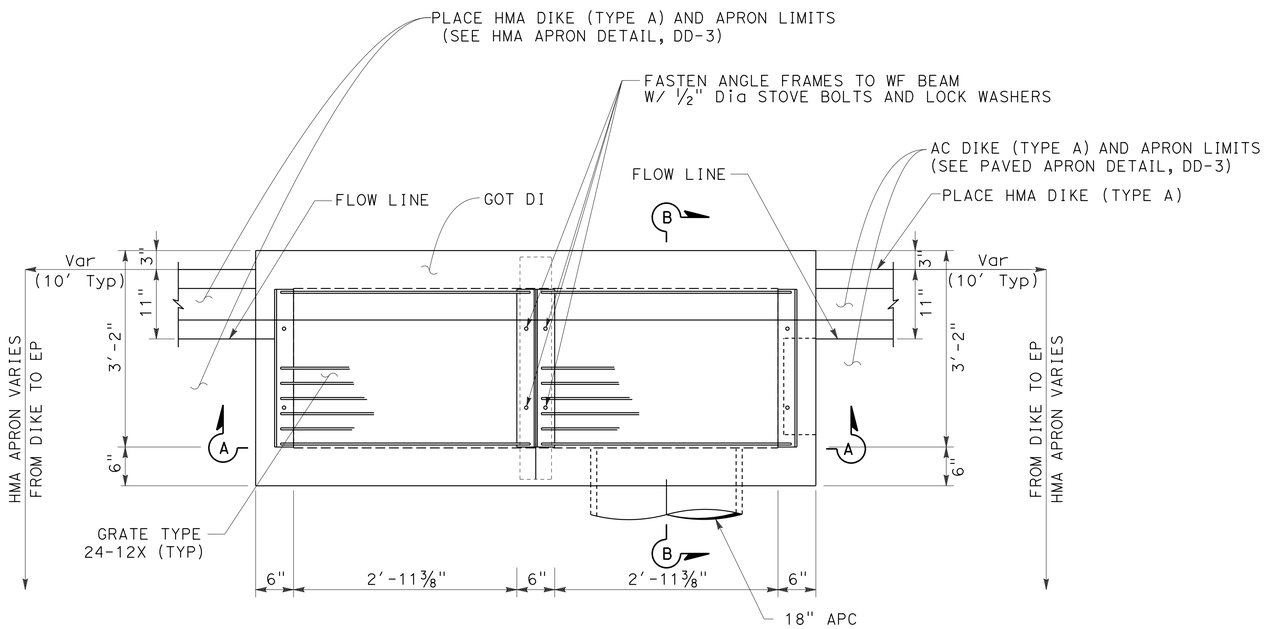

PLAN

GOT (Tandem) DI

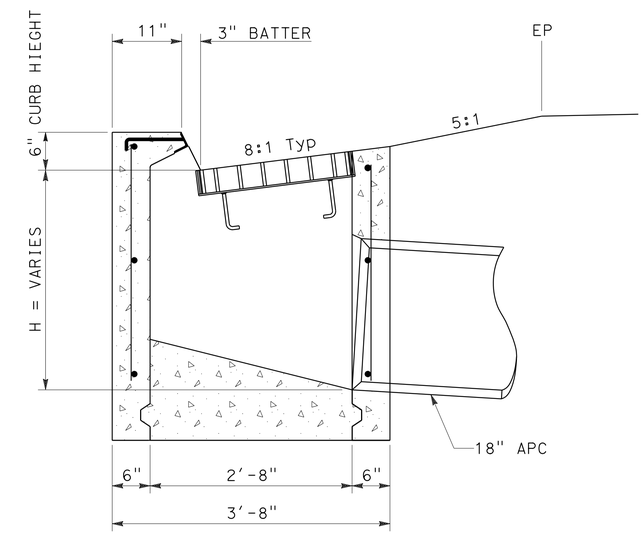

SECTION B-B

DRAINAGE INLET TYPE GOT (Mod) (Tandem)

(SEE STANDARD PLANS FOR IMFORMATION NOT SHOWN)

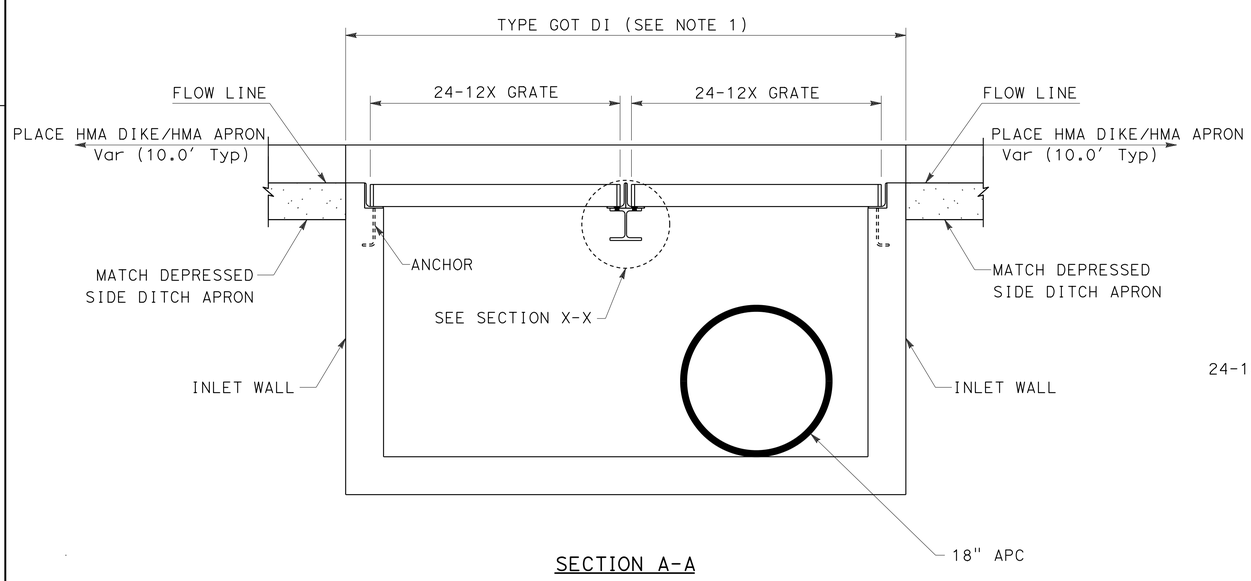

SECTION A-A

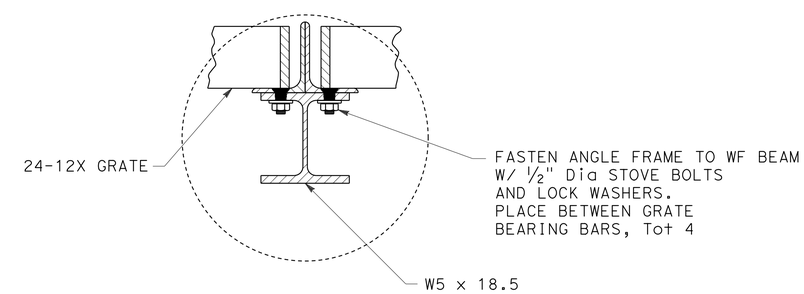

SECTION X-X

DRAINAGE DETAILS

NO SCALE

DD-4

STATE OF CALIFORNIA - DEPARTMENT OF TRANSPORTATION
Caltrans
03-DESIGN

FUNCTIONAL SUPERVISOR: ROBERT E. POLGAR
CALCULATED-DESIGNED BY: MARTIN GARCIA
CHECKED BY: MARLENE E. GIBB
REVISED BY
DATE REVISED

LAST REVISION 00-00-00
DATE PLOTTED => 06-APR-2015
TIME PLOTTED => 08:58

Dist	COUNTY	ROUTE	POST MILES TOTAL PROJECT	SHEET No.	TOTAL SHEETS
01	Men	128	Var	28	50

Marlene Gibb 1-27-15
REGISTERED CIVIL ENGINEER DATE

2-2-15
PLANS APPROVAL DATE

REGISTERED PROFESSIONAL ENGINEER
MARLENE E. GIBB
No. C 51513
Exp. 06-30-16
CIVIL
STATE OF CALIFORNIA

THE STATE OF CALIFORNIA OR ITS OFFICERS OR AGENTS SHALL NOT BE RESPONSIBLE FOR THE ACCURACY OR COMPLETENESS OF SCANNED COPIES OF THIS PLAN SHEET.

NOTES:

1. PLASTIC PIPE SHALL BE SMOOTH INTERIOR WALL TYPE S HDPE, TYPE D HDPE OR RIBBED HDPE.
2. ALL CULVERT PIPE JOINTS ARE POSITIVE JOINT TYPE.

ALTERNATIVE PIPE CULVERT (APC) AND FLARED END SECTION (AFES) ALLOWABLE PIPE MATERIAL AND PROTECTION

DRAINAGE SYSTEM No.	LOCATION (PM)	Galv CSP		CAP 0.079" (14 Ga)	RCP *	PLASTIC (HDPE)
		0.138" (10 Ga) THICK	POLYMERIC Sht COATED 0.109" (12 Ga) THICK			
1	10.58	X	X	X	X	X
2	10.73	X	X	X	X	X
3	11.00	X	X	X	X	X
4	11.13	X	X	X	X	X
5	11.17	X	X	X	X	X
6	11.54	X	X	X	X	X
7	12.12	X	X	X	X	X
8	14.91	X	X	X	X	
9	15.19	X	X	X	X	
10	15.52	X	X	X	X	
11	15.56	X	X	X	X	
12	16.11	X	X	X	X	
13	16.50	X	X	X	X	
14	16.99	X	X	X	X	
15	17.02					
16	17.26					
17	17.45	X	X	X	X	
18	18.97		X	X	X	
19	19.94		X	X	X	
20	22.34	X	X	X	X	
21	23.30				X	

DRAINAGE QUANTITIES

DQ-1

STATE OF CALIFORNIA - DEPARTMENT OF TRANSPORTATION
Caltrans
03-DESIGN

FUNCTIONAL SUPERVISOR: ROBERT E. POLGAR
CALCULATED-DESIGNED BY: STEVE D. PENDLEY
CHECKED BY: MARTIN GARCIA
REVISED BY
DATE REVISED

LAST REVISION 00-00-00
DATE PLOTTED => 06-APR-2015
TIME PLOTTED => 08:58

Dist	COUNTY	ROUTE	POST MILES TOTAL PROJECT	SHEET No.	TOTAL SHEETS
01	Men	128	Var	29	50

Marlene Gibb 1-27-15
REGISTERED CIVIL ENGINEER DATE

2-2-15
PLANS APPROVAL DATE

REGISTERED PROFESSIONAL ENGINEER MARLENE E. GIBB No. C 51513 Exp. 06-30-16 CIVIL STATE OF CALIFORNIA

THE STATE OF CALIFORNIA OR ITS OFFICERS OR AGENTS SHALL NOT BE RESPONSIBLE FOR THE ACCURACY OR COMPLETENESS OF SCANNED COPIES OF THIS PLAN SHEET.

DRAINAGE QUANTITIES

DRAINAGE SYSTEM No.	DRAINAGE UNIT	DRAINAGE Sht No.	LOCATION (PM)	REMOVE FES EA	REMOVE Culv EA	REMOVE PIPE EA	REMOVE DD EA	REMOVE INLET EA	REMOVE HW EA	ABANDON Culv EA	(N) SAND BACKFILL CY	APC 12" LF	APC 18" LF	APC 24" LF	18" CSP DD (.109" THICK) LF	24" X 18" CSP ARCH (.109" THICK) LF	AFES 24" EA	STEEL ARCH FES 24" X 18" EA	RSP (LIGHT, METHOD B) CY	RSP FABRIC (CLASS 8) SQYD	RSP FACING (METHOD A) CY	18" ANCHOR ASSEMBLY EA	MINOR CONCRETE (MINOR STRUCTURE) CY	Misc IRON & STEEL LB	(N) H OF INLET LF	(N) Max COVER LF	DESCRIPTION	DRAINAGE SYSTEM No.	DRAINAGE UNIT	DRAINAGE Sht No.
1	a	D-1	10.58						1																		REMOVE HW	1	a	D-1
	b									1																	ABANDON Culv (18" x 30.0′ CMP)		b	
	c													37.6												1.82	24" APC		c	
	d																1										24" AFES		d	
2	a	D-2	10.73						1																		REMOVE HW	2	a	D-2
	b								1																		REMOVE HW		b	
	c				1																						REMOVE Culv (18" x 35.9′ CMP)		c	
	d													48.0												2.75	24" APC		d	
	e																						1.20				24" HW		e	
	f																		4.4	13.8							RSP (LIGHT, METHOD B)		f	
3	a	D-3	11.00						1																		REMOVE HW	3	a	D-3
	b									1	2.1																ABANDON Culv (18" x 32.4′ CMP)		b	
	c													37.6												2.09	24" APC		c	
	d																						1.24	239	2.43		TYPE GO DI WITH 24-12X GRATE		d	
4	a	D-4	11.13						1																		REMOVE HW	4	a	D-4
	b				1																						REMOVE Culv (18" x 14.7′ CMP)		b	
	c									1																	ABANDON Culv (18" x 29.3′ CMP)		c	
	d																									3.21	24" APC		d	
	e													49.3									1.20				24" HW		e	
5	a	D-5	11.17		1																						REMOVE Culv (12" x 42.4′ CMP)	5	a	D-5
	b								1																		REMOVE HW		b	
	c													48.9												4.30	24" APC		c	
	d																						1.24	239	2.80		TYPE GO DI WITH 24-12X GRATE		d	
6	a	D-6	11.54	1																							REMOVE FES	6	a	D-6
	b				1																						REMOVE Culv (18" x 55.3′ CMP)		b	
	c													54.9												3.83	24" APC		c	
	d																1										24" AFES		d	
Sht DQ-2 TOTALS				1	4				6	3	6.5			276.3			2		4.4	13.8			4.88	478	(N)	(N)				

(N) = NOT A SEPARATE PAY ITEM, FOR INFORMATION ONLY.

REVISED BY S. PATEL
DATE REVISED 09-24-09
STEVE D. PENDLEY
MARTIN GARCIA
CALCULATED-DESIGNED BY
CHECKED BY
FUNCTIONAL SUPERVISOR ROBERT E. POLGAR

STATE OF CALIFORNIA - DEPARTMENT OF TRANSPORTATION
Caltrans
03-DESIGN

DRAINAGE QUANTITIES

DQ-2

LAST REVISION 00-00-00
DATE PLOTTED => 06-APR-2015
TIME PLOTTED => 08:58

Dist	COUNTY	ROUTE	POST MILES TOTAL PROJECT	SHEET No.	TOTAL SHEETS
01	Men	128	Var	30	50

Marlene Gibb 1-27-15
REGISTERED CIVIL ENGINEER DATE

2-2-15
PLANS APPROVAL DATE

REGISTERED PROFESSIONAL ENGINEER MARLENE E. GIBB No. C 51513 Exp. 06-30-16 CIVIL STATE OF CALIFORNIA

THE STATE OF CALIFORNIA OR ITS OFFICERS OR AGENTS SHALL NOT BE RESPONSIBLE FOR THE ACCURACY OR COMPLETENESS OF SCANNED COPIES OF THIS PLAN SHEET.

DRAINAGE QUANTITIES

DRAINAGE SYSTEM No.	DRAINAGE UNIT	DRAINAGE Sht No.	LOCATION (PM)	REMOVE FES EA	REMOVE Culv EA	REMOVE PIPE EA	REMOVE DD EA	REMOVE INLET EA	REMOVE HW EA	ABANDON Culv EA	(N) SAND BACKFILL CY	APC 12" LF	APC 18" LF	APC 24" LF	18" CSP DD (.109" THICK) LF	24" X 18" CSP ARCH (.109" THICK) LF	AFES 24" EA	STEEL ARCH FES 24" X 18" EA	RSP (LIGHT, METHOD B) CY	RSP FABRIC (CLASS 8) SQYD	RSP FACING (METHOD A) CY	18" ANCHOR ASSEMBLY EA	MINOR CONCRETE (MINOR STRUCTURE) CY	Misc IRON & STEEL LB	(N) H OF INLET LF	(N) Max COVER LF	DESCRIPTION	DRAINAGE SYSTEM No.	DRAINAGE UNIT	DRAINAGE Sht No.
7	a	D-7	12.12					1																			REMOVE INLET	7	a	D-7
	b				1																						REMOVE Culv (18" x 46.1′ RCP)		b	
	c						1																				REMOVE DD (12" CMP)		c	
	d								1																		REMOVE HW		d	
	e																						1.24	239	2.76		TYPE GO DI WITH 24-12X GRATE		e	
	f													46.0												5.34	24" APC		f	
	g																						0.91				18" HW		g	
	h														21.7												18" DD		h	
	i																					1					18" ANCHOR ASSEMBLY		i	
8	a	D-8	14.91						1																		REMOVE HW	8	a	D-8
	b				1																						REMOVE Culv (18" x 45.1′ CMP)		b	
	c													50.4												2.32	24" APC		c	
	d																						1.20				24" HW		d	
	e																		4.4	13.8							RSP (LIGHT, METHOD B)		e	
9	a	D-9	15.19						1																		REMOVE HW	9	a	D-9
	b				1																						REMOVE Culv (18" x 58.4′ CMP)		b	
	c													55.5												3.51	24" APC		c	
	d																1										24" AFES		d	
10	a	D-10	15.52					1																			REMOVE INLET	10	a	D-10
	b				1																						REMOVE Culv (18" x 40.2′ CMP)		b	
	c													50.6												2.76	24" APC		c	
	d																						1.20				24" HW		d	
	e																		4.4	13.8							RSP (LIGHT, METHOD B)		e	
11	a	D-11	15.56						1																		REMOVE HW	11	a	D-11
	b				1																						REMOVE Culv (18" x 60.3′ CMP)		b	
	c													62.0												3.29	24" APC		c	
	d																						1.20				24" HW		d	
	e																			14.9	3.5						FACING (METHOD A)		e	
12	a	D-12	16.11		1																						REMOVE Culv (18" x 38.4′ CMP)	12	a	D-12
	b					1																					REMOVE PIPE (8" x 12.9′ CMP)		b	
	c							1																			REMOVE INLET		c	
	d													44.6												3.93	24" APC		d	
	e																						1.24	239	2.70		TYPE GO DI WITH 24-12X GRATE		e	
Sht DQ-3 TOTALS					6	1	1	3	4					309.1	21.7		1		8.8	42.5	3.5	1	6.99	478	(N)	(N)				

(N) = NOT A SEPARATE PAY ITEM, FOR INFORMATION ONLY.

DRAINAGE QUANTITIES

DQ-3

STATE OF CALIFORNIA - DEPARTMENT OF TRANSPORTATION
Caltrans®
03-DESIGN

FUNCTIONAL SUPERVISOR: ROBERT E. POLGAR
CALCULATED-DESIGNED BY: STEVE D. PENDLEY
CHECKED BY: MARTIN GARCIA
REVISED BY
DATE REVISED

LAST REVISION 00-00-00
DATE PLOTTED => 06-APR-2015
TIME PLOTTED => 08:58

Dist	COUNTY	ROUTE	POST MILES TOTAL PROJECT	SHEET No.	TOTAL SHEETS
01	Men	128	Var	31	50

Marlene Gibb 1-27-15
REGISTERED CIVIL ENGINEER DATE

2-2-15
PLANS APPROVAL DATE

REGISTERED PROFESSIONAL ENGINEER MARLENE E. GIBB No. C 51513 Exp. 06-30-16 CIVIL STATE OF CALIFORNIA

THE STATE OF CALIFORNIA OR ITS OFFICERS OR AGENTS SHALL NOT BE RESPONSIBLE FOR THE ACCURACY OR COMPLETENESS OF SCANNED COPIES OF THIS PLAN SHEET.

DRAINAGE QUANTITIES

DRAINAGE SYSTEM No.	DRAINAGE UNIT	DRAINAGE Sht No.	LOCATION (PM)	REMOVE FES EA	REMOVE Culv EA	REMOVE PIPE EA	REMOVE DD EA	REMOVE INLET EA	REMOVE HW EA	ABANDON Culv EA	(N) SAND BACKFILL CY	APC 12" LF	APC 18" LF	APC 24" LF	18" CSP DD (.109" THICK) LF	24" X 18" CSP ARCH (.109" THICK) LF	AFES 24" EA	STEEL ARCH FES 24" X 18" EA	RSP (LIGHT, METHOD B) CY	RSP FABRIC (CLASS 8) SQYD	RSP FACING (METHOD A) CY	18" ANCHOR ASSEMBLY EA	MINOR CONCRETE (MINOR STRUCTURE) CY	Misc IRON & STEEL LB	(N) H OF INLET LF	(N) Max COVER LF	DESCRIPTION	DRAINAGE SYSTEM No.	DRAINAGE UNIT	DRAINAGE Sht No.
13	a	D-13	16.50						1																		REMOVE HW	13	a	D-13
	b				1																						REMOVE Culv (18" x 49.0' CMP)		b	
	c													50.0												3.36	24" APC		c	
	d																						1.20				24" HW		d	
	e																		4.4	13.8							RSP (LIGHT, METHOD B)		e	
14	a	D-14	16.99		1																						REMOVE Culv (18" x 45.7'' CMP)	14	a	D-14
	b							1																			REMOVE INLET		b	
	c													49.2												2.78	24" APC		c	
	d																						1.44	239	3.82		TYPE GO DI WITH 24-12X GRATE		d	
15	a	D-15	17.02						1																		REMOVE HW	15	a	D-15
	b				1																						REMOVE Culv (18" x 53.6' CMP)		b	
	c															58.6										0.51	24" x 18" CSP ARCH (0.109" THICK)		c	
	d																						0.91				24" x 18" CMP ARCH CULVERT HW		d	
16	a	D-16	17.26						1																		REMOVE HW	16	a	D-16
	b				1																						REMOVE Culv (18" x 46.7' CMP)		b	
	c															52.4										2.36	24" x 18" CSP ARCH (0.109" THICK)		c	
	d																	1									24"X 18" FES		d	
17	a	D-17	17.45						1																		REMOVE HW	17	a	D-17
	b				1																						REMOVE Culv (18" x 17.8' CMP)		b	
	c									1	2.5																ABANDON Culv (18" x 32.8' CSP)		c	
	d													62.5												2.40	24" APC		d	
	e																1										24" AFES		e	
18	a	D-18	18.97						1																		REMOVE HW	18	a	D-18
	b							1																			REMOVE INLET		b	
	c									1	4.6																ABANDON Culv (18" x 70.2' CMP)		c	
	d									1	4.3																ABANDON Culv (18" x 65.5' CMP)		d	
	e												69.2													11.49	18" APC		e	
	f																						0.91				18" HW		f	
	g																						0.85	236	3.52		TYPE GCP DI WITH TYPE 36R GRATE		g	
	h												56.4													5.73	18" APC MONTE BLOYD Rd (Co Rd 130A)		h	
	i																		24.4	54.9							RSP (LIGHT, METHOD B)		i	
	j											6.0															12" APC		j	
Sht DQ-4 TOTALS					5			2	5	3	11.4	6.0	125.6	220.3		111.0	1	1	28.8	68.7			5.31	475	(N)	(N)				

(N) = NOT A SEPARATE PAY ITEM, FOR INFORMATION ONLY.

DRAINAGE QUANTITIES

DQ-4

STATE OF CALIFORNIA - DEPARTMENT OF TRANSPORTATION
Caltrans® 03-DESIGN

FUNCTIONAL SUPERVISOR: ROBERT E. POLGAR
CALCULATED-DESIGNED BY: STEVE D. PENDLEY
CHECKED BY: MARTIN GARCIA
REVISED BY / DATE REVISED

LAST REVISION 00-00-00
DATE PLOTTED => 06-APR-2015
TIME PLOTTED => 08:58

Dist	COUNTY	ROUTE	POST MILES TOTAL PROJECT	SHEET No.	TOTAL SHEETS
01	Men	128	Var	32	50

Marlene Gibb 1-27-15
REGISTERED CIVIL ENGINEER DATE

2-2-15
PLANS APPROVAL DATE

REGISTERED PROFESSIONAL ENGINEER MARLENE E. GIBB No. C 51513 Exp. 06-30-16 CIVIL STATE OF CALIFORNIA

THE STATE OF CALIFORNIA OR ITS OFFICERS OR AGENTS SHALL NOT BE RESPONSIBLE FOR THE ACCURACY OR COMPLETENESS OF SCANNED COPIES OF THIS PLAN SHEET.

DRAINAGE QUANTITIES

DRAINAGE SYSTEM No.	DRAINAGE UNIT	DRAINAGE Sht No.	LOCATION (PM)	REMOVE FES EA	REMOVE Culv EA	REMOVE PIPE EA	REMOVE DD EA	REMOVE INLET EA	REMOVE HW EA	ABANDON Culv EA	(N) SAND BACKFILL CY	APC 12" LF	APC 18" LF	APC 24" LF	18" CSP DD (.109" THICK) LF	24" X 18" CSP ARCH (.109" THICK) LF	AFES 24" EA	STEEL ARCH FES 24" X 18" EA	RSP (LIGHT, METHOD B) CY	RSP FABRIC (CLASS 8) SQYD	RSP FACING (METHOD A) CY	18" ANCHOR ASSEMBLY EA	MINOR CONCRETE (MINOR STRUCTURE) CY	Misc IRON & STEEL LB	(N) H OF INLET LF	(N) Max COVER LF	DESCRIPTION	DRAINAGE SYSTEM No.	DRAINAGE UNIT	DRAINAGE Sht No.
19	a	D-19	19.94	1																							REMOVE FES	19	a	D-19
	b							1																			REMOVE INLET		b	
	c				1																						REMOVE Culv (18" x 30.4' CMP)		c	
	d				1																						REMOVE Culv (15" x 8.0' PP)		d	
	e													39.7												1.86	24" APC		e	
	f																1										24" AFES		f	
	g																						0.95	239	2.50		TYPE G1 DI WITH 24-12X GRATE		g	
20	a	D-20	22.34					1																			REMOVE INLET	20	a	D-20
	b				1																						REMOVE Culv (18" x 64.7' CMP)		b	
	c												69.8													4.48	18" APC		c	
	d																						2.18	540	2.15		TYPE GOT DI WITH 24-12X GRATES		d	
21	a	D-21	23.30		1																						REMOVE Culv (18" x 77.6' CMP)	21	a	D-21
	b												79.0													11.13	18" APC		b	
Sht DQ-2 TOTALS				1	4				6	3	6.5			276.3			2		4.4	13.8			4.88	478	(N)	(N)				
Sht DQ-3 TOTALS					6	1	1	3	4					309.1	21.7		1		8.8	42.5	3.5	1	6.99	478	(N)	(N)				
Sht DQ-4 TOTALS					5			2	5	3	11.4	6.0	125.6	220.3		111.0	1	1	28.8	68.7			5.31	475	(N)	(N)				
Sht DQ-5 TOTALS				1	4			2					148.8	39.7			1						3.13	779	(N)	(N)				
GRAND TOTALS				2	19	1	1	7	15	6	17.9	6.0	274.4	845.4	21.7	111.0	5	1	42.0	125.0	3.5	1	20.31	2210	(N)	(N)				

(N) = NOT A SEPARATE PAY ITEM, FOR INFORMATION ONLY.

STEVE D. PENDLEY — REVISED BY
MARTIN GARCIA — DATE REVISED
CALCULATED-DESIGNED BY
CHECKED BY
FUNCTIONAL SUPERVISOR
ROBERT E. POLGAR

STATE OF CALIFORNIA - DEPARTMENT OF TRANSPORTATION
Caltrans
03-DESIGN

DRAINAGE QUANTITIES

DQ-5

LAST REVISION 00-00-00
DATE PLOTTED => 06-APR-2015
TIME PLOTTED => 08:58

Dist	COUNTY	ROUTE	POST MILES TOTAL PROJECT	SHEET No.	TOTAL SHEETS
01	Men	128	Var	33	50

Marlene Gibb 1-27-15
REGISTERED CIVIL ENGINEER DATE

2-2-15
PLANS APPROVAL DATE

REGISTERED PROFESSIONAL ENGINEER
MARLENE E. GIBB
No. C 51513
Exp. 06-30-16
CIVIL
STATE OF CALIFORNIA

THE STATE OF CALIFORNIA OR ITS OFFICERS OR AGENTS SHALL NOT BE RESPONSIBLE FOR THE ACCURACY OR COMPLETENESS OF SCANNED COPIES OF THIS PLAN SHEET.

NOTES:

1. THIS PLAN ACCURATE FOR CONSTRUCTION AREA SIGN WORK ONLY.
2. C23B(CA) SHAL HAVE BLACK LETTERS ON ORANGE BACKGROUND.
3. EXACT SIGN LOCATIONS TO BE DETERMINED BY THE ENGINEER.

LEGEND:

CONSTRUCTION AREA SIGN SINGLE POST

CONSTRUCTION AREA SIGN TWO POST

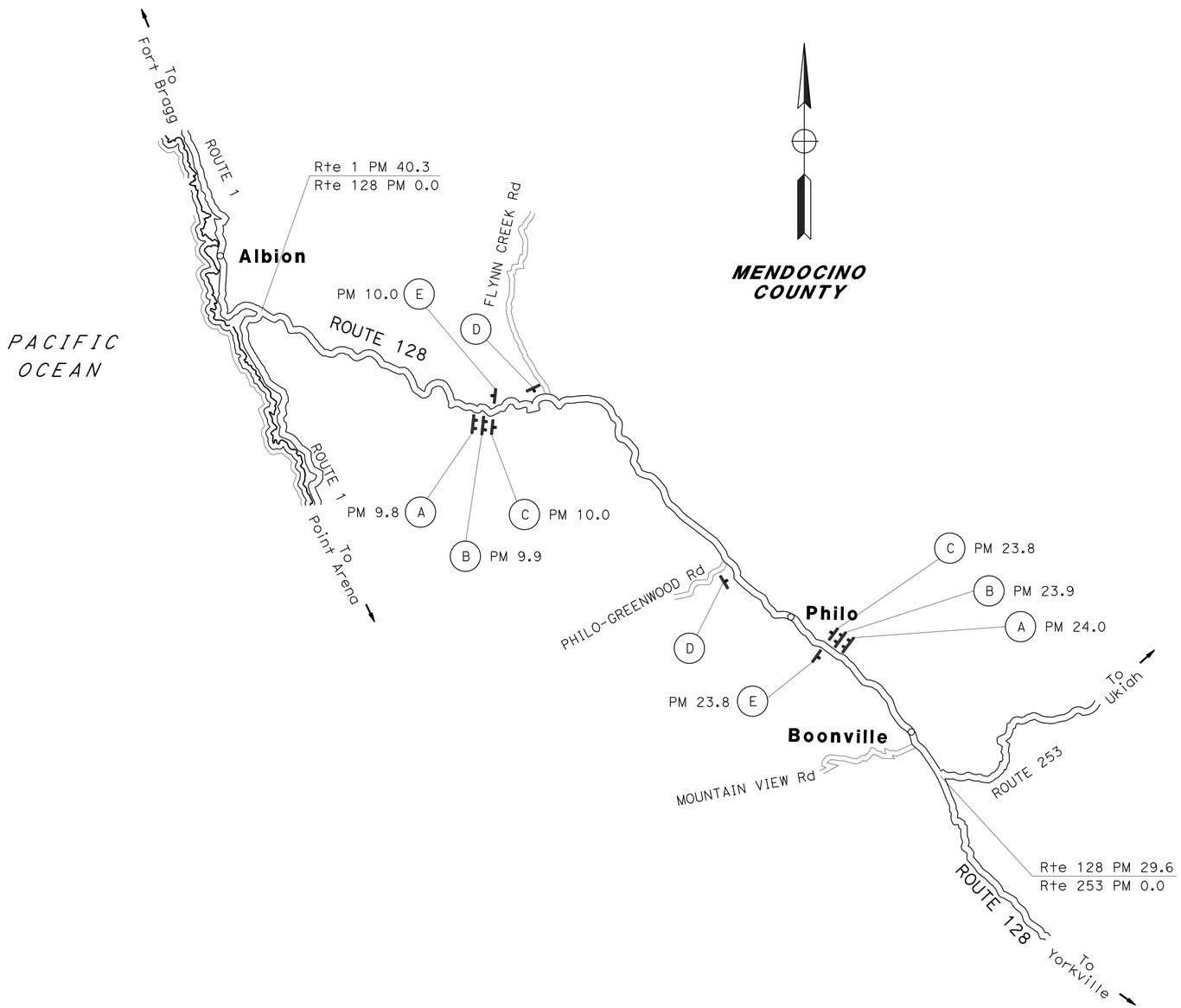

STATIONARY MOUNTED CONSTRUCTION AREA SIGNS

SIGN LETTER	SIGN CODE	SIGN MESSAGE	PANEL SIZE	No. OF POSTS AND SIZE	No. OF SIGNS
A	C40(CA)	TRAFFIC FINES DOUBLED IN CONSTRUCTION ZONES	108" x 42"	2 - 6" x 6"	2
B	G20-1	ROAD WORK NEXT 13 MILES	60" x 36"	2 - 4" x 6"	2
	C23B(CA)	DRAINAGE REHABILITATION	60" x 18"		
C	W11-1		36" x 36"	1 - 4" x 6"	2
	W16-1	SHARE THE ROAD	18" x 24"		
D	W20-1	ROAD WORK AHEAD	36" x 36"	1 - 4" x 6"	2
E	G20-2	END ROAD WORK	36" x 18"	1 - 4" x 4"	2

CONSTRUCTION AREA SIGNS

NO SCALE

CS-1

REVISED BY	DATE REVISED
S. PATEL	09-24-09

CALCULATED-DESIGNED BY: MARTIN GARCIA
CHECKED BY: MARLENE E. GIBB
FUNCTIONAL SUPERVISOR: ROBERT E. POLGAR

STATE OF CALIFORNIA - DEPARTMENT OF TRANSPORTATION
Caltrans
03-DESIGN

LAST REVISION 00-00-00
DATE PLOTTED => 06-APR-2015
TIME PLOTTED => 08:58

Dist	COUNTY	ROUTE	POST MILES TOTAL PROJECT	SHEET No.	TOTAL SHEETS
01	Men	128	Var	34	50

Sheri M. Rodriguez 1-27-15
REGISTERED CIVIL ENGINEER DATE

2-2-15
PLANS APPROVAL DATE

REGISTERED PROFESSIONAL ENGINEER SHERI M. RODRIGUEZ No. C66861 Exp. 9-30-16 CIVIL STATE OF CALIFORNIA

THE STATE OF CALIFORNIA OR ITS OFFICERS OR AGENTS SHALL NOT BE RESPONSIBLE FOR THE ACCURACY OR COMPLETENESS OF SCANNED COPIES OF THIS PLAN SHEET.

NOTES:

1. CALIFORNIA CODES ARE DESIGNATED BY (CA). OTHERWISE, FEDERAL (MUTCD) CODES ARE SHOWN.
2. ALL SIGNS SHALL HAVE A BLACK LEGEND ON FLUORESCENT ORANGE BACKGROUND AND SHALL BE EQUIPPED WITH AT LEAST TWO 16" x 16" ORANGE FLAGS FOR DAYTIME CLOSURE OR FLASHING BEACONS FOR LANE CLOSURE DURING HOURS OF DARKNESS.
3. ALL CONES USED FOR LANE CLOSURES DURING THE HOURS OF DARKNESS SHALL BE FITTED WITH RETROREFLECTIVE BANDS OR SLEEVES.
4. WHEN A PILOT CAR IS USED, PLACE A C37 (CA) SIGN AT ALL INTERSECTIONS WITHIN TRAFFIC CONTROL AREA. WHERE VEHICULAR TRAFFIC CAN NOT EFFECTIVELY SELF-REGULATE, AT LEAST ONE FLAGGER SHALL BE USED AT EACH INTERSECTION WITHIN THE TRAFFIC CONTROL AREA.
5. FLAGGER SHOULD STAND IN A CONSPICUOUS PLACE, FACING TRAFFIC AT ALL TIMES, BE VISIBLE TO APPROACHING TRAFFIC AS WELL AS APPROACHING VEHICLES AFTER THE FIRST VEHICLE HAS STOPPED.
6. ADDITIONAL ADVANCE FLAGGERS ARE REQUIRED.
7. WHEN FLAGGER IS NOT VISIBLE FROM THIS LOCATION PLACE A C29 (CA) SIGN BELOW THE C9A (CA) SIGN.

LEGEND

- TRAFFIC CONE
- TEMPORARY SIGN
- DIRECTION OF TRAVEL
- PORTABLE FLASHING BEACON
- FLAGGER

SIGN PANEL SIZE (MINIMUM)

A	48" x 48" - SPEED OF 45 mph OR MORE 36" x 36" - SPEED LESS THAN 45 mph
B	30" x 30"
C	UNUSED
D	UNUSED
E	20" x 7"

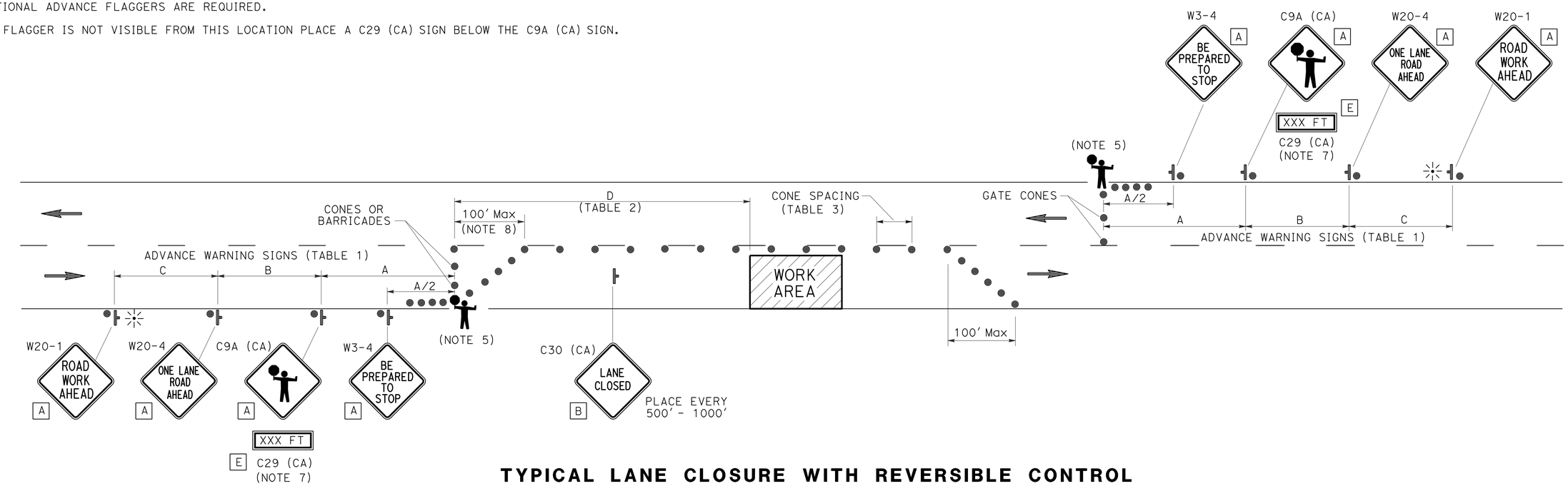

TYPICAL LANE CLOSURE WITH REVERSIBLE CONTROL

TABLE 1
ADVANCE WARNING SIGN SPACING

ROAD TYPE	Min A	Min B	Min C
	ft		
URBAN (25 mph OR LESS)	100	100	100
URBAN (30 mph TO 40 mph)	250	250	250
URBAN (MORE THAN 40 mph)	350	350	350
RURAL	500	500	500
EXPRESSWAY / FREEWAY	1000	1500	2640

TABLE 2
BUFFER SPACE

APPROACH SPEED	Min D	DOWNGRADE Min D		
		-3%*	-6%*	-9%*
mph	ft			
25 & BELOW	155	158	165	173
30	200	205	215	227
35	250	257	271	287
40	305	315	333	354
45	360	378	400	427
50	425	446	474	507
55	495	520	553	593
60	570	598	638	686
65	645	682	728	785

* USE ON SUSTAINED DOWNGRADE STEEPER THAN -3 PERCENT AND LONGER THAN 1 MILE.

TABLE 3
Max CONE SPACING

POSTED SPEED	TAPER	TANGENT	CONFLICT
mph	ft		
20	20	40	10
25	25	50	12
30	30	60	15
35	35	70	17
40	40	80	20
45	45	90	22
50	50	100	25
55	55	110	27
60	60	120	30
65	65	130	32

TRAFFIC HANDLING DETAILS

NO SCALE

THD-1

APPROVED FOR TRAFFIC HANDLING WORK ONLY

SHERI M. RODRIGUEZ — REVISED BY
TROY A. ARSENEAU — DATE REVISED
CALCULATED-DESIGNED BY
CHECKED BY
FUNCTIONAL SUPERVISOR: TROY A. ARSENEAU

STATE OF CALIFORNIA - DEPARTMENT OF TRANSPORTATION
Caltrans® TRAFFIC OPERATIONS

P:\proj4\01\37814_plans\pse\0100000134me001.dgn

LAST REVISION 00-00-00 | DATE PLOTTED => 06-APR-2015 | TIME PLOTTED => 08:58

Dist	COUNTY	ROUTE	POST MILES TOTAL PROJECT	SHEET No.	TOTAL SHEETS
01	Men	128	Var	35	50

Marlene Gibb 1-27-15
REGISTERED CIVIL ENGINEER DATE

2-2-15
PLANS APPROVAL DATE

REGISTERED PROFESSIONAL ENGINEER
MARLENE E. GIBB
No. C 51513
Exp. 06-30-16
CIVIL
STATE OF CALIFORNIA

THE STATE OF CALIFORNIA OR ITS OFFICERS OR AGENTS SHALL NOT BE RESPONSIBLE FOR THE ACCURACY OR COMPLETENESS OF SCANNED COPIES OF THIS PLAN SHEET.

PAINT TRAFFIC STRIPE (2-COAT)

DRAINAGE SYSTEM No.	LOCATION (PM)	DETAIL No. 19	DETAIL No. 22	DETAIL No. 27B
		LF		
1	10.58		6	6
2	10.73		12	12
3	11.00		6	6
4	11.13		12	12
5	11.17		12	12
6	11.54		12	12
7	12.12		12	12
8	14.91		6	6
9	15.19		12	12
10	15.52		14	14
11	15.56		14	14
12	16.11		12	12
13	16.50		12	12
14	16.99	12		12
15	17.02	6		6
16	17.26		6	6
17	17.45		6	6
18	18.97	24		24
19	19.94		6	6
20	22.34		11	11
21	23.30		24	24
SUBTOTAL		42	195	237
TOTAL		474		

PAVEMENT MARKER (RETROREFLECTIVE)

DRAINAGE SYSTEM No.	LOCATION (PM)	DETAIL No. 22 TYPE D	DETAIL No. 22 TYPE H
		EA	EA
1	10.58	2	
2	10.73	2	
3	11.00	2	
4	11.13	2	
5	11.17	2	
6	11.54	2	
7	12.12	2	
8	14.91	2	
9	15.19	2	
10	15.52	2	
11	15.56	2	
12	16.11	2	
13	16.50	2	
14	16.99	1	1
15	17.02	1	1
16	17.26	2	
17	17.45	2	
18	18.97	1	1
19	19.94	2	
20	22.34	2	
21	23.30	2	
SUBTOTAL		39	3
TOTAL		42	

PAVEMENT DELINEATION QUANTITIES

PDQ-1

STATE OF CALIFORNIA - DEPARTMENT OF TRANSPORTATION
Caltrans
03-DESIGN

FUNCTIONAL SUPERVISOR: ROBERT E. POLGAR
CALCULATED-DESIGNED BY: STEVE D. PENDLEY
CHECKED BY: MARTIN GARCIA
REVISED BY
DATE REVISED

LAST REVISION 00-00-00
DATE PLOTTED => 06-APR-2015
TIME PLOTTED => 08:58

Dist	COUNTY	ROUTE	POST MILES TOTAL PROJECT	SHEET No.	TOTAL SHEETS
01	Men	128	Var	36	50

Marlene Gibb 1-27-15
REGISTERED CIVIL ENGINEER DATE

2-2-15
PLANS APPROVAL DATE

REGISTERED PROFESSIONAL ENGINEER MARLENE E. GIBB No. C 51513 Exp. 06-30-16 CIVIL STATE OF CALIFORNIA

THE STATE OF CALIFORNIA OR ITS OFFICERS OR AGENTS SHALL NOT BE RESPONSIBLE FOR THE ACCURACY OR COMPLETENESS OF SCANNED COPIES OF THIS PLAN SHEET.

ROADWAY QUANTITIES

DRAINAGE SYSTEM No.	LOCATION (PM)	(N) ROADWAY EXCAVATION *	IMPORTED ROCKY MATERIAL	IMPORTED BORROW	Conc BACKFILL (PIPE TRENCH)	(N) MINOR HMA *	MINOR HMA: HMA APRON	MINOR HMA: DIKE	PLACE HMA (Misc AREA)	PLACE HMA DIKE (TYPE A)
		CY				TON	TON		SQYD	LF
1	10.58	8.22	6.55	-	6.46	4.79	-	-	-	-
2	10.73	0.38	9.43	0.77	-	5.46	-	-	-	-
3	11.00	0.93	-	6.46	7.65	2.69	5.11	0.50	15.14	20.0
4	11.13	0.49	5.53	-	-	7.06	-	-	-	-
5	11.17	2.20	8.01	-	2.02	6.09	6.39	0.50	19.20	20.0
6	11.54	0.30	-	0.69	-	5.59	-	-	-	-
7	12.12	24.80	-	-	2.29	5.75	4.15	0.50	12.29	20.0
8	14.91	2.95	-	1.42	8.17	2.85	-	-	-	-
9	15.19	-	-	0.20	-	5.72	-	-	-	-
10	15.52	6.76	-	9.67	-	5.93	-	-	-	-
11	15.56	6.83	-	-	-	6.30	-	-	-	-
12	16.11	-	-	8.19	3.86	4.30	2.88	0.50	8.54	20.0
13	16.50	2.82	-	-	4.47	4.05	-	-	-	-
14	16.99	2.61	-	1.83	3.99	4.29	3.20	0.50	9.47	20.0
15	17.02	1.26	-	5.53	7.60	3.01	-	-	-	-
16	17.26	7.03	-	-	7.36	2.95	-	-	-	-
17	17.45	5.41	-	-	9.03	3.52	-	-	-	-
18	18.97	1.69	-	3.57	-	9.18	-	-	-	-
19	19.94	7.52	-	-	5.80	2.43	-	-	-	-
20	22.34	8.00	-	-	4.81	6.17	6.12	0.50	18.78	20.0
21	23.30	0.51	-	-	-	4.72	-	-	-	-
TOTAL		90.71	29.52	38.33	73.51	102.85	27.85	3.00	83.42	120.0
							30.85			

(N) = NOT A SEPARATE PAY ITEM, FOR INFORMATION ONLY.
* ROADWAY EXCAVATION, MINOR HMA AND TACK COAT ARE ACCOUNTED FOR UNDER ALTERNATIVE PIPE CULVERT.

REMOVE MARKER

DRAINAGE SYSTEM No.	LOCATION (PM)	TYPE: CULVERT	TYPE: SIGN POST
		EA	EA
1	10.58	2	
2	10.73	2	
3	11.00	2	1
4	11.13	2	
5	11.17	2	
6	11.54	2	
7	12.12	2	
8	14.91	2	
9	15.19	2	
10	15.52	2	
11	15.56	2	
12	16.11	2	
13	16.50	2	1
14	16.99	2	
15	17.02	2	
16	17.26	2	
17	17.45	2	
18	18.97	2	
19	19.94	2	
20	22.34	2	
21	23.30	2	
SUB TOTAL		42	2
TOTAL		44	

MARKER (CULVERT)

DRAINAGE SYSTEM No.	LOCATION (PM)	QUANTITY
		EA
1	10.58	2
2	10.73	2
3	11.00	2
4	11.13	2
5	11.17	2
6	11.54	2
7	12.12	2
8	14.91	2
9	15.19	2
10	15.52	2
11	15.56	2
12	16.11	2
13	16.50	2
14	16.99	2
15	17.02	2
16	17.26	2
17	17.45	2
18	18.97	2
19	19.94	2
20	22.34	2
21	23.30	2
TOTAL		42

Temp FENCE (TYPE ESA)

DRAINAGE SYSTEM No.	LOCATION (PM)	Temp Fence (TYPE ESA)
		LF
1	10.58	139.9
2	10.73	50.3
3	11.00	49.1
4	11.13	76.1
5	11.17	64.8
6	11.54	68.7
7	12.12	25.1
8	14.91	25.1
9	15.19	25.1
13	16.50	25.1
17	17.45	50.3
18	18.97	25.1
20	22.34	50.8
21	23.30	87.4
TOTAL		762.9

REMOVE FENCE

DRAINAGE SYSTEM No.	LOCATION (PM)	R+/L+	LENGTH
			LF
19	19.94	R+	34.64
TOTAL			34.64

FENCE (TYPE WM, METAL POST)

DRAINAGE SYSTEM No.	LOCATION (PM)	R+/L+	LENGTH
			LF
19	19.94	R+	60.40
TOTAL			60.40

RESET ROADSIDE SIGN (ONE POST)

DRAINAGE SYSTEM No.	LOCATION (PM)	QUANTITY
		EA
3	11.00	1
21	23.30	1
TOTAL		2

MILEPOST MARKER

DRAINAGE SYSTEM No.	LOCATION (PM)	QUANTITY
		EA
3	11.00	1
13	16.50	1
TOTAL		2

RECONSTRUCT FENCE (TYPE WM)

DRAINAGE SYSTEM No.	LOCATION (PM)	R+/L+	LENGTH
			LF
11	15.56	R+	26.41
16	17.26	R+	19.90
20	22.34	R+	26.26
21	23.30	L+	26.42
TOTAL			98.99

SUMMARY OF QUANTITIES

Q-1

STATE OF CALIFORNIA - DEPARTMENT OF TRANSPORTATION
03-DESIGN
Caltrans
FUNCTIONAL SUPERVISOR: ROBERT E. POLGAR
CALCULATED-DESIGNED BY: STEVE D. PENDLEY
CHECKED BY: MARTIN GARCIA
REVISED BY
DATE REVISED

LAST REVISION 00-00-00 | DATE PLOTTED => 06-APR-2015 | TIME PLOTTED => 08:58

Dist	COUNTY	ROUTE	POST MILES TOTAL PROJECT	SHEET No.	TOTAL SHEETS
01	Men	128	Var	37	50

Laura Lazzarotto
LICENSED LANDSCAPE ARCHITECT
2-2-15
PLANS APPROVAL DATE

LICENSED LANDSCAPE ARCHITECT
Laura Lazzarotto
C. Prof. Eng.
8-31-05
Renewal Date
1-27-15
Date
STATE OF CALIFORNIA

THE STATE OF CALIFORNIA OR ITS OFFICERS OR AGENTS SHALL NOT BE RESPONSIBLE FOR THE ACCURACY OR COMPLETENESS OF SCANNED COPIES OF THIS PLAN SHEET.

SEED MIX 1

SEED	BOTANICAL NAME (COMMON NAME)	PERCENT GERMINATION (MINIMUM)	POUNDS PURE LIVE SEED PER ACRE (SLOPE MEASUREMENT)
MIX 1	BROMUS CARINATUS [1] (CALIFORNIA BROME)	50	40
	ELYMUS GLAUCUS 'BERKELEY' [1] (WILD RYE, BERKELEY)	55	40
	ELYMUS X TRITICUM (REGREEN)	75	90

[1]SEED PRODUCED IN CALIFORNIA ONLY.

LEGEND

FIBER ROLL

EC TYPE 1

EC TYPE 2

FIBER ROLLS

SEQUENCE	ITEM	MATERIAL		REMARKS
		DESCRIPTION	TYPE	
FIBER ROLLS MUST BE INSTALLED BEFORE EROSION CONTROL.	FIBER ROLLS	FIBER ROLL	TYPE B 8" TO 10" DIA	TYPE 1 FIBER ROLL INSTALLATION

EROSION CONTROL TYPE 1

SEQUENCE	ITEM	MATERIAL		APPLICATION RATE
		DESCRIPTION	TYPE	
STEP 1	HYDROSEED	SEED	MIX 1	170 LB/ACRE
		FIBER	WOOD	1500 LB/ACRE
		TACKIFIER	PSYLLIUM	150 LB/ACRE

EROSION CONTROL TYPE 2

ITEM	REMARKS
DUFF	DUFF TO BE REMOVED AND REPLACED AT SAME LOCATION ONLY

EROSION CONTROL QUANTITIES

DRAINAGE SYSTEM NO.	AREA (N)	AREA (N)	AREA (N)	DESCRIPTION	DUFF	HYDROSEED	FIBER ROLLS	PURE LIVE SEED (N)	MOVE IN MOVE OUT EROSION CONTROL
	SQFT	SQFT LT	SQFT RT		ACRE	SQFT	LF	LBS	EA
1	210	125	85	EC TYPE 2	0.005	-	12	-	
2	285	125	160	EC TYPE 2	0.007	-	-	-	
3	100	-	100	EC TYPE 2	0.002	-	-	-	
4	266	116	150	EC TYPE 2	0.006	-	-	-	
5	185	35	150	EC TYPE 2	0.004	-	10	-	
6	335	180	155	EC TYPE 2	0.008	-	22	-	
7	270	152	118	EC TYPE 2	0.006	-	16	-	
8	350	165	185	EC TYPE 1	-	350	29	1.4	
9	295	125	170	EC TYPE 1	-	295	25	1.2	
10	195	115	80	EC TYPE 1	-	195	8	0.8	
11	350	145	205	EC TYPE 1	-	350	20	1.4	2
12	95	-	95	EC TYPE 1	-	95	10	0.4	
13	305	160	145	EC TYPE 1	-	305	42	1.2	
14	205	60	145	EC TYPE 1	-	205	-	0.8	
15	181	45	136	EC TYPE 1	-	181	-	0.7	
16	210	80	130	EC TYPE 1	-	210	-	0.8	
17	203	79	124	EC TYPE 1	-	203	-	0.8	
18	655	210	445	EC TYPE 1	-	655	75	2.6	
19	135	80	55	EC TYPE 1	-	135	10	0.5	
20	435	100	335	EC TYPE 1	-	435	58	1.7	
21	400	180	220	EC TYPE 1	-	400	60	1.6	
				TOTAL	0.038	5665	415	15.9	2

(N) NOT A SEPARATE PAY ITEM, FOR INFORMATION ONLY

EROSION CONTROL LEGEND AND QUANTITIES
ECL-1

REVISED BY | DATE REVISED
LAURA LAZZAROTTO | RON FLORY
CALCULATED-DESIGNED BY | CHECKED BY
SENIOR LANDSCAPE ARCHITECT | RON FLORY
STATE OF CALIFORNIA - DEPARTMENT OF TRANSPORTATION
Caltrans
LANDSCAPE

LAST REVISION 00-00-00 | DATE PLOTTED => TIME PLOTTED =>

Dist	COUNTY	ROUTE	POST MILES TOTAL PROJECT	SHEET No.	TOTAL SHEETS
01	Men	128	Var	38	50

Laura Lazzarotto
LICENSED LANDSCAPE ARCHITECT

2-2-15
PLANS APPROVAL DATE

LICENSED LANDSCAPE ARCHITECT
Laura Lazzarotto
C. 2369
8-31-05
Renewal Date
1-27-15
Date
STATE OF CALIFORNIA

THE STATE OF CALIFORNIA OR ITS OFFICERS OR AGENTS SHALL NOT BE RESPONSIBLE FOR THE ACCURACY OR COMPLETENESS OF SCANNED COPIES OF THIS PLAN SHEET.

NOTES:

1. FOR ACCURATE RIGHT OF WAY DATA, CONTACT RIGHT OF WAY ENGINEERING AT DISTRICT OFFICE.
2. THIS PLAN ACCURATE FOR EROSION CONTROL ONLY.

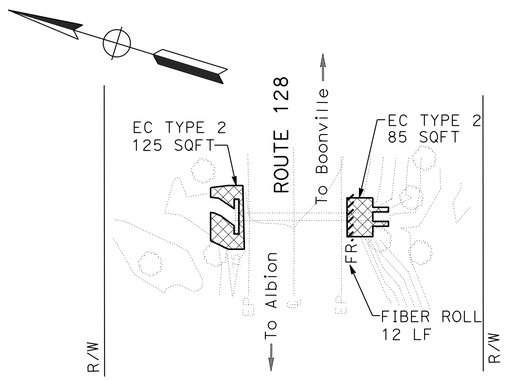

DRAINAGE SYSTEM No. 1
ROUTE 128
PM 10.58

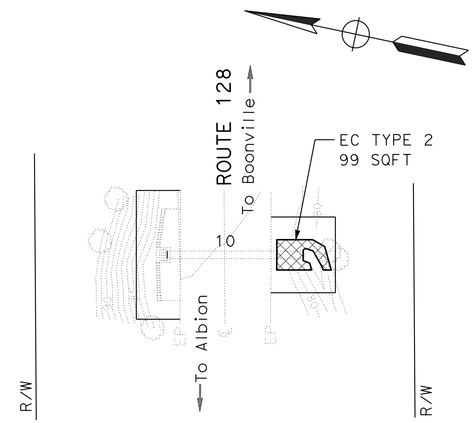

DRAINAGE SYSTEM No. 3
ROUTE 128
PM 11.00

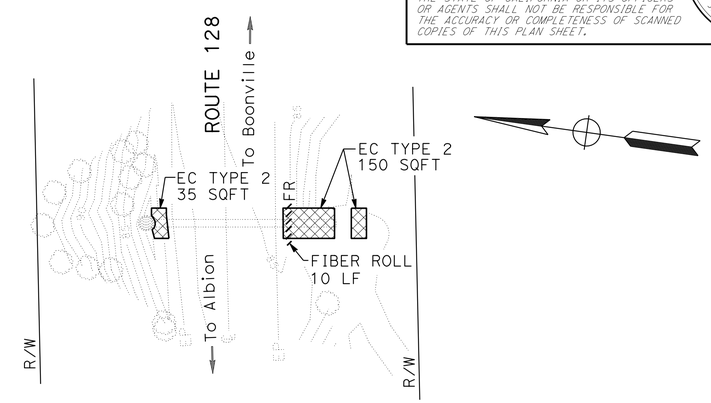

DRAINAGE SYSTEM No. 5
ROUTE 128
PM 11.17

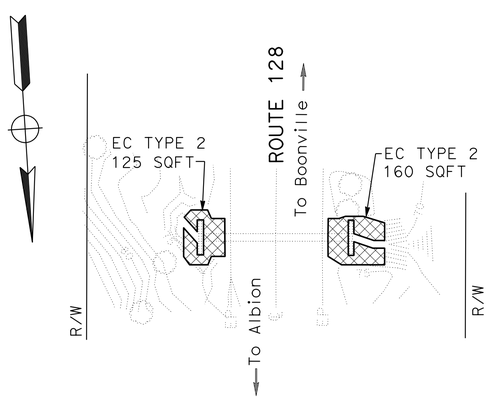

DRAINAGE SYSTEM No. 2
ROUTE 128
PM 10.73

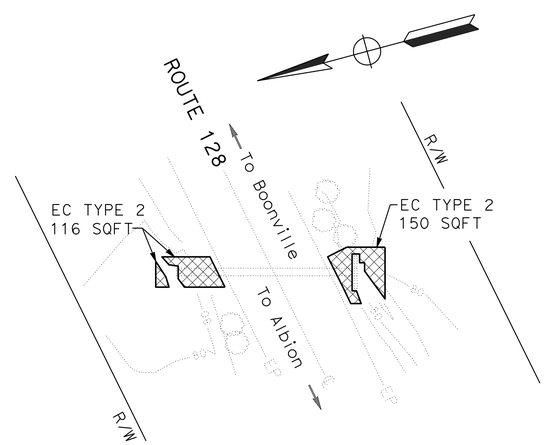

DRAINAGE SYSTEM No. 4
ROUTE 128
PM 11.13

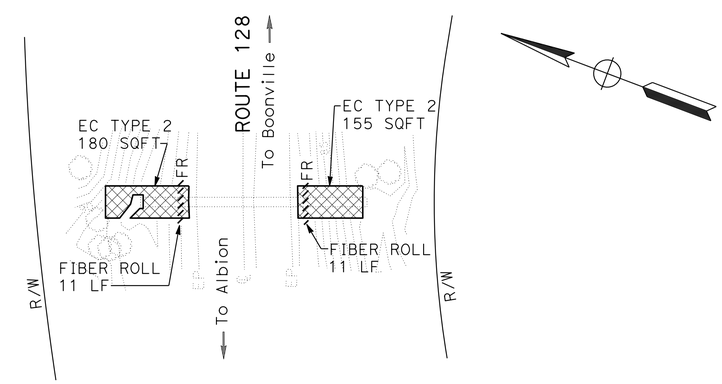

DRAINAGE SYSTEM No. 6
ROUTE 128
PM 11.54

EROSION CONTROL PLAN

SCALE: 1" = 20'

EC-1

REVISED BY	DATE REVISED
LAURA LAZZAROTTO	
RON FLORY	

CALCULATED-DESIGNED BY
CHECKED BY

SENIOR LANDSCAPE ARCHITECT
RON FLORY

STATE OF CALIFORNIA - DEPARTMENT OF TRANSPORTATION
Caltrans®
LANDSCAPE

LAST REVISION 00-00-00
DATE PLOTTED => 06-APR-2015
TIME PLOTTED => 08:58

Dist	COUNTY	ROUTE	POST MILES TOTAL PROJECT	SHEET No.	TOTAL SHEETS
01	Men	128	Var	39	50

Laura Lazzarotto
LICENSED LANDSCAPE ARCHITECT

2-2-15
PLANS APPROVAL DATE

LICENSED LANDSCAPE ARCHITECT
Laura Lazzarotto
Signature
8-31-05
Renewal Date
1-27-15
Date
STATE OF CALIFORNIA

THE STATE OF CALIFORNIA OR ITS OFFICERS OR AGENTS SHALL NOT BE RESPONSIBLE FOR THE ACCURACY OR COMPLETENESS OF SCANNED COPIES OF THIS PLAN SHEET.

NOTES:

1. FOR ACCURATE RIGHT OF WAY DATA, CONTACT RIGHT OF WAY ENGINEERING AT DISTRICT OFFICE.
2. THIS PLAN ACCURATE FOR EROSION CONTROL ONLY.

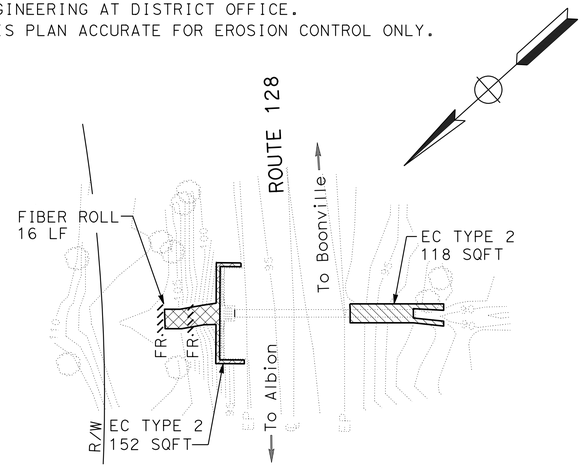

DRAINAGE SYSTEM No. 7
ROUTE 128
PM 12.12

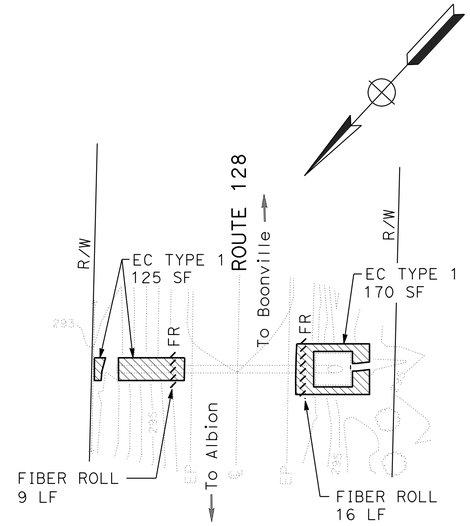

DRAINAGE SYSTEM No. 9
ROUTE 128
PM 15.19

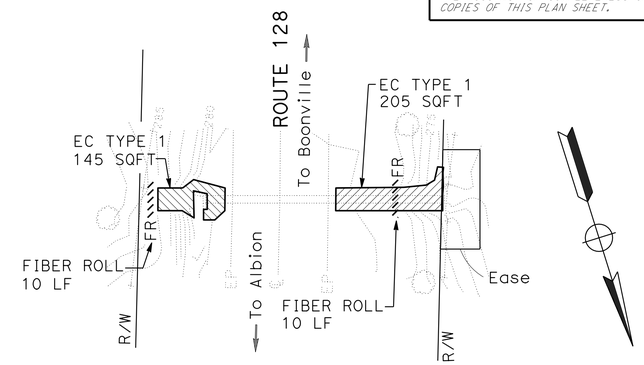

DRAINAGE SYSTEM No. 11
ROUTE 128
PM 15.56

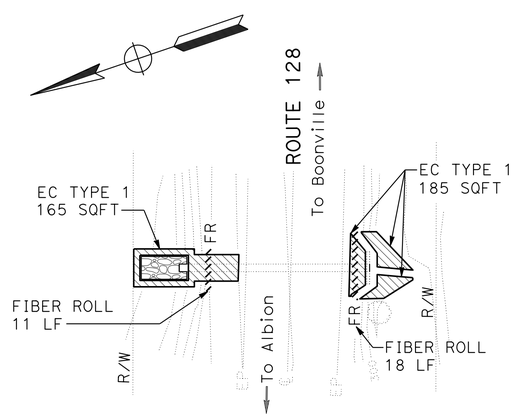

DRAINAGE SYSTEM No. 8
ROUTE 128
PM 14.91

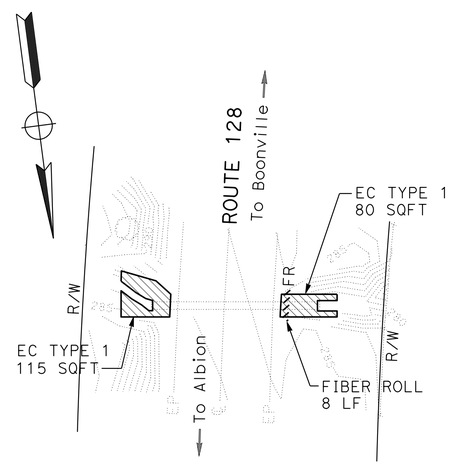

DRAINAGE SYSTEM No. 10
ROUTE 128
PM 15.52

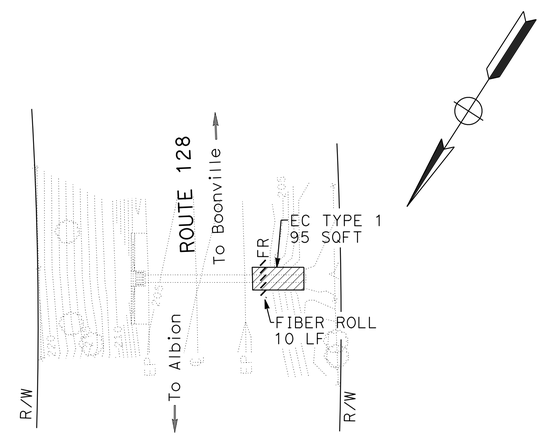

DRAINAGE SYSTEM No. 12
ROUTE 128
PM 16.11

EROSION CONTROL PLAN
SCALE: 1" = 20'

EC-2

STATE OF CALIFORNIA - DEPARTMENT OF TRANSPORTATION
Caltrans®
LANDSCAPE

SENIOR LANDSCAPE ARCHITECT: RON FLORY
CALCULATED-DESIGNED BY: LAURA LAZZAROTTO
CHECKED BY: RON FLORY
REVISED BY
DATE REVISED

LAST REVISION 00-00-00
DATE PLOTTED => 06-APR-2015
TIME PLOTTED => 08:58

Dist	COUNTY	ROUTE	POST MILES TOTAL PROJECT	SHEET No.	TOTAL SHEETS
01	Men	128	Var	40	50

Laura Lazzarotto
LICENSED LANDSCAPE ARCHITECT

2-2-15
PLANS APPROVAL DATE

LICENSED LANDSCAPE ARCHITECT
Laura Lazzarotto
Signature
8-31-05
Renewal Date
1-27-15
Date
STATE OF CALIFORNIA

THE STATE OF CALIFORNIA OR ITS OFFICERS OR AGENTS SHALL NOT BE RESPONSIBLE FOR THE ACCURACY OR COMPLETENESS OF SCANNED COPIES OF THIS PLAN SHEET.

NOTES:

1. FOR ACCURATE RIGHT OF WAY DATA, CONTACT RIGHT OF WAY ENGINEERING AT DISTRICT OFFICE.
2. THIS PLAN ACCURATE FOR EROSION CONTROL ONLY.

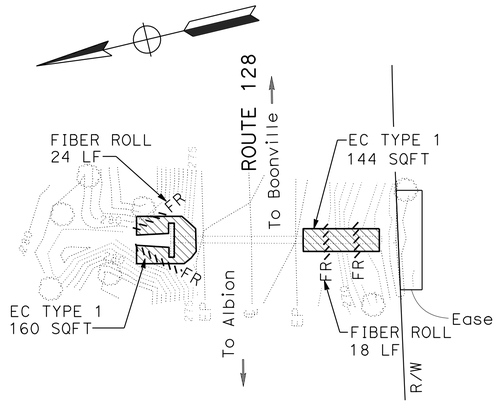

DRAINAGE SYSTEM No. 13
ROUTE 128
PM 16.50

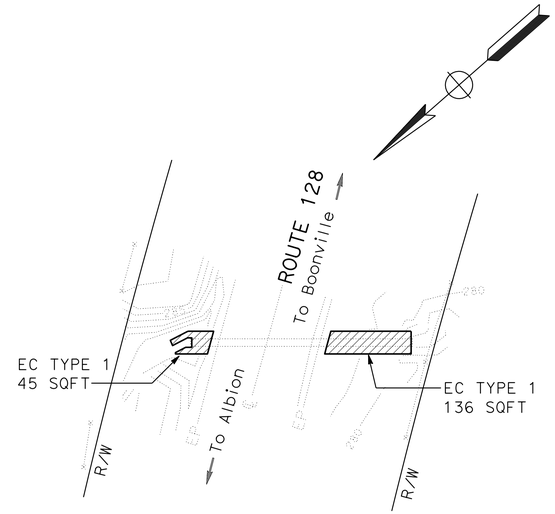

DRAINAGE SYSTEM No. 15
ROUTE 128
PM 17.02

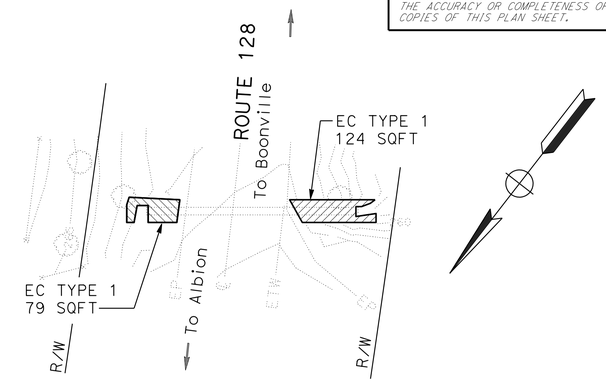

DRAINAGE SYSTEM No. 17
ROUTE 128
PM 17.45

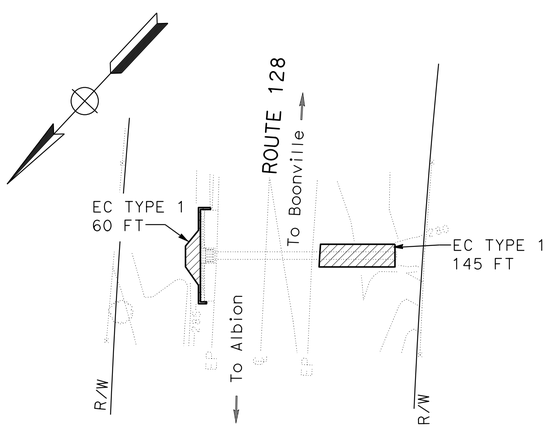

DRAINAGE SYSTEM No. 14
ROUTE 128
PM 16.99

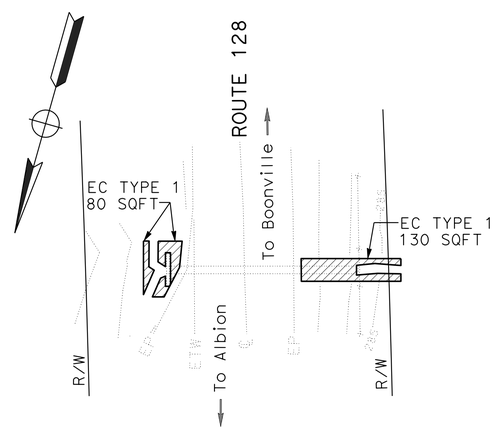

DRAINAGE SYSTEM No. 16
ROUTE 128
PM 17.26

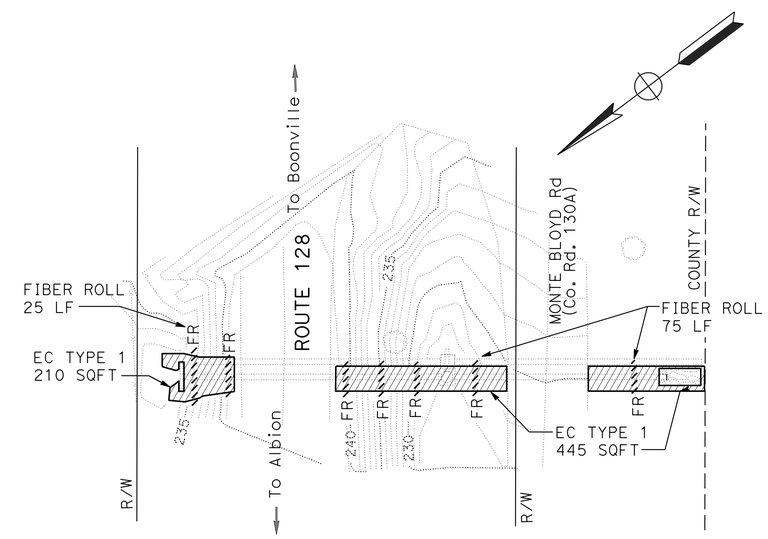

DRAINAGE SYSTEM No. 18
ROUTE 128
PM 18.97

EROSION CONTROL PLAN

SCALE: 1" = 20'

EC-3

STATE OF CALIFORNIA - DEPARTMENT OF TRANSPORTATION
Caltrans®
LANDSCAPE

SENIOR LANDSCAPE ARCHITECT: RON FLORY
CALCULATED-DESIGNED BY: LAURA LAZZAROTTO
CHECKED BY: RON FLORY
REVISED BY
DATE REVISED

LAST REVISION 00-00-00
DATE PLOTTED => 06-APR-2015
TIME PLOTTED => 08:58

Dist	COUNTY	ROUTE	POST MILES TOTAL PROJECT	SHEET No.	TOTAL SHEETS
01	Men	128	Var	41	50

Laura Lazzarotto
LICENSED LANDSCAPE ARCHITECT

2-2-15
PLANS APPROVAL DATE

LICENSED LANDSCAPE ARCHITECT
Laura Lazzarotto
Laura Lazzarotto
Signature
8-31-05
Renewal Date
1-27-15
Date
STATE OF CALIFORNIA

THE STATE OF CALIFORNIA OR ITS OFFICERS OR AGENTS SHALL NOT BE RESPONSIBLE FOR THE ACCURACY OR COMPLETENESS OF SCANNED COPIES OF THIS PLAN SHEET.

NOTES:

1. FOR ACCURATE RIGHT OF WAY DATA, CONTACT RIGHT OF WAY ENGINEERING AT DISTRICT OFFICE.
2. THIS PLAN ACCURATE FOR EROSION CONTROL ONLY.

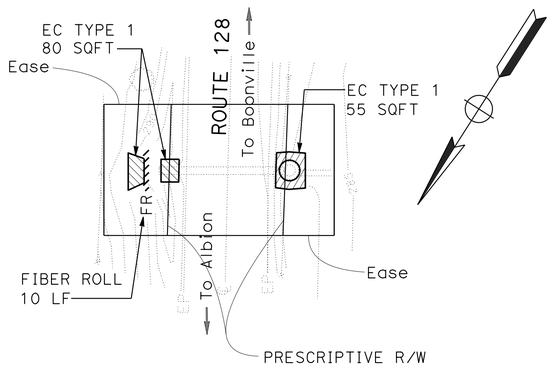

DRAINAGE SYSTEM No. 19

ROUTE 128
PM 19.94

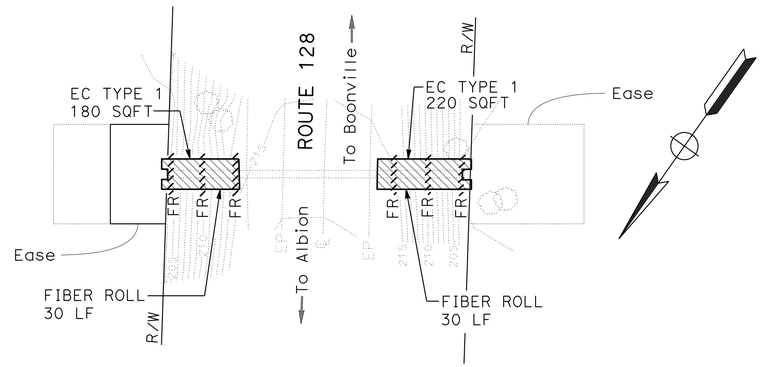

DRAINAGE SYSTEM No. 21

ROUTE 128
PM 23.30

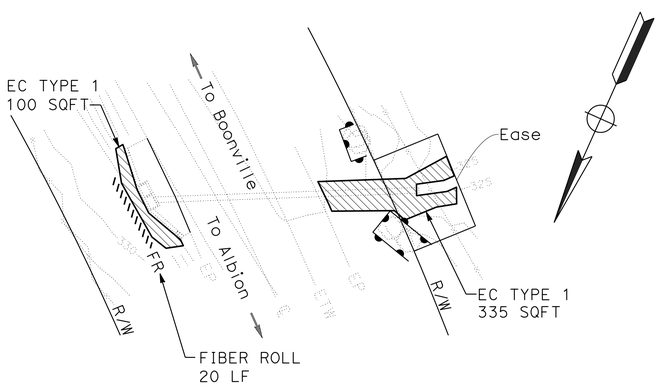

DRAINAGE SYSTEM No. 20

ROUTE 128
PM 22.34

EROSION CONTROL PLAN

SCALE: 1" = 20'

EC-4

STATE OF CALIFORNIA - DEPARTMENT OF TRANSPORTATION
Caltrans
LANDSCAPE

SENIOR LANDSCAPE ARCHITECT: RON FLORY
CALCULATED-DESIGNED BY: LAURA LAZZAROTTO
CHECKED BY: RON FLORY
REVISED BY
DATE REVISED

LAST REVISION 00-00-00
DATE PLOTTED => 06-APR-2015
TIME PLOTTED => 08:58

M

Maint	MAINTENANCE
Max	MAXIMUM
MB	METAL BEAM
MBB	METAL BEAM BARRIER
MBGR	METAL BEAM GUARD RAILING
Med	MEDIAN
MGS	MIDWEST GUARDRAIL SYSTEM
MH	MANHOLE
Min	MINIMUM
Misc	MISCELLANEOUS
Misc I & S	MISCELLANEOUS IRON AND STEEL
Mkr	MARKER
Mod	MODIFIED,
	MODIFY
Mon	MONUMENT
MP	METAL PLATE
MPGR	METAL PLATE GUARD RAILING
MR	MOVEMENT RATING
MSE	MECHANICALLY STABILIZED EMBANKMENT
Mt	MOUNTAIN, MOUNT
Mtl	MATERIAL
MVP	MAINTENANCE VEHICLE PULLOUT

N

N	NORTH
NB	NORTHBOUND
No.	NUMBER (MUST HAVE PERIOD)
Nos.	NUMBERS (MUST HAVE PERIOD)
NPS	NOMINAL PIPE SIZE
NS	NEAR SIDE
NSP	NEW STANDARD PLAN
NTS	NOT TO SCALE

O

Oblr	OBLITERATE
OC	OVERCROSSING
OD	OUTSIDE DIAMETER
OF	OUTSIDE FACE
OG	ORIGINAL GROUND
OGAC	OPEN GRADED ASPHALT CONCRETE
OGFC	OPEN GRADED FRICTION COURSE
OH	OVERHEAD
OHWM	ORDINARY HIGH WATER MARK
O-O	OUT TO OUT
Opp	OPPOSITE
OSD	OVERSIDE DRAIN

P

P	PAGE
PAP	PERFORATED ALUMINUM PIPE
PB	PULL BOX
PC	POINT OF CURVATURE,
	PRECAST
PCC	POINT OF COMPOUND CURVE,
	PORTLAND CEMENT CONCRETE
PCMS	PORTABLE CHANGEABLE MESSAGE SIGN
PCP	PERFORATED CONCRETE PIPE,
	PRESTRESSED CONCRETE PIPE
PCVC	POINT OF COMPOUND VERTICAL CURVE
PEC	PERMIT TO ENTER AND CONSTRUCT
Ped	PEDESTRIAN
Ped OC	PEDESTRIAN OVERCROSSING
Ped UC	PEDESTRIAN UNDERCROSSING
Perm Mtl	PERMEABLE MATERIAL

P continued

PG	PROFILE GRADE
PI	POINT OF INTERSECTION
PJP	PARTIAL JOINT PENETRATION
Pkwy	PARKWAY
ℙ,PL	PLATE
P/L	PROPERTY LINE
PM	POST MILE,
	TIME FROM NOON TO MIDNIGHT
PN	PAVING NOTCH
POC	POINT OF HORIZONTAL CURVE
POT	POINT OF TANGENT
POVC	POINT OF VERTICAL CURVE
PP	PIPE PILE,
	PLASTIC PIPE,
	POWER POLE
PPL	PREFORMED PERMEABLE LINER
PPP	PERFORATED PLASTIC PIPE
PRC	POINT OF REVERSE CURVE
PRF	PAVEMENT REINFORCING FABRIC
PRVC	POINT OF REVERSE VERTICAL CURVE
PS&E	PLANS, SPECIFICATIONS AND ESTIMATES
PS, P/S	PRESTRESSED
PSP	PERFORATED STEEL PIPE
PT	POINT OF TANGENCY
PVC	POLYVINYL CHLORIDE
Pvmt	PAVEMENT

Q

Qty	QUANTITY

R

R	RADIUS
R & D	REMOVE AND DISPOSE
R & S	REMOVE AND SALVAGE
R/C	RATE OF CHANGE
RCA	REINFORCED CONCRETE ARCH
RCB	REINFORCED CONCRETE BOX
RCP	REINFORCED CONCRETE PIPE
RCPA	REINFORCED CONCRETE PIPE ARCH
Rd	ROAD
Reinf	REINFORCED,
	REINFORCEMENT,
	REINFORCING
Rel	RELOCATE
Repl	REPLACEMENT
Ret	RETAINING
Rev	REVISED, REVISION
Rdwy	ROADWAY
RHMA	RUBBERIZED HOT MIX ASPHALT
Riv	RIVER
RM	ROAD-MIXED
RP	RADIUS POINT,
	REFERENCE POINT
RR	RAILROAD
RSP	ROCK SLOPE PROTECTION,
	REVISED STANDARD PLAN
Rt	RIGHT
Rte	ROUTE
RW	REDWOOD,
	RETAINING WALL
R/W	RIGHT OF WAY
Rwy	RAILWAY

S

S	SOUTH,
	SUPPLEMENT
SAE	STRUCTURE APPROACH EMBANKMENT
Salv	SALVAGE
SAPP	STRUCTURAL ALUMINUM PLATE PIPE
SB	SOUTHBOUND
SC	SAND CUSHION
SCSP	SLOTTED CORRUGATED STEEL PIPE
SD	STORM DRAIN
Sec	SECOND,
	SECTION
Sep	SEPARATION
SG	SUBGRADE
Shld	SHOULDER
Sht	SHEET
Sim	SIMILAR
℄	STATION LINE
SM	SELECTED MATERIAL
Spec	SPECIAL,
	SPECIFICATIONS
SPP	SLOTTED PLASTIC PIPE
SS	SLOPE STAKE
SSBM	STRAP AND SADDLE BRACKET METHOD
SSD	STRUCTURAL SECTION DRAIN
SSPA	STRUCTURAL STEEL PLATE ARCH
SSPP	STRUCTURAL STEEL PLATE PIPE
SSPPA	STRUCTURAL STEEL PLATE PIPE ARCH
SSRP	STEEL SPIRAL RIB PIPE
St	STREET
Sta	STATION
STBB	SINGLE THRIE BEAM BARRIER
Std	STANDARD
Str	STRUCTURE
Surf	SURFACING
SW	SIDEWALK,
	SOUND WALL
Swr	SEWER
Sym	SYMMETRICAL
S4S	SURFACE 4 SIDES

T

T	SEMI-TANGENT
Tan	TANGENT
TBB	THRIE BEAM BARRIER
Tbr	TIMBER
TC	TOP OF CURB
TCB	TRAFFIC CONTROL BOX
TCE	TEMPORARY CONSTRUCTION EASEMENT
Tel	TELEPHONE
Temp	TEMPORARY
TG	TOP OF GRADE
Tot	TOTAL
TP	TELEPHONE POLE
TPB	TREATED PERMEABLE BASE
TPM	TREATED PERMEABLE MATERIAL
Trans	TRANSITION

T continued

TS	TRANSVERSE,
	TRAFFIC SIGNAL,
	TUBULAR STEEL
Typ	TYPICAL

U

UC	UNDERCROSSING
UD	UNDERDRAIN
UG	UNDERGROUND
UON	UNLESS OTHERWISE NOTED
UP	UNDERPASS

V

V	VALVE,
	DESIGN SPEED
Var	VARIABLE,
	VARIES
VC	VERTICAL CURVE
VCP	VITRIFIED CLAY PIPE
Vert	VERTICAL
Via	VIADUCT
Vol	VOLUME

W

W	WEST,
	WIDTH
WB	WESTBOUND
WH	WEEP HOLE
WM	WIRE MESH
WS	WATER SURFACE
WSP	WELDED STEEL PIPE
Wt	WEIGHT
WV	WATER VALVE
WW	WINGWALL
WWLOL	WINGWALL LAYOUT LINE

X

X Sec	CROSS SECTION
Xing	CROSSING

Y

Yr	YEAR
Yrs	YEARS

Dist	COUNTY	ROUTE	POST MILES TOTAL PROJECT	SHEET No.	TOTAL SHEETS
01	Men	128	Var	42	50

Grace M. Tsushima
REGISTERED CIVIL ENGINEER

July 19, 2013
PLANS APPROVAL DATE

REGISTERED PROFESSIONAL ENGINEER
Grace M. Tsushima
No. C49814
Exp. 9-30-14
CIVIL
STATE OF CALIFORNIA

THE STATE OF CALIFORNIA OR ITS OFFICERS OR AGENTS SHALL NOT BE RESPONSIBLE FOR THE ACCURACY OR COMPLETENESS OF SCANNED COPIES OF THIS PLAN SHEET.

TO ACCOMPANY PLANS DATED 2-2-15

UNIT OF MEASUREMENT SYMBOLS:

Some of the symbols used in the project plan quantity tables and in the Bid Item List are:

TABLE A

SYMBOL USED	DEFINITIONS
ACRE	ACRE
CF	CUBIC FOOT
CY	CUBIC YARD
EA	EACH
GAL	GALLON
LB	POUND
LF	LINEAR FOOT
SQFT	SQUARE FOOT
SQYD	SQUARE YARD
STA	100 FEET
TAB	TABLET
TON	2,000 POUNDS

Some of the symbols used in the plans other than in the project plan quantity tables are:

TABLE B

SYMBOL USED	DEFINITIONS
ksi	KIPS PER SQUARE INCH
ksf	KIPS PER SQUARE FOOT
psi	POUNDS PER SQUARE INCH
psf	POUNDS PER SQUARE FOOT
lb/ft^3, pcf	POUNDS PER CUBIC FOOT
tsf	TONS PER SQUARE FOOT
mph, MPH *	MILES PER HOUR
ø	NOMINAL DIAMETER
oz	OUNCE
lb	POUND
kip	1,000 POUNDS
cal	CALORIE
ft	FOOT OR FEET
gal	GALLON

* For use on a sign panel only

STATE OF CALIFORNIA
DEPARTMENT OF TRANSPORTATION

ABBREVIATIONS (SHEET 2 OF 2)

NO SCALE

RSP A10B DATED JULY 19, 2013 SUPERSEDES STANDARD PLAN A10B DATED MAY 20, 2011 - PAGE 2 OF THE STANDARD PLANS BOOK DATED 2010.

REVISED STANDARD PLAN RSP A10B

2010 REVISED STANDARD PLAN RSP A10B

6-7-13

Dist	COUNTY	ROUTE	POST MILES TOTAL PROJECT	SHEET No.	TOTAL SHEETS
01	Men	128	Var	43	50

REGISTERED CIVIL ENGINEER

July 18, 2014
PLANS APPROVAL DATE

REGISTERED PROFESSIONAL ENGINEER Carl M. Duan No. C59976 Exp. 6-30-16 CIVIL STATE OF CALIFORNIA

THE STATE OF CALIFORNIA OR ITS OFFICERS OR AGENTS SHALL NOT BE RESPONSIBLE FOR THE ACCURACY OR COMPLETENESS OF SCANNED COPIES OF THIS PLAN SHEET.

TO ACCOMPANY PLANS DATED 2-2-15

2010 REVISED STANDARD PLAN RSP A62DA

DESIGN NOTES:

Design: AASHTO LRFD Bridge Design Specifications, 4th edition with California Amendments. ACPA DESIGN DATA 1, October 2007. INDIRECT DESIGN METHOD

Soil: w Fe = 162 pcf Installation Type 1
w Fe = 168 pcf Installation Types 2 & 3
w = Unit weight of soil (pcf)
Fe = Soil-structure interaction factor

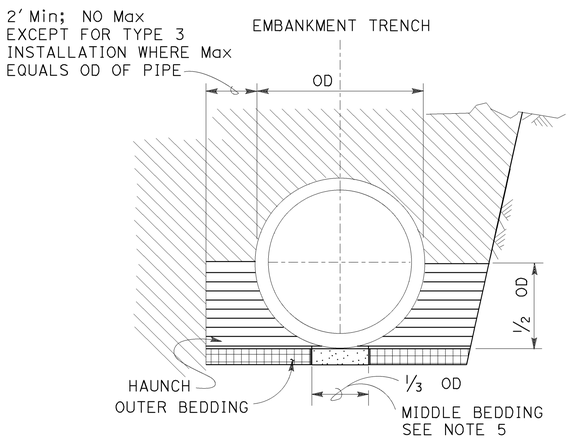

BACKFILL

LEGEND:

- ROADWAY EMBANKMENT
- STRUCTURE BACKFILL (CULVERT) FOR HAUNCH SEE NOTE 6
- STRUCTURE BACKFILL (CULVERT) FOR OUTER BEDDING SEE NOTE 6
- LOOSE BACKFILL
- STRUCTURE EXCAVATION (CULVERT)

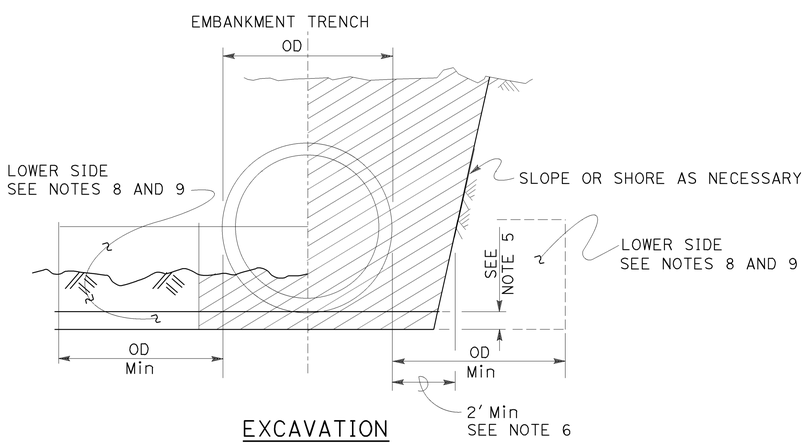

EXCAVATION

INSTALLATION TYPE 1:

The haunch and outer bedding shall be compacted to a minimum 90 percent relative compaction. In addition, the minimum sand equivalent in these areas shall be 30 and the maximum percentage passing the No. 200 sieve size shall be 12.

INSTALLATION TYPE 2:

The haunch and outer bedding shall be compacted to a minimum 90 percent relative compaction. In addition, the minimum sand equivalent in these areas shall be 25.

INSTALLATION TYPE 3:

The haunch and outer bedding shall be compacted to a minimum 85 percent relative compaction. 90 percent relative compaction will be required where the fill over the pipe is less than 4′-0″ or ½ OD. In addition, the minimum sand equivalent in these areas shall be 25 and the material shall not contain rocks, broken concrete, or other solid material exceeding 3″ in greatest dimension.

INSTALLATION TYPE 1

MINIMUM CLASS AND D-LOAD	COVER	
	60″ Dia AND SMALLER	OVER 60″ Dia TO 120″ Dia Max
CLASS II 1000D	14.9′	12.9′
CLASS III 1350D	15.0′ - 21.9′	13.0′ - 18.9′
CLASS III SPECIAL 1700D	22.0′ - 27.9′	19.0′ - 24.9′
CLASS IV 2000D	28.0′ - 32.9′	25.0′ - 29.9′
CLASS IV SPECIAL 2500D	33.0′ - 41.9′	30.0′ - 38.9′
CLASS V 3000D	42.0′ - 49.9′	39.0′ - 46.9′
CLASS V SPECIAL 3600D	50.0′ - 60.0′	47.0′ - 58.0′

INSTALLATION TYPE 2

MINIMUM CLASS AND D-LOAD	COVER	
	60″ Dia AND SMALLER	OVER 60″ Dia TO 120″ Dia Max
CLASS II 1000D	11.9′	9.9′
CLASS III 1350D	12.0′ - 15.9′	10.0′ - 14.9′
CLASS III SPECIAL 1700D	16.0′ - 20.9′	15.0′ - 19.9′
CLASS IV 2000D	21.0′ - 24.9′	20.0′ - 23.9′
CLASS IV SPECIAL 2500D	25.0′ - 31.9′	24.0′ - 30.9′
CLASS V 3000D	32.0′ - 37.9′	31.0′ - 37.9′
CLASS V SPECIAL 3600D	38.0′ - 46.0′	38.0′ - 46.0′

INSTALLATION TYPE 3

MINIMUM CLASS AND D-LOAD	COVER	
	60″ Dia AND SMALLER	OVER 60″ Dia TO 120″ Dia Max
CLASS II 1000D	8.9′	5.9′
CLASS III 1350D	9.0′ - 11.9′	6.0′ - 10.9′
CLASS III SPECIAL 1700D	12.0′ - 15.9′	11.0′ - 13.9′
CLASS IV 2000D	16.0′ - 18.9′	14.0′ - 17.9′
CLASS IV SPECIAL 2500D	19.0′ - 24.9′	18.0′ - 22.9′
CLASS V 3000D	25.0′ - 29.9′	23.0′ - 28.9′
CLASS V SPECIAL 3600D	30.0′ - 36.0′	29.0′ - 35.0′

NOTES:

1. Unless otherwise shown on the plans or specified in the special provision, the Contractor shall have the option of selecting the class of RCP and the type of installation to be used, provided the height of cover does not exceed the value shown for the RCP selected.
   Example: 24″ RCP culvert with maximum cover of 24′-0″ the options are:
   a) Class III Special or stronger with Installation Type 1.
   b) Class IV or stronger with Installation Type 2.
   c) Class IV Special or stronger with Installation Type 3.
   Cover is defined as the maximum vertical distance from top of the pipe to finished grade within the length of any given culvert.
2. The class of RCP and Installation Type selected shall be the same throughout the length of any given culvert.
3. The "length of any culvert" is defined as the culvert between:
   a) Successive drainage structure (inlets, junction boxes, headwalls, etc.).
   b) A drainage structure and the inlet or outlet end of the culvert.
   c) The inlet and outlet end of the culvert when there are no intervening drainage structures.
4. Oval and arch shaped RCP shall not be used.
5. Bedding depth: 1/25 OD Min, not less than 3″.
6. Slurry cement backfill may be substituted for backfill in the outer bedding and haunch areas. If slurry is used, the outer and middle beddings shall be omitted. Prior to installation, the soil under the middle ⅓ of the outside diameter of the pipe shall be softened by scarifying or other means to a minimum depth of 1/25 OD, but not less than 3″. Where slurry cement backfill is used, clear distance to trench wall may be reduced as set forth in the Standard Specifications.
7. Backfill shall be placed full width of excavation except where dimensions are shown for backfill width or thickness. Dimensions shown are minimum.
8. Lower side shall be suitable material as determined by the Engineer. Otherwise it shall be considered unsuitable as set forth in of the Standard Specifications. See Note 9.
9. Where the pipe is placed in a trench, if the trench walls are sloped at 5 vertical to 1 horizontal or steeper for at least 90 percent of the trench height or up to not less than 12″ from the grading plane, the firmness of the soil in the lower side need not be considered.
10. Non-reinforced precast concrete pipe sizes 3′-0″ or smaller may be placed under installation Types 1, 2 or 3.

STATE OF CALIFORNIA
DEPARTMENT OF TRANSPORTATION

EXCAVATION AND BACKFILL CONCRETE PIPE CULVERTS INDIRECT DESIGN METHOD

NO SCALE

RSP A62DA DATED JULY 18, 2014 SUPERSEDES STANDARD PLAN A62DA DATED MAY 20, 2011 - PAGE 24 OF THE STANDARD PLANS BOOK DATED 2010.

REVISED STANDARD PLAN RSP A62DA

Dist	COUNTY	ROUTE	POST MILES TOTAL PROJECT	SHEET No.	TOTAL SHEETS
01	Men	128	Var	44	50

Raymond Don Tsztoo
REGISTERED CIVIL ENGINEER

October 19, 2012
PLANS APPROVAL DATE

REGISTERED PROFESSIONAL ENGINEER
Raymond Don Tsztoo
No. C37332
Exp. 6-30-14
CIVIL
STATE OF CALIFORNIA

THE STATE OF CALIFORNIA OR ITS OFFICERS OR AGENTS SHALL NOT BE RESPONSIBLE FOR THE ACCURACY OR COMPLETENESS OF SCANNED COPIES OF THIS PLAN SHEET.

TO ACCOMPANY PLANS DATED 2-2-15

2010 REVISED STANDARD PLAN RSP A86D

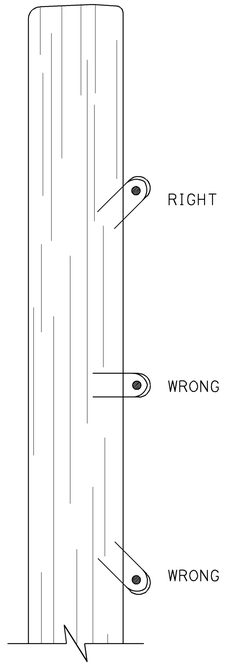

DRIVE STAPLES AT ANGLE

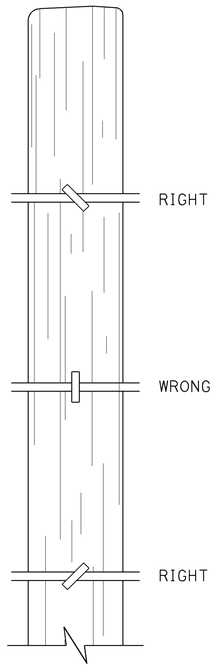

DO NOT DRIVE STAPLES PARALLEL TO SIDE OF POST

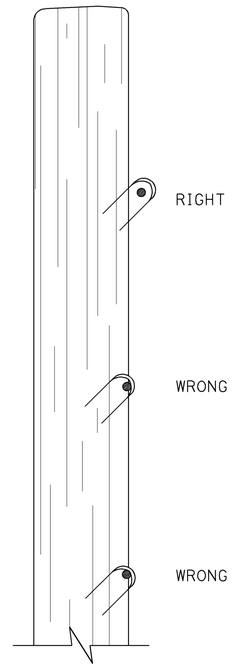

LEAVE WIRE LOOSE IN STAPLE

LINE POST STAPLING DETAILS

(Apply to rectangular/square and round posts)
Do not staple vertical wire in wire mesh.

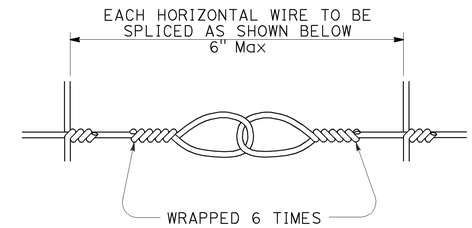

SPLICE DETAIL FOR BARBED WIRE/WIRE MESH FENCE

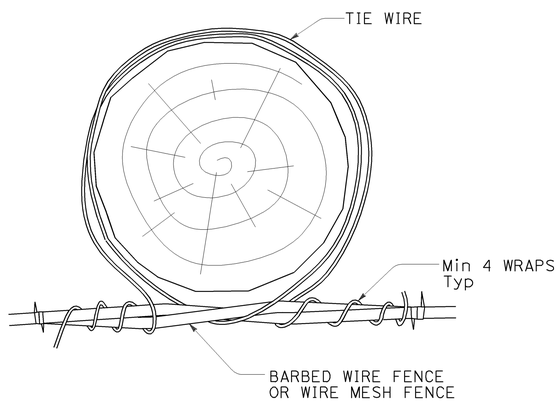

OPTION A

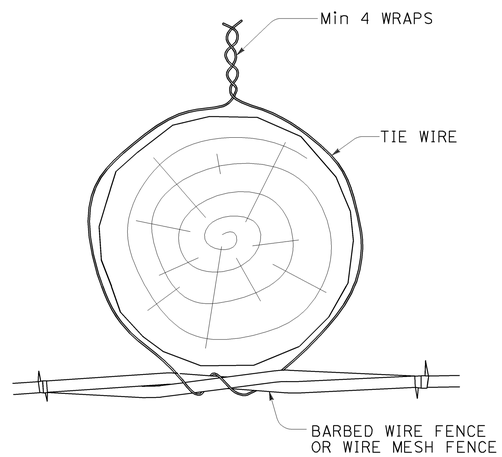

OPTION B

LINE POST WIRE TIE OPTION DETAILS

(Option details also apply to rectangular/square posts)

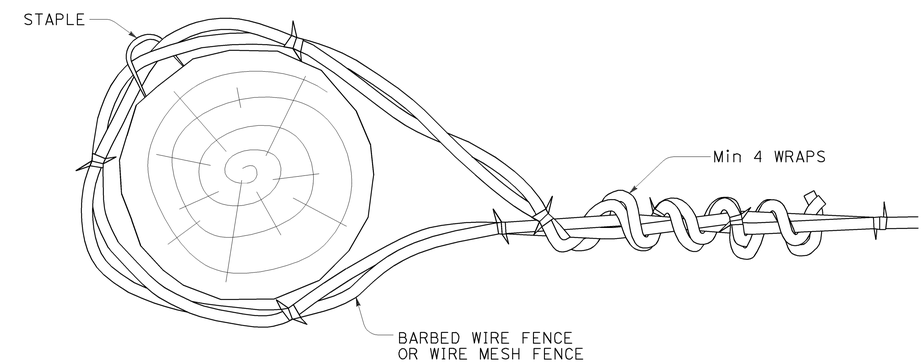

END, LATCH, PULL, AND CORNER POST DETAIL

(Also applies to rectangular/square posts)

STATE OF CALIFORNIA
DEPARTMENT OF TRANSPORTATION

BARBED WIRE AND WIRE MESH FENCE - MISCELLANEOUS DETAILS

NO SCALE

RSP A86D DATED OCTOBER 19, 2012 SUPPLEMENTS THE STANDARD PLANS BOOK DATED 2010.

REVISED STANDARD PLAN RSP A86D

10-9-12

Dist	COUNTY	ROUTE	POST MILES TOTAL PROJECT	SHEET No.	TOTAL SHEETS
01	Men	128	Var	45	50

REGISTERED CIVIL ENGINEER

July 19, 2013
PLANS APPROVAL DATE

REGISTERED PROFESSIONAL ENGINEER
Michael Janzen
No. 44788
Exp. 03-31-14
CIVIL
STATE OF CALIFORNIA

THE STATE OF CALIFORNIA OR ITS OFFICERS OR AGENTS SHALL NOT BE RESPONSIBLE FOR THE ACCURACY OR COMPLETENESS OF SCANNED COPIES OF THIS PLAN SHEET.

TO ACCOMPANY PLANS DATED 2-2-15

2010 REVISED STANDARD PLAN RSP A87B

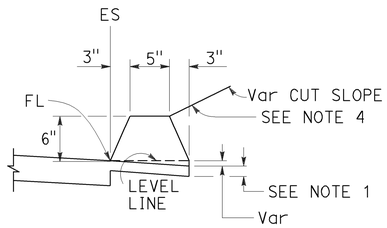

TYPE A
See Note 3

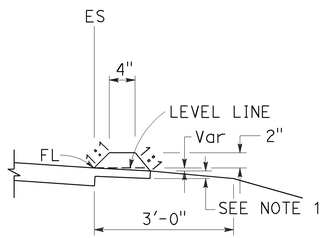

TYPE C

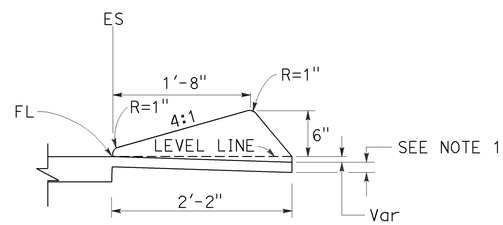

TYPE D

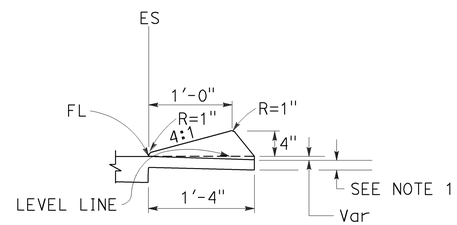

TYPE E

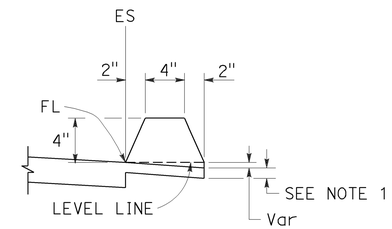

TYPE F
See Note 5

DIKES

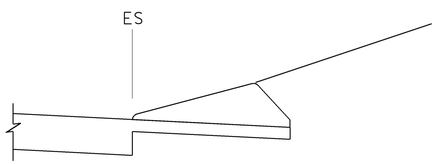

CASE C-1
Cut Slope

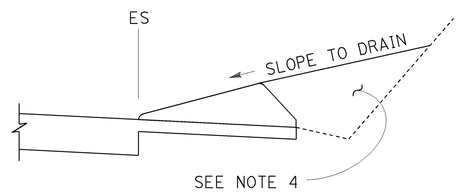

CASE C-2
Cut Slope

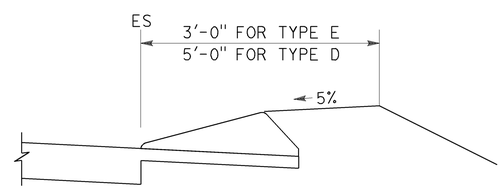

CASE F

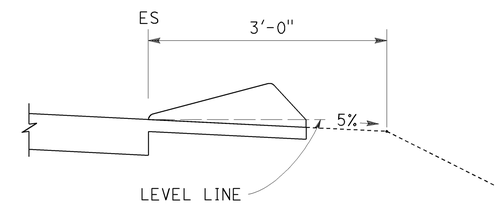

CASE R
See Note 2

TYPE D AND E BACKFILL DETAILS

NOTES:

1. For HMA shoulders only, extend top layer of HMA placed on the shoulder under dike with no joint at the ES. For projects with OGFC shoulders, do not extend OGFC under dike. See project plans for modified dike detail.
2. Case R applies to retrofit only projects where restrictive conditions do not provide enough width for Case F backfill.
3. Type A dike only to be used where restrictive slope conditions do not provide enough width to use Type D or Type E dike.
4. Fill and compact with excavated material to top of dike.
5. Use Type F dike, where dike is required with guard railing installations. See Revised Standard Plan RSP A77N4 for dike positioning details.

DIKE QUANTITIES

TYPE	CUBIC YARDS PER LINEAR FOOT
A	0.0135
C	0.0038
D	0.0293
E	0.0130
F	0.0066

Quantities based on 5% cross slope.

STATE OF CALIFORNIA
DEPARTMENT OF TRANSPORTATION

HOT MIX ASPHALT DIKES

NO SCALE

RSP A87B DATED JULY 19, 2013 SUPERSEDES STANDARD PLAN A87B DATED MAY 20, 2011 - PAGE 120 OF THE STANDARD PLANS BOOK DATED 2010.

REVISED STANDARD PLAN RSP A87B

6-27-13

TO ACCOMPANY PLANS DATED 2-2-15

Dist	COUNTY	ROUTE	POST MILES TOTAL PROJECT	SHEET No.	TOTAL SHEETS
01	Men	128	Var	46	50

REGISTERED CIVIL ENGINEER

October 19, 2012
PLANS APPROVAL DATE

Glenn DeCou No. C34547 Exp. 9-30-13 CIVIL STATE OF CALIFORNIA REGISTERED PROFESSIONAL ENGINEER

THE STATE OF CALIFORNIA OR ITS OFFICERS OR AGENTS SHALL NOT BE RESPONSIBLE FOR THE ACCURACY OR COMPLETENESS OF SCANNED COPIES OF THIS PLAN SHEET.

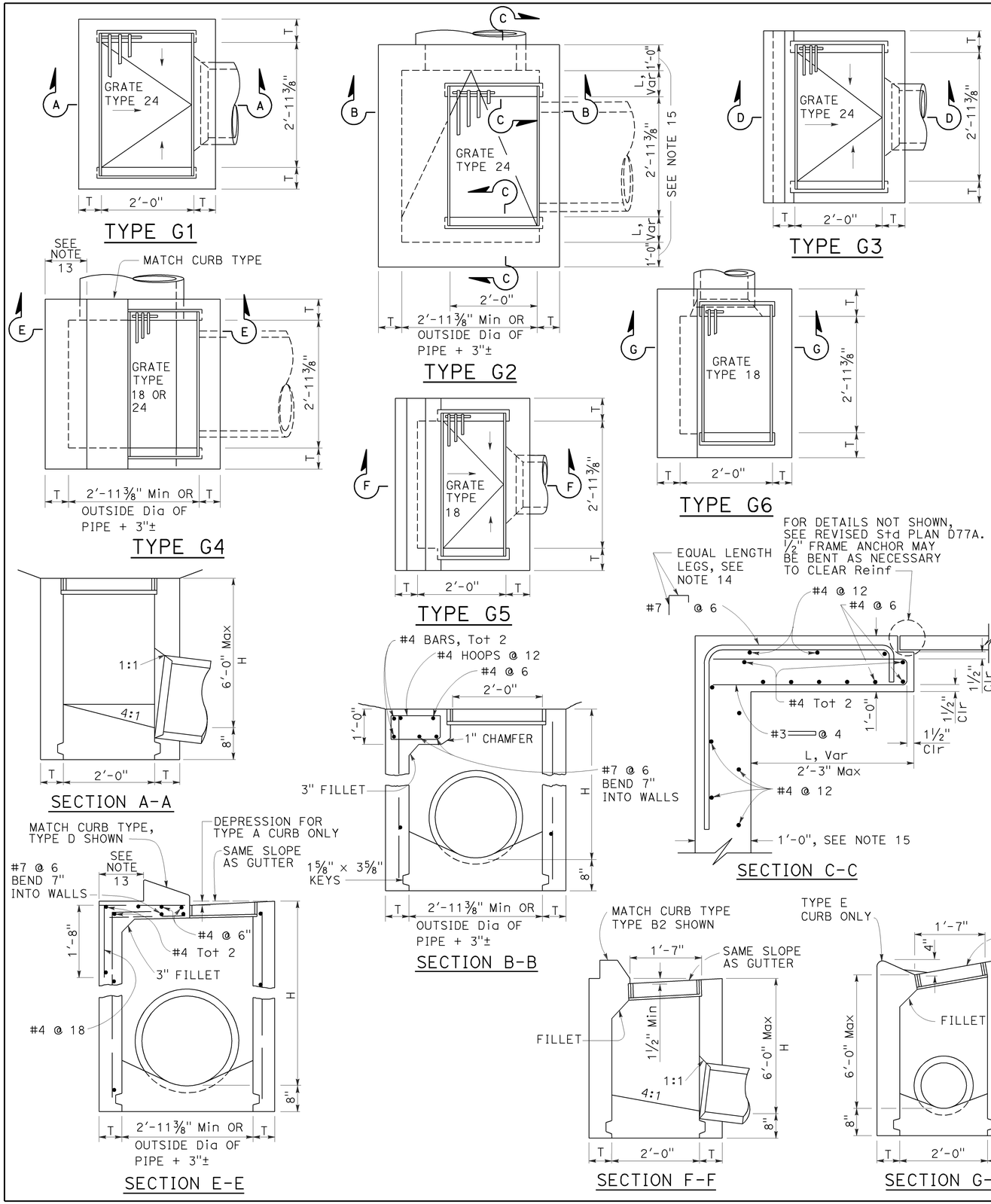

NOTES:

1. "H" is the difference in elevation between the outlet pipe flow line and the normal gutter grade line undepressed.
2. For "T" wall thickness, see Table A below.
3. Wall reinforcing not required when "H" is 8'-0" or less and the unsupported width or length is 7'-0" or less. Walls exceeding these limits shall be reinforced with #4 bars @ 1'-6" ± centers placed 1½" clear to inside of box unless otherwise shown.
4. Inlet bottom reinforcing not required. See Standard Plan D74C for alternative reinforced bottom and alternative half round bottom.
5. Steps-None required where "H" is less than 2'-6". Where "H" is 2'-6" or more, install steps with lowest rung 1'-0" above the floor and highest rung not more than 6" below top of inlet. The distance between steps shall not exceed 1'-0" and shall be uniform throughout the length of the wall. Place steps in the wall without an opening. Steps inserts may be substituted for the bar steps. Step inserts shall comply with State Industrial Safety requirements. See Standard Plan D74C for step details.
6. Details shown apply to both metal and concrete pipe.
7. Pipe(s) can be placed in any wall.
8. Curb section shall match adjacent curb.
9. Basin floors shall have wood trowel finish and a minimum slope of 12:3 from all directions toward outlet pipe.
10. Set inlet so that grate bars are parallel to direction of principal surface flow.
11. See Revised Standard Plans D77A and D77B for grate and frame details and weights of miscellaneous iron and steel.
12. See Standard Plan D78A for gutter depression details.
13. This dimenison will vary with different grates, curbs types, box width and wall thickness.
14. Bar may be rotated as necessary to clear opening. Where "L" is 6" or less, bar may be omitted.
15. Where "L" is 6" or less, wall thickness shall be as shown in Table A.
16. Cast-in-place inlets to be formed around all pipes/stubs intersecting the inlet, and concrete poured in one continuous operation. Precast inlets shall have mortared connections conforming to details for Type GCP Inlet shown on Standard Plan D75B. See Standard Specifications for mortar composition.

TABLE A

CONCRETE QUANTITIES				
TYPE	H=3'-0" TO 8'-0" (T=6")		H=8'-1" TO 20'-0" (T=8")	
	H=3'-0" (CY)	ADDITIONAL PCC PER FOOT (CY)	H=8'-1" (CY)	ADDITIONAL PCC PER FOOT (CY)
G-1	0.95	0.220	See Note A	SEE NOTE A
G-2*	1.31	0.255	3.50	0.357
G-3	1.03	0.220	See Note A	SEE NOTE A
G-4* (TYPE 24)	1.27	0.255	3.48	0.357
G-4* (TYPE 18)	1.30	0.255	3.50	0.357
G-5	1.02	0.220	SEE NOTE A	SEE NOTE A
G-6	1.04	0.220	SEE NOTE A	SEE NOTE A

TABLE BASED ON 8" FLOOR SLAB. NO DEDUCTIONS ARE TO BE MADE TO THESE QUANTITIES BECAUSE OF PIPE OPENINGS, DIFFERENT FLOOR ALTERNATIVES OR DIFFERENT CURB TYPES. * QUANTITIES FOR TYPE G-2 AND G-4 INLETS BASED ON THE MINIMUM INTERIOR DIMENSIONS.

NOTE A:

Maximum allowable height 6'-0".

STATE OF CALIFORNIA
DEPARTMENT OF TRANSPORTATION

DRAINAGE INLETS

NO SCALE

RSP D73 DATED OCTOBER 19, 2012 SUPERSEDES STANDARD PLAN D73 DATED MAY 20, 2011 - PAGE 156 OF THE STANDARD PLANS BOOK DATED 2010.

REVISED STANDARD PLAN RSP D73

2010 REVISED STANDARD PLAN RSP D73

7-19-12

Dist	COUNTY	ROUTE	POST MILES TOTAL PROJECT	SHEET No.	TOTAL SHEETS
01	Men	128	Var	47	50

Raymond Don Tsztoo
REGISTERED CIVIL ENGINEER

April 19, 2013
PLANS APPROVAL DATE

REGISTERED PROFESSIONAL ENGINEER Raymond Don Tsztoo No. C37332 Exp. 6-30-14 CIVIL STATE OF CALIFORNIA

THE STATE OF CALIFORNIA OR ITS OFFICERS OR AGENTS SHALL NOT BE RESPONSIBLE FOR THE ACCURACY OR COMPLETENESS OF SCANNED COPIES OF THIS PLAN SHEET.

TO ACCOMPANY PLANS DATED 2-2-15

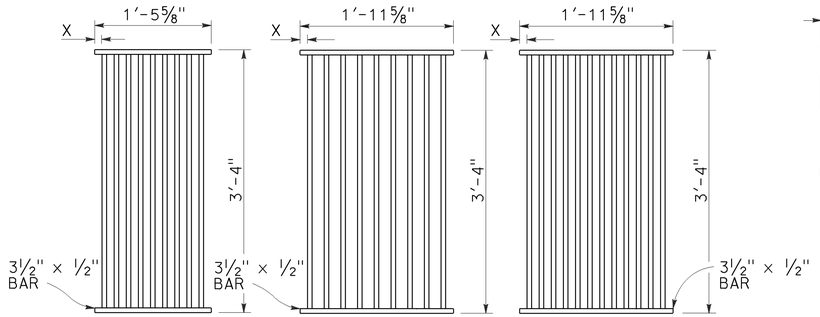

TYPE 18-9

1⅜" Clear spacing. Use within the roadbed on highways where bicycles and pedestrians are excluded.

TYPE 24-9

2" Clear spacing. Use in locations off the roadbed on all types of highways.

TYPE 24-12

1⅜" Clear spacing. Use within the roadbed on highways where bicycles and pedestrians are excluded.

RECTANGULAR GRATE DETAILS

(See table below)

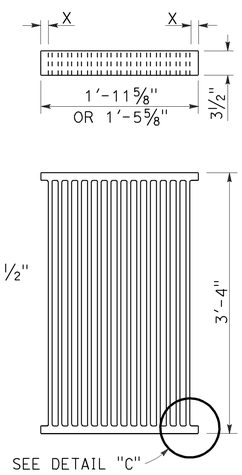

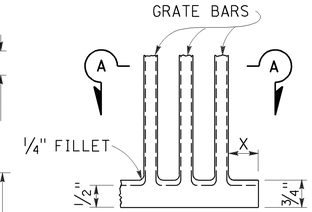

DETAIL "C"

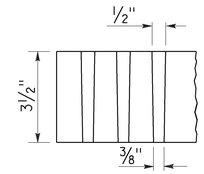

SECTION A-A

ALTERNATIVE CAST DUCTILE IRON GRATE OR CAST CARBON STEEL GRATE

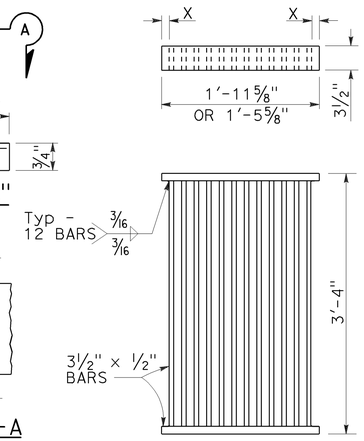

ALTERNATIVE WELDED GRATE

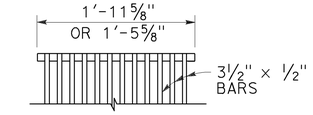

CAST END BLOCK

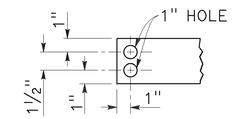

END OF BAR

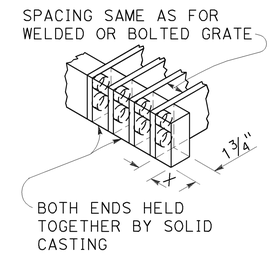

ALTERNATIVE CAST DUCTILE IRON OR CAST CARBON STEEL END BLOCK GRATE

NOTES:

1. Grate type numbers refer to approximate width of grate in inches and number of bars, respectively.
2. Contractor has the option of using cast ductile iron, cast carbon steel, welded, bolted, or cast end block grate.
3. Rounded top of bars optional on all grates.
4. Pipe inlets with a grate shall be placed so that bars parallel direction of principle surface flow.
5. Complete joint penetration butt welds may be substituted for the fillet welds on all anchors.
6. Standard square, hexagon, round or equivalent headed anchors may be substituted for the right angle hooks on the anchors shown on this plan.
7. Grate and frame weights are based on welded grates (weights of face angles, steps, protection bars, etc. are not included).
8. Connect chain to grate and frame only at locations shown on the plans. When chain is required, do not use cast ductile iron grates.

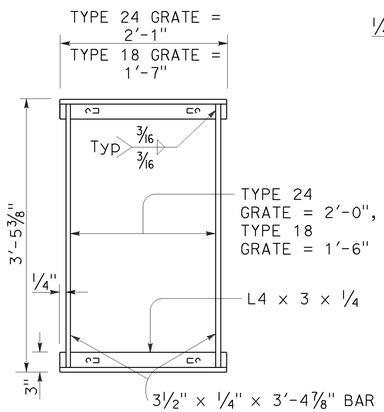

TYPICAL FRAME

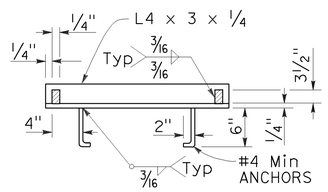

CROSS SECTION

(Thru frame)

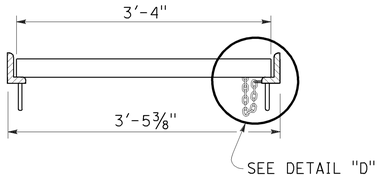

LONGITUDINAL SECTION

(Thru frame and grate)

RECTANGULAR FRAME DETAILS

(For all rectangular grates)

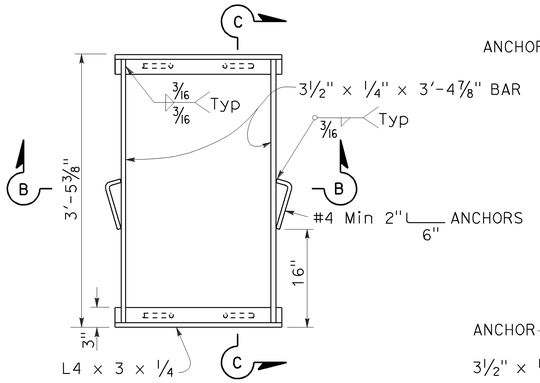

TYPICAL FRAME

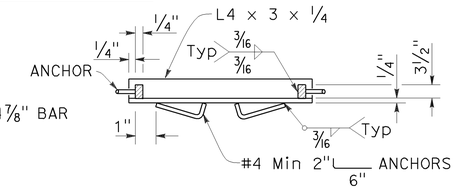

SECTION B-B

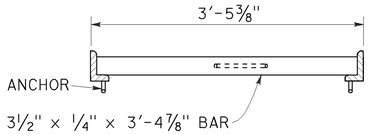

SECTION C-C

ALTERNATIVE ANCHOR FOR RECTANGULAR FRAME

(For details not shown, See Rectangular Frame Details)

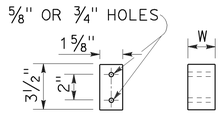

BAR SPACER

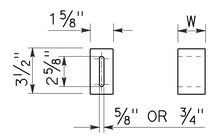

ALTERNATIVE SPACER

W = 1⅜" or 2"

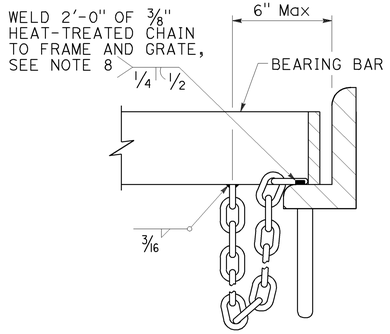

DETAIL "D"

(Steel grates only)

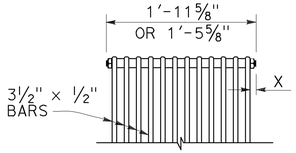

BOLTED END BLOCK

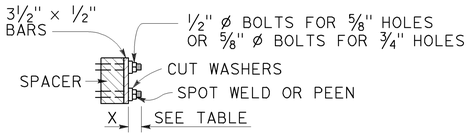

BOLTING DETAIL

ALTERNATIVE BOLTED GRATE

GRATE BAR SPACING TABLE

TYPE	No. OF BARS	CLEAR BAR SPACING	X
18-9	9	1⅜"	1 1/16"
24-9	9	2"	1 9/16"
24-12	12	1⅜"	1¼"

INLET TYPE	COVER TYPE	WEIGHT LB
OS	PLATE	174
OL-7	PLATE	170
OL-10	PLATE	170
OL-14	PLATE	170
OL-21	PLATE	170
OCP	PLATE	112
OCPI	PLATE	112
OCPI	REDWOOD	42
OMP	PLATE	177
OMPI	PLATE	177

INLET TYPE	GRATE TYPE	No. OF GRATES	WEIGHT LB
GDO	24-12	2	634
GOL-7	24-12	1	326
GOL-10	24-12	1	326
GO,G1,G2,G3,G4 (TYPE 24)	24-9	1	263
	24-12	1	326
G4 (TYPE 18),G5,G6	18-9	1	249
GT1	18-9	2	498
GT2	18-9	2	498
GT3	24-12	2	652
GT4	24-12	2	652
TRASH RACK			22
GRATE CHAIN			3

BASIS FOR Misc IRON & STEEL FINAL PAY WEIGHTS FOR DRAINAGE INLETS

(See Note 7)

STATE OF CALIFORNIA
DEPARTMENT OF TRANSPORTATION

GRATE DETAILS No. 1

NO SCALE

RSP D77A DATED APRIL 19, 2013 SUPERSEDES RSP D77A DATED JULY 20, 2012 AND STANDARD PLAN D77A DATED MAY 20, 2011 - PAGE 164 OF THE STANDARD PLANS BOOK DATED 2010.

REVISED STANDARD PLAN RSP D77A

2010 REVISED STANDARD PLAN RSP D77A

4-4-13

Dist	COUNTY	ROUTE	POST MILES TOTAL PROJECT	SHEET No.	TOTAL SHEETS
01	Men	128	Var	48	50

Raymond Don Tsztoo
REGISTERED CIVIL ENGINEER

April 19, 2013
PLANS APPROVAL DATE

REGISTERED PROFESSIONAL ENGINEER
Raymond Don Tsztoo
No. C37332
Exp. 6-30-14
CIVIL
STATE OF CALIFORNIA

THE STATE OF CALIFORNIA OR ITS OFFICERS OR AGENTS SHALL NOT BE RESPONSIBLE FOR THE ACCURACY OR COMPLETENESS OF SCANNED COPIES OF THIS PLAN SHEET.

TO ACCOMPANY PLANS DATED 2-2-15

2010 REVISED STANDARD PLAN RSP D77B

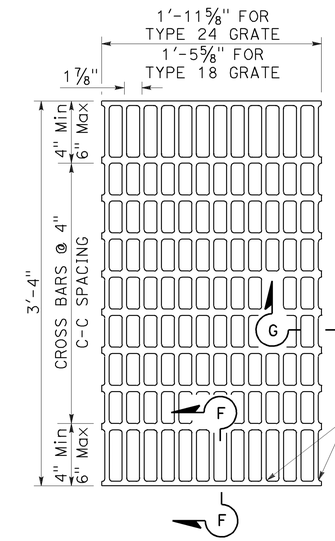

NOTES:

Bearing bars to be 3½" × ¼" bars on 1⅞" centers.

⅜"± ø Cross bars may be fillet welded, resistance welded or electroforged to bearing bars.

Weight of Type 24 grate = 141 LBS.

Weight of Type 18 grate = 107 LBS. (Type 24 grate shown).

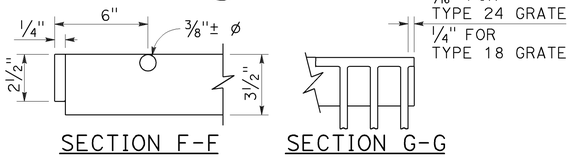

SECTION F-F SECTION G-G

TYPE 18-10 AND 24-13 GRATE

(Welded Steel)

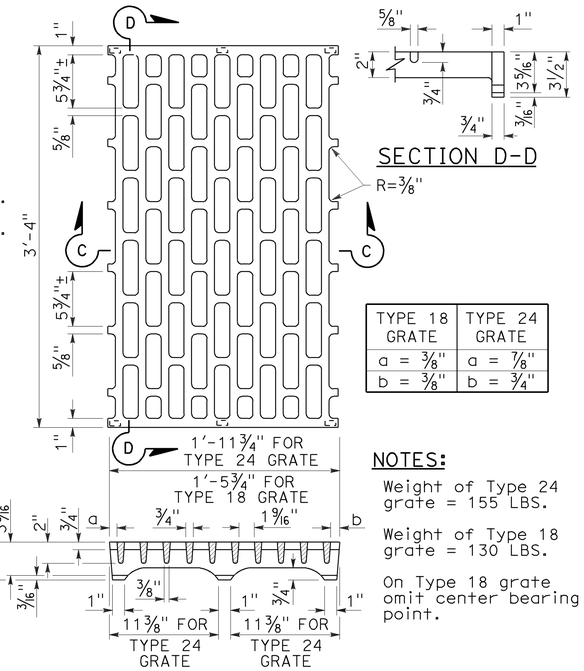

SECTION D-D

TYPE 18 GRATE	TYPE 24 GRATE
a = ⅜"	a = ⅞"
b = ⅜"	b = ¾"

NOTES:

Weight of Type 24 grate = 155 LBS.

Weight of Type 18 grate = 130 LBS.

On Type 18 grate omit center bearing point.

SECTION C-C

TYPE 18-8C AND 24-10C GRATE

(Cast ductile iron)

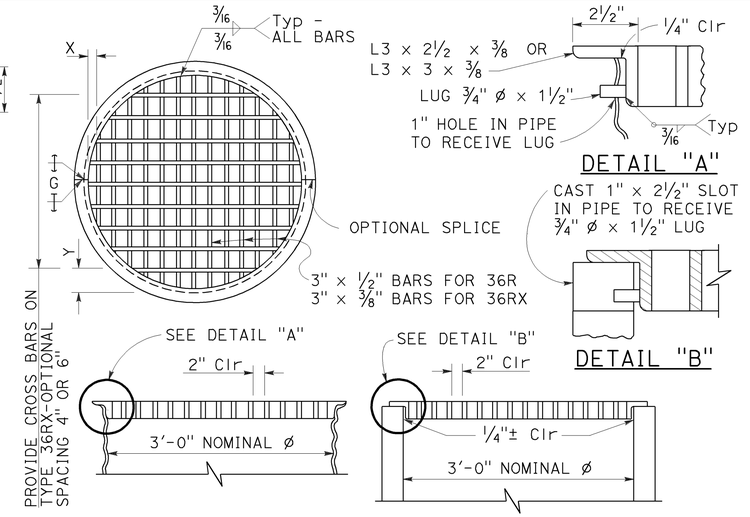

DETAIL "A"

DETAIL "B"

TYPE 36R AND 36RX GRATE DETAILS

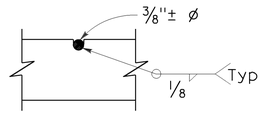

⅜"± ø Cross bars may be fillet welded, resistance welded or electroforged to bearing bars.

CROSS BAR DETAIL TYPE 36RX GRATE (WELDED STEEL)

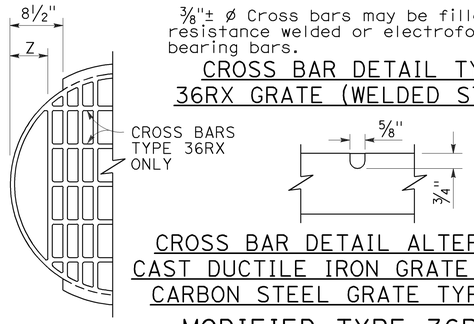

CROSS BAR DETAIL ALTERNATIVE CAST DUCTILE IRON GRATE OR CAST CARBON STEEL GRATE TYPE 36RX

MODIFIED TYPE 36R AND 36RX GRATE FOR ODI INLET

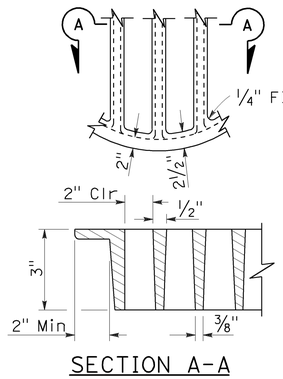

SECTION A-A

ALTERNATIVE CAST DUCTILE IRON GRATE OR CAST CARBON STEEL GRATE TYPE 36R AND 36RX

BASIS FOR Misc IRON AND STEEL FINAL PAY WEIGHTS FOR DRAINAGE INLETS

INLET TYPE	GRATE TYPE	No. OF GRATES	WEIGHT LB
GDO (SEE NOTE 4)	24-10C	2	391
	24-10S	2	456
	24-12X	2	473
	24-13	2	374
GO,GOL,G1,G2, G3,G4 (TYPE 24)	24-10C	1	202
	24-10S	1	229
	24-12X	1	239
	24-13	1	188
G4 (TYPE 18) G5,G6	18-8S	1	187
	18-9X	1	187
	18-10	1	149
GT1,GT2	18-8S	2	374
	18-9X	2	374
	18-10	2	298
GT3,GT4	24-10C	2	404
	24-10S	2	458
	24-12X	2	478
	24-13	2	376
ODI	36RX (Mod)	1	196
GMP,GCP,GCPI	36RX	1	215
ODI	36R (Mod)	1	220
GMP,GCP,GCPI	36R	1	236
TRASH RACK			22
GRATE CHAIN			3

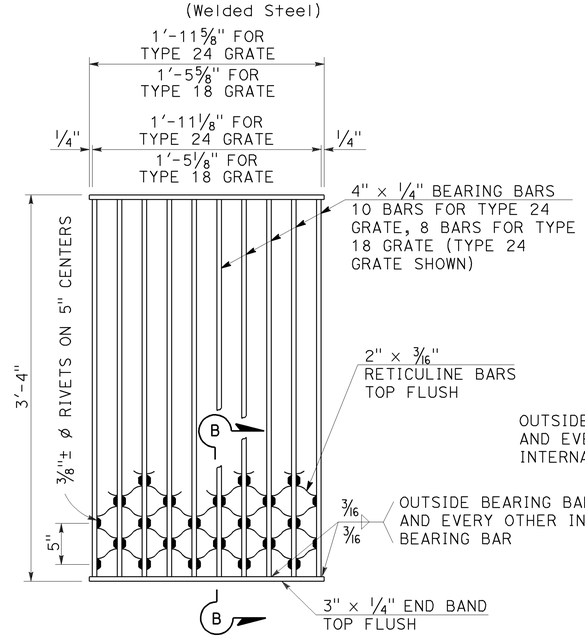

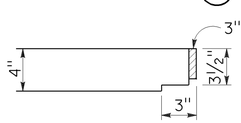

NOTES:

Weight of Type 24 grate = 182 LBS.
Weight of Type 18 grate = 145 LBS.

SECTION B-B

TYPE 18-8S AND 24-10S GRATE

(Welded Steel) Reticuline type

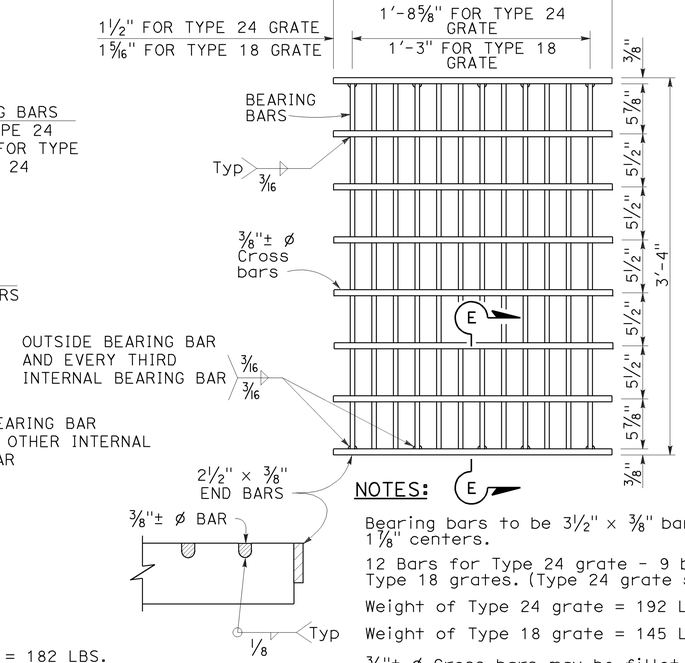

SECTION E-E

NOTES:

Bearing bars to be 3½" × ⅜" bars on 1⅞" centers.

12 Bars for Type 24 grate - 9 bars for Type 18 grates. (Type 24 grate shown).

Weight of Type 24 grate = 192 LBS.

Weight of Type 18 grate = 145 LBS.

⅜"± ø Cross bars may be fillet welded, resistance welded or electroforged to bearing bars.

TYPE 18-9X AND 24-12X GRATE

(Welded Steel)

NOTES:

1. When alternative grates are allowed - Final pay based on alternative with the lesser weight.
2. Use frame shown on Standard Plan D74A, D74B or RSP D77A as appropriate.
3. When Type 24-10S, 24-12X or 24-13 grates are used with GDO Inlets, a ¼" × 3½" × 3'-4⅞" steel bar shall be welded across the center of inlet frame to separate the individual grates.
4. See Revised Standard Plan RSP D77A for connecting chain to welded grate and frame. When chain is required, do not use cast ductile iron grate.

GRATE BAR SPACING TABLE

TYPE	No. OF BARS	CLEAR BAR SPACING	X	Y 4" SPACING	Y 6" SPACING	Z
36R	13	2"	2⅛"	-	-	-
36RX (STEEL)	15	2"	9/16"	3¾"	5¾"	-
36RX (CAST)	13	2"	2⅛"	3¾"	5¾"	-
36R Mod	12	2"	2⅛"	-	-	5"
36RX Mod (STEEL)	13	2"	9/16"	3¾"	5¾"	5 11/16"
36RX Mod (CAST)	12	2"	2⅛"	3¾"	5¾"	5"

STATE OF CALIFORNIA
DEPARTMENT OF TRANSPORTATION

GRATE DETAILS No. 2

NO SCALE

RSP D77B DATED APRIL 19, 2013 SUPERSEDES RSP D77B DATED JULY 20, 2012 AND STANDARD PLAN D77B DATED MAY 20, 2011 - PAGE 165 OF THE STANDARD PLANS BOOK DATED 2010.

REVISED STANDARD PLAN RSP D77B

4-4-13

Dist	COUNTY	ROUTE	POST MILES TOTAL PROJECT	SHEET No.	TOTAL SHEETS
01	Men	128	Var	49	50

Gregory A. Balzer
LICENSED LANDSCAPE ARCHITECT

July 19, 2013
PLANS APPROVAL DATE

LICENSED LANDSCAPE ARCHITECT
Gregory A. Balzer 2576
Renewal Date 2-28-15
Renewal Date 7-19-13
Date
STATE OF CALIFORNIA

THE STATE OF CALIFORNIA OR ITS OFFICERS OR AGENTS SHALL NOT BE RESPONSIBLE FOR THE ACCURACY OR COMPLETENESS OF SCANNED COPIES OF THIS PLAN SHEET.

TO ACCOMPANY PLANS DATED 2-2-15

A

AB	AGGREGATE BASE
ABS	ACRYLONITRILE-BUTADIENE-STYRENE
AC	ASPHALT CONCRETE
ACC	ARMOR-CLAD CONDUCTORS
Adj	ADJACENT/ADJUSTABLE
AIC	AUXILIARY IRRIGATION CONTROLLER
Alt	ALTERNATIVE
AMEND	AMENDMENT
ARV	AIR RELEASE VALVE
AUTO	AUTOMATIC
AUX	AUXILIARY
AVB	ATMOSPHERIC VACUUM BREAKER

B

B&B	BALLED AND BURLAPPED
B/B	BRASS/BRONZE
B/B/PL	BRASS/BRONZE/PLASTIC
B/PL	BRASS/PLASTIC
BFM	BONDED FIBER MATRIX
Bit Ctd	BITUMINOUS COATED
BP	BOOSTER PUMP
BPA	BACKFLOW PREVENTER ASSEMBLY
BPE	BACKFLOW PREVENTER ENCLOSURE
BV	BALL VALVE

C

C	CONDUIT
CAP	CORRUGATED ALUMINUM PIPE
CARV	COMBINATION AIR RELEASE VALVE
CB	COUPLING BAND
CCA	CAM COUPLER ASSEMBLY
CEC	CONTROLLER ENCLOSURE CABINET
CHDPE	CORRUGATED HIGH DENSITY POLYETHYLENE
CL	CHAIN LINK
CNC	CONTROL AND NEUTRAL CONDUCTORS
Conc	CONCRETE
CP	COPPER PIPE
CS	COMPOST SOCK
CSP	CORRUGATED STEEL PIPE
CST	CENTER STRIP
CV	CHECK VALVE

D

Dia	DIAMETER
DIP	DUCTILE IRON PIPE
DIT	DRIP IRRIGATION TUBING
DG	DECOMPOSED GRANITE
DN	DIAMETER NOMINAL
DVA	DRIP VALVE ASSEMBLY

E

EC	EROSION CONTROL
ECTC	EROSION CONTROL TECHNOLOGY COUNCIL
Elect	ELECTRIC/ELECTRICAL
Elev	ELEVATION
ELL	ELBOW
ENCL	ENCLOSURE
EP	EDGE OF PAVEMENT
ES	EDGE OF SHOULDER
EST	END STRIP
ESTB	ESTABLISHMENT
ETW	EDGE OF TRAVELED WAY

F

F	FULL CIRCLE
F/P	FULL/PART CIRCLE
FCV	FLOW CONTROL VALVE
FERT	FERTILIZER
FG	FINISHED GRADE
FH	FLEXIBLE HOSE
FIPT	FEMALE IRON PIPE THREAD
FIS	FERTILIZER INJECTOR SYSTEM
FL	FLOW LINE
FR	FIBER ROLL
FS	FLOW SENSOR
FSC	FLOW SENSOR CABLE
FV	FLUSH VALVE

G

Galv	GALVANIZED
GARV	GARDEN VALVE
GARVA	GARDEN VALVE ASSEMBLY
GM	GRAVEL MULCH
GPH	GALLONS PER HOUR
GPM	GALLONS PER MINUTE
GSP	GALVANIZED STEEL PIPE
GV	GATE VALVE

H

H	HALF CIRCLE
HDPE	HIGH DENSITY POLYETHYLENE
HP	HORSEPOWER/HINGE POINT
HPL	HIGH PRESSURE LINE
Hwy	HIGHWAY

I

IC	IRRIGATION CONTROLLER
ICC	IRRIGATION CONTROLLER(S) IN CONTROLLER ENCLOSURE CABINET
ID	INSIDE DIAMETER
IFS	IRRIGATION FILTRATION SYSTEM
IPS	IRON PIPE SIZE
IPT	IRON PIPE THREAD
Irr	IRRIGATION

L

L	LENGTH

M

Max	MAXIMUM
MBGR	METAL BEAM GUARD RAILING
MCV	MANUAL CONTROL VALVE
MIC	MASTER IRRIGATION CONTROLLER
Min	MINIMUM
MIPT	MALE IRON PIPE THREAD
Misc	MISCELLANEOUS
Mtl	MATERIAL
MVP	MAINTENANCE VEHICLE PULLOUT

N

NCN	NO COMMON NAME
NL	NOZZLE LINE
No.	NUMBER
NPT	NATIONAL PIPE THREAD

O

O/C	ON CENTER
OD	OUTSIDE DIAMETER
OL	OVERLAP

P

P	PART CIRCLE
PB	PULL BOX
PCC	PORTLAND CEMENT CONCRETE
PE	POLYETHYLENE
Pkt	PACKET
PL	PLASTIC
PLS	PURE LIVE SEED
PLT	PLANT/PLANTING
PLT ESTB	PLANT ESTABLISHMENT
PM	POST MILE
PR	PRESSURE RATED
PRLV	PRESSURE RELIEF VALVE
PRV	PRESSURE REGULATING VALVE
PVC	POLYVINYL CHLORIDE
Pvmt	PAVEMENT

Q

Q	QUARTER CIRCLE
QCV	QUICK COUPLING VALVE

R

R	RADIUS
RCP	REINFORCED CONCRETE PIPE
RCV	REMOTE CONTROL VALVE
RCVM	REMOTE CONTROL VALVE (MASTER)
RCVMF	REMOTE CONTROL VALVE (MASTER) W/FLOW SENSOR
RCVP	REMOTE CONTROL VALVE W/PRESSURE REGULATOR
RCW	RECYCLED WATER
RECP	ROLLED EROSION CONTROL PRODUCT
REQ	REQUIRED
RICS	REMOTE IRRIGATION CONTROL SYSTEM
R/W	RIGHT OF WAY

S

S	SLIP
SCH	SCHEDULE
SF	STATE-FURNISHED
Shld	SHOULDER
Sq	SQUARE
SST	SIDE STRIP
Sta	STATION
Std	STANDARD
SW	SIDEWALK/SOUND WALL

T

T	THIRD CIRCLE/THREAD
TLS	TRUCK LOADING STANDPIPE
TQ	THREE QUARTER CIRCLE
TRM	TURF REINFORCEMENT MAT
TT	TWO-THIRDS CIRCLE
TWSA	TREE WELL SPRINKLER ASSEMBLY
Typ	TYPICAL

U

UG	UNDERGROUND

W

W	WIDTH
W/	WITH
WM	WATER METER
WS	WYE STRAINER
WSA	WYE STRAINER ASSEMBLY
WSP	WELDED STEEL PIPE
WWM	WELDED WIRE MESH

NOTE:

For additional abbreviations, see Standard Plans A10A and A10B.

STATE OF CALIFORNIA
DEPARTMENT OF TRANSPORTATION

LANDSCAPE AND EROSION CONTROL ABBREVIATIONS

NO SCALE

RSP H1 DATED JULY 19, 2013 SUPERSEDES STANDARD PLAN H1 DATED MAY 20, 2011 - PAGE 218 OF THE STANDARD PLANS BOOK DATED 2010.

REVISED STANDARD PLAN RSP H1

2010 REVISED STANDARD PLAN RSP H1

6-28-13

Dist	COUNTY	ROUTE	POST MILES TOTAL PROJECT	SHEET No.	TOTAL SHEETS
01	Men	128	Var	50	50

REGISTERED CIVIL ENGINEER

July 19, 2013
PLANS APPROVAL DATE

REGISTERED PROFESSIONAL ENGINEER Gurinderpal Bhullar No. C48815 Exp. 9-30-14 CIVIL STATE OF CALIFORNIA

THE STATE OF CALIFORNIA OR ITS OFFICERS OR AGENTS SHALL NOT BE RESPONSIBLE FOR THE ACCURACY OR COMPLETENESS OF SCANNED COPIES OF THIS PLAN SHEET.

TO ACCOMPANY PLANS DATED 2-2-15

TABLE 1

TAPER LENGTH CRITERIA AND CHANNELIZING DEVICE SPACING

SPEED (S)	MINIMUM TAPER LENGTH * FOR WIDTH OF OFFSET 12 FEET (W)				MAXIMUM CHANNELIZING DEVICE SPACING		
					X	Y	Z **
	TANGENT 2L	MERGING L	SHIFTING L/2	SHOULDER L/3	TAPER	TANGENT	CONFLICT
mph	ft	ft	ft	ft	ft	ft	ft
20	160	80	40	27	20	40	10
25	250	125	63	42	25	50	12
30	360	180	90	60	30	60	15
35	490	245	123	82	35	70	17
40	640	320	160	107	40	80	20
45	1080	540	270	180	45	90	22
50	1200	600	300	200	50	100	25
55	1320	660	330	220	55	110	27
60	1440	720	360	240	60	120	30
65	1560	780	390	260	65	130	32
70	1680	840	420	280	70	140	35

* - For other offsets, use the following merging taper length formula for L:
For speed of 40 mph or less, $L = WS^2/60$
For speed of 45 mph or more, $L = WS$

Where: L = Taper length in feet
W = Width of offset in feet
S = Posted speed limit, off-peak 85th-percentile speed prior to work starting, or the anticipated operating speed in mph

** - Use for taper and tangent sections where there are no pavement markings or where there is a conflict between existing pavement markings and channelizers (CA).

TABLE 2

LONGITUDINAL BUFFER SPACE AND FLAGGER STATION SPACING

SPEED *	Min D **	DOWNGRADE Min D ***		
		-3%	-6%	-9%
mph	ft	ft	ft	ft
20	115	116	120	126
25	155	158	165	173
30	200	205	215	227
35	250	257	271	287
40	305	315	333	354
45	360	378	400	427
50	425	446	474	507
55	495	520	553	593
60	570	598	638	686
65	645	682	728	785
70	730	771	825	891

* - Speed is posted speed limit, off-peak 85th-percentile speed prior to work starting, or the anticipated operating speed in mph

** - Longitudinal buffer space or flagger station spacing

*** - Use on sustained downgrade steeper than -3 percent and longer than 1 mile.

TABLE 3

ADVANCE WARNING SIGN SPACING

ROAD TYPE	DISTANCE BETWEEN SIGNS *		
	A	B	C
	ft	ft	ft
URBAN - 25 mph OR LESS	100	100	100
URBAN - MORE THAN 25 mph TO 40 mph	250	250	250
URBAN - MORE THAN 40 mph	350	350	350
RURAL	500	500	500
EXPRESSWAY / FREEWAY	1000	1500	2640

* - The distances are approximate, are intended for guidance purposes only, and should be applied with engineering judgment. These distances should be adjusted by the Engineer for field conditions, if necessary, by increasing or decreasing the recommmended distances.

STATE OF CALIFORNIA
DEPARTMENT OF TRANSPORTATION

TRAFFIC CONTROL SYSTEM TABLES FOR LANE AND RAMP CLOSURES

NO SCALE

RSP T9 DATED JULY 19, 2013 SUPERSEDES RSP T9 DATED APRIL 19, 2013 THAT SUPPLEMENTS THE STANDARD PLANS BOOK DATED 2010.

REVISED STANDARD PLAN RSP T9

2010 REVISED STANDARD PLAN RSP T9

4-30-13