Dist	COUNTY	ROUTE	POST MILES TOTAL PROJECT	SHEET No.	TOTAL SHEETS
01	Men	101	52.1/52.6	1	54

STATE OF CALIFORNIA

DEPARTMENT OF TRANSPORTATION

ACNH-Q101(299)E

PROJECT PLANS FOR CONSTRUCTION ON

STATE HIGHWAY

IN MENDOCINO COUNTY
NEAR WILLITS
FROM 1.3 MILES NORTH OF REYNOLDS HIGHWAY
TO 0.1 MILE NORTH OF RYAN CREEK ROAD

TO BE SUPPLEMENTED BY STANDARD PLANS DATED 2010

INDEX OF PLANS

SHEET No.	DESCRIPTION
1	TITLE AND LOCATION MAP
2	TYPICAL CROSS SECTIONS
3	LAYOUTS
4	PROFILES AND SUPERELEVATION DIAGRAM
5-6	CONSTRUCTION DETAILS
7-11	TEMPORARY WATER POLLUTION CONTROL PLANS, DETAILS AND QUANTITIES
12-15	CONTOUR GRADING PLANS
16-29	DRAINAGE PLANS, PROFILES, DETAILS AND QUANTITIES
30	CONSTRUCTION AREA SIGNS
31-33	STAGE CONSTRUCTION PLANS
34	TRAFFIC HANDLING PLAN
35	PAVEMENT DELINEATION QUANTITIES
36	SUMMARY OF QUANTITIES
37-44	EROSION CONTROL LEGEND, PLANS, DETAILS AND QUANTITIES
45-54	REVISED STANDARD PLANS

THE STANDARD PLANS LIST APPLICABLE TO THIS CONTRACT IS INCLUDED IN THE NOTICE TO BIDDERS AND SPECIAL PROVISIONS BOOK.

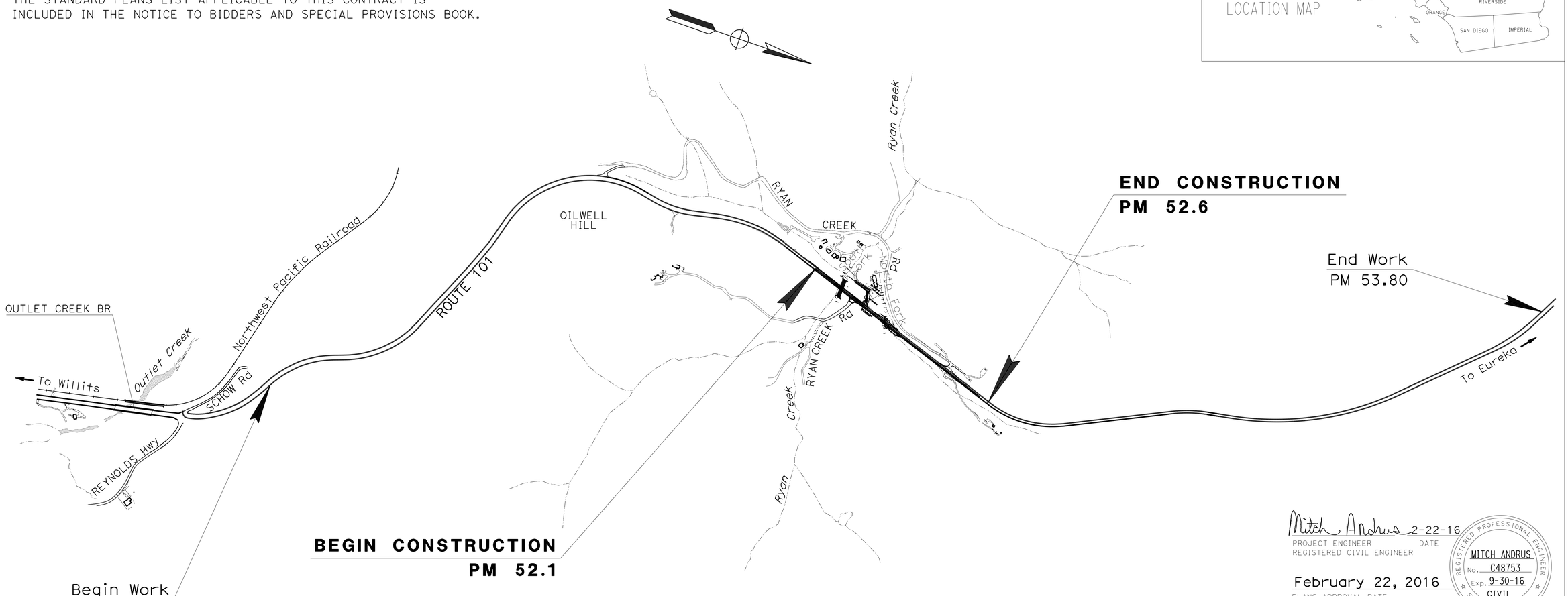

NO SCALE

Mitch Andrus 2-22-16
PROJECT ENGINEER DATE
REGISTERED CIVIL ENGINEER

February 22, 2016
PLANS APPROVAL DATE

REGISTERED PROFESSIONAL ENGINEER
MITCH ANDRUS
No. C48753
Exp. 9-30-16
CIVIL
STATE OF CALIFORNIA

THE STATE OF CALIFORNIA OR ITS OFFICERS OR AGENTS SHALL NOT BE RESPONSIBLE FOR THE ACCURACY OR COMPLETENESS OF SCANNED COPIES OF THIS PLAN SHEET.

PROJECT MANAGER MAURICIO SERRANO

DESIGN MANAGER DOUGLAS S. JONES

THE CONTRACTOR SHALL POSSESS THE CLASS (OR CLASSES) OF LICENSE AS SPECIFIED IN THE "NOTICE TO BIDDERS."

CONTRACT No.	01-262014
PROJECT ID	0112000205

LAST REVISION 02-16-16

DATE PLOTTED => 05-MAY-2016
TIME PLOTTED => 13:01

Dist	COUNTY	ROUTE	POST MILES TOTAL PROJECT	SHEET No.	TOTAL SHEETS
01	Men	101	52.1/52.6	2	54

Mitch Andrus 2-22-16
REGISTERED CIVIL ENGINEER DATE

2-22-16
PLANS APPROVAL DATE

REGISTERED PROFESSIONAL ENGINEER
MITCH ANDRUS
No. C48753
Exp. 09-30-16
CIVIL
STATE OF CALIFORNIA

THE STATE OF CALIFORNIA OR ITS OFFICERS OR AGENTS SHALL NOT BE RESPONSIBLE FOR THE ACCURACY OR COMPLETENESS OF SCANNED COPIES OF THIS PLAN SHEET.

NOTES:

1. DIMENSIONS OF THE PAVEMENT STRUCTURES (STRUCTURAL SECTIONS) ARE SUBJECT TO TOLERANCES SPECIFIED IN THE STANDARD SPECIFICATIONS.
2. SUPERELEVATION ARE SHOWN ON THE SUPERELEVATION DIAGRAMS.

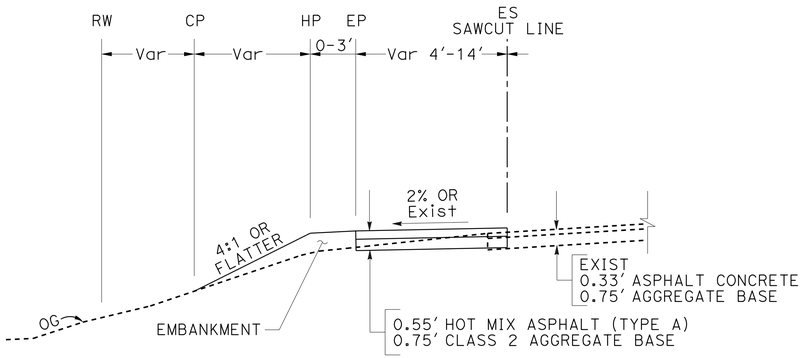

ROUTE 101
"M" LINE
Sta "M" 762+10.00 TO M" 762+91.00
Sta "M" 763+88.00 TO M" 764+79.00

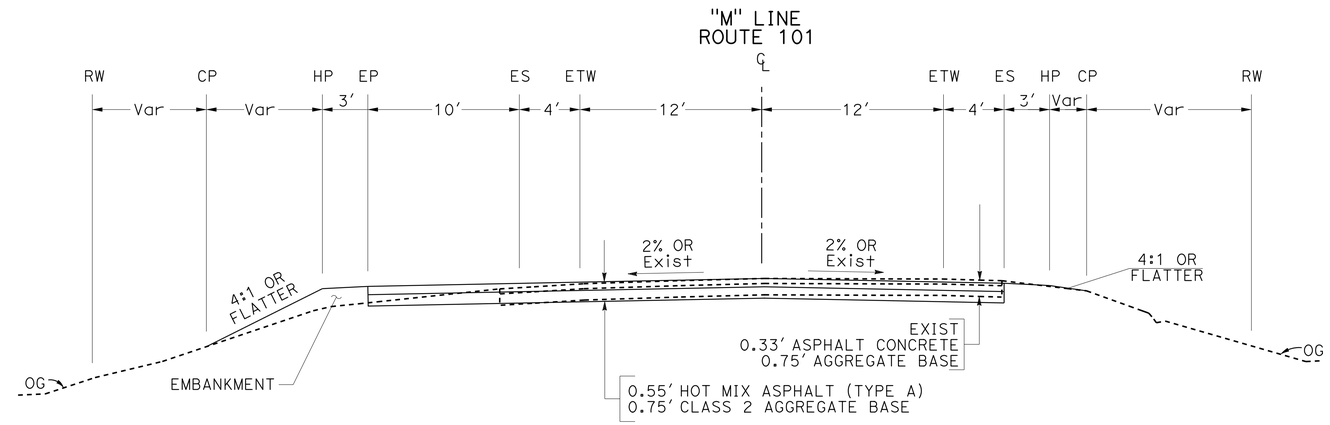

ROUTE 101
"M" LINE
Sta "M" 762+91.00 TO M" 764+09.70

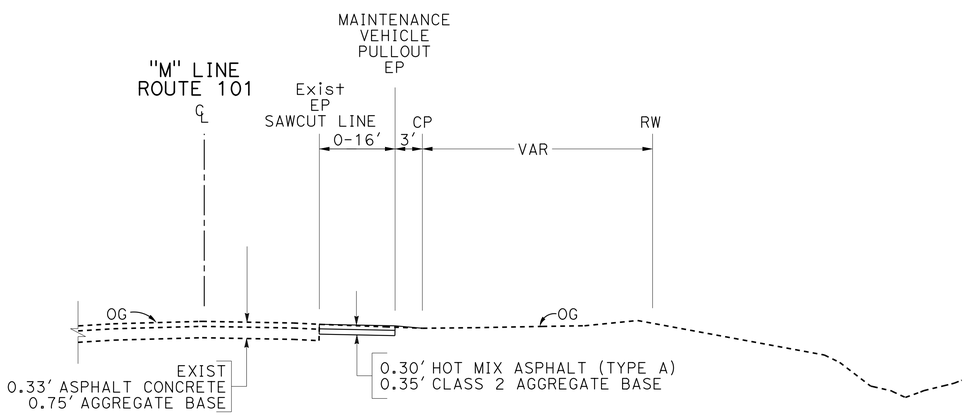

ROUTE 101
"M" LINE
MAINTENANCE VEHICLE PULLOUT
Sta "M" 763+76 TO M" 765+62

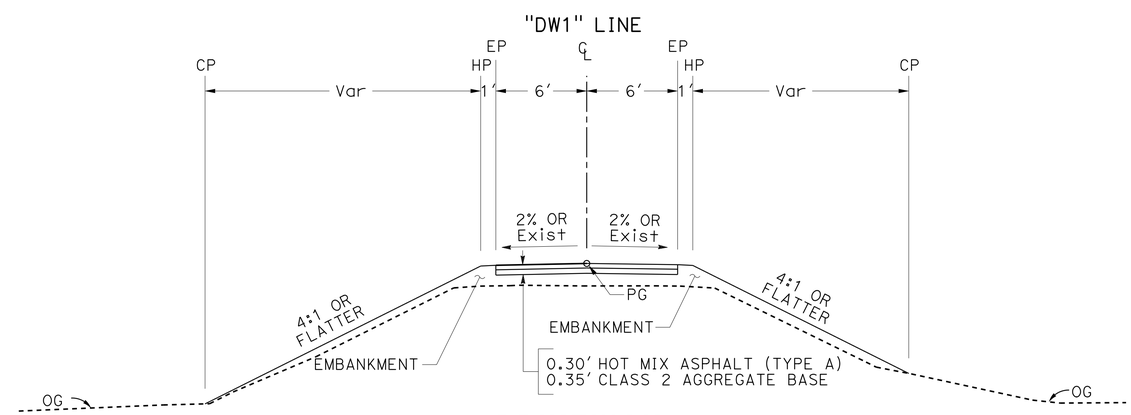

DRIVEWAY
"DW1" LINE
Sta "DW1" 6+90.00 TO "DW1" 9+84.00

TYPICAL CROSS SECTION

NO SCALE

X-1

REVISED BY	DATE REVISED
KARA L. BRIMHALL	MITCH ANDRUS
CALCULATED-DESIGNED BY	CHECKED BY
FUNCTIONAL SUPERVISOR	DOUGLAS S. JONES

STATE OF CALIFORNIA - DEPARTMENT OF TRANSPORTATION
Caltrans
03-DESIGN

LAST REVISION 01-20-16 | DATE PLOTTED => 25-APR-2016 | TIME PLOTTED => 14:16

Dist	COUNTY	ROUTE	POST MILES TOTAL PROJECT	SHEET No.	TOTAL SHEETS
01	Men	101	52.1/52.6	3	54

Mitch Andrus 2-22-16
REGISTERED CIVIL ENGINEER DATE

2-22-16
PLANS APPROVAL DATE

REGISTERED PROFESSIONAL ENGINEER
MITCH ANDRUS
No. C48753
Exp. 09-30-16
CIVIL
STATE OF CALIFORNIA

THE STATE OF CALIFORNIA OR ITS OFFICERS OR AGENTS SHALL NOT BE RESPONSIBLE FOR THE ACCURACY OR COMPLETENESS OF SCANNED COPIES OF THIS PLAN SHEET.

NOTE:

1. FOR ACCURATE RIGHT OF WAY DATA, CONTACT RIGHT OF WAY ENGINEERING AT THE DISTRICT OFFICE.
2. UTILITIES WILL BE RELOCATED FROM LEFT OF STA "M" 754+85 TO LEFT OF STA "M" 761+29 PRIOR TO CONSTRUCTION. ALL OTHER UTILITIES TO REMAIN IN PLACE.

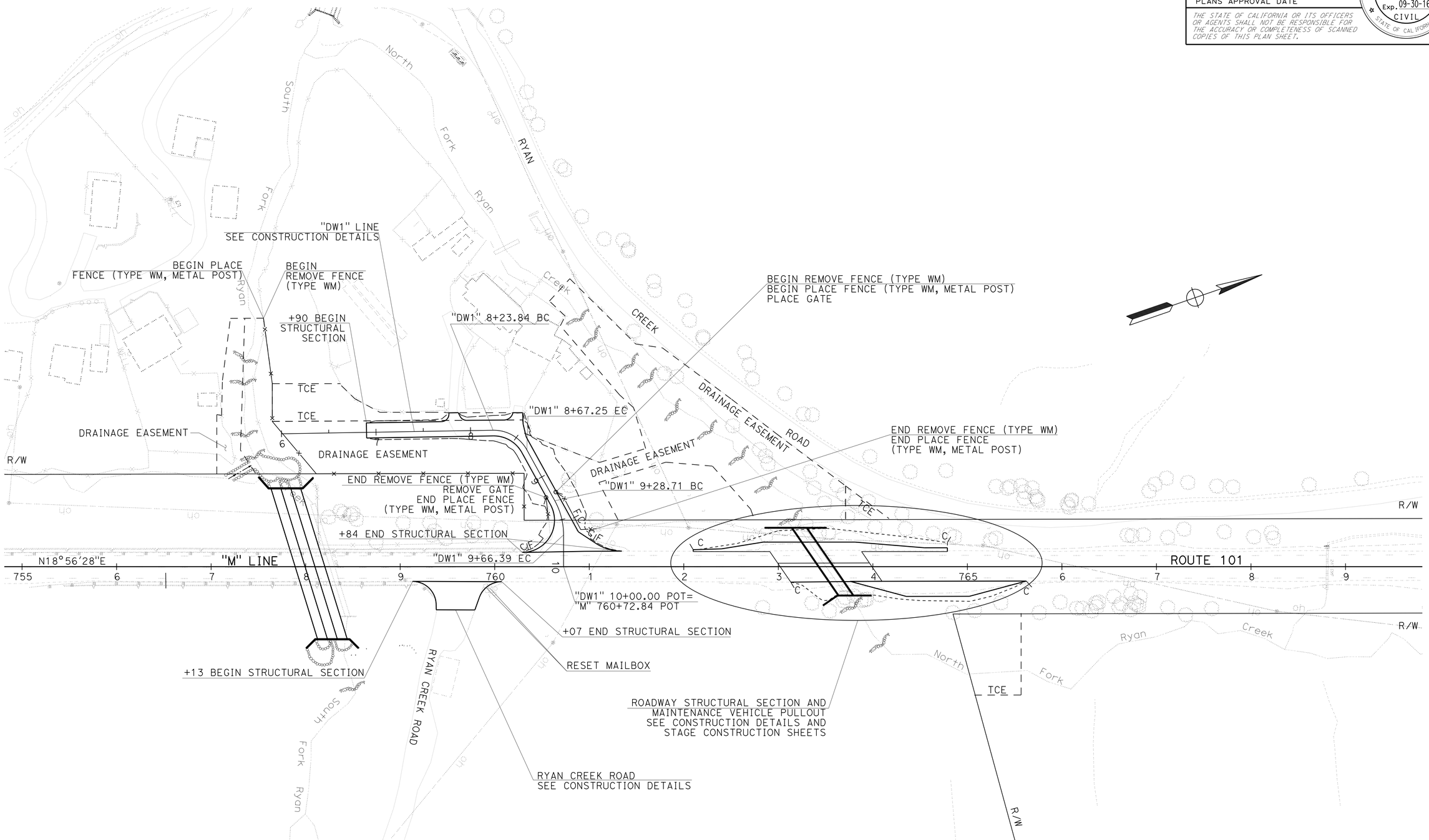

LAYOUT

SCALE 1"=50'

L-1

STATE OF CALIFORNIA - DEPARTMENT OF TRANSPORTATION
03-DESIGN

FUNCTIONAL SUPERVISOR	CALCULATED-DESIGNED BY	REVISED BY	KARA L. BRIMHALL
DOUGLAS S. JONES	CHECKED BY	DATE REVISED	MITCH ANDRUS

LAST REVISION 02-16-16 | DATE PLOTTED => 25-APR-2016 | TIME PLOTTED => 14:16

Dist	COUNTY	ROUTE	POST MILES TOTAL PROJECT	SHEET No.	TOTAL SHEETS
01	Men	101	52.1/52.6	4	54

Mitch Andrus 2-22-16
REGISTERED CIVIL ENGINEER DATE

2-22-16
PLANS APPROVAL DATE

REGISTERED PROFESSIONAL ENGINEER
MITCH ANDRUS
No. C48753
Exp. 09-30-16
CIVIL
STATE OF CALIFORNIA

THE STATE OF CALIFORNIA OR ITS OFFICERS OR AGENTS SHALL NOT BE RESPONSIBLE FOR THE ACCURACY OR COMPLETENESS OF SCANNED COPIES OF THIS PLAN SHEET.

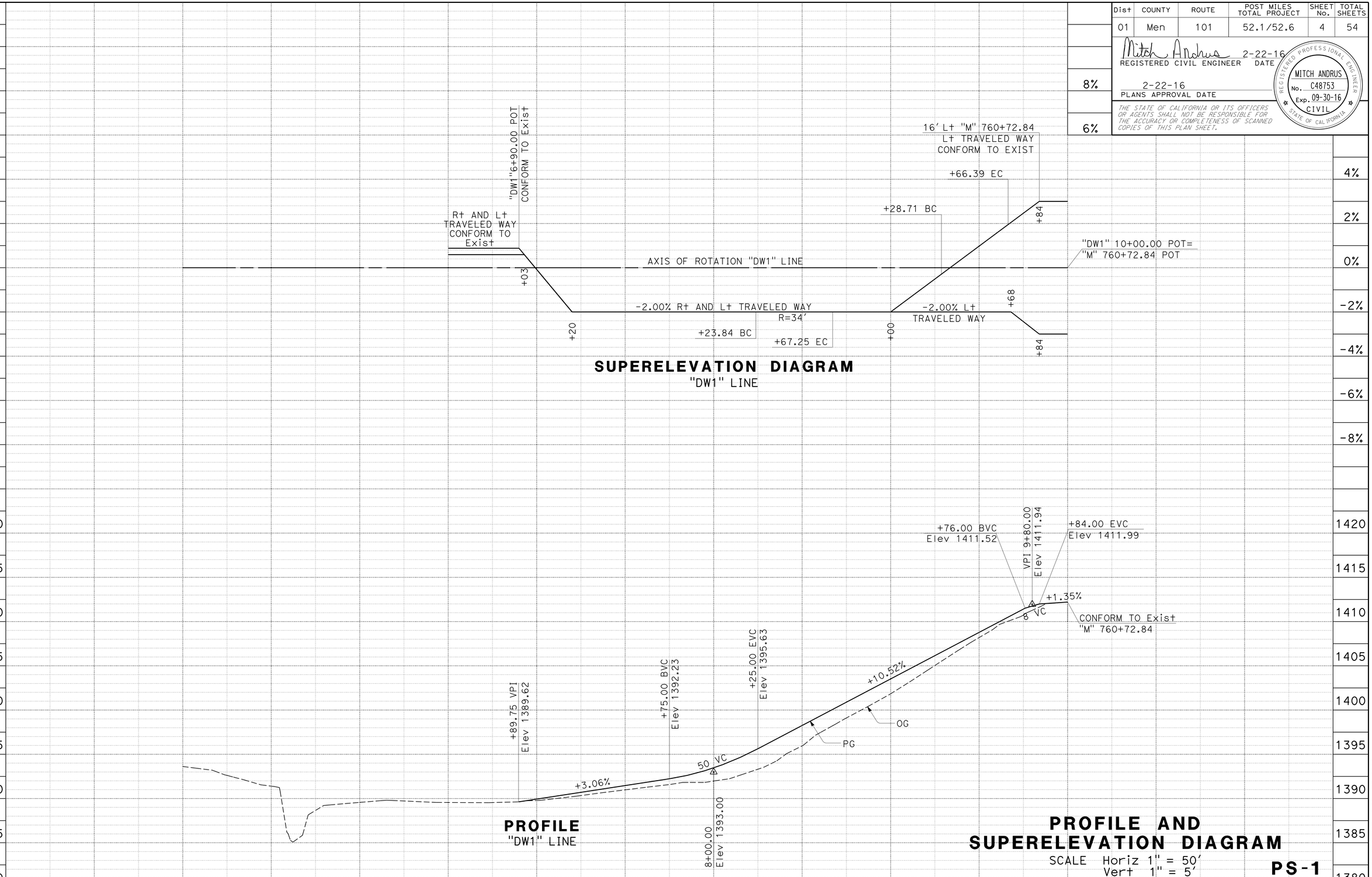

STATE OF CALIFORNIA - DEPARTMENT OF TRANSPORTATION
03-DESIGN
Caltrans

FUNCTIONAL SUPERVISOR: DOUGLAS S. JONES
CALCULATED-DESIGNED BY: KARA L. BRIMHALL
CHECKED BY: MITCH ANDRUS
REVISED BY
DATE REVISED

LAST REVISION 02-16-16
DATE PLOTTED => 25-APR-2016
TIME PLOTTED => 14:16

Dist	COUNTY	ROUTE	POST MILES TOTAL PROJECT	SHEET No.	TOTAL SHEETS
01	Men	101	52.1/52.6	5	54

Mitch Andrus 2-22-16
REGISTERED CIVIL ENGINEER DATE

2-22-16
PLANS APPROVAL DATE

REGISTERED PROFESSIONAL ENGINEER MITCH ANDRUS No. C48753 Exp. 09-30-16 CIVIL STATE OF CALIFORNIA

THE STATE OF CALIFORNIA OR ITS OFFICERS OR AGENTS SHALL NOT BE RESPONSIBLE FOR THE ACCURACY OR COMPLETENESS OF SCANNED COPIES OF THIS PLAN SHEET.

NOTES:

1. FOR ACCURATE RIGHT OF WAY DATA, CONTACT RIGHT OF WAY ENGINEERING AT THE DISTRICT OFFICE.
2. ELEVATIONS ARE BASED ON 1929 (ASSUMED) NATIONAL GEODETIC VERTICAL DATUM.

CURVE DATA

No. ⊕	R	Δ	T	L
1	8.00′	91°38′55"	8.23′	12.80′
2	8.00′	65°05′57"	5.11′	9.09′
3	34.00′	62°10′35"	20.50′	36.90′
4	10.00′	76°44′10"	7.92′	13.39′
5	34.00′	118°46′44"	57.47′	70.48′
6	50.00′	33°14′57"	14.93′	29.02′

LEGEND:

OFFSET
STATION
ELEVATION

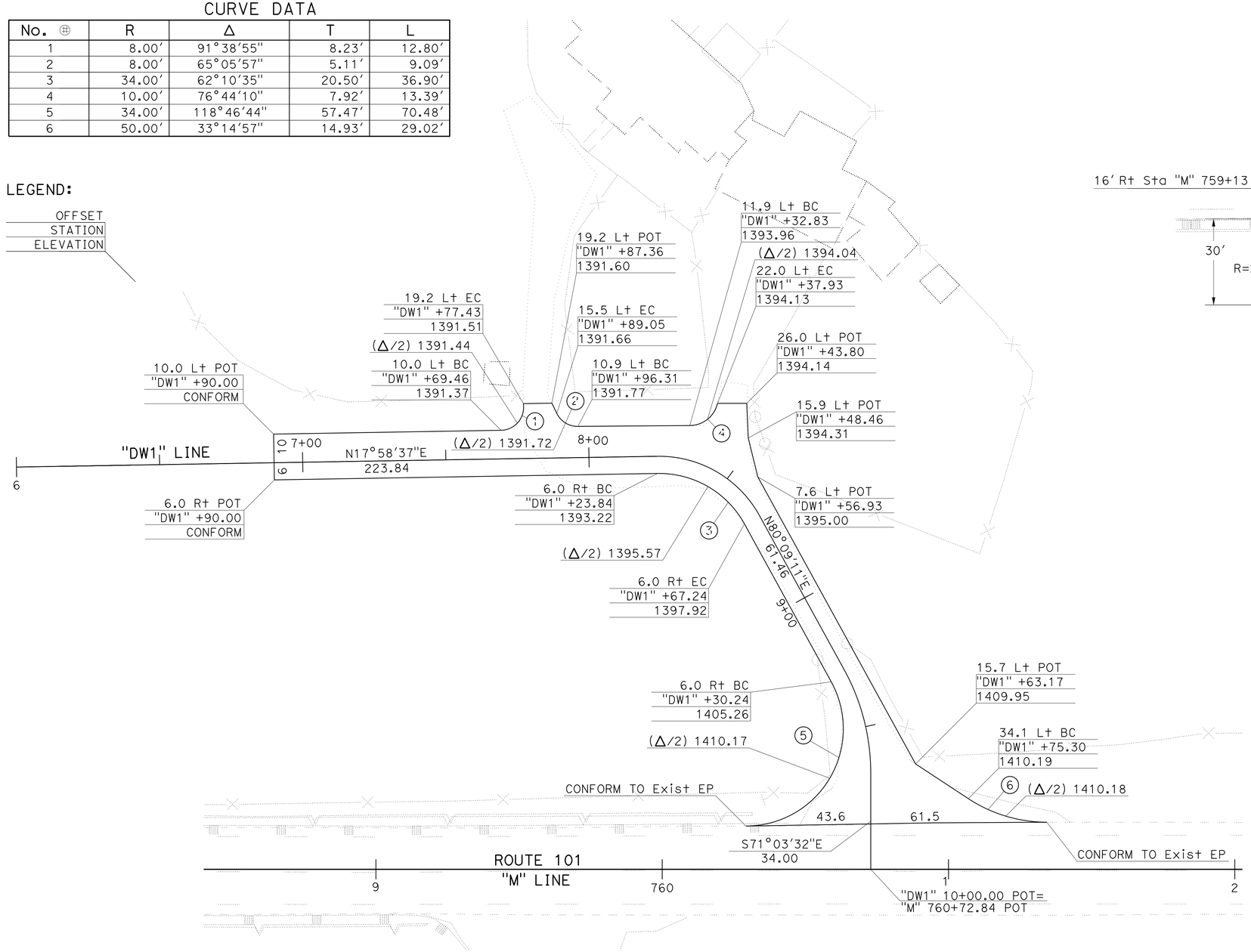

DW1 LINE
PAVEMENT ELEVATIONS
SCALE 1"=20′

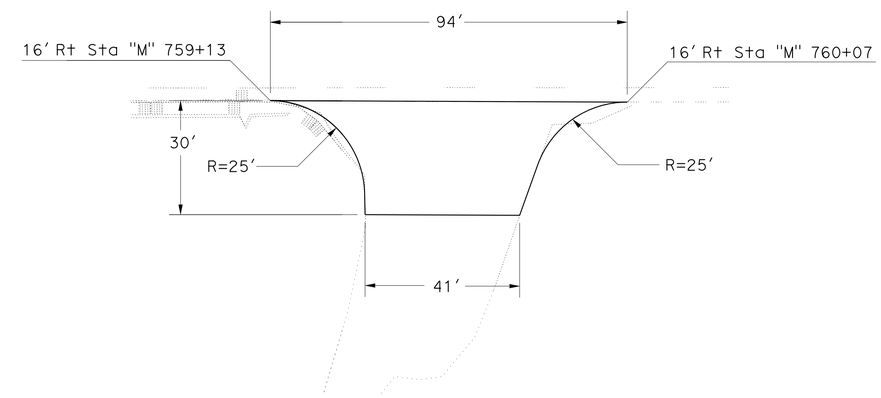

RYAN CREEK ROAD
PLAN
SCALE 1"=20′

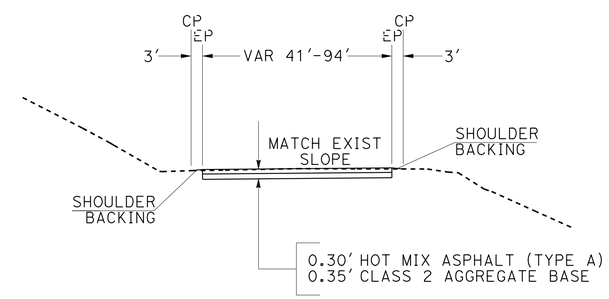

RYAN CREEK ROAD
TYPICAL SECTION
NO SCALE

CONSTRUCTION DETAILS

C-1

STATE OF CALIFORNIA - DEPARTMENT OF TRANSPORTATION
03-DESIGN
FUNCTIONAL SUPERVISOR: DOUGLAS S. JONES
CALCULATED-DESIGNED BY: KARA L. BRIMHALL
CHECKED BY: MITCH ANDRUS
REVISED BY
DATE REVISED

LAST REVISION 02-16-16
DATE PLOTTED => 25-APR-2016
TIME PLOTTED => 14:16

Dist	COUNTY	ROUTE	POST MILES TOTAL PROJECT	SHEET No.	TOTAL SHEETS
01	Men	101	52.1/52.6	6	54

Mitch Andrus 2-22-16
REGISTERED CIVIL ENGINEER DATE

2-22-16
PLANS APPROVAL DATE

REGISTERED PROFESSIONAL ENGINEER
MITCH ANDRUS
No. C48753
Exp. 09-30-16
CIVIL
STATE OF CALIFORNIA

THE STATE OF CALIFORNIA OR ITS OFFICERS OR AGENTS SHALL NOT BE RESPONSIBLE FOR THE ACCURACY OR COMPLETENESS OF SCANNED COPIES OF THIS PLAN SHEET.

NOTES:

1. FOR ACCURATE RIGHT OF WAY DATA, CONTACT RIGHT OF WAY ENGINEERING AT THE DISTRICT OFFICE.
2. ELEVATIONS ARE BASED ON 1929 (ASSUMED) NATIONAL GEODETIC VERTICAL DATUM.

LEGEND:

LIMIT OF NEW STRUCTURAL SECTION

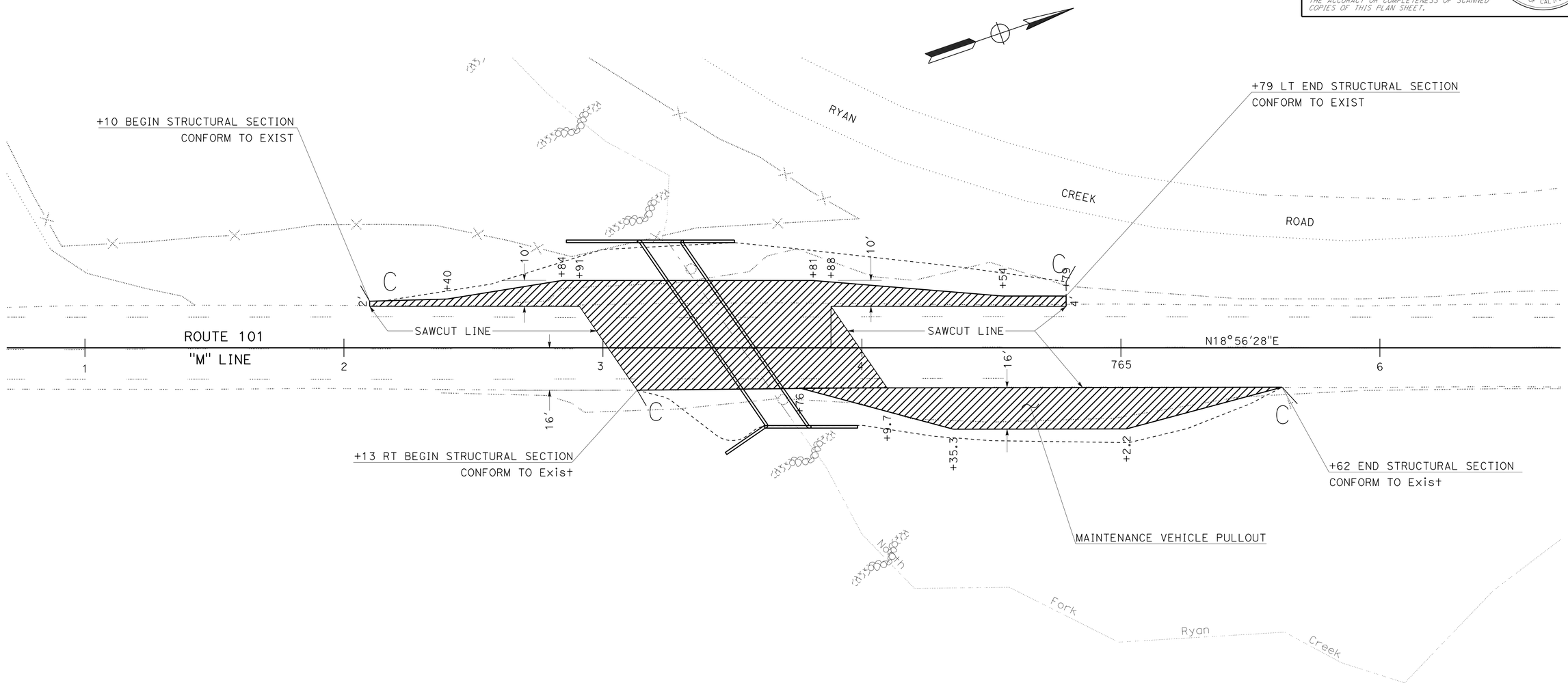

CONSTRUCTION DETAILS

SCALE 1"=20'

C-2

STATE OF CALIFORNIA - DEPARTMENT OF TRANSPORTATION
Caltrans
03-DESIGN

FUNCTIONAL SUPERVISOR: DOUGLAS S. JONES
CALCULATED-DESIGNED BY: KARA L. BRIMHALL
CHECKED BY: MITCH ANDRUS
REVISED BY
DATE REVISED

LAST REVISION 02-16-16
DATE PLOTTED => 25-APR-2016
TIME PLOTTED => 14:16

Dist	COUNTY	ROUTE	POST MILES TOTAL PROJECT	SHEET No.	TOTAL SHEETS
01	Men	101	52.1/52.6	7	54

Mitch Andrus 2-22-16
REGISTERED CIVIL ENGINEER DATE

2-22-16
PLANS APPROVAL DATE

REGISTERED PROFESSIONAL ENGINEER MITCH ANDRUS No. C48753 Exp. 09-30-16 CIVIL STATE OF CALIFORNIA

THE STATE OF CALIFORNIA OR ITS OFFICERS OR AGENTS SHALL NOT BE RESPONSIBLE FOR THE ACCURACY OR COMPLETENESS OF ELECTRONIC COPIES OF THIS PLAN SHEET.

NOTES:
1. THIS PLAN ACCURATE FOR TEMPORARY WATER POLLUTION CONTROL WORK ONLY.
2. FOR ACCURATE RIGHT OF WAY DATA, CONTACT RIGHT OF WAY ENGINEERING AT THE DISTRICT OFFICE.

LEGEND
DW — DEWATERING OPERATION
DIV — CLEAR WATER DIVERSION
SCE — STABILIZED CONSTRUCTION ENTRANCE

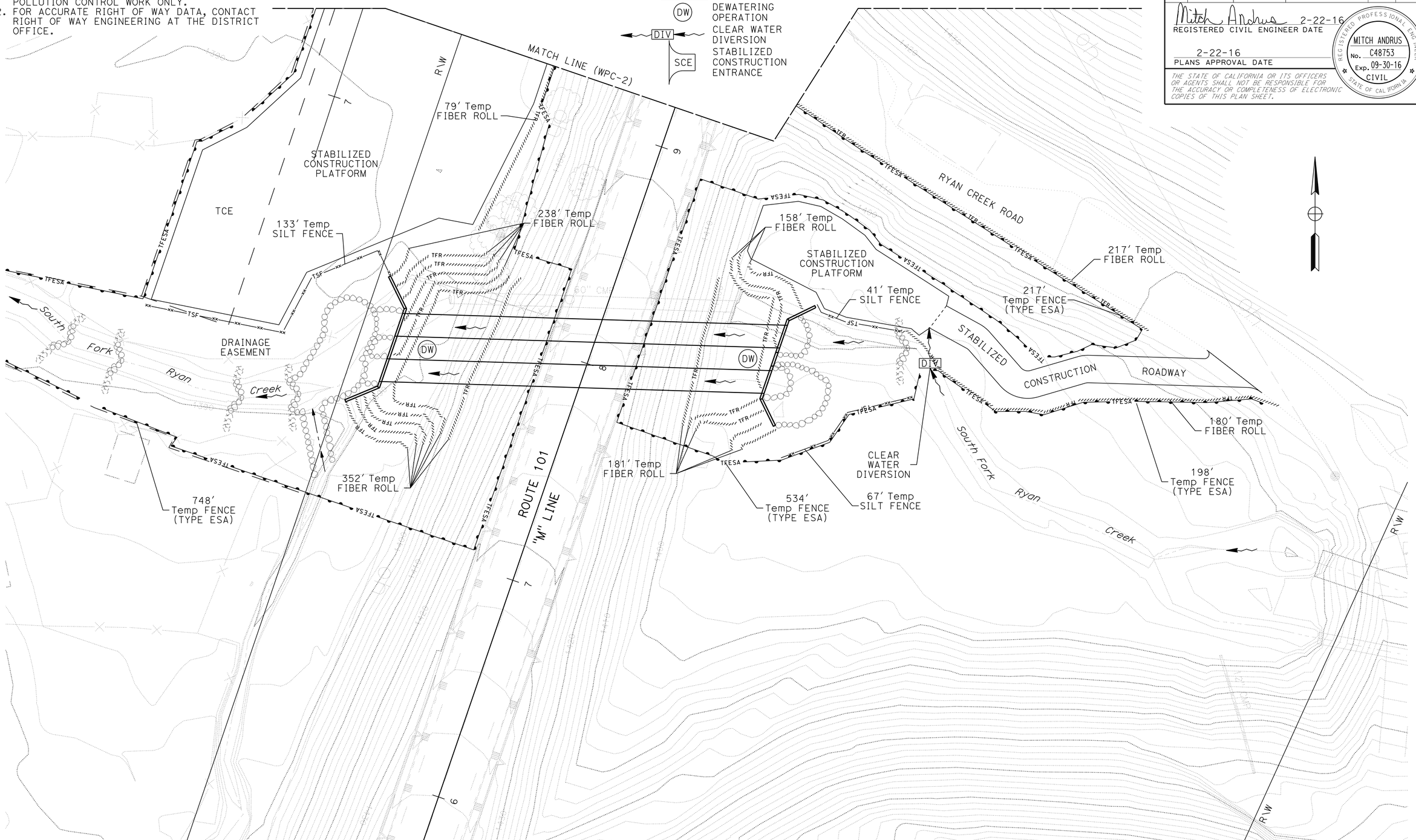

TEMPORARY WATER POLLUTION CONTROL PLAN

SCALE 1" = 20'

WPC-1

REVISED BY | DATE REVISED
S FOSTER | R MIRANDA
CALCULATED-DESIGNED BY | CHECKED BY
FUNCTIONAL SUPERVISOR: DOUGLAS S. JONES

STATE OF CALIFORNIA - DEPARTMENT OF TRANSPORTATION
Caltrans
03-DESIGN

FILE PATH => P:\proj5\01\26201\drafting\01120002051gb001.dgn

LAST REVISION 09-01-15 | DATE PLOTTED => 25-APR-2016 | TIME PLOTTED => 14:16

BORDER LAST REVISED 7/2/2010 | USERNAME => s119538 | DGN FILE => 01120002051gb001.dgn | RELATIVE BORDER SCALE IS IN INCHES 0 20 40 60 | UNIT 0307 | PROJECT NUMBER & PHASE 01120002051

Dist	COUNTY	ROUTE	POST MILES TOTAL PROJECT	SHEET No.	TOTAL SHEETS
01	Men	101	52.1/52.6	8	54

Mitch Andrus 2-22-16
REGISTERED CIVIL ENGINEER DATE

2-22-16
PLANS APPROVAL DATE

REGISTERED PROFESSIONAL ENGINEER
MITCH ANDRUS
No. C48753
Exp. 09-30-16
CIVIL
STATE OF CALIFORNIA

THE STATE OF CALIFORNIA OR ITS OFFICERS OR AGENTS SHALL NOT BE RESPONSIBLE FOR THE ACCURACY OR COMPLETENESS OF ELECTRONIC COPIES OF THIS PLAN SHEET.

NOTES:

1. THIS PLAN ACCURATE FOR TEMPORARY WATER POLLUTION CONTROL WORK ONLY.
2. FOR ACCURATE RIGHT OF WAY DATA, CONTACT RIGHT OF WAY ENGINEERING AT THE DISTRICT OFFICE.
3. THE TWO STABILIZED CONSTRUCTION ENTRANCES ON THIS SHEET WILL HAVE LOCAL TRAFFIC ON THEM. THE CONTRACTOR WILL SUBMIT TO THE ENGINEER PLANS FOR APPROVAL SHOWING HOW THIS IS TO BE DONE.

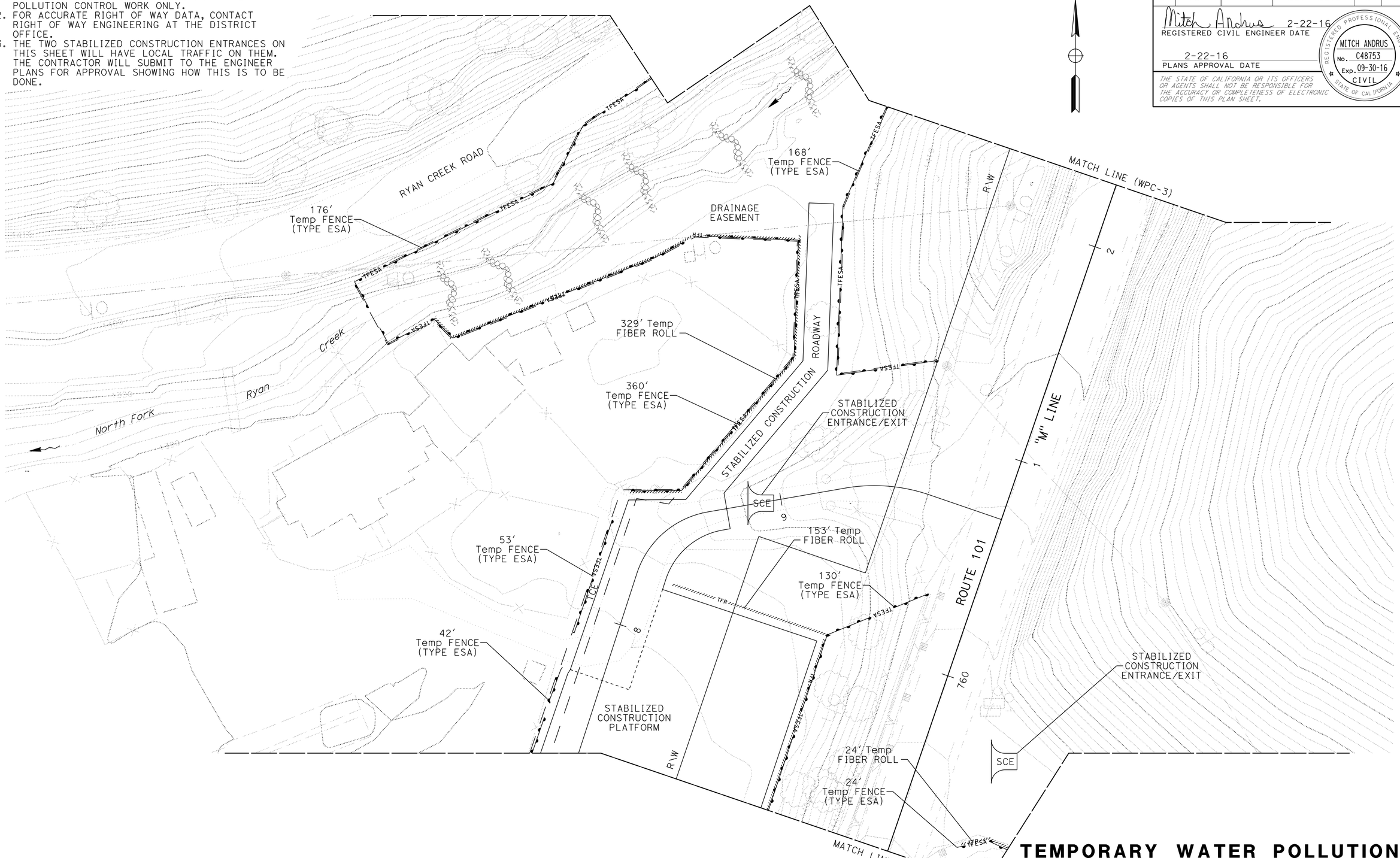

TEMPORARY WATER POLLUTION CONTROL PLAN

SCALE 1" = 20′

WPC-2

REVISED BY | DATE REVISED
S FOSTER | R MIRANDA
CALCULATED-DESIGNED BY | CHECKED BY
FUNCTIONAL SUPERVISOR: DOUGLAS S. JONES

STATE OF CALIFORNIA - DEPARTMENT OF TRANSPORTATION
Caltrans
03-DESIGN

FILE PATH => P:\proj5\01\26201\drafting\0112000205gb002.dgn

LAST REVISION 09-01-15 | DATE PLOTTED => 25-APR-2016 | TIME PLOTTED => 14:16

BORDER LAST REVISED 7/2/2010 | USERNAME => s119538 | DGN FILE => 0112000205gb002.dgn | RELATIVE BORDER SCALE IS IN INCHES 0 20 40 60 | UNIT 0307 | PROJECT NUMBER & PHASE 01120002051

Dist	COUNTY	ROUTE	POST MILES TOTAL PROJECT	SHEET No.	TOTAL SHEETS
01	Men	101	52.1/52.6	9	54

Mitch Andrus 2-22-16
REGISTERED CIVIL ENGINEER DATE

2-22-16
PLANS APPROVAL DATE

REGISTERED PROFESSIONAL ENGINEER
MITCH ANDRUS
No. C48753
Exp. 09-30-16
CIVIL
STATE OF CALIFORNIA

THE STATE OF CALIFORNIA OR ITS OFFICERS OR AGENTS SHALL NOT BE RESPONSIBLE FOR THE ACCURACY OR COMPLETENESS OF ELECTRONIC COPIES OF THIS PLAN SHEET.

NOTES:
1. THIS PLAN ACCURATE FOR TEMPORARY WATER POLLUTION CONTROL WORK ONLY.
2. FOR ACCURATE RIGHT OF WAY DATA, CONTACT RIGHT OF WAY ENGINEERING AT THE DISTRICT OFFICE.

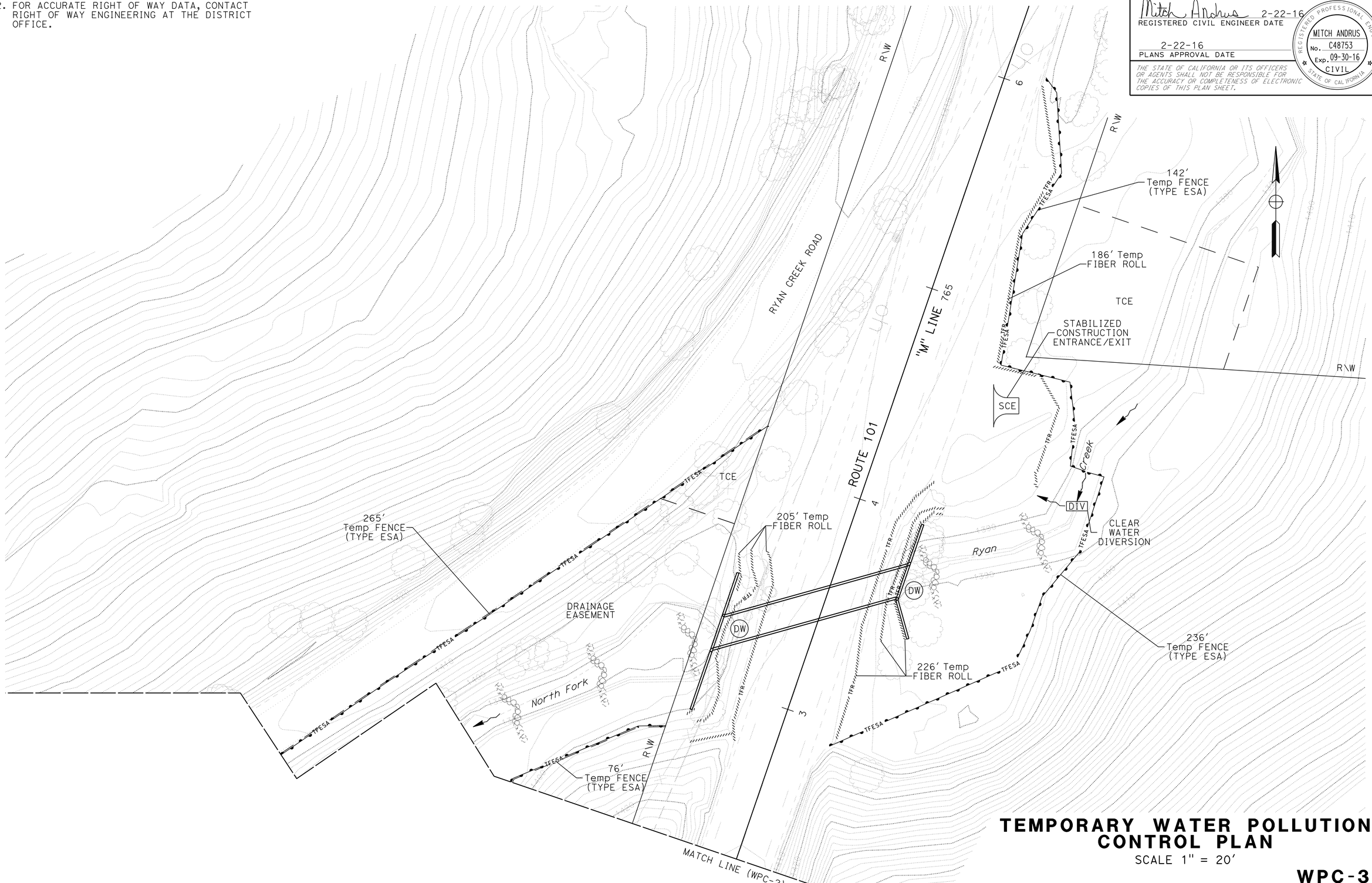

TEMPORARY WATER POLLUTION CONTROL PLAN

SCALE 1" = 20'

WPC-3

REVISED BY	DATE REVISED

CALCULATED-DESIGNED BY	CHECKED BY
S FOSTER	R MIRANDA

FUNCTIONAL SUPERVISOR: DOUGLAS S. JONES

STATE OF CALIFORNIA - DEPARTMENT OF TRANSPORTATION
Caltrans
03-DESIGN

FILE PATH => P:\proj5\01\26201\drafting\01120002051gb003.dgn

LAST REVISION 09-01-15 | DATE PLOTTED => 25-APR-2016 | TIME PLOTTED => 14:16

Dist	COUNTY	ROUTE	POST MILES TOTAL PROJECT	SHEET No.	TOTAL SHEETS
01	Men	101	52.1/52.6	10	54

Mitch Andrus 2-22-16
REGISTERED CIVIL ENGINEER DATE

2-22-16
PLANS APPROVAL DATE

REGISTERED PROFESSIONAL ENGINEER
MITCH ANDRUS
No. C48753
Exp. 09-30-16
CIVIL
STATE OF CALIFORNIA

THE STATE OF CALIFORNIA OR ITS OFFICERS OR AGENTS SHALL NOT BE RESPONSIBLE FOR THE ACCURACY OR COMPLETENESS OF ELECTRONIC COPIES OF THIS PLAN SHEET.

NOTES:
1. THIS PLAN ACCURATE FOR TEMPORARY WATER POLLUTION CONTROL WORK ONLY.

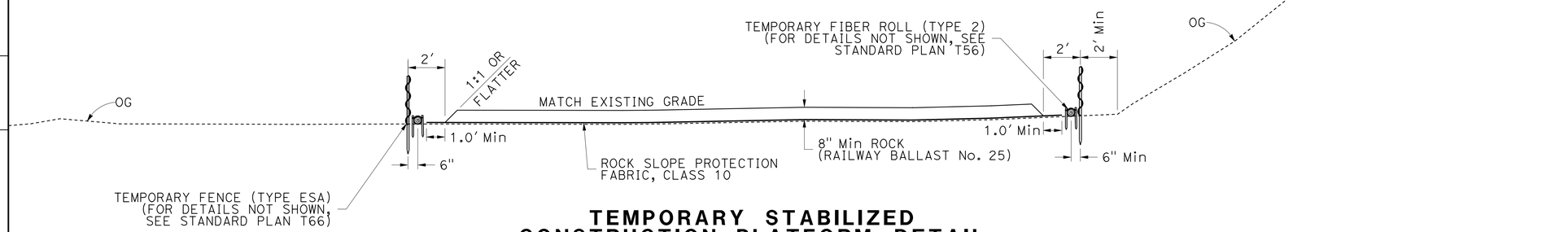

TEMPORARY STABILIZED CONSTRUCTION PLATFORM DETAIL

NOTES:
2. FOR LIMITS OF TEMPORARY STABILIZED CONSTRUCTION PLATFORM SEE SHEETS WPC-1 AND WPC-2.
3. FOR PLACEMENT OF TEMPORARY FENCE (TYPW ESA) AND TEMPORARY FIBER ROLL (TYPE 2) SEE SHEETS WPC-1 AND WPC-2.

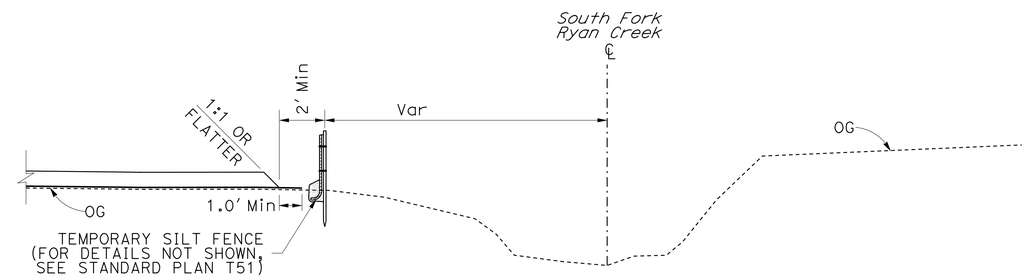

TEMPORARY SILT FENCE NEAR TEMPORARY CONSTRUCTION PLATFORM

NOTES:
4. FOR LIMITS OF TEMPORARY SILT FENCE SEE SHEETS WPC-1 AND WPC-2.

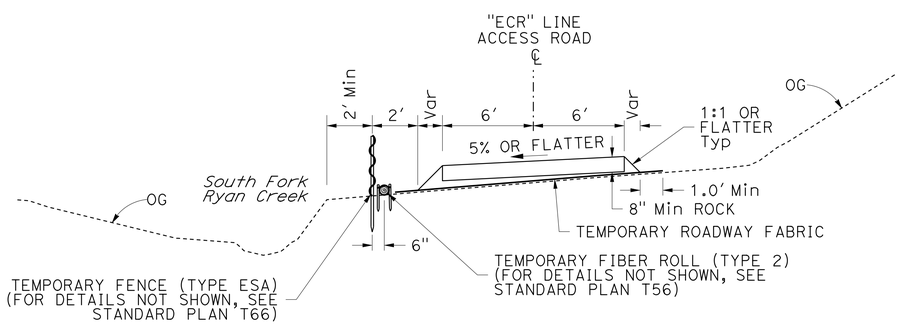

TEMPORARY CONSTRUCTION ROADWAY DETAIL

NOTES:
5. FOR LIMITS OF TEMPORARY CONSTRUCTION ROADWAY SEE SHEETS WPC-1 AND WPC-2.
6. FOR DETAILS NOT SHOWN SEE STANDARD PLAN T67.

TEMPORARY WATER POLLUTION CONTROL DETAILS

NO SCALE

WPCD-1

REVISED BY | DATE REVISED
S FOSTER | R MIRANDA
CALCULATED-DESIGNED BY | CHECKED BY
FUNCTIONAL SUPERVISOR
DOUGLAS S. JONES

STATE OF CALIFORNIA - DEPARTMENT OF TRANSPORTATION
Caltrans
03-DESIGN

FILE PATH => P:\proj5\01\26201\drafting\01120002051gc001.dgn

LAST REVISION 09-01-15 | DATE PLOTTED => 25-APR-2016 | TIME PLOTTED => 14:16

Dist	COUNTY	ROUTE	POST MILES TOTAL PROJECT	SHEET No.	TOTAL SHEETS
01	Men	101	52.1/52.6	11	54

Mitch Andrus 2-22-16
REGISTERED CIVIL ENGINEER DATE

2-22-16
PLANS APPROVAL DATE

REGISTERED PROFESSIONAL ENGINEER
MITCH ANDRUS
No. C48753
Exp. 09-30-16
CIVIL
STATE OF CALIFORNIA

THE STATE OF CALIFORNIA OR ITS OFFICERS OR AGENTS SHALL NOT BE RESPONSIBLE FOR THE ACCURACY OR COMPLETENESS OF ELECTRONIC COPIES OF THIS PLAN SHEET.

TEMPORARY CONSTRUCTION ENTRANCE	
SHEET No.	QUANTITY (EA)
WPC-1	-
WPC-2	2
WPC-3	1
TOTAL:	3

TEMPORARY CONSTRUCTION ROADWAY	
SHEET No.	QUANTITY (SQYD)
WPC-1	232
WPC-2	471
WPC-3	-
TOTAL:	703

TEMPORARY CONSTRUCTION PLATFORM	
SHEET No.	QUANTITY (SQYD)
WPC-1	1744
WPC-2	723
WPC-3	-
TOTAL:	2467

TEMPORARY FENCE (TYPE ESA)	
SHEET No.	QUANTITY (LF)
WPC-1	1659
WPC-2	901
WPC-3	737
TOTAL:	3297

TEMPORARY FIBER ROLL	
SHEET No.	QUANTITY (LF)
WPC-1	1406
WPC-2	331
WPC-3	657
TOTAL:	2394

TEMPORARY SILT FENCE	
SHEET No.	QUANTITY (LF)
WPC-1	241
WPC-2	-
WPC-3	-
TOTAL:	241

TEMPORARY WATER POLLUTION CONTROL QUANTITIES

WPCQ-1

REVISED BY | DATE REVISED
S FOSTER | R MIRANDA
CALCULATED-DESIGNED BY | CHECKED BY
FUNCTIONAL SUPERVISOR
DOUGLAS S. JONES

STATE OF CALIFORNIA - DEPARTMENT OF TRANSPORTATION
Caltrans
03-DESIGN

FILE PATH => P:\proj5\01\26201\drafting\01120002051gd001.dgn

LAST REVISION 11-01-15
DATE PLOTTED => 25-APR-2016
TIME PLOTTED => 14:16

Dist	COUNTY	ROUTE	POST MILES TOTAL PROJECT	SHEET No.	TOTAL SHEETS
01	Men	101	52.1/52.6	12	54

Mitch Andrus 2-22-16
REGISTERED CIVIL ENGINEER DATE

2-22-16
PLANS APPROVAL DATE

REGISTERED PROFESSIONAL ENGINEER
MITCH ANDRUS
No. C48753
Exp. 09-30-16
CIVIL
STATE OF CALIFORNIA

THE STATE OF CALIFORNIA OR ITS OFFICERS OR AGENTS SHALL NOT BE RESPONSIBLE FOR THE ACCURACY OR COMPLETENESS OF ELECTRONIC COPIES OF THIS PLAN SHEET.

NOTES:
1. THIS PLAN ACCURATE FOR CONTOUR GRADING WORK ONLY.
2. EXISTING CONTOUR INTERVAL 2.0'.
3. SEE DRAINAGE SHEETS FOR ACCURATE DRAINAGE INFORMATION.
4. THERE IS NO GRADING PROPOSED ON THIS SHEET.
5. FOR ACCURATE RIGHT OF WAY DATA, CONTACT RIGHT OF WAY ENGINEERING AT THE DISTRICT OFFICE.

CONTOUR GRADING
SCALE 1" = 10'

G-1

REVISED BY | DATE REVISED
S FOSTER | R MIRANDA
CALCULATED-DESIGNED BY | CHECKED BY
FUNCTIONAL SUPERVISOR: DOUGLAS S. JONES
STATE OF CALIFORNIA - DEPARTMENT OF TRANSPORTATION
Caltrans 03-DESIGN
FILE PATH => P:\proj5\01\26201\drafting\0112000205ha001.dgn

LAST REVISION 08-21-15 | DATE PLOTTED => 26-APR-2016 | TIME PLOTTED => 11:27

Dist	COUNTY	ROUTE	POST MILES TOTAL PROJECT	SHEET No.	TOTAL SHEETS
01	Men	101	52.1/52.6	13	54

Mitch Andrus 2-22-16
REGISTERED CIVIL ENGINEER DATE

2-22-16
PLANS APPROVAL DATE

REGISTERED PROFESSIONAL ENGINEER
MITCH ANDRUS
No. C48753
Exp. 09-30-16
CIVIL
STATE OF CALIFORNIA

THE STATE OF CALIFORNIA OR ITS OFFICERS OR AGENTS SHALL NOT BE RESPONSIBLE FOR THE ACCURACY OR COMPLETENESS OF ELECTRONIC COPIES OF THIS PLAN SHEET.

NOTES:
1. THIS PLAN ACCURATE FOR CONTOUR GRADING WORK ONLY.
2. EXISTING CONTOUR INTERVAL 2.0'.
3. PROPOSED CONTOUR INTERVAL 1.0'.
4. SEE DRAINAGE SHEETS FOR ACCURATE DRAINAGE INFORMATION.
5. FOR ACCURATE RIGHT OF WAY DATA, CONTACT RIGHT OF WAY ENGINEERING AT THE DISTRICT OFFICE.

CONTOUR GRADING

SCALE 1" = 10'

G-2

REVISED BY	DATE REVISED

CALCULATED-DESIGNED BY	CHECKED BY
S FOSTER	R MIRANDA

FUNCTIONAL SUPERVISOR: DOUGLAS S. JONES

STATE OF CALIFORNIA - DEPARTMENT OF TRANSPORTATION
Caltrans
03-DESIGN

FILE PATH => P:\proj5\01\26201\drafting\0112000205ha002.dgn

LAST REVISION 08-21-15 | DATE PLOTTED => 26-APR-2016 | TIME PLOTTED => 11:27

BORDER LAST REVISED 7/2/2010 | USERNAME => s119538 | DGN FILE => 0112000205ha002.dgn | RELATIVE BORDER SCALE IS IN INCHES 0 20 40 60 | UNIT 0307 | PROJECT NUMBER & PHASE 01120002051

Dist	COUNTY	ROUTE	POST MILES TOTAL PROJECT	SHEET No.	TOTAL SHEETS
01	Men	101	52.1/52.6	14	54

Mitch Andrus 2-22-16
REGISTERED CIVIL ENGINEER DATE

2-22-16
PLANS APPROVAL DATE

REGISTERED PROFESSIONAL ENGINEER
MITCH ANDRUS
No. C48753
Exp. 09-30-16
CIVIL
STATE OF CALIFORNIA

THE STATE OF CALIFORNIA OR ITS OFFICERS OR AGENTS SHALL NOT BE RESPONSIBLE FOR THE ACCURACY OR COMPLETENESS OF ELECTRONIC COPIES OF THIS PLAN SHEET.

NOTES:
1. THIS PLAN ACCURATE FOR CONTOUR GRADING WORK ONLY.
2. EXISTING CONTOUR INTERVAL 2.0'.
3. PROPOSED CONTOUR INTERVAL 1.0'.
4. SEE DRAINAGE SHEETS FOR ACCURATE DRAINAGE INFORMATION.
5. FOR ACCURATE RIGHT OF WAY DATA, CONTACT RIGHT OF WAY ENGINEERING AT THE DISTRICT OFFICE.

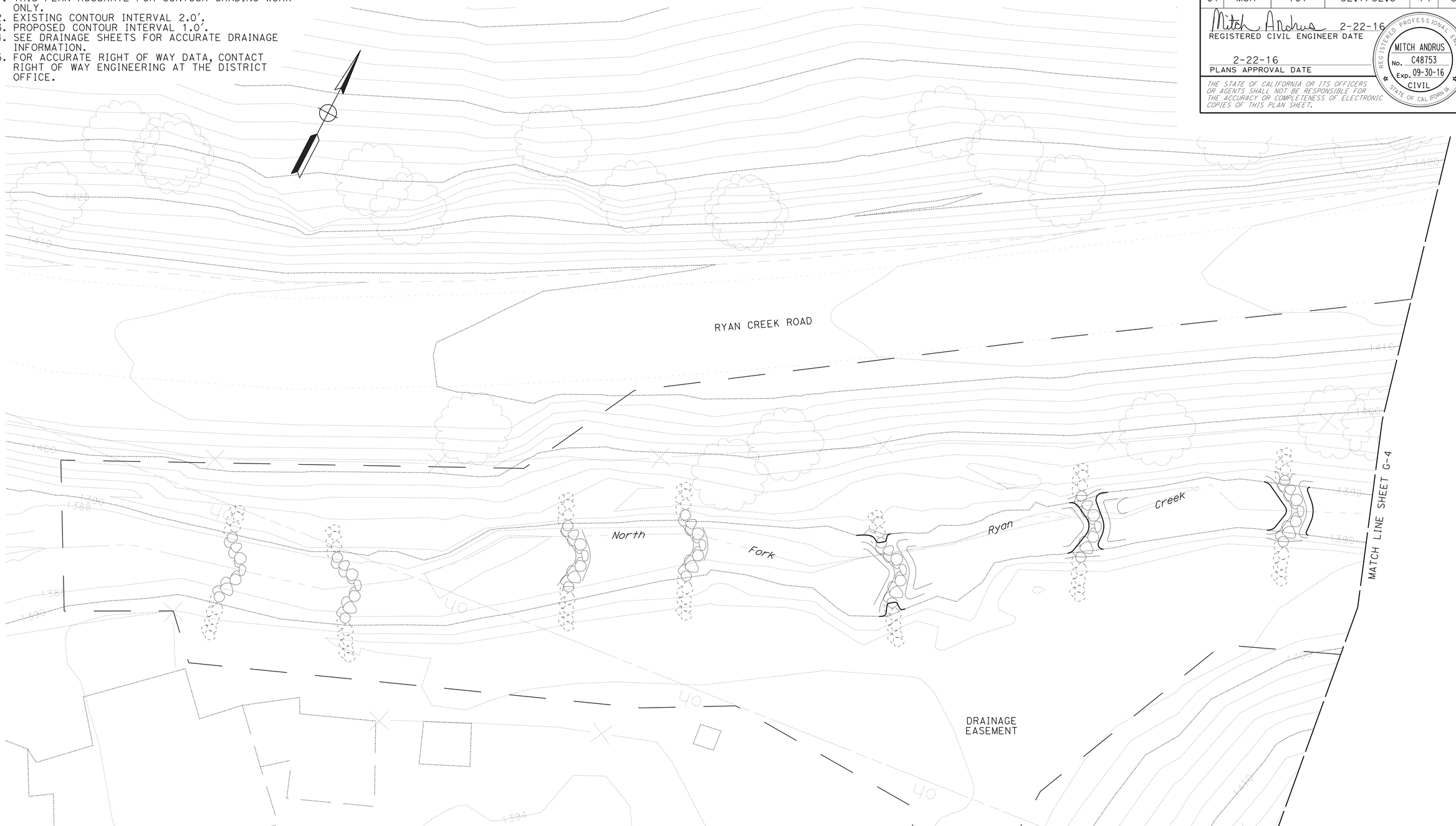

CONTOUR GRADING
SCALE 1" = 10'

G-3

REVISED BY | DATE REVISED
S FOSTER | R MIRANDA
CALCULATED-DESIGNED BY | CHECKED BY
FUNCTIONAL SUPERVISOR: DOUGLAS S. JONES
STATE OF CALIFORNIA - DEPARTMENT OF TRANSPORTATION
Caltrans 03-DESIGN

FILE PATH => P:\proj5\01\26201\drafting\0112000205ha003.dgn

LAST REVISION 09-01-15 | DATE PLOTTED => 26-APR-2016 | TIME PLOTTED => 11:27

BORDER LAST REVISED 7/2/2010 | USERNAME => s119538 | DGN FILE => 0112000205ha003.dgn | RELATIVE BORDER SCALE IS IN INCHES 0 20 40 60 | UNIT 0307 | PROJECT NUMBER & PHASE 01120002051

Dist	COUNTY	ROUTE	POST MILES TOTAL PROJECT	SHEET No.	TOTAL SHEETS
01	Men	101	52.1/52.6	15	54

Mitch Andrus 2-22-16
REGISTERED CIVIL ENGINEER DATE

2-22-16
PLANS APPROVAL DATE

REGISTERED PROFESSIONAL ENGINEER
MITCH ANDRUS
No. C48753
Exp. 09-30-16
CIVIL
STATE OF CALIFORNIA

THE STATE OF CALIFORNIA OR ITS OFFICERS OR AGENTS SHALL NOT BE RESPONSIBLE FOR THE ACCURACY OR COMPLETENESS OF ELECTRONIC COPIES OF THIS PLAN SHEET.

NOTES:
1. THIS PLAN ACCURATE FOR CONTOUR GRADING WORK ONLY.
2. EXISTING CONTOUR INTERVAL 2.0'.
3. PROPOSED CONTOUR INTERVAL 1.0'.
4. SEE DRAINAGE SHEETS FOR ACCURATE DRAINAGE INFORMATION.
5. FOR ACCURATE RIGHT OF WAY DATA, CONTACT RIGHT OF WAY ENGINEERING AT THE DISTRICT OFFICE.

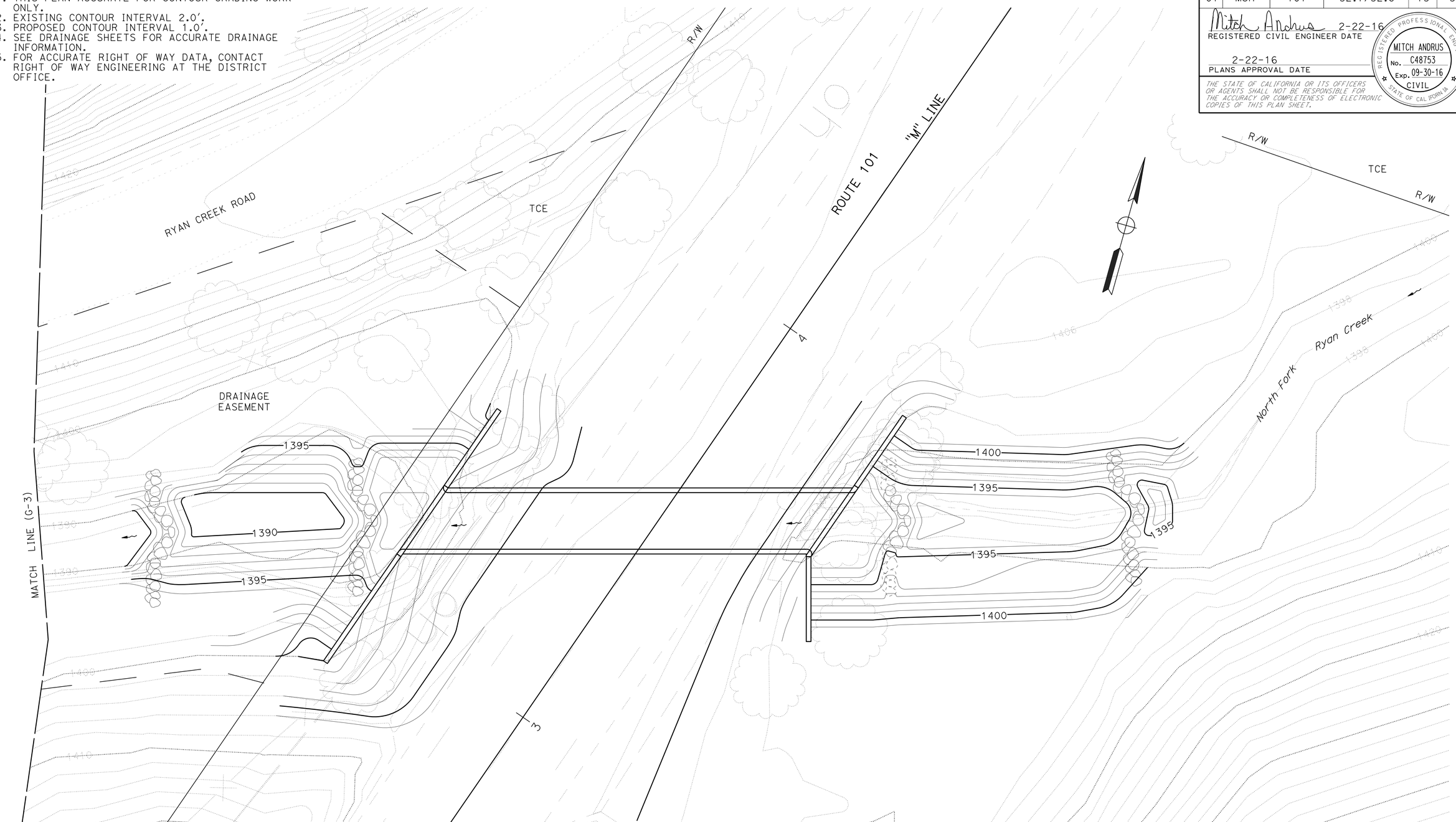

CONTOUR GRADING
SCALE 1" = 10'

G-4

REVISED BY | DATE REVISED
S FOSTER | R MIRANDA
CALCULATED-DESIGNED BY | CHECKED BY
FUNCTIONAL SUPERVISOR: DOUGLAS S. JONES

STATE OF CALIFORNIA - DEPARTMENT OF TRANSPORTATION
Caltrans
03-DESIGN

FILE PATH => P:\proj5\01\26201\drafting\0112000205ha004.dgn

LAST REVISION 09-01-15 | DATE PLOTTED => 26-APR-2016 | TIME PLOTTED => 11:27

BORDER LAST REVISED 7/2/2010 | USERNAME => s119538 | DGN FILE => 0112000205ha004.dgn | RELATIVE BORDER SCALE IS IN INCHES 0 20 40 60 | UNIT 0307 | PROJECT NUMBER & PHASE 01120002051

Dist	COUNTY	ROUTE	POST MILES TOTAL PROJECT	SHEET No.	TOTAL SHEETS
01	Men	101	52.1/52.6	16	54

Mitch Andrus 2-22-16
REGISTERED CIVIL ENGINEER DATE

2-22-16
PLANS APPROVAL DATE

REGISTERED PROFESSIONAL ENGINEER MITCH ANDRUS No. C48753 Exp. 09-30-16 CIVIL STATE OF CALIFORNIA

THE STATE OF CALIFORNIA OR ITS OFFICERS OR AGENTS SHALL NOT BE RESPONSIBLE FOR THE ACCURACY OR COMPLETENESS OF ELECTRONIC COPIES OF THIS PLAN SHEET.

NOTES:

1. THIS PLAN ACCURATE FOR DRAINAGE ONLY.
2. SEE LAYOUT PLANS FOR ACCURATE GEOMETRIC INFORMATION.
3. SEE LAYOUT PLANS FOR UTILITY INFORMATION.
4. FOR ACCURATE RIGHT OF WAY DATA, CONTACT RIGHT OF WAY ENGINEERING AT THE DISTRICT OFFICE.
5. PLACEMENT OF BANKLINE ROCK, ROOTWADS AND STREAMBED MATERIAL ARE TO OCCUR CONCURRENTLY.
6. A SCOUR POOL IS ASSOCIATED WITH EACH ROCK WEIR. SEE SHEET DD-1 FOR MORE INFORMATION.
7. SEE SHEETS DP-1, DP-2 AND DD-2 FOR TYPES AND LIMITS OF WORK (BANKLINE ROCK, ENGINEERED STREAMBED MATERIAL AND RSP BACKFILL).

LEGEND

ROCK WEIR

ABBREVIATIONS

SP = STEEL PIPE

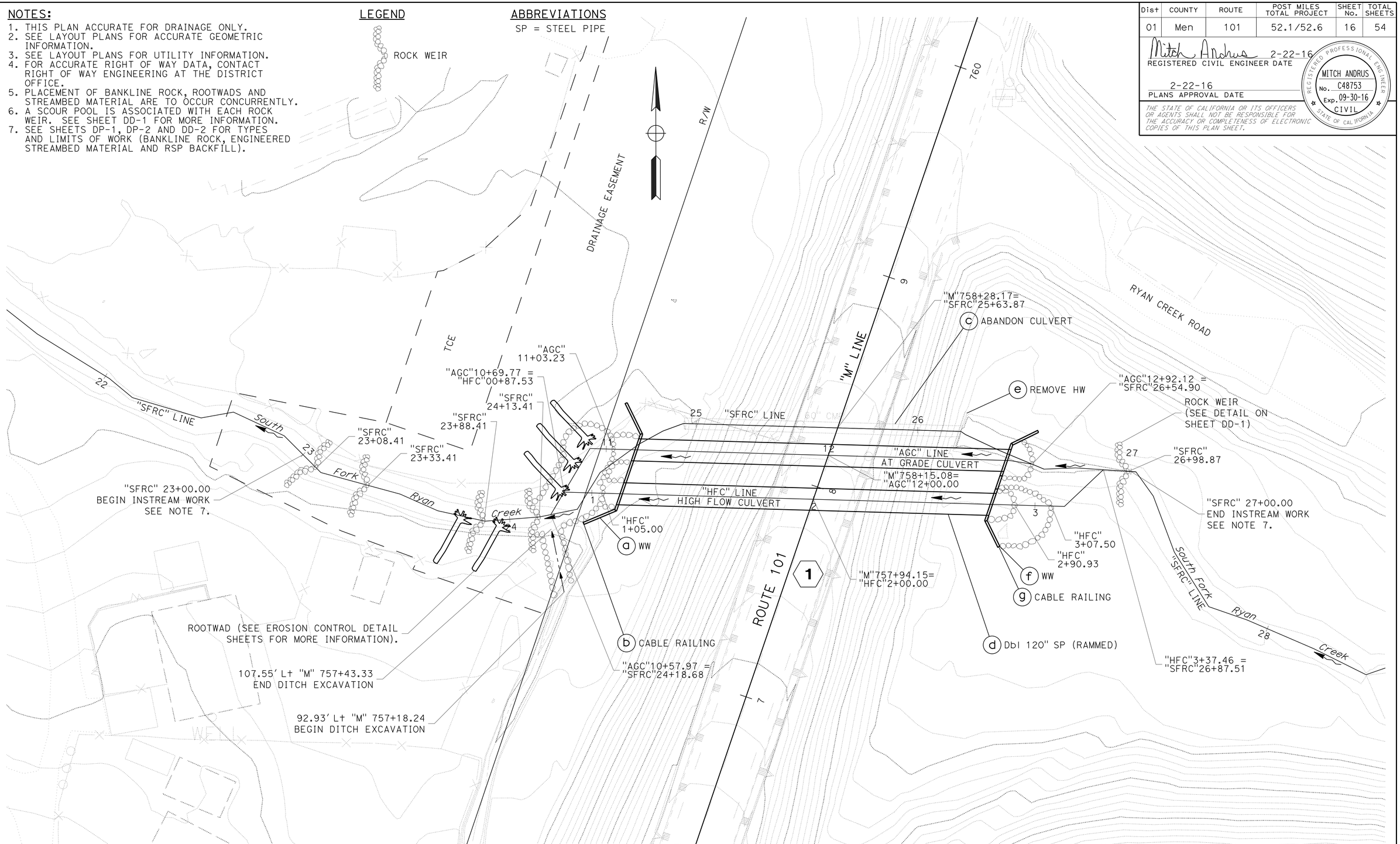

DRAINAGE PLAN

SCALE: 1"=20'

D-1

REVISED BY	DATE REVISED
S FOSTER	R MIRANDA
CALCULATED-DESIGNED BY	CHECKED BY
FUNCTIONAL SUPERVISOR	DOUGLAS S. JONES

STATE OF CALIFORNIA - DEPARTMENT OF TRANSPORTATION

Caltrans 03-DESIGN

FILE PATH => P:\proj5\01\26201\drafting\01120002051ia001.dgn

LAST REVISION 11-11-16 | DATE PLOTTED => 25-APR-2016 | TIME PLOTTED => 14:17

Dist	COUNTY	ROUTE	POST MILES TOTAL PROJECT	SHEET No.	TOTAL SHEETS
01	Men	101	52.1/52.6	17	54

Mitch Andrus 2-22-16
REGISTERED CIVIL ENGINEER DATE

2-22-16
PLANS APPROVAL DATE

REGISTERED PROFESSIONAL ENGINEER
MITCH ANDRUS
No. C48753
Exp. 09-30-16
CIVIL
STATE OF CALIFORNIA

THE STATE OF CALIFORNIA OR ITS OFFICERS OR AGENTS SHALL NOT BE RESPONSIBLE FOR THE ACCURACY OR COMPLETENESS OF ELECTRONIC COPIES OF THIS PLAN SHEET.

NOTES:

1. THIS PLAN ACCURATE FOR DRAINAGE ONLY.
2. SEE LAYOUT PLANS FOR ACCURATE GEOMETRIC INFORMATION.
3. SEE LAYOUT PLANS FOR UTILITY INFORMATION.
4. FOR ACCURATE RIGHT OF WAY DATA, CONTACT RIGHT OF WAY ENGINEERING AT THE DISTRICT OFFICE.
5. PLACEMENT OF BANKLINE ROCK, ROOTWADS AND STREAMBED MATERIAL ARE TO OCCUR CONCURRENTLY.
6. A SCOUR POOL IS ASSOCIATED WITH EACH ROCK WEIR. SEE SHEET DD-1 FOR MORE INFORMATION.
7. SEE SHEETS DP-3 AND DD-2 FOR TYPES AND LIMITS OF WORK (BANKLINE ROCK, ENGINEERED STREAMBED MATERIAL, RSP BACKFILL AND SAND AND GRAVEL).

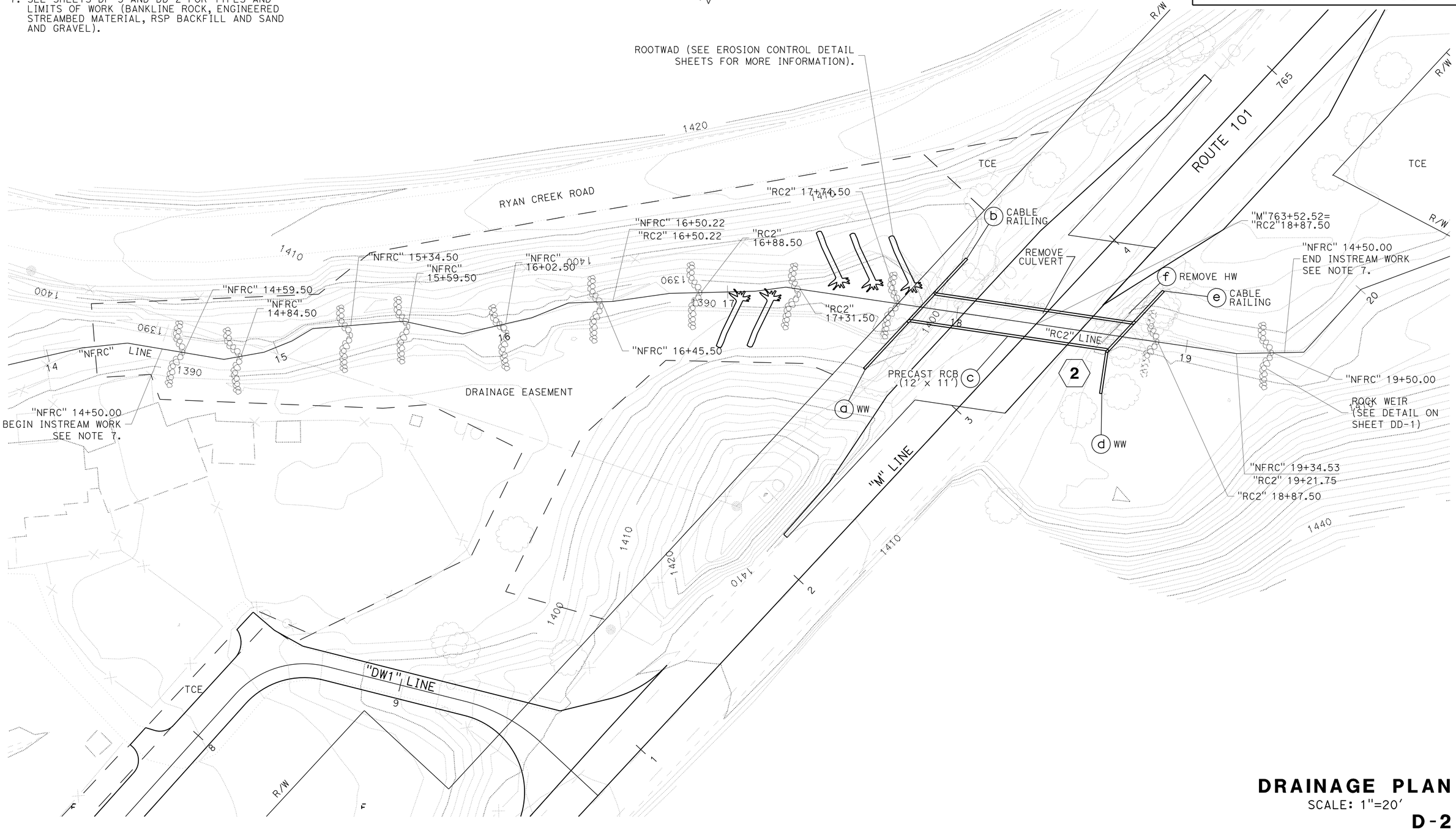

DRAINAGE PLAN

SCALE: 1"=20'

D-2

REVISED BY	DATE REVISED
S FOSTER	R MIRANDA

CALCULATED-DESIGNED BY | CHECKED BY

FUNCTIONAL SUPERVISOR: DOUGLAS S. JONES

STATE OF CALIFORNIA - DEPARTMENT OF TRANSPORTATION
Caltrans
03-DESIGN

FILE PATH => P:\proj5\01\26201\drafting\0112000205ia002.dgn

LAST REVISION 01-11-16 | DATE PLOTTED => 25-APR-2016 | TIME PLOTTED => 14:17

Dist	COUNTY	ROUTE	POST MILES TOTAL PROJECT	SHEET No.	TOTAL SHEETS
01	Men	101	52.1/52.6	18	54

Mitch Andrus 2-22-16
REGISTERED CIVIL ENGINEER DATE

2-22-16
PLANS APPROVAL DATE

REGISTERED PROFESSIONAL ENGINEER
MITCH ANDRUS
No. C48753
Exp. 09-30-16
CIVIL
STATE OF CALIFORNIA

THE STATE OF CALIFORNIA OR ITS OFFICERS OR AGENTS SHALL NOT BE RESPONSIBLE FOR THE ACCURACY OR COMPLETENESS OF ELECTRONIC COPIES OF THIS PLAN SHEET.

NOTE:
1. THIS SHEET ACCURATE FOR DRAINAGE INFORMATION ONLY.

LEGEND
- ENGINEERED STREAMBED MATERIAL
- RSP BACKFILL
- BANKLINE ROCK
- BACKING No. 3
- ROCK WEIR
- STRUCTURAL BACKFILL

ABBREVIATION
SP = STEEL PIPE

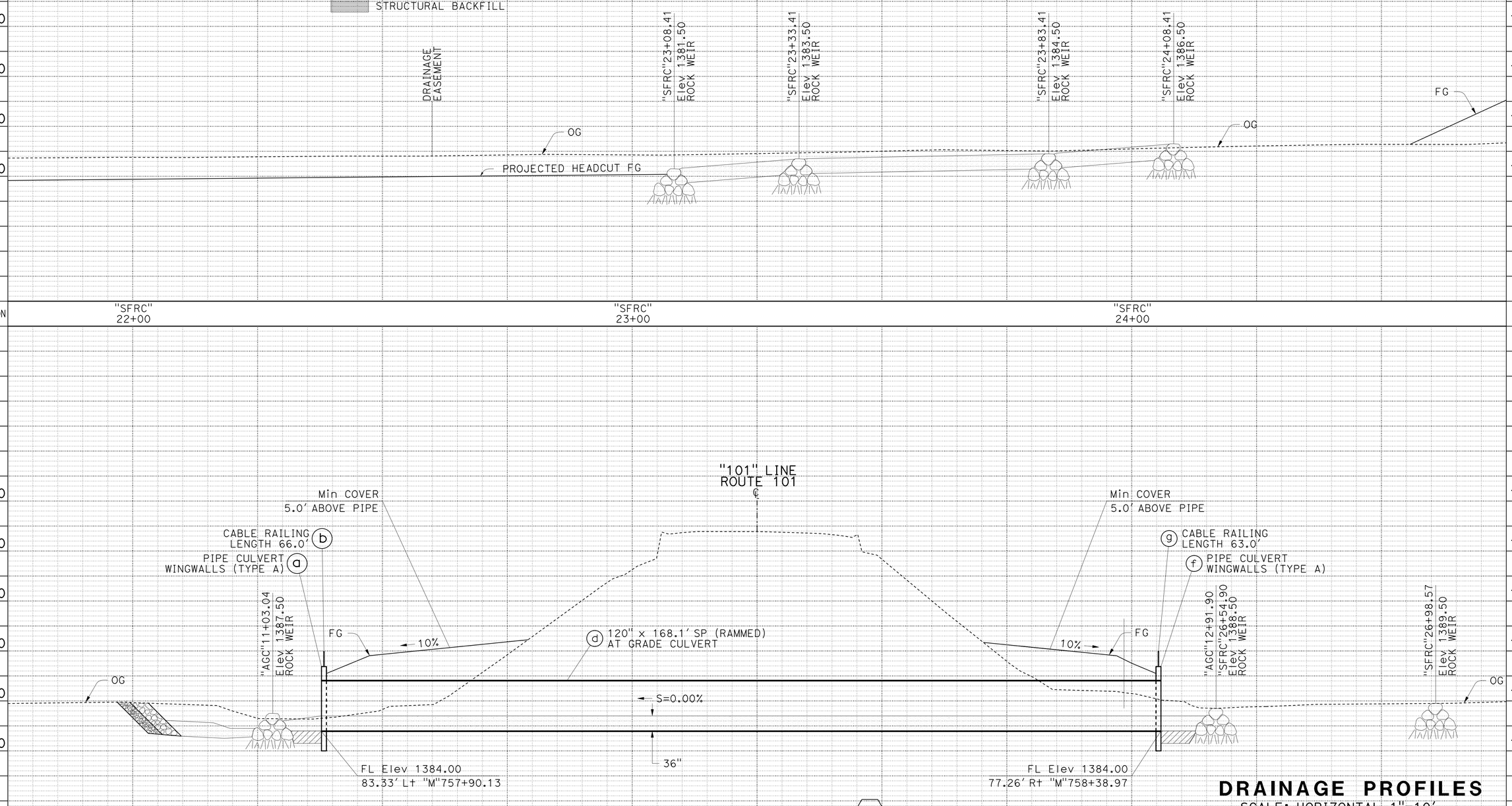

DRAINAGE SYSTEM 1
"M"758+15.08
17.18° SKEW

DRAINAGE PROFILES
SCALE: HORIZONTAL 1"=10'
VERTICAL 1"=10'

DP-1

REVISED BY | DATE REVISED
R SCOTT FOSTER | RODOLFO MIRANDA
CALCULATED-DESIGNED BY | CHECKED BY
FUNCTIONAL SUPERVISOR: DOUGLAS S. JONES

STATE OF CALIFORNIA - DEPARTMENT OF TRANSPORTATION
03-DESIGN
Caltrans

FILE PATH => P:\proj5\01\26201\drafting\01120002051b001.dgn

LAST REVISION 02-22-16 | DATE PLOTTED => 25-APR-2016 | TIME PLOTTED => 14:17

BORDER LAST REVISED 7/2/2010 | USERNAME => s119538 | DGN FILE => 01120002051b001.dgn | RELATIVE BORDER SCALE IS IN INCHES 0 2 3 | UNIT 0307 | PROJECT NUMBER & PHASE 01120002051

Dist	COUNTY	ROUTE	POST MILES TOTAL PROJECT	SHEET No.	TOTAL SHEETS
01	Men	101	52.1/52.6	19	54

Mitch Andrus 2-22-16
REGISTERED CIVIL ENGINEER DATE

2-22-16
PLANS APPROVAL DATE

REGISTERED PROFESSIONAL ENGINEER
MITCH ANDRUS
No. C48753
Exp. 09-30-16
CIVIL
STATE OF CALIFORNIA

THE STATE OF CALIFORNIA OR ITS OFFICERS OR AGENTS SHALL NOT BE RESPONSIBLE FOR THE ACCURACY OR COMPLETENESS OF ELECTRONIC COPIES OF THIS PLAN SHEET.

NOTE:
1. THIS SHEET ACCURATE FOR DRAINAGE INFORMATION ONLY.

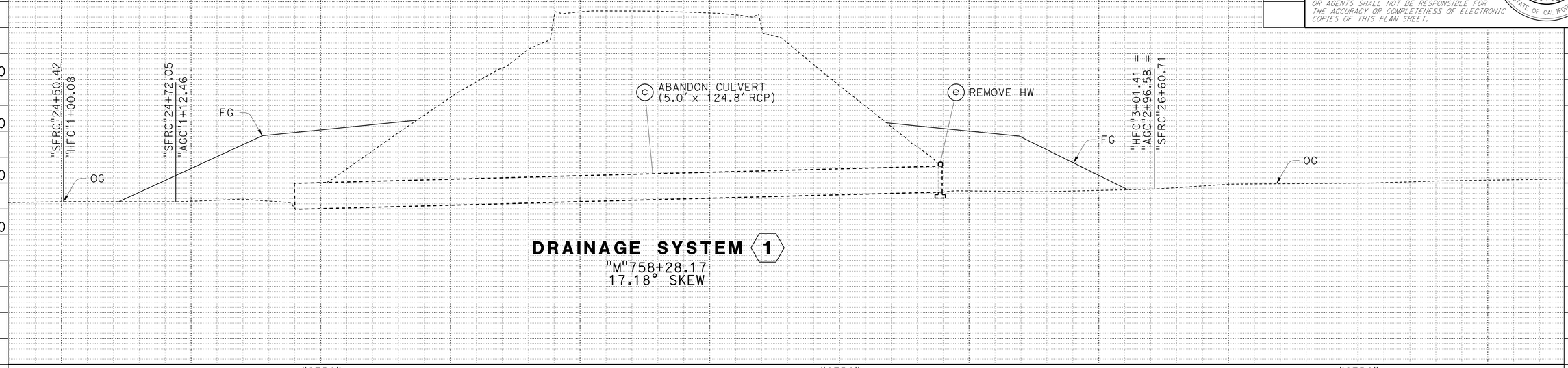

DRAINAGE SYSTEM 1
"M"758+28.17
17.18° SKEW

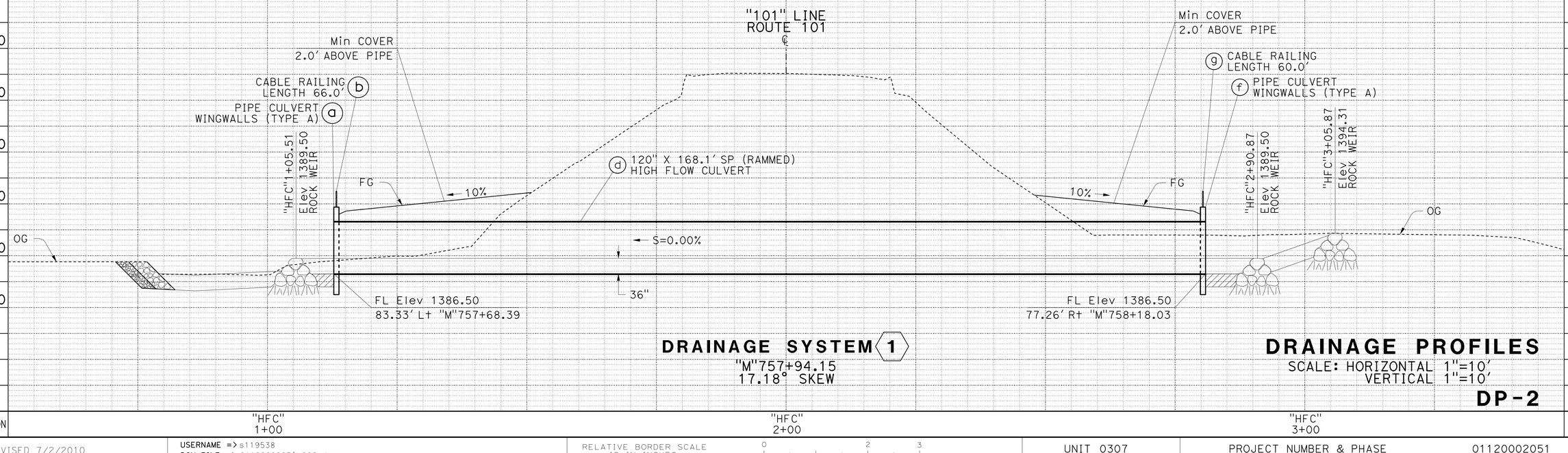

DRAINAGE SYSTEM 1
"M"757+94.15
17.18° SKEW

DRAINAGE PROFILES

SCALE: HORIZONTAL 1"=10'
VERTICAL 1"=10'

DP-2

STATE OF CALIFORNIA - DEPARTMENT OF TRANSPORTATION
Caltrans
03-DESIGN

FUNCTIONAL SUPERVISOR: DOUGLAS S. JONES
CALCULATED-DESIGNED BY: R SCOTT FOSTER
CHECKED BY: RODOLFO MIRANDA
REVISED BY / DATE REVISED

FILE PATH => P:\proj5\01\26201\drafting\01120002051b002.dgn

LAST REVISION | DATE PLOTTED => 25-APR-2016 | TIME PLOTTED => 14:17
01-11-16

BORDER LAST REVISED 7/2/2010 | USERNAME => s119538 | DGN FILE => 01120002051b002.dgn | RELATIVE BORDER SCALE IS IN INCHES 0 2 3 | UNIT 0307 | PROJECT NUMBER & PHASE 01120002051

Dist	COUNTY	ROUTE	POST MILES TOTAL PROJECT	SHEET No.	TOTAL SHEETS
01	Men	101	52.1/52.6	20	54

Mitch Andrus 2-22-16
REGISTERED CIVIL ENGINEER DATE

2-22-16
PLANS APPROVAL DATE

REGISTERED PROFESSIONAL ENGINEER
MITCH ANDRUS
No. C48753
Exp. 09-30-16
CIVIL
STATE OF CALIFORNIA

THE STATE OF CALIFORNIA OR ITS OFFICERS OR AGENTS SHALL NOT BE RESPONSIBLE FOR THE ACCURACY OR COMPLETENESS OF ELECTRONIC COPIES OF THIS PLAN SHEET.

NOTE:
1. THIS SHEET ACCURATE FOR DRAINAGE INFORMATION ONLY.

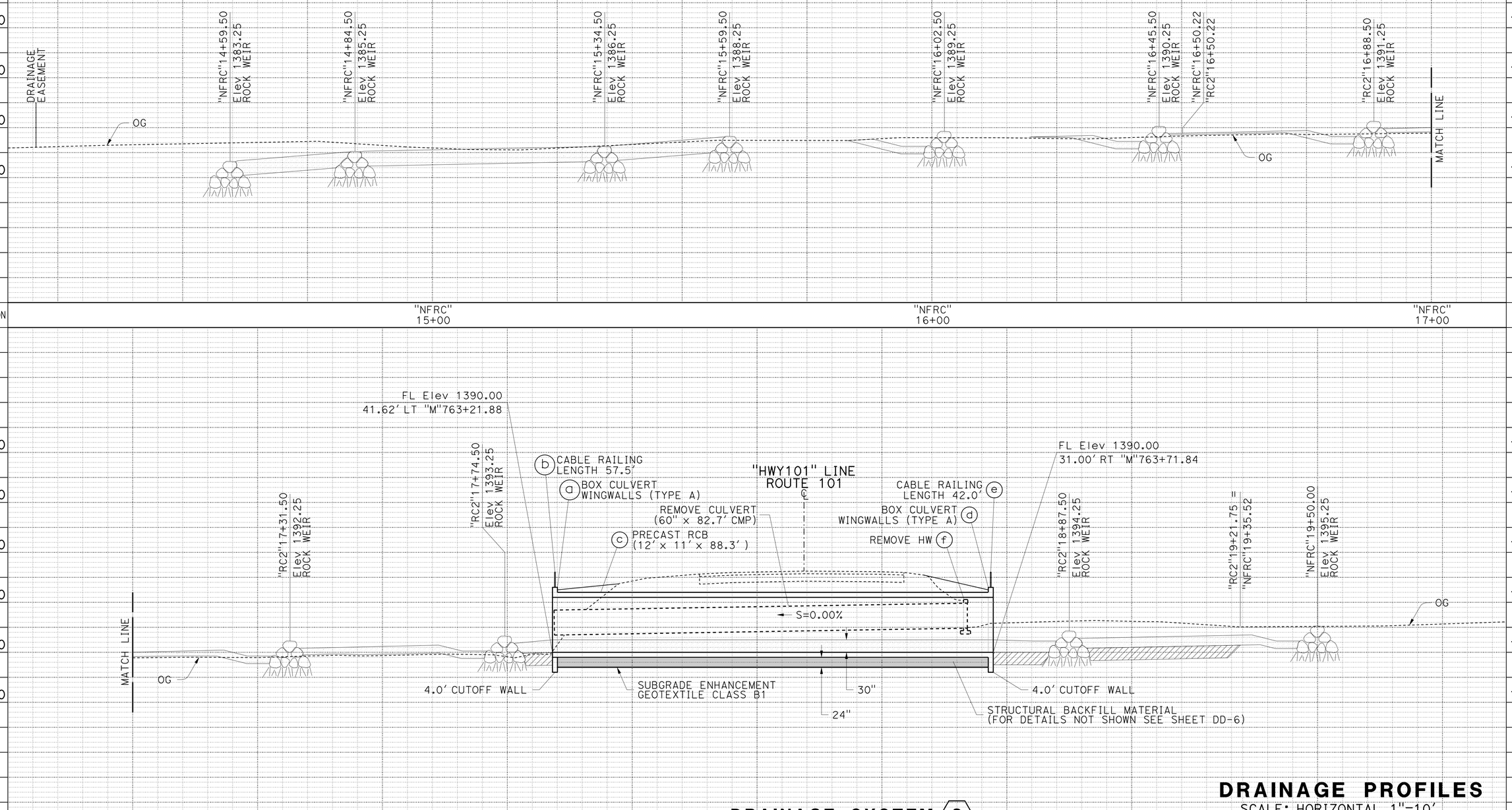

DRAINAGE SYSTEM 2

"M"763+52.52
34.51° SKEW

DRAINAGE PROFILES

SCALE: HORIZONTAL 1"=10'
VERTICAL 1"=10'

DP-3

REVISED BY	DATE REVISED
R SCOTT FOSTER	RODOLFO MIRANDA

CALCULATED-DESIGNED BY / CHECKED BY

FUNCTIONAL SUPERVISOR: DOUGLAS S. JONES

STATE OF CALIFORNIA - DEPARTMENT OF TRANSPORTATION
03-DESIGN
Caltrans

FILE PATH => P:\proj5\01\26201\draft1ng\01120002051b003.dgn

LAST REVISION | DATE PLOTTED => 25-APR-2016
01-11-16 | TIME PLOTTED => 14:17

BORDER LAST REVISED 7/2/2010 | USERNAME => s119538 | DGN FILE => 01120002051b003.dgn | RELATIVE BORDER SCALE IS IN INCHES 0 2 3 | UNIT 0307 | PROJECT NUMBER & PHASE 01120002051

Dist	COUNTY	ROUTE	POST MILES TOTAL PROJECT	SHEET No.	TOTAL SHEETS
01	Men	101	52.1/52.6	21	54

Mitch Andrus 2-22-16
REGISTERED CIVIL ENGINEER DATE

2-22-16
PLANS APPROVAL DATE

REGISTERED PROFESSIONAL ENGINEER
MITCH ANDRUS
No. C48753
Exp. 09-30-16
CIVIL
STATE OF CALIFORNIA

THE STATE OF CALIFORNIA OR ITS OFFICERS OR AGENTS SHALL NOT BE RESPONSIBLE FOR THE ACCURACY OR COMPLETENESS OF ELECTRONIC COPIES OF THIS PLAN SHEET.

NOTES:

1. THIS PLAN ACCURATE FOR FISH PASSAGE ONLY.
2. 1/2 TON & 1 TON ROCKS FOR ROCK WEIRS ARE PLACED INDIVIDUALY, PACKED TIGHTLY TOGETHER, AND WILL HAVE A MINIMUM OF THREE CONTACT POINTS WITH ADJACENT ROCKS.
3. LAYOUT OF WEIR WILL BE STAKED PRIOR TO CONSTRUCTION. ROCK WEIR CONSTRUCTION TO BE DONE UNDER THE DIRECTION OF THE ENGINEER.
4. A SCOUR POOL IS ASSOCIATED WITH EACH ROCK WEIR

LEGEND

- ENGINEERED STREAMBED MATERIAL
- RSP BACKFILL
- ROCK WEIR

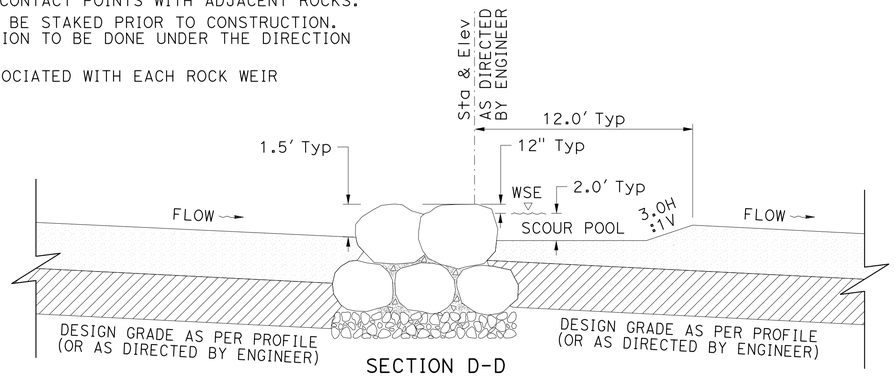

SECTION D-D

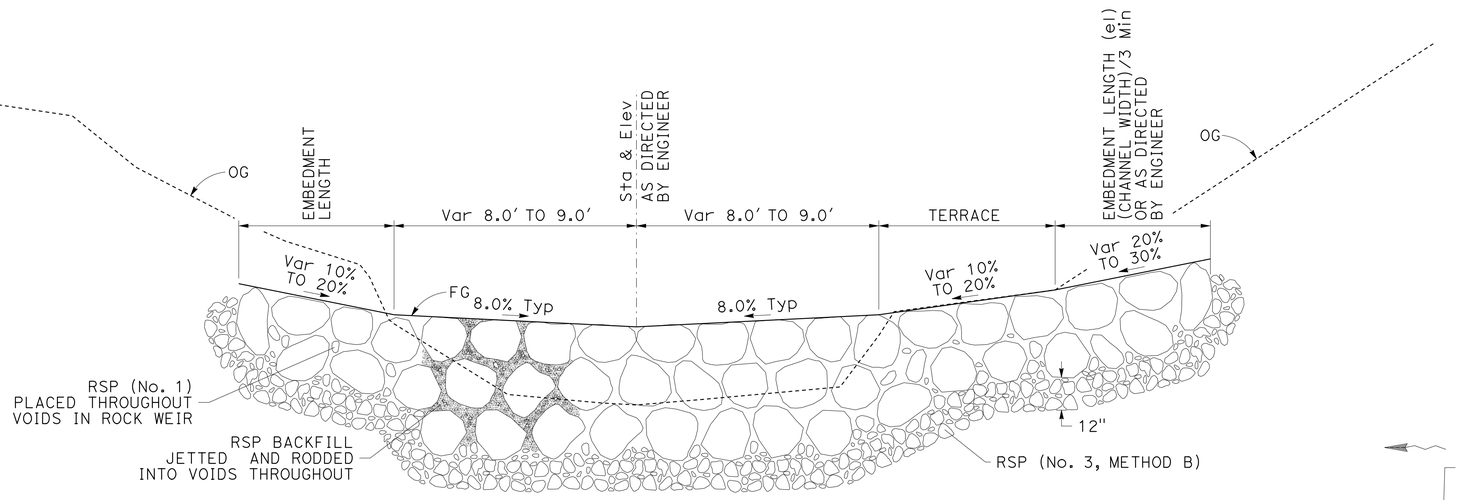

SECTION A-A

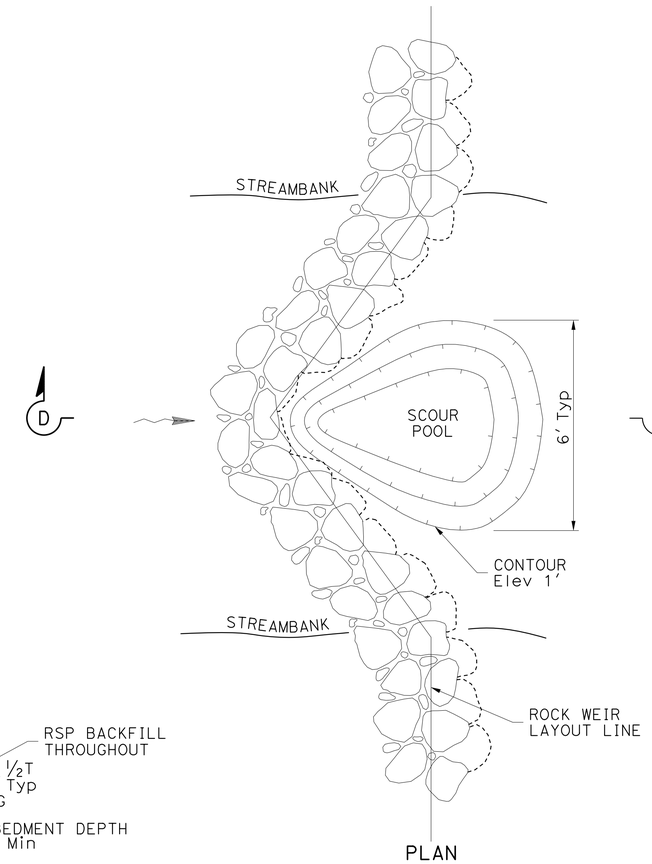

SCOUR POOL DETAIL

(AT EACH ROCK WEIR)

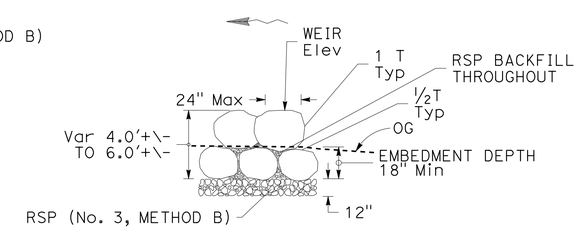

SECTION C-C

(FROM STREAMBANK TO STREAMBANK)

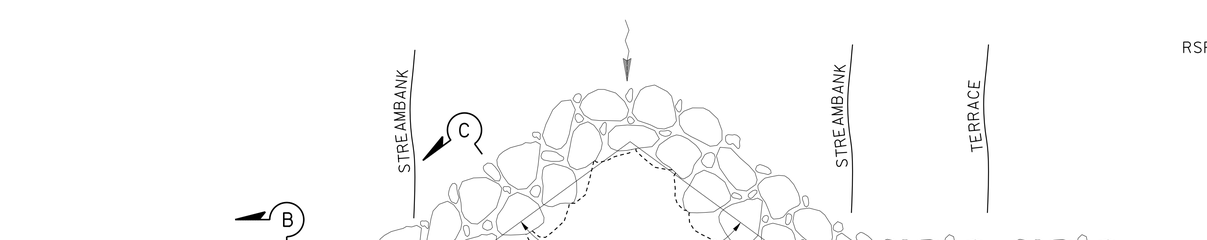

ROCK WEIR DETAIL

(NORTH AND SOUTH FORKS OF RYAN CREEK)

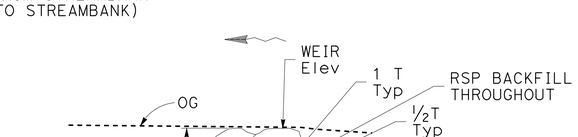

SECTION B-B

(FROM STREAMBANK OUT)

DRAINAGE DETAILS

NO SCALE

DD-1

REVISED BY	DATE REVISED

CALCULATED-DESIGNED BY: S FOSTER
CHECKED BY: R MIRANDA
FUNCTIONAL SUPERVISOR: DOUGLAS S. JONES

STATE OF CALIFORNIA - DEPARTMENT OF TRANSPORTATION
Caltrans
03-DESIGN

FILE PATH => P:\proj5\01\26201\drafting\01120002051c001.dgn

LAST REVISION 02-22-16 | DATE PLOTTED => 25-APR-2016 | TIME PLOTTED => 14:17

Dist	COUNTY	ROUTE	POST MILES TOTAL PROJECT	SHEET No.	TOTAL SHEETS
01	Men	101	52.1/52.6	22	54

Mitch Andrus 2-22-16
REGISTERED CIVIL ENGINEER DATE

2-22-16
PLANS APPROVAL DATE

REGISTERED PROFESSIONAL ENGINEER
MITCH ANDRUS
No. C48753
Exp. 09-30-16
CIVIL
STATE OF CALIFORNIA

THE STATE OF CALIFORNIA OR ITS OFFICERS OR AGENTS SHALL NOT BE RESPONSIBLE FOR THE ACCURACY OR COMPLETENESS OF ELECTRONIC COPIES OF THIS PLAN SHEET.

NOTES:

1. THIS PLAN ACCURATE FOR FISH PASSAGE ONLY.
2. MATERIAL SHALL BE A MIXTURE OF MAIN CHANNEL EXCAVATED MATERIAL AND RSP MATERIAL RATIO AS SHOWN IN THE SPECIAL PROVISIONS. MIXED UNTIL A UNIFORM MIXTURE OF COARSE AND FINE AGGREGATE IS ACHIEVED, AND SHALL BE DEPOSITED IN A MANNER TO AVOID SEGREGATION.

LEGEND

- ENGINEERED STREAMBED MATERIAL
- RSP BACKFILL
- BANKLINE ROCK
- RSP No. 3

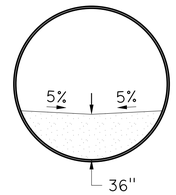

ENGINEERED STREAMBED MATERIAL

(INSIDE PIPE)

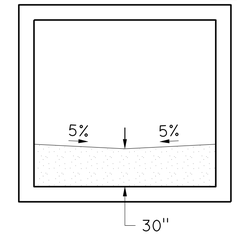

ENGINEERED STREAMBED MATERIAL

(INSIDE RCB)

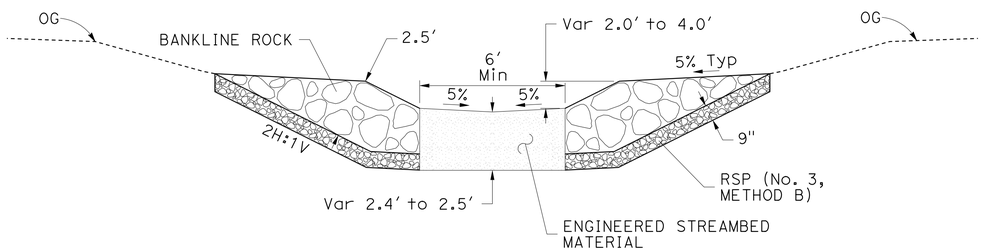

CHANNEL PROTECTION

SEE NOTE 2

BANKLINE ROCK

FROM 92.93' Lt "M" 757+18.24
TO 107.55' LT "M" 757+43.33

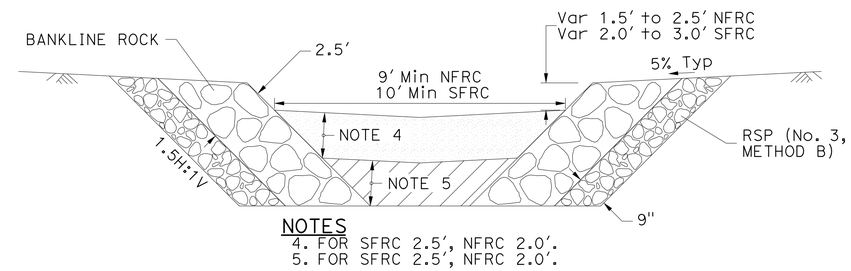

NOTES
4. FOR SFRC 2.5', NFRC 2.0'.
5. FOR SFRC 2.5', NFRC 2.0'.

TYPICAL BANKLINE ROCK & ENGINEERED STREAMBED MATERIAL

SEE NOTE 2

ENGINEERED STREAMBED MATERIAL

Sta "SFRC"23+08.41 TO "SFRC"24+13.41
Sta "SFRC"24+50.42 TO "SFRC"26+76.98
Sta "HFC"1+15.00 TO "HFC"2+85.00
Sta "NFRC"14+60.00 TO "NFRC"15+60.00
Sta "RC2"17+75.00 TO "NFRC"19+50.09

RSP BACKFILL

Sta "AGC"11+6.40 TO "AGC"11+12.79
Sta "AGC"12+80.86 TO "AGC"12+87.77
Sta "HFC"1+08.50 TO "HFC"1+12.78
Sta "HFC"2+80.87 TO "HFC"2+87.35
Sta "RC2"17+78.00 TO "RC2"17+84.03
Sta "RC2"18+72.29 TO "NFRC"19+35.52

BANKLINE ROCK

Sta "SFRC"23+08.41 TO "SFRC"24+13.41
Sta "SFRC"24+50.42 TO "AGC"1+42.00
Sta "AGC"2+44.25 TO "SFRC"26+76.98
Sta "NFRC"14+60.00 TO "NFRC"15+60.000
Sta "RC2"17+32.00 TO "RC2"17+84.50
Sta "RC2"18+72.50 TO "NFRC"17+50.00

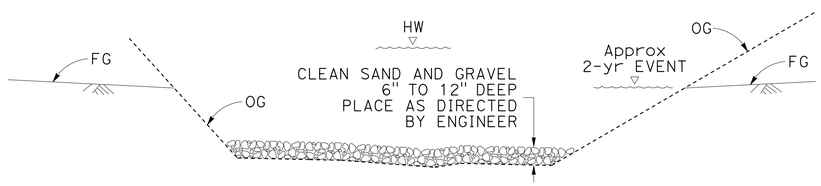

PLACING CLEAN SAND & GRAVEL IN EXISTING STREAMBED

Sta "NFRC"15+74.50 TO "NFRC"15+82.50
Sta "NFRC"16+17.50 TO "NFRC"16+25.50
Sta "NFRC"16+45.50 TO "NFRC"16+68.50
Sta "NFRC"16+88.50 TO "NFRC"17+11.50
Sta "NFRC"17+31.50 TO "NFRC"17+54.50

DRAINAGE DETAILS

NO SCALE

DD-2

REVISED BY | DATE REVISED
S FOSTER | R MIRANDA
CALCULATED-DESIGNED BY | CHECKED BY
FUNCTIONAL SUPERVISOR: DOUGLAS S. JONES

STATE OF CALIFORNIA - DEPARTMENT OF TRANSPORTATION
Caltrans 03-DESIGN

FILE PATH => P:\proj5\01\26201\drafting\01120002051c002.dgn

LAST REVISION 02-22-16 | DATE PLOTTED => 25-APR-2016 | TIME PLOTTED => 14:17

NOTE:

1. THIS PLAN ACCURATE FOR FISH PASSAGE ONLY.
   SEE STANDARD PLAN D90 FOR DETAILS NOT SHOWN.

Dist	COUNTY	ROUTE	POST MILES TOTAL PROJECT	SHEET No.	TOTAL SHEETS
01	Men	101	52.1/52.6	23	54

Mitch Andrus 2-22-16
REGISTERED CIVIL ENGINEER DATE

2-22-16
PLANS APPROVAL DATE

REGISTERED PROFESSIONAL ENGINEER
MITCH ANDRUS
No. C48753
Exp. 09-30-16
CIVIL
STATE OF CALIFORNIA

THE STATE OF CALIFORNIA OR ITS OFFICERS OR AGENTS SHALL NOT BE RESPONSIBLE FOR THE ACCURACY OR COMPLETENESS OF ELECTRONIC COPIES OF THIS PLAN SHEET.

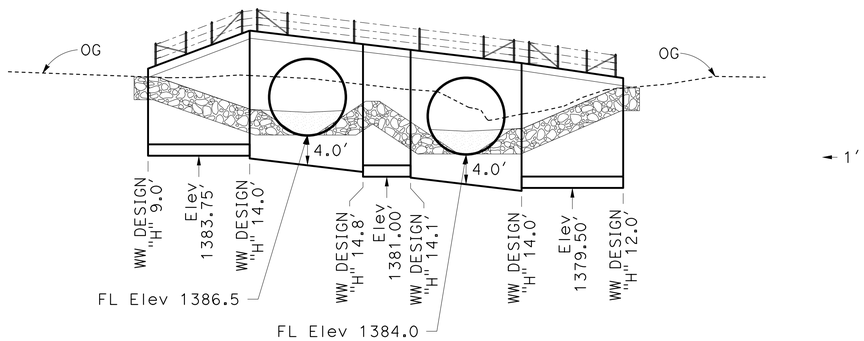

1'

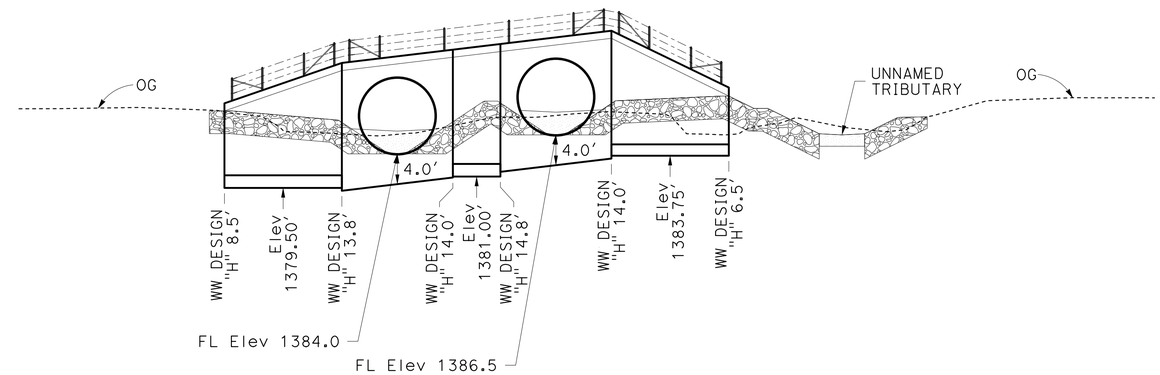

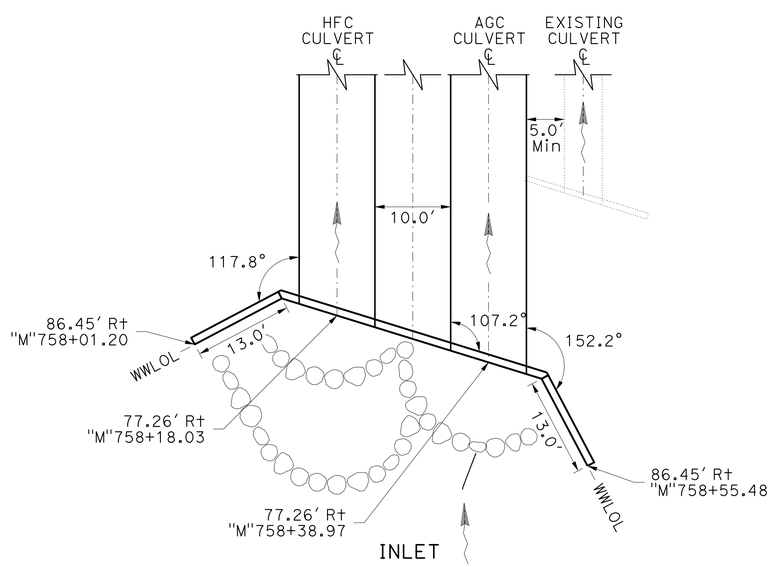

PIPE CULVERT WINGWALLS (TYPE A)

(SOUTH FORK RYAN CREEK)

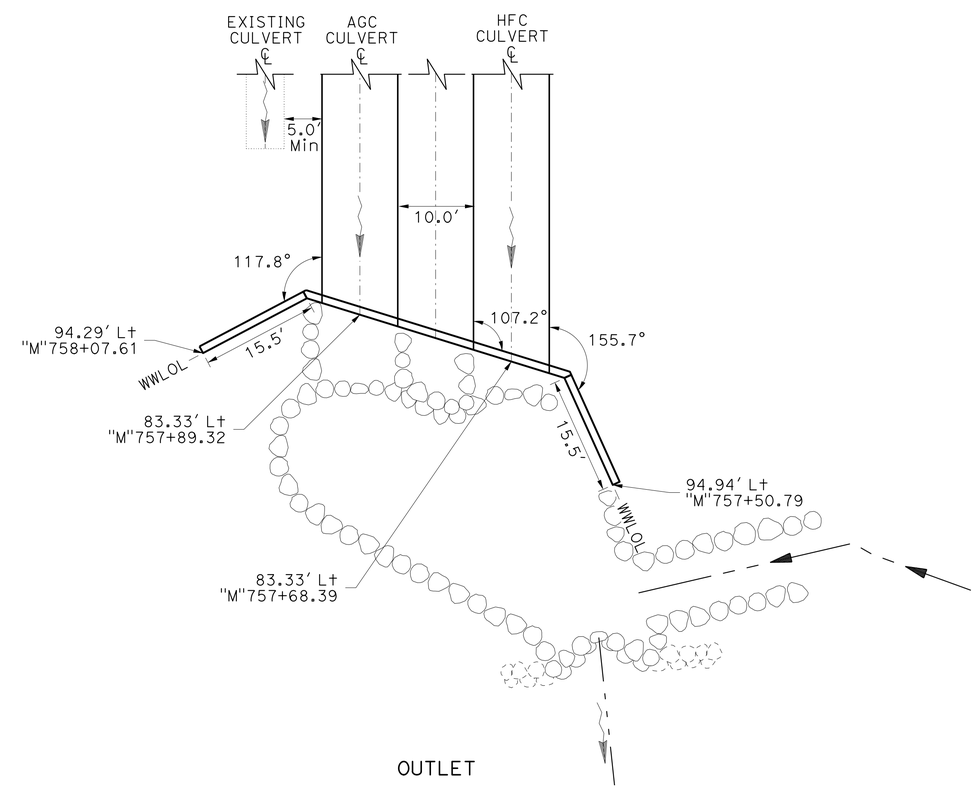

PIPE CULVERT WINGWALLS (TYPE A)

(SOUTH FORK RYAN CREEK)

DRAINAGE DETAILS

NO SCALE

DD-3

STATE OF CALIFORNIA - DEPARTMENT OF TRANSPORTATION
03-DESIGN
FUNCTIONAL SUPERVISOR: DOUGLAS S. JONES
CALCULATED-DESIGNED BY: S FOSTER
CHECKED BY: R MIRANDA
REVISED BY
DATE REVISED

FILE PATH => P:\proj5\01\26201\drafting\01120002051ic003.dgn

LAST REVISION 02-27-15
DATE PLOTTED => 25-APR-2016
TIME PLOTTED => 14:17

Dist	COUNTY	ROUTE	POST MILES TOTAL PROJECT	SHEET No.	TOTAL SHEETS
01	Men	101	52.1/52.6	24	54

Mitch Andrus 2-22-16
REGISTERED CIVIL ENGINEER DATE

2-22-16
PLANS APPROVAL DATE

REGISTERED PROFESSIONAL ENGINEER
MITCH ANDRUS
No. C48753
Exp. 09-30-16
CIVIL
STATE OF CALIFORNIA

THE STATE OF CALIFORNIA OR ITS OFFICERS OR AGENTS SHALL NOT BE RESPONSIBLE FOR THE ACCURACY OR COMPLETENESS OF ELECTRONIC COPIES OF THIS PLAN SHEET.

NOTE:

1. THIS PLAN ACCURATE FOR FISH PASSAGE ONLY.
   SEE STANDARD PLAN D84 FOR DETAILS NOT SHOWN

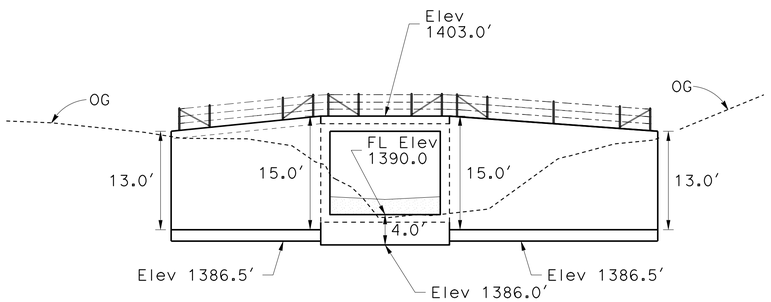

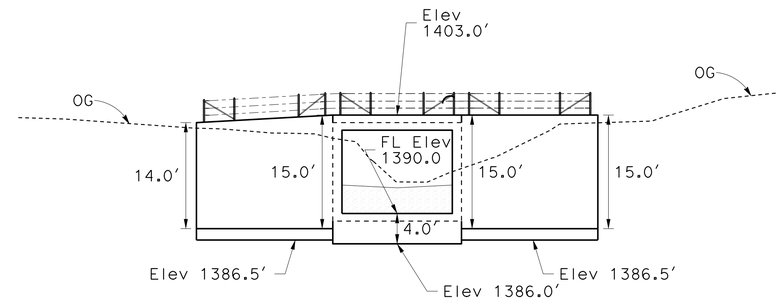

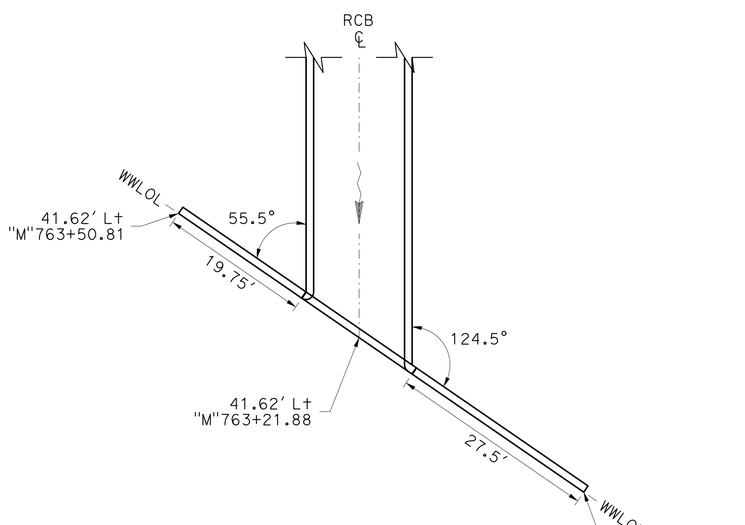

BOX CULVERT WINGWALLS

(NORTH FORK RYAN CREEK)

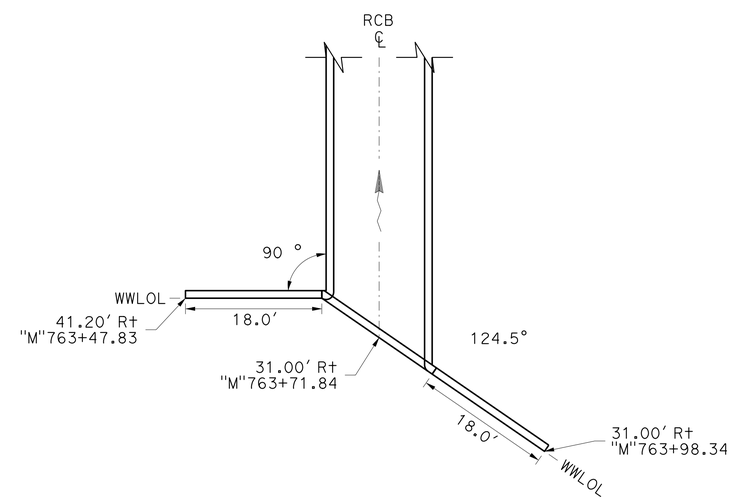

BOX CULVERT WINGWALLS

(NORTH FORK RYAN CREEK)

DRAINAGE DETAILS

NO SCALE

DD-4

REVISED BY	DATE REVISED
S FOSTER	R MIRANDA

CALCULATED-DESIGNED BY
CHECKED BY

FUNCTIONAL SUPERVISOR: DOUGLAS S. JONES

STATE OF CALIFORNIA - DEPARTMENT OF TRANSPORTATION
Caltrans
03-DESIGN

FILE PATH => P:\proj5\01\26201\drafting\01120002051c004.dgn

LAST REVISION 02-27-15 | DATE PLOTTED => 25-APR-2016 | TIME PLOTTED => 14:17

Dist	COUNTY	ROUTE	POST MILES TOTAL PROJECT	SHEET No.	TOTAL SHEETS
01	Men	101	52.1/52.6	25	54

Mitch Andrus 2-22-16
REGISTERED CIVIL ENGINEER DATE

2-22-16
PLANS APPROVAL DATE

REGISTERED PROFESSIONAL ENGINEER
MITCH ANDRUS
No. C48753
Exp. 09-30-16
CIVIL
STATE OF CALIFORNIA

THE STATE OF CALIFORNIA OR ITS OFFICERS OR AGENTS SHALL NOT BE RESPONSIBLE FOR THE ACCURACY OR COMPLETENESS OF ELECTRONIC COPIES OF THIS PLAN SHEET.

NOTES:
1. THIS PLAN ACCURATE FOR FISH PASSAGE ONLY.
2. SEE STANDARD PLAN A62A FOR DETAILS NOT SHOWN.

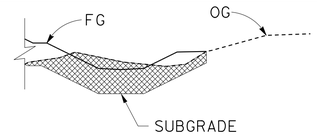

CHANNEL PROTECTION BELOW FINISHED GRADE

(DITCH EXCAVATION)
SEE NOTE 2
FROM 92.93' Lt "M" 757+18.24
TO 107.55' LT "M" 757+43.33

LEGEND
- DITCH EXCAVATION
- ENGINEERED STREAMBED MATERIAL
- ROADWAY EMBANKMENT
- MAIN CHANNEL EXCAVATION (N)
- RSP
- STRUCTURAL BACKFILL (N)
- STRUCTURAL BACKFILL (OVER EXCAVATION)
- STRUCTURE EXCAVATION (N)
- STRUCTURE EXCAVATION (OVER EXCAVATION)
- STRUCTURAL EXCAVATION (TYPE D) (N)
- STRUCTURE EXCAVATION (OVER EXCAVATION, TYPE D)

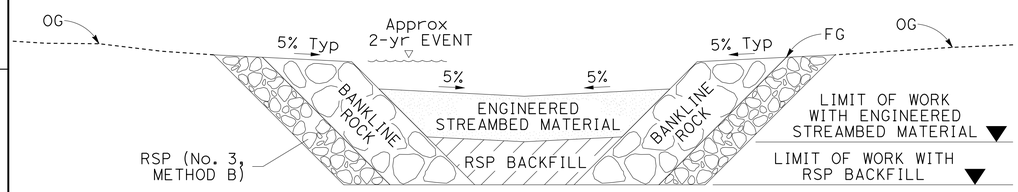

BACKFILL FOR IN-STREAM FISH PASSAGE WORK

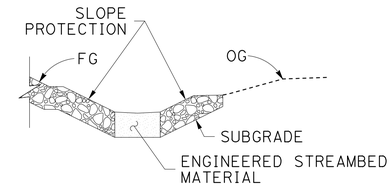

CHANNEL PROTECTION BELOW FINISHED GRADE

(BACKFILL)
SEE NOTE 2
FROM 92.93' Lt "M" 757+18.24
TO 107.55' LT "M" 757+43.33

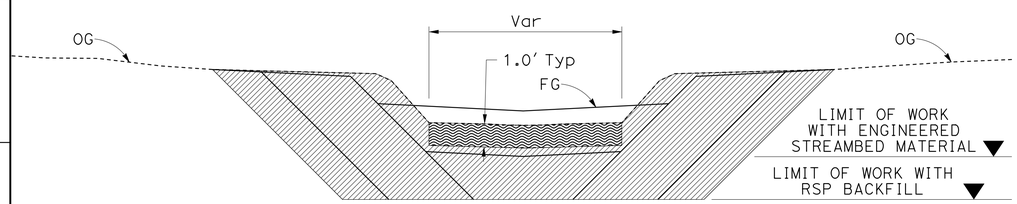

EXCAVATION FOR IN-STREAM FISH PASSAGE WORK

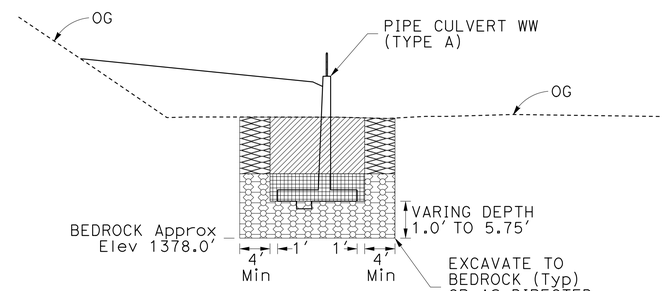

SECTION A-A
(EXCAVATION)
SEE NOTE 2

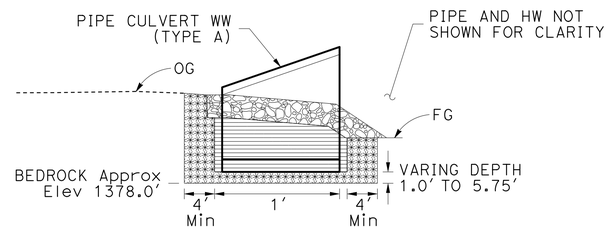

SECTION B-B
(BACKFILL)
SEE NOTE 2

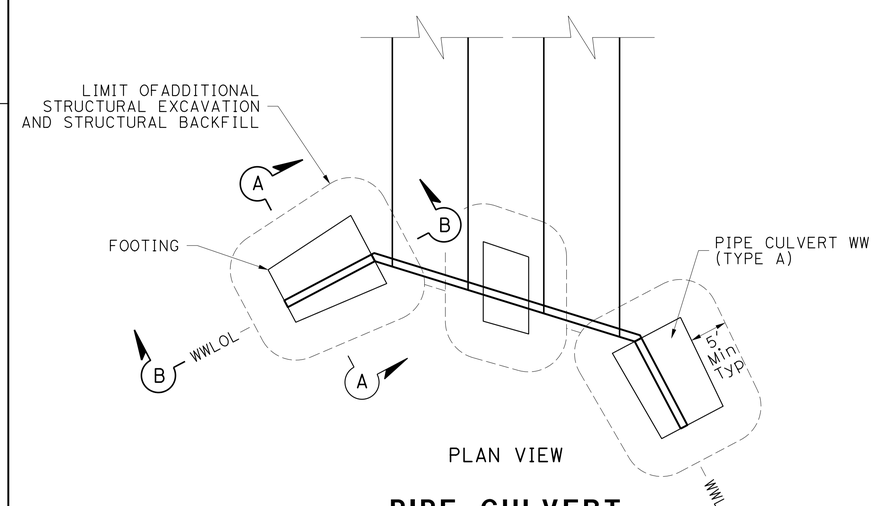

PLAN VIEW

PIPE CULVERT WINGWALLS (TYPE A)

(SOUTH FORK RYAN CREEK)
SEE NOTE 2

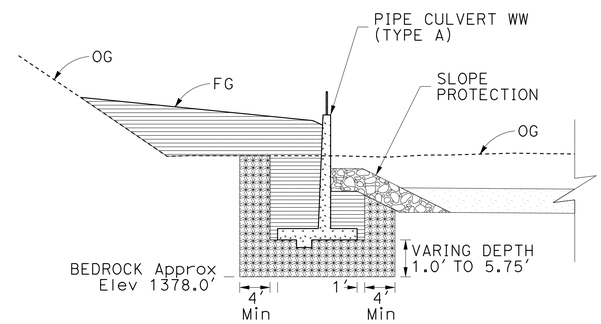

SECTION A-A
(BACKFILL)
SEE NOTE 2

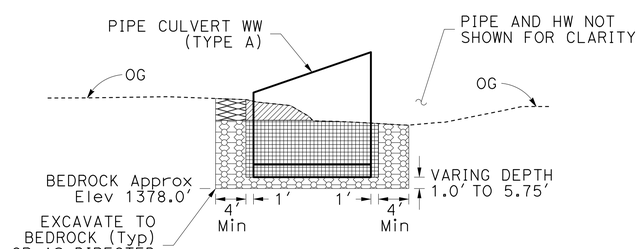

SECTION B-B
(EXCAVATION)
SEE NOTE 2

DRAINAGE DETAILS

NO SCALE

DD-5

REVISED BY	DATE REVISED	S FOSTER	R MIRANDA	DOUGLAS S. JONES
		CALCULATED-DESIGNED BY	CHECKED BY	FUNCTIONAL SUPERVISOR

STATE OF CALIFORNIA - DEPARTMENT OF TRANSPORTATION
Caltrans
03-DESIGN

FILE PATH => P:\proj5\01\26201\drafting\01120002051c005.dgn

LAST REVISION 02-22-16 | DATE PLOTTED => 25-APR-2016 | TIME PLOTTED => 14:17

NOTES:
1. THIS PLAN ACCURATE FOR FISH PASSAGE ONLY.
2. SEE STANDARD PLAN A62A FOR DETAILS NOT SHOWN.
3. FOR DETAILS NOT SHOWN SEE STANDARD PLAN A62G

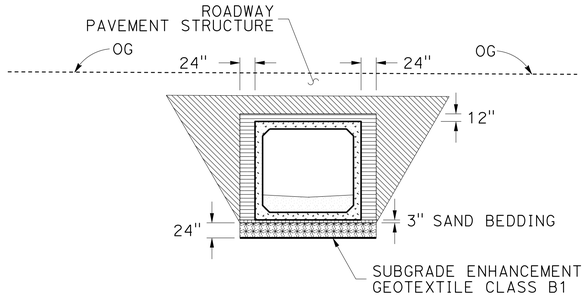

BACKFILL FOR PRECAST REINFORCED CONCRETE BOX CULVERT

SEE NOTE 3

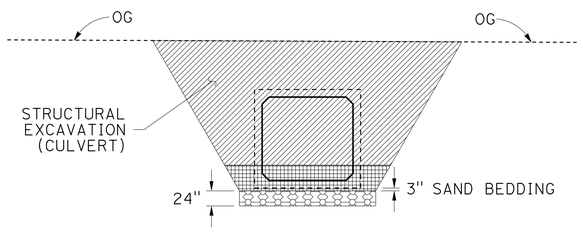

EXCAVATION FOR PRECAST REINFORCED CONCRETE BOX CULVERT

SEE NOTE 3

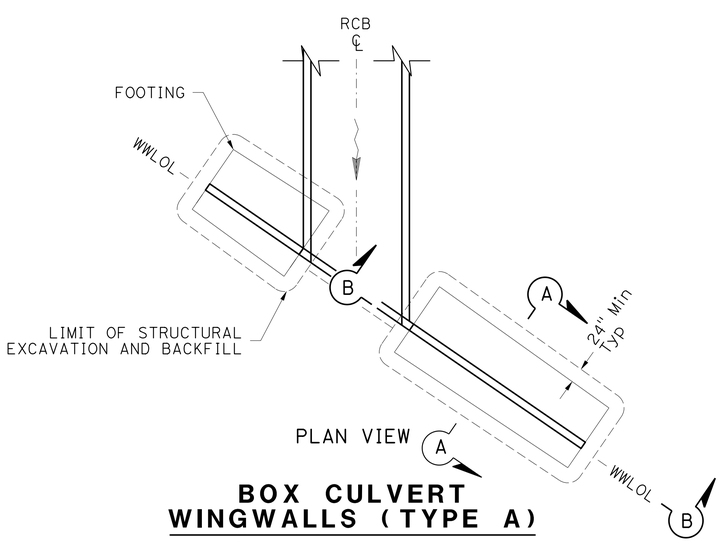

BOX CULVERT WINGWALLS (TYPE A)

(NORTH FORK RYAN CREEK)
SEE NOTE 2

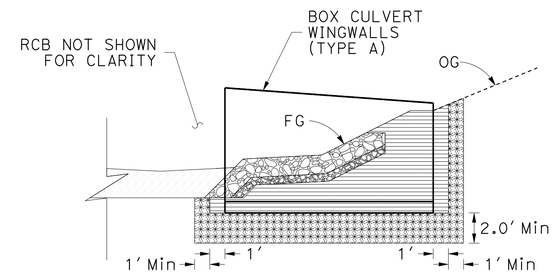

SECTION B-B

(BACKFILL)
SEE NOTE 2

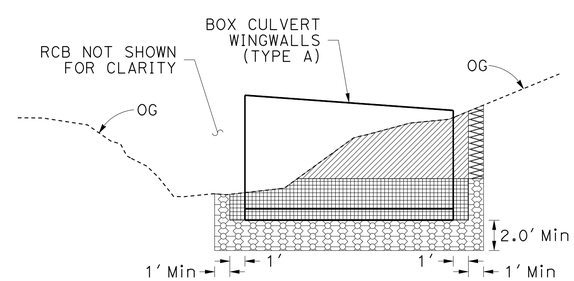

SECTION B-B

(EXCAVATION)
SEE NOTE 2

LEGEND

- ENGINEERED STREAMBED MATERIAL
- ROADWAY EMBANKMENT
- SAND BEDDING
- STRUCTURAL BACKFILL (N)
- STRUCTURAL BACKFILL (OVER EXCAVATION)
- STRUCTURE EXCAVATION (N)
- STRUCTURE EXCAVATION (OVER EXCAVATION)
- STRUCTURAL EXCAVATION (TYPE D) (N)
- STRUCTURE EXCAVATION (OVER EXCAVATION, TYPE D)

Dist	COUNTY	ROUTE	POST MILES TOTAL PROJECT	SHEET No.	TOTAL SHEETS
01	Men	101	52.1/52.6	26	54

Mitch Andrus 2-22-16
REGISTERED CIVIL ENGINEER DATE

2-22-16
PLANS APPROVAL DATE

REGISTERED PROFESSIONAL ENGINEER
MITCH ANDRUS
No. C48753
Exp. 09-30-16
CIVIL
STATE OF CALIFORNIA

THE STATE OF CALIFORNIA OR ITS OFFICERS OR AGENTS SHALL NOT BE RESPONSIBLE FOR THE ACCURACY OR COMPLETENESS OF ELECTRONIC COPIES OF THIS PLAN SHEET.

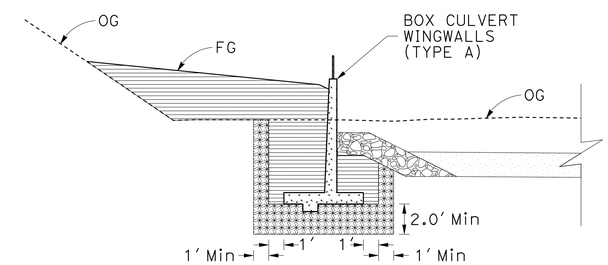

SECTION A-A

(BACKFILL)
SEE NOTE 2

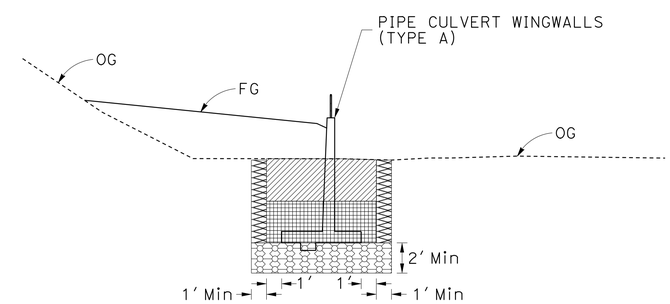

SECTION A-A

(EXCAVATION)
SEE NOTE 2

DRAINAGE DETAILS

NO SCALE

DD-6

REVISED BY	DATE REVISED

CALCULATED-DESIGNED BY	CHECKED BY
S FOSTER	R MIRANDA

FUNCTIONAL SUPERVISOR: DOUGLAS S. JONES

STATE OF CALIFORNIA - DEPARTMENT OF TRANSPORTATION
03-DESIGN
Caltrans

FILE PATH => P:\proj5\01\26201\drafting\01120002051c006.dgn

LAST REVISION 02-22-16 | DATE PLOTTED => 25-APR-2016 | TIME PLOTTED => 14:17

Dist	COUNTY	ROUTE	POST MILES TOTAL PROJECT	SHEET No.	TOTAL SHEETS
01	Men	101	52.1/52.6	27	54

Mitch Andrus 2-22-16
REGISTERED CIVIL ENGINEER DATE

2-22-16
PLANS APPROVAL DATE

REGISTERED PROFESSIONAL ENGINEER
MITCH ANDRUS
No. C48753
Exp. 09-30-16
CIVIL
STATE OF CALIFORNIA

THE STATE OF CALIFORNIA OR ITS OFFICERS OR AGENTS SHALL NOT BE RESPONSIBLE FOR THE ACCURACY OR COMPLETENESS OF ELECTRONIC COPIES OF THIS PLAN SHEET.

NOTES:

1. THIS PLAN ACCURATE FOR FISH PASSAGE ONLY.
2. SEE STANDARD PLAN A62A FOR DETAILS NOT SHOWN.
3. FOR DETAILS NOT SHOWN SEE INFORMATIONAL HANDOUT "GEOTECHNICAL DESIGN REPORT RYAN CREEK SOUTH FORK FISH PASSAGE" AND SPECIAL PROVISIONS.

ABBREVIATIONS

NBETW NORTHBOUND EDGE OF TRAVELED WAY
PT POINT
SBETW SOUTHBOUND EDGE OF TRAVELED WAY

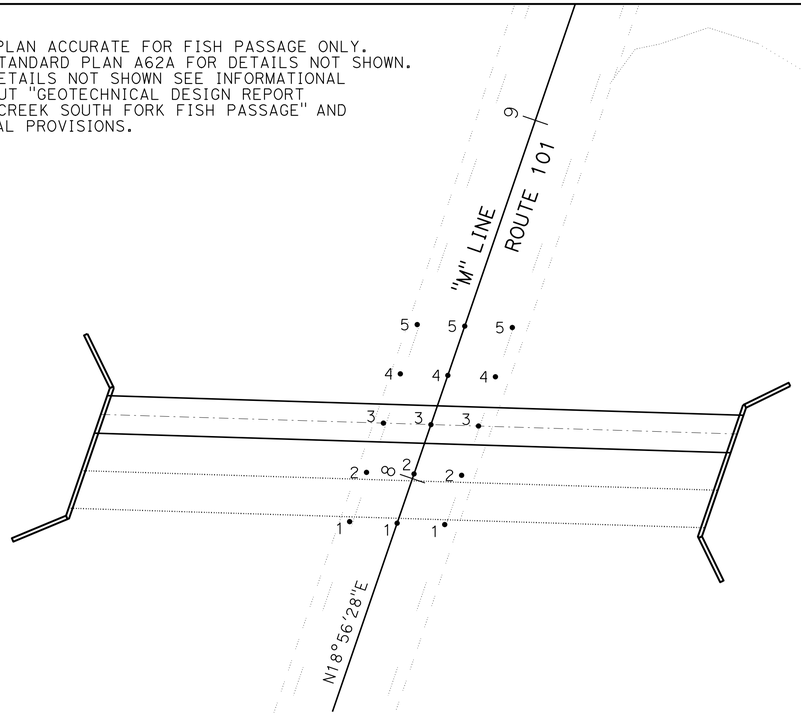

SETTLEMENT MONITORING

AT GRADE CULVERT TABLE

	SBETW		℄	NBETW	
PT	Lt	Sta	Sta	Rt	Sta
1	12'	157+83.88	157+87.56	12'	158+91.30
2	12'	157+97.63	158+01.31	12'	158+05.05
3	12'	158+11.38	158+15.09	12'	158+18.80
4	12'	158+25.13	158+28.81	12'	158+32.55
5	12'	158+38.88	158+42.56	12'	158+46.30

SETTLEMENT MONITORING

AT GRADE CULVERT
"M" 758+15.08

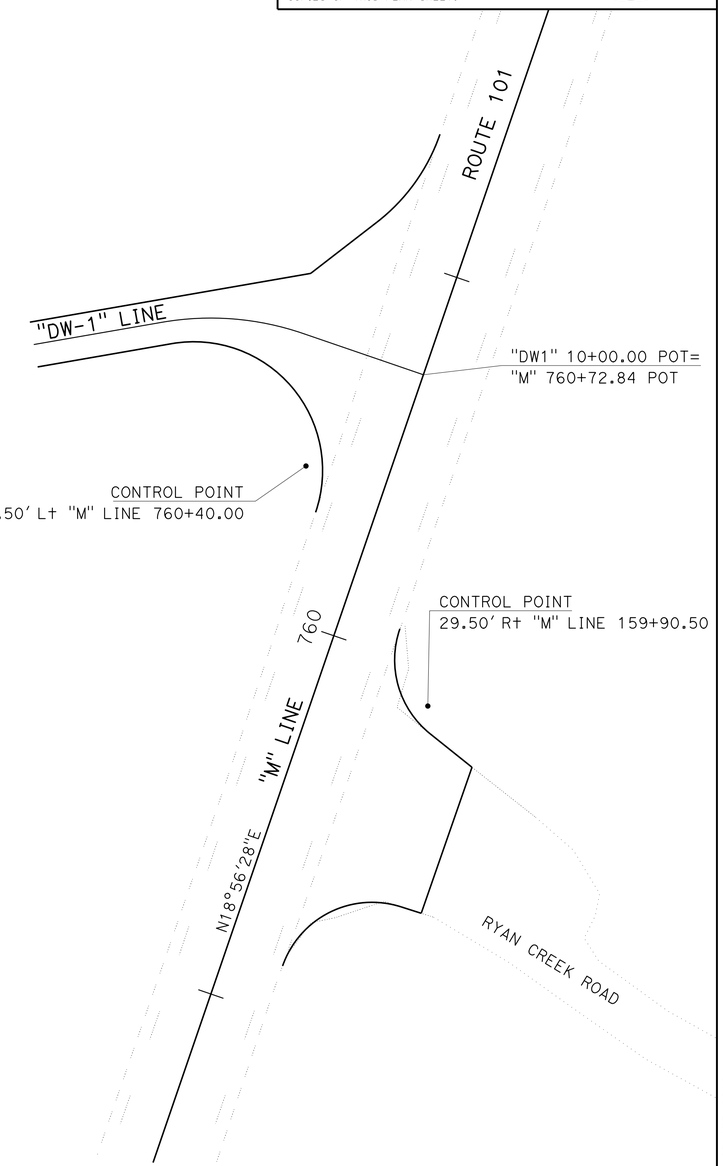

SETTLEMENT MONITORING

HIGH FLOW CULVERT TABLE

	SBETW		℄	NBETW	
PT	Lt	Sta	Sta	Rt	Sta
1	12'	157+63.94	157+67.65	12'	157+71.36
2	12'	157+77.19	157+80.90	12'	157+84.61
3	12'	157+90.44	157+94.15	12'	157+97.86
4	12'	158+03.69	158+07.40	12'	158+11.11
5	12'	158+16.94	158+20.65	12'	158+24.36

SETTLEMENT MONITORING

HIGH FLOW CULVERT
"M" 757+94.15

SETTLEMENT MONITORING

CONTROL POINTS

DRAINAGE DETAILS

NO SCALE

DD-7

REVISED BY | DATE REVISED
S FOSTER | R MIRANDA
CALCULATED-DESIGNED BY | CHECKED BY
FUNCTIONAL SUPERVISOR
DOUGLAS S. JONES

STATE OF CALIFORNIA - DEPARTMENT OF TRANSPORTATION
Caltrans
03-DESIGN

FILE PATH => P:\proj5\01\26201\drafting\01120002051c007.dgn

LAST REVISION 02-22-16 | DATE PLOTTED => 25-APR-2016 | TIME PLOTTED => 14:17

NOTE:
1. THIS PLAN ACCURATE FOR FISH PASSAGE ONLY.

Dist	COUNTY	ROUTE	POST MILES TOTAL PROJECT	SHEET No.	TOTAL SHEETS
01	Men	101	52.1/52.6	28	54

Mitch Andrus 2-22-16
REGISTERED CIVIL ENGINEER DATE

2-22-16
PLANS APPROVAL DATE

REGISTERED PROFESSIONAL ENGINEER MITCH ANDRUS No. C48753 Exp. 09-30-16 CIVIL STATE OF CALIFORNIA

THE STATE OF CALIFORNIA OR ITS OFFICERS OR AGENTS SHALL NOT BE RESPONSIBLE FOR THE ACCURACY OR COMPLETENESS OF ELECTRONIC COPIES OF THIS PLAN SHEET.

SAND AND GRAVEL

SAND AND GRAVEL IN STREAMBED	STATION	
(CY)	FROM	TO
1.3	"NFRC" 15+74.50	"NFRC" 15+82.50
1.3	"NFRC" 16+17.50	"NFRC" 16+25.50
3.8	"NFRC" 16+45.50	"NFRC" 16+68.50
7.7	"NFRC" 16+88.50	"NFRC" 17+11.50
7.7	"NFRC" 17+31.50	"NFRC" 17+54.50
21.8	TOTAL	

ENGINEERED STREAMBED MATERIAL

(N) MAIN CHANNEL EXCAVATION	(N) SAND AND GRAVEL	(N) RSP (No. 3, METHOD B)	(N) RSP (NO. 2, METHOD B)	(N) RSP (LIGHT, METHOD B)	(N) ENGINEERED STREAMBED MATERIAL	STATION	
(CY)	(CY)	(CY)	(CY)	(CY)	(CY)	FROM	TO
3.1	3.6	3.6	2.9	4.3	17.6	"SFRC" 23+08.41	"SFRC" 23+33.41
6.8	8.0	8.0	6.4	9.5	38.7	"SFRC" 23+33.41	"SFRC" 23+88.41
3.1	3.6	3.6	2.9	4.3	17.6	"SFRC" 23+88.41	"SFRC" 24+13.41
13.4	7.2	7.2	5.8	8.7	42.4	"SFRC" 24+13.41	"AGC" 11+03.23
1.2	1.4	1.4	1.1	1.7	6.9	"AGC" 11+03.23	"AGC" 11+12.98
20.7	32.5	32.5	26.0	39.0	150.7	"AGC" 11+12.98	"AGC" 12+80.86
1.4	1.6	1.6	1.3	2.0	8.0	"AGC" 12+80.86	"AGC" 12+92.12
5.4	6.4	6.4	5.1	7.6	30.9	"SFRC" 26+54.90	"SFRC" 26+98.87
0.9	1.1	1.1	0.9	1.3	5.4	"HFC" 1+05.19	"HFC" 1+12.78
20.8	32.5	32.5	26.0	39.0	150.8	"HFC" 1+12.78	"HFC" 2+80.87
3.3	3.9	3.9	3.1	4.6	18.8	"HFC" 2+80.87	"HFC" 3+07.50
2.8	2.8	2.8	3.3	2.2	13.9	"NFRC" 14+59.50	"NFRC" 14+84.50
5.6	5.6	5.6	6.7	4.4	27.8	"NFRC" 14+84.50	"NFRC" 15+34.50
2.8	2.8	2.8	3.3	2.2	13.9	"NFRC" 15+34.50	"NFRC" 15+59.50
2.3	2.3	2.3	2.7	1.8	11.3	"NFRC" 15+82.20	"NFRC" 16+02.50
4.8	4.8	4.8	5.7	3.8	23.9	"NFRC" 16+02.50	"NFRC" 16+45.50
2.2	2.2	2.2	2.7	1.8	11.2	"NFRC" 16+68.50	"NFRC" 16+88.50
2.2	2.2	2.2	2.7	1.8	11.2	"NFRC" 17+11.50	"NFRC" 17+31.50
2.2	2.2	2.2	2.7	1.8	11.2	"NFRC" 17+54.50	"NFRC" 17+74.50
12.6	34.5	34.5	41.4	27.6	150.7	"NFRC" 17+74.50	"NFRC" 18+87.50
6.9	6.9	6.9	8.3	5.6	34.8	"NFRC" 18+87.50	"NFRC" 19+50.00
					797.7	TOTAL	

(N) NOT A PAY ITEM, FOR INFORMATIONAL PURPOSES ONLY.

ROCK SLOPE PROTECTION BACKFILL

(N) MAIN CHANNEL EXCAVATION	(N) SAND AND GRAVEL	(N) RSP (No. 3, METHOD B)	(N) RSP (LIGHT, METHOD B)	(N) RSP (1/4 T, METHOD B)	(N) RSP BACKFILL VOID FILLER	RSP BACKFILL	STATION	
(CY)	(CY)	(CY)	(CY)	(CY)	(CY)	(CY)	FROM	TO
1.1	2.7	1.8	0.9	3.6	4.5	14.7	"AGC" 11+03.23	"AGC" 11+13.01
1.3	3.1	2.1	1.0	4.2	5.2	16.9	"AGC" 12+80.86	"AGC" 12+92.12
0.8	2.0	1.3	0.7	2.7	3.4	10.9	"HFC" 1+05.51	"HFC" 1+12.78
1.1	2.8	1.9	0.9	3.7	4.6	15.0	"HFC" 2+80.87	"HFC" 2+90.87
1.0	2.8	1.2	3.2	0.8	4.0	13.0	"RC2" 17+74.50	"RC2" 17+83.53
1.7	4.7	2.0	5.4	1.4	6.8	22.0	"RC2" 18+72.29	"RC2" 18+87.50
						92.5	TOTAL	

(N) NOT A PAY ITEM, FOR INFORMATIONAL PURPOSES ONLY.

BANKLINE ROCK

(N) MAIN CHANNEL EXCAVATION	(N) SAND AND GRAVEL	(N) RSP (No. 3, METHOD B)	(N) RSP (LIGHT, METHOD B)	(N) RSP (1/4 T, METHOD B)	BANKLINE ROCK	STATION	
(CY)	(CY)	(CY)	(CY)	(CY)	(CY)	FROM	TO
2.8	11.8	18.1	7.9	11.8	52.4	"SFRC" 23+08.41	"SFRC" 23+33.41
6.2	26.0	39.8	17.3	26.0	115.3	"SFRC" 23+33.41	"SFRC" 23+83.41
2.8	11.8	18.1	7.9	11.8	52.4	"SFRC" 23+83.41	"SFRC" 24+08.41
12.1	21.5	32.9	14.3	21.5	102.3	"SFRC" 24+08.41	"AGC" 11+03.04
1.1	9.2	14.1	6.2	9.2	39.8	"AGC" 11+03.04	"AGC" 11+12.79
1.3	5.3	8.2	3.6	5.3	23.7	"AGC" 12+80.86	"AGC" 12+91.90
4.9	20.8	31.8	13.9	20.8	92.2	"SFRC" 26+54.90	"SFRC" 26+98.57
2.8	9.3	13.1	12.4	3.1	40.7	"NFRC" 14+59.50	"NFRC" 14+84.50
5.6	18.6	26.2	24.8	6.2	81.4	"NFRC" 14+84.50	"NFRC" 15+34.50
2.8	9.3	13.1	12.4	3.1	40.7	"NFRC" 15+34.50	"NFRC" 15+59.50
1.1	3.6	5.0	4.8	1.2	15.7	"NFRC" 17+74.50	"NFRC" 17+84.03
1.7	5.7	8.0	7.6	1.9	24.9	"NFRC" 18+72.29	"NFRC" 18+87.50
7.0	23.2	32.7	30.9	7.8	24.9	"NFRC" 18+87.50	"NFRC" 19+50.00
					783.1	TOTAL	

(N) NOT A PAY ITEM, FOR INFORMATIONAL PURPOSES ONLY.

ROCK WEIR

ID	STATION	(N) MAIN CHANNEL EXCAVATION	(N) RSP (No. 1, METHOD B)	(N) RSP (1/2 T, METHOD A)	(N) RSP (1 T, METHOD A)	(N) ROCK WEIR FILLER	ROCK WEIR
		(CY)	(CY)	(CY)	(CY)	(CY)	(CY)
SF-01	"SFRC" 23+08.41	1.5	11.1	17.7	17.7	17.7	65.7
SF-02	"SFRC" 23+33.41	1.5	11.1	17.7	17.7	17.7	65.7
SF-03	"SFRC" 23+88.41	1.5	11.1	17.7	17.7	17.7	65.7
SF-04	"SFRC" 24+13.41	1.5	11.1	17.7	17.7	17.7	65.7
SF-05	"AGC" 11+03.25	1.5	11.1	17.7	17.7	17.7	65.7
SF-06	"AGC" 12+92.12	1.5	11.1	17.7	17.7	17.7	65.7
SF-07	"SFRC" 26+98.87	1.5	11.1	17.7	17.7	17.7	65.7
SF-08	"HFC" 1+05.00	1.5	11.1	17.7	17.7	17.7	65.7
SF-09	"HFC" 2+90.93	1.5	11.1	17.7	17.7	17.7	65.7
SF-10	"HFC" 3+07.50	1.5	11.1	17.7	17.7	17.7	65.7
NF-01	"NFRC" 14+59.50	1.5	11.1	17.7	17.7	17.7	65.7
NF-02	"NFRC" 14+84.50	1.5	11.1	17.7	17.7	17.7	65.7
NF-03	"NFRC" 15+34.50	1.5	11.1	17.7	17.7	17.7	65.7
NF-04	"NFRC" 15+59.50	1.5	11.1	17.7	17.7	17.7	65.7
NF-05	"NFRC" 16+02.50	1.5	11.1	17.7	17.7	17.7	65.7
NF-06	"NFRC" 16+45.50	1.5	11.1	17.7	17.7	17.7	65.7
NF-07	"RC2" 16++88.50	1.5	11.1	17.7	17.7	17.7	65.7
NF-08	"RC2" 17+31.50	1.5	11.1	17.7	17.7	17.7	65.7
NF-09	"RC2" 17+74.50	1.5	11.1	17.7	17.7	17.7	65.7
NF-10	"RC2" 18+87.50	1.5	11.1	17.7	17.7	17.7	65.7
NF-11	"NFRC" 19+50.00	1.5	11.1	17.7	17.7	17.7	65.7
						TOTAL:	1434.5

(N) NOT A PAY ITEM, FOR INFORMATIONAL PURPOSES ONLY.

DRAINAGE QUANTITIES

DQ-1

REVISED BY | DATE REVISED
S FOSTER | R MIRANDA
CALCULATED-DESIGNED BY | CHECKED BY
FUNCTIONAL SUPERVISOR: DOUGLAS S. JONES

STATE OF CALIFORNIA - DEPARTMENT OF TRANSPORTATION
Caltrans 03-DESIGN

FILE PATH => P:\proj5\01\26201\drafting\01120002051d001.dgn

LAST REVISION 02-22-16 | DATE PLOTTED => 25-APR-2016 | TIME PLOTTED => 14:17

NOTE:
1. THIS PLAN ACCURATE FOR FISH PASSAGE ONLY.

Dist	COUNTY	ROUTE	POST MILES TOTAL PROJECT	SHEET No.	TOTAL SHEETS
01	Men	101	52.1/52.6	29	54

Mitch Andrus 2-22-16
REGISTERED CIVIL ENGINEER DATE

2-22-16
PLANS APPROVAL DATE

REGISTERED PROFESSIONAL ENGINEER
MITCH ANDRUS
No. C48753
Exp. 09-30-16
CIVIL
STATE OF CALIFORNIA

THE STATE OF CALIFORNIA OR ITS OFFICERS OR AGENTS SHALL NOT BE RESPONSIBLE FOR THE ACCURACY OR COMPLETENESS OF ELECTRONIC COPIES OF THIS PLAN SHEET.

DRAINAGE QUANTITIES

DRAINAGE SHEET No.	DRAINAGE SYSTEM No.	DRAINAGE UNIT	ABANDON CULVERT (LF)	REMOVE ITEMS: REMOVE CULVERT (N) (LF)	REMOVE ITEMS: REMOVE HEADWALL (N) (EA)	Misc ITEMS: CABLE RAILING (LF)	Misc ITEMS: SAND BACKFILL (CY)	Misc ITEMS: STRUCTURE BACKFILL (N) (CY)	Misc ITEMS: STRUCTURE EXCAVATION (N) (CY)	Misc ITEMS: STRUCTURE EXCAVATION (TYPE D) (N) (CY)	Misc ITEMS: STRUCTURE BACKFILL (OVER EXCAVATION) (CY)	Misc ITEMS: STRUCTURE EXCAVATION (OVER EXCAVATION) (CY)	Misc ITEMS: STRUCTURE EXCAVATION (OVER EXCAVTION, TYPE D) (CY)	Misc ITEMS: PRECAST RCB (12' x 11') (LF)	CONCRETE AND STEEL: STRUCTURAL CONCRETE (HEADWALL) (CY)	CONCRETE AND STEEL: BAR REINFORCING STEEL (LB)	CONCRETE AND STEEL: 120" STEEL PIPE (RAMMED)* (LF)	DRAINAGE UNIT	STATION	DESCRIPTION
1	1	a	-	-	-	-	-	170.9	32.4	63.0	191.6	19.3	116.4	-	35.8	3707	-	a	"M"757+94.15	PIPE CULVERT WINGWALLS (TYPE A)
		b	-	-	-	66	-	-	-	-	-	-	-	-	-	-	-	b		CABLE RAILING
		c	124.8	-	-	-	86.4	-	-	-	-	-	-	-	-	-	-	c		ABANDON CULVERT
		d	-	-	-	-	-	763.0	-	-	-	-	-	-	-	-	337	d		Dbl 120" SP (RAMMED)
		e	-	-	1	-	-	-	-	-	-	-	-	-	-	-	-	e		REMOVE HEADWALL
		f	-	-	-	-	-	179.0	32.4	88.5	175.1	40.8	78.6	-	37.4	3435	-	f		PIPE CULVERT WINGWALLS (TYPE A)
		g	-	-	-	60	-	-	-	-	-	-	-	-	-	-	-	g		CABLE RAILING
2	2	a	-	-	-	-	-	250.0	163.7	40.8	62.7	11.8	44.3	-	59.0	4679	-	a	"M"763+52.52	BOX CULVERT WINGWALLS (TYPE A)
		b	-	-	-	58	-	-	-	-	-	-	-	-	-	-	-	b		CABLE RAILING
		c	-	83	-	-	-	322.8	649.3	202.1	118.0	-	118.0	88.3	-	-	-	c		PRECAST RCB (12' x 11')
		d	-	-	-	-	-	217.1	93.9	118.2	58.2	8.7	46.2	-	48.3	4131	-	d		BOX CULVERT WINGWALLS (TYPE A)
		e	-	-	-	42	-	-	-	-	-	-	-	-	-	-	-	e		CABLE RAILING
		f	-	-	1	-	-	-	-	-	-	-	-	-	-	-	-	f		REMOVE HEADWALL
TOTAL:			124.8	83	2	226	86.4	1902.8	971.7	512.6	605.6	80.6	403.5	88.3	145.9	12902	337			

(N) NOT A PAY ITEM, FOR INFORMATIONAL PURPOSES ONLY.
* ITEM TO BE PAID AS A LUMP SUM.

DRAINAGE QUANTITIES

DQ-2

REVISED BY | DATE REVISED
S FOSTER | R MIRANDA
CALCULATED-DESIGNED BY | CHECKED BY
FUNCTIONAL SUPERVISOR: DOUGLAS S. JONES

STATE OF CALIFORNIA - DEPARTMENT OF TRANSPORTATION
Caltrans 03-DESIGN

FILE PATH => P:\proj5\01\26201\drafting\01120002051d002.dgn

LAST REVISION 02-22-16 | DATE PLOTTED => 25-APR-2016 | TIME PLOTTED => 14:17

Dist	COUNTY	ROUTE	POST MILES TOTAL PROJECT	SHEET No.	TOTAL SHEETS
01	Men	101	52.1/52.6	30	54

Mitch Andrus 2-22-16
REGISTERED CIVIL ENGINEER DATE

2-22-16
PLANS APPROVAL DATE

REGISTERED PROFESSIONAL ENGINEER
MITCH ANDRUS
No. C48753
Exp. 09-30-16
CIVIL
STATE OF CALIFORNIA

THE STATE OF CALIFORNIA OR ITS OFFICERS OR AGENTS SHALL NOT BE RESPONSIBLE FOR THE ACCURACY OR COMPLETENESS OF SCANNED COPIES OF THIS PLAN SHEET.

NOTES:

1. EXACT SIGN LOCATION TO BE DETERMINED BY THE ENGINEER.
2. ALL DIMENSIONS ARE IN INCHES UNLESS OTHERWISE SHOWN.
3. EACH ADVANCE WARNING SIGH IN EACH DIRECTION OF TRAVEL SHALL BE EQUIPPED WITH AT LEAST TWO FLAGS FOR DAYTIME CLOSURE. EACH FLAG SHALL BE AT LEAST 16"x16" IN SIZE AND SHALL BE ORANGE OR FLOURESCENT RED-ORANGE IN COLOR. FLASHING BEACONS SHALL BE PLACED AT THE LOCATIONS INDICATED FOR LANE CLOSURE DURING HOURS OF DARKNESS.

STATIONARY MOUNTED CONSTRUCTION AREA SIGNS

SIGN LOCATION		SIGN CODE		PANEL SIZE	SIGN MESSAGE	NUMBER OF POST AND SIZE	NUMBER OF SIGNS
SIGN DESIGNATION	DESCRIPTION	FEDERAL	CALIFORNIA				
B	ROUTE 101	W20-1		36" x 36"	ROAD WORK AHEAD	1 - 4" x 6"	4
D	ROUTE 101	G20-2		36" x 18"	END ROAD WORK	1 - 4" x 4"	2
A	ROUTE 101		C40	108" x 42"	TRAFFIC FINES DOUBLED IN CONSTRUCTION ZONES	2 - 6" x 6"	2
C	ROUTE 101	W11-1 W16-1P		36" x 36" 24" x 30"	BICYCLE SYMBOL SHARE THE ROAD	1 - 4" x 6"	2
						TOTAL	10

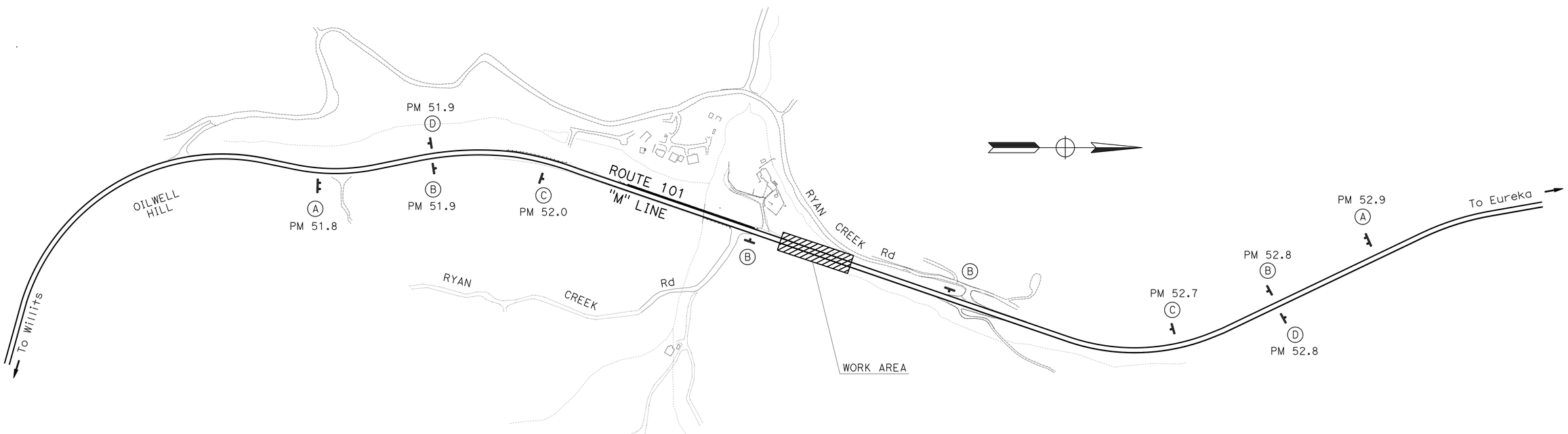

CONSTRUCTION AREA SIGNS

NO SCALE

CS-1

APPROVED FOR CONSTRUCTION AREA SIGN WORK ONLY

STATE OF CALIFORNIA - DEPARTMENT OF TRANSPORTATION
Caltrans
03-DESIGN

FUNCTIONAL SUPERVISOR: DOUGLAS S. JONES
CALCULATED-DESIGNED BY: KARA L. BRIMHALL
CHECKED BY: MITCH ANDRUS
REVISED BY
DATE REVISED

LAST REVISION 01-20-16
DATE PLOTTED => 25-APR-2016
TIME PLOTTED => 14:17

Dist	COUNTY	ROUTE	POST MILES TOTAL PROJECT	SHEET No.	TOTAL SHEETS
01	Men	101	52.1/52.6	31	54

Mitch Andrus 2-22-16
REGISTERED CIVIL ENGINEER DATE

2-22-16
PLANS APPROVAL DATE

REGISTERED PROFESSIONAL ENGINEER
MITCH ANDRUS
No. C48753
Exp 09-30-16
CIVIL
STATE OF CALIFORNIA

THE STATE OF CALIFORNIA OR ITS OFFICERS OR AGENTS SHALL NOT BE RESPONSIBLE FOR THE ACCURACY OR COMPLETENESS OF SCANNED COPIES OF THIS PLAN SHEET.

NOTES:

1. THIS PLAN ACCURATE FOR STAGE CONSTRUCTION ONLY.
   FOR CONSTRUCTION OF DRAINAGE FEATURES, SEE DRAINAGE PLAN, PROFILE AND DETAIL SHEETS.
2. PLACE STRUCTURAL SECTION ON SOUTHBOUND 101 AS FIRST ORDER OF WORK.
3. USE MAXIMUM 10:1 TAPER FOR TEMPORARY RAILING (TYPE K).

LEGEND:

- STAGE 1 LIMITS OF NEW STRUCTURAL SECTION
- DIRECTION OF TRAVEL
- TEMPORARY CRASH CUSHION

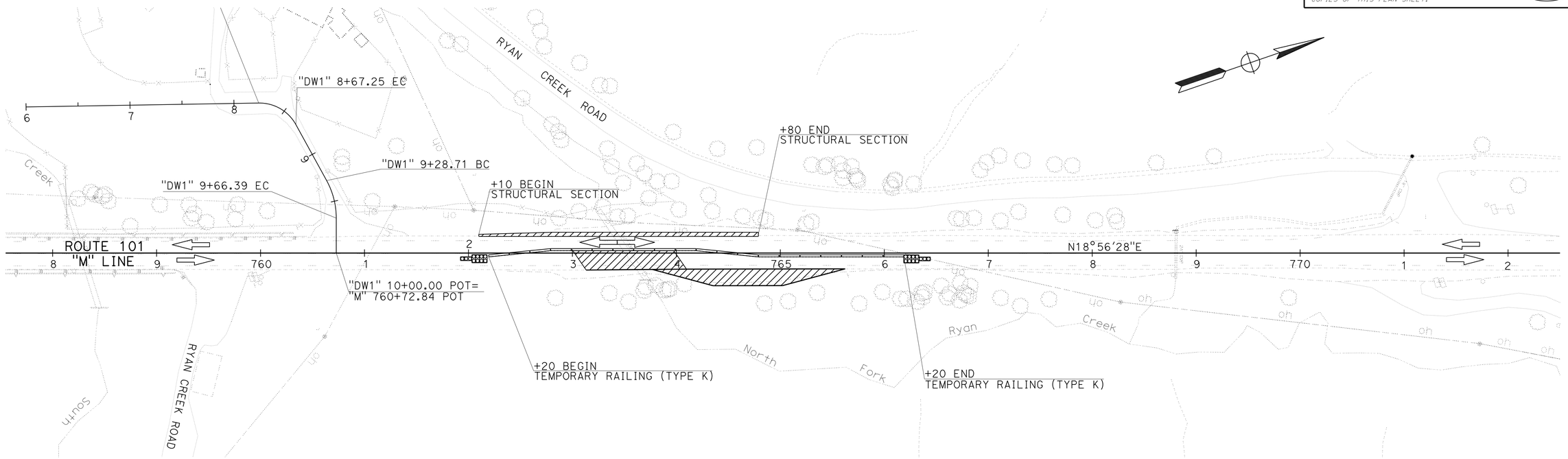

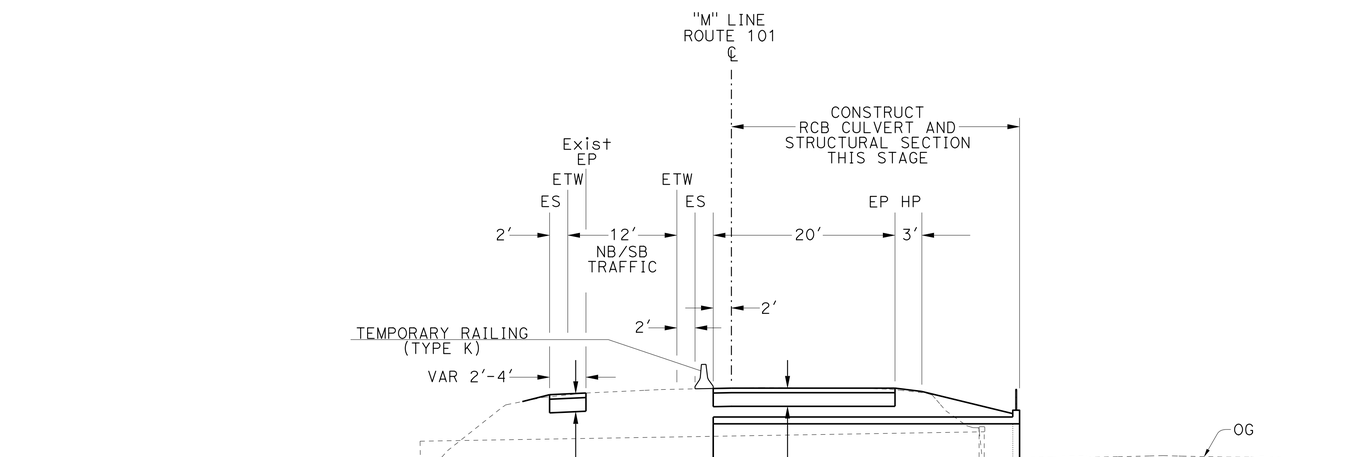

STAGE 1
TYPICAL SECTION
NO SCALE

STAGE CONSTRUCTION
STAGE 1

SCALE 1"=50'

SC-1

REVISED BY	DATE REVISED
KARA L. BRIMHALL	MITCH ANDRUS
CALCULATED-DESIGNED BY	CHECKED BY
FUNCTIONAL SUPERVISOR	DOUGLAS S. JONES

STATE OF CALIFORNIA - DEPARTMENT OF TRANSPORTATION
Caltrans
03-DESIGN

LAST REVISION 02-17-16 | DATE PLOTTED => 25-APR-2016 | TIME PLOTTED => 14:17

Dist	COUNTY	ROUTE	POST MILES TOTAL PROJECT	SHEET No.	TOTAL SHEETS
01	Men	101	52.1/52.6	32	54

Mitch Andrus 2-22-16
REGISTERED CIVIL ENGINEER DATE

2-22-16
PLANS APPROVAL DATE

REGISTERED PROFESSIONAL ENGINEER
MITCH ANDRUS
No. C48753
Exp. 09-30-16
CIVIL
STATE OF CALIFORNIA

THE STATE OF CALIFORNIA OR ITS OFFICERS OR AGENTS SHALL NOT BE RESPONSIBLE FOR THE ACCURACY OR COMPLETENESS OF SCANNED COPIES OF THIS PLAN SHEET.

NOTES:
1. THIS PLAN ACCURATE FOR STAGE CONSTRUCTION ONLY.
   FOR CONSTRUCTION OF DRAINAGE FEATURES, SEE DRAINAGE PLAN, PROFILE AND DETAIL SHEETS.
2. USE MAXIMUM 10:1 TAPER FOR TEMPORARY RAILING (TYPE K).

LEGEND:
- STAGE 2 LIMITS OF NEW STRUCTURAL SECTION
- DIRECTION OF TRAVEL
- TEMPORARY CRASH CUSHION

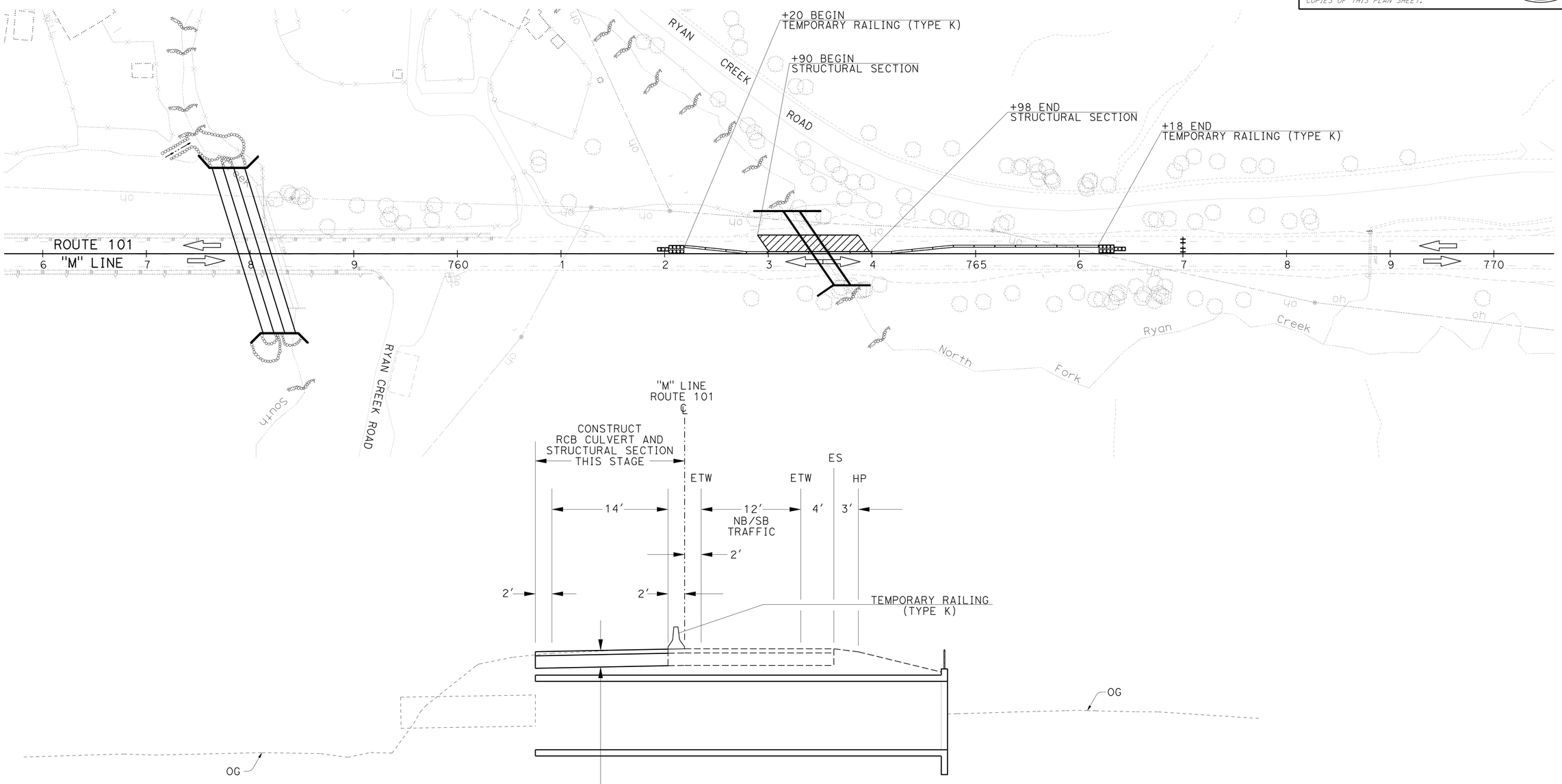

STAGE 2
TYPICAL SECTION
NO SCALE

STAGE CONSTRUCTION
STAGE 2
SCALE 1"=50′

SC-2

STATE OF CALIFORNIA - DEPARTMENT OF TRANSPORTATION
Caltrans®
03-DESIGN

FUNCTIONAL SUPERVISOR: DOUGLAS S. JONES
CALCULATED-DESIGNED BY: KARA L. BRIMHALL
CHECKED BY: MITCH ANDRUS
REVISED BY
DATE REVISED

LAST REVISION 02-17-16
DATE PLOTTED => 25-APR-2016
TIME PLOTTED => 14:17

Dist	COUNTY	ROUTE	POST MILES TOTAL PROJECT	SHEET No.	TOTAL SHEETS
01	Men	101	52.1/52.6	33	54

Mitch Andrus 2-22-16
REGISTERED CIVIL ENGINEER DATE

2-22-16
PLANS APPROVAL DATE

REGISTERED PROFESSIONAL ENGINEER
MITCH ANDRUS
No. C48753
Exp. 09-30-16
CIVIL
STATE OF CALIFORNIA

THE STATE OF CALIFORNIA OR ITS OFFICERS OR AGENTS SHALL NOT BE RESPONSIBLE FOR THE ACCURACY OR COMPLETENESS OF SCANNED COPIES OF THIS PLAN SHEET.

NOTES:
1. THIS PLAN ACCURATE FOR STAGE CONSTRUCTION ONLY.
   FOR CONSTRUCTION OF DRAINAGE FEATURES, SEE DRAINAGE PLAN, PROFILE AND DETAIL SHEETS.
2. USE MAXIMUM 10:1 TAPER FOR TEMPORARY RAILING (TYPE K).

LEGEND:
- STAGE 2 LIMITS OF NEW STRUCTURAL SECTION
- DIRECTION OF TRAVEL
- TEMPORARY CRASH CUSHION

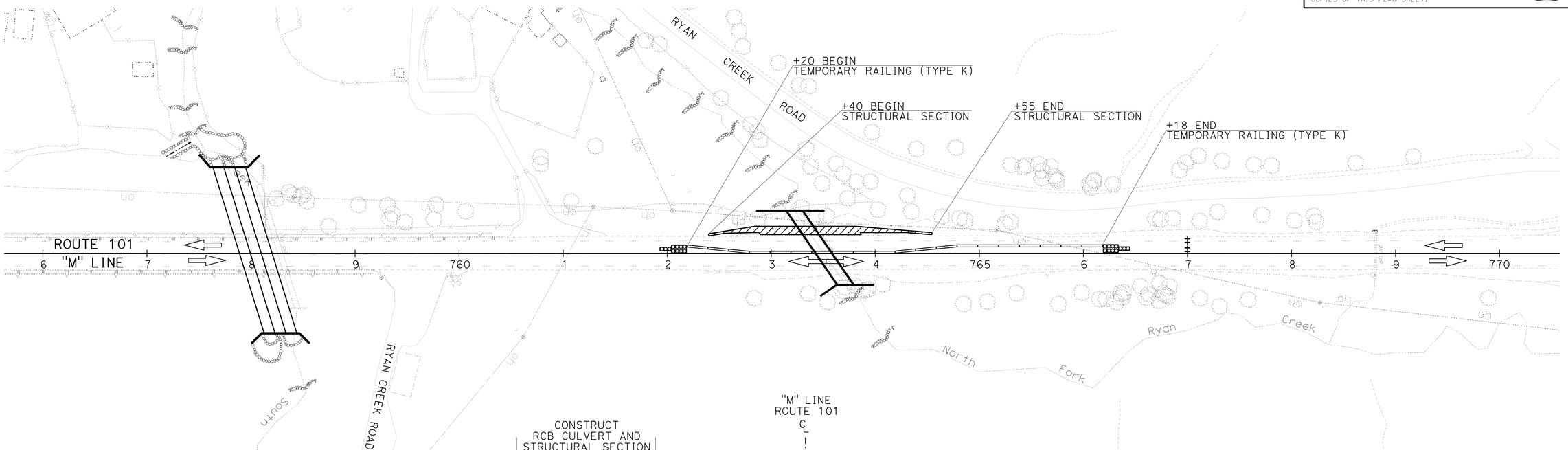

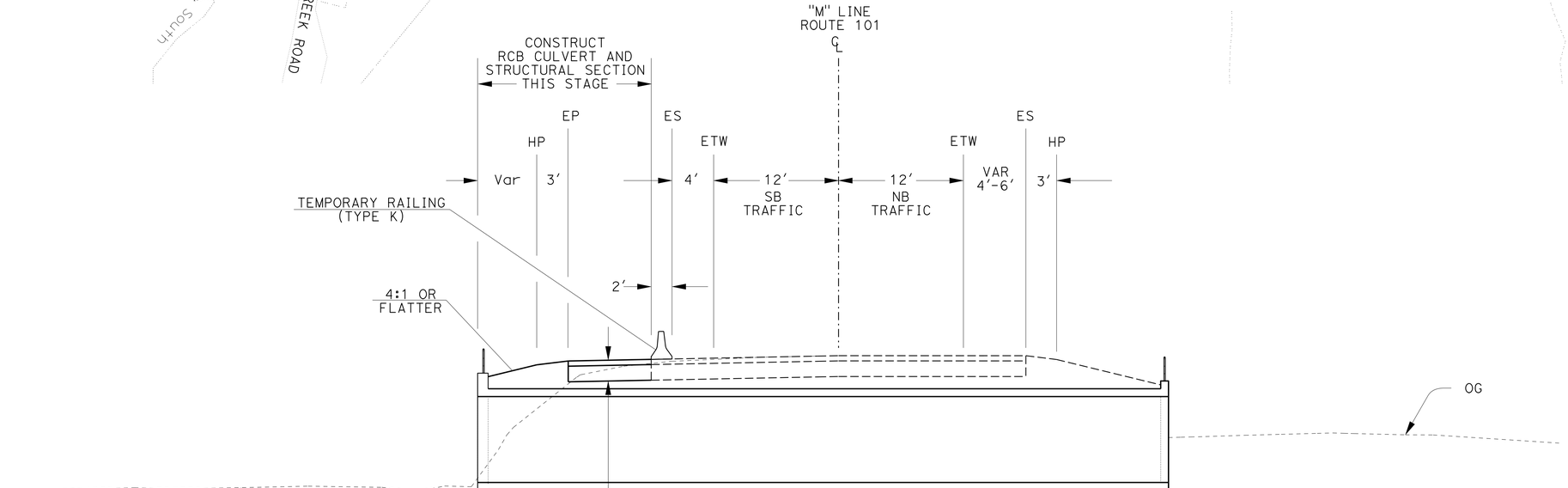

STAGE 2
TYPICAL SECTION
NO SCALE

STAGE CONSTRUCTION
STAGE 3
SCALE 1"=50′

SC-3

STATE OF CALIFORNIA - DEPARTMENT OF TRANSPORTATION
Caltrans
03-DESIGN

FUNCTIONAL SUPERVISOR: DOUGLAS S. JONES
CALCULATED-DESIGNED BY: KARA L. BRIMHALL
CHECKED BY: MITCH ANDRUS
REVISED BY
DATE REVISED

LAST REVISION 02-17-16
DATE PLOTTED => 25-APR-2016
TIME PLOTTED => 14:17

Dist	COUNTY	ROUTE	POST MILES TOTAL PROJECT	SHEET No.	TOTAL SHEETS
01	Men	101	52.1/52.6	34	54

Sheri M. Rodriguez 11-13-15
REGISTERED CIVIL ENGINEER DATE

2-22-16
PLANS APPROVAL DATE

REGISTERED PROFESSIONAL ENGINEER SHERI M. RODRIGUEZ No. C66861 Exp. 9-30-16 CIVIL STATE OF CALIFORNIA

THE STATE OF CALIFORNIA OR ITS OFFICERS OR AGENTS SHALL NOT BE RESPONSIBLE FOR THE ACCURACY OR COMPLETENESS OF SCANNED COPIES OF THIS PLAN SHEET.

NOTES:

1. CALIFORNIA CODES ARE DESIGNATED BY (CA). OTHERWISE, FEDERAL (MUTCD) CODES ARE SHOWN.
2. ALL SIGNS SHALL HAVE A BLACK LEGEND ON FLUORESCENT ORANGE BACKGROUND AND SHALL BE EQUIPPED WITH AT LEAST TWO 16" x 16" ORANGE FLAGS FOR DAYTIME CLOSURE OR FLASHING BEACONS FOR LANE CLOSURE DURING HOURS OF DARKNESS.
3. ALL CONES USED FOR LANE CLOSURES DURING THE HOURS OF DARKNESS SHALL BE FITTED WITH RETROREFLECTIVE BANDS OR SLEEVES.
4. WHEN A PILOT CAR IS USED, PLACE A C37 (CA) SIGN AT ALL INTERSECTIONS WITHIN TRAFFIC CONTROL AREA. WHERE VEHICULAR TRAFFIC CAN NOT EFFECTIVELY SELF-REGULATE, AT LEAST ONE FLAGGER SHALL BE USED AT EACH INTERSECTION WITHIN THE TRAFFIC CONTROL AREA.
5. FLAGGER SHOULD STAND IN A CONSPICUOUS PLACE, FACING TRAFFIC AT ALL TIMES, BE VISIBLE TO APPROACHING TRAFFIC AS WELL AS APPROACHING VEHICLES AFTER THE FIRST VEHICLE HAS STOPPED.
6. ADDITIONAL ADVANCE FLAGGERS ARE REQUIRED DURING HOURS OF DAYLIGHT. A FULL MATRIC PCMS IN PLACE OF EACH ADVANCE FLAGGER REQUIRED DURING HOURS OF DARKNESS.
7. WHEN FLAGGER IS NOT VISIBLE FROM THIS LOCATION PLACE A C29 (CA) SIGN BELOW THE C9A (CA) SIGN.

LEGEND

- TRAFFIC CONE
- TEMPORARY SIGN
- DIRECTION OF TRAVEL
- PORTABLE FLASHING BEACON
- FLAGGER

SIGN PANEL SIZE (MINIMUM)

- A: 48" x 48" - SPEED OF 45 mph OR MORE; 36" x 36" - SPEED LESS THAN 45 mph
- B: 30" x 30"
- C: UNUSED
- D: UNUSED
- E: 20" x 7"

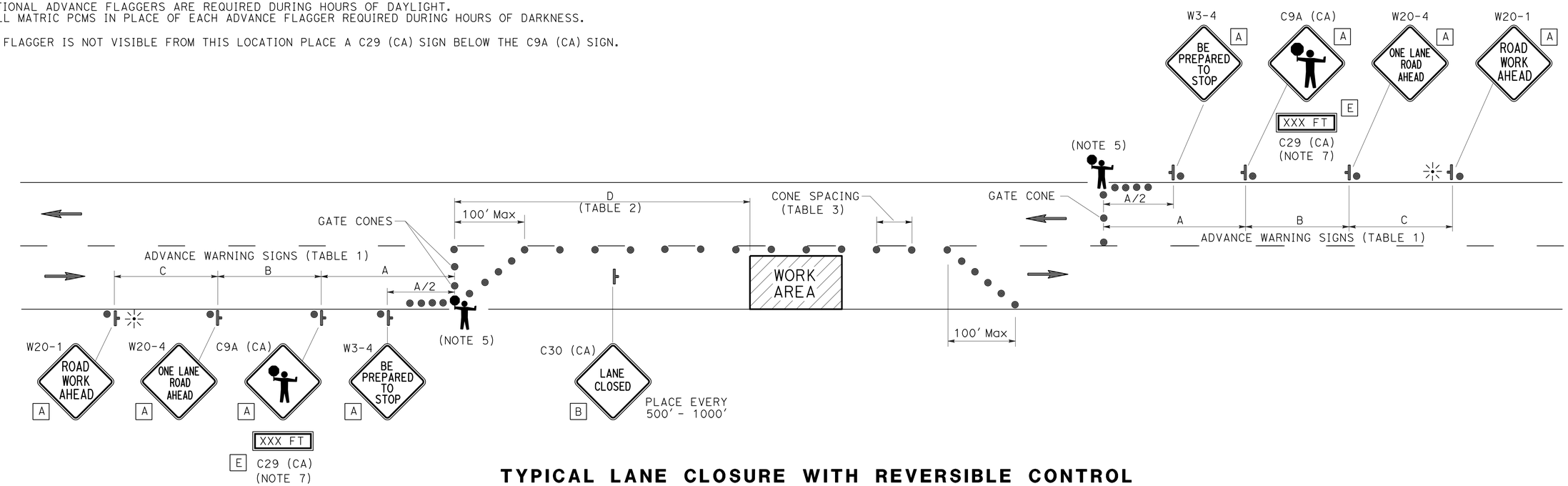

TYPICAL LANE CLOSURE WITH REVERSIBLE CONTROL

TABLE 1
ADVANCE WARNING SIGN SPACING

ROAD TYPE	Min A	Min B	Min C
	ft		
URBAN (25 mph OR LESS)	100	100	100
URBAN (30 mph TO 40 mph)	250	250	250
URBAN (MORE THAN 40 mph)	350	350	350
RURAL	500	500	500
EXPRESSWAY / FREEWAY	1000	1500	2640

TABLE 2
BUFFER SPACE

APPROACH SPEED	Min D	DOWNGRADE Min D		
		-3%*	-6%*	-9%*
mph	ft			
25 & BELOW	155	158	165	173
30	200	205	215	227
35	250	257	271	287
40	305	315	333	354
45	360	378	400	427
50	425	446	474	507
55	495	520	553	593
60	570	598	638	686
65	645	682	728	785

* USE ON SUSTAINED DOWNGRADE STEEPER THAN -3 PERCENT AND LONGER THAN 1 MILE.

TABLE 3
Max CONE SPACING

POSTED SPEED	TAPER	TANGENT	CONFLICT*
mph	ft		
20	20	40	10
25	25	50	12
30	30	60	15
35	35	70	17
40	40	80	20
45	45	90	22
50	50	100	25
55	55	110	27
60	60	120	30
65	65	130	32

* USE WHERE THERE IS A CONFLICT BETWEEN EXISTING PAVEMENT MARKINGS AND CHANNELIZERS.

TRAFFIC HANDLING PLAN

NO SCALE

APPROVED FOR TRAFFIC HANDLING WORK ONLY

TH-1

REVISED BY | DATE REVISED
SHERI M. RODRIGUEZ | TROY A. ARSENEAU
CALCULATED-DESIGNED BY | CHECKED BY
FUNCTIONAL SUPERVISOR: RICHARD MULLEN

STATE OF CALIFORNIA - DEPARTMENT OF TRANSPORTATION
Caltrans® TRAFFIC OPERATIONS

P:\proj5\01\26201\drafting\0112000205md001.dgn

LAST REVISION 01-20-16 | DATE PLOTTED => 25-APR-2016 | TIME PLOTTED => 14:17

Dist	COUNTY	ROUTE	POST MILES TOTAL PROJECT	SHEET No.	TOTAL SHEETS
01	Men	101	52.1/52.6	35	54

Mitch Andrus 2-22-16
REGISTERED CIVIL ENGINEER DATE

2-22-16
PLANS APPROVAL DATE

REGISTERED PROFESSIONAL ENGINEER
MITCH ANDRUS
No. C48753
Exp. 9-30-16
CIVIL
STATE OF CALIFORNIA

THE STATE OF CALIFORNIA OR ITS OFFICERS OR AGENTS SHALL NOT BE RESPONSIBLE FOR THE ACCURACY OR COMPLETENESS OF SCANNED COPIES OF THIS PLAN SHEET.

THERMOPLASTIC TRAFFIC STRIPE

LOCATION	4" THERMOPLASTIC TRAFFIC STRIPE		4" THERMOPLASTIC TRAFFIC STRIPE (BROKEN 36-12)
	DETAIL NUMBER		DETAIL NUMBER
	27B (LF)		6 (LF)
	LT	RT	
Sta "M" 762+00 TO 765+00	300		
Sta "M" 763+00 TO 765+75		275	
Sta "M" 763+00 TO 764+00			100
SUBTOTAL	300	275	100
TOTAL	575		100

PAVEMENT MARKER (RETROREFLECTIVE-RECESSED)

DETAIL	TYPE D (EA)
6	3
TOTAL	3

STAGE CONSTRUCTION

LOCATION	TEMPORARY RAILING (TYPE K)	TEMPORARY TRAFFIC STRIPE (TAPE)
	LF	LF
STAGE 1	400	400
STAGE 2	400	400
STAGE 3	400	300
TOTAL	1200	1100

APPROVED FOR PAVEMENT DELINEATION WORK ONLY

PAVEMENT DELINEATION QUANTITIES

PDQ-1

STATE OF CALIFORNIA - DEPARTMENT OF TRANSPORTATION
Caltrans
03-DESIGN

FUNCTIONAL SUPERVISOR: DOUGLAS S. JONES
CALCULATED-DESIGNED BY: KARA BRIMHALL
CHECKED BY: MITCH ANDRUS
REVISED BY
DATE REVISED

LAST REVISION 02-16-16
DATE PLOTTED => 25-APR-2016
TIME PLOTTED => 14:17

Dist	COUNTY	ROUTE	POST MILES TOTAL PROJECT	SHEET No.	TOTAL SHEETS
01	Men	101	52.1/52.6	36	54

Mitch Andrus 2-22-16
REGISTERED CIVIL ENGINEER DATE

2-22-16
PLANS APPROVAL DATE

REGISTERED PROFESSIONAL ENGINEER
MITCH ANDRUS
No. C48753
Exp. 09-30-16
CIVIL
STATE OF CALIFORNIA

THE STATE OF CALIFORNIA OR ITS OFFICERS OR AGENTS SHALL NOT BE RESPONSIBLE FOR THE ACCURACY OR COMPLETENESS OF SCANNED COPIES OF THIS PLAN SHEET.

ROADWAY QUANTITIES SUMMARY

LOCATION	CLASS II AGGREGATE BASE	HOT MIX ASPHALT (TYPE A)	TACK COAT	SHOULDER BACKING	GEOSYNTHETIC PAVEMENT INTERLAYER (PAVING FABRIC)	ROADWAY EXCAVATION	ROADWAY EMBANKMENT (N)	IMPORTED BORROW	DITCH EXCAVATION
	CY	TON	TON	TON	SQYD	CY	CY	CY	CY
RYAN CREEK ROAD	21	35	0.014		175	38			
"DW1" LINE	195	211	0.085		1054	162	125		
"M" LINE AT NORTH FORK RYAN CREEK	158	231	0.051	5	631		580		
MAINTENANCE VEHICLE PULLOUT	26	45	0.018		225	50			
SOUTH FORK RYAN CREEK (DOWNSTREAM)									71
TOTAL	400	522	0.168	5	2085	250	705	520	71

(N) = NOT A PAY ITEM, FOR INFORMATION ONLY.

REMOVE FENCE (TYPE WM)

LOCATION	QUANTITY LF
L+ "DW1" LINE	558
R+ "DW1" LINE	65
TOTAL	623

REMOVE GATE

LOCATION	QUANTITY EA
LT "DW1" 9+21.00	1
RT "DW1" 9+21.00	1
TOTAL	2

RESET MAILBOX

LOCATION	QUANTITY EA
RYAN CREEK ROAD	2
TOTAL	2

FENCE (TYPE WM, METAL POST)

LOCATION	QUANTITY LF
LT "DW1" LINE	491
RT "DW1" LINE	65
TOTAL	556

12' METAL GATE

LOCATION	QUANTITY EA
"DW1" 9+21.00	1
TOTAL	1

TEMPORARY CRASH CUSHION

LOCATION	QUANTITY EA
N FK RYAN CREEK	2
TOTAL	2

REVISED BY | DATE REVISED
KARA L. BRIMHALL | MITCH ANDRUS
CALCULATED-DESIGNED BY | CHECKED BY
FUNCTIONAL SUPERVISOR
DOUGLAS S. JONES
STATE OF CALIFORNIA - DEPARTMENT OF TRANSPORTATION
Caltrans
03-DESIGN

LAST REVISION 02-16-16 | DATE PLOTTED => 25-APR-2016 | TIME PLOTTED => 14:17

SUMMARY OF QUANTITIES

Q-1

Dist	COUNTY	ROUTE	POST MILES TOTAL PROJECT	SHEET No.	TOTAL SHEETS
01	Men	101	52.1/52.6	37	54

LICENSED LANDSCAPE ARCHITECT

2-22-16
PLANS APPROVAL DATE

LICENSED LANDSCAPE ARCHITECT JEFFREY L. PIETRZAK No. 4457 Signature 12-31-17 Renewal Date 2-22-16 Date STATE OF CALIFORNIA

THE STATE OF CALIFORNIA OR ITS OFFICERS OR AGENTS SHALL NOT BE RESPONSIBLE FOR THE ACCURACY OR COMPLETENESS OF SCANNED COPIES OF THIS PLAN SHEET.

LEGEND:

EROSION CONTROL (TYPE 1)

FLATTER THAN 2:1
- COMPOST (TYPE MEDIUM)
- INCORPORATE MATERIALS
- HYDROSEED
- STRAW
- INCORPORATE MATERIALS
- HYDROMULCH

EROSION CONTROL (TYPE 2)

2:1 AND STEEPER
- COMPOST (TYPE MEDIUM)
- ROLLED EROSION CONTROL PRODUCT (NETTING)
- HYDROSEED
- HYDROMULCH

DISKING

LIVE SILTATION

ROOTWAD

DISKING

SEQUENCE	ITEM	MATERIAL		REMARKS
		DESCRIPTION	TYPE	
IN EC AREAS DISKING MUST BE COMPLETED TO DECOMPACT STABILIZED CONSTRUCTION PLATFORMS BEFORE AND IN PREPERATION TO RECIEVE THE SUBSEQUENT EC MATERIALS.	DISKING	DISKING	-	-

FIBER ROLLS

SEQUENCE	ITEM	MATERIAL		REMARKS
		DESCRIPTION	TYPE	
IN EC AREAS FIBER ROLLS MUST BE INSTALLED AFTER COMPOST INCORPORATION (FOR EC TYPE-1) OR AFTER ROLLED EROSION CONTROL PRODUCT (FOR EC TYPE-2) AND BEFORE HYDROSEED.	FIBER ROLLS	FIBER ROLL	TYPE B 8" TO 10" Dia	TYPE 1 RIBER ROLL INSTALLATION

SEED MIX

SEED	BOTANICAL NAME (COMMON NAME)	PERCENT GERMINATION (MINIMUM)	POUNDS PURE LIVE SEED PER ACRE (SLOPE MEASUREMENT)
MIX[1]	ACHILLEA MILLEFOLIUM (WHITE YARROW)	77	1
	BROMUS CARINATUS (CALIFORNIA BROME)	72	6
	DESCHAMPSIA CESPITOSA (TUFTED HAIRGRASS)	72	1
	ELYMUS GLAUCUS (BLUE WILDRYE)	77	7
	HORDEUM BRANCHANTHERUM (MEADOW BARLEY)	72	6
	LEYMUS TRITICOIDES (CREEPING WILDRYE)	72	4
	TOTAL		25

[1]ALL SEED PRODUCED IN NORTHERN CALIFORNIA ONLY.

EROSION CONTROL TYPE 1

SEQUENCE	ITEM	MATERIAL		APPLICATION RATE	DEPTH
		DESCRIPTION	TYPE		
STEP 1	COMPOST (TYPE B)	COMPOST	MEDIUM	405 CY/ACRE	3"
STEP 2	INCORPORATE MATERIALS	COMPOST	-	-	6"
STEP 3	HYDROSEED	SEED	MIX	25 LB/ACRE	-
		FERTILIZER	ORGANIC	1200 LB/ACRE	-
		FIBER	WOOD	600 LB/ACRE	-
STEP 4	STRAW	STRAW	-	2 TONS/ACRE	-
STEP 5	INCORPORATE MATERIALS	STRAW	-	-	-
STEP 6	HYDROMULCH	FIBER	WOOD	600 LB/ACRE	-
		TACKIFIER	PSYLLUM	150 LB/ACRE	-

EROSION CONTROL TYPE 2

SEQUENCE	ITEM	MATERIAL		APPLICATION RATE	DEPTH
		DESCRIPTION	TYPE		
STEP 1	COMPOST (TYPE B)	COMPOST	MEDIUM	405 CY/ACRE	3"
STEP 2	ROLLED EROSION CONTROL PRODUCT (NETTING)	NETTING	TYPE B	-	-
		FASTENERS	12" METAL PIN WITH SAFETY CAP	PER MANUFACTURERS RECOMMENDATIONS	-
STEP 3	HYDROSEED	SEED	MIX	25 LB/ACRE	-
		FERTILIZER	ORGANIC	1200 LB/ACRE	-
		FIBER	WOOD	600 LB/ACRE	-
STEP 4	HYDROMULCH	FIBER	WOOD	600 LB/ACRE	-
		TACKIFIER	PSYLLUM	150 LB/ACRE	-

EROSION CONTROL LEGEND
ECL-1

REVISED BY | DATE REVISED
D. BREWER | J. PIETRZAK
CALCULATED-DESIGNED BY | CHECKED BY
SENIOR LANDSCAPE ARCHITECT
J. PIETRZAK
STATE OF CALIFORNIA - DEPARTMENT OF TRANSPORTATION
Caltrans LANDSCAPE ARCHITECTURE

LAST REVISION 02-17-16 | DATE PLOTTED => 25-APR-2016 | TIME PLOTTED => 14:17

Dist	COUNTY	ROUTE	POST MILES TOTAL PROJECT	SHEET No.	TOTAL SHEETS
01	Men	101	52.1/52.6	38	54

LICENSED LANDSCAPE ARCHITECT

2-22-16
PLANS APPROVAL DATE

LICENSED LANDSCAPE ARCHITECT
JEFFREY L. PIETRZAK
No. 4457
Signature
12-31-17
Renewal Date
2-22-16
Date
STATE OF CALIFORNIA

THE STATE OF CALIFORNIA OR ITS OFFICERS OR AGENTS SHALL NOT BE RESPONSIBLE FOR THE ACCURACY OR COMPLETENESS OF SCANNED COPIES OF THIS PLAN SHEET.

EROSION CONTROL PLAN

SCALE: 1" = 20'

EC-1

STATE OF CALIFORNIA - DEPARTMENT OF TRANSPORTATION
Caltrans® LANDSCAPE ARCHITECTURE

SENIOR LANDSCAPE ARCHITECT: J. PIETRZAK
CALCULATED-DESIGNED BY: D. BREWER
CHECKED BY: J. PIETRZAK
REVISED BY
DATE REVISED

LAST REVISION 02-17-16
DATE PLOTTED => 25-APR-2016
TIME PLOTTED => 14:17

Dist	COUNTY	ROUTE	POST MILES TOTAL PROJECT	SHEET No.	TOTAL SHEETS
01	Men	101	52.1/52.6	39	54

LICENSED LANDSCAPE ARCHITECT

2-22-16
PLANS APPROVAL DATE

LICENSED LANDSCAPE ARCHITECT
JEFFREY L. PIETRZAK
No. 4457
Signature
12-31-17
Renewal Date
2-22-16
Date
STATE OF CALIFORNIA

THE STATE OF CALIFORNIA OR ITS OFFICERS OR AGENTS SHALL NOT BE RESPONSIBLE FOR THE ACCURACY OR COMPLETENESS OF SCANNED COPIES OF THIS PLAN SHEET.

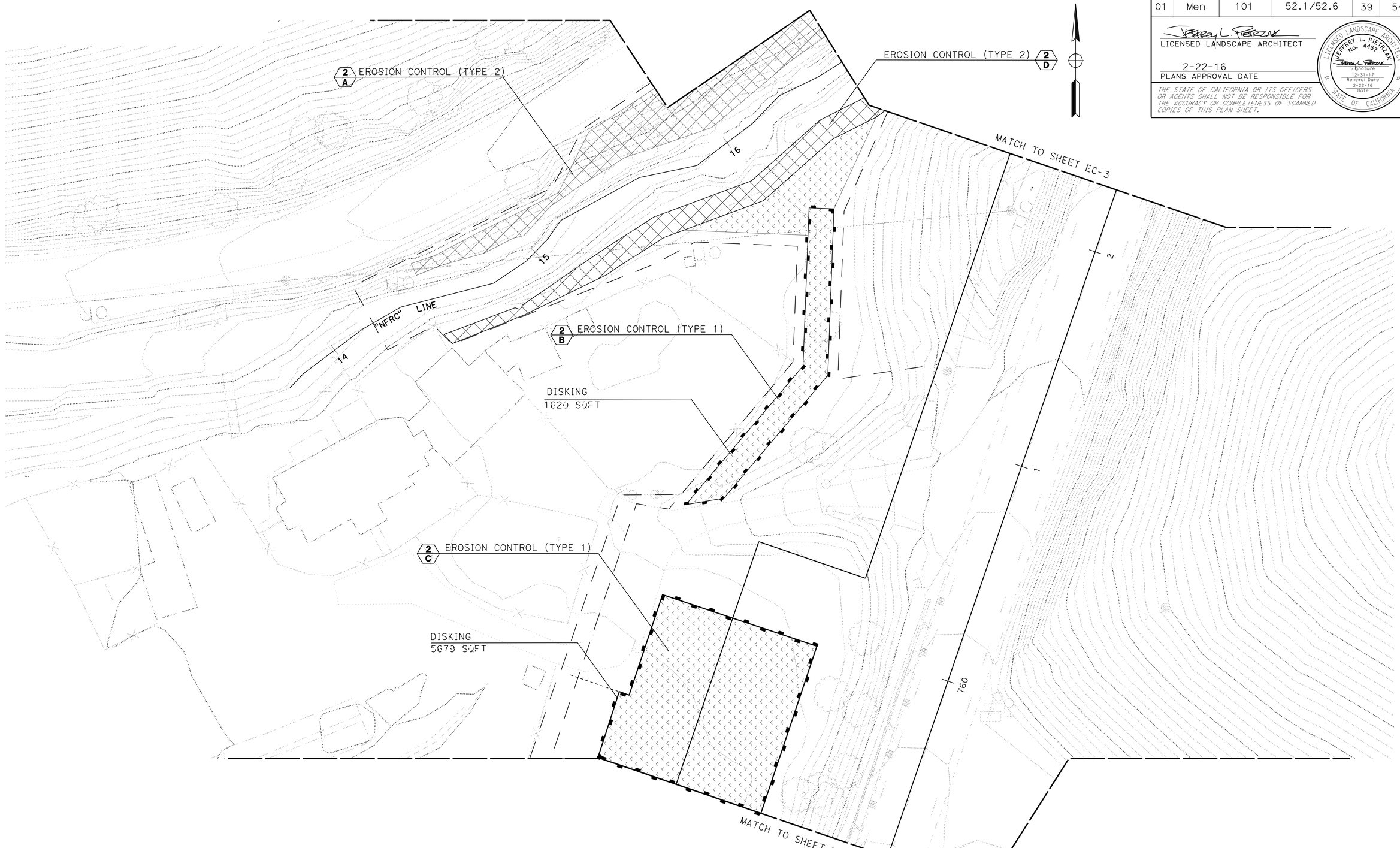

EROSION CONTROL PLAN

SCALE: 1" = 20'

EC-2

STATE OF CALIFORNIA - DEPARTMENT OF TRANSPORTATION
Caltrans®
LANDSCAPE ARCHITECTURE

SENIOR LANDSCAPE ARCHITECT: J. PIETRZAK
CALCULATED-DESIGNED BY: D. BREWER
CHECKED BY: J. PIETRZAK
REVISED BY
DATE REVISED

LAST REVISION 02-17-16
DATE PLOTTED => 25-APR-2016
TIME PLOTTED => 14:17

Dist	COUNTY	ROUTE	POST MILES TOTAL PROJECT	SHEET No.	TOTAL SHEETS
01	Men	101	52.1/52.6	40	54

LICENSED LANDSCAPE ARCHITECT

2-22-16
PLANS APPROVAL DATE

LICENSED LANDSCAPE ARCHITECT
JEFFREY L. PIETRZAK
No. 4457
Signature
12-31-17
Renewal Date
2-22-16
Date
STATE OF CALIFORNIA

THE STATE OF CALIFORNIA OR ITS OFFICERS OR AGENTS SHALL NOT BE RESPONSIBLE FOR THE ACCURACY OR COMPLETENESS OF SCANNED COPIES OF THIS PLAN SHEET.

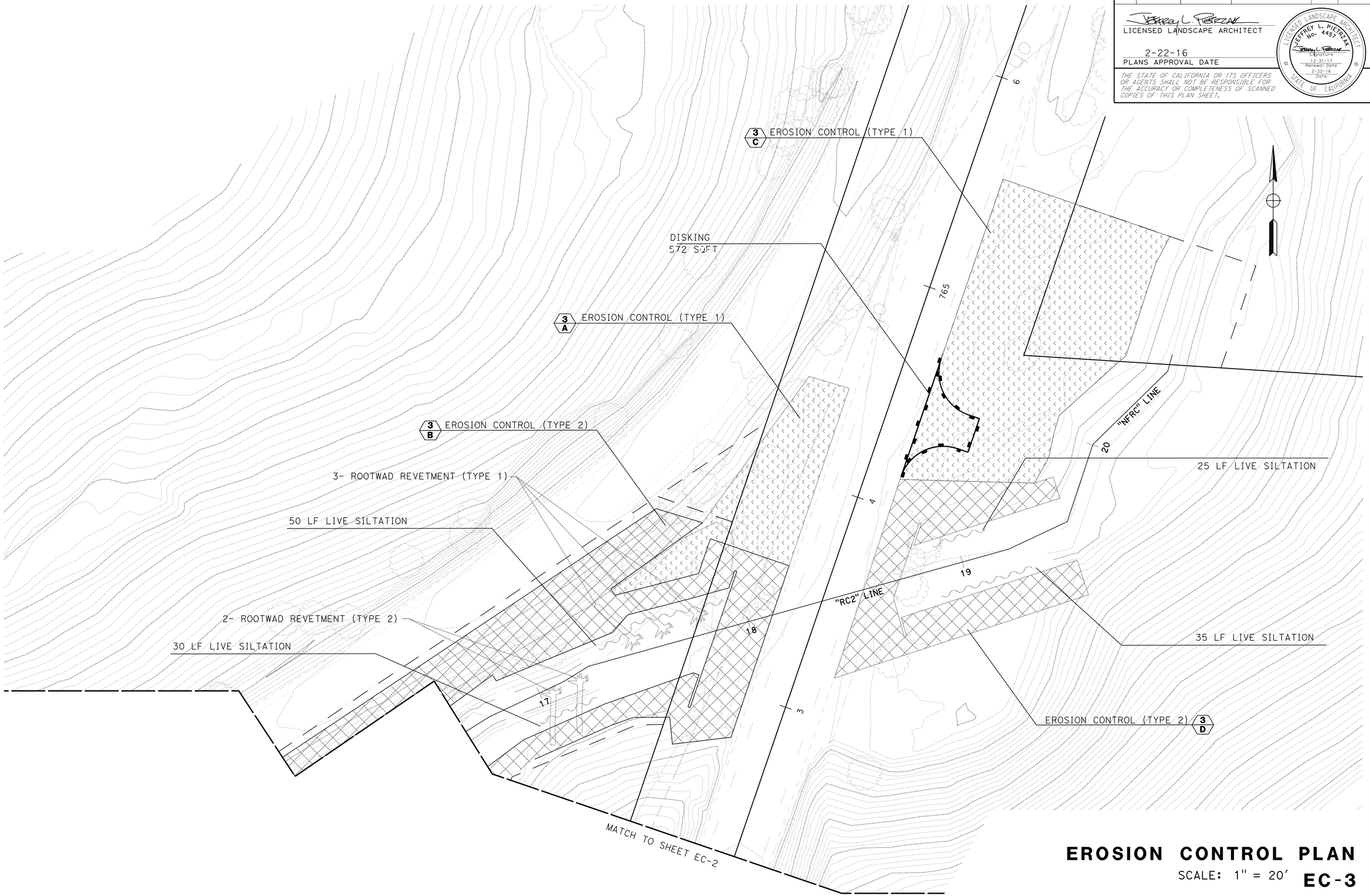

EROSION CONTROL PLAN

SCALE: 1" = 20'

EC-3

STATE OF CALIFORNIA - DEPARTMENT OF TRANSPORTATION
Caltrans® LANDSCAPE ARCHITECTURE

SENIOR LANDSCAPE ARCHITECT: J. PIETRZAK

CALCULATED-DESIGNED BY: D. BREWER
CHECKED BY: J. PIETRZAK

REVISED BY
DATE REVISED

LAST REVISION 02-17-16
DATE PLOTTED => 25-APR-2016
TIME PLOTTED => 14:17

Dist	COUNTY	ROUTE	POST MILES TOTAL PROJECT	SHEET No.	TOTAL SHEETS
01	Men	101	52.1/52.6	41	54

LICENSED LANDSCAPE ARCHITECT

2-22-16
PLANS APPROVAL DATE

LICENSED LANDSCAPE ARCHITECT
JEFFREY L. PIETRZAK
No. 4457
Signature
12-31-17
Renewal Date
2-22-16
Date
STATE OF CALIFORNIA

THE STATE OF CALIFORNIA OR ITS OFFICERS OR AGENTS SHALL NOT BE RESPONSIBLE FOR THE ACCURACY OR COMPLETENESS OF SCANNED COPIES OF THIS PLAN SHEET.

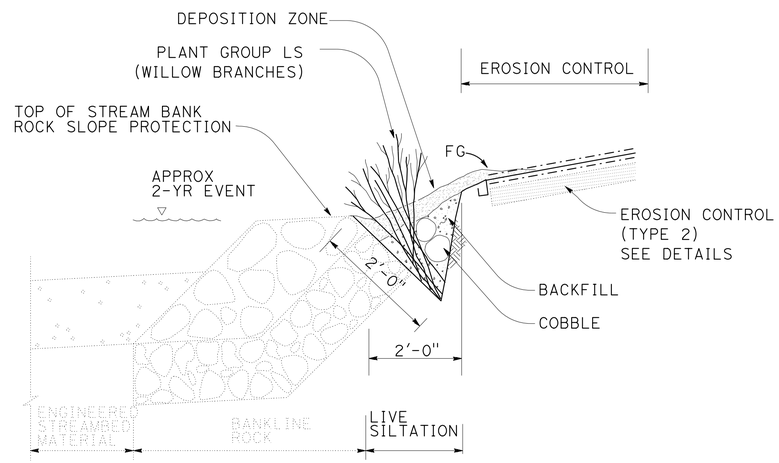

SECTION

LIVE SILTATION

NOTE:
1. REFER TO DRAINAGE DETAILS FOR ADDITIONAL INFORMATION.

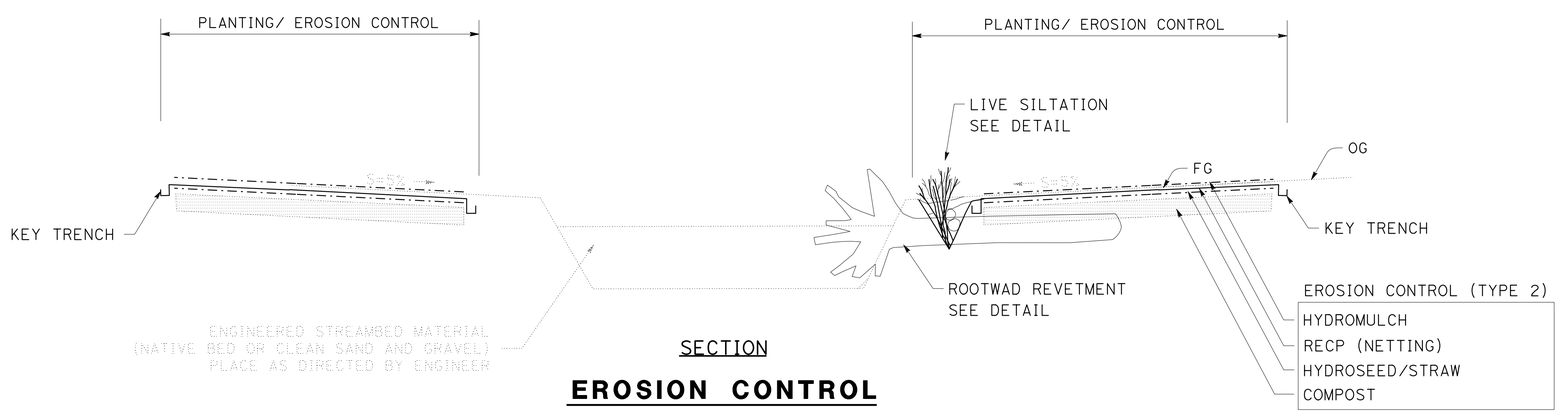

SECTION

EROSION CONTROL

EROSTION CONTROL DETAILS

NO SCALE

ECD-1

STATE OF CALIFORNIA - DEPARTMENT OF TRANSPORTATION
Caltrans® LANDSCAPE ARCHITECTURE

SENIOR LANDSCAPE ARCHITECT: J. PIETRZAK
CALCULATED-DESIGNED BY: D. BREWER
CHECKED BY: J. PIETRZAK
REVISED BY
DATE REVISED

LAST REVISION 02-17-16
DATE PLOTTED => 25-APR-2016
TIME PLOTTED => 14:17

Dist	COUNTY	ROUTE	POST MILES TOTAL PROJECT	SHEET No.	TOTAL SHEETS
01	Men	101	52.1/52.6	42	54

LICENSED LANDSCAPE ARCHITECT

2-22-16
PLANS APPROVAL DATE

LICENSED LANDSCAPE ARCHITECT JEFFREY L. PIETRZAK No. 4457 Signature 12-31-17 Renewal Date 2-22-16 Date STATE OF CALIFORNIA

THE STATE OF CALIFORNIA OR ITS OFFICERS OR AGENTS SHALL NOT BE RESPONSIBLE FOR THE ACCURACY OR COMPLETENESS OF SCANNED COPIES OF THIS PLAN SHEET.

NOTES:

1. ROOT WAD SHALL BE PLACED SUCH THAT THE FOOTER LOG IS PLACED BENEATH THE ROOT WAD.
2. FIELD CONDITIONS MAY VARY. FINAL CONFIGURATION SHALL BE DETERMINED BY ENGINEER.
3. PLACE A MINIMUM OF ONE 1'-6" ROCK ON EITHER SIDE OF FOOTER LOG DIRECTLY UNDER ROOT WAD.
4. REINFORCING BAR STAKES SHALL BE DRIVEN THROUGH PRE-DRILLED HOLE UNTIL STAKE HEAD IS FLUSH WITH LOG.
5. SEE DRAINAGE PLANS FOR FURTHER INFORMATION.

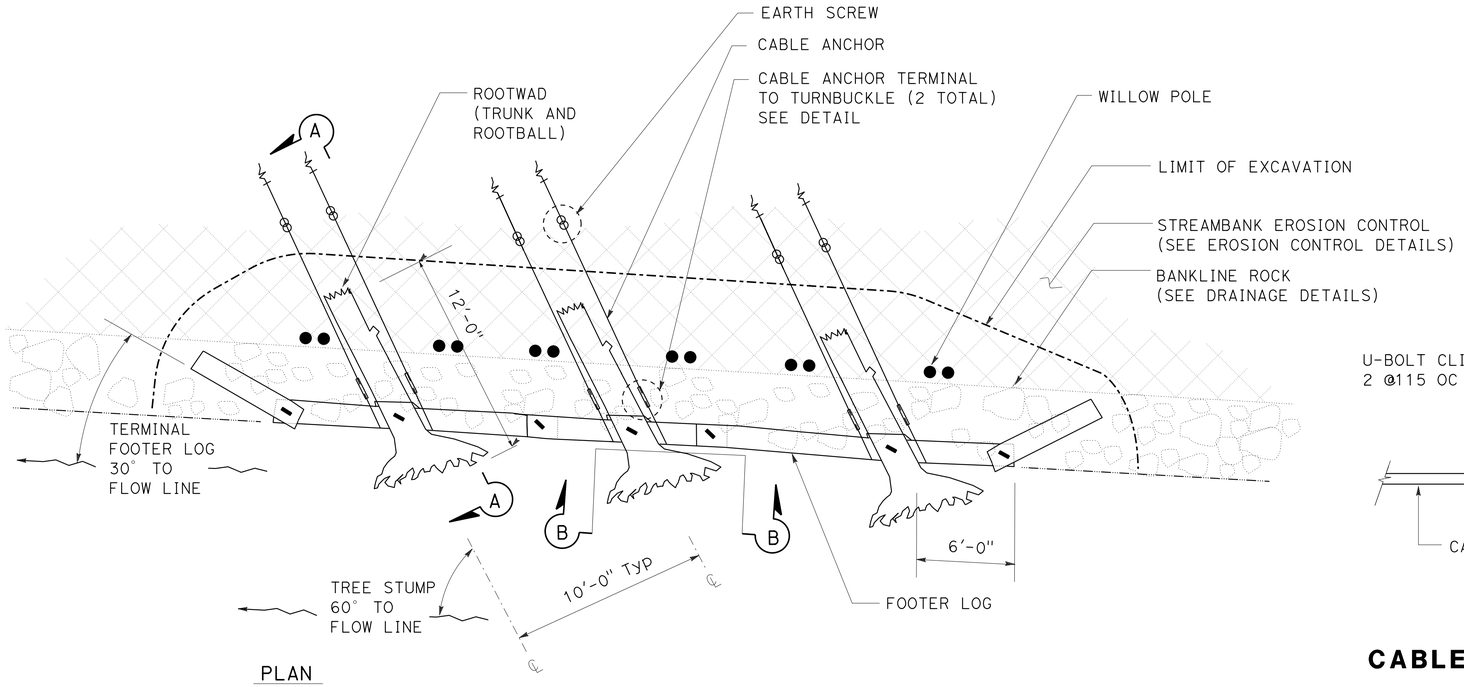

PLAN

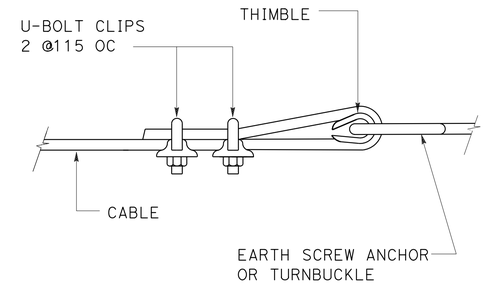

CABLE ANCHOR TERMINAL

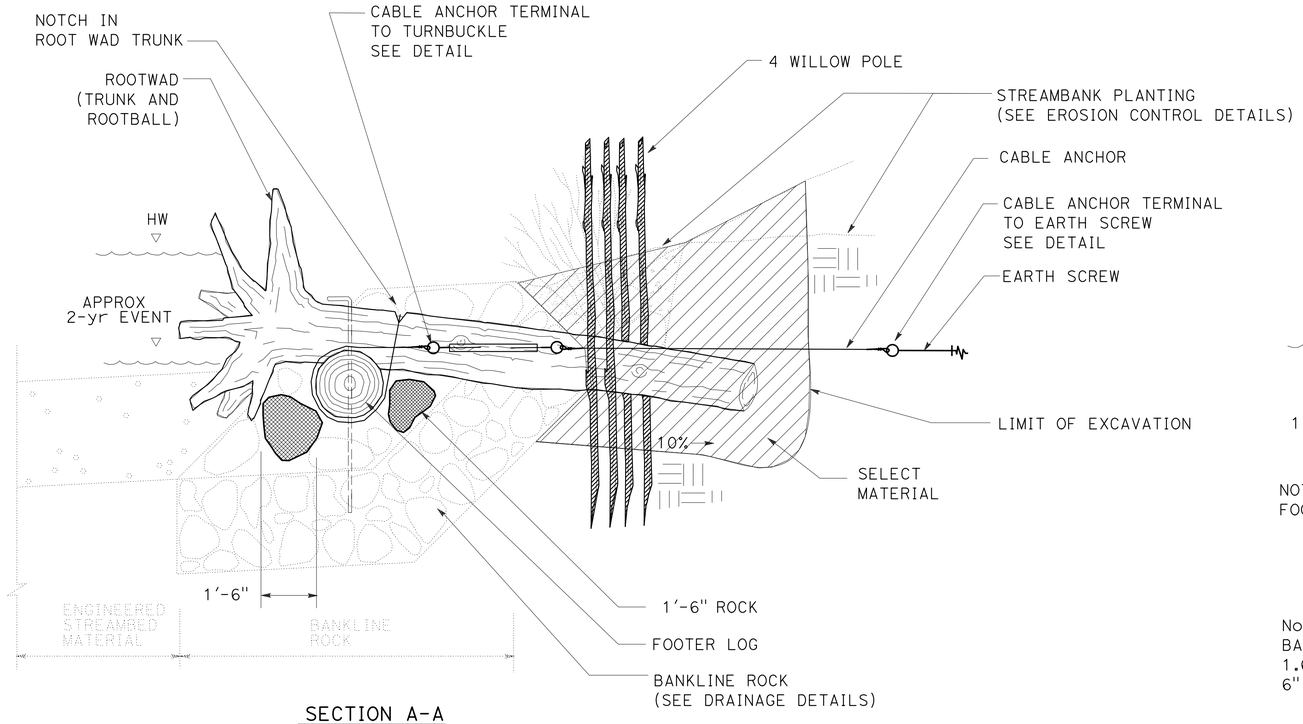

SECTION A-A

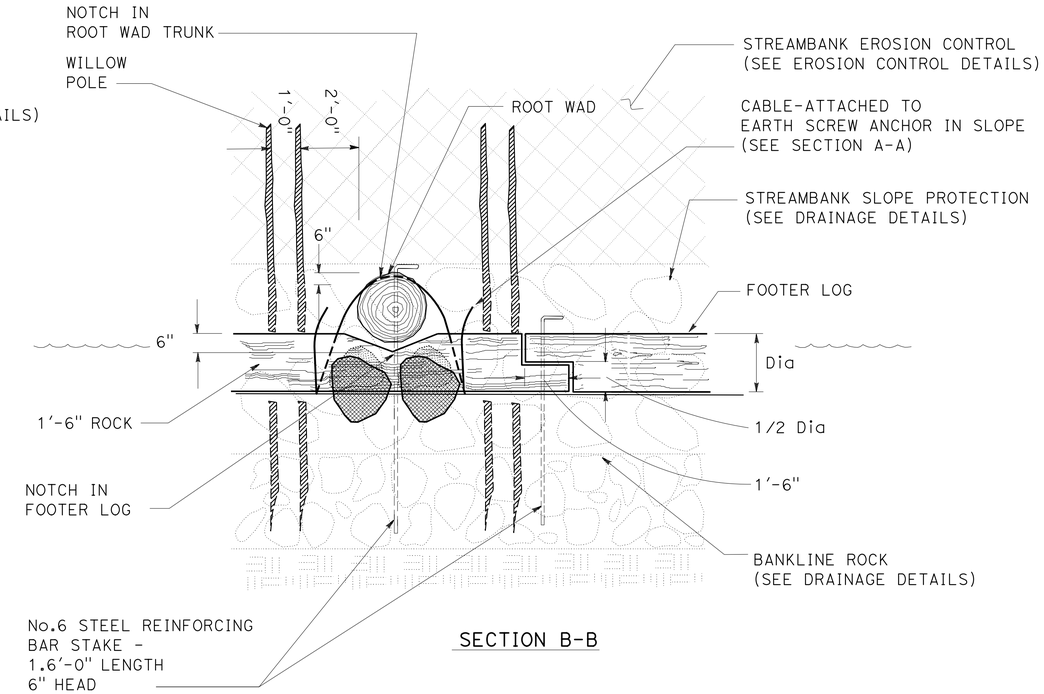

SECTION B-B

ROOTWAD REVETMENT- TYPE 1

EROSION CONTROL DETAILS

NO SCALE

ECD-2

STATE OF CALIFORNIA - DEPARTMENT OF TRANSPORTATION
Caltrans® LANDSCAPE ARCHITECTURE
SENIOR LANDSCAPE ARCHITECT J. PIETRZAK
CALCULATED-DESIGNED BY D. BREWER
CHECKED BY J. PIETRZAK
REVISED BY
DATE REVISED

LAST REVISION 02-17-16
DATE PLOTTED => 25-APR-2016
TIME PLOTTED => 14:17

Dist	COUNTY	ROUTE	POST MILES TOTAL PROJECT	SHEET No.	TOTAL SHEETS
01	MEN	101	52.1/52.6	43	54

LICENSED LANDSCAPE ARCHITECT

2-22-16
PLANS APPROVAL DATE

LICENSED LANDSCAPE ARCHITECT
JEFFREY L. PIETRZAK
No. 4457
Signature
12-31-17
Renewal Date
2-22-16
Date
STATE OF CALIFORNIA

THE STATE OF CALIFORNIA OR ITS OFFICERS OR AGENTS SHALL NOT BE RESPONSIBLE FOR THE ACCURACY OR COMPLETENESS OF SCANNED COPIES OF THIS PLAN SHEET.

NOTES:

1. FIELD CONDITIONS MAY VARY. FINAL CONFIGURATION SHALL BE DETERMINED BY ENGINEER.
2. PLACE A MINIMUM OF ONE 1'-6" ROCK ON EITHER SIDE OF FOOTER LOG DIRECTLY UNDER ROOT WAD.
3. SEE DRAINAGE PLANS FOR FURTHER INFORMATION.

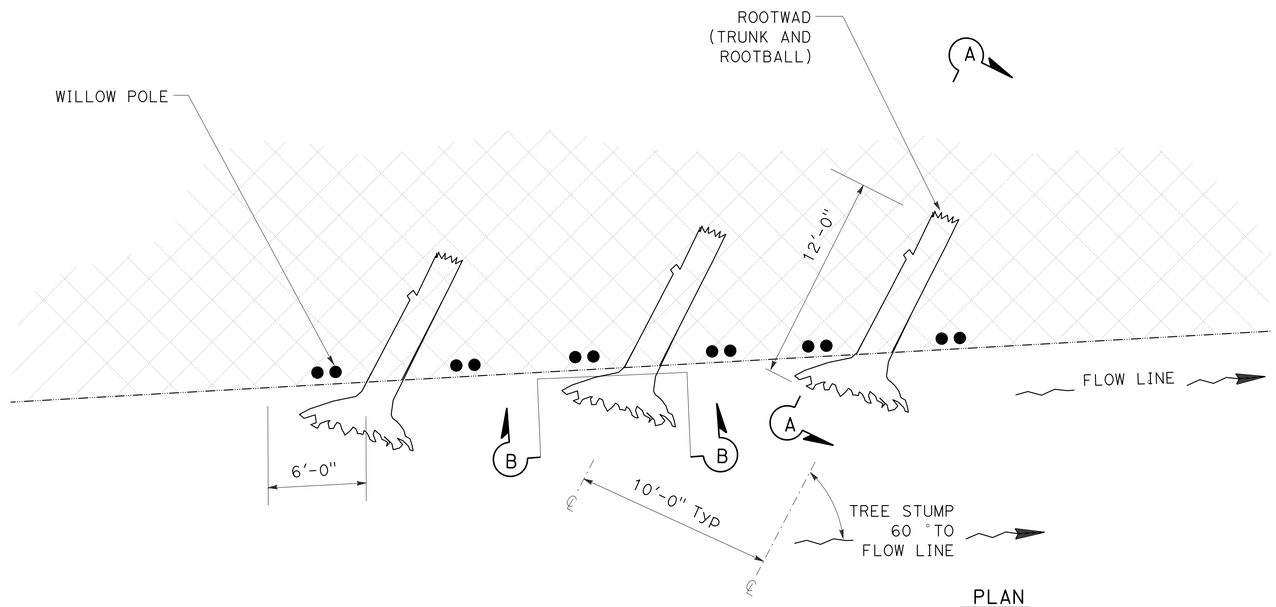

PLAN

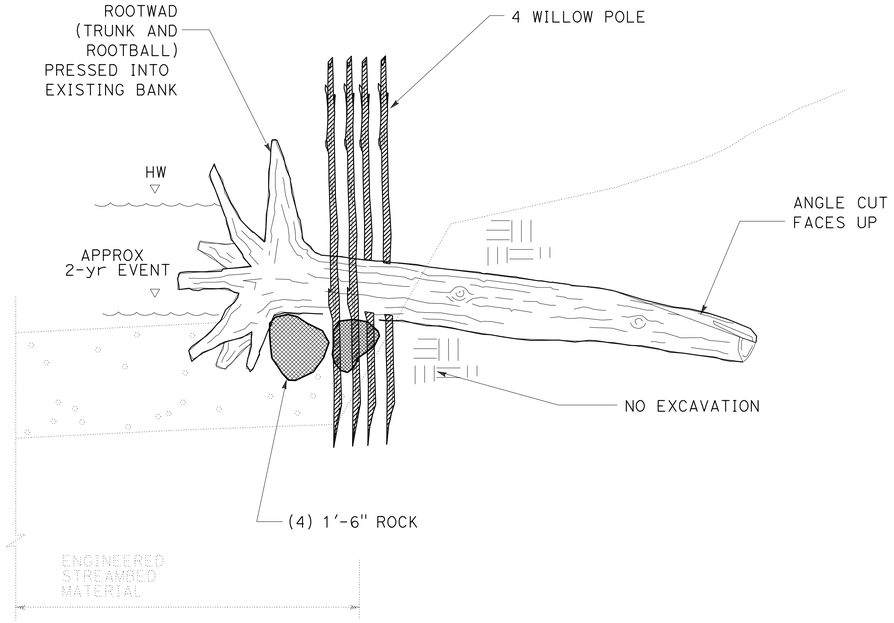

SECTION A-A

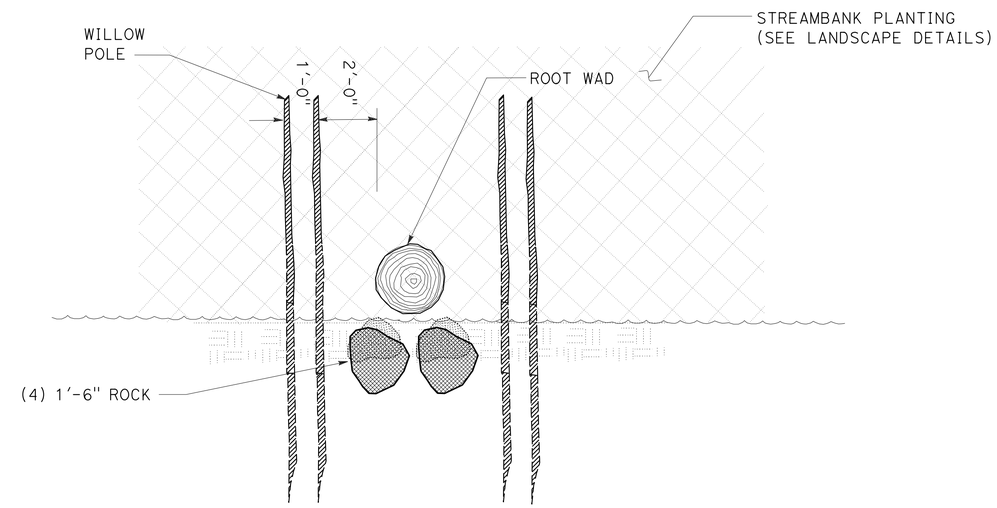

SECTION B-B

ROOTWAD REVETMENT- TYPE 2

EROSION CONTROL DETAILS

NO SCALE

ECD-3

STATE OF CALIFORNIA - DEPARTMENT OF TRANSPORTATION
Caltrans® LANDSCAPE ARCHITECTURE

SENIOR LANDSCAPE ARCHITECT: J. PIETRZAK
CALCULATED-DESIGNED BY: D. BREWER
CHECKED BY: J. PIETRZAK
REVISED BY
DATE REVISED

LAST REVISION 02-17-16
DATE PLOTTED => 25-APR-2016
TIME PLOTTED => 14:17

Dist	COUNTY	ROUTE	POST MILES TOTAL PROJECT	SHEET No.	TOTAL SHEETS
01	Men	101	52.1/52.6	44	54

LICENSED LANDSCAPE ARCHITECT

2-22-16
PLANS APPROVAL DATE

LICENSED LANDSCAPE ARCHITECT
JEFFREY L. PIETRZAK
No. 4457
Signature
12-31-17
Renewal Date
2-22-16
Date
STATE OF CALIFORNIA

THE STATE OF CALIFORNIA OR ITS OFFICERS OR AGENTS SHALL NOT BE RESPONSIBLE FOR THE ACCURACY OR COMPLETENESS OF SCANNED COPIES OF THIS PLAN SHEET.

LIVE SILTATION

SHEET	ITEM	(N) PLANTS LF	(N) GROUP LS PLANTS EA	(N) BACKFILL CF	(N) COBBLE CF	LF
EC-1	LIVE SILTATION	2.7	324	192	48	120
EC-3	LIVE SILTATION	2.7	380	224	56	140
					TOTAL	260

(N) INFORMATION PURPOSES ONLY; NOT A PAY ITEM

ROOTWAD REVETMENT

SHEET	ITEM	(TYPE 1) EA	(TYPE 2) EA
EC-1	ROOTWAD REVETMENT	3	2
EC-2	ROOTWAD REVETMENT	-	-
EC-3	ROOTWAD REVETMENT	3	2
	TOTAL	6	4

DISKING

SHEET	(N) SQFT	ACRES
EC-1	16,021	0.4
EC-2	7,299	0.2
EC-3	572	0.1
TOTAL	23,892	0.7

EROSION CONTROL

SHEET	LOCATION	TYPE	(N) SQFT	COMPOST SQFT	COMPOST (N) CY	INCORPORATE MATERIALS SQFT	ROLLED EROSION CONTROL PRODUCT (NETTING) TPYE B SQFT	HYDROSEED SQFT	STRAW SQFT	INCORPORATE MATERIALS SQFT	HYDROMULCH SQFT
EC-1	A	1	15,476	15,476	143	15,476	-	15,476	15,476	15,476	15,476
	B	2	6,866	6,866	64	-	6,866	6,866	-	-	6,866
	C	2	1,484	1,484	14	-	1,484	1,484	-	-	1,484
	D	1	1,696	1,696	16	1,696	-	1,696	1,696	1,696	1,696
	E	1	1,908	1,908	18	1,908	-	1,908	1,908	1,908	1,908
	F	2	4,990	4,990	46	-	4,990	4,990	-	-	4,990
EC-2	A	2	2,980	2,980	28	-	2,980	2,980	-	-	2,980
	B	1	1,780	1,780	16	1,780	-	1,780	1,780	1,780	1,780
	C	1	7,226	7,226	67	7,226	-	7,226	7,226	7,226	7,226
	D	2	2,057	2,057	19	-	2,057	2,057	-	-	2,057
EC-3	A	1	3,561	3,561	33	3,561	-	3,561	3,561	3,561	3,561
	B	2	8,680	8,680	80	-	8,680	8,680	-	-	8,680
	C	1	1,0345	1,0345	96	10,345	-	1,0345	10,345	10,345	1,0345
	D	2	4,417	4,417	41	-	4,417	4,417	-	-	4,417
		TOTAL	73,466	73,466	681	41,992	31,474	73,466	41,992	41,992	73,466

FIBER ROLLS

SHEET	ITEM	LF
EC-1	FIBER ROLLS	930
EC-2	FIBER ROLLS	29
	TOTAL	959

EROSION CONTROL QUANTITIES
ECQ-1

STATE OF CALIFORNIA - DEPARTMENT OF TRANSPORTATION
Caltrans® LANDSCAPE ARCHITECTURE

SENIOR LANDSCAPE ARCHITECT: J. PIETRZAK
CALCULATED-DESIGNED BY: D. BREWER
CHECKED BY: J. PIETRZAK
REVISED BY
DATE REVISED

LAST REVISION 02-17-16
DATE PLOTTED => 25-APR-2016
TIME PLOTTED => 14:17

M

Maint	MAINTENANCE
Max	MAXIMUM
MB	METAL BEAM
MBB	METAL BEAM BARRIER
MBGR	METAL BEAM GUARD RAILING
Med	MEDIAN
MGS	MIDWEST GUARDRAIL SYSTEM
MH	MANHOLE
Min	MINIMUM
Misc	MISCELLANEOUS
Misc I & S	MISCELLANEOUS IRON AND STEEL
Mkr	MARKER
Mod	MODIFIED,
	MODIFY
Mon	MONUMENT
MP	METAL PLATE
MPGR	METAL PLATE GUARD RAILING
MR	MOVEMENT RATING
MSE	MECHANICALLY STABILIZED EMBANKMENT
Mt	MOUNTAIN, MOUNT
Mtl	MATERIAL
MVP	MAINTENANCE VEHICLE PULLOUT

N

N	NORTH
NB	NORTHBOUND
No.	NUMBER (MUST HAVE PERIOD)
Nos.	NUMBERS (MUST HAVE PERIOD)
NPS	NOMINAL PIPE SIZE
NS	NEAR SIDE
NSP	NEW STANDARD PLAN
NTS	NOT TO SCALE

O

Oblr	OBLITERATE
OC	OVERCROSSING
OD	OUTSIDE DIAMETER
OF	OUTSIDE FACE
OG	ORIGINAL GROUND
OGAC	OPEN GRADED ASPHALT CONCRETE
OGFC	OPEN GRADED FRICTION COURSE
OH	OVERHEAD
OHWM	ORDINARY HIGH WATER MARK
O-O	OUT TO OUT
Opp	OPPOSITE
OSD	OVERSIDE DRAIN

P

P	PAGE
PAP	PERFORATED ALUMINUM PIPE
PB	PULL BOX
PC	POINT OF CURVATURE,
	PRECAST
PCC	POINT OF COMPOUND CURVE,
	PORTLAND CEMENT CONCRETE
PCMS	PORTABLE CHANGEABLE MESSAGE SIGN
PCP	PERFORATED CONCRETE PIPE,
	PRESTRESSED CONCRETE PIPE
PCVC	POINT OF COMPOUND VERTICAL CURVE
PEC	PERMIT TO ENTER AND CONSTRUCT
Ped	PEDESTRIAN
Ped OC	PEDESTRIAN OVERCROSSING
Ped UC	PEDESTRIAN UNDERCROSSING
Perm Mtl	PERMEABLE MATERIAL

P continued

PG	PROFILE GRADE
PI	POINT OF INTERSECTION
PJP	PARTIAL JOINT PENETRATION
Pkwy	PARKWAY
ℙ,PL	PLATE
P/L	PROPERTY LINE
PM	POST MILE,
	TIME FROM NOON TO MIDNIGHT
PN	PAVING NOTCH
POC	POINT OF HORIZONTAL CURVE
POT	POINT OF TANGENT
POVC	POINT OF VERTICAL CURVE
PP	PIPE PILE,
	PLASTIC PIPE,
	POWER POLE
PPL	PREFORMED PERMEABLE LINER
PPP	PERFORATED PLASTIC PIPE
PRC	POINT OF REVERSE CURVE
PRF	PAVEMENT REINFORCING FABRIC
PRVC	POINT OF REVERSE VERTICAL CURVE
PS&E	PLANS, SPECIFICATIONS AND ESTIMATES
PS, P/S	PRESTRESSED
PSP	PERFORATED STEEL PIPE
PT	POINT OF TANGENCY
PVC	POLYVINYL CHLORIDE
Pvmt	PAVEMENT

Q

Qty	QUANTITY

R

R	RADIUS
R & D	REMOVE AND DISPOSE
R & S	REMOVE AND SALVAGE
R/C	RATE OF CHANGE
RCA	REINFORCED CONCRETE ARCH
RCB	REINFORCED CONCRETE BOX
RCP	REINFORCED CONCRETE PIPE
RCPA	REINFORCED CONCRETE PIPE ARCH
Rd	ROAD
Reinf	REINFORCED,
	REINFORCEMENT,
	REINFORCING
Rel	RELOCATE
Repl	REPLACEMENT
Ret	RETAINING
Rev	REVISED, REVISION
Rdwy	ROADWAY
RHMA	RUBBERIZED HOT MIX ASPHALT
Riv	RIVER
RM	ROAD-MIXED
RP	RADIUS POINT,
	REFERENCE POINT
RR	RAILROAD
RSP	ROCK SLOPE PROTECTION,
	REVISED STANDARD PLAN
Rt	RIGHT
Rte	ROUTE
RW	REDWOOD,
	RETAINING WALL
R/W	RIGHT OF WAY
Rwy	RAILWAY

S

S	SOUTH,
	SUPPLEMENT
SAE	STRUCTURE APPROACH EMBANKMENT
Salv	SALVAGE
SAPP	STRUCTURAL ALUMINUM PLATE PIPE
SB	SOUTHBOUND
SC	SAND CUSHION
SCSP	SLOTTED CORRUGATED STEEL PIPE
SD	STORM DRAIN
Sec	SECOND,
	SECTION
Sep	SEPARATION
SG	SUBGRADE
Shld	SHOULDER
Sht	SHEET
Sim	SIMILAR
℄	STATION LINE
SM	SELECTED MATERIAL
Spec	SPECIAL,
	SPECIFICATIONS
SPP	SLOTTED PLASTIC PIPE
SS	SLOPE STAKE
SSBM	STRAP AND SADDLE BRACKET METHOD
SSD	STRUCTURAL SECTION DRAIN
SSPA	STRUCTURAL STEEL PLATE ARCH
SSPP	STRUCTURAL STEEL PLATE PIPE
SSPPA	STRUCTURAL STEEL PLATE PIPE ARCH
SSRP	STEEL SPIRAL RIB PIPE
St	STREET
Sta	STATION
STBB	SINGLE THRIE BEAM BARRIER
Std	STANDARD
Str	STRUCTURE
Surf	SURFACING
SW	SIDEWALK,
	SOUND WALL
Swr	SEWER
Sym	SYMMETRICAL
S4S	SURFACE 4 SIDES

T

T	SEMI-TANGENT
Tan	TANGENT
TBB	THRIE BEAM BARRIER
Tbr	TIMBER
TC	TOP OF CURB
TCB	TRAFFIC CONTROL BOX
TCE	TEMPORARY CONSTRUCTION EASEMENT
Tel	TELEPHONE
Temp	TEMPORARY
TG	TOP OF GRADE
Tot	TOTAL
TP	TELEPHONE POLE
TPB	TREATED PERMEABLE BASE
TPM	TREATED PERMEABLE MATERIAL
Trans	TRANSITION

T continued

TS	TRANSVERSE,
	TRAFFIC SIGNAL,
	TUBULAR STEEL
Typ	TYPICAL

U

UC	UNDERCROSSING
UD	UNDERDRAIN
UG	UNDERGROUND
UON	UNLESS OTHERWISE NOTED
UP	UNDERPASS

V

V	VALVE,
	DESIGN SPEED
Var	VARIABLE,
	VARIES
VC	VERTICAL CURVE
VCP	VITRIFIED CLAY PIPE
Vert	VERTICAL
Via	VIADUCT
Vol	VOLUME

W

W	WEST,
	WIDTH
WB	WESTBOUND
WH	WEEP HOLE
WM	WIRE MESH
WS	WATER SURFACE
WSP	WELDED STEEL PIPE
Wt	WEIGHT
WV	WATER VALVE
WW	WINGWALL
WWLOL	WINGWALL LAYOUT LINE

X

X Sec	CROSS SECTION
Xing	CROSSING

Y

Yr	YEAR
Yrs	YEARS

Dist	COUNTY	ROUTE	POST MILES TOTAL PROJECT	SHEET No.	TOTAL SHEETS
01	Men	101	52.1/52.6	45	54

Grace M. Tsushima
REGISTERED CIVIL ENGINEER

July 19, 2013
PLANS APPROVAL DATE

REGISTERED PROFESSIONAL ENGINEER
Grace M. Tsushima
No. C49814
Exp. 9-30-14
CIVIL
STATE OF CALIFORNIA

THE STATE OF CALIFORNIA OR ITS OFFICERS OR AGENTS SHALL NOT BE RESPONSIBLE FOR THE ACCURACY OR COMPLETENESS OF SCANNED COPIES OF THIS PLAN SHEET.

TO ACCOMPANY PLANS DATED 2-22-16

UNIT OF MEASUREMENT SYMBOLS:

Some of the symbols used in the project plan quantity tables and in the Bid Item List are:

TABLE A

SYMBOL USED	DEFINITIONS
ACRE	ACRE
CF	CUBIC FOOT
CY	CUBIC YARD
EA	EACH
GAL	GALLON
LB	POUND
LF	LINEAR FOOT
SQFT	SQUARE FOOT
SQYD	SQUARE YARD
STA	100 FEET
TAB	TABLET
TON	2,000 POUNDS

Some of the symbols used in the plans other than in the project plan quantity tables are:

TABLE B

SYMBOL USED	DEFINITIONS
ksi	KIPS PER SQUARE INCH
ksf	KIPS PER SQUARE FOOT
psi	POUNDS PER SQUARE INCH
psf	POUNDS PER SQUARE FOOT
lb/ft^3, pcf	POUNDS PER CUBIC FOOT
tsf	TONS PER SQUARE FOOT
mph, MPH *	MILES PER HOUR
ø	NOMINAL DIAMETER
oz	OUNCE
lb	POUND
kip	1,000 POUNDS
cal	CALORIE
ft	FOOT OR FEET
gal	GALLON

* For use on a sign panel only

STATE OF CALIFORNIA
DEPARTMENT OF TRANSPORTATION

ABBREVIATIONS (SHEET 2 OF 2)

NO SCALE

RSP A10B DATED JULY 19, 2013 SUPERSEDES STANDARD PLAN A10B DATED MAY 20, 2011 - PAGE 2 OF THE STANDARD PLANS BOOK DATED 2010.

REVISED STANDARD PLAN RSP A10B

2010 REVISED STANDARD PLAN RSP A10B

6-7-13

Dist	COUNTY	ROUTE	POST MILES TOTAL PROJECT	SHEET No.	TOTAL SHEETS
01	Men	101	52.1/52.6	46	54

REGISTERED CIVIL ENGINEER

October 19, 2012
PLANS APPROVAL DATE

REGISTERED PROFESSIONAL ENGINEER
Raymond Don Tsztoo
No. C37332
Exp. 6-30-14
CIVIL
STATE OF CALIFORNIA

THE STATE OF CALIFORNIA OR ITS OFFICERS OR AGENTS SHALL NOT BE RESPONSIBLE FOR THE ACCURACY OR COMPLETENESS OF SCANNED COPIES OF THIS PLAN SHEET.

TO ACCOMPANY PLANS DATED 2-22-16

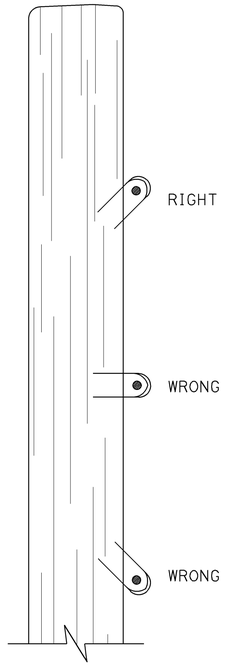

DRIVE STAPLES AT ANGLE

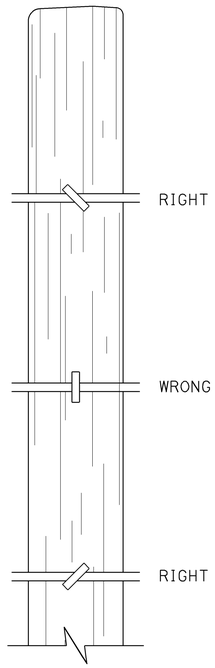

DO NOT DRIVE STAPLES PARALLEL TO SIDE OF POST

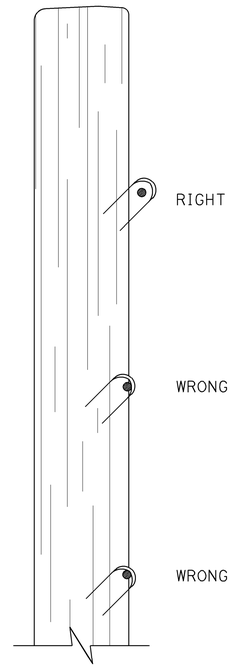

LEAVE WIRE LOOSE IN STAPLE

LINE POST STAPLING DETAILS

(Apply to rectangular/square and round posts)
Do not staple vertical wire in wire mesh.

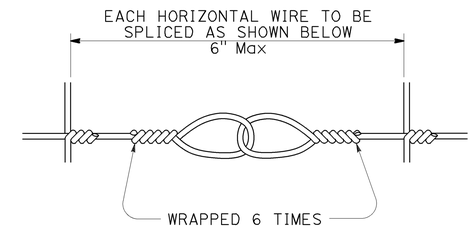

SPLICE DETAIL FOR BARBED WIRE/WIRE MESH FENCE

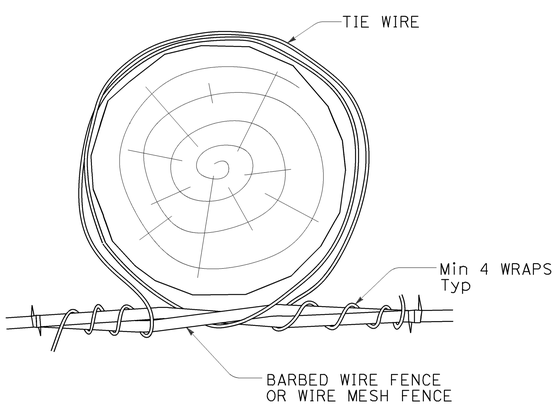

OPTION A

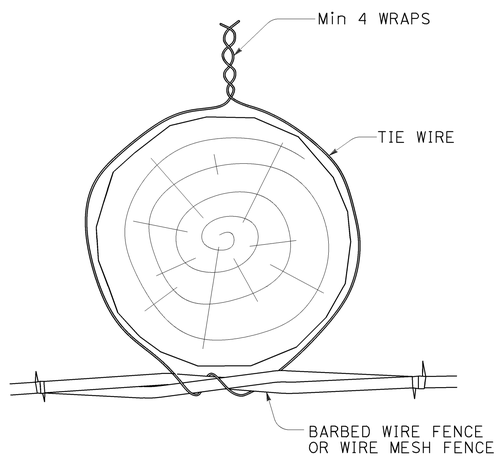

OPTION B

LINE POST WIRE TIE OPTION DETAILS

(Option details also apply to rectangular/square posts)

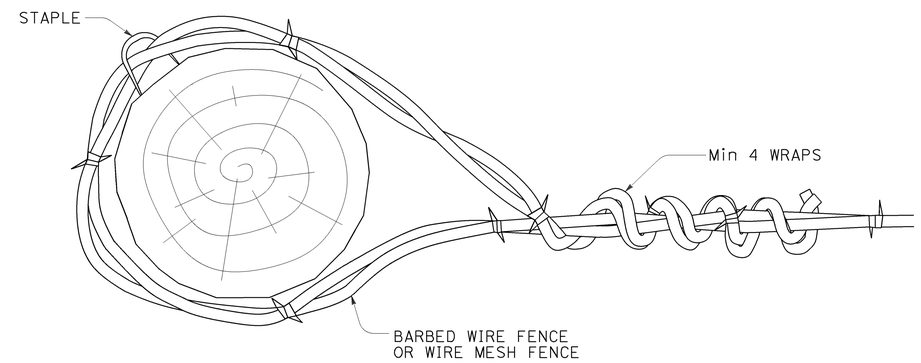

END, LATCH, PULL, AND CORNER POST DETAIL

(Also applies to rectangular/square posts)

STATE OF CALIFORNIA
DEPARTMENT OF TRANSPORTATION

BARBED WIRE AND WIRE MESH FENCE - MISCELLANEOUS DETAILS

NO SCALE

RSP A86D DATED OCTOBER 19, 2012 SUPPLEMENTS THE STANDARD PLANS BOOK DATED 2010.

REVISED STANDARD PLAN RSP A86D

2010 REVISED STANDARD PLAN RSP A86D

10-9-12

Dist	COUNTY	ROUTE	POST MILES TOTAL PROJECT	SHEET No.	TOTAL SHEETS
01	Men	101	52.1/52.6	47	54

REGISTERED CIVIL ENGINEER

July 18, 2014
PLANS APPROVAL DATE

REGISTERED PROFESSIONAL ENGINEER
Carl M. Duan
No. C59976
Exp. 6-30-16
CIVIL
STATE OF CALIFORNIA

THE STATE OF CALIFORNIA OR ITS OFFICERS OR AGENTS SHALL NOT BE RESPONSIBLE FOR THE ACCURACY OR COMPLETENESS OF SCANNED COPIES OF THIS PLAN SHEET.

TO ACCOMPANY PLANS DATED 2-22-16

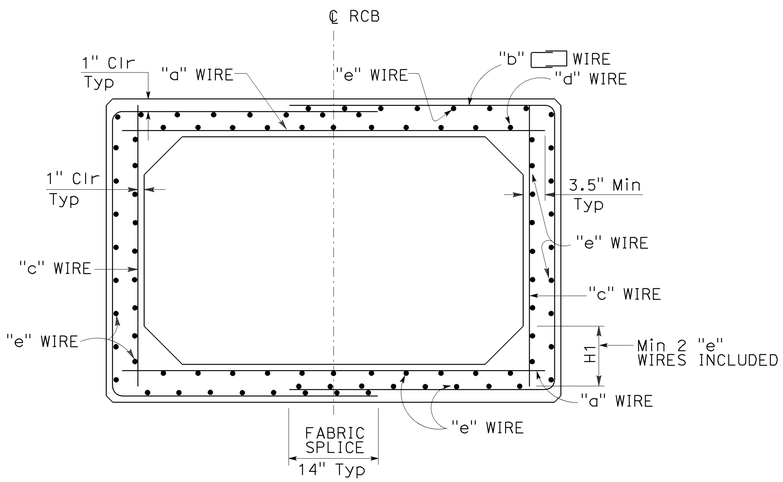

TYPICAL SECTION - SPANS 4'-0" THRU 12'-0"

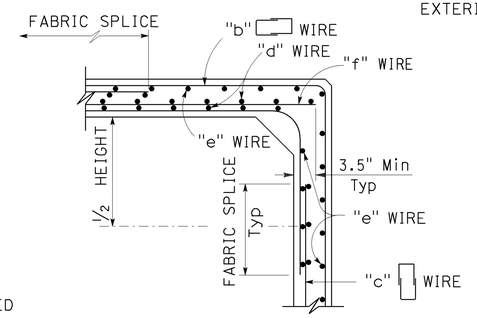

ALTERNATIVE DETAILING OPTION

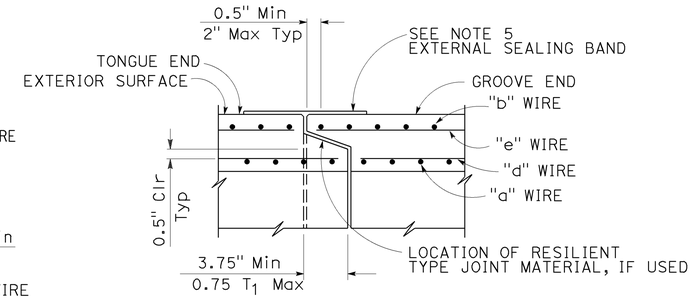

END JOINT DETAIL

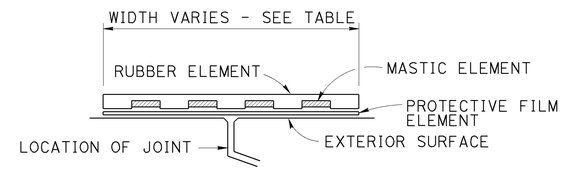

EXTERNAL SEALING BAND SCHEMATIC

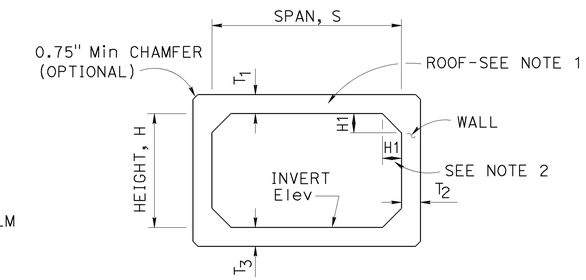

SCHEMATIC

TABLE	
SPAN	EXTERNAL SEALING BAND WIDTH
4'-6'	9"
7'-8'	11"
10'-12'	13"

SPAN, S			4'						5'								6'								7'									
HEIGHT, H			2'		3'		4'		2'		3'		4'		5'		3'		4'		5'		6'		3'		4'		5'		6'		7'	
MAXIMUM EARTH COVER			10'	20'	10'	20'	10'	20'	10'	20'	10'	20'	10'	20'	10'	20'	10'	20'	10'	20'	10'	20'	10'	20'	10'	20'	10'	20'	10'	20'	10'	20'	10'	20'
CONCRETE (INCH)	ROOF	T_1	5.5"	5.5"	5.5"	5.5"	5.5"	5.5"	6"	6"	6"	6"	6"	6"	6"	6"	7"	7"	7"	7"	7"	7"	7"	7"	8"	8"	8"	8"	8"	8"	8"	8"	8"	8"
	SIDE WALL	T_2	5.5"	5.5"	5.5"	5.5"	5.5"	5.5"	6"	6"	6"	6"	6"	6"	6"	6"	7"	7"	7"	7"	7"	7"	7"	7"	8"	8"	8"	8"	8"	8"	8"	8"	8"	8"
	INVERT	T_3	5.5"	5.5"	5.5"	5.5"	5.5"	5.5"	6"	6"	6"	6"	6"	6"	6"	6"	7"	7"	7"	7"	7"	7"	7"	7"	8"	8"	8"	8"	8"	8"	8"	8"	8"	8"
MINIMUM WELDED WIRE FABRIC ($inch^2/ft$)		"a"	.33	.47	.34	.49	.34	.50	.40	.62	.41	.62	.42	.64	.43	.64	.44	.67	.45	.70	.46	.71	.47	.72	.47	.72	.48	.75	.50	.78	.50	.79	.51	.80
		"b"	.23	.28	.23	.25	.21	.23	.26	.36	.24	.36	.24	.33	.24	.30	.28	.44	.27	.40	.27	.37	.27	.38	.33	.52	.31	.48	.30	.45	.30	.43	.30	.48
		"c"	.11	.11	.11	.12	.18	.24	.11	.11	.11	.11	.13	.23	.24	.34	.11	.11	.11	.12	.19	.27	.27	.42	.11	.11	.11	.11	.13	.20	.26	.31	.30	.50
		"d"	.16	.11	.16	.11	.16	.11	.17	.11	.18	.11	.18	.11	.18	.11	.17	.11	.18	.11	.18	.11	.18	.11	.17	.11	.17	.11	.18	.11	.18	.11	.18	.11
		"e"	.11	.11	.11	.11	.11	.11	.11	.11	.11	.11	.11	.11	.11	.11	.11	.11	.11	.11	.11	.11	.11	.11	.11	.11	.11	.11	.11	.11	.11	.11	.11	.11
		"f"	.22	.36	.23	.37	.22	.26	.29	.51	.30	.51	.29	.41	.26	.30	.33	.56	.34	.58	.27	.44	.21	.30	.36	.61	.37	.64	.37	.57	.25	.48	.21	.30
* QUANTITY	Conc	CY/LF	.31		.34		.38		.37		.41		.44		.48		.51		.56		.60		.64		.63		.68		.73		.78		.83	
	Reinf	LB/LF	35	41	39	45	45	51	49	58	49	62	54	69	62	78	60	79	64	83	72	93	80	107	72	98	76	102	81	110	92	120	101	143
** SOIL PRESSURE (ksf)			2.3	4.4	2.4	4.5	2.4	4.5	3.1	4.4	3.1	4.5	3.1	4.5	3.2	4.5	2.7	4.5	2.8	4.5	2.8	4.6	2.8	4.6	2.5	4.5	2.5	4.6	2.5	4.6	2.5	4.6	2.6	4.6

SPAN, S			8'										10'												12'													
HEIGHT, H			4'		5'		6'		7'		8'		5'		6'		7'		8'		9'		10'		6'		7'		8'		9'		10'		11'		12'	
MAXIMUM EARTH COVER			10'	20'	10'	20'	10'	20'	10'	20'	10'	20'	10'	20'	10'	20'	10'	20'	10'	20'	10'	20'	10'	20'	10'	20'	10'	20'	10'	20'	10'	20'	10'	20'	10'	20'	10'	20'
CONCRETE (INCH)	ROOF	T_1	8.5"	8.5"	8.5"	8.5"	8.5"	8.5"	8.5"	8.5"	8.5"	8.5"	10"	10"	10"	10"	10"	10"	10"	10"	10"	10"	10"	10"	12"	12"	12"	12"	12"	12"	12"	12"	12"	12"	12"	12"	12"	12"
	SIDE WALL	T_2	8.5"	8.5"	8.5"	8.5"	8.5"	8.5"	8.5"	8.5"	8.5"	8.5"	10"	10"	10"	10"	10"	10"	10"	10"	10"	10"	10"	10"	12"	12"	12"	12"	12"	12"	12"	12"	12"	12"	12"	12"	12"	12"
	INVERT	T_3	8.5"	8.5"	8.5"	8.5"	8.5"	8.5"	8.5"	8.5"	8.5"	8.5"	10"	10"	10"	10"	10"	10"	10"	10"	10"	10"	10"	10"	12"	12"	12"	12"	12"	12"	12"	12"	12"	12"	12"	12"	12"	12"
MINIMUM WELDED WIRE FABRIC ($inch^2/ft$)		"a"	.55	.87	.56	.90	.57	.92	.58	.93	.58	.94	.66	1.07	.67	1.10	.69	1.13	.70	1.14	.70	1.16	.77	1.16	.73	1.21	1.21	1.24	.77	1.27	1.24	1.29	1.27	1.31	.78	1.32	1.29	1.32
		"b"	.37	.59	.35	.55	.33	.52	.33	.52	.36	.57	.45	.74	.43	.70	.41	.67	.40	.64	.43	.67	.48	.67	.51	.85	.85	.81	.49	.77	.81	.74	.77	.77	.53	.79	.74	.79
		"c"	.11	.11	.11	.11	.20	.31	.31	.42	.38	.62	.11	.11	.11	.11	.22	.31	.36	.42	.40	.62	.54	.86	.11	.11	.11	.11	.23	.30	.37	.42	.42	.60	.54	.82	.42	1.06
		"d"	.19	.11	.19	.11	.20	.11	.20	.11	.20	.11	.20	.11	.20	.11	.21	.11	.21	.11	.21	.11	.21	.11	.20	.11	.20	.11	.21	.11	.22	.11	.22	.11	.22	.11	.22	.11
		"e"	.11	.11	.11	.11	.11	.11	.11	.11	.11	.11	.11	.11	.11	.11	.11	.11	.11	.11	.11	.11	.11	.11	.11	.11	.11	.11	.11	.11	.11	.11	.11	.11	.11	.11	.11	.11
		"f"	.44	.76	.45	.79	.37	.61	.27	.52	.20	.31	.55	.96	.56	.99	.47	.81	.34	.73	.31	.53	.16	.30	.62	1.10	1.10	1.13	.64	.97	1.13	.87	.97	.71	.40	.50	.87	.26
* QUANTITY	Conc	CY/LF	.78		.83		.88		.94		.99		1.10		1.17		1.23		1.29		1.35		1.41		1.56		1.63		1.70		1.78		1.85		1.93		2.00	
	Reinf	LB/LF	93	129	97	133	105	148	117	161	131	189	133	191	138	196	148	212	191	225	176	253	201	282	174	255	179	261	191	279	207	293	223	323	249	357	281	393
** SOIL PRESSURE (ksf)			2.5	4.6	2.5	4.6	2.5	4.6	2.5	4.6	2.5	4.6	3.8	4.6	3.8	4.7	3.8	4.7	4.6	4.7	3.9	4.7	3.9	4.8	3.6	4.7	3.7	4.7	3.7	4.8	3.7	4.8	3.7	4.8	3.8	4.9	3.8	4.9

* See Note 3 ** See Note 6

NOTES:

1. The inside and outside surfaces of the RCB roof shall be marked "TOP".
2. H1 minimum shall equal the wall thickness. H1 maximum shall be 8" for spans through 8' and 14" for spans over 8'.
3. Quantities are approximate and for design purposes only.
4. For design and details not shown see Revised Standard Plan RSP D83B.
5. For external sealing band applications see Standard Plan A62G.
6. Soil pressures shown are factored per AASHTO LRFD and include soil weight of fill over box, self weight of box and live load where applicable.

STATE OF CALIFORNIA
DEPARTMENT OF TRANSPORTATION

PRECAST REINFORCED CONCRETE BOX CULVERT

NO SCALE

RSP D83A DATED JULY 18, 2014 SUPERSEDES STANDARD PLAN D83A DATED MAY 20, 2011 - PAGE 175 OF THE STANDARD PLANS BOOK DATED 2010.

REVISED STANDARD PLAN RSP D83A

2010 REVISED STANDARD PLAN RSP D83A

4-3-14

Dist	COUNTY	ROUTE	POST MILES TOTAL PROJECT	SHEET No.	TOTAL SHEETS
01	Men	101	52.1/52.6	48	54

REGISTERED CIVIL ENGINEER

July 18, 2014
PLANS APPROVAL DATE

REGISTERED PROFESSIONAL ENGINEER Carl M. Duan No. C59976 Exp. 6-30-16 CIVIL STATE OF CALIFORNIA

THE STATE OF CALIFORNIA OR ITS OFFICERS OR AGENTS SHALL NOT BE RESPONSIBLE FOR THE ACCURACY OR COMPLETENESS OF SCANNED COPIES OF THIS PLAN SHEET.

TO ACCOMPANY PLANS DATED 2-22-16

DESIGN NOTES:

Specifications:

AASHTO LRFD Bridge Design Specifications, 4th Edition with California Amendments.

Earth load:

Earth pressures for two conditions:
140 pcf Vert, 42 pcf Horiz
140 pcf Vert, 140 pcf Horiz

Unit stresses:

f'c = 5.0 ksi
fy = 65.0 ksi for weld wire fabric
n = 7

Shear:

Based on

$V_c = \{2.14\sqrt{f_c'} + 4600 \frac{A_s}{b d_e} \frac{V_u d_e}{M_u}\} b.d_e \leq 4.0\sqrt{f_c'} b.d_e$ (Pounds)

V_c shall not be less than $3.00\sqrt{f_c'} b.d_e$ for frame members and $2.5\sqrt{f_c'} b.d_e$ for simply supported members.

Exclusion:

Axial loading on the members has not been considered.

GENERAL NOTES:

Designation:

Standard single or multiple precast box culverts are shown on the plans as span times height with maximum cover over roof thus: 8' x 5' RCB with 10'-0" or double 10' x 5' RCB with 20'-0", followed by alternatives.

Alternatives:

Single cell:

Standard dimensions of AASHTO Material Specification 'M259' or 'M273'.

Multiple cell:

Constructed by placing single cells adjacent to each other. Inlet and outlet ends of culvert will be rounded unless square ends are designated. Parapet will be shown unless designated in plans. Such designation may be different for inlet and outlet ends.

Limitations:

Where the overfill is less than 12", Precast RCB culverts are not to be used. Precast RCB culverts are not to be used in siphon or pressurized installations unless appropriate "watertight" jointing is provided.

Special reinforcement coverage:

Precast RCB culvert standard plans are not to be used in a corrosive environment or where there is a severe abrasive flow condition or freeze-thaw locations.

Special design:

Required for culvert with different conditions, loads or design bearing pressures greater than those given on these plans. Required for culverts where end details need higher skew angles, higher parapets or barrier sections.

CONSTRUCTION NOTES:

Cutoff walls:

4'-0" Cutoff walls are to be provided at inlet and/or outlet unless channel is lined and unless otherwise shown. These walls are to be extended if scour conditions warrant. See Standard Plans D84, D85 and D86A.

Wingwalls:

Wingwalls shall be cast-in-place and shall conform to standard plan details for box culvert wingwalls. See Standard Plans D84, D85 and D86A.

Earthwork:

See Standard Plan A62G.

Construction loads:

Strutting may be required near temporary ends. For construction loads on culverts, See Standard Plan D88.

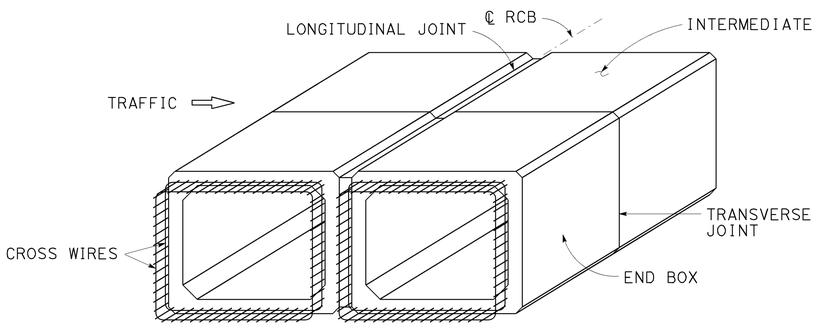

PRECAST RCB TERMINOLOGY

NOTE: Inner and outer reinforcement to be exposed as required to tie to cast-in-place construction. A minimum of two cross wires shall be exposed on all sides.

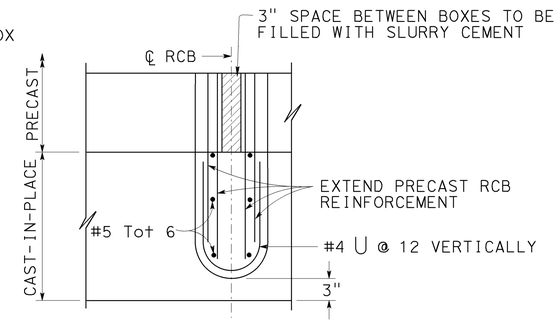

PARTIAL PLAN INTERIOR WALL MULTICELL CULVERT

PARAPET "P" BARS			
SPAN \ SKEW ANGLE	0° TO 15°	16° TO 30°	31° TO 45°
4'-0"	#5	#5	#5
5'-0"	#5	#5	#6
6'-0"	#6	#6	#6
7'-0"	#7	#7	#7
8'-0"	#7	#7	#8
10'-0"	#8	#8	#9
12'-0"	#9	#9	#10

BARRIER PARAPET REINFORCEMENT

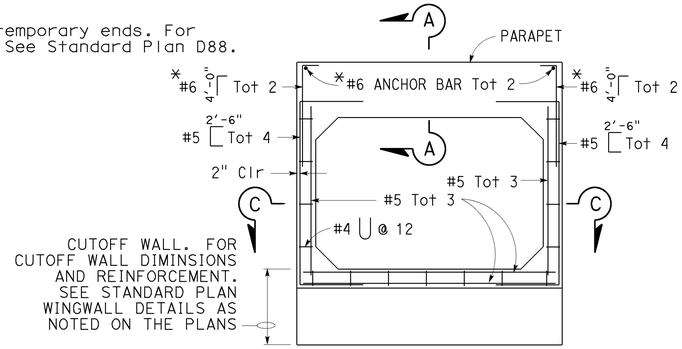

CAST-IN-PLACE END ELEVATION

* Reinforcing required for barrier parapet application only.

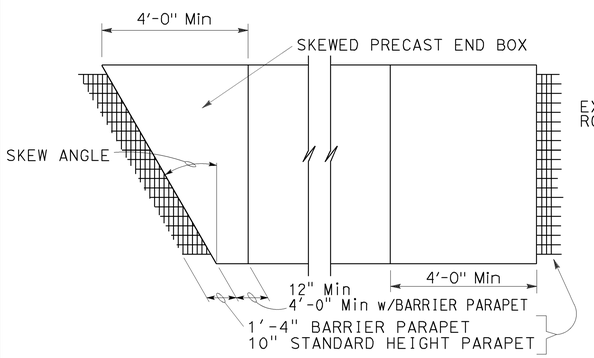

PARTIAL PLAN VIEW

For illustrative purposes only.
For correct skew direction see plans.

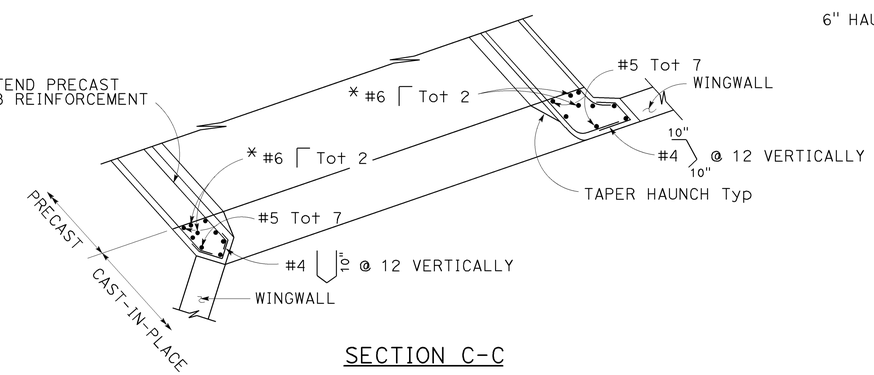

SECTION C-C

* Reinforcing required for barrier parapet application only.

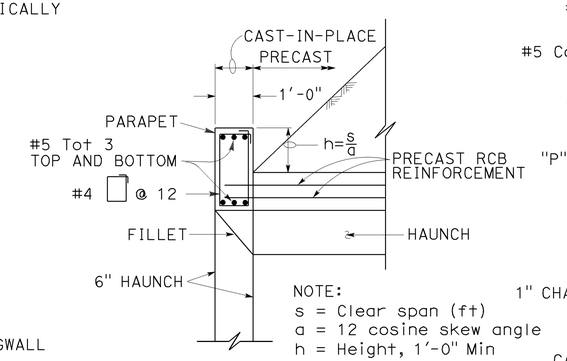

SECTION A-A
(Standard Height Parapet)

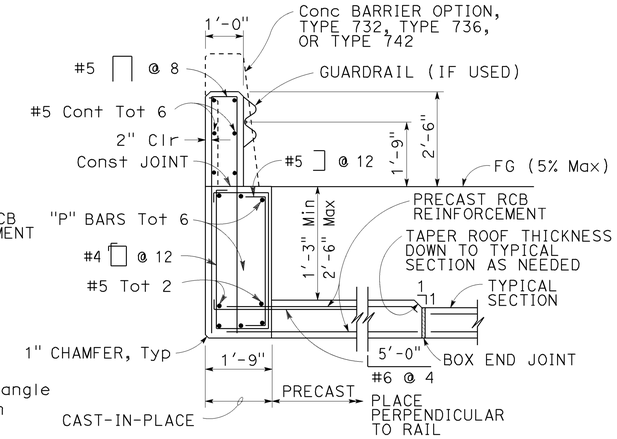

SECTION A-A
(Barrier Parapet)

TYPICAL CULVERT END DETAILS

For wall and invert reinforcement not shown, See "End Elevation" detail.

STATE OF CALIFORNIA
DEPARTMENT OF TRANSPORTATION

PRECAST REINFORCED CONCRETE BOX CULVERT MISCELLANEOUS DETAILS

NO SCALE

RSP D83B DATED JULY 18, 2014 SUPERSEDES STANDARD PLAN D83B DATED MAY 20, 2011 - PAGE 176 OF THE STANDARD PLANS BOOK DATED 2010.

REVISED STANDARD PLAN RSP D83B

2010 REVISED STANDARD PLAN RSP D83B

4-3-14

Dist	COUNTY	ROUTE	POST MILES TOTAL PROJECT	SHEET No.	TOTAL SHEETS
01	Men	101	52.1/52.6	49	54

Gregory A. Balzer
LICENSED LANDSCAPE ARCHITECT

July 19, 2013
PLANS APPROVAL DATE

THE STATE OF CALIFORNIA OR ITS OFFICERS OR AGENTS SHALL NOT BE RESPONSIBLE FOR THE ACCURACY OR COMPLETENESS OF SCANNED COPIES OF THIS PLAN SHEET.

LICENSED LANDSCAPE ARCHITECT — Gregory A. Balzer 2576 — Gregory A. Balzer — 02-28-15 Renewal Date — 7-19-13 Date — STATE OF CALIFORNIA

TO ACCOMPANY PLANS DATED 2-22-16

A

AB	AGGREGATE BASE
ABS	ACRYLONITRILE-BUTADIENE-STYRENE
AC	ASPHALT CONCRETE
ACC	ARMOR-CLAD CONDUCTORS
Adj	ADJACENT/ADJUSTABLE
AIC	AUXILIARY IRRIGATION CONTROLLER
Alt	ALTERNATIVE
AMEND	AMENDMENT
ARV	AIR RELEASE VALVE
AUTO	AUTOMATIC
AUX	AUXILIARY
AVB	ATMOSPHERIC VACUUM BREAKER

B

B&B	BALLED AND BURLAPPED
B/B	BRASS/BRONZE
B/B/PL	BRASS/BRONZE/PLASTIC
B/PL	BRASS/PLASTIC
BFM	BONDED FIBER MATRIX
Bit Ctd	BITUMINOUS COATED
BP	BOOSTER PUMP
BPA	BACKFLOW PREVENTER ASSEMBLY
BPE	BACKFLOW PREVENTER ENCLOSURE
BV	BALL VALVE

C

C	CONDUIT
CAP	CORRUGATED ALUMINUM PIPE
CARV	COMBINATION AIR RELEASE VALVE
CB	COUPLING BAND
CCA	CAM COUPLER ASSEMBLY
CEC	CONTROLLER ENCLOSURE CABINET
CHDPE	CORRUGATED HIGH DENSITY POLYETHYLENE
CL	CHAIN LINK
CNC	CONTROL AND NEUTRAL CONDUCTORS
Conc	CONCRETE
CP	COPPER PIPE
CS	COMPOST SOCK
CSP	CORRUGATED STEEL PIPE
CST	CENTER STRIP
CV	CHECK VALVE

D

Dia	DIAMETER
DIP	DUCTILE IRON PIPE
DIT	DRIP IRRIGATION TUBING
DG	DECOMPOSED GRANITE
DN	DIAMETER NOMINAL
DVA	DRIP VALVE ASSEMBLY

E

EC	EROSION CONTROL
ECTC	EROSION CONTROL TECHNOLOGY COUNCIL
Elect	ELECTRIC/ELECTRICAL
Elev	ELEVATION
ELL	ELBOW
ENCL	ENCLOSURE
EP	EDGE OF PAVEMENT
ES	EDGE OF SHOULDER
EST	END STRIP
ESTB	ESTABLISHMENT
ETW	EDGE OF TRAVELED WAY

F

F	FULL CIRCLE
F/P	FULL/PART CIRCLE
FCV	FLOW CONTROL VALVE
FERT	FERTILIZER
FG	FINISHED GRADE
FH	FLEXIBLE HOSE
FIPT	FEMALE IRON PIPE THREAD
FIS	FERTILIZER INJECTOR SYSTEM
FL	FLOW LINE
FR	FIBER ROLL
FS	FLOW SENSOR
FSC	FLOW SENSOR CABLE
FV	FLUSH VALVE

G

Galv	GALVANIZED
GARV	GARDEN VALVE
GARVA	GARDEN VALVE ASSEMBLY
GM	GRAVEL MULCH
GPH	GALLONS PER HOUR
GPM	GALLONS PER MINUTE
GSP	GALVANIZED STEEL PIPE
GV	GATE VALVE

H

H	HALF CIRCLE
HDPE	HIGH DENSITY POLYETHYLENE
HP	HORSEPOWER/HINGE POINT
HPL	HIGH PRESSURE LINE
Hwy	HIGHWAY

I

IC	IRRIGATION CONTROLLER
ICC	IRRIGATION CONTROLLER(S) IN CONTROLLER ENCLOSURE CABINET
ID	INSIDE DIAMETER
IFS	IRRIGATION FILTRATION SYSTEM
IPS	IRON PIPE SIZE
IPT	IRON PIPE THREAD
Irr	IRRIGATION

L

L	LENGTH

M

Max	MAXIMUM
MBGR	METAL BEAM GUARD RAILING
MCV	MANUAL CONTROL VALVE
MIC	MASTER IRRIGATION CONTROLLER
Min	MINIMUM
MIPT	MALE IRON PIPE THREAD
Misc	MISCELLANEOUS
Mtl	MATERIAL
MVP	MAINTENANCE VEHICLE PULLOUT

N

NCN	NO COMMON NAME
NL	NOZZLE LINE
No.	NUMBER
NPT	NATIONAL PIPE THREAD

O

O/C	ON CENTER
OD	OUTSIDE DIAMETER
OL	OVERLAP

P

P	PART CIRCLE
PB	PULL BOX
PCC	PORTLAND CEMENT CONCRETE
PE	POLYETHYLENE
Pkt	PACKET
PL	PLASTIC
PLS	PURE LIVE SEED
PLT	PLANT/PLANTING
PLT ESTB	PLANT ESTABLISHMENT
PM	POST MILE
PR	PRESSURE RATED
PRLV	PRESSURE RELIEF VALVE
PRV	PRESSURE REGULATING VALVE
PVC	POLYVINYL CHLORIDE
Pvmt	PAVEMENT

Q

Q	QUARTER CIRCLE
QCV	QUICK COUPLING VALVE

R

R	RADIUS
RCP	REINFORCED CONCRETE PIPE
RCV	REMOTE CONTROL VALVE
RCVM	REMOTE CONTROL VALVE (MASTER)
RCVMF	REMOTE CONTROL VALVE (MASTER) W/FLOW SENSOR
RCVP	REMOTE CONTROL VALVE W/PRESSURE REGULATOR
RCW	RECYCLED WATER
RECP	ROLLED EROSION CONTROL PRODUCT
REQ	REQUIRED
RICS	REMOTE IRRIGATION CONTROL SYSTEM
R/W	RIGHT OF WAY

S

S	SLIP
SCH	SCHEDULE
SF	STATE-FURNISHED
Shld	SHOULDER
Sq	SQUARE
SST	SIDE STRIP
Sta	STATION
Std	STANDARD
SW	SIDEWALK/SOUND WALL

T

T	THIRD CIRCLE/THREAD
TLS	TRUCK LOADING STANDPIPE
TQ	THREE QUARTER CIRCLE
TRM	TURF REINFORCEMENT MAT
TT	TWO-THIRDS CIRCLE
TWSA	TREE WELL SPRINKLER ASSEMBLY
Typ	TYPICAL

U

UG	UNDERGROUND

W

W	WIDTH
W/	WITH
WM	WATER METER
WS	WYE STRAINER
WSA	WYE STRAINER ASSEMBLY
WSP	WELDED STEEL PIPE
WWM	WELDED WIRE MESH

NOTE:

For additional abbreviations, see Standard Plans A10A and A10B.

STATE OF CALIFORNIA
DEPARTMENT OF TRANSPORTATION

LANDSCAPE AND EROSION CONTROL ABBREVIATIONS

NO SCALE

RSP H1 DATED JULY 19, 2013 SUPERSEDES STANDARD PLAN H1 DATED MAY 20, 2011 - PAGE 218 OF THE STANDARD PLANS BOOK DATED 2010.

REVISED STANDARD PLAN RSP H1

2010 REVISED STANDARD PLAN RSP H1

6-28-13

Dist	COUNTY	ROUTE	POST MILES TOTAL PROJECT	SHEET No.	TOTAL SHEETS
01	Men	101	52.1/52.6	50	54

LICENSED LANDSCAPE ARCHITECT

November 15, 2013
PLANS APPROVAL DATE

LICENSED LANDSCAPE ARCHITECT
Gregory A. Balzer 2576
02-28-15
(Renewal) Date
11-15-13
Date
STATE OF CALIFORNIA

THE STATE OF CALIFORNIA OR ITS OFFICERS OR AGENTS SHALL NOT BE RESPONSIBLE FOR THE ACCURACY OR COMPLETENESS OF SCANNED COPIES OF THIS PLAN SHEET.

TO ACCOMPANY PLANS DATED 2-22-16

2010 REVISED STANDARD PLAN RSP H2

EXISTING	NEW	ITEM DESCRIPTION
		WATER METER (WM)
		BACKFLOW PREVENTER ASSEMBLY (BPA)
		BACKFLOW PREVENTER ENCLOSURE (BPE)
		BOOSTER PUMP (BP)
		TRUCK LOADING STANDPIPE (TLS)
	FS	FLOW SENSOR (FS)
		MASTER IRRIGATION CONTROLLER (MIC)
		AUXILIARY IRRIGATION CONTROLLER (AIC)
		IRRIGATION CONTROLLER (IC) IRRIGATION CONTROLLER (IC) (BATTERY) IRRIGATION CONTROLLER (IC) (SOLAR) IRRIGATION CONTROLLER (IC) (TWO WIRE) IRRIGATION CONTROLLER(S) IN CONTROLLER ENCLOSURE CABINET (ICC)
acc	ACC	ARMOR-CLAD CONDUCTORS (ACC)
cnc	CNC	CONTROL AND NEUTRAL CONDUCTORS (CNC)
		IRRIGATION CONDUIT
		EXTEND IRRIGATION CONDUIT
dip	DIP	DUCTILE IRON PIPE (SUPPLY LINE) (MAIN) (DIP)
		GALVANIZED STEEL PIPE (SUPPLY LINE) (MAIN) (GSP)
		GALVANIZED STEEL PIPE (SUPPLY LINE) (LATERAL) (GSP)
		PLASTIC PIPE (SUPPLY LINE) (MAIN)
		PLASTIC PIPE (SUPPLY LINE) (LATERAL)
cp	CP	COPPER PIPE (SUPPLY LINE)
dit	DIT	DRIP IRRIGATION TUBING
		REMOTE CONTROL VALVE (RCV) REMOTE CONTROL VALVE (MASTER) (RCVM) REMOTE CONTROL VALVE (MASTER) W/FLOW METER (RCVMF)
P	P	REMOTE CONTROL VALVE W/PRESSURE REGULATOR (RCVP)
		EXISTING MANUAL CONTROL VALVE (MCV)
V	V	DRIP VALVE ASSEMBLY (DVA)
Y	Y	WYE STRAINER ASSEMBLY (WSA)

EXISTING	NEW	ITEM DESCRIPTION
		GATE VALVE (GV)
		BALL VALVE (BV)
		QUICK COUPLING VALVE (QCV)
		CAM COUPLER ASSEMBLY (CCA)
		GARDEN VALVE ASSEMBLY (GARVA)
		PRESSURE REGULATING VALVE (PRV)
		PRESSURE RELIEF VALVE (PRLV)
		FLOW CONTROL VALVE (FCV)
		COMBINATION AIR RELEASE VALVE (CARV)
		CHECK VALVE (CV)
		FLUSH VALVE (FV)
		EXISTING NOZZLE LINE W/TURNING UNION
		EXISTING IRRIGATION SYSTEM
		EXISTING IRRIGATION SYSTEM TO BE REMOVED
		CHAIN LINK GATE
		QUICK COUPLING VALVE W/SPRINKLER PROTECTOR
3	3	SPRINKLER W/SPRINKLER PROTECTOR
	C	CONNECT TO EXISTING SYSTEM
		CAP
		CAP EXISTING
	FR	FIBER ROLL
	CS	COMPOST SOCK

RCV SIZE
IRRIGATION CONTROLLER
CONTROLLER STATION
VALVE IN PARALLEL (IF APPLICABLE)
GPM
QUANTITY OF SPRINKLERS (WHEN SHOWN)

* 2½"-A-2b-40-60

VALVE CODE

* VALVE CODES FOR EXISTING VALVES ARE SHOWN IN A DASHED ENCLOSURE.

STATE OF CALIFORNIA
DEPARTMENT OF TRANSPORTATION

LANDSCAPE AND EROSION CONTROL SYMBOLS

NO SCALE

RSP H2 DATED NOVEMBER 15, 2013 SUPERSEDES RSP H2 DATED JULY 19, 2013 AND STANDARD PLAN H2 DATED MAY 20, 2011 - PAGE 219 OF THE STANDARD PLANS BOOK DATED 2010.

REVISED STANDARD PLAN RSP H2

10-9-13

Dist	COUNTY	ROUTE	POST MILES TOTAL PROJECT	SHEET No.	TOTAL SHEETS
01	Men	101	52.1/52.6	51	54

REGISTERED CIVIL ENGINEER

July 19, 2013
PLANS APPROVAL DATE

REGISTERED PROFESSIONAL ENGINEER
Gurinderpal Bhullar
No. C48815
Exp. 9-30-14
CIVIL
STATE OF CALIFORNIA

THE STATE OF CALIFORNIA OR ITS OFFICERS OR AGENTS SHALL NOT BE RESPONSIBLE FOR THE ACCURACY OR COMPLETENESS OF SCANNED COPIES OF THIS PLAN SHEET.

TO ACCOMPANY PLANS DATED 2-22-16

2010 REVISED STANDARD PLAN RSP T9

TABLE 1

TAPER LENGTH CRITERIA AND CHANNELIZING DEVICE SPACING

SPEED (S)	MINIMUM TAPER LENGTH * FOR WIDTH OF OFFSET 12 FEET (W)				MAXIMUM CHANNELIZING DEVICE SPACING		
					X	Y	Z **
	TANGENT 2L	MERGING L	SHIFTING L/2	SHOULDER L/3	TAPER	TANGENT	CONFLICT
mph	ft	ft	ft	ft	ft	ft	ft
20	160	80	40	27	20	40	10
25	250	125	63	42	25	50	12
30	360	180	90	60	30	60	15
35	490	245	123	82	35	70	17
40	640	320	160	107	40	80	20
45	1080	540	270	180	45	90	22
50	1200	600	300	200	50	100	25
55	1320	660	330	220	55	110	27
60	1440	720	360	240	60	120	30
65	1560	780	390	260	65	130	32
70	1680	840	420	280	70	140	35

* - For other offsets, use the following merging taper length formula for L:
For speed of 40 mph or less, $L = WS^2/60$
For speed of 45 mph or more, $L = WS$

Where: L = Taper length in feet
W = Width of offset in feet
S = Posted speed limit, off-peak 85th-percentile speed prior to work starting, or the anticipated operating speed in mph

** - Use for taper and tangent sections where there are no pavement markings or where there is a conflict between existing pavement markings and channelizers (CA).

TABLE 2

LONGITUDINAL BUFFER SPACE AND FLAGGER STATION SPACING

SPEED *	Min D **	DOWNGRADE Min D ***		
		-3%	-6%	-9%
mph	ft	ft	ft	ft
20	115	116	120	126
25	155	158	165	173
30	200	205	215	227
35	250	257	271	287
40	305	315	333	354
45	360	378	400	427
50	425	446	474	507
55	495	520	553	593
60	570	598	638	686
65	645	682	728	785
70	730	771	825	891

* - Speed is posted speed limit, off-peak 85th-percentile speed prior to work starting, or the anticipated operating speed in mph

** - Longitudinal buffer space or flagger station spacing

*** - Use on sustained downgrade steeper than -3 percent and longer than 1 mile.

TABLE 3

ADVANCE WARNING SIGN SPACING

ROAD TYPE	DISTANCE BETWEEN SIGNS *		
	A	B	C
	ft	ft	ft
URBAN - 25 mph OR LESS	100	100	100
URBAN - MORE THAN 25 mph TO 40 mph	250	250	250
URBAN - MORE THAN 40 mph	350	350	350
RURAL	500	500	500
EXPRESSWAY / FREEWAY	1000	1500	2640

* - The distances are approximate, are intended for guidance purposes only, and should be applied with engineering judgment. These distances should be adjusted by the Engineer for field conditions, if necessary, by increasing or decreasing the recommmended distances.

STATE OF CALIFORNIA
DEPARTMENT OF TRANSPORTATION

TRAFFIC CONTROL SYSTEM TABLES FOR LANE AND RAMP CLOSURES

NO SCALE

RSP T9 DATED JULY 19, 2013 SUPERSEDES RSP T9 DATED APRIL 19, 2013 THAT SUPPLEMENTS THE STANDARD PLANS BOOK DATED 2010.

REVISED STANDARD PLAN RSP T9

4-30-13

TO ACCOMPANY PLANS DATED 2-22-16

Dist	COUNTY	ROUTE	POST MILES TOTAL PROJECT	SHEET No.	TOTAL SHEETS
01	Men	101	52.1/52.6	52	54

REGISTERED CIVIL ENGINEER

April 19, 2013
PLANS APPROVAL DATE

REGISTERED PROFESSIONAL ENGINEER Gurinderpal Bhullar No. C48815 Exp. 9-30-14 CIVIL STATE OF CALIFORNIA

THE STATE OF CALIFORNIA OR ITS OFFICERS OR AGENTS SHALL NOT BE RESPONSIBLE FOR THE ACCURACY OR COMPLETENESS OF SCANNED COPIES OF THIS PLAN SHEET.

NOTES:

See Revised Standard Plan RSP T9 for tables.

Use cone spacing X for taper segment, Y for tangent segment or Z for conflict situations, as approriate, per Table 1, unless X, Y, or Z cone spacing is shown on this sheet.

Unless otherwise specified in the special provisions, all temporary warning signs shall have black legend on fluorescent orange background.

California codes are designated by (CA). Otherwise, Federal (MUTCD) codes are shown.

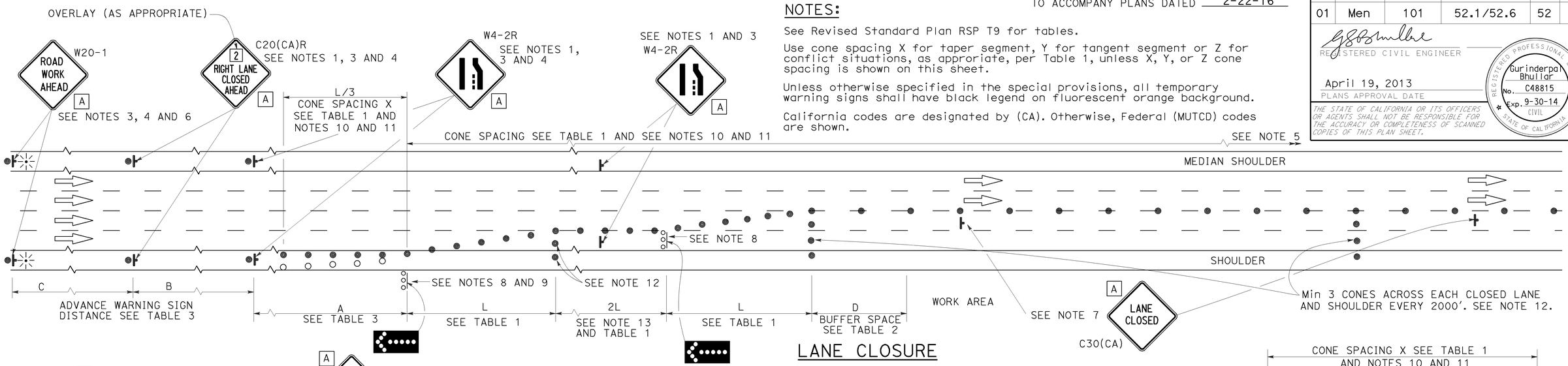

LANE CLOSURE

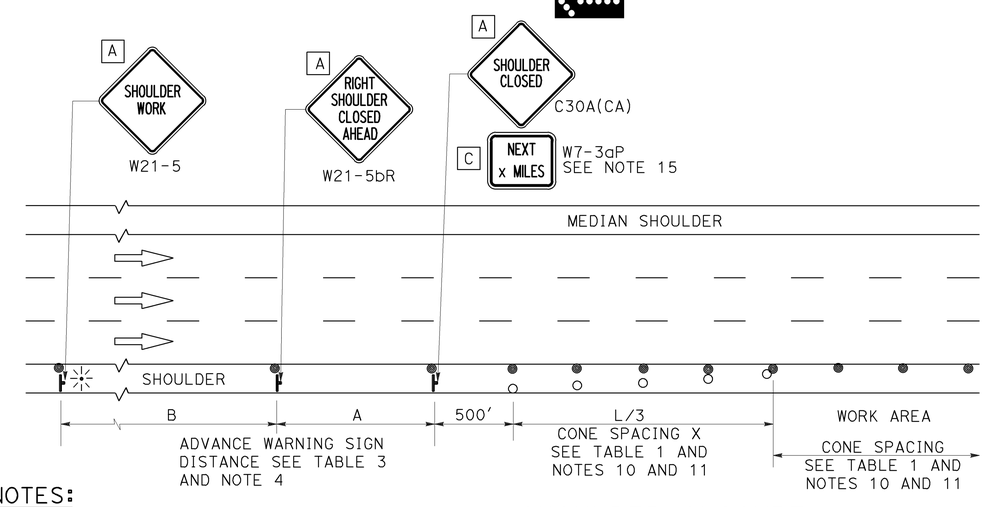

SHOULDER CLOSURE

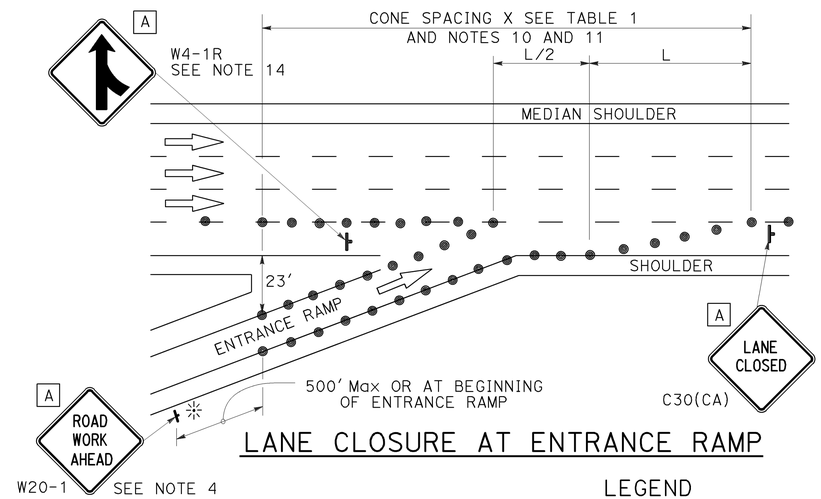

LANE CLOSURE AT ENTRANCE RAMP

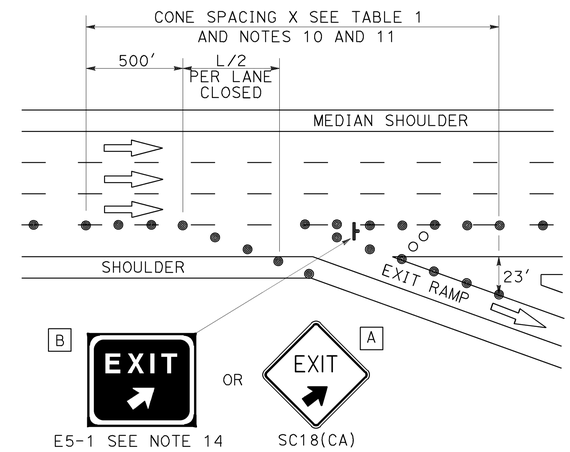

LANE CLOSURE AT EXIT RAMP

NOTES:

1. Median lane closures shall conform to the details as shown except that C20(CA)L and W4-2L signs shall be used.
2. At least one person shall be assigned to provide full time maintenance of traffic control devices for lane closures.
3. Duplicate sign installations are not required:
   a) On opposite shoulder if at least one-half of the available lanes remain open to traffic.
   b) In the median if the width of the median shoulder is less than 8' and the outside lanes are to be closed.
4. Each advance warning sign on each side of the roadway shall be equipped with at least two flags for daytime closure. Each flag shall be at least 16" x 16" in size and shall be orange or fluorescent red-orange in color. Flashing beacons shall be placed at the locations indicated for lane closure during hours of darkness.
5. A G20-2 "END ROAD WORK" sign, with minimum size of 48" x 24" as appropriate, shall be placed at the end of the lane closure unless the end of work area is obvious or ends within a larger project's limits.
6. If the W20-1 sign would follow within 2000' of a stationary W20-1 or G20-1 "ROAD WORK NEXT _____ MILES", use a C20(CA) sign for the first advance warning sign.
7. Place a C30(CA) sign every 2000' throughout length of lane closure.
8. One flashing arrow sign for each lane closed. The flashing arrow signs shall be Type I.
9. A minimum 1500' of sight distance shall be provided where possible for vehicles approaching the first flashing arrow sign. Lane closures shall not begin at top of crest vertical curve or on a horizontal curve.
10. All cones used for lane closures during the hours of darkness shall be fitted with retroreflective bands (or sleeves) as specified in the specifications.
11. Portable delineators, placed at one-half the spacing indicated for traffic cones may be used instead of cones for daytime closures only.
12. Unless otherwise specified in the special provisions, a minimum of 3 cones shall be placed transversely across each closed lane and shoulder at each location where a taper across a traffic lane ends and every 2000' as shown on the "Lane Closure" detail. Two Type II barricades may be used instead of the 3 cones. The transverse alignment of the cones or barricades on the closed shoulder may be shifted from the transverse alignment to provide access to the work.
13. Unless otherwise specified in the special provisions, the 2L tangent shown along lane lines shall be used between the L tapers required for each closed traffic lane.
14. Unless otherwise specified in the special provisions, the E5-1 or SC18(CA) and W4-1 signs shall be used as shown.
15. A W7-3aP "NEXT____ MILES" plaque must be used if theshoulder closure extends beyond the distance that can be perceived by road users.

LEGEND

- TRAFFIC CONE
- TRAFFIC CONE (OPTIONAL TAPER)
- TEMPORARY TRAFFIC CONTROL SIGN
- FLASHING ARROW SIGN (FAS)
- FAS SUPPORT OR TRAILER
- PORTABLE FLASHING BEACON

SIGN PANEL SIZE (Min)

A	48" x 48"
B	72" x 60"
C	36" x 30"

STATE OF CALIFORNIA
DEPARTMENT OF TRANSPORTATION

TRAFFIC CONTROL SYSTEM FOR LANE CLOSURE ON FREEWAYS AND EXPRESSWAYS

NO SCALE

RSP T10 DATED APRIL 19, 2013 SUPERSEDES STANDARD PLAN T10 DATED MAY 20, 2011 - PAGE 237 OF THE STANDARD PLANS BOOK DATED 2010.

REVISED STANDARD PLAN RSP T10

2010 REVISED STANDARD PLAN RSP T10

12-18-12

Dist	COUNTY	ROUTE	POST MILES TOTAL PROJECT	SHEET No.	TOTAL SHEETS
01	Men	101	52.1/52.6	53	54

REGISTERED CIVIL ENGINEER

April 19, 2013
PLANS APPROVAL DATE

REGISTERED PROFESSIONAL ENGINEER
Gurinderpal Bhullar
No. C48815
Exp. 9-30-14
CIVIL
STATE OF CALIFORNIA

THE STATE OF CALIFORNIA OR ITS OFFICERS OR AGENTS SHALL NOT BE RESPONSIBLE FOR THE ACCURACY OR COMPLETENESS OF SCANNED COPIES OF THIS PLAN SHEET.

TO ACCOMPANY PLANS DATED 2-22-16

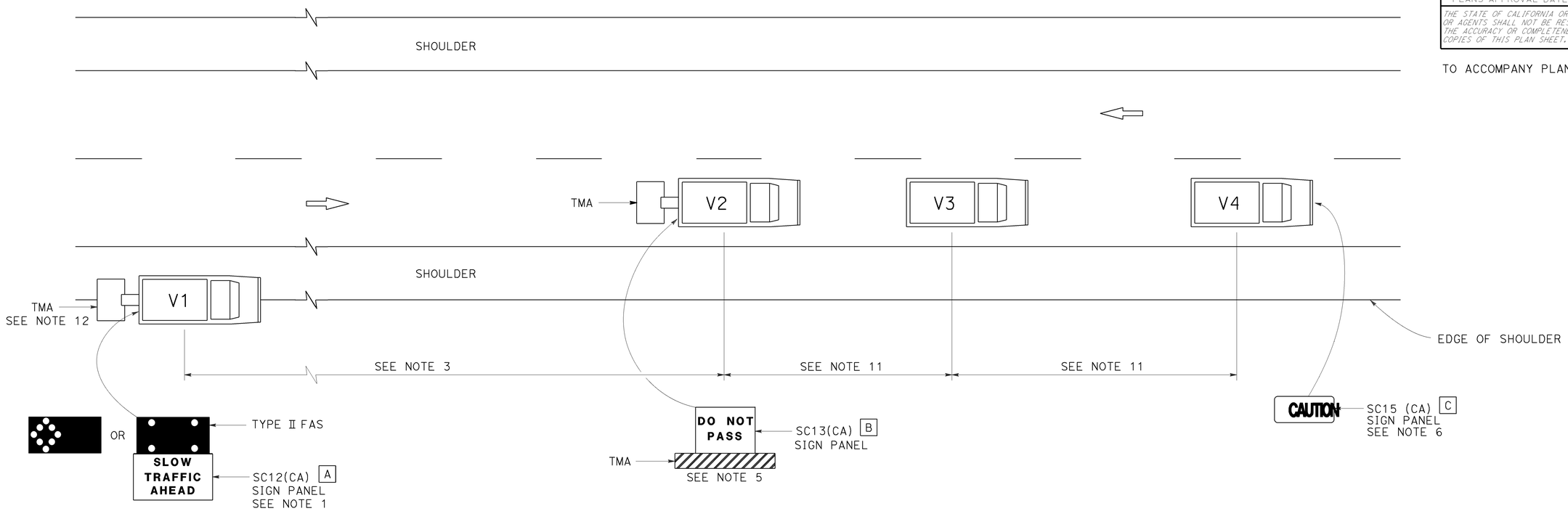

LEGEND

V1	SIGN VEHICLE
V2	SHADOW VEHICLE
V3	WORK/APPLICATION VEHICLE
V4	SIGN VEHICLE
TMA	TRUCK-MOUNTED ATTENUATOR
	FLASHING ARROW SIGN (FAS) IN FLASHING CAUTION MODE
	FLASHING ARROW SIGN (FAS) IN ALTERNATING DIAMOND CAUTION

SIGN PANEL SIZE (Min)

A	72" x 42"
B	54" x 42"
C	54" x 24"

NOTES:

1. Either a changeable message sign or a SC12(CA) "SLOW TRAFFIC AHEAD" sign shall be mounted on the rear of sign vehicle V1. The changeable message sign shall be sequenced to show the "CAUTION" message first, follow by the "SLOW TRAFFIC AHEAD" message. A Type II flashing arrow sign may be used with the SC12(CA) sign panel.
2. Sign vehicle V1 should be positioned where highly visible when shoulders are not available.
3. If traffic queues develop, sign vehicle V1 should be positioned upstream from the end of queue.
4. Vehicle-mounted sign panels shall have Type III or above retroreflective sheeting, black on white, or black on fluorescent orange, with 6" minimum series D letters per Caltrans sign specifications.
5. Shadow vehicle shall be equipped with a truck-mounted attenuator. The sign panel shown shall be mounted on the rear of shadow vehicle V2. The message "LANE CLOSED" may be used in place of the "DO NOT PASS" message.
6. The sign panel shown shall be mounted on the front of sign vehicle V4, facing opposing traffic.
7. All vehicles shall be equipped with flashing or rotating amber lights.
8. Sign vehicle V4 will not be required when the work and vehicles V2 and V3 are 2' or more from the centerline of the highway during the work or application operations.
9. All vehicles used for lane closures shall be equipped with two-way radios and the vehicle operators shall maintain communication during the work or application operation.
10. This plan shall not be used where workers would be on foot in the work area. Use a stationary type lane closure (Revised Standard Plan T13) for this condition.
11. Minimize spacing between vehicles V2 and V3 and vehicles V3 and V4 to deter road users from driving in between them.
12. If sign vehicle V1 encroaches into the traffic lane due to insufficient shoulder width, sign vehicle V1 shall be equipped with a truck-mounted attenuator. Sign vehicle V1 shall stay as close to the edge of shoulder as practicable.

STATE OF CALIFORNIA
DEPARTMENT OF TRANSPORTATION

TRAFFIC CONTROL SYSTEM FOR MOVING LANE CLOSURE ON TWO LANE HIGHWAYS

NO SCALE

RSP T17 DATED APRIL 19, 2013 SUPERSEDES STANDARD PLAN T17
DATED MAY 20, 2011 - PAGE 245 OF THE STANDARD PLANS BOOK DATED 2010.

REVISED STANDARD PLAN RSP T17

2010 REVISED STANDARD PLAN RSP T17

12-18-12

Dist	COUNTY	ROUTE	POST MILES TOTAL PROJECT	SHEET No.	TOTAL SHEETS
01	Men	101	52.1/52.6	54	54

REGISTERED CIVIL ENGINEER

October 21, 2011
PLANS APPROVAL DATE

REGISTERED PROFESSIONAL ENGINEER Tillat Satter No. C42892 Exp. 3-31-12 CIVIL STATE OF CALIFORNIA

THE STATE OF CALIFORNIA OR ITS OFFICERS OR AGENTS SHALL NOT BE RESPONSIBLE FOR THE ACCURACY OR COMPLETENESS OF SCANNED COPIES OF THIS PLAN SHEET.

TO ACCOMPANY PLANS DATED 2-22-16

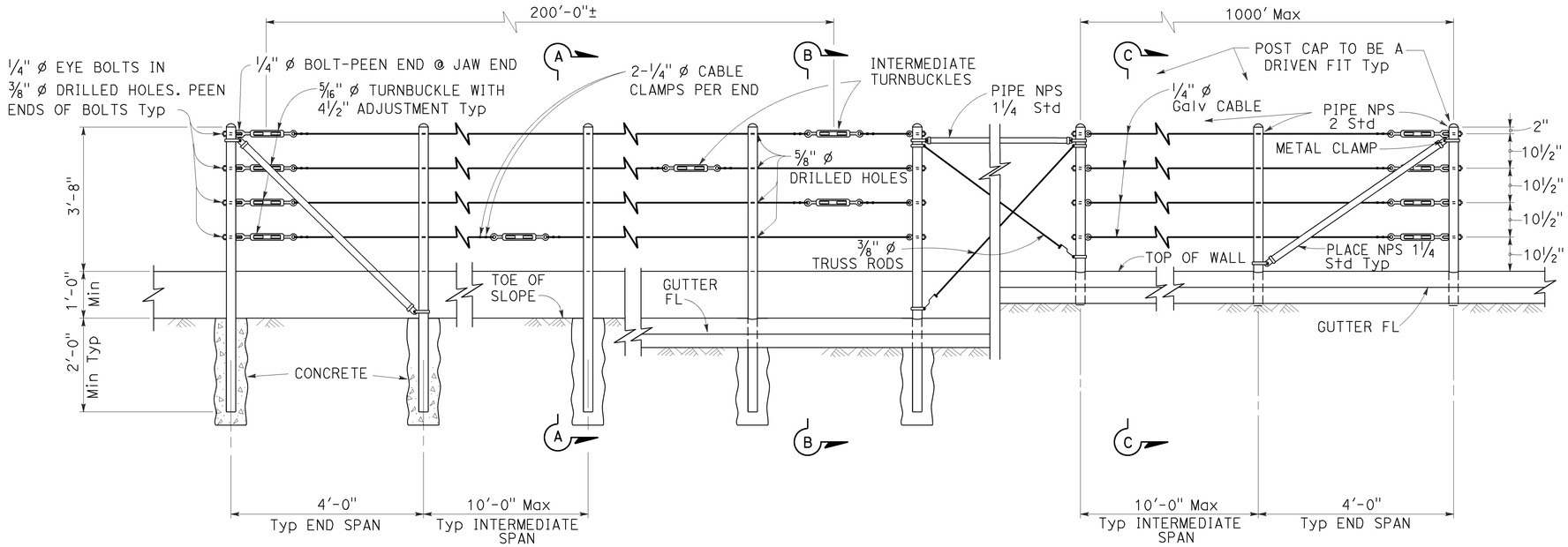

EXISTING WALL (WITHOUT GUTTER)
Existing

RETAINING WALL (WITH GUTTER)
Existing

RETAINING WALL (WITH GUTTER)
New construction

ELEVATION

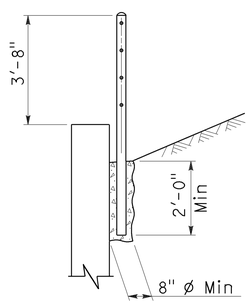

SECTION A-A
Existing

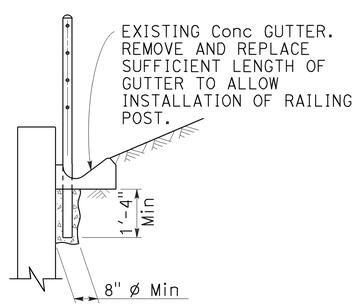

SECTION B-B
Existing

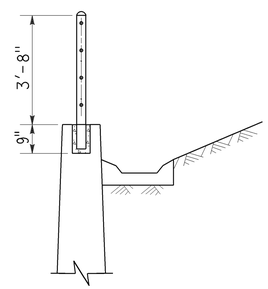

SECTION C-C
New construction

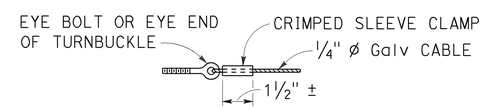

ALTERNATIVE CABLE CONNECTION

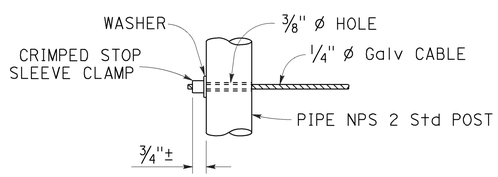

ALTERNATIVE DEAD END ANCHORAGE

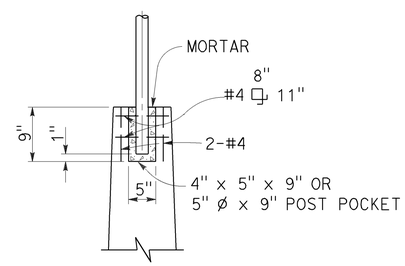

POST POCKET

NOTES:

1. Maximum distance between turnbuckles shall be 200'-0"±.
2. Intermediate turnbuckles to be placed in adjacent spans.
3. Cable shall not be spliced between intermediate turnbuckles and end posts.
4. Posts to be vertical.
5. Alignment of holes in posts may vary to conform to slope of top of retaining wall.
6. The Contractor shall verify all dependent dimensions in the field before ordering or fabricating any material.
7. Line posts shall be braced horizontally and trussed diagonally in both directions at intervals not to exceed 1000'.
8. Post pockets to be centered in top of wall.
9. Typical end spans, braced in both directions, shall be constructed at changes in line where the angle of deflection is 15° or more.
10. Provide thimbles at all cable loops.

STATE OF CALIFORNIA
DEPARTMENT OF TRANSPORTATION

CABLE RAILING

NO SCALE

RSP B11-47 DATED OCTOBER 21, 2011 SUPERSEDES STANDARD PLAN B11-47 DATED MAY 20, 2011 - PAGE 293 OF THE STANDARD PLANS BOOK DATED 2010.

REVISED STANDARD PLAN RSP B11-47

2010 REVISED STANDARD PLAN RSP B11-47

9-14-11