ACSTP-Q101(291)E

Dist	COUNTY	ROUTE	POST MILES TOTAL PROJECT	SHEET No.	TOTAL SHEETS
01	Hum	101	25.5/28.5	1	24

INDEX OF PLANS

SHEET No.	DESCRIPTION
1	TITLE AND LOCATION MAP
2	TYPICAL CROSS SECTIONS
3-7	CONSTRUCTION DETAILS
8	CONSTRUCTION AREA SIGNS
9	TRAFFIC HANDLING PLAN
10-12	PAVEMENT DELINEATION DETAILS AND QUANTITIES
13-14	SUMMARY OF QUANTITIES
15-24	REVISED AND NEW STANDARD PLANS

THE STANDARD PLANS LIST APPLICABLE TO THIS CONTRACT IS INCLUDED IN THE NOTICE TO BIDDERS AND SPECIAL PROVISIONS BOOK.

STATE OF CALIFORNIA

DEPARTMENT OF TRANSPORTATION

PROJECT PLANS FOR CONSTRUCTION ON

STATE HIGHWAY

IN HUMBOLDT COUNTY
NEAR MYERS FLAT FROM 2.4 MILES SOUTH
TO 0.6 MILE NORTH OF MYERS FLAT SEPARATION

TO BE SUPPLEMENTED BY STANDARD PLANS DATED MAY 2010

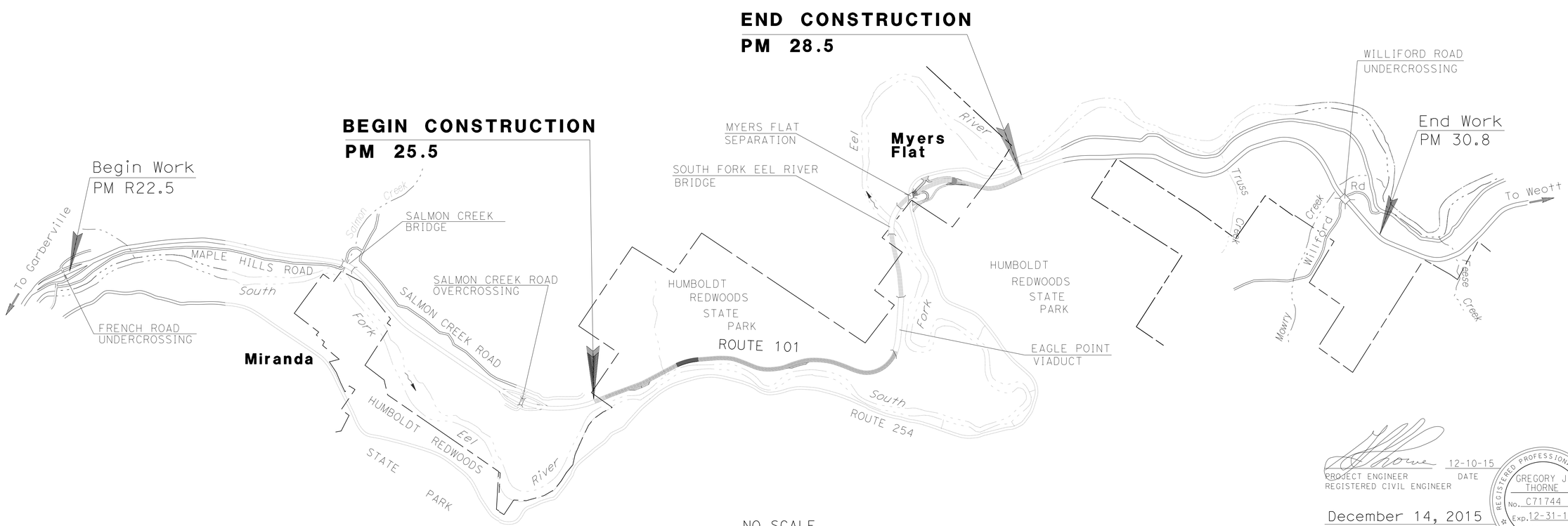

NO SCALE

PROJECT ENGINEER
REGISTERED CIVIL ENGINEER

12-10-15
DATE

REGISTERED PROFESSIONAL ENGINEER
GREGORY J. THORNE
No. C71744
Exp. 12-31-15
CIVIL
STATE OF CALIFORNIA

December 14, 2015
PLANS APPROVAL DATE

THE STATE OF CALIFORNIA OR ITS OFFICERS OR AGENTS SHALL NOT BE RESPONSIBLE FOR THE ACCURACY OR COMPLETENESS OF SCANNED COPIES OF THIS PLAN SHEET.

THE CONTRACTOR SHALL POSSESS THE CLASS (OR CLASSES) OF LICENSE AS SPECIFIED IN THE "NOTICE TO BIDDERS."

CONTRACT No.	01-0E4904
PROJECT ID	0114000086

PROJECT MANAGER T.J. FITZGERALD
DESIGN ENGINEER T.J. FITZGERALD

LAST REVISION 00-00-00
DATE PLOTTED => 22-JAN-2016
TIME PLOTTED => 06:20

NOTES:

1. DIMENSIONS OF THE PAVEMENT STRUCTURES (STRUCTURAL SECTIONS) ARE SUBJECT TO TOLERANCES SPECIFIED IN THE STANDARD SPECIFICATIONS.
2. IN AREAS WHERE THE WIDTH OF THE EXISTING SURFACING VARIES FROM THAT SHOWN, THE CONTRACTOR SHALL VARY THE WIDTH OF THE PAVING OPERATIONS AS DIRECTED BY THE ENGINEER.
3. EXISTING UTILITY FACILITIES HAVE NOT BEEN PLOTTED ON THESE PLANS.

PAVEMENT CLIMATE REGION

NORTH COAST CLIMATE REGION

Dist	COUNTY	LOCATION CODE	POST MILES TOTAL PROJECT	SHEET No.	TOTAL SHEETS
01	Hum	101	25.5/28.5	2	24

REGISTERED CIVIL ENGINEER 12-10-15 DATE

December 14, 2015
PLANS APPROVAL DATE

REGISTERED PROFESSIONAL ENGINEER GREGORY J. THORNE No. C71744 Exp. 12-31-15 CIVIL STATE OF CALIFORNIA

THE STATE OF CALIFORNIA OR ITS OFFICERS OR AGENTS SHALL NOT BE RESPONSIBLE FOR THE ACCURACY OR COMPLETENESS OF SCANNED COPIES OF THIS PLAN SHEET.

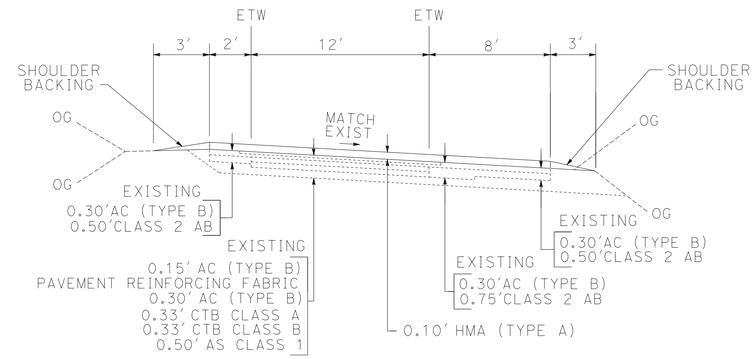

RAMPS

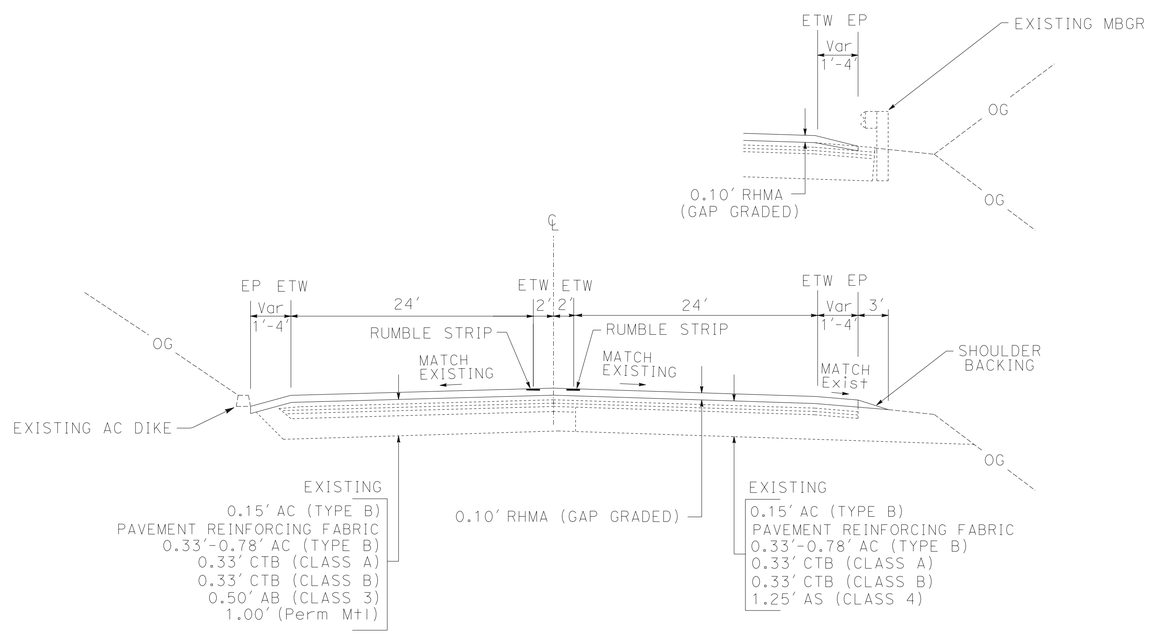

MAINLINE

PM 25.49 TO PM 28.51

ROUTE 101

TYPICAL SECTIONS

NO SCALE

X-1

STATE OF CALIFORNIA - DEPARTMENT OF TRANSPORTATION
Caltrans® **MAINTENANCE DESIGN**

FUNCTIONAL SUPERVISOR: T.J. FITZGERALD
CALCULATED-DESIGNED BY: G.J. THORNE
CHECKED BY: G. KEATING
REVISED BY
DATE REVISED

LAST REVISION 00-00-00
DATE PLOTTED => 22-JAN-2016
TIME PLOTTED => 06:20

Dist	COUNTY	LOCATION CODE	POST MILES TOTAL PROJECT	SHEET No.	TOTAL SHEETS
01	Hum	101	25.5/28.5	3	24

REGISTERED CIVIL ENGINEER 12-10-15 DATE

December 14, 2015
PLANS APPROVAL DATE

REGISTERED PROFESSIONAL ENGINEER GREGORY J. THORNE No. C71744 Exp. 12-31-15 CIVIL STATE OF CALIFORNIA

THE STATE OF CALIFORNIA OR ITS OFFICERS OR AGENTS SHALL NOT BE RESPONSIBLE FOR THE ACCURACY OR COMPLETENESS OF SCANNED COPIES OF THIS PLAN SHEET.

NOTE:

1. REMOVE AND DISPOSE PAVEMENT MARKERS PRIOR TO COLD PLANE AC PAVEMENT AND REPLACE AC SURFACING.

LEGEND:

0.10' HMA (TYPE A) OR
0.10' RHMA (GAP GRADED)

COLD PLANE AC PAVEMENT

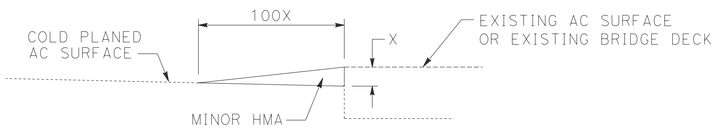

PROFILE

TEMPORARY HMA TAPER

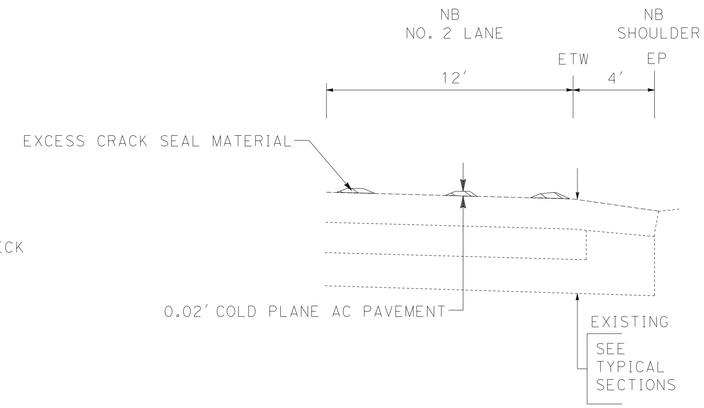

TYPICAL SECTION

COLD PLANE AC PAVEMENT

(TO REMOVE EXCESS CRACK SEAL MATERIAL FROM SURFACE)

PM 27.38 TO PM 27.56
PM 27.62 TO PM 27.67
PM 27.98 TO PM 28.10
PM 28.28 TO PM 28.31

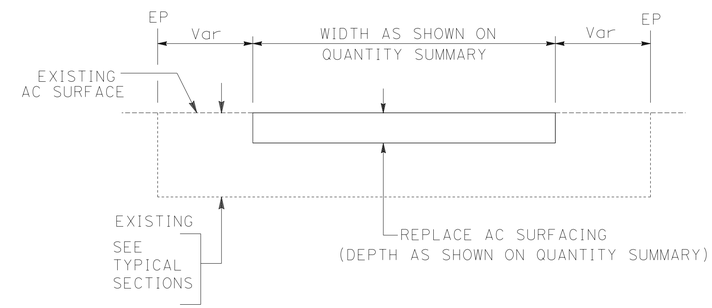

TYPICAL SECTION

REPLACE ASPHALT CONCRETE SURFACING

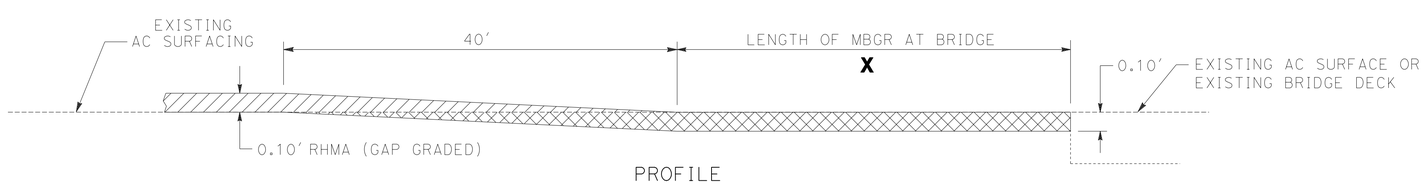

PROFILE

COLD PLANE AC PAVEMENT

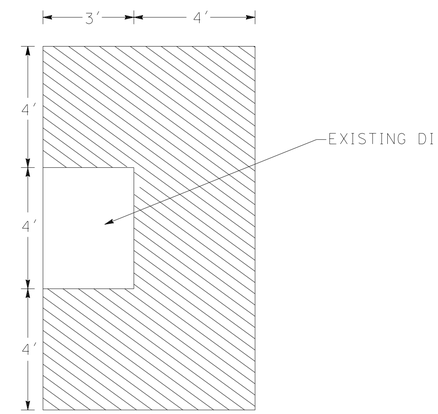

PLAN

COLD PLANE AC PAVEMENT

(AT DRAINAGE INLET)
SB OFF-RAMP
PM 28.03

PM	LOCATION	X
25.50	BEGIN CONSTRUCTION	0
27.04	BEGIN EAGLE POINT VIADUCT	150
27.32	END EAGLE POINT VIADUCT	50
27.71	BEGIN SOUTH FORK EEL RIVER BRIDGE	140
27.866-27.923	BETWEEN SOUTH FORK EEL RIVER BRIDGE AND MYERS FLAT SEPARATION(FULL DEPTH,NO TAPER)	310
27.93	NB ON-RAMP	0
27.93	NB OFF-RAMP	0
27.95	END MYERS FLAT SEPARATION	100
28.03	SB ON-RAMP AND SB OFF-RAMP	0
28.50	END CONSTRUCTION	0

CONSTRUCTION DETAILS

NO SCALE

C-1

REVISED BY | DATE REVISED
G.J. THORNE | G. KEATING
CALCULATED-DESIGNED BY | CHECKED BY
FUNCTIONAL SUPERVISOR
T.J. FITZGERALD
STATE OF CALIFORNIA - DEPARTMENT OF TRANSPORTATION
Caltrans

LAST REVISION 00-00-00 | DATE PLOTTED => 22-JAN-2016 | TIME PLOTTED => 06:20

Dist	COUNTY	LOCATION CODE	POST MILES TOTAL PROJECT	SHEET No.	TOTAL SHEETS
01	Hum	101	25.5/28.5	4	24

REGISTERED CIVIL ENGINEER 12-10-15 DATE

December 14, 2015
PLANS APPROVAL DATE

REGISTERED PROFESSIONAL ENGINEER GREGORY J. THORNE No. C71744 Exp. 12-31-15 CIVIL STATE OF CALIFORNIA

THE STATE OF CALIFORNIA OR ITS OFFICERS OR AGENTS SHALL NOT BE RESPONSIBLE FOR THE ACCURACY OR COMPLETENESS OF SCANNED COPIES OF THIS PLAN SHEET.

LEGEND:

0.10′ HMA (TYPE A) OR
0.10′ RHMA (GAP GRADED)

COLD PLANE AC PAVEMENT

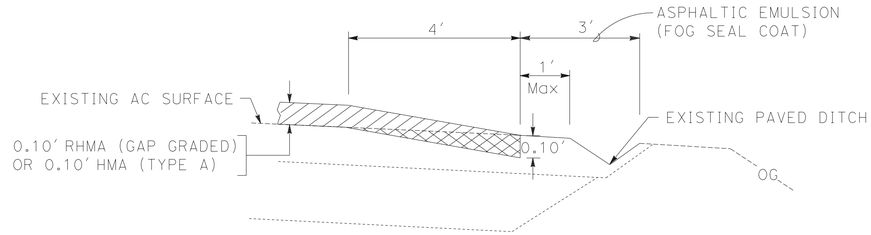

TYPICAL SECTION

COLD PLANE AC PAVEMENT
(AT PAVED DITCH)

LOCATION		DIRECTION
FROM	TO	
PM		NB/SB
27.38	27.67	SB
27.94	27.99	NB

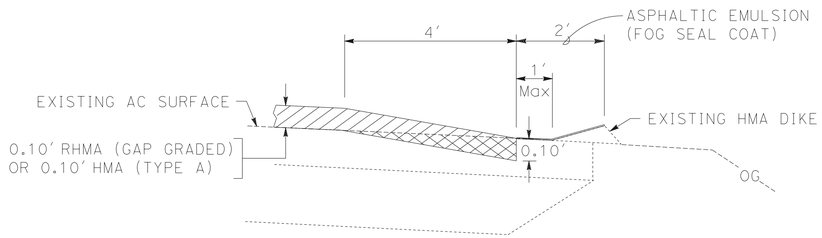

TYPICAL SECTION

COLD PLANE AC PAVEMENT
(AT HMA DIKE)

LOCATION		DIRECTION
FROM	TO	
PM		NB/SB
26.22	26.27	SB
26.86	26.96	SB
27.63	27.67	NB
27.97	28.06	NB
28.47	28.49	NB

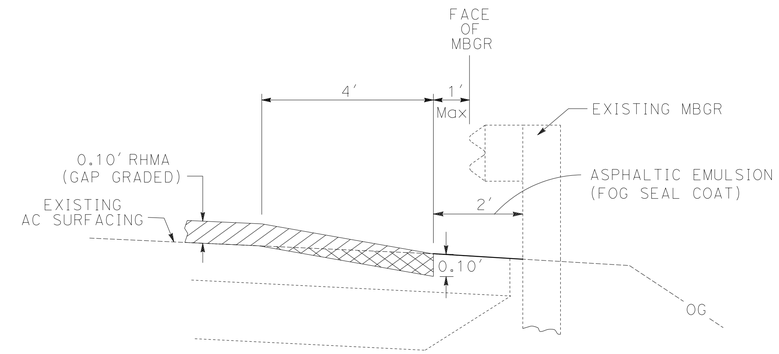

TYPICAL SECTION

COLD PLANE AC PAVEMENT
(AT MBGR)

LOCATION		DIRECTION
FROM	TO	
PM		NB/SB
25.50	25.65	NB
25.78	26.51	NB
26.57	26.92	NB
27.38	27.63	NB
28.30	28.50	SB

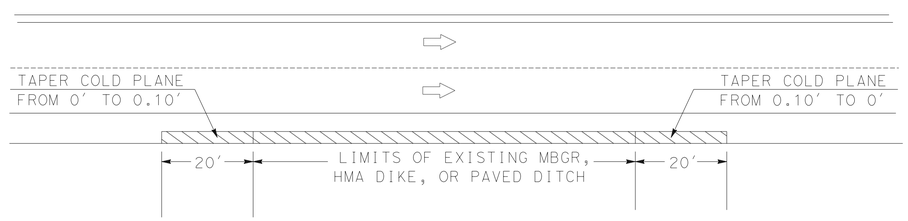

PLAN

COLD PLANE AC PAVEMENT
(AT MBGR, HMA DIKE AND PAVED DITCH)

CONSTRUCTION DETAILS
NO SCALE

C-2

STATE OF CALIFORNIA - DEPARTMENT OF TRANSPORTATION
Caltrans

FUNCTIONAL SUPERVISOR: T.J. FITZGERALD
CALCULATED-DESIGNED BY: G.J. THORNE
CHECKED BY: G. KEATING
REVISED BY
DATE REVISED

LAST REVISION 00-00-00
DATE PLOTTED => 22-JAN-2016
TIME PLOTTED => 06:20

Dist	COUNTY	LOCATION CODE	POST MILES TOTAL PROJECT	SHEET No.	TOTAL SHEETS
01	Hum	101	25.5/28.5	5	24

REGISTERED CIVIL ENGINEER 12-10-15 DATE

December 14, 2015
PLANS APPROVAL DATE

REGISTERED PROFESSIONAL ENGINEER GREGORY J. THORNE No. C71744 Exp. 12-31-15 CIVIL STATE OF CALIFORNIA

THE STATE OF CALIFORNIA OR ITS OFFICERS OR AGENTS SHALL NOT BE RESPONSIBLE FOR THE ACCURACY OR COMPLETENESS OF SCANNED COPIES OF THIS PLAN SHEET.

NOTE:

EXISTING UTILITY FACILITIES HAVE NOT BEEN PLOTTED ON THESE PLANS.

LEGEND:

RHMA (GAP GRADED)

HMA (TYPE A)

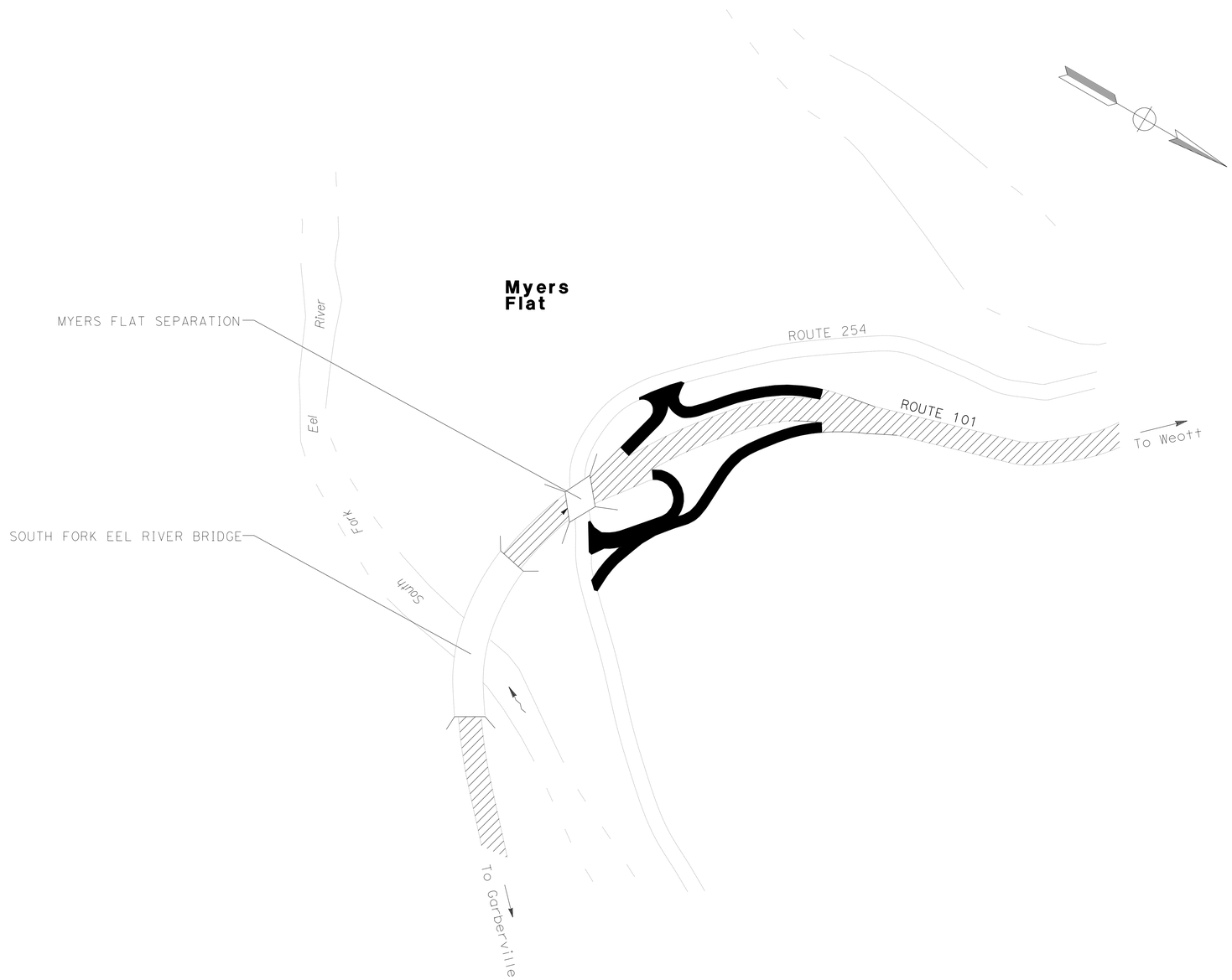

MYERS FLAT INTERCHANGE

CONSTRUCTION DETAILS

NO SCALE

C-3

REVISED BY | DATE REVISED

G.J. THORNE | G. KEATING

CALCULATED-DESIGNED BY | CHECKED BY

FUNCTIONAL SUPERVISOR: T.J. FITZGERALD

STATE OF CALIFORNIA - DEPARTMENT OF TRANSPORTATION

Caltrans

LAST REVISION 00-00-00 | DATE PLOTTED => 22-JAN-2016 | TIME PLOTTED => 06:20

BORDER LAST REVISED 7/2/2010 | USERNAME => s120115 | DGN FILE => 0114000086ga003.dgn | RELATIVE BORDER SCALE IS IN INCHES 0 1 2 3 | UNIT 0052 | PROJECT NUMBER & PHASE 01140000861

Dist	COUNTY	LOCATION CODE	POST MILES TOTAL PROJECT	SHEET No.	TOTAL SHEETS
01	Hum	101	25.5/28.5	6	24

REGISTERED CIVIL ENGINEER 12-10-15 DATE

December 14, 2015
PLANS APPROVAL DATE

REGISTERED PROFESSIONAL ENGINEER GREGORY J. THORNE No. C71744 Exp. 12-31-15 CIVIL STATE OF CALIFORNIA

THE STATE OF CALIFORNIA OR ITS OFFICERS OR AGENTS SHALL NOT BE RESPONSIBLE FOR THE ACCURACY OR COMPLETENESS OF SCANNED COPIES OF THIS PLAN SHEET.

NOTE:

EXISTING UTILITY FACILITIES HAVE NOT BEEN PLOTTED ON THESE PLANS.

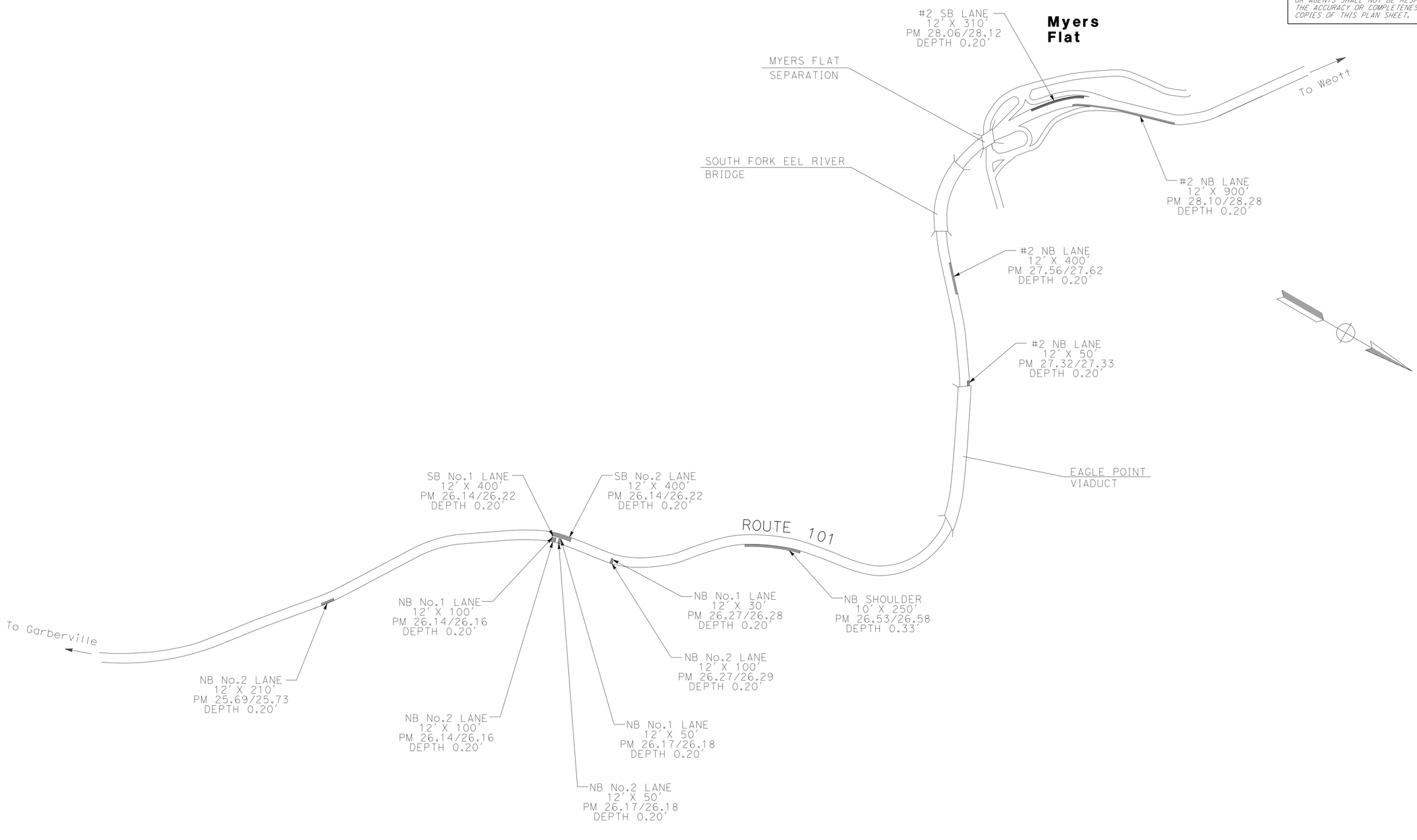

REPLACE AC SURFACING

CONSTRUCTION DETAILS

NO SCALE

C-4

REVISED BY | DATE REVISED

G.J. THORNE | G. KEATING

CALCULATED-DESIGNED BY | CHECKED BY

FUNCTIONAL SUPERVISOR: T.J. FITZGERALD

STATE OF CALIFORNIA - DEPARTMENT OF TRANSPORTATION

Caltrans®

LAST REVISION 00-00-00 | DATE PLOTTED => 22-JAN-2016 | TIME PLOTTED => 06:20

NOTE:
DO NOT INSTALL GROUND-IN RUMBLE STRIP ON BRIDGE DECKS OR APPROACH SLABS.

Dist	COUNTY	LOCATION CODE	POST MILES TOTAL PROJECT	SHEET No.	TOTAL SHEETS
01	Hum	101	25.5/28.5	7	24

David A. Morgan 12-10-15
REGISTERED CIVIL ENGINEER DATE

December 14, 2015
PLANS APPROVAL DATE

REGISTERED PROFESSIONAL ENGINEER
DAVID A. MORGAN
No. C72321
Exp. 6-30-16
CIVIL
STATE OF CALIFORNIA

THE STATE OF CALIFORNIA OR ITS OFFICERS OR AGENTS SHALL NOT BE RESPONSIBLE FOR THE ACCURACY OR COMPLETENESS OF SCANNED COPIES OF THIS PLAN SHEET.

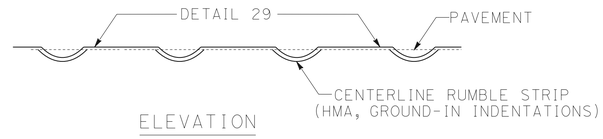

ELEVATION

SECTION C-C

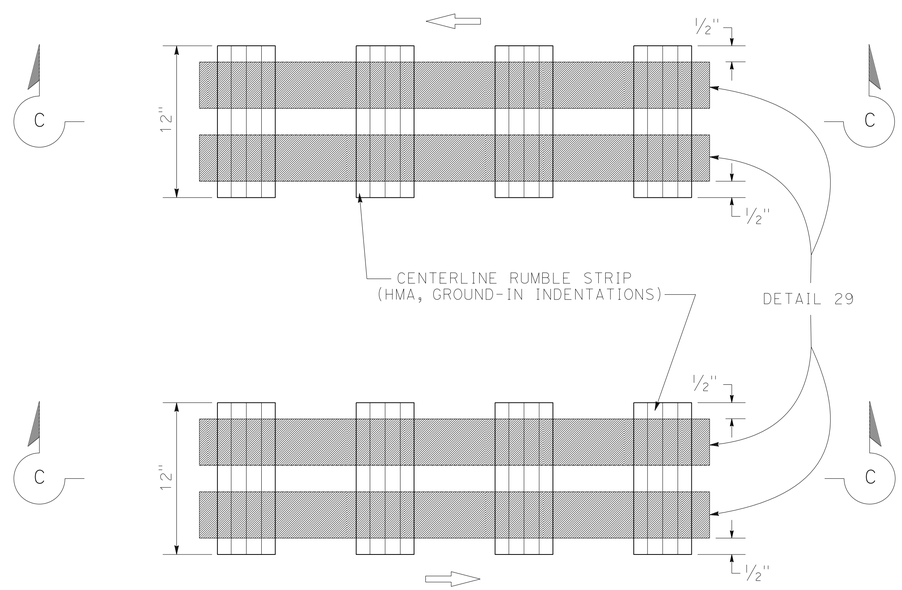

PLAN

CENTERLINE RUMBLE STRIP
(HMA, GROUND-IN INDENTATIONS)

CONSTRUCTION DETAILS

NO SCALE

C-5

REVISED BY	DATE REVISED
DAVID MORGAN	EVELYN HARTMAN
CALCULATED-DESIGNED BY	CHECKED BY
FUNCTIONAL SUPERVISOR	DAVID MORGAN

STATE OF CALIFORNIA - DEPARTMENT OF TRANSPORTATION
Caltrans

LAST REVISION 00-00-00
DATE PLOTTED => 22-JAN-2016
TIME PLOTTED => 06:20

Dist	COUNTY	LOCATION CODE	POST MILES TOTAL PROJECT	SHEET No.	TOTAL SHEETS
01	Hum	101	25.5/28.5	8	24

REGISTERED CIVIL ENGINEER 12-10-15 DATE

December 14, 2015
PLANS APPROVAL DATE

REGISTERED PROFESSIONAL ENGINEER GREGORY J. THORNE No. C71744 Exp. 12-31-15 CIVIL STATE OF CALIFORNIA

THE STATE OF CALIFORNIA OR ITS OFFICERS OR AGENTS SHALL NOT BE RESPONSIBLE FOR THE ACCURACY OR COMPLETENESS OF SCANNED COPIES OF THIS PLAN SHEET.

NOTES:

1. LOCATIONS OF CONSTRUCTION AREA SIGNS ARE APPROXIMATE. EXACT LOCATIONS WILL BE DETERMINED BY THE ENGINEER.
2. ALL SIGNS SHALL BE BLACK ON ORANGE EXCEPT C40(CA), WHICH IS BLACK ON WHITE.
3. CALIFORNIA CODES ARE DESIGNATED BY (CA), OTHERWISE FEDERAL CODES ARE SHOWN.
4. EXISTING UTILITY FACILITIES HAVE NOT BEEN PLOTTED ON THESE PLANS.

STATIONARY MOUNTED CONSTRUCTION AREA SIGNS

SIGN No.	SIGN CODE	PANEL SIZE	SIGN MESSAGE	NUMBER OF POSTS AND SIZE	NUMBER OF SIGNS (N)
A	G20-1	90" X 48"	ROAD WORK NEXT 5 MILES	2 - 6" x 6"	2
	C23B(CA)	54" X 12"	PAVING		
B	W11-1	36" X 36"	BICYCLE SYMBOL	1 - 4" x 6"	2
	W16-1	24" X 30"	SHARE THE ROAD		
C	G20-2	48" X 24"	END ROAD WORK	1 - 4" x 6"	2
D	W20-1	48" X 48"	ROAD WORK AHEAD	1 - 6" x 6"	3
E	C40(CA)	144" X 60"	TRAFFIC FINES DOUBLED IN CONSTRUCTION ZONES	2 - 6" x 8"	2
F	SC6-4(CA)	48" X 60"	RAMP CLOSED DAY MONTH DATE THRU DAY MONTH DATE TIME - TIME	1 - 6" x 6"	4

(N) NOT A SEPARATE PAY ITEM. FOR INFORMATION ONLY.

C23B(CA) SIGN PANEL DETAIL

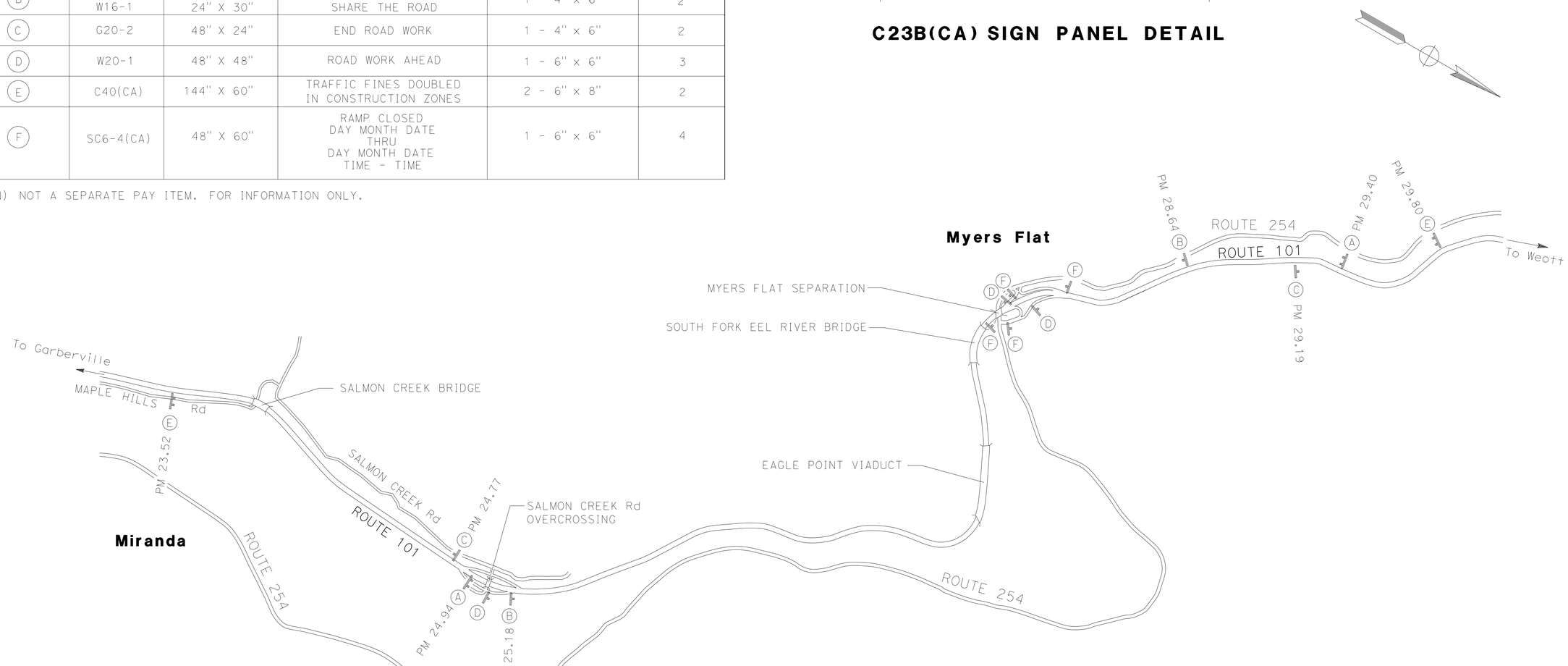

APPROVED FOR CONSTRUCTION AREA SIGN WORK ONLY

CONSTRUCTION AREA SIGNS

NO SCALE

CS-1

STATE OF CALIFORNIA - DEPARTMENT OF TRANSPORTATION

Caltrans

FUNCTIONAL SUPERVISOR T.J. FITZGERALD

CALCULATED-DESIGNED BY G.J. THORNE

CHECKED BY G. KEATING

REVISED BY

DATE REVISED

LAST REVISION 00-00-00

DATE PLOTTED => 22-JAN-2016
TIME PLOTTED => 06:20

Dist	COUNTY	ROUTE	POST MILES TOTAL PROJECT	SHEET No.	TOTAL SHEETS
01	Hum	101	25.5/28.5	9	24

REGISTERED CIVIL ENGINEER 3-5-15 DATE

December 14, 2015
PLANS APPROVAL DATE

REGISTERED PROFESSIONAL ENGINEER SHERI M. RODRIGUEZ No. C66861 Exp. 9-30-16 CIVIL STATE OF CALIFORNIA

THE STATE OF CALIFORNIA OR ITS OFFICERS OR AGENTS SHALL NOT BE RESPONSIBLE FOR THE ACCURACY OR COMPLETENESS OF SCANNED COPIES OF THIS PLAN SHEET.

NOTES:

1. CALIFORNIA CODES ARE DESIGNATED BY (CA). OTHERWISE, FEDERAL (MUTCD) CODES ARE SHOWN.
2. ALL SIGNS SHALL HAVE A BLACK LEGEND ON FLUORESCENT ORANGE BACKGROUND AND SHALL BE EQUIPPED WITH AT LEAST TWO 16" x 16" ORANGE FLAGS FOR DAYTIME CLOSURE OR FLASHING BEACONS FOR LANE CLOSURE DURING HOURS OF DARKNESS.
3. ALL CONES USED FOR LANE CLOSURES DURING THE HOURS OF DARKNESS SHALL BE FITTED WITH RETROREFLECTIVE BANDS OR SLEEVES.
4. WHEN A PILOT CAR IS USED, PLACE A C37 (CA) SIGN AT ALL INTERSECTIONS WITHIN TRAFFIC CONTROL AREA. WHERE VEHICULAR TRAFFIC CAN NOT EFFECTIVELY SELF-REGULATE, AT LEAST ONE FLAGGER SHALL BE USED AT EACH INTERSECTION WITHIN THE TRAFFIC CONTROL AREA.
5. FLAGGER SHOULD STAND IN A CONSPICUOUS PLACE, FACING TRAFFIC AT ALL TIMES, BE VISIBLE TO APPROACHING TRAFFIC AS WELL AS APPROACHING VEHICLES AFTER THE FIRST VEHICLE HAS STOPPED.
6. ADDITIONAL ADVANCE FLAGGERS ARE REQUIRED.
7. WHEN FLAGGER IS NOT VISIBLE FROM THIS LOCATION PLACE A C29 (CA) SIGN BELOW THE C9A (CA) SIGN.

LEGEND

- TRAFFIC CONE
- TEMPORARY SIGN
- DIRECTION OF TRAVEL
- PORTABLE FLASHING BEACON
- FLAGGER

SIGN PANEL SIZE (MINIMUM)

- A 48" x 48" - SPEED OF 45 mph OR MORE; 36" x 36" - SPEED LESS THAN 45 mph
- B 30" x 30"
- C UNUSED
- D UNUSED
- E 20" x 7"

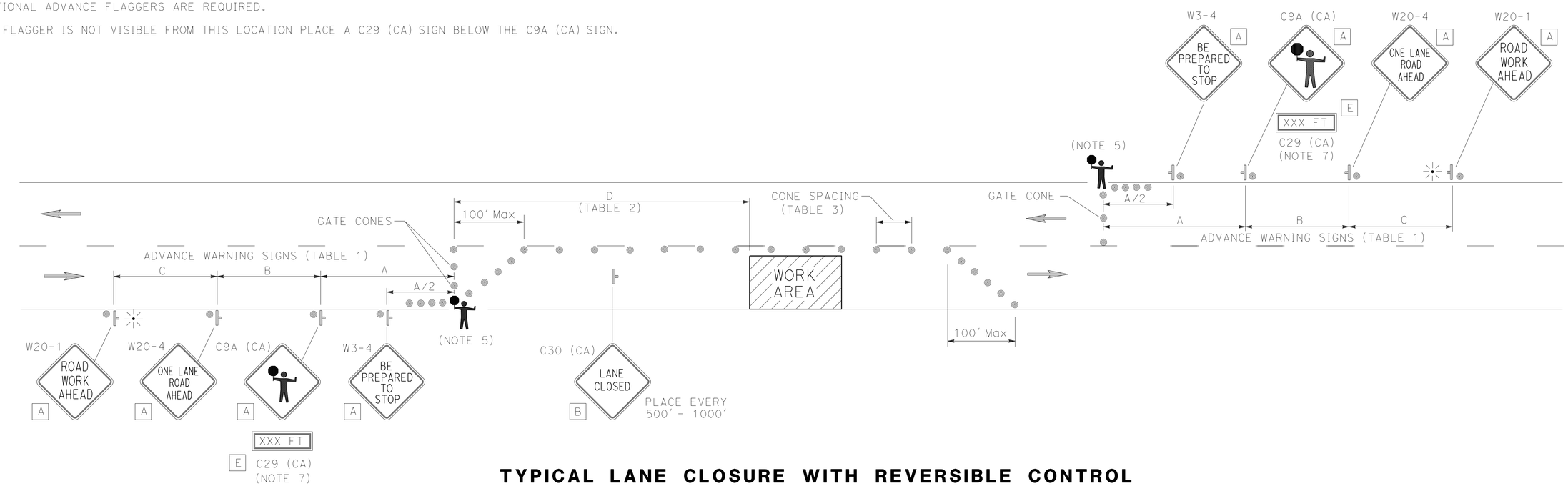

TYPICAL LANE CLOSURE WITH REVERSIBLE CONTROL

TABLE 1

ADVANCE WARNING SIGN SPACING

ROAD TYPE	Min A	Min B	Min C
	ft		
URBAN (25 mph OR LESS)	100	100	100
URBAN (30 mph TO 40 mph)	250	250	250
URBAN (MORE THAN 40 mph)	350	350	350
RURAL	500	500	500
EXPRESSWAY / FREEWAY	1000	1500	2640

TABLE 2

BUFFER SPACE

APPROACH SPEED	Min D	DOWNGRADE Min D		
		-3%*	-6%*	-9%*
mph	ft			
25 & BELOW	155	158	165	173
30	200	205	215	227
35	250	257	271	287
40	305	315	333	354
45	360	378	400	427
50	425	446	474	507
55	495	520	553	593
60	570	598	638	686
65	645	682	728	785

* USE ON SUSTAINED DOWNGRADE STEEPER THAN -3 PERCENT AND LONGER THAN 1 MILE.

TABLE 3

Max CONE SPACING

POSTED SPEED	TAPER	TANGENT	CONFLICT*
mph	ft		
20	20	40	10
25	25	50	12
30	30	60	15
35	35	70	17
40	40	80	20
45	45	90	22
50	50	100	25
55	55	110	27
60	60	120	30
65	65	130	32

* USE WHERE THERE IS A CONFLICT BETWEEN EXISTING PAVEMENT MARKINGS AND CHANNELIZERS.

TRAFFIC HANDLING PLAN

NO SCALE

APPROVED FOR TRAFFIC HANDLING WORK ONLY

TH-1

REVISED BY | DATE REVISED
SHERI M. RODRIGUEZ | TROY A. ARSENEAU
CALCULATED-DESIGNED BY | CHECKED BY
FUNCTIONAL SUPERVISOR | RICHARD MULLEN

STATE OF CALIFORNIA - DEPARTMENT OF TRANSPORTATION
Caltrans® TRAFFIC OPERATIONS

P:\PROJ\01\0E490\drafting\sheets\0114000086md001.dgn

LAST REVISION 00-00-00 | DATE PLOTTED => 22-JAN-2016 | TIME PLOTTED => 06:21

Dist	COUNTY	LOCATION CODE	POST MILES TOTAL PROJECT	SHEET No.	TOTAL SHEETS
01	Hum	101	25.5/28.5	10	24

REGISTERED CIVIL ENGINEER 12-10-15 DATE

December 14, 2015
PLANS APPROVAL DATE

REGISTERED PROFESSIONAL ENGINEER
GREGORY J. THORNE
No. C71744
Exp. 12-31-15
CIVIL
STATE OF CALIFORNIA

THE STATE OF CALIFORNIA OR ITS OFFICERS OR AGENTS SHALL NOT BE RESPONSIBLE FOR THE ACCURACY OR COMPLETENESS OF SCANNED COPIES OF THIS PLAN SHEET.

NOTE:

REFERENCE LOCATION PRIOR TO OVERLAY AND REESTABLISH AT SAME LOCATION.

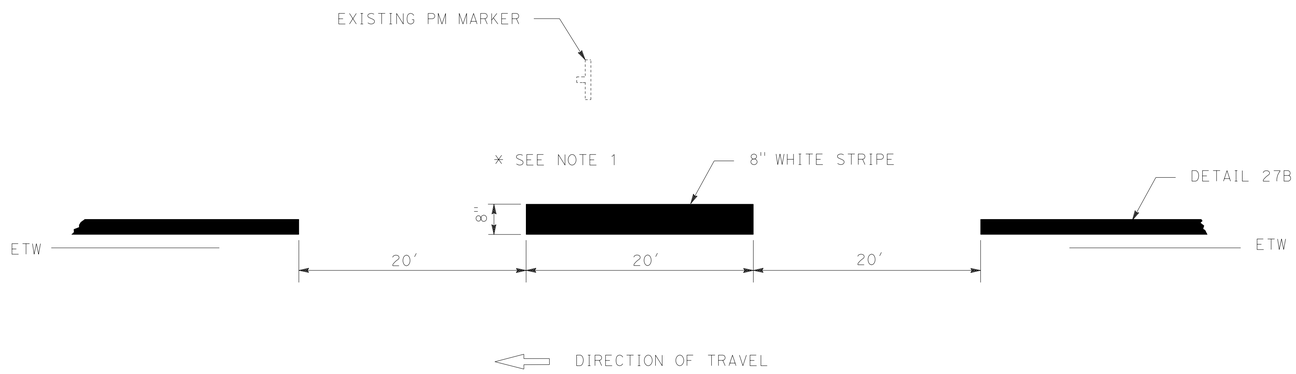

STRIPING AT POST MILE MARKER

ROUTE 101 (NB) PM 26.00
ROUTE 101 (NB) PM 27.00
ROUTE 101 (NB) PM 28.00
ROUTE 101 (SB) PM 26.00
ROUTE 101 (SB) PM 27.00

PAVEMENT DELINEATION DETAIL

NO SCALE

PDD-1

REVISED BY | DATE REVISED
G.J. THORNE | G. KEATING
CALCULATED-DESIGNED BY | CHECKED BY
FUNCTIONAL SUPERVISOR
R.B. McCARTHY

STATE OF CALIFORNIA - DEPARTMENT OF TRANSPORTATION
Caltrans® MAINTENANCE DESIGN

LAST REVISION 00-00-00 | DATE PLOTTED => 22-JAN-2016 | TIME PLOTTED => 06:21

Dist	COUNTY	ROUTE	POST MILES TOTAL PROJECT	SHEET No.	TOTAL SHEETS
01	Hum	101	25.5/28.5	11	24

REGISTERED CIVIL ENGINEER 12-10-15 DATE

December 14, 2015
PLANS APPROVAL DATE

REGISTERED PROFESSIONAL ENGINEER GREGORY J. THORNE No. C71744 Exp. 12-31-15 CIVIL STATE OF CALIFORNIA

THE STATE OF CALIFORNIA OR ITS OFFICERS OR AGENTS SHALL NOT BE RESPONSIBLE FOR THE ACCURACY OR COMPLETENESS OF SCANNED COPIES OF THIS PLAN SHEET.

THERMOPLASTIC TRAFFIC STRIPE AND PAVEMENT MARKERS

LOCATION PM		L+/R+/RAMP	DETAIL NUMBER	DETAIL LENGTH (N)	8 INCH WHITE	4 INCH YELLOW SOLID	4 INCH WHITE SOLID	4 INCH WHITE (BROKEN 36-12)	4 INCH WHITE (BROKEN 17-7)	(NON-REFLECTIVE) TYPE A	(RETROREFLECTIVE) TYPE D YELLOW (TWO-WAY)	TYPE G CLEAR (ONE-WAY)	TYPE H YELLOW (ONE-WAY)	TYPE C RED-CLEAR	REMOVE PAVEMENT MARKER (N)
FROM	TO			LF	LF	LF	LF	LF	LF	EA	EA	EA	EA	EA	EA
25.49	28.31	LT	11/13	14,890				14,890		1,241		311			1,552
25.49	25.99	RT	27B	2,640			2,640								
25.49	25.99	LT	27B	2,640			2,640								
25.50	28.50		29	15,840		63,360					1,322				1,322
25.50	26.76	RT	11/13	6,653				6,653		554		140			694
26.00	26.99	RT	27B	5,227			5,227								
26.00	26.99	LT	27B	5,227			5,227								
26.00	26.01	RT	38A	20	20										
26.00	26.01	LT	38A	20	20										
26.76	26.79	RT	11/14	144				144		12				3	15
26.79	27.29	RT	11/13	2,640				2,640		220		56			276
27.00	27.96	RT	27B	5,069			5,069								
27.00	27.97	LT	27B	5,122			5,122								
27.00	27.01	RT	38A	20	20										
27.00	27.01	LT	38A	20	20										
27.29	27.32	RT	11/14	144				144		12				3	15
27.32	27.82	RT	11/13	2,640				2,640		220		56			276
27.82	27.85	RT	11/14	144				144		12				3	15
27.85	28.90	RT	11/13	5,544				5,544		462		117			579
27.87	27.89	NB OFF-RAMP	22	110		220					12				12
27.87	27.90	NB ON-RAMP	27B	150			150								
27.87	28.13	NB ON-RAMP	27B	400			400								
27.87	27.88	NB OFF-RAMP	36	84	84							5			5
27.88	27.96	NB OFF-RAMP	27B	880			880								
27.88	27.90	NB ON-RAMP	25A	220		220							10		10
27.89	27.94	NB OFF-RAMP	29	330		1,320					30				30
27.90	27.93	SB ON-RAMP	9	125					125			2			2
27.93	27.94	SB ON-RAMP	36A	60	60								4		4
27.94	27.96	RT	36	256	256							12			12
27.94	28.09	NB ON-RAMP	25A	600		600							26		26
27.94	28.01	SB ON-RAMP	25A	372		372							17		17
27.94	28.00	SB ON-RAMP	27B	575			575								
27.96	27.99	RT	27B	158			158								
27.96	28.00	NB OFF-RAMP	25A	395		395							17		17
27.97	28.16	LT	27B	1,003			1,003								
28.00	28.13	RT	27B	686			686								
28.00	28.01	RT	38A	20	20										
28.01	28.16	SB OFF-RAMP	27B	862			862								
28.01	28.16	SB OFF-RAMP	25A	770		770							33		33
28.01	28.01	SB ON-RAMP	22	82		164					12				12
28.09	28.10	NB ON-RAMP	36A	66	66							4			4
28.10	28.11	NB ON-RAMP	9	50					50			2			2
28.13	28.51	RT	27B	2,006			2,006								
28.16	28.22	RT	36	284	284							13			13
28.16	28.51	LT	27B	1,848			1,848								
28.16	28.22	SB OFF-RAMP	36	284	284							13			13
28.31	28.34	LT	11/14	144				144		12				3	15
28.34	28.51	LT	11/13	898				898		75		20			95
SUB-TOTAL					1,134	67,421	34,493	33,841	175	2,820	1,376	751	107	12	5,066
TOTAL					1,134	101,914		33,841	175	2,820	2,246				5,066

(N) NOT A SEPARATE PAY ITEM. FOR INFORMATION ONLY.

PAVEMENT DELINEATION QUANTITIES

PDQ-1

STATE OF CALIFORNIA - DEPARTMENT OF TRANSPORTATION
Caltrans® MAINTENANCE DESIGN

REVISED BY | DATE REVISED
G.J. THORNE | G. KEATING
CALCULATED-DESIGNED BY | CHECKED BY
FUNCTIONAL SUPERVISOR: T.J. FITZGERALD

LAST REVISION 00-00-00 | DATE PLOTTED => 22-JAN-2016 | TIME PLOTTED => 06:21

Dist	COUNTY	ROUTE	POST MILES TOTAL PROJECT	SHEET No.	TOTAL SHEETS
01	Hum	101	25.5/28.5	12	24

REGISTERED CIVIL ENGINEER 12-10-15 DATE

December 14, 2015
PLANS APPROVAL DATE

REGISTERED PROFESSIONAL ENGINEER GREGORY J. THORNE No. C71744 Exp. 12-31-15 CIVIL STATE OF CALIFORNIA

THE STATE OF CALIFORNIA OR ITS OFFICERS OR AGENTS SHALL NOT BE RESPONSIBLE FOR THE ACCURACY OR COMPLETENESS OF SCANNED COPIES OF THIS PLAN SHEET.

REMOVE THERMOPLASTIC PAVEMENT MARKING

LOCATION PM	ORIENTATION	TYPE / LEGEND	REMOVE THERMOPLASTIC PAVEMENT MARKING SQFT	REMARKS
27.96	FNBT	STOP	22	NB OFF-RAMP
27.98	FNBT	AHEAD	31	NB OFF-RAMP
27.90	FNBT	TYPE V ARROW	33	NB OFF-RAMP
27.89	FNBT	TYPE V ARROW	33	NB OFF-RAMP
27.88	FNBT	STOP	22	NB OFF-RAMP
27.88	FNBT	STOP	22	NB OFF-RAMP
27.88	FNBT	LIMIT LINE	49	NB OFF-RAMP
27.88	FNBT	TYPE V ARROW	33	NB ON-RAMP
27.88	FNBT	TYPE I ARROW	31	NB ON-RAMP
27.89	FNBT	TYPE V ARROW	33	NB ON-RAMP
28.09	FSBT	STOP	22	SB OFF-RAMP
28.08	FSBT	AHEAD	31	SB OFF-RAMP
28.04	FSBT	TYPE V ARROW	33	SB OFF-RAMP
28.03	FSBT	TYPE V ARROW	33	SB OFF-RAMP
28.03	FSBT	STOP	22	SB OFF-RAMP
28.03	FSBT	STOP	22	SB OFF-RAMP
28.03	FSBT	LIMIT LINE	42	SB OFF-RAMP
28.02	FSBT	TYPE V ARROW	33	SB ON-RAMP
		TOTAL	547	

REMOVE THERMOPLASTIC TRAFFIC STRIPE

LOCATION PM FROM	LOCATION PM TO	LT/RT	REMOVE THERMOPLASTIC TRAFFIC STRIPE LF	REMARKS
26.00	26.01	RT	20	8" CHP MARK
26.00	26.01	LT	20	8" CHP MARK
27.00	27.01	RT	20	8" CHP MARK
27.00	27.01	LT	20	8" CHP MARK
27.87	27.88	RT	84	8" GORE STRIPE NB OFF-RAMP
27.93	27.94	LT	60	8" GORE STRIPE SB ON-RAMP
27.94	27.96	RT	256	8" GORE STRIPE
28.00	28.01	RT	20	8" CHP MARK
28.09	28.10	RT	66	8" GORE STRIPE NB ON-RAMP
28.16	28.22	LT	284	8" GORE STRIPE
28.16	28.22	LT	284	8" GORE STRIPE SB OFF-RAMP
		TOTAL	1134	

THERMOPLASTIC PAVEMENT MARKING

LOCATION PM	ORIENTATION	TYPE / LEGEND	THERMOPLASTIC PAVEMENT MARKING SQFT	REMARKS
27.96	FNBT	STOP	22	NB OFF-RAMP
27.98	FNBT	AHEAD	31	NB OFF-RAMP
27.90	FNBT	TYPE V ARROW	33	NB OFF-RAMP
27.89	FNBT	TYPE V ARROW	33	NB OFF-RAMP
27.88	FNBT	STOP	22	NB OFF-RAMP
27.88	FNBT	STOP	22	NB OFF-RAMP
27.88	FNBT	LIMIT LINE	49	NB OFF-RAMP
27.88	FNBT	TYPE I ARROW	31	NB ON-RAMP
27.88	FNBT	TYPE I ARROW	31	NB ON-RAMP
28.09	FSBT	STOP	22	SB OFF-RAMP
28.08	FSBT	AHEAD	31	SB OFF-RAMP
28.04	FSBT	TYPE V ARROW	33	SB OFF-RAMP
28.03	FSBT	TYPE V ARROW	33	SB OFF-RAMP
28.03	FSBT	STOP	22	SB OFF-RAMP
28.03	FSBT	STOP	22	SB OFF-RAMP
28.03	FSBT	LIMIT LINE	42	SB OFF-RAMP
28.02	FSBT	TYPE I ARROW	31	SB ON-RAMP
		TOTAL	510	

TEMPORARY PAVEMENT MARKING

LOCATION PM	ORIENTATION	TYPE / LEGEND	TEMPORARY PAVEMENT MARKING (PAINT) SQFT	REMARKS
27.96	FNBT	STOP	22	NB OFF-RAMP
27.98	FNBT	AHEAD	31	NB OFF-RAMP
27.90	FNBT	TYPE V ARROW	33	NB OFF-RAMP
27.89	FNBT	TYPE V ARROW	33	NB OFF-RAMP
27.88	FNBT	STOP	22	NB OFF-RAMP
27.88	FNBT	STOP	22	NB OFF-RAMP
27.88	FNBT	LIMIT LINE	49	NB OFF-RAMP
27.88	FNBT	TYPE I ARROW	31	NB ON-RAMP
27.88	FNBT	TYPE I ARROW	31	NB ON-RAMP
28.09	FSBT	STOP	22	SB OFF-RAMP
28.08	FSBT	AHEAD	31	SB OFF-RAMP
28.04	FSBT	TYPE V ARROW	33	SB OFF-RAMP
28.03	FSBT	TYPE V ARROW	33	SB OFF-RAMP
28.03	FSBT	STOP	22	SB OFF-RAMP
28.03	FSBT	STOP	22	SB OFF-RAMP
28.03	FSBT	LIMIT LINE	42	SB OFF-RAMP
28.02	FSBT	TYPE I ARROW	31	SB ON-RAMP
		TOTAL	510	

PAVEMENT DELINEATION QUANTITIES

PDQ-2

STATE OF CALIFORNIA - DEPARTMENT OF TRANSPORTATION
Caltrans® MAINTENANCE DESIGN

FUNCTIONAL SUPERVISOR: T.J.FITZGERALD
CALCULATED-DESIGNED BY: G.J. THORNE
CHECKED BY: G. KEATING
REVISED BY
DATE REVISED

LAST REVISION 00-00-00
DATE PLOTTED => 22-JAN-2016
TIME PLOTTED => 06:21

Dist	COUNTY	ROUTE	POST MILES TOTAL PROJECT	SHEET No.	TOTAL SHEETS
01	Hum	101	25.5/28.5	13	24

REGISTERED CIVIL ENGINEER 12-10-15 DATE

December 14, 2015
PLANS APPROVAL DATE

REGISTERED PROFESSIONAL ENGINEER GREGORY J. THORNE No. C71744 Exp. 12-31-15 CIVIL STATE OF CALIFORNIA

THE STATE OF CALIFORNIA OR ITS OFFICERS OR AGENTS SHALL NOT BE RESPONSIBLE FOR THE ACCURACY OR COMPLETENESS OF SCANNED COPIES OF THIS PLAN SHEET.

ROADWAY QUANTITIES

LOCATION PM FROM	LOCATION PM TO	Lt/Rt NB/SB	LANE No.	WIDTH FT	LENGTH FT	DEPTH FT	COLD PLANE ASPHALT CONCRETE PAVEMENT SQYD	REPLACE ASPHALT CONCRETE SURFACING CY	ASPHALTIC EMULSION (FOG SEAL COAT) TON	HOT MIX ASPHALT (TYPE A) TON	RUBBERIZED HOT MIX ASPHALT (GAP GRADED) TON	TACK COAT TON	REMARKS
25.49	27.08			60	8395	0.10					4344.4	16.2	BEGIN PROJECT TO EAGLE POINT VIADUCT
25.49	25.50			60	40	0.00-0.10	266.7						BEGIN PROJECT
25.50	25.64	NB		4	759	0.00-0.10	337.3		0.04				COLD PLANE IN FRONT OF MBGR
25.64	25.71	RT		10	370	0.10					31.9	0.1	WIDE PAVED SHOULDER
25.69	25.73	NB	2	12	210	0.20		18.7					
25.79	26.50	NB		4	3789	0.00-0.10	1,684.0		0.21				COLD PLANE IN FRONT OF MBGR
26.14	26.16	NB	1	12	100	0.20		8.9					
26.14	26.16	NB	2	12	100	0.20		8.9					
26.14	26.22	SB	1	12	400	0.20		35.6					
26.14	26.22	SB	2	12	400	0.20		35.6					
26.17	26.18	NB	1	12	50	0.20		4.4					
26.17	26.18	NB	2	12	50	0.20		4.4					
26.23	26.26	SB		4	198	0.00-0.10	88.0		0.01				COLD PLANE IN FRONT OF HMA DIKE
26.27	26.28	NB	1	12	30	0.20		2.7					
26.27	26.29	NB	2	12	100	0.20		8.9					
26.50	26.58	RT		10	422	0.10					36.4	0.1	WIDE PAVED SHOULDER
26.53	26.58	NB	Shld	10	250	0.33		30.6					
26.58	26.91	NB		4	1782	0.00-0.10	792.0		0.10				COLD PLANE IN FRONT OF MBGR
26.87	26.95	SB		4	462	0.00-0.10	205.3		0.03				COLD PLANE IN FRONT OF HMA DIKE
27.04	27.07			60	190	0.00-0.10	1,266.7						BEGIN EAGLE POINT VIADUCT
27.32	27.33	NB	2	12	50	0.20		4.4					
27.36	27.71			60	1848	0.10					956.3	3.6	EAGLE POINT VIADUCT TO S.F. EEL R. BRIDGE
27.36	27.38			60	90	0.00-0.10	600.0						END EAGLE POINT VIADUCT
27.38	27.67	SB		4	1531	0.00-0.10	680.4		0.13				COLD PLANE IN FRONT PAVED DITCH
27.38	27.62	NB		4	1287	0.00-0.10	572.0		0.07				COLD PLANE IN FRONT OF MBGR
27.38	27.56	NB	2	12	950	0.02	1,266.7						COLD PLANE EXCESS CRACK SEAL MATERIAL
27.56	27.62	NB	2	12	400	0.20		35.6					
27.62	27.67	NB	2	12	264	0.02	352.0						COLD PLANE EXCESS CRACK SEAL MATERIAL
27.63	27.67	NB		4	211	0.00-0.10	93.9		0.01				COLD PLANE IN FRONT OF HMA DIKE
27.67	27.71			60	180	0.00-0.10	1,200.0						BEGIN S FORK EEL RIVER BRIDGE
27.87	27.92			60-80	310	0.10					187.2	0.7	S FORK EEL RIVER BRIDGE TO MYERS FLAT SEPARATION
27.87	27.92			60-80	310	0.10	2,180.0						S FORK EEL RIVER BRIDGE TO MYERS FLAT SEPARATION
27.88	27.89					0.10				37.2		0.1	MYERS FLAT NB OFF-RAMP FLARE
27.88	27.89					0.10				36.3		0.1	MYERS FLAT NB ON-RAMP FLARE
27.88				60-160	40	0.00-0.10	577.8						NB OFF-RAMP
27.89	27.99			22	750	0.10				144.2		0.5	MYERS FLAT NB OFF-RAMP
27.89	28.20			22	1315	0.10				252.8		0.9	MYERS FLAT NB ON-RAMP
27.98	28.03	NB		4	260	0.00-0.10	133.3		0.02				COLD PLANE IN FRONT PAVED DITCH - NB ON-RAMP
27.94	28.02			22	235	0.10				45.2		0.2	MYERS FLAT SB ON-RAMP
27.94				20-24	40	0.00-0.10	133.3						NB ON-RAMP
27.95	28.51			60	2957	0.10					1530.2	5.7	MYERS FLAT SEPARATION TO END PROJECT
27.95	27.98			100-130	140	0.00-0.10	1,622.2						END MYERS FLAT SEP
27.98	28.05	NB		4	410	0.00-0.10	182.2		0.03				COLD PLANE IN FRONT OF HMA DIKE
27.98	28.10	NB	2	12	634	0.02	845.3						COLD PLANE EXCESS CRACK SEAL MATERIAL
28.01		SB				0.00-0.10	8.0						COLD PLANE AROUND DI
28.02	28.03					0.10				29.4		0.1	MYERS FLAT SB ON-RAMP FLARE
28.03	28.04					0.10				21.3		0.1	MYERS FLAT SB OFF-RAMP FLARE
28.03				50-150	40	0.00-0.10	533.3						SB ON/OFF-RAMP
28.04	28.13			22	785	0.10				150.9		0.6	MYERS FLAT SB OFF-RAMP
28.06	28.12	SB	2	12	310	0.20		27.6					
28.10	28.28	NB	2	12	900	0.20		80.0					
28.28	28.31	NB	2	12	158	0.02	210.7						COLD PLANE EXCESS CRACK SEAL MATERIAL
28.31	28.50	SB		4	1003	0.00-0.10	445.8		0.06				COLD PLANE IN FRONT OF MBGR
28.48	28.49	NB		4	73	0.00-0.10	32.4		0.01				COLD PLANE IN FRONT OF HMA DIKE
28.50	28.51			60	40	0.00-0.10	266.7						END PROJECT
						TOTAL	15,576.0	306.3	0.72	717.3	7086.4	29.0	

SUMMARY OF QUANTITIES
Q-1

STATE OF CALIFORNIA - DEPARTMENT OF TRANSPORTATION
Caltrans® MAINTENANCE DESIGN

FUNCTIONAL SUPERVISOR: T.J. FITZGERALD
CALCULATED-DESIGNED BY: G.J. THORNE
CHECKED BY: G. KEATING
REVISED BY
DATE REVISED

LAST REVISION 00-00-00
DATE PLOTTED =>
TIME PLOTTED =>

Dist	COUNTY	ROUTE	POST MILES TOTAL PROJECT	SHEET No.	TOTAL SHEETS
01	Hum	101	25.5/28.5	14	24

REGISTERED CIVIL ENGINEER 12-10-15 DATE

December 14, 2015
PLANS APPROVAL DATE

REGISTERED PROFESSIONAL ENGINEER
GREGORY J. THORNE
No. C71744
Exp. 12-31-15
CIVIL
STATE OF CALIFORNIA

THE STATE OF CALIFORNIA OR ITS OFFICERS OR AGENTS SHALL NOT BE RESPONSIBLE FOR THE ACCURACY OR COMPLETENESS OF SCANNED COPIES OF THIS PLAN SHEET.

SHOULDER BACKING

LOCATION PM		DIRECTION	LENGTH (N)	SHOULDER BACKING	REMARKS
FROM	TO	NB/SB	LF	TON	
25.49	25.59	SB	528	23.4	MAINLINE
25.64	25.79	NB	792	35.2	MAINLINE
25.71	25.80	SB	475	21.1	MAINLINE
25.88	25.94	SB	317	14.1	MAINLINE
26.31	26.44	SB	686	30.5	MAINLINE
26.50	26.59	NB	475	21.1	MAINLINE
26.63	26.83	SB	1056	46.9	MAINLINE
26.85	26.88	SB	158	7	MAINLINE
26.90	27.06	NB	845	37.5	MAINLINE
27.94	27.99	SB	212	9.4	SB ON-RAMP
27.96	27.99	NB	400	17.8	NB OFF-RAMP
27.96	28.01	SB	355	15.8	SB ON-RAMP
26.97	27.06	SB	475	21.1	MAINLINE
27.97	28.16	SB	1003	44.5	MAINLINE
28.00	28.10	NB	505	22.4	NB ON-RAMP
28.07	28.15	SB	430	19.1	SB OFF-RAMP
28.09	28.15	SB	325	14.4	SB OFF-RAMP
28.16	28.26	SB	528	23.4	MAINLINE
28.34	28.48	NB	739	32.8	MAINLINE
			TOTAL	457.5	

(N) NOT A SEPARATE PAY ITEM. FOR INFORMATION ONLY.

RUMBLE STRIP

LOCATION PM		CENTERLINE RUMBLE STRIP (HMA, GROUND-IN INDENTATIONS)
FROM	TO	Sta
25.49	27.07	166.8
27.32	27.71	41.2
27.86	27.92	6.3
27.95	28.51	59.1
	TOTAL	273.4

SUMMARY OF QUANTITIES

Q-2

REVISED BY | DATE REVISED
G.J. THORNE | G. KEATING
CALCULATED-DESIGNED BY | CHECKED BY
FUNCTIONAL SUPERVISOR
T.J. FITZGERALD

STATE OF CALIFORNIA - DEPARTMENT OF TRANSPORTATION
Caltrans® MAINTENANCE DESIGN

LAST REVISION 00-00-00 | DATE PLOTTED => 22-JAN-2016 | TIME PLOTTED => 06:21

M

Maint	MAINTENANCE
Max	MAXIMUM
MB	METAL BEAM
MBB	METAL BEAM BARRIER
MBGR	METAL BEAM GUARD RAILING
Med	MEDIAN
MGS	MIDWEST GUARDRAIL SYSTEM
MH	MANHOLE
Min	MINIMUM
Misc	MISCELLANEOUS
Misc I & S	MISCELLANEOUS IRON AND STEEL
Mkr	MARKER
Mod	MODIFIED,
	MODIFY
Mon	MONUMENT
MP	METAL PLATE
MPGR	METAL PLATE GUARD RAILING
MR	MOVEMENT RATING
MSE	MECHANICALLY STABILIZED EMBANKMENT
Mt	MOUNTAIN, MOUNT
Mtl	MATERIAL
MVP	MAINTENANCE VEHICLE PULLOUT

N

N	NORTH
NB	NORTHBOUND
No.	NUMBER (MUST HAVE PERIOD)
Nos.	NUMBERS (MUST HAVE PERIOD)
NPS	NOMINAL PIPE SIZE
NS	NEAR SIDE
NSP	NEW STANDARD PLAN
NTS	NOT TO SCALE

O

Oblr	OBLITERATE
OC	OVERCROSSING
OD	OUTSIDE DIAMETER
OF	OUTSIDE FACE
OG	ORIGINAL GROUND
OGAC	OPEN GRADED ASPHALT CONCRETE
OGFC	OPEN GRADED FRICTION COURSE
OH	OVERHEAD
OHWM	ORDINARY HIGH WATER MARK
O-O	OUT TO OUT
Opp	OPPOSITE
OSD	OVERSIDE DRAIN

P

p	PAGE
PAP	PERFORATED ALUMINUM PIPE
PB	PULL BOX
PC	POINT OF CURVATURE,
	PRECAST
PCC	POINT OF COMPOUND CURVE,
	PORTLAND CEMENT CONCRETE
PCMS	PORTABLE CHANGEABLE MESSAGE SIGN
PCP	PERFORATED CONCRETE PIPE,
	PRESTRESSED CONCRETE PIPE
PCVC	POINT OF COMPOUND VERTICAL CURVE
PEC	PERMIT TO ENTER AND CONSTRUCT
Ped	PEDESTRIAN
Ped OC	PEDESTRIAN OVERCROSSING
Ped UC	PEDESTRIAN UNDERCROSSING
Perm Mtl	PERMEABLE MATERIAL

P continued

PG	PROFILE GRADE
PI	POINT OF INTERSECTION
PJP	PARTIAL JOINT PENETRATION
Pkwy	PARKWAY
ℙL,PL	PLATE
P/L	PROPERTY LINE
PM	POST MILE,
	TIME FROM NOON TO MIDNIGHT
PN	PAVING NOTCH
POC	POINT OF HORIZONTAL CURVE
POT	POINT OF TANGENT
POVC	POINT OF VERTICAL CURVE
PP	PIPE PILE,
	PLASTIC PIPE,
	POWER POLE
PPL	PREFORMED PERMEABLE LINER
PPP	PERFORATED PLASTIC PIPE
PRC	POINT OF REVERSE CURVE
PRF	PAVEMENT REINFORCING FABRIC
PRVC	POINT OF REVERSE VERTICAL CURVE
PS&E	PLANS, SPECIFICATIONS AND ESTIMATES
PS, P/S	PRESTRESSED
PSP	PERFORATED STEEL PIPE
PT	POINT OF TANGENCY
PVC	POLYVINYL CHLORIDE
Pvmt	PAVEMENT

Q

Qty	QUANTITY

R

R	RADIUS
R & D	REMOVE AND DISPOSE
R & S	REMOVE AND SALVAGE
R/C	RATE OF CHANGE
RCA	REINFORCED CONCRETE ARCH
RCB	REINFORCED CONCRETE BOX
RCP	REINFORCED CONCRETE PIPE
RCPA	REINFORCED CONCRETE PIPE ARCH
Rd	ROAD
Reinf	REINFORCED,
	REINFORCEMENT,
	REINFORCING
Rel	RELOCATE
Repl	REPLACEMENT
Ret	RETAINING
Rev	REVISED, REVISION
Rdwy	ROADWAY
RHMA	RUBBERIZED HOT MIX ASPHALT
Riv	RIVER
RM	ROAD-MIXED
RP	RADIUS POINT,
	REFERENCE POINT
RR	RAILROAD
RSP	ROCK SLOPE PROTECTION,
	REVISED STANDARD PLAN
Rt	RIGHT
Rte	ROUTE
RW	REDWOOD,
	RETAINING WALL
R/W	RIGHT OF WAY
Rwy	RAILWAY

S

S	SOUTH,
	SUPPLEMENT
SAE	STRUCTURE APPROACH EMBANKMENT
Salv	SALVAGE
SAPP	STRUCTURAL ALUMINUM PLATE PIPE
SB	SOUTHBOUND
SC	SAND CUSHION
SCSP	SLOTTED CORRUGATED STEEL PIPE
SD	STORM DRAIN
Sec	SECOND,
	SECTION
Sep	SEPARATION
SG	SUBGRADE
Shld	SHOULDER
Sht	SHEET
Sim	SIMILAR
℄	STATION LINE
SM	SELECTED MATERIAL
Spec	SPECIAL,
	SPECIFICATIONS
SPP	SLOTTED PLASTIC PIPE
SS	SLOPE STAKE
SSBM	STRAP AND SADDLE BRACKET METHOD
SSD	STRUCTURAL SECTION DRAIN
SSPA	STRUCTURAL STEEL PLATE ARCH
SSPP	STRUCTURAL STEEL PLATE PIPE
SSPPA	STRUCTURAL STEEL PLATE PIPE ARCH
SSRP	STEEL SPIRAL RIB PIPE
St	STREET
Sta	STATION
STBB	SINGLE THRIE BEAM BARRIER
Std	STANDARD
Str	STRUCTURE
Surf	SURFACING
SW	SIDEWALK,
	SOUND WALL
Swr	SEWER
Sym	SYMMETRICAL
S4S	SURFACE 4 SIDES

T

T	SEMI-TANGENT
Tan	TANGENT
TBB	THRIE BEAM BARRIER
Tbr	TIMBER
TC	TOP OF CURB
TCB	TRAFFIC CONTROL BOX
TCE	TEMPORARY CONSTRUCTION EASEMENT
Tel	TELEPHONE
Temp	TEMPORARY
TG	TOP OF GRADE
Tot	TOTAL
TP	TELEPHONE POLE
TPB	TREATED PERMEABLE BASE
TPM	TREATED PERMEABLE MATERIAL
Trans	TRANSITION

T continued

TS	TRANSVERSE,
	TRAFFIC SIGNAL,
	TUBULAR STEEL
Typ	TYPICAL

U

UC	UNDERCROSSING
UD	UNDERDRAIN
UG	UNDERGROUND
UON	UNLESS OTHERWISE NOTED
UP	UNDERPASS

V

V	VALVE,
	DESIGN SPEED
Var	VARIABLE,
	VARIES
VC	VERTICAL CURVE
VCP	VITRIFIED CLAY PIPE
Vert	VERTICAL
Via	VIADUCT
Vol	VOLUME

W

W	WEST,
	WIDTH
WB	WESTBOUND
WH	WEEP HOLE
WM	WIRE MESH
WS	WATER SURFACE
WSP	WELDED STEEL PIPE
Wt	WEIGHT
WV	WATER VALVE
WW	WINGWALL
WWLOL	WINGWALL LAYOUT LINE

X

X Sec	CROSS SECTION
Xing	CROSSING

Y

Yr	YEAR
Yrs	YEARS

Dist	COUNTY	ROUTE	POST MILES TOTAL PROJECT	SHEET No.	TOTAL SHEETS
01	Hum	101	25.5/28.5	15	24

Grace M. Tsushima
REGISTERED CIVIL ENGINEER

July 19, 2013
PLANS APPROVAL DATE

REGISTERED PROFESSIONAL ENGINEER Grace M. Tsushima No. C49814 Exp. 9-30-14 CIVIL STATE OF CALIFORNIA

THE STATE OF CALIFORNIA OR ITS OFFICERS OR AGENTS SHALL NOT BE RESPONSIBLE FOR THE ACCURACY OR COMPLETENESS OF SCANNED COPIES OF THIS PLAN SHEET.

TO ACCOMPANY PLANS DATED 12-14-15

UNIT OF MEASUREMENT SYMBOLS:

Some of the symbols used in the project plan quantity tables and in the Bid Item List are:

TABLE A

SYMBOL USED	DEFINITIONS
ACRE	ACRE
CF	CUBIC FOOT
CY	CUBIC YARD
EA	EACH
GAL	GALLON
LB	POUND
LF	LINEAR FOOT
SQFT	SQUARE FOOT
SQYD	SQUARE YARD
STA	100 FEET
TAB	TABLET
TON	2,000 POUNDS

Some of the symbols used in the plans other than in the project plan quantity tables are:

TABLE B

SYMBOL USED	DEFINITIONS
ksi	KIPS PER SQUARE INCH
ksf	KIPS PER SQUARE FOOT
psi	POUNDS PER SQUARE INCH
psf	POUNDS PER SQUARE FOOT
lb/ft^3, pcf	POUNDS PER CUBIC FOOT
tsf	TONS PER SQUARE FOOT
mph, MPH *	MILES PER HOUR
ø	NOMINAL DIAMETER
oz	OUNCE
lb	POUND
kip	1,000 POUNDS
cal	CALORIE
ft	FOOT OR FEET
gal	GALLON

* For use on a sign panel only

STATE OF CALIFORNIA
DEPARTMENT OF TRANSPORTATION

ABBREVIATIONS (SHEET 2 OF 2)

NO SCALE

RSP A10B DATED JULY 19, 2013 SUPERSEDES STANDARD PLAN A10B DATED MAY 20, 2011 - PAGE 2 OF THE STANDARD PLANS BOOK DATED 2010.

REVISED STANDARD PLAN RSP A10B

2010 REVISED STANDARD PLAN RSP A10B

P:\PROJ\01\0E490\drafting\sheets\va001.dgn

6-7-13

Dist	COUNTY	ROUTE	POST MILES TOTAL PROJECT	SHEET No.	TOTAL SHEETS
01	Hum	101	25.5/28.5	16	24

REGISTERED CIVIL ENGINEER

July 19, 2013
PLANS APPROVAL DATE

REGISTERED PROFESSIONAL ENGINEER Roberta L. McLaughlin No. C40375 Exp. 3-31-15 CIVIL STATE OF CALIFORNIA

THE STATE OF CALIFORNIA OR ITS OFFICERS OR AGENTS SHALL NOT BE RESPONSIBLE FOR THE ACCURACY OR COMPLETENESS OF SCANNED COPIES OF THIS PLAN SHEET.

TO ACCOMPANY PLANS DATED 12-14-15

EXIT RAMP NEUTRAL AREA (GORE) TREATMENT

DETAIL 36

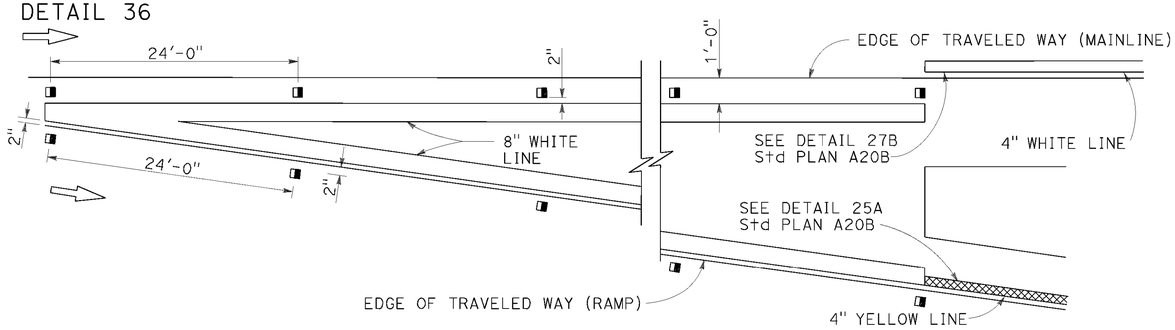

ENTRANCE RAMP NEUTRAL AREA (MERGE) TREATMENT

DETAIL 36A

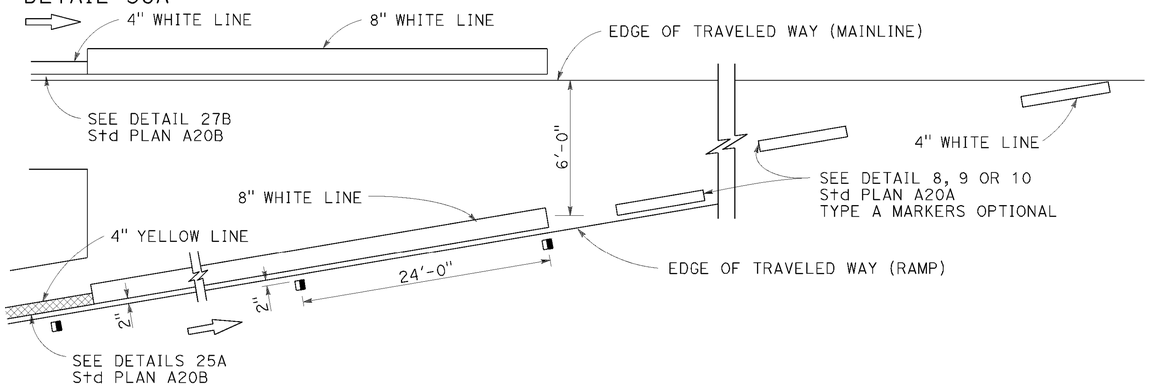

ENTRANCE RAMP NEUTRAL AREA (ACCELERATION LANE) TREATMENT

DETAIL 36B

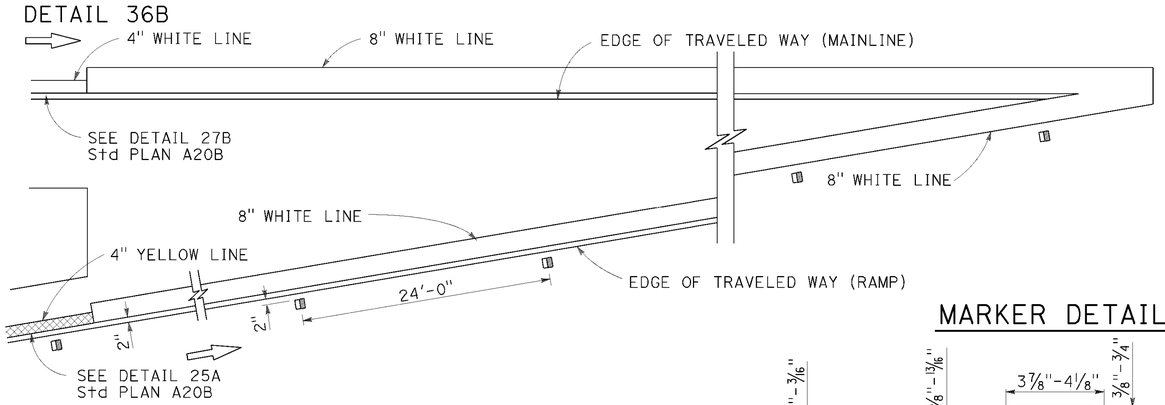

MARKER DETAILS

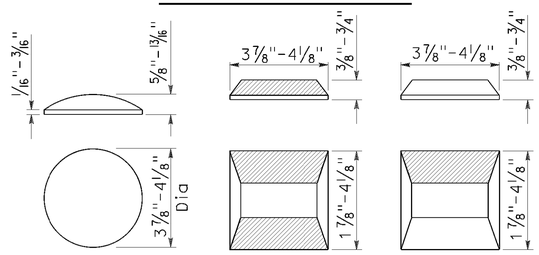

RETROREFLECTIVE FACE

LEGEND:

MARKERS

- ○ TYPE A WHITE NON-REFLECTIVE
- ⊟ TYPE C RED-CLEAR RETROREFLECTIVE
- ◨ TYPE G ONE-WAY CLEAR RETROREFLECTIVE

LANE DROP AT EXIT RAMPS

DETAIL 37

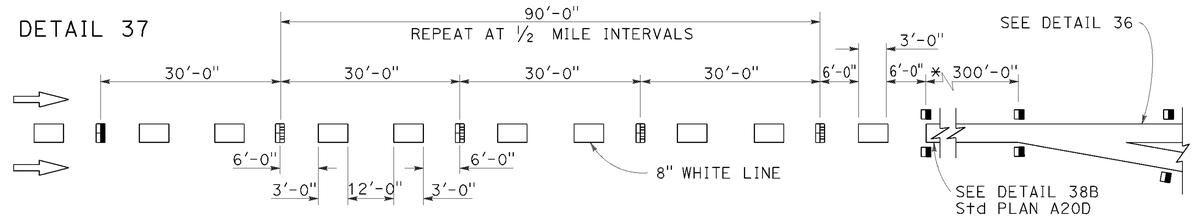

DETAIL 37A

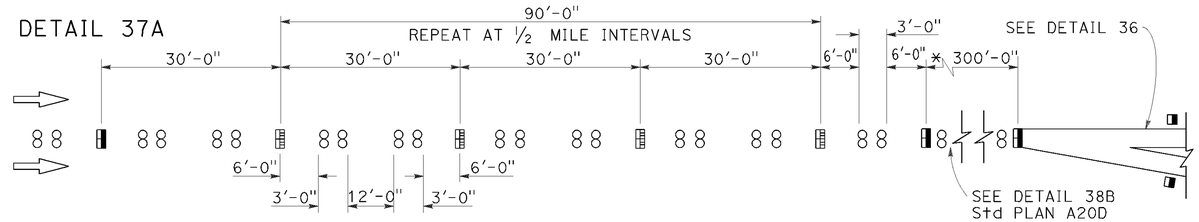

* The solid channelizing line shown may be omitted on short auxiliary lanes where weaving length is critical.

LANE DROP AT INTERSECTIONS

DETAIL 37B

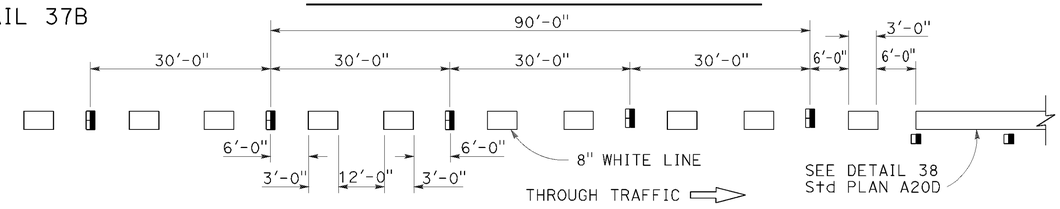

DETAIL 37C

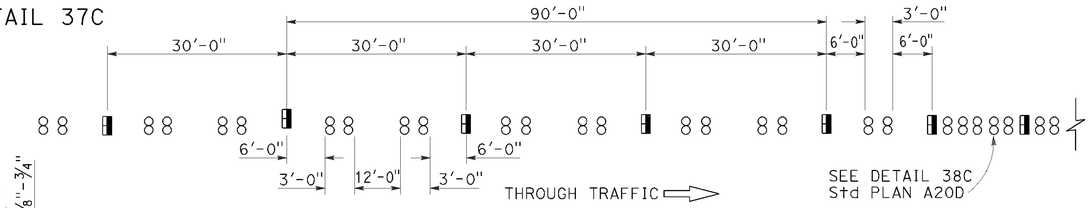

STATE OF CALIFORNIA
DEPARTMENT OF TRANSPORTATION

PAVEMENT MARKERS AND TRAFFIC LINE TYPICAL DETAILS

NO SCALE

RSP A20C DATED JULY 19, 2013 SUPERSEDES STANDARD PLAN A20C DATED MAY 20, 2011 - PAGE 11 OF THE STANDARD PLANS BOOK DATED 2010.

REVISED STANDARD PLAN RSP A20C

2010 REVISED STANDARD PLAN RSP A20C

P:\PROJ\01\0E490\drafting\sheets\va002.dgn

4-29-13

Dist	COUNTY	ROUTE	POST MILES TOTAL PROJECT	SHEET No.	TOTAL SHEETS
01	Hum	101	25.5/28.5	17	24

REGISTERED CIVIL ENGINEER

April 20, 2012
PLANS APPROVAL DATE

REGISTERED PROFESSIONAL ENGINEER
Roberta L. McLaughlin
No. C40375
Exp. 3-31-13
CIVIL
STATE OF CALIFORNIA

THE STATE OF CALIFORNIA OR ITS OFFICERS OR AGENTS SHALL NOT BE RESPONSIBLE FOR THE ACCURACY OR COMPLETENESS OF SCANNED COPIES OF THIS PLAN SHEET.

TO ACCOMPANY PLANS DATED 12-14-15

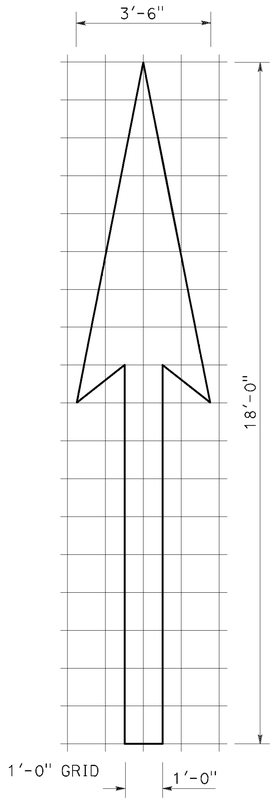

A=25 ft^2

TYPE I 18'-0" ARROW

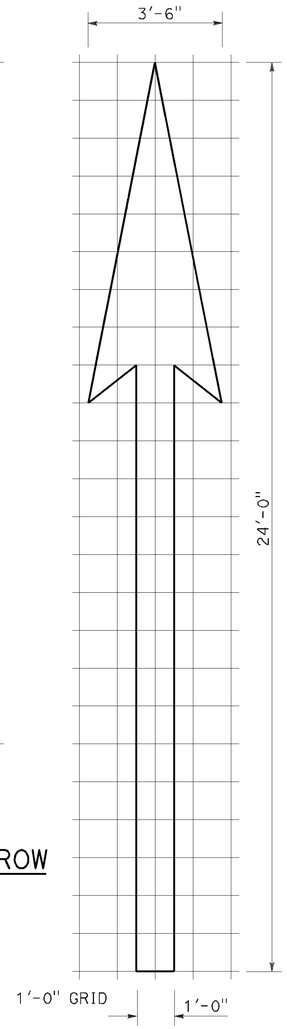

A=31 ft^2

TYPE I 24'-0" ARROW

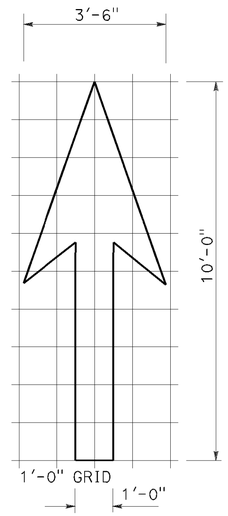

A=14 ft^2

TYPE I 10'-0" ARROW

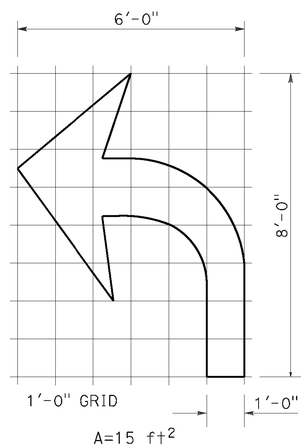

A=15 ft^2

TYPE IV (L) ARROW

(For Type IV (R) arrow, use mirror image)

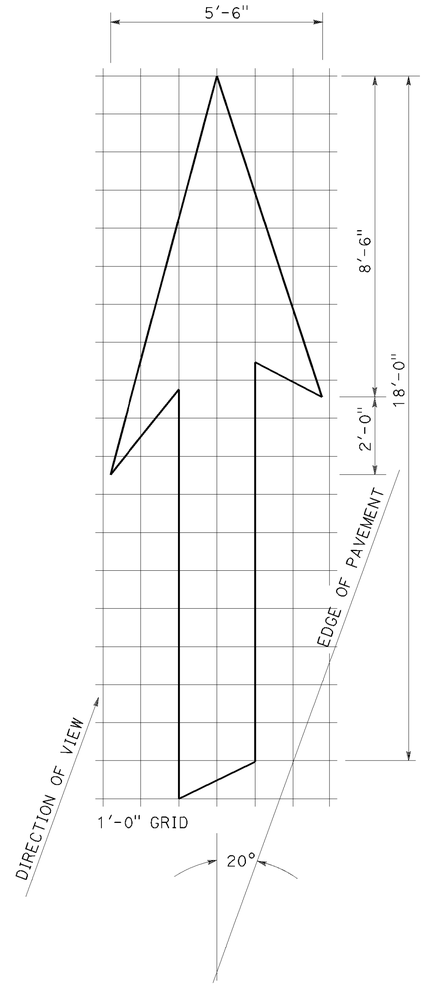

A=42 ft^2

TYPE VI ARROW

Right lane drop arrow
(For left lane, use mirror image)

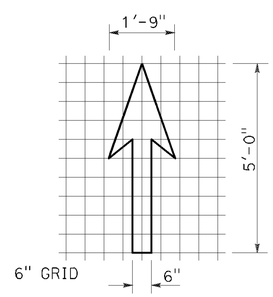

A=3.5 ft^2

BIKE LANE ARROW

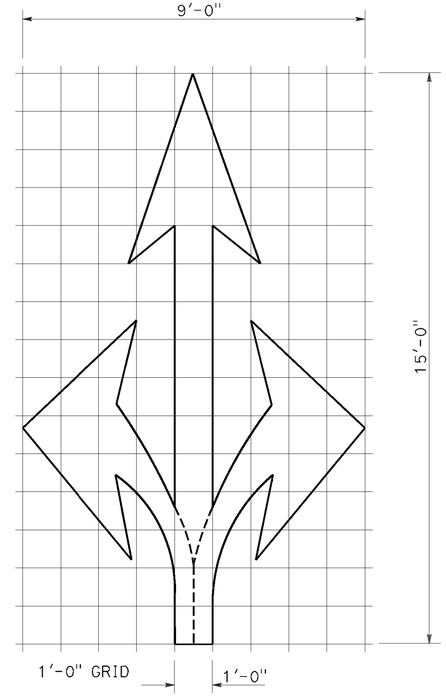

A=36 ft^2

TYPE VIII ARROW

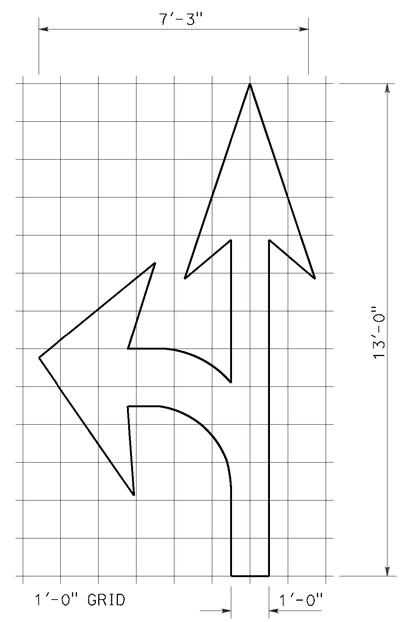

A=27 ft^2

TYPE VII (L) ARROW

(For Type VII (R) arrow, use mirror image)

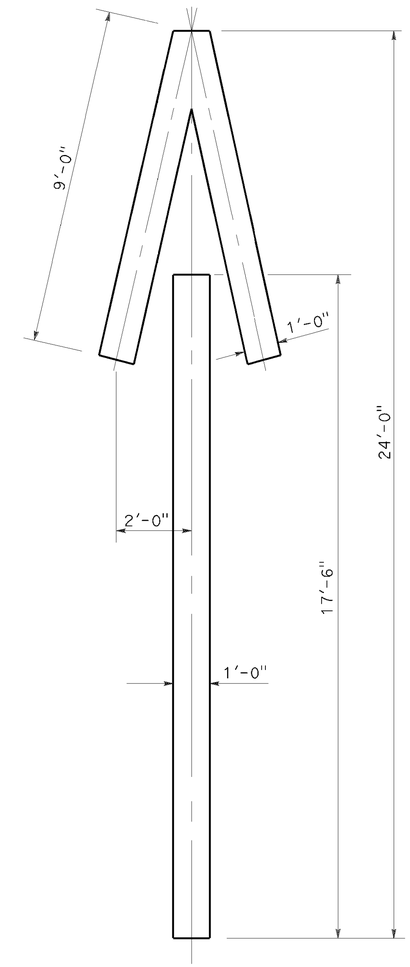

A=33 ft^2

TYPE V ARROW

NOTE:
Minor variations in dimensions may be accepted by the Engineer.

STATE OF CALIFORNIA
DEPARTMENT OF TRANSPORTATION

PAVEMENT MARKINGS ARROWS

NO SCALE

RSP A24A DATED APRIL 20, 2012 SUPERSEDES STANDARD PLAN A24A DATED MAY 20, 2011 - PAGE 13 OF THE STANDARD PLANS BOOK DATED 2010.

REVISED STANDARD PLAN RSP A24A

2010 REVISED STANDARD PLAN RSP A24A

P:\PROJ\01\0E490\drafting\sheets\va003.dgn

3-14-12

Dist	COUNTY	ROUTE	POST MILES TOTAL PROJECT	SHEET No.	TOTAL SHEETS
01	Hum	101	25.5/28.5	18	24

REGISTERED CIVIL ENGINEER

July 20, 2012
PLANS APPROVAL DATE

REGISTERED PROFESSIONAL ENGINEER
Roberta L. McLaughlin
No. C40375
Exp. 3-31-13
CIVIL
STATE OF CALIFORNIA

THE STATE OF CALIFORNIA OR ITS OFFICERS OR AGENTS SHALL NOT BE RESPONSIBLE FOR THE ACCURACY OR COMPLETENESS OF SCANNED COPIES OF THIS PLAN SHEET.

TO ACCOMPANY PLANS DATED 12-14-15

2010 REVISED STANDARD PLAN RSP A24E

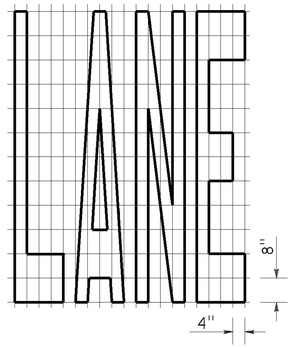

A=24 ft^2

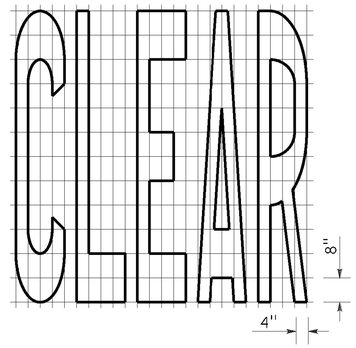

A=27 ft^2

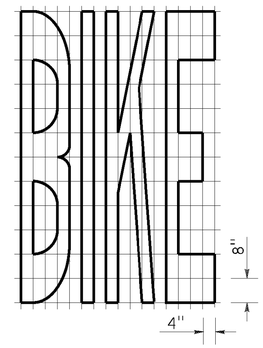

A=21 ft^2

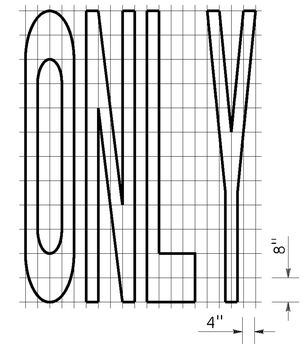

A=22 ft^2

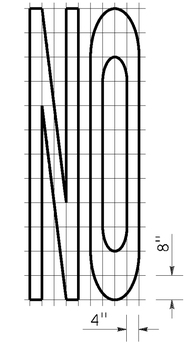

A=14 ft^2

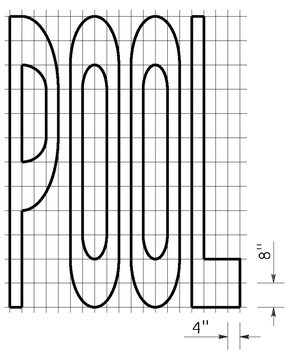

A=23 ft^2

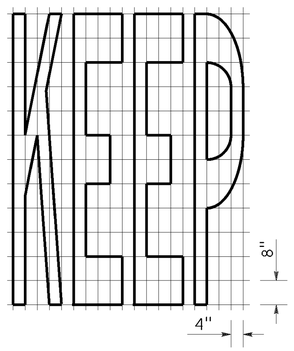

A=24 ft^2

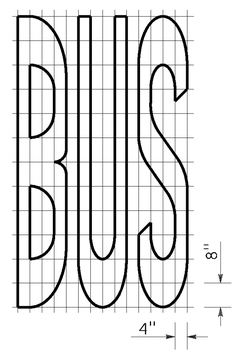

A=20 ft^2

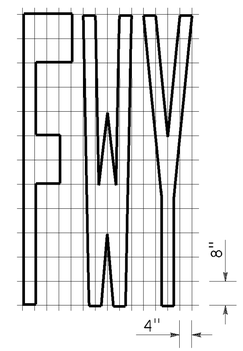

A=16 ft^2

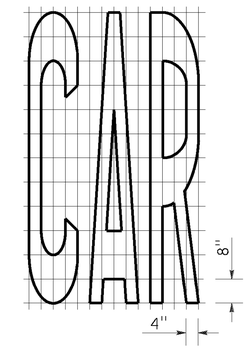

A=17 ft^2

WORD MARKINGS			
ITEM	ft^2	ITEM	ft^2
LANE	24	NO	14
POOL	23	BIKE	21
CAR	17	BUS	20
CLEAR	27	ONLY	22
KEEP	24	FWY	16

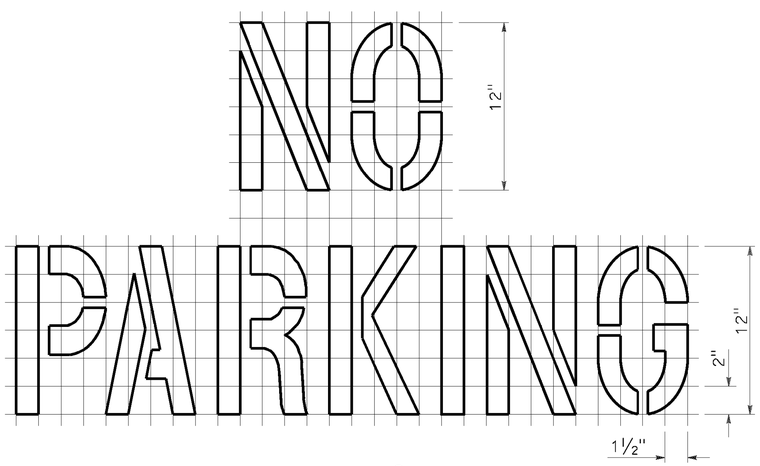

A=2 ft^2

See Notes 6 and 7

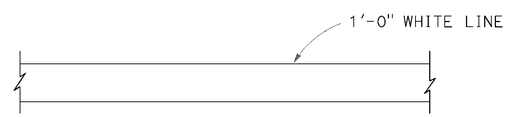

LIMIT LINE (STOP LINE)

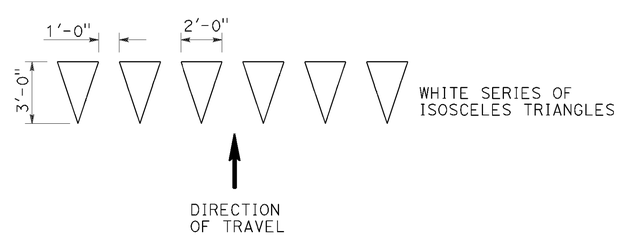

YIELD LINE

NOTES:

1. If a message consists of more than one word, it should read "UP", i.e., the first word should be nearest the driver.
2. The space between words should be at least four times the height of the characters for low speed roads, but not more than ten times the height of the characters. The space may be reduced appropriately where there is limited space because of local conditions.
3. Minor variations in dimensions may be accepted by the Engineer.
4. Portions of a letter, number or symbol may be separated by connecting segments not to exceed 2" in width.
5. The words "NO PARKING" pavement marking is to be used for parking facilities. For typical locations of markings, see Standard Plans A90A and A90B.
6. The words "NO PARKING", shall be painted in white letters no less than 1'-0" high on a contrasting background and located so that it is visible to traffic enforcement officials.

STATE OF CALIFORNIA
DEPARTMENT OF TRANSPORTATION

PAVEMENT MARKINGS WORDS, LIMIT AND YIELD LINES

NO SCALE

RSP A24E DATED JULY 20, 2012 SUPERSEDES STANDARD PLAN A24E
DATED MAY 20, 2011 - PAGE 17 OF THE STANDARD PLANS BOOK DATED 2010.

REVISED STANDARD PLAN RSP A24E

P:\PROJ\01\0E490\drafting\sheets\va004.dgn

6-12-12

Dist	COUNTY	ROUTE	POST MILES TOTAL PROJECT	SHEET No.	TOTAL SHEETS
01	Hum	101	25.5/28.5	19	24

Srikanth Balasubramanian
REGISTERED CIVIL ENGINEER

October 30, 2015
PLANS APPROVAL DATE

REGISTERED PROFESSIONAL ENGINEER Srikanth N. Balasubramanian No. C56426 Exp. 6-30-17 CIVIL STATE OF CALIFORNIA

THE STATE OF CALIFORNIA OR ITS OFFICERS OR AGENTS SHALL NOT BE RESPONSIBLE FOR THE ACCURACY OR COMPLETENESS OF SCANNED COPIES OF THIS PLAN SHEET.

TO ACCOMPANY PLANS DATED 12-14-15

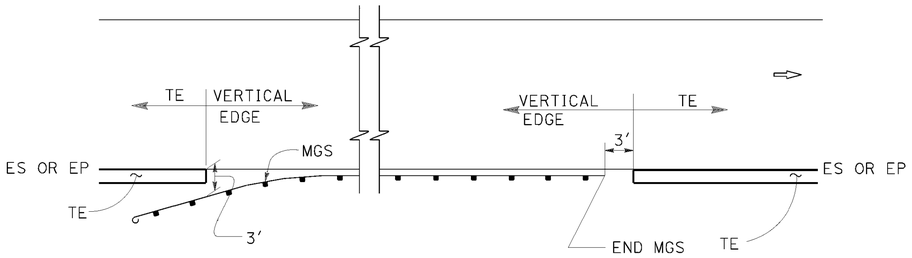

MGS

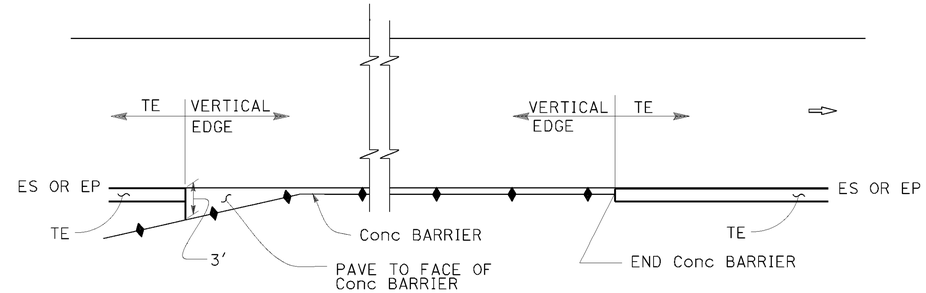

CONCRETE BARRIER

ABBREVIATIONS:

TE TAPERED EDGE

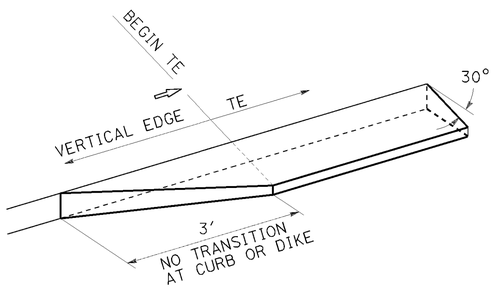

TRANSITION DETAIL FOR CONCRETE ONLY

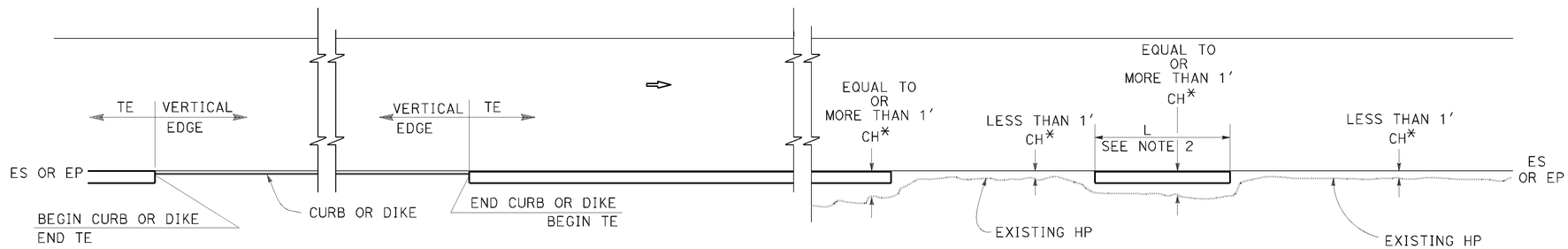

CURB OR DIKE

NARROW SIDE SLOPE

* CH = Distance from ES or EP to existing HP.

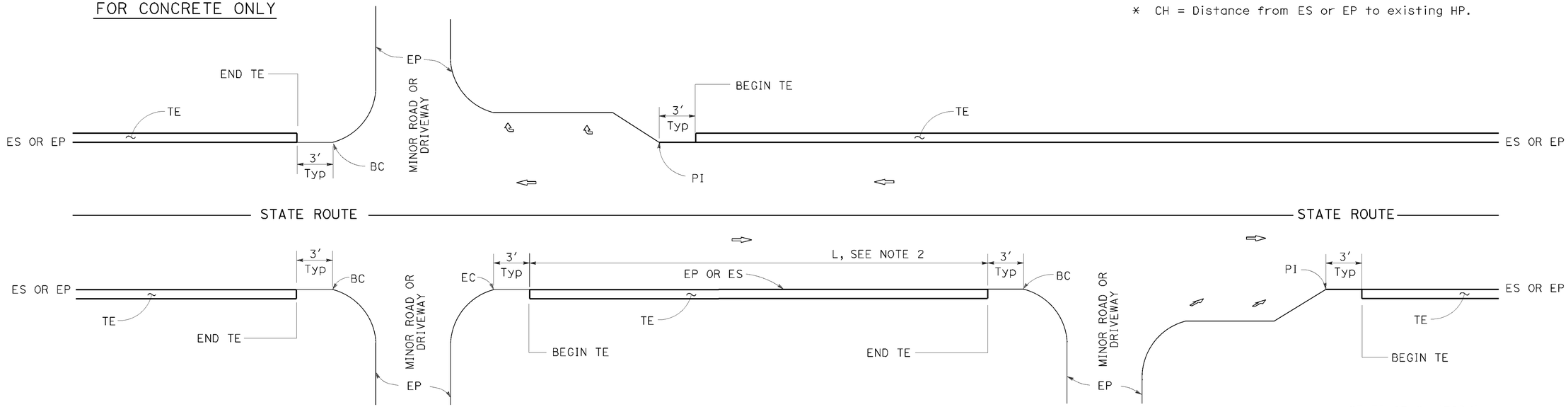

INTERTECTION

DRIVEWAY AND INTERSECTION

MINOR ROADWAY OR DRIVEWAY

STATE OF CALIFORNIA
DEPARTMENT OF TRANSPORTATION

PAVEMENT EDGE TREATMENTS

NO SCALE

NOTES:

1. For details not shown, see Revised Standard Plans RSP P75 and RSP P76.
2. Tapered edge is optional when L is less than 30′.

RSP P74 DATED OCTOBER 30, 2015 SUPERSEDES RSP P74 DATED NOVEMBER 15, 2013 AND RSP P74 DATED JANUARY 20, 2012 THAT SUPPLEMENTS THE STANDARD PLANS BOOK DATED 2010.

REVISED STANDARD PLAN RSP P74

2010 REVISED STANDARD PLAN RSP P74

P:\PROJ\01\0E490\drafting\sheets\va005.dgn

10-13-15

Dist	COUNTY	ROUTE	POST MILES TOTAL PROJECT	SHEET No.	TOTAL SHEETS
01	Hum	101	25.5/28.5	20	24

REGISTERED CIVIL ENGINEER

October 30, 2015
PLANS APPROVAL DATE

REGISTERED PROFESSIONAL ENGINEER Srikanth N. Balasubramanian No. C56426 Exp. 6-30-17 CIVIL STATE OF CALIFORNIA

THE STATE OF CALIFORNIA OR ITS OFFICERS OR AGENTS SHALL NOT BE RESPONSIBLE FOR THE ACCURACY OR COMPLETENESS OF SCANNED COPIES OF THIS PLAN SHEET.

TO ACCOMPANY PLANS DATED 12-14-15

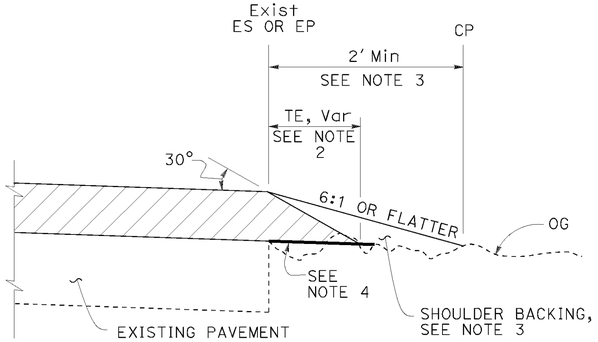

CASE A
Tapered Edge

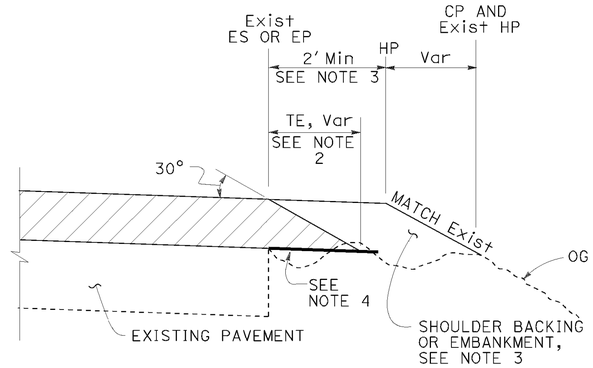

CASE B
Tapered Edge

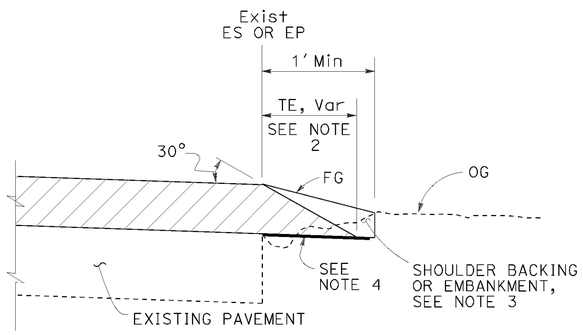

CASE C
Tapered Edge

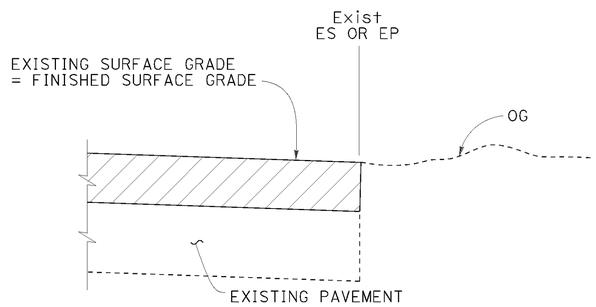

CASE D
Vertical Edge

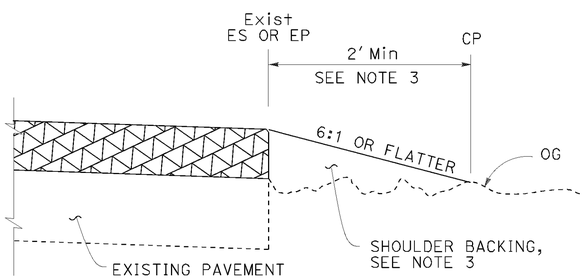

CASE E
Vertical Edge

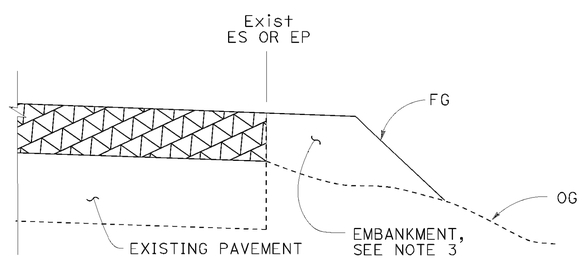

CASE F
Vertical Edge
* See Table A and Revised Std Plan RSP P74

LEGEND:

- HMA OVERLAY
- HMA OR CONCRETE OVERLAY
- CONCRETE OVERLAY

ABBREVIATIONS:

TE TAPERED EDGE
TT TOTAL THICKNESS OF TE

TABLE A
EDGE TREATMENT FOR VARIOUS OVERLAY THICKNESS AND CONDITIONS

	OVERLAY THICKNESS	
FIELD CONDITION	LESS THAN 0.15'	0.15' OR MORE
Exist SLOPE 6:1 OR FLATTER	CASE E	CASE A
Exist SLOPE 3:1 TO 6:1	CASE E	CASE B
Exist SLOPE STEEPER THAN 3:1	CASE F	CASE F
CUT SECTION (REPLACE, COLD PLANE, MILL PAVEMENT)	CASE D	CASE C

ADDITIONAL HMA OR CONCRETE QUANTITIES FOR TE/SIDE/MILE

TYPICAL CROSS SECTION	TT	TOTAL ADDITIONAL MATERIAL FOR TE/SIDE/MILE		
		HMA (TON)	CONCRETE (CY)*	CONCRETE (CY)**
TT	0.15'	7.7	NA	NA
	0.20'	13.7	NA	NA
	0.30'	30.9	NA	NA
	0.40'	54.9	NA	NA
	0.45'	69.4	NA	NA
TT 0.43'	0.50'	84.2	NA	NA
	0.60'	113.9	NA	NA
	0.70'	143.6	70.9	94.2
	0.80'	173.3	85.6	112.2
	0.90'	203.0	100.3	130.2
	1.00'	232.7	114.9	148.2
	1.10'	262.4	129.6	166.2
	1.20'	292.1	144.3	184.2

* For Detail "A"
** For Optional Detail "A"

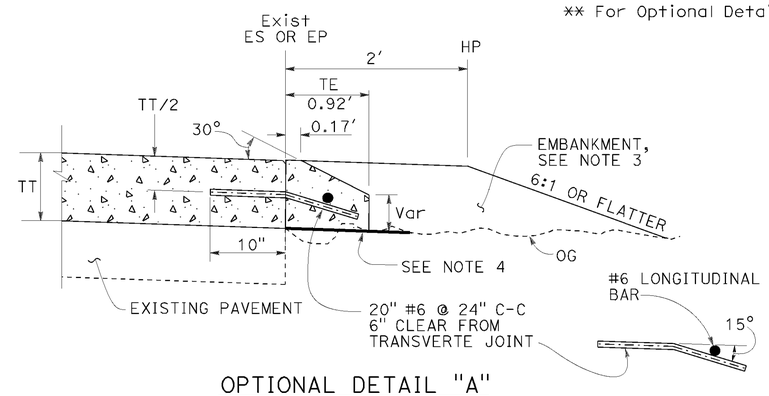

OPTIONAL DETAIL "A"
For concrete overlay
See Note 5

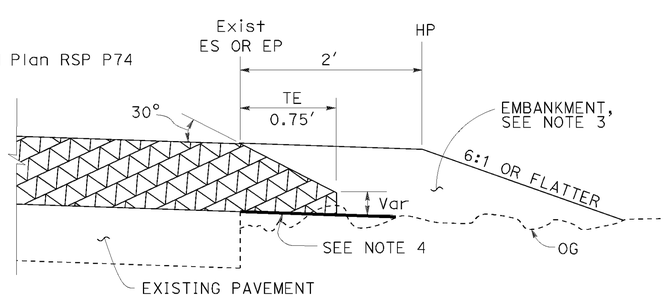

DETAIL "A"
For HMA overlay thickness more than 0.43' or concrete overlay

NOTES:

1. For limits of tapered edge and vertical edge treatments, see Revised Standard Plan RSP P74.
2. Details shown for HMA overlay thickness less than 0.43'. See Detail "A" for HMA overlay thickness more than 0.43' or concrete overlay.
3. For locations and limits of shoulder backing or embankment see project plans.
4. Grade existing ground to place tapered edge. 1' minimum width
5. Tapered edge transverse joint must match overlay transverse joint. End of #6 longitudinal bar must be 2" ±½" clear from transverse joint.
6. Tapered edge is not needed in the area of MGS, barrier, right turn lane and acceleration lane. See Revised Standard Plan RSP P74.

STATE OF CALIFORNIA
DEPARTMENT OF TRANSPORTATION

PAVEMENT EDGE TREATMENTS-OVERLAYS

NO SCALE

RSP P75 DATED OCTOBER 30, 2015 SUPERSEDES RSP P75 DATED NOVEMBER 15, 2013 AND RSP P75 DATED JANUARY 20, 2012 THAT SUPPLEMENTS THE STANDARD PLANS BOOK DATED 2010.

REVISED STANDARD PLAN RSP P75

2010 REVISED STANDARD PLAN RSP P75

P:\PROJ\01\0E490\drafting\sheets\va006.dgn

7-2-15

Dist	COUNTY	ROUTE	POST MILES TOTAL PROJECT	SHEET No.	TOTAL SHEETS
01	Hum	101	25.5/28.5	21	24

REGISTERED CIVIL ENGINEER

July 19, 2013
PLANS APPROVAL DATE

REGISTERED PROFESSIONAL ENGINEER
Gurinderpal Bhullar
No. C48815
Exp. 9-30-14
CIVIL
STATE OF CALIFORNIA

THE STATE OF CALIFORNIA OR ITS OFFICERS OR AGENTS SHALL NOT BE RESPONSIBLE FOR THE ACCURACY OR COMPLETENESS OF SCANNED COPIES OF THIS PLAN SHEET.

TO ACCOMPANY PLANS DATED 12-14-15

2010 REVISED STANDARD PLAN RSP T9

TABLE 1

TAPER LENGTH CRITERIA AND CHANNELIZING DEVICE SPACING

SPEED (S)	MINIMUM TAPER LENGTH * FOR WIDTH OF OFFSET 12 FEET (W)				MAXIMUM CHANNELIZING DEVICE SPACING		
					X	Y	Z **
	TANGENT 2L	MERGING L	SHIFTING L/2	SHOULDER L/3	TAPER	TANGENT	CONFLICT
mph	ft	ft	ft	ft	ft	ft	ft
20	160	80	40	27	20	40	10
25	250	125	63	42	25	50	12
30	360	180	90	60	30	60	15
35	490	245	123	82	35	70	17
40	640	320	160	107	40	80	20
45	1080	540	270	180	45	90	22
50	1200	600	300	200	50	100	25
55	1320	660	330	220	55	110	27
60	1440	720	360	240	60	120	30
65	1560	780	390	260	65	130	32
70	1680	840	420	280	70	140	35

* - For other offsets, use the following merging taper length formula for L:
For speed of 40 mph or less, $L = WS^2/60$
For speed of 45 mph or more, $L = WS$

Where: L = Taper length in feet
W = Width of offset in feet
S = Posted speed limit, off-peak 85th-percentile speed prior to work starting, or the anticipated operating speed in mph

** - Use for taper and tangent sections where there are no pavement markings or where there is a conflict between existing pavement markings and channelizers (CA).

TABLE 2

LONGITUDINAL BUFFER SPACE AND FLAGGER STATION SPACING

SPEED *	Min D **	DOWNGRADE Min D ***		
		-3%	-6%	-9%
mph	ft	ft	ft	ft
20	115	116	120	126
25	155	158	165	173
30	200	205	215	227
35	250	257	271	287
40	305	315	333	354
45	360	378	400	427
50	425	446	474	507
55	495	520	553	593
60	570	598	638	686
65	645	682	728	785
70	730	771	825	891

* - Speed is posted speed limit, off-peak 85th-percentile speed prior to work starting, or the anticipated operating speed in mph

** - Longitudinal buffer space or flagger station spacing

*** - Use on sustained downgrade steeper than -3 percent and longer than 1 mile.

TABLE 3

ADVANCE WARNING SIGN SPACING

ROAD TYPE	DISTANCE BETWEEN SIGNS *		
	A	B	C
	ft	ft	ft
URBAN - 25 mph OR LESS	100	100	100
URBAN - MORE THAN 25 mph TO 40 mph	250	250	250
URBAN - MORE THAN 40 mph	350	350	350
RURAL	500	500	500
EXPRESSWAY / FREEWAY	1000	1500	2640

* - The distances are approximate, are intended for guidance purposes only, and should be applied with engineering judgment. These distances should be adjusted by the Engineer for field conditions, if necessary, by increasing or decreasing the recommmended distances.

STATE OF CALIFORNIA
DEPARTMENT OF TRANSPORTATION

TRAFFIC CONTROL SYSTEM TABLES FOR LANE AND RAMP CLOSURES

NO SCALE

RSP T9 DATED JULY 19, 2013 SUPERSEDES RSP T9 DATED APRIL 19, 2013 THAT SUPPLEMENTS THE STANDARD PLANS BOOK DATED 2010.

REVISED STANDARD PLAN RSP T9

P:\PROJ\01\0E490\drafting\sheets\va007.dgn

4-30-13

TO ACCOMPANY PLANS DATED 12-14-15

Dist	COUNTY	ROUTE	POST MILES TOTAL PROJECT	SHEET No.	TOTAL SHEETS
01	Hum	101	25.5/28.5	22	24

REGISTERED CIVIL ENGINEER

April 19, 2013
PLANS APPROVAL DATE

REGISTERED PROFESSIONAL ENGINEER Gurinderpal Bhullar No. C48815 Exp. 9-30-14 CIVIL STATE OF CALIFORNIA

THE STATE OF CALIFORNIA OR ITS OFFICERS OR AGENTS SHALL NOT BE RESPONSIBLE FOR THE ACCURACY OR COMPLETENESS OF SCANNED COPIES OF THIS PLAN SHEET.

NOTES:

See Revised Standard Plan RSP T9 for tables.

Use cone spacing X for taper segment, Y for tangent segment or Z for conflict situations, as approriate, per Table 1, unless X, Y, or Z cone spacing is shown on this sheet.

Unless otherwise specified in the special provisions, all temporary warning signs shall have black legend on fluorescent orange background.

California codes are designated by (CA). Otherwise, Federal (MUTCD) codes are shown.

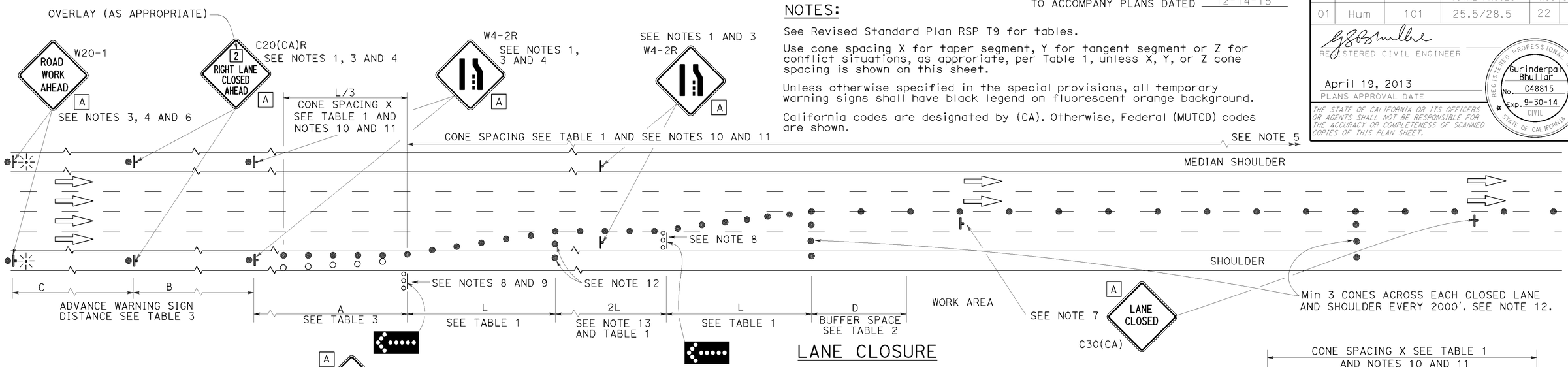

LANE CLOSURE

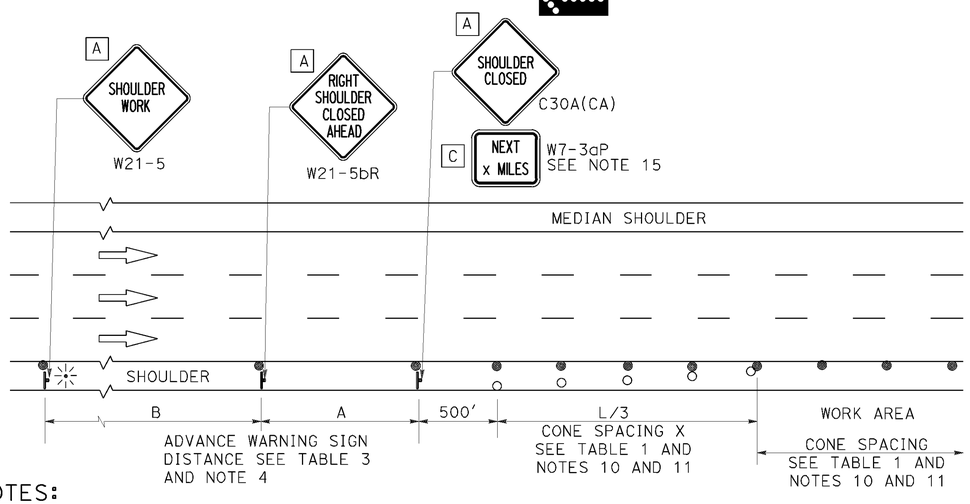

SHOULDER CLOSURE

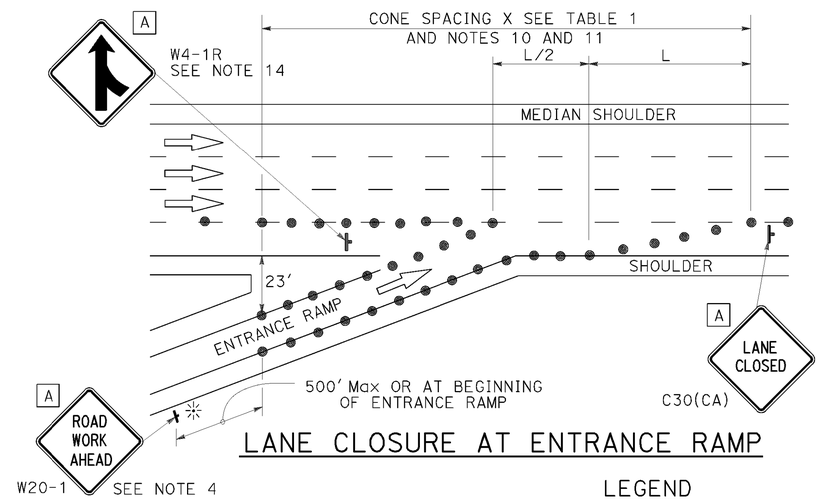

LANE CLOSURE AT ENTRANCE RAMP

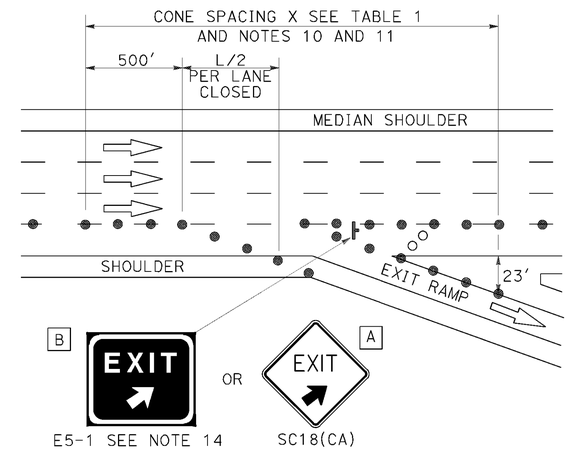

LANE CLOSURE AT EXIT RAMP

NOTES:

1. Median lane closures shall conform to the details as shown except that C20(CA)L and W4-2L signs shall be used.
2. At least one person shall be assigned to provide full time maintenance of traffic control devices for lane closures.
3. Duplicate sign installations are not required:
   a) On opposite shoulder if at least one-half of the available lanes remain open to traffic.
   b) In the median if the width of the median shoulder is less than 8' and the outside lanes are to be closed.
4. Each advance warning sign on each side of the roadway shall be equipped with at least two flags for daytime closure. Each flag shall be at least 16" x 16" in size and shall be orange or fluorescent red-orange in color. Flashing beacons shall be placed at the locations indicated for lane closure during hours of darkness.
5. A G20-2 "END ROAD WORK" sign, with minimum size of 48" x 24" as appropriate, shall be placed at the end of the lane closure unless the end of work area is obvious or ends within a larger project's limits.
6. If the W20-1 sign would follow within 2000' of a stationary W20-1 or G20-1 "ROAD WORK NEXT _____ MILES", use a C20(CA) sign for the first advance warning sign.
7. Place a C30(CA) sign every 2000' throughout length of lane closure.
8. One flashing arrow sign for each lane closed. The flashing arrow signs shall be Type I.
9. A minimum 1500' of sight distance shall be provided where possible for vehicles approaching the first flashing arrow sign. Lane closures shall not begin at top of crest vertical curve or on a horizontal curve.
10. All cones used for lane closures during the hours of darkness shall be fitted with retroreflective bands (or sleeves) as specified in the specifications.
11. Portable delineators, placed at one-half the spacing indicated for traffic cones may be used instead of cones for daytime closures only.
12. Unless otherwise specified in the special provisions, a minimum of 3 cones shall be placed transversely across each closed lane and shoulder at each location where a taper across a traffic lane ends and every 2000' as shown on the "Lane Closure" detail. Two Type II barricades may be used instead of the 3 cones. The transverse alignment of the cones or barricades on the closed shoulder may be shifted from the transverse alignment to provide access to the work.
13. Unless otherwise specified in the special provisions, the 2L tangent shown along lane lines shall be used between the L tapers required for each closed traffic lane.
14. Unless otherwise specified in the special provisions, the E5-1 or SC18(CA) and W4-1 signs shall be used as shown.
15. A W7-3aP "NEXT ___ MILES" plaque must be used if theshoulder closure extends beyond the distance that can be perceived by road users.

LEGEND

- TRAFFIC CONE
- TRAFFIC CONE (OPTIONAL TAPER)
- TEMPORARY TRAFFIC CONTROL SIGN
- FLASHING ARROW SIGN (FAS)
- FAS SUPPORT OR TRAILER
- PORTABLE FLASHING BEACON

SIGN PANEL SIZE (Min)

A	48" x 48"
B	72" x 60"
C	36" x 30"

STATE OF CALIFORNIA
DEPARTMENT OF TRANSPORTATION

TRAFFIC CONTROL SYSTEM FOR LANE CLOSURE ON FREEWAYS AND EXPRESSWAYS

NO SCALE

RSP T10 DATED APRIL 19, 2013 SUPERSEDES STANDARD PLAN T10 DATED MAY 20, 2011 - PAGE 237 OF THE STANDARD PLANS BOOK DATED 2010.

REVISED STANDARD PLAN RSP T10

2010 REVISED STANDARD PLAN RSP T10

P:\PROJ\01\0E490\drafting\sheets\va008.dgn

12-18-12

Dist	COUNTY	ROUTE	POST MILES TOTAL PROJECT	SHEET No.	TOTAL SHEETS
01	Hum	101	25.5/28.5	23	24

REGISTERED CIVIL ENGINEER

April 19, 2013
PLANS APPROVAL DATE

REGISTERED PROFESSIONAL ENGINEER Gurinderpal Bhullar No. C48815 Exp. 9-30-14 CIVIL STATE OF CALIFORNIA

THE STATE OF CALIFORNIA OR ITS OFFICERS OR AGENTS SHALL NOT BE RESPONSIBLE FOR THE ACCURACY OR COMPLETENESS OF SCANNED COPIES OF THIS PLAN SHEET.

TO ACCOMPANY PLANS DATED 12-14-15

TYPICAL RAMP CLOSURES

SIGN PANEL SIZE (Min)

- A 48" x 48"
- B 48" x 30"
- C 36" x 36"
- D 48" x 36"

LEGEND

- TRAFFIC CONE
- TEMPORARY TRAFFIC CONTROL SIGN
- BARRICADES
- PORTABLE FLASHING BEACON

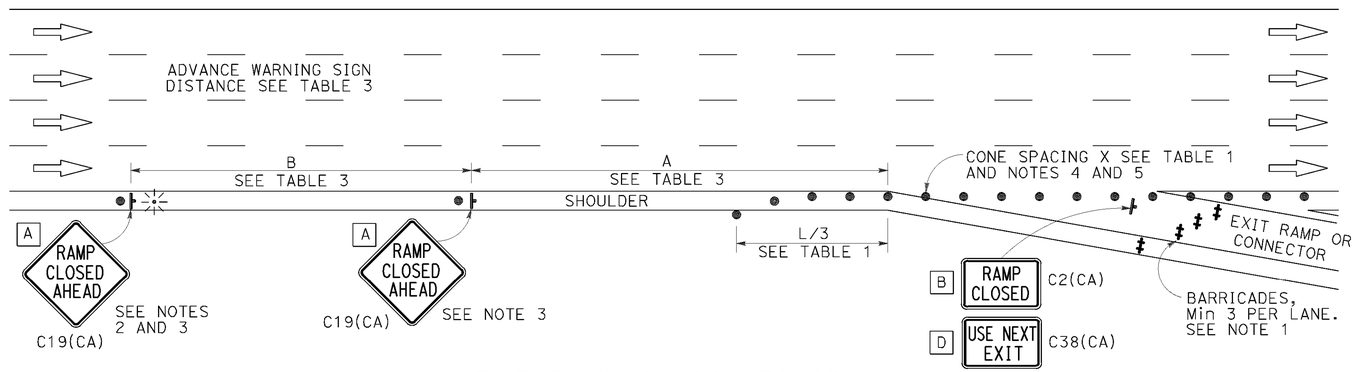

EXIT RAMP OR CONNECTOR

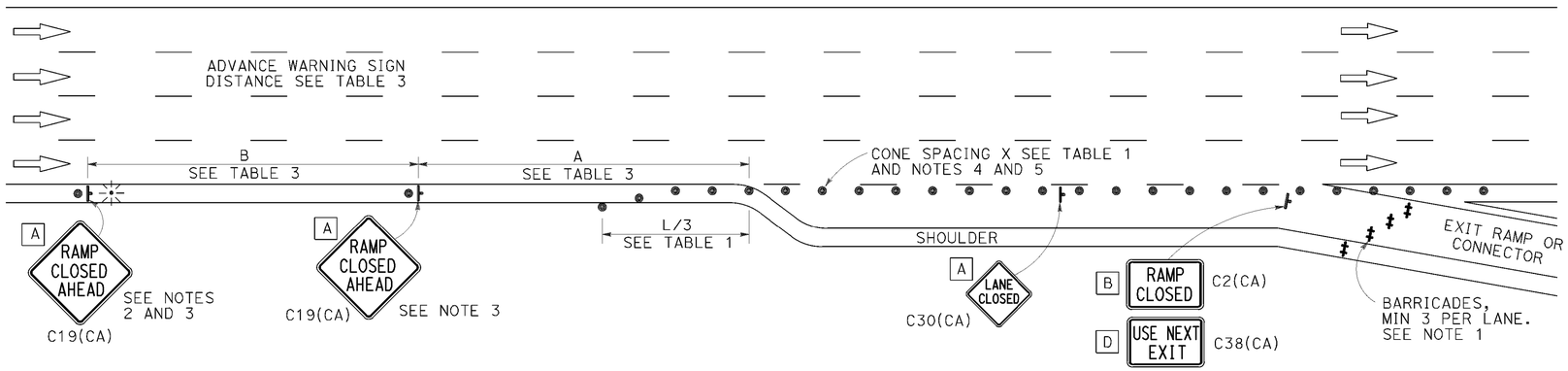

EXIT RAMP OR CONNECTOR WITH ADDITIONAL LANE

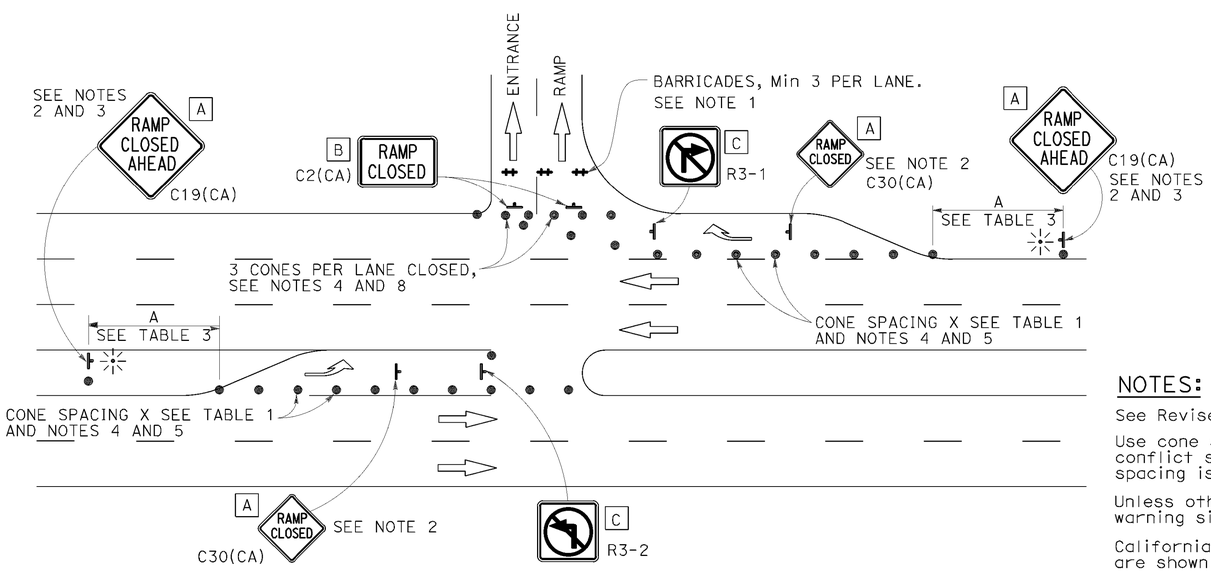

ENTRANCE RAMP WITH TURNING POCKETS

NOTES:

See Revised Standard Plan RSP T9 for tables.

Use cone spacing X for taper segment, Y for tangent segment or Z for conflict situations, as approriate, per Table 1, unless X, Y, or Z cone spacing is shown on this sheet.

Unless otherwise specified in the special provisions, all temporary warning signs shall have black legend on fluorescent orange background.

California codes are designated by (CA). Otherwise, Federal (MUTCD) codes are shown.

NOTES:

1. Barricades shall be Type I, II, or III for closures lasting one week or less and Type III for closures lasting longer than one week.
2. In addition to placing the C19(CA) "RAMP CLOSED AHEAD" and C30(CA) "RAMP CLOSED" signs, black on orange overlay plates with the word "CLOSED" may be mounted, as directed by the Engineer, on all guide signs that refer to the closed ramp. The letter size on the overlay shall be the same as the guide sign.
3. Each advance C19(CA) "RAMP CLOSED AHEAD" sign shall be equipped with at least two flags for daytime closure. Each flag shall be at least 16" x 16" in size and shall be orange or fluorescent red-orange in color. A flashing beacon shall be placed on top of the first C19(CA) sign during hours of darkness.
4. All cones used for ramp closures during the hours of darkness shall be fitted with retroreflective bands (or sleeves) as specified in the specifications.
5. Portable delineators, placed at one-half the spacing indicated for traffic cones, may be used instead of cones for daytime ramp closures only.
6. At least one person shall be assigned to provide full time maintenance of traffic control devices, unless otherwise directed by the Engineer.
7. The existing "EXIT" signs shall be covered during ramp closures.
8. A minimum of 3 cones shall be placed transversely across each closed lane and shoulder.

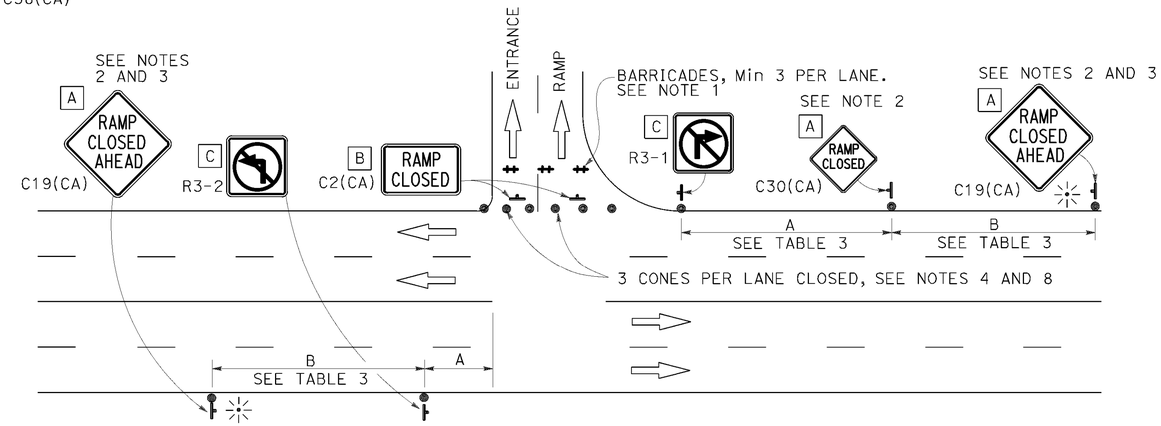

ENTRANCE RAMP WITHOUT TURNING POCKETS

STATE OF CALIFORNIA
DEPARTMENT OF TRANSPORTATION

TRAFFIC CONTROL SYSTEM FOR RAMP CLOSURE

NO SCALE

RSP T14 DATED APRIL 19, 2013 SUPERSEDES STANDARD PLAN T14
DATED MAY 20, 2011 - PAGE 242 OF THE STANDARD PLANS BOOK DATED 2010.

REVISED STANDARD PLAN RSP T14

2010 REVISED STANDARD PLAN RSP T14

P:\PROJ\01\0E490\drafting\sheets\va009.dgn

12-18-12

Dist	COUNTY	ROUTE	POST MILES TOTAL PROJECT	SHEET No.	TOTAL SHEETS
01	Hum	101	25.5/28.5	24	24

REGISTERED CIVIL ENGINEER

April 19, 2013
PLANS APPROVAL DATE

REGISTERED PROFESSIONAL ENGINEER Gurinderpal Bhullar No. C48815 Exp. 9-30-14 CIVIL STATE OF CALIFORNIA

THE STATE OF CALIFORNIA OR ITS OFFICERS OR AGENTS SHALL NOT BE RESPONSIBLE FOR THE ACCURACY OR COMPLETENESS OF SCANNED COPIES OF THIS PLAN SHEET.

TO ACCOMPANY PLANS DATED 12-14-15

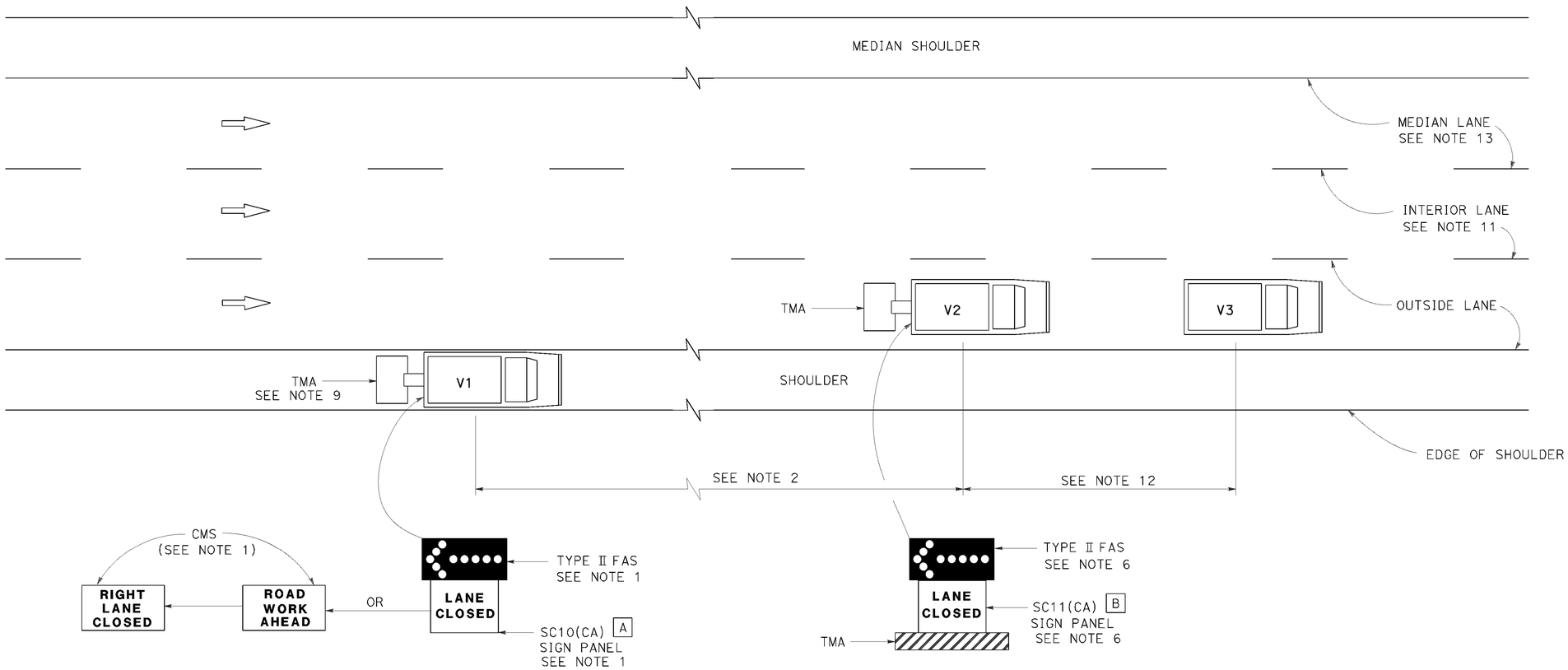

MOVING LANE CLOSURE ON MEDIAN LANE OR OUTSIDE LANE OF MULTILANE HIGHWAYS

SIGN PANEL SIZE (Min)

A 66" x 36"

B 54" x 42"

LEGEND

V1	SIGN VEHICLE
V2	SHADOW VEHICLE
V3	WORK/APPLICATION VEHICLE
⟨•••••	FLASHING ARROW SIGN (FAS)
CMS	CHANGEABLE MESSAGE SIGN
TMA	TRUCK-MOUNTED ATTENUATOR

NOTES:

1. Either a changeable message sign or a SC10(CA) sign panel and a Type II flashing arrow sign shall be mounted on the rear of sign vehicle V1. The changeable message sign shall be sequenced to show the "ROAD WORK AHEAD" message first, followed by the "RIGHT LANE CLOSED" message. For median lane closure, the flashing arrow symbol shall be reversed with the arrowhead on the right and the changeable message sign shall show "LEFT LANE CLOSED".
2. If traffic queues develop, sign vehicle V1 should be positioned upstream from the end of queue. Sign vehicle V1 shall be positioned where highly visible when shoulders are not available.
3. A minimum sight distance of 1500′ should be provided in advance of sign vehicle V1.
4. Sign vehicle V1 should remain at the beginning of horizontal or vertical curves until the other vehicles (V2 and V3) are far enough beyond the curve to resume the minimum sight distance of 1500′.
5. Vehicle-mounted sign panels shall have Type III or above retroreflective sheeting, black on white, or black on fluorescent orange, with 6" minimum series D letters per Caltrans sign specifications.
6. Shadow vehicle V2 shall be equipped with a truck-mounted attenuator. The sign panel shown and a Type II flashing arrow sign shall be mounted on the rear of shadow vehicle V2. For median lane closure the flashing arrow sign symbol shall be displayed with the arrowhead on the right.
7. All vehicles used for lane closures shall be equipped with two-way radios, and the vehicle operators shall maintain communication during the work or application operation.
8. All vehicles shall be equipped with flashing or rotating amber lights.
9. If sign vehicle V1 encroaches into the traffic lane due to insufficient shoulder width, sign vehicle V1 shall be equipped with a truck-mounted attenuator. Sign vehicle V1 shall stay as close to the edge of shoulder as practicable.
10. Where workers would be on foot in the work area, a stationary type lane closure (Revised Standard Plan T10, T11, etc., as applicable) shall be used instead of this plan.
11. For moving lane closure on interior lane of multilane highways, use Revised Standard Plan T16.
12. The spacing between work vehicle(s) and the shadow vehicles, and between each shadow vehicle should be minimized to deter road users from driving in between.
13. When the work/application vehicle V3 occupies the median lane, sign vehicle V1 should drive in the median shoulder and indicate left lane closed ahead.

STATE OF CALIFORNIA
DEPARTMENT OF TRANSPORTATION

TRAFFIC CONTROL SYSTEM FOR MOVING LANE CLOSURE ON MULTILANE HIGHWAYS

NO SCALE

RSP T15 DATED APRIL 19, 2013 SUPERSEDES STANDARD PLAN T15
DATED MAY 20, 2011 - PAGE 243 OF THE STANDARD PLANS BOOK DATED 2010.

REVISED STANDARD PLAN RSP T15

2010 REVISED STANDARD PLAN RSP T15

P:\PROJ\01\0E490\drafting\sheets\va010.dgn

12-18-12