ACNP-P029(115)E

Dist	COUNTY	ROUTE	POST MILES TOTAL PROJECT	SHEET No.	TOTAL SHEETS
01	Lak	29	R34.4/R40.0	1	62

STATE OF CALIFORNIA
DEPARTMENT OF TRANSPORTATION

PROJECT PLANS FOR CONSTRUCTION ON
STATE HIGHWAY

IN LAKE COUNTY NEAR LAKEPORT
FROM 0.1 MILE SOUTH OF MAIN STREET
TO 0.1 MILE SOUTH OF HOPLAND ROAD

INDEX OF PLANS

SHEET No.	DESCRIPTION
1	TITLE AND LOCATION MAP
2-3	TYPICAL CROSS SECTIONS
4-11	CONSTRUCTION DETAILS
12-13	CONSTRUCTION AREA SIGNS
14-15	PAVEMENT DELINEATION DETAILS AND QUANTITIES
16-19	SUMMARY OF QUANTITIES
20-30	ELECTRICAL PLANS
31-34	SPECIAL ELECTRICAL STRUCTURES
35-62	REVISED STANDARD PLANS

THE STANDARD PLANS LIST APPLICABLE TO THIS CONTRACT IS INCLUDED IN THE NOTICE TO BIDDERS AND SPECIAL PROVISIONS BOOK.

TO BE SUPPLEMENTED BY STANDARD PLANS DATED 2010

LOCATION MAP

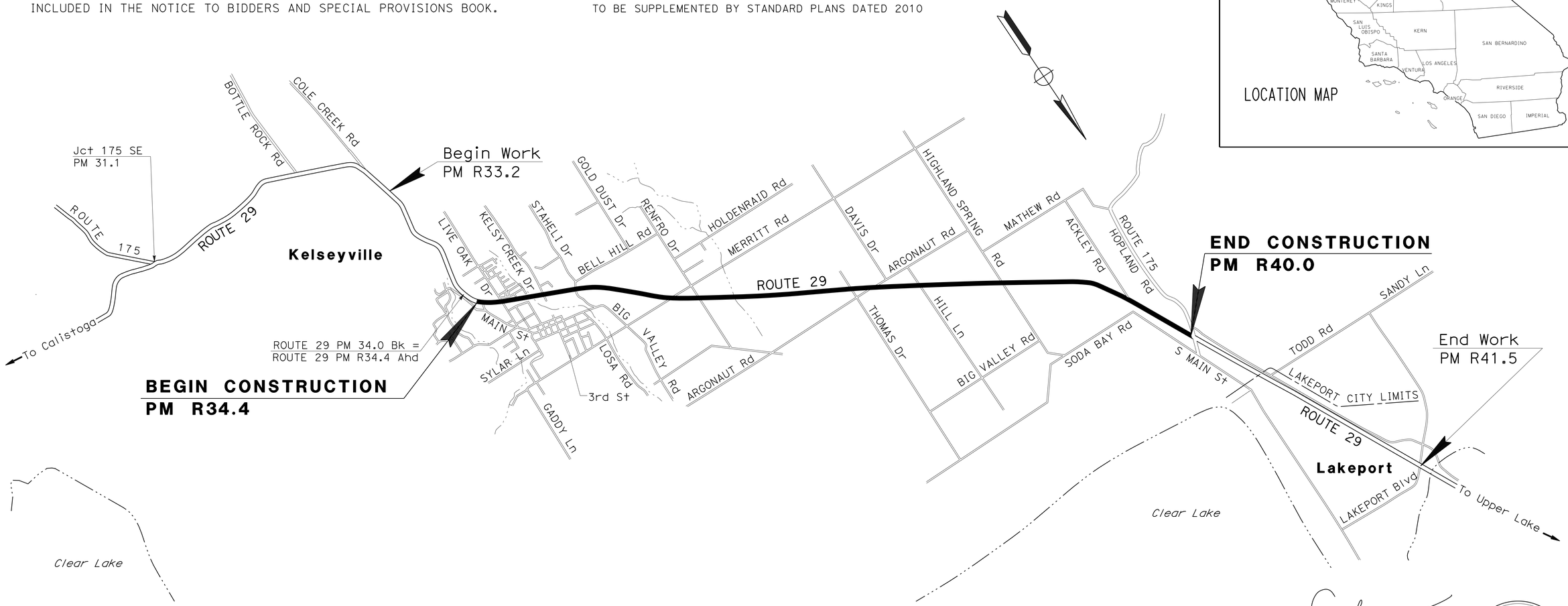

PROJECT MANAGER: SEBASTIAN COHEN

DESIGN ENGINEER: JUSTIN UNCK

5-1-14
PROJECT ENGINEER DATE
REGISTERED CIVIL ENGINEER

May 1, 2014
PLANS APPROVAL DATE

REGISTERED PROFESSIONAL ENGINEER
HUAN CUNG
No. C74406
Exp. 9-30-15
CIVIL
STATE OF CALIFORNIA

THE STATE OF CALIFORNIA OR ITS OFFICERS OR AGENTS SHALL NOT BE RESPONSIBLE FOR THE ACCURACY OR COMPLETENESS OF SCANNED COPIES OF THIS PLAN SHEET.

THE CONTRACTOR SHALL POSSESS THE CLASS (OR CLASSES) OF LICENSE AS SPECIFIED IN THE "NOTICE TO BIDDERS."

NO SCALE

CONTRACT No.	01-0C3504
PROJECT ID	0112000253

LAST REVISION 00-00-00 DATE PLOTTED => 28-AUG-2014 TIME PLOTTED => 10:46

Dist	COUNTY	ROUTE	POST MILES TOTAL PROJECT	SHEET No.	TOTAL SHEETS
01	Lak	29	R34.4/R40.0	2	62

REGISTERED CIVIL ENGINEER 5-1-14 DATE

5-1-14
PLANS APPROVAL DATE

REGISTERED PROFESSIONAL ENGINEER HUAN M. CUNG No. C74406 Exp. 9-30-15 CIVIL STATE OF CALIFORNIA

THE STATE OF CALIFORNIA OR ITS OFFICERS OR AGENTS SHALL NOT BE RESPONSIBLE FOR THE ACCURACY OR COMPLETENESS OF SCANNED COPIES OF THIS PLAN SHEET.

NOTES:

1. DIMENSIONS OF THE PAVEMENT STRUCTURES (STRUCTURAL SECTIONS) ARE SUBJECT TO TOLERANCES SPECIFIED IN THE STANDARD SPECIFICATIONS.
2. DO NOT PAVE OVER BRIDGE DECKS OR APPROACH SLABS.
3. SEE SUMMARY OF QUANTITIES AND CONSTRUCTION DETAILS FOR TYPE AND LOCATION OF HMA DIKE.
4. SEE SUMMARY OF QUANTITIES FOR LOCATION OF ADJUST GUARDRAIL.
5. SEE SUMMARY OF QUANTITIES FOR TYPE AND LOCATIONS OF RUMBLE STRIP.
6. EXISTING UTILITY FACILITIES HAVE NOT BEEN INCLUDED ON THESE PLANS.

ABBREVIATION:

RHMA-G = RUBBERIZED HOT MIX ASPHALT (GAP GRADED)

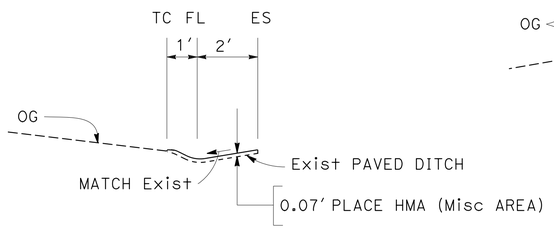

PM R35.52 TO PM R35.68
(HIGH SIDE SUPER DITCH)

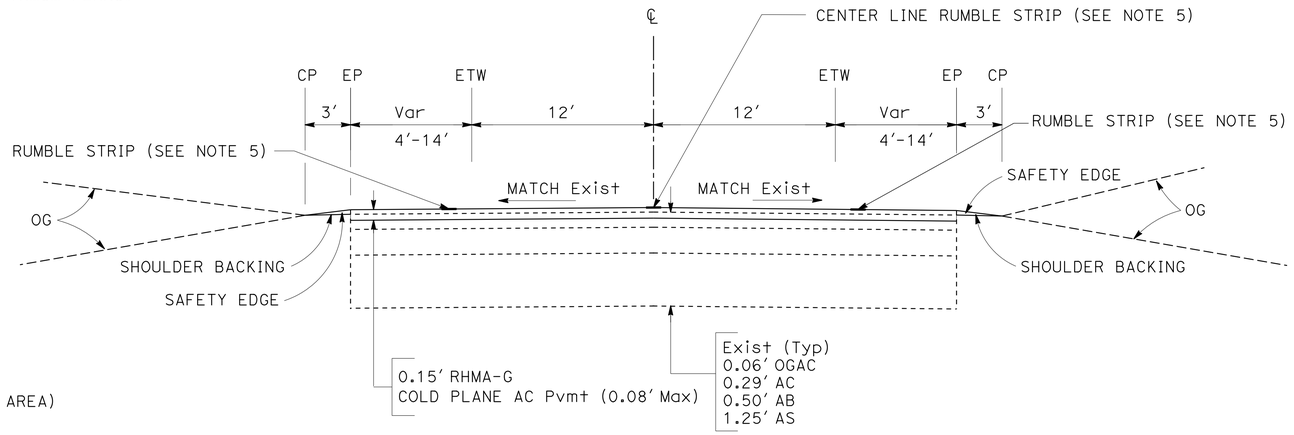

PM R34.90 TO PM R35.25
PM R35.50 TO PM R35.80
PM R36.60 TO PM R37.30
PM R37.56 TO PM R37.60
PM R37.80 TO PM R38.30
PM R38.90 TO PM R40.00

DESIGN DESIGNATION (ROUTE 29)

2014: ADT = 13,900 D = 60%
2035: ADT = 23,200 T = 4%
DHV = 2,200 V = 55 MPH
TI_{20} = 9.5
$ESAL_{20}$ = 1,575,000

PAVEMENT CLIMATE REGION

LOW MOUNTAIN

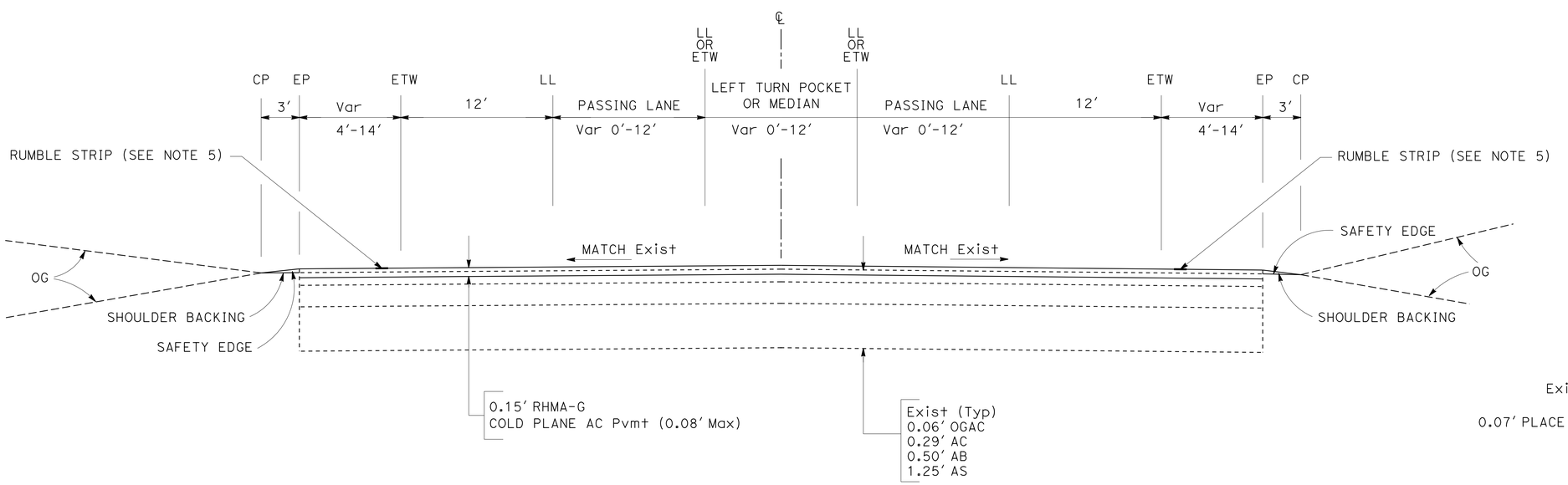

PM R34.40 TO PM R34.50
PM R34.60 TO PM R34.90
PM R35.25 TO PM R35.50
PM R37.30 TO PM R37.56
PM R37.60 TO PM R37.80
PM R38.30 TO PM R38.90

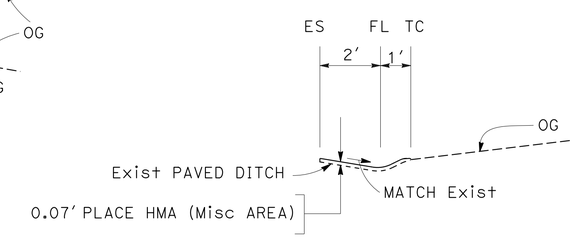

PM R34.41 TO PM R34.52
(HIGH SIDE SUPER DITCH)

TYPICAL CROSS SECTION

NO SCALE

ROUTE 29

X-1

STATE OF CALIFORNIA - DEPARTMENT OF TRANSPORTATION
Caltrans DIVISION OF ENGINEERING

FUNCTIONAL SUPERVISOR: JUSTIN UNCK
CALCULATED-DESIGNED BY: HUAN CUNG
CHECKED BY: WESLEY LEE
REVISED BY / DATE REVISED

LAST REVISION 00-00-00 | DATE PLOTTED => 28-AUG-2014 | TIME PLOTTED => 10:46

Dist	COUNTY	ROUTE	POST MILES TOTAL PROJECT	SHEET No.	TOTAL SHEETS
01	Lak	29	R34.4/R40.0	3	62

REGISTERED CIVIL ENGINEER 5-1-14 DATE

5-1-14
PLANS APPROVAL DATE

REGISTERED PROFESSIONAL ENGINEER HUAN M. CUNG No. C74406 Exp. 9-30-15 CIVIL STATE OF CALIFORNIA

THE STATE OF CALIFORNIA OR ITS OFFICERS OR AGENTS SHALL NOT BE RESPONSIBLE FOR THE ACCURACY OR COMPLETENESS OF SCANNED COPIES OF THIS PLAN SHEET.

NOTES:

1. EXISTING UTILITY FACILITIES HAVE NOT BEEN INCLUDED ON THESE PLANS.

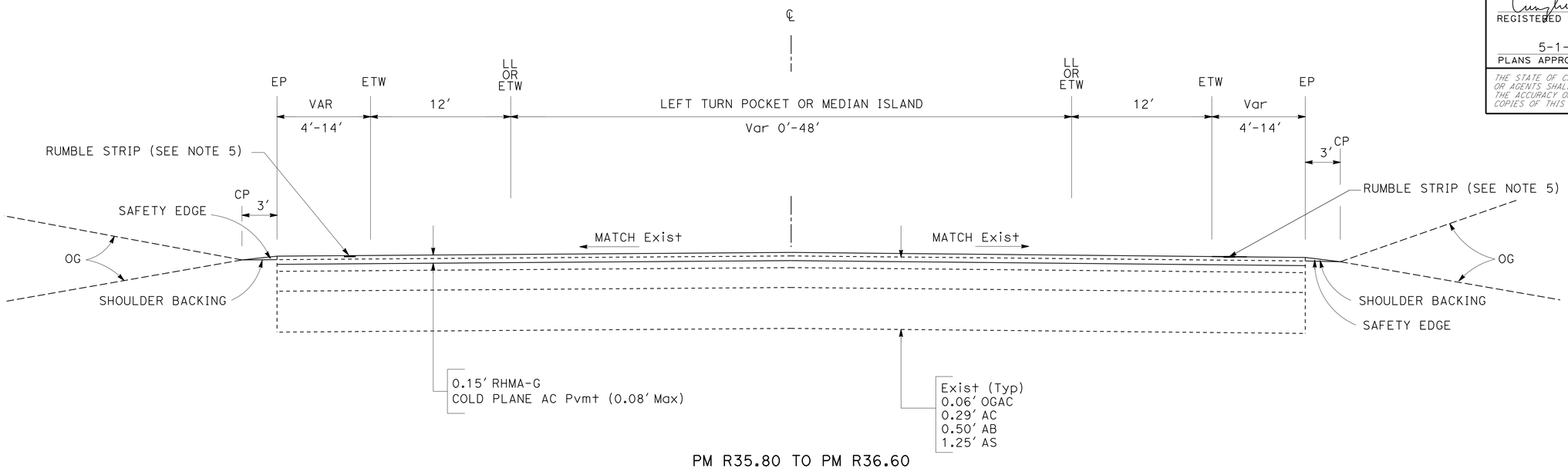

PM R35.80 TO PM R36.60

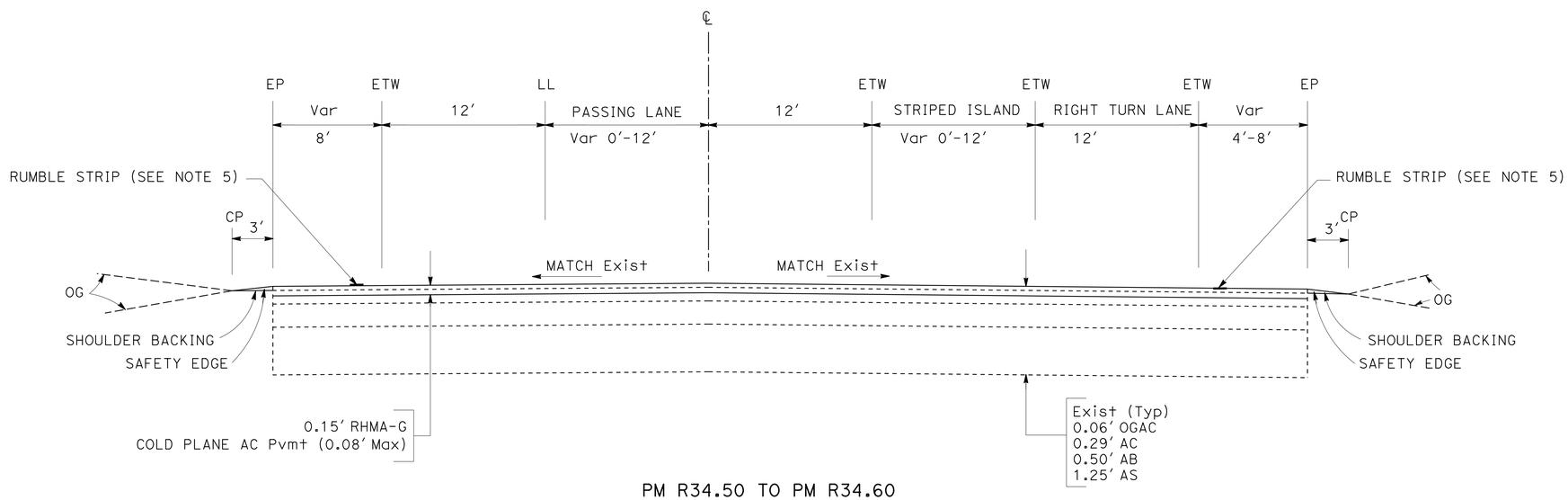

PM R34.50 TO PM R34.60

ROUTE 29

TYPICAL CROSS SECTION

NO SCALE

X-2

STATE OF CALIFORNIA - DEPARTMENT OF TRANSPORTATION
Caltrans® DIVISION OF ENGINEERING

FUNCTIONAL SUPERVISOR: JUSTIN UNCK
CALCULATED-DESIGNED BY: HUAN CUNG
CHECKED BY: WESLEY LEE
REVISED BY / DATE REVISED

LAST REVISION 00-00-00
DATE PLOTTED => 28-AUG-2014
TIME PLOTTED => 10:46

Dist	COUNTY	ROUTE	POST MILES TOTAL PROJECT	SHEET No.	TOTAL SHEETS
01	Lak	29	R34.4/R40.0	4	62

REGISTERED CIVIL ENGINEER 5-1-14 DATE

5-1-14
PLANS APPROVAL DATE

REGISTERED PROFESSIONAL ENGINEER HUAN M. CUNG No. C74406 Exp. 9-30-15 CIVIL STATE OF CALIFORNIA

THE STATE OF CALIFORNIA OR ITS OFFICERS OR AGENTS SHALL NOT BE RESPONSIBLE FOR THE ACCURACY OR COMPLETENESS OF SCANNED COPIES OF THIS PLAN SHEET.

NOTES:

1. EXISTING UTILITY FACILITIES ARE NOT SHOWN ON THESE PLANS.

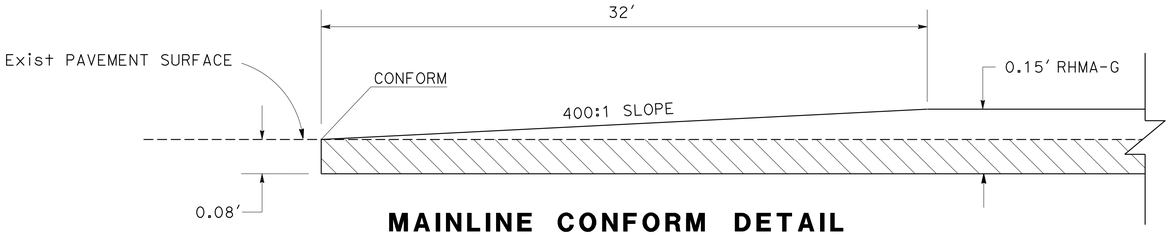

MAINLINE CONFORM DETAIL

PM R34.4; PM R40.00

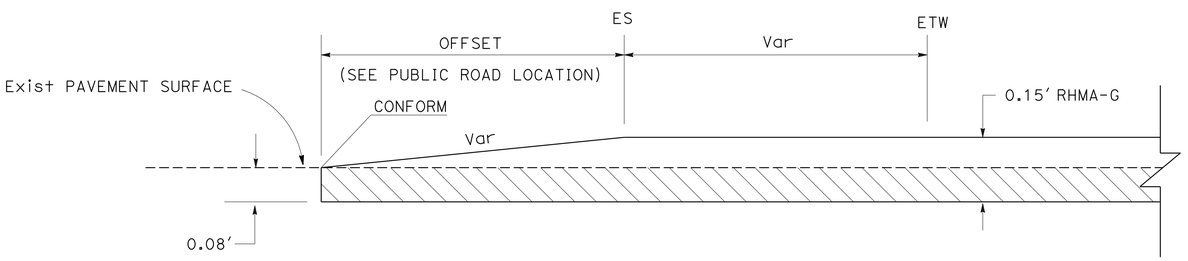

PUBLIC ROAD CONFORM DETAIL

PM R34.70; PM R35.04
PM R35.28; PM R36.00
PM R36.27; PM R37.41
PM R37.64; PM R38.58; PM R39.51

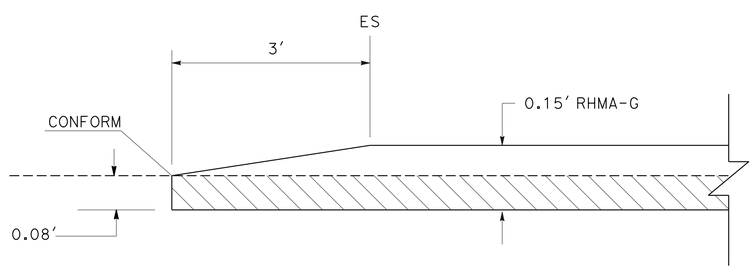

PRIVATE DRIVEWAY CONFORM DETAIL

PM R39.95

LEGEND:

COLD PLANE AC PAVEMENT

LIMIT OF PAVING

ABBREVIATION:

RHMA-G = RUBBERIZED HOT MIX ASPHALT (GAP GRADED)

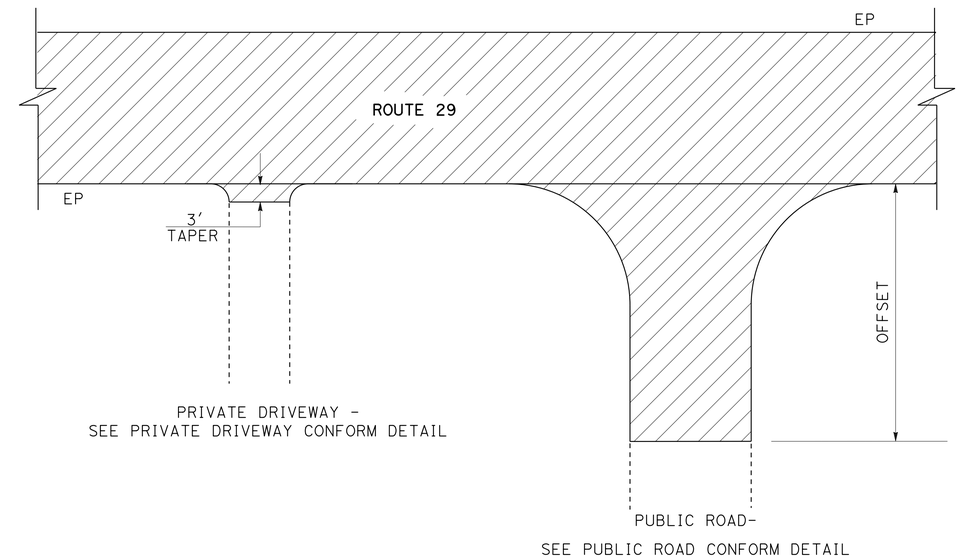

PAVING DETAIL

PUBLIC ROAD LOCATIONS

PM	NAME	OFFSET
R34.70	LIVE OAK DRIVE	40
R35.04	KELSEY CREEK DRIVE	25
R35.28	BELL HILL ROAD	30
R36.00	MERRIT ROAD	25
R36.27	RENFRO DRIVE	30
R37.41	THOMAS DRIVE	25
R37.64	ARGONAUT ROAD	25
R38.58	HIGHLAND SPRINGS ROAD	40
R39.51	ACKLEY ROAD	25

CONSTRUCTION DETAILS

NO SCALE

C-1

STATE OF CALIFORNIA - DEPARTMENT OF TRANSPORTATION
Caltrans® DIVISION OF ENGINEERING

FUNCTIONAL SUPERVISOR: JUSTIN UNCK
CALCULATED-DESIGNED BY: HUAN CUNG
CHECKED BY: WESLEY LEE
REVISED BY
DATE REVISED

LAST REVISION 00-00-00
DATE PLOTTED => 28-AUG-2014
TIME PLOTTED => 10:46

Dist	COUNTY	ROUTE	POST MILES TOTAL PROJECT	SHEET No.	TOTAL SHEETS
01	Lak	29	R34.4/R40.0	5	62

REGISTERED CIVIL ENGINEER 5-1-14 DATE

5-1-14
PLANS APPROVAL DATE

REGISTERED PROFESSIONAL ENGINEER HUAN M. CUNG No. C74406 Exp. 9-30-15 CIVIL STATE OF CALIFORNIA

THE STATE OF CALIFORNIA OR ITS OFFICERS OR AGENTS SHALL NOT BE RESPONSIBLE FOR THE ACCURACY OR COMPLETENESS OF SCANNED COPIES OF THIS PLAN SHEET.

NOTES:

1. EXISTING UTILITY FACILITIES ARE NOT SHOWN ON THESE PLANS
2. SEE STANDARD PLANS FOR ADDITIONAL RUMBLE STRIP INFORMATION

LEGEND:

COLD PLANE AC PAVEMENT

ABBREVIATION:

RHMA-G = RUBBERIZED HOT MIX ASPHALT (GAP GRADED)

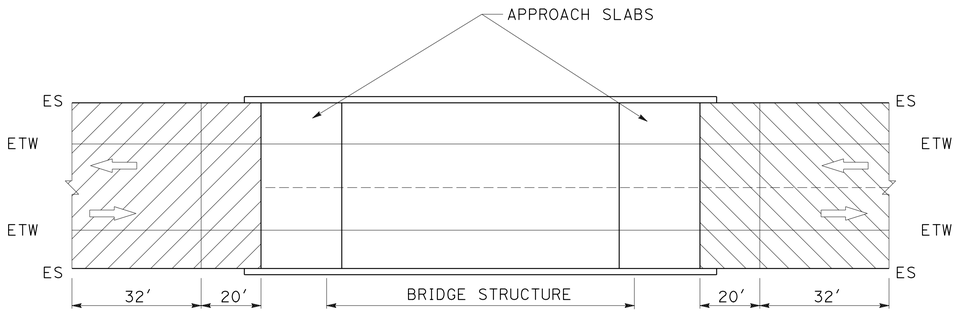

BRIDGE TRANSITION TAPER AND PAVEMENT CONFORM

PM R34.97 (KELSEY CREEK Br.)
PM R37.56 (ADOBE CREEK Br.)

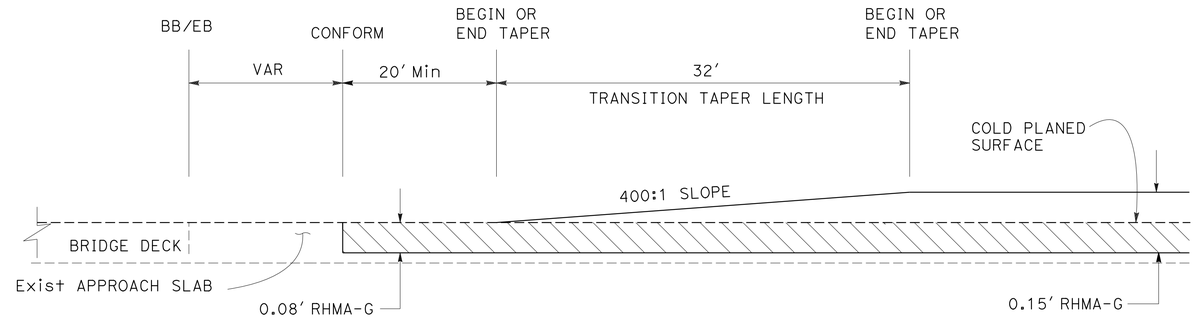

TRANSITION TAPER - PROFILE

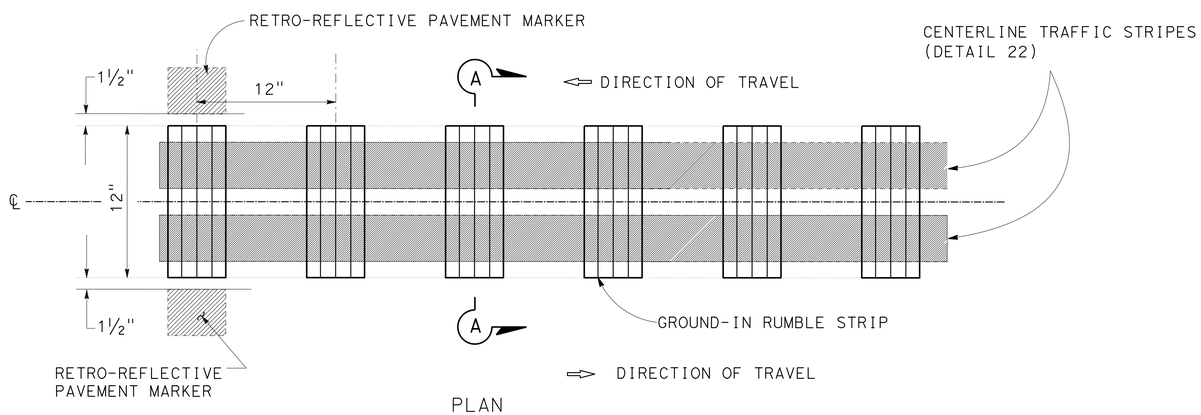

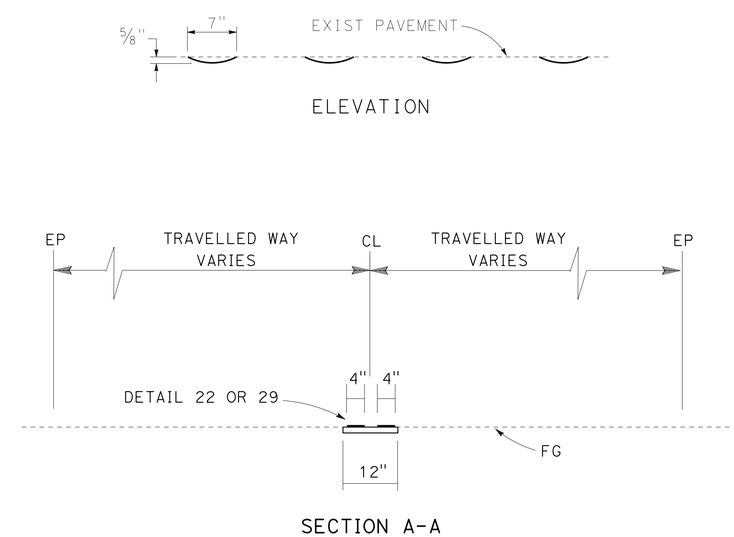

CENTERLINE RUMBLE STRIP (HMA, GROUND-IN INDENTATIONS)

CONSTRUCTION DETAILS

NO SCALE

C-2

STATE OF CALIFORNIA - DEPARTMENT OF TRANSPORTATION
Caltrans DIVISION OF ENGINEERING

FUNCTIONAL SUPERVISOR: JUSTIN UNCK
CALCULATED-DESIGNED BY: HUAN CUNG
CHECKED BY: WESLEY LEE
REVISED BY / DATE REVISED

LAST REVISION 00-00-00
DATE PLOTTED => 28-AUG-2014
TIME PLOTTED => 10:46

Dist	COUNTY	ROUTE	POST MILES TOTAL PROJECT	SHEET No.	TOTAL SHEETS
01	Lak	29	R34.4/R40.0	6	62

REGISTERED CIVIL ENGINEER 5-1-14 DATE

5-1-14
PLANS APPROVAL DATE

REGISTERED PROFESSIONAL ENGINEER HUAN M. CUNG No. C74406 Exp. 9-30-15 CIVIL STATE OF CALIFORNIA

THE STATE OF CALIFORNIA OR ITS OFFICERS OR AGENTS SHALL NOT BE RESPONSIBLE FOR THE ACCURACY OR COMPLETENESS OF SCANNED COPIES OF THIS PLAN SHEET.

NOTES:

1. RUMBLE STRIPS, AS SHOWN ON THIS PLAN SHALL NOT BE CONSTRUCTED ON BRIDGE DECKS, BRIDGE APPROACH SLABS, RAMPS, PUBLIC AND PRIVATE ROAD APPROACHES AND MAJOR (COMMERCIAL ENTRANCE OR MULTIPLE RESIDENTS) DRIVEWAYS.

LEGEND

DIRECTION OF TRAVEL

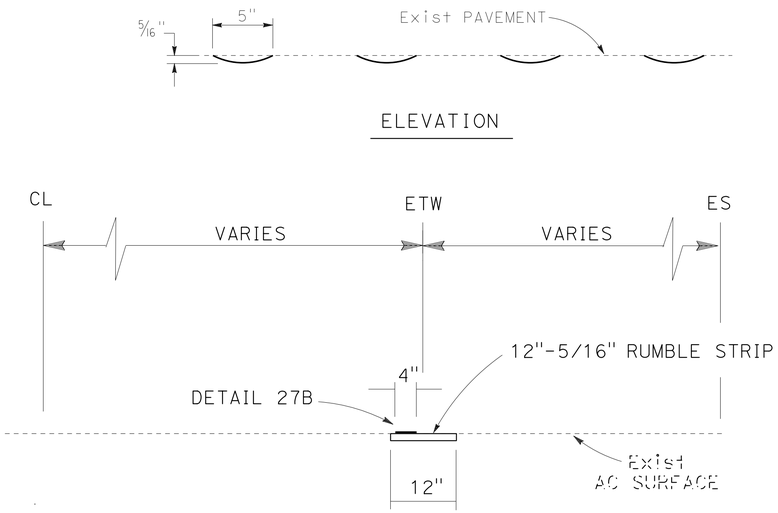

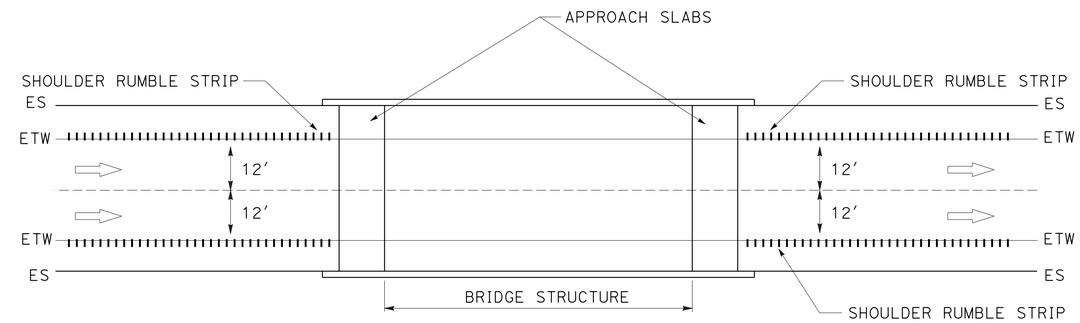

RUMBLE STRIPS AT BRIDGE APPROACHES

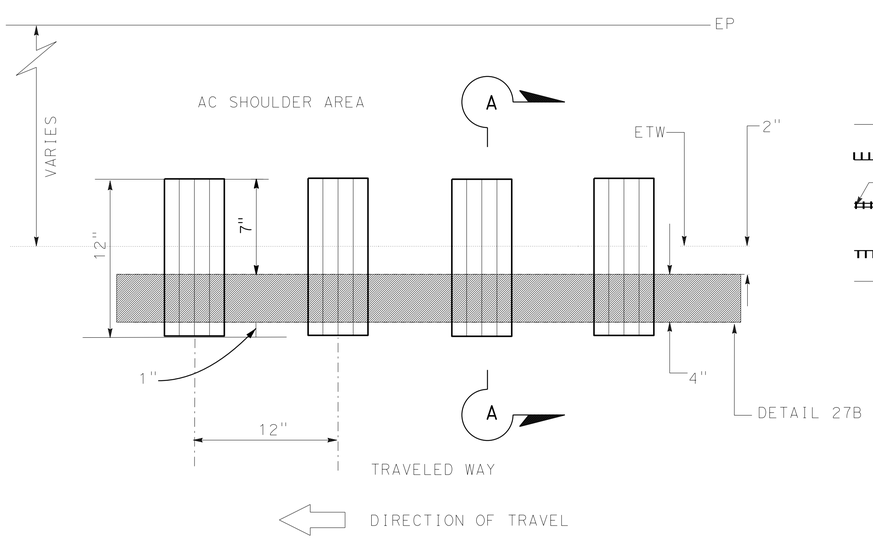

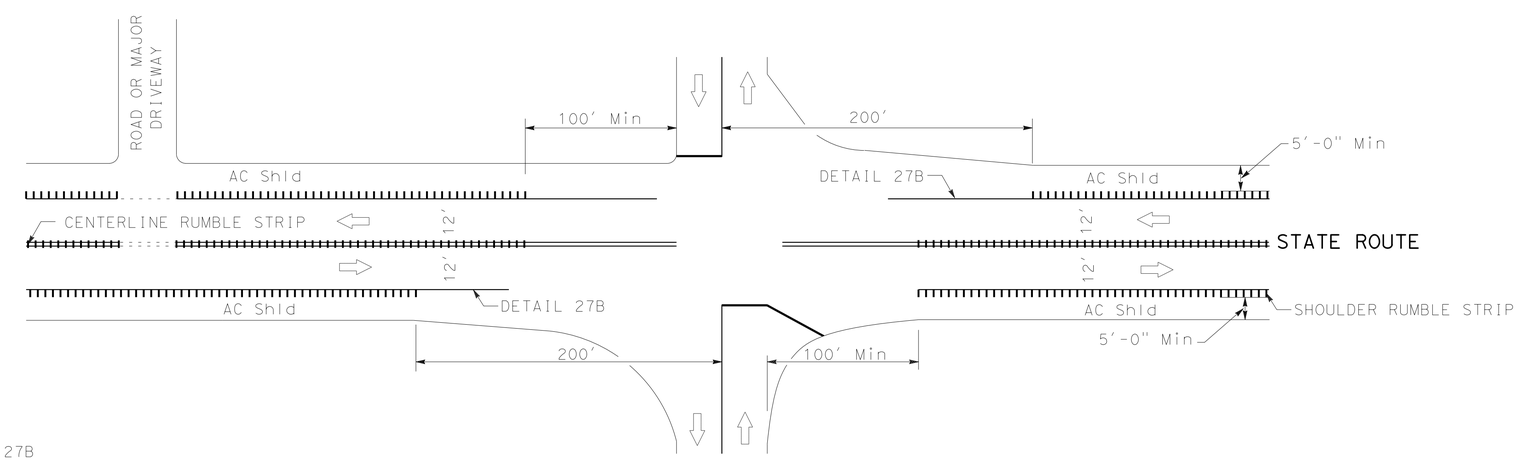

RUMBLE STRIPS AT INTERSECTING ROADS AND MAJOR DRIVEWAYS

OUTSIDE/RIGHT SHOULDER GROUND IN RUMBLE STRIP

(SEE NOTES ABOVE)

CONSTRUCTION DETAILS

NO SCALE

C-3

STATE OF CALIFORNIA - DEPARTMENT OF TRANSPORTATION
Caltrans DIVISION OF ENGINEERING

FUNCTIONAL SUPERVISOR: JUSTIN UNCK
CALCULATED-DESIGNED BY: HUAN CUNG
CHECKED BY: WESLEY LEE
REVISED BY
DATE REVISED

LAST REVISION 00-00-00
DATE PLOTTED => 28-AUG-2014
TIME PLOTTED => 10:46

Dist	COUNTY	ROUTE	POST MILES TOTAL PROJECT	SHEET No.	TOTAL SHEETS
01	Lak	29	R34.4/R40.0	7	62

REGISTERED CIVIL ENGINEER 5-1-14 DATE

5-1-14
PLANS APPROVAL DATE

REGISTERED PROFESSIONAL ENGINEER HUAN M. CUNG No. C74406 Exp. 9-30-15 CIVIL STATE OF CALIFORNIA

THE STATE OF CALIFORNIA OR ITS OFFICERS OR AGENTS SHALL NOT BE RESPONSIBLE FOR THE ACCURACY OR COMPLETENESS OF SCANNED COPIES OF THIS PLAN SHEET.

NOTES:

1. EXISTING UTILITY FACILITIES ARE NOT SHOWN ON THESE PLANS.

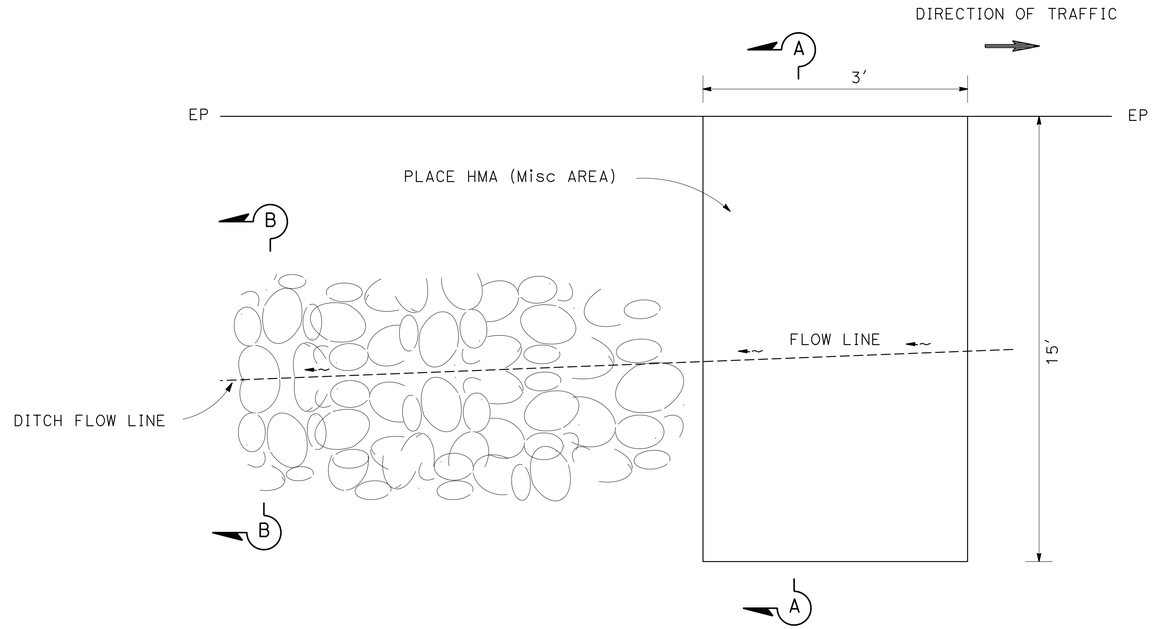

PLAN

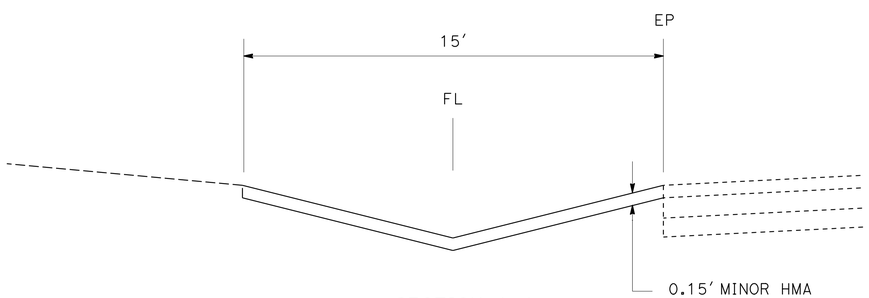

SECTION A-A

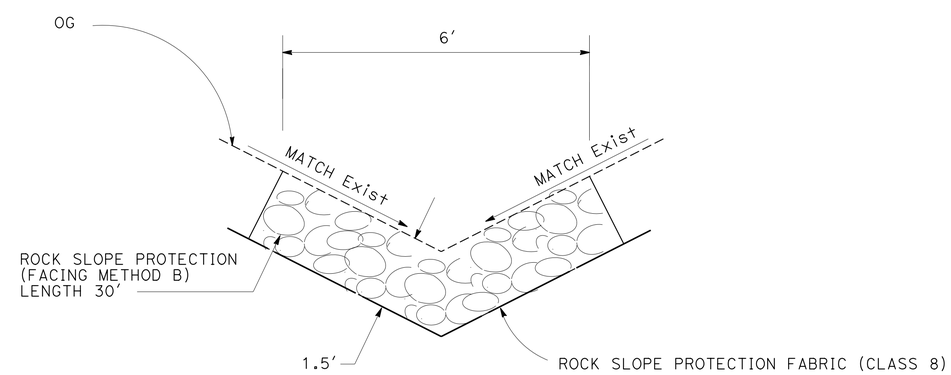

SECTION B-B

RSP LINED DITCH
PM R36.41 SB

CONSTRUCTION DETAILS

NO SCALE

C-4

STATE OF CALIFORNIA - DEPARTMENT OF TRANSPORTATION
Caltrans® DIVISION OF ENGINEERING

FUNCTIONAL SUPERVISOR: JUSTIN UNCK

CALCULATED-DESIGNED BY: HUAN CUNG
CHECKED BY: WESLEY LEE

REVISED BY
DATE REVISED

LAST REVISION 00-00-00
DATE PLOTTED => 28-AUG-2014
TIME PLOTTED => 10:46

Dist	COUNTY	ROUTE	POST MILES TOTAL PROJECT	SHEET No.	TOTAL SHEETS
01	Lak	29	R34.4/R40.0	8	62

REGISTERED CIVIL ENGINEER 5-1-14 DATE

5-1-14
PLANS APPROVAL DATE

REGISTERED PROFESSIONAL ENGINEER HUAN M. CUNG No. C74406 Exp. 9-30-15 CIVIL STATE OF CALIFORNIA

THE STATE OF CALIFORNIA OR ITS OFFICERS OR AGENTS SHALL NOT BE RESPONSIBLE FOR THE ACCURACY OR COMPLETENESS OF SCANNED COPIES OF THIS PLAN SHEET.

NOTES:

1. EXISTING UTILITY FACILITIES ARE NOT SHOWN ON THESE PLANS.
2. FOR ADJUST INLET AT MEDIANS, TAPER HMA AS SHOWN.

LEGEND

CONCRETE

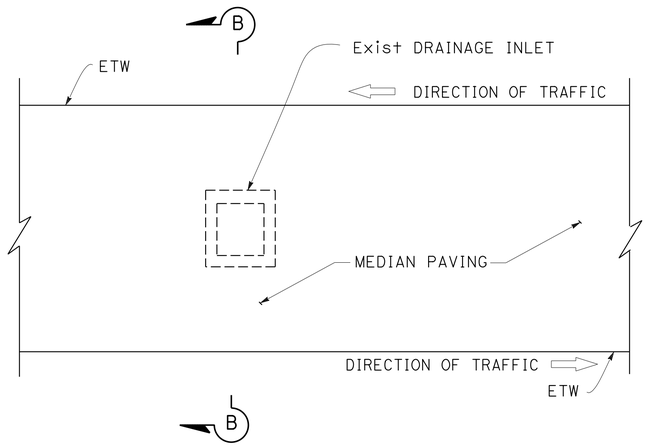

PLAN

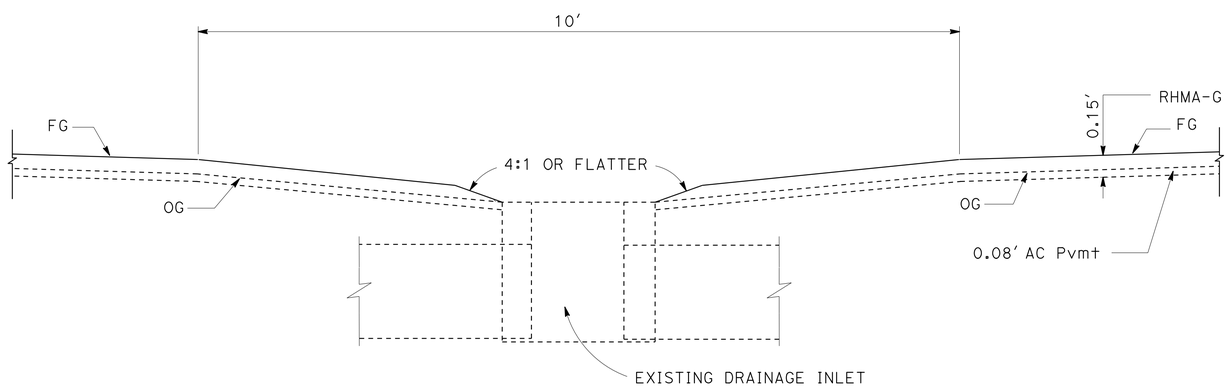

SECTION B-B

MEDIAN INLET PAVING DETAIL

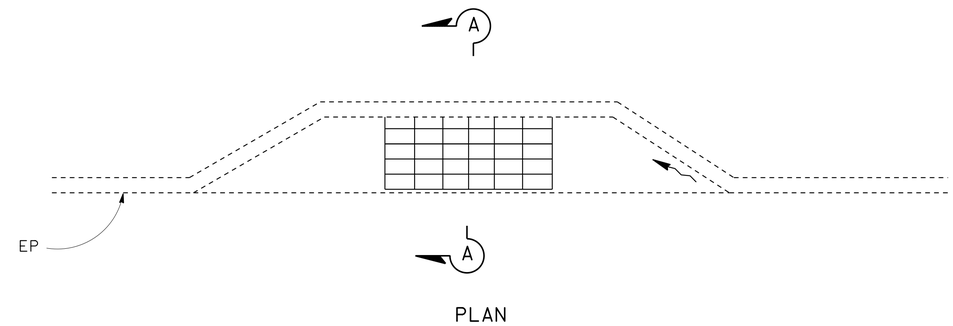

PLAN

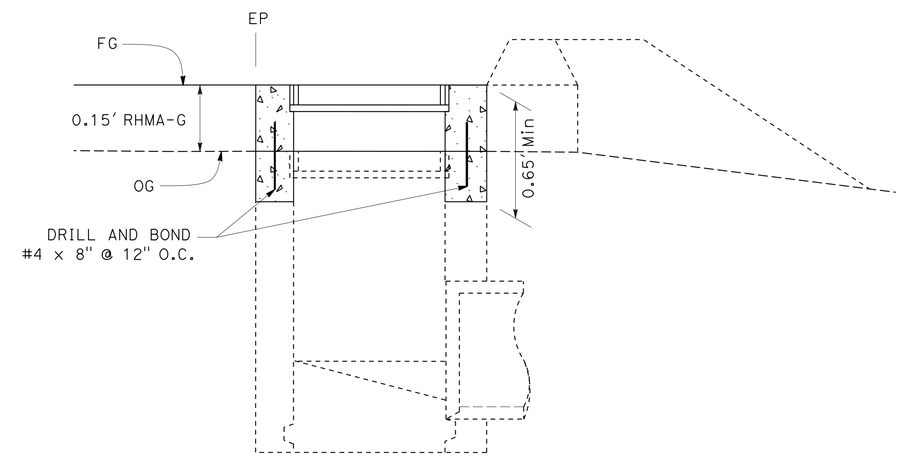

SECTION A-A

ADJUST INLET

ROUTE 29
DRAINAGE INLET DETAILS

CONSTRUCTION DETAILS

NO SCALE

C-5

3866

STATE OF CALIFORNIA - DEPARTMENT OF TRANSPORTATION
Caltrans DIVISION OF ENGINEERING

FUNCTIONAL SUPERVISOR: JUSTIN UNCK
CALCULATED-DESIGNED BY: WESLEY LEE
CHECKED BY: HUAN CUNG
REVISED BY
DATE REVISED

LAST REVISION 00-00-00
DATE PLOTTED => 28-AUG-2014
TIME PLOTTED => 10:46

Dist	COUNTY	ROUTE	POST MILES TOTAL PROJECT	SHEET No.	TOTAL SHEETS
01	Lak	29	R34.4/R40.0	9	62

REGISTERED CIVIL ENGINEER 5-1-14 DATE

5-1-14
PLANS APPROVAL DATE

REGISTERED PROFESSIONAL ENGINEER HUAN M. CUNG No. C74406 Exp. 9-30-15 CIVIL STATE OF CALIFORNIA

THE STATE OF CALIFORNIA OR ITS OFFICERS OR AGENTS SHALL NOT BE RESPONSIBLE FOR THE ACCURACY OR COMPLETENESS OF SCANNED COPIES OF THIS PLAN SHEET.

NOTES:

1. EXISTING UTILITY FACILITIES ARE NOT SHOWN ON THESE PLANS.
2. REPLACE AC SURFACING OCCURS AFTER COLD PLANE AC PAVEMENT.
3. CRACK TREATMENT IS APPLIED TO THE COLD PLANE AC PAVEMENT SURFACES.

LEGEND

→ DIRECTION OF TRAVEL

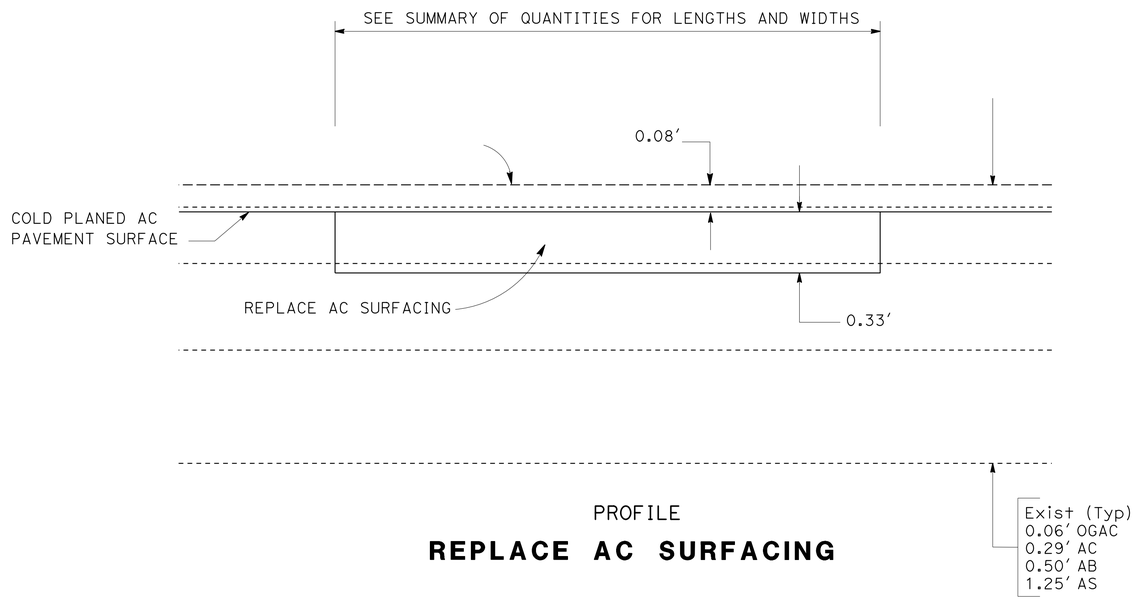

PROFILE

REPLACE AC SURFACING

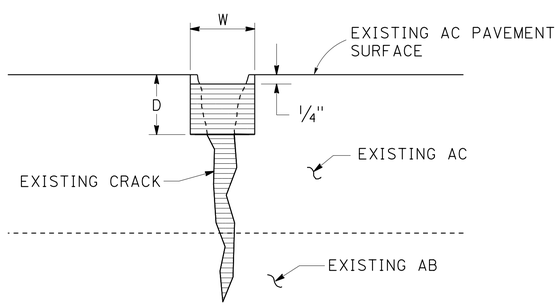

CRACK TREATMENT PROFILE

W = WIDTH OF ROUTING = WIDTH OF CRACK + 1/4" Min
D = DEPTH OF ROUTING = W + 1/4" Min

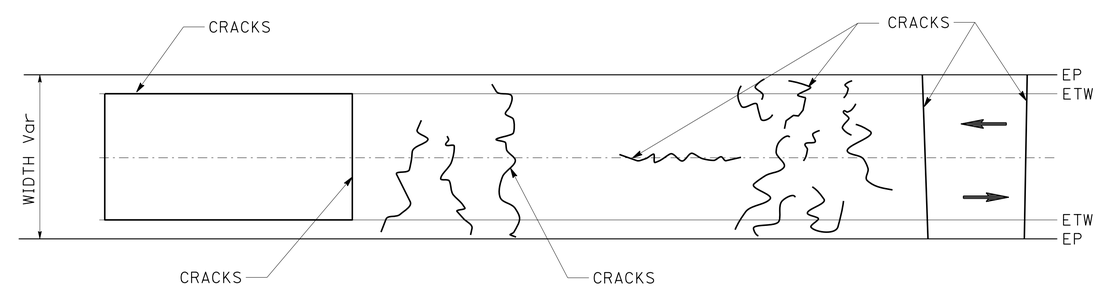

PLAN

CRACK TREATMENT

CONSTRUCTION DETAILS

NO SCALE

C-6

STATE OF CALIFORNIA - DEPARTMENT OF TRANSPORTATION
Caltrans® DIVISION OF ENGINEERING

FUNCTIONAL SUPERVISOR: JUSTIN UNCK
CALCULATED-DESIGNED BY: WESLEY LEE
CHECKED BY: HUAN CUNG
REVISED BY
DATE REVISED

LAST REVISION 00-00-00 | DATE PLOTTED => 28-AUG-2014 | TIME PLOTTED => 10:46

Dist	COUNTY	ROUTE	POST MILES TOTAL PROJECT	SHEET No.	TOTAL SHEETS
01	Lak	29	R34.4/R40.0	10	62

REGISTERED CIVIL ENGINEER 5-1-14 DATE

5-1-14
PLANS APPROVAL DATE

REGISTERED PROFESSIONAL ENGINEER HUAN M. CUNG No. C74406 Exp. 9-30-15 CIVIL STATE OF CALIFORNIA

THE STATE OF CALIFORNIA OR ITS OFFICERS OR AGENTS SHALL NOT BE RESPONSIBLE FOR THE HMACURHMAY OR COMPLETENESS OF SCANNED COPIES OF THIS PLAN SHEET.

NOTES:

1. EXISTING UTILITY FACILITIES ARE NOT SHOWN IN THESE PLANS.

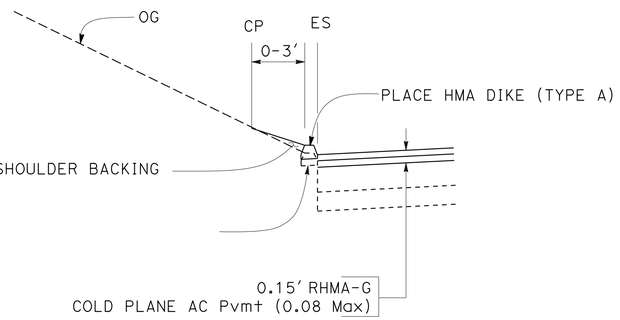

PM R39.87 TO PM R39.97 (NB)
PM R39.85 TO PM R39.91 (NB)

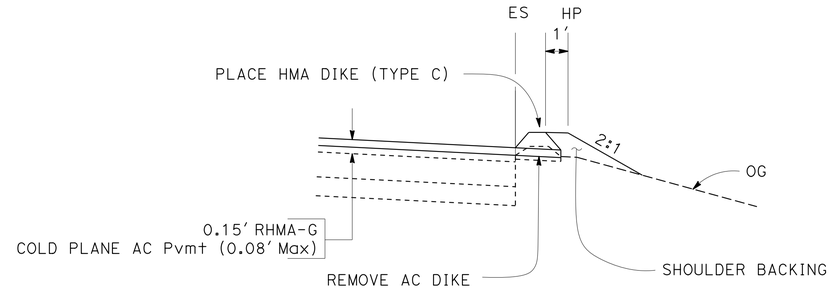

PM R34.96 TO PM R34.97 (SB)
PM R35.01 TO PM R35.02 (SB)

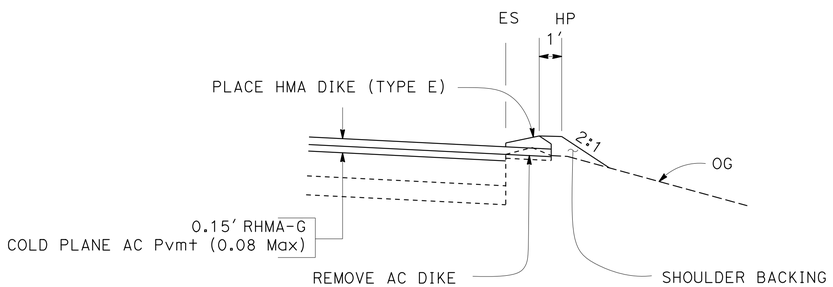

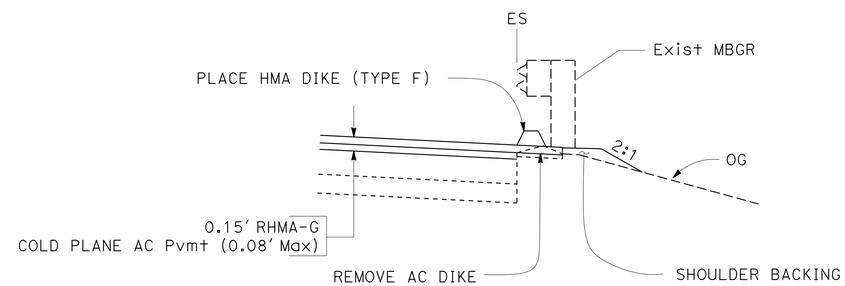

PM R34.43 TO PM R34.56 (SB)
PM R34.83 TO PM R34.88 (SB)
PM R34.91 TO PM R34.95 (SB)
PM R35.02 TO PM R35.06 (SB)
PM R35.06 TO PM R35.32 (SB)
PM R35.05 TO PM R35.18 (NB)
PM R35.29 TO PM R35.32 (NB)
PM R35.38 TO PM R35.62 (NB)

PM R35.69 TO PM R36.04 (NB)
PM R35.74 TO PM R36.00 (SB)
PM R36.05 TO PM R36.11 (NB)
PM R36.24 TO PM R36.60 (NB)
PM R37.39 TO PM R37.68 (SB)
PM R39.31 TO PM R39.53 (NB)
PM R39.70 TO PM R39.86 (NB)
PM R39.98 TO PM R40.00 (NB)

PM R35.40 TO PM R35.74 (SB)
PM R36.08 TO PM R36.18 (SB)
PM R36.33 TO PM R36.36 (SB)
PM R39.54 TO PM R39.70 (NB)

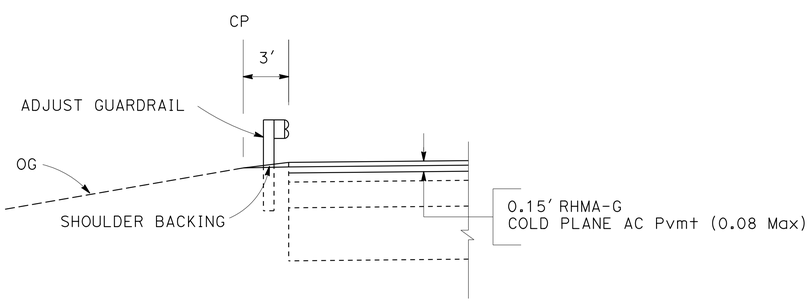

PM R34.90 PM R37.59
PM R35.01 PM R38.54
PM R35.01 PM R38.63
PM R36.73 PM R38.90
PM R37.56

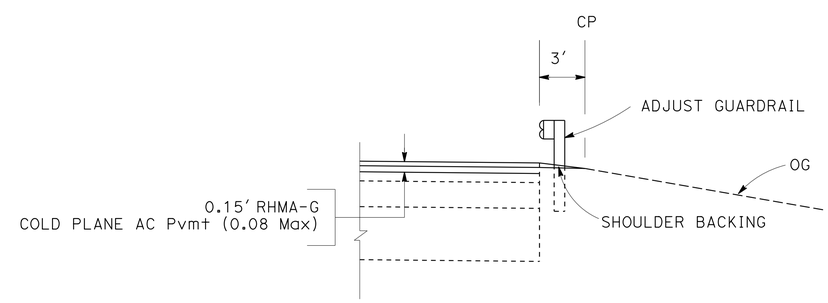

PM R34.90 PM R37.59
PM R35.01 PM R38.54
PM R35.01 PM R38.63
PM R36.73 PM R38.90
PM R37.56

ROUTE 29
METAL BEAM GUARDRAIL AND DIKE DETAILS

CONSTRUCTION DETAILS
NO SCALE
C-7

STATE OF CALIFORNIA - DEPARTMENT OF TRANSPORTATION
Caltrans DIVISION OF ENGINEERING

FUNCTIONAL SUPERVISOR: JUSTIN UNCK
CALCULATED-DESIGNED BY: WESLEY LEE
CHECKED BY: HUAN CUNG
REVISED BY
DATE REVISED

LAST REVISION 00-00-00
DATE PLOTTED => 28-AUG-2014
TIME PLOTTED => 10:46

Dist	COUNTY	ROUTE	POST MILES TOTAL PROJECT	SHEET No.	TOTAL SHEETS
01	Lak	29	R34.4/R40.0	11	62

REGISTERED CIVIL ENGINEER 5-1-14 DATE

5-1-14
PLANS APPROVAL DATE

REGISTERED PROFESSIONAL ENGINEER HUAN M. CUNG No. C74406 Exp. 9-30-15 CIVIL STATE OF CALIFORNIA

THE STATE OF CALIFORNIA OR ITS OFFICERS OR AGENTS SHALL NOT BE RESPONSIBLE FOR THE ACCURACY OR COMPLETENESS OF SCANNED COPIES OF THIS PLAN SHEET.

NOTES:
1. EXISTING UTILITY FACILITIES ARE NOT SHOWN ON THESE PLANS.
2. REMOVE CONCRETE FACILITATES THE CONSTRUCTION FOR MINOR CONCRETE (CURB RAMP)
3. MINOR CONCRETE (CURB RAMP) ACCOUNTS FOR CURB RAMP CASE G AND IS MODIFIED BY SPECIFYING A 5′ WIDE RAMP AND BY HAVING A CONCRETE PAVED SURFACE IN LIEU OF A STANDARD PLANTER AREA FOR CASE G. SEE STANDARD PLANS FOR INFORMATION NOT SHOWN.

LEGEND:

PLACE AC (Misc AREA)

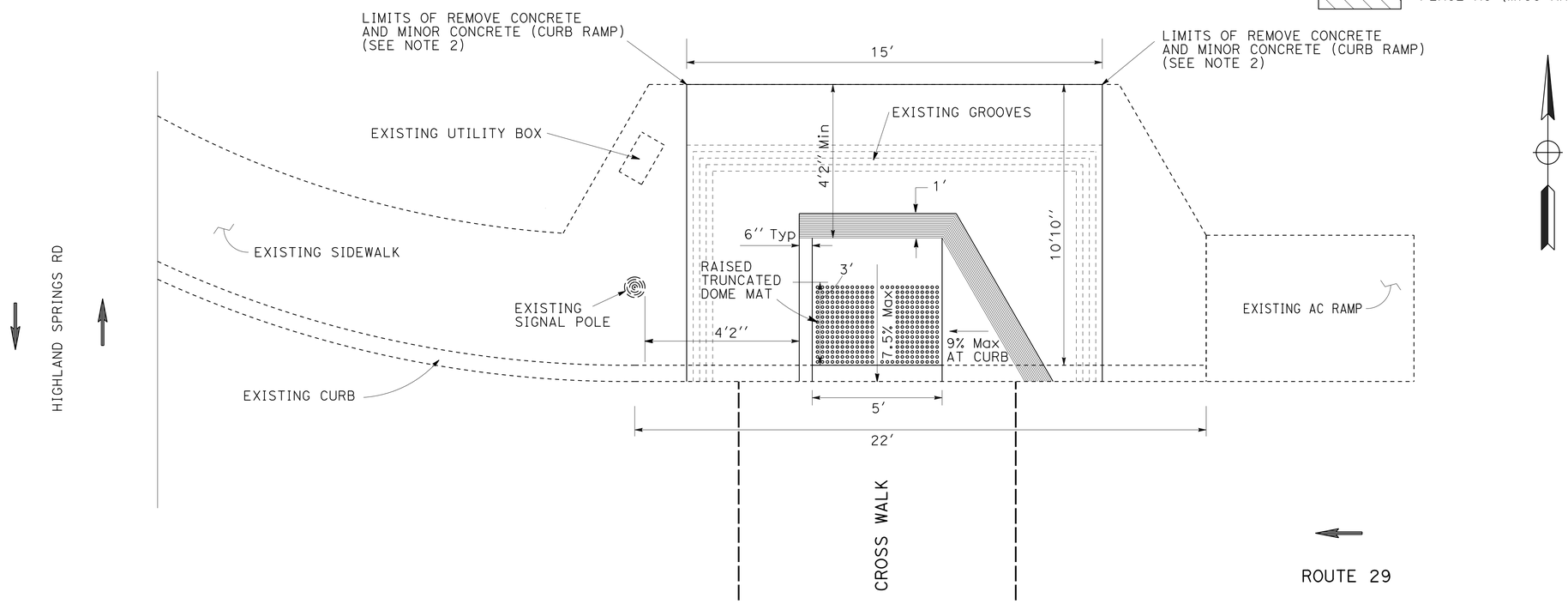

NE CONNER SIDEWALK
HIGHLAND SPRINGS RD INTERSECTION

MINOR CONCRETE (CURB RAMP)

CURB RAMP DETAIL

(MODIFIED CASE G)
SEE NOTE 3

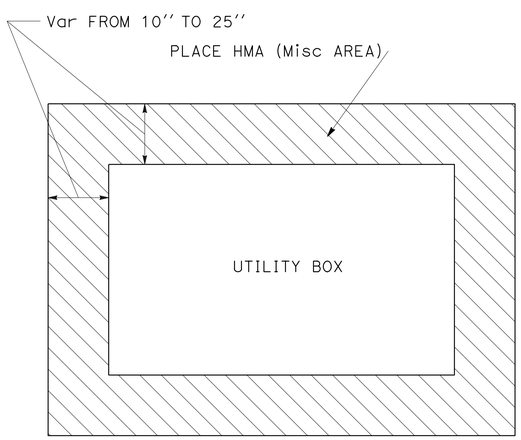

PLAN

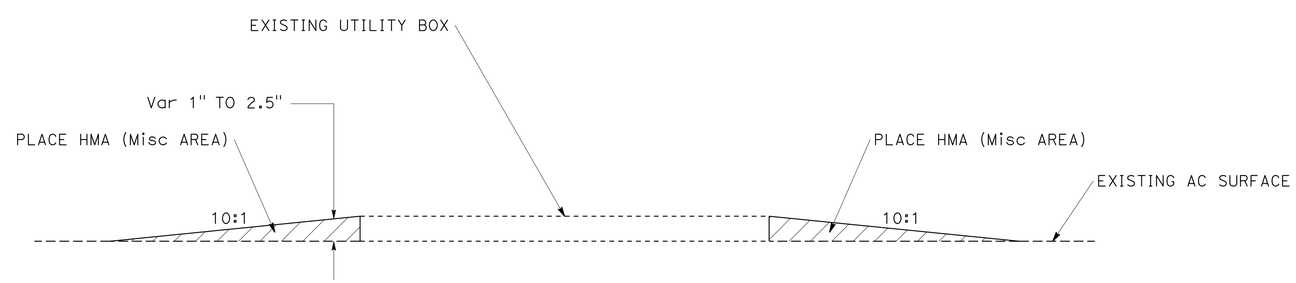

ELEVATION

UTILITY BOX SURFACE FLUSHING DETAIL

NE CORNER AND SE CORNER OF LIVE OAK DRIVE

CONSTRUCTION DETAILS

NO SCALE

C-8

STATE OF CALIFORNIA - DEPARTMENT OF TRANSPORTATION
Caltrans® DIVISION OF ENGINEERING

FUNCTIONAL SUPERVISOR: JUSTIN UNCK
CALCULATED-DESIGNED BY: WESLEY LEE
CHECKED BY: HUAN CUNG
REVISED BY
DATE REVISED

LAST REVISION 00-00-00
DATE PLOTTED => 28-AUG-2014
TIME PLOTTED => 10:46

Dist	COUNTY	ROUTE	POST MILES TOTAL PROJECT	SHEET No.	TOTAL SHEETS
01	Lak	29	R34.4/R40.0	12	62

Kris M. Albers 5-1-14
REGISTERED CIVIL ENGINEER DATE

5-1-14
PLANS APPROVAL DATE

REGISTERED PROFESSIONAL ENGINEER
KRIS M. ALBERS
No. 49986
Exp. 6-30-15
CIVIL
STATE OF CALIFORNIA

THE STATE OF CALIFORNIA OR ITS OFFICERS OR AGENTS SHALL NOT BE RESPONSIBLE FOR THE ACCURACY OR COMPLETENESS OF SCANNED COPIES OF THIS PLAN SHEET.

STATIONARY MOUNTED CONSTRUCTION AREA SIGNS

SIGN LETTER	SIGN CODE FEDERAL	SIGN CODE CALIFORNIA	PANEL SIZE	SIGN MESSAGE	NUMBER OF POST AND SIZE	NUMBER OF SIGNS
A		C40	108" x 42"	TRAFFIC FINES DOUBLED IN CONSTRUCTION ZONES	2 - 6" x 6"	2
B	G20-1		90" x 48"	ROAD WORK NEXT 6 MILES	2 - 6" x 6"	2
C	W20-1		36" x 36"	ROAD WORK AHEAD	1 - 4" x 6"	22
D	G20-2		48" x 24"	END ROAD WORK	1 - 4" x 6"	2
E	W11-1 W16-1		36" x 36" 24" x 30"	BICYCLE SYMBOL SHARE THE ROAD	1 - 4" x 6"	2

LEGEND

(X) CONSTRUCTION AREA SIGN LETTER

NOTE:

1. EXACT SIGN LOCATION TO BE DETERMINED BY THE ENGINEER.

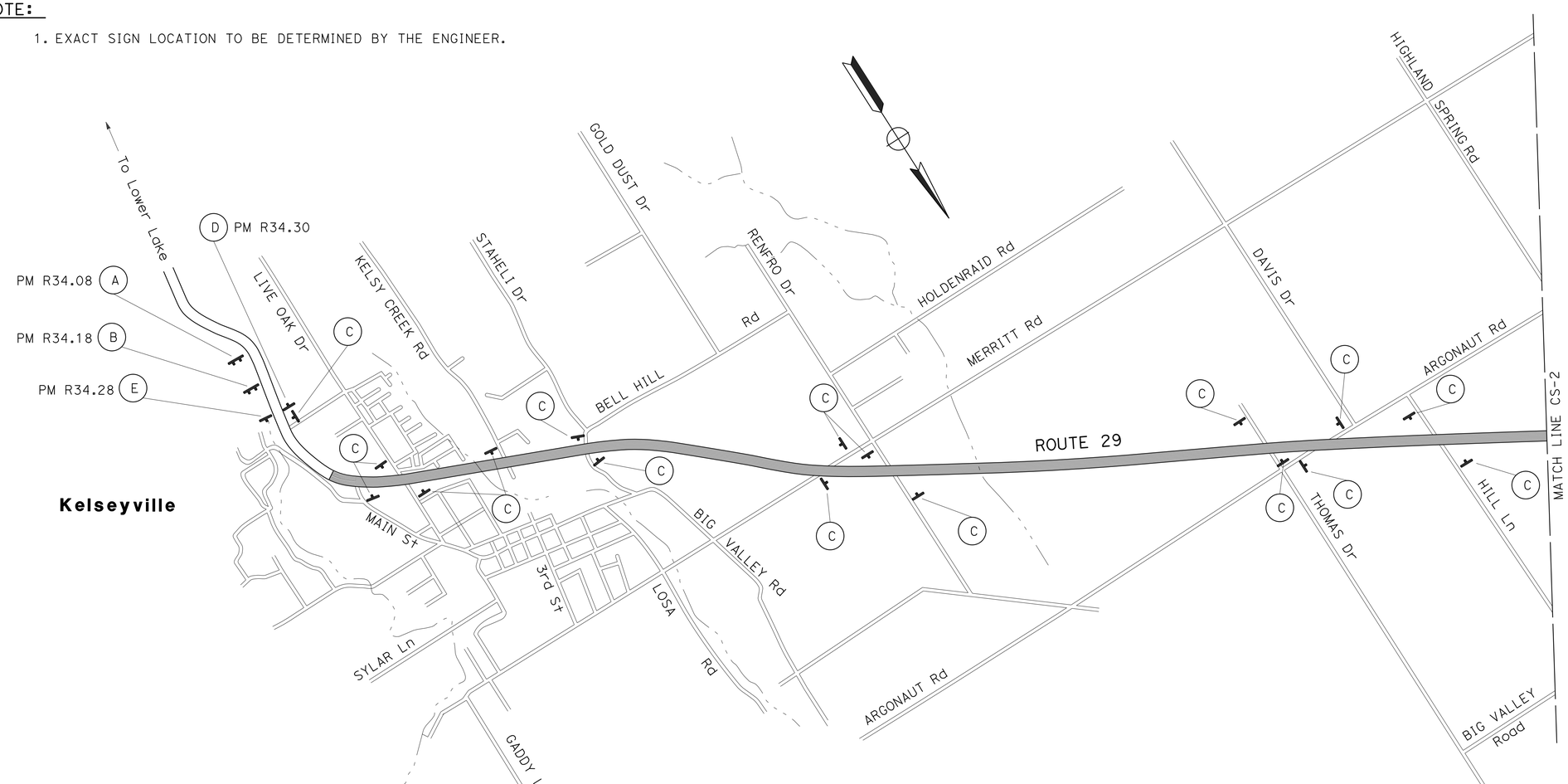

CONSTRUCTION AREA SIGNS

NO SCALE

APPROVED FOR CONSTRUCTION AREA SIGN WORK ONLY

CS-1

STATE OF CALIFORNIA - DEPARTMENT OF TRANSPORTATION
Caltrans
TRAFFIC

FUNCTIONAL SUPERVISOR: SERGIO ACEVES
CALCULATED-DESIGNED BY: KRIS ALBERS
CHECKED BY: CHUCK COOK
REVISED BY
DATE REVISED

LAST REVISION 03-13-14
DATE PLOTTED => 28-AUG-2014
TIME PLOTTED => 10:46

Dist	COUNTY	ROUTE	POST MILES TOTAL PROJECT	SHEET No.	TOTAL SHEETS
01	Lak	29	R34.4/R40.0	13	62

Kris M. Albers 5-1-14
REGISTERED CIVIL ENGINEER DATE

5-1-14
PLANS APPROVAL DATE

REGISTERED PROFESSIONAL ENGINEER
KRIS M. ALBERS
No. 49986
Exp. 6-30-15
CIVIL
STATE OF CALIFORNIA

THE STATE OF CALIFORNIA OR ITS OFFICERS OR AGENTS SHALL NOT BE RESPONSIBLE FOR THE ACCURACY OR COMPLETENESS OF SCANNED COPIES OF THIS PLAN SHEET.

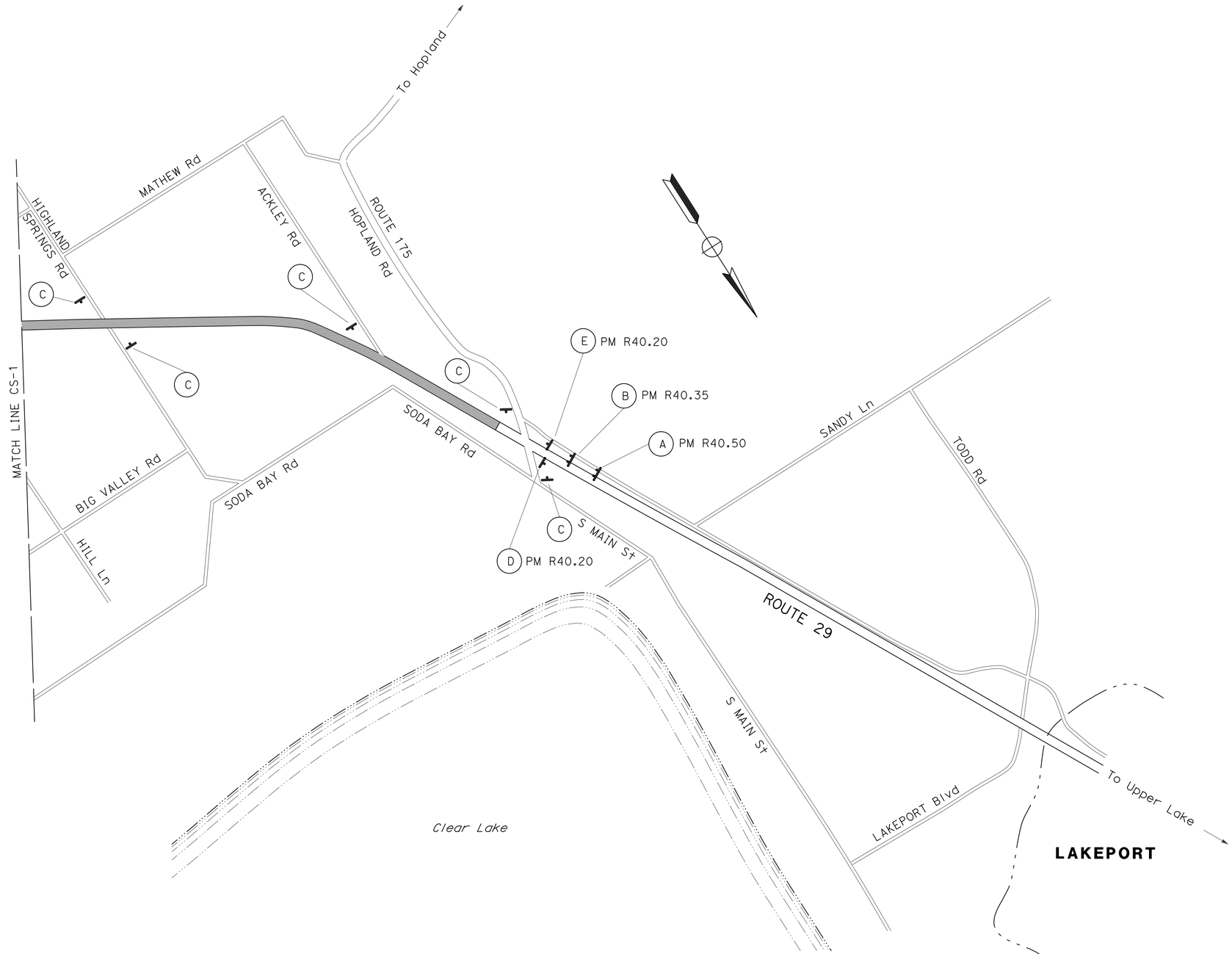

CONSTRUCTION AREA SIGNS

NO SCALE

APPROVED FOR CONSTRUCTION AREA SIGN WORK ONLY

CS-2

STATE OF CALIFORNIA - DEPARTMENT OF TRANSPORTATION
Caltrans
TRAFFIC

FUNCTIONAL SUPERVISOR: SERGIO ACEVES
CALCULATED-DESIGNED BY: CHUCK COOK
CHECKED BY: KRIS ALBERS
REVISED BY
DATE REVISED

LAST REVISION 03-11-14
DATE PLOTTED => 28-AUG-2014
TIME PLOTTED => 10:46

Dist	COUNTY	ROUTE	POST MILES TOTAL PROJECT	SHEET No.	TOTAL SHEETS
01	Lak	29	R34.4/R40.0	14	62

Kris M. Albers 5-1-14
REGISTERED CIVIL ENGINEER DATE

5-1-14
PLANS APPROVAL DATE

REGISTERED PROFESSIONAL ENGINEER
KRIS M. ALBERS
No. 49986
Exp. 6-30-15
CIVIL
STATE OF CALIFORNIA

THE STATE OF CALIFORNIA OR ITS OFFICERS OR AGENTS SHALL NOT BE RESPONSIBLE FOR THE ACCURACY OR COMPLETENESS OF SCANNED COPIES OF THIS PLAN SHEET.

4" THERMOPLASTIC TRAFFIC STRIPE

DETAIL NUMBER	LF
19	2,311
21	840
22	15,384
25A	100
27B	53,948
29	42,424
TOTAL	115,007

6" THERMOPLASTIC TRAFFIC STRIPE

DETAIL NUMBER	LF
39	120
TOTAL	120

8" THERMOPLASTIC TRAFFIC STRIPE

DETAIL NUMBER	LF
36	1,560
38	4,690
TOTAL	6,250

PAVEMENT MARKER

DETAIL NUMBER	RETROREFLECTIVE		
	TYPE D EA	TYPE G EA	TYPE H EA
6	190		
12		40	
19	50		98
22	644		
25A			4
29	886		
36		66	
38		197	
SUBTOTAL	1,770	303	102
TOTAL	2,175		

6" THERMOPLASTIC TRAFFIC STRIPE (BROKEN 8 - 4)

DETAIL NUMBER	LF
39A	120
TOTAL	120

4" THERMOPLASTIC TRAFFIC STRIPE (BROKEN 12 - 3)

DETAIL NUMBER	LF
27C	3,045
TOTAL	3,045

4" THERMOPLASTIC TRAFFIC STRIPE (BROKEN 36 - 12)

DETAIL NUMBER	LF
6	9,032
12	1,873
19	2,311
TOTAL	13,216

THERMOPLASTIC PAVEMENT MARKING

DESCRIPTION	NUMBER	SQFT
TYPE II ARROW	5	110
TYPE III ARROW	20	840
TYPE V ARROW	30	990
TYPE VI ARROW	19	798
"SIGNAL"	1	32
"STOP"	14	308
"AHEAD"	1	31
"SLOW"	1	23
"TO"	1	11
"15"	1	15
12" YELLOW DIAGONALS	188	6,389
LIMIT LINE	12	479
CROSSWALK	8	1,439
TOTAL		11,464

NOTES:

1. YELLOW DIAGONALS SHALL BE PLACED 15' CENTER TO CENTER.
2. ALL CROSSWALKS ARE 1'-0" BASIC.

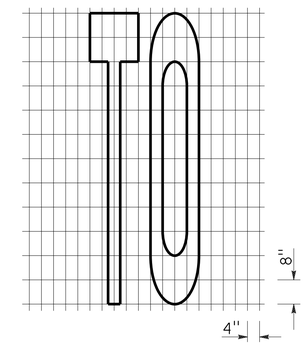

A=11 ft^2

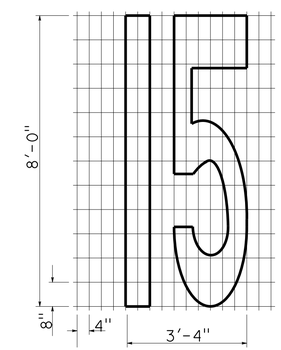

A=15 ft^2

PAVEMENT MARKING DETAILS

PAVEMENT DELINEATION DETAILS AND QUANTITIES

PDQ-1

STATE OF CALIFORNIA - DEPARTMENT OF TRANSPORTATION
Caltrans
TRAFFIC

FUNCTIONAL SUPERVISOR: SERGIO ACEVES
CALCULATED-DESIGNED BY: CHUCK COOK
CHECKED BY: KRIS ALBERS
REVISED BY
DATE REVISED

LAST REVISION 02-19-14
DATE PLOTTED => 28-AUG-2014
TIME PLOTTED => 10:46

Dist	COUNTY	ROUTE	POST MILES TOTAL PROJECT	SHEET No.	TOTAL SHEETS
01	Lak	29	R34.4/R40.0	15	62

Kris M. Albers 5-1-14
REGISTERED CIVIL ENGINEER DATE

5-1-14
PLANS APPROVAL DATE

REGISTERED PROFESSIONAL ENGINEER
KRIS M. ALBERS
No. 49986
Exp. 6-30-15
CIVIL
STATE OF CALIFORNIA

THE STATE OF CALIFORNIA OR ITS OFFICERS OR AGENTS SHALL NOT BE RESPONSIBLE FOR THE ACCURACY OR COMPLETENESS OF SCANNED COPIES OF THIS PLAN SHEET.

OBJECT MARKER

DESCRIPTION	OBJECT MARKER TYPE L-1
	EACH
PM R34.96 FNBT	1
PM R35.02 FSBT	1
PM R36.75 FNBT	1
PM R36.78 FSBT	1
PM R37.58 FNBT	1
PM R37.60 FSBT	1
PM R38.54 FNBT	1
PM R38.56 FSBT	1
PM R38.60 FNBT	1
PM R38.65 FSBT	1
PM R38.86 FNBT	1
PM R38.92 FSBT	1
TOTAL	12

NOTE:
EXACT OBJECT MARKER LOCATIONS TO BE DETERMINED BY THE ENGINEER.

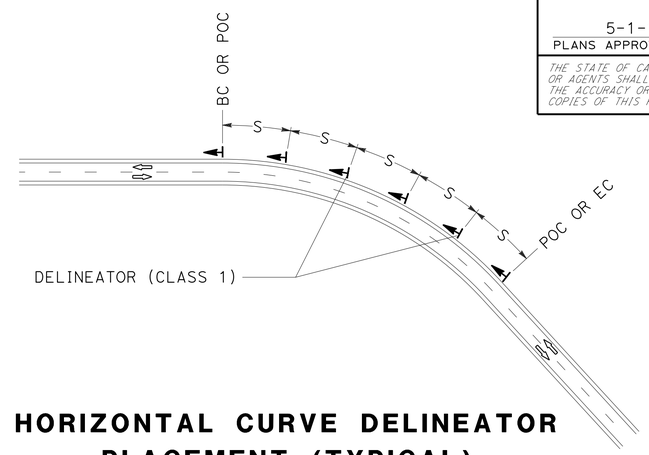

HORIZONTAL CURVE DELINEATOR PLACEMENT (TYPICAL)

NO SCALE

LEGEND

S= DELINEATOR SPACING

⇨ DIRECTION OF TRAVEL

DELINEATOR

DESCRIPTION	SPACING S=	DELINEATOR (CLASS 1)			
		TYPE E		TYPE F	
		FNBT	FSBT	FNBT	FSBT
		EACH	EACH	EACH	EACH
MAINLINE CURVE, POC=PM R34.41, POC=PM R34.54	145′	5			
MAIN St		2		3	
MAINLINE CURVE, POC=PM R34.62, EC=PM R34.73	148′	4			
KELSEY CREEK Dr		2	2	3	3
BELL HILL Rd		2	2	3	3
MERRITT Rd		2	2	3	3
RENFRO Dr		2	2	3	3
THOMAS Dr		2	2	3	3
ARGONAUT Rd		2	2	3	3
ACKLEY Rd			2		3
SUBTOTAL		23	14	21	21
TOTAL		79			

NOTE:
EXACT DELINEATOR LOCATIONS TO BE DETERMINED BY THE ENGINEER.

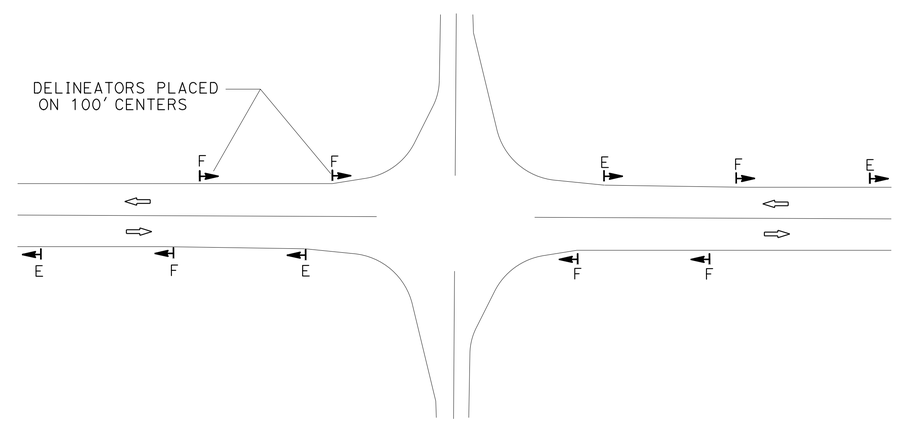

DELINEATOR PLACEMENT AT INTERSECTIONS (TYPICAL)

NO SCALE

PAVEMENT DELINEATION DETAILS AND QUANTITIES

PDQ-2

STATE OF CALIFORNIA - DEPARTMENT OF TRANSPORTATION
Caltrans
TRAFFIC

FUNCTIONAL SUPERVISOR: SERGIO ACEVES
CALCULATED-DESIGNED BY: KRIS ALBERS
CHECKED BY: CHUCK COOK
REVISED BY
DATE REVISED

LAST REVISION 03-13-14
DATE PLOTTED => 28-AUG-2014
TIME PLOTTED => 10:46

Dist	COUNTY	ROUTE	POST MILES TOTAL PROJECT	SHEET No.	TOTAL SHEETS
01	Lak	29	R34.4/R40.0	16	62

REGISTERED CIVIL ENGINEER 5-1-14 DATE

5-1-14
PLANS APPROVAL DATE

REGISTERED PROFESSIONAL ENGINEER HUAN M. CUNG No. C74406 Exp. 9-30-15 CIVIL STATE OF CALIFORNIA

THE STATE OF CALIFORNIA OR ITS OFFICERS OR AGENTS SHALL NOT BE RESPONSIBLE FOR THE ACCURACY OR COMPLETENESS OF SCANNED COPIES OF THIS PLAN SHEET.

NOTES:

1. EXISTING UTILITY FACILITIES ARE NOT SHOWN IN THESE PLANS.

REPLACE ASPHALT CONCRETE SURFACING

LOCATION/ DESCRIPTION	DIRECTION	POST MILE		LENGTH	WIDTH	DEPTH	REPLACE AC SURFACING
	NB/SB	Begin	END	FT	FT	FT	CY
MAINLINE	SB	R34.40	R34.42	111	12	0.33	16.28
MAINLINE	SB	R34.43	R34.45	150	12	0.33	22.00
MAINLINE	SB	R34.46	R34.50	218	8	0.33	21.32
MAINLINE	SB	R34.58	R34.73	812	12	0.33	119.09
MAINLINE	NB	R34.65	R34.73	428	8	0.33	41.85
MAINLINE	NB	R34.61	R34.70	520	12	0.33	76.27
MAINLINE	NB	R34.70	R34.73	166	12	0.33	24.35
MAINLINE	SB	R34.72	R34.74	100	12	0.33	14.67
MAINLINE	SB	R34.75	R34.84	475	12	0.33	69.67
MAINLINE	NB	R34.75	R34.84	475	12	0.33	69.67
MAINLINE	NB	R35.01	R35.02	75	12	0.33	11.00
MAINLINE	SB	R35.02	R35.04	125	12	0.33	18.33
MAINLINE	SB	R35.03	R35.04	80	12	0.33	11.73
MAINLINE	SB	R35.05	R36.05	32	8	0.33	3.13
MAINLINE	SB	R35.20	R35.21	75	12	0.33	11.00
MAINLINE	NB	R35.31	R35.32	6	8	0.33	0.59
MAINLINE	NB	R35.31	R35.35	218	12	0.33	31.97
MAINLINE	NB	R35.34	R35.37	89	8	0.33	8.70
MAINLINE	NB	R35.38	R35.40	185	8	0.33	18.09
MAINLINE	NB	R35.40	R35.43	148	12	0.33	21.71
MAINLINE	NB	R35.42	R35.53	601	12	0.33	88.15
MAINLINE	NB	R35.60	R35.65	237	12	0.33	34.76
MAINLINE	NB	R35.76	R35.78	172	12	0.33	25.23
MAINLINE	NB	R35.77	R35.80	188	12	0.33	27.57
MAINLINE	NB	R35.80	R35.82	132	12	0.33	19.36
MAINLINE	NB	R35.85	R35.87	160	8	0.33	15.64
MAINLINE	NB	R35.86	R35.94	425	12	0.33	62.33
MAINLINE	NB	R35.99	R36.03	201	12	0.33	29.48
MAINLINE	SB	R36.03	R36.09	339	8	0.33	33.15
MAINLINE	SB	R36.03	R36.05	100	8	0.33	9.78
MAINLINE	SB	R36.12	R36.14	119	12	0.33	17.45
MAINLINE	SB	R36.20	R36.22	125	12	0.33	18.33
MAINLINE	NB	R36.76	R36.79	200	12	0.33	29.33
MAINLINE	NB	R36.98	R37.02	250	12	0.33	36.67
MAINLINE	NB	R37.03	R37.07	250	12	0.33	36.67
MAINLINE	NB	R37.70	R37.73	165	12	0.33	24.20
MAINLINE	NB	R36.70	R36.92	1188	31	0.33	450.12
SUBTOTAL (1)							1569.63

REPLACE ASPHALT CONCRETE SURFACING

LOCATION/ DESCRIPTION	DIRECTION	POST MILE		LENGTH	WIDTH	DEPTH	REPLACE AC SURFACING
	NB/SB	Begin	END	FT	FT	FT	CY
MAINLINE	NB	R37.10	R37.12	150	8	0.33	14.67
MAINLINE	NB	R36.25	R36.29	175	12	0.33	25.67
MAINLINE	NB	R36.57	R36.73	825	12	0.33	121.00
MAINLINE	NB	R36.70	R36.75	250	12	0.33	36.67
MAINLINE	NB	R37.18	R37.23	250	12	0.33	36.67
MAINLINE	NB	R37.57	R37.60	200	12	0.33	29.33
MAINLINE	NB	R37.58	R37.61	200	8	0.33	19.56
MAINLINE	NB	R37.59	R37.60	50	12	0.33	7.33
MAINLINE	NB	R37.61	R37.63	100	12	0.33	14.67
MAINLINE	NB	R37.78	R37.93	800	12	0.33	117.33
MAINLINE	NB	R38.00	R38.07	400	12	0.33	58.67
MAINLINE	NB	R38.00	R38.24	250	12	0.33	36.67
MAINLINE	SB	R38.12	R38.16	225	12	0.33	33.00
MAINLINE	SB	R38.21	R38.23	75	12	0.33	11.00
MAINLINE	SB	R38.27	R38.28	75	12	0.33	11.00
MAINLINE	SB	R38.63	R38.71	425	12	0.33	62.33
MAINLINE	SB	R38.99	R39.01	125	12	0.33	18.33
MAINLINE	SB	R39.05	R39.06	50	12	0.33	7.33
MAINLINE	SB	R39.10	R39.16	350	12	0.33	51.33
MAINLINE	SB	R39.23	R39.25	100	12	0.33	14.67
MAINLINE	SB	R39.30	R39.40	500	12	0.33	73.33
MAINLINE	SB	R39.47	R39.66	1000	12	0.33	146.67
MAINLINE	SB	R39.50	R39.51	50	12	0.33	7.33
MAINLINE	SB	R39.50	R39.82	1,700	12	0.33	249.33
MAINLINE	SB	R39.51	R39.53	75	12	0.33	11.00
MAINLINE	SB	R39.59	R39.63	150	12	0.33	22.00
MAINLINE	SB	R39.64	R39.65	75	12	0.33	11.00
MAINLINE	SB	R39.65	R39.95	1,550	12	0.33	227.33
MAINLINE	SB	R39.85	R39.96	625	12	0.33	91.67
MAINLINE	SB	R39.74	R40.00	1,400	12	0.33	205.33
SUBTOTAL (2)							1772.22
SUBTOTAL (1)							1569.63
TOTAL							3341.85

SUMMARY OF QUANTITIES

Q-1

STATE OF CALIFORNIA - DEPARTMENT OF TRANSPORTATION
Caltrans DIVISION OF ENGINEERING

FUNCTIONAL SUPERVISOR: JUSTIN UNCK
CALCULATED-DESIGNED BY: HUAN CUNG
CHECKED BY: WESLEY LEE
REVISED BY / DATE REVISED

LAST REVISION 00-00-00
DATE PLOTTED => 28-AUG-2014
TIME PLOTTED => 10:46

Dist	COUNTY	ROUTE	POST MILES TOTAL PROJECT	SHEET No.	TOTAL SHEETS
01	Lak	29	R34.4/R40.0	17	62

REGISTERED CIVIL ENGINEER 5-1-14 DATE

5-1-14
PLANS APPROVAL DATE

REGISTERED PROFESSIONAL ENGINEER HUAN M. CUNG No. C74406 Exp. 9-30-15 CIVIL STATE OF CALIFORNIA

THE STATE OF CALIFORNIA OR ITS OFFICERS OR AGENTS SHALL NOT BE RESPONSIBLE FOR THE ACCURACY OR COMPLETENESS OF SCANNED COPIES OF THIS PLAN SHEET.

NOTES:

1. EXISTING UTILITY FACILITIES ARE NOT SHOWN ON THESE PLANS.

ADJUST INLET AND ENTRANCE TAPER

LOCATION POST MILE	ADJUST INLET	ENTRANCE TAPER
	EA	EA
R34.69	1	
R34.72	1	
R35.09	1	
R35.38	1	
R35.77	1	
R35.91	1	
R35.97	1	
R36.05	1	
R36.10	1	
R36.41	1	1
R37.04	1	
R37.28	1	
R37.43	1	
R37.46	1	
R37.88	2	
R38.16	1	
R38.22	1	
R38.40	1	
R38.55	1	
R38.63	1	
R38.71	1	
R39.91	1	
R39.23	1	
R39.50	1	
R39.65	1	
R39.75	1	
R39.78	1	
R39.82	1	
TOTAL	29	1

TIMPORARY DRAINAGE INLET PROTECTION

POST MILE		TEMPORARY DRAINAGE INLET PROTECTION
BEGIN	END	EA
R34.40	R40.00	29
TOTAL		29

ROCK SLOPE PROTECTION

POST MILE	LOCATION	ROCK SLOPE PROTECTION (FACING, METHOD B)	ROCK SLOPE PROTECTION FABRIC (CLASS 8)
		CY	SQYD
R36.41	SB	12	12
TOTAL		12	12

CRACK TREATMENT

LOCATION	LNMI
SOUTHBOUND	5.6
NORTHBOUND	5.6
TOTAL	11.2

SEE CONSTRUCTION DETAILS FOR NOTES RELATED TO CRACK TREATMENT.

CURB RAMPS

DESCRIPTION	LOCATION	QUANTITY	UNIT
RAMP DETECTABLE WARNING SURFACE	4 CORNERS AT HIGHLAND SPRING Rd AND Rte 29 INTERSECTION	52.5	SQFT
REMOVE CONCRETE	NE CORNER AT HIGHLAND SPRINGS Rd AND Rte 29 INTERSECTION	20	SQYD
MINOR CONCRETE (CURB RAMP)	NE CORNER AT HIGHLAND SPRINGS Rd AND Rte 29 INTERSECTION	4	CY
PLACE HOT MIX ASPHALT (MISCELANEOUS AREA)	SE AND NE CORNERS OF LIVE OAK Dr Rte 29 INTERSECTION	6.7*	SQYD

* SEE ROADWAY QUANTITIES TABLE FOR THE TOTAL QUANTITY

TEMPORARY FENCE (TYPE ESA)

LOCATION	QUANTITY
PM TO PM	LF
36.28 TO 36.42 (NB)	1637
36.28 TO 36.42 (SB)	1637
36.96 TO 37.27 (NB)	739
TOTAL	4013

THE EXACT LOCATION OF TEMPORARY FENCE WILL BE DETERMINED IN THE FIELD BY THE ENGINEER

ROADWAY QUANTITIES

POST MILE		COLD PLANE AC PAVEMENT	RUBBERIZED HMA (GAP GRADED)	SHOULDER BACKING	PLACE HMA (Misc AREA)	MINOR HMA	TACK COAT	NOTES
BEGIN	END	SQYD	TON	TON	SQYD	TON	TON	
R34.40	R40.00	168,000	16,100	732			85	
R34.41	R34.52				193.33	19		PAVE DITCH
R35.52	R35.68				281.67	28		PAVE DITCH
R39.52	R39.80	2507	245					VISTA POINT
R36.41					5.00	1		APRON
CURB RAMPS					6.70			
HMA DIKE						433.64		
SUBTOTAL		170,507	16,345	732	486.70	481.64	85	
TOTAL		170,507	16,345	732	486.70	481.64	85	

RUMBLE STRIP

POST MILE		CENTERLINE RUMBLE STRIP (HMA, GROUND-IN INDENTATIONS)	SHOULDER RUMBLE STRIP (HMA, GROUND-IN INDENTATIONS)
BEGIN	END	STA	STA
R34.40	R40.00		527.38
R34.90	R35.23	17.42	
R35.46	R35.81	18.48	
R36.59	R36.67	4.22	
TOTAL		40.12	527.38*

SUMMARY OF QUANTITIES

Q-2

STATE OF CALIFORNIA - DEPARTMENT OF TRANSPORTATION
Caltrans DIVISION OF ENGINEERING

FUNCTIONAL SUPERVISOR: JUSTIN UNCK
CALCULATED-DESIGNED BY: HUAN CUNG
CHECKED BY: WESLEY LEE
REVISED BY
DATE REVISED

LAST REVISION 00-00-00
DATE PLOTTED => 08-SEP-2014
TIME PLOTTED => 13:20

Dist	COUNTY	ROUTE	POST MILES TOTAL PROJECT	SHEET No.	TOTAL SHEETS
01	Lak	29	R34.4/R40.0	18	62

REGISTERED CIVIL ENGINEER 5-1-14 DATE

5-1-14
PLANS APPROVAL DATE

REGISTERED PROFESSIONAL ENGINEER HUAN M. CUNG No. C74406 Exp. 9-30-15 CIVIL STATE OF CALIFORNIA

THE STATE OF CALIFORNIA OR ITS OFFICERS OR AGENTS SHALL NOT BE RESPONSIBLE FOR THE ACCURACY OR COMPLETENESS OF SCANNED COPIES OF THIS PLAN SHEET.

NOTES:

1. EXISTING UTILITY FACILITIES ARE NOT SHOWN ON THESE PLANS.

HMA DIKE

LOCATION FROM	LOCATION TO	DIRECTION	PLACE HMA DIKE (TYPE A)	PLACE HMA DIKE (TYPE C)	PLACE HMA DIKE (TYPE E)	PLACE HMA DIKE (TYPE F)	REMOVE AC DIKE	MINOR HOT MIX ASPHALT
			LF	LF	LF	LF	LF	TON
PM R34.43	PM R34.56	SB			665		665	17.27
PM R34.83	PM R34.88	SB			260		260	6.75
PM R34.91	PM R34.95	SB			187		187	4.86
PM R34.96	PM R34.97	SB		67			67	0.51
PM R35.01	PM R35.02	SB		55			55	0.42
PM R35.02	PM R35.06	SB			265		265	6.88
PM R35.06	PM R35.32	SB			1375		1375	35.71
PM R35.05	PM R35.18	NB			690		690	17.92
PM R35.29	PM R35.32	NB			200		200	5.19
PM R35.38	PM R35.62	NB			1330		1330	34.55
PM R35.40	PM R35.74	SB				1780	1780	23.47
PM R35.69	PM R36.04	NB			1875		1875	48.70
PM R35.74	PM R36.00	SB			1352		1352	35.12
PM R36.05	PM R36.11	NB			345		345	8.96
PM R36.08	PM R36.18	SB				510	510	6.73
PM R36.24	PM R36.60	NB			1890		1890	49.09
PM R36.33	PM R36.36	SB				160	160	2.11
PM R37.39	PM R37.68	SB			1550		1550	40.26
PM R39.31	PM R39.53	NB			1175		1175	30.52
PM R39.54	PM R39.70	NB				830	830	10.95
PM R39.70	PM R39.86	NB			850		850	22.08
PM R39.87	PM R39.97	NB	534				534	14.40
PM R39.85	PM R39.91	NB	328				328	8.85
PM R39.98	PM R40.00	NB			90		90	2.34
		TOTAL	862	122	14099	3280	18363	433.64*

* SEE ROADWAY QUANTITIES TABLE FOR THE TOTAL QUANTITY

ADJUST GUARDRAIL

LOCATION FROM	LOCATION TO	DIRECTION	DESCRIPTION	ADJUST GUARDRAIL
				LF
PM R34.96	PM R35.02	SB	ATTACH TO Br No. 14-64 (KELSEY CREEK), Rt Shld	130
PM R34.96	PM R35.02	NB	ATTACH TO Br No. 14-64 (KELSEY CREEK), Lt Shld	130
PM R36.75	PM R36.78	NB		164
PM R36.76	PM R36.78	SB		140
PM R37.58	PM R37.60	SB	ATTACH TO Br No. 14-65 (ADOBE CREEK), Rt Shld	157
PM R37.58	PM R37.60	NB	ATTACH TO Br No. 14-65 (ADOBE CREEK), Lt Shld	157
PM R38.54	PM R38.56	SB		140
PM R38.54	PM R38.56	NB		116
PM R38.60	PM R38.64	NB		128
PM R38.61	PM R38.65	SB		115
PM R38.86	PM R38.91	NB		191
PM R38.89	PM R38.92	SB		153
			TOTAL	1,721

SUMMARY OF QUANTITIES
Q-3

STATE OF CALIFORNIA - DEPARTMENT OF TRANSPORTATION
Caltrans DIVISION OF ENGINEERING

FUNCTIONAL SUPERVISOR: JUSTIN UNCK
CALCULATED-DESIGNED BY: HUAN CUNG
CHECKED BY: WESLEY LEE
REVISED BY
DATE REVISED

LAST REVISION 00-00-00
DATE PLOTTED => 08-SEP-2014
TIME PLOTTED => 13:20

Dist	COUNTY	ROUTE	POST MILES TOTAL PROJECT	SHEET No.	TOTAL SHEETS
01	Lak	29	R34.4/R40.0	19	62

Chamkaur Singh Dhatt 5-1-14
REGISTERED ELECTRICAL ENGINEER DATE

5-1-14
PLANS APPROVAL DATE

REGISTERED PROFESSIONAL ENGINEER
CHAMKAUR DHATT
No. E15951
Exp. 06-30-15
ELECTRICAL
STATE OF CALIFORNIA

THE STATE OF CALIFORNIA OR ITS OFFICERS OR AGENTS SHALL NOT BE RESPONSIBLE FOR THE ACCURACY OR COMPLETENESS OF SCANNED COPIES OF THIS PLAN SHEET.

NOTES:

1. FOR ACCURATE RIGHT OF WAY DATA, CONTACT RIGHT OF WAY ENGINEERING AT THE DISTRICT OFFICE.
2. FOR TEMPORARY WOOD POLE DETAILS, SEE SES SHEETS. INSTALL TEMPORARY WOOD POLES AT MINIMUM 30′ FROM ETW. BACKFILL POLE HOLES AFTER COMPLETION OF WORK.
3. PROVIDE 25′ MINIMUM VERTICAL CLEARANCE FOR OVERHEAD CABLES/CONDUCTORS.
4. RC ALL TEMPORARY VIVDS EQUIPMENT AFTER COMPLETION OF WORK.

ABBREVIATION:

PG&E - PACIFIC GAS AND ELECTRIC

LEGEND (THIS SHEET):

1. MESSENGER CABLE, 3 VIVDS CABLE
2. MESSENGER CABLE, 2 VIVDS CABLE
3. MESSENGER CABLE, 1 VIVDS CABLE
4. ADD 1 VIVDS CABLE FOR FUTURE USE.
5. ADD 2 VIVDS CABLE FOR FUTURE USE.
6. ADD 4 VIVDS CABLE FOR FUTURE USE.
7. KEEP 45′ LONG VIVDS CABLE FOR FUTURE USE IN PULL BOX.

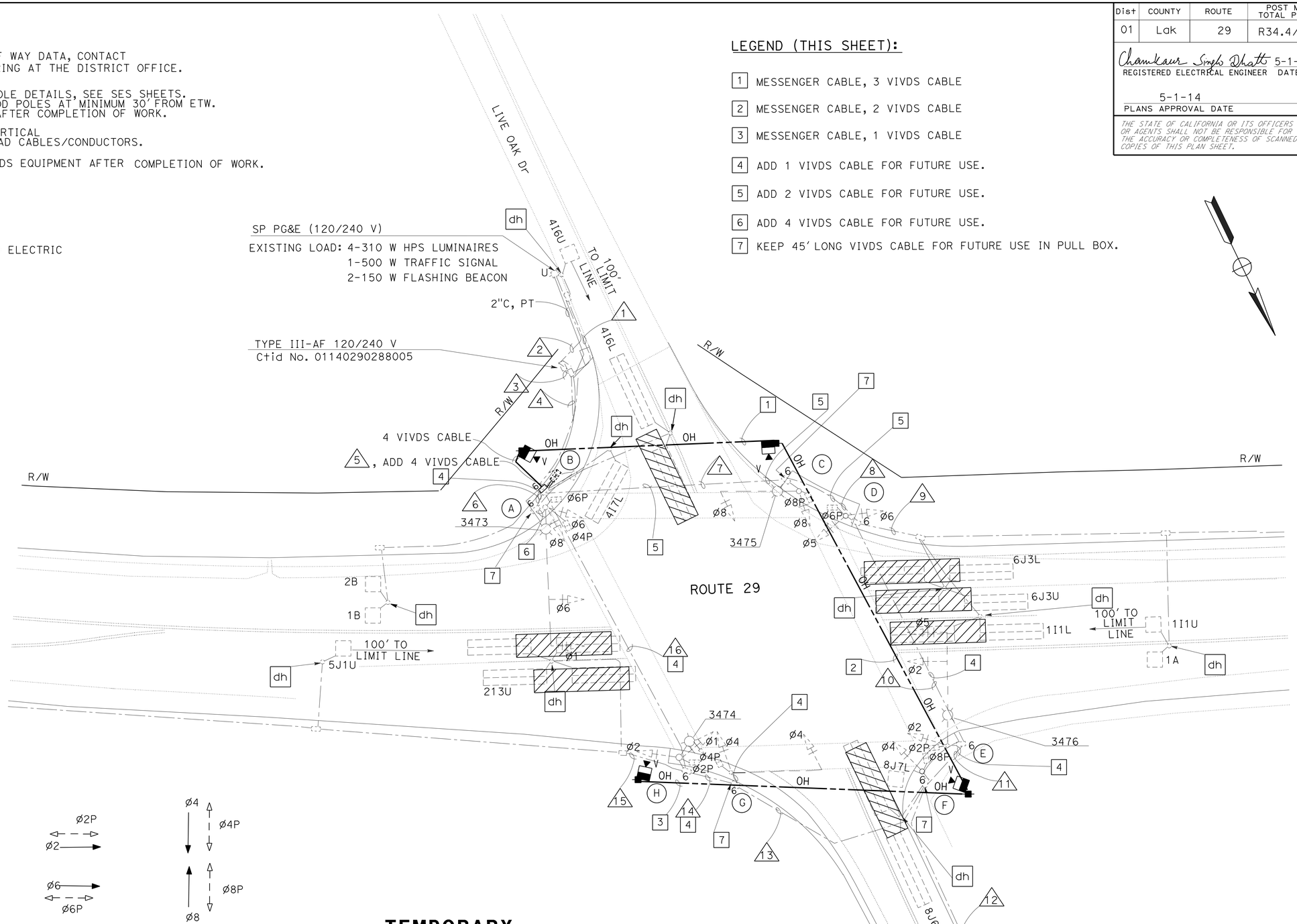

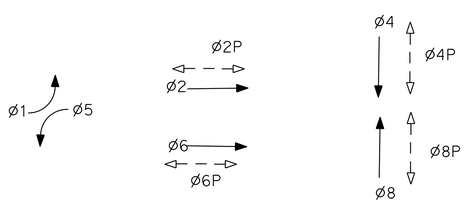

EXISTING PHASE DIAGRAM

TEMPORARY

(Rte 29 AND LIVE OAK Dr)

APPROVED FOR ELECTRICAL WORK ONLY

MODIFY SIGNAL

SCALE: 1" = 20′

E-1

STATE OF CALIFORNIA - DEPARTMENT OF TRANSPORTATION
Caltrans® **ELECTRICAL DESIGN**

FUNCTIONAL SUPERVISOR: STEVEN BLOCK
CALCULATED-DESIGNED BY: ALI HASSANI
CHECKED BY: CHAMKAUR DHATT
REVISED BY
DATE REVISED

LAST REVISION 05-27-14
DATE PLOTTED => 28-AUG-2014
TIME PLOTTED => 10:47

Dist	COUNTY	ROUTE	POST MILES TOTAL PROJECT	SHEET No.	TOTAL SHEETS
01	Lak	29	R34.4/R40.0	20	62

Chamkaur Singh Dhatt 5-1-14
REGISTERED ELECTRICAL ENGINEER DATE

5-1-14
PLANS APPROVAL DATE

REGISTERED PROFESSIONAL ENGINEER CHAMKAUR DHATT No. E15951 Exp. 06-30-15 ELECTRICAL STATE OF CALIFORNIA

THE STATE OF CALIFORNIA OR ITS OFFICERS OR AGENTS SHALL NOT BE RESPONSIBLE FOR THE ACCURACY OR COMPLETENESS OF SCANNED COPIES OF THIS PLAN SHEET.

NOTE:

1. FOR ACCURATE RIGHT OF WAY DATA, CONTACT RIGHT OF WAY ENGINEERING AT THE DISTRICT OFFICE.

LEGEND (THIS SHEET):

1 AB EXISTING LOOPS. RC dh.
SEE SHEET E-11 FOR TYPICAL 1 TYPE D LOOP + 3 TYPE A LOOP CONNECTION DETAIL.

2 INSTALL PREFORMED LOOP BEFORE ROADWAY WORK BEGINS, SEE LOOP INSTALATION AND PB TERMINATION DETAILS ON SHEET E-11.

3 RC EXISTING PB. INSTALL NEW TRAFFIC PULL BOX. SEE SHEET E-11 FOR TRAFFIC PULL BOX WELDING DETAIL.

4 RC EXISTING PB, INSTALL NEW PB

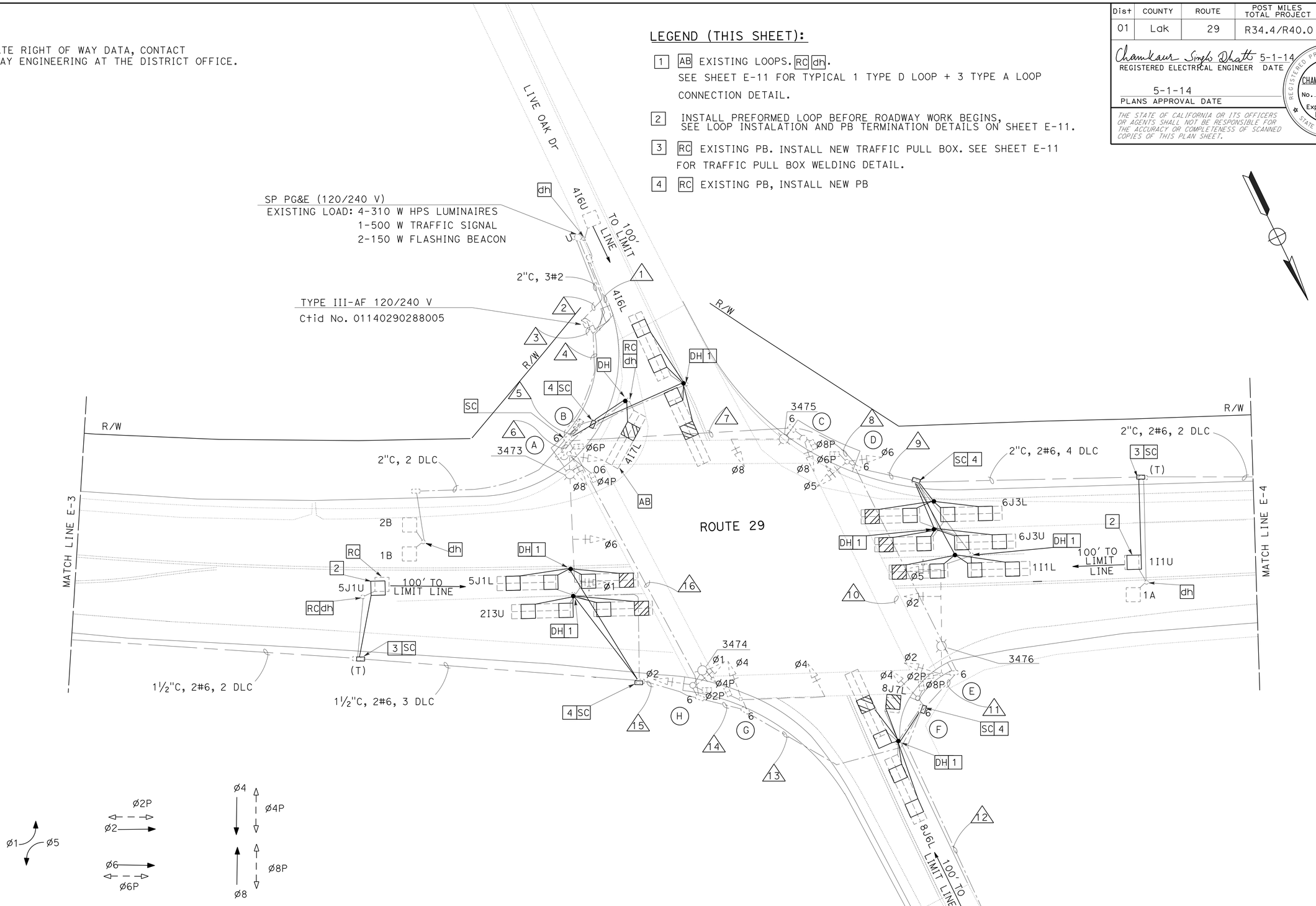

EXISTING PHASE DIAGRAM

(Rte 29 AND LIVE OAK Dr)

APPROVED FOR ELECTRICAL WORK ONLY

MODIFY SIGNAL

SCALE: 1" = 20'

E-2

STATE OF CALIFORNIA - DEPARTMENT OF TRANSPORTATION
Caltrans® **ELECTRICAL DESIGN**

FUNCTIONAL SUPERVISOR: STEVEN BLOCK
CALCULATED-DESIGNED BY: ALI HASSANI
CHECKED BY: CHAMKAUR DHATT
REVISED BY
DATE REVISED

LAST REVISION 04-03-14 | DATE PLOTTED => 28-AUG-2014 | TIME PLOTTED => 10:47

Dist	COUNTY	ROUTE	POST MILES TOTAL PROJECT	SHEET No.	TOTAL SHEETS
01	Lak	29	R34.4/R40.0	21	62

Chamkaur Singh Dhatt 5-1-14
REGISTERED ELECTRICAL ENGINEER DATE

5-1-14
PLANS APPROVAL DATE

REGISTERED PROFESSIONAL ENGINEER
CHAMKAUR DHATT
No. E15951
Exp. 06-30-15
ELECTRICAL
STATE OF CALIFORNIA

THE STATE OF CALIFORNIA OR ITS OFFICERS OR AGENTS SHALL NOT BE RESPONSIBLE FOR THE ACCURACY OR COMPLETENESS OF SCANNED COPIES OF THIS PLAN SHEET.

NOTE:

FOR ACCURATE RIGHT OF WAY DATA, CONTACT
RIGHT OF WAY ENGINEERING AT THE DISTRICT OFFICE.

LEGEND (THIS SHEET):

1 INSTALL PREFORMED LOOP BEFORE ROADWAY WORK BEGINS, SEE LOOP INSTALLATION AND PB TERMINATION DETAILS ON SHEET E-11.

2 RC PB. INSTALL TRAFFIC PULL BOX, SEE SHEET E-11 FOR TRAFFIC PULL BOX WELDING DETAIL.

3 AB EXISTING LOOPS. RC dh.

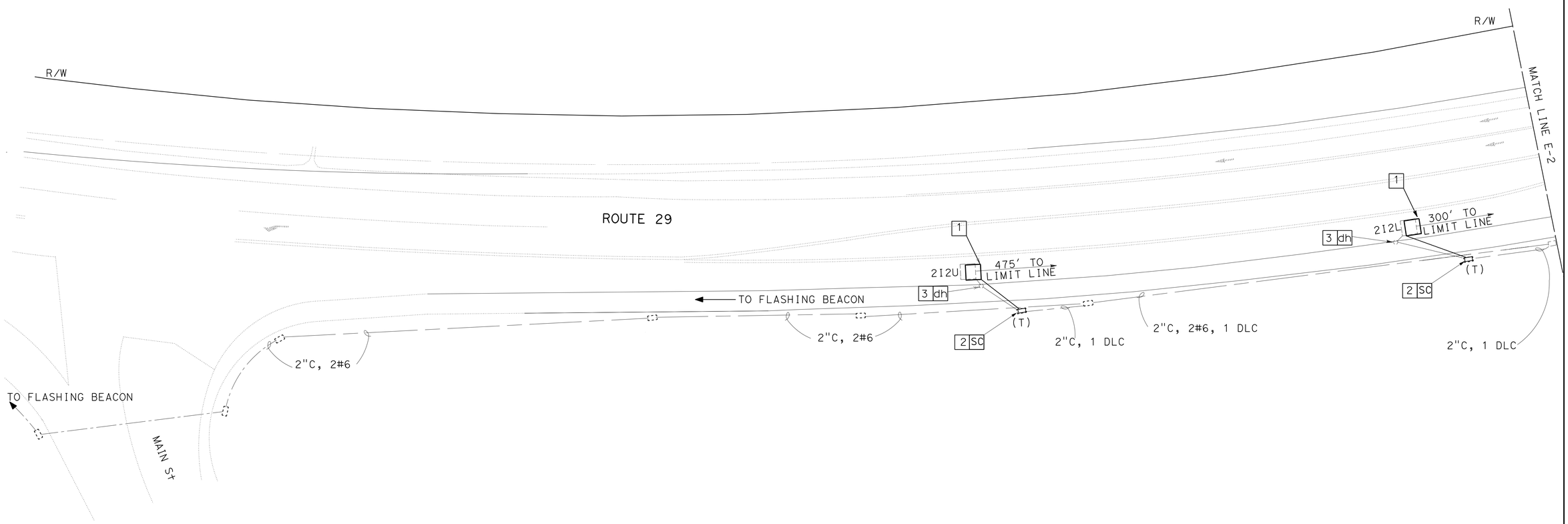

(Rte 29 AND LIVE OAK Dr)

APPROVED FOR ELECTRICAL WORK ONLY

MODIFY SIGNAL

SCALE: 1" = 20'

E-3

STATE OF CALIFORNIA - DEPARTMENT OF TRANSPORTATION
Caltrans® **ELECTRICAL DESIGN**

FUNCTIONAL SUPERVISOR: STEVEN BLOCK
CALCULATED-DESIGNED BY: ALI HASSANI
CHECKED BY: CHAMKAUR DHATT
REVISED BY
DATE REVISED

LAST REVISION 04-03-14
DATE PLOTTED => 28-AUG-2014
TIME PLOTTED => 10:47

Dist	COUNTY	ROUTE	POST MILES TOTAL PROJECT	SHEET No.	TOTAL SHEETS
01	Lak	29	R34.4/R40.0	22	62

Chamkaur Singh Dhatt 5-1-14
REGISTERED ELECTRICAL ENGINEER DATE

5-1-14
PLANS APPROVAL DATE

REGISTERED PROFESSIONAL ENGINEER
CHAMKAUR DHATT
No. E15951
Exp. 06-30-15
ELECTRICAL
STATE OF CALIFORNIA

THE STATE OF CALIFORNIA OR ITS OFFICERS OR AGENTS SHALL NOT BE RESPONSIBLE FOR THE ACCURACY OR COMPLETENESS OF SCANNED COPIES OF THIS PLAN SHEET.

NOTE:

FOR ACCURATE RIGHT OF WAY DATA, CONTACT
RIGHT OF WAY ENGINEERING AT THE DISTRICT OFFICE.

LEGEND (THIS SHEET):

1 INSTALL PREFORMED LOOP BEFORE ROADWAY WORK BEGINS, SEE LOOP INSTALLATION AND PB TERMINATION DETAILS ON SHEET E-11.

2 RC PB. INSTALL TRAFFIC PULL BOX, SEE SHEET E-11 FOR TRAFFIC PULL BOX WELDING DETAIL.

3 AB EXISTING LOOPS. RC dh.

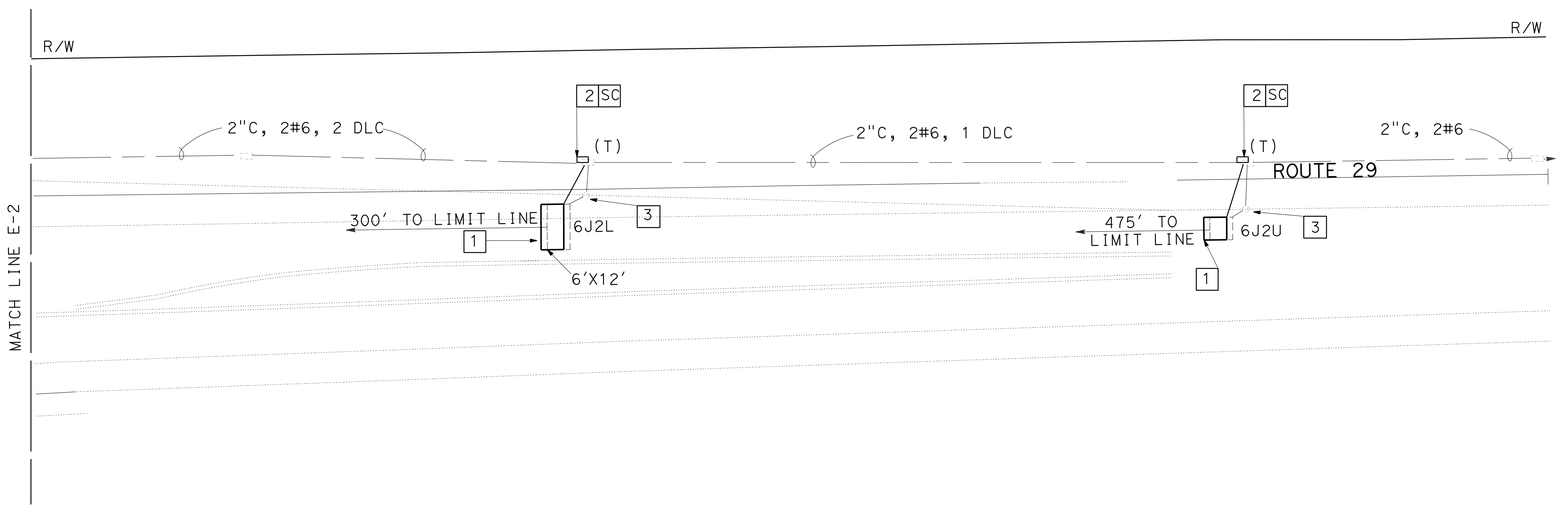

(Rte 29 AND LIVE OAK Dr)

APPROVED FOR ELECTRICAL WORK ONLY

MODIFY SIGNAL

SCALE: 1" = 20'

E-4

STATE OF CALIFORNIA - DEPARTMENT OF TRANSPORTATION
Caltrans® **ELECTRICAL DESIGN**

FUNCTIONAL SUPERVISOR: STEVEN BLOCK
CALCULATED-DESIGNED BY: ALI HASSANI
CHECKED BY: CHAMKAUR DHATT
REVISED BY
DATE REVISED

LAST REVISION 04-03-14
DATE PLOTTED => 28-AUG-2014
TIME PLOTTED => 10:47

Dist	COUNTY	ROUTE	POST MILES TOTAL PROJECT	SHEET No.	TOTAL SHEETS
01	Lak	29	R34.4/R40.0	23	62

Chamkaur Singh Dhatt 5-1-14
REGISTERED ELECTRICAL ENGINEER DATE

5-1-14
PLANS APPROVAL DATE

REGISTERED PROFESSIONAL ENGINEER
CHAMKAUR DHATT
No. E15951
Exp. 06-30-15
ELECTRICAL
STATE OF CALIFORNIA

THE STATE OF CALIFORNIA OR ITS OFFICERS OR AGENTS SHALL NOT BE RESPONSIBLE FOR THE ACCURACY OR COMPLETENESS OF SCANNED COPIES OF THIS PLAN SHEET.

NOTE:

FOR ACCURATE RIGHT OF WAY DATA, CONTACT RIGHT OF WAY ENGINEERING AT THE DISTRICT OFFICE.

LEGEND (THIS SHEET):

1 AB EXISTING LOOPS, RC dh.

2 RC EXISTING PB, INSTALL TRAFFIC PULL BOX.

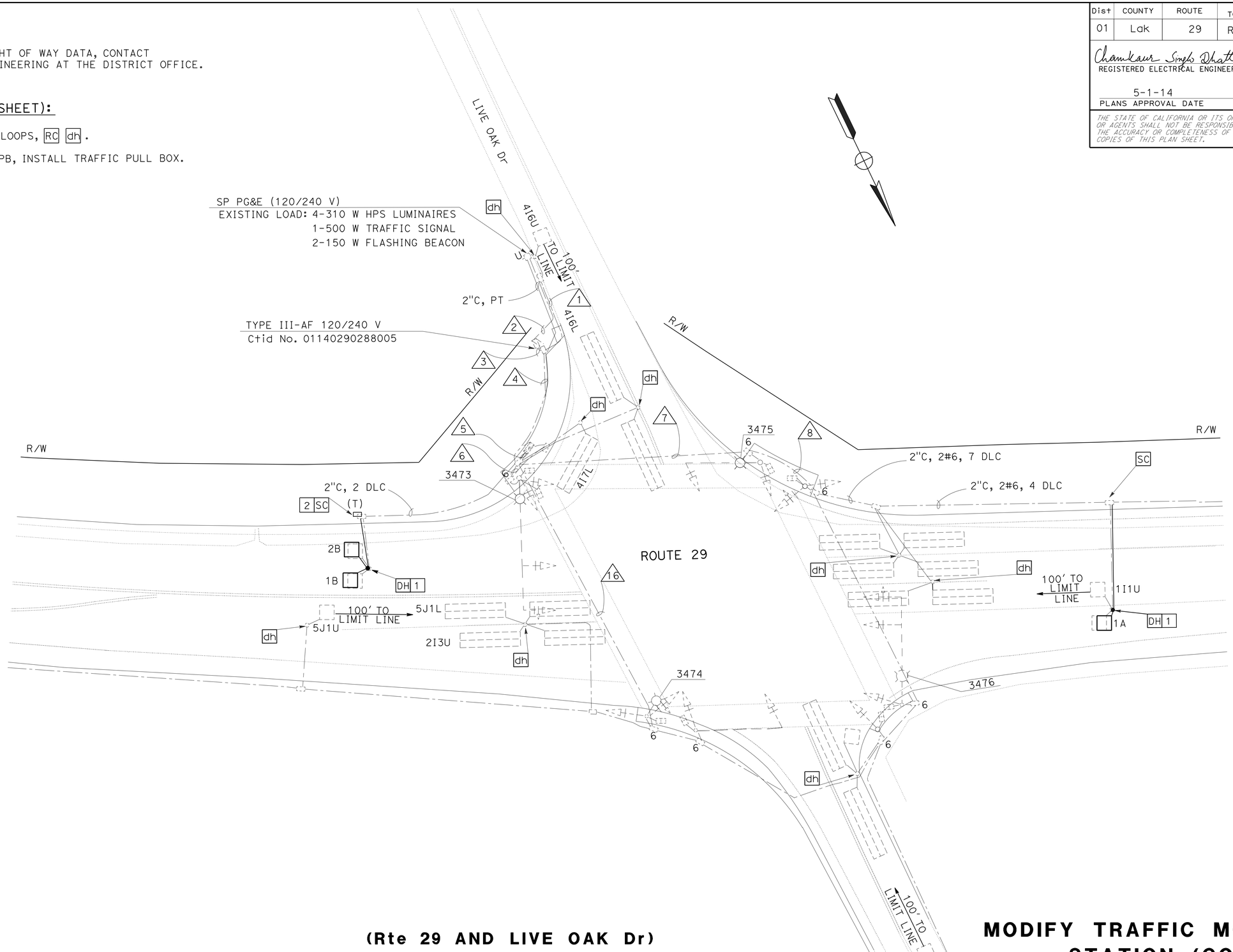

(Rte 29 AND LIVE OAK Dr)

APPROVED FOR ELECTRICAL WORK ONLY

MODIFY TRAFFIC MONITORING STATION (COUNT)

SCALE: 1" = 20'

E-5

STATE OF CALIFORNIA - DEPARTMENT OF TRANSPORTATION
Caltrans® **ELECTRICAL DESIGN**

FUNCTIONAL SUPERVISOR: STEVEN BLOCK

CALCULATED-DESIGNED BY: ALI HASSANI
CHECKED BY: CHAMKAUR DHATT

REVISED BY | DATE REVISED

LAST REVISION 04-03-14
DATE PLOTTED => 28-AUG-2014
TIME PLOTTED => 10:47

Dist	COUNTY	ROUTE	POST MILES TOTAL PROJECT	SHEET No.	TOTAL SHEETS
01	Lak	29	R34.4/R40.0	24	62

Chamkaur Singh Dhatt 5-1-14
REGISTERED ELECTRICAL ENGINEER DATE

5-1-14
PLANS APPROVAL DATE

REGISTERED PROFESSIONAL ENGINEER
CHAMKAUR DHATT
No. E15951
Exp. 06-30-15
ELECTRICAL
STATE OF CALIFORNIA

THE STATE OF CALIFORNIA OR ITS OFFICERS OR AGENTS SHALL NOT BE RESPONSIBLE FOR THE ACCURACY OR COMPLETENESS OF SCANNED COPIES OF THIS PLAN SHEET.

MODIFIED CONDUCTOR AND CONDUIT SCHEDULE

CONDUIT RUN		1	2	3	4	5	6	7	8	9	10	11	12	13	14	15	16
CONDUIT SIZE		2"	2"	1½"	2"	2-3"	2"	3"	3"	2"	3"	3"	2"	3"	3"	2"	3"
AWG	CIRCUIT	Exist	Exist	Exist	Exist	Exist	Exist	Exist	Exist	Exist	Exist	Exist	Exist	Exist	Exist	Exist	Exist
#14	Ø1 VEHICLE SIGNAL					3	3										3
	Ø2 VEHICLE SIGNAL					3						3		3	3		3
	Ø4 VEHICLE SIGNAL					3								3	3		3
	Ø5 VEHICLE SIGNAL					6		3	3			3		3	3		3
	Ø6 VEHICLE SIGNAL					6	3	3	3								
	Ø8 VEHICLE SIGNAL					3	3	3									
	Ø2 Ped SIGNAL					2						2		2	2		2
	Ø4 Ped SIGNAL					2	2								2		2
	Ø6 Ped SIGNAL					4	2	2	2								
	Ø8 Ped SIGNAL					4		2						2	2		2
	Ø2 PBA					1								1	1		1
	Ø4 PBA					1	1										1
	Ø6 PBA					1	1	1									
	Ø8 PBA					2		1	1			1		1	1		1
	PBA COMMON					2	1	1	1			1		1	1		1
	SPARES					3	3	3	3		3	3		3	3		3
	TOTAL #14	0	0	0	0	46	19	19	13	0	3	13	0	19	21	0	25
#10	LIGHTING			1	1	2	1	1				1		1	1		1
	LIGHTING COMMON			1	1	2	1	1				1		1	1		1
	SIGNAL COMMON			2	2	2	1	1	1			1		1	1		1
	TOTAL #10	0	0	4	4	6	3	3	1	0	0	3	0	3	3	0	3
#6	FLASHING BEACON			1	1			1	1	1						1	1
	FLASHING BEACON COMMON			1	1			1	1	1						1	1
	TOTAL #6	0	0	2	2	0		2	2	2	0	0	0	0	0	2	2
#2	CONTROLLER CABINET			2	2	2											
DLC (2#16)	Ø1 DETECTOR					4		4	4	4							
	Ø2 DETECTOR					3										3	3
	Ø4 DETECTOR	1			3	4											
	Ø5 DETECTOR					3										2	3
	Ø6 DETECTOR					4		4	4	4							
	Ø8 DETECTOR					3							1	3	3		3
	TRAFFIC COUNT DETECTOR					3		1	1	1							
	TOTAL DLC's	1	0	0	1	20		7	7	7	0	0	1	3	3	5	8
	SERVICE FEED		3														
	VIVDS CABLE *					4	1	2	1		1	1			1		1

* ADD VIVDS CABLE FOR FUTURE USE

(Rte 29 AND LIVE OAK Dr)

MODIFY SIGNAL

E-6

STATE OF CALIFORNIA - DEPARTMENT OF TRANSPORTATION
Caltrans® ELECTRICAL DESIGN

FUNCTIONAL SUPERVISOR: STEVEN BLOCK
CALCULATED-DESIGNED BY: ALI HASSANI
CHECKED BY: CHAMKAUR DHATT
REVISED BY
DATE REVISED

LAST REVISION 05-27-14
DATE PLOTTED => 28-AUG-2014
TIME PLOTTED => 10:47

Dist	COUNTY	ROUTE	POST MILES TOTAL PROJECT	SHEET No.	TOTAL SHEETS
01	Lak	29	R34.4/R40.0	25	62

Chamkaur Singh Dhatt 5-1-14
REGISTERED ELECTRICAL ENGINEER DATE

5-1-14
PLANS APPROVAL DATE

REGISTERED PROFESSIONAL ENGINEER CHAMKAUR DHATT No. E15951 Exp. 06-30-15 ELECTRICAL STATE OF CALIFORNIA

THE STATE OF CALIFORNIA OR ITS OFFICERS OR AGENTS SHALL NOT BE RESPONSIBLE FOR THE ACCURACY OR COMPLETENESS OF SCANNED COPIES OF THIS PLAN SHEET.

NOTES (THIS SHEET):

1. FOR ACCURATE RIGHT OF WAY DATA, CONTACT RIGHT OF WAY ENGINEERING AT THE DISTRICT OFFICE.
2. FOR TEMPORARY WOOD POLE DETAILS, SEE SES SHEETS. INSTALL TEMPORARY WOOD POLES AT MINIMUM 30' FROM ETW. BACKFILL POLE HOLES AFTER COMPLETION OF WORK.
3. PROVIDE 25 FEET MINIMUM VERTICAL CLEARANCE FOR OVERHEAD CABLES/CONDUCTORS.
4. RC ALL TEMPORARY VIVDS EQUIPMENT AFTER COMPLETION OF WORK AND AS DIRECTED BY THE ENGINEER.

LEGEND (THIS SHEET):

1. MESSENGER CABLE, 1 VIVDS CABLE
2. MESSENGER CABLE, 2 VIVDS CABLE
3. MESSENGER CABLE, 1 VIVDS CABLE
4. RC EXISTING PB, INSTALL NEW PB.
5. ADD 1 VIVDS CABLE FOR FUTURE USE.
6. ADD 2 VIVDS CABLE FOR FUTURE USE.
7. ADD 4 VIVDS CABLE FOR FUTURE USE.
8. KEEP 45' Min LONG VIVDS CABLE IN PULL BOX FOR FUTURE USE.

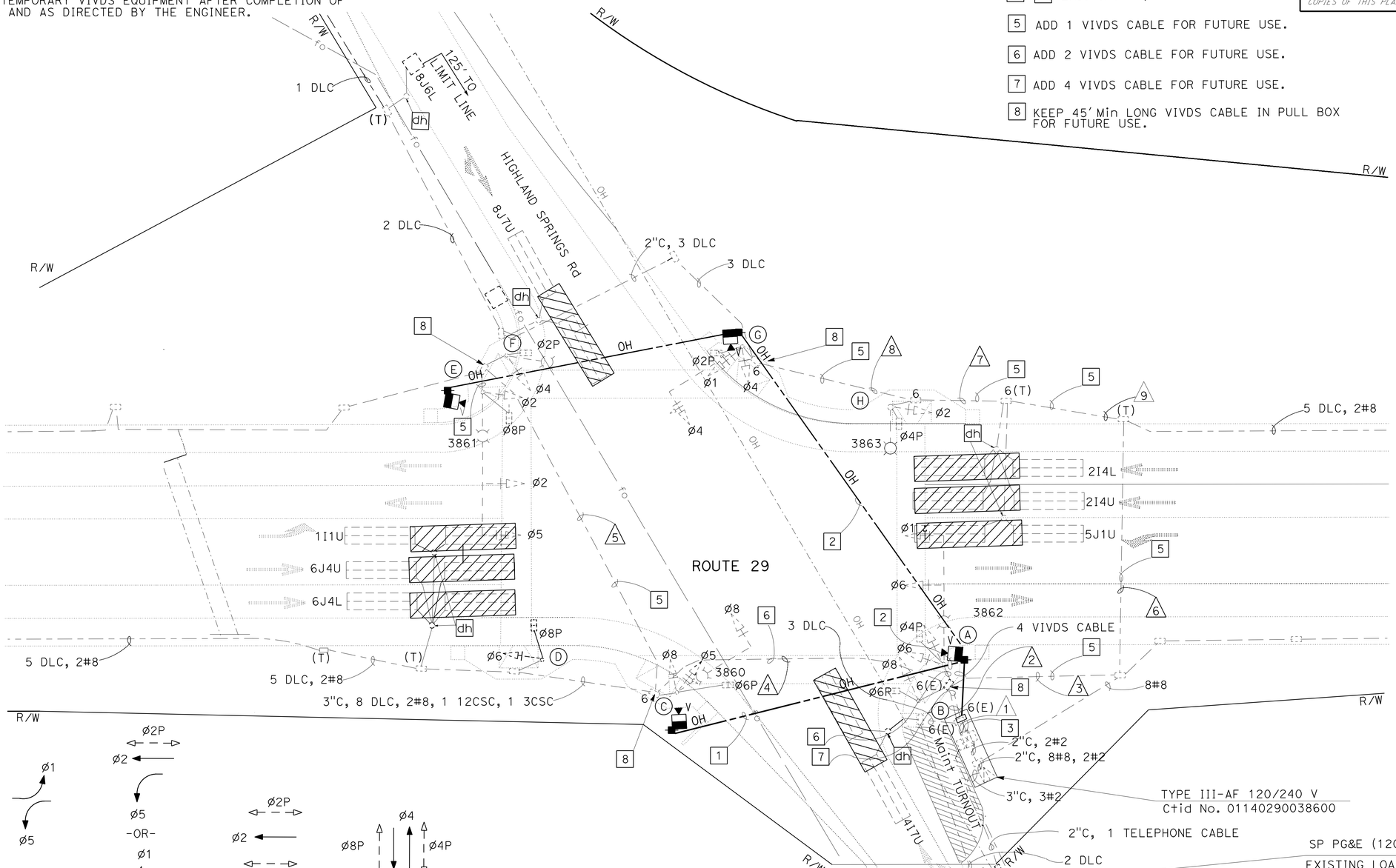

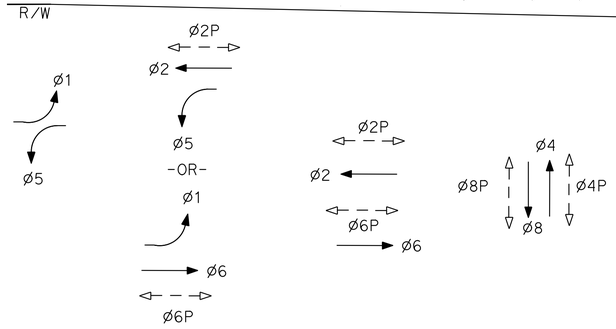

EXISTING PHASE DIAGRAM

TEMPORARY

(Rte 29 AND HIGHLAND SPRINGS Rd)

APPROVED FOR ELECTRICAL WORK ONLY

MODIFY SIGNAL

SCALE: 1" = 20'

E-7

STATE OF CALIFORNIA - DEPARTMENT OF TRANSPORTATION
Caltrans® ELECTRICAL DESIGN

FUNCTIONAL SUPERVISOR: STEVEN BLOCK
CALCULATED-DESIGNED BY: ALI HASSANI
CHECKED BY: CHAMKAUR DHATT
REVISED BY
DATE REVISED

LAST REVISION 04-03-14
DATE PLOTTED => 28-AUG-2014
TIME PLOTTED => 10:47

Dist	COUNTY	ROUTE	POST MILES TOTAL PROJECT	SHEET No.	TOTAL SHEETS
01	Lak	29	R34.4/R40.0	26	62

Chamkaur Singh Dhatt 5-1-14
REGISTERED ELECTRICAL ENGINEER DATE

5-1-14
PLANS APPROVAL DATE

REGISTERED PROFESSIONAL ENGINEER
CHAMKAUR DHATT
No. E15951
Exp. 06-30-15
ELECTRICAL
STATE OF CALIFORNIA

THE STATE OF CALIFORNIA OR ITS OFFICERS OR AGENTS SHALL NOT BE RESPONSIBLE FOR THE ACCURACY OR COMPLETENESS OF SCANNED COPIES OF THIS PLAN SHEET.

NOTE:

FOR ACCURATE RIGHT OF WAY DATA, CONTACT RIGHT OF WAY ENGINEERING AT THE DISTRICT OFFICE.

LEGEND (THIS SHEET):

1. AB EXISTING LOOPS. RC dh.
   SEE SHEET E-11 FOR TYPICAL 1 TYPE D LOOP + 3 TYPE A LOOP CONNECTION DETAIL.
2. RC PB. INSTALL NEW TRAFFIC PULL BOX, SEE SHEET E-11 FOR TRAFFIC PULL BOX WELDING DETAIL.
3. SEE MODIFIED POLE AND EQUIPMENT SCHEDULE, SHEET E-10 FOR DETAIL.
4. RC EXISTING PB, INSTALL NEW PB.
5. REUSE EXISTING 3CSC CABLES.

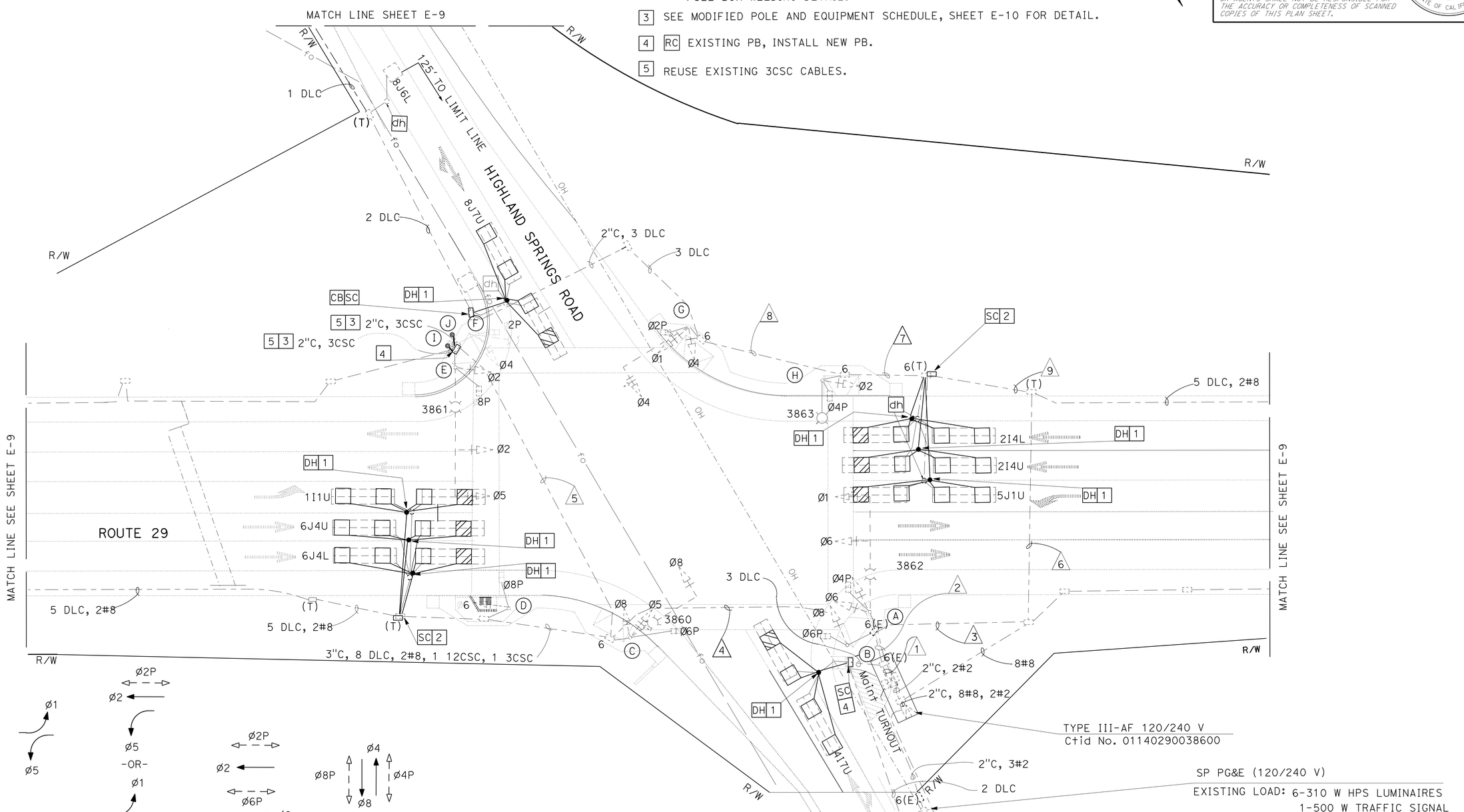

EXISTING PHASE DIAGRAM

(Route 29 AND HIGHLAND SPRING Rd)

MODIFYING SIGNAL

SCALE: 1" = 20'

E-8

APPROVED FOR ELECTRICAL WORK ONLY

STATE OF CALIFORNIA - DEPARTMENT OF TRANSPORTATION
Caltrans® ELECTRICAL DESIGN

FUNCTIONAL SUPERVISOR: STEVEN BLOCK
CALCULATED-DESIGNED BY: ALI HASSANI
CHECKED BY: CHAMKAUR DHATT
REVISED BY
DATE REVISED

LAST REVISION 01-24-14
DATE PLOTTED => 28-AUG-2014
TIME PLOTTED => 10:47

Dist	COUNTY	ROUTE	POST MILES TOTAL PROJECT	SHEET No.	TOTAL SHEETS
01	Lak	29	R34.4/R40.0	27	62

Chamkaur Singh Dhatt 5-1-14
REGISTERED ELECTRICAL ENGINEER DATE

5-1-14
PLANS APPROVAL DATE

REGISTERED PROFESSIONAL ENGINEER
CHAMKAUR DHATT
No. E15951
Exp. 06-30-15
ELECTRICAL
STATE OF CALIFORNIA

THE STATE OF CALIFORNIA OR ITS OFFICERS OR AGENTS SHALL NOT BE RESPONSIBLE FOR THE ACCURACY OR COMPLETENESS OF SCANNED COPIES OF THIS PLAN SHEET.

NOTE:

FOR ACCURATE RIGHT OF WAY DATA, CONTACT
RIGHT OF WAY ENGINEERING AT THE DISTRICT OFFICE.

LEGEND (THIS SHEET):

1 INSTALL PREFORMED LOOP BEFORE ROADWAY WORK BEGINS, SEE LOOP INSTALLATION AND PB TERMINATION DETAILS ON SHEET E-11.

2 RC PB. INSTALL NEW TRAFFIC PULL BOX, SEE SHEET E-11 FOR TRAFFIC PULL BOX WELDING DETAIL.

3 AB EXISTING LOOPS. RC dh.

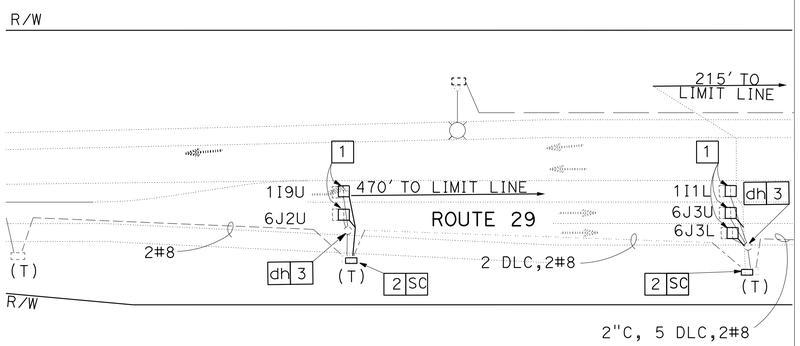

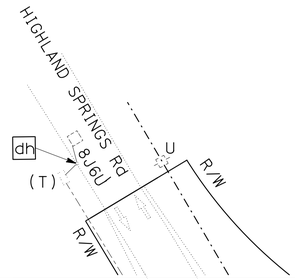

SEE SHEET E-8

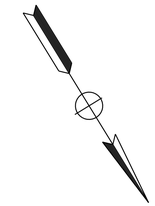

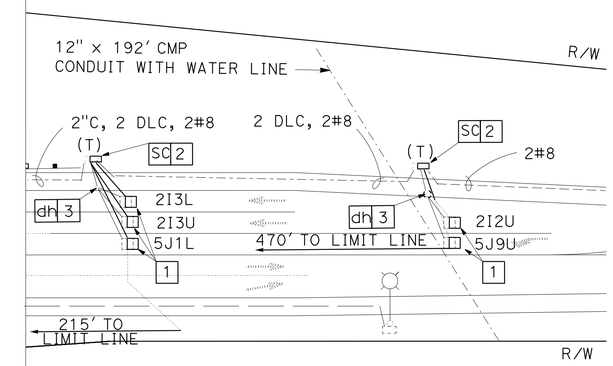

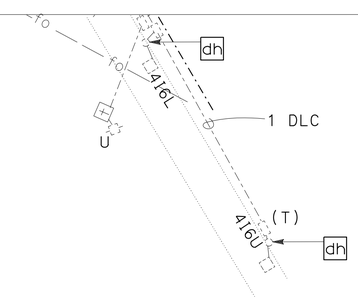

(Route 29 AND HIGHLAND SPRINGS Rd)

MODIFY SIGNAL

SCALE: 1" = 50'

APPROVED FOR ELECTRICAL WORK ONLY

E-9

STATE OF CALIFORNIA - DEPARTMENT OF TRANSPORTATION
Caltrans® **ELECTRICAL DESIGN**

FUNCTIONAL SUPERVISOR: STEVEN BLOCK
CALCULATED-DESIGNED BY: ALI HASSANI
CHECKED BY: CHAMKAUR DHATT
REVISED BY
DATE REVISED

LAST REVISION 00-00-00
DATE PLOTTED => 28-AUG-2014
TIME PLOTTED => 10:47

Dist	COUNTY	ROUTE	POST MILES TOTAL PROJECT	SHEET No.	TOTAL SHEETS
01	Lak	29	R34.4/R40.0	28	62

Chamkaur Singh Dhatt 5-1-14
REGISTERED ELECTRICAL ENGINEER DATE

5-1-14
PLANS APPROVAL DATE

REGISTERED PROFESSIONAL ENGINEER
CHAMKAUR DHATT
No. E15951
Exp. 06-30-15
ELECTRICAL
STATE OF CALIFORNIA

THE STATE OF CALIFORNIA OR ITS OFFICERS OR AGENTS SHALL NOT BE RESPONSIBLE FOR THE ACCURACY OR COMPLETENESS OF SCANNED COPIES OF THIS PLAN SHEET.

MODIFIED CONDUCTOR AND CONDUIT SCHEDULE

AWG OR CABLE	CONDUCTOR RUN		1	2	3	4	5	6	7	8
Veh-Ped 12CSC	(A) 1,6,4P	4	2 1	2 1						
	(B) 6P	6	1 1	1 1						
	(C) 8	6	1 1	1 1		1 1				
	(D) 5,8P	8	1 1	1 1		1 1				
	(E) 2,5 *		2	2		2	1			
	(F) 4 *		1	1		1	1			
	(G) 4,2P	2	1 1	1 1	1 1			1 1	1 1	1 1
3CSC	(H) 1,4P	4	1 1	1 1	1 1			1 1	1 1	1 1
	(I) 8P,2P	2,8	2	2		2	2			
	TOTAL		10 8	10 8	2 2	5 4	2 2	2 2	2 2	2 2
AWG	CIRCUIT									
#8	LUMINAIRES				2	2	2			
#8	FLASHERS				2	2		2		
VIVDS CABLE			4	4	1	2	1	1	1	1
PHASE	LOOP DLC									
Ø1			2	2		2				
Ø2			5	5	5			5	2	
Ø4			4	4						
Ø5			2	2	2			2	2	
Ø6			5	5		5				
Ø8			4		4			4	4	4
	TOTAL		18	15	9	6		9	6	3
	VIVDS CABLE *		4	4	1	2	1	1	1	1
	CONDUIT SIZE		2-4"C	2-4"C	3"C	4"C	3"C	3"C	3"C	3"C

* ADD VIVDS CABLE FOR FUTURE USE

MODIFIED POLE AND EQUIPMENT SCHEDULE

No.	STANDARD			Veh Sig Mtg			Ped SIGNAL			PBA		HPS
	TYPE	SMA	LMA	Ø	TYPE LED	Mtg	Ø	TYPE LED	Mtg	Ø	ARROW	LUMINAIRE
(A)	26A-4-100	45	15	6	300	MAS	4	A	SP-1-T	4	←	310 W
				6	300	SV-1-T						
				2	300	MAT						
(B)	1-A						6	A	TP-1-T	6	→	
(C)	17A-2-100	20	10	8	300	MAT	6	A	SP-1-T	6	←	310 W
				8	300	SV-1-T						
(D)	1-A			5	300	TV-1-T	8	A	SP-1-T	8	→	
(E)	26A-4-100	45	15	2	300	MAS	8	A	SP-1-T	*	←	310 W
				2	300	SV-1-T						
				5	300	MAT						
(F)	1-A						2	A	TP-1-T	*	→	
(G)	16-2-100	20		4	300	MAT	2	A	SP-1-T	2	←	
				4	300	SV-1-T						
(H)	1-A			1	300	TV-1-T	4	A	SP-1-T	4	→	
** (I)	1-A									8	←	
*** (J)	1-A									2	→	

* RC Ø2 AND Ø8 PBA (B).
** INSTALL Ø8 PBA (B).
*** INSTALL Ø2 PBA (B).

(Rte 29 AND HIGHLAND SPRINGS Rd)

MODIFY SIGNAL CONDUIT AND POLE SCHEDULE

NO SCALE

E-10

STATE OF CALIFORNIA - DEPARTMENT OF TRANSPORTATION
Caltrans® ELECTRICAL DESIGN
FUNCTIONAL SUPERVISOR: STEVEN BLOCK
CALCULATED-DESIGNED BY: ALI HASSANI
CHECKED BY: CHAMKAUR DHATT
REVISED BY
DATE REVISED

LAST REVISION 00-00-00
DATE PLOTTED => 28-AUG-2014
TIME PLOTTED => 10:47

Dist	COUNTY	ROUTE	POST MILES TOTAL PROJECT	SHEET No.	TOTAL SHEETS
01	Lak	29	R34.4/R40.0	29	62

Chamkaur Singh Dhatt 5-1-14
REGISTERED ELECTRICAL ENGINEER DATE

5-1-14
PLANS APPROVAL DATE

REGISTERED PROFESSIONAL ENGINEER
CHAMKAUR DHATT
No. E15951
Exp. 06-30-15
ELECTRICAL
STATE OF CALIFORNIA

THE STATE OF CALIFORNIA OR ITS OFFICERS OR AGENTS SHALL NOT BE RESPONSIBLE FOR THE ACCURACY OR COMPLETENESS OF SCANNED COPIES OF THIS PLAN SHEET.

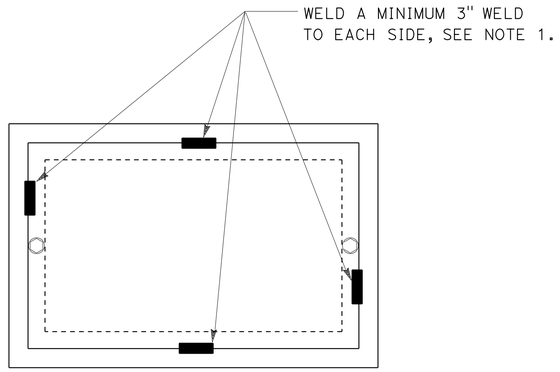

TOP VIEW

TRAFFIC PULL BOX WELDING DETAIL

NOTES ON PULL BOXES:

1. WELDING MUST COMPLY WITH STANDARD SPECIFICATION SECTION 75.
2. CONDUITS ENTERING THE PULL BOX MUST BE ENCASED IN PCC (3" ALL AROUND). PCC ENCASEMENT MUST EXTEND 5'-6" FROM THE PULL BOX.
3. PULL BOXES FOR ELECTROLIERS, POST AND SIGNAL STANDARDS MUST BE LOCATED WITHIN 5'-0" FROM THE STATION OF THE ADJACENT ELECTROLIER, POST OR SIGNAL STANDARD.

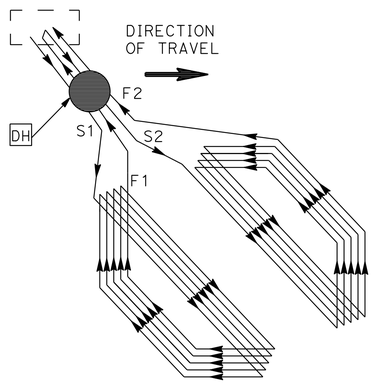

MODIFIED WINDING DETAIL
TYPE D LOOP DETECTOR CONFIGURATION
SEE RSP ES-5B FOR NOTES AND DETAILS

DETAIL

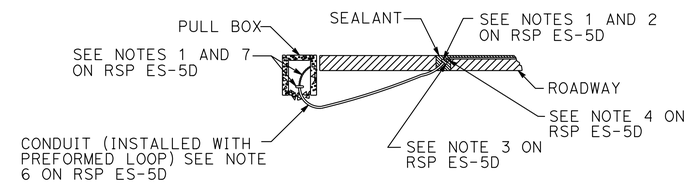

PREFORMED LOOP PULL BOX TERMINATION DETAIL

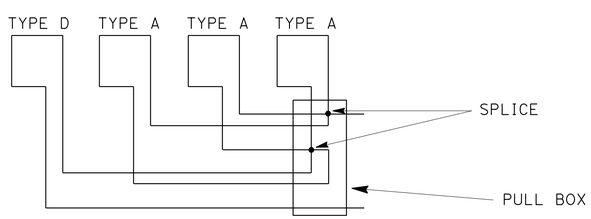

TYPICAL 1 TYPE D + 3 TYPE A LOOP CONNECTION

DETAIL

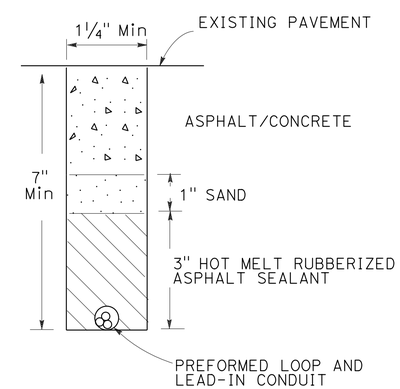

PREFORMED LOOP INSTALLATION DETAIL

ELECTRICAL DETAIL

NO SCALE

E-11

STATE OF CALIFORNIA - DEPARTMENT OF TRANSPORTATION
Caltrans® ELECTRICAL DESIGN

FUNCTIONAL SUPERVISOR: STEVEN BLOCK
CALCULATED-DESIGNED BY: ALI HASSANI
CHECKED BY: CHAMKAUR DHATT
REVISED BY
DATE REVISED

RC dh

LAST REVISION 00-00-00
DATE PLOTTED => 28-AUG-2014
TIME PLOTTED => 10:47

Dist	COUNTY	ROUTE	POST MILES TOTAL PROJECT	SHEET No.	TOTAL SHEETS
01	Lak	29	R34.4/R40.0	30	62

Chamkaur Singh Dhatt 5-1-14
REGISTERED ELECTRICAL ENGINEER DATE

5-1-14
PLANS APPROVAL DATE

REGISTERED PROFESSIONAL ENGINEER
CHAMKAUR DHATT
No. E15951
Exp. 06-30-15
ELECTRICAL
STATE OF CALIFORNIA

THE STATE OF CALIFORNIA OR ITS OFFICERS OR AGENTS SHALL NOT BE RESPONSIBLE FOR THE ACCURACY OR COMPLETENESS OF SCANNED COPIES OF THIS PLAN SHEET.

NOTE:
ITEMS SHOWN IN THESE TABLES ARE NOT A SEPARATE PAY ITEMS, FOR INFORMATION ONLY.

MODIFY SIGNAL

SHEET No.	TYPE D LOOP	TYPE A LOOP	DETECTOR HANDHOLE	PB 5(T)	TYPE 1-A STANDARD	VIVDS CABLE	VIVDS CAMERA	WOOD POLE	MESSENGER CABLE	2" CONDUIT	PB 6(E)	PB (6)	PREFORMED LOOP
	EA	EA	EA	EA		FT	EA	EA	FT	FT	EA	EA	EA
E-1						600	4	4	450	50		1	
E-2	9	21	8	5						10		1	2
E-3				2									2
E-4				2									2
E-7				2		700	4					1	
E-8	8	24	8	5	2			4	450	50			
E-9				4						10			10

MODIFY TRAFFIC MONITORING STATION (COUNT)

SHEET No.	TYPE A LOOP	DETECTOR HANDHOLE	PB
	EA	EA	EA
E-5	3	2	1

ELECTRICAL QUANTITIES

E-12

REVISED BY | DATE REVISED
ALI HASSANI | CHAMKAUR DHATT
CALCULATED-DESIGNED BY | CHECKED BY
FUNCTIONAL SUPERVISOR
STEVEN BLOCK

STATE OF CALIFORNIA - DEPARTMENT OF TRANSPORTATION
Caltrans® ELECTRICAL DESIGN

LAST REVISION 00-00-00
DATE PLOTTED => 28-AUG-2014
TIME PLOTTED => 10:47

Dist	COUNTY	ROUTE	POST MILES TOTAL PROJECT	SHEET No.	TOTAL SHEETS
01	Lak	29	R34.4/R40.0	31	62

REGISTERED CIVIL ENGINEER 5-1-14 DATE

5-1-14
PLANS APPROVAL DATE

REGISTERED PROFESSIONAL ENGINEER HUAN M. CUNG No. C74406 Exp. 9-30-15 CIVIL STATE OF CALIFORNIA

THE STATE OF CALIFORNIA OR ITS OFFICERS OR AGENTS SHALL NOT BE RESPONSIBLE FOR THE ACCURACY OR COMPLETENESS OF SCANNED COPIES OF THIS PLAN SHEET.

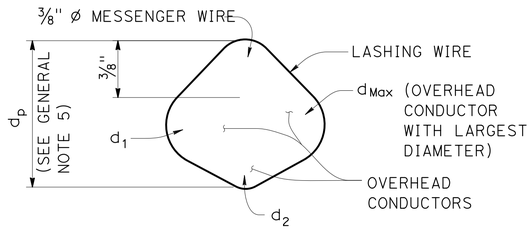

$d_p = 3/8" + d_{Max} + 0.30 * (d_1 + d_2 + ... d_n)$

PROJECTED DEPTH OF OVERHEAD BUNDLE, (d_p)

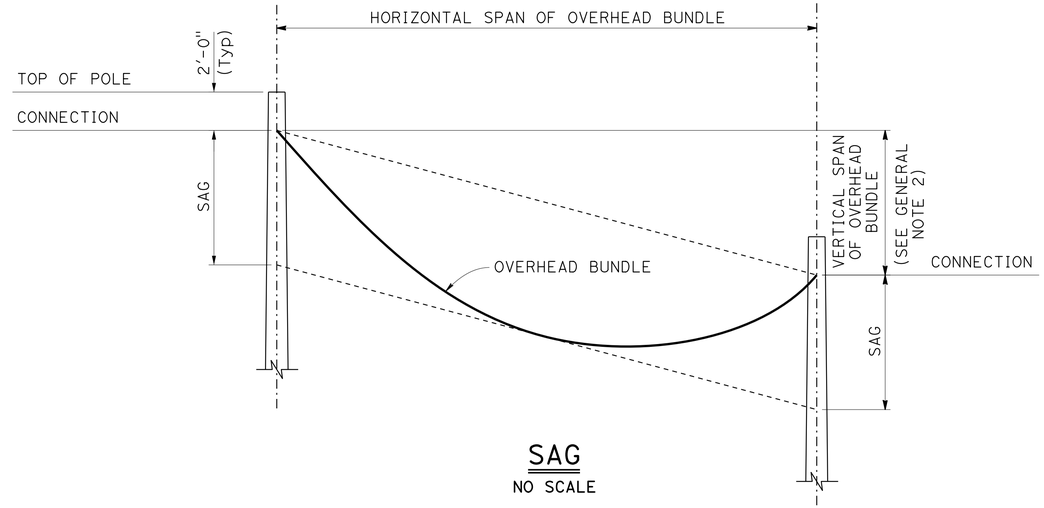

SAG

NO SCALE

Design: AASHTO Standard Specifications for Structural Supports for Highway Signs, Luminaires and Traffic Signals, Fifth Edition (LTS-5).

GROUP LOAD COMBINATIONS:

I Dead Load
II Dead Load + Wind Load
III Dead Load + 0.5 (Wind Load) + Ice Load
IV Fatigue: Not used

LOADING:

Wind Loading: 100 mph (3-second gust)
Wind Recurrence Interval: 10 years
Combined height, exposure, and elevated terrain factor = 1.05 (Exposure C, structure is not located on or over the top half of a ridge, hill, or escarpment)

Ice Loading: 3.0 psf on surfaces, 0.60 in radial thickness of ice at a unit weight of 60 pcf on overhead bundles

BASIC DESIGN VALUES:

Timber Poles: Fb = 1850 psi
Fv = 110 psi
Fcp = 230 psi
Fc = 950 psi
E = 1500 x 10^3 psi

DESIGN WIRE BREAKING STRENGTHS:

ASTM A475, Utilities Grade, 7 strand modified by termination efficiency factor of 0.8

FOUNDATION DESIGN NOTES:

1. Pole embedment depth design is based on Broms' approximate procedure as described in Article 13.6 of AASHTO LTS-5.

2. Embedment depth is calculated based on following soil parameters,
Cohesive Soil:
Shear strength of soil c = 1500 psf.
Cohesionless Soil:
Ø = 30 deg, γ = 120 pcf.
Soil assumed to be unsaturated.

3. An overload factor of 2.0 and an undercapacity factor of 0.7 were used for safety factor of 2.86.

4. Allowable vertical bearing pressure at the end bearing of poles is 3000 psf at 6 feet or more embedment.

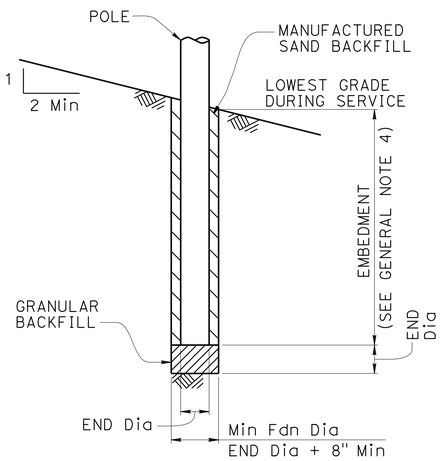

POLE FOUNDATION

GENERAL NOTES:

1. The messenger wire and any combination of overhead conductors must not exceed either a self weight of 3.0 lb/ft or the maximun d_p.

2. The maximum vertical span is 10% of the horizontal span.

3. For poles with adjacent unbalanced horizontal spans, the shortest horizontal span must be at least 50% of the largest horizontal span.

4. Add 2'-0" for slopes above 1V:4H.

5. For a pole supporting multiple spans, calculate d_p for each span and use the largest value.

6. Do not exceed the attachments shown.

DIAMETERS AND SELF WEIGHT OF OVERHEAD CONDUCTORS

CONDUCTOR OR CABLE TYPE	DIAMETER d (in)	WEIGHT w (plf)
3 CONDUCTOR SIGNAL CABLE (3CSC)	0.400	0.0980
5 CONDUCTOR SIGNAL CABLE (5CSC)	0.500	0.1560
9 CONDUCTOR SIGNAL CABLE (9CSC)	0.650	0.2760
12 CONDUCTOR SIGNAL CABLE (12CSC)	0.800	0.3970
28 CONDUCTOR SIGNAL CABLE (28CSC)	0.900	0.6490
1-#14	0.166	0.0235
1-#12	0.185	0.0330
1-#10	0.210	0.0476
1-#8	0.271	0.0774
1-#6	0.310	0.1130
1-#4	0.359	0.1690
1-#3	0.388	0.2080
1-#2	0.420	0.2560
1-#1	0.498	0.3340
6-CONDUCTOR SIGNAL INTERCONNECT CABLE (SIC)	0.350	0.0860
12-CONDUCTOR SIGNAL INTERCONNECT CABLE (SIC)	0.500	0.1440
DETECTOR LEAD-IN CABLE (DLC)	0.310	0.0440
12 to 48-STRAND FIBER OPTIC CABLE (48FOC)	0.424	0.0600
72-STRAND FIBER OPTIC CABLE (72FOC)	0.484	0.0770
96-STRAND FIBER OPTIC CABLE (96FOC)	0.535	0.1050
144-STRAND FIBER OPTIC CABLE (144FOC)	0.670	0.1890
3/8" Ø MESSENGER WIRE	0.375	0.2730

TEMPORARY WOOD POLES GENERAL NOTES

NO SCALE

SES-1

REVISED BY | DATE REVISED
WESLEY LEE | HUAN CUNG
CALCULATED-DESIGNED BY | CHECKED BY
FUNCTIONAL SUPERVISOR
JUSTIN UNCK

STATE OF CALIFORNIA - DEPARTMENT OF TRANSPORTATION
Caltrans DIVISION OF ENGINEERING

LAST REVISION 00-00-00 | DATE PLOTTED => 28-AUG-2014 | TIME PLOTTED => 10:47

Dist	COUNTY	ROUTE	POST MILES TOTAL PROJECT	SHEET No.	TOTAL SHEETS
01	Lak	29	R34.4/R40.0	32	62

REGISTERED CIVIL ENGINEER 5-1-14 DATE

5-1-14
PLANS APPROVAL DATE

REGISTERED PROFESSIONAL ENGINEER HUAN M. CUNG No. C74406 Exp. 9-30-15 CIVIL STATE OF CALIFORNIA

THE STATE OF CALIFORNIA OR ITS OFFICERS OR AGENTS SHALL NOT BE RESPONSIBLE FOR THE ACCURACY OR COMPLETENESS OF SCANNED COPIES OF THIS PLAN SHEET.

LEGEND

- Wood Pole No Attachments
- A Wood Pole with Attachments
- —OH— Overhead Bundle

POLE SELECTION TABLE

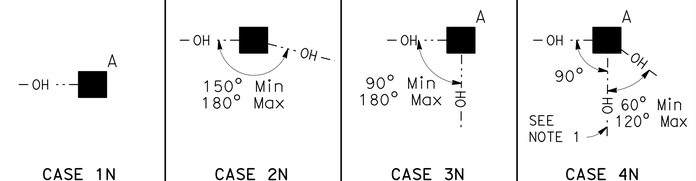

			CASE 1N				CASE 2N				CASE 3N				CASE 4N				CASE 5N
		MAXIMUM d_p	1"	1.5"	2.0"	2.5"	1"	1.5"	2.0"	2.5"	1.0"	1.5"	2.0"	2.5"	1"	1.5"	2.0"	2.5"	N/A
OVERHEAD BUNDLE HORIZONTAL SPAN (Max)	50′	MINIMUM POLE CLASS	H-1	H-2	H-2	H-2	4	3	2	1	H-2	H-2	H-3	H-3	H-4	H-4	H-4	H-5	CLASS 1 E = 10′
		POLE EMBEDMENT (E)	11′				10′				11′				12′				
	100′	MINIMUM POLE CLASS	H-2	H-3	H-4	H-5	1	H-1	H-2	H-3	H-4	H-5	H-5	H-6	H-5	H-5	H-6		
		POLE EMBEDMENT (E)	12′				11′				12′				12′				
	150′	MINIMUM POLE CLASS	H-4	H-5	H-6		H-1	H-2	H-3	H-5	H-6				H-6				
		POLE EMBEDMENT (E)	12′				12′				12′				12′				
	200′	MINIMUM POLE CLASS	H-5	H-6			H-2	H-3	H-5										
		POLE EMBEDMENT (E)	12′				12′												

1. CCTV camera assembly or vehicle detection system
2. Overhead bundle consisting of a ⅜" ø messenger wire and overhead conductors and lashing wire.
3. Luminaire with mast arm
4. Pedestrian pushbutton
5. Signal face with 3 indications or single sheet sign panel (10 SQFT Max)
6. Riser with weather head as required
7. Pull box as required
8. Grounding as required
9. Single section flashing beacon or single sheet sign panel (4 SQFT Max)
10. Single sheet sign panel (4′ x 4′ Max) or signal face with 3 indications
11. Flashing beacon control assembly
12. NEMA 3R enclosure, 26"(W) x 56"(H) x 12"(D) Max dimensions. Max weight including batteries, 450 lbs
13. 25′ SQFT Max total photovoltaic panels mounted as shown as required
14. 2-section 12" flashing beacon

NOTES:

1. In addition to other restrictions on maximum horizontal span, this horizontal span must not exceed 100′.
2. Cases 1N, 3N and 4N may substitute the attachments shown in Case 5N if the photovoltaic panel is not included.

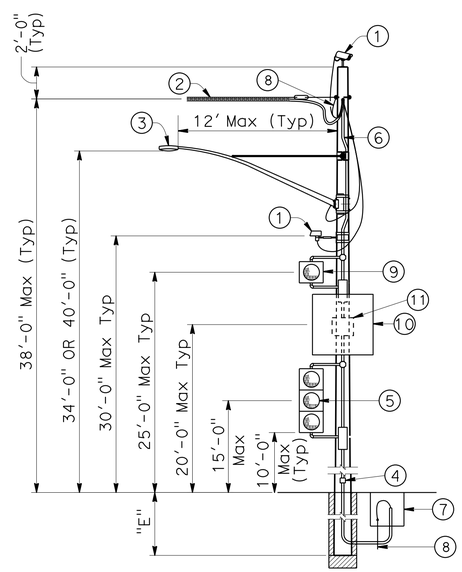

CASE 1N
POLE AT DEAD END WITH ATTACHMENTS
SEE NOTE 2

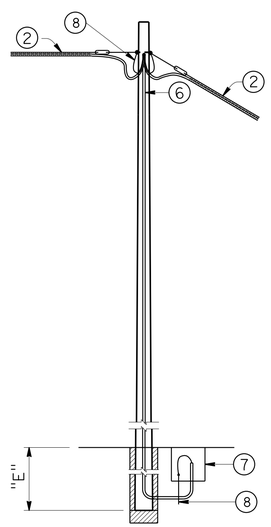

CASE 2N
POLE AT TANGENT WITHOUT ATTACHMENTS

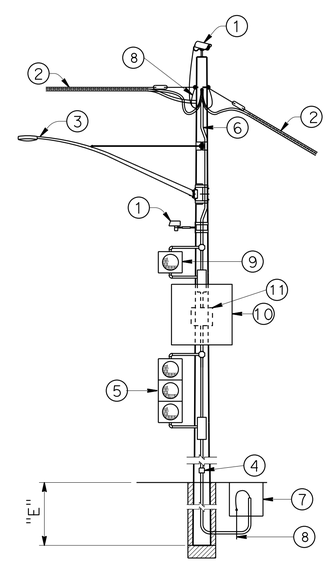

CASE 3N
POLE AT TANGENT OR CORNER WITH ATTACHMENTS
SEE NOTE 2

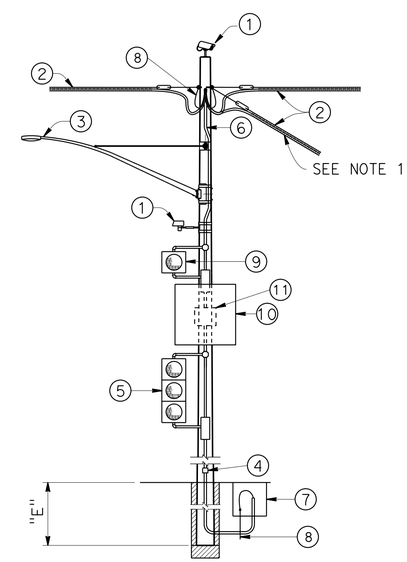

CASE 4N
POLE AT JUNCTION WITH ATTACHMENTS
SEE NOTE 2

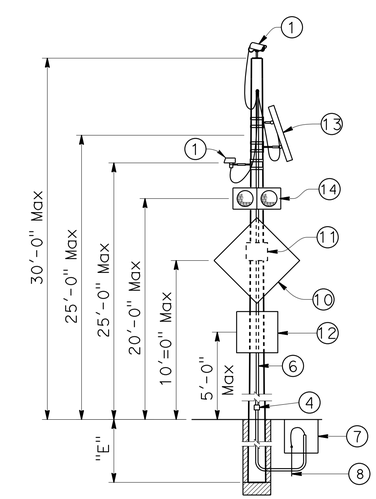

CASE 5N
POLE WITHOUT OVERHEAD BUNDLE WITH ATTACHMENTS

TEMPORARY WOOD POLES NON-GUYED - NO SIGNALS ON SPANS

NO SCALE

SES-2

STATE OF CALIFORNIA - DEPARTMENT OF TRANSPORTATION
Caltrans® DIVISION OF ENGINEERING

FUNCTIONAL SUPERVISOR: JUSTIN UNCK
CALCULATED-DESIGNED BY: WESLEY LEE
CHECKED BY: HUAN CUNG
REVISED BY
DATE REVISED

LAST REVISION 00-00-00
DATE PLOTTED => 28-AUG-2014
TIME PLOTTED => 10:47

Dist	COUNTY	ROUTE	POST MILES TOTAL PROJECT	SHEET No.	TOTAL SHEETS
01	Lak	29	R34.4/R40.0	33	62

REGISTERED CIVIL ENGINEER 5-1-14 DATE

5-1-14
PLANS APPROVAL DATE

REGISTERED PROFESSIONAL ENGINEER HUAN M. CUNG No. C74406 Exp. 9-30-15 CIVIL STATE OF CALIFORNIA

THE STATE OF CALIFORNIA OR ITS OFFICERS OR AGENTS SHALL NOT BE RESPONSIBLE FOR THE ACCURACY OR COMPLETENESS OF SCANNED COPIES OF THIS PLAN SHEET.

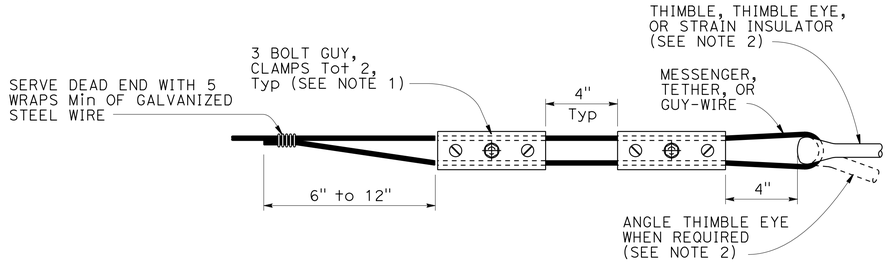

ALTERNATIVE TERMINATION OF MESSENGER WIRES USING GUY CLAMPS

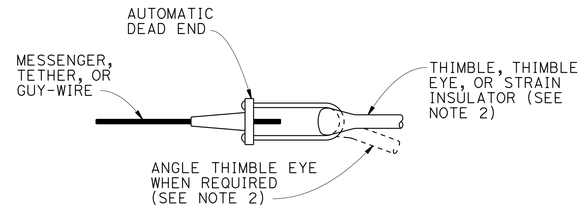

TERMINATION OF WIRES USING AUTOMATIC DEAD END

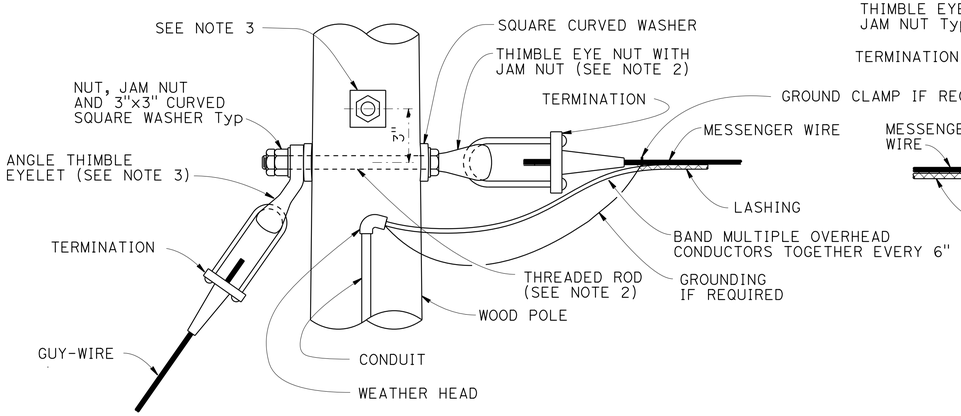

POLE AT DEAD END WITH GUY-WIRE CONNECTION

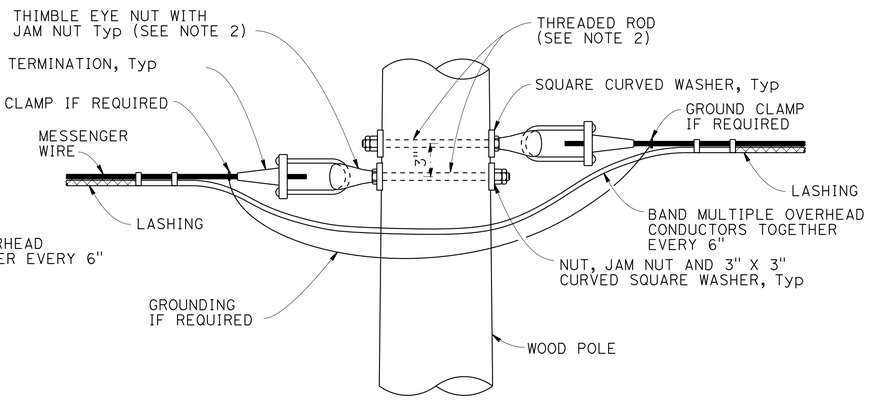

POLE AT TANGENT OR CORNER CONNECTION

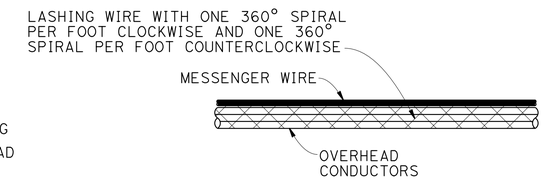

DOUBLE LASHING DETAIL

USE IF d_p IS GREATER THAN 1½"

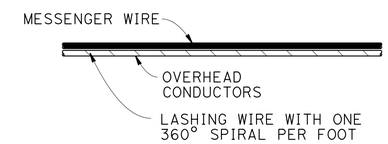

TYPICAL LASHING DETAIL

USE IF d_p IS 1½" OR LESS

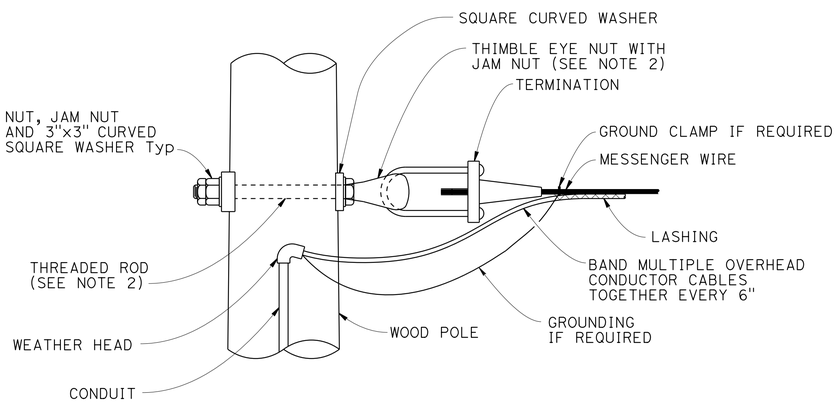

POLE AT DEAD END CONNECTION

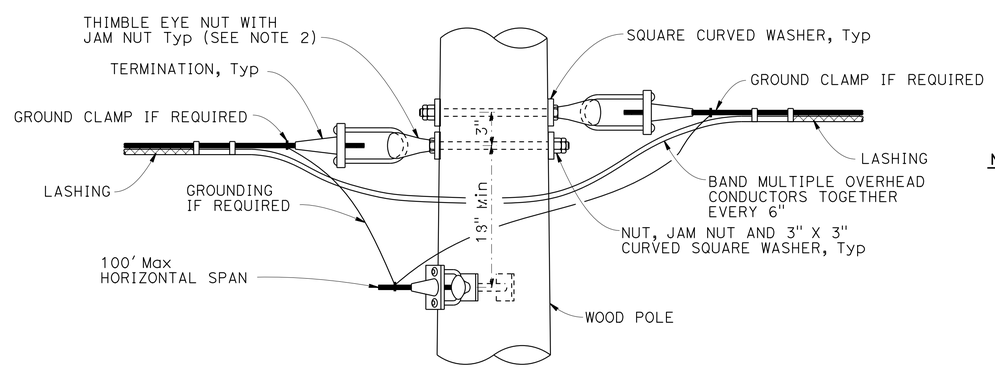

POLE AT JUNCTION CONNECTION

NOTES:

1. For guy wires use 3 clamps.
2. Use ⅝" ø except ¾" ø at guyed wires
3. Install additional angle thimble eyelet at poles with two guy wires.

TEMPORARY WOOD POLES DETAILS No.1

NO SCALE

SES-3

STATE OF CALIFORNIA - DEPARTMENT OF TRANSPORTATION
Caltrans® DIVISION OF ENGINEERING

FUNCTIONAL SUPERVISOR: JUSTIN UNCK
CALCULATED-DESIGNED BY: WESLEY LEE
CHECKED BY: HUAN CUNG
REVISED BY
DATE REVISED

LAST REVISION 00-00-00
DATE PLOTTED => 28-AUG-2014
TIME PLOTTED => 10:47

Dist	COUNTY	ROUTE	POST MILES TOTAL PROJECT	SHEET No.	TOTAL SHEETS
01	Lak	29	R34.4/R40.0	34	62

REGISTERED CIVIL ENGINEER 5-1-14 DATE

5-1-14
PLANS APPROVAL DATE

REGISTERED PROFESSIONAL ENGINEER HUAN M. CUNG No. C74406 Exp. 9-30-15 CIVIL STATE OF CALIFORNIA

THE STATE OF CALIFORNIA OR ITS OFFICERS OR AGENTS SHALL NOT BE RESPONSIBLE FOR THE ACCURACY OR COMPLETENESS OF SCANNED COPIES OF THIS PLAN SHEET.

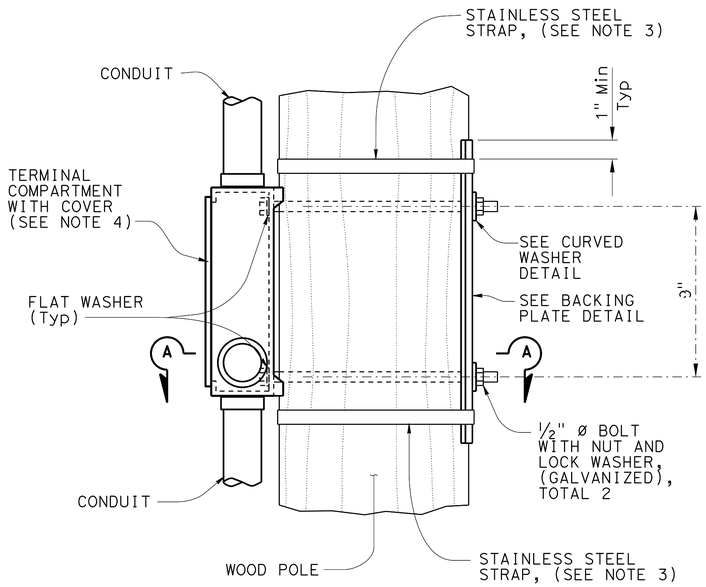

ELEVATION

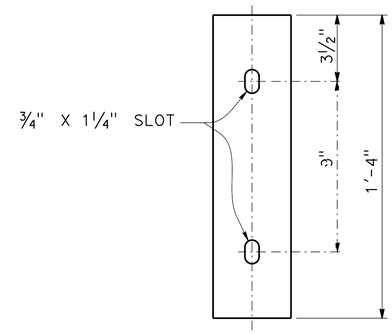

ELEVATION

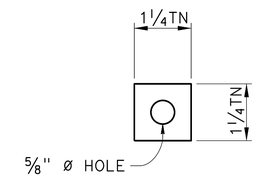

ELEVATION

PLAN

BACKING PLATE DETAIL

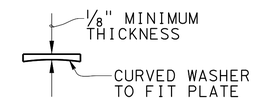

PLAN

CURVED WASHER DETAIL

NOTES:

1. Verify pole dimensions at terminal compartment for fabrication of backing plate and curved washer.
2. Backing plate to be galvanized after fabrication.
3. ¾" x 0.044" minimum, rounded edge stainless steel straps, double wrapped with 2" long bend under stainless steel strap buckle.
4. For details not shown see Standard Plan ES-4D.

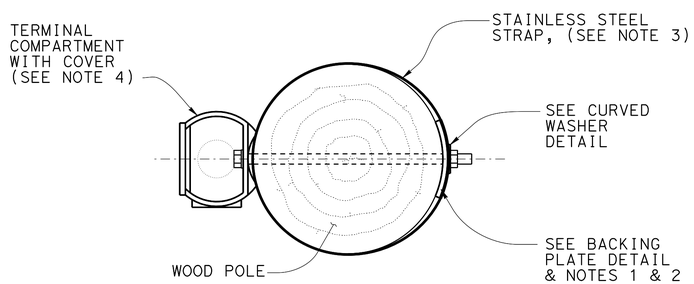

SECTION A-A

SIDE MOUNTING TERMINAL COMPARTMENT

TEMPORARY WOOD POLES DETAILS No.4

NO SCALE **SES-4**

STATE OF CALIFORNIA - DEPARTMENT OF TRANSPORTATION
Caltrans DIVISION OF ENGINEERING

FUNCTIONAL SUPERVISOR: JUSTIN UNCK
CALCULATED-DESIGNED BY: WESLEY LEE
CHECKED BY: HUAN CUNG
REVISED BY
DATE REVISED

LAST REVISION 00-00-00
DATE PLOTTED => 28-AUG-2014
TIME PLOTTED => 10:47

M

Maint	MAINTENANCE
Max	MAXIMUM
MB	METAL BEAM
MBB	METAL BEAM BARRIER
MBGR	METAL BEAM GUARD RAILING
Med	MEDIAN
MGS	MIDWEST GUARDRAIL SYSTEM
MH	MANHOLE
Min	MINIMUM
Misc	MISCELLANEOUS
Misc I & S	MISCELLANEOUS IRON AND STEEL
Mkr	MARKER
Mod	MODIFIED,
	MODIFY
Mon	MONUMENT
MP	METAL PLATE
MPGR	METAL PLATE GUARD RAILING
MR	MOVEMENT RATING
MSE	MECHANICALLY STABILIZED EMBANKMENT
Mt	MOUNTAIN, MOUNT
Mtl	MATERIAL
MVP	MAINTENANCE VEHICLE PULLOUT

N

N	NORTH
NB	NORTHBOUND
No.	NUMBER (MUST HAVE PERIOD)
Nos.	NUMBERS (MUST HAVE PERIOD)
NPS	NOMINAL PIPE SIZE
NS	NEAR SIDE
NSP	NEW STANDARD PLAN
NTS	NOT TO SCALE

O

Oblr	OBLITERATE
OC	OVERCROSSING
OD	OUTSIDE DIAMETER
OF	OUTSIDE FACE
OG	ORIGINAL GROUND
OGAC	OPEN GRADED ASPHALT CONCRETE
OGFC	OPEN GRADED FRICTION COURSE
OH	OVERHEAD
OHWM	ORDINARY HIGH WATER MARK
O-O	OUT TO OUT
Opp	OPPOSITE
OSD	OVERSIDE DRAIN

P

p	PAGE
PAP	PERFORATED ALUMINUM PIPE
PB	PULL BOX
PC	POINT OF CURVATURE,
	PRECAST
PCC	POINT OF COMPOUND CURVE,
	PORTLAND CEMENT CONCRETE
PCMS	PORTABLE CHANGEABLE MESSAGE SIGN
PCP	PERFORATED CONCRETE PIPE,
	PRESTRESSED CONCRETE PIPE
PCVC	POINT OF COMPOUND VERTICAL CURVE
PEC	PERMIT TO ENTER AND CONSTRUCT
Ped	PEDESTRIAN
Ped OC	PEDESTRIAN OVERCROSSING
Ped UC	PEDESTRIAN UNDERCROSSING
Perm Mtl	PERMEABLE MATERIAL

P continued

PG	PROFILE GRADE
PI	POINT OF INTERSECTION
PJP	PARTIAL JOINT PENETRATION
Pkwy	PARKWAY
ℙ,PL	PLATE
P/L	PROPERTY LINE
PM	POST MILE,
	TIME FROM NOON TO MIDNIGHT
PN	PAVING NOTCH
POC	POINT OF HORIZONTAL CURVE
POT	POINT OF TANGENT
POVC	POINT OF VERTICAL CURVE
PP	PIPE PILE,
	PLASTIC PIPE,
	POWER POLE
PPL	PREFORMED PERMEABLE LINER
PPP	PERFORATED PLASTIC PIPE
PRC	POINT OF REVERSE CURVE
PRF	PAVEMENT REINFORCING FABRIC
PRVC	POINT OF REVERSE VERTICAL CURVE
PS&E	PLANS, SPECIFICATIONS AND ESTIMATES
PS, P/S	PRESTRESSED
PSP	PERFORATED STEEL PIPE
PT	POINT OF TANGENCY
PVC	POLYVINYL CHLORIDE
Pvmt	PAVEMENT

Q

Qty	QUANTITY

R

R	RADIUS
R & D	REMOVE AND DISPOSE
R & S	REMOVE AND SALVAGE
R/C	RATE OF CHANGE
RCA	REINFORCED CONCRETE ARCH
RCB	REINFORCED CONCRETE BOX
RCP	REINFORCED CONCRETE PIPE
RCPA	REINFORCED CONCRETE PIPE ARCH
Rd	ROAD
Reinf	REINFORCED,
	REINFORCEMENT,
	REINFORCING
Rel	RELOCATE
Repl	REPLACEMENT
Ret	RETAINING
Rev	REVISED, REVISION
Rdwy	ROADWAY
RHMA	RUBBERIZED HOT MIX ASPHALT
Riv	RIVER
RM	ROAD-MIXED
RP	RADIUS POINT,
	REFERENCE POINT
RR	RAILROAD
RSP	ROCK SLOPE PROTECTION,
	REVISED STANDARD PLAN
Rt	RIGHT
Rte	ROUTE
RW	REDWOOD,
	RETAINING WALL
R/W	RIGHT OF WAY
Rwy	RAILWAY

S

S	SOUTH,
	SUPPLEMENT
SAE	STRUCTURE APPROACH EMBANKMENT
Salv	SALVAGE
SAPP	STRUCTURAL ALUMINUM PLATE PIPE
SB	SOUTHBOUND
SC	SAND CUSHION
SCSP	SLOTTED CORRUGATED STEEL PIPE
SD	STORM DRAIN
Sec	SECOND,
	SECTION
Sep	SEPARATION
SG	SUBGRADE
Shld	SHOULDER
Sht	SHEET
Sim	SIMILAR
℄	STATION LINE
SM	SELECTED MATERIAL
Spec	SPECIAL,
	SPECIFICATIONS
SPP	SLOTTED PLASTIC PIPE
SS	SLOPE STAKE
SSBM	STRAP AND SADDLE BRACKET METHOD
SSD	STRUCTURAL SECTION DRAIN
SSPA	STRUCTURAL STEEL PLATE ARCH
SSPP	STRUCTURAL STEEL PLATE PIPE
SSPPA	STRUCTURAL STEEL PLATE PIPE ARCH
SSRP	STEEL SPIRAL RIB PIPE
St	STREET
Sta	STATION
STBB	SINGLE THRIE BEAM BARRIER
Std	STANDARD
Str	STRUCTURE
Surf	SURFACING
SW	SIDEWALK,
	SOUND WALL
Swr	SEWER
Sym	SYMMETRICAL
S4S	SURFACE 4 SIDES

T

T	SEMI-TANGENT
Tan	TANGENT
TBB	THRIE BEAM BARRIER
Tbr	TIMBER
TC	TOP OF CURB
TCB	TRAFFIC CONTROL BOX
TCE	TEMPORARY CONSTRUCTION EASEMENT
Tel	TELEPHONE
Temp	TEMPORARY
TG	TOP OF GRADE
Tot	TOTAL
TP	TELEPHONE POLE
TPB	TREATED PERMEABLE BASE
TPM	TREATED PERMEABLE MATERIAL
Trans	TRANSITION

T continued

TS	TRANSVERSE,
	TRAFFIC SIGNAL,
	TUBULAR STEEL
Typ	TYPICAL

U

UC	UNDERCROSSING
UD	UNDERDRAIN
UG	UNDERGROUND
UON	UNLESS OTHERWISE NOTED
UP	UNDERPASS

V

V	VALVE,
	DESIGN SPEED
Var	VARIABLE,
	VARIES
VC	VERTICAL CURVE
VCP	VITRIFIED CLAY PIPE
Vert	VERTICAL
Via	VIADUCT
Vol	VOLUME

W

W	WEST,
	WIDTH
WB	WESTBOUND
WH	WEEP HOLE
WM	WIRE MESH
WS	WATER SURFACE
WSP	WELDED STEEL PIPE
Wt	WEIGHT
WV	WATER VALVE
WW	WINGWALL
WWLOL	WINGWALL LAYOUT LINE

X

X Sec	CROSS SECTION
Xing	CROSSING

Y

Yr	YEAR
Yrs	YEARS

Dist	COUNTY	ROUTE	POST MILES TOTAL PROJECT	SHEET No.	TOTAL SHEETS
01	Lak	29	R34.4/R40.0	35	62

Grace M. Tsushima
REGISTERED CIVIL ENGINEER

July 19, 2013
PLANS APPROVAL DATE

REGISTERED PROFESSIONAL ENGINEER
Grace M. Tsushima
No. C49814
Exp. 9-30-14
CIVIL
STATE OF CALIFORNIA

THE STATE OF CALIFORNIA OR ITS OFFICERS OR AGENTS SHALL NOT BE RESPONSIBLE FOR THE ACCURACY OR COMPLETENESS OF SCANNED COPIES OF THIS PLAN SHEET.

TO ACCOMPANY PLANS DATED 5-1-14

UNIT OF MEASUREMENT SYMBOLS:

Some of the symbols used in the project plan quantity tables and in the Bid Item List are:

TABLE A

SYMBOL USED	DEFINITIONS
ACRE	ACRE
CF	CUBIC FOOT
CY	CUBIC YARD
EA	EACH
GAL	GALLON
LB	POUND
LF	LINEAR FOOT
SQFT	SQUARE FOOT
SQYD	SQUARE YARD
STA	100 FEET
TAB	TABLET
TON	2,000 POUNDS

Some of the symbols used in the plans other than in the project plan quantity tables are:

TABLE B

SYMBOL USED	DEFINITIONS
ksi	KIPS PER SQUARE INCH
ksf	KIPS PER SQUARE FOOT
psi	POUNDS PER SQUARE INCH
psf	POUNDS PER SQUARE FOOT
lb/ft^3, pcf	POUNDS PER CUBIC FOOT
tsf	TONS PER SQUARE FOOT
mph, MPH *	MILES PER HOUR
ø	NOMINAL DIAMETER
oz	OUNCE
lb	POUND
kip	1,000 POUNDS
cal	CALORIE
ft	FOOT OR FEET
gal	GALLON

* For use on a sign panel only

STATE OF CALIFORNIA
DEPARTMENT OF TRANSPORTATION

ABBREVIATIONS (SHEET 2 OF 2)

NO SCALE

RSP A10B DATED JULY 19, 2013 SUPERSEDES STANDARD PLAN A10B DATED MAY 20, 2011 - PAGE 2 OF THE STANDARD PLANS BOOK DATED 2010.

REVISED STANDARD PLAN RSP A10B

2010 REVISED STANDARD PLAN RSP A10B

6-7-13

Dist	COUNTY	ROUTE	POST MILES TOTAL PROJECT	SHEET No.	TOTAL SHEETS
01	Lak	29	R34.4/R40.0	36	62

REGISTERED CIVIL ENGINEER

July 19, 2013
PLANS APPROVAL DATE

REGISTERED PROFESSIONAL ENGINEER Roberta L. McLaughlin No. C40375 Exp. 3-31-15 CIVIL STATE OF CALIFORNIA

THE STATE OF CALIFORNIA OR ITS OFFICERS OR AGENTS SHALL NOT BE RESPONSIBLE FOR THE ACCURACY OR COMPLETENESS OF SCANNED COPIES OF THIS PLAN SHEET.

TO ACCOMPANY PLANS DATED 5-1-14

EXIT RAMP NEUTRAL AREA (GORE) TREATMENT

DETAIL 36

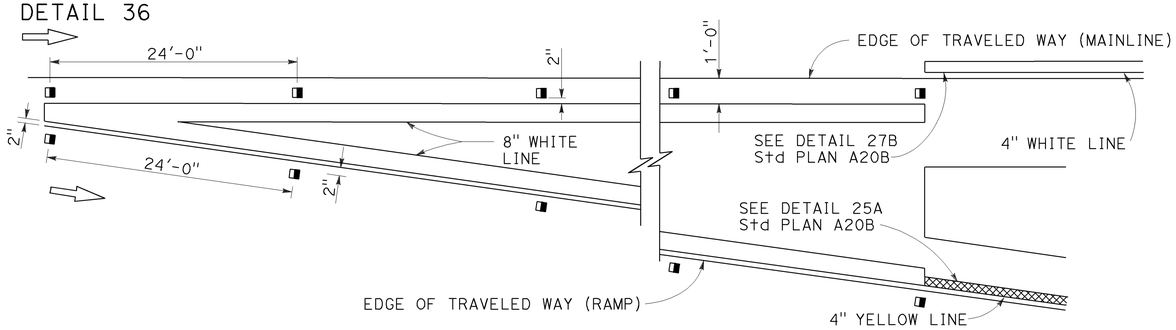

ENTRANCE RAMP NEUTRAL AREA (MERGE) TREATMENT

DETAIL 36A

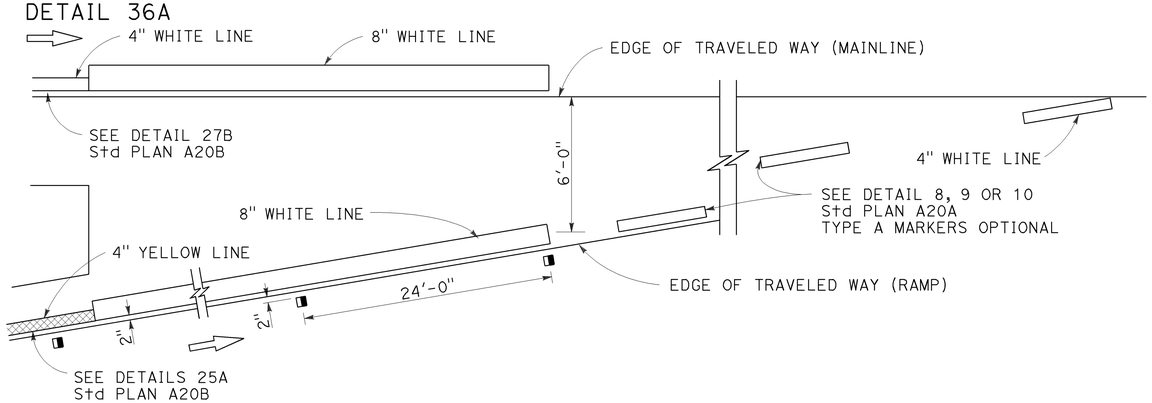

ENTRANCE RAMP NEUTRAL AREA (ACCELERATION LANE) TREATMENT

DETAIL 36B

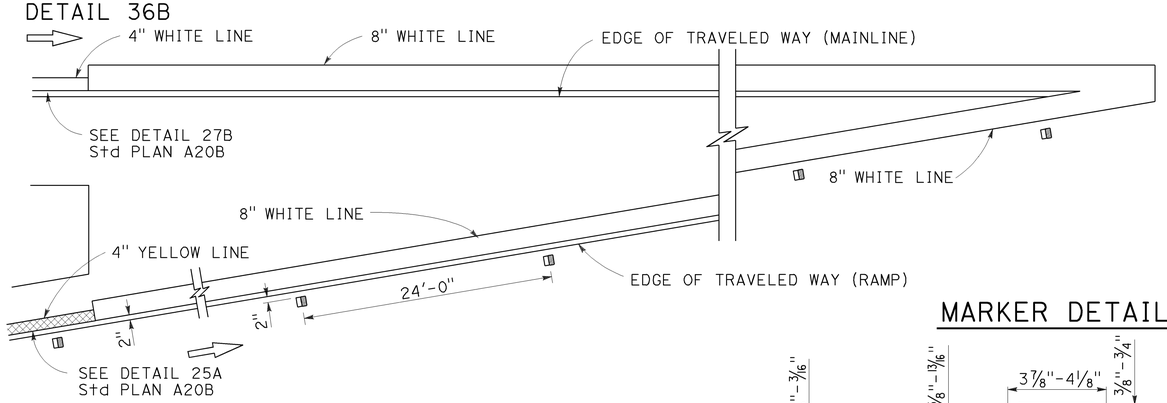

LANE DROP AT EXIT RAMPS

DETAIL 37

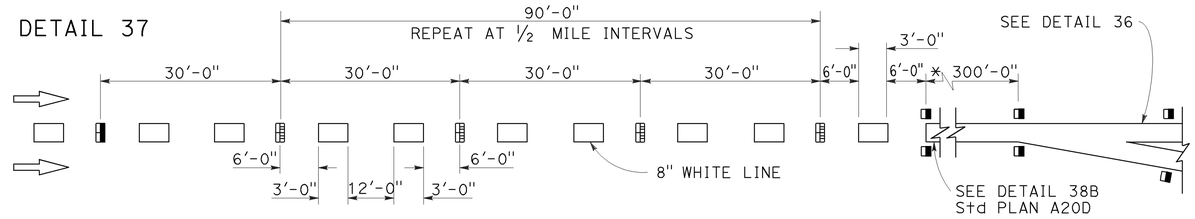

DETAIL 37A

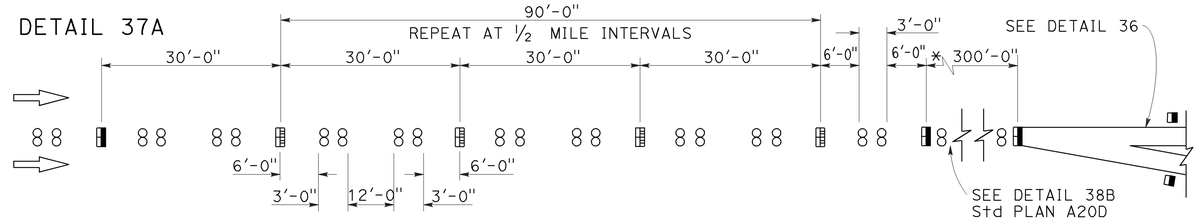

* The solid channelizing line shown may be omitted on short auxiliary lanes where weaving length is critical.

LANE DROP AT INTERSECTIONS

DETAIL 37B

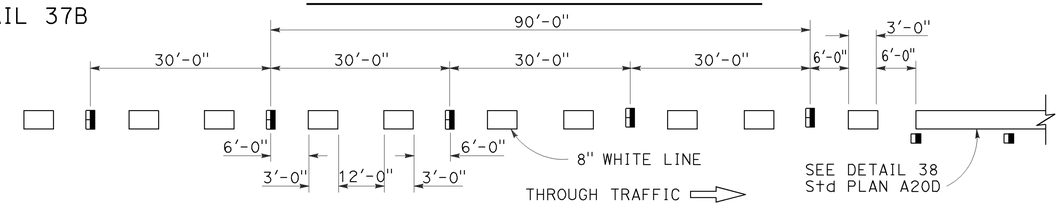

DETAIL 37C

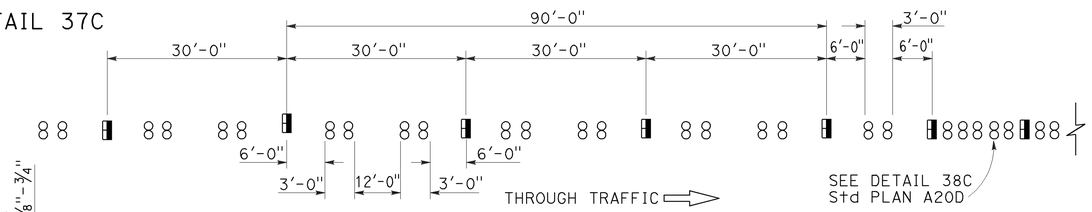

MARKER DETAILS

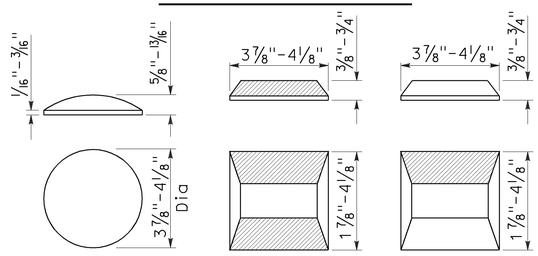

RETROREFLECTIVE FACE

LEGEND:

MARKERS

- ○ TYPE A WHITE NON-REFLECTIVE
- ⊟ TYPE C RED-CLEAR RETROREFLECTIVE
- ◨ TYPE G ONE-WAY CLEAR RETROREFLECTIVE

STATE OF CALIFORNIA
DEPARTMENT OF TRANSPORTATION

PAVEMENT MARKERS AND TRAFFIC LINE TYPICAL DETAILS

NO SCALE

RSP A20C DATED JULY 19, 2013 SUPERSEDES STANDARD PLAN A20C DATED MAY 20, 2011 - PAGE 11 OF THE STANDARD PLANS BOOK DATED 2010.

REVISED STANDARD PLAN RSP A20C

2010 REVISED STANDARD PLAN RSP A20C

4-29-13

Dist	COUNTY	ROUTE	POST MILES TOTAL PROJECT	SHEET No.	TOTAL SHEETS
01	Lak	29	R34.4/R40.0	37	62

REGISTERED CIVIL ENGINEER

October 19, 2012
PLANS APPROVAL DATE

REGISTERED PROFESSIONAL ENGINEER Roberta L. McLaughlin No. C40375 Exp. 3-31-13 CIVIL STATE OF CALIFORNIA

THE STATE OF CALIFORNIA OR ITS OFFICERS OR AGENTS SHALL NOT BE RESPONSIBLE FOR THE ACCURACY OR COMPLETENESS OF SCANNED COPIES OF THIS PLAN SHEET.

NOTE: TO ACCOMPANY PLANS DATED 5-1-14

Minor variations in dimensions may be accepted by the Engineer.

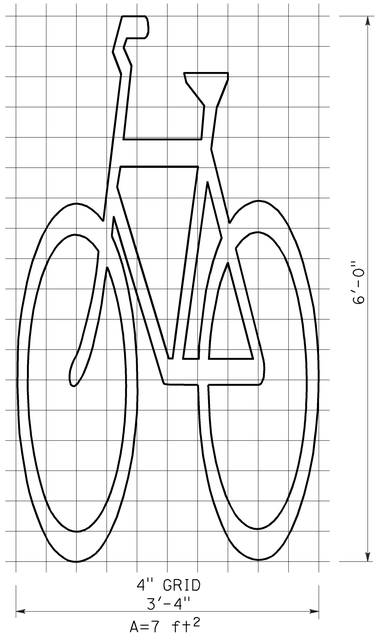

BIKE LANE SYMBOL WITHOUT PERSON

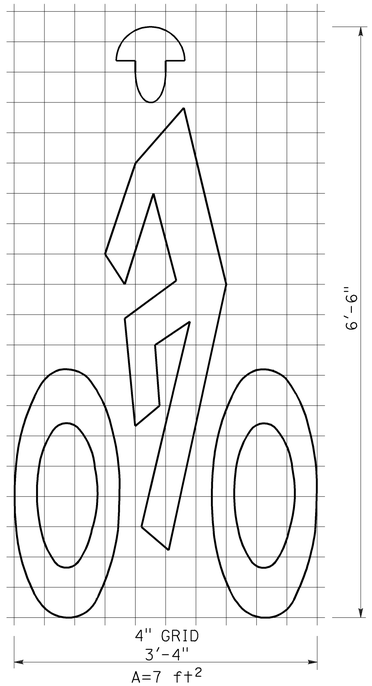

BIKE LANE SYMBOL WITH PERSON

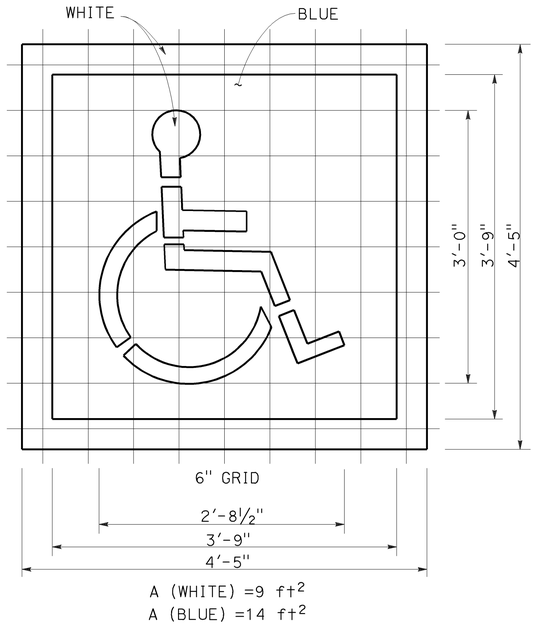

INTERNATIONAL SYMBOL OF ACCESSIBILITY (ISA) MARKING

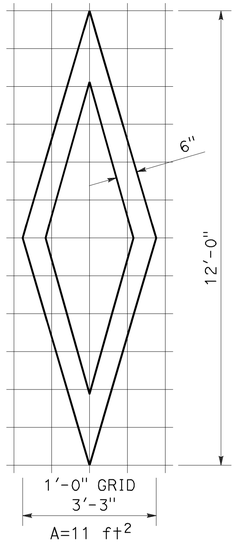

DIAMOND SYMBOL

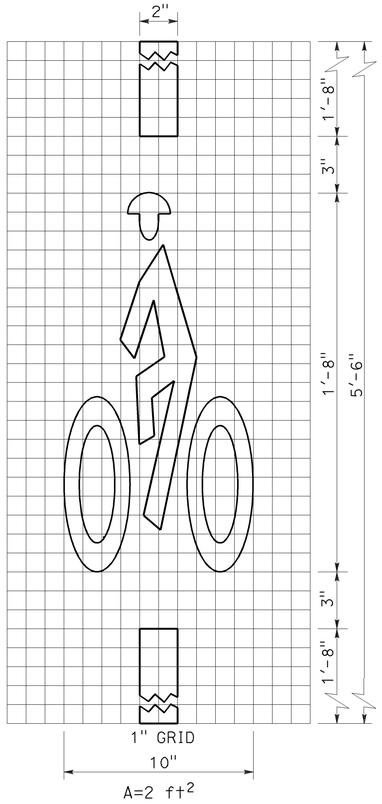

BICYCLE LOOP DETECTOR SYMBOL

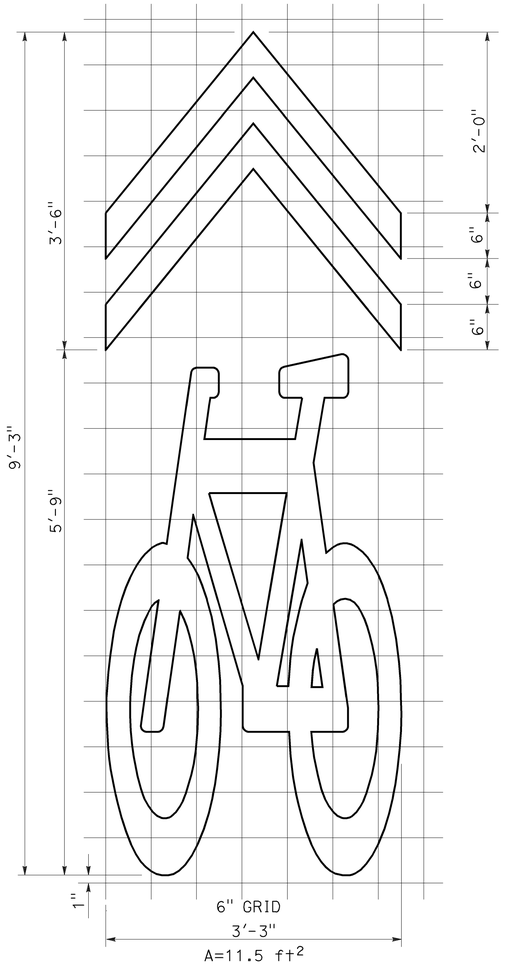

SHARED ROADWAY BICYCLE MARKING

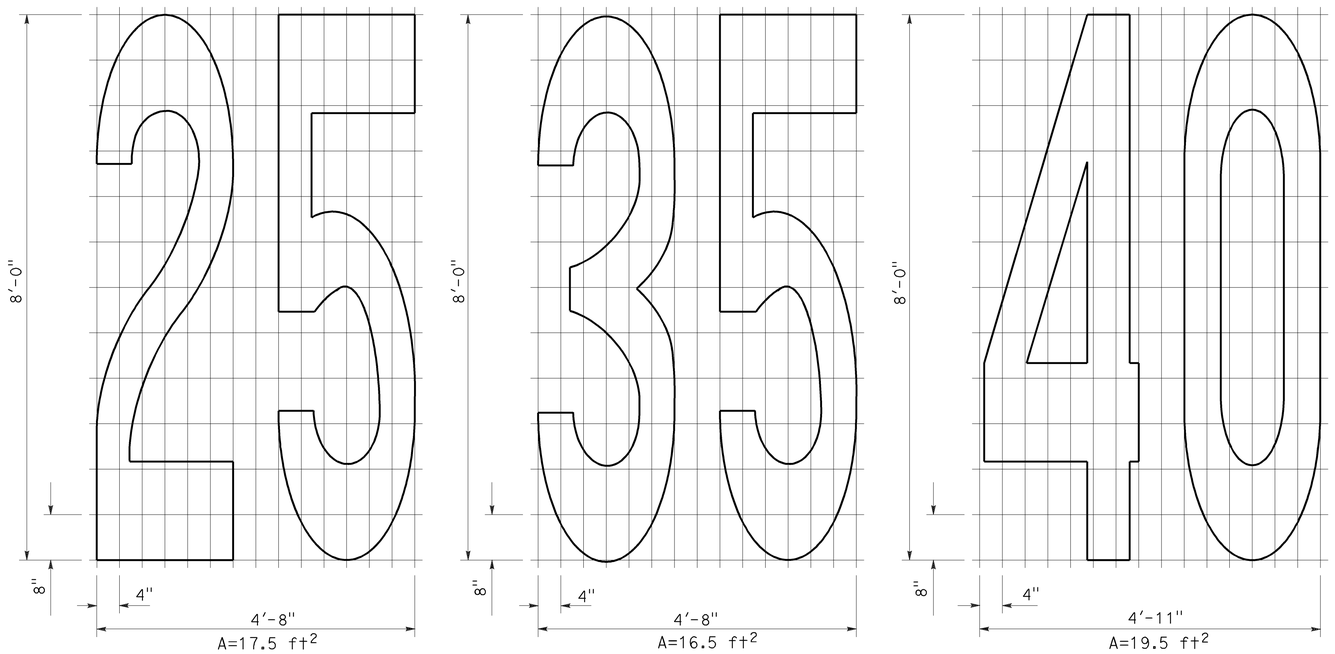

NUMERALS

STATE OF CALIFORNIA
DEPARTMENT OF TRANSPORTATION

PAVEMENT MARKINGS SYMBOLS AND NUMERALS

NO SCALE

RSP A24C DATED OCTOBER 19, 2012 SUPERSEDES STANDARD PLAN A24C DATED MAY 20, 2011 - PAGE 15 OF THE STANDARD PLANS BOOK DATED 2010.

REVISED STANDARD PLAN RSP A24C

2010 REVISED STANDARD PLAN RSP A24C

6-28-12

Dist	COUNTY	ROUTE	POST MILES TOTAL PROJECT	SHEET No.	TOTAL SHEETS
01	Lak	29	R34.4/R40.0	38	62

REGISTERED CIVIL ENGINEER

July 20, 2012
PLANS APPROVAL DATE

REGISTERED PROFESSIONAL ENGINEER
Roberta L. McLaughlin
No. C40375
Exp. 3-31-13
CIVIL
STATE OF CALIFORNIA

THE STATE OF CALIFORNIA OR ITS OFFICERS OR AGENTS SHALL NOT BE RESPONSIBLE FOR THE ACCURACY OR COMPLETENESS OF SCANNED COPIES OF THIS PLAN SHEET.

TO ACCOMPANY PLANS DATED 5-1-14

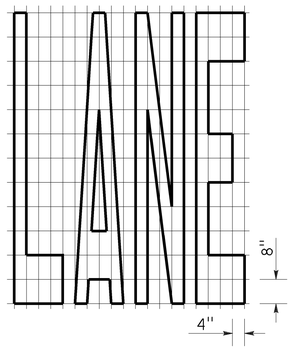

A=24 ft^2

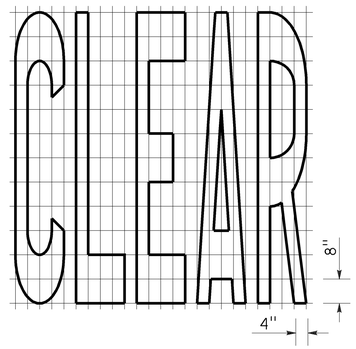

A=27 ft^2

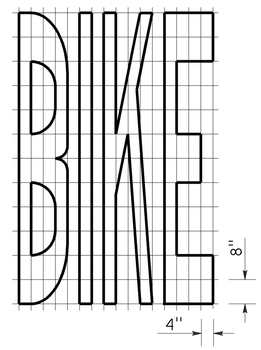

A=21 ft^2

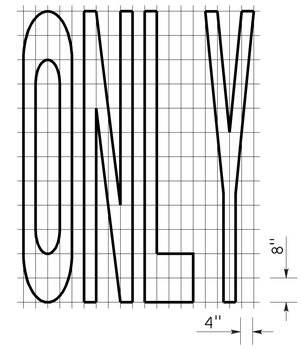

A=22 ft^2

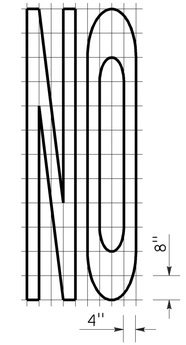

A=14 ft^2

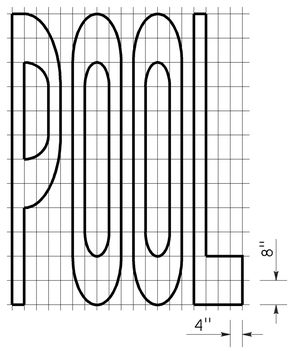

A=23 ft^2

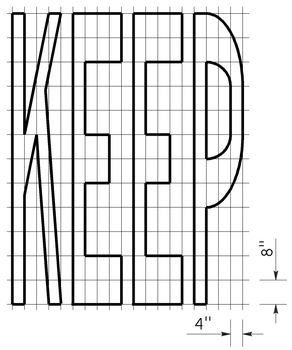

A=24 ft^2

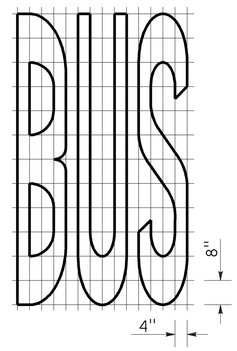

A=20 ft^2

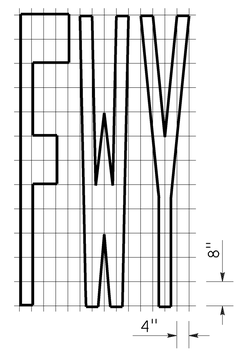

A=16 ft^2

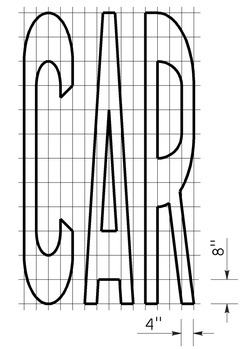

A=17 ft^2

WORD MARKINGS			
ITEM	ft^2	ITEM	ft^2
LANE	24	NO	14
POOL	23	BIKE	21
CAR	17	BUS	20
CLEAR	27	ONLY	22
KEEP	24	FWY	16

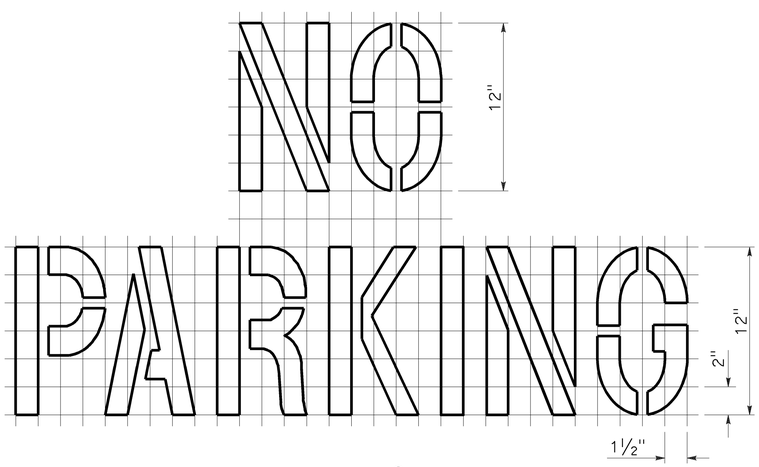

A=2 ft^2
See Notes 6 and 7

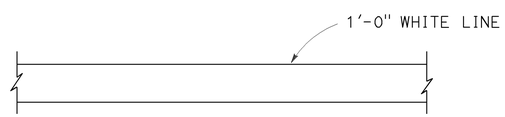

LIMIT LINE (STOP LINE)

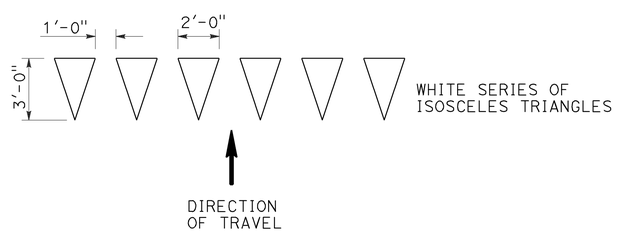

YIELD LINE

NOTES:

1. If a message consists of more than one word, it should read "UP", i.e., the first word should be nearest the driver.
2. The space between words should be at least four times the height of the characters for low speed roads, but not more than ten times the height of the characters. The space may be reduced appropriately where there is limited space because of local conditions.
3. Minor variations in dimensions may be accepted by the Engineer.
4. Portions of a letter, number or symbol may be separated by connecting segments not to exceed 2" in width.
5. The words "NO PARKING" pavement marking is to be used for parking facilities. For typical locations of markings, see Standard Plans A90A and A90B.
6. The words "NO PARKING", shall be painted in white letters no less than 1'-0" high on a contrasting background and located so that it is visible to traffic enforcement officials.

STATE OF CALIFORNIA
DEPARTMENT OF TRANSPORTATION

PAVEMENT MARKINGS WORDS, LIMIT AND YIELD LINES

NO SCALE

RSP A24E DATED JULY 20, 2012 SUPERSEDES STANDARD PLAN A24E
DATED MAY 20, 2011 - PAGE 17 OF THE STANDARD PLANS BOOK DATED 2010.

REVISED STANDARD PLAN RSP A24E

2010 REVISED STANDARD PLAN RSP A24E

6-12-12

Dist	COUNTY	ROUTE	POST MILES TOTAL PROJECT	SHEET No.	TOTAL SHEETS
01	Lak	29	R34.4/R40.0	39	62

REGISTERED CIVIL ENGINEER

July 20, 2012
PLANS APPROVAL DATE

REGISTERED PROFESSIONAL ENGINEER
Roberta L. McLaughlin
No. C40375
Exp. 3-31-13
CIVIL
STATE OF CALIFORNIA

THE STATE OF CALIFORNIA OR ITS OFFICERS OR AGENTS SHALL NOT BE RESPONSIBLE FOR THE ACCURACY OR COMPLETENESS OF SCANNED COPIES OF THIS PLAN SHEET.

TO ACCOMPANY PLANS DATED 5-1-14

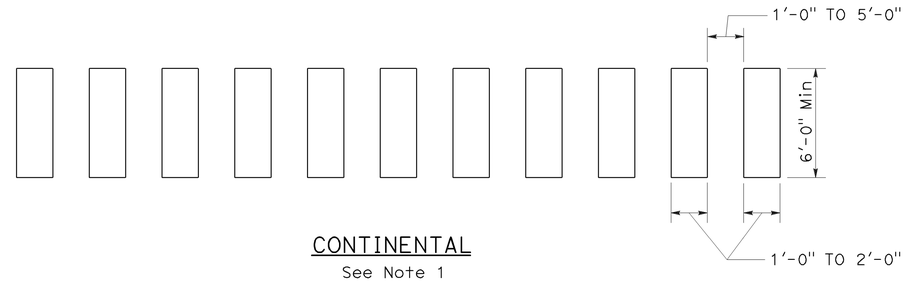

CONTINENTAL
See Note 1

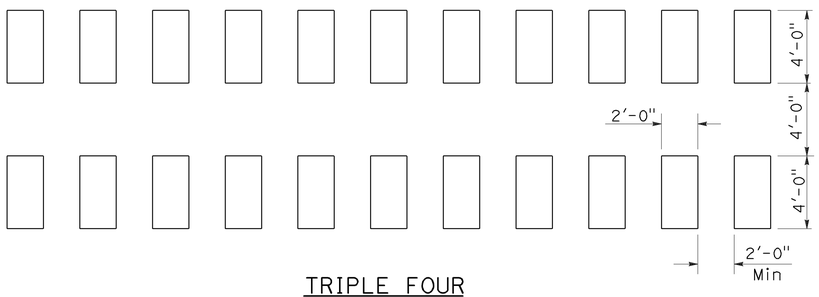

TRIPLE FOUR
See Note 1

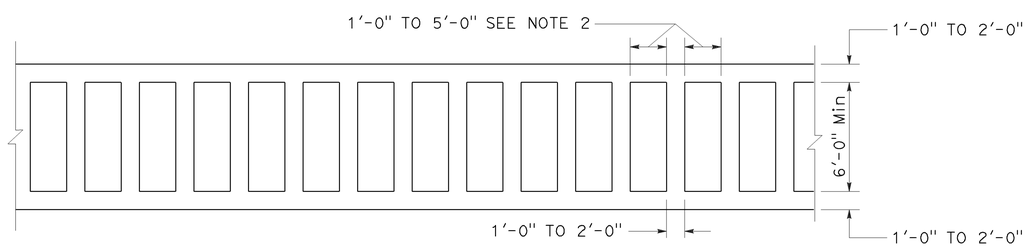

LADDER

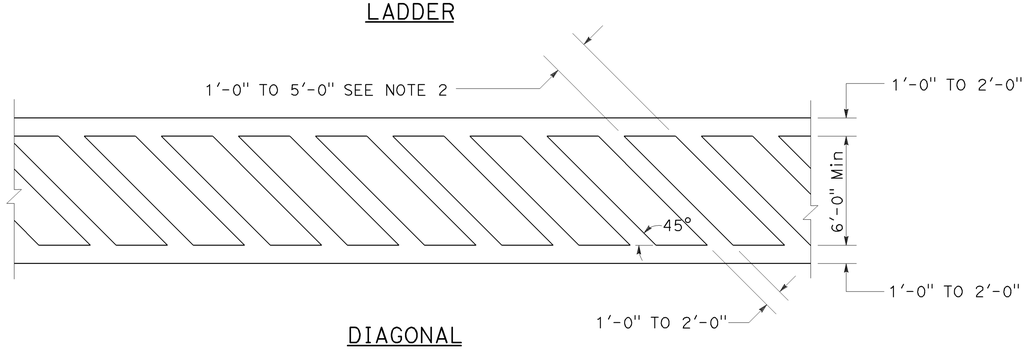

DIAGONAL

HIGHER VISIBILITY CROSSWALKS

NOTES:

1. Spaces between markings should be placed in wheel tracks of each lane.
2. Spacings not to exceed 2.5 times width of longitudinal line.
3. All crosswalk markings must be white except for those near schools must be yellow.

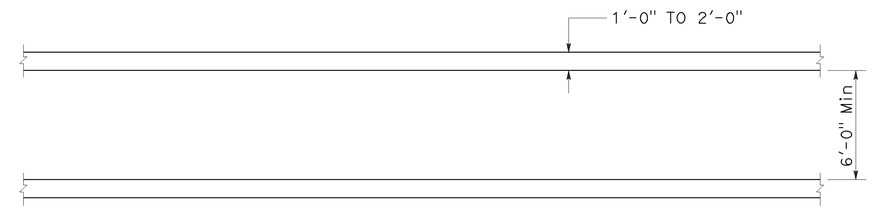

BASIC

STATE OF CALIFORNIA
DEPARTMENT OF TRANSPORTATION

PAVEMENT MARKINGS CROSSWALKS

NO SCALE

RSP A24F DATED JULY 20, 2012 SUPPLEMENTS THE STANDARD PLANS BOOK DATED 2010.

REVISED STANDARD PLAN RSP A24F

2010 REVISED STANDARD PLAN RSP A24F

6-28-12

Dist	COUNTY	ROUTE	POST MILES TOTAL PROJECT	SHEET No.	TOTAL SHEETS
01	Lak	29	R34.4/R40.0	40	62

Randell D. Hiatt
REGISTERED CIVIL ENGINEER

July 19, 2013
PLANS APPROVAL DATE

REGISTERED PROFESSIONAL ENGINEER
Randell D. Hiatt
No. C50200
Exp. 6-30-15
CIVIL
STATE OF CALIFORNIA

THE STATE OF CALIFORNIA OR ITS OFFICERS OR AGENTS SHALL NOT BE RESPONSIBLE FOR THE ACCURACY OR COMPLETENESS OF SCANNED COPIES OF THIS PLAN SHEET.

TO ACCOMPANY PLANS DATED 5-1-14

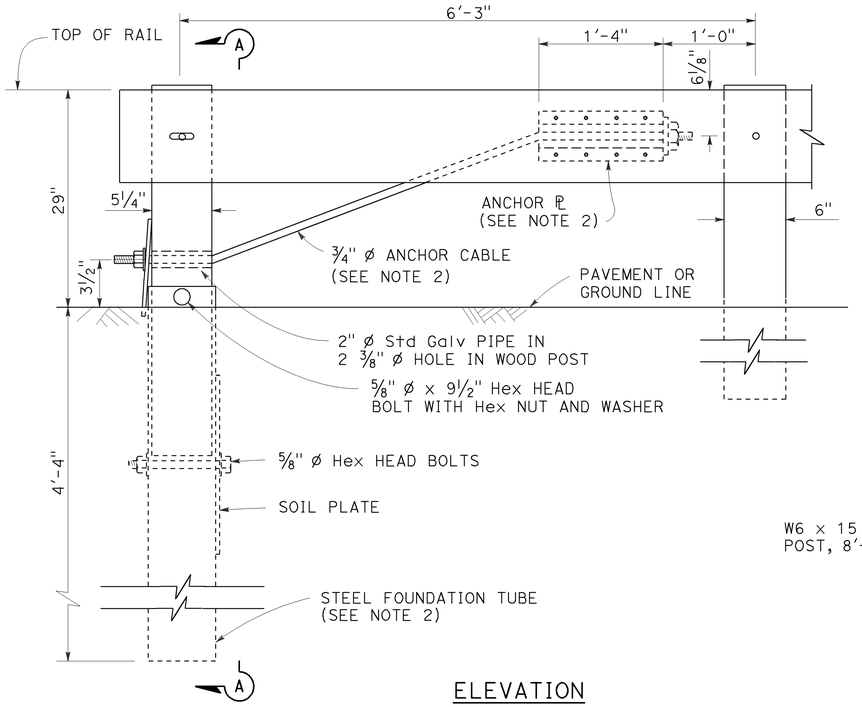

ELEVATION
END ANCHOR
ASSEMBLY (TYPE SFT)

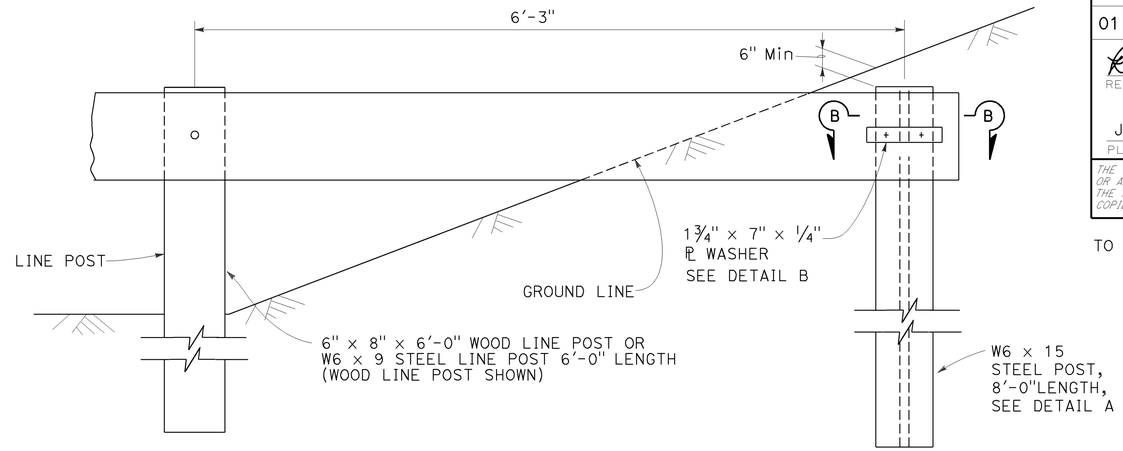

BURIED POST END ANCHOR

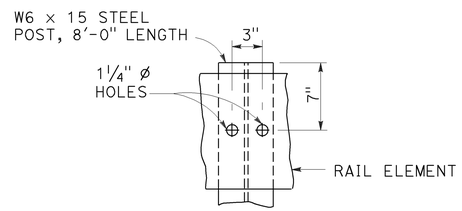

DETAIL A

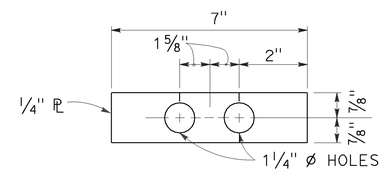

DETAIL B

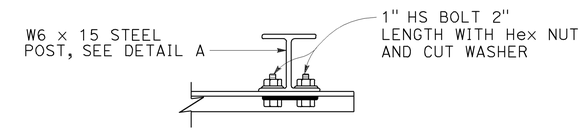

SECTION B-B

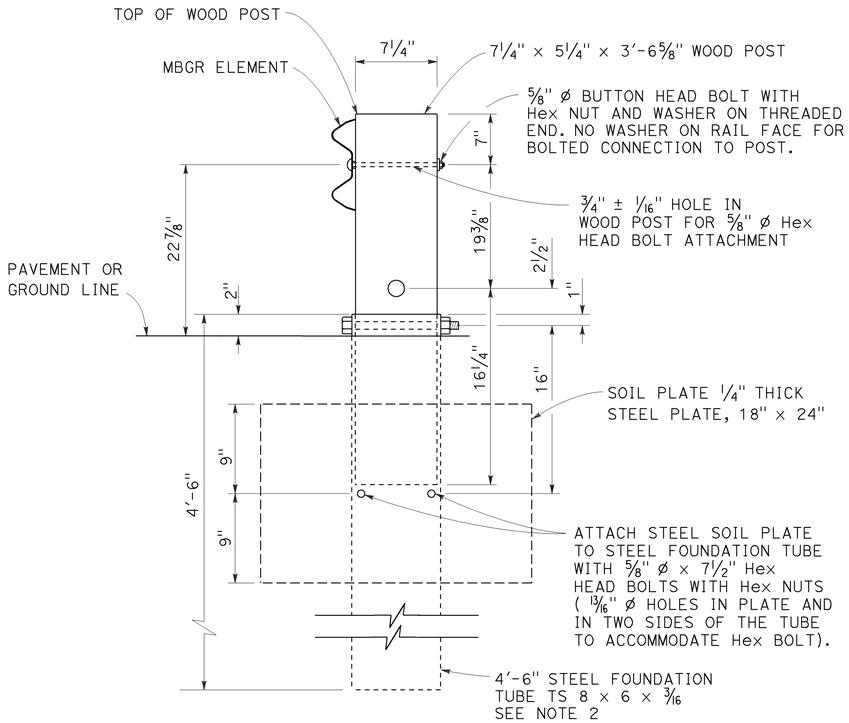

SECTION A-A

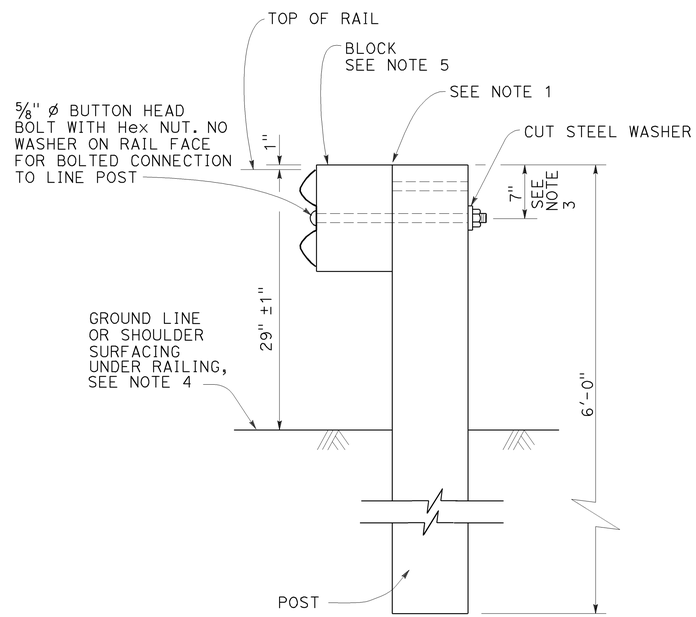

TYPICAL LINE
POST INSTALLATION

NOTES:

1. For wood post and wood block, toenail with 2-16d Galv nails in top of block. For steel post and notched wood or plastic block, notched face of block faces steel post.
2. A 6'-0" Length steel foundation tube, TS 8 x 6 x 3/16, without a soil plate, may be furnished and installed in place of the 4'-6" length steel foundation tube and soil plate shown, Minimum embadment of the 6'-0" length tube shall be 5'-9". A 5/8" ø Hex head bolt and nut shall be installed in the hole in the 6'-0" length tube to keep the wood post from dropping into the tube.
3. To connect railing to 27" terminal system end treatment, transition the top of railing height at a ratio of 120:1 to terminal system end treatment height plus one 12'-6" standard railing section at the transitioned height for a horizontal connection to the end treatment.
4. Install posts in soil.
5. See Revised Standard Plans RSP A77N1 and RSP A77N2 for details.
6. Holes excavation in the slope to construct the buried post end anchor shall be backfilled with selected earth, placed in layers approximately 1'-0" thick. Each layer shall be moistened and thoroughly compacted.

STATE OF CALIFORNIA
DEPARTMENT OF TRANSPORTATION

METAL BEAM GUARD RAILING RECONSTRUCT INSTALLATION

NO SCALE

RSP A77L3 DATED JULY 19, 2013 SUPPLEMENTS THE STANDARD PLANS BOOK DATED 2010.

REVISED STANDARD PLAN RSP A77L3

2010 REVISED STANDARD PLAN RSP A77L3

7-16-13

Dist	COUNTY	ROUTE	POST MILES TOTAL PROJECT	SHEET No.	TOTAL SHEETS
01	Lak	29	R34.4/R40.0	41	62

Randell D. Hiatt
REGISTERED CIVIL ENGINEER

July 19, 2013
PLANS APPROVAL DATE

REGISTERED PROFESSIONAL ENGINEER
Randell D. Hiatt
No. C50200
Exp. 6-30-15
CIVIL
STATE OF CALIFORNIA

THE STATE OF CALIFORNIA OR ITS OFFICERS OR AGENTS SHALL NOT BE RESPONSIBLE FOR THE ACCURACY OR COMPLETENESS OF SCANNED COPIES OF THIS PLAN SHEET.

TO ACCOMPANY PLANS DATED 5-1-14

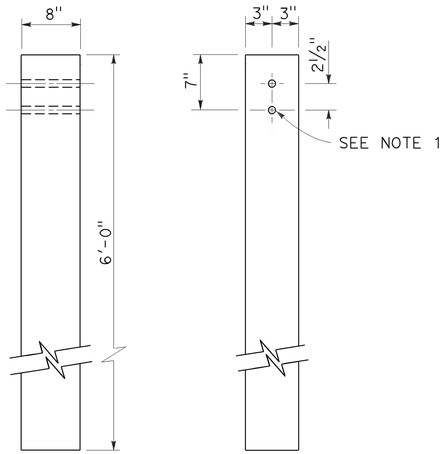

SIDE FRONT

6" x 8" WOOD POST
See Note 3

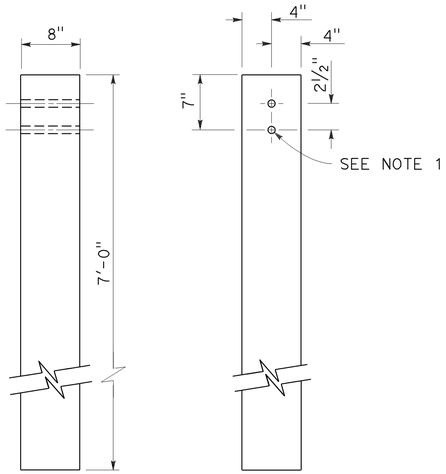

SIDE FRONT

8" x 8" WOOD POST
See Note 4

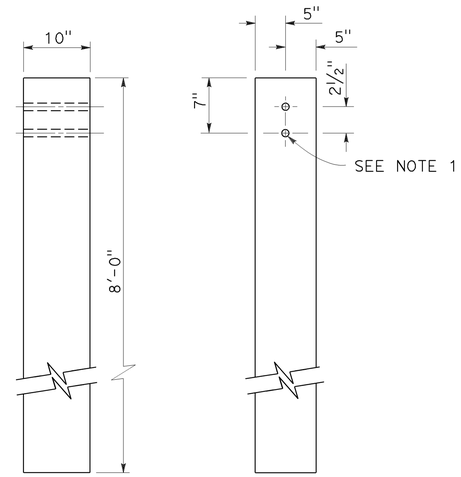

SIDE FRONT

10" x 10" WOOD POST
See Note 5

NOTES:

1. All holes in wood posts and blocks shall be ¾" Dia ± 1/16".
2. Dimensions shown for wood post are nominal.
3. This post and block combination used for standard line post sections of MGS.
4. This post and 8" x 12" block combination used for line post sections of MGS on narrow roadways.
5. This post and 8" x 12" block combination is typically used where strengthened line post sections of MGS are warranted to shield fixed objects.
6. See Revised Standard Plan RSP A77L3 for use of 6" x 8" and 8" x 8" wood blocks.

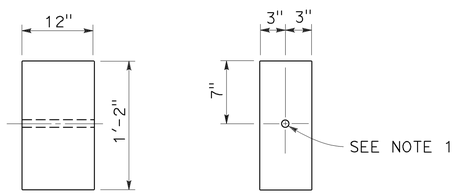

SIDE FRONT

6" x 12" WOOD BLOCK
See Note 3

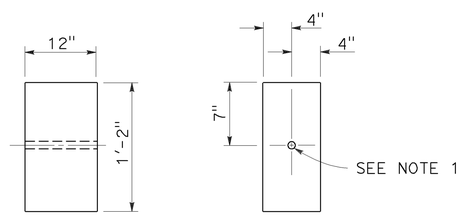

SIDE FRONT

8" x 12" WOOD BLOCK

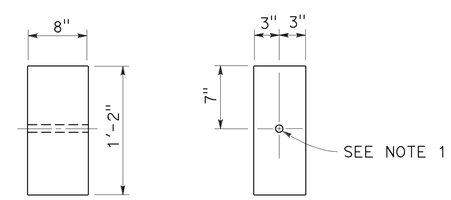

SIDE FRONT

6" x 8" WOOD BLOCK
Only for use with metal beam guard rail see Note 6

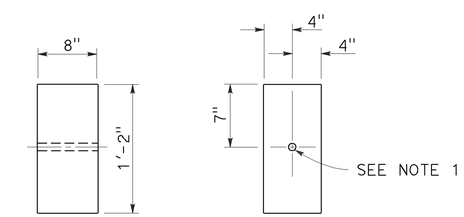

SIDE FRONT

8" x 8" WOOD BLOCK
Only for use with metal beam guard rail see Note 6

STATE OF CALIFORNIA
DEPARTMENT OF TRANSPORTATION

MIDWEST GUARDRAIL SYSTEM WOOD POST AND WOOD BLOCK DETAILS

NO SCALE

RSP A77N1 DATED JULY 19, 2013 SUPPLEMENTS THE STANDARD PLANS BOOK DATED 2010.

REVISED STANDARD PLAN RSP A77N1

2010 REVISED STANDARD PLAN RSP A77N1

7-3-13

Dist	COUNTY	ROUTE	POST MILES TOTAL PROJECT	SHEET No.	TOTAL SHEETS
01	Lak	29	R34.4/R40.0	42	62

Randell D. Hiatt
REGISTERED CIVIL ENGINEER

November 15, 2013
PLANS APPROVAL DATE

REGISTERED PROFESSIONAL ENGINEER
Randell D. Hiatt
No. C50200
Exp. 6-30-15
CIVIL
STATE OF CALIFORNIA

THE STATE OF CALIFORNIA OR ITS OFFICERS OR AGENTS SHALL NOT BE RESPONSIBLE FOR THE ACCURACY OR COMPLETENESS OF SCANNED COPIES OF THIS PLAN SHEET.

TO ACCOMPANY PLANS DATED 5-1-14

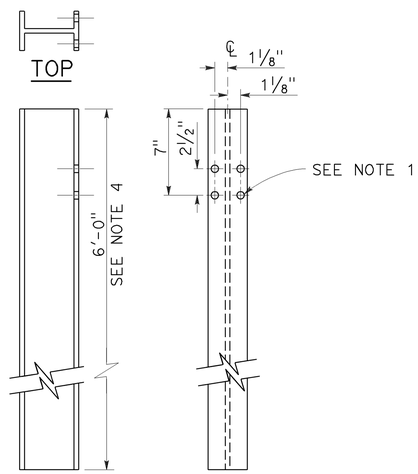

SIDE FRONT

W6 x 9 OR W6 x 8.5 STEEL POST

See Note 4

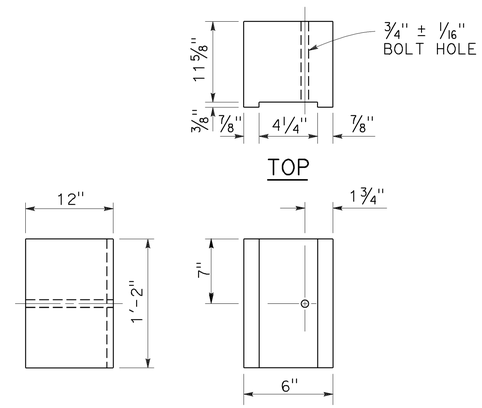

SIDE FRONT

6" x 12" NOTCHED WOOD BLOCK

See Notes 2 and 3

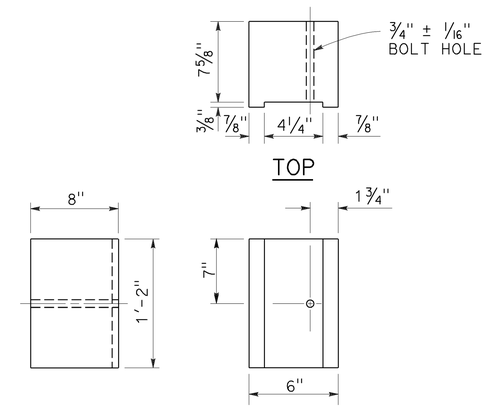

SIDE FRONT

6" x 8" NOTCHED WOOD BLOCK

Only for use with metal beam guard railing. See Note 5

NOTES:

1. All holes in steel post shall be 13/16" Dia maximum.
2. Dimensions shown for wood block are nominal.
3. Notched face of block faces steel post.
4. 6'-0" length posts to be used for typical roadway installation. See Revised Standard Plan RSP A77N3.
5. See Revised Standard Plan RSP A77L3 for use of 6" x 8" and 8" x 8" notched wood blocks.
6. This post and 8" x 12" block combination to be used for line post sections of MGS on narrow roadways and where strengthened line post sections of MGS are warranted to shield fixed objects.

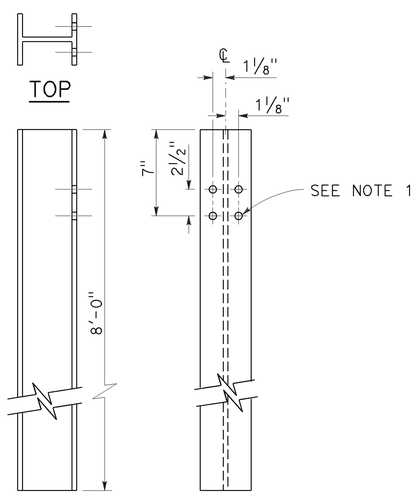

SIDE FRONT

W6 x 15 STEEL POST

See Note 6

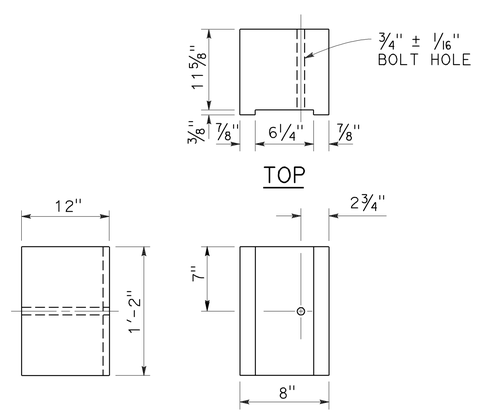

SIDE FRONT

8" x 12" NOTCHED WOOD BLOCK

See Notes 2 and 3

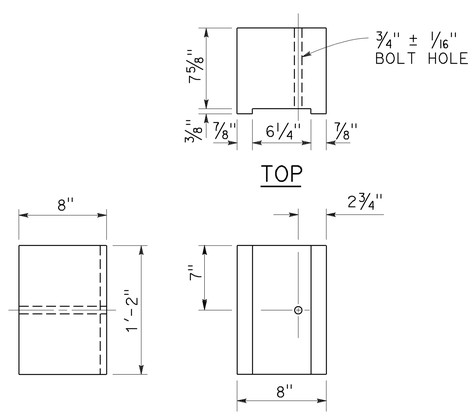

SIDE FRONT

8" x 8" NOTCHED WOOD BLOCK

Only for use with metal beam guard railing. See Note 5

STATE OF CALIFORNIA
DEPARTMENT OF TRANSPORTATION

MIDWEST GUARDRAIL SYSTEM STEEL POST AND NOTCHED WOOD BLOCK DETAILS

NO SCALE

RSP A77N2 DATED NOVEMBER 15, 2013 SUPERSEDES RSP A77N2
DATED JULY 19, 2013 THAT SUPPLEMENTS THE STANDARD PLANS BOOK DATED 2010.

REVISED STANDARD PLAN RSP A77N2

2010 REVISED STANDARD PLAN RSP A77N2

10-29-13

Dist	COUNTY	ROUTE	POST MILES TOTAL PROJECT	SHEET No.	TOTAL SHEETS
01	Lak	29	R34.4/R40.0	43	62

REGISTERED CIVIL ENGINEER

July 19, 2013
PLANS APPROVAL DATE

REGISTERED PROFESSIONAL ENGINEER
Michael Janzen
No. 44788
Exp. 03-31-14
CIVIL
STATE OF CALIFORNIA

THE STATE OF CALIFORNIA OR ITS OFFICERS OR AGENTS SHALL NOT BE RESPONSIBLE FOR THE ACCURACY OR COMPLETENESS OF SCANNED COPIES OF THIS PLAN SHEET.

TO ACCOMPANY PLANS DATED 5-1-14

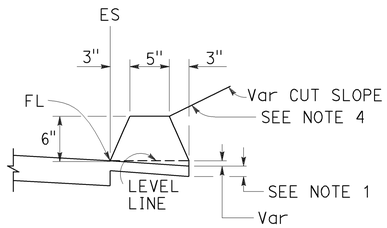

TYPE A
See Note 3

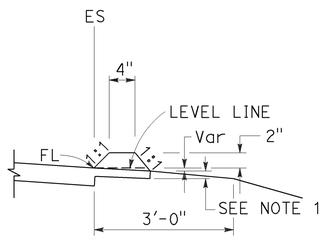

TYPE C

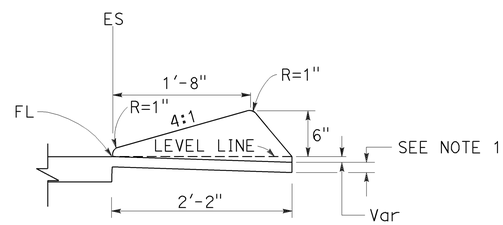

TYPE D

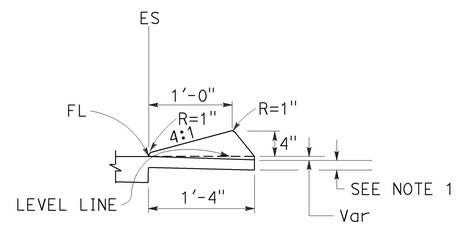

TYPE E

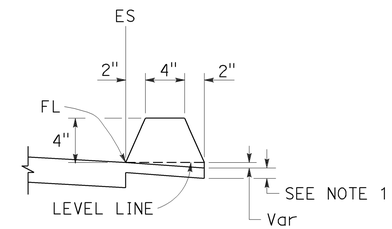

TYPE F
See Note 5

DIKES

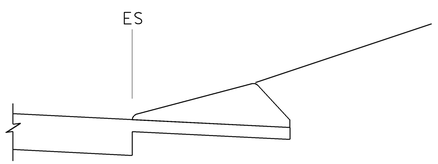

CASE C-1
Cut Slope

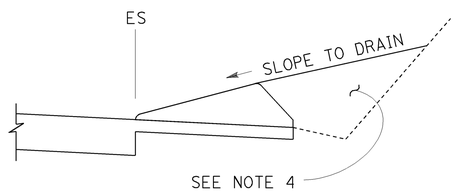

CASE C-2
Cut Slope

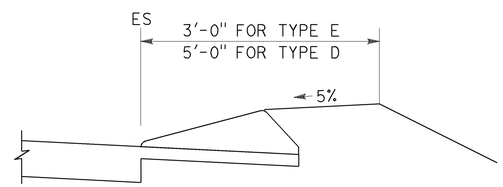

CASE F

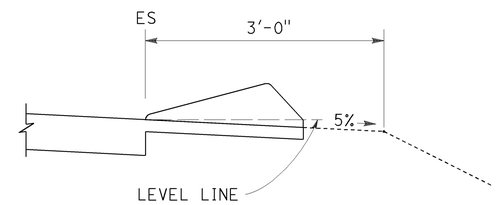

CASE R
See Note 2

TYPE D AND E BACKFILL DETAILS

NOTES:

1. For HMA shoulders only, extend top layer of HMA placed on the shoulder under dike with no joint at the ES. For projects with OGFC shoulders, do not extend OGFC under dike. See project plans for modified dike detail.
2. Case R applies to retrofit only projects where restrictive conditions do not provide enough width for Case F backfill.
3. Type A dike only to be used where restrictive slope conditions do not provide enough width to use Type D or Type E dike.
4. Fill and compact with excavated material to top of dike.
5. Use Type F dike, where dike is required with guard railing installations. See Revised Standard Plan RSP A77N4 for dike positioning details.

DIKE QUANTITIES

TYPE	CUBIC YARDS PER LINEAR FOOT
A	0.0135
C	0.0038
D	0.0293
E	0.0130
F	0.0066

Quantities based on 5% cross slope.

STATE OF CALIFORNIA
DEPARTMENT OF TRANSPORTATION

HOT MIX ASPHALT DIKES

NO SCALE

RSP A87B DATED JULY 19, 2013 SUPERSEDES STANDARD PLAN A87B
DATED MAY 20, 2011 - PAGE 120 OF THE STANDARD PLANS BOOK DATED 2010.

REVISED STANDARD PLAN RSP A87B

2010 REVISED STANDARD PLAN RSP A87B

6-27-13

Dist	COUNTY	ROUTE	POST MILES TOTAL PROJECT	SHEET No.	TOTAL SHEETS
01	Lak	29	R34.4/R40.0	44	62

REGISTERED CIVIL ENGINEER

March 21, 2014
PLANS APPROVAL DATE

REGISTERED PROFESSIONAL ENGINEER Hector David Cordova No. C41957 Exp. 3-31-14 CIVIL STATE OF CALIFORNIA

THE STATE OF CALIFORNIA OR ITS OFFICERS OR AGENTS SHALL NOT BE RESPONSIBLE FOR THE ACCURACY OR COMPLETENESS OF SCANNED COPIES OF THIS PLAN SHEET.

TO ACCOMPANY PLANS DATED 5-1-14

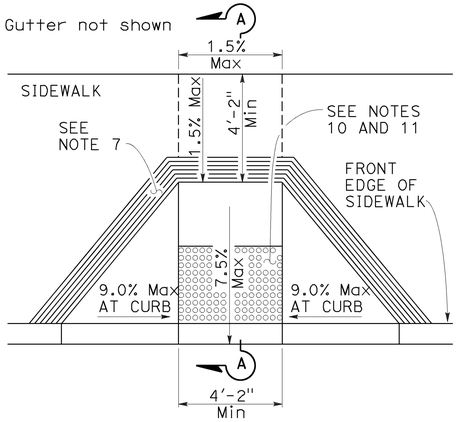

CASE A

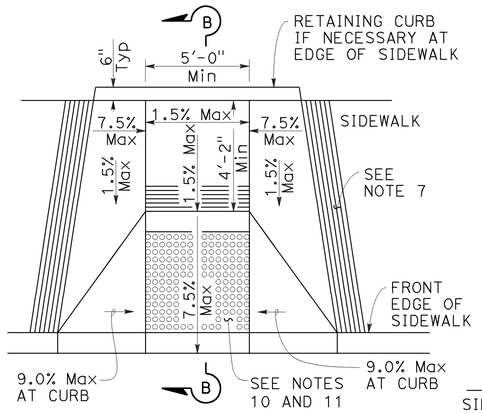

CASE B

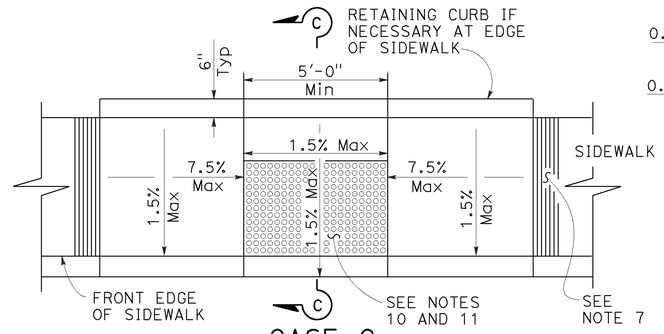

CASE C

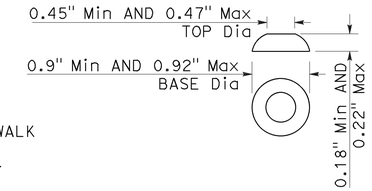

RAISED TRUNCATED DOME

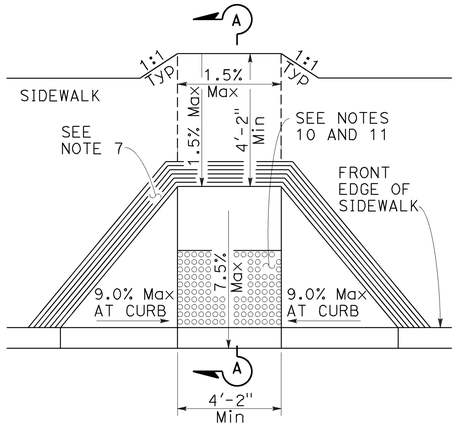

CASE D

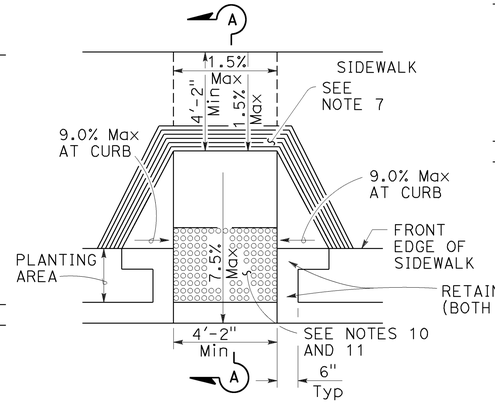

CASE E

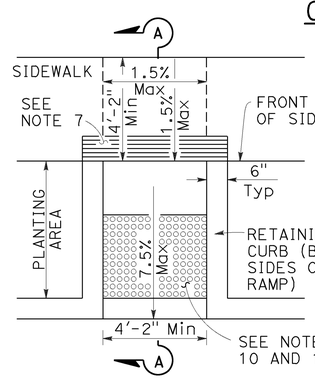

CASE F

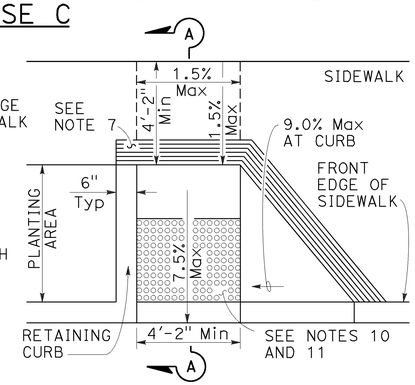

CASE G
See Note 4

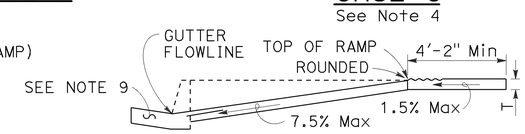

SECTION A-A

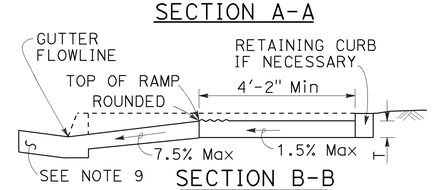

SECTION B-B
Depress entire sidewalk as required

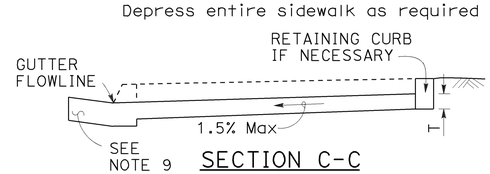

SECTION C-C

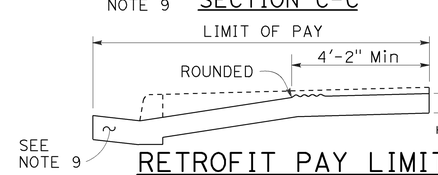

RETROFIT PAY LIMITS
Existing curb and sidewalk

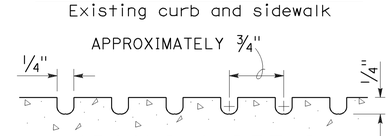

GROOVING DETAIL

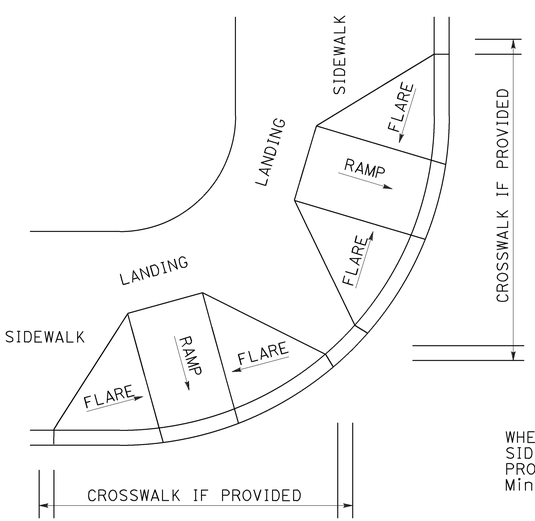

DETAIL A

TYPICAL TWO-RAMP CORNER INSTALLATION
See Note 1

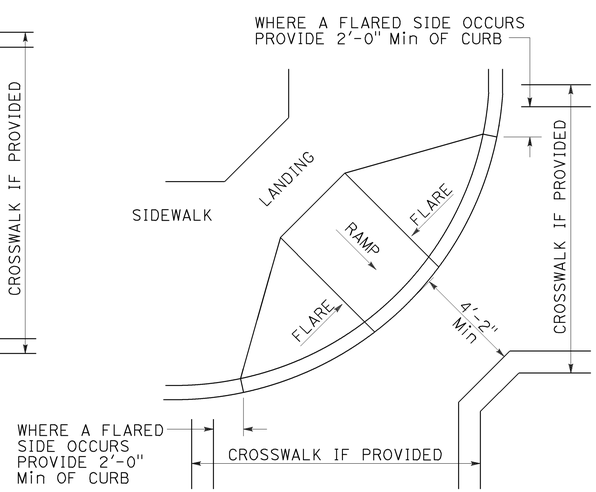

DETAIL B

TYPICAL ONE-RAMP CORNER INSTALLATION
See Notes 1 and 3

NOTES:

1. As site conditions dictate, Case A through Case G curb ramps may be used for corner installations similar to those shown in Detail A and Detail B. The case of curb ramps used in Detail A do not have to be the same. Case A through Case G curb ramps also may be used at mid block locations, as site conditions dictate.
2. If distance from curb to back of sidewalk is too short to accommodate ramp and 4'-2" platform (landing) as shown in Case A, the sidewalk may be depressed longitudinally as in Case B, or C or may be widened as in Case D.
3. When ramp is located in center of curb return, crosswalk configuration must be similar to that shown for Detail B.
4. As site conditions dictate, the retaining curb side and the flared side of the Case G ramp shall be constructed in reversed position.
5. If located on a curve, the sides of the ramp need not be parallel, but the minimum width of the ramp shall be 4'-2".
6. Side slope of ramp flares vary uniformly from a maximum of 9.0% at curb to conform with longitudinal sidewalk slope adjacent to top of the ramp, except in Case C and Case F.
7. The curb ramp shall be outlined, as shown, with a 1'-0" wide border with 1/4" grooves approximately 3/4" on center. See grooving detail.
8. Transitions from ramps and landing to walks, gutters or streets shall be flush (no lip) and free of abrupt changes.
9. Counter slopes of adjoining gutters and road surfaces immediately adjacent to and within 24 inches of the curb ramp shall not be steeper than 1:20 (5.0%). Gutter pan slope shall not exceed 1" of depth for each 2'-0" of width.
10. Curb ramps shall have a detectable warning surface that extends the full width and 3'-0" depth of the ramp. A 4'-0" wide detectable warning surface may be used on a 4'-2" wide curb ramp. Detectable Warning Surfaces shall conform to the requirements in the Standard Specifications.
11. The edge of the detectable warning surface nearest the street shall be between 6" and 8" from the gutter flowline.
12. Sidewalk and ramp thickness, "T", shall be 3 1/2" minimum.
13. Utility pull boxes, manholes, vaults and all other utility facilities within the boundaries of the curb ramp will be relocated or adjusted to grade by the owner prior to, or in conjunction with, curb ramp construction.
14. Detectable warning surface may have to be cut to allow removal of utility covers while maintaining full detectable warning width and depth.

RAISED TRUNCATED DOME PATTERN (IN-LINE)

DETECTABLE WARNING SURFACE
See Note 10

STATE OF CALIFORNIA
DEPARTMENT OF TRANSPORTATION

CURB RAMP DETAILS

NO SCALE

RSP A88A DATED MARCH 21, 2014 SUPERSEDES RSP A88A DATED JULY 19, 2013 AND STANDARD PLAN A88A DATED MAY 20, 2011 - PAGE 121 OF THE STANDARD PLANS BOOK DATED 2010.

REVISED STANDARD PLAN RSP A88A

2010 REVISED STANDARD PLAN RSP A88A

2-25-14

DIST	COUNTY	ROUTE	POST MILES TOTAL PROJECT	SHEET No.	TOTAL SHEETS
01	Lak	29	R34.4/R40.0	45	62

REGISTERED CIVIL ENGINEER

November 15, 2013
PLANS APPROVAL DATE

REGISTERED PROFESSIONAL ENGINEER Cornelis M. Hakim No. C55610 Exp. 12-31-14 CIVIL STATE OF CALIFORNIA

THE STATE OF CALIFORNIA OR ITS OFFICERS OR AGENTS SHALL NOT BE RESPONSIBLE FOR THE ACCURACY OR COMPLETENESS OF SCANNED COPIES OF THIS PLAN SHEET.

TO ACCOMPANY PLANS DATED 5-1-14

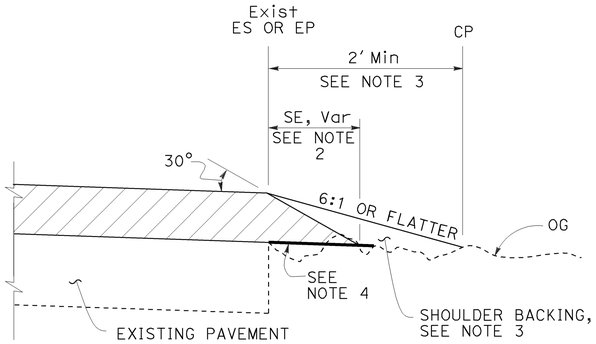

CASE A
Safety Edge

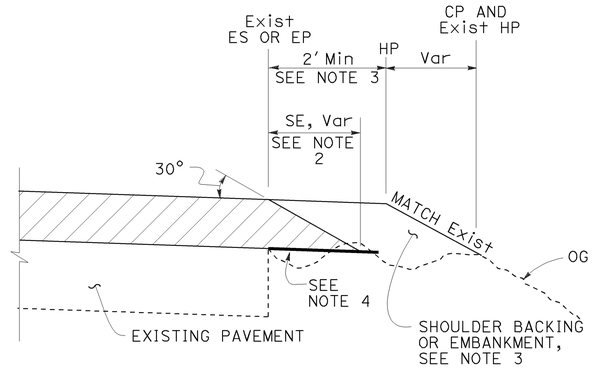

CASE B
Safety Edge

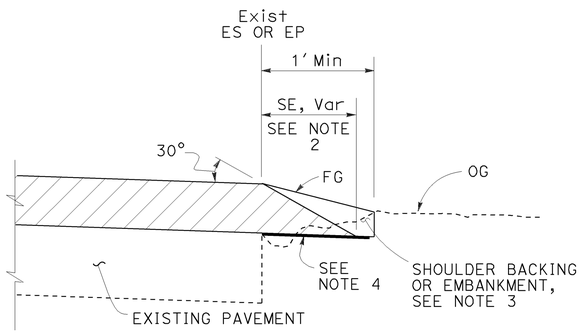

CASE C
Safety Edge

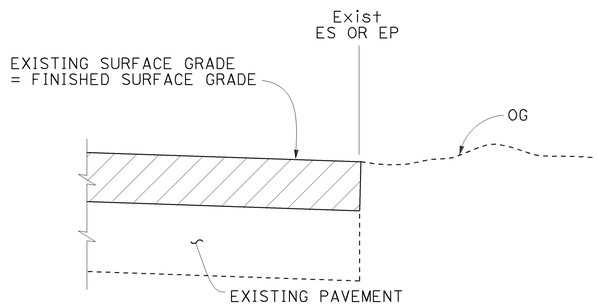

CASE D
Vertical Edge

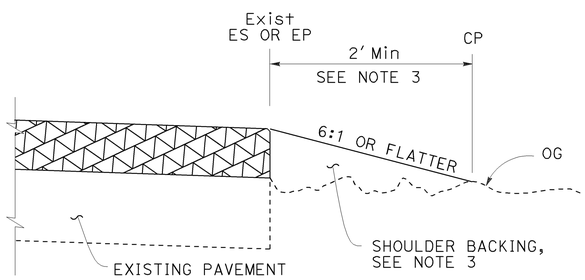

CASE E
Vertical Edge

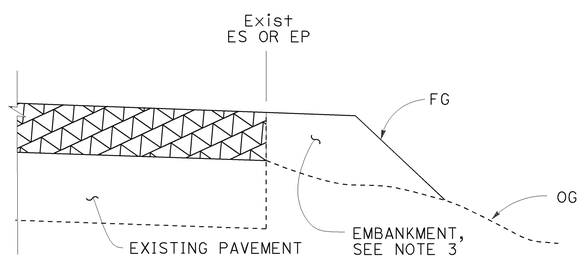

CASE F
Vertical Edge
* See Table A and Revised Std Plan RSP P74

LEGEND:

- HMA OVERLAY
- HMA OR CONCRETE OVERLAY
- CONCRETE OVERLAY

ABBREVIATIONS:

SE SAFETY EDGE
TT TOTAL THICKNESS OF SE

TABLE A
EDGE TREATMENT FOR VARIOUS OVERLAY THICKNESS AND CONDITIONS

	OVERLAY THICKNESS	
FIELD CONDITION	LESS THAN 0.15′	0.15′ OR MORE
Exist SLOPE 6:1 OR FLATTER	CASE E	CASE A
Exist SLOPE 3:1 TO 6:1	CASE E	CASE B
Exist SLOPE STEEPER THAN 3:1	CASE F	CASE F
CUT SECTION (REPLACE, COLD PLANE, MILL PAVEMENT)	CASE D	CASE C

ADDITIONAL HMA OR CONCRETE QUANTITIES FOR SE/SIDE/MILE

TYPICAL CROSS SECTION	TT	TOTAL ADDITIONAL MATERIAL FOR SE/SIDE/MILE		
		HMA (TON)	CONCRETE (CY)*	CONCRETE (CY)**
TT	0.15′	NA	NA	NA
	0.20′	13.7	NA	NA
	0.30′	30.9	NA	NA
	0.40′	54.9	NA	NA
	0.45′	69.4	NA	NA
TT 0.43′	0.50′	84.2	NA	NA
	0.60′	113.9	NA	NA
	0.70′	143.6	70.9	94.2
	0.80′	173.3	85.6	112.2
	0.90′	203.0	100.3	130.2
	1.00′	232.7	114.9	148.2
	1.10′	262.4	129.6	166.2
	1.20′	292.1	144.3	184.2

* For Detail "A"
** For Optional Detail "A"

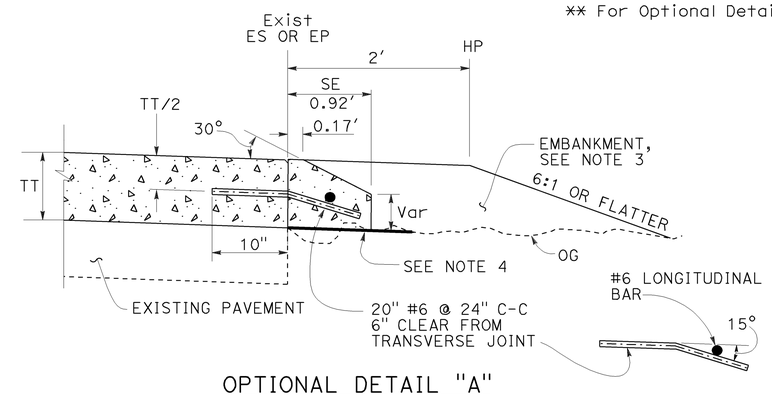

OPTIONAL DETAIL "A"
For concrete overlay
See Note 5

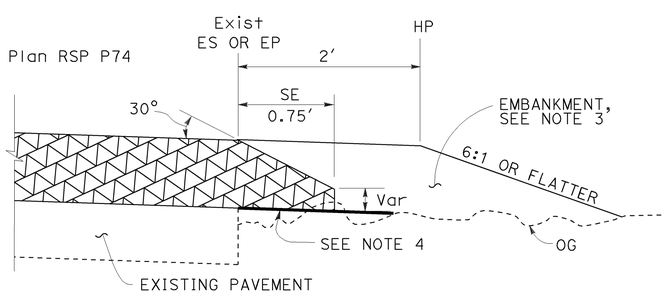

DETAIL "A"
For HMA overlay thickness more than 0.43′ or concrete overlay

NOTES:

1. For limits of safety edge and vertical edge treatments, see Revised Standard Plan RSP P74.
2. Details shown for HMA overlay thickness less than 0.43′. See Detail "A" for HMA overlay thickness more than 0.43′ or concrete overlay.
3. For locations and limits of shoulder backing or embankment see project plans.
4. Grade existing ground to place safety edge. 1′ minimum width
5. Safety edge transverse joint must match overlay transverse joint. End of #6 longitudinal bar must be 2" ±½" clear from transverse joint.
6. Safety edge is not needed in the area of MGS, barrier, right turn lane and acceleration lane. See Revised Standard Plan RSP P74.

STATE OF CALIFORNIA
DEPARTMENT OF TRANSPORTATION

PAVEMENT EDGE TREATMENTS-OVERLAYS

NO SCALE

RSP P75 DATED NOVEMBER 15, 2013 SUPERSEDES RSP P75 DATED JANUARY 20, 2012 THAT SUPPLEMENTS THE STANDARD PLANS BOOK DATED 2010.

REVISED STANDARD PLAN RSP P75

2010 REVISED STANDARD PLAN RSP P75

10-4-13

Dist	COUNTY	ROUTE	POST MILES TOTAL PROJECT	SHEET No.	TOTAL SHEETS
01	Lak	29	R34.4/R40.0	46	62

Raymond Don Tsztoo
REGISTERED CIVIL ENGINEER

April 19, 2013
PLANS APPROVAL DATE

REGISTERED PROFESSIONAL ENGINEER Raymond Don Tsztoo No. C37332 Exp. 6-30-14 CIVIL STATE OF CALIFORNIA

THE STATE OF CALIFORNIA OR ITS OFFICERS OR AGENTS SHALL NOT BE RESPONSIBLE FOR THE ACCURACY OR COMPLETENESS OF SCANNED COPIES OF THIS PLAN SHEET.

TO ACCOMPANY PLANS DATED 5-1-14

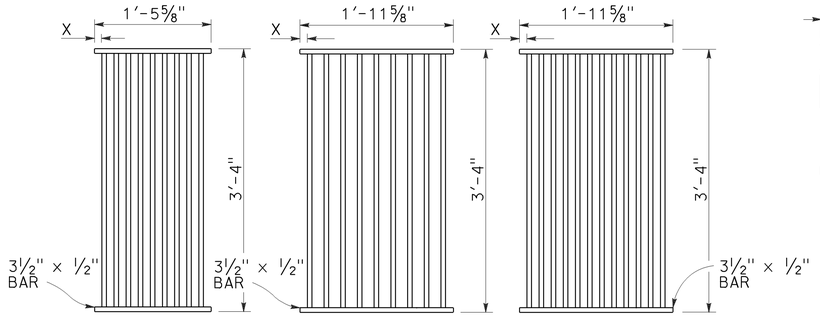

TYPE 18-9

1⅜" Clear spacing. Use within the roadbed on highways where bicycles and pedestrians are excluded.

TYPE 24-9

2" Clear spacing. Use in locations off the roadbed on all types of highways.

TYPE 24-12

1⅜" Clear spacing. Use within the roadbed on highways where bicycles and pedestrians are excluded.

RECTANGULAR GRATE DETAILS

(See table below)

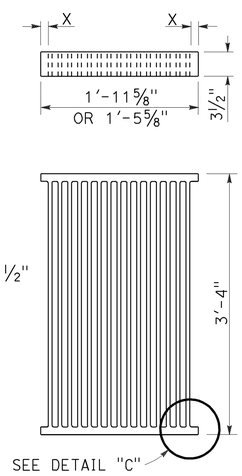

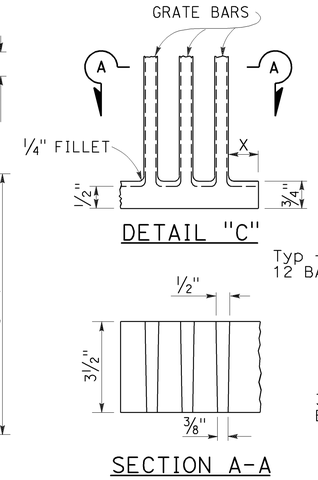

DETAIL "C"

SECTION A-A

ALTERNATIVE CAST DUCTILE IRON GRATE OR CAST CARBON STEEL GRATE

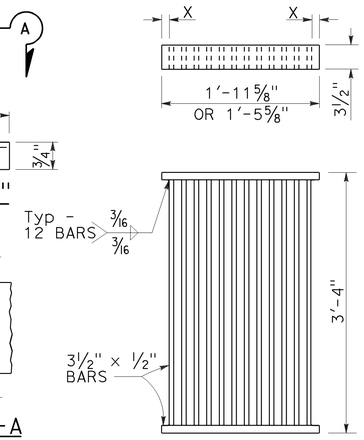

ALTERNATIVE WELDED GRATE

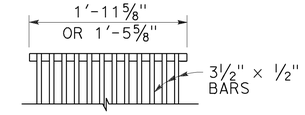

CAST END BLOCK

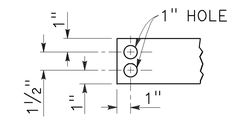

END OF BAR

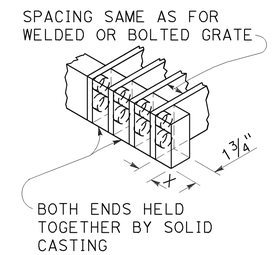

ALTERNATIVE CAST DUCTILE IRON OR CAST CARBON STEEL END BLOCK GRATE

NOTES:

1. Grate type numbers refer to approximate width of grate in inches and number of bars, respectively.
2. Contractor has the option of using cast ductile iron, cast carbon steel, welded, bolted, or cast end block grate.
3. Rounded top of bars optional on all grates.
4. Pipe inlets with a grate shall be placed so that bars parallel direction of principle surface flow.
5. Complete joint penetration butt welds may be substituted for the fillet welds on all anchors.
6. Standard square, hexagon, round or equivalent headed anchors may be substituted for the right angle hooks on the anchors shown on this plan.
7. Grate and frame weights are based on welded grates (weights of face angles, steps, protection bars, etc. are not included).
8. Connect chain to grate and frame only at locations shown on the plans. When chain is required, do not use cast ductile iron grates.

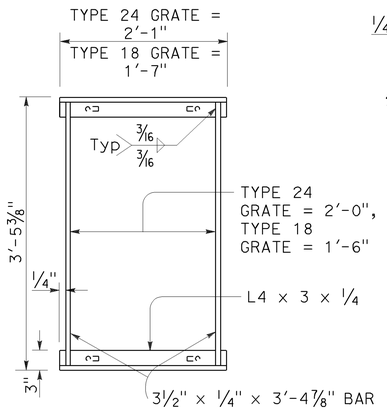

TYPICAL FRAME

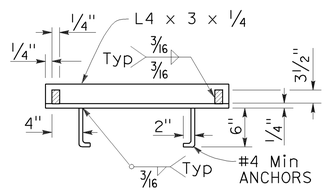

CROSS SECTION

(Thru frame)

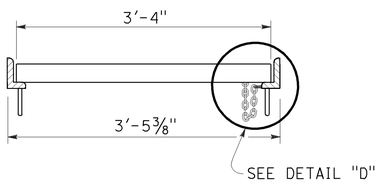

LONGITUDINAL SECTION

(Thru frame and grate)

RECTANGULAR FRAME DETAILS

(For all rectangular grates)

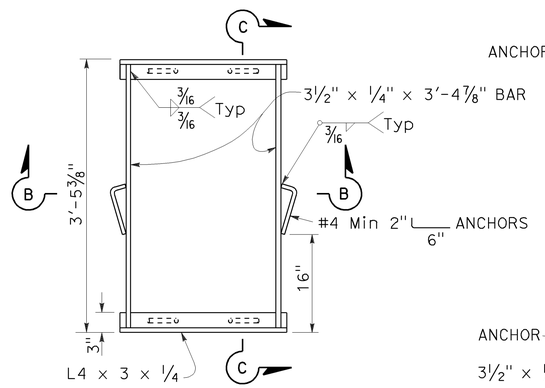

TYPICAL FRAME

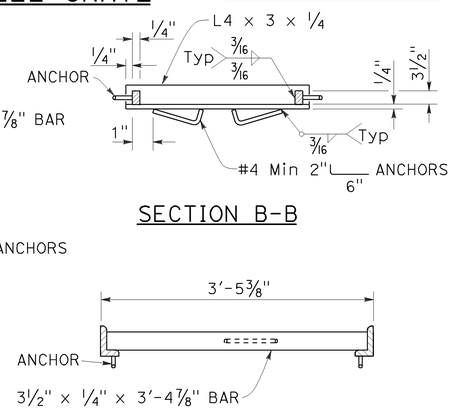

SECTION B-B

SECTION C-C

ALTERNATIVE ANCHOR FOR RECTANGULAR FRAME

(For details not shown, See Rectangular Frame Details)

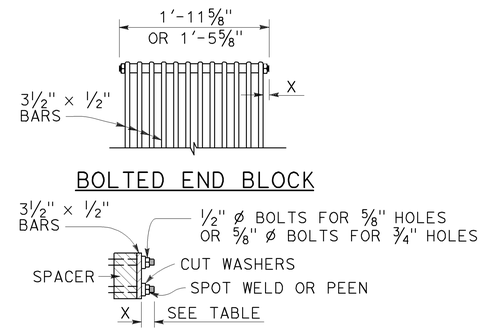

BOLTED END BLOCK

BOLTING DETAIL

ALTERNATIVE BOLTED GRATE

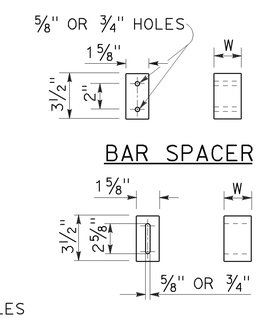

BAR SPACER

ALTERNATIVE SPACER

W = 1⅜" or 2"

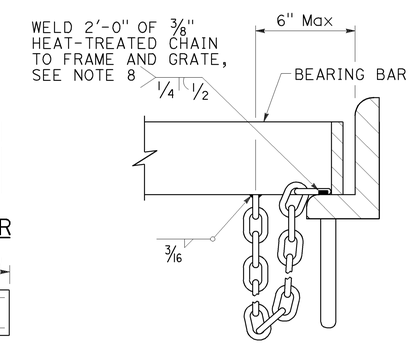

DETAIL "D"

(Steel grates only)

GRATE BAR SPACING TABLE

TYPE	No. OF BARS	CLEAR BAR SPACING	X
18-9	9	1⅜"	1 1/16"
24-9	9	2"	1 9/16"
24-12	12	1⅜"	1¼"

INLET TYPE	COVER TYPE	WEIGHT LB
OS	PLATE	174
OL-7	PLATE	170
OL-10	PLATE	170
OL-14	PLATE	170
OL-21	PLATE	170
OCP	PLATE	112
OCPI	PLATE	112
OCPI	REDWOOD	42
OMP	PLATE	177
OMPI	PLATE	177

INLET TYPE	GRATE TYPE	No. OF GRATES	WEIGHT LB
GDO	24-12	2	634
GOL-7	24-12	1	326
GOL-10	24-12	1	326
GO,G1,G2,G3,G4 (TYPE 24)	24-9	1	263
	24-12	1	326
G4 (TYPE 18),G5,G6	18-9	1	249
GT1	18-9	2	498
GT2	18-9	2	498
GT3	24-12	2	652
GT4	24-12	2	652
TRASH RACK			22
GRATE CHAIN			3

BASIS FOR Misc IRON & STEEL FINAL PAY WEIGHTS FOR DRAINAGE INLETS

(See Note 7)

STATE OF CALIFORNIA
DEPARTMENT OF TRANSPORTATION

GRATE DETAILS No. 1

NO SCALE

RSP D77A DATED APRIL 19, 2013 SUPERSEDES RSP D77A DATED JULY 20, 2012 AND STANDARD PLAN D77A DATED MAY 20, 2011 - PAGE 164 OF THE STANDARD PLANS BOOK DATED 2010.

REVISED STANDARD PLAN RSP D77A

2010 REVISED STANDARD PLAN RSP D77A

4-4-13

Dist	COUNTY	ROUTE	POST MILES TOTAL PROJECT	SHEET No.	TOTAL SHEETS
01	Lak	29	R34.4/R40.0	47	62

Raymond Don Tsztoo
REGISTERED CIVIL ENGINEER

April 19, 2013
PLANS APPROVAL DATE

REGISTERED PROFESSIONAL ENGINEER Raymond Don Tsztoo No. C37332 Exp. 6-30-14 CIVIL STATE OF CALIFORNIA

THE STATE OF CALIFORNIA OR ITS OFFICERS OR AGENTS SHALL NOT BE RESPONSIBLE FOR THE ACCURACY OR COMPLETENESS OF SCANNED COPIES OF THIS PLAN SHEET.

TO ACCOMPANY PLANS DATED 5-1-14

2010 REVISED STANDARD PLAN RSP D77B

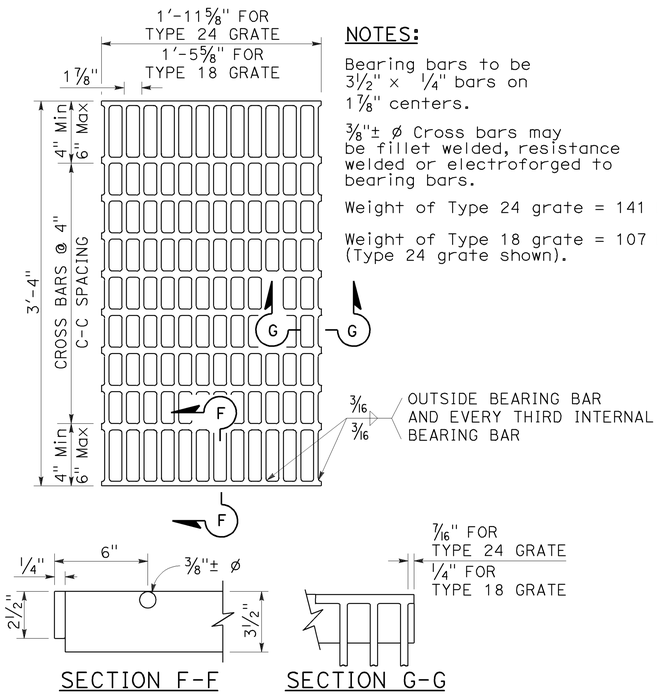

SECTION F-F SECTION G-G

TYPE 18-10 AND 24-13 GRATE

(Welded Steel)

NOTES:

Bearing bars to be 3½" × ¼" bars on 1⅞" centers.

⅜"± ø Cross bars may be fillet welded, resistance welded or electroforged to bearing bars.

Weight of Type 24 grate = 141 LBS.

Weight of Type 18 grate = 107 LBS. (Type 24 grate shown).

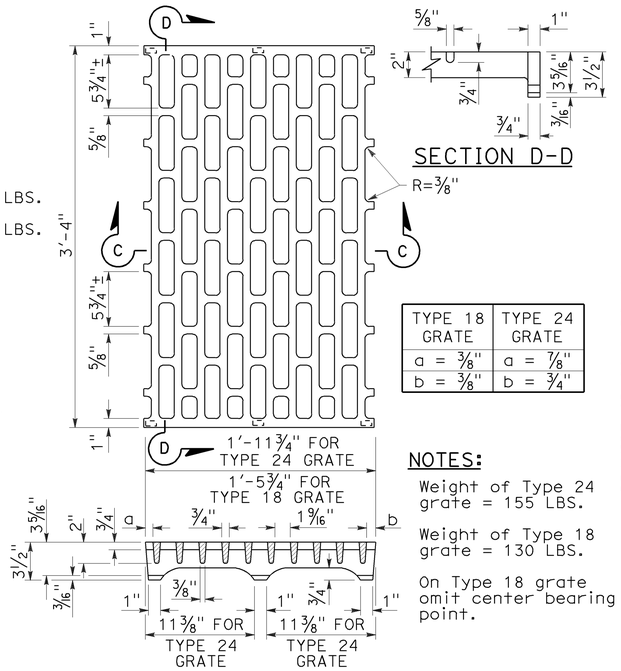

SECTION D-D

TYPE 18 GRATE	TYPE 24 GRATE
a = ⅜"	a = ⅞"
b = ⅜"	b = ¾"

SECTION C-C

NOTES:

Weight of Type 24 grate = 155 LBS.

Weight of Type 18 grate = 130 LBS.

On Type 18 grate omit center bearing point.

TYPE 18-8C AND 24-10C GRATE

(Cast ductile iron)

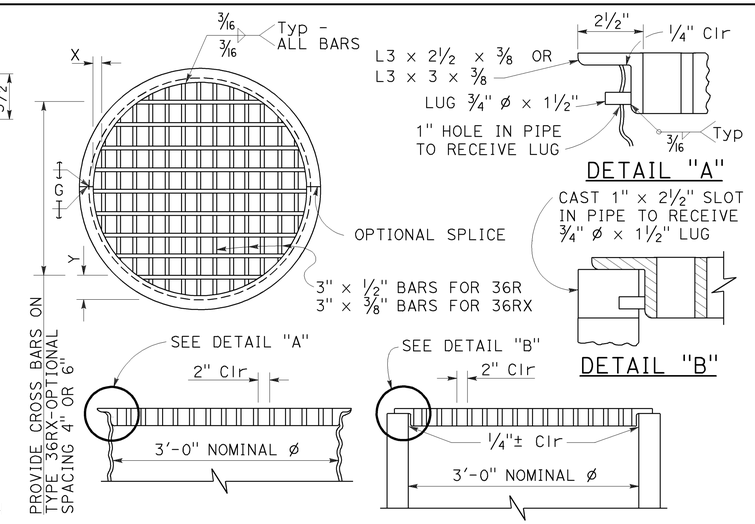

DETAIL "A"

DETAIL "B"

TYPE 36R AND 36RX GRATE DETAILS

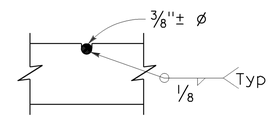

⅜"± ø Cross bars may be fillet welded, resistance welded or electroforged to bearing bars.

CROSS BAR DETAIL TYPE 36RX GRATE (WELDED STEEL)

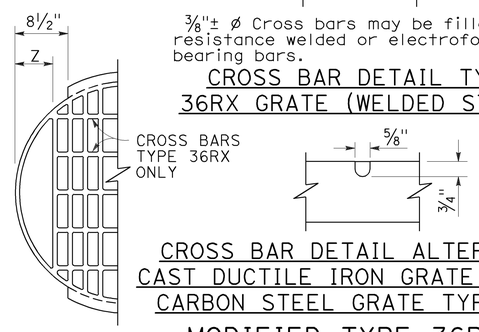

CROSS BAR DETAIL ALTERNATIVE CAST DUCTILE IRON GRATE OR CAST CARBON STEEL GRATE TYPE 36RX

MODIFIED TYPE 36R AND 36RX GRATE FOR ODI INLET

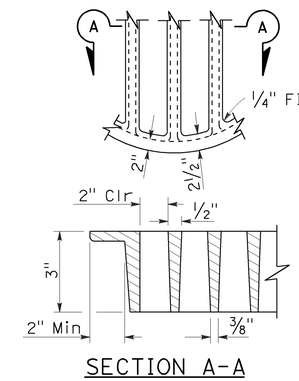

SECTION A-A

ALTERNATIVE CAST DUCTILE IRON GRATE OR CAST CARBON STEEL GRATE TYPE 36R AND 36RX

BASIS FOR Misc IRON AND STEEL FINAL PAY WEIGHTS FOR DRAINAGE INLETS

INLET TYPE	GRATE TYPE	No. OF GRATES	WEIGHT LB
GDO (SEE NOTE 4)	24-10C	2	391
	24-10S	2	456
	24-12X	2	473
	24-13	2	374
GO,GOL,G1,G2, G3,G4 (TYPE 24)	24-10C	1	202
	24-10S	1	229
	24-12X	1	239
	24-13	1	188
G4 (TYPE 18) G5,G6	18-8S	1	187
	18-9X	1	187
	18-10	1	149
GT1,GT2	18-8S	2	374
	18-9X	2	374
	18-10	2	298
GT3,GT4	24-10C	2	404
	24-10S	2	458
	24-12X	2	478
	24-13	2	376
ODI	36RX (Mod)	1	196
GMP,GCP,GCPI	36RX	1	215
ODI	36R (Mod)	1	220
GMP,GCP,GCPI	36R	1	236
TRASH RACK			22
GRATE CHAIN			3

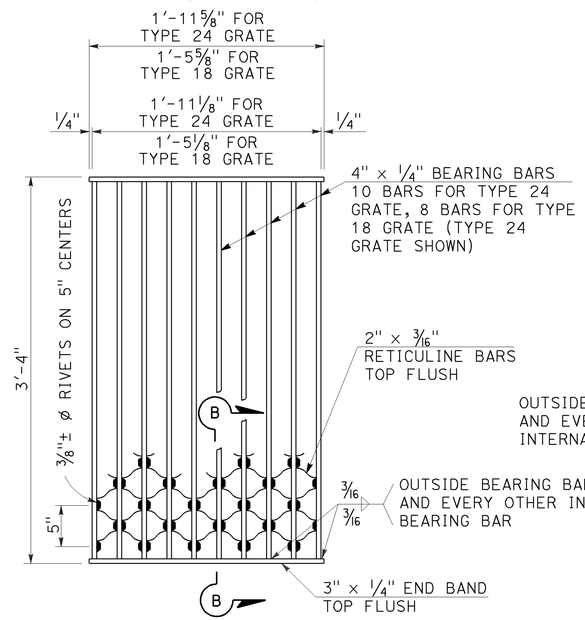

SECTION B-B

NOTES:

Weight of Type 24 grate = 182 LBS.
Weight of Type 18 grate = 145 LBS.

TYPE 18-8S AND 24-10S GRATE

(Welded Steel) Reticuline type

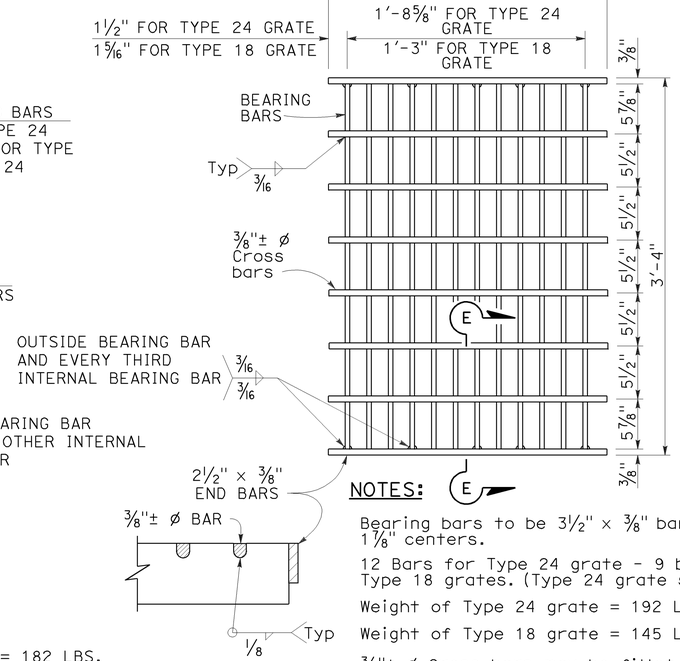

SECTION E-E

NOTES:

Bearing bars to be 3½" × ⅜" bars on 1⅞" centers.

12 Bars for Type 24 grate - 9 bars for Type 18 grates. (Type 24 grate shown).

Weight of Type 24 grate = 192 LBS.

Weight of Type 18 grate = 145 LBS.

⅜"± ø Cross bars may be fillet welded, resistance welded or electroforged to bearing bars.

TYPE 18-9X AND 24-12X GRATE

(Welded Steel)

NOTES:

1. When alternative grates are allowed - Final pay based on alternative with the lesser weight.
2. Use frame shown on Standard Plan D74A, D74B or RSP D77A as appropriate.
3. When Type 24-10S, 24-12X or 24-13 grates are used with GDO Inlets, a ¼" × 3½" × 3'-4⅞" steel bar shall be welded across the center of inlet frame to separate the individual grates.
4. See Revised Standard Plan RSP D77A for connecting chain to welded grate and frame. When chain is required, do not use cast ductile iron grate.

GRATE BAR SPACING TABLE

TYPE	No. OF BARS	CLEAR BAR SPACING	X	Y 4" SPACING	Y 6" SPACING	Z
36R	13	2"	2⅛"	-	-	-
36RX (STEEL)	15	2"	9/16"	3¾"	5¾"	-
36RX (CAST)	13	2"	2⅛"	3¾"	5¾"	-
36R Mod	12	2"	2⅛"	-	-	5"
36RX Mod (STEEL)	13	2"	9/16"	3¾"	5¾"	5 11/16"
36RX Mod (CAST)	12	2"	2⅛"	3¾"	5¾"	5"

STATE OF CALIFORNIA
DEPARTMENT OF TRANSPORTATION

GRATE DETAILS No. 2

NO SCALE

RSP D77B DATED APRIL 19, 2013 SUPERSEDES RSP D77B DATED JULY 20, 2012 AND STANDARD PLAN D77B DATED MAY 20, 2011 - PAGE 165 OF THE STANDARD PLANS BOOK DATED 2010.

REVISED STANDARD PLAN RSP D77B

4-4-13

Dist	COUNTY	ROUTE	POST MILES TOTAL PROJECT	SHEET No.	TOTAL SHEETS
01	Lak	29	R34.4/R40.0	48	62

REGISTERED CIVIL ENGINEER

July 19, 2013
PLANS APPROVAL DATE

REGISTERED PROFESSIONAL ENGINEER
Gurinderpal Bhullar
No. C48815
Exp. 9-30-14
CIVIL
STATE OF CALIFORNIA

THE STATE OF CALIFORNIA OR ITS OFFICERS OR AGENTS SHALL NOT BE RESPONSIBLE FOR THE ACCURACY OR COMPLETENESS OF SCANNED COPIES OF THIS PLAN SHEET.

TO ACCOMPANY PLANS DATED 5-1-14

2010 REVISED STANDARD PLAN RSP T9

TABLE 1

TAPER LENGTH CRITERIA AND CHANNELIZING DEVICE SPACING

SPEED (S)	MINIMUM TAPER LENGTH * FOR WIDTH OF OFFSET 12 FEET (W)				MAXIMUM CHANNELIZING DEVICE SPACING		
					X	Y	Z **
	TANGENT 2L	MERGING L	SHIFTING L/2	SHOULDER L/3	TAPER	TANGENT	CONFLICT
mph	ft	ft	ft	ft	ft	ft	ft
20	160	80	40	27	20	40	10
25	250	125	63	42	25	50	12
30	360	180	90	60	30	60	15
35	490	245	123	82	35	70	17
40	640	320	160	107	40	80	20
45	1080	540	270	180	45	90	22
50	1200	600	300	200	50	100	25
55	1320	660	330	220	55	110	27
60	1440	720	360	240	60	120	30
65	1560	780	390	260	65	130	32
70	1680	840	420	280	70	140	35

* - For other offsets, use the following merging taper length formula for L:
For speed of 40 mph or less, $L = WS^2/60$
For speed of 45 mph or more, $L = WS$

Where: L = Taper length in feet
W = Width of offset in feet
S = Posted speed limit, off-peak 85th-percentile speed prior to work starting, or the anticipated operating speed in mph

** - Use for taper and tangent sections where there are no pavement markings or where there is a conflict between existing pavement markings and channelizers (CA).

TABLE 2

LONGITUDINAL BUFFER SPACE AND FLAGGER STATION SPACING

SPEED *	Min D **	DOWNGRADE Min D ***		
		-3%	-6%	-9%
mph	ft	ft	ft	ft
20	115	116	120	126
25	155	158	165	173
30	200	205	215	227
35	250	257	271	287
40	305	315	333	354
45	360	378	400	427
50	425	446	474	507
55	495	520	553	593
60	570	598	638	686
65	645	682	728	785
70	730	771	825	891

* - Speed is posted speed limit, off-peak 85th-percentile speed prior to work starting, or the anticipated operating speed in mph

** - Longitudinal buffer space or flagger station spacing

*** - Use on sustained downgrade steeper than -3 percent and longer than 1 mile.

TABLE 3

ADVANCE WARNING SIGN SPACING

ROAD TYPE	DISTANCE BETWEEN SIGNS *		
	A	B	C
	ft	ft	ft
URBAN - 25 mph OR LESS	100	100	100
URBAN - MORE THAN 25 mph TO 40 mph	250	250	250
URBAN - MORE THAN 40 mph	350	350	350
RURAL	500	500	500
EXPRESSWAY / FREEWAY	1000	1500	2640

* - The distances are approximate, are intended for guidance purposes only, and should be applied with engineering judgment. These distances should be adjusted by the Engineer for field conditions, if necessary, by increasing or decreasing the recommmended distances.

STATE OF CALIFORNIA
DEPARTMENT OF TRANSPORTATION

TRAFFIC CONTROL SYSTEM TABLES FOR LANE AND RAMP CLOSURES

NO SCALE

RSP T9 DATED JULY 19, 2013 SUPERSEDES RSP T9 DATED APRIL 19, 2013 THAT SUPPLEMENTS THE STANDARD PLANS BOOK DATED 2010.

REVISED STANDARD PLAN RSP T9

TO ACCOMPANY PLANS DATED 5-1-14

Dist	COUNTY	ROUTE	POST MILES TOTAL PROJECT	SHEET No.	TOTAL SHEETS
01	Lak	29	R34.4/R40.0	49	62

REGISTERED CIVIL ENGINEER

April 19, 2013
PLANS APPROVAL DATE

REGISTERED PROFESSIONAL ENGINEER Gurinderpal Bhullar No. C48815 Exp. 9-30-14 CIVIL STATE OF CALIFORNIA

THE STATE OF CALIFORNIA OR ITS OFFICERS OR AGENTS SHALL NOT BE RESPONSIBLE FOR THE ACCURACY OR COMPLETENESS OF SCANNED COPIES OF THIS PLAN SHEET.

NOTES:

See Revised Standard Plan RSP T9 for tables.

Use cone spacing X for taper segment, Y for tangent segment or Z for conflict situations, as approriate, per Table 1, unless X, Y, or Z cone spacing is shown on this sheet.

Unless otherwise specified in the special provisions, all temporary warning signs shall have black legend on fluorescent orange background.

California codes are designated by (CA). Otherwise, Federal (MUTCD) codes are shown.

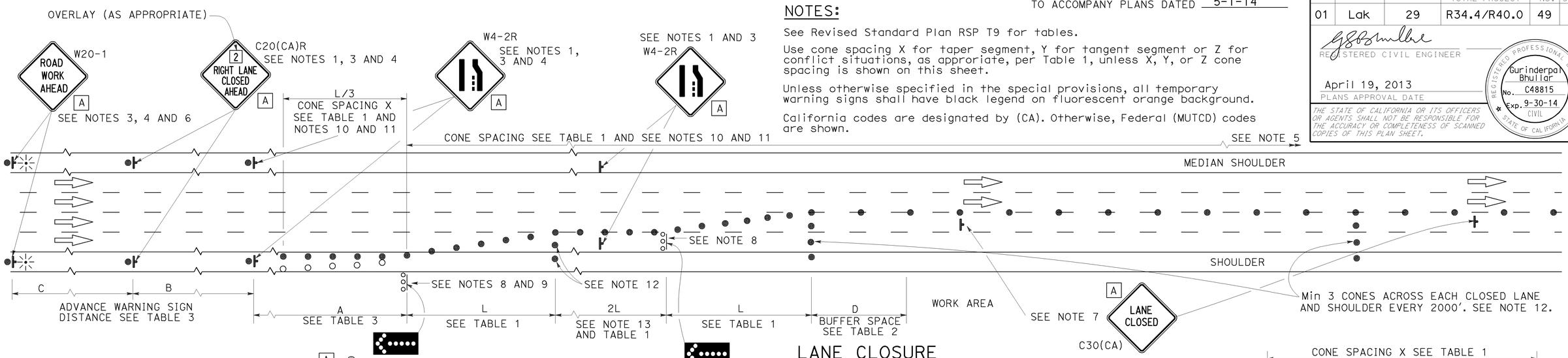

LANE CLOSURE

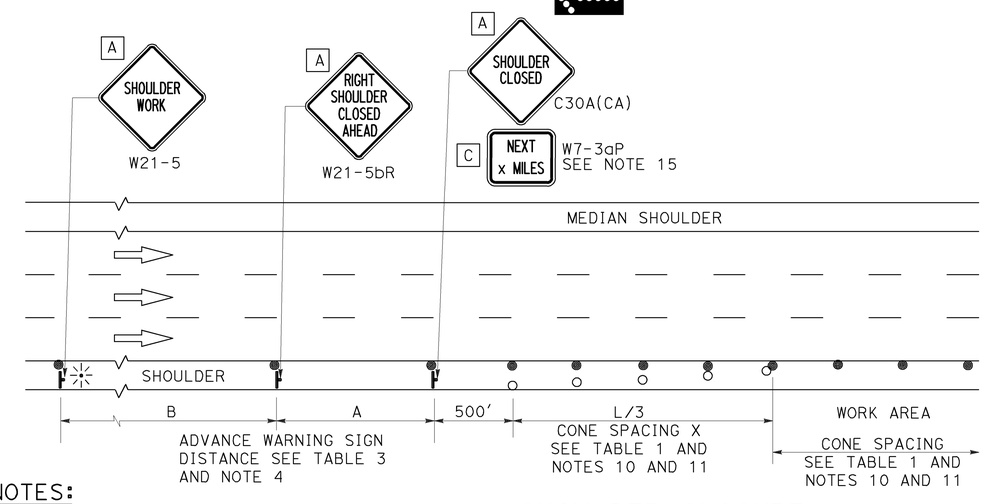

SHOULDER CLOSURE

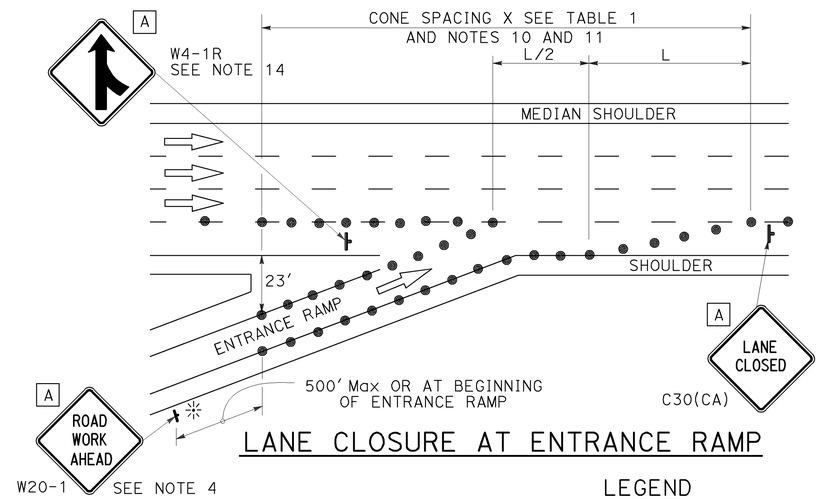

LANE CLOSURE AT ENTRANCE RAMP

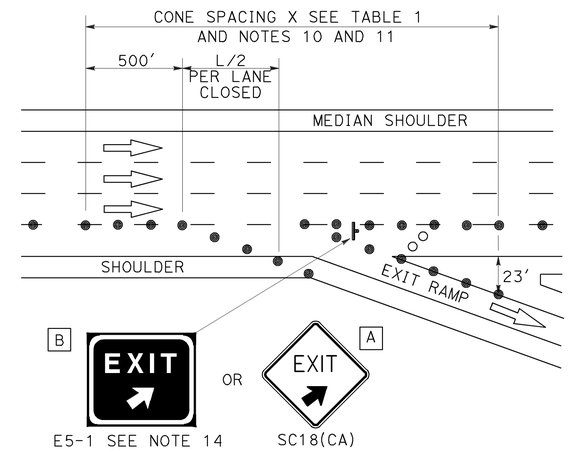

LANE CLOSURE AT EXIT RAMP

NOTES:

1. Median lane closures shall conform to the details as shown except that C20(CA)L and W4-2L signs shall be used.
2. At least one person shall be assigned to provide full time maintenance of traffic control devices for lane closures.
3. Duplicate sign installations are not required:
   a) On opposite shoulder if at least one-half of the available lanes remain open to traffic.
   b) In the median if the width of the median shoulder is less than 8' and the outside lanes are to be closed.
4. Each advance warning sign on each side of the roadway shall be equipped with at least two flags for daytime closure. Each flag shall be at least 16" x 16" in size and shall be orange or fluorescent red-orange in color. Flashing beacons shall be placed at the locations indicated for lane closure during hours of darkness.
5. A G20-2 "END ROAD WORK" sign, with minimum size of 48" x 24" as appropriate, shall be placed at the end of the lane closure unless the end of work area is obvious or ends within a larger project's limits.
6. If the W20-1 sign would follow within 2000' of a stationary W20-1 or G20-1 "ROAD WORK NEXT _____ MILES", use a C20(CA) sign for the first advance warning sign.
7. Place a C30(CA) sign every 2000' throughout length of lane closure.
8. One flashing arrow sign for each lane closed. The flashing arrow signs shall be Type I.
9. A minimum 1500' of sight distance shall be provided where possible for vehicles approaching the first flashing arrow sign. Lane closures shall not begin at top of crest vertical curve or on a horizontal curve.
10. All cones used for lane closures during the hours of darkness shall be fitted with retroreflective bands (or sleeves) as specified in the specifications.
11. Portable delineators, placed at one-half the spacing indicated for traffic cones may be used instead of cones for daytime closures only.
12. Unless otherwise specified in the special provisions, a minimum of 3 cones shall be placed transversely across each closed lane and shoulder at each location where a taper across a traffic lane ends and every 2000' as shown on the "Lane Closure" detail. Two Type II barricades may be used instead of the 3 cones. The transverse alignment of the cones or barricades on the closed shoulder may be shifted from the transverse alignment to provide access to the work.
13. Unless otherwise specified in the special provisions, the 2L tangent shown along lane lines shall be used between the L tapers required for each closed traffic lane.
14. Unless otherwise specified in the special provisions, the E5-1 or SC18(CA) and W4-1 signs shall be used as shown.
15. A W7-3aP "NEXT____ MILES" plaque must be used if theshoulder closure extends beyond the distance that can be perceived by road users.

LEGEND

- TRAFFIC CONE
- TRAFFIC CONE (OPTIONAL TAPER)
- TEMPORARY TRAFFIC CONTROL SIGN
- FLASHING ARROW SIGN (FAS)
- FAS SUPPORT OR TRAILER
- PORTABLE FLASHING BEACON

SIGN PANEL SIZE (Min)

A	48" x 48"
B	72" x 60"
C	36" x 30"

STATE OF CALIFORNIA
DEPARTMENT OF TRANSPORTATION

TRAFFIC CONTROL SYSTEM FOR LANE CLOSURE ON FREEWAYS AND EXPRESSWAYS

NO SCALE

RSP T10 DATED APRIL 19, 2013 SUPERSEDES STANDARD PLAN T10 DATED MAY 20, 2011 - PAGE 237 OF THE STANDARD PLANS BOOK DATED 2010.

REVISED STANDARD PLAN RSP T10

2010 REVISED STANDARD PLAN RSP T10

12-18-12

Dist	COUNTY	ROUTE	POST MILES TOTAL PROJECT	SHEET No.	TOTAL SHEETS
01	Lak	29	R34.4/R40.0	50	62

REGISTERED CIVIL ENGINEER

April 19, 2013
PLANS APPROVAL DATE

REGISTERED PROFESSIONAL ENGINEER Gurinderpal Bhullar No. C48815 Exp. 9-30-14 CIVIL STATE OF CALIFORNIA

THE STATE OF CALIFORNIA OR ITS OFFICERS OR AGENTS SHALL NOT BE RESPONSIBLE FOR THE ACCURACY OR COMPLETENESS OF SCANNED COPIES OF THIS PLAN SHEET.

TO ACCOMPANY PLANS DATED 5-1-14

LEGEND

- TRAFFIC CONE
- TEMPORARY TRAFFIC CONTROL SIGN
- FLASHING ARROW SIGN (FAS)
- FAS SUPPORT OR TRAILER
- PORTABLE FLASHING BEACON

SIGN PANEL SIZE (Min)

A	48" x 48"
B	24" x 24"
C	36" x 18"

NOTES:

See Revised Standard Plan RSP T9 for tables.

Use cone spacing X for taper segment, Y for tangent segment or Z for conflict situations, as approriate, per Table 1, unless X, Y, or Z cone spacing is shown on this sheet.

Unless otherwise specified in the special provisions, all temporary warning signs shall have black legend on fluorescent orange background.

California codes are designated by (CA). Otherwise, Federal (MUTCD) codes are shown.

TYPICAL HALF ROAD CLOSURE

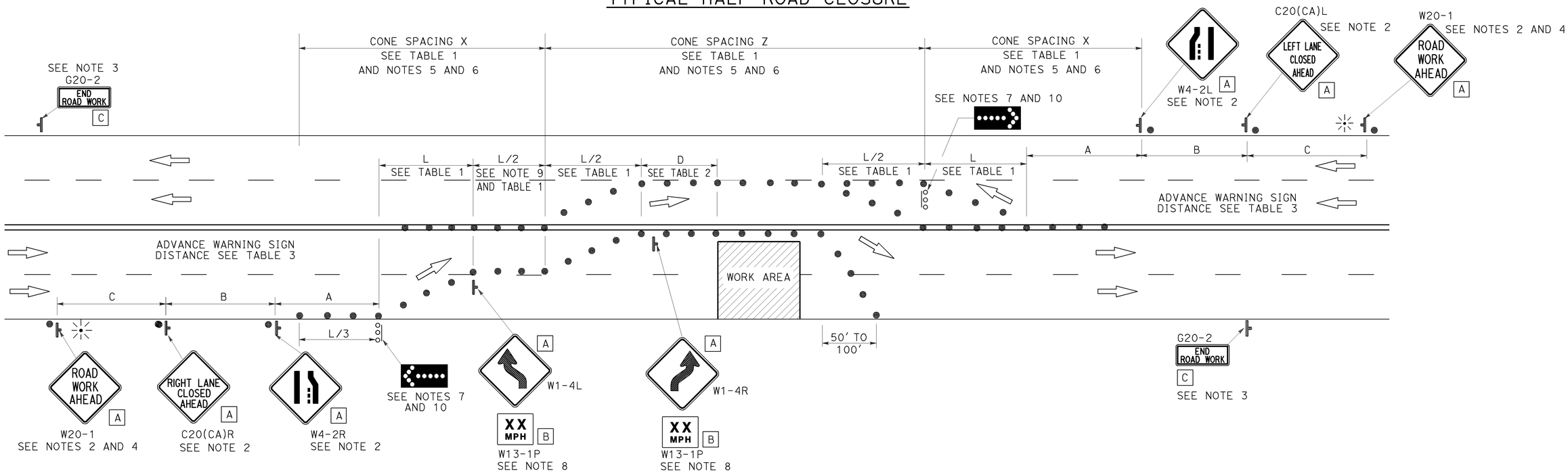

NOTES:

1. At least one person shall be assigned to provide full time maintenance of traffic control devices for lane closure unless, otherwise directed by the Engineer.
2. Each advance warning sign in each direction of travel shall be equipped with at least two flags for daytime closure. Each flag shall be at least 16" x 16" in size and shall be orange or fluorescent red-orange in color. Flashing beacons shall be placed at the locations indicated for lane closure during hours of darkness.
3. A G20-2 "END ROAD WORK" sign, as appropriate, shall be placed at the end of the lane closure unless the end of work area is obvious, or ends within a larger project's limits.
4. If the W20-1 sign would follow within 2000' of a stationary W20-1 or G20-1 "ROAD WORK NEXT _____ MILES", use a C20(CA) sign for the first advance warning sign.
5. All cones used for lane closures during the hours of darkness shall be fitted with retroreflective bands (or sleeves) as specified in the specifications.
6. Portable delineators, placed at one-half the spacing indicated for traffic cones, may be used instead of cones for daytime closures only.
7. Flashing arrow signs shall be either Type I or Type II.
8. Advisory speed will be determined by the Engineer. The W13-1P Plaque will not be required when advisory speed is more than the posted or maximum speed limit.
9. Unless otherwise specified in the special provisions, the tangent (L/2) shall be used.
10. A minimum 1500' of sight distance shall be provided where possible for vehicles approaching the first flashing arrow sign. Lane closures shall not begin at the top of crest vertical curve or on a horizontal curve.

STATE OF CALIFORNIA
DEPARTMENT OF TRANSPORTATION

TRAFFIC CONTROL SYSTEM FOR HALF ROAD CLOSURE ON MULTILANE CONVENTIONAL HIGHWAYS AND EXPRESSWAYS

NO SCALE

RSP T12 DATED APRIL 19, 2013 SUPERSEDES STANDARD PLAN T12
DATED MAY 20, 2011 - PAGE 240 OF THE STANDARD PLANS BOOK DATED 2010.

REVISED STANDARD PLAN RSP T12

2010 REVISED STANDARD PLAN RSP T12

4-2-13

Dist	COUNTY	ROUTE	POST MILES TOTAL PROJECT	SHEET No.	TOTAL SHEETS
01	Lak	29	R34.4/R40.0	51	62

REGISTERED CIVIL ENGINEER

July 18, 2014
PLANS APPROVAL DATE

REGISTERED PROFESSIONAL ENGINEER Gurinderpal Bhullar No. C48815 Exp. 9-30-14 CIVIL STATE OF CALIFORNIA

THE STATE OF CALIFORNIA OR ITS OFFICERS OR AGENTS SHALL NOT BE RESPONSIBLE FOR THE ACCURACY OR COMPLETENESS OF SCANNED COPIES OF THIS PLAN SHEET.

TO ACCOMPANY PLANS DATED 5-1-14

NOTES:

See Revised Standard Plan RSP T9 for tables.

Use cone spacing X for taper segment, Y for tangent segment or Z for conflict situations, as approriate, per Table 1, unless X, Y, or Z cone spacing is shown on this sheet.

Unless otherwise specified in the special provisions, all temporary warning signs shall have black legend on fluorescent orange background.

California codes are designated by (CA). Otherwise, Federal (MUTCD) codes are shown.

TYPICAL LANE CLOSURE WITH REVERSIBLE CONTROL

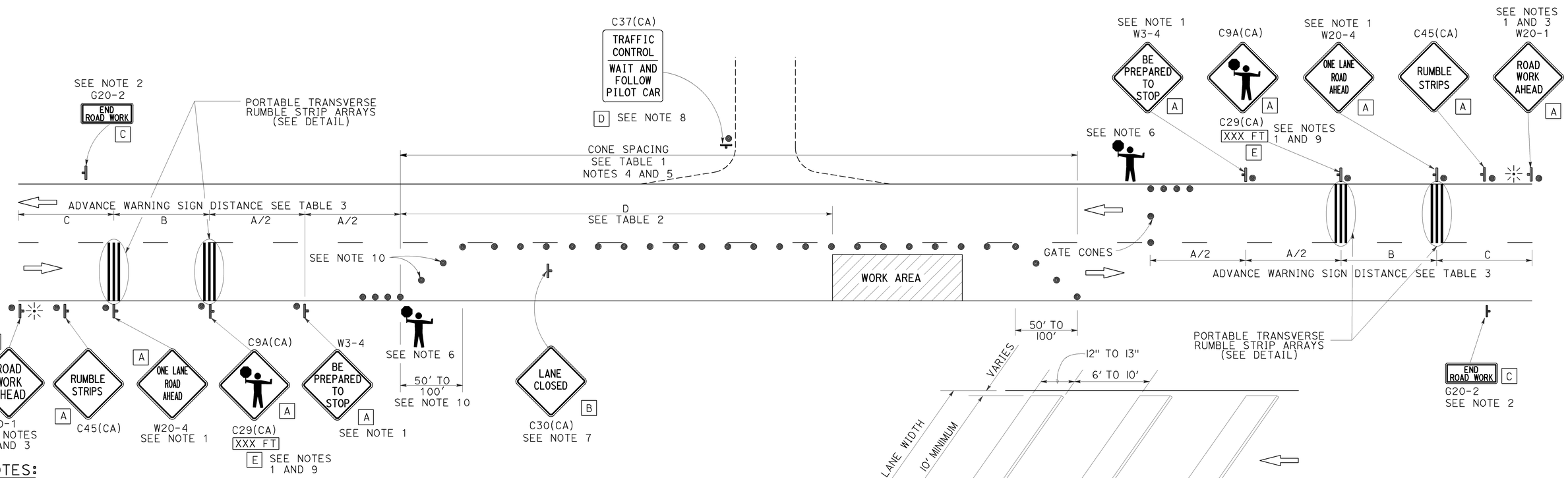

NOTES:

1. Each advance warning sign in each direction of travel shall be equipped with at least two flags for daytime closure. Each flag shall be at least 16" x 16" in size and shall be orange or fluorescent red-orange in color. Flashing beacons shall be placed at the locations indicated for lane closure during hours of darkness.
2. A G20-2 "END ROAD WORK" sign, as appropriate, shall be placed at the end of the lane control unless the end of work area is obvious, or ends within a larger project's limits.
3. If the W20-1 sign would follow within 2000' of a stationary W20-1 or G20-1 "ROAD WORK NEXT _____ MILES", use a W20-4 sign for the first advance warning sign.
4. All cones used for lane closures during the hours of darkness shall be fitted with retroreflective bands (or sleeves) as specified in the specifications.
5. Portable delineators, placed at one-half the spacing indicated for traffic cones, may be used instead of cones for daytime closures only.
6. Additional advance flaggers may be required. Flagger should stand in a conspicuous place, be visible to approaching traffic as well as approaching vehicles after the first vehicle has stopped. During the hours of darkness, the flagging-station and flagger shall be illuminated and clearly visible to approaching traffic. The illumination footprint of the lighting on the ground shall be at least 20' in diameter. Place a minimum of four cones at 50' intervals in advance of flagger station as shown.
7. Place C30(CA) "LANE CLOSED" sign at 500' to 1000' intervals throughout extended work areas. They are optional if the work area is visible from the flagger station.
8. When a pilot car is used, place a C37(CA) "TRAFFIC CONTROL-WAIT AND FOLLOW PILOT CAR" sign with black legend on white background at all intersections, driveways and alleys without a flagger within traffic control area. Signs shall be clean and visible at all times. Where traffic can not be effectively self-regulated, at least one flagger shall be used at each intersection within traffic control area.
9. An optional C29(CA) sign may be placed below the C9A(CA) sign.
10. Either traffic cones or barricades shall be placed on the taper. Barricades shall be Type I, II, or III.
11. The color of the portable transverse rumble strips shall be black or orange. Use 2 arrays, each array shall consist of 3 rumble strips.
12. Portable transverse rumble strips shall not be placed on sharp horizontal or vertical curves nor shall they be placed through pedestrian crossings.
13. If the portable transverse rumble strips become out of alignment (skewed) by more than 6 inches, measured from one end to the other, they shall be readjusted to bring the placement back to the original location.

PORTABLE TRANSVERSE RUMBLE STRIP ARRAY DETAIL

SIGN PANEL SIZE (Min)

A	48" x 48"
B	30" x 30"
C	36" x 18"
D	36" x 42"
E	20" x 7"

LEGEND

- TRAFFIC CONE
- TEMPORARY TRAFFIC CONTROL SIGN
- PORTABLE FLASHING BEACON
- FLAGGER

STATE OF CALIFORNIA
DEPARTMENT OF TRANSPORTATION

TRAFFIC CONTROL SYSTEM FOR LANE CLOSURE ON TWO LANE CONVENTIONAL HIGHWAYS

NO SCALE

RSP T13 DATED JULY 18, 2014 SUPERSEDES RSP T13 DATED APRIL 19, 2013 AND STANDARD PLAN T13 DATED MAY 20, 2011 - PAGE 241 OF THE STANDARD PLANS BOOK DATED 2010.

REVISED STANDARD PLAN RSP T13

2010 REVISED STANDARD PLAN RSP T13

6-19-14

Dist	COUNTY	ROUTE	POST MILES TOTAL PROJECT	SHEET No.	TOTAL SHEETS
01	Lak	29	R34.4/R40.0	52	62

REGISTERED CIVIL ENGINEER

April 19, 2013
PLANS APPROVAL DATE

REGISTERED PROFESSIONAL ENGINEER Gurinderpal Bhullar No. C48815 Exp. 9-30-14 CIVIL STATE OF CALIFORNIA

THE STATE OF CALIFORNIA OR ITS OFFICERS OR AGENTS SHALL NOT BE RESPONSIBLE FOR THE ACCURACY OR COMPLETENESS OF SCANNED COPIES OF THIS PLAN SHEET.

TO ACCOMPANY PLANS DATED 5-1-14

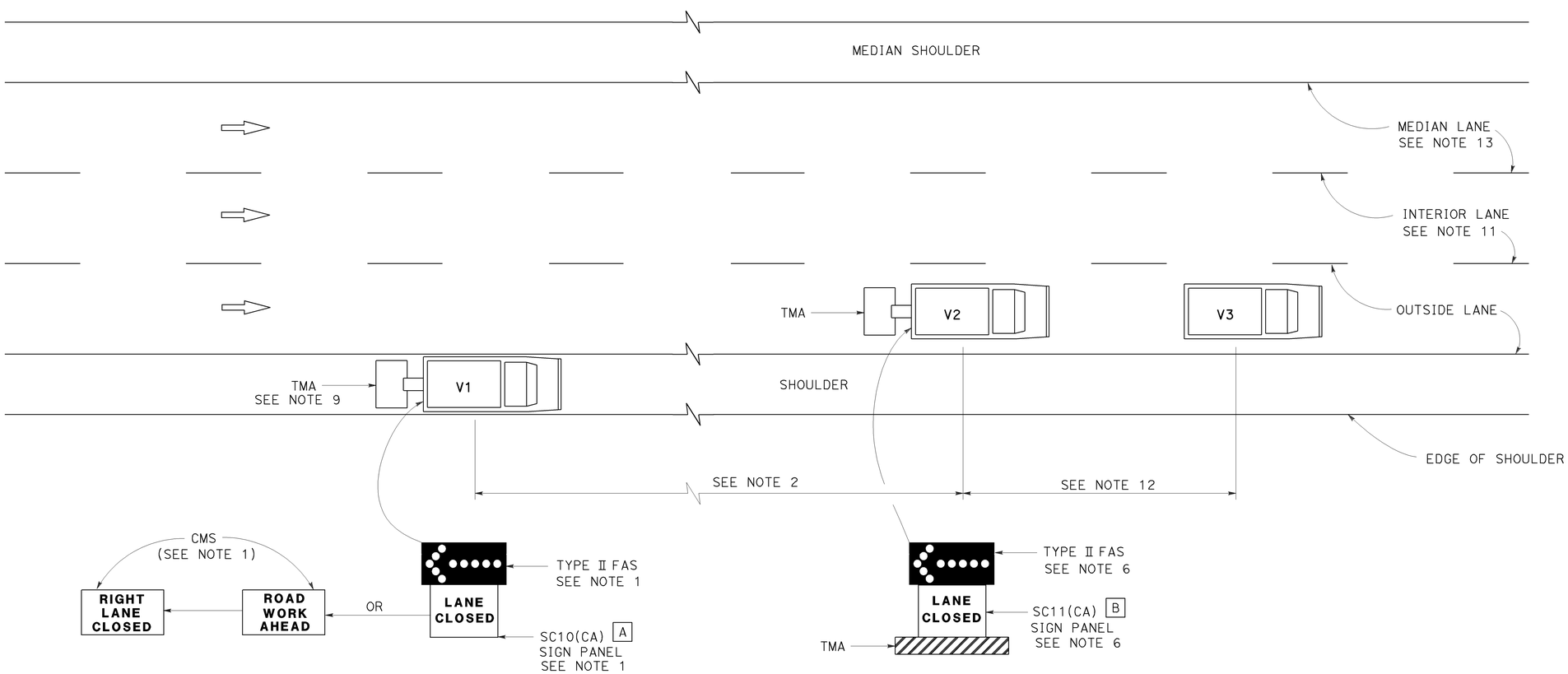

MOVING LANE CLOSURE ON MEDIAN LANE OR OUTSIDE LANE OF MULTILANE HIGHWAYS

SIGN PANEL SIZE (Min)

A 66" x 36"

B 54" x 42"

LEGEND

V1	SIGN VEHICLE
V2	SHADOW VEHICLE
V3	WORK/APPLICATION VEHICLE
	FLASHING ARROW SIGN (FAS)
CMS	CHANGEABLE MESSAGE SIGN
TMA	TRUCK-MOUNTED ATTENUATOR

NOTES:

1. Either a changeable message sign or a SC10(CA) sign panel and a Type II flashing arrow sign shall be mounted on the rear of sign vehicle V1. The changeable message sign shall be sequenced to show the "ROAD WORK AHEAD" message first, followed by the "RIGHT LANE CLOSED" message. For median lane closure, the flashing arrow symbol shall be reversed with the arrowhead on the right and the changeable message sign shall show "LEFT LANE CLOSED".
2. If traffic queues develop, sign vehicle V1 should be positioned upstream from the end of queue. Sign vehicle V1 shall be positioned where highly visible when shoulders are not available.
3. A minimum sight distance of 1500′ should be provided in advance of sign vehicle V1.
4. Sign vehicle V1 should remain at the beginning of horizontal or vertical curves until the other vehicles (V2 and V3) are far enough beyond the curve to resume the minimum sight distance of 1500′.
5. Vehicle-mounted sign panels shall have Type III or above retroreflective sheeting, black on white, or black on fluorescent orange, with 6" minimum series D letters per Caltrans sign specifications.
6. Shadow vehicle V2 shall be equipped with a truck-mounted attenuator. The sign panel shown and a Type II flashing arrow sign shall be mounted on the rear of shadow vehicle V2. For median lane closure the flashing arrow sign symbol shall be displayed with the arrowhead on the right.
7. All vehicles used for lane closures shall be equipped with two-way radios, and the vehicle operators shall maintain communication during the work or application operation.
8. All vehicles shall be equipped with flashing or rotating amber lights.
9. If sign vehicle V1 encroaches into the traffic lane due to insufficient shoulder width, sign vehicle V1 shall be equipped with a truck-mounted attenuator. Sign vehicle V1 shall stay as close to the edge of shoulder as practicable.
10. Where workers would be on foot in the work area, a stationary type lane closure (Revised Standard Plan T10, T11, etc., as applicable) shall be used instead of this plan.
11. For moving lane closure on interior lane of multilane highways, use Revised Standard Plan T16.
12. The spacing between work vehicle(s) and the shadow vehicles, and between each shadow vehicle should be minimized to deter road users from driving in between.
13. When the work/application vehicle V3 occupies the median lane, sign vehicle V1 should drive in the median shoulder and indicate left lane closed ahead.

STATE OF CALIFORNIA
DEPARTMENT OF TRANSPORTATION

TRAFFIC CONTROL SYSTEM FOR MOVING LANE CLOSURE ON MULTILANE HIGHWAYS

NO SCALE

RSP T15 DATED APRIL 19, 2013 SUPERSEDES STANDARD PLAN T15
DATED MAY 20, 2011 - PAGE 243 OF THE STANDARD PLANS BOOK DATED 2010.

REVISED STANDARD PLAN RSP T15

2010 REVISED STANDARD PLAN RSP T15

12-18-12

Dist	COUNTY	ROUTE	POST MILES TOTAL PROJECT	SHEET No.	TOTAL SHEETS
01	Lak	29	R34.4/R40.0	53	62

REGISTERED CIVIL ENGINEER

April 19, 2013
PLANS APPROVAL DATE

REGISTERED PROFESSIONAL ENGINEER
Gurinderpal Bhullar
No. C48815
Exp. 9-30-14
CIVIL
STATE OF CALIFORNIA

THE STATE OF CALIFORNIA OR ITS OFFICERS OR AGENTS SHALL NOT BE RESPONSIBLE FOR THE ACCURACY OR COMPLETENESS OF SCANNED COPIES OF THIS PLAN SHEET.

TO ACCOMPANY PLANS DATED 5-1-14

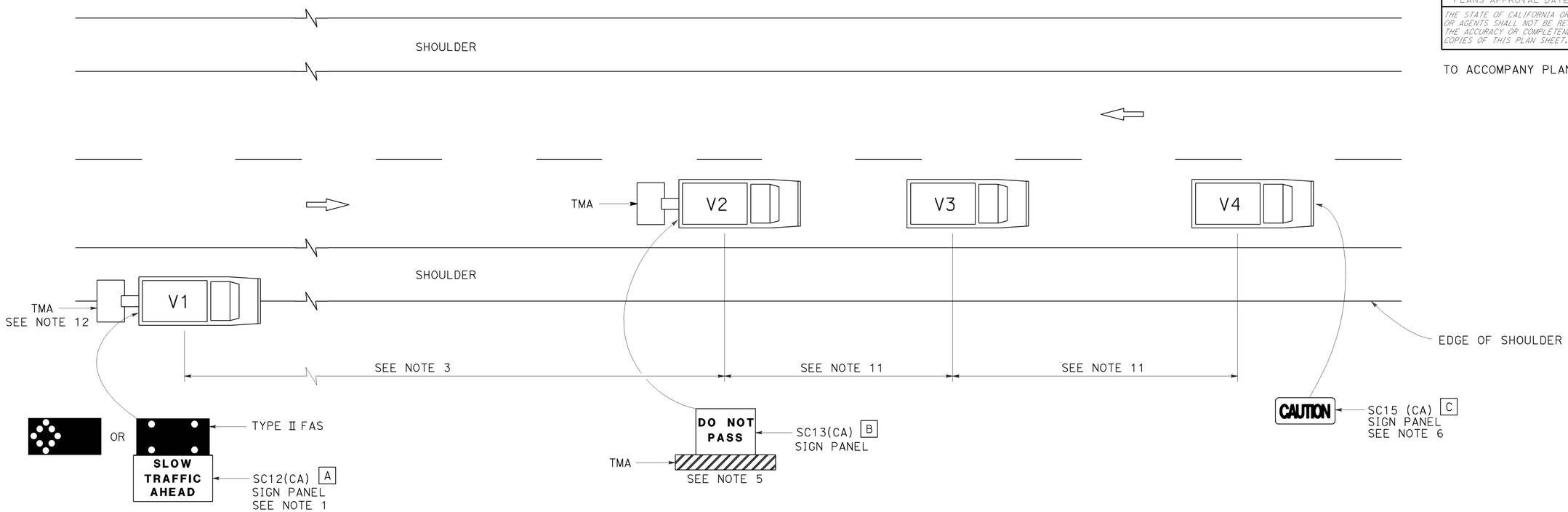

LEGEND

V1	SIGN VEHICLE
V2	SHADOW VEHICLE
V3	WORK/APPLICATION VEHICLE
V4	SIGN VEHICLE
TMA	TRUCK-MOUNTED ATTENUATOR
	FLASHING ARROW SIGN (FAS) IN FLASHING CAUTION MODE
	FLASHING ARROW SIGN (FAS) IN ALTERNATING DIAMOND CAUTION

SIGN PANEL SIZE (Min)

A	72" x 42"
B	54" x 42"
C	54" x 24"

NOTES:

1. Either a changeable message sign or a SC12(CA) "SLOW TRAFFIC AHEAD" sign shall be mounted on the rear of sign vehicle V1. The changeable message sign shall be sequenced to show the "CAUTION" message first, follow by the "SLOW TRAFFIC AHEAD" message. A Type II flashing arrow sign may be used with the SC12(CA) sign panel.
2. Sign vehicle V1 should be positioned where highly visible when shoulders are not available.
3. If traffic queues develop, sign vehicle V1 should be positioned upstream from the end of queue.
4. Vehicle-mounted sign panels shall have Type III or above retroreflective sheeting, black on white, or black on fluorescent orange, with 6" minimum series D letters per Caltrans sign specifications.
5. Shadow vehicle shall be equipped with a truck-mounted attenuator. The sign panel shown shall be mounted on the rear of shadow vehicle V2. The message "LANE CLOSED" may be used in place of the "DO NOT PASS" message.
6. The sign panel shown shall be mounted on the front of sign vehicle V4, facing opposing traffic.
7. All vehicles shall be equipped with flashing or rotating amber lights.
8. Sign vehicle V4 will not be required when the work and vehicles V2 and V3 are 2′ or more from the centerline of the highway during the work or application operations.
9. All vehicles used for lane closures shall be equipped with two-way radios and the vehicle operators shall maintain communication during the work or application operation.
10. This plan shall not be used where workers would be on foot in the work area. Use a stationary type lane closure (Revised Standard Plan T13) for this condition.
11. Minimize spacing between vehicles V2 and V3 and vehicles V3 and V4 to deter road users from driving in between them.
12. If sign vehicle V1 encroaches into the traffic lane due to insufficient shoulder width, sign vehicle V1 shall be equipped with a truck-mounted attenuator. Sign vehicle V1 shall stay as close to the edge of shoulder as practicable.

STATE OF CALIFORNIA
DEPARTMENT OF TRANSPORTATION

TRAFFIC CONTROL SYSTEM FOR MOVING LANE CLOSURE ON TWO LANE HIGHWAYS

NO SCALE

RSP T17 DATED APRIL 19, 2013 SUPERSEDES STANDARD PLAN T17
DATED MAY 20, 2011 - PAGE 245 OF THE STANDARD PLANS BOOK DATED 2010.

REVISED STANDARD PLAN RSP T17

2010 REVISED STANDARD PLAN RSP T17

12-18-12

Dist	COUNTY	ROUTE	POST MILES TOTAL PROJECT	SHEET No.	TOTAL SHEETS
01	Lak	29	R34.4/R40.0	54	62

Theresa Gabriel
REGISTERED ELECTRICAL ENGINEER

July 19, 2013
PLANS APPROVAL DATE

REGISTERED PROFESSIONAL ENGINEER Theresa Aziz Gabriel No. E15129 Exp. 6-30-14 ELECTRICAL STATE OF CALIFORNIA

THE STATE OF CALIFORNIA OR ITS OFFICERS OR AGENTS SHALL NOT BE RESPONSIBLE FOR THE ACCURACY OR COMPLETENESS OF SCANNED COPIES OF THIS PLAN SHEET.

TO ACCOMPANY PLANS DATED 5-1-14

LEGEND:

AB	ABANDON. IF APPLIED TO CONDUIT, REMOVE CONDUCTORS
BC	INSTALL PULL BOX IN EXISTING CONDUIT RUN
BP	PEDESTRIAN BARRICADE, TYPE AS INDICATED ON PLAN
CB	INSTALL CONDUIT INTO EXISTING PULL BOX
CC	CONNECT NEW AND EXISTING CONDUIT. REMOVE EXISTING CONDUCTORS AND INSTALL CONDUCTORS AS INDICATED
CF	CONDUIT TO REMAIN FOR FUTURE USE. REMOVE CONDUCTORS. INSTALL PULL TAPE
DH	DETECTOR HANDHOLE
FA	FOUNDATION TO BE ABANDONED
IS	INSTALL SIGN ON SIGNAL MAST ARM
NS	NO SLIP BASE ON STANDARD
PEC	PHOTOELECTRIC CONTROL
PEU	PHOTOELECTRIC UNIT
RC	EQUIPMENT OR MATERIAL TO BE REMOVED AND BECOME THE PROPERTY OF THE CONTRACTOR
RE	REMOVE ELECTROLIER, FUSES AND BALLAST. TAPE ENDS OF CONDUCTORS
RL	RELOCATE EQUIPMENT
RR	REMOVE AND REUSE EQUIPMENT
RS	REMOVE AND SALVAGE EQUIPMENT
SC	SPLICE NEW TO EXISTING CONDUCTORS
SD	SERVICE DISCONNECT
TSP	TELEPHONE SERVICE POINT

ABBREVIATIONS

APS	ACCESSIBLE PEDESTRIAN SIGNAL
BBS	BATTERY BACKUP SYSTEM
BC	BOLT CIRCLE
BPB	BICYCLE PUSH BUTTON
C	CONDUIT
CB	CIRCUIT BREAKER
CCTV	CLOSED CIRCUIT TELEVISION
Ckt	CIRCUIT
CMS	CHANGEABLE MESSAGE SIGN
Ctid	CALTRANS IDENTIFICATION
Comm	COMMUNICATION
DLC	LOOP DETECTOR LEAD-IN CABLE
EMS	EXTINGUISHABLE MESSAGE SIGN
EVUC	EMERGENCY VEHICLE UNIT CABLE
EVUD	EMERGENCY VEHICLE UNIT DETECTOR
FB	FLASHING BEACON
FBCA	FLASHING BEACON CONTROL ASSEMBLY
FBS	FLASHING BEACON WITH SLIP BASE
FO	FIBER OPTIC
G	EQUIPMENT GROUNDING CONDUCTOR
GB	GROUND BUS
GFCI	GROUND FAULT CIRCUIT INTERRUPTER
HAR	HIGHWAY ADVISORY RADIO
Hex	HEXAGONAL
HPS	HIGH PRESSURE SODIUM
IISNS	INTERNALLY ILLUMINATED STREET NAME SIGN
ISL	INDUCTION SIGN LIGHTING
LED	LIGHT EMITTING DIODE
LMA	LUMINAIRE MAST ARM
LPS	LOW PRESSURE SODIUM
Ltg	LIGHTING
Lum	LUMINAIRE
M	METERED
MAT	MAST ARM MOUNTING TOP ATTACHMENT
MAS	MAST ARM MOUNTING SIDE ATTACHMENT
M/M	MULTIPLE TO MULTIPLE TRANSFORMER
Mtg	MOUNTING
MV	MERCURY VAPOR LIGHTING FIXTURE
MVDS	MICROWAVE VEHICLE DETECTION SYSTEM
N	NEUTRAL (GROUNDED CONDUCTOR)
NB	NEUTRAL BUS
NC	NORMALLY CLOSE
NO	NORMALLY OPEN
P	CIRCUIT BREAKER'S POLE
PB	PULL BOX
PBA	PUSH BUTTON ASSEMBLY
PEC	PHOTOELECTRIC CONTROL
Ped	PEDESTRIAN
PEU	PHOTOELECTRIC UNIT
PT	CONDUIT WITH PULL TAPE
RE	RELOCATED EQUIPMENT
RM	RAMP METERING
RWIS	ROADSIDE WEATHER INFORMATION SYSTEM
SB	SLIP BASE
SIC	SIGNAL INTERCONNECT CABLE
Sig	SIGNAL
SMA	SIGNAL MAST ARM
SNS	STREET NAME SIGN
SP	SERVICE POINT
TDC	TELEPHONE DEMARCATION CABINET
TMS	TRAFFIC MONITORING STATION
TOS	TRAFFIC OPERATIONS SYSTEM
Veh	VEHICLE
VIVDS	VIDEO IMAGE VEHICLE DETECTION SYSTEM
WIM	WEIGH-IN-MOTION
Xfmr	TRANSFORMER

SOFFIT AND WALL MOUNTED LUMINAIRES

PENDANT, 70 W HPS UNLESS OTHERWISE SPECIFIED

FLUSH, 70 W HPS UNLESS OTHERWISE SPECIFIED

WALL SURFACE, 70 W HPS UNLESS OTHERWISE SPECIFIED

EXISTING SOFFIT OR WALL LUMINAIRE TO REMAIN UNMODIFIED

EXISTING SOFFIT OR WALL LUMINAIRE TO BE MODIFIED AS SPECIFIED

NOTE:

Arrow indicates "street side" of luminaire.

COMMONLY USED SYMBOLS FOR UNITED STATES CUSTOMARY UNITS OF MEASUREMENT:

SYMBOL USED	DEFINITIONS
Ω	OHMS
min	MINUTE
s	SECOND
bps	BITS PER SECOND
Bps	BYTES PER SECOND
A	AMPERE
V	VOLT
V(dc)	VOLT (DIRECT CURRENT)
V(ac)	VOLT (ALTERNATING CURRENT)
FC	FOOT - CANDLE
W	WATTS
VA	VOLT-AMPERE
M	MEGA
k	KILO
m	MILLI
μ	MICRO
P	PICO
Hz	HERTZ

MISCELLANEOUS ELECTROLIERS

NEW	EXISTING	
		LUMINAIRE ON WOOD POLE
		NON-STANDARD ELECTROLIER (SEE PROJECT NOTES OR PROJECT PLANS)
		CITY ELECTROLIER
		ELECTROLIER FOUNDATION (FUTURE INSTALLATION)

NOTES:

1. HPS luminaires shall be 310 W HPS when installed on Type 21, 21D, 30, 31 and 32 Standards, unless otherwise specified. HPS luminaires shall be 200 W when installed on other type standards or poles, unless otherwise specified.
2. LED luminaires shall be 235 W when installed on Type 21, 21D, 30, 31 and 32 Standards, unless otherwise specified. LED luminaires shall be 165 W when installed on other type standards or poles, unless otherwise specified.
3. Luminaires shall be the cutoff type, ANSI Type III medium cutoff lighting distribution, unless otherwise specified.

STANDARD ELECTROLIER

NEW	EXISTING	STANDARD TYPE
		15
		15D
		15 STRUCTURE
		15D STRUCTURE
		21
		21D
		21 STRUCTURE
		21D STRUCTURE
		30
		31
		32

STATE OF CALIFORNIA
DEPARTMENT OF TRANSPORTATION

ELECTRICAL SYSTEMS (LEGEND AND ABBREVIATIONS)

NO SCALE

RSP ES-1A DATED JULY 19, 2013 SUPERSEDES STANDARD PLAN ES-1A DATED MAY 20, 2011 - PAGE 425 OF THE STANDARD PLANS BOOK DATED 2010.

REVISED STANDARD PLAN RSP ES-1A

2010 REVISED STANDARD PLAN RSP ES-1A

Dist	COUNTY	ROUTE	POST MILES TOTAL PROJECT	SHEET No.	TOTAL SHEETS
01	Lak	29	R34.4/R40.0	55	62

Theresa Gabriel
REGISTERED ELECTRICAL ENGINEER

July 19, 2013
PLANS APPROVAL DATE

REGISTERED PROFESSIONAL ENGINEER
Theresa Aziz Gabriel
No. E15129
Exp. 6-30-14
ELECTRICAL
STATE OF CALIFORNIA

THE STATE OF CALIFORNIA OR ITS OFFICERS OR AGENTS SHALL NOT BE RESPONSIBLE FOR THE ACCURACY OR COMPLETENESS OF SCANNED COPIES OF THIS PLAN SHEET.

TO ACCOMPANY PLANS DATED 5-1-14

CONDUIT

NEW	EXISTING	
		LIGHTING CONDUIT, UNLESS OTHERWISE INDICATED OR NOTED
		TRAFFIC SIGNAL CONDUIT
C	c	COMMUNICATION CONDUIT
T	t	TELEPHONE CONDUIT
F	f	FIRE ALARM CONDUIT
FO	fo	FIBER OPTIC CONDUIT
		CONDUIT TERMINATION
R	r	CONDUIT RISER ATTACHED TO THE STRUCTURE OR SERVICE POLE

SERVICE EQUIPMENT

NEW	EXISTING	
OH	oh	OVERHEAD LINES
U	U	WOOD POLE, "U" INDICATES UTILITY OWNED
		POLE GUY WITH ANCHOR
		UTILITY TRANSFORMER - GROUND MOUNTED
III	III	SERVICE EQUIPMENT ENCLOSURE TYPE. DOOR INDICATES FRONT OF ENCLOSURE
T	t	TELEPHONE DEMARCATION CABINET

POLE-MOUNTED SERVICE DESIGNATION

TYPE H SERVICE, 28'-10" — TYPE OF INSTALLATION AND POLE HEIGHT ABOVE GRADE

FLASHING BEACON

NEW	EXISTING	
R	R	FLASHING BEACON (ONE VEHICLE SIGNAL HEAD WITH BACKPLATE AND VISOR) "R" INDICATES RED INDICATION, "Y" INDICATES YELLOW INDICATION
Y Y	Y Y	FLASHING BEACON WITH TYPE 15-FBS STANDARD AND A SIGN.
R R	R R	FLASHING BEACON WITH TYPES 9, 9A OR 9B SIGN UNLESS OTHERWISE SPECIFIED OR INDICATED

SIGNAL EQUIPMENT

NEW	EXISTING	
C	C	PEDESTRIAN SIGNAL HEAD "C" INDICATES COUNTDOWN PEDESTRIAN HEAD
		PUSH BUTTON ASSEMBLY POST
		PEDESTRIAN BARRICADE
		VEHICLE SIGNAL HEAD (WITH BACKPLATE AND 3-SECTIONS: RED, YELLOW AND GREEN)
		VEHICLE SIGNAL HEAD WITH ANGLE VISOR
PV	PV	MODIFICATIONS OF BASIC SYMBOL: "L" INDICATES ALL NON-ARROW SECTIONS LOUVERED "LG" INDICATES LOUVERED GREEN SECTION ONLY "PV" INDICATES ALL 12" SECTIONS PROGRAMMED VISIBILITY "8" INDICATES ALL 8" SECTIONS (ONLY WHEN SPECIFIED)
		VEHICLE SIGNAL HEAD CONSISTING OF RED, YELLOW AND GREEN LEFT ARROW SECTIONS
		VEHICLE SIGNAL HEAD CONSISTING OF RED AND YELLOW SECTIONS WITH AN UP GREEN ARROW SECTION
		VEHICLE SIGNAL HEAD (5 SECTION) CONSISTING OF RED, YELLOW AND GREEN SECTIONS WITH YELLOW AND GREEN RIGHT ARROW SECTIONS
		TYPE 15TS STANDARD WITH VEHICLE SIGNAL HEAD AND LUMINAIRE
		TYPE 21TS STANDARD WITH VEHICLE SIGNAL HEAD AND LUMINAIRE
		STANDARD WITH LUMINAIRE AND SIGNAL MAST ARMS AND ATTACHED VEHICLE SIGNAL HEADS
		TYPE 1 STANDARD WITH ATTACHED VEHICLE SIGNAL HEADS
		STANDARD WITH A SIGNAL MAST ARM, ATTACHED VEHICLE SIGNAL HEADS AND INTERNALLY ILLUMINATED STREET NAME SIGN
		CONTROLLER ASSEMBLY. DOOR INDICATES FRONT OF CABINET

SIGNAL EQUIPMENT Cont

NEW	EXISTING	
		GUARD POST
		TYPE 1 STANDARD WITH RAMP METERING SIGN
		OPTICAL DETECTOR FOR THE EMERGENCY VEHICLE DETECTION SYSTEM

NOTES:

1. All signal sections shall be 12" unless shown otherwise.
2. Signal heads shall be provided with backplates unless shown otherwise.

ILLUMINATED OVERHEAD SIGN

NEW	EXISTING	
		SINGLE POST, SINGLE ILLUMINATED SIGN, BALANCED BUTTERFLY
		SINGLE POST, DOUBLE ILLUMINATED SIGN, BALANCED BUTTERFLY
		SINGLE POST, SINGLE ILLUMINATED SIGN, FULL CANTILEVER
		DOUBLE POST, SINGLE ILLUMINATED SIGN
		SINGLE ILLUMINATED SIGN MOUNTED ON STRUCTURE
		DOUBLE POST, SINGLE ILLUMINATED SIGN WITH ELECTROLIER

STATE OF CALIFORNIA
DEPARTMENT OF TRANSPORTATION

ELECTRICAL SYSTEMS (LEGEND AND ABBREVIATIONS)

NO SCALE

RSP ES-1B DATED JULY 19, 2013 SUPERSEDES STANDARD PLAN ES-1B DATED MAY 20, 2011 - PAGE 426 OF THE STANDARD PLANS BOOK DATED 2010.

REVISED STANDARD PLAN RSP ES-1B

2010 REVISED STANDARD PLAN RSP ES-1B

7-15-13

Dist	COUNTY	ROUTE	POST MILES TOTAL PROJECT	SHEET No.	TOTAL SHEETS
01	Lak	29	R34.4/R40.0	56	62

Theresa Gabriel
REGISTERED ELECTRICAL ENGINEER

July 19, 2013
PLANS APPROVAL DATE

REGISTERED PROFESSIONAL ENGINEER
Theresa Aziz Gabriel
No. E15129
Exp. 6-30-14
ELECTRICAL
STATE OF CALIFORNIA

THE STATE OF CALIFORNIA OR ITS OFFICERS OR AGENTS SHALL NOT BE RESPONSIBLE FOR THE ACCURACY OR COMPLETENESS OF SCANNED COPIES OF THIS PLAN SHEET.

TO ACCOMPANY PLANS DATED 5-1-14

EQUIPMENT IDENTIFICATION

ILLUMINATED SIGN IDENTIFICATION NUMBER:

SIGN No. 12345
10 ISL SCI 1.0

- SIGN NUMBER - PLACE ON POST OR STRUCTURE
- TRANSFORMER RATING (kVA)
- LIGHTING CONTROL TYPE
- NUMBER AND TYPE OF FIXTURES

} DO NOT PLACE ON STANDARD OR STRUCTURE

ELECTROLIER OR EQUIPMENT IDENTIFICATION NUMBER:

12345 - 15'-0"

- MAST ARM LENGTH, IF SHOWN. DO NOT PLACE ON STANDARD OR STRUCTURE
- EQUIPMENT NUMBER - PLACE ON STANDARD OR STRUCTURE. EXISTING EQUIPMENT NUMBERS ARE SHOWN IN PARENTHESIS

CONDUIT AND CONDUCTOR IDENTIFICATION:

1½"C, 2#10, 15#14, 2 DLC, 12P#18 (PAIR)

- NUMBER AND SIZE OF CONDUCTORS AND CABLES
- SIZE OF CONDUIT IN INCHES

ø1, ø2, ø2P, etc.	TRAFFIC PHASE IDENTIFICATION FOR SIGNAL FACES, DETECTORS AND PHASE DIAGRAMS
1 2 3	LEGEND NUMBERS
A B C	EQUIPMENT, SIGNAL POLES, INSTALLATION OR ITEMS
1 2 3	CONDUIT RUN NUMBERS

SIGNAL AND LIGHTING STANDARD (TYPICAL DESIGNATION):

19A - 3 - 100

- WIND VELOCITY = 100 mph
- CASE 3 ARM LOADING
- STANDARD TYPE
- STANDARD PLAN SHEET NUMBER
- DETAIL, NUMBER, SECTION, TYPE OR ELEVATION

MISCELLANEOUS EQUIPMENT

NEW	EXISTING	
CMS	cms	CHANGEABLE MESSAGE SIGN
		CLOSED CIRCUIT TELEVISION CAMERA
		HIGHWAY ADVISORY RADIO POLE AND ANTENNA
EMS	ems	EXTINGUISHABLE MESSAGE SIGN
M V	m v	DETECTION DEVICE M = MICROWAVE SENSOR V = VIDEO IMAGE SENSOR

WIRING DIAGRAM LEGEND

- EXTERNAL CONDUCTOR
- CONDUCTOR OR BUS
- TIE POINT
- CONTACTOR COIL
- CONTACTOR, NO CONTACT
- TERMINAL BLOCKS
- CONTACTOR, NC CONTACT
- ENCLOSURE BOND
- GROUNDING ELECTRODE
- CIRCUIT BREAKER
- RECEPTACLE

PULL BOXES

NEW	EXISTING	
		PULL BOX, No. 5 UNLESS OTHERWISE INDICATED OR NOTED
3	9A(21)	PULL BOX, ADDITIONAL DESIGNATIONS OR DESCRIPTIONS

3 No. 3½ PULL BOX
5 No. 5 PULL BOX
6 No. 6 PULL BOX
7 No. 7 (CEILING PULL BOX)
8 No. 8 (PENDANT SOFFIT PULL BOX)
9 No. 9 PULL BOX
9A No. 9A PULL BOX

(C) COMMUNICATIONS PULL BOX
(E) PULL BOX WITH EXTENSION
(S) SPRINKLER CONTROL PULL BOX
(21) ANCHOR BOLTS AND CONDUIT FOR FUTURE INSTALLATION OF TYPE 21 STANDARD
(T) TRAFFIC PULL BOX

VEHICLE DETECTORS

5 J 9 U

- VEHICLE DETECTOR DESIGNATION
- U = UPPER
  L = LOWER
- SLOT NUMBER IN INPUT FILE
- INPUT FILE (I OR J)
- PHASE

NEW	EXISTING	
		TYPE A DETECTOR LOOP. OUTLINE OF SAWCUT SHOWN
		TYPE B DETECTOR LOOP. OUTLINE OF SAWCUT SHOWN
		TYPE C DETECTOR LOOP. OUTLINE OF SAWCUT SHOWN
		TYPE D DETECTOR LOOP. OUTLINE OF SAWCUT SHOWN
		TYPE E DETECTOR LOOP. OUTLINE OF SAWCUT SHOWN
		TYPE Q DETECTOR LOOP. OUTLINE OF SAWCUT SHOWN
		MAGNETIC DETECTOR
DH	dh	DETECTOR HANDHOLE
		MICROWAVE OR VIDEO DETECTION ZONE

STATE OF CALIFORNIA
DEPARTMENT OF TRANSPORTATION

ELECTRICAL SYSTEMS (LEGEND AND ABBREVIATIONS)

NO SCALE

RSP ES-1C DATED JULY 19, 2013 SUPERSEDES STANDARD PLAN ES-1C DATED MAY 20, 2011 - PAGE 427 OF THE STANDARD PLANS BOOK DATED 2010.

REVISED STANDARD PLAN RSP ES-1C

2010 REVISED STANDARD PLAN RSP ES-1C

7-11-13

Dist	COUNTY	ROUTE	POST MILES TOTAL PROJECT	SHEET No.	TOTAL SHEETS
01	Lak	29	R34.4/R40.0	57	62

Theresa Gabriel
REGISTERED ELECTRICAL ENGINEER

July 19, 2013
PLANS APPROVAL DATE

REGISTERED PROFESSIONAL ENGINEER
Theresa Aziz Gabriel
No. E15129
Exp. 6-30-14
ELECTRICAL
STATE OF CALIFORNIA

THE STATE OF CALIFORNIA OR ITS OFFICERS OR AGENTS SHALL NOT BE RESPONSIBLE FOR THE ACCURACY OR COMPLETENESS OF SCANNED COPIES OF THIS PLAN SHEET.

TO ACCOMPANY PLANS DATED 5-1-14

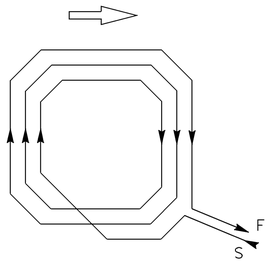

WINDING DETAIL

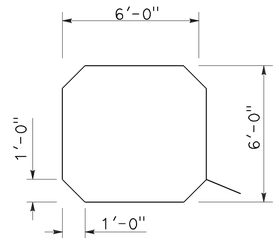

SAWCUT DETAIL

TYPE A LOOP DETECTOR CONFIGURATION

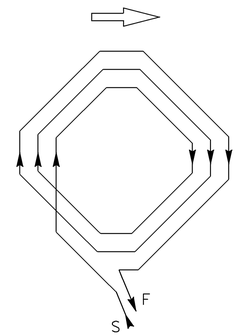

WINDING DETAIL

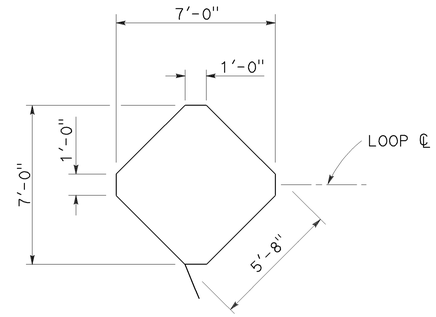

SAWCUT DETAIL

TYPE B LOOP DETECTOR CONFIGURATION

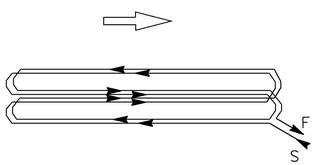

WINDING DETAIL

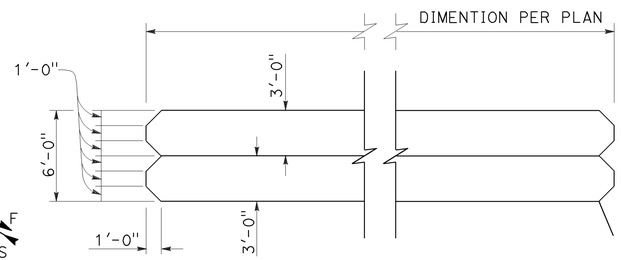

SAWCUT DETAIL

TYPE C LOOP DETECTOR CONFIGURATION

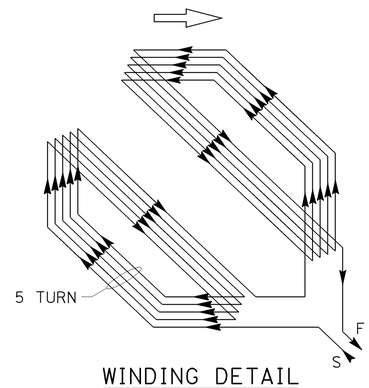

WINDING DETAIL

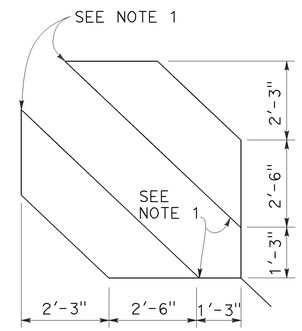

SAWCUT DETAIL

TYPE D LOOP DETECTOR CONFIGURATION

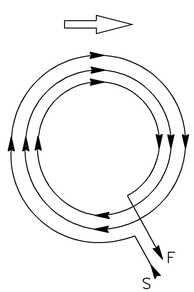

WINDING DETAIL

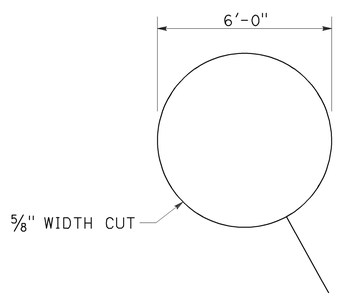

SAWCUT DETAIL

TYPE E LOOP DETECTOR CONFIGURATION

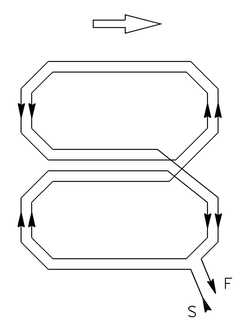

WINDING DETAIL

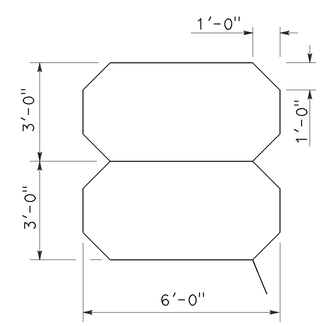

SAWCUT DETAIL

TYPE Q LOOP DETECTOR CONFIGURATION

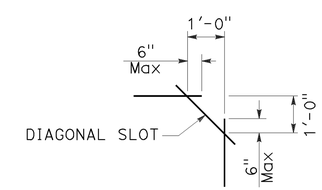

PLAN VIEW OF DIAGONAL SLOT AT CORNERS

NOTES:

1. Round corners of acute angle sawcuts to prevent damage to conductors.
2. Typical distance separating loops from edge to edge is 10' for Type A, B, D and E installation in single lane.

STATE OF CALIFORNIA
DEPARTMENT OF TRANSPORTATION

ELECTRICAL SYSTEMS (DETECTORS)

NO SCALE

RSP ES-5B DATED JULY 19, 2013 SUPERSEDES STANDARD PLAN ES-5B DATED MAY 20, 2011 - PAGE 449 OF THE STANDARD PLANS BOOK DATED 2010.

REVISED STANDARD PLAN RSP ES-5B

2010 REVISED STANDARD PLAN RSP ES-5B

7-9-13

Dist	COUNTY	ROUTE	POST MILES TOTAL PROJECT	SHEET No.	TOTAL SHEETS
01	Lak	29	R34.4/R40.0	58	62

Theresa Gabriel
REGISTERED ELECTRICAL ENGINEER

July 19, 2013
PLANS APPROVAL DATE

REGISTERED PROFESSIONAL ENGINEER
Theresa Aziz Gabriel
No. E15129
Exp. 6-30-14
ELECTRICAL
STATE OF CALIFORNIA

THE STATE OF CALIFORNIA OR ITS OFFICERS OR AGENTS SHALL NOT BE RESPONSIBLE FOR THE ACCURACY OR COMPLETENESS OF SCANNED COPIES OF THIS PLAN SHEET.

TO ACCOMPANY PLANS DATED 5-1-14

2010 REVISED STANDARD PLAN RSP ES-5C

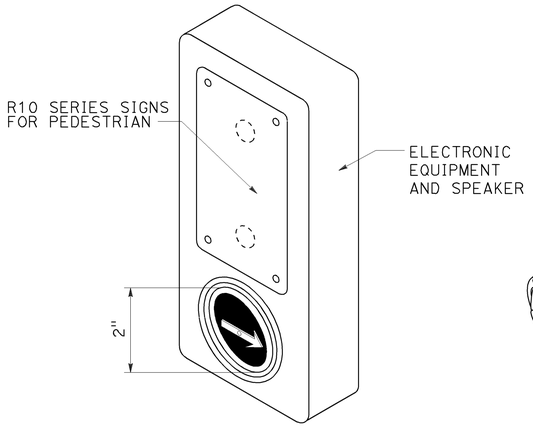

ACCESSIBLE PEDESTRIAN SIGNAL

DETAIL A
(See note 1 to 4)

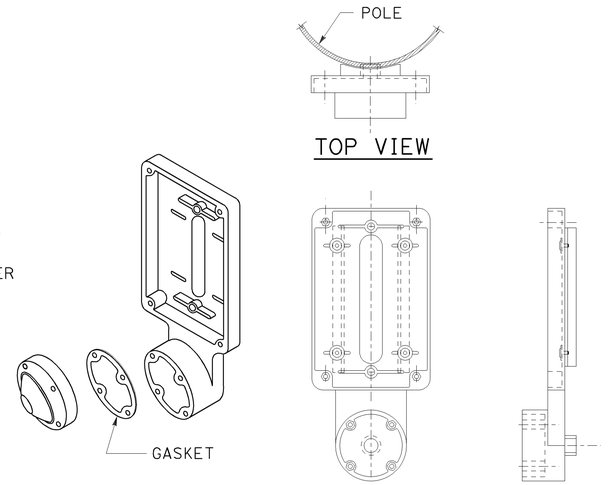

TYPE B PUSH BUTTON ASSEMBLY

DETAIL B
(See note 1 to 4)

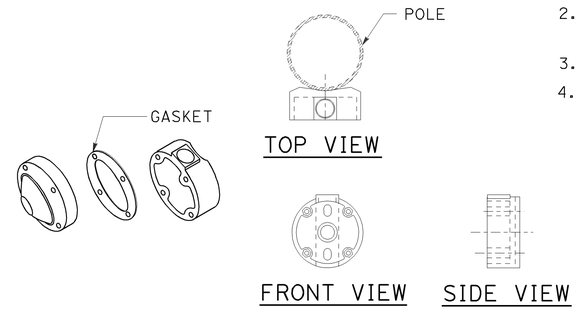

TYPE C PUSH BUTTON ASSEMBLY

DETAIL C
(See note 1 to 4)

NOTES:

1. Back casting shape to fit curvature of pole.
2. Provide cover fitting for top of post, when PBA is mounted on push button assembly post.
3. Install push button on crosswalk side of standard.
4. Use R10 series regulatory signs and plaques for pedestrian and bicycle facilities.

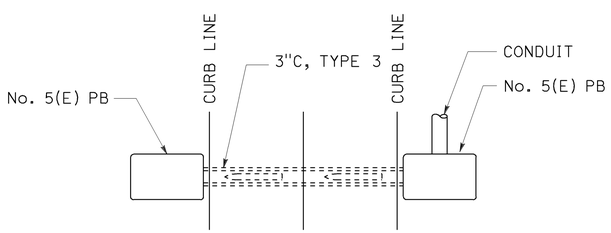

PLAN

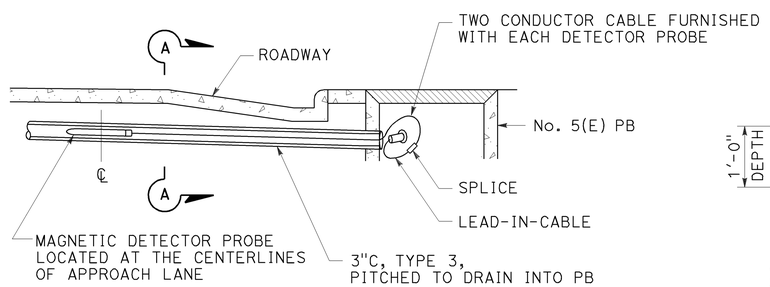

ELEVATION

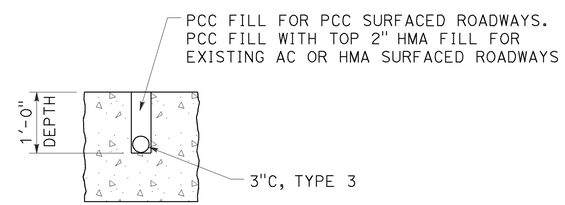

SECTION A-A

MAGNETIC VEHICLE DETECTOR INSTALLATION DETAILS

DETAIL D

STATE OF CALIFORNIA
DEPARTMENT OF TRANSPORTATION

ELECTRICAL SYSTEMS (ACCESSIBLE PEDESTRIAN SIGNAL, PUSH BUTTON ASSEMBLIES AND MAGNETIC VEHICLE DETECTOR)

NO SCALE

RSP ES-5C DATED JULY 19, 2013 SUPERSEDES STANDARD PLAN ES-5C
DATED MAY 20, 2011 - PAGE 450 OF THE STANDARD PLANS BOOK DATED 2010.

REVISED STANDARD PLAN RSP ES-5C

7-9-13

Dist	COUNTY	ROUTE	POST MILES TOTAL PROJECT	SHEET No.	TOTAL SHEETS
01	Lak	29	R34.4/R40.0	59	62

Theresa Gabriel
REGISTERED ELECTRICAL ENGINEER

July 19, 2013
PLANS APPROVAL DATE

REGISTERED PROFESSIONAL ENGINEER Theresa Aziz Gabriel No. E15129 Exp. 6-30-14 ELECTRICAL STATE OF CALIFORNIA

THE STATE OF CALIFORNIA OR ITS OFFICERS OR AGENTS SHALL NOT BE RESPONSIBLE FOR THE ACCURACY OR COMPLETENESS OF SCANNED COPIES OF THIS PLAN SHEET.

TO ACCOMPANY PLANS DATED 5-1-14

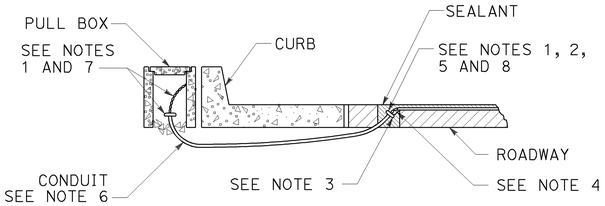

TYPE A
CURB TERMINATION DETAIL

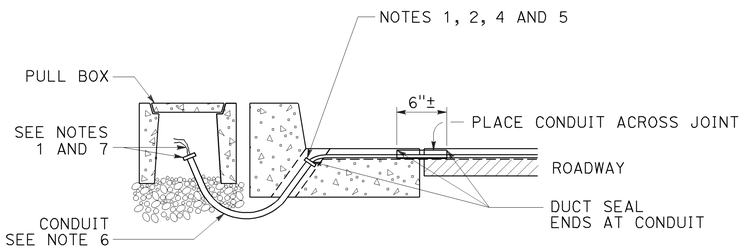

CROSS SECTION

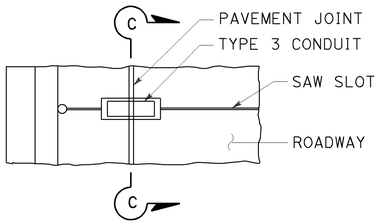

PLAN VIEW

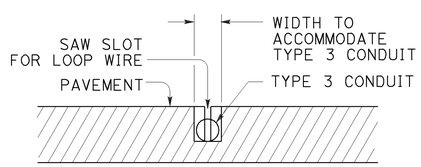

SECTION C-C

TYPE B
CURB TERMINATION DETAIL

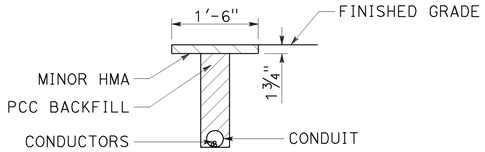

"T" TRENCH
DETAIL T

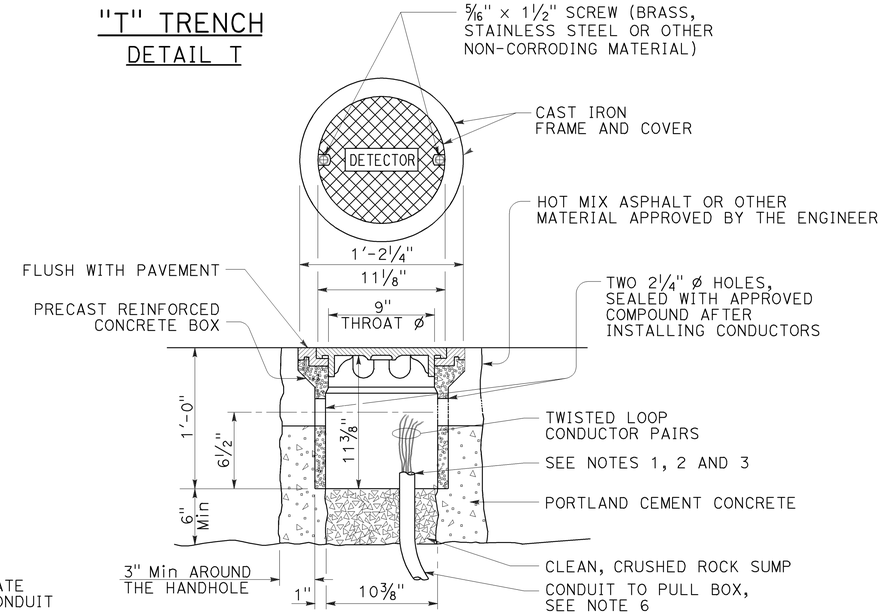

DETECTOR HANDHOLE DETAIL

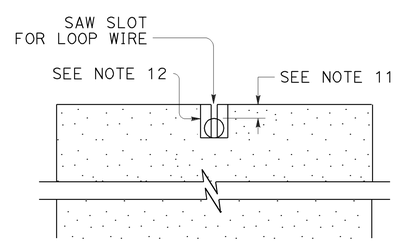

SECTION A-A

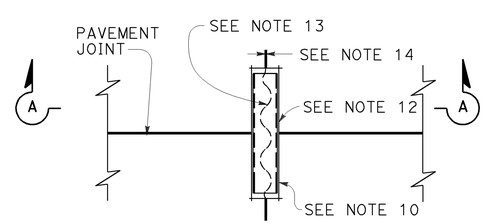

PLAN VIEW

TYPICAL LOOP LEAD-IN DETAIL
AT PAVEMENT JOINT

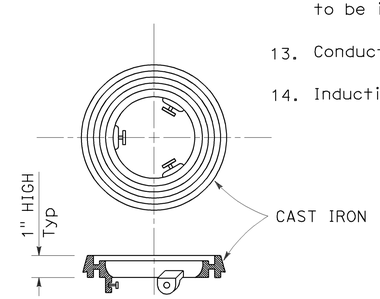

LOCKING GRADE RING

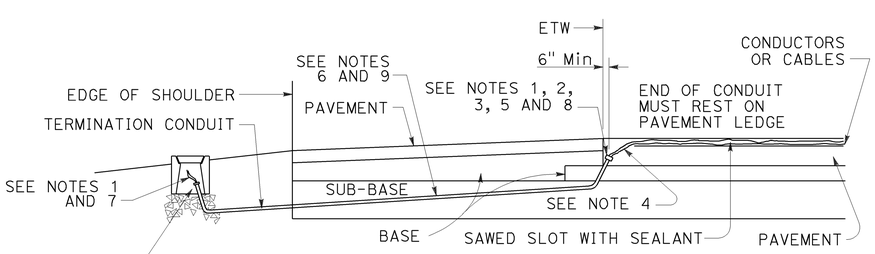

CROSS SECTION

PLAN VIEW

SHOULDER TERMINATION DETAILS

NOTES:

1. Bushing shall be used at end of conduit.
2. Tape detector conductors or cables 3" each side of bushings.
3. Install duct seal compound to each end of termination conduit before installing sealant.
4. Round all sharp edges where detector conductors or cables have to pass.
5. End of conduit shall be 3⅛" below roadway surface.
6.

Conduit size	Loop conductors
1"C minimum	1 to 2 pairs
1½"C minimum	3 to 4 pairs
2"C minimum	5 or more pairs

7. Splice detector conductors or cables to detector lead-in-cable.
8. Location of detector handhole when shown on plans.
9. When the shoulder and traveled way are paved with the same material and there is no joint between them, the conduit shall extend only 2'-0" into the shoulder pavement.
10. ¾"C, Type 3 conduit 6" long minimum, plug both ends with duct compound to keep out sealant.
11. ½" Minimum between top of conduit and pavement surface.
12. Sawcut shall not exceed 1" in width and ⅛" longer than conduit to be installed.
13. Conductors with ½" minimum slack inside conduit.
14. Inductive loop detector saw slot.

STATE OF CALIFORNIA
DEPARTMENT OF TRANSPORTATION

ELECTRICAL SYSTEMS (CURB TERMINATION AND HANDHOLE)

NO SCALE

RSP ES-5D DATED JULY 19, 2013 SUPERSEDES STANDARD PLAN ES-5D DATED MAY 20, 2011 - PAGE 451 OF THE STANDARD PLANS BOOK DATED 2010.

REVISED STANDARD PLAN RSP ES-5D

2010 REVISED STANDARD PLAN RSP ES-5D

7-9-13

Dist	COUNTY	ROUTE	POST MILES TOTAL PROJECT	SHEET No.	TOTAL SHEETS
01	Lak	29	R34.4/R40.0	60	62

REGISTERED CIVIL ENGINEER

July 19, 2013
PLANS APPROVAL DATE

REGISTERED PROFESSIONAL ENGINEER
Stanley P. Johnson
No. C57793
Exp. 3-31-14
CIVIL
STATE OF CALIFORNIA

THE STATE OF CALIFORNIA OR ITS OFFICERS OR AGENTS SHALL NOT BE RESPONSIBLE FOR THE ACCURACY OR COMPLETENESS OF SCANNED COPIES OF THIS PLAN SHEET.

TO ACCOMPANY PLANS DATED 5-1-14

2010 REVISED STANDARD PLAN RSP ES-7A

NOTES:

1. For additional notes, details and data for Type 15TS and Type 21TS Standards, see Standard Plan ES-6A.
2. Handhole shall be located on the downstream side of traffic.

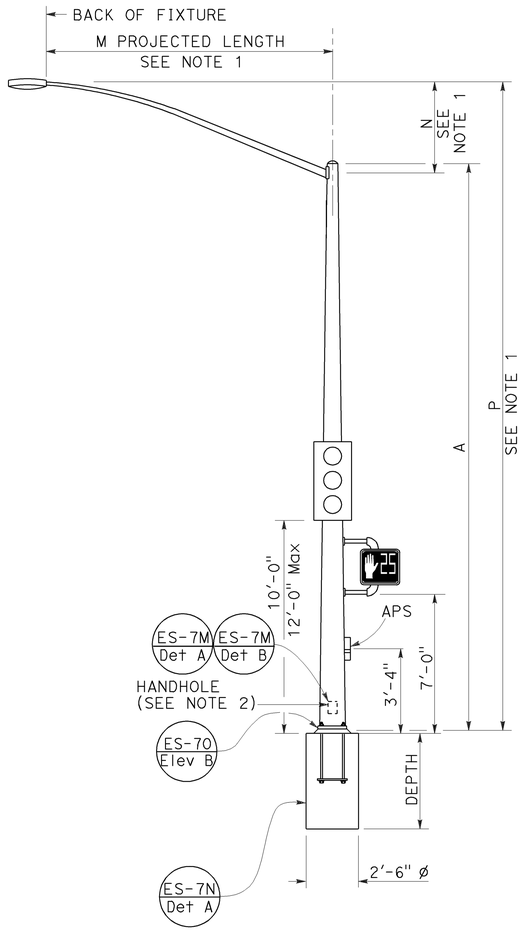

TYPE 15TS AND 21TS STANDARD

ELEVATION A

(See Note 1)

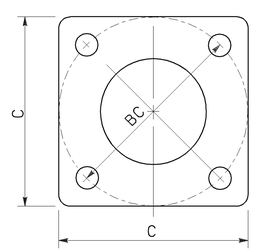

BASE PLATE

TYPE 15TS AND 21TS

DETAIL A

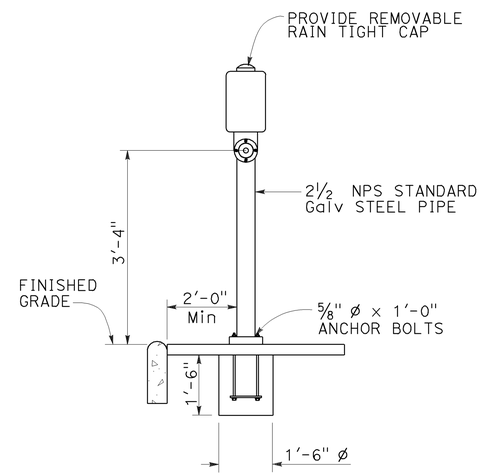

ELEVATION

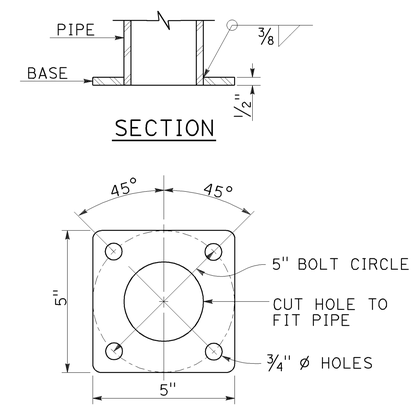

BASE PLATE

PBA POST

PUSH BUTTON ASSEMBLY POST

DETAIL B

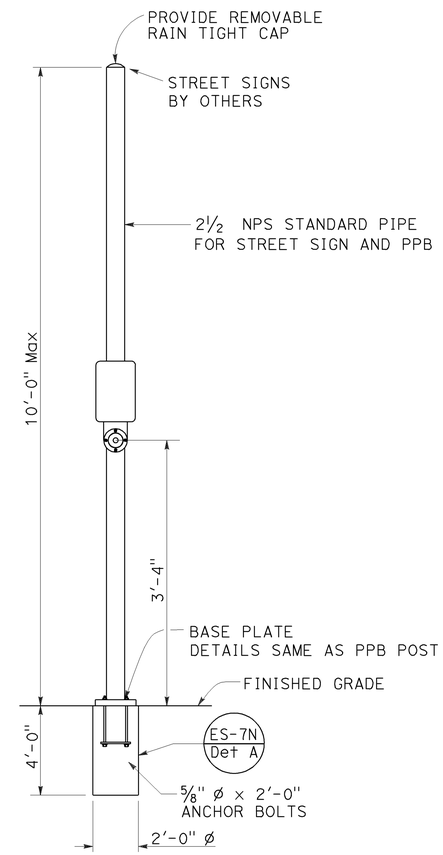

COMBINED STREET SIGN

PUSH BUTTON ASSEMBLY POST

DETAIL C

POLE TYPE	POLE DATA				BASE PLATE DATA				CIDH
	A HEIGHT	Min OD BASE	Min OD TOP	WALL THICKNESS	C	BC = BOLT CIRCLE	THICKNESS	ANCHOR BOLT SIZE	DEPTH
15TS	30'-0"	8"	3 11/16"	0.1793"	1'-1½"	1'-0"	2"	1½" ø x 42"	7'-6"
21TS	35'-0"	9⅜"	3 9/16"		1'-3"	1'-2"			8'-6"

STATE OF CALIFORNIA
DEPARTMENT OF TRANSPORTATION

ELECTRICAL SYSTEMS (SIGNAL AND LIGHTING STANDARD, TYPE TS, AND PUSH BUTTON ASSEMBLY POST)

NO SCALE

RSP ES-7A DATED JULY 19, 2013 SUPERSEDES STANDARD PLAN ES-7A DATED MAY 20, 2011 - PAGE 462 OF THE STANDARD PLANS BOOK DATED 2010.

REVISED STANDARD PLAN RSP ES-7A

DIST	COUNTY	ROUTE	POST MILES TOTAL PROJECT	SHEET NO.	TOTAL SHEETS
01	Lak	29	R34.4/R40.0	61	62

Theresa Gabriel
REGISTERED ELECTRICAL ENGINEER

July 19, 2013
PLANS APPROVAL DATE

REGISTERED PROFESSIONAL ENGINEER Theresa Aziz Gabriel No. E15129 Exp. 6-30-14 ELECTRICAL STATE OF CALIFORNIA

THE STATE OF CALIFORNIA OR ITS OFFICERS OR AGENTS SHALL NOT BE RESPONSIBLE FOR THE ACCURACY OR COMPLETENESS OF SCANNED COPIES OF THIS PLAN SHEET.

TO ACCOMPANY PLANS DATED 5-1-14

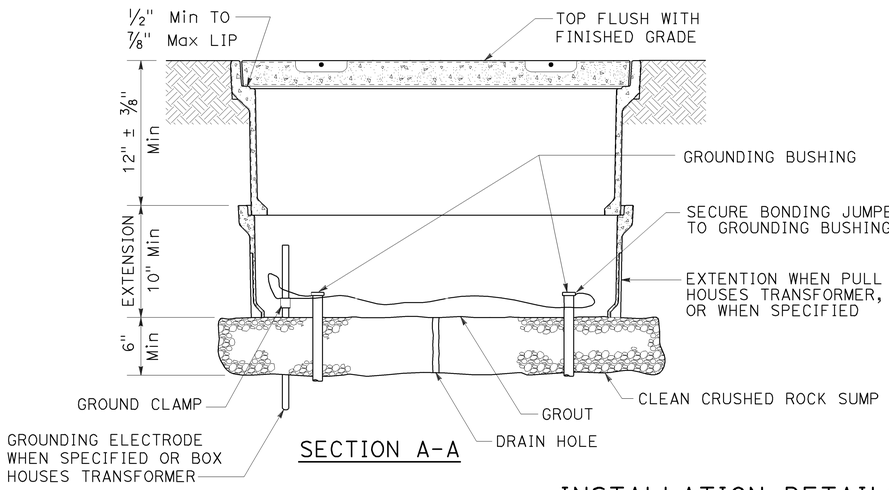

SECTION A-A

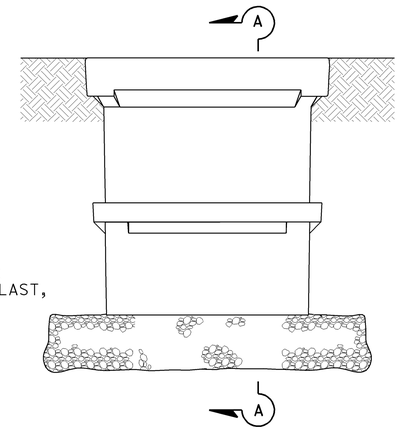

SIDE VIEW

INSTALLATION DETAILS

DETAIL A

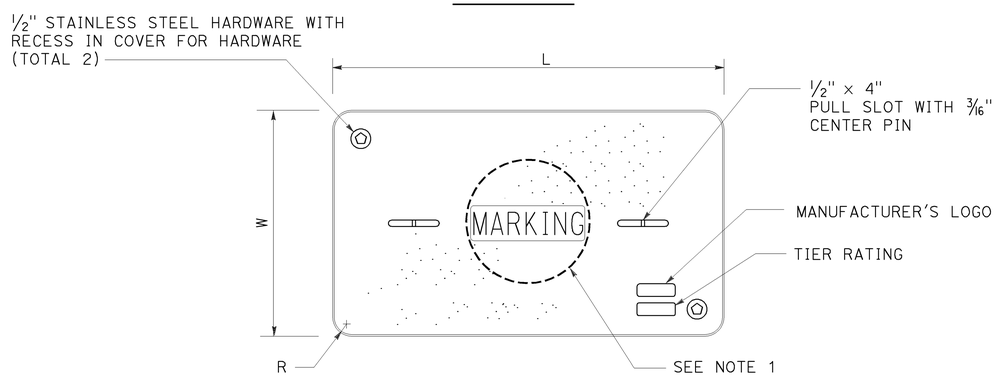

COVER TOP VIEW

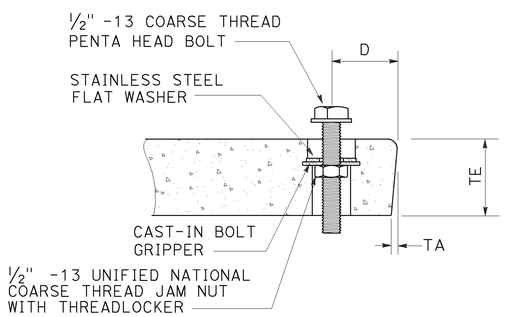

TYPICAL COVER CAPTIVE BOLT

OR SIMILAR

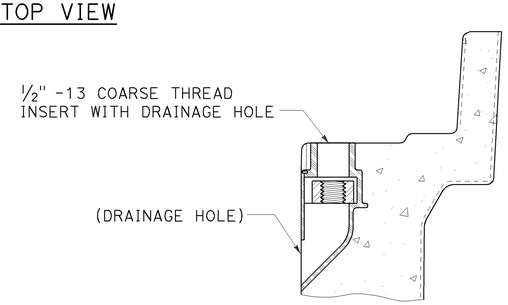

TYPICAL THREADED INSERT

OR SIMILAR

DIMENSION TABLE										
PULL BOX	PULL BOX			COVER						
	MINIMUM DEPTH BOX	MINIMUM DEPTH EXTENSION	MAXIMUM WEIGHT	L	W	R	TE	TA	D	MAXIMUM WEIGHT
No. 3½	12"	N/A	40 lb	1′ - 3⅜"	10⅛"	1⅜"	2"	⅛"	1¾"	30 lb
No. 5	12"	10"	55 lb	1′ - 11¼"	1′ - 1¾"	1⅜"	2"	⅛"	1¾"	60 lb
No. 6	12"	10"	70 lb	2′ - 6½"	1′ - 5½"	1⅜"	2"	⅛"	2"	85 lb

NOTES:

1. Pull box covers shall be marked as follows: "SERVICE" Service circuits between service point and service disconnect; "SPRINKLER-CONTROL" sprinkler control circuits, 50 V or less; "CALTRANS" on all pull boxes, except pull boxes marked "SPRINKLER-CONTROL"; and "TELEPHONE" Telephone service;
   - A) No. 3½ pull box.
     - 1) "SIGNAL" - Traffic signal circuits with or without lighting or sign lighting circuits.
     - 2) "LIGHTING" - Lighting or sign lighting circuits where voltage is under 600 V.
   - B) No. 5, 6, 9 or 9A pull box.
     - 1) "TRAFFIC SIGNAL" - Traffic signal circuits with or without lighting or sign lighting circuits.
     - 2) "LIGHTING" - Lighting or sign lighting circuits where voltage is under 600 V.
     - 3) "LIGHTING-HIGH VOLTAGE" - Lighting or sign lighting circuits where voltage is above 600 V.
     - 4) "IRRIGATION" - Circuits to irrigation controller 120 V or more.
     - 5) "RAMP METER" - Ramp meter circuits.
     - 6) "COUNT STATION" - Count or speed monitor circuits.
     - 7) "COMMUNICATIONS" - Communication circuits.
     - 8) "TOS COMMUNICATIONS" - TOS communication line.
     - 9) "TOS POWER" - TOS power.
     - 10) "TDC POWER" - Telephone demarcation cabinet power.
     - 11) "CCTV" - Closed circuit television circuits.
     - 12) "TMS" - Traffic monitoring station circuits.
     - 13) "CMS" - Changeable message sign circuits.
     - 14) "HAR" - Highway advisory radio circuits.
     - 15) "BOOSTER PUMP" - Booster pump circuit.
2. The nominal dimensions of the opening in which the cover sets shall be the same as the cover dimensions except the length and width dimensions shall be ⅛" greater.
3. Covers and boxes shall be interchangeable with California standard male and female gages. When interchanged with a standard male or female gage, the top surfaces shall be flush within ⅛". Top outside radius of covers and pull boxes shall have a ⅛" radius.
4. Pull box extension may be another pull box as long as the bottom edge of the pull box can fit into the cover opening.
5. All dimensions for the cover for non-traffic pull box are nominal values.

STATE OF CALIFORNIA
DEPARTMENT OF TRANSPORTATION

ELECTRICAL SYSTEMS (NON-TRAFFIC PULL BOX)

NO SCALE

RSP ES-8A DATED JULY 19, 2013 SUPERSEDES RSP ES-8A DATED JANUARY 20, 2012 THAT SUPPLEMENTS THE STANDARD PLANS BOOK DATED 2010.

REVISED STANDARD PLAN RSP ES-8A

2010 REVISED STANDARD PLAN RSP ES-8A

7-15-13

DIST	COUNTY	ROUTE	POST MILES TOTAL PROJECT	SHEET NO.	TOTAL SHEETS
01	Lak	29	R34.4/R40.0	62	62

Theresa Gabriel
REGISTERED ELECTRICAL ENGINEER

July 19, 2013
PLANS APPROVAL DATE

REGISTERED PROFESSIONAL ENGINEER
Theresa Aziz Gabriel
No. E15129
Exp. 6-30-14
ELECTRICAL
STATE OF CALIFORNIA

THE STATE OF CALIFORNIA OR ITS OFFICERS OR AGENTS SHALL NOT BE RESPONSIBLE FOR THE ACCURACY OR COMPLETENESS OF SCANNED COPIES OF THIS PLAN SHEET.

TO ACCOMPANY PLANS DATED 5-1-14

2010 REVISED STANDARD PLAN RSP ES-8B

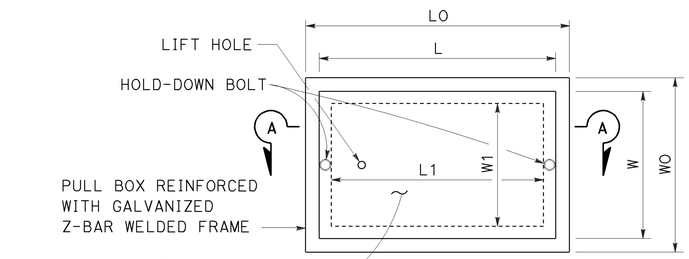

TOP VIEW

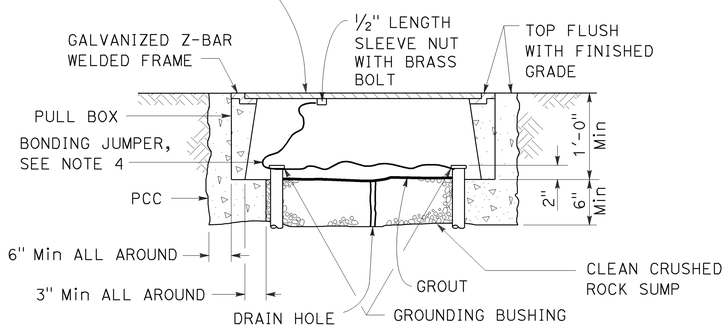

SECTION A-A

No. 3½(T), No. 5(T) AND No. 6(T) TRAFFIC PULL BOX

NOTES:

1. Traffic pull box shall be provided with steel cover and special concrete footing. Steel cover shall have embossed non-skid pattern.
2. Steel reinforcing shall be as regularly used in the standard products of the respective manufacturer.
3. Pull box covers shall be marked as follows: "SERVICE" Service circuits between service point and service disconnect; "SPRINKLER-CONTROL" Sprinkler control circuits, 50 V or less; "CALTRANS" On all pull boxes, except pull boxes marked "SPRINKLER-CONTROL"; and "TELEPHONE" Telephone service.
   - A) No. 3½(T) pull box.
     - 1) "SIGNAL" - Traffic signal circuits with or without lighting or sign lighting circuits.
     - 2) "LIGHTING" - Lighting or sign lighting circuits where voltage is under 600 V.
   - B) No. 5(T) or 6(T) pull box.
     - 1) "TRAFFIC SIGNAL" - Traffic signal circuits with or without lighting or sign lighting circuits.
     - 2) "LIGHTING" - Lighting or sign lighting circuits where voltage is under 600 V.
     - 3) "LIGHTING-HIGH VOLTAGE" - Lighting or sign lighting circuits where voltage is above 600 V.
     - 4) "IRRIGATION" - Circuits to irrigation controller 120 V or more.
     - 5) "RAMP METER" - Ramp meter circuits.
     - 6) "COUNT STATION" - Count or speed monitor circuits.
     - 7) "COMMUNICATION" - Communication circuits.
     - 8) "TOS COMMUNICATIONS" - TOS communications line.
     - 9) "TOS POWER" - TOS power.
     - 10) "TDC POWER" - Telephone demarcation cabinet power.
     - 11) "CCTV" - Closed circuit television circuits.
     - 12) "TMS" - Traffic monitoring station circuits.
     - 13) "CMS" - Changeable message sign circuits.
     - 14) "HAR" - Highway advisory radio circuits.
     - 15) "BOOSTER PUMP" - Booster pump circuit.
4. Bonding jumper for metal covers shall be 3' long, minimum.
5. The nominal dimensions of the opening in which the cover sets shall be the same as the cover dimensions except the length and width dimensions shall be ⅛" greater.
6. Covers and boxes shall be interchangeable with California standard male and female gages. When interchanged with a standard male or female gage, the top surfaces shall be flush within ⅛".

DIMENSION TABLE

PULL BOX	PULL BOX						COVER				
	MINIMUM * THICKNESS	MINIMUM DEPTH BOX AND EXTENSION	WO	LO	L1	W1	L **	W **	R	EDGE THICKNESS	EDGE TAPER
No. 3½(T)	1½"	1'-0"	1'-5"± 1"	1'-8⅞"±	1'-2½"±	10⅝"± 1"	1'-8"±	1'-1¾"±	0"	½"	NONE
No. 5(T)	1¾"	1'-0"	1'-11½"± 1"	2'-5½"±	1'-7"±	1'-1"± 1"	2'-3"±	1'-4"±	0"	½"	NONE
No. 6(T)	2"	1'-0"	2'-6"± 1"	2'-11½"±	1'-11½"±	1'-5"± 1"	2'-9"±	1'-8"±	0"	½"	NONE

* EXCLUDING CONDUIT WEB ** TOP DIMENSION

STATE OF CALIFORNIA
DEPARTMENT OF TRANSPORTATION

ELECTRICAL SYSTEMS (TRAFFIC PULL BOX)

NO SCALE

RSP ES-8B DATED JULY 19, 2013 SUPERSEDES RSP ES-8B DATED JANUARY 20, 2012 THAT SUPPLEMENTS THE STANDARD PLANS BOOK DATED 2010.

REVISED STANDARD PLAN RSP ES-8B

7-15-13