Dist	COUNTY	ROUTE	POST MILES TOTAL PROJECT	SHEET No.	TOTAL SHEETS
01	Hum	211	73.2/74.0	1	4

INDEX OF PLANS

SHEET No	DESCRIPTION
1	TITLE AND LOCATION MAP
2	CONSTRUCTION AREA SIGNS
3	CONSTRUCTION DETAILS AND SUMMARY OF QUANTITIES
4	TRAFFIC CONTROL SYSTEMS

THE STANDARD PLANS LIST APPLICABLE TO THIS CONTRACT IS INCLUDED IN THE NOTICE TO BIDDERS AND SPECIAL PROVISIONS BOOK.

STATE OF CALIFORNIA

DEPARTMENT OF TRANSPORTATION

PROJECT PLANS FOR CONSTRUCTION ON

STATE HIGHWAY

IN HUMBOLDT COUNTY IN FERNDALE FROM OCEAN AVENUE TO TENNYSON AVENUE

TO BE SUPPLEMENTED BY STANDARD PLANS DATED 2010

LOCATION MAP

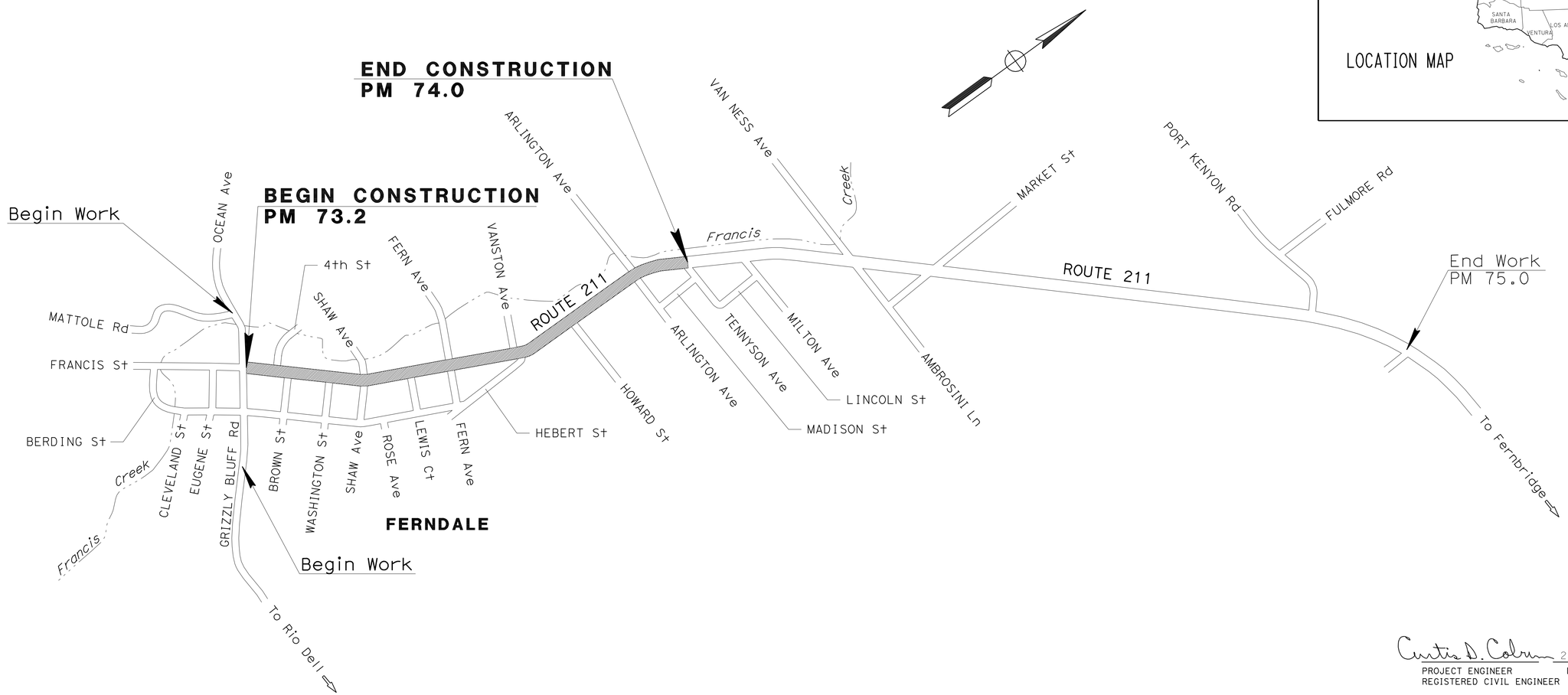

Curtis D. Coburn 2/28/13
PROJECT ENGINEER DATE
REGISTERED CIVIL ENGINEER

February 28, 2013
PLANS APPROVAL DATE

REGISTERED PROFESSIONAL ENGINEER
CURTIS D. COBURN
No. 58431
Exp. 12-31-14
CIVIL
STATE OF CALIFORNIA

THE STATE OF CALIFORNIA OR ITS OFFICERS OR AGENTS SHALL NOT BE RESPONSIBLE FOR THE ACCURACY OR COMPLETENESS OF SCANNED COPIES OF THIS PLAN SHEET.

PROJECT MANAGER Royal B. McCarthy

DESIGN ENGINEER Royal B. McCarthy

THE CONTRACTOR SHALL POSSESS THE CLASS (OR CLASSES) OF LICENSE AS SPECIFIED IN THE "NOTICE TO BIDDERS."

NO SCALE

CONTRACT No.	01-0B8604
PROJECT ID	0112000209

LAST REVISION 00-00-00

DATE PLOTTED => 28-FEB-2013
TIME PLOTTED => 1357

Dist	COUNTY	ROUTE	POST MILES TOTAL PROJECT	SHEET No.	TOTAL SHEETS
01	Hum	211	73.2/74.0	2	4

Curtis D. Coburn 2/28/13
REGISTERED CIVIL ENGINEER DATE

February 28, 2013
PLANS APPROVAL DATE

REGISTERED PROFESSIONAL ENGINEER
CURTIS D. COBURN
No. 58431
Exp. 12-31-14
CIVIL
STATE OF CALIFORNIA

THE STATE OF CALIFORNIA OR ITS OFFICERS OR AGENTS SHALL NOT BE RESPONSIBLE FOR THE ACCURACY OR COMPLETENESS OF SCANNED COPIES OF THIS PLAN SHEET.

NOTES:

1. EXISTING UTILITY FACILITIES HAVE NOT BEEN PLOTTED ON THESE PLANS.
2. EXACT SIGN LOCATIONS TO BE DETERMINED BY THE ENGINEER.

LEGEND

(B2) = TYPE II BARRICADE MOUNTED
(B3) = TYPE III BARRICADE MOUNTED
= WORK AREA
= TYPE II BARRICADE WITH SIGN
= TYPE III BARRICADE WITH SIGN
= TYPE III BARRICADE
= FLAG/SIGN STAND (W20-1)

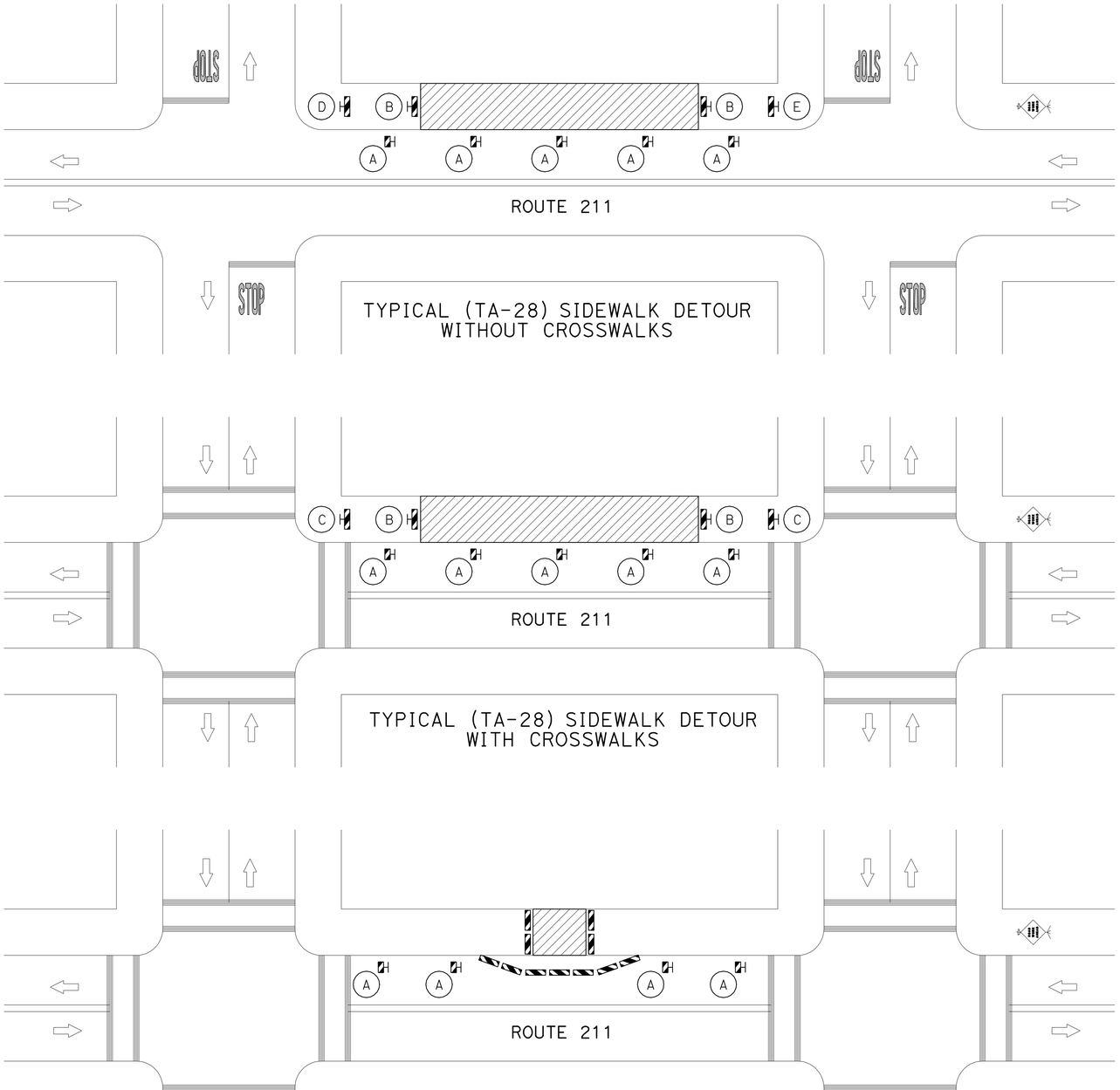

CONSTRUCTION AREA SIGNS

SIGN No.	SIGN CODE	SIGN MESSAGE	PANEL SIZE (INCHES)	No. OF SIGNS
A	R26	NO PARKING ANYTIME (B2)	12 x 18	112
B	R9-9	SIDEWALK CLOSED (B3)	24 x 12	42
C	R9-10	SIDEWALK CLOSED, (ARROW) USE OTHER SIDE (B3)	24 x 12	14
D	R9-11 Rt	SIDEWALK CLOSED, (ARROW) CROSS HERE (B3)	24 x 12	3
E	R9-11 Lt	SIDEWALK CLOSED, (ARROW) CROSS HERE (B3)	24 x 12	3

TEMPORARY TRAFFIC CONTROL

SIDEWALK SEGMENT FROM (PM)	SIDEWALK SEGMENT TO (PM)	TEMPORARY TRAFFIC CONTROL TYPE	REMARKS
73.20 Lt	73.40 Lt	(TA-28) SIDEWALK DIVERSION	OCEAN Ave TO SHAW Ave
73.20 Rt	73.27 Rt	(TA-28) SIDEWALK DIVERSION	OCEAN Ave TO BROWN St
73.27 Rt	73.34 Rt	(TA-28) SIDEWALK DIVERSION	BROWN St TO WASHINGTON St
73.27 Rt	73.40 Rt	(TA-28) SIDEWALK DIVERSION	WASHINGTON St TO SHAW Ave
73.40 Lt	73.54 Lt	(TA-28) SIDEWALK DETOUR WITH CROSSWALKS & (TA-28) SIDEWALK DETOUR WITHOUT CROSSWALKS	SHAW Ave TO FERN Ave
73.40 Rt	73.48 Rt	(TA-28) SIDEWALK DETOUR WITH CROSSWALKS & (TA-28) SIDEWALK DETOUR WITHOUT CROSSWALKS	SHAW Ave TO LEWIS St
73.48 Rt	73.54 Rt	(TA-28) SIDEWALK DETOUR WITHOUT CROSSWALKS	LEWIS St TO FERN AVE
73.54 Lt	73.65 Lt	(TA-28) SIDEWALK DETOUR WITHOUT CROSSWALKS	FERN Ave TO VANSTON Ave
73.54 Rt	73.66 Rt	(TA-28) SIDEWALK DETOUR WITHOUT CROSSWALKS	FERN Ave TO HERBERT St
73.65 Lt	73.89 Lt	(TA-28) SIDEWALK DETOUR WITHOUT CROSSWALKS	VANSTON Ave TO ARLINGTON Ave
73.66 Rt	73.76 Rt	(TA-28) SIDEWALK DETOUR WITHOUT CROSSWALKS	HERBERT St TO HOWARD St
73.76 Rt	73.89 Rt	(TA-28) SIDEWALK DETOUR WITHOUT CROSSWALKS	HOWARD St TO ARLINGTON St
73.89 Rt	73.97 Rt	(TA-28) SIDEWALK DETOUR WITH CROSSWALKS	ARLINGTON Ave TO TENNYSON Ave
73.89 Lt	73.97 Lt	(TA-28) SIDEWALK DETOUR WITH CROSSWALKS	ARLINGTON Ave TO TENNYSON AVE

CONSTRUCTION AREA SIGNS
CS-1

NO SCALE

STATE OF CALIFORNIA - DEPARTMENT OF TRANSPORTATION
Caltrans MAINTENANCE DESIGN

FUNCTIONAL SUPERVISOR: Royal B. McCarthy
CALCULATED-DESIGNED BY: Johnathan Jackson
CHECKED BY: Curtis Coburn
REVISED BY
DATE REVISED

LAST REVISION 00-00-00
DATE PLOTTED => 28-FEB-2013
TIME PLOTTED => 13:57

RECONSTRUCT SIDEWALK

LOCATION (PM)	LENGTH (LF)	WIDTH (LF)	REMOVE CONCRETE SIDEWALK (SQYD)	MINOR CONCRETE (SIDEWALK) (CY)	REMARKS
73.20					OCEAN Ave / BLUFF St
73.21 Lt	3.0	9.0	3.0	0.4	
73.21 Rt	6.0	9.0	6.0	0.7	
73.22 Lt	12.0	9.0	12.0	1.4	WATER GRATES
73.24 Lt	9.0	9.0	9.0	1.0	
73.25 Rt	3.0	9.0	3.0	0.4	DRAINAGE GRATE
73.25 Lt	3.0	9.0	3.0	0.4	
73.26 Rt	3.0	9.0	3.0	0.4	
73.26 Lt	3.0	9.0	3.0	0.4	
73.27 Lt	3.0	9.0	3.0	0.4	FIRE HYDRANT
73.27					BROWN St
73.28 Rt	6.0	9.0	6.0	0.7	
73.29 Lt	3.0	9.0	3.0	0.4	
73.31 Rt	3.0	9.0	3.0	0.4	
73.31 Lt	38.0	9.0	38.0	4.3	TREE; WATER GRATE
73.31 Rt	6.0	9.0	6.0	0.7	TREE
73.33 Lt	6.0	9.0	6.0	0.7	
73.33 Lt	28.0	9.0	28.0	3.2	TREE
73.34					WASHINGTON St
73.36 Lt	6.0	9.0	6.0	0.7	
73.37 Rt	3.0	9.0	3.0	0.4	
73.39 Lt	12.0	9.0	12.0	1.4	
73.39 Rt	6.0	9.0	6.0	0.7	
73.40					SHAW Ave
73.41 Rt	3.0	8.0	2.7	0.3	
73.41 Lt	5.0	8.0	4.5	0.5	
73.41 Rt	3.0	8.0	2.7	0.3	WATER GRATE
73.42 Rt	11.0	8.0	9.8	1.1	
73.42 Lt	14.0	8.0	12.5	1.4	
73.42 Rt	6.0	8.0	5.4	0.6	
73.43 Rt	6.0	8.0	5.4	0.6	UTILITY POLE
73.43 Lt	6.0	8.0	5.4	0.6	
73.43 Lt	30.0	8.0	26.7	3.0	UTILITY POLE; WATER GRATE
73.43 Rt	12.0	8.0	10.7	0.4	
73.44 Lt	18.0	8.0	16.0	1.8	
73.44 Rt	4.0	8.0	3.6	0.4	
73.44 Rt	7.0	8.0	6.3	0.7	
73.44 Lt	3.0	8.0	2.7	0.3	
73.45 Rt	3.0	8.0	2.7	0.3	UTILITY POLE
73.45 Lt	34.0	8.0	30.3	3.4	R2-1 SIGN, UTILITY POLE
73.45 Rt	3.0	8.0	2.7	0.3	
73.45 Rt	7.0	8.0	6.3	0.7	
73.45 Rt	11.0	8.0	9.8	1.1	
73.46 Lt	6.0	8.0	5.4	0.6	
73.47 Lt	18.0	8.0	16.0	1.8	
73.47 Lt	25.0	8.0	22.3	2.5	
73.48					LEWIS St
73.48 Lt	9.0	8.0	8.0	0.9	UTILITY POLE WITH LUMINAIRE
73.48 Rt	137.0	8.0	121.8	13.6	UTILITY POLE
73.49 Lt	37.0	8.0	32.9	3.7	
73.50 Lt	31.0	8.0	27.6	3.1	
73.51 Lt	6.0	8.0	5.4	0.6	WATER GRATE
73.51 Lt	21.0	8.0	18.7	2.7	WATER GRATE
73.52 Lt	42.0	8.0	37.4	4.2	WATER GRATE; UTILITY POLE
73.52 Rt	3.0	8.0	2.7	0.3	
73.53 Lt	40.0	8.0	35.6	4.0	
73.53 Rt	6.0	8.0	5.4	0.6	WATER GRATE
73.54 Rt	6.0	8.0	5.4	0.6	
73.54					FERN Ave
73.55 Lt	61.0	8.0	54.3	6.1	CONCRETE WALL (CRACKED)
73.55 Rt	37.0	7.5	30.9	3.5	WATER GRATE
73.56 Rt	8.0	7.5	6.7	0.8	UTILITY POLE
73.56 Lt	21.0	8.0	18.7	2.1	WATER GRATE
73.56 Rt	19.0	7.5	15.9	1.8	
73.57 Lt	9.0	8.0	8.0	0.9	
73.58 Lt	11.0	8.0	9.8	1.1	
73.58 Rt	4.0	7.5	3.4	0.4	WATER GRATE
73.59 Rt	4.0	7.5	3.4	0.4	UTILITY POLE
73.60 Lt	11.0	8.0	9.8	1.1	
73.60 Rt	3.0	7.5	2.5	0.3	
73.60 Lt	18.0	8.0	16.0	1.8	
73.61 Lt	4.0	8.0	3.6	0.4	
73.61 Lt	22.0	8.0	19.6	2.2	
73.61 Rt	3.0	7.5	2.5	0.3	
73.62 Rt	6.0	7.5	5.0	0.6	
73.62 Lt	9.0	8.0	8.0	0.9	UTILITY POLE
73.62 Lt	4.0	8.0	3.6	0.4	
73.62 Rt	6.0	7.5	5.0	0.6	
73.62 Lt	11.0	8.0	9.8	1.1	WATER GRATE
73.63 Rt	27.0	7.5	22.5	2.5	
73.63 Lt	4.0	8.0	3.6	0.4	
73.63 Lt	4.0	8.0	3.6	0.4	
73.63 Lt	7.0	8.0	6.3	0.7	
73.63 Rt	9.0	7.5	7.5	0.9	
73.64 Lt	8.0	8.0	7.2	0.8	
73.64 Rt	3.0	7.5	2.5	0.3	R2-1 SIGN
73.64 Lt	15.0	8.0	13.4	1.5	D3-1 SIGNS
73.65 Rt	6.0	7.5	5.0	0.6	
73.65					VANSTON Ave
73.66 Lt	5.0	7.5	4.2	0.5	WATER GRATE
73.66 Lt	12.0	7.5	10.0	1.2	UTILITY POLE GUY-WIRE
73.66					HERBERT St
	SUBTOTAL 1		995.1	112.9	

LOCATION (PM)	LENGTH (LF)	WIDTH (LF)	REMOVE CONCRETE SIDEWALK (SQYD)	MINOR CONCRETE (SIDEWALK) (CY)	REMARKS
73.66 Lt	4.0	7.5	3.4	0.4	
73.67 Lt	9.0	7.5	7.5	0.9	
73.67 Lt	5.0	7.5	4.2	0.5	UTILITY POLE
73.67 Lt	9.0	7.5	7.5	0.9	WATER GRATE
73.68 Lt	7.0	7.5	5.9	0.7	
73.69 Rt	3.0	7.5	2.5	0.3	
73.69 Rt	6.0	7.5	5.0	0.6	
73.69 Rt	9.0	7.5	7.5	0.9	
73.69 Rt	5.0	7.5	4.2	0.5	WATER GRATE
73.69 Lt	5.0	7.5	4.2	0.5	
73.70 Lt	31.0	7.5	25.9	2.9	UTILITY POLE; UTILITY POLE GUY-WIRE
73.70 Rt	9.0	7.5	7.5	0.9	
73.70 Rt	2.0	7.5	1.7	0.2	UTILITY POLE
73.71 Lt	21.0	7.5	17.5	2.0	UTILITY POLE
73.71 Rt	49.0	7.5	40.9	4.6	
73.71 Lt	12.0	7.5	10.0	1.2	
73.72 Rt	3.0	7.5	2.5	0.3	
73.72 Rt	6.0	7.5	5.0	0.6	
73.72 Lt	21.0	7.5	17.5	2.0	UTILITY POLE
73.72 Lt	3.0	7.5	2.5	0.3	
73.73 Lt	6.0	7.5	5.0	0.6	
73.73 Rt	4.0	7.5	3.4	0.4	
73.73 Lt	7.0	7.5	5.9	0.7	
73.73 Rt	4.0	7.5	3.4	0.4	
73.73 Rt	72.0	7.5	60.0	6.7	WATER GRATE; CONCRETE WALL
73.74 Lt	51.0	7.5	42.5	4.8	UTILITY POLE; UTILITY POLE GUY-WIRE
73.75 Lt	4.0	7.5	3.4	0.4	G14(CA) SIGN
73.75 Rt	3.0	7.5	2.5	0.3	
73.76 Lt	8.0	7.5	6.7	0.8	D3-1 SIGNS
73.76					HOWARD St
73.77 Lt	12.0	7.5	10.0	1.2	
73.77 Rt	12.0	7.5	10.0	1.2	UTILITY POLE
73.77 Lt	4.0	7.5	3.4	0.4	
73.77 Rt	6.0	7.5	5.0	0.6	CONCRETE WALL
73.77 Rt	7.0	7.5	5.9	0.7	CONCRETE WALL
73.78 Rt	6.0	7.5	5.0	0.6	
73.78 Rt	6.0	7.5	5.0	0.6	
73.79 Lt	8.0	7.5	6.7	0.8	
73.79 Lt	4.0	7.5	3.4	0.4	
73.79 Lt	8.0	7.5	6.7	0.8	
73.79 Rt	3.0	7.5	2.5	0.3	
73.80 Rt	17.0	7.5	14.2	1.6	
73.80 Lt	8.0	7.5	6.7	0.8	
73.80 Rt	9.0	7.5	7.5	0.9	UTILITY POLE; S1-1/W16-9P SIGN
73.81 Rt	9.0	7.5	7.5	0.9	
73.81 Rt	6.0	7.5	5.0	0.6	
73.81 Rt	6.0	7.5	5.0	0.6	
73.81 Lt	4.0	7.5	3.4	0.4	
73.82 Lt	8.0	7.5	6.7	0.8	
73.82 Rt	9.0	7.5	7.5	0.9	
73.82 Rt	3.0	7.5	2.5	0.3	
73.82 Lt	9.0	7.5	7.5	0.9	
73.83 Lt	13.0	7.5	10.9	1.3	
73.83 Rt	6.0	7.5	5.0	0.6	
73.83 Lt	7.0	7.5	5.9	0.7	
73.83 Lt	8.0	7.5	6.7	0.8	
73.83 Rt	6.0	7.5	5.0	0.6	
73.84 Lt	4.0	7.5	3.4	0.4	
73.84 Rt	13.0	7.5	10.9	1.3	
73.84 Lt	4.0	7.5	3.4	0.4	
73.84 Rt	3.0	7.5	2.5	0.3	
73.85 Rt	15.0	7.5	12.5	1.4	UTILITY POLE; S1-1/S4-3 SIGN
73.85 Lt	5.0	7.5	4.2	0.5	
73.85 Rt	9.0	7.5	7.5	0.9	
73.86 Lt	4.0	7.5	3.4	0.4	
73.86 Lt	4.0	7.5	3.4	0.4	
73.87 Lt	8.0	7.5	6.7	0.8	
73.88 Lt	3.0	7.5	2.5	0.3	
73.88 Lt	6.0	7.5	5.0	0.6	
73.89					ARLINGTON Ave
73.89 Rt	8.0	5.5	4.9	0.6	
73.90 Rt	8.0	5.5	4.9	0.6	
73.90 Rt	4.0	5.5	2.5	0.3	
73.90 Rt	4.0	5.5	2.5	0.3	
73.91 Lt	9.0	6.0	6.0	0.7	
73.91 Lt	5.0	6.0	3.4	0.4	
73.91 Rt	4.0	5.5	2.5	0.3	UTILITY POLE
73.91 Rt	54.0	5.5	33.0	3.7	CONCRETE WALL
73.92 Lt	10.0	6.0	6.7	0.8	
73.93 Rt	3.0	5.5	1.9	0.3	
73.93 Lt	40.0	6.0	26.7	3.0	R2-1 SIGN
73.94 Lt	20.0	6.0	13.4	1.5	
73.95 Lt	5.0	6.0	3.4	0.4	
73.95 Rt	6.0	5.5	3.7	0.5	
73.95 Rt	3.0	5.5	1.9	0.3	
73.95 Lt	5.0	6.0	3.4	0.4	
73.96 Rt	3.0	5.5	1.9	0.3	
73.96 Rt	6.0	5.5	3.7	0.5	S1-1/W16-7P SIGN
73.96 Rt	3.0	5.5	1.9	0.3	
73.97					TENNYSON Ave
SUBTOTAL 1			1021.8	112.9	
SUBTOTAL 2			680.0	79.5	
TOTAL			1701.8	192.4	

Dist	COUNTY	ROUTE	POST MILES TOTAL PROJECT	SHEET No.	TOTAL SHEETS
01	Hum	211	73.2/74.0	3	4

Curtis D. Coburn 2/28/13
REGISTERED CIVIL ENGINEER DATE

February 28, 2013
PLANS APPROVAL DATE

REGISTERED PROFESSIONAL ENGINEER CURTIS D. COBURN No. 58431 Exp. 12-31-14 CIVIL STATE OF CALIFORNIA

THE STATE OF CALIFORNIA OR ITS OFFICERS OR AGENTS SHALL NOT BE RESPONSIBLE FOR THE ACCURACY OR COMPLETENESS OF SCANNED COPIES OF THIS PLAN SHEET.

NOTES

1. EXISTING UTILITY FACILITIES HAVE NOT BEEN PLOTTED ON THESE PLANS.

LEGEND

RECONSTRUCT SIDEWALK

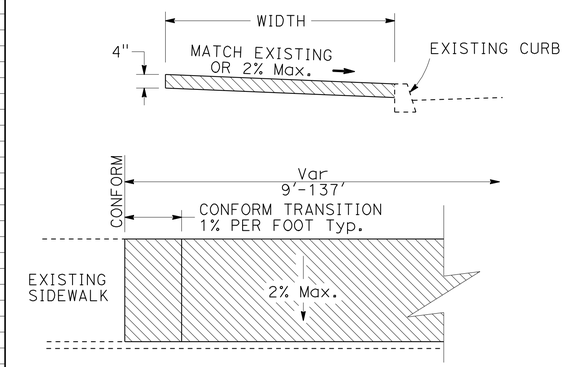

RECONSTRUCT SIDEWALK

SUMMARY OF QUANTITIES AND CONSTRUCTION DETAILS

Q-1

STATE OF CALIFORNIA - DEPARTMENT OF TRANSPORTATION
Caltrans MAINTENANCE DESIGN

FUNCTIONAL SUPERVISOR: Royal B. McCarthy
CALCULATED-DESIGNED BY: Johnathan Jackson
CHECKED BY: Curtis Coburn
REVISED BY / DATE REVISED

LAST REVISION 00-00-00
DATE PLOTTED => 28-FEB-2013
TIME PLOTTED => 13:57

Dist	COUNTY	ROUTE	POST MILES TOTAL PROJECT	SHEET No.	TOTAL SHEETS
01	Hum	211	73.2/74.0	4	4

REGISTERED CIVIL ENGINEER 12-7-12 DATE

February 28, 2013
PLANS APPROVAL DATE

REGISTERED PROFESSIONAL ENGINEER Gurinderpal Bhullar No. C48815 Exp. 9-30-14 CIVIL STATE OF CALIFORNIA

THE STATE OF CALIFORNIA OR ITS OFFICERS OR AGENTS SHALL NOT BE RESPONSIBLE FOR THE ACCURACY OR COMPLETENESS OF SCANNED COPIES OF THIS PLAN SHEET.

NOTES:

Unless otherwise specified in the special provisions, all temporary warning signs shall have black legend on orange background.

California code are designated by (CA). Otherwise, Federal (MUTCD) codes are shown.

TYPICAL LANE CLOSURE WITH REVERSIBLE CONTROL

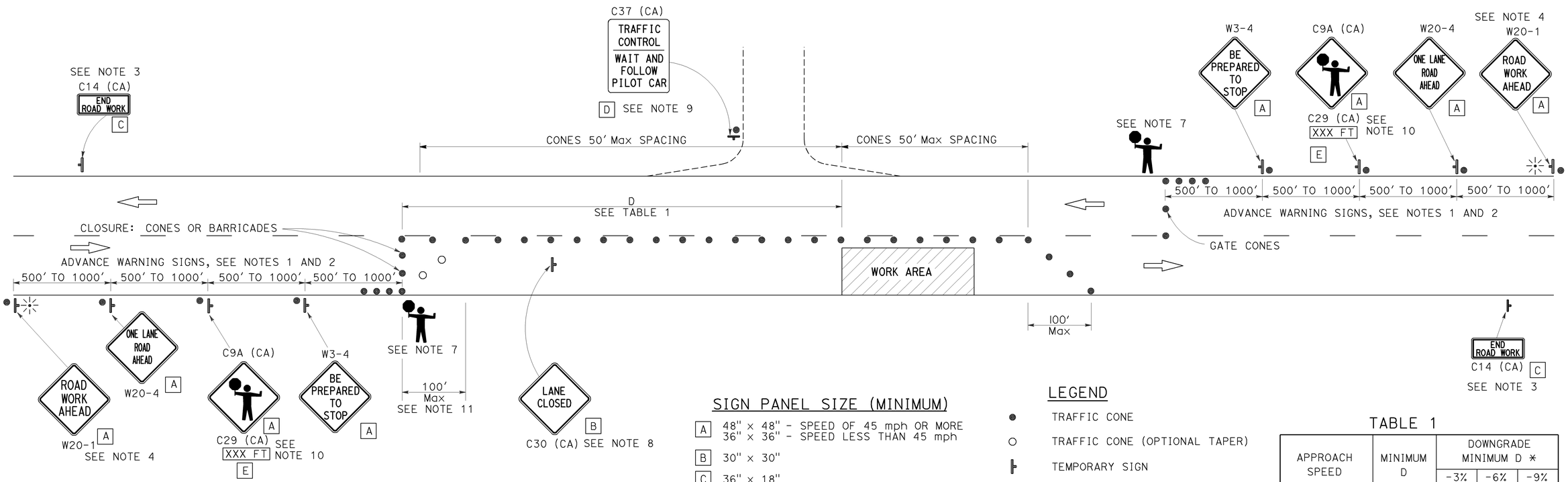

SIGN PANEL SIZE (MINIMUM)

A	48" x 48" - SPEED OF 45 mph OR MORE 36" x 36" - SPEED LESS THAN 45 mph
B	30" x 30"
C	36" x 18"
D	36" x 42"
E	36" x 9"

LEGEND

- TRAFFIC CONE
- TRAFFIC CONE (OPTIONAL TAPER)
- TEMPORARY SIGN
- PORTABLE FLASHING BEACON
- FLAGGER

TABLE 1

APPROACH SPEED	MINIMUM D	DOWNGRADE MINIMUM D *		
		-3%	-6%	-9%
mph	ft	ft	ft	ft
25 AND BELOW	155	158	165	173
30	200	205	215	227
35	250	257	271	287
40	305	315	333	354
45	360	378	400	427
50	425	446	474	507
55	495	520	553	593
60	570	598	638	686
65	645	682	728	785

* USE ON SUSTAINED DOWNGRADE STEEPER THAN -3 PERCENT AND LONGER THAN 1 MILE.

NOTES:

1. Where approach speeds are low, advance warning signs may be placed at 300' spacing, and closer in urban areas.
2. Each advance warning sign in each direction of travel shall be equipped with at least two flags for daytime closure. Each flag shall be at least 16" x 16" in size and shall be orange or fluorescent red-orange in color. Flashing beacons shall be placed at the locations indicated for lane closure during hours of darkness.
3. A C14 (CA) "END ROAD WORK" sign, as appropriate, shall be placed at the end of the lane control unless the end of work area is obvious, or ends within a larger project's limits.
4. If the W20-1 sign would follow within 2000' of a stationary W20-1 or C11 (CA) "ROAD WORK NEXT _____MILES", use a W20-4 sign for the first advance warning sign.
5. All cones used for lane closures during the hours of darkness shall be fitted with retroreflective bands (or sleeves) as specified in the specifications.
6. Portable delineators, placed at one-half the spacing indicated for traffic cones, may be used instead of cones for daytime closures only.
7. Additional advance flaggers may be required. Flagger should stand in a conspicuous place, be visible to approaching traffic as well as approaching vehicles after the first vehicle has stopped. During the hours of darkness, the flagging-station and flagger shall be illuminated and clearly visible to approaching traffic. The illumination footprint of the lighting on the ground shall be at least 20' in diameter. Place a minimum of four cones at 50' intervals in advance of flagger station as shown.
8. Place C30 (CA) "LANE CLOSED" sign at 500' to 1000' intervals throughout extended work areas. They are optional if the work area is visible from the flagger station.
9. When a pilot car is used, place a C37 (CA) "TRAFFIC CONTROL-WAIT AND FOLLOW PILOT CAR" sign at all intersections within traffic control area. Signs shall be clean and visible at all times.
10. An optional C29 (CA) sign may be placed below the C9A (CA) sign.
11. Traffic cones or barricades may be placed on the optional taper as shown, barricades shall be Type I, II, or III.

STATE OF CALIFORNIA
DEPARTMENT OF TRANSPORTATION

TRAFFIC CONTROL SYSTEM FOR LANE CLOSURE ON TWO LANE CONVENTIONAL HIGHWAYS

NO SCALE

TCS-1

STATE OF CALIFORNIA - DEPARTMENT OF TRANSPORTATION
Caltrans

FUNCTIONAL SUPERVISOR | CALCULATED-DESIGNED BY | CHECKED BY | REVISED BY | DATE REVISED

LAST REVISION 00-00-00 | DATE PLOTTED => 10-DEC-2012 | TIME PLOTTED => 09:45