Dist	COUNTY	ROUTE	POST MILES TOTAL PROJECT	SHEET No.	TOTAL SHEETS
01	Hum	299	32.1	1	32

ER-19A7(004)E

STATE OF CALIFORNIA
DEPARTMENT OF TRANSPORTATION

PROJECT PLANS FOR CONSTRUCTION ON
STATE HIGHWAY

IN HUMBOLDT COUNTY
NEAR WILLOW CREEK
AT 1.2 MILES WEST OF
EAST FORK WILLOW CREEK BRIDGE

TO BE SUPPLEMENTED BY STANDARD PLANS DATED 2010

INDEX OF PLANS

SHEET No.	DESCRIPTION
1	TITLE AND LOCATION MAP
2	TYPICAL CROSS SECTIONS
3	LAYOUT
4-5	CONSTRUCTION DETAILS
6	CONSTRUCTION AREA SIGNS
7-8	STAGE CONSTRUCTION AND TRAFFIC HANDLING PLANS
9	SUMMARY OF QUANTITIES
10	EROSION CONTROL PLAN AND QUANTITIES
11-22	REVISED STANDARD PLANS
STRUCTURE PLANS	
23-32	RETAINING WALL AT WILLOW CREEK Br No. 04-E0034

THE STANDARD PLANS LIST APPLICABLE TO THIS CONTRACT IS INCLUDED IN THE NOTICE TO BIDDERS AND SPECIAL PROVISIONS BOOK.

LOCATION OF CONSTRUCTION
STA "R1" 518+80
STA "RWLOL" 519+30 PM 32.1

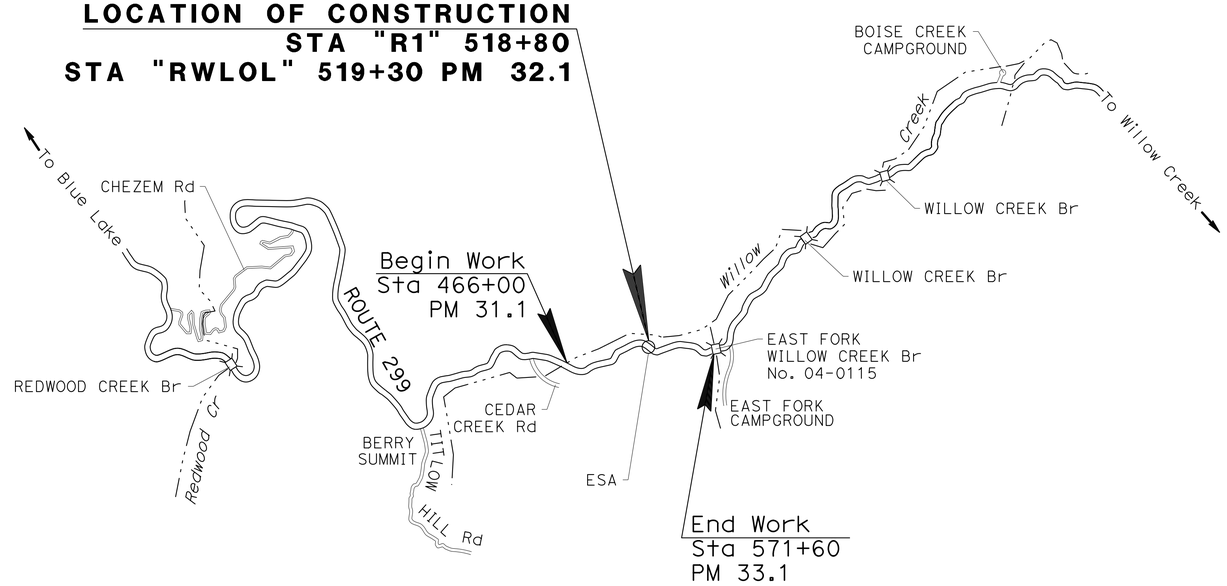

NO SCALE

THE CONTRACTOR SHALL POSSESS THE CLASS (OR CLASSES) OF LICENSE AS SPECIFIED IN THE "NOTICE TO BIDDERS."

Sean Shepard 09-08-14
PROJECT ENGINEER DATE
REGISTERED CIVIL ENGINEER

September 8, 2014
PLANS APPROVAL DATE

REGISTERED PROFESSIONAL ENGINEER SEAN E. SHEPARD No. C71379 Exp. 12-31-15 CIVIL STATE OF CALIFORNIA

THE STATE OF CALIFORNIA OR ITS OFFICERS OR AGENTS SHALL NOT BE RESPONSIBLE FOR THE ACCURACY OR COMPLETENESS OF SCANNED COPIES OF THIS PLAN SHEET.

CONTRACT No.	01-0B4604
PROJECT ID	0112000129

DATE PLOTTED => 16-OCT-2014
TIME PLOTTED => 10:11

LAST REVISION

P:\proj\01\0b460_plans\pse\0112000129ab001.dgn

DESIGN ENGINEER: JOHN MARTIN
PROJECT MANAGER: TALITHA HODGSON

Dist	COUNTY	ROUTE	POST MILES TOTAL PROJECT	SHEET No.	TOTAL SHEETS
01	Hum	299	32.1	2	32

Sean Shepard 09-08-14
REGISTERED CIVIL ENGINEER DATE

09-08-14
PLANS APPROVAL DATE

REGISTERED PROFESSIONAL ENGINEER SEAN E. SHEPARD No. C71379 Exp. 12-31-15 CIVIL STATE OF CALIFORNIA

THE STATE OF CALIFORNIA OR ITS OFFICERS OR AGENTS SHALL NOT BE RESPONSIBLE FOR THE ACCURACY OR COMPLETENESS OF SCANNED COPIES OF THIS PLAN SHEET.

PAVEMENT CLIMATE REGION: LOW MOUNTAIN

NOTES:

1. DIMENSIONS OF THE PAVEMENT STRUCTURES (STRUCTURAL SECTIONS) ARE SUBJECT TO TOLERANCES SPECIFIED IN THE STANDARD SPECIFICATIONS.

ABBREVIATIONS:

REW RAIL ELEMENT WALL

(E) EXISTING

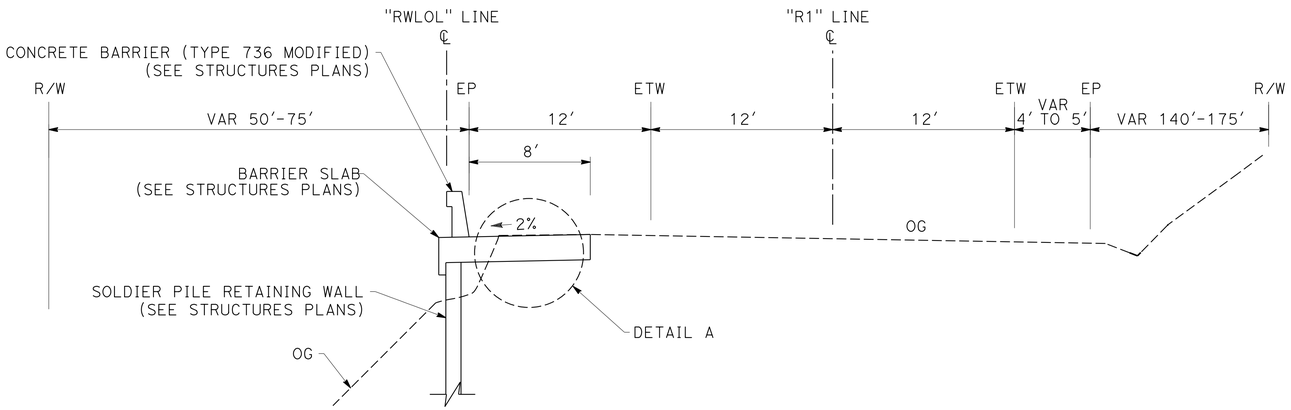

ROUTE 299
"R1" 518+66 TO 519+05
"RWLOL" 519+05 TO 519+44

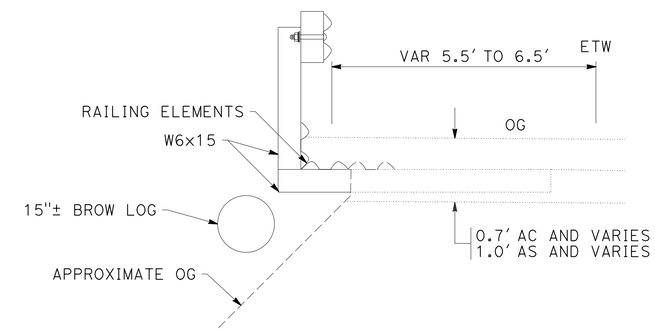

DETAIL A
EXISTING CONDITION AT WALL LOCATION

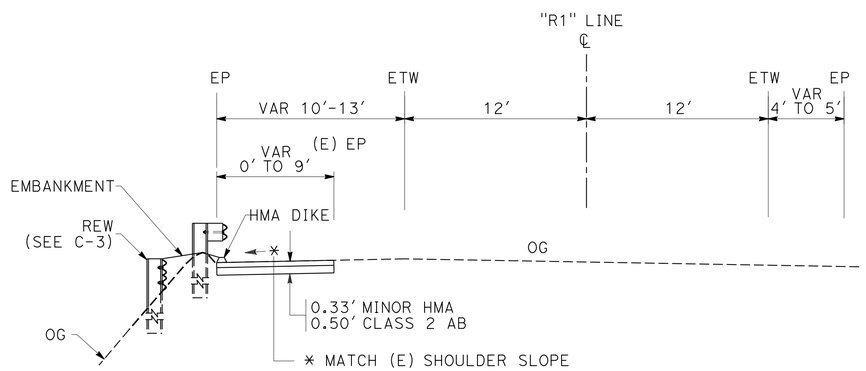

ROUTE 299
"R1" 518+00 TO 518+66

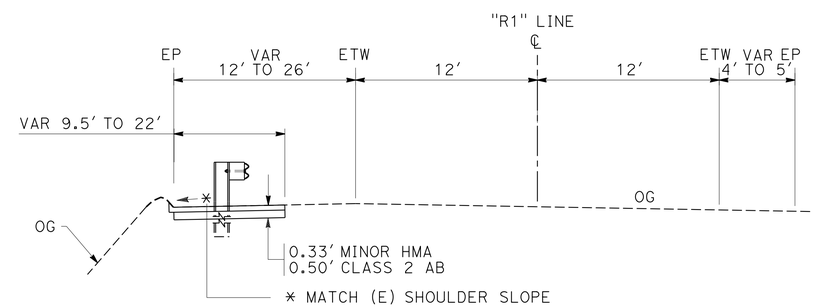

ROUTE 299
"R1" 519+05 TO 520+00

TYPICAL CROSS SECTIONS
NO SCALE

X-1

STATE OF CALIFORNIA - DEPARTMENT OF TRANSPORTATION
Caltrans® DESIGN

FUNCTIONAL SUPERVISOR: JOHN MARTIN
CALCULATED-DESIGNED BY: SEAN SHEPARD
CHECKED BY: ROBERT NIXON
REVISED BY / DATE REVISED

P:\proj\01\0b460_plans\pse\0112000129ca001.dgn

DATE PLOTTED => 16-OCT-2014
TIME PLOTTED => 10:11
LAST REVISION

Dist	COUNTY	ROUTE	POST MILES TOTAL PROJECT	SHEET No.	TOTAL SHEETS
01	Hum	299	32.1	3	32

Sean Shepard 09-08-14
REGISTERED CIVIL ENGINEER DATE

09-08-14
PLANS APPROVAL DATE

REGISTERED PROFESSIONAL ENGINEER SEAN E. SHEPARD No. C71379 Exp. 12-31-15 CIVIL STATE OF CALIFORNIA

THE STATE OF CALIFORNIA OR ITS OFFICERS OR AGENTS SHALL NOT BE RESPONSIBLE FOR THE ACCURACY OR COMPLETENESS OF SCANNED COPIES OF THIS PLAN SHEET.

NOTES:

1. FOR ACCURATE RIGHT OF WAY DATA, CONTACT RIGHT OF WAY ENGINEERING AT THE DISTRICT OFFICE.
2. EXACT LOCATION OF TEMPORARY REINFORCED SILT FENCE AS DIRECTED BY THE ENGINEER.
3. FOR MGS LEAVE-OUT AND REW DETAILS, SEE CONSTRUCTION DETAILS.
4. EXISTING UTILITY FACILITIES HAVE NOT BEEN PLOTTED ON THESE PLANS.
5. THE EASTBOUND SHOULDER SOUTH OF THE PROJECT WORK AREA IS AN ESA.

LEGEND:

- REW
- PLACE HMA (MISCELLANEOUS AREA) BOUNDARY
- BARRIER SLAB AND RAIL (SEE STRUCTURES PLANS)

ABBREVIATIONS:

REW	RAIL ELEMENT WALL
(E)	EXISTING
MGS	MIDWEST GUARDRAIL SYSTEM

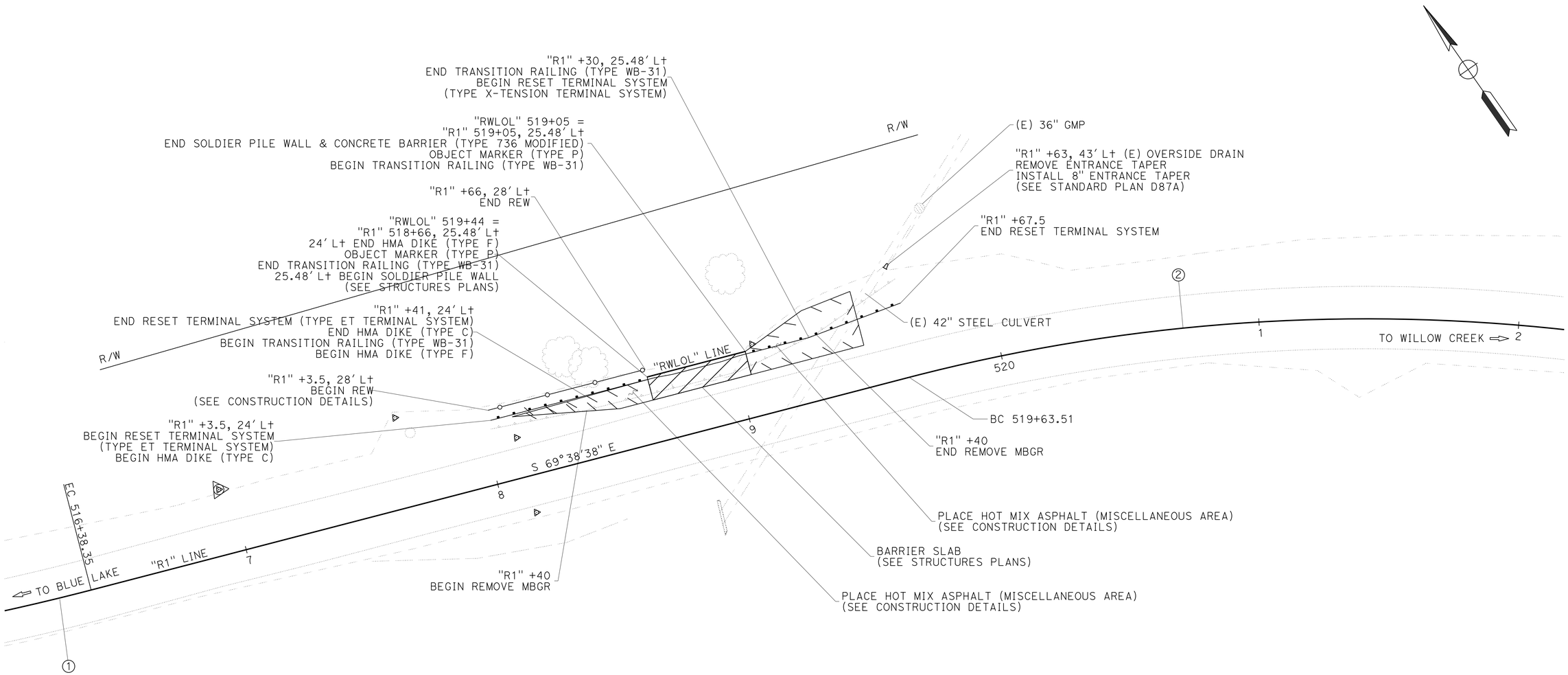

CURVE DATA

No. ⊕	R	Δ	T	L
1	900'	17°57'02"	142.15'	281.96'
2	700'	34°59'58"	220.70'	427.60'

R/W

LAYOUT

SCALE: 1" = 20'

L-1

REVISED BY	DATE REVISED	SEAN SHEPARD	ROBERT NIXON	CALCULATED-DESIGNED BY	CHECKED BY	FUNCTIONAL SUPERVISOR	JOHN MARTIN

STATE OF CALIFORNIA - DEPARTMENT OF TRANSPORTATION
Caltrans®
DESIGN

P:\proj\01\0b460_plans\pse\0112000129ea001.dgn

LAST REVISION
DATE PLOTTED => 16-OCT-2014
TIME PLOTTED => 10:11

Dist	COUNTY	ROUTE	POST MILES TOTAL PROJECT	SHEET No.	TOTAL SHEETS
01	Hum	299	32.1	4	32

Sean Shepard 09-08-14
REGISTERED CIVIL ENGINEER DATE

09-08-14
PLANS APPROVAL DATE

REGISTERED PROFESSIONAL ENGINEER SEAN E. SHEPARD No. C71379 Exp. 12-31-15 CIVIL STATE OF CALIFORNIA

THE STATE OF CALIFORNIA OR ITS OFFICERS OR AGENTS SHALL NOT BE RESPONSIBLE FOR THE ACCURACY OR COMPLETENESS OF SCANNED COPIES OF THIS PLAN SHEET.

NOTES:

1. SEE REVISED STANDARD PLAN B11-56 FOR CONNECTION DETAILS BETWEEN CONCRETE BARRIER (TYPE 736 MODIFIED) AND TRANSITION RAILING (TYPE WB-31).
2. FOR ARCHITECTURAL TREATMENT DETAILS SEE STRUCTURES PLANS.

LEGEND:

PLACE HOT MIX ASPHALT (MISCELLANEOUS AREA)

OBJECT MARKER (TYPE P)

ABBREVIATIONS:

REW	RAIL ELEMENT WALL
(E)	EXISTING
MGS	MIDWEST GUARDRAIL SYSTEM

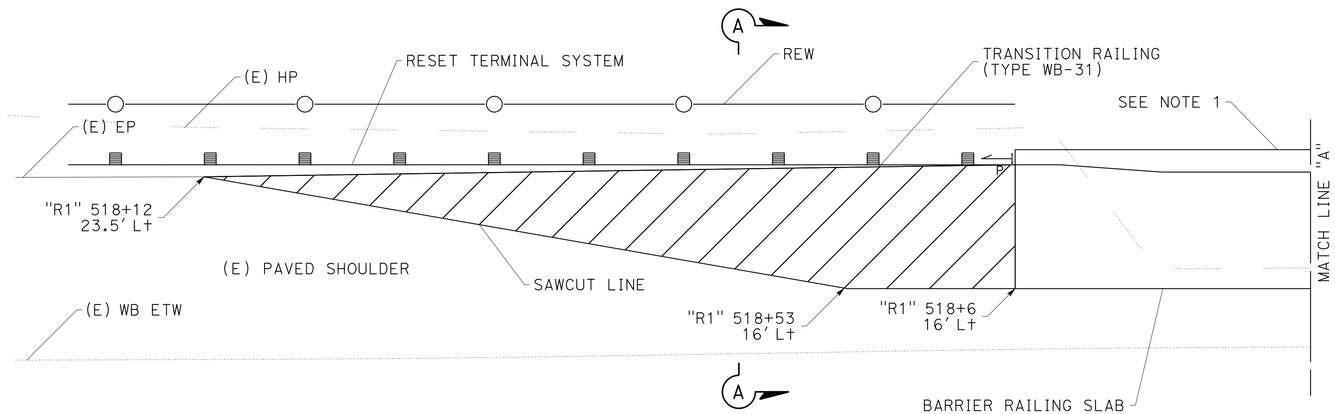

ROUTE 299

"R1" 518+00 TO 518+85.5

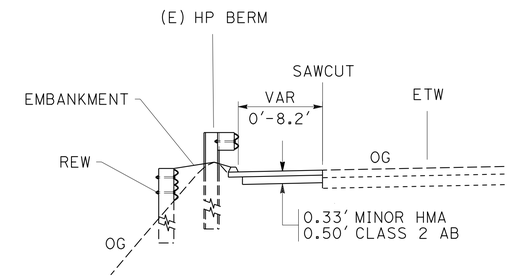

SECTION A-A

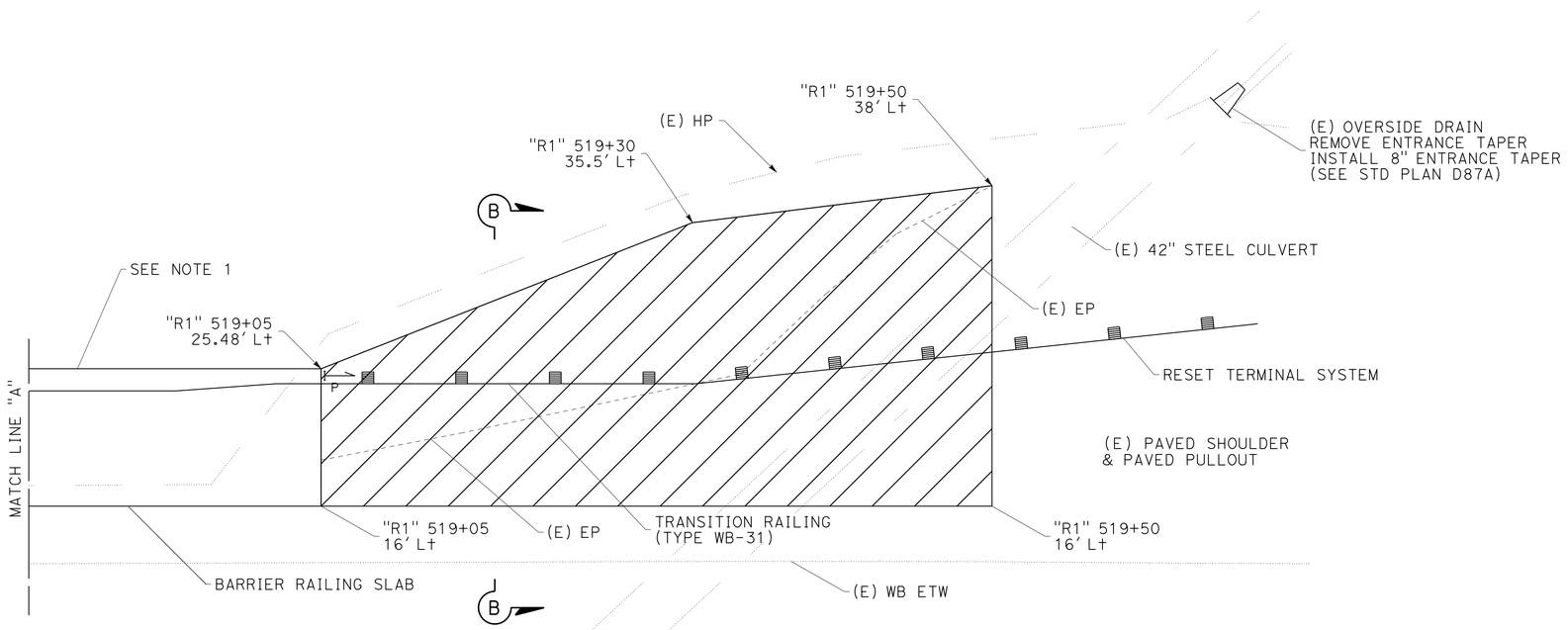

ROUTE 299

"R1" 518+85.5 TO 520+00

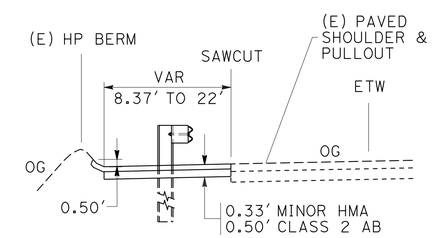

SECTION B-B

CONSTRUCTION DETAILS

NO SCALE

C-1

STATE OF CALIFORNIA - DEPARTMENT OF TRANSPORTATION

DESIGN

FUNCTIONAL SUPERVISOR: JOHN MARTIN

CALCULATED-DESIGNED BY: SEAN SHEPARD

CHECKED BY: ROBERT NIXON

REVISED BY | DATE REVISED

LAST REVISION | DATE PLOTTED => 16-OCT-2014 | TIME PLOTTED => 10:11

P:\proj1\01\0b460_plans\pse\0112000129ga001.dgn

Dist	COUNTY	ROUTE	POST MILES TOTAL PROJECT	SHEET No.	TOTAL SHEETS
01	Hum	299	32.1	5	32

Sean Shepard 09-08-14
REGISTERED CIVIL ENGINEER DATE

09-08-14
PLANS APPROVAL DATE

REGISTERED PROFESSIONAL ENGINEER SEAN E. SHEPARD No. C71379 Exp. 12-31-15 CIVIL STATE OF CALIFORNIA

THE STATE OF CALIFORNIA OR ITS OFFICERS OR AGENTS SHALL NOT BE RESPONSIBLE FOR THE ACCURACY OR COMPLETENESS OF SCANNED COPIES OF THIS PLAN SHEET.

NOTES:

1. LEAVE-OUT AREA MAY BE RETANGULAR OR ROUND SO LONG AS THE CLEARANCES SHOWN ARE MAINTAINED.
2. FOR STEEL POST SIZES SEE RSP A77N2.
3. FOR DETAILS NOT SHOWN SEE RSP A77L1 AND A77L2.
4. USE Min 120 PSI COMPRESSIVE STRENGTH FOR CONTROLLED LOW-STRENGTH MATERIAL.

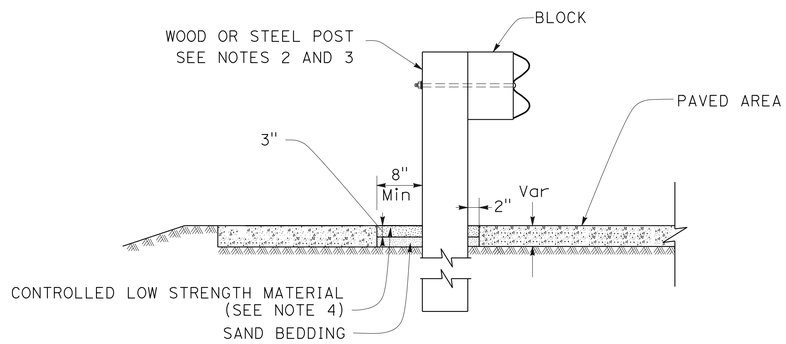

SECTION A-A

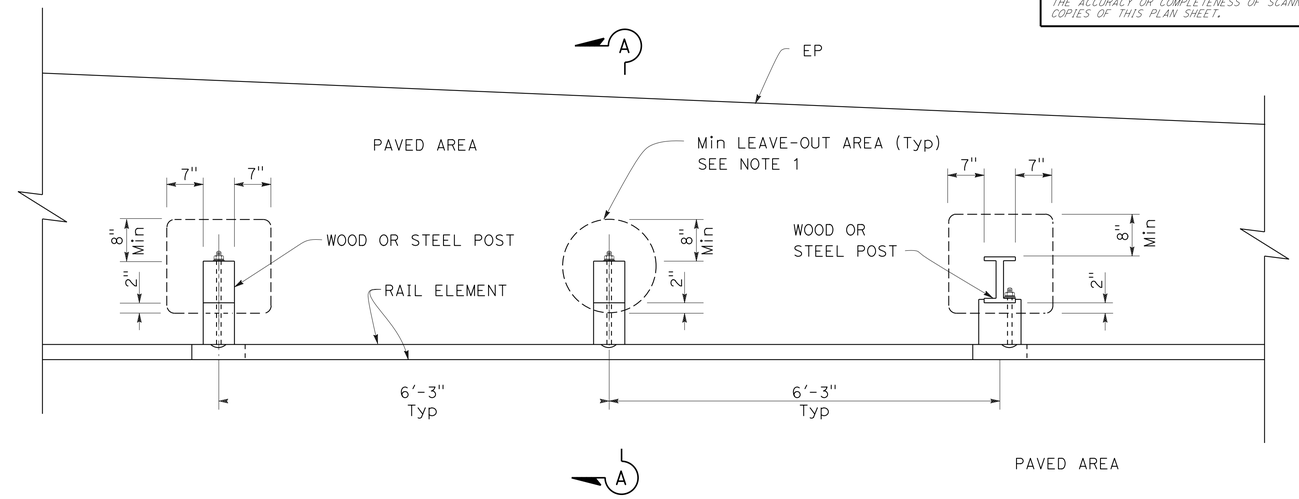

PLAN

GUARD RAIL POST LEAVE-OUT DETAIL

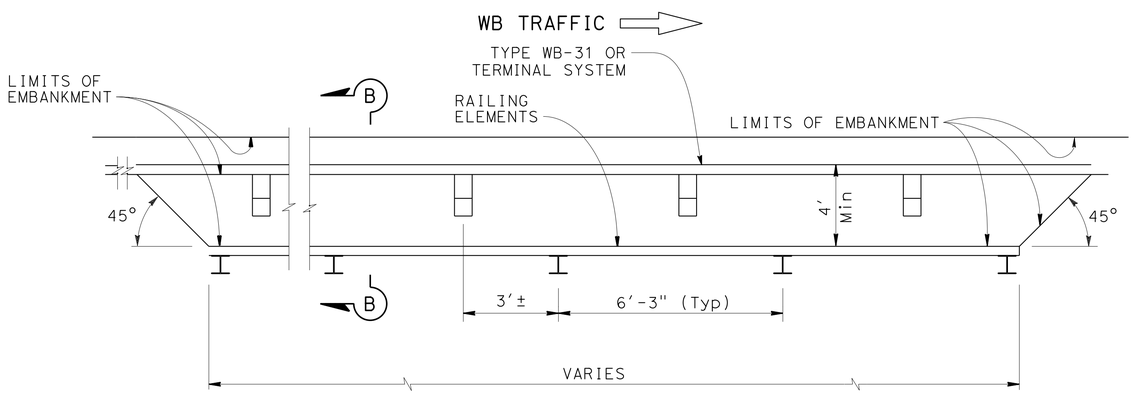

PLAN

RAIL ELEMENT WALL

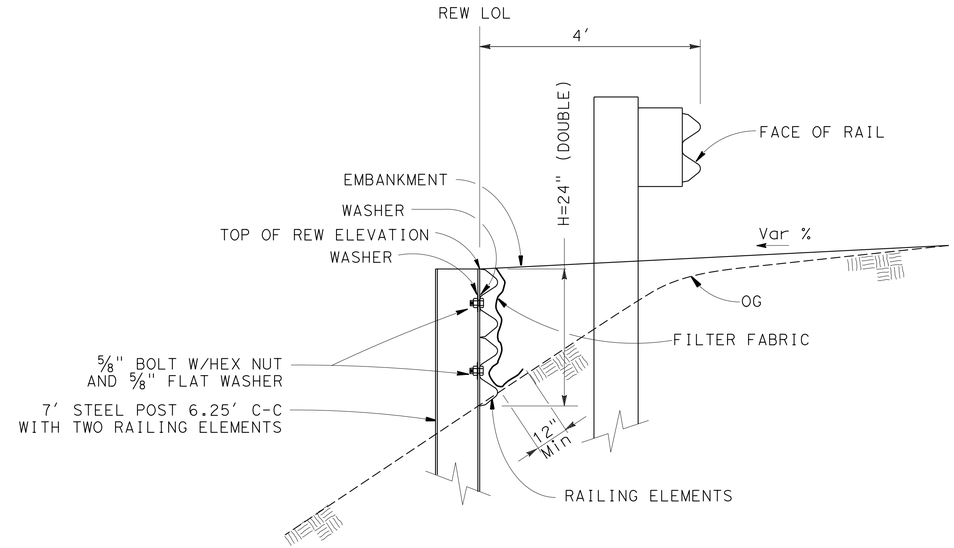

SECTION B-B
"R1" STA 518+3.5 TO 518+66

CONSTRUCTION DETAILS

NO SCALE

C-2

REVISED BY | DATE REVISED
SEAN SHEPARD | ROBERT NIXON
CALCULATED-DESIGNED BY | CHECKED BY
FUNCTIONAL SUPERVISOR | JOHN MARTIN

STATE OF CALIFORNIA - DEPARTMENT OF TRANSPORTATION
Caltrans DESIGN

P:\proj1\01\0b460_plans\pse\0112000129ga002.dgn

LAST REVISION | DATE PLOTTED => 16-OCT-2014 | TIME PLOTTED => 10:11

Dist	COUNTY	ROUTE	POST MILES TOTAL PROJECT	SHEET No.	TOTAL SHEETS
01	Hum	299	32.1	6	32

Sean Shepard 09-08-14
REGISTERED CIVIL ENGINEER DATE

09-08-14
PLANS APPROVAL DATE

REGISTERED PROFESSIONAL ENGINEER
SEAN E. SHEPARD
No. C71379
Exp. 12-31-15
CIVIL
STATE OF CALIFORNIA

THE STATE OF CALIFORNIA OR ITS OFFICERS OR AGENTS SHALL NOT BE RESPONSIBLE FOR THE ACCURACY OR COMPLETENESS OF SCANNED COPIES OF THIS PLAN SHEET.

NOTES:

1. EXACT LOCATION OF ALL SIGNS TO BE DETERMINED BY THE ENGINEER.
2. CALIFORNIA CODES ARE DESIGNATED BY (CA), OTHERWISE FEDERAL CODES ARE SHOWN.
3. ALL CONSTRUCTION AREA SIGNS EXCEPT C40(CA) SHALL HAVE A BLACK LEGEND WITH AN ORANGE BACKGROUND.
4. PCMS MESSAGES AS SHOWN OR AS AUTHORIZED.

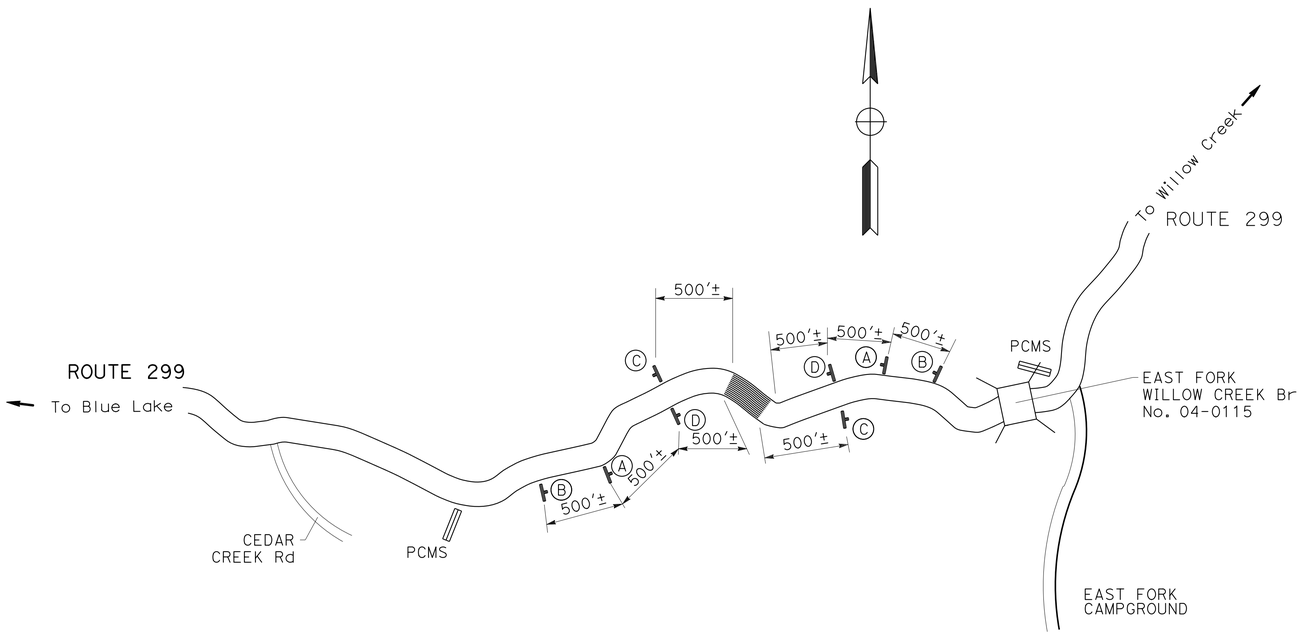

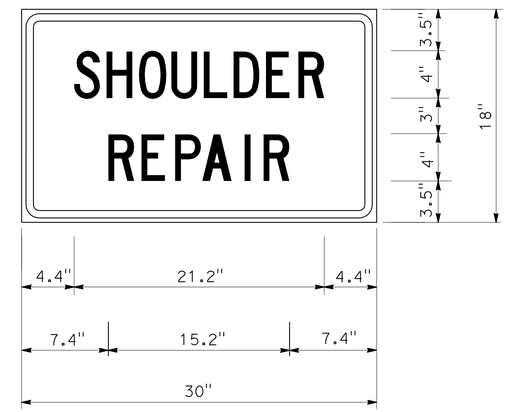

1.5" RADIUS, 0.6" BORDERS, 0.4" INDENT, BLACK ON ORANGE;

C23B SIGN PANEL DETAIL

CONSTRUCTION AREA SIGNS (STATIONARY MOUNTED)

SIGN	TYPE	PANEL SIZE	SIGN MESSAGE	NUMBER AND SIZE OF POSTS	No. OF SIGNS
A	W20-1	36" x 36"	ROAD WORK AHEAD	1 - 4" x 6"	2
	C23B(CA)	30" x 18"	SHOULDER REPAIR		2
B	C40(CA)	108" x 42"	TRAFFIC FINES DOUBLED IN CONSTRUCTION ZONES	2 - 6" x 6"	2
C	G20-2	36" x 18"	END ROAD WORK	1 - 4" x 4"	2
D	W11-1	36" x 36"	BICYCLE (SYMBOL)	1 - 4" x 6"	2
	W16-1	24" x 30"	SHARE THE ROAD		2

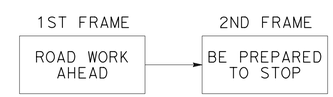

PCMS MESSAGES

APPROVED FOR CONSTRUCTION AREA SIGNS ONLY

CONSTRUCTION AREA SIGNS

NO SCALE

CS-1

REVISED BY | DATE REVISED
SEAN SHEPARD | ROBERT NIXON
CALCULATED-DESIGNED BY | CHECKED BY
FUNCTIONAL SUPERVISOR: JOHN MARTIN
STATE OF CALIFORNIA - DEPARTMENT OF TRANSPORTATION
Caltrans
DESIGN

P:\proj1\01\0b460_plans\pse\0112000129la001.dgn

LAST REVISION | DATE PLOTTED => 16-OCT-2014 | TIME PLOTTED => 10:11

Dist	COUNTY	ROUTE	POST MILES TOTAL PROJECT	SHEET No.	TOTAL SHEETS
01	Hum	299	32.1	7	32

Sean Shepard 09-08-14
REGISTERED CIVIL ENGINEER DATE

09-08-14
PLANS APPROVAL DATE

REGISTERED PROFESSIONAL ENGINEER
SEAN E. SHEPARD
No. C71379
Exp. 12-31-15
CIVIL
STATE OF CALIFORNIA

THE STATE OF CALIFORNIA OR ITS OFFICERS OR AGENTS SHALL NOT BE RESPONSIBLE FOR THE ACCURACY OR COMPLETENESS OF SCANNED COPIES OF THIS PLAN SHEET.

STAGE 1 TRAFFIC HANDLING AND CONSTRUCTION

BUILD STAGE 1 FROM EXISTING ROADWAY USING RSP T-13 TRAFFIC CONTROL
DRILL HOLES AND PLACE STEEL AND CONCRETE FOR PILES
EXCAVATE AND INSTALL LAGGING
BACKFILL WALL TO BARRIER SLAB BASE ELEVATION

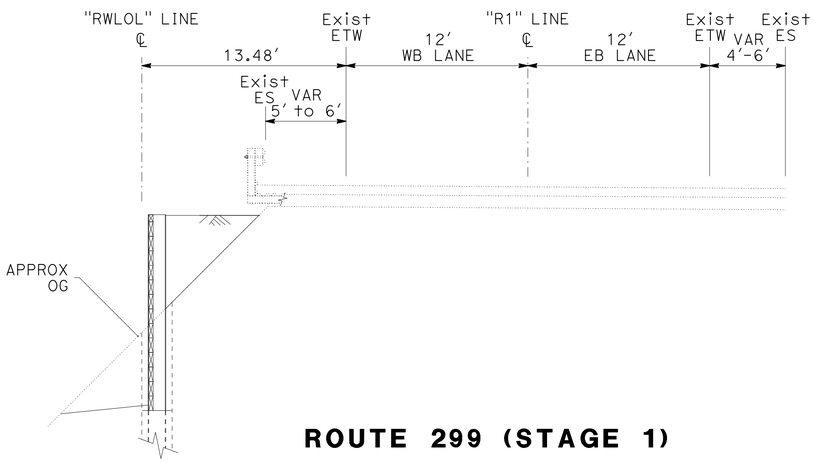

ROUTE 299 (STAGE 1)
"R1" 518+66 TO 519+05
"RWLOL" 19+05 TO 19+44

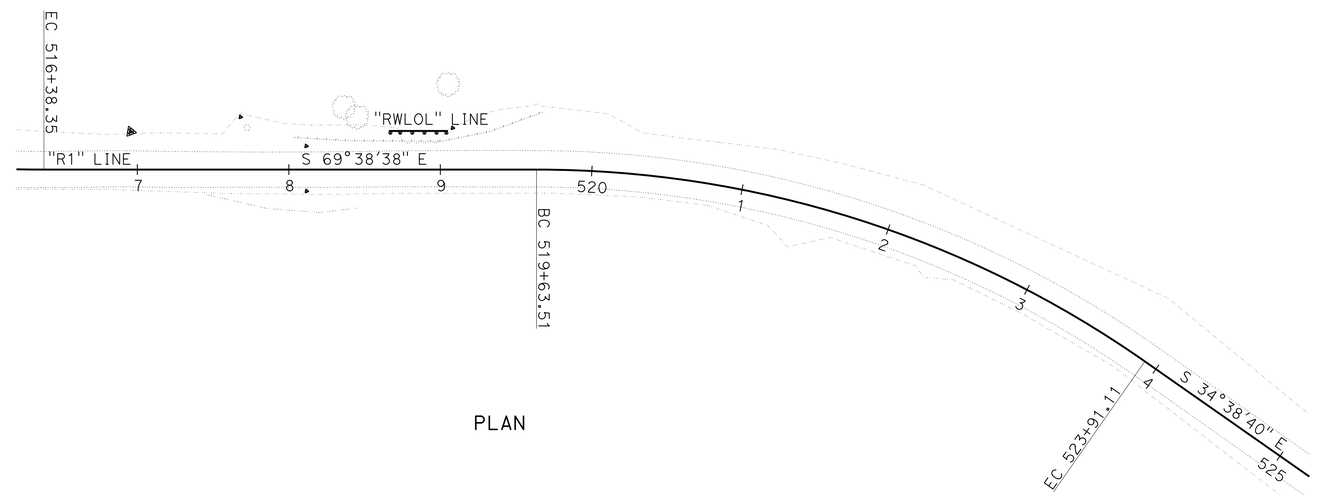

PLAN

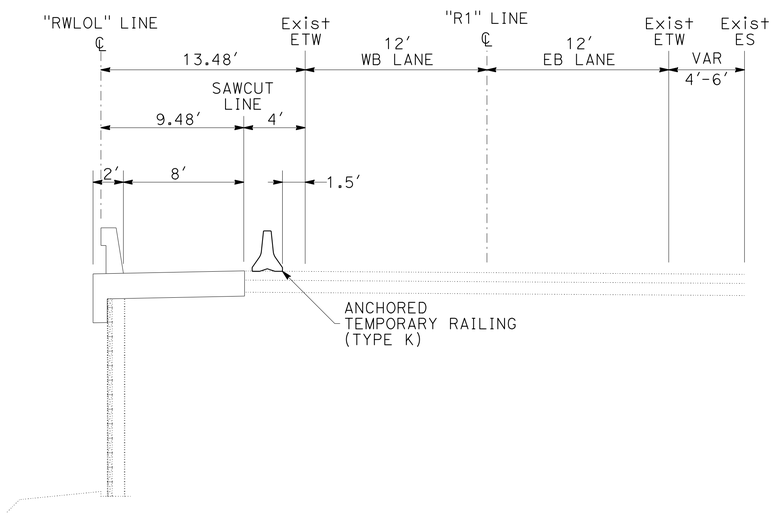

ROUTE 299 (STAGE 2)
"R1" 518+66 TO 519+05

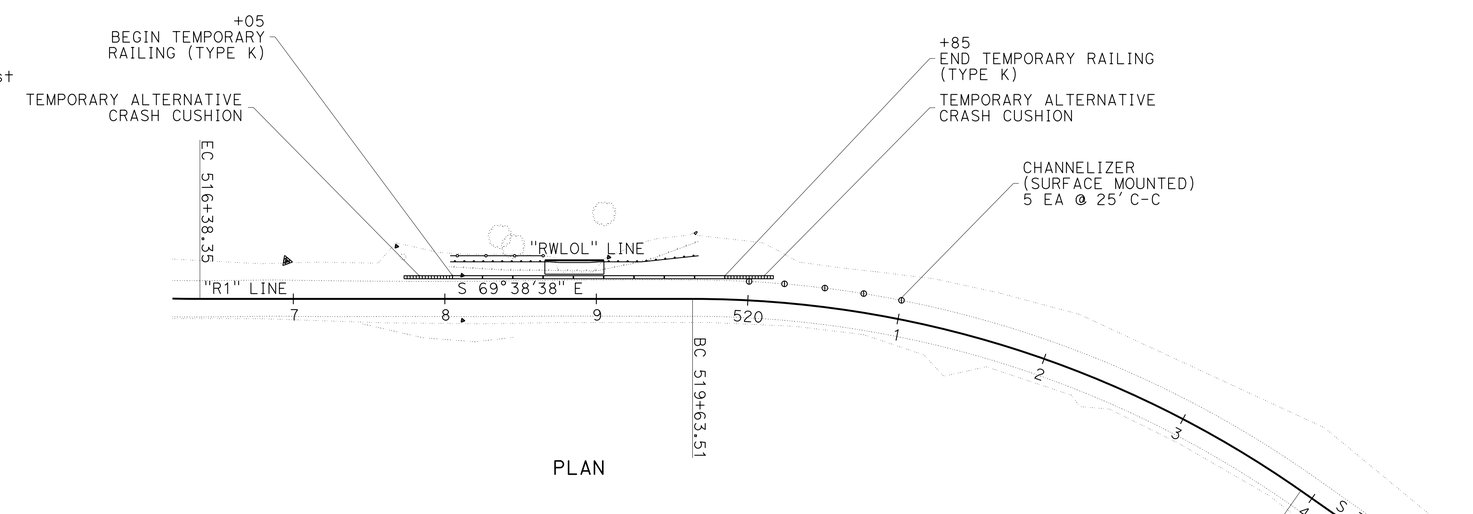

PLAN

STAGE 2 TRAFFIC HANDLING AND CONSTRUCTION

PLACE ANCHORED TEMPORARY RAILING (TYPE K)
REMOVE EXISTING METAL BEAM GUARD RAIL SYSTEM
SAWCUT SHOULDER TRIM LINE
CONSTRUCT BARRIER SLAB AND CONCRETE BARRIER
INSTALL REW AND GUARD RAILING SYSTEMS
COMPLETE MINOR HMA PAVING AND DRAINAGE

STAGE CONSTRUCTION (TRAFFIC HANDLING PLAN)

SCALE: 1" = 50′

SC-1

APPROVED FOR STAGE CONSTRUCTION AND TRAFFIC HANDLING WORK ONLY

REVISED BY | DATE REVISED
SEAN SHEPARD | ROBERT NIXON
CALCULATED-DESIGNED BY | CHECKED BY
FUNCTIONAL SUPERVISOR | JOHN MARTIN

STATE OF CALIFORNIA - DEPARTMENT OF TRANSPORTATION
Caltrans
DESIGN

P:\proj1\01\0b460_plans\pse\0112000129ma001.dgn

LAST REVISION | DATE PLOTTED => 16-OCT-2014 | TIME PLOTTED => 10:11

Dist	COUNTY	ROUTE	POST MILES TOTAL PROJECT	SHEET No.	TOTAL SHEETS
01	Hum	299	32.1	8	32

Sheri M. Rodriguez 09-08-14
REGISTERED CIVIL ENGINEER DATE

09-08-14
PLANS APPROVAL DATE

REGISTERED PROFESSIONAL ENGINEER SHERI M. RODRIGUEZ No. C66861 Exp. 9-30-16 CIVIL STATE OF CALIFORNIA

THE STATE OF CALIFORNIA OR ITS OFFICERS OR AGENTS SHALL NOT BE RESPONSIBLE FOR THE ACCURACY OR COMPLETENESS OF SCANNED COPIES OF THIS PLAN SHEET.

NOTES:

1. CALIFORNIA CODES ARE DESIGNATED BY (CA). OTHERWISE, FEDERAL (MUTCD) CODES ARE SHOWN.
2. ALL SIGNS SHALL HAVE A BLACK LEGEND ON FLUORESCENT ORANGE BACKGROUND AND SHALL BE EQUIPPED WITH AT LEAST TWO 16" x 16" ORANGE FLAGS FOR DAYTIME CLOSURE OR FLASHING BEACONS FOR LANE CLOSURE DURING HOURS OF DARKNESS.
3. ALL CONES USED FOR LANE CLOSURES DURING THE HOURS OF DARKNESS SHALL BE FITTED WITH RETROREFLECTIVE BANDS OR SLEEVES.
4. WHEN A PILOT CAR IS USED, PLACE A C37 (CA) SIGN AT ALL INTERSECTIONS WITHIN TRAFFIC CONTROL AREA. WHERE VEHICULAR TRAFFIC CAN NOT EFFECTIVELY SELF-REGULATE, AT LEAST ONE FLAGGER SHALL BE USED AT EACH INTERSECTION WITHIN THE TRAFFIC CONTROL AREA.
5. FLAGGER SHOULD STAND IN A CONSPICUOUS PLACE, FACING TRAFFIC AT ALL TIMES, BE VISIBLE TO APPROACHING TRAFFIC AS WELL AS APPROACHING VEHICLES AFTER THE FIRST VEHICLE HAS STOPPED.
6. ADDITIONAL ADVANCE FLAGGERS ARE REQUIRED.
7. WHEN FLAGGER IS NOT VISIBLE FROM THIS LOCATION PLACE A C29 (CA) SIGN BELOW THE C9A (CA) SIGN.
8. TRAFFIC CONES OR BARRICADES MAY BE PLACED ON THE OPTIONAL TAPER AS SHOWN; BARRICADES SHALL BE TYPE I, II, OR III.

SIGN PANEL SIZE (MINIMUM)

- [A] 48" x 48" - SPEED OF 45 mph OR MORE
  36" x 36" - SPEED LESS THAN 45 mph
- [B] 30" x 30"
- [C] UNUSED
- [D] UNUSED
- [E] 20" x 7"

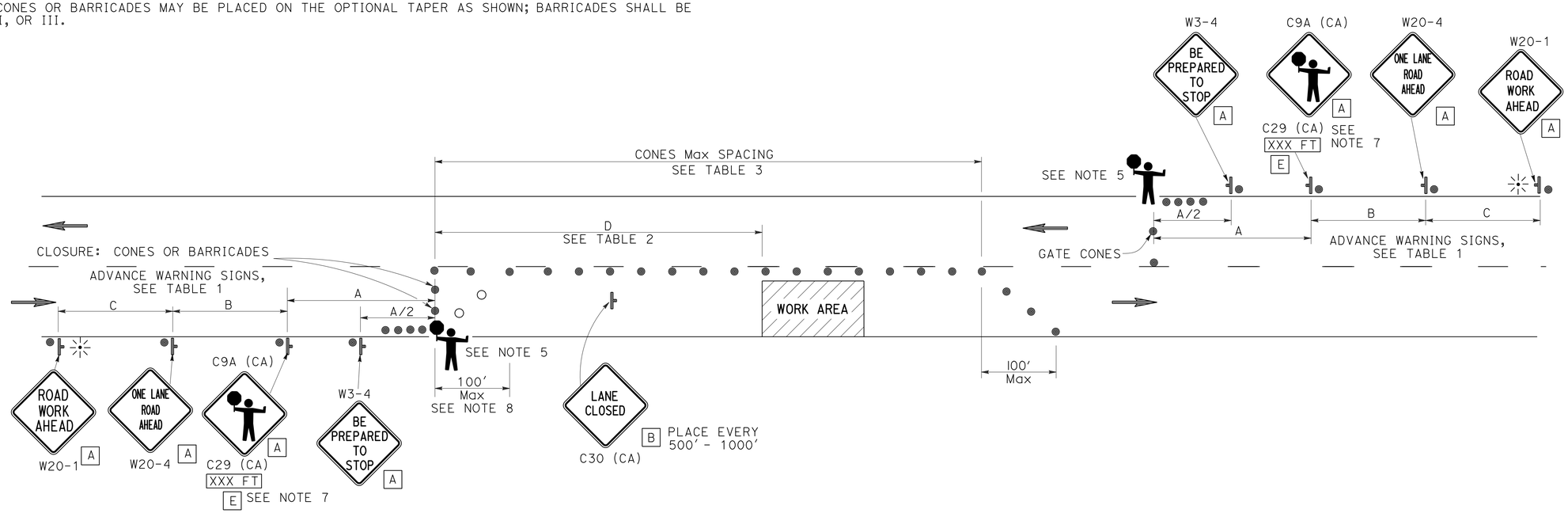

TYPICAL LANE CLOSURE WITH REVERSIBLE CONTROL

LEGEND

- ● TRAFFIC CONE
- ○ TRAFFIC CONE (OPTIONAL TAPER)
- TEMPORARY SIGN
- DIRECTION OF TRAVEL
- PORTABLE FLASHING BEACON
- FLAGGER

TABLE 1

DISTANCE BETWEEN SIGNS			
ROAD TYPE	Min A (ft)	Min B (ft)	Min C (ft)
URBAN (SPEED 25 mph OR LESS)	100	100	100
URBAN (SPEED 30 mph OR MORE)	350	350	350
RURAL	500	500	500
EXPRESSWAY / FREEWAY	1000	1500	2640

TABLE 2

APPROACH SPEED	Min D	DOWNGRADE Min D *		
		-3%	-6%	-9%
mph	ft	ft	ft	ft
25 AND BELOW	155	158	165	173
30	200	205	215	227
35	250	257	271	287
40	305	315	333	354
45	360	378	400	427
50	425	446	474	507
55	495	520	553	593
60	570	598	638	686
65	645	682	728	785

* USE ON SUSTAINED DOWNGRADE STEEPER THAN -3 PERCENT AND LONGER THAN 1 MILE.

TABLE 3

CONES Max SPACING	
POSTED SPEED	ft
20 mph	20
25 mph	25
30 mph	30
35 mph	35
40 mph	40
45 mph	45
50 mph	50
55 mph	55
60 mph	60
65 mph	65

TRAFFIC HANDLING PLAN

NO SCALE

TH-1

REVISED BY | DATE REVISED
SHERI M. RODRIGUEZ | SEAN SHEPARD
CALCULATED-DESIGNED BY | CHECKED BY
FUNCTIONAL SUPERVISOR | TROY ARSENEAU

STATE OF CALIFORNIA - DEPARTMENT OF TRANSPORTATION
Caltrans® TRAFFIC OPS

P:\proj1\01\0b460_plans\pse\0112000129md001.dgn

LAST REVISION | DATE PLOTTED => 16-OCT-2014 | TIME PLOTTED => 10:11

Dist	COUNTY	ROUTE	POST MILES TOTAL PROJECT	SHEET No.	TOTAL SHEETS
01	Hum	299	32.1	9	32

Sean Shepard 09-08-14
REGISTERED CIVIL ENGINEER DATE

09-08-14
PLANS APPROVAL DATE

REGISTERED PROFESSIONAL ENGINEER SEAN E. SHEPARD No. C71379 Exp. 12-31-15 CIVIL STATE OF CALIFORNIA

THE STATE OF CALIFORNIA OR ITS OFFICERS OR AGENTS SHALL NOT BE RESPONSIBLE FOR THE ACCURACY OR COMPLETENESS OF SCANNED COPIES OF THIS PLAN SHEET.

NOTE:

1. (N) - NOT A SEPARATE PAY ITEM, FOR INFORMATION ONLY

STAGE CONSTRUCTION

STATION	CHANNELIZER (SURFACE MOUNTED)	TEMPORARY RAILING (TYPE K)	TEMPORARY ALTERNATIVE CRASH CUSHION
	EA	LF	EA
"R1" 518+05, Lt			1
"R1" 518+05 TO 519+85, Lt		180	
"R1" 519+85, Lt			1
"R1" 520+00 TO 521+00, Lt	5		
TOTAL	5	180	2

PORTABLE CHANGEABLE MESSAGE SIGN

	EA
TOTAL	2

TEMPORARY WATER POLLUTION CONTROL

Temp EROSION CONTROL BLANKET	Temp COVER	Temp CHECK DAM	Temp DRAINAGE INLET PROTECTION	Temp FIBER ROLL	Temp REINFORCED SILT FENCE	Temp STRAW BALE BARRIER
SQYD	SQYD	LF	EA	LF	LF	LF
140	120	30	1	240	120	120

ROADWAY ITEMS

STATION	TREATED WOOD WASTE	REMOVE ENTRANCE TAPER	REMOVE GUARDRAIL	RESET TERMINAL SYSTEM	ROADWAY EXCAVATION (NATURALLY OCCURRING ASBESTOS)	(N) EMBANKMENT	CLASS 2 AGGREGATE BASE (CY)	MINOR HOT MIX ASPHALT	PLACE HOT MIX ASPHALT DIKE (TYPE C)	PLACE HOT MIX ASPHALT DIKE (TYPE F)	PLACE HOT MIX ASPHALT (MISCELLANEOUS AREA)	RAIL ELEMENT WALL	CONTROLLED LOW-STRENGTH MATERIAL	8" ENTRANCE TAPER	OBJECT MARKER (TYPE P)	TRANSITION RAILING (TYPE WB-31)
	LB	EA	LF	EA	CY	CY	CY	TON	LF	LF	SQYD	SQFT	CF	EA	EA	EA
"R1" 518+20 TO 519+33, Lt	1140		100			17	18	30	37.5	25	115					2
"R1" 518+66 TO 519+05, Lt					40										2	
"R1" 519+63, 43' Lt		1												1		
"R1" 518+3.5 TO 519+67.5, Lt				2									9			
"R1" 518+3.5 TO 518+66, Lt												125				
TOTAL	1140	1	100	2	40	17	18	30	37.5	25	115	125	9	1	2	2

SUMMARY OF QUANTITIES

Q-1

REVISED BY | DATE REVISED
SEAN SHEPARD | ROBERT NIXON
CALCULATED-DESIGNED BY | CHECKED BY
FUNCTIONAL SUPERVISOR
JOHN MARTIN

STATE OF CALIFORNIA - DEPARTMENT OF TRANSPORTATION
Caltrans® DESIGN

P:\proj1\01\0b460_plans\pse\0112000129pa001.dgn

LAST REVISION | DATE PLOTTED => 16-OCT-2014 | TIME PLOTTED => 10:11

Dist	COUNTY	ROUTE	POST MILES TOTAL PROJECT	SHEET No.	TOTAL SHEETS
01	Hum	299	32.1	10	32

Laura Lazzarotto
LICENSED LANDSCAPE ARCHITECT

09-08-14
PLANS APPROVAL DATE

LICENSED LANDSCAPE ARCHITECT
Laura Lazzarotto
Signature
8-31-15
Renewal Date
9-04-14
Date
STATE OF CALIFORNIA

THE STATE OF CALIFORNIA OR ITS OFFICERS OR AGENTS SHALL NOT BE RESPONSIBLE FOR THE ACCURACY OR COMPLETENESS OF SCANNED COPIES OF THIS PLAN SHEET.

NOTE:

1. (N) - NOT A SEPARATE PAY ITEM, FOR INFORMATION ONLY

LEGEND:

EROSION CONTROL (TYPE 1)

EROSION CONTROL (TYPE 1)

SEQUENCE	ITEM	MATERIAL		APPLICATION RATE
		DESCRIPTION	TYPE	
STEP 1	WOOD MULCH	SHREDDED BARK	REDWOOD	404 CY/ACRE

EROSION CONTROL QUANTITIES

STATION	AREA (N)	DESCRIPTION	WOOD MULCH
	SQFT		CY
"R1" 517+90 To 519+70	850	EROSION CONTROL (TYPE 1)	7.9
TOTAL			7.9

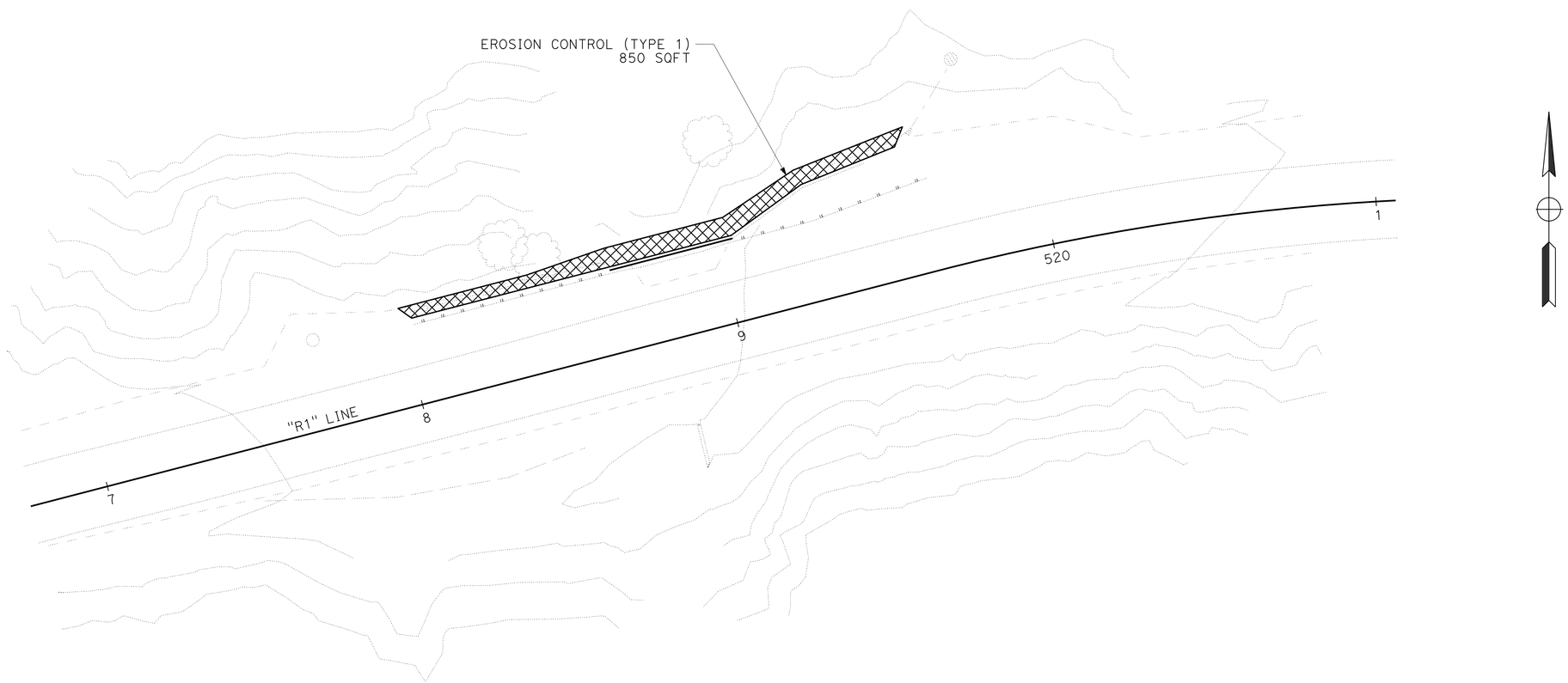

EROSION CONTROL PLAN AND QUANTITIES

SCALE: 1" = 20'

EC-1

APPROVED FOR EROSION CONTROL WORK ONLY

REVISED BY | DATE REVISED
LAURA LAZZAROTTO | SEAN SHEPARD
CALCULATED-DESIGNED BY | CHECKED BY
SENIOR LANDSCAPE ARCHITECT | RON FLORY
STATE OF CALIFORNIA - DEPARTMENT OF TRANSPORTATION
Caltrans
LANDSCAPE

P:\proj\01\0b460_plans\pse\0112000129te001.dgn

LAST REVISION | DATE PLOTTED => 16-OCT-2014 | TIME PLOTTED => 10:12

M

Maint	MAINTENANCE
Max	MAXIMUM
MB	METAL BEAM
MBB	METAL BEAM BARRIER
MBGR	METAL BEAM GUARD RAILING
Med	MEDIAN
MGS	MIDWEST GUARDRAIL SYSTEM
MH	MANHOLE
Min	MINIMUM
Misc	MISCELLANEOUS
Misc I & S	MISCELLANEOUS IRON AND STEEL
Mkr	MARKER
Mod	MODIFIED, MODIFY
Mon	MONUMENT
MP	METAL PLATE
MPGR	METAL PLATE GUARD RAILING
MR	MOVEMENT RATING
MSE	MECHANICALLY STABILIZED EMBANKMENT
Mt	MOUNTAIN, MOUNT
Mtl	MATERIAL
MVP	MAINTENANCE VEHICLE PULLOUT

N

N	NORTH
NB	NORTHBOUND
No.	NUMBER (MUST HAVE PERIOD)
Nos.	NUMBERS (MUST HAVE PERIOD)
NPS	NOMINAL PIPE SIZE
NS	NEAR SIDE
NSP	NEW STANDARD PLAN
NTS	NOT TO SCALE

O

Oblr	OBLITERATE
OC	OVERCROSSING
OD	OUTSIDE DIAMETER
OF	OUTSIDE FACE
OG	ORIGINAL GROUND
OGAC	OPEN GRADED ASPHALT CONCRETE
OGFC	OPEN GRADED FRICTION COURSE
OH	OVERHEAD
OHWM	ORDINARY HIGH WATER MARK
O-O	OUT TO OUT
Opp	OPPOSITE
OSD	OVERSIDE DRAIN

P

P	PAGE
PAP	PERFORATED ALUMINUM PIPE
PB	PULL BOX
PC	POINT OF CURVATURE, PRECAST
PCC	POINT OF COMPOUND CURVE, PORTLAND CEMENT CONCRETE
PCMS	PORTABLE CHANGEABLE MESSAGE SIGN
PCP	PERFORATED CONCRETE PIPE, PRESTRESSED CONCRETE PIPE
PCVC	POINT OF COMPOUND VERTICAL CURVE
PEC	PERMIT TO ENTER AND CONSTRUCT
Ped	PEDESTRIAN
Ped OC	PEDESTRIAN OVERCROSSING
Ped UC	PEDESTRIAN UNDERCROSSING
Perm Mtl	PERMEABLE MATERIAL

P continued

PG	PROFILE GRADE
PI	POINT OF INTERSECTION
PJP	PARTIAL JOINT PENETRATION
Pkwy	PARKWAY
℄,PL	PLATE
P/L	PROPERTY LINE
PM	POST MILE, TIME FROM NOON TO MIDNIGHT
PN	PAVING NOTCH
POC	POINT OF HORIZONTAL CURVE
POT	POINT OF TANGENT
POVC	POINT OF VERTICAL CURVE
PP	PIPE PILE, PLASTIC PIPE, POWER POLE
PPL	PREFORMED PERMEABLE LINER
PPP	PERFORATED PLASTIC PIPE
PRC	POINT OF REVERSE CURVE
PRF	PAVEMENT REINFORCING FABRIC
PRVC	POINT OF REVERSE VERTICAL CURVE
PS&E	PLANS, SPECIFICATIONS AND ESTIMATES
PS, P/S	PRESTRESSED
PSP	PERFORATED STEEL PIPE
PT	POINT OF TANGENCY
PVC	POLYVINYL CHLORIDE
Pvmt	PAVEMENT

Q

Qty	QUANTITY

R

R	RADIUS
R & D	REMOVE AND DISPOSE
R & S	REMOVE AND SALVAGE
R/C	RATE OF CHANGE
RCA	REINFORCED CONCRETE ARCH
RCB	REINFORCED CONCRETE BOX
RCP	REINFORCED CONCRETE PIPE
RCPA	REINFORCED CONCRETE PIPE ARCH
Rd	ROAD
Reinf	REINFORCED, REINFORCEMENT, REINFORCING
Rel	RELOCATE
Repl	REPLACEMENT
Ret	RETAINING
Rev	REVISED, REVISION
Rdwy	ROADWAY
RHMA	RUBBERIZED HOT MIX ASPHALT
Riv	RIVER
RM	ROAD-MIXED
RP	RADIUS POINT, REFERENCE POINT
RR	RAILROAD
RSP	ROCK SLOPE PROTECTION, REVISED STANDARD PLAN
Rt	RIGHT
Rte	ROUTE
RW	REDWOOD, RETAINING WALL
R/W	RIGHT OF WAY
Rwy	RAILWAY

S

S	SOUTH, SUPPLEMENT
SAE	STRUCTURE APPROACH EMBANKMENT
Salv	SALVAGE
SAPP	STRUCTURAL ALUMINUM PLATE PIPE
SB	SOUTHBOUND
SC	SAND CUSHION
SCSP	SLOTTED CORRUGATED STEEL PIPE
SD	STORM DRAIN
Sec	SECOND, SECTION
Sep	SEPARATION
SG	SUBGRADE
Shld	SHOULDER
Sht	SHEET
Sim	SIMILAR
₤	STATION LINE
SM	SELECTED MATERIAL
Spec	SPECIAL, SPECIFICATIONS
SPP	SLOTTED PLASTIC PIPE
SS	SLOPE STAKE
SSBM	STRAP AND SADDLE BRACKET METHOD
SSD	STRUCTURAL SECTION DRAIN
SSPA	STRUCTURAL STEEL PLATE ARCH
SSPP	STRUCTURAL STEEL PLATE PIPE
SSPPA	STRUCTURAL STEEL PLATE PIPE ARCH
SSRP	STEEL SPIRAL RIB PIPE
St	STREET
Sta	STATION
STBB	SINGLE THRIE BEAM BARRIER
Std	STANDARD
Str	STRUCTURE
Surf	SURFACING
SW	SIDEWALK, SOUND WALL
Swr	SEWER
Sym	SYMMETRICAL
S4S	SURFACE 4 SIDES

T

T	SEMI-TANGENT
Tan	TANGENT
TBB	THRIE BEAM BARRIER
Tbr	TIMBER
TC	TOP OF CURB
TCB	TRAFFIC CONTROL BOX
TCE	TEMPORARY CONSTRUCTION EASEMENT
Tel	TELEPHONE
Temp	TEMPORARY
TG	TOP OF GRADE
Tot	TOTAL
TP	TELEPHONE POLE
TPB	TREATED PERMEABLE BASE
TPM	TREATED PERMEABLE MATERIAL
Trans	TRANSITION

T continued

TS	TRANSVERSE, TRAFFIC SIGNAL, TUBULAR STEEL
Typ	TYPICAL

U

UC	UNDERCROSSING
UD	UNDERDRAIN
UG	UNDERGROUND
UON	UNLESS OTHERWISE NOTED
UP	UNDERPASS

V

V	VALVE, DESIGN SPEED
Var	VARIABLE, VARIES
VC	VERTICAL CURVE
VCP	VITRIFIED CLAY PIPE
Vert	VERTICAL
Via	VIADUCT
Vol	VOLUME

W

W	WEST, WIDTH
WB	WESTBOUND
WH	WEEP HOLE
WM	WIRE MESH
WS	WATER SURFACE
WSP	WELDED STEEL PIPE
Wt	WEIGHT
WV	WATER VALVE
WW	WINGWALL
WWLOL	WINGWALL LAYOUT LINE

X

X Sec	CROSS SECTION
Xing	CROSSING

Y

Yr	YEAR
Yrs	YEARS

Dist	COUNTY	ROUTE	POST MILES TOTAL PROJECT	SHEET No.	TOTAL SHEETS
01	Hum	299	32.1	11	32

Grace M. Tsushima
REGISTERED CIVIL ENGINEER

July 19, 2013
PLANS APPROVAL DATE

REGISTERED PROFESSIONAL ENGINEER Grace M. Tsushima No. C49814 Exp. 9-30-14 CIVIL STATE OF CALIFORNIA

THE STATE OF CALIFORNIA OR ITS OFFICERS OR AGENTS SHALL NOT BE RESPONSIBLE FOR THE ACCURACY OR COMPLETENESS OF SCANNED COPIES OF THIS PLAN SHEET.

TO ACCOMPANY PLANS DATED 09-08-14

UNIT OF MEASUREMENT SYMBOLS:

Some of the symbols used in the project plan quantity tables and in the Bid Item List are:

TABLE A

SYMBOL USED	DEFINITIONS
ACRE	ACRE
CF	CUBIC FOOT
CY	CUBIC YARD
EA	EACH
GAL	GALLON
LB	POUND
LF	LINEAR FOOT
SQFT	SQUARE FOOT
SQYD	SQUARE YARD
STA	100 FEET
TAB	TABLET
TON	2,000 POUNDS

Some of the symbols used in the plans other than in the project plan quantity tables are:

TABLE B

SYMBOL USED	DEFINITIONS
ksi	KIPS PER SQUARE INCH
ksf	KIPS PER SQUARE FOOT
psi	POUNDS PER SQUARE INCH
psf	POUNDS PER SQUARE FOOT
lb/ft^3, pcf	POUNDS PER CUBIC FOOT
tsf	TONS PER SQUARE FOOT
mph, MPH *	MILES PER HOUR
ø	NOMINAL DIAMETER
oz	OUNCE
lb	POUND
kip	1,000 POUNDS
cal	CALORIE
ft	FOOT OR FEET
gal	GALLON

* For use on a sign panel only

STATE OF CALIFORNIA
DEPARTMENT OF TRANSPORTATION

ABBREVIATIONS (SHEET 2 OF 2)

NO SCALE

RSP A10B DATED JULY 19, 2013 SUPERSEDES STANDARD PLAN A10B DATED MAY 20, 2011 - PAGE 2 OF THE STANDARD PLANS BOOK DATED 2010.

REVISED STANDARD PLAN RSP A10B

2010 REVISED STANDARD PLAN RSP A10B

DATE PLOTTED => 16-OCT-2014
TIME PLOTTED => 10:12

Dist	COUNTY	ROUTE	POST MILES TOTAL PROJECT	SHEET No.	TOTAL SHEETS
01	Hum	299	32.1	12	32

Randell D. Hiatt
REGISTERED CIVIL ENGINEER

July 19, 2013
PLANS APPROVAL DATE

REGISTERED PROFESSIONAL ENGINEER
Randell D. Hiatt
No. C50200
Exp. 6-30-15
CIVIL
STATE OF CALIFORNIA

THE STATE OF CALIFORNIA OR ITS OFFICERS OR AGENTS SHALL NOT BE RESPONSIBLE FOR THE ACCURACY OR COMPLETENESS OF SCANNED COPIES OF THIS PLAN SHEET.

TO ACCOMPANY PLANS DATED 09-08-14

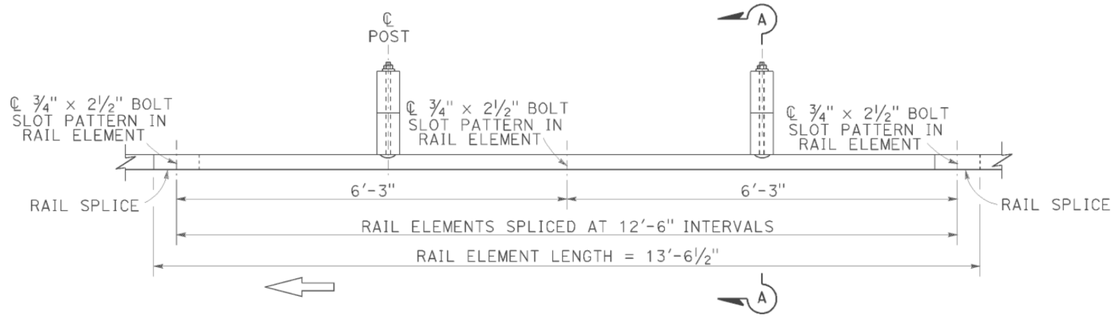

PLAN

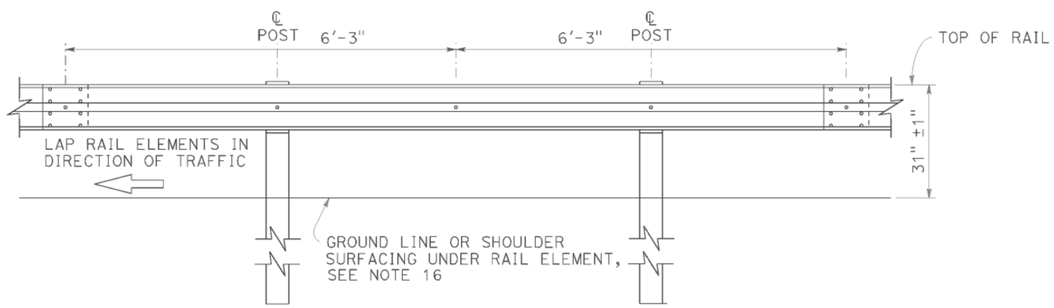

ELEVATION

MIDWEST GUARDRAIL SYSTEM WITH WOOD POST AND BLOCKS

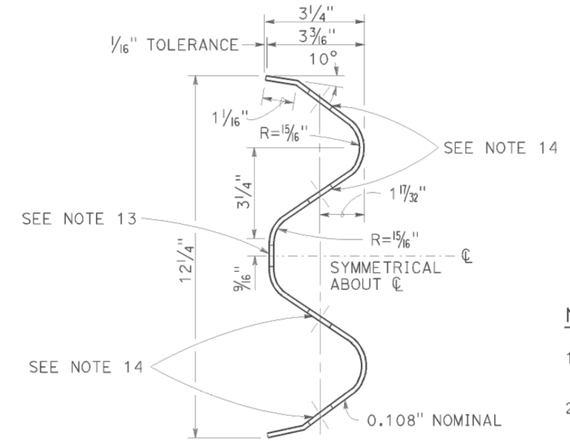

SECTION THRU RAIL ELEMENT

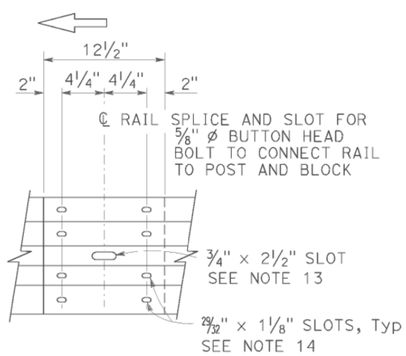

ELEVATION

RAIL ELEMENT SPLICE DETAIL

a) Connect the over lapped end of the rail elements with ⅝" ø × 1⅜" button head oval shoulder splice bolts inserted into the 29/32" × 1⅛" slots and bolted together with ⅝" ø recessed hex nuts. Recess of hex nut points toward rail element. A total of 8 bolts and nuts are to be used at each rail splice connection.

b) The ends of the rail elements are to be overlapped in the direction of traffic (see details).

c) Where end cap is to be attached to the end of a rail element, a total of 4 of the above described splice bolts and nuts are to be used.

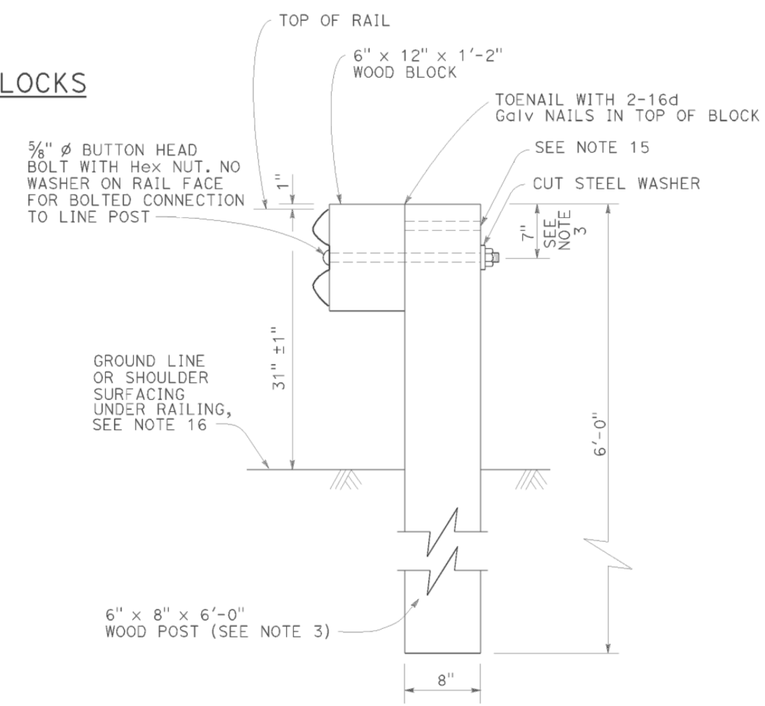

SECTION A-A

TYPICAL WOOD LINE POST INSTALLATION

See Note 4

NOTES:

1. For details of steel post installations, see Revised Standard Plan RSP A77L2.
2. For details of standard hardware used to construct MGS, see Revised Standard Plan RSP A77M1.
3. For details of wood posts and wood blocks used to construct MGS, see Revised Standard Plan RSP A77N1.
4. For additional installation details, see Revised Standard Plan RSP A77N3.
5. MGS post spacing to be 6'-3" center to center, except as otherwise noted.
6. For MGS typical layouts, see the A77P, A77Q and A77R Series of Standard Plans.
7. If railing is connected to terminal system end treatment, use 31" height terminal system end treatment.
8. For MGS end anchor details, see Revised Standard Plans RSP A77S1 and RSP A77T2.
9. For details of MGS transition to bridge railing, see Revised Standard Plan RSP A77U4.
10. For additional details of MSG connection to bridge railing, see Revised Standard Plans RSP A77U1, RSP A77U2 and RSP A77V1.
11. For MGS connection details to abutments and walls, see Revised Standard Plan RSP A77U3.
12. For typical MGS delineation and dike positioning details, see Revised Standard Plan RSP A77N4.
13. Slotted hole for bolted connection of rail element to block and post. See "Section Thru Rail Element".
14. Slotted holes for splice bolts to overlap ends of rail element. See "Section Thru Rail Element".
15. Additional hole in uppermost portion of line post is for potential future adjustments of railing height. See Revised Standard Plan RSP A77N1.
16. Install posts in soil.

STATE OF CALIFORNIA
DEPARTMENT OF TRANSPORTATION

MIDWEST GUARDRAIL SYSTEM STANDARD RAILING SECTION (WOOD POST WITH WOOD BLOCK)

NO SCALE

RSP A77L1 DATED JULY 19, 2013 SUPPLEMENTS STANDARD PLANS BOOK DATED 2010.

REVISED STANDARD PLAN RSP A77L1

2010 REVISED STANDARD PLAN RSP A77L1

DATE PLOTTED => 16-OCT-2014
TIME PLOTTED => 10:12

Dist	COUNTY	ROUTE	POST MILES TOTAL PROJECT	SHEET No.	TOTAL SHEETS
01	Hum	299	32.1	13	32

Randell D. Hiatt
REGISTERED CIVIL ENGINEER

July 19, 2013
PLANS APPROVAL DATE

REGISTERED PROFESSIONAL ENGINEER
Randell D. Hiatt
No. C50200
Exp. 6-30-15
CIVIL
STATE OF CALIFORNIA

THE STATE OF CALIFORNIA OR ITS OFFICERS OR AGENTS SHALL NOT BE RESPONSIBLE FOR THE ACCURACY OR COMPLETENESS OF SCANNED COPIES OF THIS PLAN SHEET.

TO ACCOMPANY PLANS DATED 09-08-14

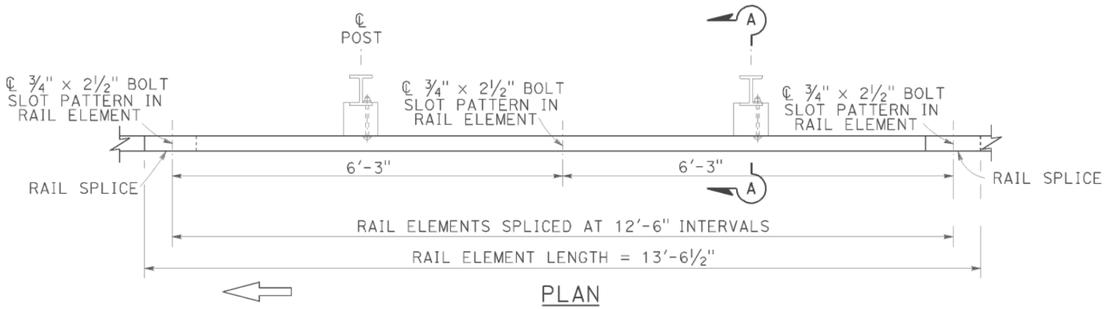

PLAN

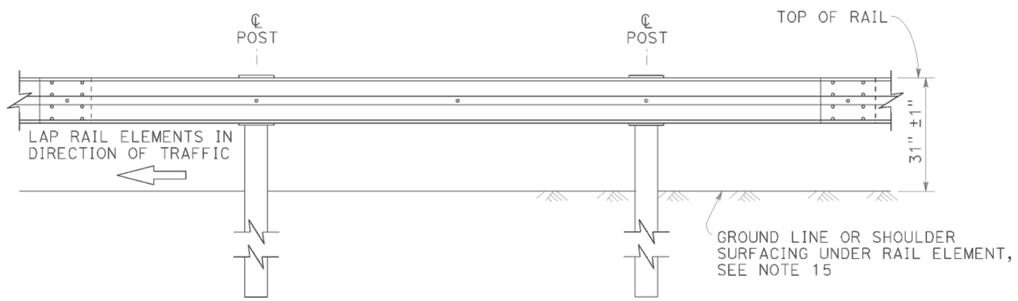

ELEVATION

MIDWEST GUARDRAIL SYSTEM WITH STEEL POSTS AND NOTCHED WOOD OR NOTCHED RECYCLED PLASTIC BLOCKS

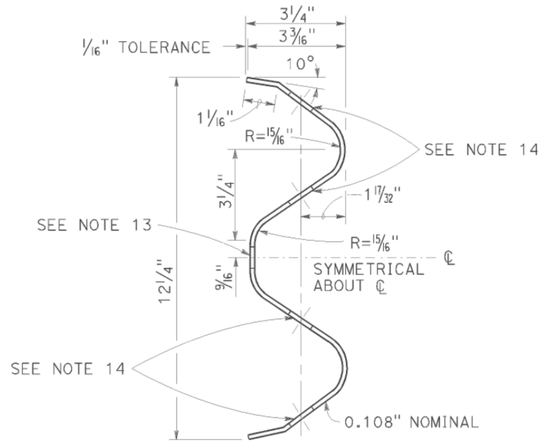

SECTION THRU RAIL ELEMENT

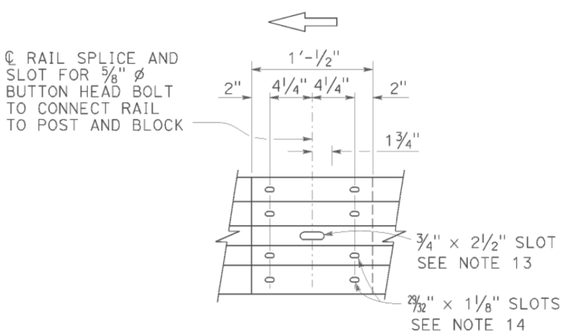

ELEVATION

RAIL ELEMENT SPLICE DETAIL

a) Connect the over lapped end of the rail elements with ⅝" ø × 1⅜" button head oval shoulder splice bolts inserted into the 29/32" × 1⅛" slots and bolted together with ⅝" ø recessed hex nuts. Recess of hex nut points toward rail element. A total of 8 bolts and nuts are to be used at each rail splice connection.

b) The ends of the rail elements are to be overlapped in the direction of traffic (see details).

c) Where end cap is to be attached to the end of a rail element, a total of 4 of the above described splice bolts and nuts are to be used.

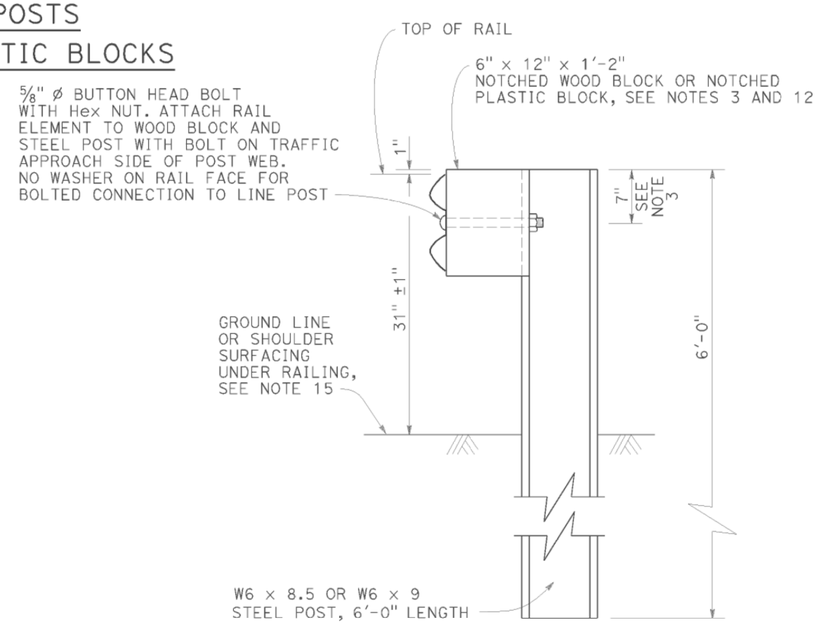

SECTION A-A

TYPICAL STEEL LINE POST INSTALLATION

See Note 4

NOTES:

1. For details of wood post installations, see Revised Standard Plan RSP A77L1.
2. For details of standard hardware used to construct MGS, see Revised Standard Plan RSP A77M1.
3. For details of steel posts and notched wood blocks used to construct MGS, see Revised Standard Plan RSP A77N2.
4. For additional installation details, see Revised Standard Plan RSP A77N3.
5. MGS post spacing to be 6'-3" center to center, except as otherwise noted.
6. For MGS typical layouts, see the A77P, A77Q and A77R Series of Standard Plans.
7. If railing is connected to terminal system end treatment, use 31" height terminal system end treatment.
8. For MGS end anchor details, see Revised Standard Plans RSP A77S1 and RSP A77T2.
9. For details of MGS transition to bridge railing, see Revised Standard Plan RSP A77U4.
10. For additional details of MGS connection to bridge railings, see Revised Standard Plans RSP A77U1, RSP A77U2 and RSP A77V1.
11. For dike positioning and MGS delineation details, see Revised Standard Plan RSP A77N4.
12. Notched face of block faces steel post.
13. Slotted hole for bolted connection of rail element to block and post. See "Section Thru Rail Element".
14. Slotted holes for splice bolts to overlap ends of rail element. See "Section Thru Rail Element".
15. Install posts in soil.

STATE OF CALIFORNIA
DEPARTMENT OF TRANSPORTATION

MIDWEST GUARDRAIL SYSTEM STANDARD RAILING SECTION (STEEL POST WITH NOTCHED WOOD OR NOTCHED RECYCLED PLASTIC BLOCK)

NO SCALE

RSP A77L2 DATED JULY 19, 2013 SUPPLEMENTS THE STANDARD PLANS BOOK DATED 2010.

REVISED STANDARD PLAN RSP A77L2

2010 REVISED STANDARD PLAN RSP A77L2

DATE PLOTTED => 16-OCT-2014
TIME PLOTTED => 10:12

Dist	COUNTY	ROUTE	POST MILES TOTAL PROJECT	SHEET No.	TOTAL SHEETS
01	Hum	299	32.1	14	32

Randell D. Hiatt
REGISTERED CIVIL ENGINEER

November 15, 2013
PLANS APPROVAL DATE

REGISTERED PROFESSIONAL ENGINEER
Randell D. Hiatt
No. C50200
Exp. 6-30-15
CIVIL
STATE OF CALIFORNIA

THE STATE OF CALIFORNIA OR ITS OFFICERS OR AGENTS SHALL NOT BE RESPONSIBLE FOR THE ACCURACY OR COMPLETENESS OF SCANNED COPIES OF THIS PLAN SHEET.

TO ACCOMPANY PLANS DATED 09-08-14

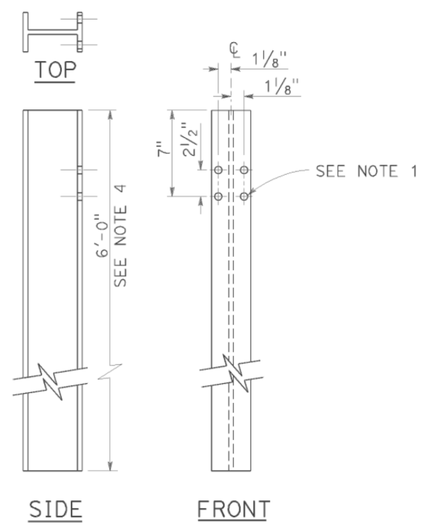

W6 x 9 OR W6 x 8.5
STEEL POST
See Note 4

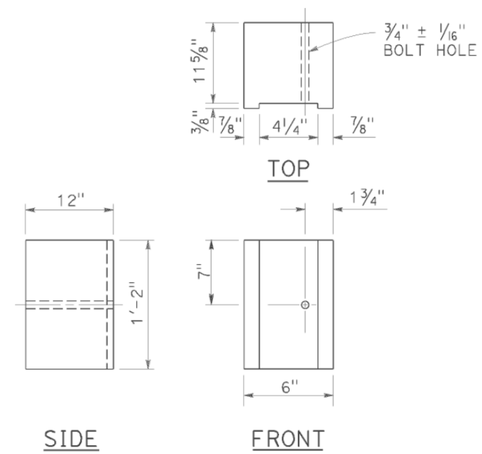

6" x 12"
NOTCHED WOOD BLOCK
See Notes 2 and 3

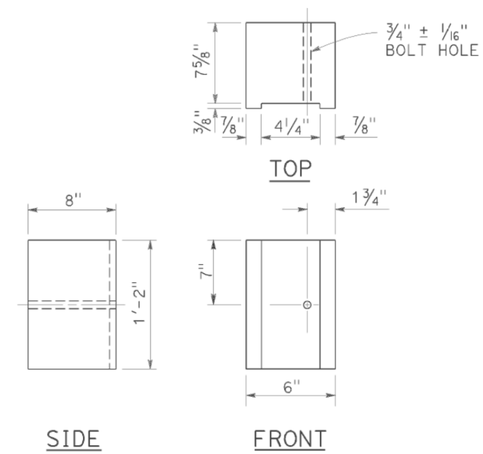

6" x 8"
NOTCHED WOOD BLOCK
Only for use with metal beam guard railing. See Note 5

NOTES:

1. All holes in steel post shall be 13/16" Dia maximum.
2. Dimensions shown for wood block are nominal.
3. Notched face of block faces steel post.
4. 6'-0" length posts to be used for typical roadway installation. See Revised Standard Plan RSP A77N3.
5. See Revised Standard Plan RSP A77L3 for use of 6" x 8" and 8" x 8" notched wood blocks.
6. This post and 8" x 12" block combination to be used for line post sections of MGS on narrow roadways and where strengthened line post sections of MGS are warranted to shield fixed objects.

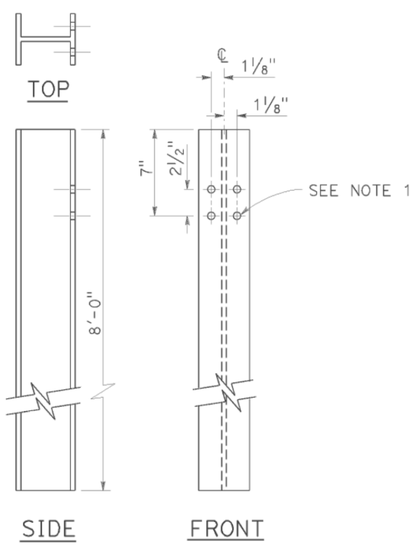

W6 x 15
STEEL POST
See Note 6

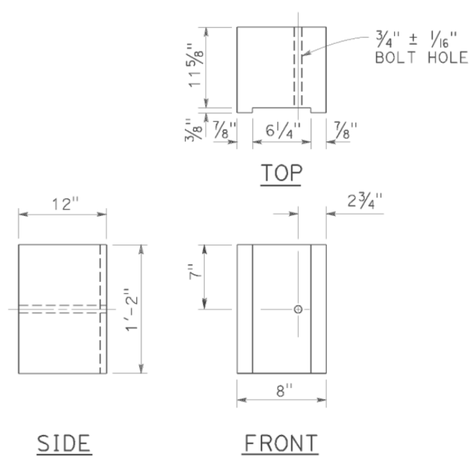

8" x 12"
NOTCHED WOOD BLOCK
See Notes 2 and 3

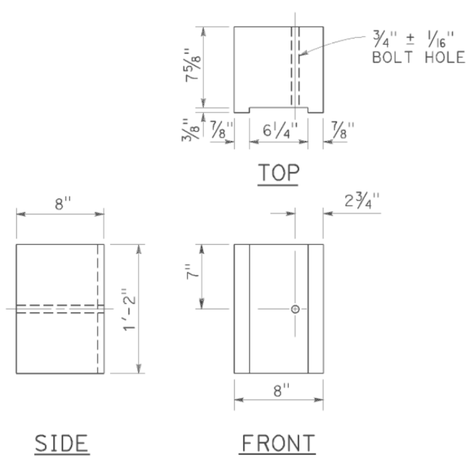

8" x 8"
NOTCHED WOOD BLOCK
Only for use with metal beam guard railing. See Note 5

STATE OF CALIFORNIA
DEPARTMENT OF TRANSPORTATION

MIDWEST GUARDRAIL SYSTEM STEEL POST AND NOTCHED WOOD BLOCK DETAILS

NO SCALE

RSP A77N2 DATED NOVEMBER 15, 2013 SUPERSEDES RSP A77N2
DATED JULY 19, 2013 THAT SUPPLEMENTS THE STANDARD PLANS BOOK DATED 2010.

REVISED STANDARD PLAN RSP A77N2

2010 REVISED STANDARD PLAN RSP A77N2

DATE PLOTTED => 16-OCT-2014
TIME PLOTTED => 10:12

Dist	COUNTY	ROUTE	POST MILES TOTAL PROJECT	SHEET No.	TOTAL SHEETS
01	Hum	299	32.1	15	32

Randell D. Hiatt
REGISTERED CIVIL ENGINEER

July 19, 2013
PLANS APPROVAL DATE

REGISTERED PROFESSIONAL ENGINEER
Randell D. Hiatt
No. C50200
Exp. 6-30-15
CIVIL
STATE OF CALIFORNIA

THE STATE OF CALIFORNIA OR ITS OFFICERS OR AGENTS SHALL NOT BE RESPONSIBLE FOR THE ACCURACY OR COMPLETENESS OF SCANNED COPIES OF THIS PLAN SHEET.

TO ACCOMPANY PLANS DATED 09-08-14

NOTES:

1. When necessary to place dike more than 7" in front of face of MGS, only Type C dike may be used. For dike details, see Revised Standard Plan RSP A87B.
2. For standard railing post embedment, see Revised Standard Plan RSP A77N3.
3. MGS delineation to be used where shown on the Project Plans.
4. When dike or curb is placed under MGS, the maximum height of the dike or curb shall be 6". Mountable dike should not be used. For dike and curb details, see Revised Standard Plans RSP A87A and RSP A87B.
5. For details of typical distance between the face of rail and hinge point, see Revised Standard Plan RSP A77N3.
6. For steel line posts, use 1/4 - 20 self-tapping screws in 0.22" diameter holes or 1/4" bolts in 9/32" diameter holes.

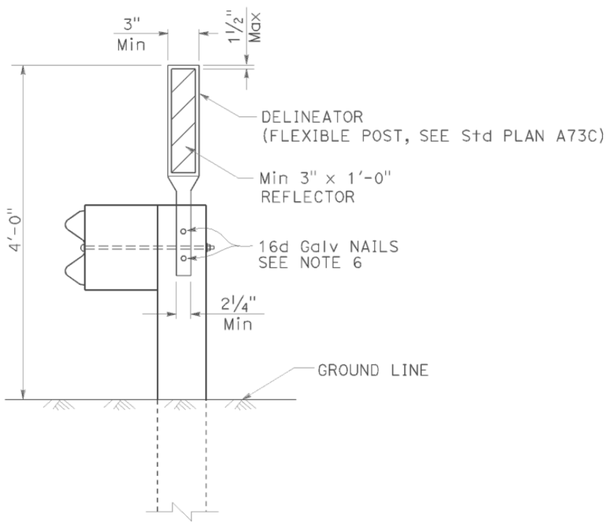

MGS DELINEATION
See Note 3

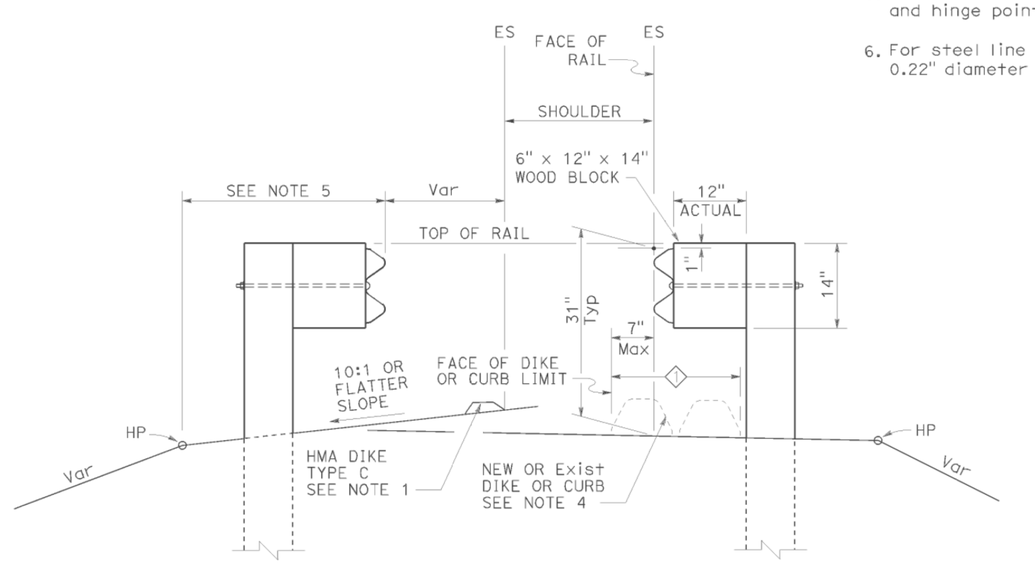

DIKE POSITIONING
See Note 1

1 PERMISSIBLE DIKE OR CURB PLACEMENT AREA

STATE OF CALIFORNIA
DEPARTMENT OF TRANSPORTATION

MIDWEST GUARDRAIL SYSTEM TYPICAL RAILING DELINEATION AND DIKE POSITIONING DETAILS

NO SCALE

RSP A77N4 DATED JULY 19, 2013 SUPPLEMENTS THE STANDARD PLANS BOOK DATED 2010.

REVISED STANDARD PLAN RSP A77N4

2010 REVISED STANDARD PLAN RSP A77N4

DATE PLOTTED => 16-OCT-2014
TIME PLOTTED => 10:12

Dist	COUNTY	ROUTE	POST MILES TOTAL PROJECT	SHEET No.	TOTAL SHEETS
01	Hum	299	32.1	16	32

Randell D. Hiatt
REGISTERED CIVIL ENGINEER

November 15, 2013
PLANS APPROVAL DATE

REGISTERED PROFESSIONAL ENGINEER — Randell D. Hiatt No. C50200 Exp. 6-30-15 CIVIL — STATE OF CALIFORNIA

THE STATE OF CALIFORNIA OR ITS OFFICERS OR AGENTS SHALL NOT BE RESPONSIBLE FOR THE ACCURACY OR COMPLETENESS OF SCANNED COPIES OF THIS PLAN SHEET.

TO ACCOMPANY PLANS DATED 09-08-14

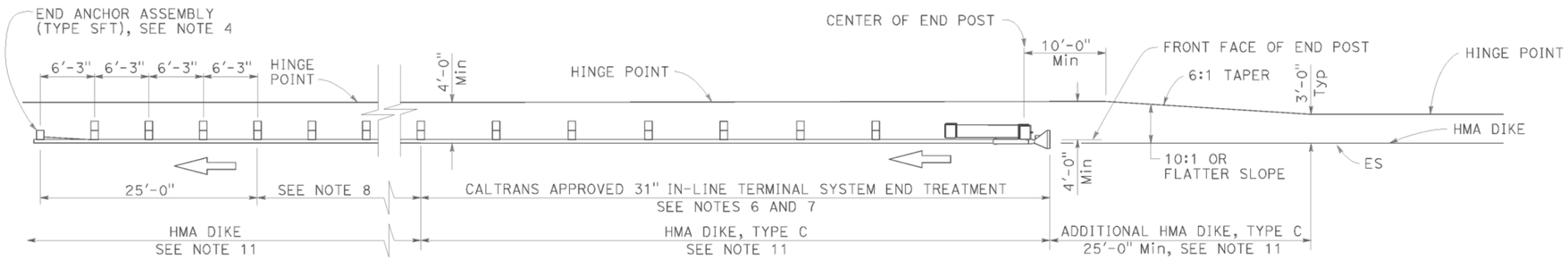

TYPE 11A LAYOUT

(Embankment MGS installation with 31" in-line end treatment at traffic approach end of railing) see Note 5

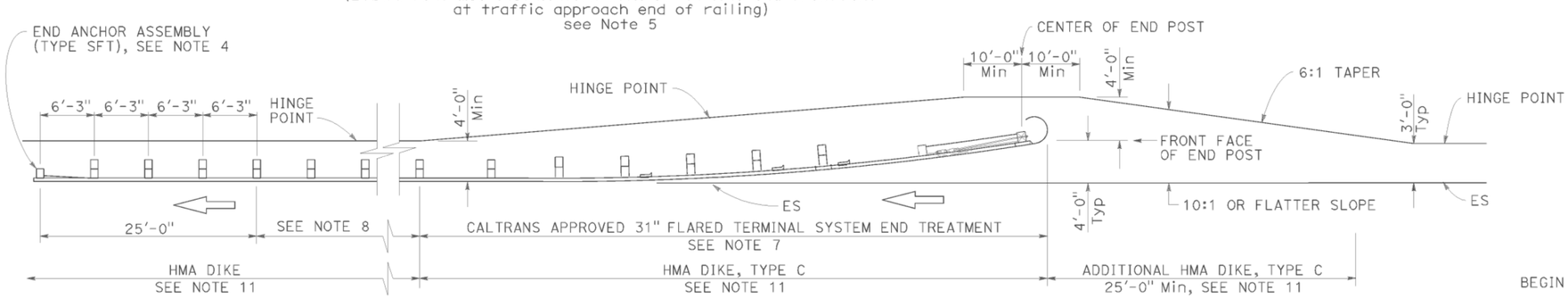

TYPE 11B LAYOUT

(Embankment MGS installation with 31" flared end treatment at traffic approach end of railing) see Note 5

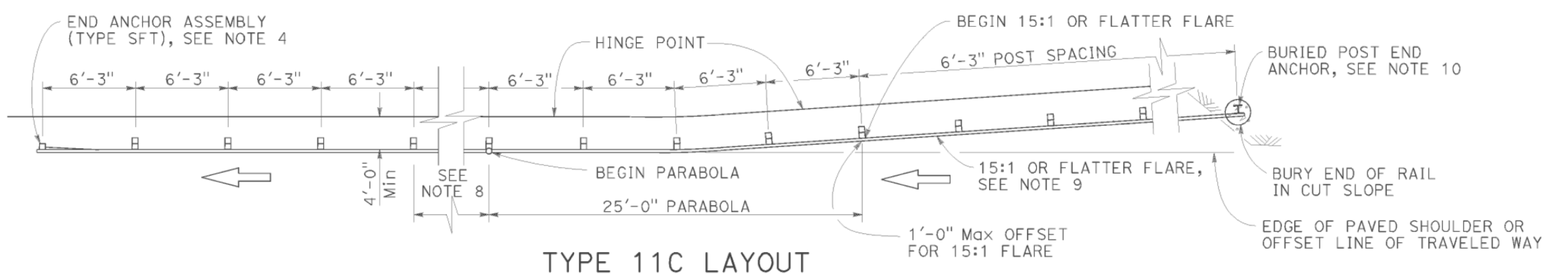

TYPE 11C LAYOUT

(Embankment MGS installation with buried end anchor treatment at traffic approach end of railing) see Notes 5 and 11

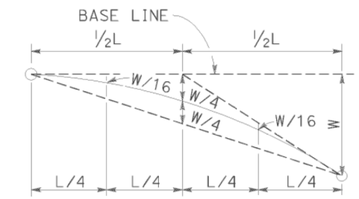

TYPICAL PARABOLIC LAYOUT

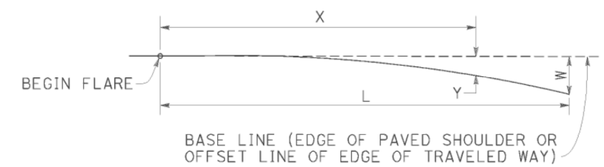

$$Y = \frac{WX^2}{L^2}$$

Y = OFFSET FROM BASE LINE
W = MAXIMUM OFFSET
X = DISTANCE ALONG BASE LINE
L = LENGTH OF FLARE

PARABOLIC FLARE OFFSETS

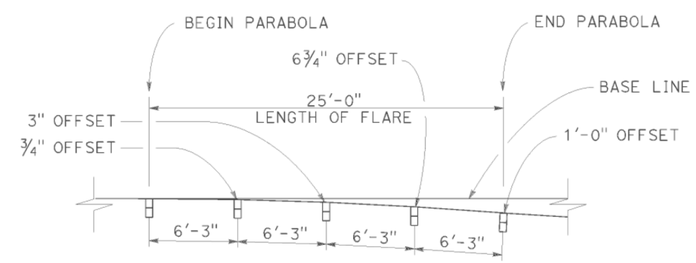

TYPICAL FLARE OFFSETS FOR 1 FOOT Max END OFFSET

NOTES:

1. Line post, blocks and hardware to be used are shown on Revised Standard Plans RSP A77L1, RSP A77L2, RSP A77M1, RSP A77N1 and RSP A77N2.
2. MGS post spacing to be 6'-3" center to center, except as otherwise noted.
3. Except as noted, line posts are 6" x 8" x 6'-0" wood with 6" x 12" x 1'-2" wood blocks. W6 x 8.5 or W6 x 9 steel posts, 6'-0" in length, with 6" x 12" x 1'-2" notched wood blocks or recycled plastic blocks may be used for 6" x 8" x 6'-0" wood post with 6" x 12" x 1'-2" wood blocks where applicable and when specified.
4. For End Anchor Assembly (Type SFT) details, see Revised Standard Plan RSP A77S1.
5. Layout Types 11A, 11B or 11C are typically used where MGS is recommended to shield embankment slopes and a crashworthy end treatment is required for only one direction of traffic.
6. 31" in-line terminal system end treatments are used where site conditions will not accommodate a flared end treatment.
7. The type of 31" terminal system end treatment to be used will be shown on the Project Plans.
8. Dependent on site conditions (embankment height and side slope), construction of additional MGS (length equal to multiples of 12'-6" with 6'-3" post spacing) may be advisable.
9. The 15:1 or flatter flare used with buried end anchors is based on the edge of the paved shoulder or offset line of edge of the traveled way. The length of MGS within the 15:1 or flatter flare is based on site conditions and should be a length equal to multiples of 12'-6".
10. For details of the buried post end anchor used with Type 11C Layout, see Revised Standard Plan RSP A77T2.
11. Where placement of dike is required with MGS installations, see Revised Standard Plan RSP A77N4 for dike positioning details.

STATE OF CALIFORNIA
DEPARTMENT OF TRANSPORTATION

MIDWEST GUARDRAIL SYSTEM TYPICAL LAYOUTS FOR EMBANKMENTS

NO SCALE

RSP A77P1 DATED NOVEMBER 15, 2013 SUPERSEDES RSP A77P1 DATED JULY 19, 2013 THAT SUPPLEMENTS THE STANDARD PLANS BOOK DATED 2010.

REVISED STANDARD PLAN RSP A77P1

2010 REVISED STANDARD PLAN RSP A77P1

DATE PLOTTED => 16-OCT-2014
TIME PLOTTED => 10:12

Dist	COUNTY	ROUTE	POST MILES TOTAL PROJECT	SHEET No.	TOTAL SHEETS
01	Hum	299	32.1	17	32

Randell D. Hiatt
REGISTERED CIVIL ENGINEER

July 19, 2013
PLANS APPROVAL DATE

REGISTERED PROFESSIONAL ENGINEER
Randell D. Hiatt
No. C50200
Exp. 6-30-15
CIVIL
STATE OF CALIFORNIA

THE STATE OF CALIFORNIA OR ITS OFFICERS OR AGENTS SHALL NOT BE RESPONSIBLE FOR THE ACCURACY OR COMPLETENESS OF SCANNED COPIES OF THIS PLAN SHEET.

TO ACCOMPANY PLANS DATED 09-08-14

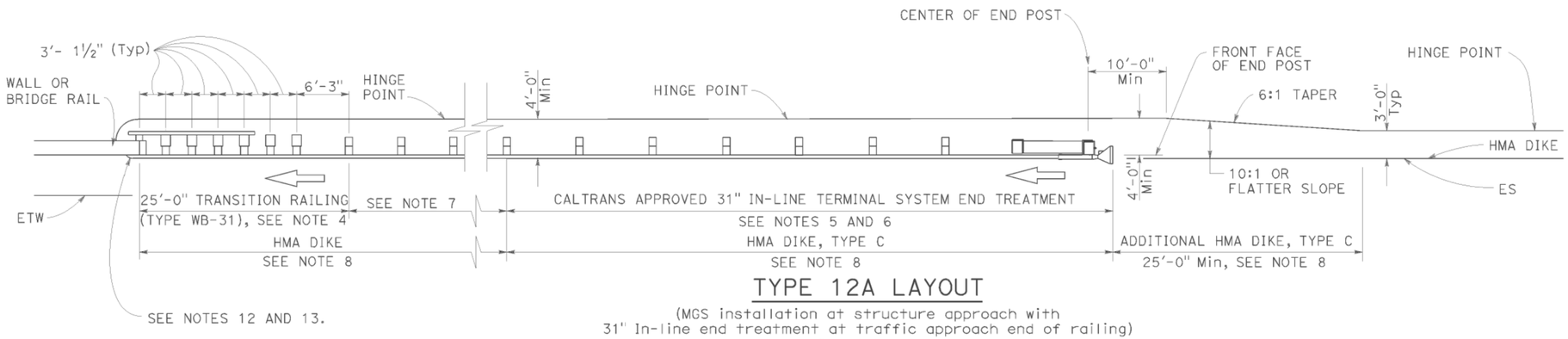

TYPE 12A LAYOUT

(MGS installation at structure approach with
31" In-line end treatment at traffic approach end of railing)
See Notes 9

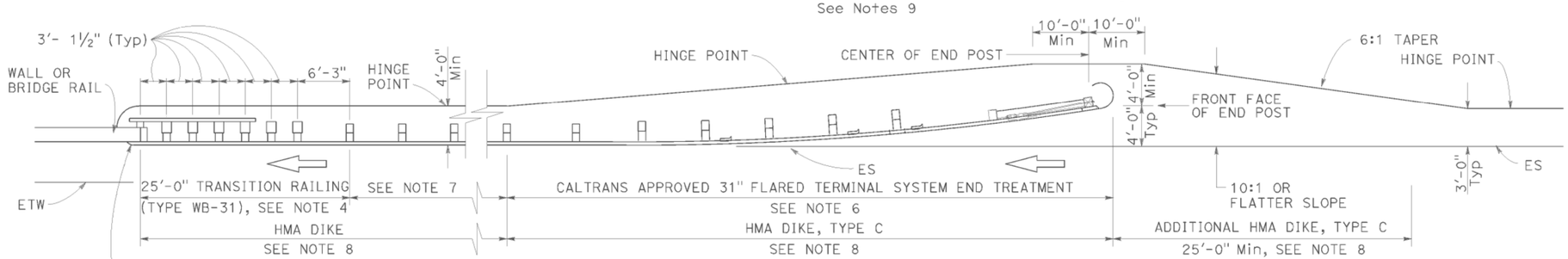

TYPE 12B LAYOUT

(MGS installation at structure approach with
31" Flared end treatment at traffic approach end of railing)
See Notes 9

NOTES:

1. Line post, blocks and hardware to be used are shown on Revised Standard Plans RSP A77L1, RSP A77L2, RSP A77M1, RSP A77N1 and RSP A77N2.
2. MGS post spacing to be 6'-3" center to center, except as otherwise noted.
3. Except as noted, line posts are 6" x 8" x 6'-0" wood with 6" x 12" x 1'-2" wood blocks. W6 x 8.5 or W6 x 9 steel posts, 6'-0" in length, with 6" x 12" x 1'-2" notched wood blocks or plastic blocks may be used for 6" x 8" x 6'-0" wood posts with 6" x 12" x 1'-2" wood blocks where applicable and when specified.
4. For Transition Railing (Type WB-31) details for Types 12A and 12B Layouts, see Revised Standard Plan RSP A77U4.
5. 31" in-line terminal system end treatments are used where site conditions will not accommodate a 31" flared end treatment.
6. The type 31" of terminal system end treatment to be used will be shown on the Project Plans.
7. Dependent on site conditions (embankment height, side slopes, or other fixed objects), it may be advisable to construct additional guard railing (a length equal to multiples of 12'-6" with 6'-3" post spacing) between the transition railing and end treatment. A 12.5 degree angle of departure can be drawn on the Project Plans from the edge of traveled way through the outer most point of the fixed object to determine the additional length of railing needed.
8. Where placement of dike is required with guard railing installations, see Revised Standard Plan RSP A77N4 for dike positioning details.
9. Type 12A or Type 12B Layouts are typically used:
   a. To the right of approaching traffic, at the end of a structure, on two-lane conventional highway where the roadbed width across the structure is less than 40 feet.
   b. To the left of approaching traffic, at the end of a structure, on two-lane conventional highway where the roadbed width across the structure is less than 40 feet.
   c. To the right of approaching traffic at the end of each structure on multilane freeways or expressways with separate adjacent or parallel bridges.
   d. To the right of approaching traffic at the end of the structure on multilane freeways or expressways with decked median on the bridge.
10. See Revised Standard Plan RSP A77Q3 for typical layout used left of approaching traffic at the ends of each structure on multilane freeways or expressways with separate adjacent or parallel bridges.
11. For additional details of typical connections to bridge rail, see Connection Detail AA on Revised Standard Plans RSP A77U1 and RSP A77U2 and Connection Detail FF on Revised Standard Plans RSP A77V1 and RSP A77V2.
12. For additional details of a typical connection to walls or abutments, see Revised Standard Plan RSP A77U3.

STATE OF CALIFORNIA
DEPARTMENT OF TRANSPORTATION

MIDWEST GUARDRAIL SYSTEM TYPICAL LAYOUTS FOR STRUCTURE APPROACH

NO SCALE

RSP A77Q1 DATED JULY 19, 2013 SUPPLEMENTS THE STANDARD PLANS BOOK DATED 2010.

REVISED STANDARD PLAN RSP A77Q1

2010 REVISED STANDARD PLAN RSP A77Q1

DATE PLOTTED => 16-OCT-2014
TIME PLOTTED => 10:12

Dist	COUNTY	ROUTE	POST MILES TOTAL PROJECT	SHEET No.	TOTAL SHEETS
01	Hum	299	32.1	18	32

Randell D. Hiatt
REGISTERED CIVIL ENGINEER

July 19, 2013
PLANS APPROVAL DATE

REGISTERED PROFESSIONAL ENGINEER
Randell D. Hiatt
No. C50200
Exp. 6-30-15
CIVIL
STATE OF CALIFORNIA

THE STATE OF CALIFORNIA OR ITS OFFICERS OR AGENTS SHALL NOT BE RESPONSIBLE FOR THE ACCURACY OR COMPLETENESS OF SCANNED COPIES OF THIS PLAN SHEET.

TO ACCOMPANY PLANS DATED 09-08-14

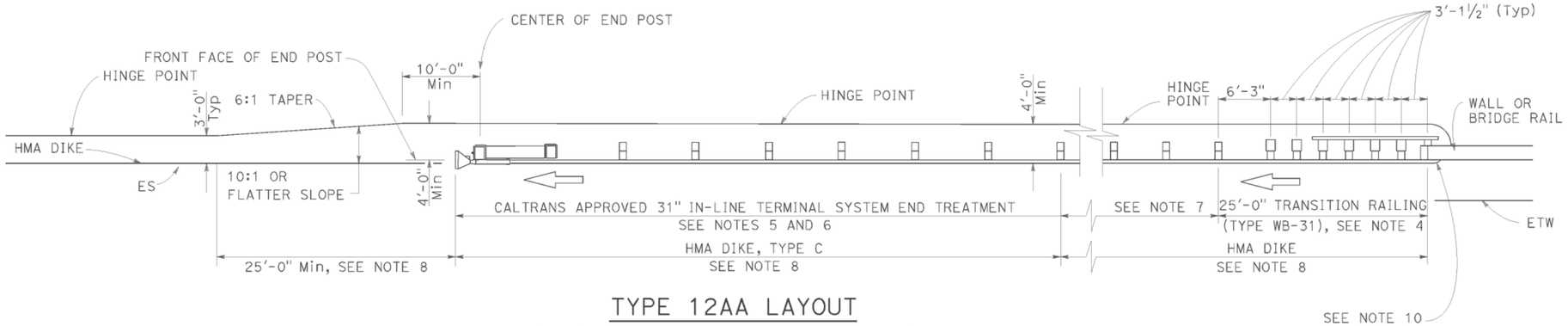

TYPE 12AA LAYOUT

(MGS installation at structure departure with
31" in-line end treatment at trailing end of railing)
See Notes 8 and 9

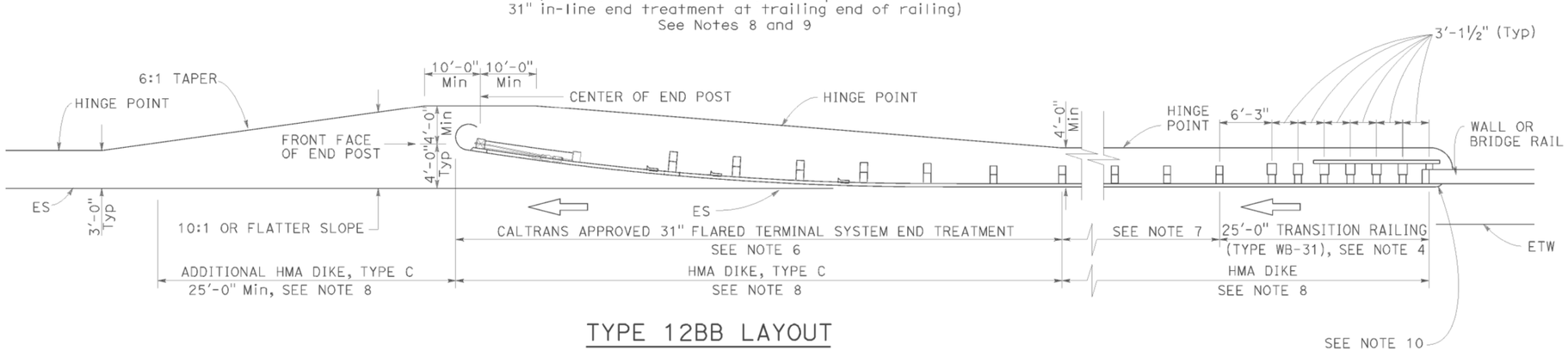

TYPE 12BB LAYOUT

(MGS installation at structure departure with
31" flared end treatment at trailing end of railing)
See Notes 8 and 9

NOTES:

1. Line post, blocks and hardware to be used are shown on Revised Standard Plans RSP A77L1, RSP A77L2, RSP A77M1, RSP A77N1 and RSP A77N2.
2. MGS post spacing to be 6'-3" center to center, except as otherwise noted.
3. Except as noted, line posts are 6" x 8" x 6'-0" wood with 6" x 12" x 1'-2" wood blocks. W6 x 8.5 or W6 x 9 steel posts, 6'-0" in length, with 6" x 12" x 1-2" notched wood blocks or notched recycled plastic blocks may be used for 6" x 8" x 6'-0" wood posts with 6" x 12" x 1'-2" wood blocks where applicable and when specified.
4. For Transition Railing (Type WB-31) details for Types 12AA and 12BB Layouts, see Revised Standard Plan RSP A77U4.
5. 31" in-line terminal system treatments are used where site conditions will not accommodate a 31" flared end treatment.
6. The type of 31" terminal system to be used will be shown on the Project Plans.
7. Dependent on site conditions (embankment height, side slopes, other fixed objects), it may be advisable to construct additional MGS (a length equal to multiples of 12'-6" with 6'-3" post spacing) between the transition railing and 31" end treatments.
8. Where placement of dike is required with MGS installations, see Revised Standard Plan RSP A77N4 for dike positioning details.
9. Type 12AA or Type 12BB Layouts are typically used to the right of traffic departing a structure on two-way conventional highways where the roadbed width across the structure is less than 40 feet.
10. For additional details of typical connections to bridge rail, see Connection Detail CC on Revised Standard Plan RSP A77U2 and Connection Detail HH on Revised Standard Plan RSP A77V2.

STATE OF CALIFORNIA
DEPARTMENT OF TRANSPORTATION

MIDWEST GUARDRAIL SYSTEM TYPICAL LAYOUTS FOR STRUCTURE DEPARTURE

NO SCALE

RSP A77Q4 DATED JULY 19, 2013 SUPPLEMENTS THE STANDARD PLANS BOOK DATED 2010.

REVISED STANDARD PLAN RSP A77Q4

2010 REVISED STANDARD PLAN RSP A77Q4

DATE PLOTTED => 16-OCT-2014
TIME PLOTTED => 10:12

Dist	COUNTY	ROUTE	POST MILES TOTAL PROJECT	SHEET No.	TOTAL SHEETS
01	Hum	299	32.1	19	32

Randell D. Hiatt
REGISTERED CIVIL ENGINEER

November 15, 2013
PLANS APPROVAL DATE

REGISTERED PROFESSIONAL ENGINEER
Randell D. Hiatt
No. C50200
Exp. 6-30-15
CIVIL
STATE OF CALIFORNIA

THE STATE OF CALIFORNIA OR ITS OFFICERS OR AGENTS SHALL NOT BE RESPONSIBLE FOR THE ACCURACY OR COMPLETENESS OF SCANNED COPIES OF THIS PLAN SHEET.

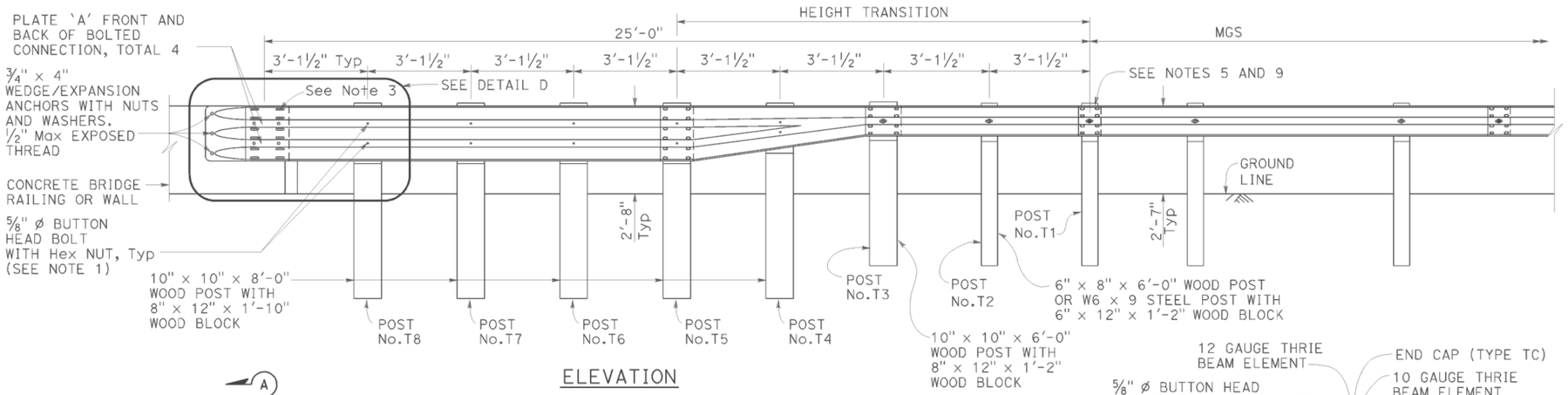

ELEVATION

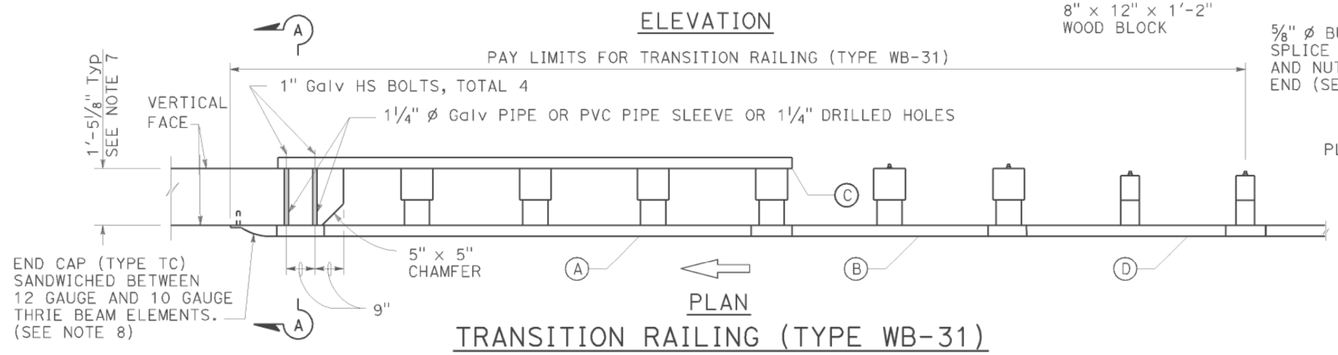

PLAN

TRANSITION RAILING (TYPE WB-31)

(No Blockout Attachment)

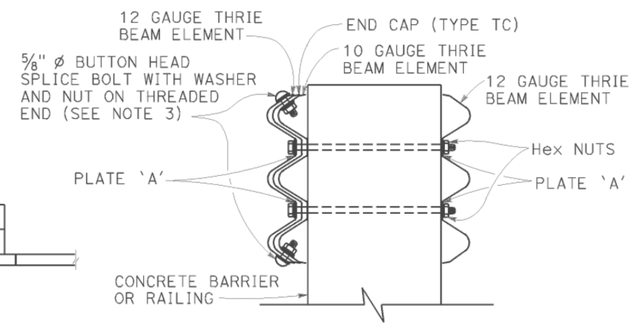

SECTION A-A

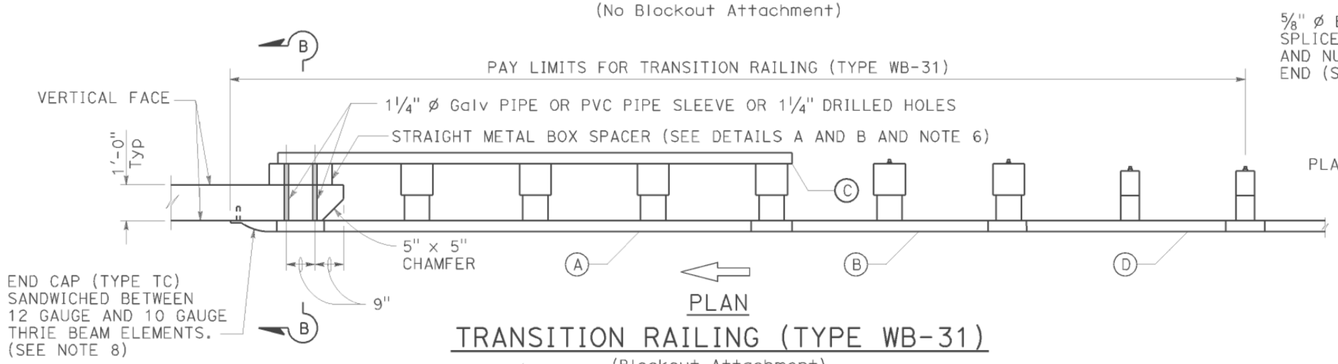

PLAN

TRANSITION RAILING (TYPE WB-31)

(Blockout Attachment)

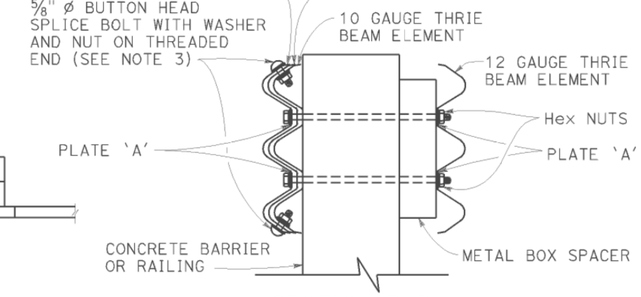

SECTION B-B

NOTES:

TO ACCOMPANY PLANS DATED 09-08-14

1. Use 5/8" ø Button head bolts and hex nuts for connections to posts. No washer on rail face for bolted connections to post.
2. The nested rail elements, end cap, and 'W' beam to thrie beam element may be spliced together prior to bolting the elements to the wood post and concrete barrier or railing.
3. Exterior splice bolt holes for rail element splices at Post No. T5 and the connection to the concrete barrier or railing shall be the standard 29/32" x 1 1/8" slot size. Interior splice bolt holes at these locations may be increased up to 1 1/4" ø. Only the top 4 and the bottom 4 splice bolts with washers and nuts are required for rail splices at Post No. T5 and the connection to the concrete barrier or railing.
4. The top elevation of Posts No. T2 through No. T7 shall not project more than 1" above the top elevation of the rail element.
5. Typically, the railing connected to Transition Railing (Type WB-31) will be either standard railing section of MGS with height transition ratio of 150:1 or a Caltrans approved 31" end treatment attached to Post No. T1.
6. The depth of the metal box spacer varies from the 9 1/8" to 1 1/2" and is dependent on the width of the concrete railing or wall. The combined dimension for the depth of the metal box spacer plus the width of railing or wall is typically 21 1/8". Where the space between the backside of the concrete railing or wall and the rear thrie beam element is less than 1 1/2", metal plates similar to Plate 'A' are to be used as spacers.
7. Where the width of the concrete railing or wall is greater than 17 1/8", wood blocks are to be used to fill the space created between the backside of Posts No. T5 through No. T8 and the rear thrie beam element. These wood blocks shall be 8" in width and 1'-2" in length. The dimension between the front thrie beam element and the rear thrie beam element is to match the width of the concrete railing or wall.
8. End cap may be installed over 12 gauge and 10 gauge thrie beam elements where transition railing is installed on the departure end of bridge railing.
9. Conform standard railing section height to 31" at Post No. T1 using height transition ratio of 150:1.

LEGEND:

(A) NESTED THRIE BEAM ELEMENTS (ONE 12 GAUGE ELEMENT NESTED OVER ONE 10 GAUGE ELEMENT).

(B) ONE ASYMMETRICAL 10 GAUGE "W" BEAM TO THRIE BEAM ELEMENT.

(C) ONE 12 GAUGE THRIE BEAM ELEMENT.

(D) ONE 10 GAUGE "W" BEAM RAIL ELEMENT (7'-3 1/2" LENGTH)

10 GAUGE = 0.138" THICK
12 GAUGE = 0.108" THICK

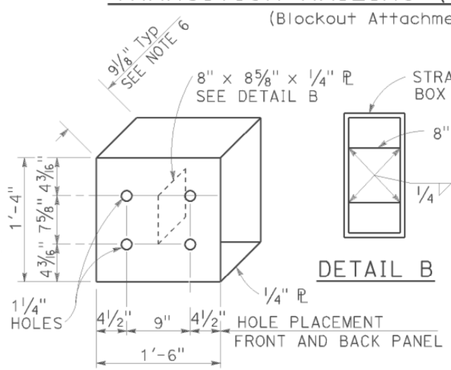

DETAIL A

STRAIGHT METAL BOX SPACER

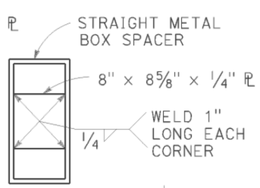

DETAIL B

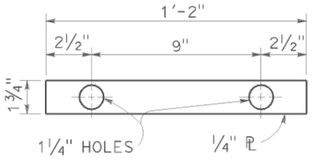

DETAIL C

PLATE 'A'

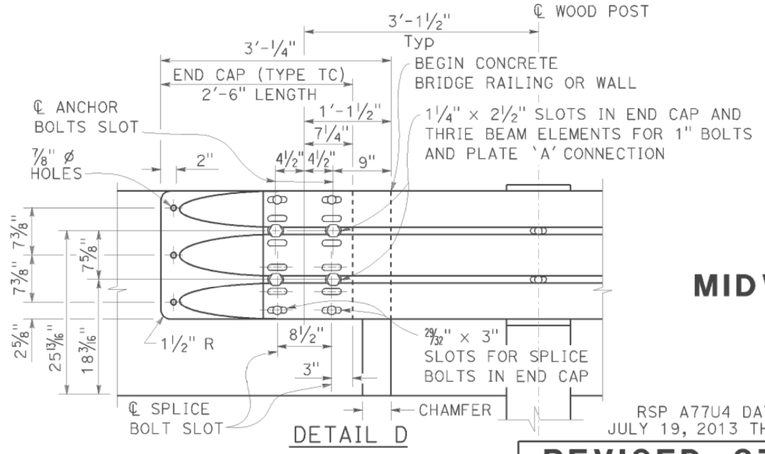

DETAIL D

STATE OF CALIFORNIA
DEPARTMENT OF TRANSPORTATION

MIDWEST GUARDRAIL SYSTEM TRANSITION RAILING (TYPE WB-31)

NO SCALE

RSP A77U4 DATED NOVEMBER 15, 2013 SUPERSEDES RSP A77U4 DATED JULY 19, 2013 THAT SUPPLEMENTS THE STANDARD PLANS BOOK DATED 2010.

REVISED STANDARD PLAN RSP A77U4

2010 REVISED STANDARD PLAN RSP A77U4

DATE PLOTTED => 16-OCT-2014
TIME PLOTTED => 10:13

Dist	COUNTY	ROUTE	POST MILES TOTAL PROJECT	SHEET No.	TOTAL SHEETS
01	Hum	299	32.1	20	32

REGISTERED CIVIL ENGINEER

July 19, 2013
PLANS APPROVAL DATE

REGISTERED PROFESSIONAL ENGINEER
Michael Janzen
No. 44788
Exp. 03-31-14
CIVIL
STATE OF CALIFORNIA

THE STATE OF CALIFORNIA OR ITS OFFICERS OR AGENTS SHALL NOT BE RESPONSIBLE FOR THE ACCURACY OR COMPLETENESS OF SCANNED COPIES OF THIS PLAN SHEET.

TO ACCOMPANY PLANS DATED 09-08-14

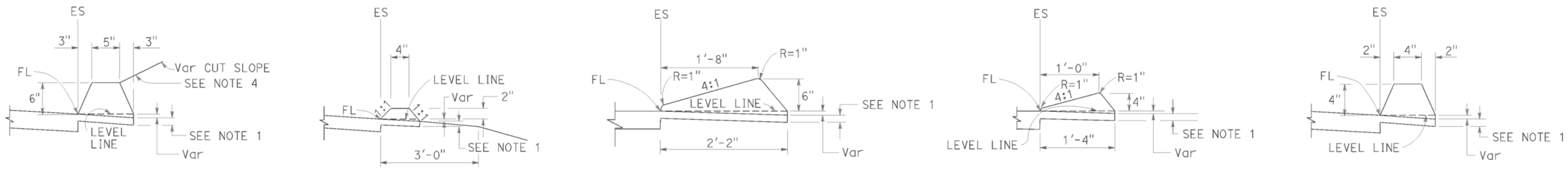

TYPE A
See Note 3

TYPE C

TYPE D

TYPE E

TYPE F
See Note 5

DIKES

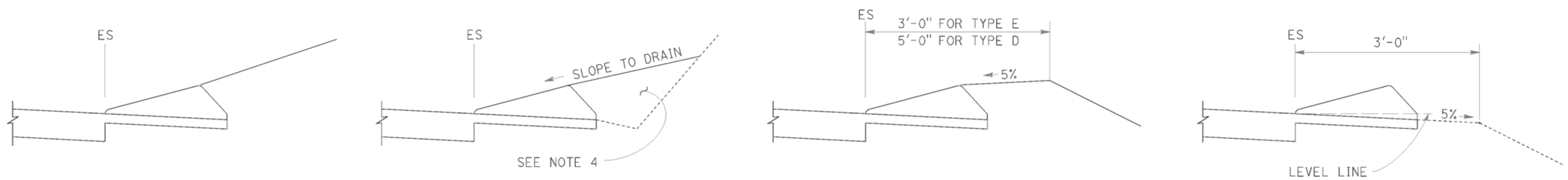

CASE C-1
Cut Slope

CASE C-2
Cut Slope

CASE F

CASE R
See Note 2

TYPE D AND E BACKFILL DETAILS

NOTES:

1. For HMA shoulders only, extend top layer of HMA placed on the shoulder under dike with no joint at the ES. For projects with OGFC shoulders, do not extend OGFC under dike. See project plans for modified dike detail.
2. Case R applies to retrofit only projects where restrictive conditions do not provide enough width for Case F backfill.
3. Type A dike only to be used where restrictive slope conditions do not provide enough width to use Type D or Type E dike.
4. Fill and compact with excavated material to top of dike.
5. Use Type F dike, where dike is required with guard railing installations. See Revised Standard Plan RSP A77N4 for dike positioning details.

DIKE QUANTITIES

TYPE	CUBIC YARDS PER LINEAR FOOT
A	0.0135
C	0.0038
D	0.0293
E	0.0130
F	0.0066

Quantities based on 5% cross slope.

STATE OF CALIFORNIA
DEPARTMENT OF TRANSPORTATION

HOT MIX ASPHALT DIKES

NO SCALE

RSP A87B DATED JULY 19, 2013 SUPERSEDES STANDARD PLAN A87B
DATED MAY 20, 2011 - PAGE 120 OF THE STANDARD PLANS BOOK DATED 2010.

REVISED STANDARD PLAN RSP A87B

2010 REVISED STANDARD PLAN RSP A87B

DATE PLOTTED => 16-OCT-2014
TIME PLOTTED => 10:13

TO ACCOMPANY PLANS DATED 09-08-14

Dist	COUNTY	ROUTE	POST MILES TOTAL PROJECT	SHEET No.	TOTAL SHEETS
02	Hum	299	32.1	21	32

REGISTERED CIVIL ENGINEER

April 19, 2013
PLANS APPROVAL DATE

REGISTERED PROFESSIONAL ENGINEER Gurinderpal Bhullar No. C48815 Exp. 9-30-14 CIVIL STATE OF CALIFORNIA

THE STATE OF CALIFORNIA OR ITS OFFICERS OR AGENTS SHALL NOT BE RESPONSIBLE FOR THE ACCURACY OR COMPLETENESS OF SCANNED COPIES OF THIS PLAN SHEET.

NOTES:

See Revised Standard Plan RSP T9 for tables.

Use cone spacing X for taper segment, Y for tangent segment or Z for conflict situations, as approriate, per Table 1, unless X, Y, or Z cone spacing is shown on this sheet.

Unless otherwise specified in the special provisions, all temporary warning signs shall have black legend on fluorescent orange background.

California codes are designated by (CA). Otherwise, Federal (MUTCD) codes are shown.

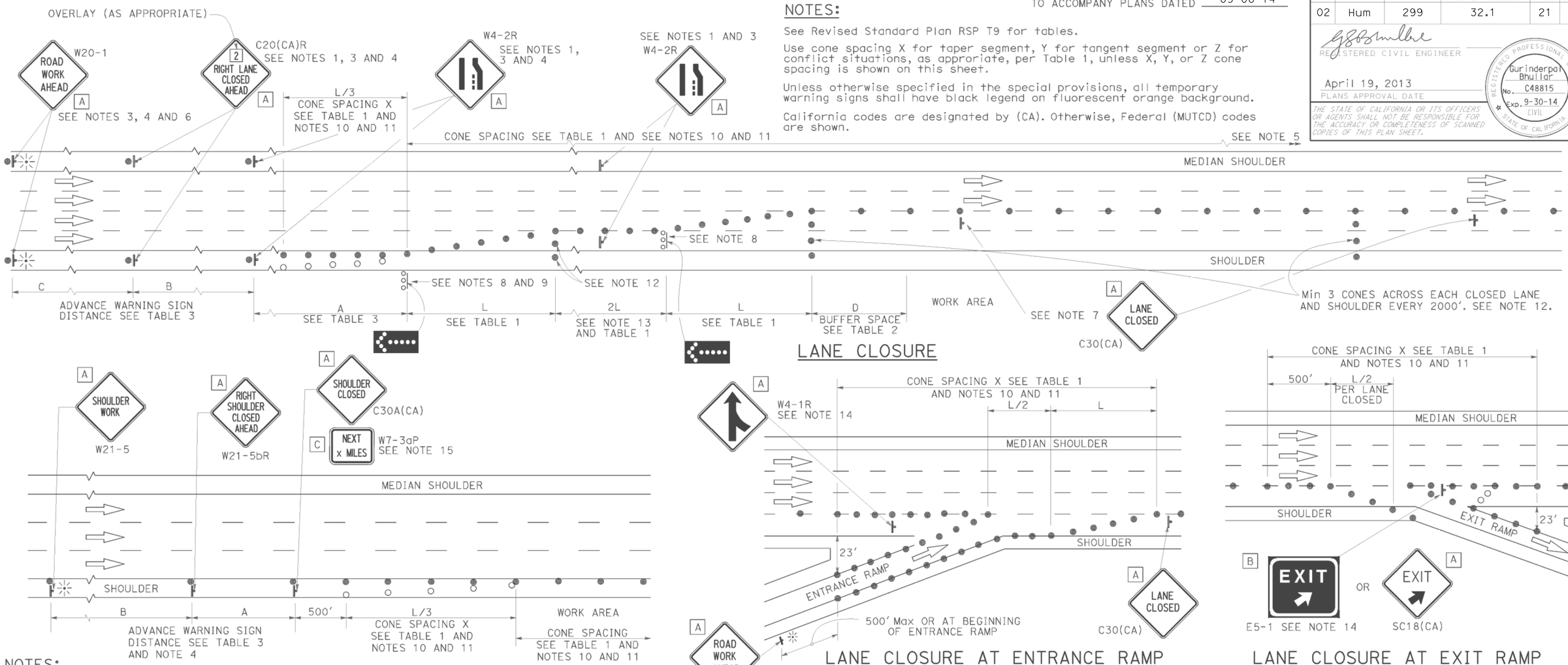

LANE CLOSURE

SHOULDER CLOSURE

LANE CLOSURE AT ENTRANCE RAMP

LANE CLOSURE AT EXIT RAMP

NOTES:

1. Median lane closures shall conform to the details as shown except that C20(CA)L and W4-2L signs shall be used.
2. At least one person shall be assigned to provide full time maintenance of traffic control devices for lane closures.
3. Duplicate sign installations are not required:
   a) On opposite shoulder if at least one-half of the available lanes remain open to traffic.
   b) In the median if the width of the median shoulder is less than 8' and the outside lanes are to be closed.
4. Each advance warning sign on each side of the roadway shall be equipped with at least two flags for daytime closure. Each flag shall be at least 16" x 16" in size and shall be orange or fluorescent red-orange in color. Flashing beacons shall be placed at the locations indicated for lane closure during hours of darkness.
5. A G20-2 "END ROAD WORK" sign, with minimum size of 48" x 24" as appropriate, shall be placed at the end of the lane closure unless the end of work area is obvious or ends within a larger project's limits.
6. If the W20-1 sign would follow within 2000' of a stationary W20-1 or G20-1 "ROAD WORK NEXT _____ MILES", use a C20(CA) sign for the first advance warning sign.
7. Place a C30(CA) sign every 2000' throughout length of lane closure.
8. One flashing arrow sign for each lane closed. The flashing arrow signs shall be Type I.
9. A minimum 1500' of sight distance shall be provided where possible for vehicles approaching the first flashing arrow sign. Lane closures shall not begin at top of crest vertical curve or on a horizontal curve.
10. All cones used for lane closures during the hours of darkness shall be fitted with retroreflective bands (or sleeves) as specified in the specifications.
11. Portable delineators, placed at one-half the spacing indicated for traffic cones may be used instead of cones for daytime closures only.
12. Unless otherwise specified in the special provisions, a minimum of 3 cones shall be placed transversely across each closed lane and shoulder at each location where a taper across a traffic lane ends and every 2000' as shown on the "Lane Closure" detail. Two Type II barricades may be used instead of the 3 cones. The transverse alignment of the cones or barricades on the closed shoulder may be shifted from the transverse alignment to provide access to the work.
13. Unless otherwise specified in the special provisions, the 2L tangent shown along lane lines shall be used between the L tapers required for each closed traffic lane.
14. Unless otherwise specified in the special provisions, the E5-1 or SC18(CA) and W4-1 signs shall be used as shown.
15. A W7-3aP "NEXT____MILES" plaque must be used if theshoulder closure extends beyond the distance that can be perceived by road users.

LEGEND

- TRAFFIC CONE
- TRAFFIC CONE (OPTIONAL TAPER)
- TEMPORARY TRAFFIC CONTROL SIGN
- FLASHING ARROW SIGN (FAS)
- FAS SUPPORT OR TRAILER
- PORTABLE FLASHING BEACON

SIGN PANEL SIZE (Min)

A	48" x 48"
B	72" x 60"
C	36" x 30"

STATE OF CALIFORNIA
DEPARTMENT OF TRANSPORTATION

TRAFFIC CONTROL SYSTEM FOR LANE CLOSURE ON FREEWAYS AND EXPRESSWAYS

NO SCALE

RSP T10 DATED APRIL 19, 2013 SUPERSEDES STANDARD PLAN T10 DATED MAY 20, 2011 - PAGE 237 OF THE STANDARD PLANS BOOK DATED 2010.

REVISED STANDARD PLAN RSP T10

2010 REVISED STANDARD PLAN RSP T10

DATE PLOTTED => 16-OCT-2014
TIME PLOTTED => 10:13

Dist	COUNTY	ROUTE	POST MILES TOTAL PROJECT	SHEET No.	TOTAL SHEETS
01	Hum	299	32.1	22	32

REGISTERED CIVIL ENGINEER

November 15, 2013
PLANS APPROVAL DATE

REGISTERED PROFESSIONAL ENGINEER — Tillat Satter — No. C42892 — Exp. 3-31-14 — CIVIL — STATE OF CALIFORNIA

THE STATE OF CALIFORNIA OR ITS OFFICERS OR AGENTS SHALL NOT BE RESPONSIBLE FOR THE ACCURACY OR COMPLETENESS OF SCANNED COPIES OF THIS PLAN SHEET.

TO ACCOMPANY PLANS DATED 09-08-14

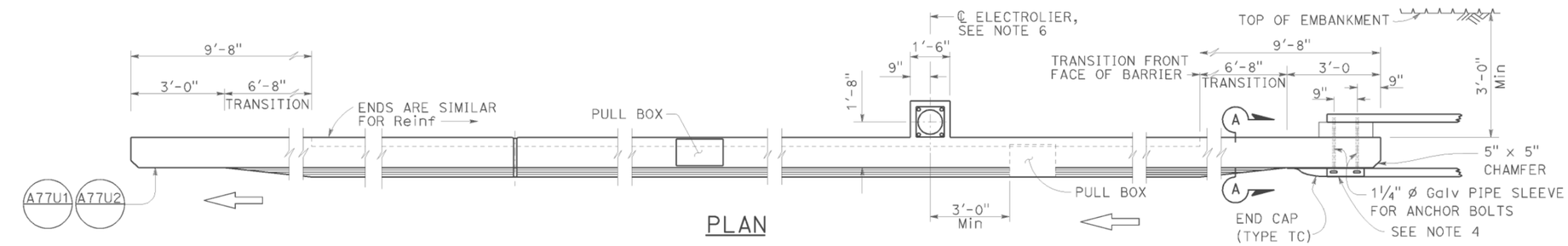

PLAN

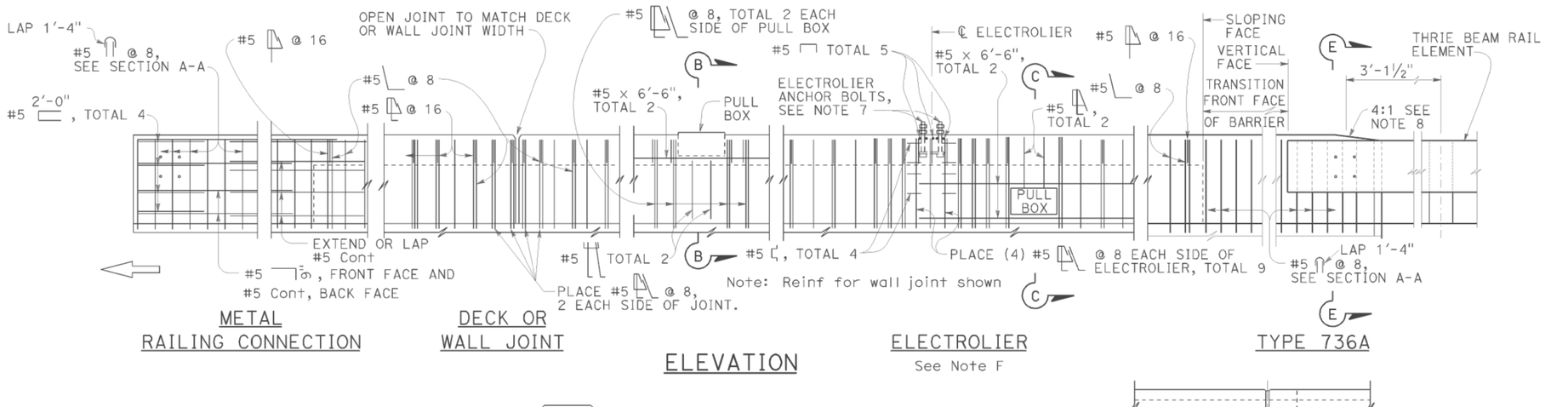

METAL RAILING CONNECTION

DECK OR WALL JOINT

ELEVATION

ELECTROLIER
See Note F

TYPE 736A

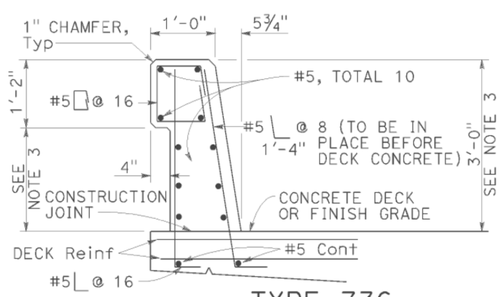

TYPE 736

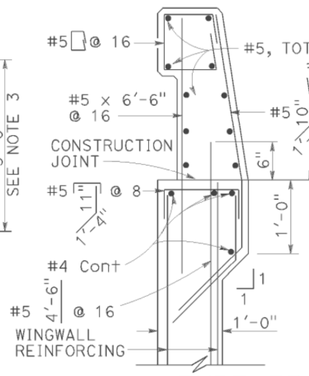

TYPE 736A

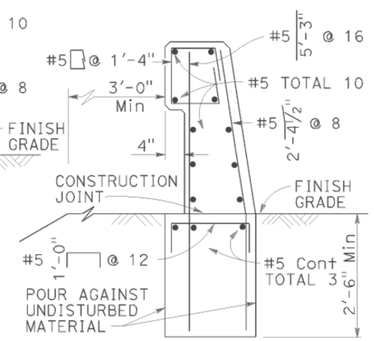

TYPE 736B

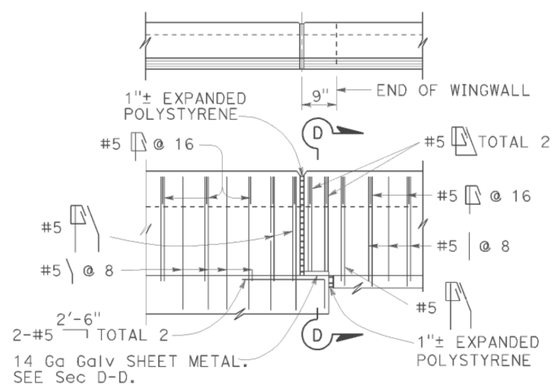

TYPE 736A TYPE 736B

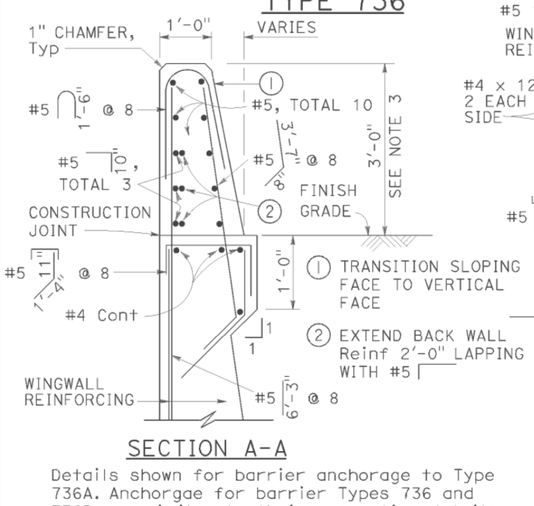

SECTION A-A

Details shown for barrier anchorage to Type 736A. Anchorgae for barrier Types 736 and 736B are similar to their respective details.

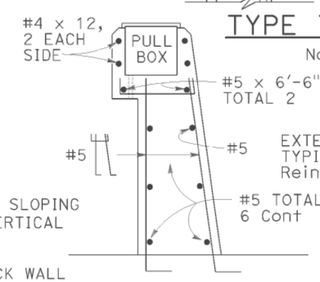

SECTION B-B

Note: Types 736A & 736B are similar to Type 736 except as noted

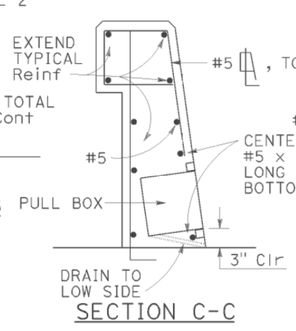

SECTION C-C
See Notes

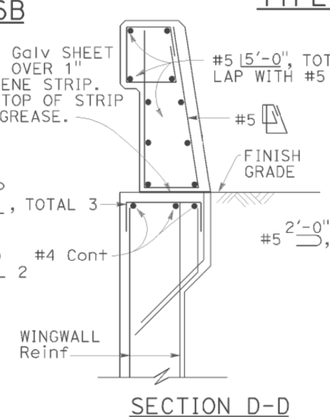

SECTION D-D

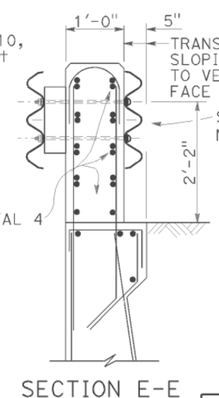

SECTION E-E
See Notes

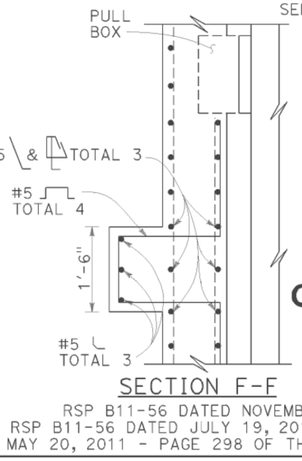

SECTION F-F

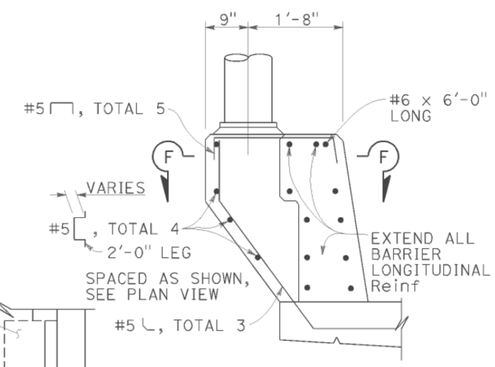

PEDESTAL ELEVATION

NOTES:

1. Walls are to be backfilled before barrier is placed.
2. Clearance to reinforcing steel in barrier to be 1", except as noted. Longitudinal reinforcement to stop at all expansion joints.
3. Dimensions may vary with roadway cross slope and with certain thickness of surfacing. See Project Plans.
4. For typical metal railing connection details not shown, see Revised Standard Plans RSP A77U1 and RSP A77U2.
5. See Standard Plans ES-9A, ES-9B, ES-9C, ES-9D and ES-9E for electrical details. The maximum number of conduits in the barrier is limited to two 2" conduits along with one 3" conduit. When a 3" conduit is used, it is restricted to the base of the barrier.
6. For electrolier mounting details, See Standard Plans ES-6A and ES-6B.
7. Minimum concrete edge distance, to the reinforcing shown, shall be maintained. Edge distance may be adjusted to accommodate increase in concrete cover for architectual treatment.
8. Taper the top of the end of the bridge railing at 4:1 to match the top elevation of the thrie beam rail element.

STATE OF CALIFORNIA
DEPARTMENT OF TRANSPORTATION

CONCRETE BARRIER TYPE 736

NO SCALE

RSP B11-56 DATED NOVEMBER 15, 2013 SUPERSEDES RSP B11-56 DATED JULY 19, 2013 AND STANDARD PLAN B11-56 DATED MAY 20, 2011 - PAGE 298 OF THE STANDARD PLANS BOOK DATED 2010.

REVISED STANDARD PLAN RSP B11-56

2010 REVISED STANDARD PLAN RSP B11-56

DATE PLOTTED => 16-OCT-2014
TIME PLOTTED => 10:13

DIST	COUNTY	ROUTE	POST MILES TOTAL PROJECT	SHEET No.	TOTAL SHEETS
01	Hum	299	32.1	23	32

REGISTERED CIVIL ENGINEER — DATE 6-25-14

09-08-14
PLANS APPROVAL DATE

REGISTERED PROFESSIONAL ENGINEER — Henry Fang — No. C56541 — Exp. 6-30-15 — CIVIL — STATE OF CALIFORNIA

The State of California or its officers or agents shall not be responsible for the accuracy or completeness of scanned copies of this plan sheet.

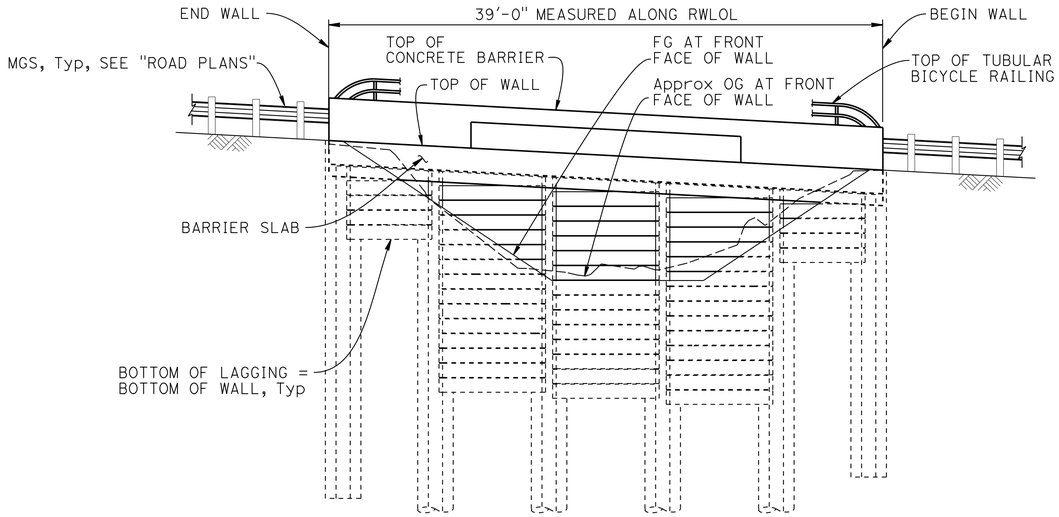

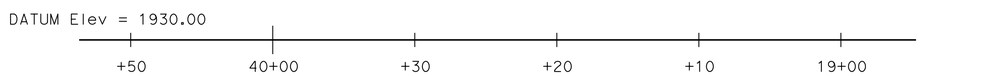

ELEVATION - MIRRORED

3/16" = 1'-0"

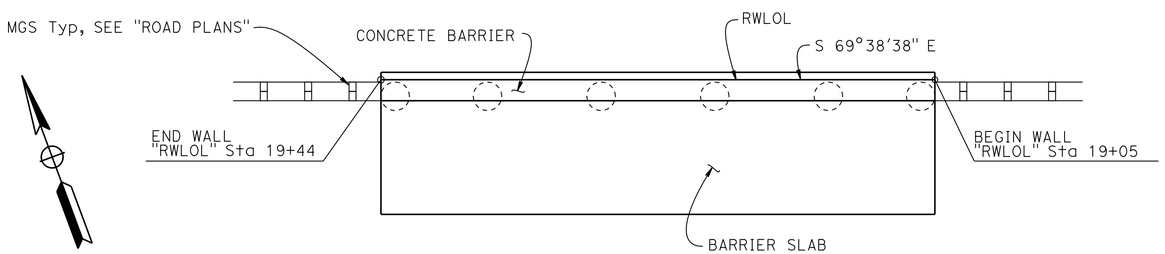

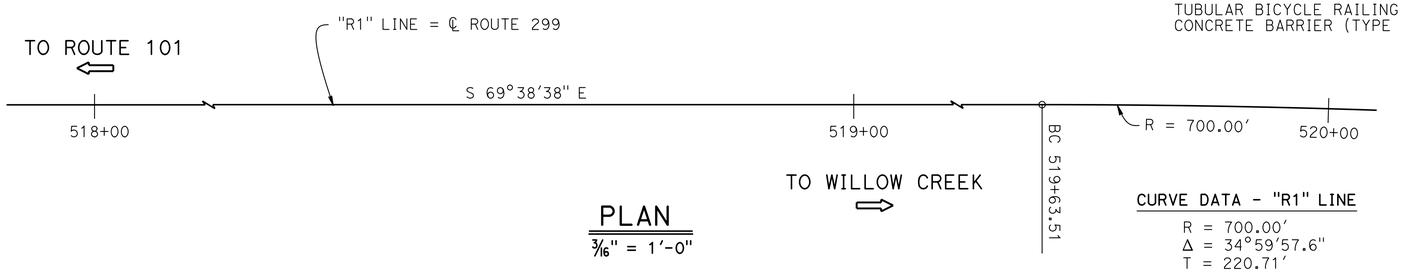

PLAN

3/16" = 1'-0"

CURVE DATA - "R1" LINE

R = 700.00'
Δ = 34°59'57.6"
T = 220.71'
L = 427.60'

RETAINING WALL AT WILLOW CREEK — BRIDGE #04E0034

QUANTITIES

STRUCTURE EXCAVATION (SOLDIER PILE WALL)	13	CY
STRUCTURE BACKFILL (SOLDIER PILE WALL)	18	CY
CONCRETE BACKFILL (SOLDIER PILE WALL)	14	CY
LEAN CONCRETE BACKFILL	12	CY
STEEL SOLDIER PILE (HP 14 X 89)	156	LF
30" DRILLED HOLE	141	LF
STRUCTURAL CONCRETE, BARRIER SLAB	24	CY
TIMBER LAGGING	2	MFBM
CLEAN AND PAINT STEEL SOLDIER PILING	LUMP	SUM
PREPARE AND STAIN CONCRETE	200	SQFT
TUBULAR BICYCLE RAILING	39	LF
CONCRETE BARRIER (TYPE 736 MODIFIED)	39	LF

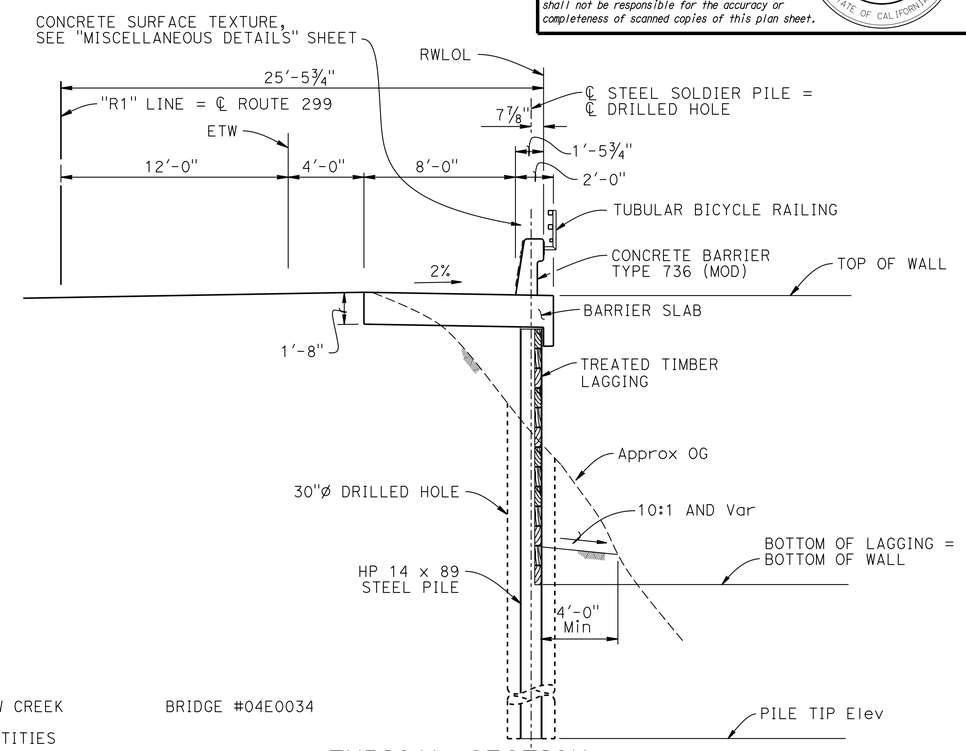

TYPICAL SECTION

¼" = 1'-0"

INDEX TO PLANS

SHEET NO.	TITLE
1	GENERAL PLAN
2	STRUCTURE PLAN
3	FOUNDATION PLAN
4	SOLDIER PILE WALL DETAILS
5	SOLDIER PILE WALL LAGGING DETAILS
6	CONCRETE BARRIER SLAB DETAILS
7	MISCELLANEOUS DETAILS
8	TUBULAR BICYCLE RAILING DETAILS
9	LOG OF TEST BORINGS 1 OF 2
10	LOG OF TEST BORINGS 2 OF 2

STANDARD PLANS DATED 2010

A10A	ABBREVIATIONS (SHEET 1 OF 2)
RSP A10B	ABBREVIATIONS (SHEET 2 OF 2)
A10C	LINES AND SYMBOLS (SHEET 1 OF 3)
A10D	LINES AND SYMBOLS (SHEET 2 OF 3)
A10F	LEGEND-SOIL (SHEET 1 OF 2)
A10G	LEGEND-SOIL (SHEET 2 OF 2)
A10H	LEGEND-ROCK
RSP B11-56	CONCRETE BARRIER TYPE 736

STANDARD PLAN SHEET No.
DETAIL No.

For GENERAL NOTES, see "SOLDIER PILE WALL DETAILS" sheet.

DESIGN ENGINEER

	BY	CHECKED			
DESIGN	H. Fang	J. Lynch	LOAD & RESISTANCE FACTOR DESIGN		
DETAILS	E. Montevirgen	J. Lynch	LAYOUT	H. Fang	J. Lynch
QUANTITIES	H. Fang	J. Lynch	SPECIFICATIONS	S. Nelapatla	PLANS AND SPECS COMPARED X

ORIGINAL SCALE IN INCHES FOR REDUCED PLANS 0 1 2 3

STATE OF CALIFORNIA
DEPARTMENT OF TRANSPORTATION

DIVISION OF ENGINEERING SERVICES
STRUCTURE DESIGN
DESIGN BRANCH 2

BRIDGE NO. 04E0034
POST MILE 32.06

RETAINING WALL AT WILLOW CREEK
GENERAL PLAN

UNIT: 3577
PROJECT NUMBER & PHASE: 01120001291
CONTRACT NO.: 01-0B4601

DISREGARD PRINTS BEARING EARLIER REVISION DATES

REVISION DATES: 9-06-13 2-11-14 3-06-14 4-14-14

SHEET 1 OF 10

USERNAME => s115152 DATE PLOTTED => 16-OCT-2014 TIME PLOTTED => 10:13

STRUCTURES DESIGN GENERAL PLAN SHEET (ENGLISH) (REV.09-01-10)

FILE => 01-0b460k_g_agp.dgn

DIST	COUNTY	ROUTE	POST MILES TOTAL PROJECT	SHEET No.	TOTAL SHEETS
01	Hum	299	32.1	24	32

REGISTERED CIVIL ENGINEER — DATE 6-25-14

09-08-14
PLANS APPROVAL DATE

REGISTERED PROFESSIONAL ENGINEER — Henry Fang — No. C56541 — Exp. 6-30-15 — CIVIL — STATE OF CALIFORNIA

The State of California or its officers or agents shall not be responsible for the accuracy or completeness of scanned copies of this plan sheet.

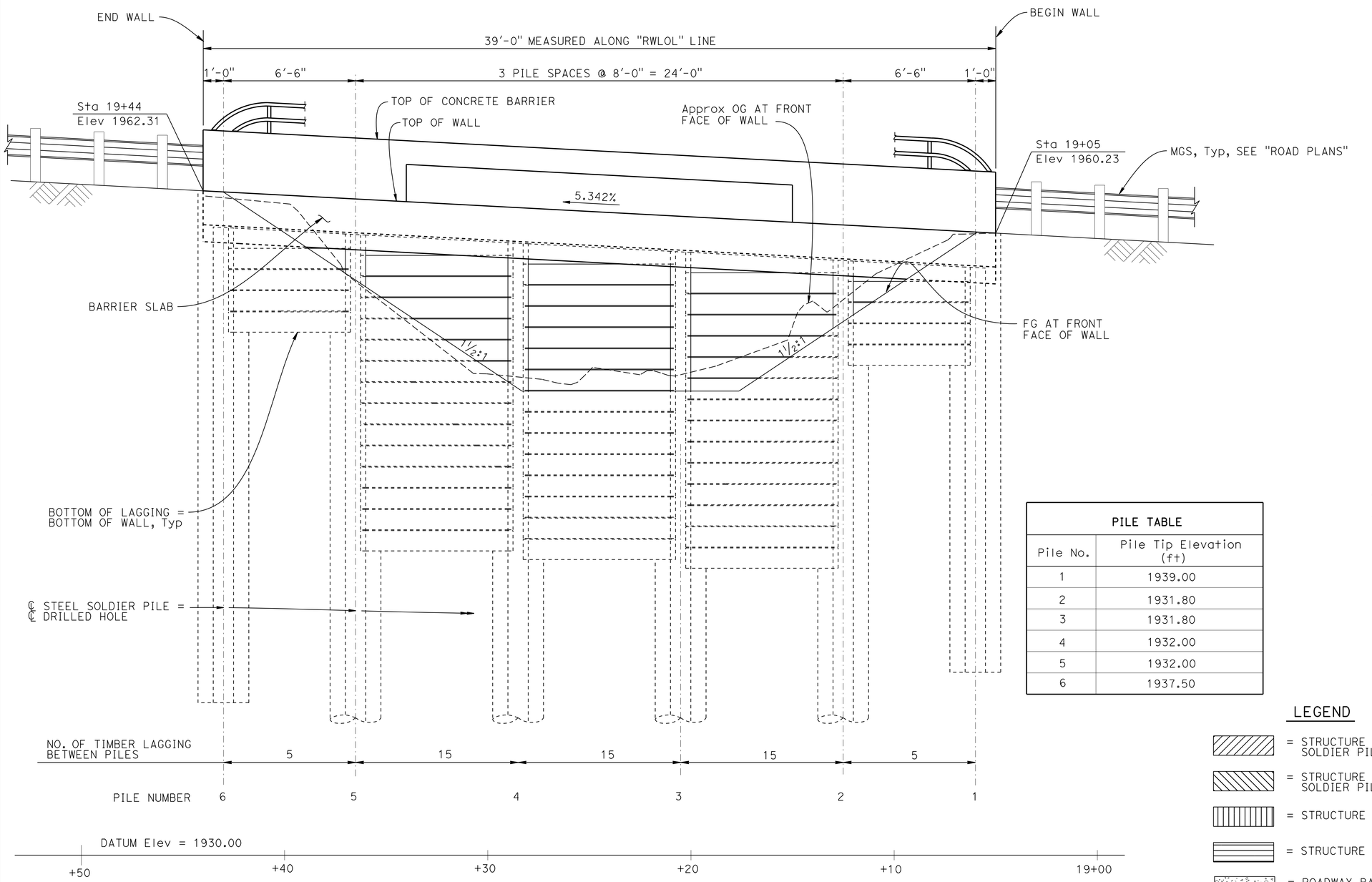

ELEVATION - MIRRORED

3/8" = 1'-0"

PILE TABLE	
Pile No.	Pile Tip Elevation (ft)
1	1939.00
2	1931.80
3	1931.80
4	1932.00
5	1932.00
6	1937.50

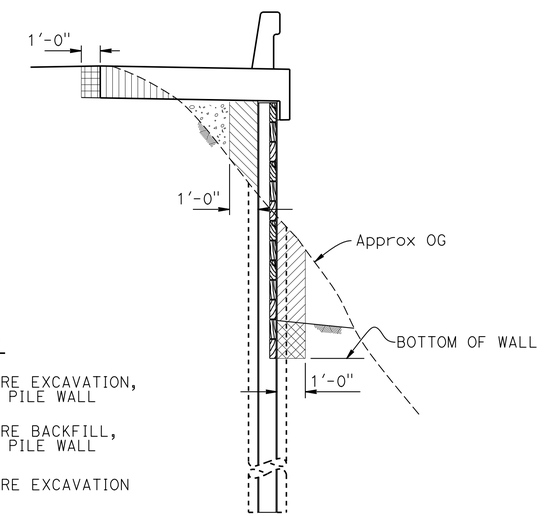

LEGEND

- = STRUCTURE EXCAVATION, SOLDIER PILE WALL
- = STRUCTURE BACKFILL, SOLDIER PILE WALL
- = STRUCTURE EXCAVATION
- = STRUCTURE BACKFILL
- = ROADWAY BACKFILL, SEE "ROAD PLANS"

LIMITS OF PAYMENT FOR EXCAVATION AND BACKFILL

NO SCALE

	BY	CHECKED
DESIGN	Henry Fang	J. Lynch
DETAILS	E. Montevirgen	J. Lynch
QUANTITIES	H. Fang	J. Lynch

STATE OF CALIFORNIA
DEPARTMENT OF TRANSPORTATION

DIVISION OF ENGINEERING SERVICES
STRUCTURE DESIGN
DESIGN BRANCH 2

BRIDGE NO. 04E0034
POST MILE 32.06

RETAINING WALL AT WILLOW CREEK
STRUCTURE PLAN

STRUCTURES DESIGN DETAIL SHEET (ENGLISH) (REV. 09-01-10)

ORIGINAL SCALE IN INCHES FOR REDUCED PLANS 0 1 2 3

UNIT: 3577
PROJECT NUMBER & PHASE: 01120001291
CONTRACT NO.: 01-0B4601

DISREGARD PRINTS BEARING EARLIER REVISION DATES

REVISION DATES: 9-09-13 2-18-14 3-06-14 4-14-14

SHEET 2 OF 10

FILE => 01-0b460k_c_struct_plans.dgn

USERNAME => s113152 DATE PLOTTED => 16-OCT-2014 TIME PLOTTED => 10:13

DIST	COUNTY	ROUTE	POST MILES TOTAL PROJECT	SHEET No.	TOTAL SHEETS
01	Hum	299	32.1	25	32

REGISTERED CIVIL ENGINEER — DATE 6-25-14

09-08-14
PLANS APPROVAL DATE

REGISTERED PROFESSIONAL ENGINEER — Henry Fang — No. C56541 — Exp. 6-30-15 — CIVIL — STATE OF CALIFORNIA

The State of California or its officers or agents shall not be responsible for the accuracy or completeness of electronic copies of this plan sheet.

CURVE DATA

No	R	Δ	T	L
Ⓐ	700.00′	34°59′57.6″	220.71′	427.60′

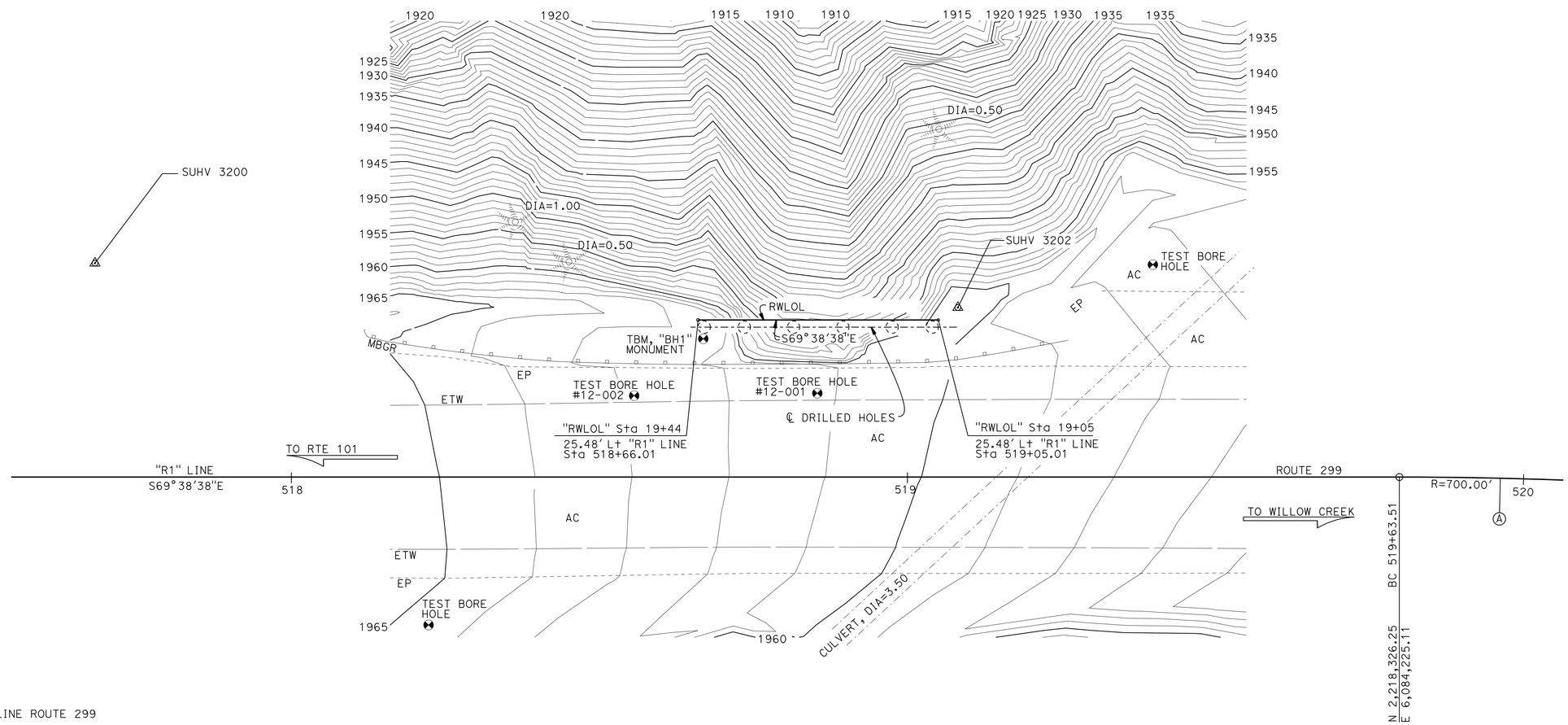

SURVEY CONTROL

SUHV 3200
Fnd SPIKE
34.96 Ft Lt "R1" LINE ROUTE 299
Sta 517+68.12
N 2,218,429.80
E 6,084,045.76
Elev = 1968.34

SUHV 3202
Fnd SPIKE
27.50 Ft Lt "R1" LINE ROUTE 299
Sta 519+08.18
N 2,218,374.33
E 6,084,174.56
Elev = 1960.68

PRELIMINARY INVESTIGATION SECTION

SCALE 1"=10′	VERT.DATUM NAVD88	LiDAR AS OF: 11/2012			
	HORZ.DATUM NAD83	SURVEYED BY DISTRICT 12/2012	CHECKED BY C. FASSETT 06/2013		
ALIGNMENT TIES Dist. Traverse Sheet		DRAFTED BY T. ZOLNIKOV 06/2013	CHECKED BY S. SOU 06/2013		

DESIGN	BY H. Fang	CHECKED J. Lynch
DETAILS	BY E. Montevirgen	CHECKED J. Lynch
QUANTITIES	BY H. Fang	CHECKED J. Lynch

STATE OF CALIFORNIA
DEPARTMENT OF TRANSPORTATION

DIVISION OF ENGINEERING SERVICES
STRUCTURE DESIGN
DESIGN BRANCH 2

BRIDGE NO. 04E0034
POST MILE 32.06

RETAINING WALL AT WILLOW CREEK
FOUNDATION PLAN

STRUCTURES FOUNDATION PLAN SHEET (ENGLISH) (REV. 09-01-10)

ORIGINAL SCALE IN INCHES FOR REDUCED PLANS 0 1 2 3

UNIT: 3577
PROJECT NUMBER & PHASE: 0112000129 1
CONTRACT NO.: 01-0B4601

DISREGARD PRINTS BEARING EARLIER REVISION DATES

REVISION DATES: 01/07/13 02/19/14 03/06/14 04/14/14

SHEET 3 OF 10

DIST	COUNTY	ROUTE	POST MILES TOTAL PROJECT	SHEET No.	TOTAL SHEETS
01	Hum	299	32.1	26	32

REGISTERED CIVIL ENGINEER — DATE 6-25-14

09-08-14
PLANS APPROVAL DATE

REGISTERED PROFESSIONAL ENGINEER — Henry Fang — No. C56541 — Exp. 6-30-15 — CIVIL — STATE OF CALIFORNIA

The State of California or its officers or agents shall not be responsible for the accuracy or completeness of scanned copies of this plan sheet.

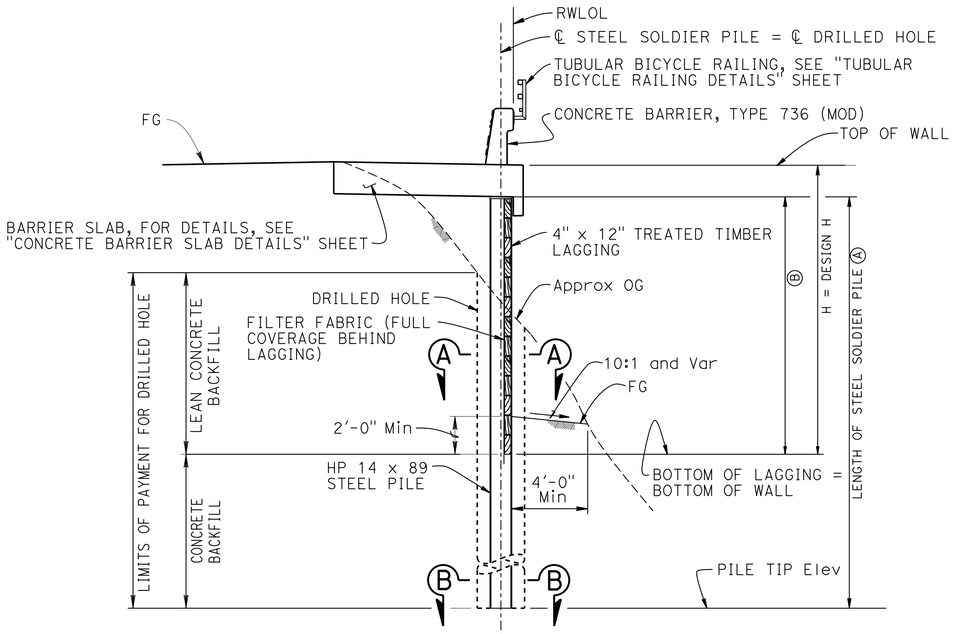

TYPICAL SECTION

1/4" = 1'-0"

NOTE:

(A) Limit of clean and paint Steel Soldier Pile, undercoats

(B) Limit of clean and paint Steel Soldier Pile, finish coats

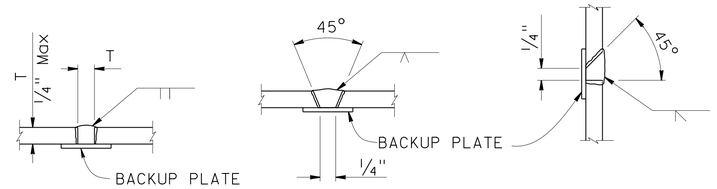

SQUARE GROOVE — SINGLE VEE-GROOVE — SINGLE BEVEL-GROOVE

PILE WELDING DETAIL-BUTT JOINTS

NO SCALE

NOTES:

1. Single vee-groove and square groove permitted for all positions
2. Single bevel-groove permitted for horizontal joints only

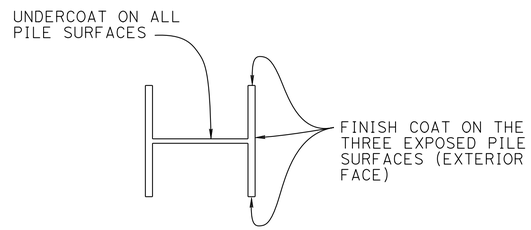

LIMITS OF CLEAN & PAINT STEEL SOLDIER PILE

NO SCALE

GENERAL NOTES

DESIGN: AASHTO LRFD Bridge Design Specifications, 4th Edition with California Amendments.

SEISMIC LOADING: Peak Ground Accelaration = 0.83g
V_{S30} = 1800 ft/sec

LIVE LOAD: 240 psf equivalent to 2 feet soil weight

SOIL PARAMETERS: (For determination of Design Lateral Earth Pressures)
Soil Pressure Diagram

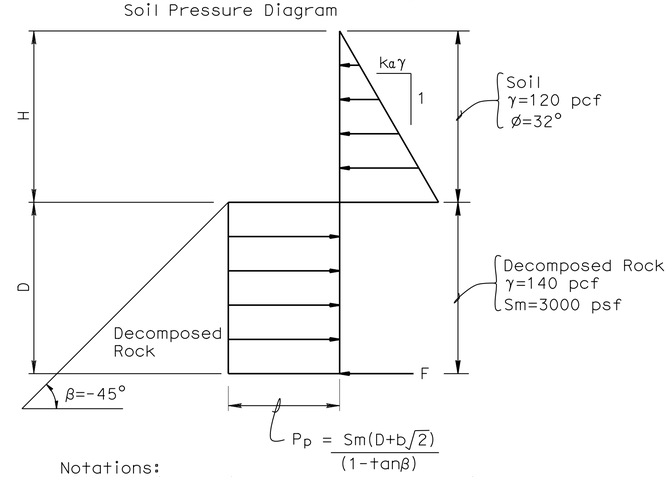

Notations:
- Pp= Passive resistance of the rock acting on the actual width of the embedded discrete vertical wall element (KIP/FT).
- H = Height of Cantilevered Wall.
- F = Force at tip of embedded vertical wall elements required to provide equilibrium of horizontal forces (KIP).
- Sm = Shear strength of rock mass.
- D = Embedment of vertical wall elements.
- b = Actual width of embedded discrete vertical wall element in plane of wall.
- β = Toe slope angle.

STEEL SOLDIER PILES: ASTM A572, A572M, Grade 50 Min,

REINFORCED CONCRETE: f'c = 4000 psi
fy = 60 ksi

STRUCTURAL TIMBER: Treated Douglas Fir, Grade No. 1 or better
Timber to be full sawn

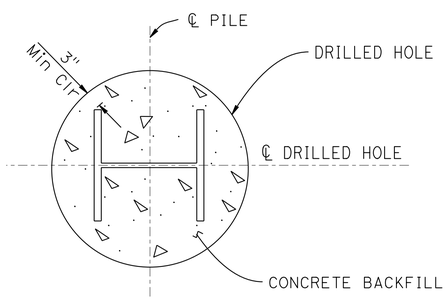

SECTION B-B

NO SCALE

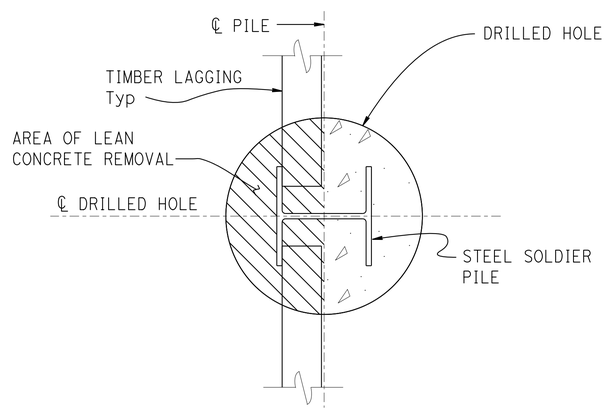

SECTION A-A

NO SCALE

DESIGN	BY Henry Fang	CHECKED J. Lynch	
DETAILS	BY E. Montevirgen	CHECKED J. Lynch	
QUANTITIES	BY Henry Fang	CHECKED J. Lynch	

STATE OF CALIFORNIA
DEPARTMENT OF TRANSPORTATION

DIVISION OF ENGINEERING SERVICES
STRUCTURE DESIGN
DESIGN BRANCH 2

BRIDGE NO. 04E0034
POST MILE 32.06

RETAINING WALL AT WILLOW CREEK
SOLDIER PILE WALL DETAILS

STRUCTURES DESIGN DETAIL SHEET (ENGLISH) (REV. 09-01-10)

ORIGINAL SCALE IN INCHES FOR REDUCED PLANS 0 1 2 3

UNIT: 3577
PROJECT NUMBER & PHASE: 01120001291
CONTRACT NO.: 01-0B4601

DISREGARD PRINTS BEARING EARLIER REVISION DATES

REVISION DATES: 2-24-14 3-06-14 4-14-14

SHEET 4 OF 10

FILE => 01-0b460k_g_spw_det.dgn

USERNAME => s113152 DATE PLOTTED => 16-OCT-2014 TIME PLOTTED => 10:13

DIST	COUNTY	ROUTE	POST MILES TOTAL PROJECT	SHEET No.	TOTAL SHEETS
01	Hum	299	32.1	27	32

REGISTERED CIVIL ENGINEER 6-25-14 DATE

09-08-14
PLANS APPROVAL DATE

REGISTERED PROFESSIONAL ENGINEER Henry Fang No. C56541 Exp. 6-30-15 CIVIL STATE OF CALIFORNIA

The State of California or its officers or agents shall not be responsible for the accuracy or completeness of electronic copies of this plan sheet.

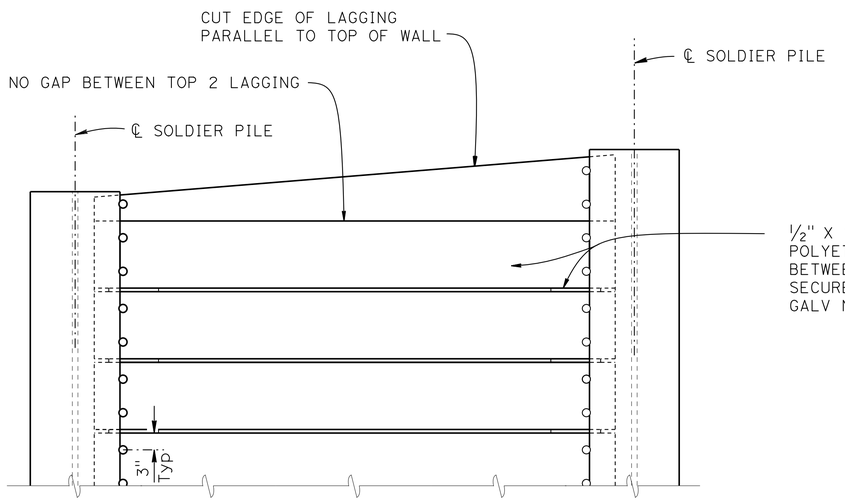

PART ELEVATION

LAGGING DETAILS (ALTERNATIVE 1)

NO SCALE

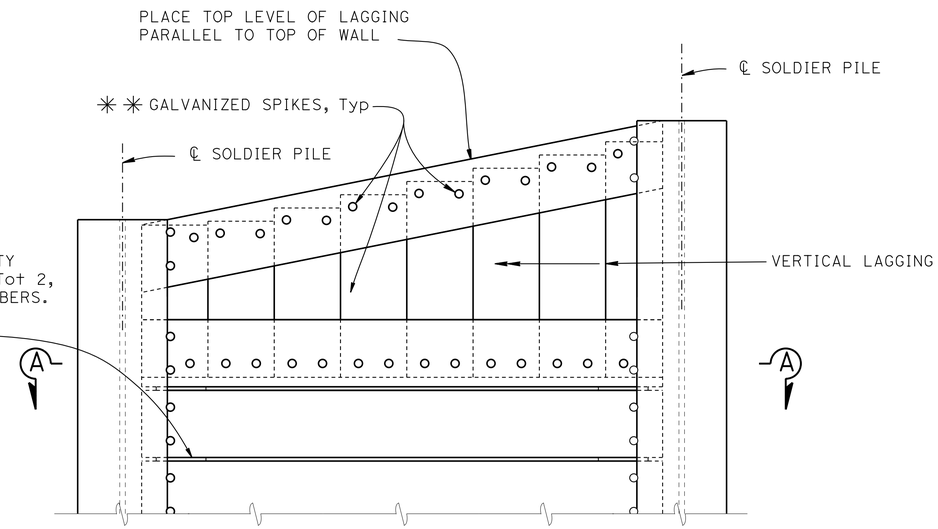

PART ELEVATION

LAGGING DETAILS (ALTERNATIVE 2)

NO SCALE

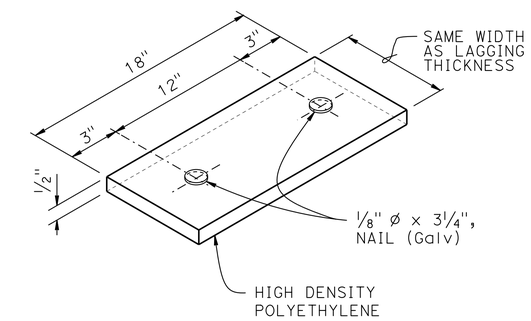

SHIM DETAIL

NO SCALE

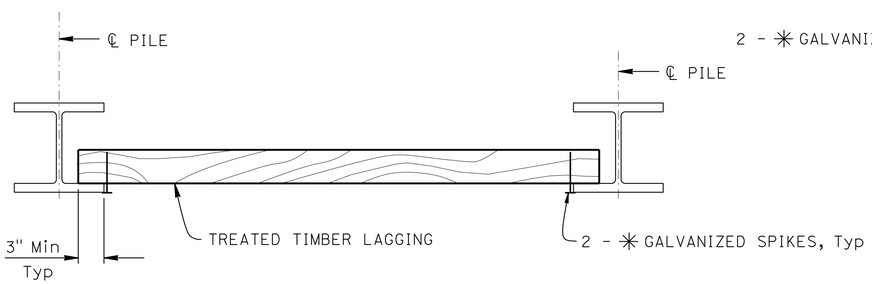

PART PLAN

NO SCALE

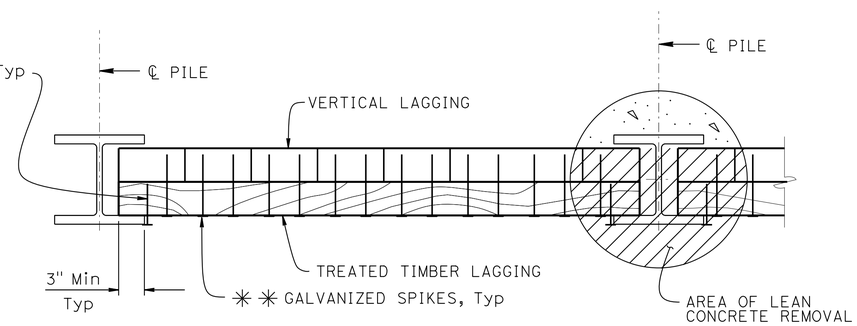

SECTION A-A

NO SCALE

✳ USE 16d Galv WIRE SPIKES FOR 4 x 12 LAGGING
✳✳ USE 60d Galv WIRE SPIKES FOR 4 x 12 LAGGING

NOTES:

1. No clipping of timber lagging corners allowed
2. Spikes shall not be bent
3. Spikes may need to be pre-drilled to protect Laggings.

STANDARD DRAWING

FILE NO. **xs12-080**

APPROVAL DATE January 2012

STATE OF **CALIFORNIA** DEPARTMENT OF TRANSPORTATION

DIVISION OF ENGINEERING SERVICES

BRIDGE NO. 04E0034

POST MILE 32.06

RETAINING WALL AT WILLOW CREEK

SOLDIER PILE WALL LAGGING DETAILS

DS OSD 2147A (ENGLISH STANDARD DRAWING "XS" BORDER REV. (02-02-11)

ORIGINAL SCALE IN INCHES FOR REDUCED PLANS 0 1 2 3

UNIT: 3577
PROJECT NUMBER & PHASE: 01120001291 CONTRACT NO.: 01-0B4601

DISREGARD PRINTS BEARING EARLIER REVISION DATES

REVISION DATES 2-24-14 4-14-14

SHEET 5 OF 10

FILE => 01-0b460k_h_xs12-080.dgn

USERNAME => s115152 DATE PLOTTED => 16-OCT-2014 TIME PLOTTED => 10:13

DIST	COUNTY	ROUTE	POST MILES TOTAL PROJECT	SHEET No.	TOTAL SHEETS
01	Hum	299	32.1	28	32

REGISTERED CIVIL ENGINEER — DATE 6-25-14

09-08-14
PLANS APPROVAL DATE

REGISTERED PROFESSIONAL ENGINEER — Henry Fang — No. C56541 — Exp. 6-30-15 — CIVIL — STATE OF CALIFORNIA

The State of California or its officers or agents shall not be responsible for the accuracy or completeness of scanned copies of this plan sheet.

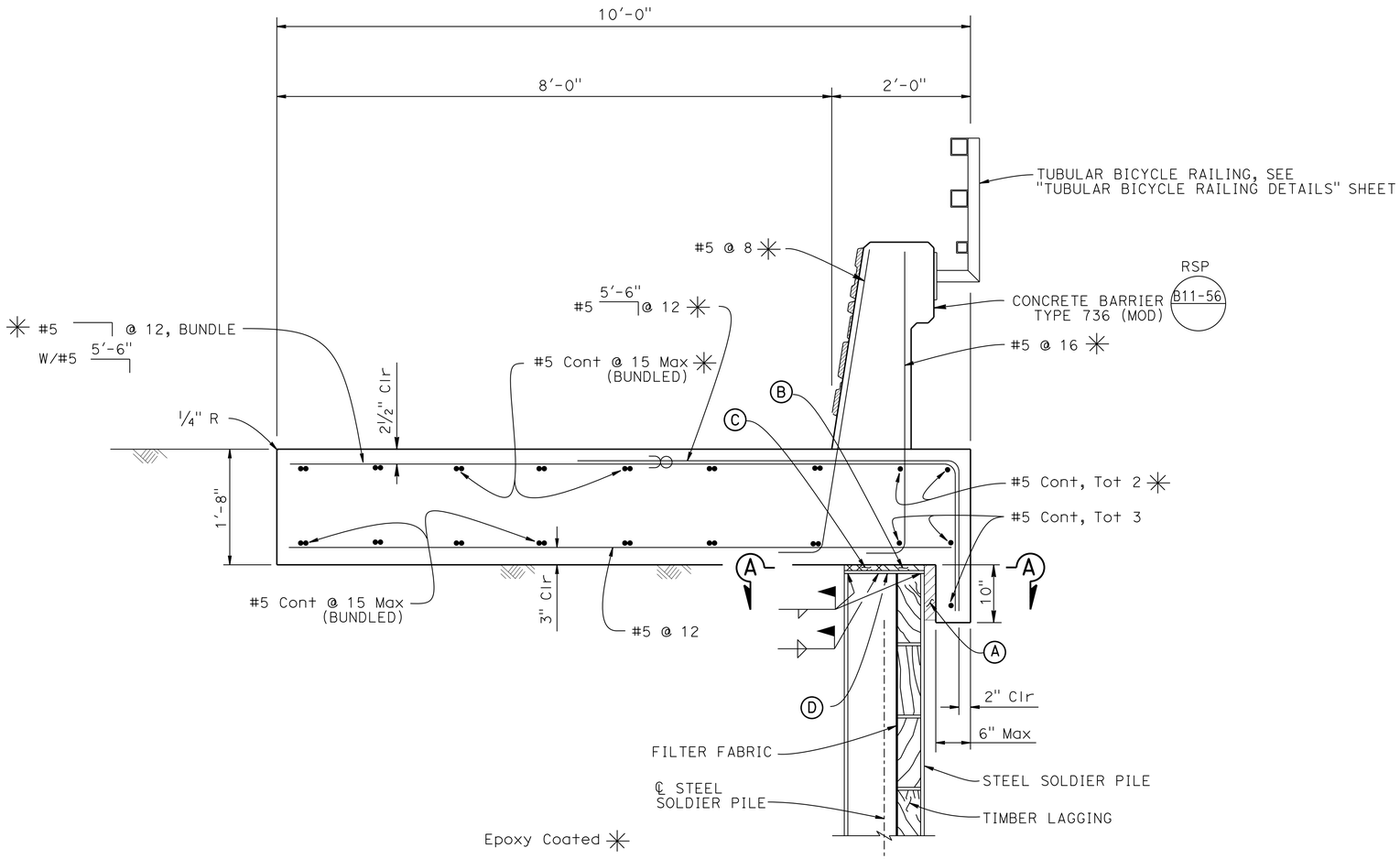

CONCRETE BARRIER SLAB

1" = 1'-0"

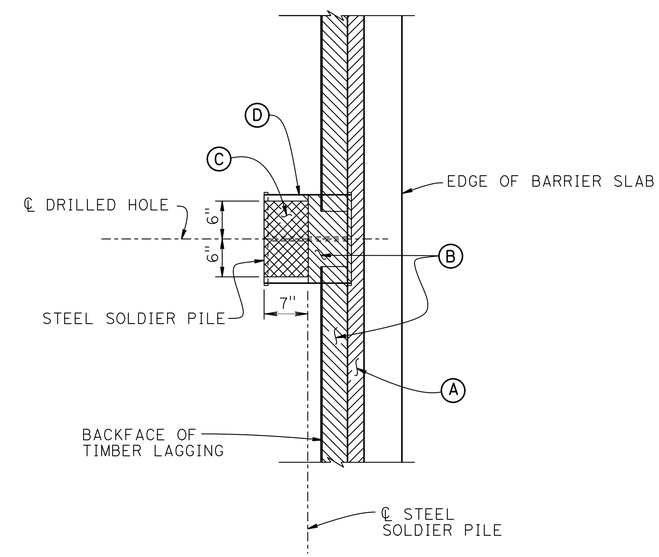

SECTION A-A

1"= 1'-0"

NOTES:

1. Clearance to reinforcing steel in concrete barrier to be 1".
2. Not all barrier reinforcement shown.
3. No expansion joints in concrete barrier or barrier slab within wall limits.

NOTES:

(A) 2" Min Expanded polystyrene

(B) Expanded Polystyrene, same thickness as bearing pad

(C) 1" x 7" x 12" Elastomeric bearing pad bonded to top of each pile

(D) PL ½" x 14" x 14" field welded on top of each pile

✳ Indicates bundled bars

DESIGN	BY Henry Fang	CHECKED J. Lynch	
DETAILS	BY E. Montevirgen	CHECKED J. Lynch	
QUANTITIES	BY Henry Fang	CHECKED J. Lynch	

STATE OF CALIFORNIA
DEPARTMENT OF TRANSPORTATION

DIVISION OF ENGINEERING SERVICES
STRUCTURE DESIGN
DESIGN BRANCH 2

BRIDGE NO. 04E0034
POST MILE 32.06

RETAINING WALL AT WILLOW CREEK
CONCRETE BARRIER SLAB DETAILS

STRUCTURES DESIGN DETAIL SHEET (ENGLISH) (REV. 09-01-10)

ORIGINAL SCALE IN INCHES FOR REDUCED PLANS 0 1 2 3

UNIT: 3577
PROJECT NUMBER & PHASE: 01120001291
CONTRACT NO.: 01-0B4601

DISREGARD PRINTS BEARING EARLIER REVISION DATES

REVISION DATES: 2-24-14 4-14-14 5-12-14

SHEET 6 OF 10

FILE => 01-0b460k_l_cbs_det.dgn

USERNAME => s115152 DATE PLOTTED => 16-OCT-2014 TIME PLOTTED => 10:13

DIST	COUNTY	ROUTE	POST MILES TOTAL PROJECT	SHEET No.	TOTAL SHEETS
01	Hum	299	32.1	29	32

REGISTERED CIVIL ENGINEER — DATE 6-25-14

09-08-14
PLANS APPROVAL DATE

REGISTERED PROFESSIONAL ENGINEER — Henry Fang — No. C56541 — Exp. 6-30-15 — CIVIL — STATE OF CALIFORNIA

The State of California or its officers or agents shall not be responsible for the accuracy or completeness of scanned copies of this plan sheet.

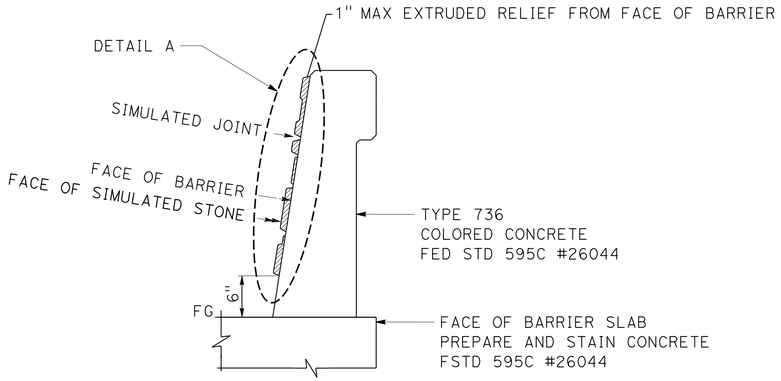

TYPICAL CROSS SECTION

NO SCALE

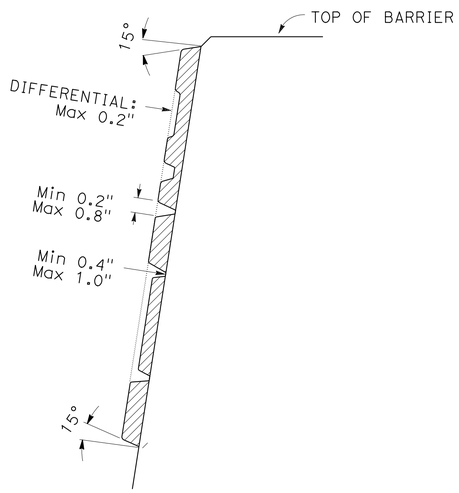

DETAIL A

NO SCALE

RANDOM ROCK TEXTURE

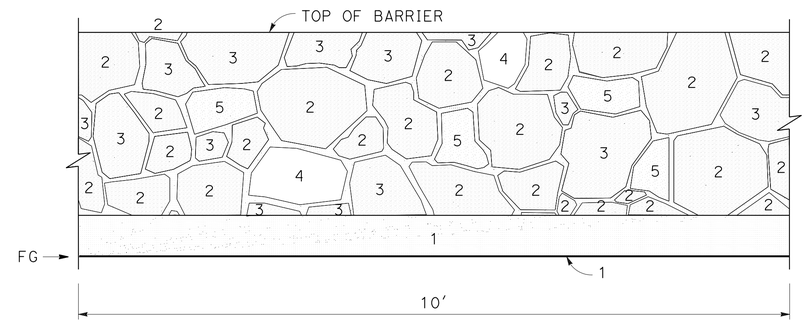

COLOR KEY-ELEVATION

NO SCALE

BASE COLOR LEGEND

1		COLORED CONCRETE FEDERAL STANDARD 595C-26044 (VERY DARK GREY)
2	75%	CONCRETE STAIN FEDERAL STANDARD 595C-26008 (DARK GRAY)
3	20%	CONCRETE STAIN FEDERAL STANDARD 595C-26122 (GREY BROWN)
4	2%	CONCRETE STAIN FEDERAL STANDARD 595C-26493 (LIGHT GRAY)
5	3%	CONCRETE STAIN FEDERAL STANDARD 595C-10091 (RED BROWN)

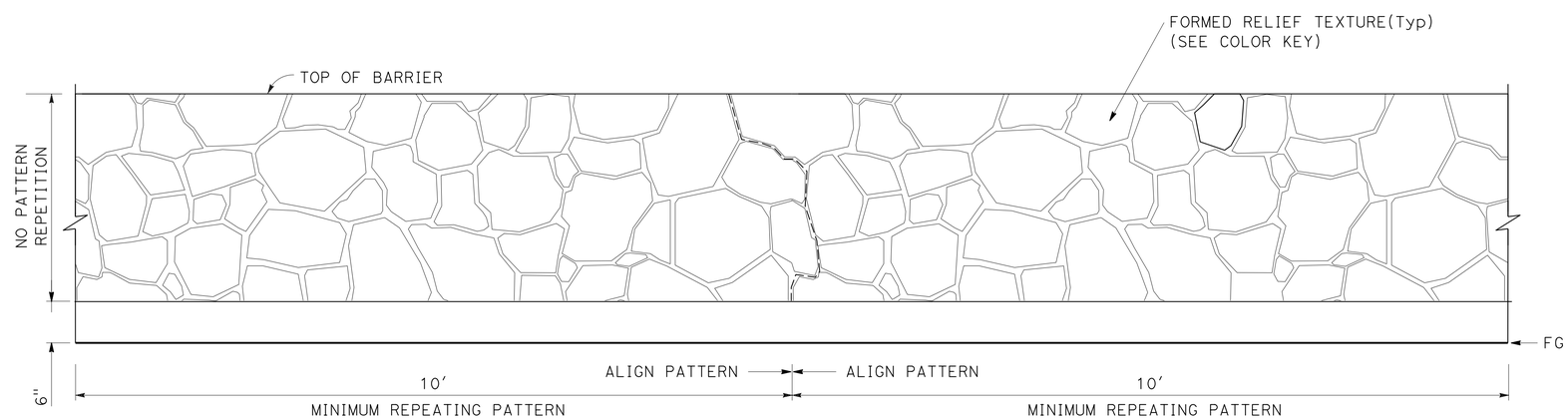

RANDOM ROCK TEXTURE-ELEVATION

NO SCALE

	BY	CHECKED
DESIGN	Henry Fang	J. Lynch
DETAILS	E. Montevirgen	J. Lynch
QUANTITIES	Henry Fang	J. Lynch

STATE OF CALIFORNIA
DEPARTMENT OF TRANSPORTATION

DIVISION OF ENGINEERING SERVICES
STRUCTURE DESIGN
DESIGN BRANCH 2

BRIDGE NO. 04E0034
POST MILE 32.06

RETAINING WALL AT WILLOW CREEK

MISCELLANEOUS DETAILS

STRUCTURES DESIGN DETAIL SHEET (ENGLISH) (REV. 09-01-10)

ORIGINAL SCALE IN INCHES FOR REDUCED PLANS 0 1 2 3

UNIT: 3577
PROJECT NUMBER & PHASE: 01120001291
CONTRACT NO.: 01-0B4601

DISREGARD PRINTS BEARING EARLIER REVISION DATES → 5-07-14

REVISION DATES | SHEET 7 | OF 10

FILE => 01-0b460k_j_misc_det.dgn

USERNAME => s115152 DATE PLOTTED => 16-OCT-2014 TIME PLOTTED => 10:13

DIST	COUNTY	ROUTE	POST MILES TOTAL PROJECT	SHEET No.	TOTAL SHEETS
01	Hum	299	32.1	30	32

REGISTERED CIVIL ENGINEER — DATE 6-25-14

09-08-14
PLANS APPROVAL DATE

REGISTERED PROFESSIONAL ENGINEER — Henry Fang No. C56541 Exp. 6-30-15 CIVIL — STATE OF CALIFORNIA

The State of California or its officers or agents shall not be responsible for the accuracy or completeness of electronic copies of this plan sheet.

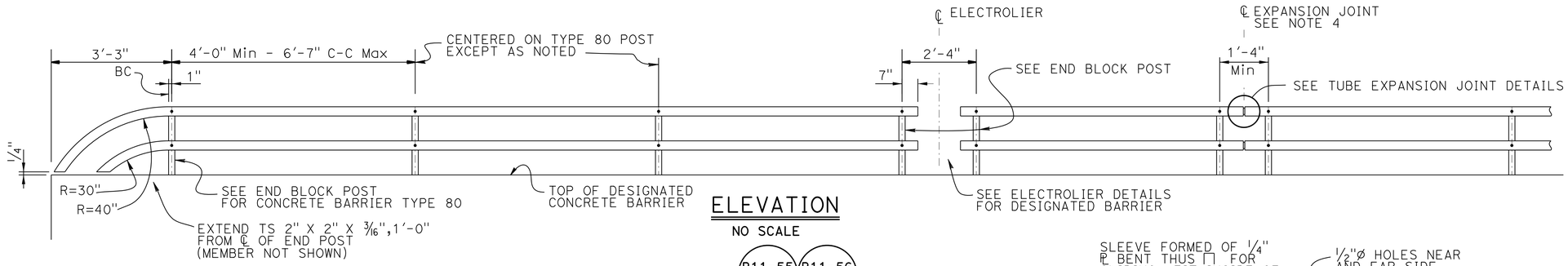

ELEVATION
NO SCALE

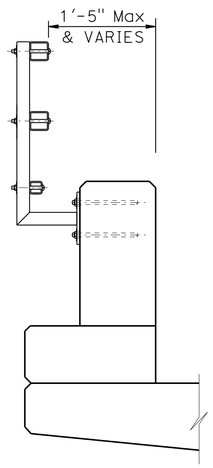

NOTE:
For details not shown, see "TYPE 732 OR 736"

TYPE 80 END BLOCK POST
1" = 1'-0"

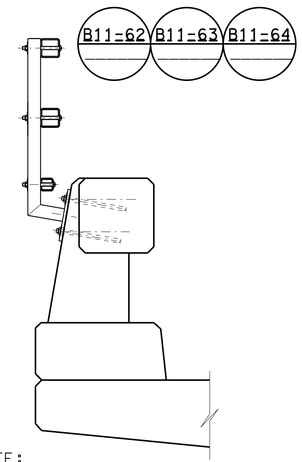

NOTE:
For details not shown, see "TYPE 732 OR 736"

TYPE 80
1" = 1'-0"

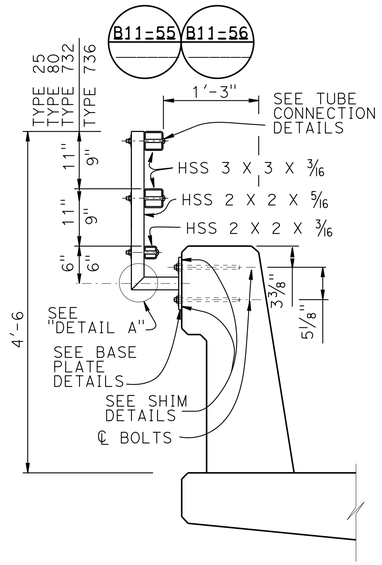

TYPE 732 OR 736
1" = 1'-0"

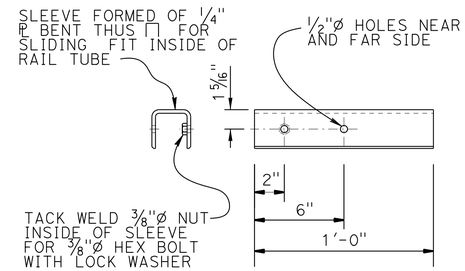

SLEEVE DETAIL
NO SCALE

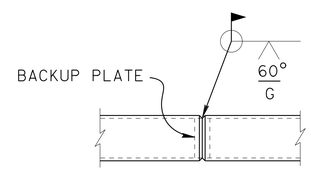

WELDED SPLICE DETAIL
NO SCALE

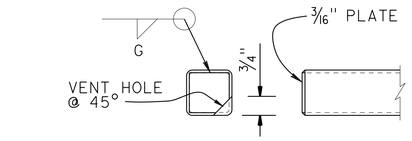

RAIL CAP DETAIL
NO SCALE

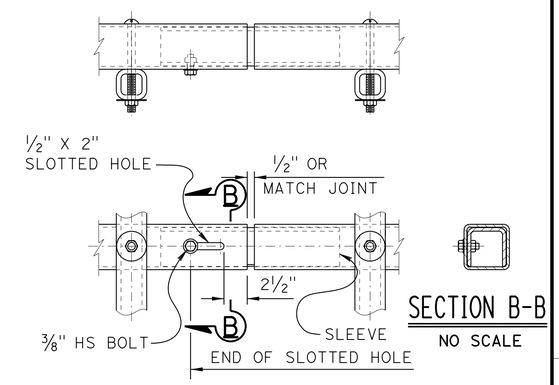

SECTION B-B
NO SCALE

TUBE EXPANSION JOINT DETAILS
NO SCALE

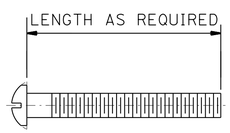

ROUND HEAD SCREW DETAIL
NO SCALE

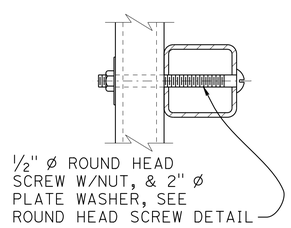

TUBE CONNECTION DETAIL
NO SCALE

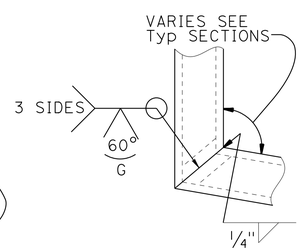

DETAIL A
NO SCALE

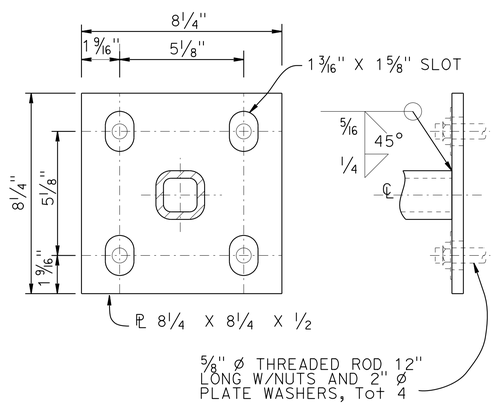

BASE PLATE DETAIL
NO SCALE

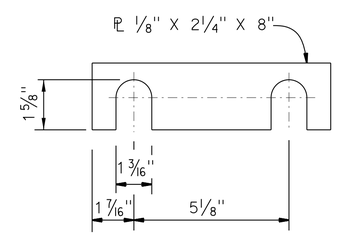

SHIM DETAILS
NO SCALE

NOTES:

1. Post shall be normal to railing.
2. Rail tubes shall be shop bent or fabricated to fit horizontal curve when radius is less than 12".
3. Tube expansion joints shall be located in the tubes spanning deck or wall joints. Increase joint width in tubes to match expansion joint width and increase sleeve length correspondingly.
4. Top rail tube shall be continuous over not less than two posts except a short post spacing is permitted near deck or wall joints, electroliers, or other rail discontinuities as noted.
5. See Project Plans for limits of tubular hand railing.

STANDARD DRAWING
FILE NO. xs16-035
APPROVAL DATE August 2012

STATE OF CALIFORNIA DEPARTMENT OF TRANSPORTATION
DIVISION OF ENGINEERING SERVICES

BRIDGE NO. 04E0034
POST MILE 32.06

RETAINING WALL AT WILLOW CREEK
TUBULAR BICYCLE RAILING DETAILS

DS OSD 2147A (ENGLISH STANDARD DRAWING "XS" BORDER REV. (02-02-11)

ORIGINAL SCALE IN INCHES FOR REDUCED PLANS 0 1 2 3

UNIT: 3577
PROJECT NUMBER & PHASE: 01120001291
CONTRACT NO.: 01-0B4604

DISREGARD PRINTS BEARING EARLIER REVISION DATES

REVISION DATES: 8/22/12 6/9/14

SHEET 8 OF 10

FILE => 01-0b460k_k_0xs16-035.dgn

USERNAME => s115152 DATE PLOTTED => 16-OCT-2014 TIME PLOTTED => 10:13

DIST	COUNTY	ROUTE	POST MILES TOTAL PROJECT	SHEET No	TOTAL SHEETS
01	Hum	299	32.1	31	32

CERTIFIED ENGINEERING GEOLOGIST 5-7-14

09-08-14
01 APPROVAL DATE

PROFESSIONAL GEOLOGIST Luis Paredes-Mejia No. 2329 Exp. 01-31-16 CERTIFIED ENGINEERING GEOLOGIST STATE OF CALIFORNIA

The State of California or its officers or agents shall not be responsible for the accuracy or completeness of electronic copies of this plan sheet.

This LOTB sheet was prepared in accordance with the Caltrans Soil & Rock Logging, Classification, & Presentation Manual (2010 Edition).

See 2010 Standard Plans A10F and A10G for Soil Legend, and A10H for Rock Legend.

BENCH MARK

SUHV 3200
Fnd spike 34.96′ Lt "R1" Line
Rte 299, Sta 517+68.12
N 2,218,429.80
E 6,084,045.76
Elev= 1968.34

SUHV 3202
Fnd spike 27.50′ Lt "R1" Line
Rte 299, Sta 519+08.18
N 2,218,374.33
E 6,084,174.56
Elev= 1960.68

NAVD83

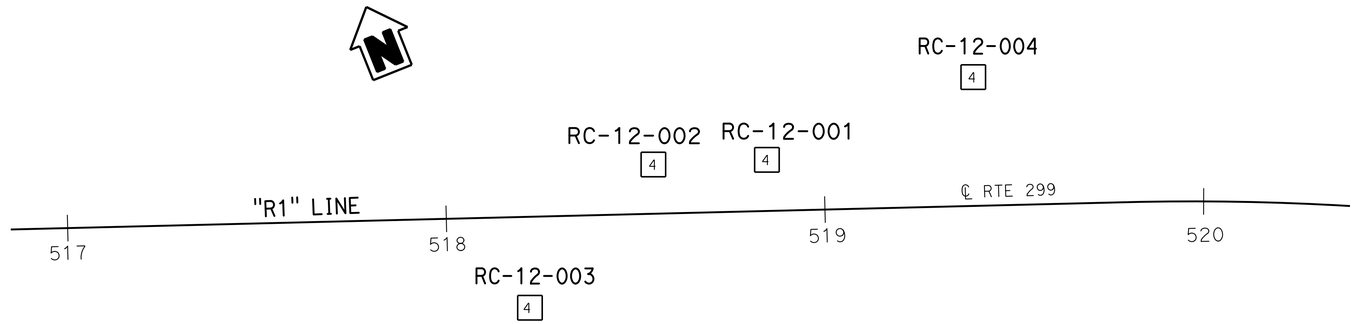

PLAN

1" = 20′

Note: Groundwater was not measured in borings RC-12-001, RC-12-002, and RC-12-004 during field investigation.

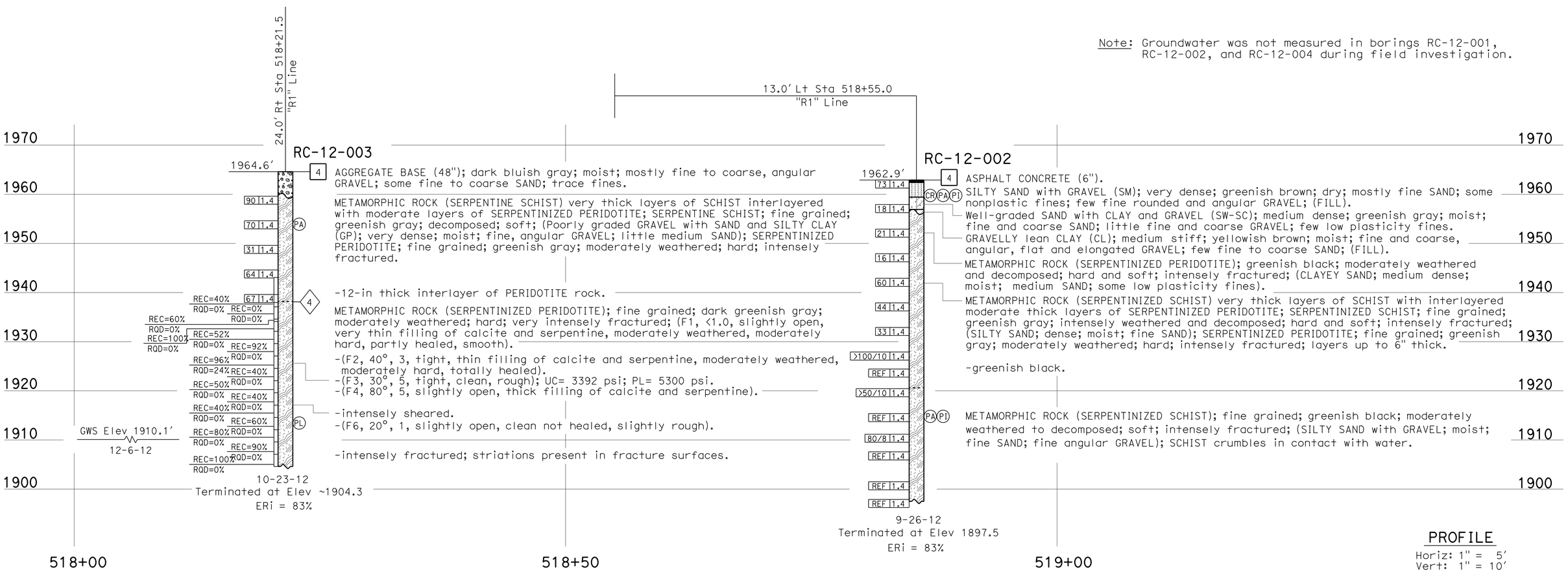

PROFILE

Horiz: 1" = 5′
Vert: 1" = 10′

ENGINEERING SERVICES	MATERIALS AND GEOTECHNICAL SERVICES	STATE OF CALIFORNIA DEPARTMENT OF TRANSPORTATION	DIVISION OF ENGINEERING SERVICES STRUCTURE DESIGN DESIGN BRANCH 2	BRIDGE NO. / POST MILE 32.06	RETAINING WALL AT WILLOW CREEK LOG OF TEST BORINGS 1 OF 2
FUNCTIONAL SUPERVISOR NAME: R. Mahallati	DRAWN BY: F. Nguyen CHECKED BY: A. Barrie	FIELD INVESTIGATION BY: L. Paredes-Mejia, L. Leong			

OGS CIVIL LOG OF TEST BORINGS SHEET

ORIGINAL SCALE IN INCHES FOR REDUCED PLANS 0 1 2 3

UNIT: 3643
PROJECT NUMBER & PHASE: 01120001291
CONTRACT NO.: 01-0B4604

DISREGARD PRINTS BEARING EARLIER REVISION DATES

REVISION DATES: 01-22-13 05-07-14 09-11-13

SHEET 9 OF 10

FILE => 01-0b460k_z_lotb01.dgn

USERNAME => s115152 DATE PLOTTED => 16-OCT-2014 TIME PLOTTED => 10:13

DIST	COUNTY	ROUTE	POST MILES TOTAL PROJECT	SHEET No	TOTAL SHEETS
01	Hum	299	32.1	32	32

CERTIFIED ENGINEERING GEOLOGIST 5-7-14

09-08-14
01 APPROVAL DATE

PROFESSIONAL GEOLOGIST Luis Paredes-Mejia No. 2329 Exp. 01-31-16 CERTIFIED ENGINEERING GEOLOGIST STATE OF CALIFORNIA

The State of California or its officers or agents shall not be responsible for the accuracy or completeness of electronic copies of this plan sheet.

This LOTB sheet was prepared in accordance with the Caltrans Soil & Rock Logging, Classification, & Presentation Manual (2010 Edition).

See 2010 Standard Plans A10F and A10G for Soil Legend, and A10H for Rock Legend.

FOR PLAN VIEW, SEE
"LOG OF TEST BORINGS 1 OF 2"

Note: Groundwater was not measured in borings RC-12-001, RC-12-002, and RC-12-004 during field investigation.

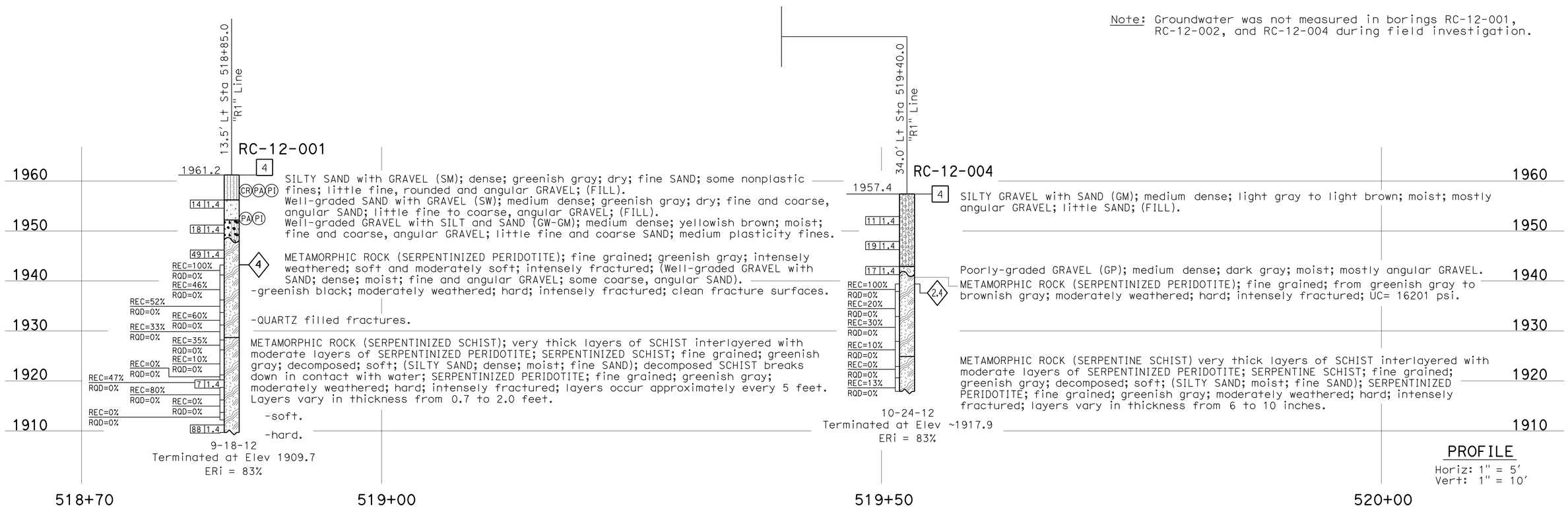

PROFILE
Horiz: 1" = 5'
Vert: 1" = 10'

ENGINEERING SERVICES	MATERIALS AND GEOTECHNICAL SERVICES	STATE OF CALIFORNIA DEPARTMENT OF TRANSPORTATION	DIVISION OF ENGINEERING SERVICES STRUCTURE DESIGN DESIGN BRANCH 2	BRIDGE NO. 04E0034 POST MILE 32.06	RETAINING WALL AT WILLOW CREEK LOG OF TEST BORINGS 2 OF 2
FUNCTIONAL SUPERVISOR NAME: R. Mahallati	DRAWN BY: F. Nguyen CHECKED BY: A. Barrie	FIELD INVESTIGATION BY: L. Paredes-Mejia, L. Leong			

OGS CIVIL LOG OF TEST BORINGS SHEET

ORIGINAL SCALE IN INCHES FOR REDUCED PLANS 0 1 2 3

UNIT: 3643
PROJECT NUMBER & PHASE: 01120001291 CONTRACT NO.: 01-0B4604

DISREGARD PRINTS BEARING EARLIER REVISION DATES

REVISION DATES 01-03-13 05-07-14 09-11-13 SHEET 10 OF 10

FILE => 01-0b460k_z_lotb02.dgn

USERNAME => s115152 DATE PLOTTED => 16-OCT-2014 TIME PLOTTED => 10:13