ACNHP-ER-19B3(004)E

Dist	COUNTY	ROUTE	POST MILES TOTAL PROJECT	SHEET No.	TOTAL SHEETS
01	Hum	101	R15.0, 29.4	1	47

STATE OF CALIFORNIA

DEPARTMENT OF TRANSPORTATION

PROJECT PLANS FOR CONSTRUCTION ON

STATE HIGHWAY

IN HUMBOLDT COUNTY
NEAR REDWAY
AT 1.5 MILES SOUTH OF HURLBUTT UC
AND NEAR MYERS FLAT
AT 1.1 MILES SOUTH OF WILLIFORD ROAD UC

TO BE SUPPLEMENTED BY STANDARD PLANS DATED 2010

INDEX OF PLANS

SHEET No.	DESCRIPTION
1	TITLE AND LOCATION MAP
2-3	TYPICAL CROSS SECTIONS
4-5	LAYOUT
6-7	PROFILE & SUPERELEVATION DIAGRAM
8-9	CONSTRUCTION DETAILS
10-15	DRAINAGE PLAN, PROFILE, DETAILS AND QUANTITIES
16-17	UTILITY
18	CONSTRUCTION AREA SIGNS
19-28	STAGE CONSTRUCTION PLAN & QUANTITIES
29	PAVEMENT DELINEATION DETAILS & QUANTITIES
30	SUMMARY OF QUANTITIES
31-33	EROSION CONTROL PLAN & QUANTITIES
34-47	REVISED STANDARD PLANS

THE STANDARD PLANS LIST APPLICABLE TO THIS CONTRACT IS INCLUDED IN THE NOTICE TO BIDDERS AND SPECIAL PROVISIONS BOOK.

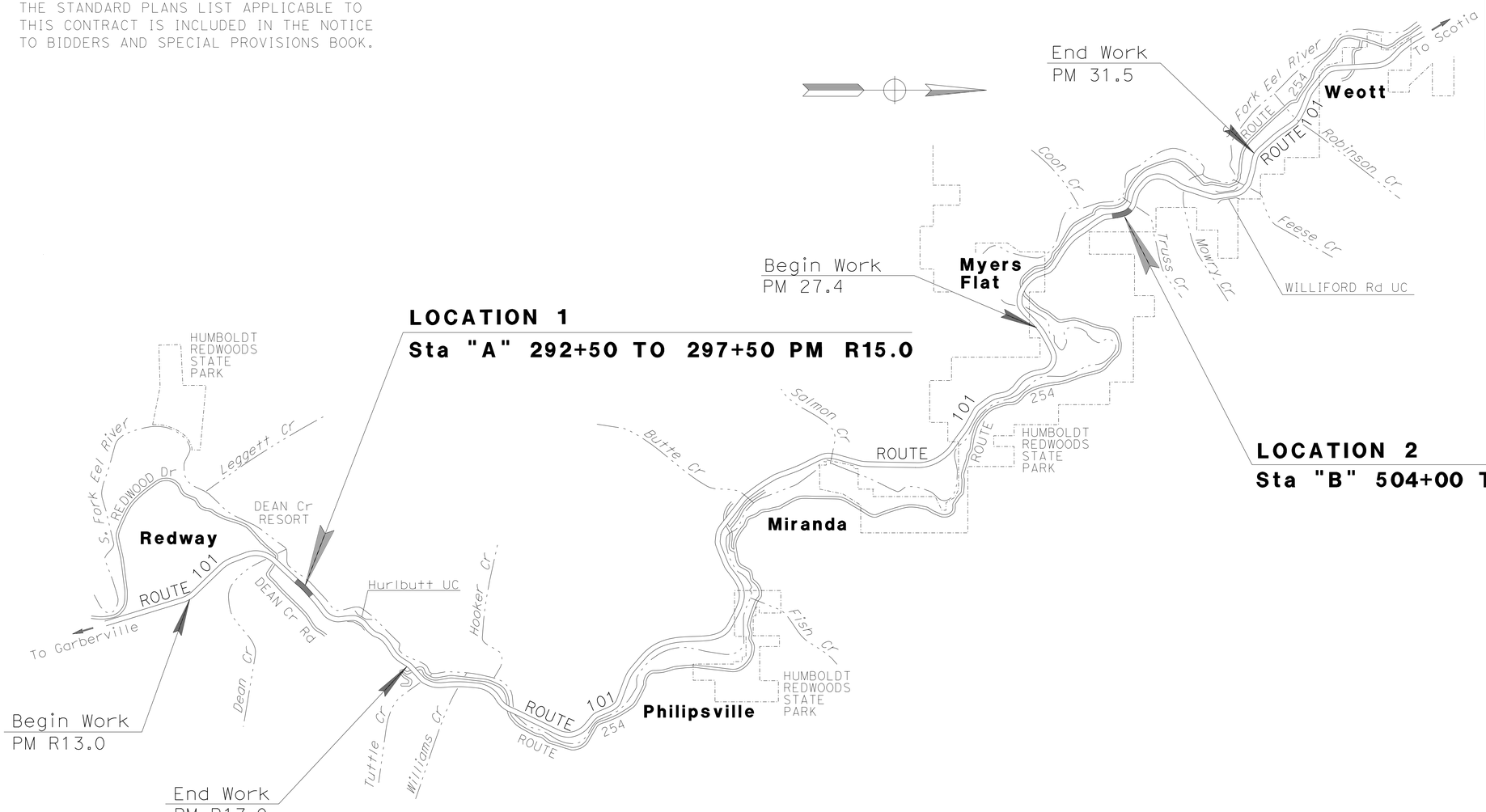

LOCATION 1
Sta "A" 292+50 TO 297+50 PM R15.0

LOCATION 2
Sta "B" 504+00 TO 511+50 PM 29.4

NO SCALE

THE CONTRACTOR SHALL POSSESS THE CLASS (OR CLASSES) OF LICENSE AS SPECIFIED IN THE "NOTICE TO BIDDERS."

Dianne M. Edwards 1-30-15
PROJECT ENGINEER DATE
REGISTERED CIVIL ENGINEER

REGISTERED PROFESSIONAL ENGINEER D.M.EDWARDS No. C-51898 Exp. 6-30-16 CIVIL STATE OF CALIFORNIA

January 30, 2015
PLANS APPROVAL DATE

THE STATE OF CALIFORNIA OR ITS OFFICERS OR AGENTS SHALL NOT BE RESPONSIBLE FOR THE ACCURACY OR COMPLETENESS OF SCANNED COPIES OF THIS PLAN SHEET.

CONTRACT No.	01-0B4004
PROJECT ID	0112000124

PROJECT MANAGER: TALITHA JANE HODGSON
DESIGN MANAGER: KELLY B. TIMMONS

P:\PROJ\01\0B400\drafting\sheets\0112000124ab001.dgn

LAST REVISION 09-15-14
DATE PLOTTED => 10-FEB-2015
TIME PLOTTED => 14:18

Dist	COUNTY	ROUTE	POST MILES TOTAL PROJECT	SHEET No.	TOTAL SHEETS
01	Hum	101	R15.0, 29.4	2	47

Dianne M Edwards 01-30-15
REGISTERED CIVIL ENGINEER DATE

January 30, 2015
PLANS APPROVAL DATE

REGISTERED PROFESSIONAL ENGINEER D.M.EDWARDS No. C-51898 Exp. 6-30-16 CIVIL STATE OF CALIFORNIA

THE STATE OF CALIFORNIA OR ITS OFFICERS OR AGENTS SHALL NOT BE RESPONSIBLE FOR THE ACCURACY OR COMPLETENESS OF SCANNED COPIES OF THIS PLAN SHEET.

NOTES:

1. DIMENSIONS OF THE PAVEMENT STRUCTURES (STRUCTURAL SECTIONS) ARE SUBJECT TO TOLERANCES SPECIFIED IN THE STANDARD SPECIFICATIONS.
2. SUPERELEVATIONS ARE SHOWN ON THE PROFILE AND SUPERELEVATION DIAGRAMS.
3. EXACT LOCATIONS AND TYPES OF HMA DIKE AND METAL BEAM GUARD RAILING ARE SHOWN ON THE LAYOUTS AND SUMMARY OF QUANTITIES SHEETS.

DESIGN DESIGNATION

ADT (2014)	6,830	D	60%
ADT (2034)	7,500	T	10%
DHV	990	V	65 mph
ESAL	3,652,398	TI_{20}	10.5

PAVEMENT CLIMATE REGION: NORTH COAST

ABBREVIATIONS:

HMA-O	HOT MIX ASPHALT (OPEN GRADED)
Veg CONTROL	VEGETATION CONTROL (MINOR CONCRETE) SEE CONSTRUCTION DETAILS
LL	LANE LINE

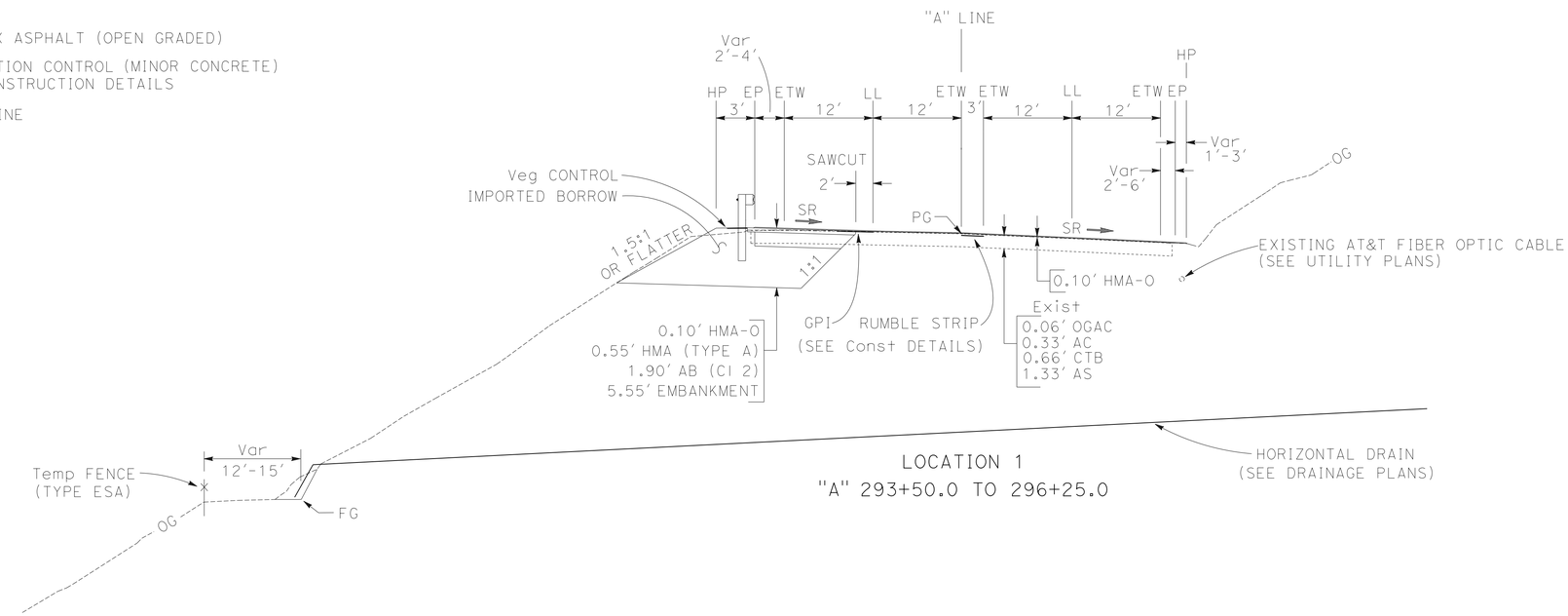

LOCATION 1
"A" 293+50.0 TO 296+25.0

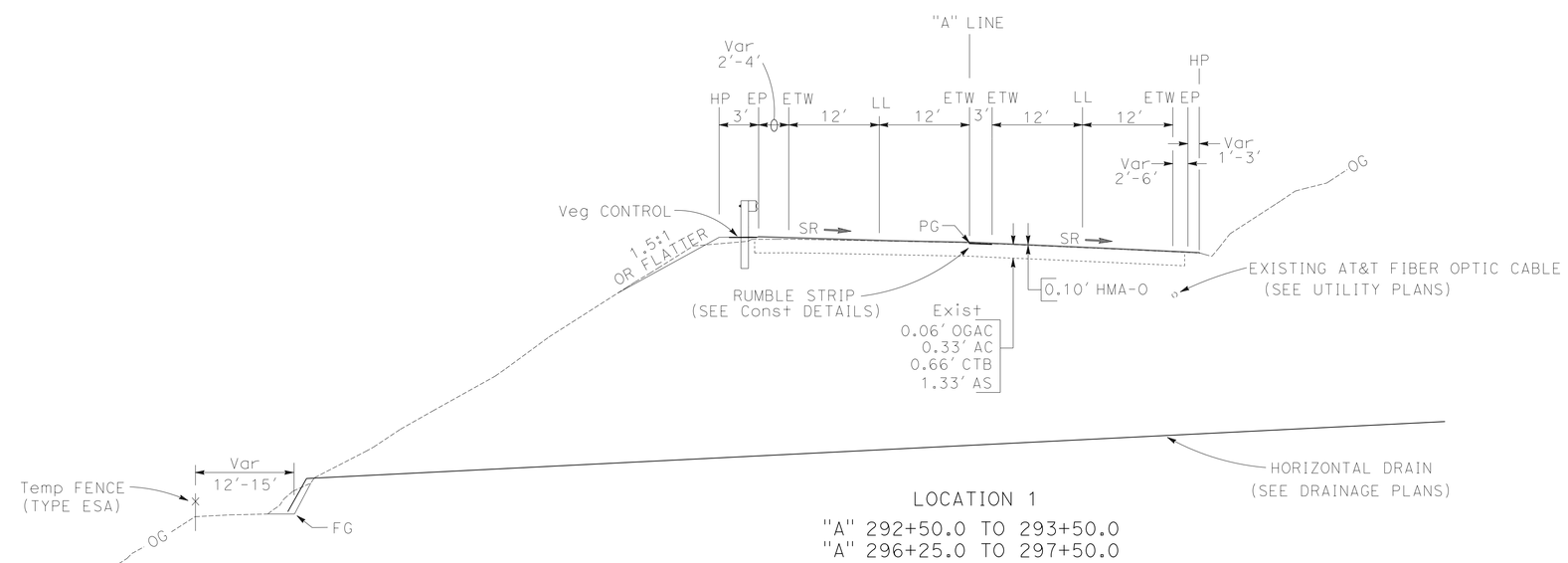

LOCATION 1
"A" 292+50.0 TO 293+50.0
"A" 296+25.0 TO 297+50.0

ROUTE 101

TYPICAL CROSS SECTIONS

NO SCALE

X-1

REVISED BY | DATE REVISED
DIANNE EDWARDS | ROBERT KING
CALCULATED-DESIGNED BY | CHECKED BY
FUNCTIONAL SUPERVISOR: KELLY B. TIMMONS

STATE OF CALIFORNIA - DEPARTMENT OF TRANSPORTATION
Caltrans® **DESIGN**

P:\PROJ\01\0B400\drafting\sheets\0112000124ca001.dgn

LAST REVISION 09-15-14 | DATE PLOTTED => 10-FEB-2015 | TIME PLOTTED => 14:18

Dist	COUNTY	ROUTE	POST MILES TOTAL PROJECT	SHEET No.	TOTAL SHEETS
01	Hum	101	R15.0, 29.4	3	47

Dianne M Edwards 01-30-15
REGISTERED CIVIL ENGINEER DATE

January 30, 2015
PLANS APPROVAL DATE

REGISTERED PROFESSIONAL ENGINEER D.M.EDWARDS No. C-51898 Exp. 6-30-16 CIVIL STATE OF CALIFORNIA

THE STATE OF CALIFORNIA OR ITS OFFICERS OR AGENTS SHALL NOT BE RESPONSIBLE FOR THE ACCURACY OR COMPLETENESS OF SCANNED COPIES OF THIS PLAN SHEET.

DESIGN DESIGNATION

ADT (2014)	5,510	D	60%
ADT (2034)	6,050	T	11%
DHV	750	V	65 mph
ESAL	3,652,398	TI_{20}	10.5

PAVEMENT CLIMATE REGION: NORTH COAST

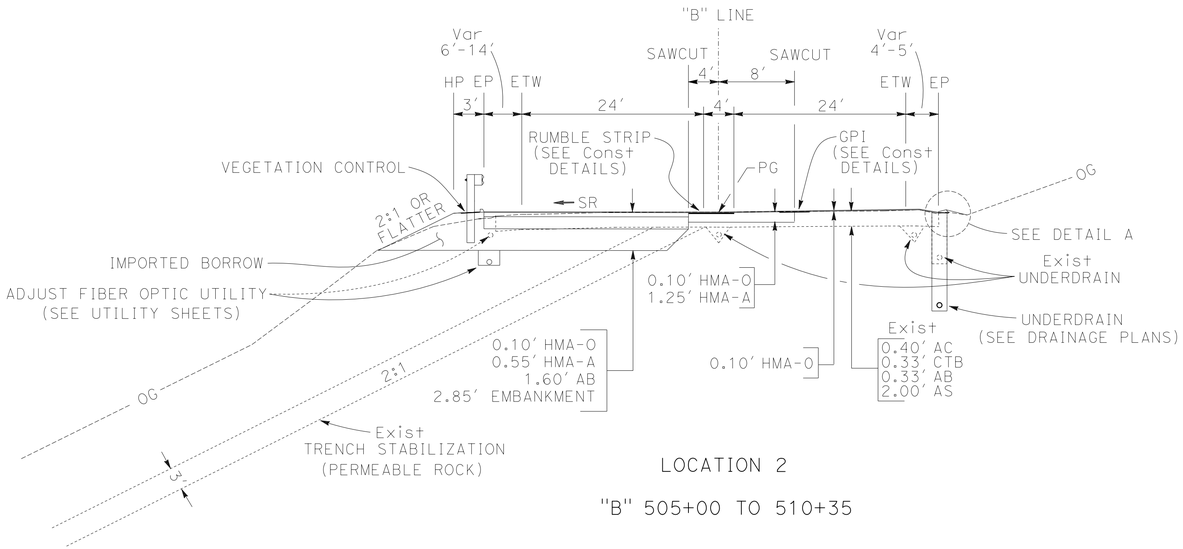

LOCATION 2

"B" 505+00 TO 510+35

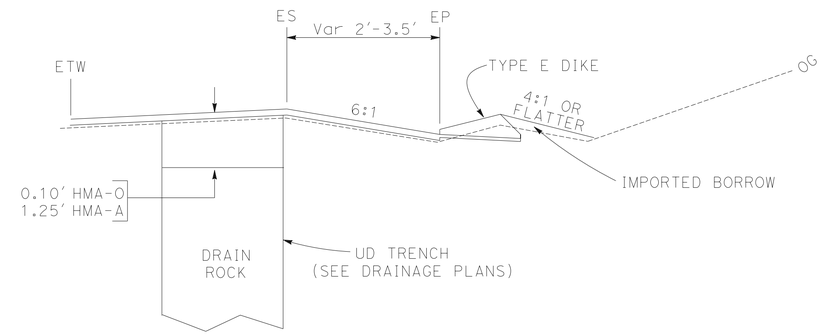

DETAIL A

"B" 506+00 TO 511+50

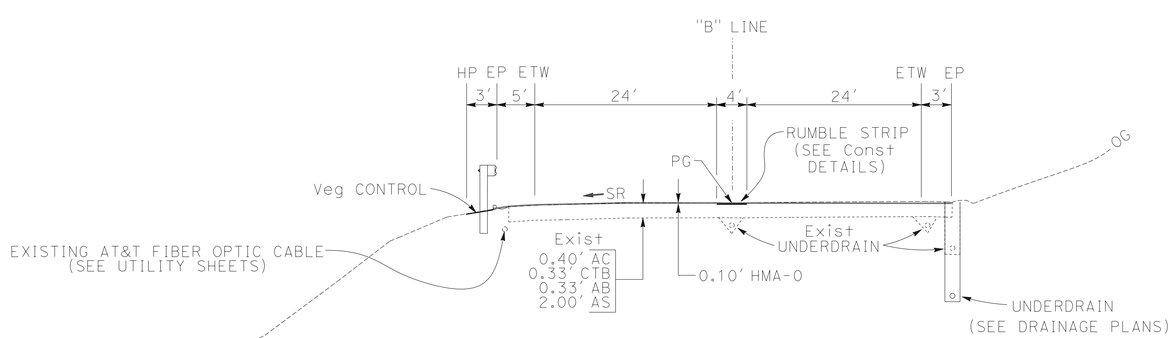

LOCATION 2

"B" 504+00.0 TO 505+00.0
"B" 510+35.0 TO 511+50.0

ROUTE 101

TYPICAL CROSS SECTION

NO SCALE

X-2

REVISED BY | DATE REVISED
DIANNE EDWARDS | ROBERT KING
CALCULATED-DESIGNED BY | CHECKED BY
FUNCTIONAL SUPERVISOR | KELLY B. TIMMONS

STATE OF CALIFORNIA - DEPARTMENT OF TRANSPORTATION
Caltrans
DESIGN

P:\PROJ\01\0B400\drafting\sheets\0112000124ca002.dgn

LAST REVISION 09-15-14 | DATE PLOTTED => 10-FEB-2015 | TIME PLOTTED => 14:18

BORDER LAST REVISED 7/2/2010 | USERNAME => s120115 | DGN FILE => 0112000124ca002.dgn | RELATIVE BORDER SCALE IS IN INCHES 0 1 2 3 | UNIT 0312 | PROJECT NUMBER & PHASE 01120001241

NOTES:

1. FOR ACCURATE RIGHT OF WAY AND ACCESS DATA, CONTACT RIGHT OF WAY ENGINEERING AT THE DISTRICT OFFICE.
2. PLACE GUARD RAILING DELINEATORS AT 50' C-C.

CURVE DATA

CURVE #	R	Δ	T	L
1	4000.00'	010°26'00"	365.20'	728.38'

ELEVATION IS BASED ON NAVD 88 DATUM

Dist	COUNTY	ROUTE	POST MILES TOTAL PROJECT	SHEET No.	TOTAL SHEETS
01	Hum	101	R15.0, 29.4	4	47

Dianne M Edwards 01-30-15
REGISTERED CIVIL ENGINEER DATE

January 30, 2015
PLANS APPROVAL DATE

REGISTERED PROFESSIONAL ENGINEER D.M.EDWARDS No. C-51898 Exp. 6-30-16 CIVIL STATE OF CALIFORNIA

THE STATE OF CALIFORNIA OR ITS OFFICERS OR AGENTS SHALL NOT BE RESPONSIBLE FOR THE ACCURACY OR COMPLETENESS OF SCANNED COPIES OF THIS PLAN SHEET.

LEGEND

RECONSTRUCT STRUCTURAL SECTION

GUARD RAILING DELINEATOR (TYPE F)

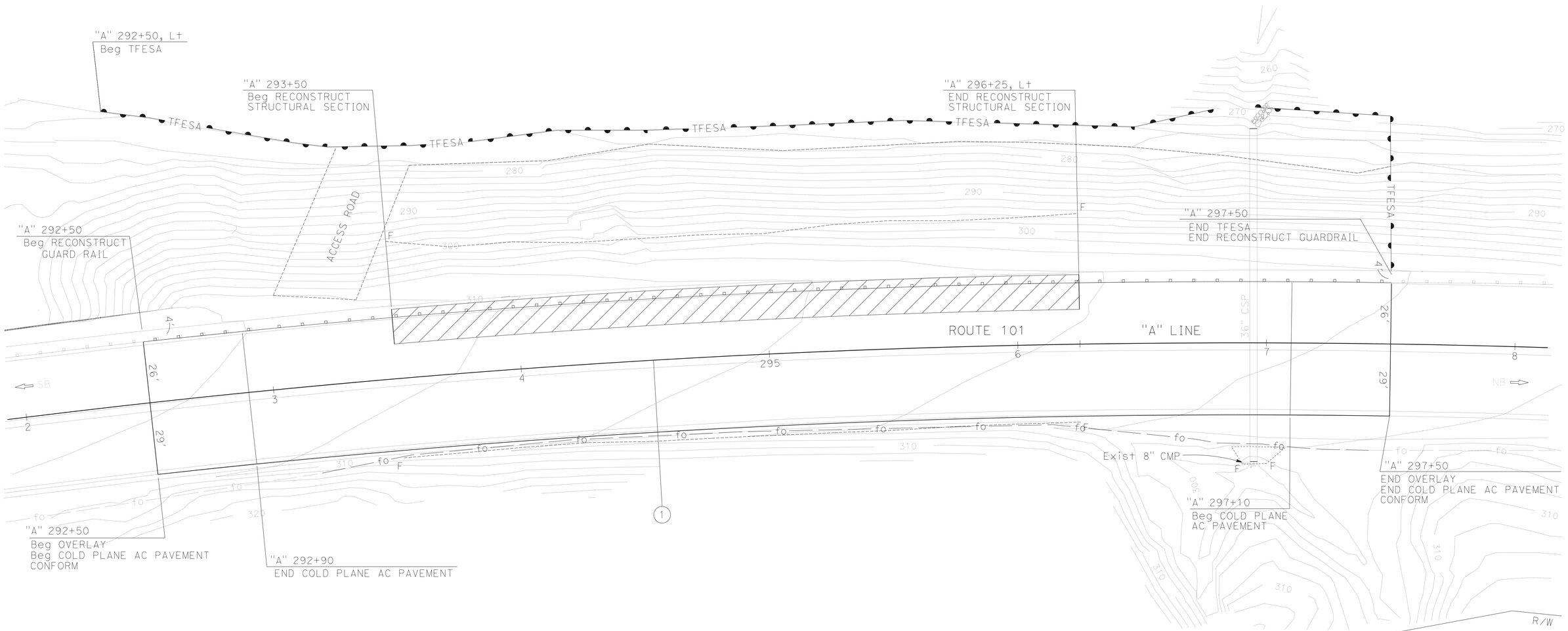

LOCATION 1

LAYOUT

SCALE: 1" = 20'

L-1

REVISED BY	DATE REVISED
DIANNE EDWARDS	ROBERT KING
CALCULATED-DESIGNED BY	CHECKED BY
FUNCTIONAL SUPERVISOR	KELLY B. TIMMONS

STATE OF CALIFORNIA - DEPARTMENT OF TRANSPORTATION

Caltrans® DESIGN

P:\PROJ\01\0B400\drafting\sheets\0112000124ea001.dgn

LAST REVISION 09-15-14 | DATE PLOTTED => 10-FEB-2015 TIME PLOTTED => 14:18

BORDER LAST REVISED 7/2/2010 | USERNAME => s120115 DGN FILE => 0112000124ea001.dgn | RELATIVE BORDER SCALE IS IN INCHES 0 1 2 3 | UNIT 0312 | PROJECT NUMBER & PHASE 01120001241

NOTES:

1. FOR ACCURATE RIGHT OF WAY AND ACCESS DATA, CONTACT RIGHT OF WAY ENGINEERING AT THE DISTRICT OFFICE.

CURVE DATA

CURVE #	R	Δ	T	L
2	1200′	28°38′52″	306.41′	600′

ELEVATION IS BASED ON NAVD 88 DATUM

Dist	COUNTY	ROUTE	POST MILES TOTAL PROJECT	SHEET No.	TOTAL SHEETS
01	Hum	101	R15.0, 29.4	5	47

Dianne M Edwards 01-30-15
REGISTERED CIVIL ENGINEER DATE

January 30, 2015
PLANS APPROVAL DATE

REGISTERED PROFESSIONAL ENGINEER D.M.EDWARDS No. C-51898 Exp. 6-30-16 CIVIL STATE OF CALIFORNIA

THE STATE OF CALIFORNIA OR ITS OFFICERS OR AGENTS SHALL NOT BE RESPONSIBLE FOR THE ACCURACY OR COMPLETENESS OF SCANNED COPIES OF THIS PLAN SHEET.

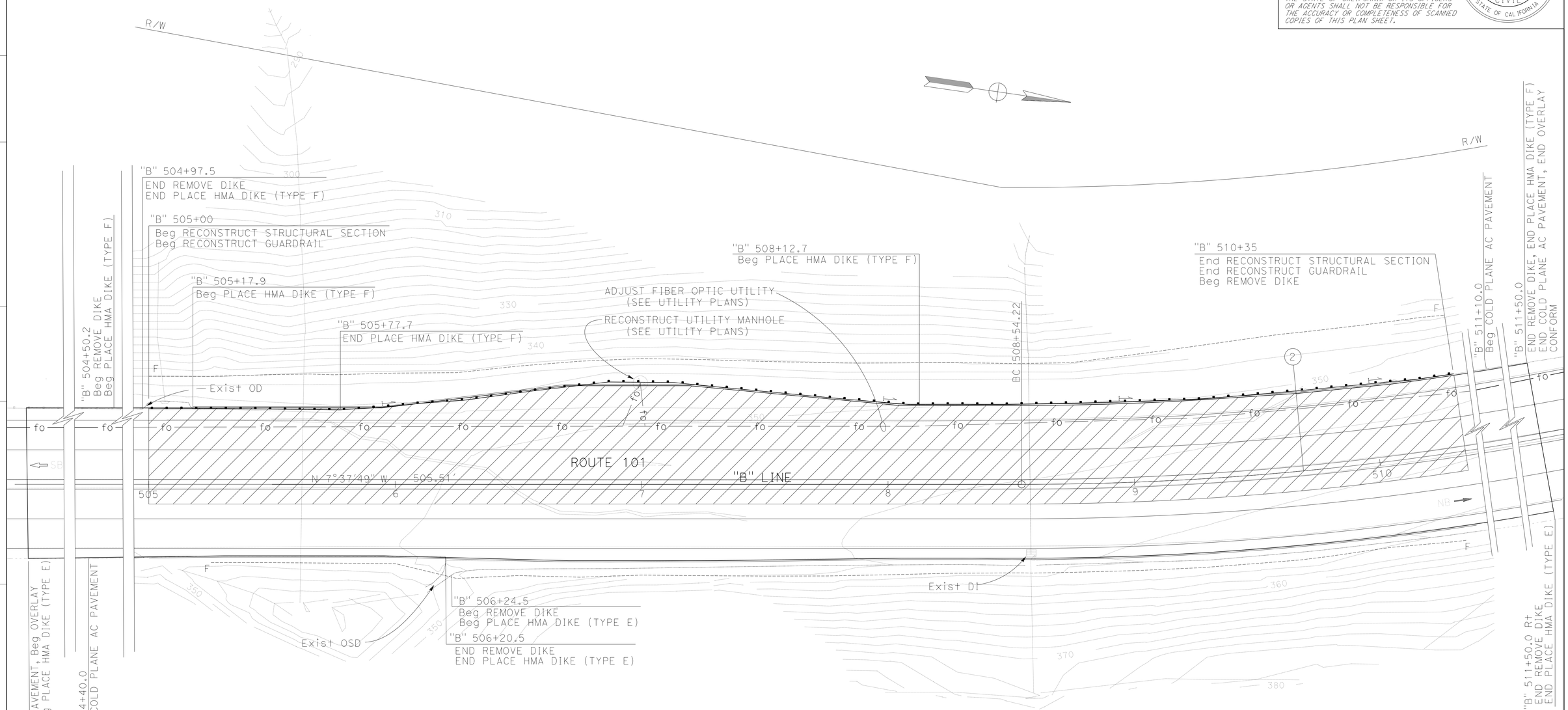

LOCATION 2

LAYOUT

SCALE: 1" = 20′

L-2

REVISED BY	DATE REVISED
DIANNE EDWARDS	ROBERT KING
CALCULATED-DESIGNED BY	CHECKED BY
FUNCTIONAL SUPERVISOR	KELLY B. TIMMONS

STATE OF CALIFORNIA - DEPARTMENT OF TRANSPORTATION

Caltrans® DESIGN

P:\PROJ\01\0B400\drafting\sheets\0112000124ea002.dgn

LAST REVISION 09-15-14 | DATE PLOTTED => 10-FEB-2015 | TIME PLOTTED => 14:18

Dist	COUNTY	ROUTE	POST MILES TOTAL PROJECT	SHEET No.	TOTAL SHEETS
01	Hum	101	R15.0, 29.4	6	47

Dianne M Edwards 01-30-15
REGISTERED CIVIL ENGINEER DATE

January 30, 2015
PLANS APPROVAL DATE

REGISTERED PROFESSIONAL ENGINEER
D.M.EDWARDS
No. C-51898
Exp. 6-30-16
CIVIL
STATE OF CALIFORNIA

THE STATE OF CALIFORNIA OR ITS OFFICERS OR AGENTS SHALL NOT BE RESPONSIBLE FOR THE ACCURACY OR COMPLETENESS OF SCANNED COPIES OF THIS PLAN SHEET.

NOTE:
ELEVATION IS BASED ON NAVD88.

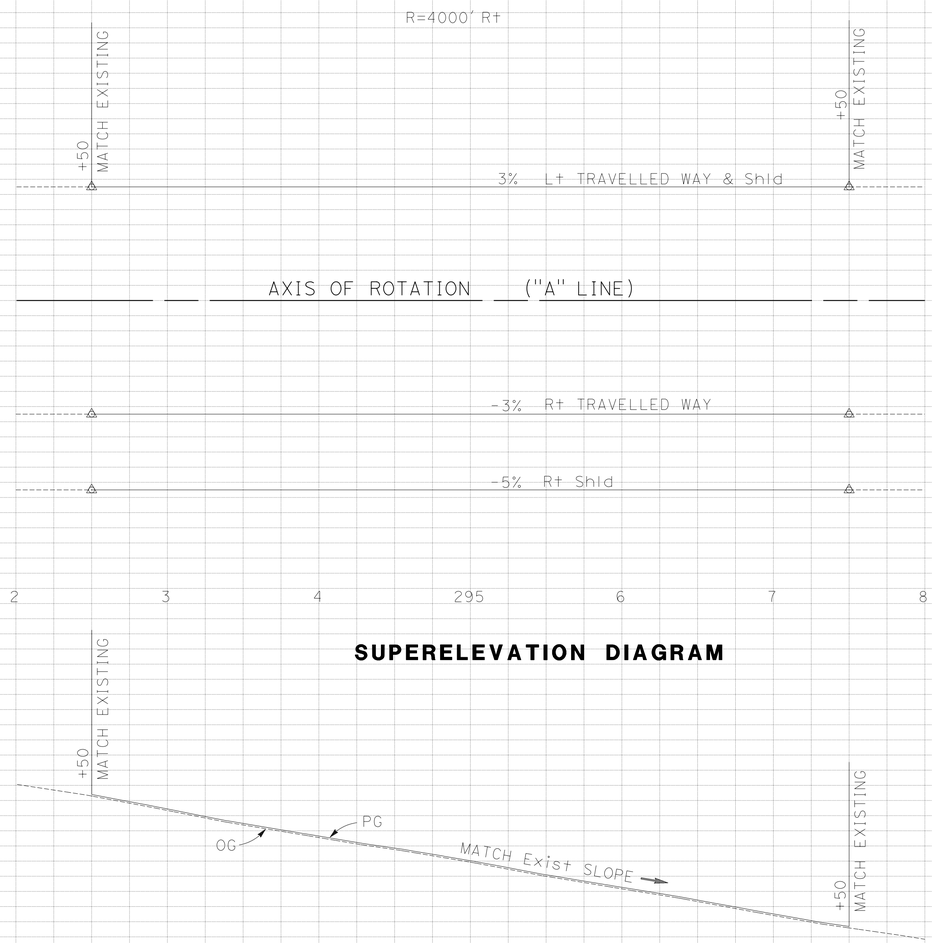

SUPERELEVATION DIAGRAM

PROFILE

LOCATION 1
"A" LINE

ROUTE 101

5% 0% -5%

9 290 1 2 3 4 295 6 7 8 9 300 1 2

315 310 305 300 295 290

STATION 9 290 1 2 3 4 295 6 7 8 9 300 1 2 TOTAL

CY Exc
Emb

PROFILE AND SUPERELEVATION DIAGRAM

SCALE: 1" = 50' Horiz
1" = 5' Vert

PS-1

REVISED BY | DATE REVISED
DIANNE EDWARDS | ROBERT KING
CALCULATED-DESIGNED BY | CHECKED BY
FUNCTIONAL SUPERVISOR
KELLY B. TIMMONS

STATE OF CALIFORNIA - DEPARTMENT OF TRANSPORTATION
Caltrans®
DESIGN

P:\PROJ\01\0B400\drafting\sheets\01120001241b001.dgn

LAST REVISION 09-15-14 | DATE PLOTTED => 10-FEB-2015 | TIME PLOTTED => 14:18

Dist	COUNTY	ROUTE	POST MILES TOTAL PROJECT	SHEET No.	TOTAL SHEETS
01	Hum	101	R15.0, 29.4	7	47

Dianne M Edwards 01-30-15
REGISTERED CIVIL ENGINEER DATE

January 30, 2015
PLANS APPROVAL DATE

REGISTERED PROFESSIONAL ENGINEER D.M.EDWARDS No. C-51898 Exp. 6-30-16 CIVIL STATE OF CALIFORNIA

THE STATE OF CALIFORNIA OR ITS OFFICERS OR AGENTS SHALL NOT BE RESPONSIBLE FOR THE ACCURACY OR COMPLETENESS OF SCANNED COPIES OF THIS PLAN SHEET.

NOTE:
ELEVATION IS BASED ON NAVD88.

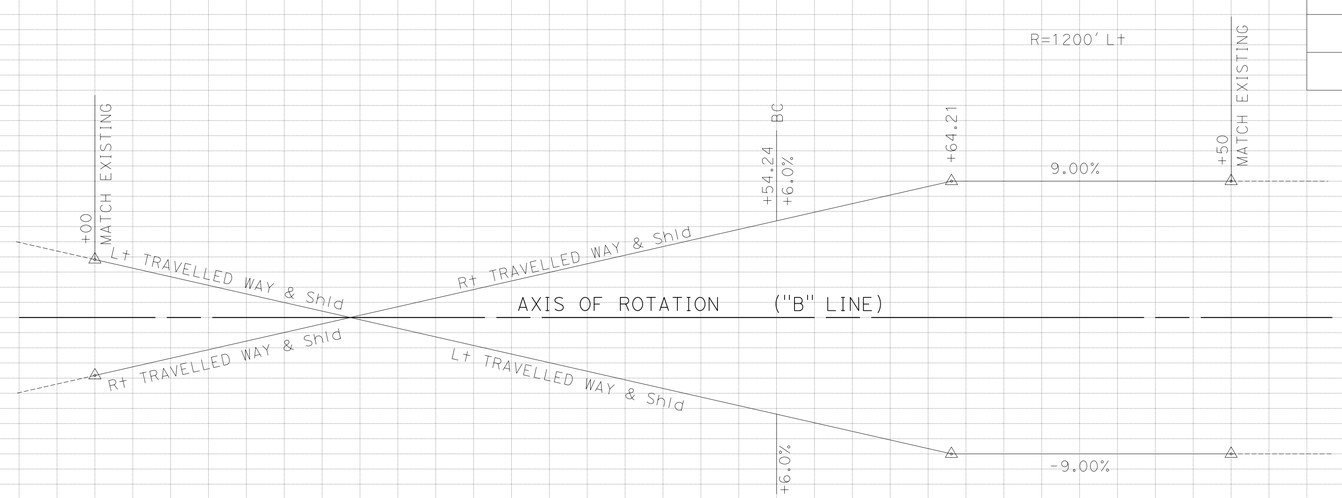

SUPERELEVATION DIAGRAM

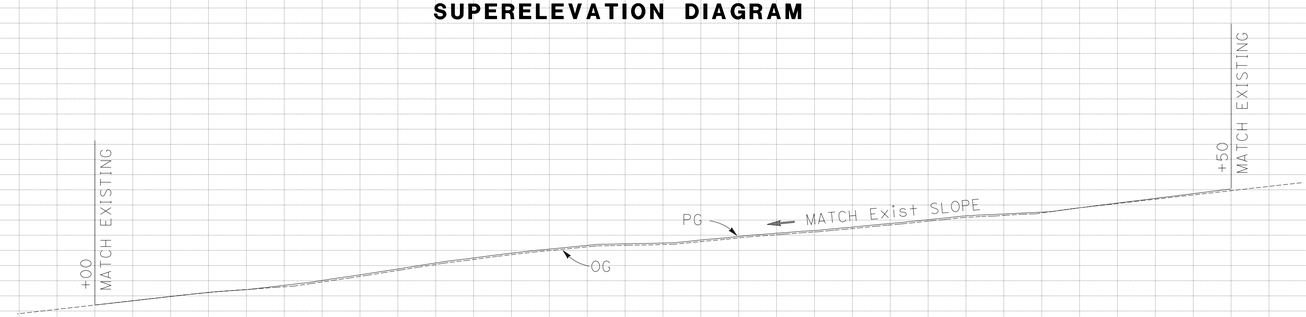

PROFILE

LOCATION 2
"A" LINE

ROUTE 101

PROFILE AND SUPERELEVATION DIAGRAM

SCALE: 1" = 50' Horiz
1" = 5' Vert

PS-2

STATION	1	2	3	4	505	6	7	8	9	510	1	2	3	4	TOTAL
CY Exc															
CY Emb															

REVISED BY | DATE REVISED
DIANNE EDWARDS | ROBERT KING
CALCULATED-DESIGNED BY | CHECKED BY
FUNCTIONAL SUPERVISOR | KELLY B. TIMMONS

STATE OF CALIFORNIA - DEPARTMENT OF TRANSPORTATION
Caltrans® DESIGN

P:\PROJ\01\0B400\drafting\sheets\01120001241fb002.dgn

LAST REVISION 09-15-14 | DATE PLOTTED => 10-FEB-2015 | TIME PLOTTED => 14:18

BORDER LAST REVISED 7/2/2010 | USERNAME => s120115 | DGN FILE => 01120001241fb002.dgn | RELATIVE BORDER SCALE IS IN INCHES 0 1 2 3 | UNIT 0312 | PROJECT NUMBER & PHASE 01120001241

Dist	COUNTY	ROUTE	POST MILES TOTAL PROJECT	SHEET No.	TOTAL SHEETS
01	Hum	101	R15.0, 29.4	8	47

Dianne M Edwards 01-30-15
REGISTERED CIVIL ENGINEER DATE

January 30, 2015
PLANS APPROVAL DATE

REGISTERED PROFESSIONAL ENGINEER D.M.EDWARDS No. C-51898 Exp. 6-30-16 CIVIL STATE OF CALIFORNIA

THE STATE OF CALIFORNIA OR ITS OFFICERS OR AGENTS SHALL NOT BE RESPONSIBLE FOR THE ACCURACY OR COMPLETENESS OF SCANNED COPIES OF THIS PLAN SHEET.

NOTE:

FOR 'GROUND-IN RUMBLE STRIP' APPLICATIONS NOT SHOWN SEE STANDARD PLANS 2010.

LEGEND:

COLD PLANE AC PAVEMENT

ABBREVIATIONS:

GPI GEOSYNTHETIC PAVEMENT INTERLAYER (PAVING FABRIC)

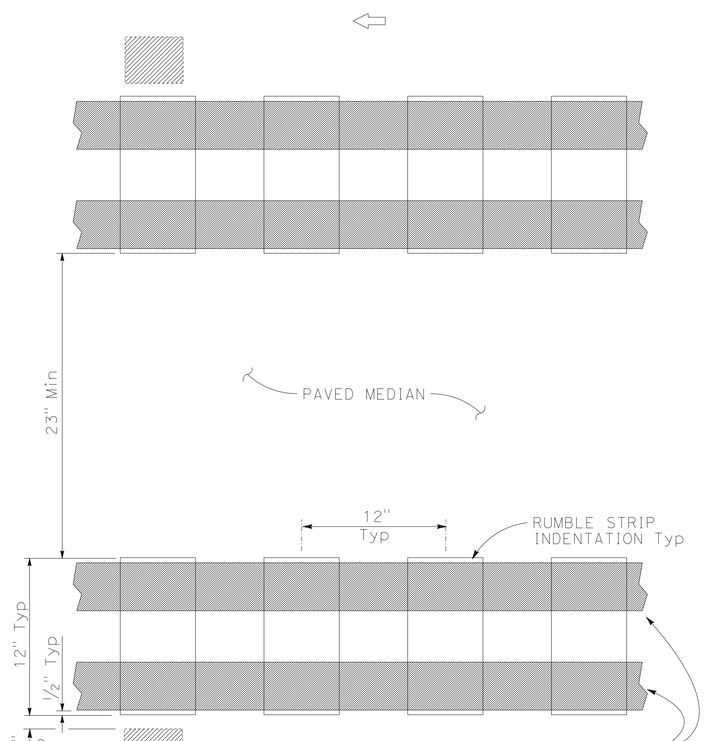

GROUND-IN CENTERLINE RUMBLESTRIP
(PAVED MEDIAN)

RUMBLE STRIP DETAIL

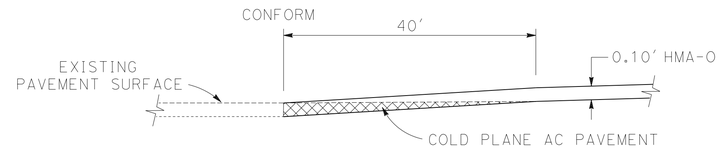

PAVING CONFORM DETAIL

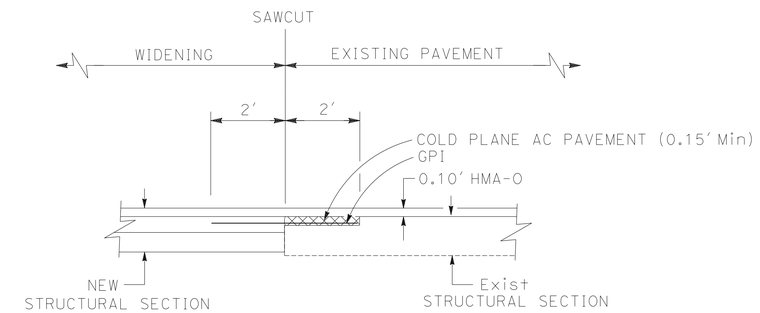

GPI DETAIL

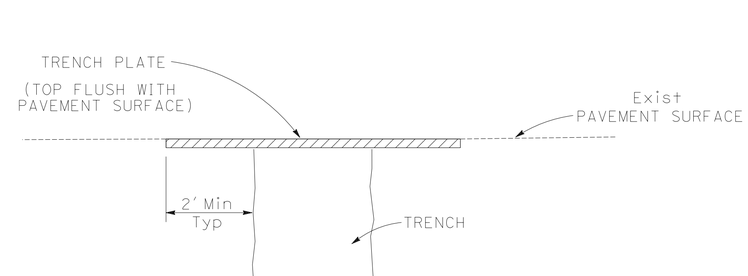

EMBEDDED TEMPORARY TRENCH PLATE AT CULVERT EXCAVATION

DRAINAGE SYSTEM No. 1 3

CONSTRUCTION DETAILS

NO SCALE

C-1

REVISED BY | DATE REVISED
DIANNE EDWARDS | ROBERT KING
CALCULATED-DESIGNED BY | CHECKED BY
FUNCTIONAL SUPERVISOR | KELLY B. TIMMONS

STATE OF CALIFORNIA - DEPARTMENT OF TRANSPORTATION
Caltrans
DESIGN

P:\PROJ\01\0B400\drafting\sheets\0112000124ga001.dgn

LAST REVISION 09-15-14 | DATE PLOTTED => 10-FEB-2015 | TIME PLOTTED => 14:18

Dist	COUNTY	ROUTE	POST MILES TOTAL PROJECT	SHEET No.	TOTAL SHEETS
01	Hum	101	R15.0, 29.4	9	47

Dianne M Edwards 01-30-15
REGISTERED CIVIL ENGINEER DATE

January 30, 2015
PLANS APPROVAL DATE

REGISTERED PROFESSIONAL ENGINEER D.M.EDWARDS No. C-51898 Exp. 6-30-16 CIVIL STATE OF CALIFORNIA

THE STATE OF CALIFORNIA OR ITS OFFICERS OR AGENTS SHALL NOT BE RESPONSIBLE FOR THE ACCURACY OR COMPLETENESS OF SCANNED COPIES OF THIS PLAN SHEET.

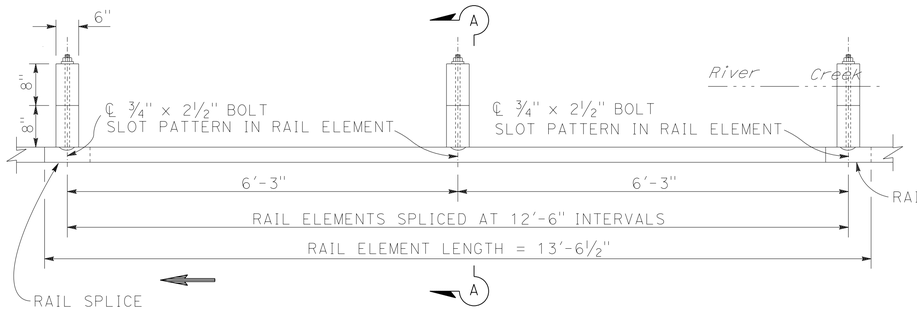

PLAN VIEW

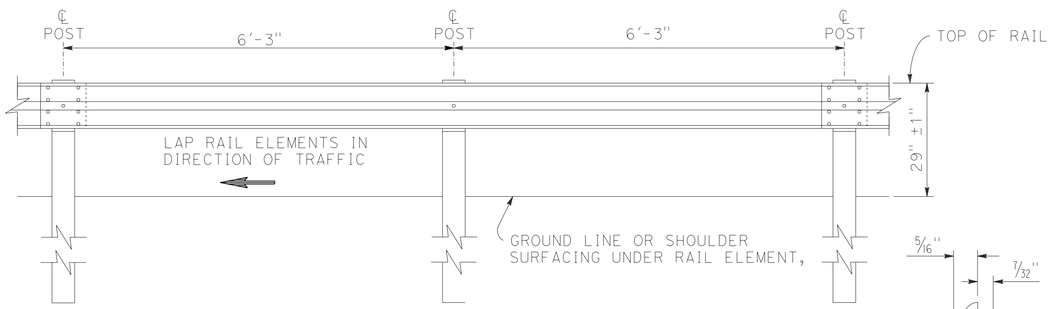

ELEVATION

GUARD RAILING WITH WOOD POST AND BLOCKS

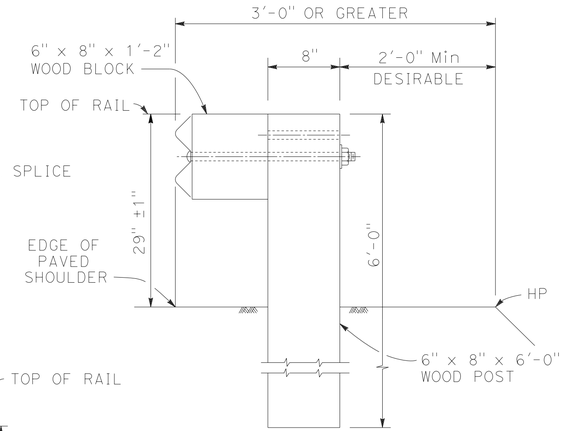

TYPICAL ROADWAY INSTALLATION

NOTES:

1. WHERE THE DISTANCE BETWEEN BACK OF POST AND HINGE POINT IS LESS THAN 42", CONSTRUCT VEGETATION CONTROL TO 6" FROM HINGE POINT WHILE MAINTAINING THE 8" BLOCK-OUT AT BACK OF POST. IF THE 8" BLOCK-OUT AT BACK OF POST CAN NOT BE MAINTAINED, CONSTRUCT VEGETATION CONTROL FLUSH WITH THE BACK EDGE OF POST.

2. CONSTRUCT VEGETATION CONTROL TO THE EDGE OF PAVED SHOULDER. WHERE DIKE IS CONSTRUCTED UNDER RAILING, CONSTRUCT VEGETATION CONTROL TO BACK EDGE OF DIKE.

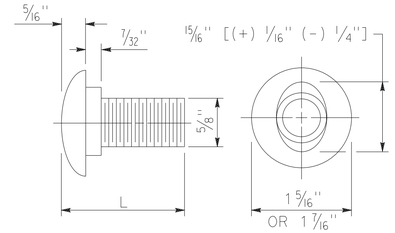

5/8" ø BUTTON HEAD BOLT

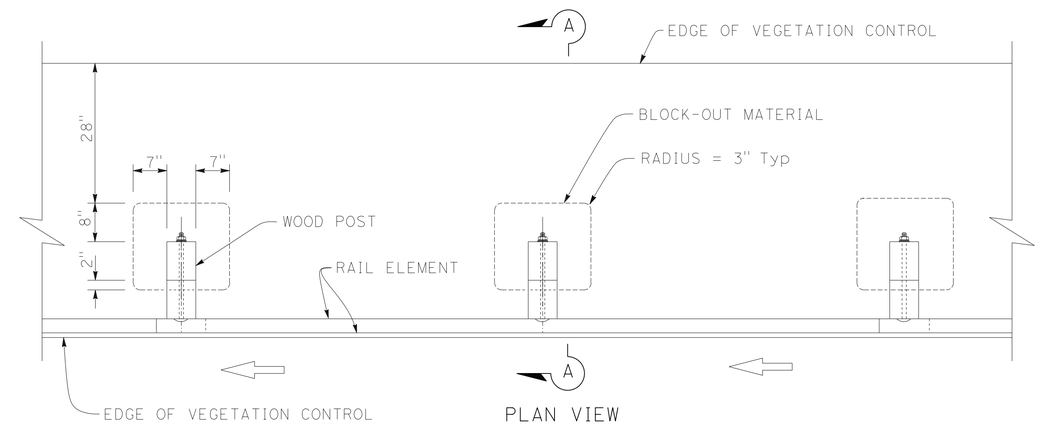

PLAN VIEW

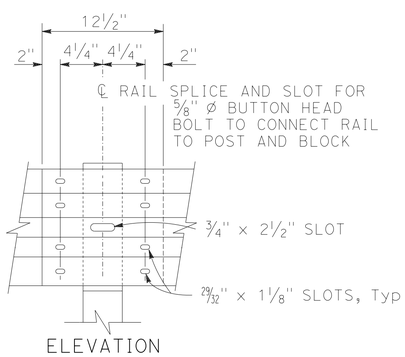

ELEVATION

RAIL ELEMENT SPLICE DETAIL

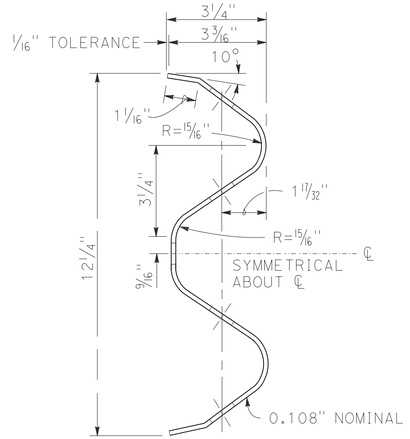

SECTION THRU RAIL ELEMENT

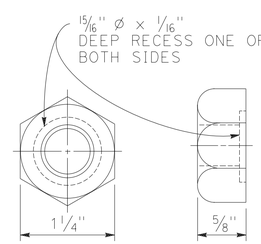

5/8" ø RECESS NUT

L	THREAD LENGTH
1⅜"	FULL THREAD LENGTH
2"	FULL THREAD LENGTH
10"	4" Min THREAD LENGTH
18"	4" Min THREAD LENGTH
20"	4" Min THREAD LENGTH
22"	4" Min THREAD LENGTH
** 2¾"	2" Min THREAD LENGTH
** 19"	4" Min THREAD LENGTH

** FOR NESTED RAIL APPLICATIONS.

A) CONNECT THE OVER LAPPED END OF THE RAIL ELEMENTS WITH 5/8" ø X 1 3/8" BUTTON HEAD OVAL SHOULDER SPLICE BOLTS INSERTED INTO THE 13/16" X 1 1/8" SLOTS AND BOLTED TOGETHER WITH 5/8" ø RECESSED HEX NUTS. RECESS OF HEX NUT POINTS TOWARD RAIL ELEMENT. A TOTAL OF 8 BOLTS AND NUTS ARE TO BE USED AT EACH RAIL SPLICE CONNECTION.

B) THE ENDS OF THE RAIL ELEMENTS ARE TO BE OVERLAPPED IN THE DIRECTION OF TRAFFIC (SEE DETAILS).

GUARDRAIL DETAILS

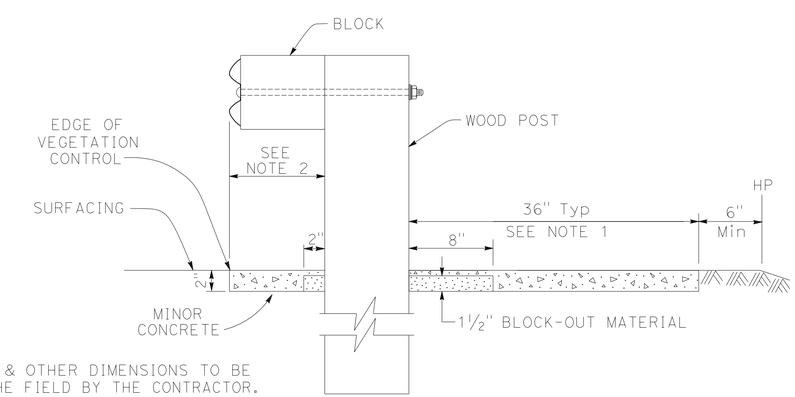

SECTION A-A

NOTE:

POST SPACING & OTHER DIMENSIONS TO BE VERIFIED IN THE FIELD BY THE CONTRACTOR.

CONSTRUCTION DETAILS

NO SCALE

C-2

REVISED BY | DATE REVISED
DIANNE EDWARDS | ROBERT KING
CALCULATED-DESIGNED BY | CHECKED BY
FUNCTIONAL SUPERVISOR | KELLY B. TIMMONS

STATE OF CALIFORNIA - DEPARTMENT OF TRANSPORTATION
Caltrans® DESIGN

P:\PROJ\01\0B400\drafting\sheets\0112000124ga002.dgn

LAST REVISION 09-15-14 | DATE PLOTTED => 10-FEB-2015 | TIME PLOTTED => 14:18

NOTE:

1. FOR ACCURATE RIGHT OF WAY AND ACCESS DATA, CONTACT RIGHT OF WAY ENGINEERING AT THE DISTRICT OFFICE.

Dist	COUNTY	ROUTE	POST MILES TOTAL PROJECT	SHEET No.	TOTAL SHEETS
01	Hum	101	R15.0, 29.4	10	47

Dianne M Edwards 01-30-15
REGISTERED CIVIL ENGINEER DATE

January 30, 2015
PLANS APPROVAL DATE

REGISTERED PROFESSIONAL ENGINEER D.M.EDWARDS No. C-51898 Exp. 6-30-16 CIVIL STATE OF CALIFORNIA

THE STATE OF CALIFORNIA OR ITS OFFICERS OR AGENTS SHALL NOT BE RESPONSIBLE FOR THE ACCURACY OR COMPLETENESS OF SCANNED COPIES OF THIS PLAN SHEET.

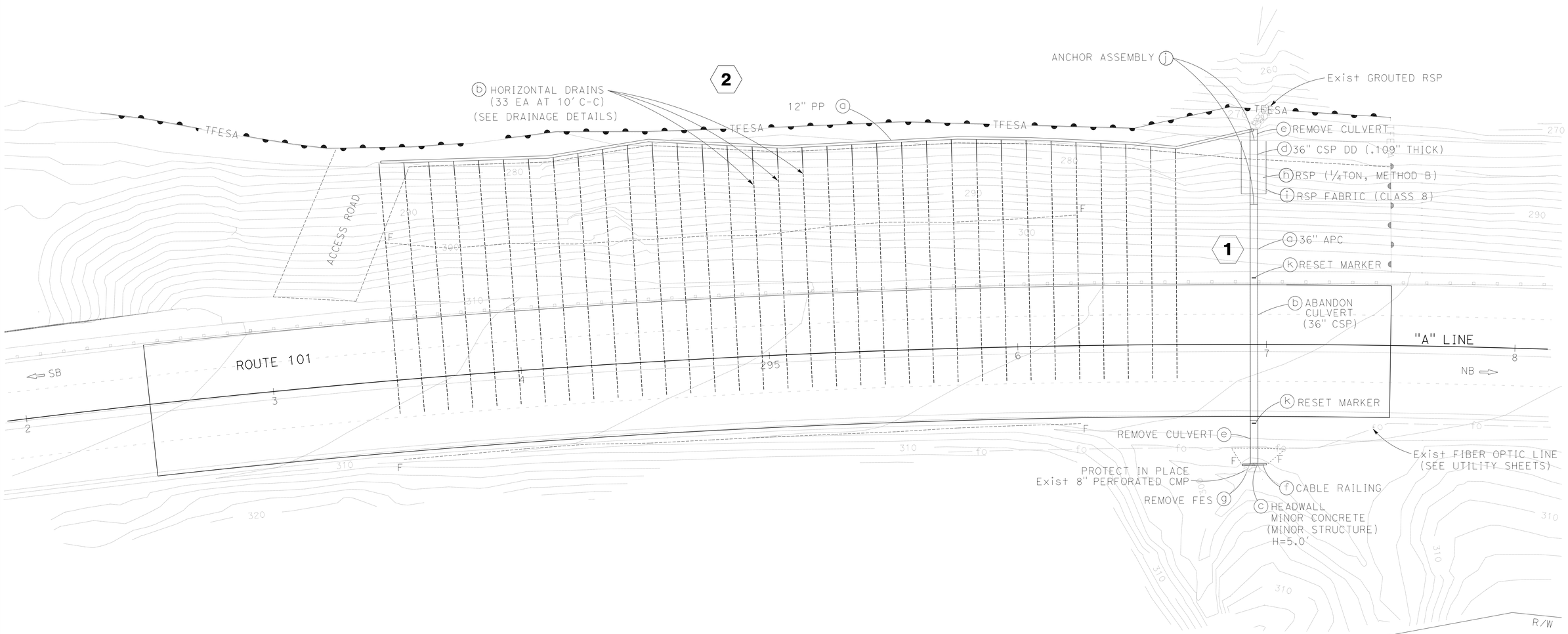

LOCATION 1

APPROVED FOR DRAINAGE WORK ONLY

DRAINAGE PLAN

SCALE: 1" = 20'

D-1

REVISED BY	DATE REVISED
DIANNE EDWARDS	ROBERT KING
CALCULATED-DESIGNED BY	CHECKED BY
FUNCTIONAL SUPERVISOR	KELLY B. TIMMONS

STATE OF CALIFORNIA - DEPARTMENT OF TRANSPORTATION

Caltrans

DESIGN

P:\PROJ\01\0B400\drafting\sheets\01120001241a001.dgn

LAST REVISION 09-15-14 | DATE PLOTTED => 10-FEB-2015 | TIME PLOTTED => 14:18

Dist	COUNTY	ROUTE	POST MILES TOTAL PROJECT	SHEET No.	TOTAL SHEETS
01	Hum	101	R15.0, 29.4	11	47

Dianne M Edwards 01-30-15
REGISTERED CIVIL ENGINEER DATE

January 30, 2015
PLANS APPROVAL DATE

REGISTERED PROFESSIONAL ENGINEER
D.M.EDWARDS
No. C-51898
Exp. 6-30-16
CIVIL
STATE OF CALIFORNIA

THE STATE OF CALIFORNIA OR ITS OFFICERS OR AGENTS SHALL NOT BE RESPONSIBLE FOR THE ACCURACY OR COMPLETENESS OF SCANNED COPIES OF THIS PLAN SHEET.

NOTES:

1. FOR ACCURATE RIGHT OF WAY AND ACCESS DATA, CONTACT RIGHT OF WAY ENGINEERING AT THE DISTRICT OFFICE.

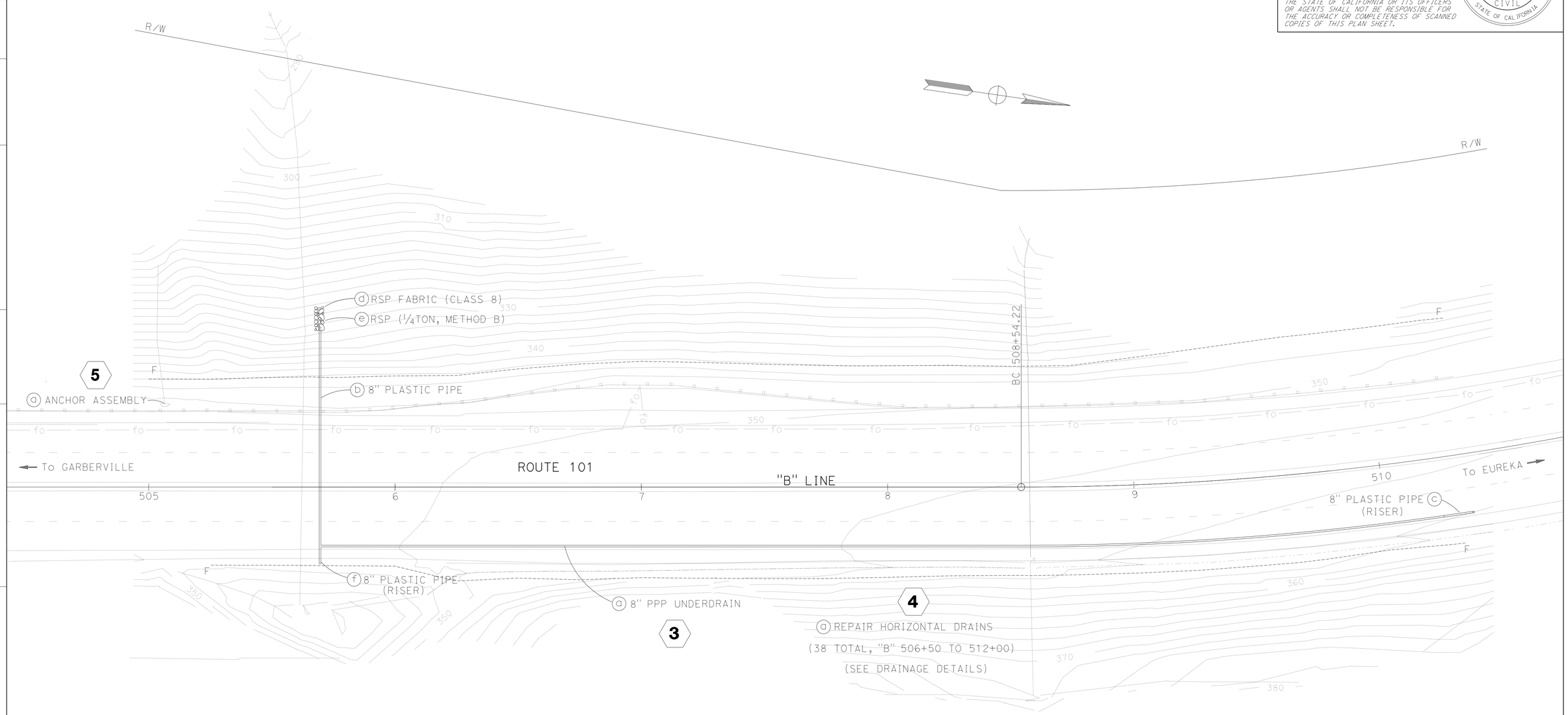

LOCATION 2

APPROVED FOR DRAINAGE WORK ONLY

DRAINAGE PLAN

SCALE: 1" = 20'

D-2

REVISED BY	DATE REVISED

DIANNE EDWARDS
ROBERT KING

CALCULATED-DESIGNED BY
CHECKED BY

FUNCTIONAL SUPERVISOR
KELLY B. TIMMONS

STATE OF CALIFORNIA - DEPARTMENT OF TRANSPORTATION
Caltrans
DESIGN

P:\PROJ\01\0B400\drafting\sheets\01120001241a002.dgn

LAST REVISION 09-15-14
DATE PLOTTED => 10-FEB-2015
TIME PLOTTED => 14:18

Dist	COUNTY	ROUTE	POST MILES TOTAL PROJECT	SHEET No.	TOTAL SHEETS
01	Hum	101	R15.0, 29.4	12	47

Dianne M Edwards 01-30-15
REGISTERED CIVIL ENGINEER DATE

January 30, 2015
PLANS APPROVAL DATE

REGISTERED PROFESSIONAL ENGINEER D.M.EDWARDS No. C-51898 Exp. 6-30-16 CIVIL STATE OF CALIFORNIA

THE STATE OF CALIFORNIA OR ITS OFFICERS OR AGENTS SHALL NOT BE RESPONSIBLE FOR THE ACCURACY OR COMPLETENESS OF SCANNED COPIES OF THIS PLAN SHEET.

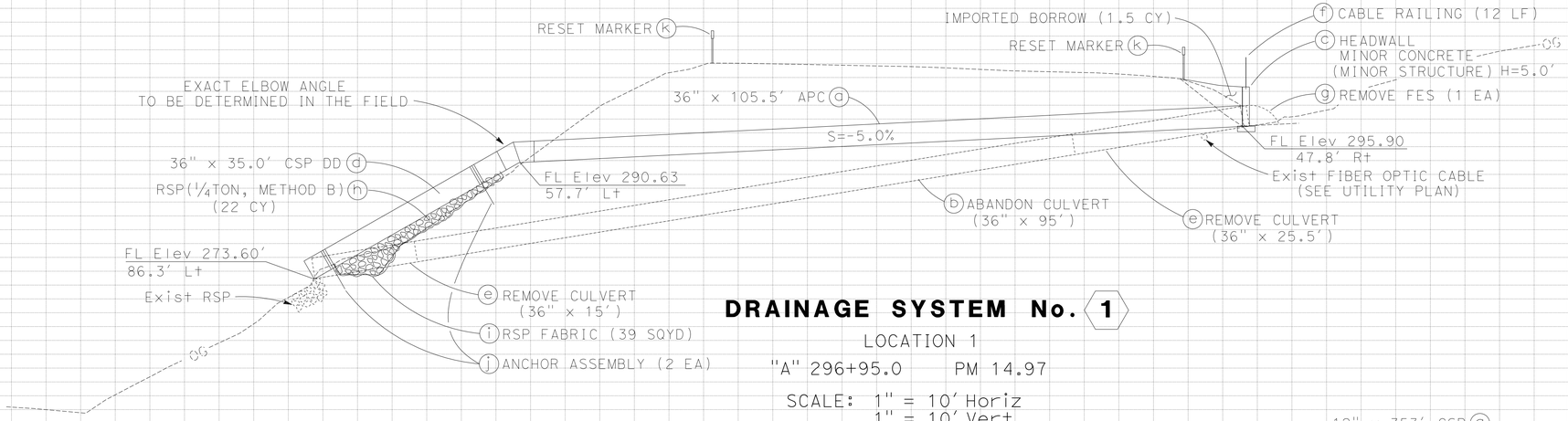

DRAINAGE SYSTEM No. 1

LOCATION 1

"A" 296+95.0 PM 14.97

SCALE: 1" = 10' Horiz
1" = 10' Vert

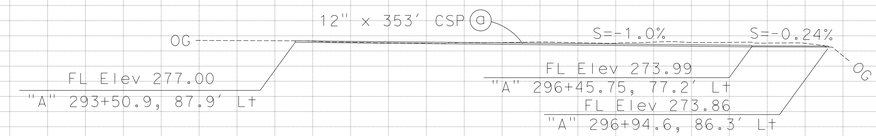

DRAINAGE SYSTEM No. 2

LOCATION 1

"A" 293+50.8, 87.9' Lt TO 296+45.8, 77.3' Lt
"A" 296+45.8, 77.3' Lt TO 296+94.6, 86.3' Lt

SCALE: 1" = 50' Horiz
1" = 50' Vert

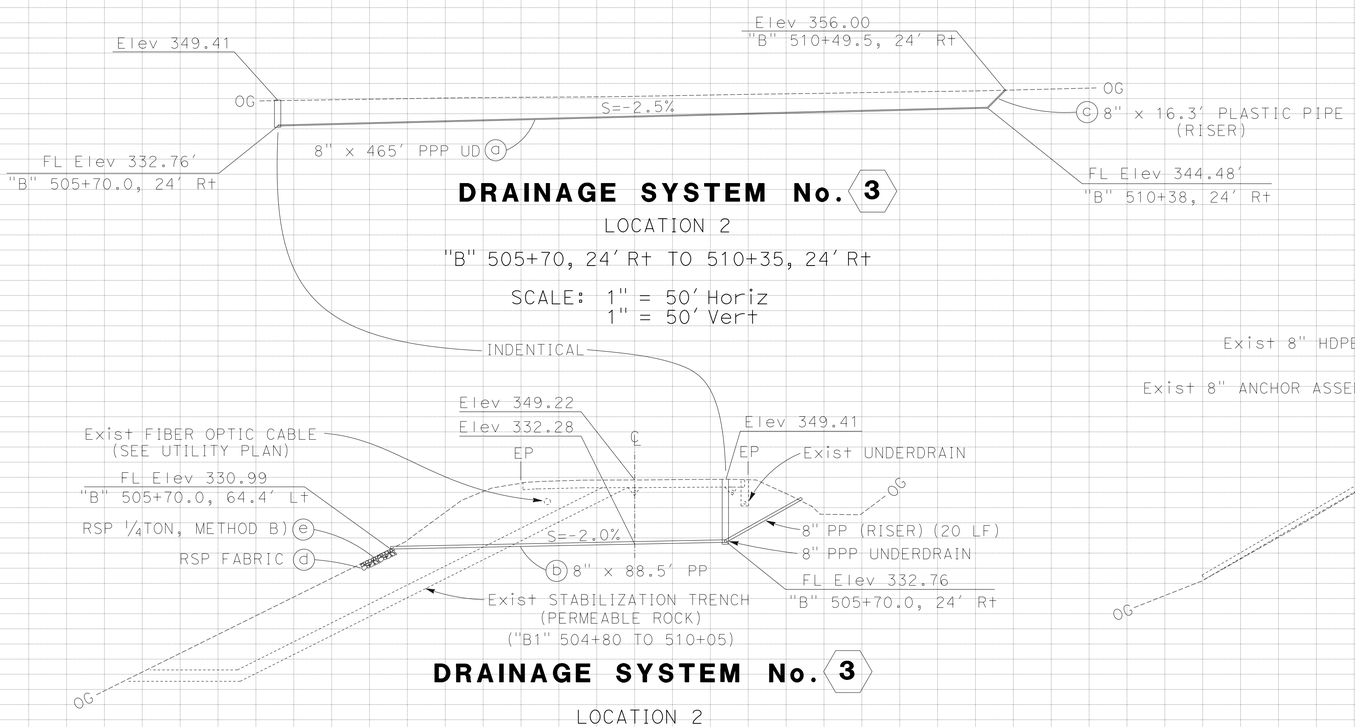

DRAINAGE SYSTEM No. 3

LOCATION 2

"B" 505+70, 24' Rt TO 510+35, 24' Rt

SCALE: 1" = 50' Horiz
1" = 50' Vert

DRAINAGE SYSTEM No. 3

LOCATION 2

"B" 505+70, 24' Rt TO 505+70, 64.5' Lt

SCALE: 1" = 20' Horiz
1" = 20' Vert

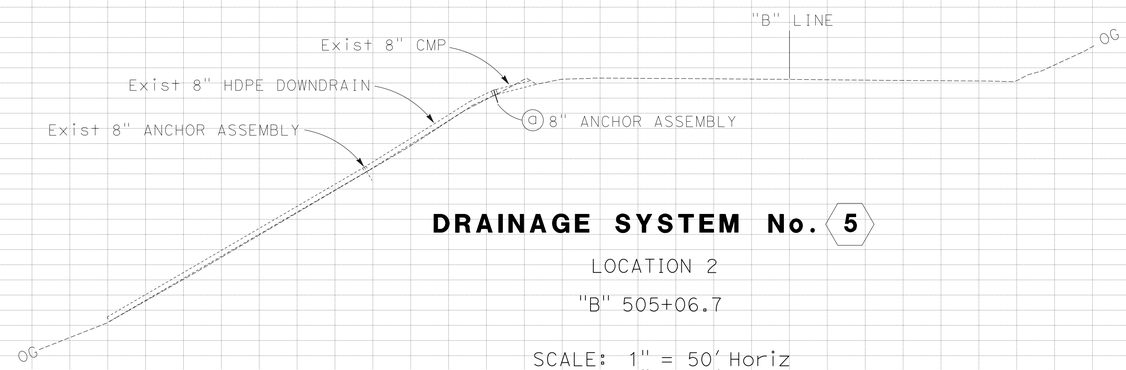

DRAINAGE SYSTEM No. 5

LOCATION 2

"B" 505+06.7

SCALE: 1" = 50' Horiz
1" = 50' Vert

DRAINAGE PROFILE

SCALE: AS SHOWN

DP-1

STATION		TOTAL
CY	Exc	
	Emb	

REVISED BY | DATE REVISED
DIANNE EDWARDS | ROBERT KING
CALCULATED-DESIGNED BY | CHECKED BY
FUNCTIONAL SUPERVISOR | KELLY B. TIMMONS

STATE OF CALIFORNIA - DEPARTMENT OF TRANSPORTATION
Caltrans
DESIGN

P:\PROJ\01\0B400\drafting\sheets\01120001241b001.dgn

LAST REVISION 09-15-14 | DATE PLOTTED => 10-FEB-2015 | TIME PLOTTED => 14:18

Dist	COUNTY	ROUTE	POST MILES TOTAL PROJECT	SHEET No.	TOTAL SHEETS
01	Hum	101	R15.0, 29.4	13	47

Dianne M Edwards 01-30-15
REGISTERED CIVIL ENGINEER DATE

January 30, 2015
PLANS APPROVAL DATE

REGISTERED PROFESSIONAL ENGINEER D.M.EDWARDS No. C-51898 Exp. 6-30-16 CIVIL STATE OF CALIFORNIA

THE STATE OF CALIFORNIA OR ITS OFFICERS OR AGENTS SHALL NOT BE RESPONSIBLE FOR THE ACCURACY OR COMPLETENESS OF SCANNED COPIES OF THIS PLAN SHEET.

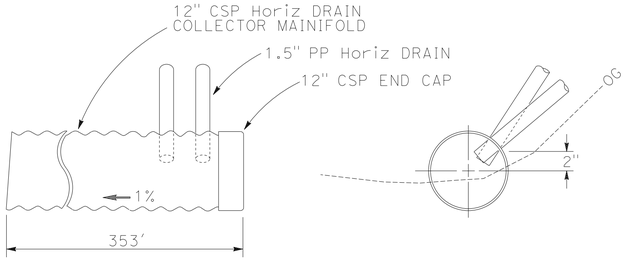

12" PP COLLECTOR SYSTEM

2

LOCATION 1

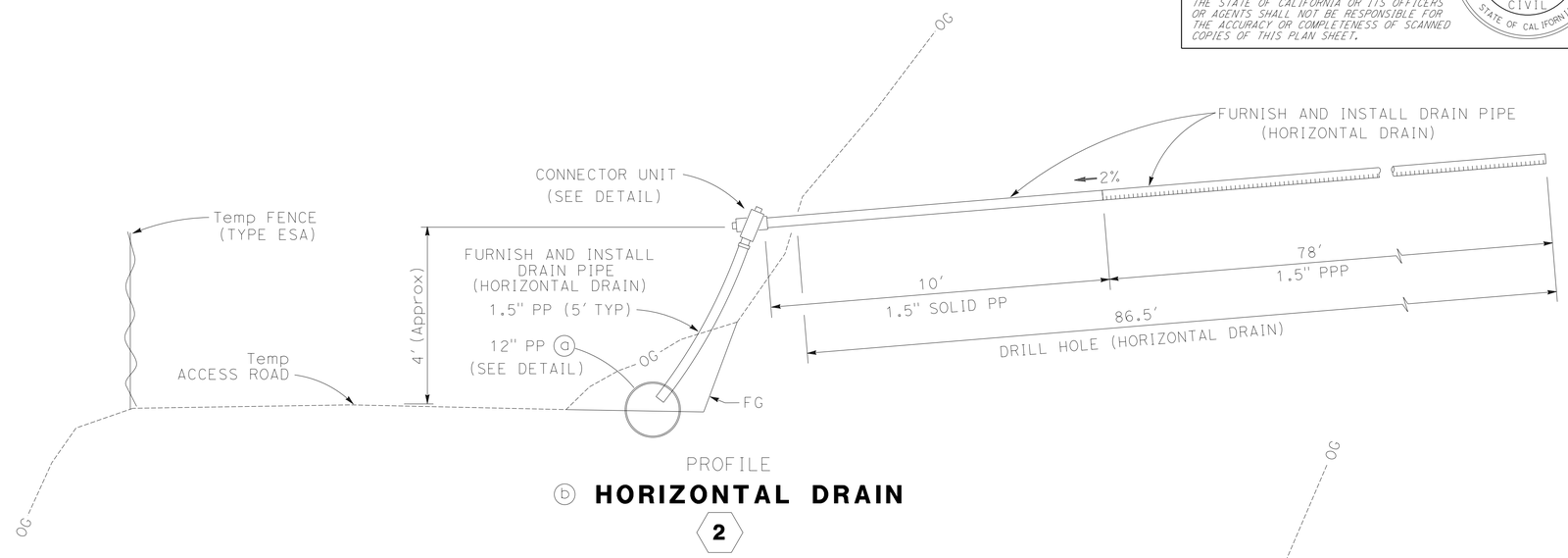

PROFILE

ⓑ HORIZONTAL DRAIN

2

LOCATION 1

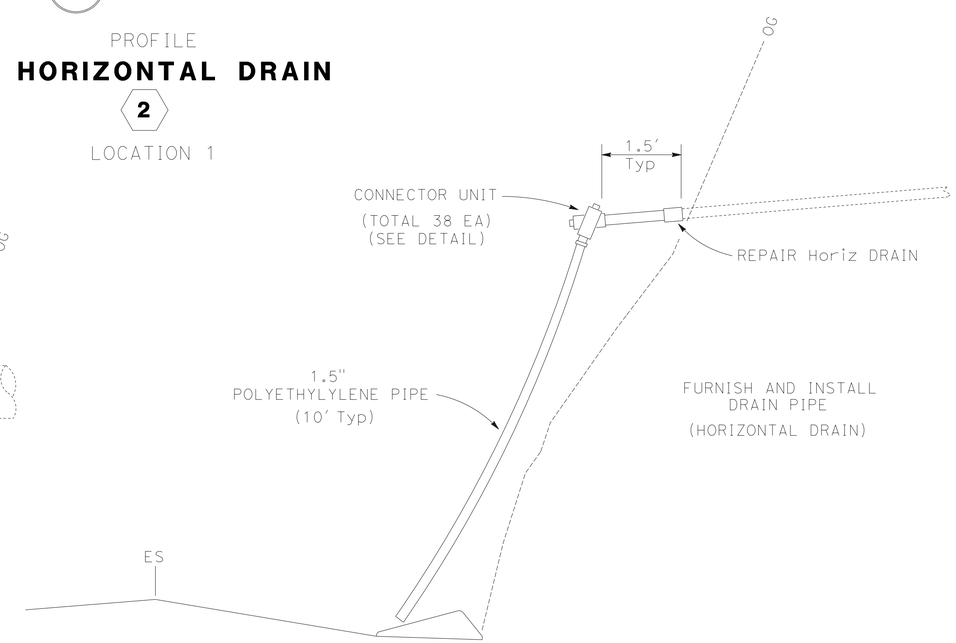

PROFILE

ⓐ HORIZONTAL DRAIN

4

LOCATION 2

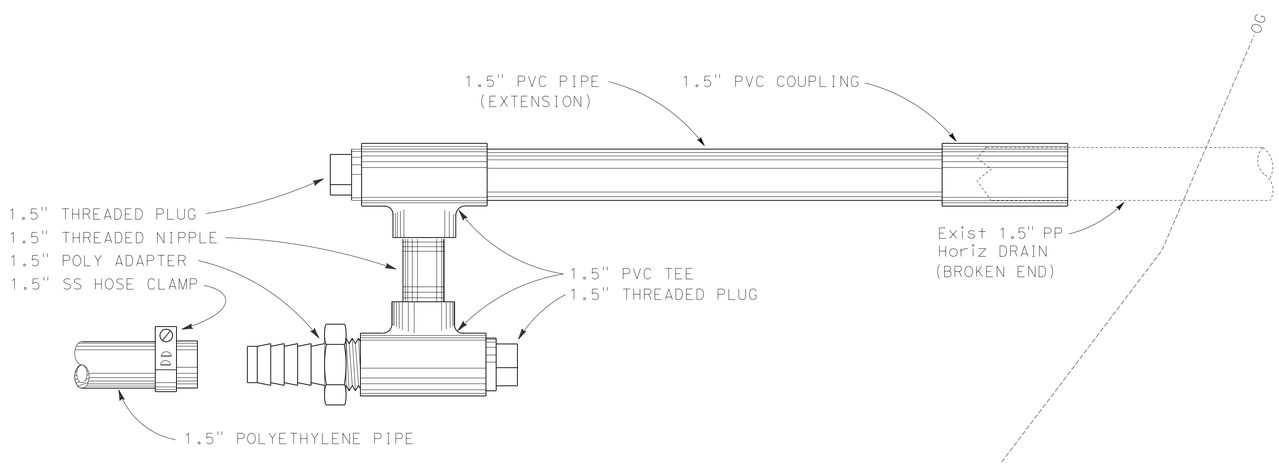

PLAN VIEW

HORIZONTAL DRAIN REPAIR AND CONNECTOR UNIT

DRAINAGE DETAILS

NO SCALE

DD-1

REVISED BY	DATE REVISED
DIANNE EDWARDS	ROBERT KING
CALCULATED-DESIGNED BY	CHECKED BY
FUNCTIONAL SUPERVISOR	KELLY B. TIMMONS

STATE OF CALIFORNIA - DEPARTMENT OF TRANSPORTATION **DESIGN**

Caltrans®

P:\PROJ\01\0B400\drafting\sheets\01120001241c001.dgn

LAST REVISION 09-15-14 | DATE PLOTTED => 10-FEB-2015 TIME PLOTTED => 14:18

Dist	COUNTY	ROUTE	POST MILES TOTAL PROJECT	SHEET No.	TOTAL SHEETS
01	Hum	101	R15.0, 29.4	14	47

Dianne M Edwards 01-30-15
REGISTERED CIVIL ENGINEER DATE

January 30, 2015
PLANS APPROVAL DATE

REGISTERED PROFESSIONAL ENGINEER
D.M.EDWARDS
No. C-51898
Exp. 6-30-16
CIVIL
STATE OF CALIFORNIA

THE STATE OF CALIFORNIA OR ITS OFFICERS OR AGENTS SHALL NOT BE RESPONSIBLE FOR THE ACCURACY OR COMPLETENESS OF SCANNED COPIES OF THIS PLAN SHEET.

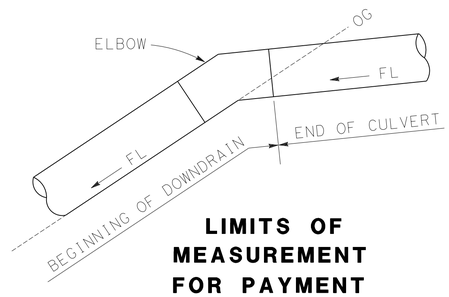

LIMITS OF MEASUREMENT FOR PAYMENT

DRAINAGE SYSTEM No. 1

LOCATION 1

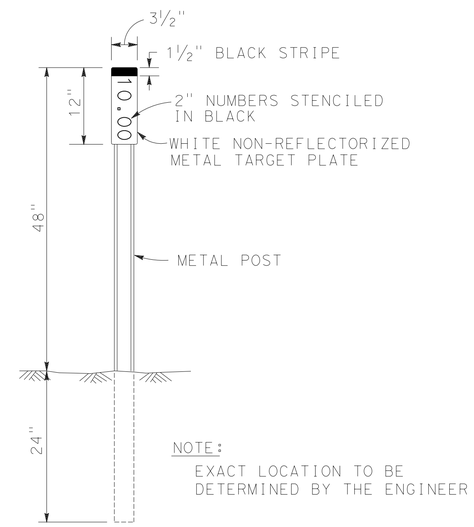

NOTE:
EXACT LOCATION TO BE DETERMINED BY THE ENGINEER

MARKER (CULVERT)

DRAINAGE SYSTEM No. 1

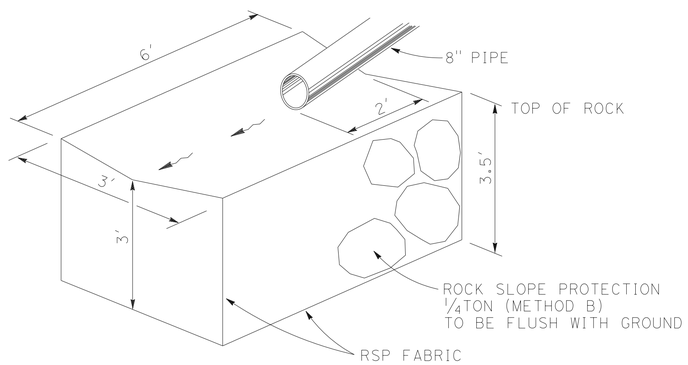

ROCK ENERGY DISSIPATOR AT DRAINAGE OUTLET

DRAINAGE SYSTEM No. 3

LOCATION 2

DRAINAGE DETAILS

NO SCALE

DD-2

REVISED BY	DATE REVISED
DIANNE EDWARDS	ROBERT KING
CALCULATED-DESIGNED BY	CHECKED BY
FUNCTIONAL SUPERVISOR	KELLY B. TIMMONS

STATE OF CALIFORNIA - DEPARTMENT OF TRANSPORTATION
Caltrans
DESIGN

P:\PROJ\01\0B400\drafting\sheets\01120001241c002.dgn

LAST REVISION 09-15-14
DATE PLOTTED => 10-FEB-2015
TIME PLOTTED => 14:18

Dist	COUNTY	ROUTE	POST MILES TOTAL PROJECT	SHEET No.	TOTAL SHEETS
01	Hum	101	R15.0, 29.4	15	47

Dianne M Edwards 01-30-15
REGISTERED CIVIL ENGINEER DATE

January 30, 2015
PLANS APPROVAL DATE

REGISTERED PROFESSIONAL ENGINEER D.M.EDWARDS No. C-51898 Exp. 6-30-16 CIVIL STATE OF CALIFORNIA

THE STATE OF CALIFORNIA OR ITS OFFICERS OR AGENTS SHALL NOT BE RESPONSIBLE FOR THE ACCURACY OR COMPLETENESS OF SCANNED COPIES OF THIS PLAN SHEET.

APC TABLE

DRAINAGE SYSTEM No.	DRAINAGE UNIT	GALVANIZED CSP	GALVANIZED POLYMERIC SHEET COATED CSP	HDPE (TYPE S)
1	ⓐ	0.109" (12 GAUGE)	0.079" (14 GAUGE)	YES

DRAINAGE SHEET No.	DRAINAGE SYSTEM NUMBER No.	DRAINAGE UNIT	ABANDON CULVERT	SAND BACKFILL	REMOVE CULVERT	REMOVE FES	36" APC	36" CSP DOWNDRAIN (0.109" THICK)	12" PLASTIC PIPE	8" PERFORATED PLASTIC PIPE UNDERDRAIN	8" PLASTIC PIPE	DRILL HOLE (HORIZONTAL DRAIN)	FURNISH & INSTALL DRAIN PIPE (HORIZONTAL DRAIN)	RSP (1/4 TON, METHOD B)	RSP FABRIC (CLASS 8)	MINOR CONCRETE (MINOR STRUCTURE)	ANCHOR ASSEMBLY	RESET MARKER	CABLE RAILING	NOTES	DRAINAGE SHEET No.	DRAINAGE SYSTEM NUMBER No.	DRAINAGE UNIT
			EA	CY	LF	EA		LF	LF	LF	LF	LF	LF	CY	SQYD	CY	EA	EA	LF				
D-1	1	a					105.5														D-1	1	a
		b	1	24.9																			b
		c														2.1				HEADWALL, H=5′			c
		d						35															d
		e			40.5																		e
		f																	12				f
		g				1																	g
		h												22									h
		i													39								i
		j															2			36"			j
		k																2					k
D-1	2	a							353												D-1	2	a
		b										2855	3069							SEE SHEET DD-1			b
D-2	3	a								465											D-2	3	a
		b									88.5												b
		c									16.3									RISER			c
		d													9								d
		e												2.3									e
		f									20.0									RISER			f
D-2	4	a											437							SEE SHEET DD-1	D-2	4	a
D-2	5	a															1			8" PP AT OSD	D-2	5	a
		TOTALS	1	24.9	40.5	1	105.5	35	353	465	124.8	2855	3506	24.3	48	2.1	3	2	12				

DRAINAGE QUANTITIES

DQ-1

FUNCTIONAL SUPERVISOR: KELLY B. TIMMONS
CALCULATED-DESIGNED BY: DIANNE EDWARDS
CHECKED BY: ROBERT KING
REVISED BY
DATE REVISED

STATE OF CALIFORNIA - DEPARTMENT OF TRANSPORTATION
Caltrans®
DESIGN

P:\PROJ\01\0B400\drafting\sheets\01120001241d001.dgn

LAST REVISION 09-15-14 | DATE PLOTTED => 10-FEB-2015 | TIME PLOTTED => 14:18

Dist	COUNTY	ROUTE	POST MILES TOTAL PROJECT	SHEET No.	TOTAL SHEETS
01	Hum	101	R15.0, 29.4	16	47

Dianne M Edwards 01-30-15
REGISTERED CIVIL ENGINEER DATE

January 30, 2015
PLANS APPROVAL DATE

REGISTERED PROFESSIONAL ENGINEER
D.M.EDWARDS
No. C-51898
Exp. 6-30-16
CIVIL
STATE OF CALIFORNIA

THE STATE OF CALIFORNIA OR ITS OFFICERS OR AGENTS SHALL NOT BE RESPONSIBLE FOR THE ACCURACY OR COMPLETENESS OF SCANNED COPIES OF THIS PLAN SHEET.

NOTE:

1. FOR ACCURATE RIGHT OF WAY AND ACCESS DATA, CONTACT RIGHT OF WAY ENGINEERING AT THE DISTRICT OFFICE.

LEGEND

No. POTHOLE NUMBER

fo FIBER OPTIC

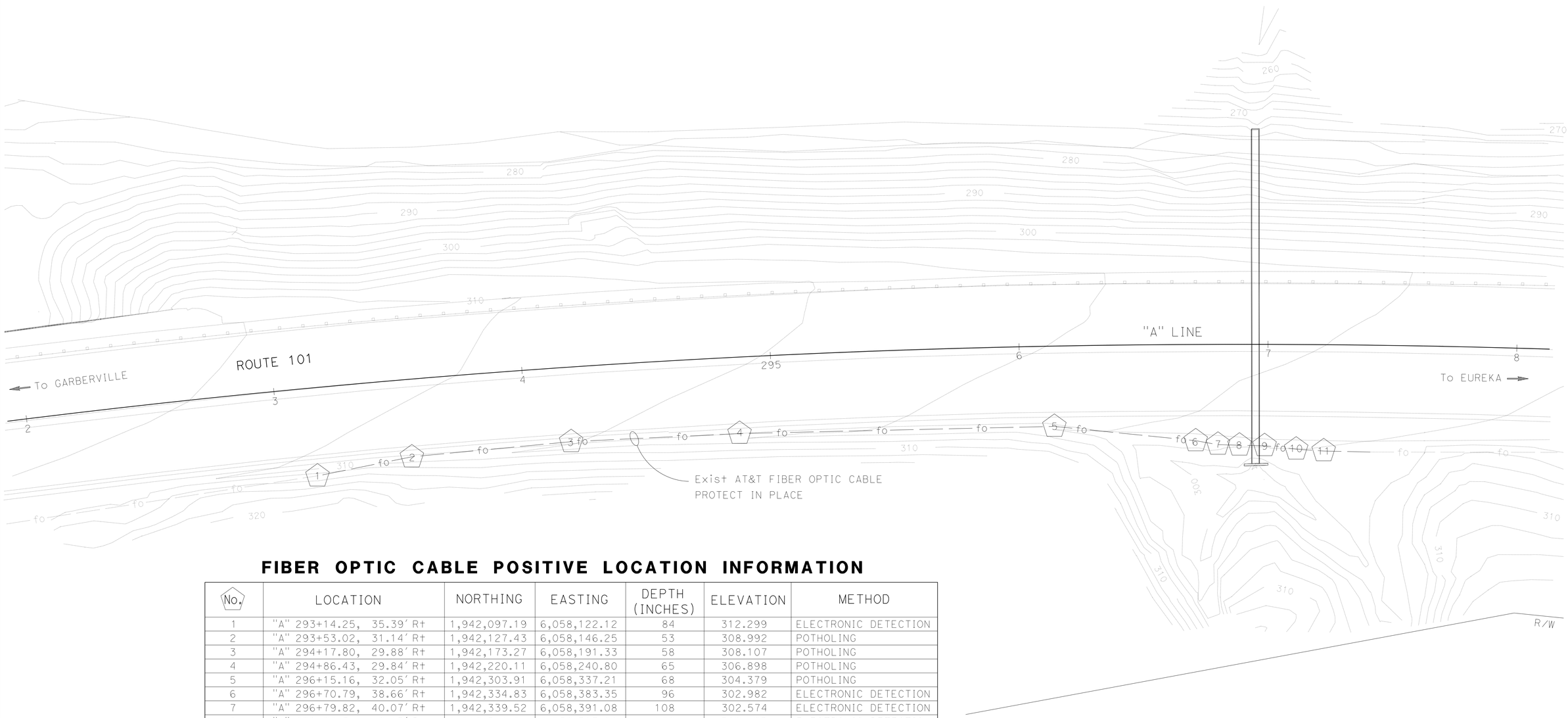

FIBER OPTIC CABLE POSITIVE LOCATION INFORMATION

No.	LOCATION	NORTHING	EASTING	DEPTH (INCHES)	ELEVATION	METHOD
1	"A" 293+14.25, 35.39' Rt	1,942,097.19	6,058,122.12	84	312.299	ELECTRONIC DETECTION
2	"A" 293+53.02, 31.14' Rt	1,942,127.43	6,058,146.25	53	308.992	POTHOLING
3	"A" 294+17.80, 29.88' Rt	1,942,173.27	6,058,191.33	58	308.107	POTHOLING
4	"A" 294+86.43, 29.84' Rt	1,942,220.11	6,058,240.80	65	306.898	POTHOLING
5	"A" 296+15.16, 32.05' Rt	1,942,303.91	6,058,337.21	68	304.379	POTHOLING
6	"A" 296+70.79, 38.66' Rt	1,942,334.83	6,058,383.35	96	302.982	ELECTRONIC DETECTION
7	"A" 296+79.82, 40.07' Rt	1,942,339.52	6,058,391.08	108	302.574	ELECTRONIC DETECTION
8	"A" 296+88.54, 40.43' Rt	1,942,344.81	6,058,397.92	120	302.493	ELECTRONIC DETECTION
9	"A" 296+98.74, 40.64' Rt	1,942,351.13	6,058,405.79	114	302.257	ELECTRONIC DETECTION
10	"A" 297+11.56, 41.96' Rt	1,942,358.23	6,058,416.39	108	301.892	ELECTRONIC DETECTION
11	"A" 297+22.74, 42.58' Rt	1,942,364.81	6,058,425.31	114	301.782	ELECTRONIC DETECTION

LOCATION 1

UTILITY
SCALE: 1" = 20'

U-1

REVISED BY | DATE REVISED
DIANNE EDWARDS | ROBERT KING
CALCULATED-DESIGNED BY | CHECKED BY
FUNCTIONAL SUPERVISOR: KELLY B. TIMMONS

STATE OF CALIFORNIA - DEPARTMENT OF TRANSPORTATION
Caltrans®
DESIGN

P:\PROJ\01\0B400\drafting\sheets\0112000124ka001.dgn

LAST REVISION 09-15-14 | DATE PLOTTED => 10-FEB-2015 | TIME PLOTTED => 14:18

NOTE:

1. FOR ACCURATE RIGHT OF WAY AND ACCESS DATA, CONTACT RIGHT OF WAY ENGINEERING AT THE DISTRICT OFFICE.

Dist	COUNTY	ROUTE	POST MILES TOTAL PROJECT	SHEET No.	TOTAL SHEETS
01	Hum	101	R15.0, 29.4	17	47

Dianne M Edwards 01-30-15
REGISTERED CIVIL ENGINEER DATE

January 30, 2015
PLANS APPROVAL DATE

REGISTERED PROFESSIONAL ENGINEER D.M.EDWARDS No. C-51898 Exp. 6-30-16 CIVIL STATE OF CALIFORNIA

THE STATE OF CALIFORNIA OR ITS OFFICERS OR AGENTS SHALL NOT BE RESPONSIBLE FOR THE ACCURACY OR COMPLETENESS OF SCANNED COPIES OF THIS PLAN SHEET.

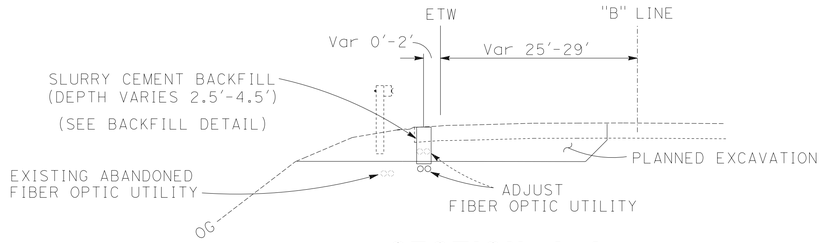

SECTION A-A

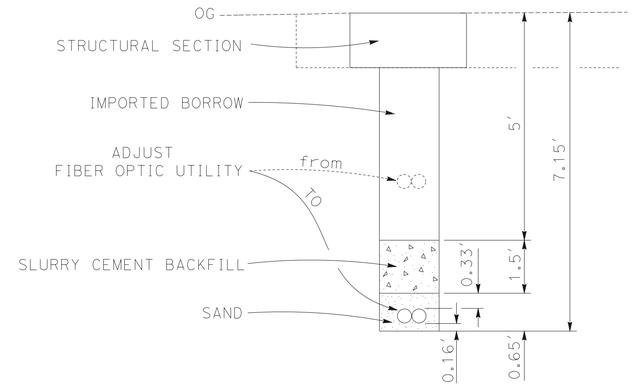

BACKFILL DETAIL

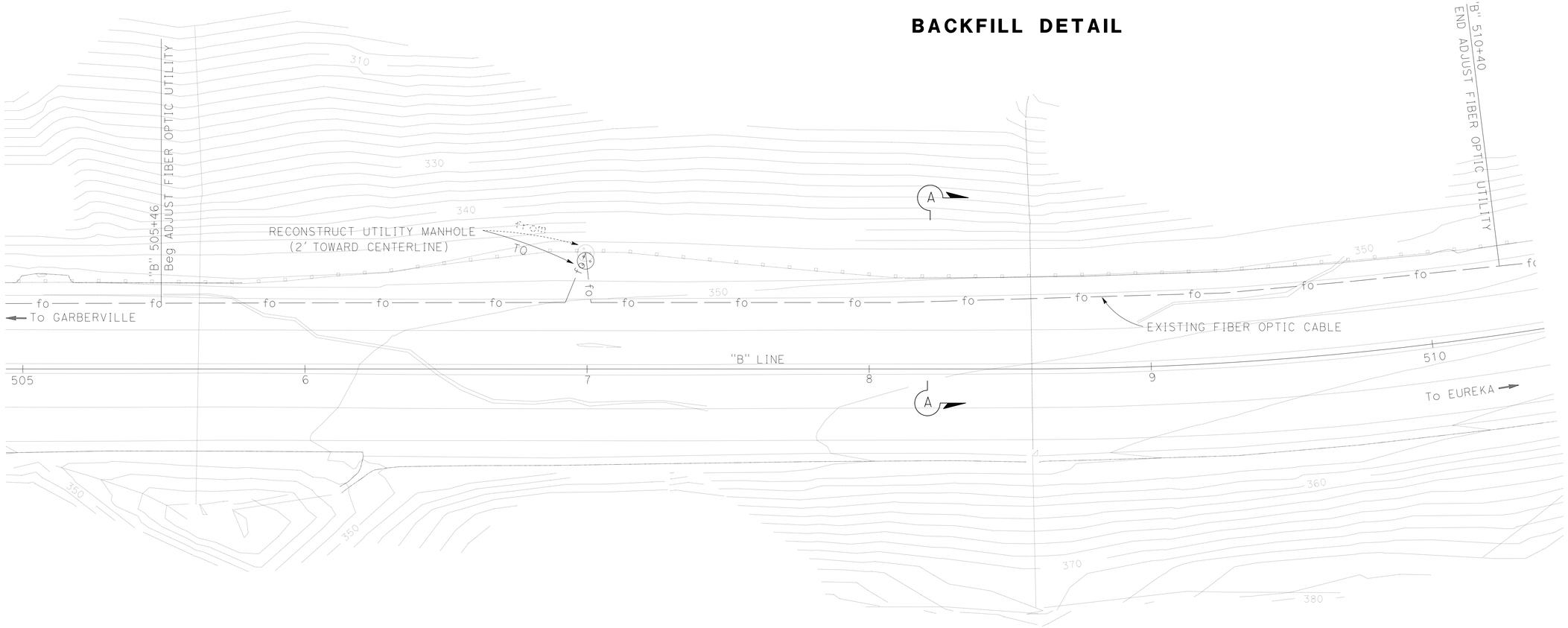

LOCATION 2

UTILITY

SCALE: 1" = 20'

U-2

APPROVED FOR UTILITY WORK ONLY

REVISED BY	DATE REVISED

CALCULATED-DESIGNED BY	DIANNE EDWARDS
CHECKED BY	ROBERT KING
FUNCTIONAL SUPERVISOR	KELLY B. TIMMONS

STATE OF CALIFORNIA - DEPARTMENT OF TRANSPORTATION
Caltrans®
DESIGN

P:\PROJ\01\0B400\drafting\sheets\0112000124ka002.dgn

LAST REVISION 09-15-14 | DATE PLOTTED => 10-FEB-2015 | TIME PLOTTED => 14:18

Dist	COUNTY	ROUTE	POST MILES TOTAL PROJECT	SHEET No.	TOTAL SHEETS
01	Hum	101	R15.0, 29.4	18	47

Dianne M Edwards 01-30-15
REGISTERED CIVIL ENGINEER DATE

January 30, 2015
PLANS APPROVAL DATE

REGISTERED PROFESSIONAL ENGINEER D.M.EDWARDS No. C-51898 Exp. 6-30-16 CIVIL STATE OF CALIFORNIA

THE STATE OF CALIFORNIA OR ITS OFFICERS OR AGENTS SHALL NOT BE RESPONSIBLE FOR THE ACCURACY OR COMPLETENESS OF SCANNED COPIES OF THIS PLAN SHEET.

STATIONARY MOUNTED CONSTRUCTION AREA SIGNS

	TYPE	SIGN MESSAGE	PANEL SIZE (IN)	No. OF POSTS AND SIZE (IN)	No. OF SIGNS
A	C40(CA)	TRAFFIC FINES DOUBLED IN CONSTRUCTION ZONES	144 x 60	2 - 6 x 8	4
B	W20-1	ROAD WORK AHEAD	48 x 48	1 - 6 x 6	4
C	W11-1	BICYCLE SYMBOL	48 x 48	1 - 4 x 6	4
	W16-1	SHARE THE ROAD	30 x 24		
D	G20-2	END ROAD WORK	48 x 24	1 - 4 x 6	4
E	W20-1	ROAD WORK AHEAD	36 x 36	1 - 4 x 6	1

NOTE: EXACT SIGN LOCATION TO BE DETERMINED BY THE ENGINEER.

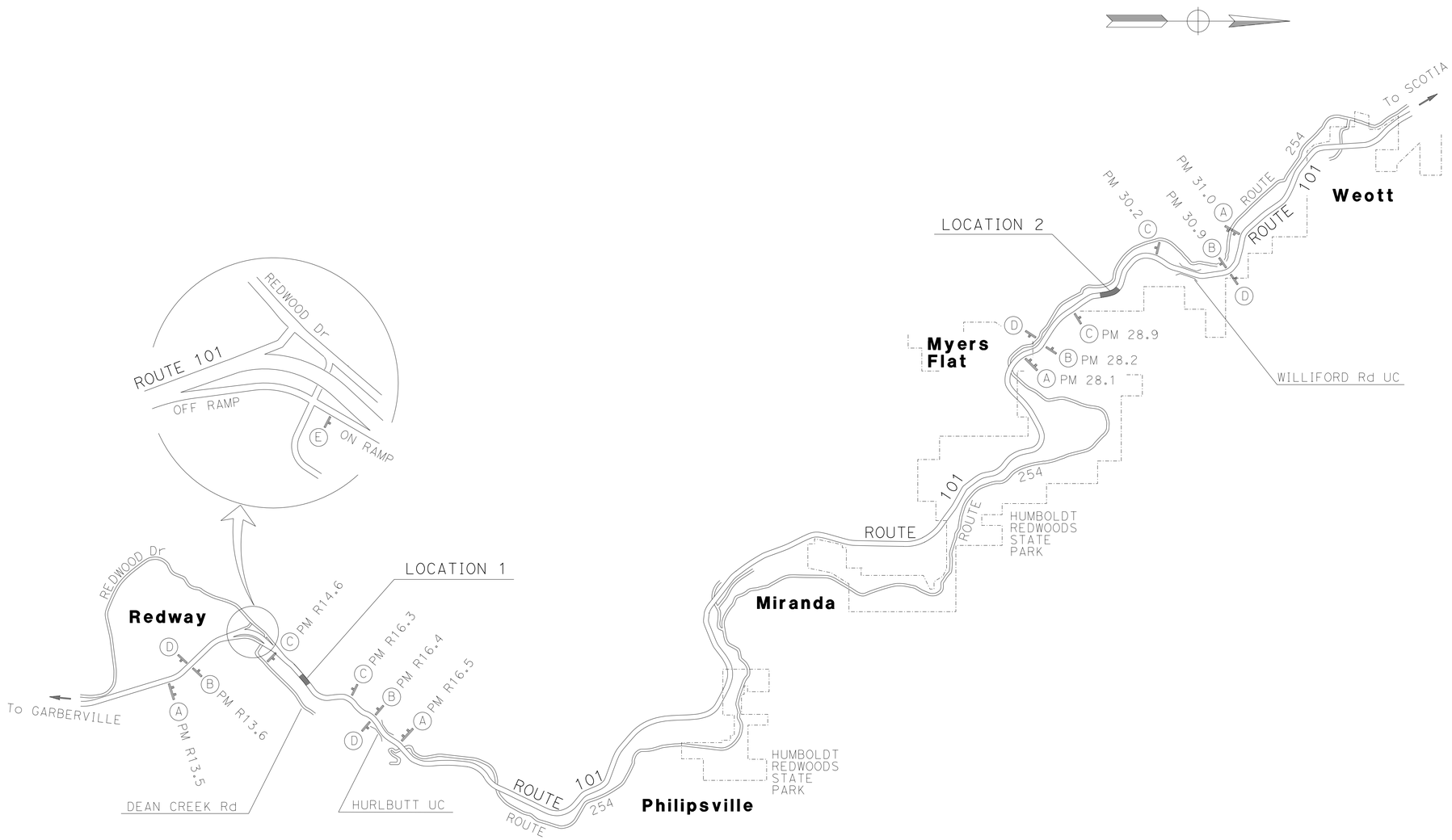

CONSTRUCTION AREA SIGNS

NO SCALE

APPROVED FOR CONSTRUCTION AREA SIGN WORK ONLY

CS-1

REVISED BY | DATE REVISED
DIANNE EDWARDS | ROBERT KING
CALCULATED-DESIGNED BY | CHECKED BY
FUNCTIONAL SUPERVISOR: KELLY B. TIMMONS

STATE OF CALIFORNIA - DEPARTMENT OF TRANSPORTATION
Caltrans
DESIGN

P:\PROJ\01\0B400\drafting\sheets\01120001241a001.dgn

LAST REVISION 09-15-14 | DATE PLOTTED => 10-FEB-2015 | TIME PLOTTED => 14:18

BORDER LAST REVISED 7/2/2010 | USERNAME => s120115 | DGN FILE => 01120001241a001.dgn | RELATIVE BORDER SCALE IS IN INCHES 0 1 2 3 | UNIT 0312 | PROJECT NUMBER & PHASE 01120001241

Dist	COUNTY	ROUTE	POST MILES TOTAL PROJECT	SHEET No.	TOTAL SHEETS
01	Hum	101	R15.0, 29.4	19	47

Dianne M Edwards 01-30-15
REGISTERED CIVIL ENGINEER DATE

January 30, 2015
PLANS APPROVAL DATE

REGISTERED PROFESSIONAL ENGINEER D.M.EDWARDS No. C-51898 Exp. 6-30-16 CIVIL STATE OF CALIFORNIA

THE STATE OF CALIFORNIA OR ITS OFFICERS OR AGENTS SHALL NOT BE RESPONSIBLE FOR THE ACCURACY OR COMPLETENESS OF SCANNED COPIES OF THIS PLAN SHEET.

NOTES:

1. INDEX NOTES DO NOT REPRESENT AN ORDER OF WORK AS INDICATED.
2. CONTRACTOR SHALL PROVIDE TEMPORARY PUBLIC ACCESS TO ROADWAY CONNECTIONS THROUGH WORK AT ALL TIMES.
3. TEMPORARY RAILING (TYPE K) END TAPERS SHALL BE 1:10 OR FLATTER.
4. ALL CHANNELIZERS (SURFACE MOUNTED) SHALL BE INSTALLED AT 32.5' C-C UNLESS OTHERWISE SHOWN.
5. ALL TRAFFIC PLASTIC DRUMS SHALL BE INSTALLED AT 65' C-C UNLESS OTHERWISE SHOWN.
6. ALL TEMPORARY RAILING (TYPE K) SHALL BE STAKED.

LEGEND

- RECONSTRUCT STRUCTURAL SECTION
- XX PAVEMENT DELINEATION DETAIL NUMBER
- X CONSTRUCTION AREA SIGN LETTER
- DIRECTION OF TRAFFIC
- TEMPORARY RAILING (TYPE K)
- ALTERNATIVE Temp CRASH CUSHION
- CHANNELIZER (SURFACE MOUNTED)
- TYPE III BARRICADE
- FLASHING BEACON
- SIGN-SINGLE POST
- TRAFFIC PLASTIC DRUM
- LL LANE LINE

LOCATION 1

STAGE 1

1. INSTALL CONSTRUCTION AREA SIGNS AS INDICATED ON SHEET CS-1.
2. INSTALL TEMPORARY FENCE (TYPE ESA).
3. PERFORM CLEARING AND GRUBBING NECESSARY FOR ACCESS TO INSTALL HORIZONTAL DRAINS.
4. INSTALL TRAFFIC CONTROL SYSTEM AND PLACE Temp RAILING (TYPE K) AND ALTERNATIVE Temp CRASH CUSHIONS PER THESE PLANS.
5. PERFORM ALL WORK NECESSARY TO CONSTRUCT THE FOLLOWING:
   - * RECONSTRUCT STRUCTURAL SECTION, "A" 292+50.0 TO 297+50.0, EXCLUDING HMA-O.
   - * LEFT SIDE OF DRAINAGE SYSTEM #1.
   - * DRAINAGE SYSTEM #2.
   - * RECONSTRUCT GUARD RAIL.

STAGE 2

1. INSTALL TRAFFIC CONTROL SYSTEM USING STANDARD TRAFFIC HANDLING PLANS
2. REMOVE ALL Temp DELINEATION.
3. INSTALL RIGHT SIDE OF DRAINAGE SYSTEM #1.
4. PLACE HMA-O.
5. PLACE PERMANENT PAVEMENT DELINEATION.
6. PERFORM ALL REMAINING ROADWAY ITEMS, INCLUDING EROSION CONTROL.
7. REMOVE CONSTRUCTION AREA SIGNS.

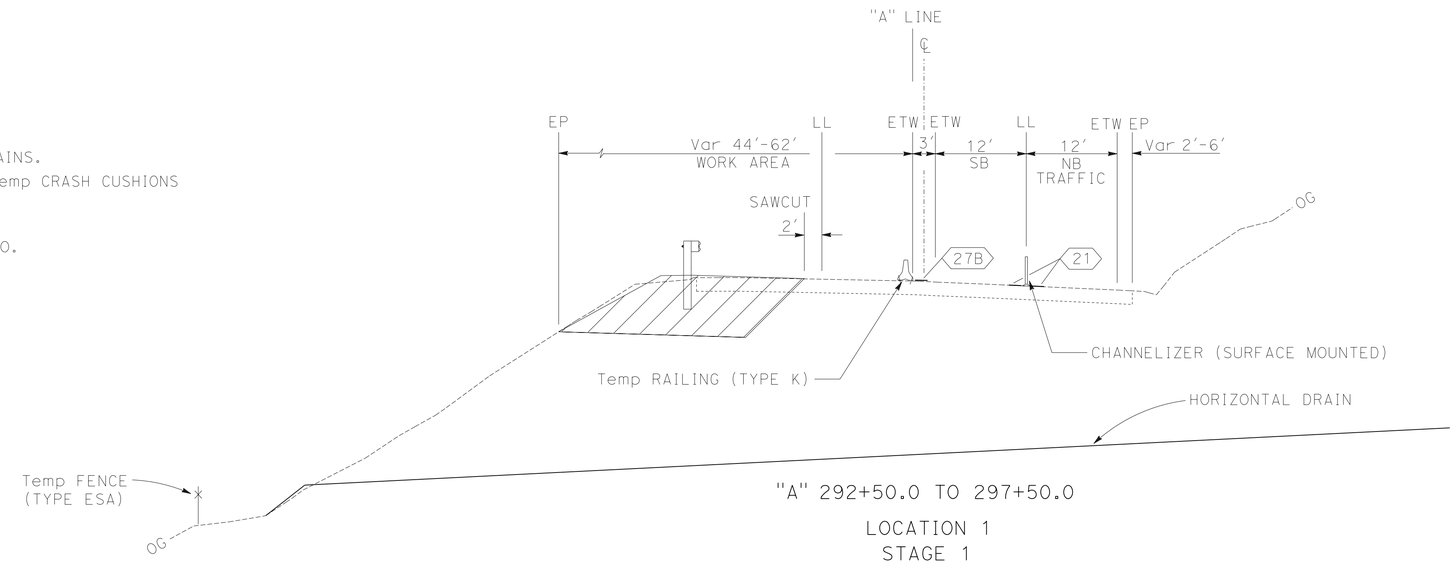

INDEX SHEET

STAGE CONSTRUCTION AND TRAFFIC HANDLING PLAN

NO SCALE

SC-1

REVISED BY | DATE REVISED
DIANNE EDWARDS | ROBERT KING
CALCULATED-DESIGNED BY | CHECKED BY
FUNCTIONAL SUPERVISOR: KELLY B. TIMMONS

STATE OF CALIFORNIA - DEPARTMENT OF TRANSPORTATION
Caltrans® DESIGN

P:\PROJ\01\0B400\drafting\sheets\0112000124ma001.dgn

LAST REVISION 09-15-14 | DATE PLOTTED => 10-FEB-2015 | TIME PLOTTED => 14:18

Dist	COUNTY	ROUTE	POST MILES TOTAL PROJECT	SHEET No.	TOTAL SHEETS
01	Hum	101	R15.0, 29.4	20	47

Dianne M Edwards 01-30-15
REGISTERED CIVIL ENGINEER DATE

January 30, 2015
PLANS APPROVAL DATE

REGISTERED PROFESSIONAL ENGINEER D.M.EDWARDS No. C-51898 Exp. 6-30-16 CIVIL STATE OF CALIFORNIA

THE STATE OF CALIFORNIA OR ITS OFFICERS OR AGENTS SHALL NOT BE RESPONSIBLE FOR THE ACCURACY OR COMPLETENESS OF SCANNED COPIES OF THIS PLAN SHEET.

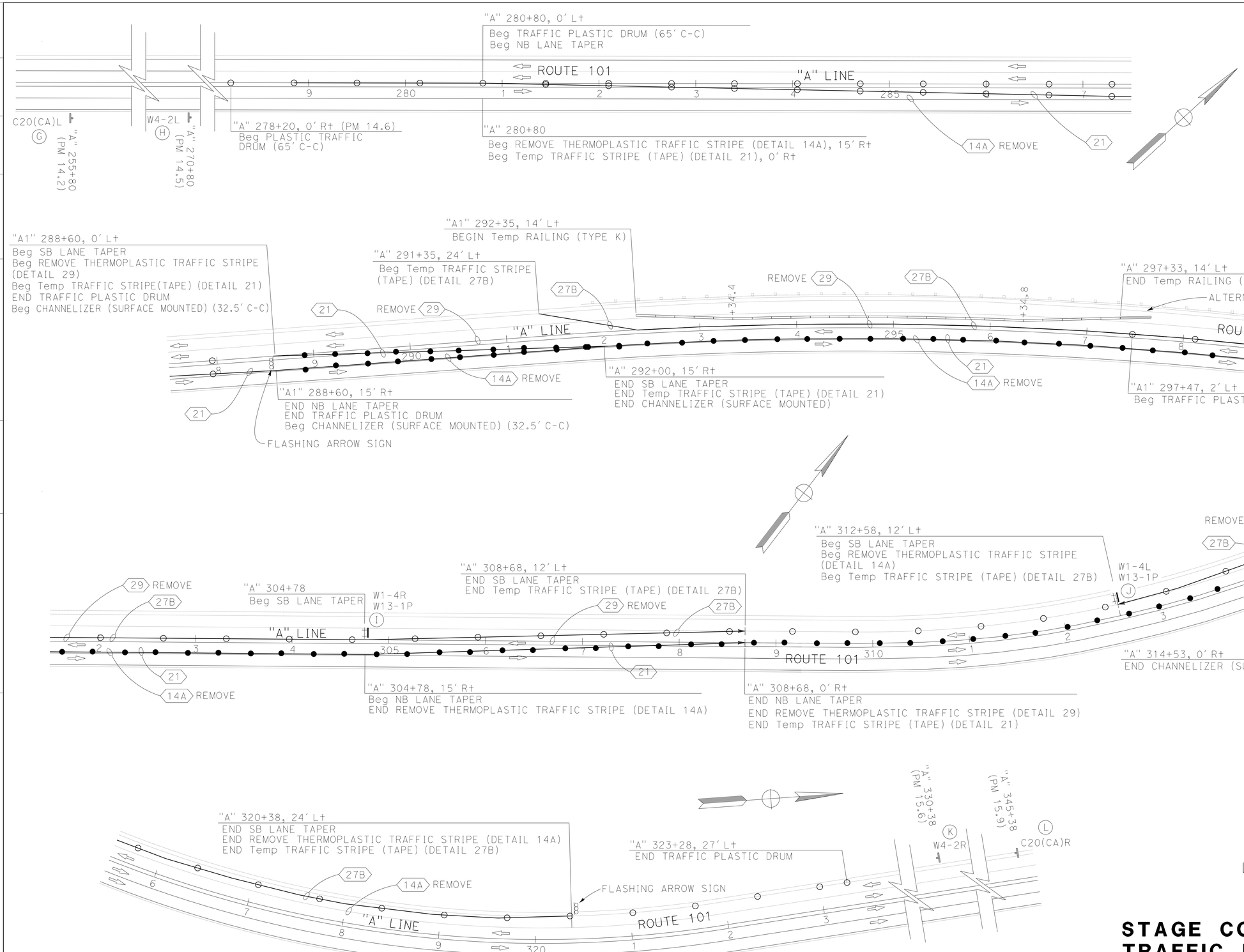

LOCATION 1
STAGE 1

STAGE CONSTRUCTION AND TRAFFIC HANDLING PLAN

SCALE: 1" = 50'

SC-2

APPROVED FOR STAGE CONSTRUCTION AND TRAFFIC HANDLING WORK ONLY

REVISED BY | DATE REVISED
DIANNE EDWARDS | ROBERT KING
CALCULATED-DESIGNED BY | CHECKED BY
FUNCTIONAL SUPERVISOR | KELLY B. TIMMONS

STATE OF CALIFORNIA - DEPARTMENT OF TRANSPORTATION
Caltrans
DESIGN

P:\PROJ\01\0B400\drafting\sheets\0112000124ma002.dgn

LAST REVISION 09-15-14 | DATE PLOTTED => 10-FEB-2015 | TIME PLOTTED => 14:18

Dist	COUNTY	ROUTE	POST MILES TOTAL PROJECT	SHEET No.	TOTAL SHEETS
01	Hum	101	R15.0, 29.4	21	47

Dianne M Edwards 01-30-15
REGISTERED CIVIL ENGINEER DATE

January 30, 2015
PLANS APPROVAL DATE

REGISTERED PROFESSIONAL ENGINEER D.M.EDWARDS No. C-51898 Exp. 6-30-16 CIVIL STATE OF CALIFORNIA

THE STATE OF CALIFORNIA OR ITS OFFICERS OR AGENTS SHALL NOT BE RESPONSIBLE FOR THE ACCURACY OR COMPLETENESS OF SCANNED COPIES OF THIS PLAN SHEET.

LOCATION 2

STAGE 1

COMPLETE CONSTRUCTION OF THE No. 1 NB LANE AND MEDIAN USING STANDARD TRAFFIC HANDLING PLANS.

1. INSTALL CONSTRUCTION AREA SIGNS AS INDICATED ON SHEET CS-1.
2. INSTALL TEMPORARY FENCE (TYPE ESA).
3. "B" 505+00 TO 510+35, RECONSTRUCT STRUCTURAL SECTION, EXCLUDING TOP LIFT HMA-O.
4. INSTALL DRAINAGE SYSTEM #3 UD 8" PP ACROSS NB #1 AND BOTH SB LANES.

STAGE 2

COMPLETE CONSTRUCTION OF THE LEFT SIDE OF THE ROAD, EXCLUDING HMA-O

1. INSTALL TRAFFIC CONTROL SYSTEM PER THESE PLANS AND PLACE Temp RAILING (TYPE K) AND ALTERNATIVE CRASH CUSHIONS PER TRAFFIC HANDLING PLANS.
2. PERFORM ALL WORK NECESSARY TO CONSTRUCT THE FOLLOWING:
   - * L+ ONLY, "B" 505+00 TO 510+35, RECONSTRUCT STRUCTURAL SECTION, EXCLUDING TOP LIFT HMA-O.
   - * LEFT SIDE OF DRAINAGE SYSTEM #3, INCLUDING RSP AT OUTLET.
   - * RECONSTRUCT GUARD RAIL.

STAGE 3

COMPLETE CONSTRUCTION OF THE RIGHT SIDE OF THE ROAD, EXCLUDING TOP LIFT HMA-O

1. INSTALL TRAFFIC CONTROL SYSTEM PER THESE PLANS, RESET Temp RAILING (TYPE K) AND ALTERNATIVE Temp CRASH CUSHIONS PER TRAFFIC HANDLING PLANS.
2. PERFORM ALL WORK NECESSARY TO CONSTRUCT THE FOLLOWING:
   - * INSTALL DRAINAGE SYSTEM #3.
   - * REPAIR HORIZONTAL DRAINS (DRAINAGE SYSTEM #4).

STAGE 4

1. INSTALL TRAFFIC CONTROL SYSTEM USING STANDARD TRAFFIC HANDLING PLANS.
2. PLACE HMA-O
3. PLACE PERMANENT PAVEMENT DELINEATION.
4. PERFORM ALL REMAINING ROADWAY ITEMS, INCLUDING EROSION CONTROL.
5. REMOVE CONSTRUCTION AREA SIGNS.

ABBREVIATIONS

GPI GEOSYNTHETIC PAVEMENT INTERLAYER

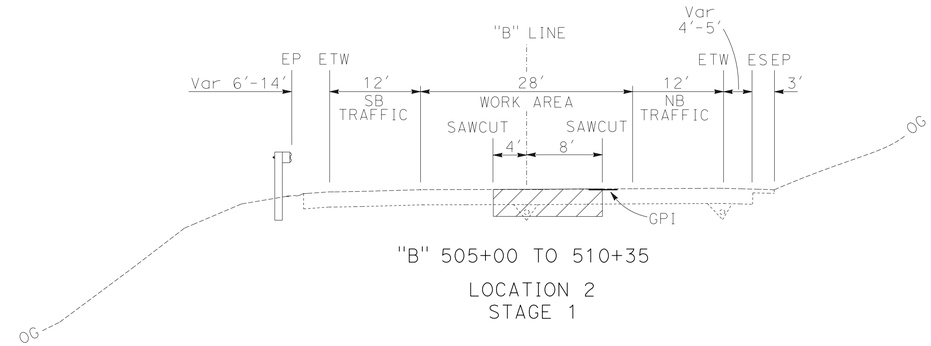

"B" 505+00 TO 510+35

LOCATION 2
STAGE 1

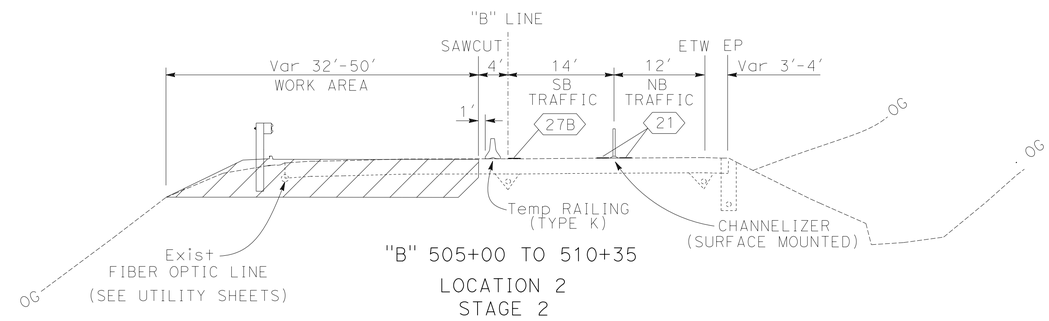

"B" 505+00 TO 510+35

LOCATION 2
STAGE 2

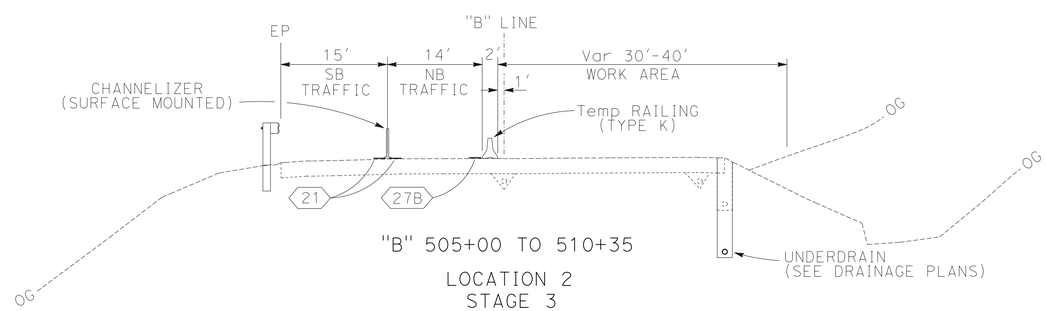

"B" 505+00 TO 510+35

LOCATION 2
STAGE 3

INDEX SHEET

STAGE CONSTRUCTION AND TRAFFIC HANDLING PLAN

NO SCALE

SC-3

REVISED BY | DATE REVISED
DIANNE EDWARDS | ROBERT KING
CALCULATED-DESIGNED BY | CHECKED BY
FUNCTIONAL SUPERVISOR | KELLY B. TIMMONS

STATE OF CALIFORNIA - DEPARTMENT OF TRANSPORTATION
Caltrans® DESIGN

P:\PROJ\01\0B400\drafting\sheets\0112000124ma003.dgn

LAST REVISION 09-15-14 | DATE PLOTTED => 10-FEB-2015 | TIME PLOTTED => 14:18

Dist	COUNTY	ROUTE	POST MILES TOTAL PROJECT	SHEET No.	TOTAL SHEETS
01	Hum	101	R15.0, 29.4	22	47

Dianne M Edwards 01-30-15
REGISTERED CIVIL ENGINEER DATE

January 30, 2015
PLANS APPROVAL DATE

REGISTERED PROFESSIONAL ENGINEER
D.M.EDWARDS
No. C-51898
Exp. 6-30-16
CIVIL
STATE OF CALIFORNIA

THE STATE OF CALIFORNIA OR ITS OFFICERS OR AGENTS SHALL NOT BE RESPONSIBLE FOR THE ACCURACY OR COMPLETENESS OF SCANNED COPIES OF THIS PLAN SHEET.

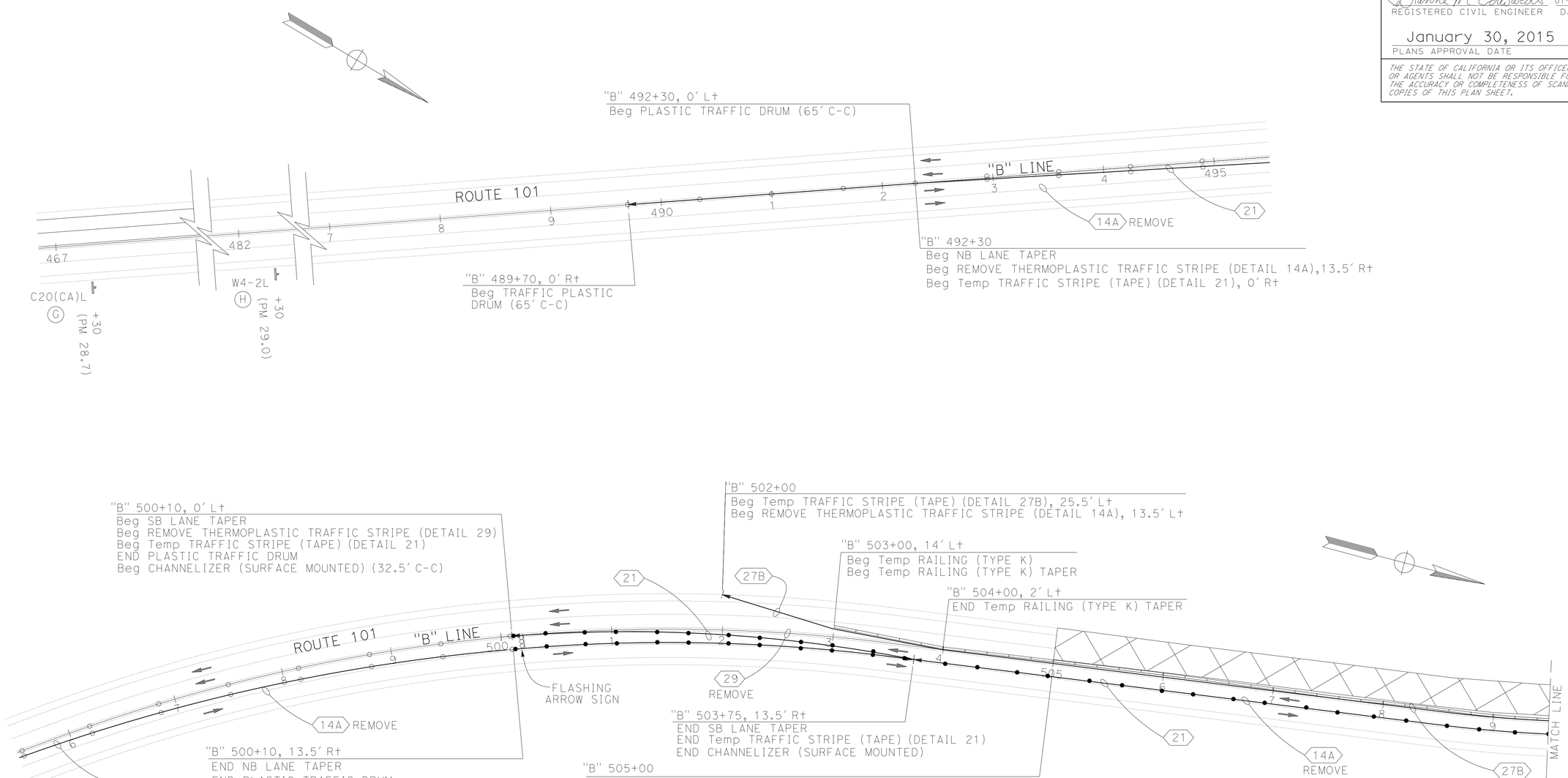

LOCATION 2
STAGE 2

STAGE CONSTRUCTION AND TRAFFIC HANDLING PLAN

SCALE: 1" = 50'

APPROVED FOR STAGE CONSTRUCTION AND TRAFFIC HANDLING WORK ONLY

SC-4

REVISED BY | DATE REVISED
DIANNE EDWARDS | ROBERT KING
CALCULATED-DESIGNED BY | CHECKED BY
FUNCTIONAL SUPERVISOR
KELLY B. TIMMONS

STATE OF CALIFORNIA - DEPARTMENT OF TRANSPORTATION
Caltrans
DESIGN

P:\PROJ\01\0B400\drafting\sheets\0112000124ma004.dgn

LAST REVISION 09-15-14 | DATE PLOTTED => 10-FEB-2015 | TIME PLOTTED => 14:18

Dist	COUNTY	ROUTE	POST MILES TOTAL PROJECT	SHEET No.	TOTAL SHEETS
01	Hum	101	R15.0, 29.4	23	47

Dianne M Edwards 01-30-15
REGISTERED CIVIL ENGINEER DATE

January 30, 2015
PLANS APPROVAL DATE

REGISTERED PROFESSIONAL ENGINEER D.M.EDWARDS No. C-51898 Exp. 6-30-16 CIVIL STATE OF CALIFORNIA

THE STATE OF CALIFORNIA OR ITS OFFICERS OR AGENTS SHALL NOT BE RESPONSIBLE FOR THE ACCURACY OR COMPLETENESS OF SCANNED COPIES OF THIS PLAN SHEET.

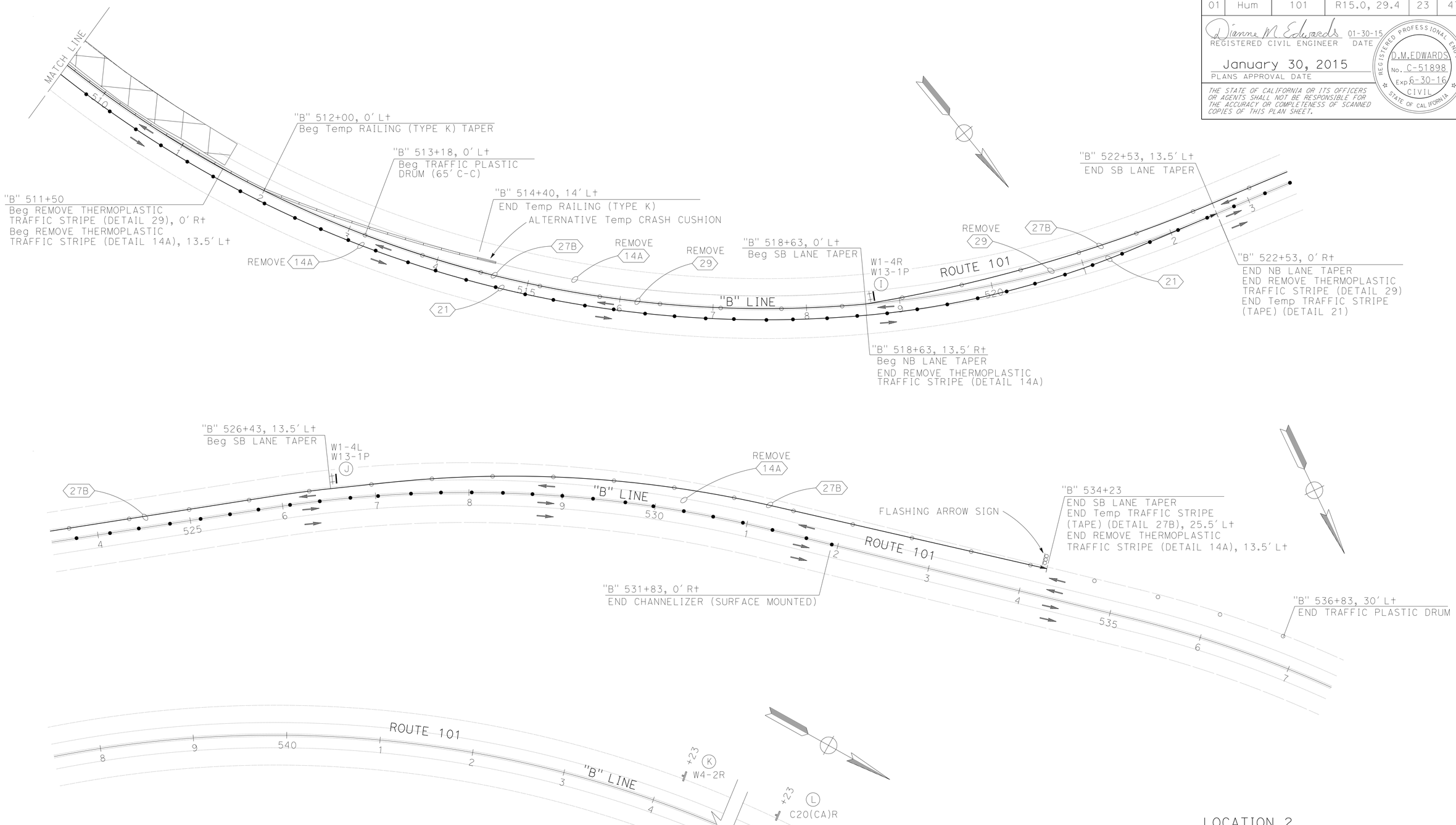

LOCATION 2
STAGE 2

STAGE CONSTRUCTION AND TRAFFIC HANDLING PLAN

SCALE: 1" = 50'

APPROVED FOR STAGE CONSTRUCTION AND TRAFFIC HANDLING WORK ONLY

SC-5

REVISED BY | DATE REVISED
DIANNE EDWARDS | ROBERT KING
CALCULATED-DESIGNED BY | CHECKED BY
FUNCTIONAL SUPERVISOR | KELLY B. TIMMONS

STATE OF CALIFORNIA - DEPARTMENT OF TRANSPORTATION
Caltrans
DESIGN

P:\PROJ\01\0B400\drafting\sheets\01120001124ma005.dgn

LAST REVISION 09-15-14 | DATE PLOTTED => 10-FEB-2015 | TIME PLOTTED => 14:18

Dist	COUNTY	ROUTE	POST MILES TOTAL PROJECT	SHEET No.	TOTAL SHEETS
01	Hum	101	R15.0, 29.4	24	47

Dianne M Edwards 01-30-15
REGISTERED CIVIL ENGINEER DATE

January 30, 2015
PLANS APPROVAL DATE

REGISTERED PROFESSIONAL ENGINEER D.M.EDWARDS No. C-51898 Exp. 6-30-16 CIVIL STATE OF CALIFORNIA

THE STATE OF CALIFORNIA OR ITS OFFICERS OR AGENTS SHALL NOT BE RESPONSIBLE FOR THE ACCURACY OR COMPLETENESS OF SCANNED COPIES OF THIS PLAN SHEET.

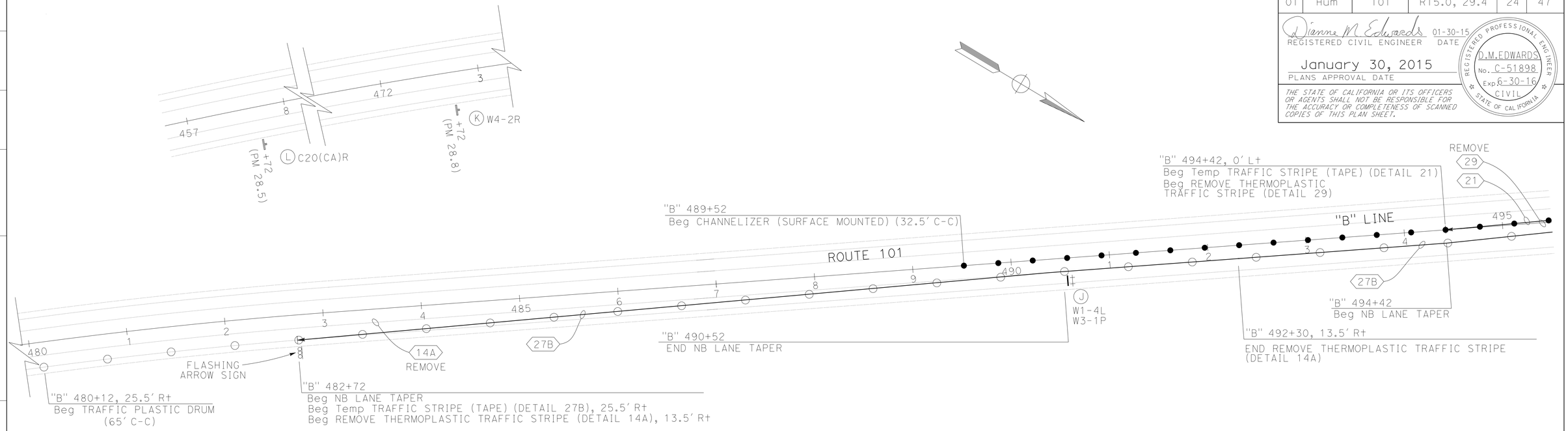

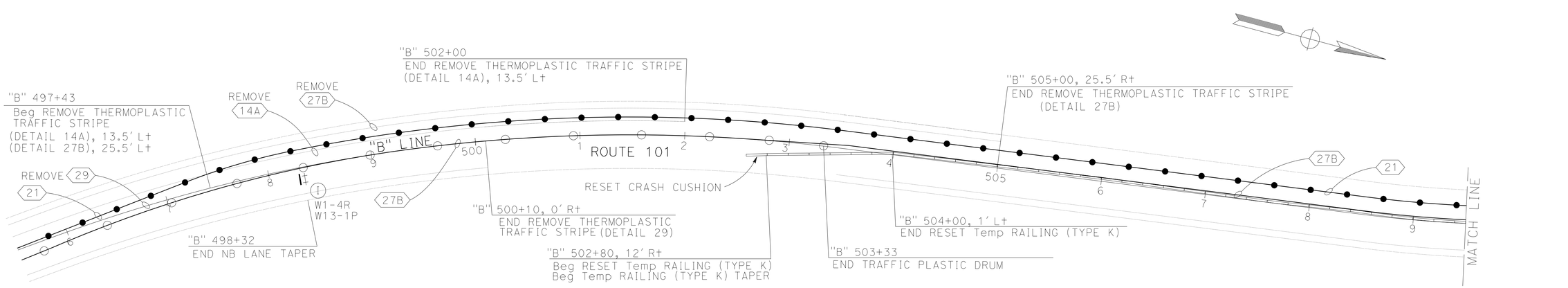

LOCATION 2
STAGE 3

STAGE CONSTRUCTION AND TRAFFIC HANDLING PLAN

SCALE: 1" = 50'

APPROVED FOR STAGE CONSTRUCTION AND TRAFFIC HANDLING WORK ONLY

SC-6

REVISED BY | DATE REVISED
DIANNE EDWARDS | ROBERT KING
CALCULATED-DESIGNED BY | CHECKED BY
FUNCTIONAL SUPERVISOR: KELLY B. TIMMONS

STATE OF CALIFORNIA - DEPARTMENT OF TRANSPORTATION
Caltrans® **DESIGN**

P:\PROJ\01\0B400\drafting\sheets\0112000124ma006.dgn

LAST REVISION 09-15-14 | DATE PLOTTED => 10-FEB-2015 | TIME PLOTTED => 14:18

Dist	COUNTY	ROUTE	POST MILES TOTAL PROJECT	SHEET No.	TOTAL SHEETS
01	Hum	101	R15.0, 29.4	25	47

Dianne M Edwards 01-30-15
REGISTERED CIVIL ENGINEER DATE

January 30, 2015
PLANS APPROVAL DATE

REGISTERED PROFESSIONAL ENGINEER D.M.EDWARDS No. C-51898 Exp. 6-30-16 CIVIL STATE OF CALIFORNIA

THE STATE OF CALIFORNIA OR ITS OFFICERS OR AGENTS SHALL NOT BE RESPONSIBLE FOR THE ACCURACY OR COMPLETENESS OF SCANNED COPIES OF THIS PLAN SHEET.

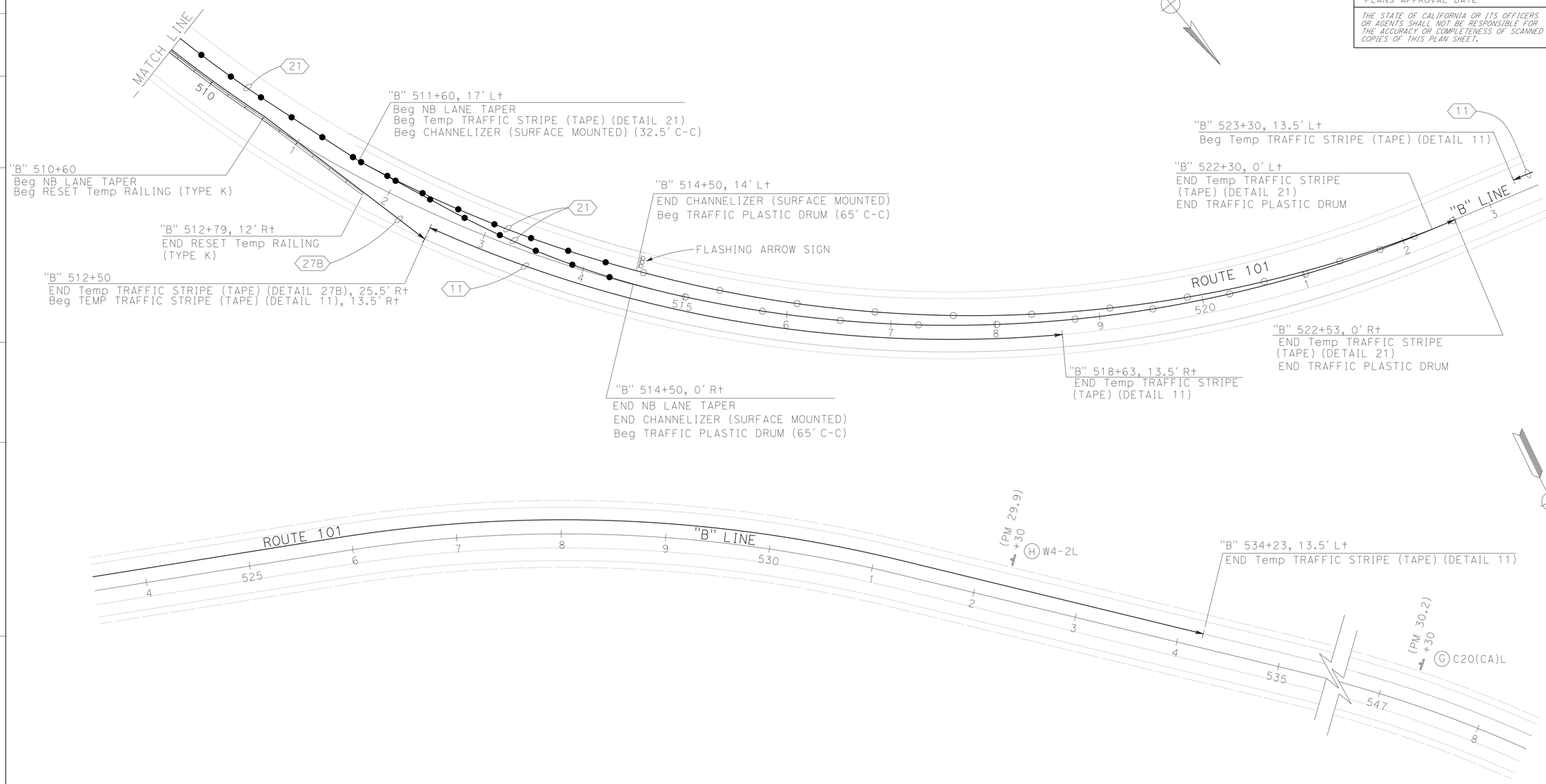

LOCATION 2
STAGE 3

STAGE CONSTRUCTION AND TRAFFIC HANDLING PLAN

SCALE: 1" = 50'

APPROVED FOR STAGE CONSTRUCTION AND TRAFFIC HANDLING WORK ONLY

SC-7

REVISED BY | DATE REVISED
DIANNE EDWARDS | ROBERT KING
CALCULATED-DESIGNED BY | CHECKED BY
FUNCTIONAL SUPERVISOR | KELLY B. TIMMONS

STATE OF CALIFORNIA - DEPARTMENT OF TRANSPORTATION
Caltrans
DESIGN

P:\PROJ\01\0B400\drafting\sheets\0112000124ma007.dgn

LAST REVISION 09-15-14 | DATE PLOTTED => 10-FEB-2015 | TIME PLOTTED => 14:18

BORDER LAST REVISED 7/2/2010 | USERNAME => s120115 | DGN FILE => 0112000124ma007.dgn | RELATIVE BORDER SCALE IS IN INCHES 0 1 2 3 | UNIT 0312 | PROJECT NUMBER & PHASE 01120001241

Dist	COUNTY	ROUTE	POST MILES TOTAL PROJECT	SHEET No.	TOTAL SHEETS
01	Hum	101	R15.0, 29.4	26	47

Dianne M Edwards 01-30-15
REGISTERED CIVIL ENGINEER DATE

January 30, 2015
PLANS APPROVAL DATE

REGISTERED PROFESSIONAL ENGINEER D.M.EDWARDS No. C-51898 Exp. 6-30-16 CIVIL STATE OF CALIFORNIA

THE STATE OF CALIFORNIA OR ITS OFFICERS OR AGENTS SHALL NOT BE RESPONSIBLE FOR THE ACCURACY OR COMPLETENESS OF SCANNED COPIES OF THIS PLAN SHEET.

STATIONARY MOUNTED CONSTRUCTION AREA SIGNS FOR STAGE CONSTRUCTION

LOCATION	STAGE	◯	TYPE	SIGN MESSAGE	STATION	FNBT/ FSBT	PANEL SIZE Horiz x Vert INCH x INCH	INSTALL No. OF SIGNS EA	RELOCATE No. OF SIGNS EA	No. OF POSTS AND SIZE (IN) INCH x INCH	PANEL COLOR (LEGEND / BACKGROUND)
1	1	G	C20(CA)L	LEFT LANE CLOSED AHEAD	"A" 255+80	FNBT	48 x 48	1		1 - 6 x 6	BLACK / ORANGE
		H	W4-2L	MERGE RIGHT SYMBOL	"A" 270+80	FNBT	48 x 48	1		1 - 6 x 6	BLACK / ORANGE
		I	W1-4R	LANE MOVES RIGHT SYMBOL	"A" 304+78	FSBT	48 x 48	1		BARRICADE MOUNTED	BLACK / ORANGE
			W13-1P	50 MPH			24 X 24				BLACK / WHITE
		J	W1-4L	LANE MOVES LEFT SYMBOL	"A" 312+58	FSBT	48 x 48	1		BARRICADE MOUNTED	BLACK / ORANGE
			W13-1P	50 MPH			24 X 24				BLACK / WHITE
		K	W4-2R	MERGE LEFT SYMBOL	"A" 330+38	FSBT	48 x 48	1		1 - 6 x 6	BLACK / ORANGE
		L	C20(CA)R	RIGHT LANE CLOSED AHEAD	"A" 345+38	FSBT	48 x 48	1		1 - 6 x 6	BLACK / ORANGE
2	2	G	C20(CA)L	LEFT LANE CLOSED AHEAD	"B" 467+30	FNBT	48 x 48	1		1 - 6 x 6	BLACK / ORANGE
		H	W4-2L	MERGE RIGHT SYMBOL	"B" 482+30	FNBT	48 x 48	1		1 - 6 x 6	BLACK / ORANGE
		I	W1-4R	LANE MOVES RIGHT SYMBOL	"B" 518+63	FSBT	48 x 48	1		BARRICADE MOUNTED	BLACK / ORANGE
			W13-1P	50 MPH			24 X 24				BLACK / WHITE
		J	W1-4L	LANE MOVES LEFT SYMBOL	"B" 526+43	FSBT	48 x 48	1		BARRICADE MOUNTED	BLACK / ORANGE
			W13-1P	50 MPH			24 X 24				BLACK / WHITE
		K	W4-2R	MERGE LEFT SYMBOL	"B" 544+23	FSBT	48 x 48	1		1 - 6 x 6	BLACK / ORANGE
		L	C20(CA)R	RIGHT LANE CLOSED AHEAD	"B" 559+23	FSBT	48 x 48	1		1 - 6 x 6	BLACK / ORANGE
	3	G	C20(CA)L	LEFT LANE CLOSED AHEAD	"B" 547+30	FSBT	48 x 48		1	1 - 6 x 6	BLACK / ORANGE
		H	W4-2L	MERGE RIGHT SYMBOL	"B" 532+30	FSBT	48 x 48		1	1 - 6 x 6	BLACK / ORANGE
		I	W1-4R	LANE MOVES RIGHT SYMBOL	"B" 498+32	FNBT	48 x 48		1	BARRICADE MOUNTED	BLACK / ORANGE
			W13-1P	50 MPH			24 X 24				BLACK / WHITE
		J	W1-4L	LANE MOVES LEFT SYMBOL	"B" 490+52	FNBT	48 x 48		1	BARRICADE MOUNTED	BLACK / ORANGE
			W13-1P	50 MPH			24 X 24				BLACK / WHITE
		K	W4-2R	MERGE LEFT SYMBOL	"B" 472+72	FNBT	48 x 48		1	1 - 6 x 6	BLACK / ORANGE
		L	C20(CA)R	RIGHT LANE CLOSED AHEAD	"B" 457+72	FNBT	48 x 48		1	1 - 6 x 6	BLACK / ORANGE
							TOTALS	12	6		

STAGE CONSTRUCTION AND TRAFFIC HANDLING QUANTITIES

SCQ-1

REVISED BY | DATE REVISED
DIANNE EDWARDS | ROBERT KING
CALCULATED-DESIGNED BY | CHECKED BY
FUNCTIONAL SUPERVISOR | KELLY B. TIMMONS

STATE OF CALIFORNIA - DEPARTMENT OF TRANSPORTATION
Caltrans® DESIGN

P:\PROJ\01\0B400\drafting\sheets\0112000124mf001.dgn

LAST REVISION 09-15-14 | DATE PLOTTED => 10-FEB-2015 | TIME PLOTTED => 14:18

Dist	COUNTY	ROUTE	POST MILES TOTAL PROJECT	SHEET No.	TOTAL SHEETS
01	Hum	101	R15.0, 29.4	27	47

Dianne M Edwards 01-30-15
REGISTERED CIVIL ENGINEER DATE

January 30, 2015
PLANS APPROVAL DATE

REGISTERED PROFESSIONAL ENGINEER D.M.EDWARDS No. C-51898 Exp. 6-30-16 CIVIL STATE OF CALIFORNIA

THE STATE OF CALIFORNIA OR ITS OFFICERS OR AGENTS SHALL NOT BE RESPONSIBLE FOR THE ACCURACY OR COMPLETENESS OF SCANNED COPIES OF THIS PLAN SHEET.

TEMPORARY TRAFFIC CONTROL DEVICES

LOCATION NUMBER	STAGE NUMBER	Sta FROM	Sta TO	Lt/Rt/CL	CHANNELIZER (SURFACE MOUNTED) EA	TRAFFIC PLASTIC DRUM EA	TEMPORARY RAILING (TYPE K) LF	RESET Temp RAILING (TYPE K) LF	ALTERNATIVE TEMPORARY CRASH CUSHION LF	RESET CRASH CUSHION EA	FLASHING ARROW SIGNS EA	RESET FLASHING ARROW SIGN EA
1	1	"A" 278+20	"A" 288+60	Rt		17						
		"A" 280+80	"A" 288+60	CL		11						
		"A" 288+60		Rt							1	
		"A" 288+60	"A" 292+00	CL	12							
		"A" 288+60	"A" 314+53	Rt	81							
		"A" 292+35	"A" 297+33	Lt			500		1			
		"A" 297+47	"A" 323+28	Lt		41						
		"A" 320+38		Lt							1	
2	2	"B" 489+70	"B" 500+10	Rt		17						
		"B" 492+30	"B" 500+10	Lt		13						
		"B" 500+10		Rt							1	
		"B" 500+10	"B" 503+75	Lt	13							
		"B" 500+10	"B" 531+83	Rt	99							
		"B" 503+00	"B" 514+40	Lt			1140		1			
		"B" 513+18	"B" 536+83	Lt		38						
		"B" 534+23		Lt							1	
	3	"B" 480+12	"B" 503+48	Rt								
		"B" 482+72		Rt								1
		"B" 498+52	"B" 514+50	Lt	82							
		"B" 511+60	"B" 514+50	CL	18							
		"B" 502+80	"B" 504+00	Rt				120		1		
		"B" 510+60	"B" 512+79	Rt				120				
		"B" 514+50		Lt								1
		"B" 514+50	"B" 522+53	CL		11						
		"B" 514+50	"B" 522+53	Rt		11						
				TOTAL	303	195	1,640	240	2	1	4	2

STAGE CONSTRUCTION AND TRAFFIC HANDLING QUANTITIES

SCQ-2

REVISED BY | DATE REVISED
DIANNE EDWARDS | ROBERT KING
CALCULATED-DESIGNED BY | CHECKED BY
FUNCTIONAL SUPERVISOR
KELLY B. TIMMONS

STATE OF CALIFORNIA - DEPARTMENT OF TRANSPORTATION
Caltrans® DESIGN

P:\PROJ\01\0B400\drafting\sheets\0112000124mf002.dgn

LAST REVISION 09-15-14 | DATE PLOTTED => 10-FEB-2015 TIME PLOTTED => 14:18

Dist	COUNTY	ROUTE	POST MILES TOTAL PROJECT	SHEET No.	TOTAL SHEETS
01	Hum	101	R15.0, 29.4	28	47

Dianne M Edwards 01-30-15
REGISTERED CIVIL ENGINEER DATE

January 30, 2015
PLANS APPROVAL DATE

REGISTERED PROFESSIONAL ENGINEER D.M.EDWARDS No. C-51898 Exp. 6-30-16 CIVIL STATE OF CALIFORNIA

THE STATE OF CALIFORNIA OR ITS OFFICERS OR AGENTS SHALL NOT BE RESPONSIBLE FOR THE ACCURACY OR COMPLETENESS OF SCANNED COPIES OF THIS PLAN SHEET.

TEMPORARY STRIPING

LOCATION NUMBER	STAGE NUMBER	Sta FROM	Sta TO	DETAIL No.	Lt/Rt/CL	LENGTH LF	REMOVE THERMOPLASTIC TRAFFIC STRIPE LF	REMOVE YELLOW THERMOPLASTIC TRAFFIC STRIPE (HAZARDOUS WASTE) LF	REMOVE PAVEMENT MARKER EA	TEMPORARY TRAFFIC STRIPE (TAPE) WHITE LF	TEMPORARY TRAFFIC STRIPE (TAPE) YELLOW LF
1	1	"A" 280+80	"A" 304+78	14A	Rt	2392	598		14		
		"A" 280+80	"A" 292+00	21	Rt	1120					2240
		"A" 288+60	"A" 308+68	29	CL	2008		8032	672		
		"A" 288+60	"A" 308+68	21	Lt	3126					6252
		"A" 291+35	"A" 308+68	27B	Lt	1736				1736	
		"A" 312+58	"A" 320+38	14A	Lt	772	193		5		
		"A" 312+58	"A" 320+38	27B	Lt	767				767	
2	2	"B" 492+30	"B" 518+63	14A	Rt	2638	660		15		
		"B" 492+30	"B" 503+75	21	Rt	1133					2266
		"B" 500+10	"B" 505+00	29	CL	490		1960	165		
		"B" 500+10	"B" 522+53	21	Lt	2256					4512
		"B" 502+00	"B" 505+00	14A	Lt	300	75		3		
		"B" 502+00	"B" 534+23	27B	Lt	3224				3224	
		"B" 511+50	"B" 522+53	29	CL	1103		4412	370		
		"B" 511+50	"B" 534+23	14A	Lt	2256	564		13		
	3	"B" 482+72	"B" 492+30	14A	Rt	958	240		6		
		"B" 482+72	"B" 512+50	27B	Rt	2961				2961	
		"B" 512+50	"B" 518+63	11	Rt	621				621	
		"B" 494+42	"B" 500+10	29	CL	568		2272	192		
		"B" 494+42	"B" 522+30	21	Lt	2784					5568
		"B" 511+60	"B" 522+53	21	CL	1090					2180
		"B" 497+43	"B" 502+00	14A	Lt	460	115		3		
		"B" 497+43	"B" 505+00	27B	Lt	765	191		5		
		"B" 523+30	"B" 534+23	11	Lt	1098				1098	
						SUBTOTAL				10,407	23,018
						TOTAL	2636	16,676	1463	33,425	

STAGE CONSTRUCTION AND TRAFFIC HANDLING QUANTITIES

SCQ-3

REVISED BY | DATE REVISED
DIANNE EDWARDS | ROBERT KING
CALCULATED-DESIGNED BY | CHECKED BY
FUNCTIONAL SUPERVISOR | KELLY B. TIMMONS
STATE OF CALIFORNIA - DEPARTMENT OF TRANSPORTATION
Caltrans® DESIGN
P:\PROJ\01\0B400\drafting\sheets\0112000124mf003.dgn

LAST REVISION 09-15-14 | DATE PLOTTED => 10-FEB-2015 | TIME PLOTTED => 14:18

Dist	COUNTY	ROUTE	POST MILES TOTAL PROJECT	SHEET No.	TOTAL SHEETS
01	Hum	101	R15.0, 29.4	29	47

Dianne M Edwards 01-30-15
REGISTERED CIVIL ENGINEER DATE

January 30, 2015
PLANS APPROVAL DATE

REGISTERED PROFESSIONAL ENGINEER
D.M.EDWARDS
No. C-51898
Exp. 6-30-16
CIVIL
STATE OF CALIFORNIA

THE STATE OF CALIFORNIA OR ITS OFFICERS OR AGENTS SHALL NOT BE RESPONSIBLE FOR THE ACCURACY OR COMPLETENESS OF SCANNED COPIES OF THIS PLAN SHEET.

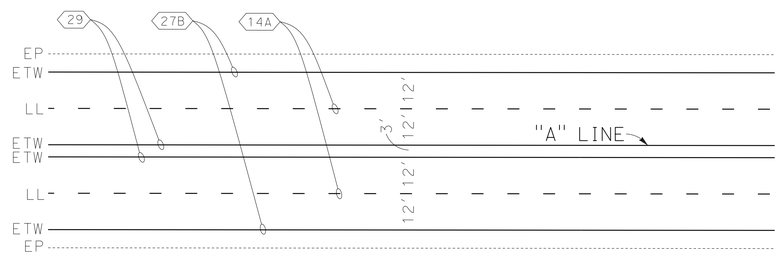

LOCATION 1

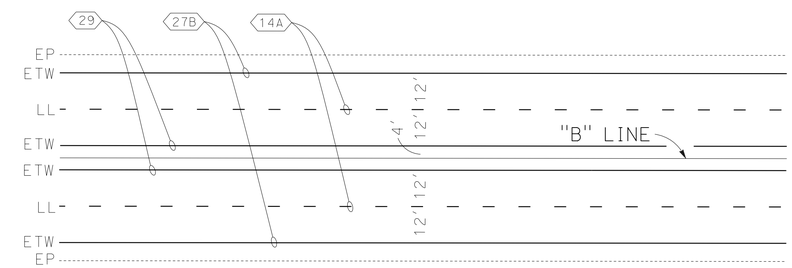

LOCATION 2

TYPICAL STRIPING DETAILS

NO SCALE

PAVEMENT DELINEATION

LOCATION NUMBER	STATION		DETAIL NUMBER	L+/R+/CL	LENGTH	GROUND-IN CENTERLINE RUMBLE STRIP	4" THERMOPLASTIC TRAFFIC STRIPE		PAVEMENT MARKER (RETROREFLECTIVE-RECESSED)	
							WHITE	YELLOW	TYPE C	TYPE D
	FROM	TO			LF	Sta	LF		EA	
1	"A" 280+80	"A" 304+78	14A	R+	2392		2392		52	
	"A" 288+60	"A" 308+68	29	CL	2008	10		8032		170
	"A" 292+50	"A" 297+50	27B	L+	500		500			
	"A" 292+50	"A" 297+50	27B	R+	500		500			
	"A" 292+50	"A" 297+50	14A	L+	500		500		13	
	"A" 312+58	"A" 320+38	14A	L+	780		780		18	
2	"B" 497+43	"B" 511+60	27B	L+	1417		288			
	"B" 497+43	"B" 534+23	14A	L+	3680		288		78	
	"B" 494+42	"B" 522+53	29	CL	2811	15		11,244		236
	"B" 482+72	"B" 490+52	14A	R+	780		780		17	
	"B" 492+30	"B" 518+63	14A	R+	2633		2633		56	
	"B" 504+00	"B" 511+50	27B	R+	760		760			
					SUBTOTAL		9421	19,276	234	406
					TOTAL	25	28,697		640	

PAVEMENT DELINEATION DETAILS AND QUANTITIES

PDD-1

REVISED BY	DATE REVISED

DIANNE EDWARDS — ROBERT KING

CALCULATED-DESIGNED BY — CHECKED BY

FUNCTIONAL SUPERVISOR: KELLY B. TIMMONS

Caltrans® DESIGN

STATE OF CALIFORNIA - DEPARTMENT OF TRANSPORTATION

P:\PROJ\01\0B400\drafting\sheets\0112000124nb001.dgn

LAST REVISION 09-15-14 — DATE PLOTTED => 10-FEB-2015 TIME PLOTTED => 14:18

Dist	COUNTY	ROUTE	POST MILES TOTAL PROJECT	SHEET No.	TOTAL SHEETS
01	Hum	101	R15.0, 29.4	30	47

Dianne M Edwards 01-30-15
REGISTERED CIVIL ENGINEER DATE

January 30, 2015
PLANS APPROVAL DATE

REGISTERED PROFESSIONAL ENGINEER D.M.EDWARDS No. C-51898 Exp. 6-30-16 CIVIL STATE OF CALIFORNIA

THE STATE OF CALIFORNIA OR ITS OFFICERS OR AGENTS SHALL NOT BE RESPONSIBLE FOR THE ACCURACY OR COMPLETENESS OF SCANNED COPIES OF THIS PLAN SHEET.

DIKE QUANTITIES

LOCATION	STATION FROM	STATION TO	L+/R+	REMOVE AC DIKE	PLACE HMA DIKE TYPE E	PLACE HMA DIKE TYPE F	HMA (TYPE A)
				LF	LF	LF	TONS
2	"B" 504+00	"B" 506+20.5	R+	221	221		5.8
	"B" 504+50.2	"B" 504+97.5	L+	47		47	0.6
	"B" 505+17.9	"B" 505+77.7	L+	*		60	0.8
	"B" 506+24.5	"B" 511+50.0	R+	526	526		13.8
	"B" 508+12.7	"B" 510+35.0	L+	*		222	3.0
	"B" 510+35.0	"B" 511+50.0	L+	115		115	1.5
			TOTALS	908	746	444	25.6

* DIKE REMOVAL IS INCLUDED IN ROADWAY EXCAVATION.

GUARDRAIL

LOCATION	STATION FROM	STATION TO	L+/R+	RECONSTRUCT GUARDRAIL (WOOD POST)	GUARD RAILING DELINEATOR (TYPE F)	TREATED WOOD WASTE	VEGETATION CONTROL (MINOR CONCRETE)
				LF	EA	LB	SQYD
1	"A" 292+50	"A" 297+50	L+	500	10	6500	204
2	"B" 505+00	"B" 510+35	L+	535	4	6900	219
			TOTALS	1035	14	13,400	423

ROADWAY QUANTITIES

LOCATION	STATION FROM	STATION TO	HMA (TYPE OGFC)	HMA (TYPE A)	CLASS 2 AGGREGATE BASE	ROADWAY EXCAVATION	IMPORTED BORROW	COLDPLANE AC PAVEMENT	TACK COAT	ASPHALT BINDER (GEOSYNTHETIC PAVEMENT INTERLAYER)	GEOSYNTHETIC PAVEMENT INTERLAYER (PAVEMENT FABRIC)	ADJUST FIBER OPTIC UTILITY	RECONSTRUCT UTILITY MANHOLE
			TONS	TONS	CY	CY	CY	SQYD	TONS	TONS	SQYD	LF	EA
1	"A" 292+50	"A" 297+50	221	341	116	646	591	524	0.5	0.1	123		
2	"B" 504+00	"B" 511+50	347	1449	910	4145	2547	1246	1.3	0.3	237	1300	1
TOTALS FROM HMA DIKE QUANTITIES				25.6									
		TOTALS	568	1815.6	1026	4791	3138	1770	1.8	0.4	360	1300	1

TEMPORARY WATER POLLUTION CONTROL

LOCATION	STATION FROM	STATION TO	L+/R+	Temp DI PROTECTION	Temp GRAVEL BAG BERMS	Temp SILT FENCE	Temp FIBER ROLL	Temp CHECK DAMS	Temp LARGE SEDIMENT BARRIER	Temp FENCE (TYPE ESA)	Temp HYDRAULIC MULCH	Temp COVER
				EA	LF	LF	LF	LF	LF	LF	SQYD	SQYD
1	"A" 293+50	"A" 296+25	L+			300	360		300	600		1210
	"A" 293+50	"A" 296+25	R+					150				
2	"B" 504+00	"B" 511+50	R+	2	740							
	"B" 504+00	"B" 511+50	L+	1	450	585	410				1936	
			TOTALS	3	1190	885	770	150	300	600	1936	1210

SUMMARY OF QUANTITIES

Q-1

REVISED BY | DATE REVISED
DIANNE EDWARDS | ROBERT KING
CALCULATED-DESIGNED BY | CHECKED BY
FUNCTIONAL SUPERVISOR: KELLY B. TIMMONS

Caltrans® DESIGN
STATE OF CALIFORNIA - DEPARTMENT OF TRANSPORTATION

P:\PROJ\01\0B400\drafting\sheets\0112000124pa001.dgn

LAST REVISION 09-15-14 | DATE PLOTTED => 10-FEB-2015 TIME PLOTTED => 14:18

Dist	COUNTY	ROUTE	POST MILES TOTAL PROJECT	SHEET No.	TOTAL SHEETS
01	Hum	101	R15.0,29.4	31	47

Laura Lazzarotto
LICENSED LANDSCAPE ARCHITECT

January 30, 2015
PLANS APPROVAL DATE

LICENSED LANDSCAPE ARCHITECT
Laura Lazzarotto L.A. 4245
Signature
8-31-015
Renewal Date
1-23-15
Date
STATE OF CALIFORNIA

THE STATE OF CALIFORNIA OR ITS OFFICERS OR AGENTS SHALL NOT BE RESPONSIBLE FOR THE ACCURACY OR COMPLETENESS OF SCANNED COPIES OF THIS PLAN SHEET.

NOTES:

1. FOR ACCURATE RIGHT OF WAY AND ACCESS DATA, CONTACT RIGHT OF WAY ENGINEERING AT THE DISTRICT OFFICE.

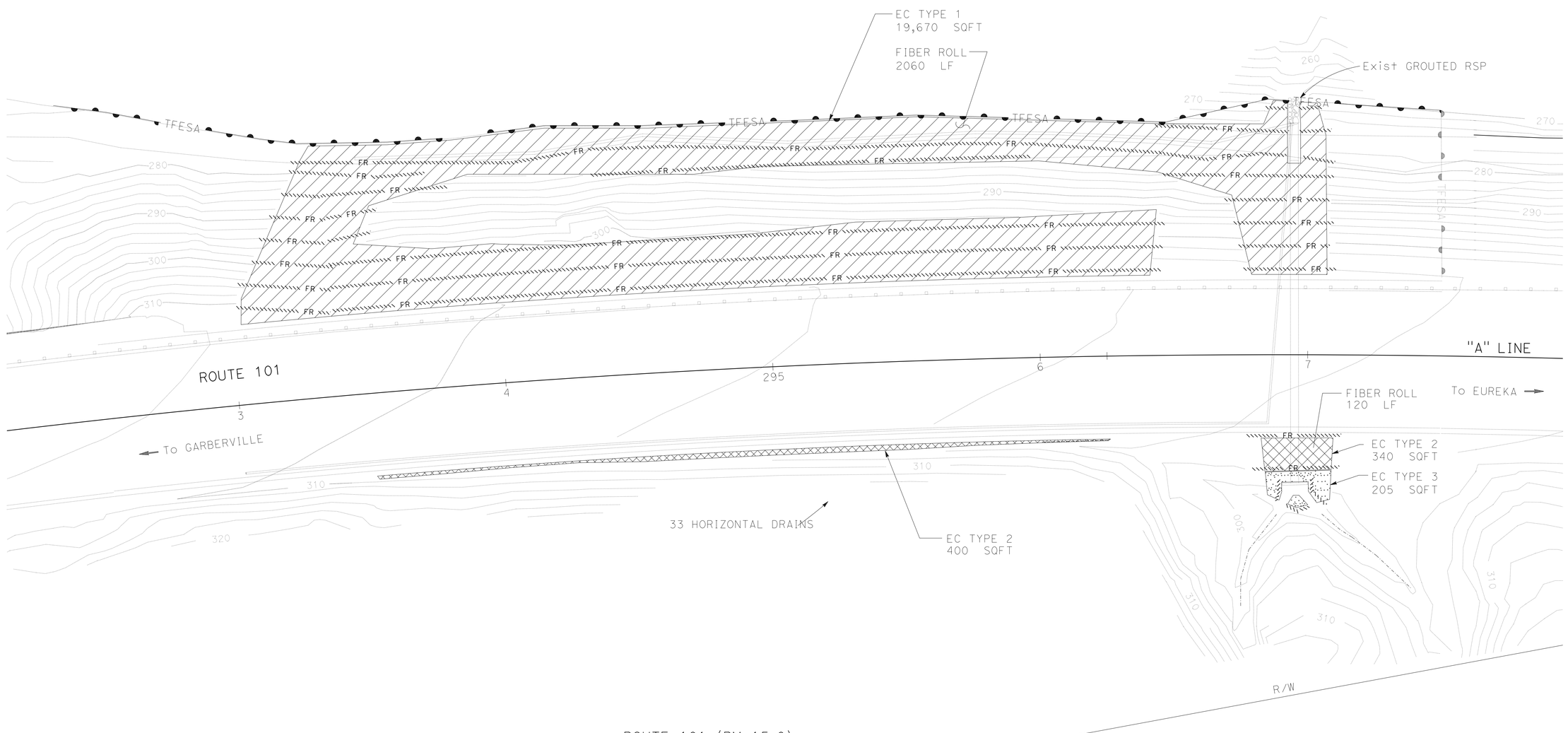

APPROVED FOR EROSION CONTROL ONLY

EROSION CONTROL PLAN

SCALE: 1" = 20'

EC-1

REVISED BY | DATE REVISED
LAURA LAZZAROTTO | DIANNE EDWARDS
CALCULATED-DESIGNED BY | CHECKED BY
SENIOR LANDSCAPE ARCHITECT | RON FLORY

STATE OF CALIFORNIA - DEPARTMENT OF TRANSPORTATION
Caltrans® LANDSCAPE ARCHITECTURE

P:\PROJ\01\0B400\drafting\sheets\01120001241te001.dgn

LAST REVISION 02-01-14 | DATE PLOTTED => 10-FEB-2015 | TIME PLOTTED => 14:18

BORDER LAST REVISED 7/2/2010 | USERNAME => s120115 | DGN FILE => 01120001241te001.dgn | RELATIVE BORDER SCALE IS IN INCHES 0 1 2 3 | UNIT 0314 | PROJECT NUMBER & PHASE 01120001241

Dist	COUNTY	ROUTE	POST MILES TOTAL PROJECT	SHEET No.	TOTAL SHEETS
01	Hum	101	R15.0,29.4	32	47

Laura Lazzarotto
LICENSED LANDSCAPE ARCHITECT

January 30, 2015
PLANS APPROVAL DATE

LICENSED LANDSCAPE ARCHITECT
Laura Lazzarotto
Signature
8-31-2015
Renewal Date
1-23-15
Date
STATE OF CALIFORNIA

THE STATE OF CALIFORNIA OR ITS OFFICERS OR AGENTS SHALL NOT BE RESPONSIBLE FOR THE ACCURACY OR COMPLETENESS OF SCANNED COPIES OF THIS PLAN SHEET.

NOTES:

1. FOR ACCURATE RIGHT OF WAY AND ACCESS DATA, CONTACT RIGHT OF WAY ENGINEERING AT THE DISTRICT OFFICE.

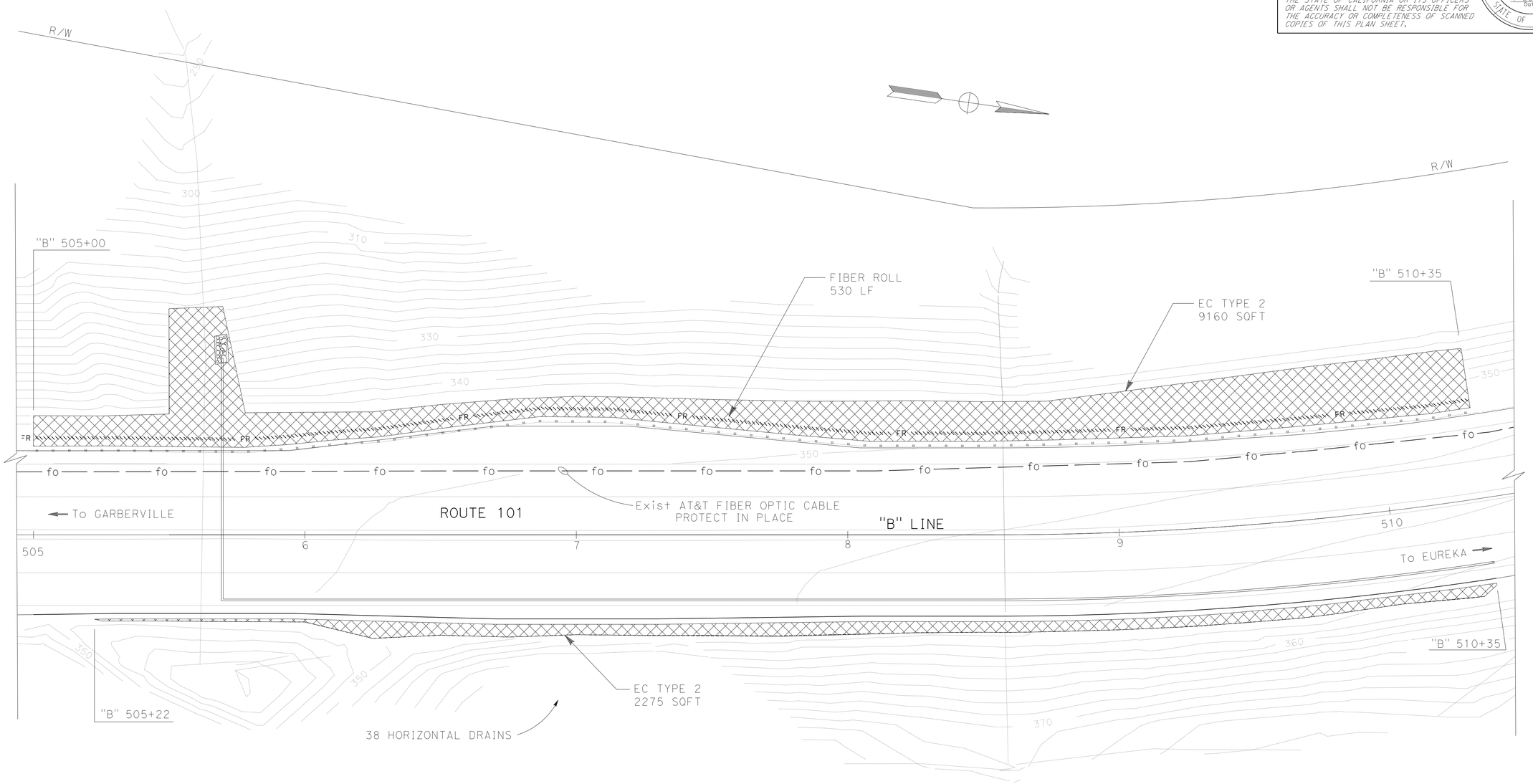

ROUTE 101 (PM 29.4)

R/W

APPROVED FOR EROSION CONTROL ONLY

EROSION CONTROL PLAN

SCALE: 1" = 20'

EC-2

REVISED BY	DATE REVISED

CALCULATED-DESIGNED BY	LAURA LAZZAROTTO
CHECKED BY	DIANNE EDWARDS
SENIOR LANDSCAPE ARCHITECT	RON FLORY

STATE OF CALIFORNIA - DEPARTMENT OF TRANSPORTATION
Caltrans® LANDSCAPE ARCHITECTURE

P:\PROJ\01\0B400\drafting\sheets\01120001241e002.dgn

LAST REVISION 02-01-14
DATE PLOTTED => 10-FEB-2015
TIME PLOTTED => 14:18

BORDER LAST REVISED 7/2/2010 | USERNAME => s120115 DGN FILE => 01120001241e002.dgn | RELATIVE BORDER SCALE IS IN INCHES 0 1 2 3 | UNIT 0314 | PROJECT NUMBER & PHASE 01120001241

Dist	COUNTY	ROUTE	POST MILES TOTAL PROJECT	SHEET No.	TOTAL SHEETS
01	Hum	101	R15.0,29.4	33	47

Laura Lazzarotto
LICENSED LANDSCAPE ARCHITECT

January 30, 2015
PLANS APPROVAL DATE

LICENSED LANDSCAPE ARCHITECT Laura Lazzarotto STATE OF CALIFORNIA
Signature 8-31-15 Renewal Date 1-23-15 Date

THE STATE OF CALIFORNIA OR ITS OFFICERS OR AGENTS SHALL NOT BE RESPONSIBLE FOR THE ACCURACY OR COMPLETENESS OF SCANNED COPIES OF THIS PLAN SHEET.

EROSION CONTROL QUANTITIES

PLAN SHEET	LOCATION	LT	RT	EROSION CONTROL TYPE	FIBER ROLLS	HYDROSEED	STRAW	HYDROMULCH	WOOD MULCH	ROLLED EROSION CONTROL PRODUCT (BLANKET)	PURE LIVE SEED	FIBER	TACKIFIER	STRAW	AREA
					LF	SQFT	SQFT	SQFT	CY	SQFT	LBS			TON	SQFT
											(N)			(N)	(N)
EC-1	HUM 101 PM R15.0	X		TYPE 1	2060	19,670	19,670	19,670			6.8	109.6	6.4	0.14	19,670
			X	TYPE 2	80				6.5						740
			X	TYPE 3	40					230					230
EC-2	HUM 101 PM 29.4	X		TYPE 2	530				84.8						9160
			X	TYPE 2					21.0						2275
				TOTAL	2710	19,670	19,670	19,670	112.3	230	6.8	109.6	6.4	0.14	32,075

NOTE: (N) DENOTES NON PAY ITEM. (FOR INFORMATION ONLY)

LEGEND

- EC TYPE 1
- EC TYPE 2
- EC TYPE 3
- ROCK SLOPE PROTECTION

FIBER ROLLS

SEQUENCE	ITEM	MATERIAL		REMARKS
		DESCRIPTION	TYPE	
FIBER ROLLS MUST BE INSTALLED BEFORE EROSION CONTROL	FIBER ROLLS	FIBER ROLL	TYPE B 8" TO 10" Dia	TYPE 1 FIBER ROLL INSTALLATION

EROSION CONTROL TYPE 1

SEQUENCE	ITEM	MATERIAL		APPLICATION RATE	REMARKS
		DESCRIPTION	TYPE		
STEP 1	HYDROSEED	SEED	MIX 1	148 LB/ACRE	
		FIBER	WOOD	1200 LB/ACRE	
STEP 2	STRAW	STRAW	WHEAT &/OR BARLEY	3 TON/ACRE	
STEP 3	HYDROMULCH	FIBER	WOOD	1200 LB/ACRE	
		TACKIFIER	PSYLLIUM	140 LB/ACRE	

EROSION CONTROL TYPE 2

SEQUENCE	ITEM	MATERIAL		APPLICATION RATE
		DESCRIPTION	TYPE	
STEP 1	WOOD MULCH	BARK	WALK-ON BARK	405 CY/ACRE

EROSION CONTROL TYPE 3

ITEM	MATERIAL	
	DESCRIPTION	TYPE
ROLLED EROSION CONTROL PRODUCT	EROSION CONTROL BLANKET	A

SEED MIX 1

SEED	BOTANICAL NAME (COMMON NAME)	PERCENT GERMINATION (MINIMUM)	POUNDS PURE LIVE SEED PER ACRE (SLOPE MEASUREMENT)
MIX 1	ACHILLEA MILLEFOLIUM [1] (WHITE YARROW)	40	1
	BROMUS CARINATUS [1] (CALIFORNIA BROME)	50	30
	ELYMUS GLAUCUS [1] (BLUE WILDRYE)	45	20
	FESTUCA IDAHOENSIS 'NATIVE' [1] (IDAHO FESCUE, NATIVE)	50	12
	HORDEUM VULGARE var. UC (COMMON BARLEY)	75	70
	LOTUS PURSHIANUS [1] (SPANISH CLOVER)	40	10
	VULPIA MICROSTACHYS [1] (6 WEEKS FESCUE)	50	5

[1] SEED PRODUCED IN CALIFORNIA ONLY.

EROSION CONTROL LEGEND AND EROSION CONTROL QUANTITIES
ECQ-1

REVISED BY | DATE REVISED
LAURA LAZZAROTTO | DIANNE EDWARDS
CALCULATED-DESIGNED BY | CHECKED BY
SENIOR LANDSCAPE ARCHITECT | RON FLORY
STATE OF CALIFORNIA - DEPARTMENT OF TRANSPORTATION
Caltrans® LANDSCAPE

LAST REVISION 00-00-00 | DATE PLOTTED => 10-FEB-2015 | TIME PLOTTED => 14:18

M

Maint	MAINTENANCE
Max	MAXIMUM
MB	METAL BEAM
MBB	METAL BEAM BARRIER
MBGR	METAL BEAM GUARD RAILING
Med	MEDIAN
MGS	MIDWEST GUARDRAIL SYSTEM
MH	MANHOLE
Min	MINIMUM
Misc	MISCELLANEOUS
Misc I & S	MISCELLANEOUS IRON AND STEEL
Mkr	MARKER
Mod	MODIFIED,
	MODIFY
Mon	MONUMENT
MP	METAL PLATE
MPGR	METAL PLATE GUARD RAILING
MR	MOVEMENT RATING
MSE	MECHANICALLY STABILIZED EMBANKMENT
Mt	MOUNTAIN, MOUNT
Mtl	MATERIAL
MVP	MAINTENANCE VEHICLE PULLOUT

N

N	NORTH
NB	NORTHBOUND
No.	NUMBER (MUST HAVE PERIOD)
Nos.	NUMBERS (MUST HAVE PERIOD)
NPS	NOMINAL PIPE SIZE
NS	NEAR SIDE
NSP	NEW STANDARD PLAN
NTS	NOT TO SCALE

O

Oblr	OBLITERATE
OC	OVERCROSSING
OD	OUTSIDE DIAMETER
OF	OUTSIDE FACE
OG	ORIGINAL GROUND
OGAC	OPEN GRADED ASPHALT CONCRETE
OGFC	OPEN GRADED FRICTION COURSE
OH	OVERHEAD
OHWM	ORDINARY HIGH WATER MARK
O-O	OUT TO OUT
Opp	OPPOSITE
OSD	OVERSIDE DRAIN

P

P	PAGE
PAP	PERFORATED ALUMINUM PIPE
PB	PULL BOX
PC	POINT OF CURVATURE,
	PRECAST
PCC	POINT OF COMPOUND CURVE,
	PORTLAND CEMENT CONCRETE
PCMS	PORTABLE CHANGEABLE MESSAGE SIGN
PCP	PERFORATED CONCRETE PIPE,
	PRESTRESSED CONCRETE PIPE
PCVC	POINT OF COMPOUND VERTICAL CURVE
PEC	PERMIT TO ENTER AND CONSTRUCT
Ped	PEDESTRIAN
Ped OC	PEDESTRIAN OVERCROSSING
Ped UC	PEDESTRIAN UNDERCROSSING
Perm Mtl	PERMEABLE MATERIAL

P continued

PG	PROFILE GRADE
PI	POINT OF INTERSECTION
PJP	PARTIAL JOINT PENETRATION
Pkwy	PARKWAY
ℙ,PL	PLATE
P/L	PROPERTY LINE
PM	POST MILE,
	TIME FROM NOON TO MIDNIGHT
PN	PAVING NOTCH
POC	POINT OF HORIZONTAL CURVE
POT	POINT OF TANGENT
POVC	POINT OF VERTICAL CURVE
PP	PIPE PILE,
	PLASTIC PIPE,
	POWER POLE
PPL	PREFORMED PERMEABLE LINER
PPP	PERFORATED PLASTIC PIPE
PRC	POINT OF REVERSE CURVE
PRF	PAVEMENT REINFORCING FABRIC
PRVC	POINT OF REVERSE VERTICAL CURVE
PS&E	PLANS, SPECIFICATIONS AND ESTIMATES
PS, P/S	PRESTRESSED
PSP	PERFORATED STEEL PIPE
PT	POINT OF TANGENCY
PVC	POLYVINYL CHLORIDE
Pvmt	PAVEMENT

Q

Qty	QUANTITY

R

R	RADIUS
R & D	REMOVE AND DISPOSE
R & S	REMOVE AND SALVAGE
R/C	RATE OF CHANGE
RCA	REINFORCED CONCRETE ARCH
RCB	REINFORCED CONCRETE BOX
RCP	REINFORCED CONCRETE PIPE
RCPA	REINFORCED CONCRETE PIPE ARCH
Rd	ROAD
Reinf	REINFORCED,
	REINFORCEMENT,
	REINFORCING
Rel	RELOCATE
Repl	REPLACEMENT
Ret	RETAINING
Rev	REVISED, REVISION
Rdwy	ROADWAY
RHMA	RUBBERIZED HOT MIX ASPHALT
Riv	RIVER
RM	ROAD-MIXED
RP	RADIUS POINT,
	REFERENCE POINT
RR	RAILROAD
RSP	ROCK SLOPE PROTECTION,
	REVISED STANDARD PLAN
Rt	RIGHT
Rte	ROUTE
RW	REDWOOD,
	RETAINING WALL
R/W	RIGHT OF WAY
Rwy	RAILWAY

S

S	SOUTH,
	SUPPLEMENT
SAE	STRUCTURE APPROACH EMBANKMENT
Salv	SALVAGE
SAPP	STRUCTURAL ALUMINUM PLATE PIPE
SB	SOUTHBOUND
SC	SAND CUSHION
SCSP	SLOTTED CORRUGATED STEEL PIPE
SD	STORM DRAIN
Sec	SECOND,
	SECTION
Sep	SEPARATION
SG	SUBGRADE
Shld	SHOULDER
Sht	SHEET
Sim	SIMILAR
₤	STATION LINE
SM	SELECTED MATERIAL
Spec	SPECIAL,
	SPECIFICATIONS
SPP	SLOTTED PLASTIC PIPE
SS	SLOPE STAKE
SSBM	STRAP AND SADDLE BRACKET METHOD
SSD	STRUCTURAL SECTION DRAIN
SSPA	STRUCTURAL STEEL PLATE ARCH
SSPP	STRUCTURAL STEEL PLATE PIPE
SSPPA	STRUCTURAL STEEL PLATE PIPE ARCH
SSRP	STEEL SPIRAL RIB PIPE
St	STREET
Sta	STATION
STBB	SINGLE THRIE BEAM BARRIER
Std	STANDARD
Str	STRUCTURE
Surf	SURFACING
SW	SIDEWALK,
	SOUND WALL
Swr	SEWER
Sym	SYMMETRICAL
S4S	SURFACE 4 SIDES

T

T	SEMI-TANGENT
Tan	TANGENT
TBB	THRIE BEAM BARRIER
Tbr	TIMBER
TC	TOP OF CURB
TCB	TRAFFIC CONTROL BOX
TCE	TEMPORARY CONSTRUCTION EASEMENT
Tel	TELEPHONE
Temp	TEMPORARY
TG	TOP OF GRADE
Tot	TOTAL
TP	TELEPHONE POLE
TPB	TREATED PERMEABLE BASE
TPM	TREATED PERMEABLE MATERIAL
Trans	TRANSITION

T continued

TS	TRANSVERSE,
	TRAFFIC SIGNAL,
	TUBULAR STEEL
Typ	TYPICAL

U

UC	UNDERCROSSING
UD	UNDERDRAIN
UG	UNDERGROUND
UON	UNLESS OTHERWISE NOTED
UP	UNDERPASS

V

V	VALVE,
	DESIGN SPEED
Var	VARIABLE,
	VARIES
VC	VERTICAL CURVE
VCP	VITRIFIED CLAY PIPE
Vert	VERTICAL
Via	VIADUCT
Vol	VOLUME

W

W	WEST,
	WIDTH
WB	WESTBOUND
WH	WEEP HOLE
WM	WIRE MESH
WS	WATER SURFACE
WSP	WELDED STEEL PIPE
Wt	WEIGHT
WV	WATER VALVE
WW	WINGWALL
WWLOL	WINGWALL LAYOUT LINE

X

X Sec	CROSS SECTION
Xing	CROSSING

Y

Yr	YEAR
Yrs	YEARS

Dist	COUNTY	ROUTE	POST MILES TOTAL PROJECT	SHEET No.	TOTAL SHEETS
01	Hum	101	R15.0, 29.4	34	47

Grace M. Tsushima
REGISTERED CIVIL ENGINEER

July 19, 2013
PLANS APPROVAL DATE

REGISTERED PROFESSIONAL ENGINEER Grace M. Tsushima No. C49814 Exp. 9-30-14 CIVIL STATE OF CALIFORNIA

THE STATE OF CALIFORNIA OR ITS OFFICERS OR AGENTS SHALL NOT BE RESPONSIBLE FOR THE ACCURACY OR COMPLETENESS OF SCANNED COPIES OF THIS PLAN SHEET.

TO ACCOMPANY PLANS DATED 01-30-15

UNIT OF MEASUREMENT SYMBOLS:

Some of the symbols used in the project plan quantity tables and in the Bid Item List are:

TABLE A

SYMBOL USED	DEFINITIONS
ACRE	ACRE
CF	CUBIC FOOT
CY	CUBIC YARD
EA	EACH
GAL	GALLON
LB	POUND
LF	LINEAR FOOT
SQFT	SQUARE FOOT
SQYD	SQUARE YARD
STA	100 FEET
TAB	TABLET
TON	2,000 POUNDS

Some of the symbols used in the plans other than in the project plan quantity tables are:

TABLE B

SYMBOL USED	DEFINITIONS
ksi	KIPS PER SQUARE INCH
ksf	KIPS PER SQUARE FOOT
psi	POUNDS PER SQUARE INCH
psf	POUNDS PER SQUARE FOOT
lb/ft^3, pcf	POUNDS PER CUBIC FOOT
tsf	TONS PER SQUARE FOOT
mph, MPH *	MILES PER HOUR
ø	NOMINAL DIAMETER
oz	OUNCE
lb	POUND
kip	1,000 POUNDS
cal	CALORIE
ft	FOOT OR FEET
gal	GALLON

* For use on a sign panel only

STATE OF CALIFORNIA
DEPARTMENT OF TRANSPORTATION

ABBREVIATIONS (SHEET 2 OF 2)

NO SCALE

RSP A10B DATED JULY 19, 2013 SUPERSEDES STANDARD PLAN A10B DATED MAY 20, 2011 - PAGE 2 OF THE STANDARD PLANS BOOK DATED 2010.

REVISED STANDARD PLAN RSP A10B

2010 REVISED STANDARD PLAN RSP A10B

P:\PROJ\01\0B400\drafting\sheets\0112000124va001.dgn

6-7-13

Dist	COUNTY	ROUTE	POST MILES TOTAL PROJECT	SHEET No.	TOTAL SHEETS
01	Hum	101	R15.0, 29.4	35	47

Randell D. Hiatt
REGISTERED CIVIL ENGINEER

July 19, 2013
PLANS APPROVAL DATE

REGISTERED PROFESSIONAL ENGINEER
Randell D. Hiatt
No. C50200
Exp. 6-30-15
CIVIL
STATE OF CALIFORNIA

THE STATE OF CALIFORNIA OR ITS OFFICERS OR AGENTS SHALL NOT BE RESPONSIBLE FOR THE ACCURACY OR COMPLETENESS OF SCANNED COPIES OF THIS PLAN SHEET.

TO ACCOMPANY PLANS DATED 01-30-15

2010 REVISED STANDARD PLAN RSP A77L3

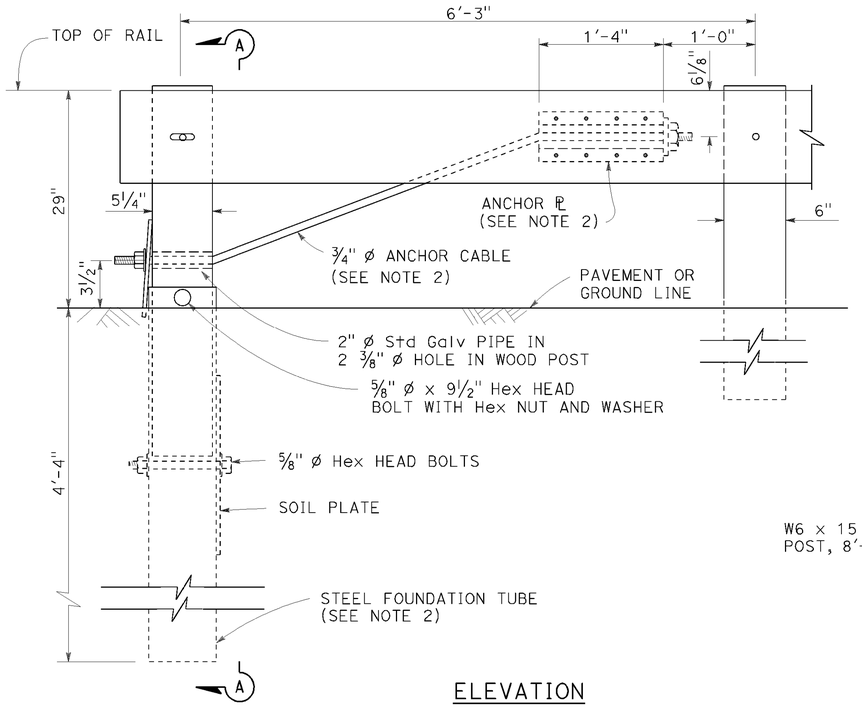

ELEVATION
END ANCHOR
ASSEMBLY (TYPE SFT)

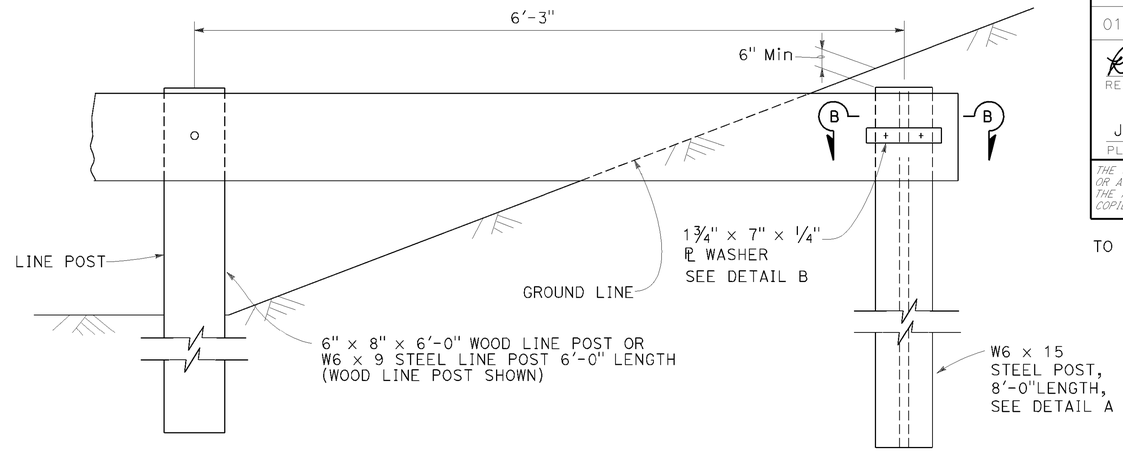

BURIED POST END ANCHOR

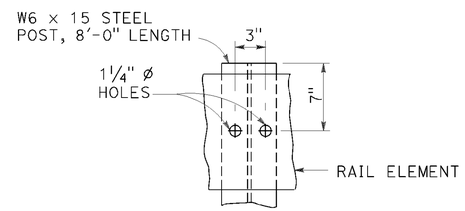

DETAIL A

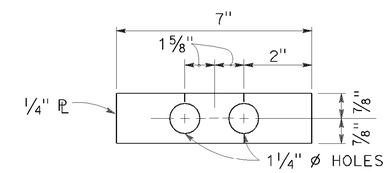

DETAIL B

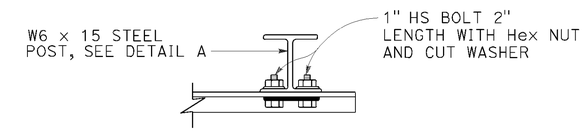

SECTION B-B

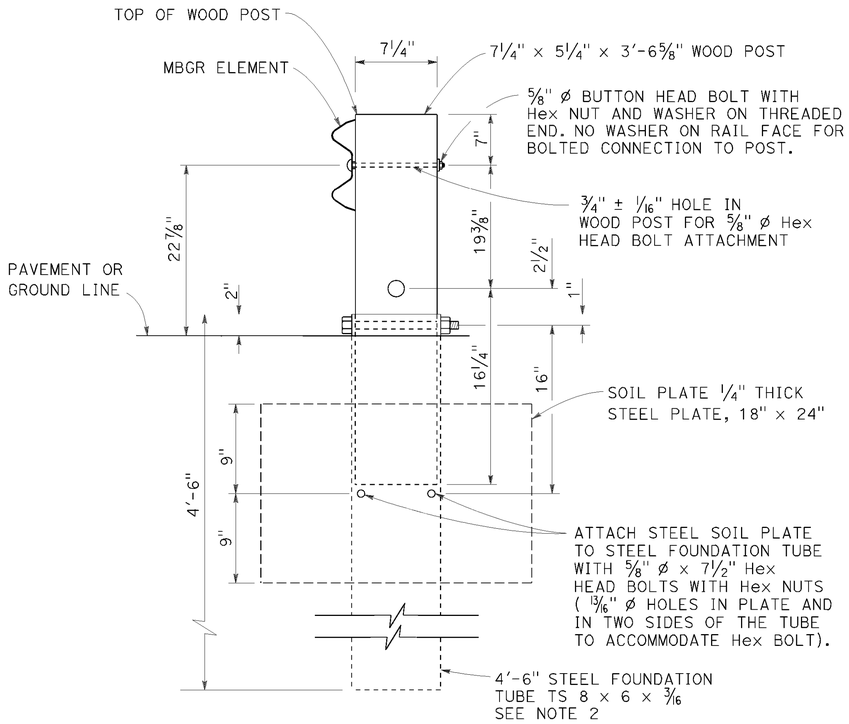

SECTION A-A

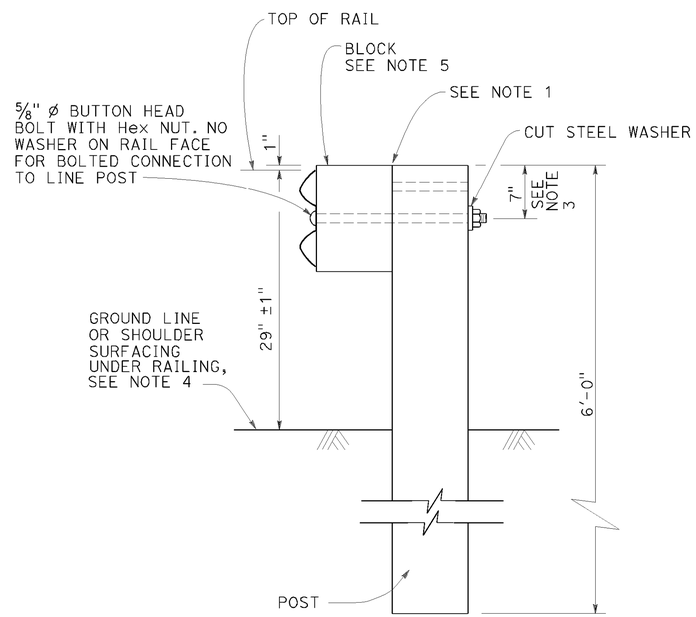

TYPICAL LINE
POST INSTALLATION

NOTES:

1. For wood post and wood block, toenail with 2-16d Galv nails in top of block. For steel post and notched wood or plastic block, notched face of block faces steel post.
2. A 6'-0" Length steel foundation tube, TS 8 x 6 x 3/16, without a soil plate, may be furnished and installed in place of the 4'-6" length steel foundation tube and soil plate shown, Minimum embadment of the 6'-0" length tube shall be 5'-9". A 5/8" ø Hex head bolt and nut shall be installed in the hole in the 6'-0" length tube to keep the wood post from dropping into the tube.
3. To connect railing to 27" terminal system end treatment, transition the top of railing height at a ratio of 120:1 to terminal system end treatment height plus one 12'-6" standard railing section at the transitioned height for a horizontal connection to the end treatment.
4. Install posts in soil.
5. See Revised Standard Plans RSP A77N1 and RSP A77N2 for details.
6. Holes excavation in the slope to construct the buried post end anchor shall be backfilled with selected earth, placed in layers approximately 1'-0" thick. Each layer shall be moistened and thoroughly compacted.

STATE OF CALIFORNIA
DEPARTMENT OF TRANSPORTATION

METAL BEAM GUARD RAILING RECONSTRUCT INSTALLATION

NO SCALE

RSP A77L3 DATED JULY 19, 2013 SUPPLEMENTS THE STANDARD PLANS BOOK DATED 2010.

REVISED STANDARD PLAN RSP A77L3

P:\PROJ\01\0B400\drafting\sheets\0112000124va002.dgn

7-16-13

Dist	COUNTY	ROUTE	POST MILES TOTAL PROJECT	SHEET No.	TOTAL SHEETS
01	Hum	101	R15.0, 29.4	36	47

Randell D. Hiatt
REGISTERED CIVIL ENGINEER

November 15, 2013
PLANS APPROVAL DATE

REGISTERED PROFESSIONAL ENGINEER
Randell D. Hiatt
No. C50200
Exp. 6-30-15
CIVIL
STATE OF CALIFORNIA

THE STATE OF CALIFORNIA OR ITS OFFICERS OR AGENTS SHALL NOT BE RESPONSIBLE FOR THE ACCURACY OR COMPLETENESS OF SCANNED COPIES OF THIS PLAN SHEET.

TO ACCOMPANY PLANS DATED 01-30-15

NOTE:

See Revised Standard Plans RSP A77S1, RSP A77S2 and RSP A77T1 for typical use of anchor cable and anchor plate.

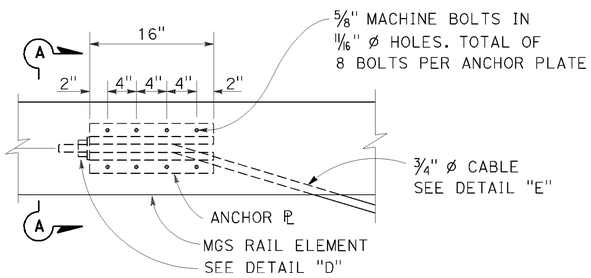

ANCHOR PLATE DETAIL

(MGS shown, TBB similar)

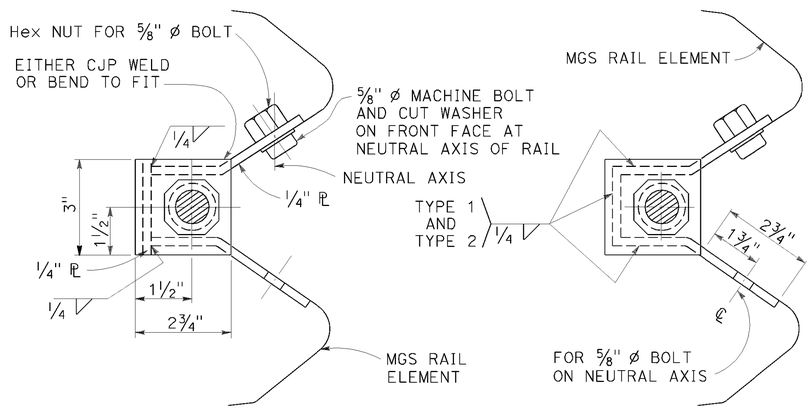

NOTE:

Dimensioning applies to both types.

SECTION A-A
(ALTERNATIVE TYPE 1)

SECTION A-A
(ALTERNATIVE TYPE 2)

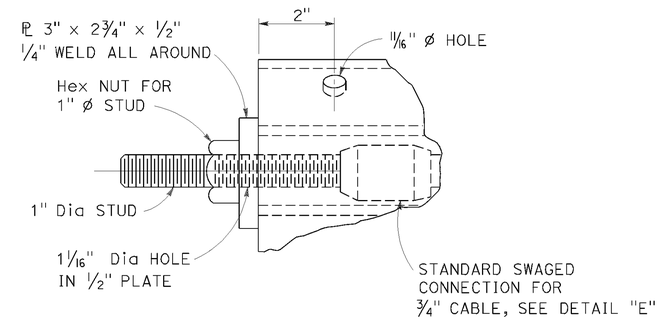

DETAIL "D"

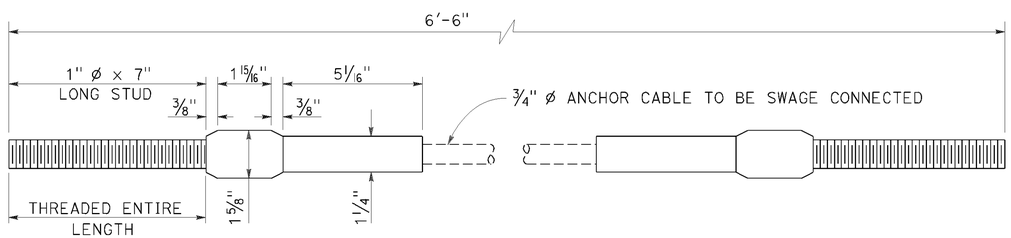

ANCHOR CABLE WITH SWAGED FITTING AND STUD

DETAIL "E"

STATE OF CALIFORNIA
DEPARTMENT OF TRANSPORTATION

METAL RAILING ANCHOR CABLE AND ANCHOR PLATE DETAILS

NO SCALE

RSP A77S3 DATED NOVEMBER 15, 2013 SUPERSEDES RSP A77S3 DATED JULY 19, 2013 THAT SUPPLEMENTS THE STANDARD PLANS BOOK DATED 2010.

REVISED STANDARD PLAN RSP A77S3

2010 REVISED STANDARD PLAN RSP A77S3

P:\PROJ\01\0B400\drafting\sheets\0112000124va003.dgn

10-4-13

Dist	COUNTY	ROUTE	POST MILES TOTAL PROJECT	SHEET No.	TOTAL SHEETS
01	Hum	101	R15.0, 29.4	37	47

Randell D. Hiatt
REGISTERED CIVIL ENGINEER

November 15, 2013
PLANS APPROVAL DATE

REGISTERED PROFESSIONAL ENGINEER
Randell D. Hiatt
No. C50200
Exp. 6-30-15
CIVIL
STATE OF CALIFORNIA

THE STATE OF CALIFORNIA OR ITS OFFICERS OR AGENTS SHALL NOT BE RESPONSIBLE FOR THE ACCURACY OR COMPLETENESS OF SCANNED COPIES OF THIS PLAN SHEET.

TO ACCOMPANY PLANS DATED 01-30-15

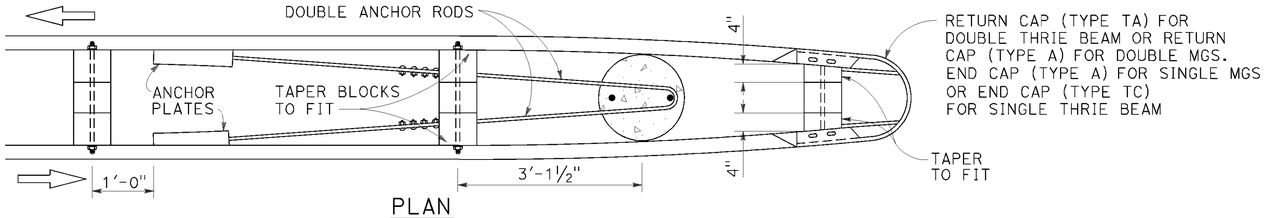

PLAN
See Note 4

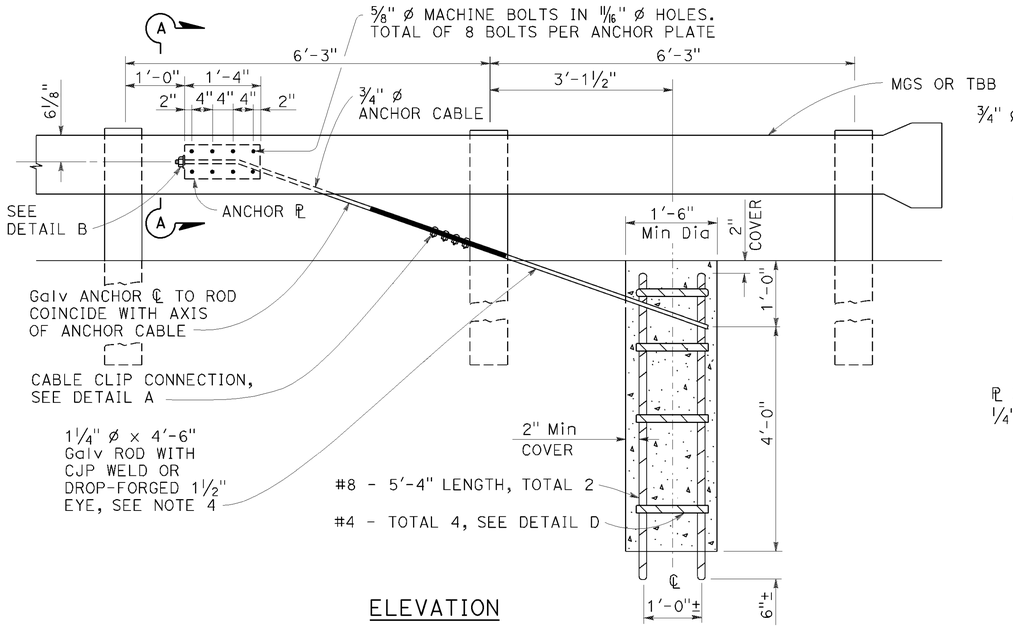

ELEVATION
END ANCHOR ASSEMBLY
(TYPE CA)
(Wood post, MGS shown, details similar for Thrie Beam Barrier.)

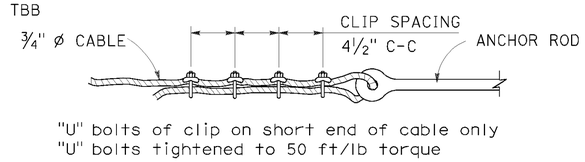

DETAIL A
CABLE CLIP CONNECTION

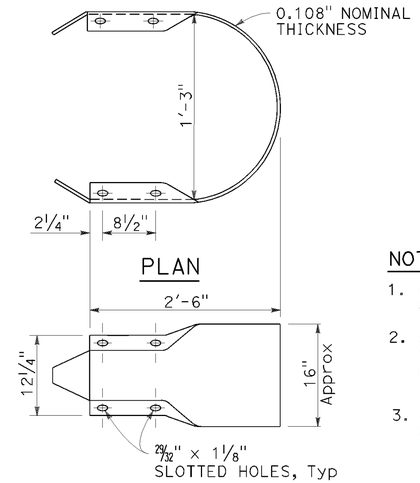

PLAN
ELEVATION
RETURN CAP
(TYPE A)

NOTES:

1. For typical use of this type of end anchor, see Revised Standard Plan RSP A78E2.
2. Anchor cable to be parallel to railing for straight runs of rail. Anchor cable may have angle point at anchor plate if railing is curved.
3. Anchor rod hooks to be in contact with anchor reinforcement when concrete is placed. Wire ties may be used to position anchor rods.
4. Single sided railing installations require only one anchor plate, anchor rod and anchor cable. Single sided railing will not have a rail element or blockouts on backside of line posts as shown in the plan view.

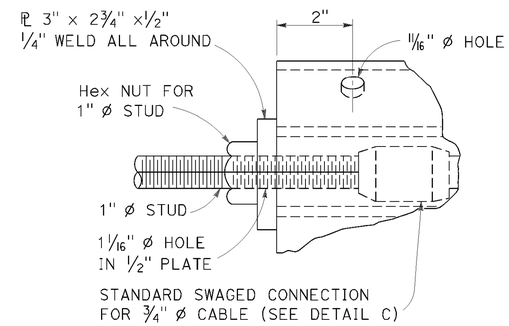

DETAIL B

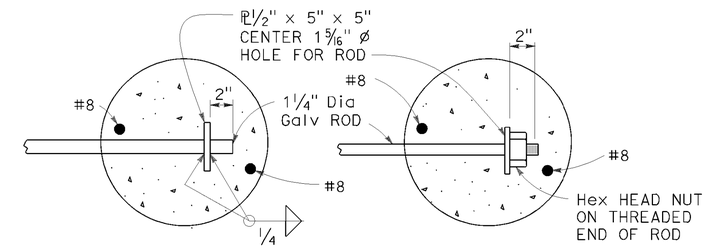

OPTIONAL ENDS ON SINGLE ANCHOR ROD
(Not to be used for double anchors)

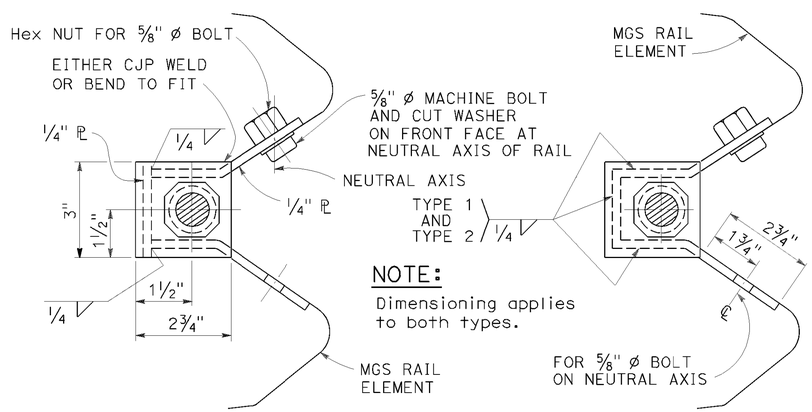

SECTION A-A
(Alternative Type 1)

SECTION A-A
(Alternative Type 2)

ANCHOR PLATE DETAILS

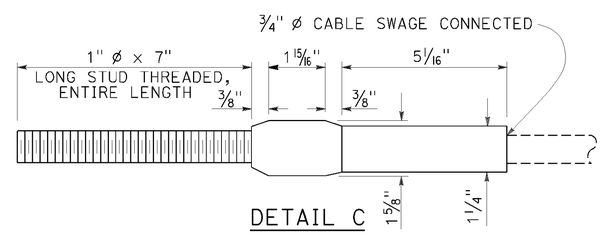

DETAIL C

ANCHOR CABLE WITH
SWAGED FITTING AND STUD

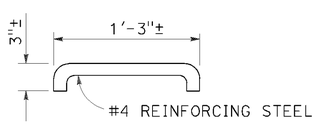

DETAIL D

NOTE:
Use two 1¼" ø Galv rods with hook and eye for double MGS anchor.

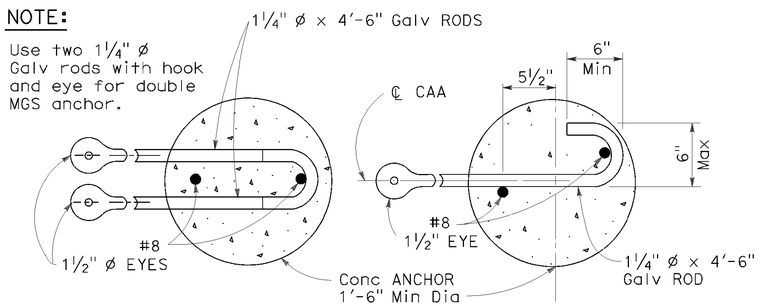

DOUBLE ANCHOR
SINGLE ANCHOR
ANCHOR RODS

STATE OF CALIFORNIA
DEPARTMENT OF TRANSPORTATION

METAL RAILING END ANCHOR ASSEMBLY (TYPE CA)

NO SCALE

RSP A77T1 DATED NOVEMBER 15, 2013 SUPERSEDES RSP A77T1 DATED JULY 19, 2013 THAT SUPPLEMENTS THE STANDARD PLANS BOOK DATED 2010.

REVISED STANDARD PLAN RSP A77T1

2010 REVISED STANDARD PLAN RSP A77T1

P:\PROJ\01\0B400\drafting\sheets\0112000124va004.dgn

10-22-13

Dist	COUNTY	ROUTE	POST MILES TOTAL PROJECT	SHEET No.	TOTAL SHEETS
01	Hum	101	R15.0, 29.4	38	47

REGISTERED CIVIL ENGINEER

July 19, 2013
PLANS APPROVAL DATE

REGISTERED PROFESSIONAL ENGINEER
Michael Janzen
No. 44788
Exp. 03-31-14
CIVIL
STATE OF CALIFORNIA

THE STATE OF CALIFORNIA OR ITS OFFICERS OR AGENTS SHALL NOT BE RESPONSIBLE FOR THE ACCURACY OR COMPLETENESS OF SCANNED COPIES OF THIS PLAN SHEET.

TO ACCOMPANY PLANS DATED 01-30-15

2010 REVISED STANDARD PLAN RSP A87B

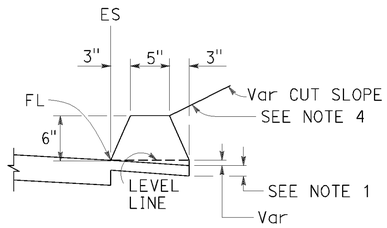

TYPE A
See Note 3

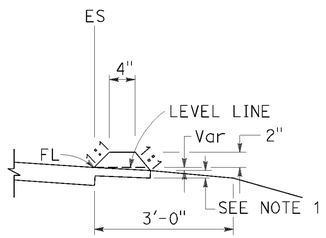

TYPE C

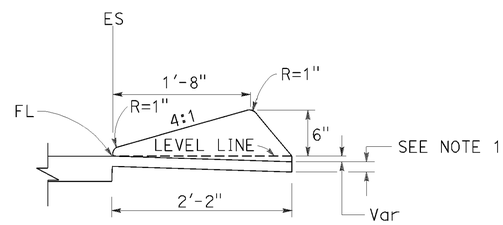

TYPE D

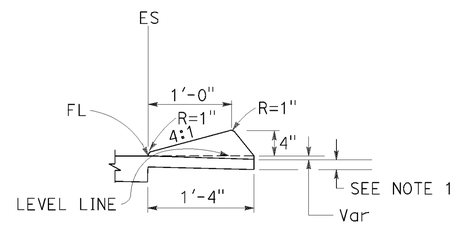

TYPE E

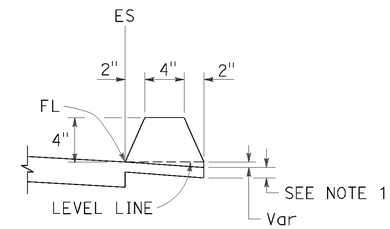

TYPE F
See Note 5

DIKES

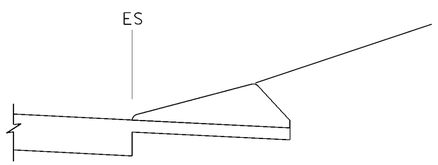

CASE C-1
Cut Slope

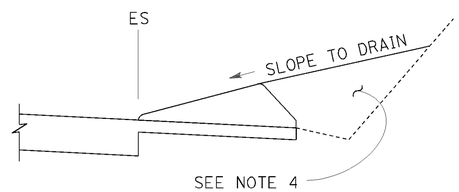

CASE C-2
Cut Slope

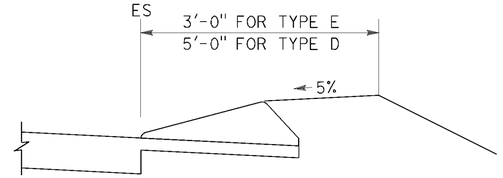

CASE F

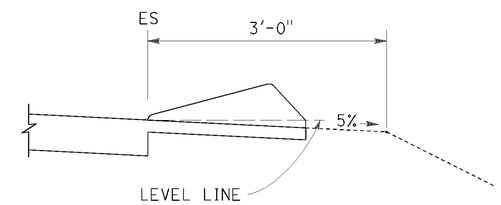

CASE R
See Note 2

TYPE D AND E BACKFILL DETAILS

NOTES:

1. For HMA shoulders only, extend top layer of HMA placed on the shoulder under dike with no joint at the ES. For projects with OGFC shoulders, do not extend OGFC under dike. See project plans for modified dike detail.
2. Case R applies to retrofit only projects where restrictive conditions do not provide enough width for Case F backfill.
3. Type A dike only to be used where restrictive slope conditions do not provide enough width to use Type D or Type E dike.
4. Fill and compact with excavated material to top of dike.
5. Use Type F dike, where dike is required with guard railing installations. See Revised Standard Plan RSP A77N4 for dike positioning details.

DIKE QUANTITIES

TYPE	CUBIC YARDS PER LINEAR FOOT
A	0.0135
C	0.0038
D	0.0293
E	0.0130
F	0.0066

Quantities based on 5% cross slope.

STATE OF CALIFORNIA
DEPARTMENT OF TRANSPORTATION

HOT MIX ASPHALT DIKES

NO SCALE

RSP A87B DATED JULY 19, 2013 SUPERSEDES STANDARD PLAN A87B
DATED MAY 20, 2011 - PAGE 120 OF THE STANDARD PLANS BOOK DATED 2010.

REVISED STANDARD PLAN RSP A87B

P:\PROJ\01\0B400\drafting\sheets\0112000124va005.dgn

6-27-13

Dist	COUNTY	ROUTE	POST MILES TOTAL PROJECT	SHEET No.	TOTAL SHEETS
01	Hum	101	R15.0, 29.4	39	47

Gregory A. Bolzer
LICENSED LANDSCAPE ARCHITECT

July 19, 2013
PLANS APPROVAL DATE

THE STATE OF CALIFORNIA OR ITS OFFICERS OR AGENTS SHALL NOT BE RESPONSIBLE FOR THE ACCURACY OR COMPLETENESS OF SCANNED COPIES OF THIS PLAN SHEET.

LICENSED LANDSCAPE ARCHITECT
Gregory A. Bolzer 2516
Gregory A. Bolzer
Expiration Date
2-28-15
Renewal Date
7-19-13
Date
STATE OF CALIFORNIA

TO ACCOMPANY PLANS DATED 01-30-15

2010 REVISED STANDARD PLAN RSP H1

A

AB	AGGREGATE BASE
ABS	ACRYLONITRILE-BUTADIENE-STYRENE
AC	ASPHALT CONCRETE
ACC	ARMOR-CLAD CONDUCTORS
Adj	ADJACENT/ADJUSTABLE
AIC	AUXILIARY IRRIGATION CONTROLLER
Alt	ALTERNATIVE
AMEND	AMENDMENT
ARV	AIR RELEASE VALVE
AUTO	AUTOMATIC
AUX	AUXILIARY
AVB	ATMOSPHERIC VACUUM BREAKER

B

B&B	BALLED AND BURLAPPED
B/B	BRASS/BRONZE
B/B/PL	BRASS/BRONZE/PLASTIC
B/PL	BRASS/PLASTIC
BFM	BONDED FIBER MATRIX
Bit Ctd	BITUMINOUS COATED
BP	BOOSTER PUMP
BPA	BACKFLOW PREVENTER ASSEMBLY
BPE	BACKFLOW PREVENTER ENCLOSURE
BV	BALL VALVE

C

C	CONDUIT
CAP	CORRUGATED ALUMINUM PIPE
CARV	COMBINATION AIR RELEASE VALVE
CB	COUPLING BAND
CCA	CAM COUPLER ASSEMBLY
CEC	CONTROLLER ENCLOSURE CABINET
CHDPE	CORRUGATED HIGH DENSITY POLYETHYLENE
CL	CHAIN LINK
CNC	CONTROL AND NEUTRAL CONDUCTORS
Conc	CONCRETE
CP	COPPER PIPE
CS	COMPOST SOCK
CSP	CORRUGATED STEEL PIPE
CST	CENTER STRIP
CV	CHECK VALVE

D

Dia	DIAMETER
DIP	DUCTILE IRON PIPE
DIT	DRIP IRRIGATION TUBING
DG	DECOMPOSED GRANITE
DN	DIAMETER NOMINAL
DVA	DRIP VALVE ASSEMBLY

E

EC	EROSION CONTROL
ECTC	EROSION CONTROL TECHNOLOGY COUNCIL
Elect	ELECTRIC/ELECTRICAL
Elev	ELEVATION
ELL	ELBOW
ENCL	ENCLOSURE
EP	EDGE OF PAVEMENT
ES	EDGE OF SHOULDER
EST	END STRIP
ESTB	ESTABLISHMENT
ETW	EDGE OF TRAVELED WAY

F

F	FULL CIRCLE
F/P	FULL/PART CIRCLE
FCV	FLOW CONTROL VALVE
FERT	FERTILIZER
FG	FINISHED GRADE
FH	FLEXIBLE HOSE
FIPT	FEMALE IRON PIPE THREAD
FIS	FERTILIZER INJECTOR SYSTEM
FL	FLOW LINE
FR	FIBER ROLL
FS	FLOW SENSOR
FSC	FLOW SENSOR CABLE
FV	FLUSH VALVE

G

Galv	GALVANIZED
GARV	GARDEN VALVE
GARVA	GARDEN VALVE ASSEMBLY
GM	GRAVEL MULCH
GPH	GALLONS PER HOUR
GPM	GALLONS PER MINUTE
GSP	GALVANIZED STEEL PIPE
GV	GATE VALVE

H

H	HALF CIRCLE
HDPE	HIGH DENSITY POLYETHYLENE
HP	HORSEPOWER/HINGE POINT
HPL	HIGH PRESSURE LINE
Hwy	HIGHWAY

I

IC	IRRIGATION CONTROLLER
ICC	IRRIGATION CONTROLLER(S) IN CONTROLLER ENCLOSURE CABINET
ID	INSIDE DIAMETER
IFS	IRRIGATION FILTRATION SYSTEM
IPS	IRON PIPE SIZE
IPT	IRON PIPE THREAD
Irr	IRRIGATION

L

L	LENGTH

M

Max	MAXIMUM
MBGR	METAL BEAM GUARD RAILING
MCV	MANUAL CONTROL VALVE
MIC	MASTER IRRIGATION CONTROLLER
Min	MINIMUM
MIPT	MALE IRON PIPE THREAD
Misc	MISCELLANEOUS
Mtl	MATERIAL
MVP	MAINTENANCE VEHICLE PULLOUT

N

NCN	NO COMMON NAME
NL	NOZZLE LINE
No.	NUMBER
NPT	NATIONAL PIPE THREAD

O

O/C	ON CENTER
OD	OUTSIDE DIAMETER
OL	OVERLAP

P

P	PART CIRCLE
PB	PULL BOX
PCC	PORTLAND CEMENT CONCRETE
PE	POLYETHYLENE
Pkt	PACKET
PL	PLASTIC
PLS	PURE LIVE SEED
PLT	PLANT/PLANTING
PLT ESTB	PLANT ESTABLISHMENT
PM	POST MILE
PR	PRESSURE RATED
PRLV	PRESSURE RELIEF VALVE
PRV	PRESSURE REGULATING VALVE
PVC	POLYVINYL CHLORIDE
Pvmt	PAVEMENT

Q

Q	QUARTER CIRCLE
QCV	QUICK COUPLING VALVE

R

R	RADIUS
RCP	REINFORCED CONCRETE PIPE
RCV	REMOTE CONTROL VALVE
RCVM	REMOTE CONTROL VALVE (MASTER)
RCVMF	REMOTE CONTROL VALVE (MASTER) W/FLOW SENSOR
RCVP	REMOTE CONTROL VALVE W/PRESSURE REGULATOR
RCW	RECYCLED WATER
RECP	ROLLED EROSION CONTROL PRODUCT
REQ	REQUIRED
RICS	REMOTE IRRIGATION CONTROL SYSTEM
R/W	RIGHT OF WAY

S

S	SLIP
SCH	SCHEDULE
SF	STATE-FURNISHED
Shld	SHOULDER
Sq	SQUARE
SST	SIDE STRIP
Sta	STATION
Std	STANDARD
SW	SIDEWALK/SOUND WALL

T

T	THIRD CIRCLE/THREAD
TLS	TRUCK LOADING STANDPIPE
TQ	THREE QUARTER CIRCLE
TRM	TURF REINFORCEMENT MAT
TT	TWO-THIRDS CIRCLE
TWSA	TREE WELL SPRINKLER ASSEMBLY
Typ	TYPICAL

U

UG	UNDERGROUND

W

W	WIDTH
W/	WITH
WM	WATER METER
WS	WYE STRAINER
WSA	WYE STRAINER ASSEMBLY
WSP	WELDED STEEL PIPE
WWM	WELDED WIRE MESH

NOTE:

For additional abbreviations, see Standard Plans A10A and A10B.

STATE OF CALIFORNIA
DEPARTMENT OF TRANSPORTATION

LANDSCAPE AND EROSION CONTROL ABBREVIATIONS

NO SCALE

RSP H1 DATED JULY 19, 2013 SUPERSEDES STANDARD PLAN H1 DATED MAY 20, 2011 - PAGE 218 OF THE STANDARD PLANS BOOK DATED 2010.

REVISED STANDARD PLAN RSP H1

P:\PROJ\01\0B400\drafting\sheets\0112000124va006.dgn

6-28-13

Dist	COUNTY	ROUTE	POST MILES TOTAL PROJECT	SHEET No.	TOTAL SHEETS
01	Hum	101	R15.0, 29.4	40	47

Gregory A. Balzer
LICENSED LANDSCAPE ARCHITECT

November 15, 2013
PLANS APPROVAL DATE

LICENSED LANDSCAPE ARCHITECT
Gregory A. Balzer 2516
Expiration Date
2-28-15
Renewal Date
11-15-13
Date
STATE OF CALIFORNIA

THE STATE OF CALIFORNIA OR ITS OFFICERS OR AGENTS SHALL NOT BE RESPONSIBLE FOR THE ACCURACY OR COMPLETENESS OF SCANNED COPIES OF THIS PLAN SHEET.

TO ACCOMPANY PLANS DATED 01-30-15

2010 REVISED STANDARD PLAN RSP H2

EXISTING	NEW	ITEM DESCRIPTION
		WATER METER (WM)
		BACKFLOW PREVENTER ASSEMBLY (BPA)
		BACKFLOW PREVENTER ENCLOSURE (BPE)
		BOOSTER PUMP (BP)
		TRUCK LOADING STANDPIPE (TLS)
	FS	FLOW SENSOR (FS)
		MASTER IRRIGATION CONTROLLER (MIC)
		AUXILIARY IRRIGATION CONTROLLER (AIC)
		IRRIGATION CONTROLLER (IC) IRRIGATION CONTROLLER (IC) (BATTERY) IRRIGATION CONTROLLER (IC) (SOLAR) IRRIGATION CONTROLLER (IC) (TWO WIRE) IRRIGATION CONTROLLER(S) IN CONTROLLER ENCLOSURE CABINET (ICC)
acc	ACC	ARMOR-CLAD CONDUCTORS (ACC)
cnc	CNC	CONTROL AND NEUTRAL CONDUCTORS (CNC)
		IRRIGATION CONDUIT
		EXTEND IRRIGATION CONDUIT
dip	DIP	DUCTILE IRON PIPE (SUPPLY LINE) (MAIN) (DIP)
		GALVANIZED STEEL PIPE (SUPPLY LINE) (MAIN) (GSP)
		GALVANIZED STEEL PIPE (SUPPLY LINE) (LATERAL) (GSP)
		PLASTIC PIPE (SUPPLY LINE) (MAIN)
		PLASTIC PIPE (SUPPLY LINE) (LATERAL)
cp	CP	COPPER PIPE (SUPPLY LINE)
dit	DIT	DRIP IRRIGATION TUBING
		REMOTE CONTROL VALVE (RCV) REMOTE CONTROL VALVE (MASTER) (RCVM) REMOTE CONTROL VALVE (MASTER) W/FLOW METER (RCVMF)
P	P	REMOTE CONTROL VALVE W/PRESSURE REGULATOR (RCVP)
		EXISTING MANUAL CONTROL VALVE (MCV)
	V	DRIP VALVE ASSEMBLY (DVA)
	Y	WYE STRAINER ASSEMBLY (WSA)

EXISTING	NEW	ITEM DESCRIPTION
		GATE VALVE (GV)
		BALL VALVE (BV)
		QUICK COUPLING VALVE (QCV)
		CAM COUPLER ASSEMBLY (CCA)
		GARDEN VALVE ASSEMBLY (GARVA)
		PRESSURE REGULATING VALVE (PRV)
		PRESSURE RELIEF VALVE (PRLV)
		FLOW CONTROL VALVE (FCV)
		COMBINATION AIR RELEASE VALVE (CARV)
		CHECK VALVE (CV)
		FLUSH VALVE (FV)
		EXISTING NOZZLE LINE W/TURNING UNION
		EXISTING IRRIGATION SYSTEM
		EXISTING IRRIGATION SYSTEM TO BE REMOVED
		CHAIN LINK GATE
		QUICK COUPLING VALVE W/SPRINKLER PROTECTOR
3	3	SPRINKLER W/SPRINKLER PROTECTOR
	C	CONNECT TO EXISTING SYSTEM
		CAP
		CAP EXISTING
	\\\FR\\\	FIBER ROLL
	\\\CS\\\	COMPOST SOCK

- RCV SIZE
- IRRIGATION CONTROLLER
- CONTROLLER STATION
- VALVE IN PARALLEL (IF APPLICABLE)
- GPM
- QUANTITY OF SPRINKLERS (WHEN SHOWN)

* 2½"-A-2b-40-60

VALVE CODE

* VALVE CODES FOR EXISTING VALVES ARE SHOWN IN A DASHED ENCLOSURE.

STATE OF CALIFORNIA
DEPARTMENT OF TRANSPORTATION

LANDSCAPE AND EROSION CONTROL SYMBOLS

NO SCALE

RSP H2 DATED NOVEMBER 15, 2013 SUPERSEDES RSP H2 DATED JULY 19, 2013 AND STANDARD PLAN H2 DATED MAY 20, 2011 - PAGE 219 OF THE STANDARD PLANS BOOK DATED 2010.

REVISED STANDARD PLAN RSP H2

P:\PROJ\01\0B400\drafting\sheets\0112000124vd007.dgn

10-9-13

DIST	COUNTY	ROUTE	POST MILES TOTAL PROJECT	SHEET No.	TOTAL SHEETS
01	Hum	101	R15.0, 29.4	41	47

REGISTERED CIVIL ENGINEER

November 15, 2013
PLANS APPROVAL DATE

REGISTERED PROFESSIONAL ENGINEER Cornelis M. Hakim No. C55610 Exp. 12-31-14 CIVIL STATE OF CALIFORNIA

THE STATE OF CALIFORNIA OR ITS OFFICERS OR AGENTS SHALL NOT BE RESPONSIBLE FOR THE ACCURACY OR COMPLETENESS OF SCANNED COPIES OF THIS PLAN SHEET.

TO ACCOMPANY PLANS DATED 01-30-15

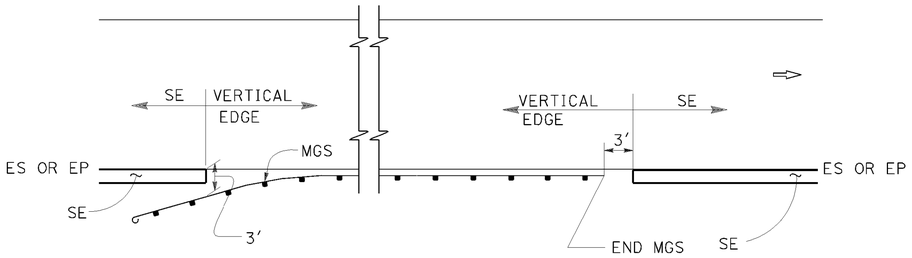

MGS

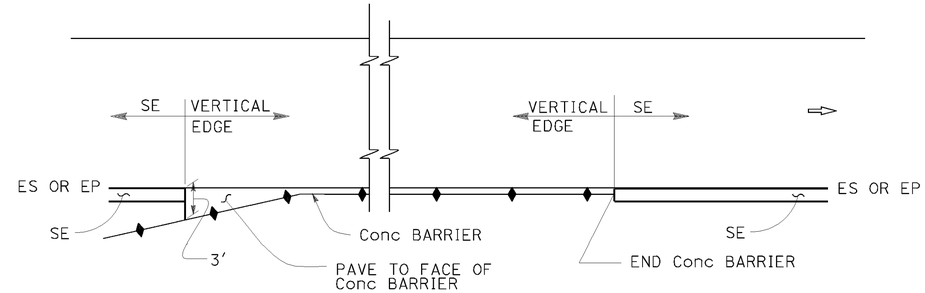

CONCRETE BARRIER

ABBREVIATIONS:

SE SAFETY EDGE

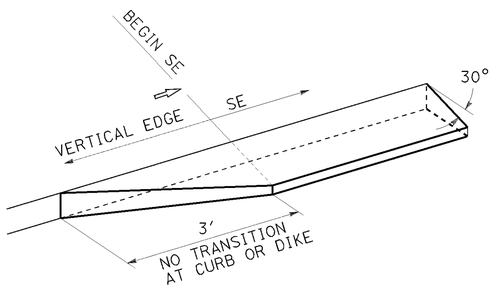

TRANSITION DETAIL FOR CONCRETE ONLY

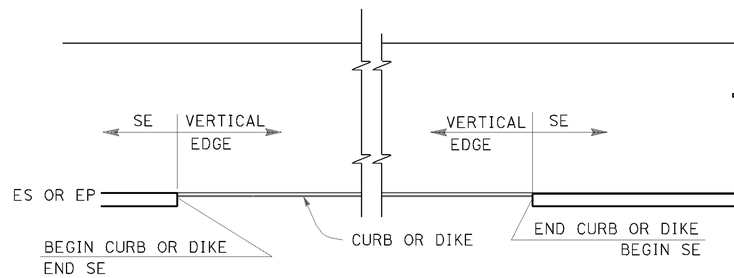

CURB OR DIKE

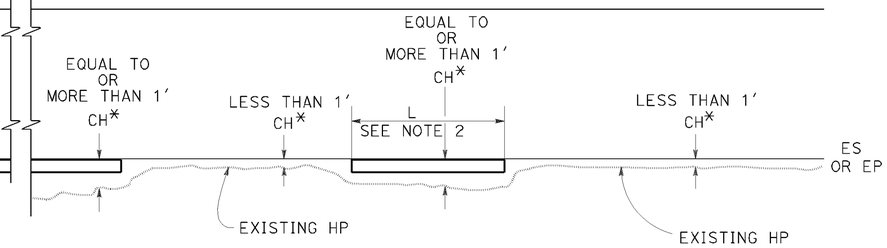

NARROW SIDE SLOPE

* CH = Distance from ES or EP to existing HP.

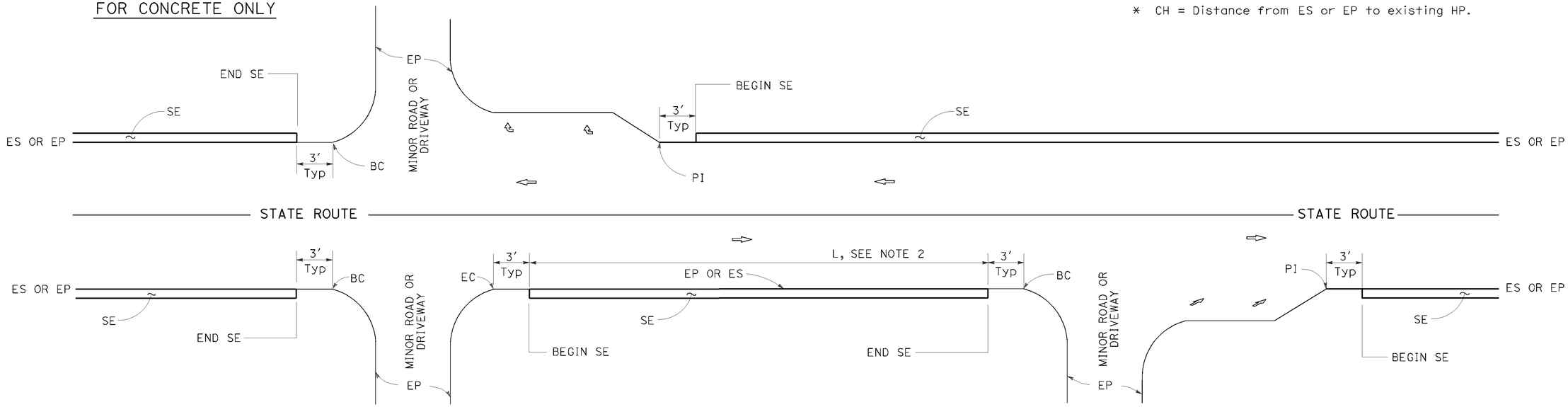

INTERSECTION

DRIVEWAY AND INTERSECTION

MINOR ROADWAY OR DRIVEWAY

NOTES:

1. For details not shown, see Revised Standard Plans RSP P75 and RSP P76.
2. Safety edge is optional when L is less than 30′.

STATE OF CALIFORNIA
DEPARTMENT OF TRANSPORTATION

PAVEMENT EDGE TREATMENTS

NO SCALE

RSP P74 DATED NOVEMBER 15, 2013 SUPERSEDES RSP P74 DATED JANUARY 20, 2012 THAT SUPPLEMENTS THE STANDARD PLANS BOOK DATED 2010.

REVISED STANDARD PLAN RSP P74

2010 REVISED STANDARD PLAN RSP P74

P:\PROJ\01\0B400\drafting\sheets\0112000124va008.dgn

10-11-13

DIST	COUNTY	ROUTE	POST MILES TOTAL PROJECT	SHEET No.	TOTAL SHEETS
01	Hum	101	R15.0, 29.4	42	47

REGISTERED CIVIL ENGINEER

November 15, 2013
PLANS APPROVAL DATE

REGISTERED PROFESSIONAL ENGINEER Cornelis M. Hakim No. C55610 Exp. 12-31-14 CIVIL STATE OF CALIFORNIA

THE STATE OF CALIFORNIA OR ITS OFFICERS OR AGENTS SHALL NOT BE RESPONSIBLE FOR THE ACCURACY OR COMPLETENESS OF SCANNED COPIES OF THIS PLAN SHEET.

TO ACCOMPANY PLANS DATED 01-30-15

2010 REVISED STANDARD PLAN RSP P75

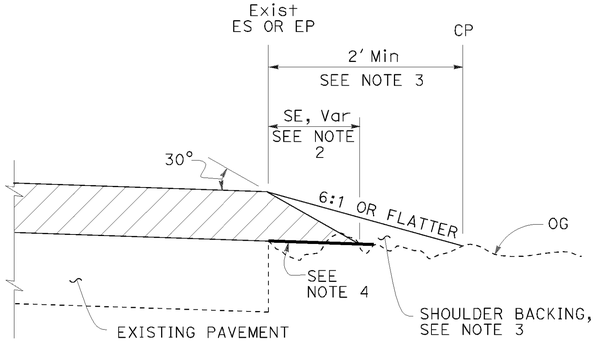

CASE A
Safety Edge

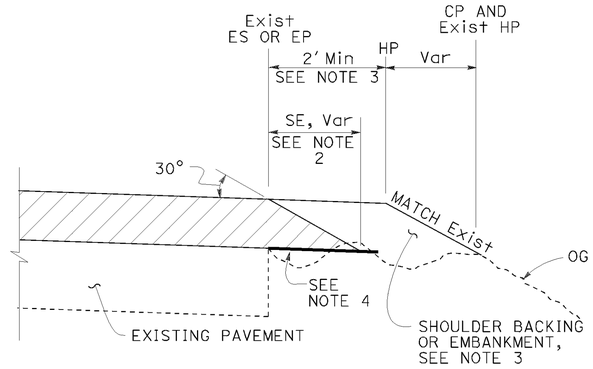

CASE B
Safety Edge

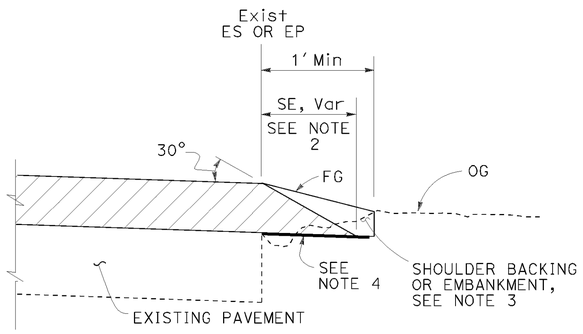

CASE C
Safety Edge

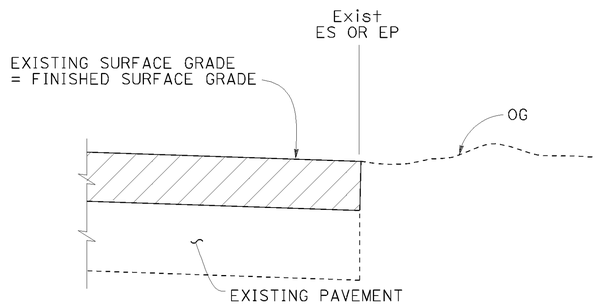

CASE D
Vertical Edge

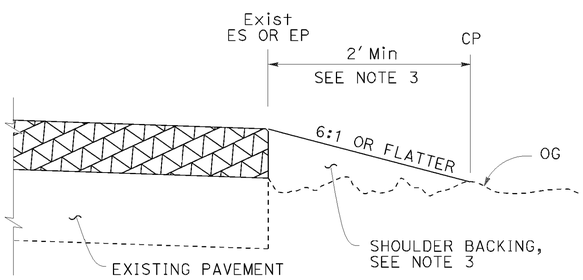

CASE E
Vertical Edge

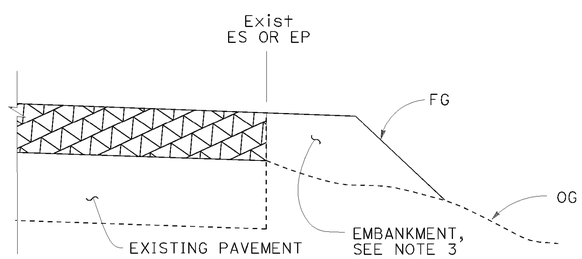

CASE F
Vertical Edge
* See Table A and Revised Std Plan RSP P74

LEGEND:

- HMA OVERLAY
- HMA OR CONCRETE OVERLAY
- CONCRETE OVERLAY

ABBREVIATIONS:

SE SAFETY EDGE
TT TOTAL THICKNESS OF SE

TABLE A
EDGE TREATMENT FOR VARIOUS OVERLAY THICKNESS AND CONDITIONS

	OVERLAY THICKNESS	
FIELD CONDITION	LESS THAN 0.15'	0.15' OR MORE
Exist SLOPE 6:1 OR FLATTER	CASE E	CASE A
Exist SLOPE 3:1 TO 6:1	CASE E	CASE B
Exist SLOPE STEEPER THAN 3:1	CASE F	CASE F
CUT SECTION (REPLACE, COLD PLANE, MILL PAVEMENT)	CASE D	CASE C

ADDITIONAL HMA OR CONCRETE QUANTITIES FOR SE/SIDE/MILE

TYPICAL CROSS SECTION	TT	TOTAL ADDITIONAL MATERIAL FOR SE/SIDE/MILE		
		HMA (TON)	CONCRETE (CY)*	CONCRETE (CY)**
TT	0.15'	NA	NA	NA
	0.20'	13.7	NA	NA
	0.30'	30.9	NA	NA
	0.40'	54.9	NA	NA
	0.45'	69.4	NA	NA
TT 0.43'	0.50'	84.2	NA	NA
	0.60'	113.9	NA	NA
	0.70'	143.6	70.9	94.2
	0.80'	173.3	85.6	112.2
	0.90'	203.0	100.3	130.2
	1.00'	232.7	114.9	148.2
	1.10'	262.4	129.6	166.2
	1.20'	292.1	144.3	184.2

* For Detail "A"
** For Optional Detail "A"

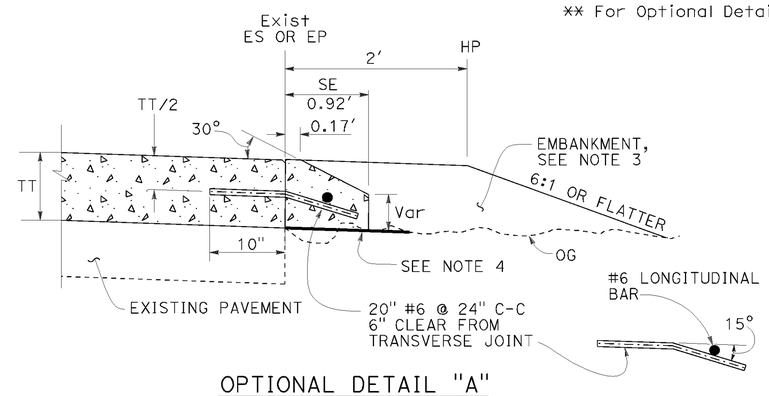

OPTIONAL DETAIL "A"
For concrete overlay
See Note 5

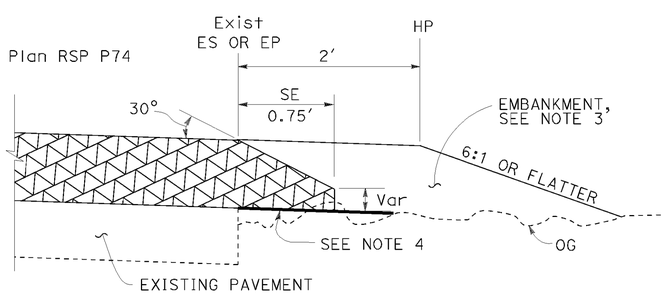

DETAIL "A"
For HMA overlay thickness more than 0.43' or concrete overlay

NOTES:

1. For limits of safety edge and vertical edge treatments, see Revised Standard Plan RSP P74.
2. Details shown for HMA overlay thickness less than 0.43'. See Detail "A" for HMA overlay thickness more than 0.43' or concrete overlay.
3. For locations and limits of shoulder backing or embankment see project plans.
4. Grade existing ground to place safety edge. 1' minimum width
5. Safety edge transverse joint must match overlay transverse joint. End of #6 longitudinal bar must be 2" ±½" clear from transverse joint.
6. Safety edge is not needed in the area of MGS, barrier, right turn lane and acceleration lane. See Revised Standard Plan RSP P74.

STATE OF CALIFORNIA
DEPARTMENT OF TRANSPORTATION

PAVEMENT EDGE TREATMENTS-OVERLAYS

NO SCALE

RSP P75 DATED NOVEMBER 15, 2013 SUPERSEDES RSP P75 DATED JANUARY 20, 2012 THAT SUPPLEMENTS THE STANDARD PLANS BOOK DATED 2010.

REVISED STANDARD PLAN RSP P75

P:\PROJ\01\0B400\drafting\sheets\0112000124va009.dgn

10-4-13

Dist	COUNTY	ROUTE	POST MILES TOTAL PROJECT	SHEET No.	TOTAL SHEETS
01	Hum	101	R15.0, 29.4	43	47

REGISTERED CIVIL ENGINEER

July 19, 2013
PLANS APPROVAL DATE

REGISTERED PROFESSIONAL ENGINEER
Gurinderpal Bhullar
No. C48815
Exp. 9-30-14
CIVIL
STATE OF CALIFORNIA

THE STATE OF CALIFORNIA OR ITS OFFICERS OR AGENTS SHALL NOT BE RESPONSIBLE FOR THE ACCURACY OR COMPLETENESS OF SCANNED COPIES OF THIS PLAN SHEET.

TO ACCOMPANY PLANS DATED 01-30-15

2010 REVISED STANDARD PLAN RSP T9

TABLE 1

TAPER LENGTH CRITERIA AND CHANNELIZING DEVICE SPACING

SPEED (S)	MINIMUM TAPER LENGTH * FOR WIDTH OF OFFSET 12 FEET (W)				MAXIMUM CHANNELIZING DEVICE SPACING		
					X	Y	Z **
	TANGENT 2L	MERGING L	SHIFTING L/2	SHOULDER L/3	TAPER	TANGENT	CONFLICT
mph	ft	ft	ft	ft	ft	ft	ft
20	160	80	40	27	20	40	10
25	250	125	63	42	25	50	12
30	360	180	90	60	30	60	15
35	490	245	123	82	35	70	17
40	640	320	160	107	40	80	20
45	1080	540	270	180	45	90	22
50	1200	600	300	200	50	100	25
55	1320	660	330	220	55	110	27
60	1440	720	360	240	60	120	30
65	1560	780	390	260	65	130	32
70	1680	840	420	280	70	140	35

* - For other offsets, use the following merging taper length formula for L:
For speed of 40 mph or less, $L = WS^2/60$
For speed of 45 mph or more, $L = WS$

Where: L = Taper length in feet
W = Width of offset in feet
S = Posted speed limit, off-peak 85th-percentile speed prior to work starting, or the anticipated operating speed in mph

** - Use for taper and tangent sections where there are no pavement markings or where there is a conflict between existing pavement markings and channelizers (CA).

TABLE 2

LONGITUDINAL BUFFER SPACE AND FLAGGER STATION SPACING

SPEED *	Min D **	DOWNGRADE Min D ***		
		-3%	-6%	-9%
mph	ft	ft	ft	ft
20	115	116	120	126
25	155	158	165	173
30	200	205	215	227
35	250	257	271	287
40	305	315	333	354
45	360	378	400	427
50	425	446	474	507
55	495	520	553	593
60	570	598	638	686
65	645	682	728	785
70	730	771	825	891

* - Speed is posted speed limit, off-peak 85th-percentile speed prior to work starting, or the anticipated operating speed in mph

** - Longitudinal buffer space or flagger station spacing

*** - Use on sustained downgrade steeper than -3 percent and longer than 1 mile.

TABLE 3

ADVANCE WARNING SIGN SPACING

ROAD TYPE	DISTANCE BETWEEN SIGNS *		
	A	B	C
	ft	ft	ft
URBAN - 25 mph OR LESS	100	100	100
URBAN - MORE THAN 25 mph TO 40 mph	250	250	250
URBAN - MORE THAN 40 mph	350	350	350
RURAL	500	500	500
EXPRESSWAY / FREEWAY	1000	1500	2640

* - The distances are approximate, are intended for guidance purposes only, and should be applied with engineering judgment. These distances should be adjusted by the Engineer for field conditions, if necessary, by increasing or decreasing the recommmended distances.

STATE OF CALIFORNIA
DEPARTMENT OF TRANSPORTATION

TRAFFIC CONTROL SYSTEM TABLES FOR LANE AND RAMP CLOSURES

NO SCALE

RSP T9 DATED JULY 19, 2013 SUPERSEDES RSP T9 DATED APRIL 19, 2013 THAT SUPPLEMENTS THE STANDARD PLANS BOOK DATED 2010.

REVISED STANDARD PLAN RSP T9

P:\PROJ\01\0B400\drafting\sheets\0112000124va010.dgn

4-30-13

TO ACCOMPANY PLANS DATED 01-30-15

Dist	COUNTY	ROUTE	POST MILES TOTAL PROJECT	SHEET No.	TOTAL SHEETS
01	Hum	101	R15.0, 29.4	44	47

REGISTERED CIVIL ENGINEER

April 19, 2013
PLANS APPROVAL DATE

REGISTERED PROFESSIONAL ENGINEER Gurinderpal Bhullar No. C48815 Exp. 9-30-14 CIVIL STATE OF CALIFORNIA

THE STATE OF CALIFORNIA OR ITS OFFICERS OR AGENTS SHALL NOT BE RESPONSIBLE FOR THE ACCURACY OR COMPLETENESS OF SCANNED COPIES OF THIS PLAN SHEET.

NOTES:

See Revised Standard Plan RSP T9 for tables.

Use cone spacing X for taper segment, Y for tangent segment or Z for conflict situations, as approriate, per Table 1, unless X, Y, or Z cone spacing is shown on this sheet.

Unless otherwise specified in the special provisions, all temporary warning signs shall have black legend on fluorescent orange background.

California codes are designated by (CA). Otherwise, Federal (MUTCD) codes are shown.

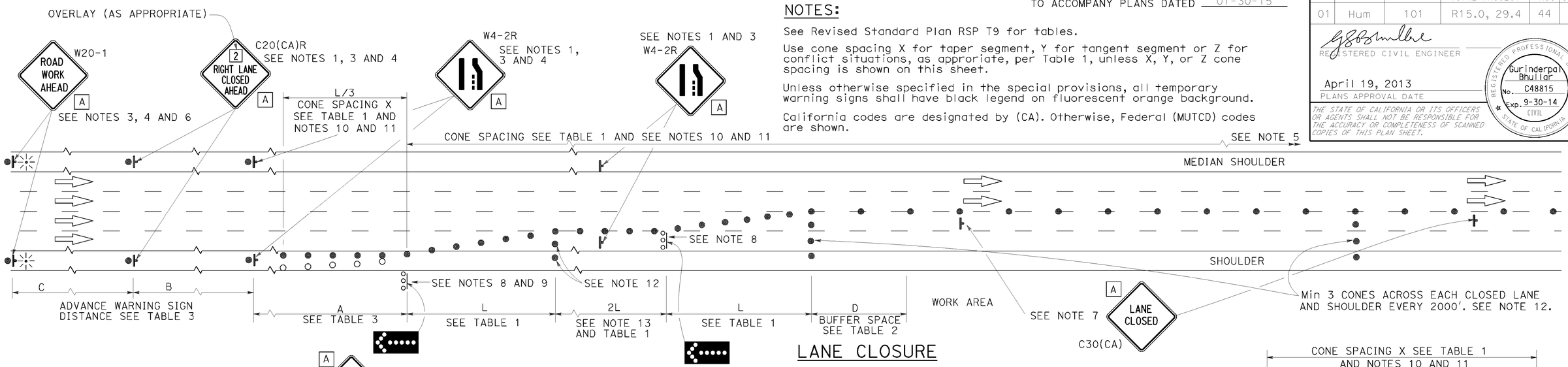

LANE CLOSURE

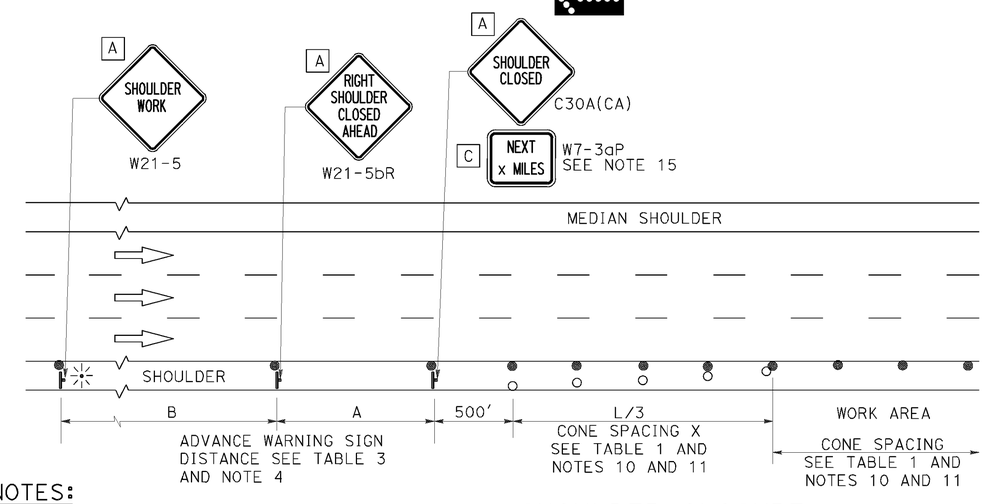

SHOULDER CLOSURE

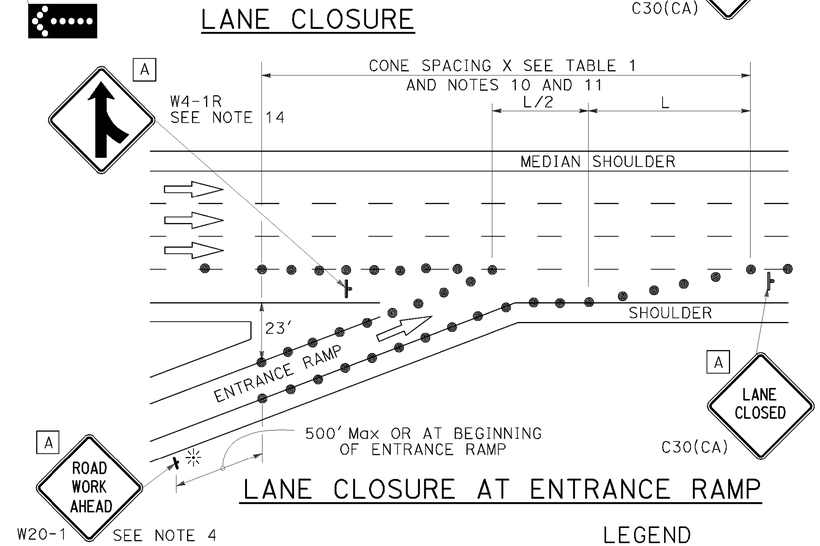

LANE CLOSURE AT ENTRANCE RAMP

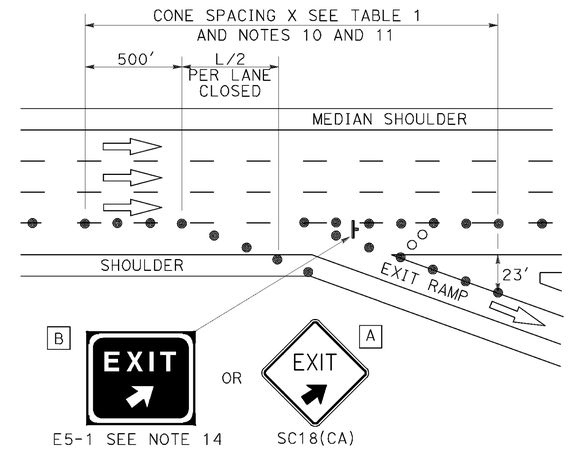

LANE CLOSURE AT EXIT RAMP

NOTES:

1. Median lane closures shall conform to the details as shown except that C20(CA)L and W4-2L signs shall be used.
2. At least one person shall be assigned to provide full time maintenance of traffic control devices for lane closures.
3. Duplicate sign installations are not required:
   a) On opposite shoulder if at least one-half of the available lanes remain open to traffic.
   b) In the median if the width of the median shoulder is less than 8' and the outside lanes are to be closed.
4. Each advance warning sign on each side of the roadway shall be equipped with at least two flags for daytime closure. Each flag shall be at least 16" x 16" in size and shall be orange or fluorescent red-orange in color. Flashing beacons shall be placed at the locations indicated for lane closure during hours of darkness.
5. A G20-2 "END ROAD WORK" sign, with minimum size of 48" x 24" as appropriate, shall be placed at the end of the lane closure unless the end of work area is obvious or ends within a larger project's limits.
6. If the W20-1 sign would follow within 2000' of a stationary W20-1 or G20-1 "ROAD WORK NEXT _____ MILES", use a C20(CA) sign for the first advance warning sign.
7. Place a C30(CA) sign every 2000' throughout length of lane closure.
8. One flashing arrow sign for each lane closed. The flashing arrow signs shall be Type I.
9. A minimum 1500' of sight distance shall be provided where possible for vehicles approaching the first flashing arrow sign. Lane closures shall not begin at top of crest vertical curve or on a horizontal curve.
10. All cones used for lane closures during the hours of darkness shall be fitted with retroreflective bands (or sleeves) as specified in the specifications.
11. Portable delineators, placed at one-half the spacing indicated for traffic cones may be used instead of cones for daytime closures only.
12. Unless otherwise specified in the special provisions, a minimum of 3 cones shall be placed transversely across each closed lane and shoulder at each location where a taper across a traffic lane ends and every 2000' as shown on the "Lane Closure" detail. Two Type II barricades may be used instead of the 3 cones. The transverse alignment of the cones or barricades on the closed shoulder may be shifted from the transverse alignment to provide access to the work.
13. Unless otherwise specified in the special provisions, the 2L tangent shown along lane lines shall be used between the L tapers required for each closed traffic lane.
14. Unless otherwise specified in the special provisions, the E5-1 or SC18(CA) and W4-1 signs shall be used as shown.
15. A W7-3aP "NEXT____ MILES" plaque must be used if theshoulder closure extends beyond the distance that can be perceived by road users.

LEGEND

- TRAFFIC CONE
- TRAFFIC CONE (OPTIONAL TAPER)
- TEMPORARY TRAFFIC CONTROL SIGN
- FLASHING ARROW SIGN (FAS)
- FAS SUPPORT OR TRAILER
- PORTABLE FLASHING BEACON

SIGN PANEL SIZE (Min)

A	48" x 48"
B	72" x 60"
C	36" x 30"

STATE OF CALIFORNIA
DEPARTMENT OF TRANSPORTATION

TRAFFIC CONTROL SYSTEM FOR LANE CLOSURE ON FREEWAYS AND EXPRESSWAYS

NO SCALE

RSP T10 DATED APRIL 19, 2013 SUPERSEDES STANDARD PLAN T10 DATED MAY 20, 2011 - PAGE 237 OF THE STANDARD PLANS BOOK DATED 2010.

REVISED STANDARD PLAN RSP T10

2010 REVISED STANDARD PLAN RSP T10

P:\PROJ\01\0B400\drafting\sheets\0112000124va011.dgn

12-18-12

TO ACCOMPANY PLANS DATED 01-30-15

Dist	COUNTY	ROUTE	POST MILES TOTAL PROJECT	SHEET No.	TOTAL SHEETS
01	Hum	101	R15.0, 29.4	45	47

REGISTERED CIVIL ENGINEER

April 19, 2013
PLANS APPROVAL DATE

REGISTERED PROFESSIONAL ENGINEER Gurinderpal Bhullar No. C48815 Exp. 9-30-14 CIVIL STATE OF CALIFORNIA

THE STATE OF CALIFORNIA OR ITS OFFICERS OR AGENTS SHALL NOT BE RESPONSIBLE FOR THE ACCURACY OR COMPLETENESS OF SCANNED COPIES OF THIS PLAN SHEET.

NOTES: See Revised Standard Plan RSP T9 for tables.

Use cone spacing X for taper segment, Y for tangent segment or Z for conflict situations, as approriate, per Table 1, unless X, Y, or Z cone spacing is shown on this sheet.

Unless otherwise specified in the special provisions, all temporary warning signs shall have black legend on fluorescent orange background.

California codes are designated by (CA). Otherwise, Federal (MUTCD) codes are shown.

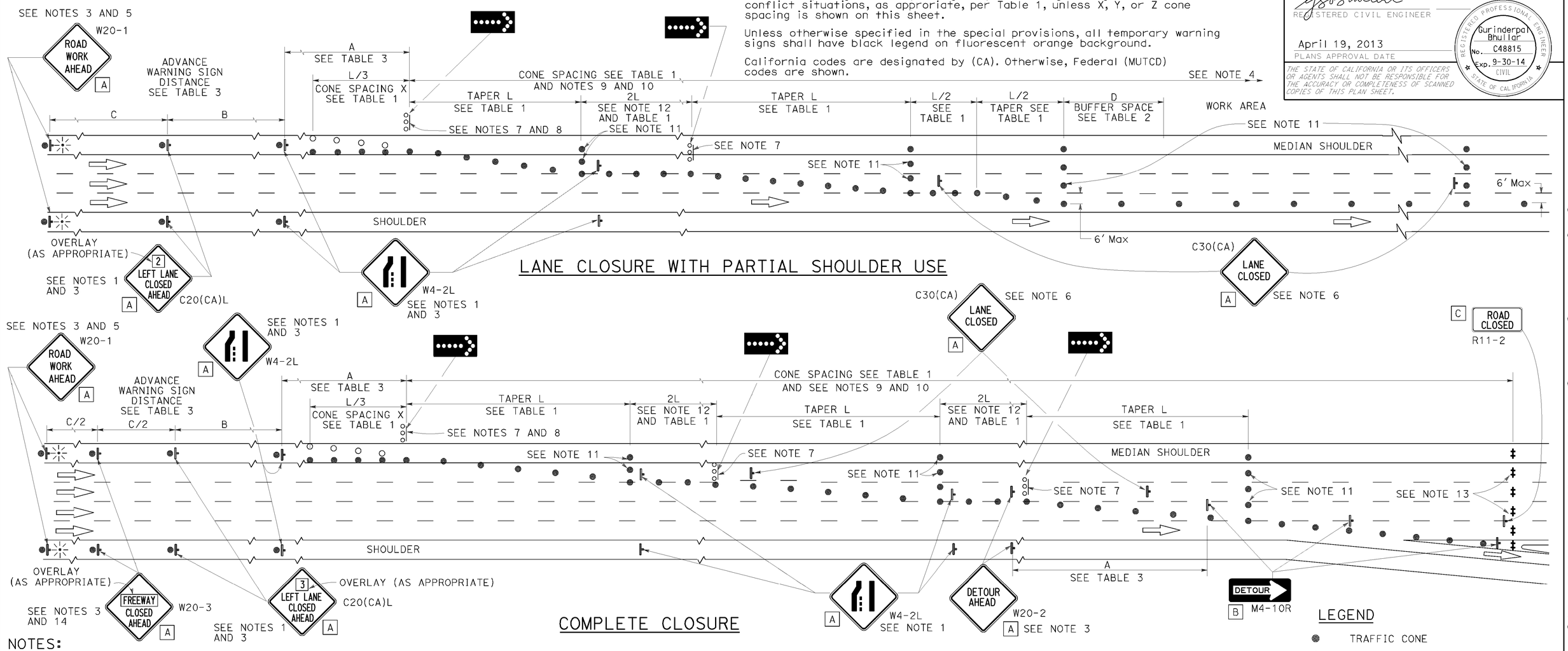

LANE CLOSURE WITH PARTIAL SHOULDER USE

COMPLETE CLOSURE

NOTES:

1. Lane closures on the right side using partial median shoulder as a traffic lane shall conform to the details as shown except that C20(CA)R and W4-2R signs shall be used.
2. At least one person shall be assigned to provide full time maintenance of traffic control devices for lane closures.
3. Each advance warning sign on each side of the roadway shall be equipped with at least two flags for daytime closure. Each flag shall be at least 16" X 16" in size and shall be orange or fluorescent red-orange in color. Flashing beacons shall be placed at the locations indicated for lane closure during hours of darkness.
4. A G20-2 "END ROAD WORK" sign, with minimum size of 48" x 24" as appropriate, shall be placed at the end of the lane closure unless the end of work area is obvious or ends within a larger project's limits.
5. If the W20-1 sign would follow within 2000' of a stationary W20-1 or G20-1 "ROAD WORK NEXT ___ MILES", use a C20(CA) sign for the first advance warning sign.
6. Place a C30(CA) sign every 2000' throughout length of lane closure.
7. One flashing arrow sign for each lane closed. The flashing arrow signs shall be Type I.
8. A minimum 1500' of sight distance shall be provided where possible for vehicles approaching the first flashing arrow sign. Lane closures shall not begin at the top of crest vertical curve or on a horizontal curve.
9. All cones used for lane closures during the hours of darkness shall be fitted with retroreflective bands (or sleeves) as specified in the specifications.
10. Portable delineators, placed at one-half the spacing indicated for traffic cones, may be used instead of cones for daytime closures only.
11. Unless otherwise specified in the special provisions, a minimum of 3 cones shall be placed transversely across each closed lane and shoulder at each location where a taper across a traffic lane ends and every 2000' as shown on the "Lane Closure With Partial Shoulder Use" detail. Two Type II barricades may be used instead of the 3 cones. The transverse alignment of the cones or barricades on the closed shoulder may be shifted from the transverse alignment to provide access to the work.
12. Unless otherwise specified in the special provisions, the 2L tangent shown along lane lines shall be used between the L tapers required for each closed traffic lane.
13. A minimum of Two Type II or III barricades shall be placed across each closed lane and shoulder at the location shown and every 2000' within the complete closure area. Within the complete closure area, the transverse alignment of the barricades on the closed shoulder may be shifted from the transverse alignment to provide access to the work.
14. When specified in the special provisions, a W20-2 "DETOUR AHEAD" sign is to be used in place of the W20-3 "FREEWAY CLOSED AHEAD" sign.

SIGN PANEL SIZE (Min)

A	48" x 48"
B	48" x 18"
C	48" x 30"

LEGEND

- TRAFFIC CONE
- TRAFFIC CONE (OPTIONAL TAPER)
- TEMPORARY TRAFFIC CONTROL SIGN
- FLASHING ARROW SIGN (FAS)
- FAS SUPPORT OR TRAILER
- PORTABLE FLASHING BEACON

STATE OF CALIFORNIA
DEPARTMENT OF TRANSPORTATION

TRAFFIC CONTROL SYSTEM FOR LANE CLOSURES ON FREEWAYS AND EXPRESSWAYS

NO SCALE

RSP T10A DATED APRIL 19, 2013 SUPERSEDES STANDARD PLAN T10A DATED MAY 20, 2011 - PAGE 238 OF THE STANDARD PLANS BOOK DATED 2010.

REVISED STANDARD PLAN RSP T10A

2010 REVISED STANDARD PLAN RSP T10A

P:\PROJ\01\QB400\drafting\sheets\0112000124va012.dgn

12-18-12

Dist	COUNTY	ROUTE	POST MILES TOTAL PROJECT	SHEET No.	TOTAL SHEETS
01	Hum	101	R15.0, 29.4	46	47

REGISTERED CIVIL ENGINEER

April 19, 2013
PLANS APPROVAL DATE

REGISTERED PROFESSIONAL ENGINEER Gurinderpal Bhullar No. C48815 Exp. 9-30-14 CIVIL STATE OF CALIFORNIA

THE STATE OF CALIFORNIA OR ITS OFFICERS OR AGENTS SHALL NOT BE RESPONSIBLE FOR THE ACCURACY OR COMPLETENESS OF SCANNED COPIES OF THIS PLAN SHEET.

TO ACCOMPANY PLANS DATED 01-30-15

LEGEND

- TRAFFIC CONE
- TEMPORARY TRAFFIC CONTROL SIGN
- FLASHING ARROW SIGN (FAS)
- FAS SUPPORT OR TRAILER
- PORTABLE FLASHING BEACON

SIGN PANEL SIZE (Min)

- A 48" x 48"
- B 24" x 24"
- C 36" x 18"

NOTES:

See Revised Standard Plan RSP T9 for tables.

Use cone spacing X for taper segment, Y for tangent segment or Z for conflict situations, as approriate, per Table 1, unless X, Y, or Z cone spacing is shown on this sheet.

Unless otherwise specified in the special provisions, all temporary warning signs shall have black legend on fluorescent orange background.

California codes are designated by (CA). Otherwise, Federal (MUTCD) codes are shown.

TYPICAL HALF ROAD CLOSURE

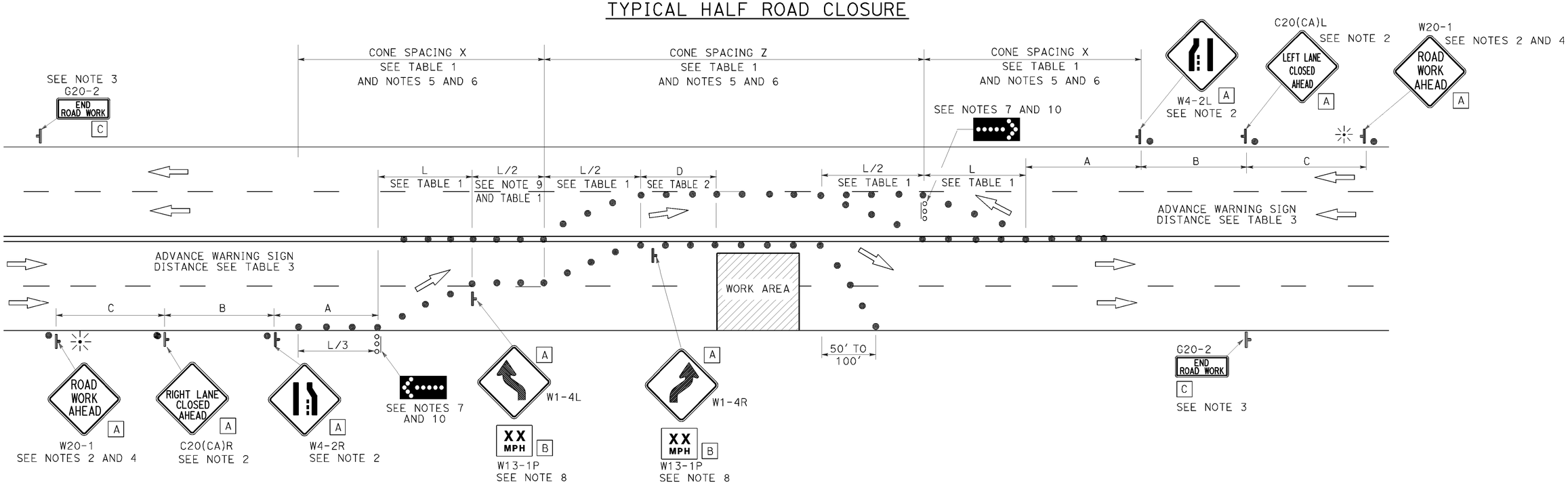

NOTES:

1. At least one person shall be assigned to provide full time maintenance of traffic control devices for lane closure unless, otherwise directed by the Engineer.
2. Each advance warning sign in each direction of travel shall be equipped with at least two flags for daytime closure. Each flag shall be at least 16" x 16" in size and shall be orange or fluorescent red-orange in color. Flashing beacons shall be placed at the locations indicated for lane closure during hours of darkness.
3. A G20-2 "END ROAD WORK" sign, as appropriate, shall be placed at the end of the lane closure unless the end of work area is obvious, or ends within a larger project's limits.
4. If the W20-1 sign would follow within 2000' of a stationary W20-1 or G20-1 "ROAD WORK NEXT _____ MILES", use a C20(CA) sign for the first advance warning sign.
5. All cones used for lane closures during the hours of darkness shall be fitted with retroreflective bands (or sleeves) as specified in the specifications.
6. Portable delineators, placed at one-half the spacing indicated for traffic cones, may be used instead of cones for daytime closures only.
7. Flashing arrow signs shall be either Type I or Type II.
8. Advisory speed will be determined by the Engineer. The W13-1P Plaque will not be required when advisory speed is more than the posted or maximum speed limit.
9. Unless otherwise specified in the special provisions, the tangent (L/2) shall be used.
10. A minimum 1500' of sight distance shall be provided where possible for vehicles approaching the first flashing arrow sign. Lane closures shall not begin at the top of crest vertical curve or on a horizontal curve.

STATE OF CALIFORNIA
DEPARTMENT OF TRANSPORTATION

TRAFFIC CONTROL SYSTEM FOR HALF ROAD CLOSURE ON MULTILANE CONVENTIONAL HIGHWAYS AND EXPRESSWAYS

NO SCALE

RSP T12 DATED APRIL 19, 2013 SUPERSEDES STANDARD PLAN T12
DATED MAY 20, 2011 - PAGE 240 OF THE STANDARD PLANS BOOK DATED 2010.

REVISED STANDARD PLAN RSP T12

2010 REVISED STANDARD PLAN RSP T12

P:\PROJ\01\0B400\drafting\sheets\0112000124va013.dgn

4-2-13

Dist	COUNTY	ROUTE	POST MILES TOTAL PROJECT	SHEET No.	TOTAL SHEETS
01	Hum	101	R15.0, 29.4	47	47

REGISTERED CIVIL ENGINEER

April 19, 2013
PLANS APPROVAL DATE

REGISTERED PROFESSIONAL ENGINEER Gurinderpal Bhullar No. C48815 Exp. 9-30-14 CIVIL STATE OF CALIFORNIA

THE STATE OF CALIFORNIA OR ITS OFFICERS OR AGENTS SHALL NOT BE RESPONSIBLE FOR THE ACCURACY OR COMPLETENESS OF SCANNED COPIES OF THIS PLAN SHEET.

TO ACCOMPANY PLANS DATED 01-30-15

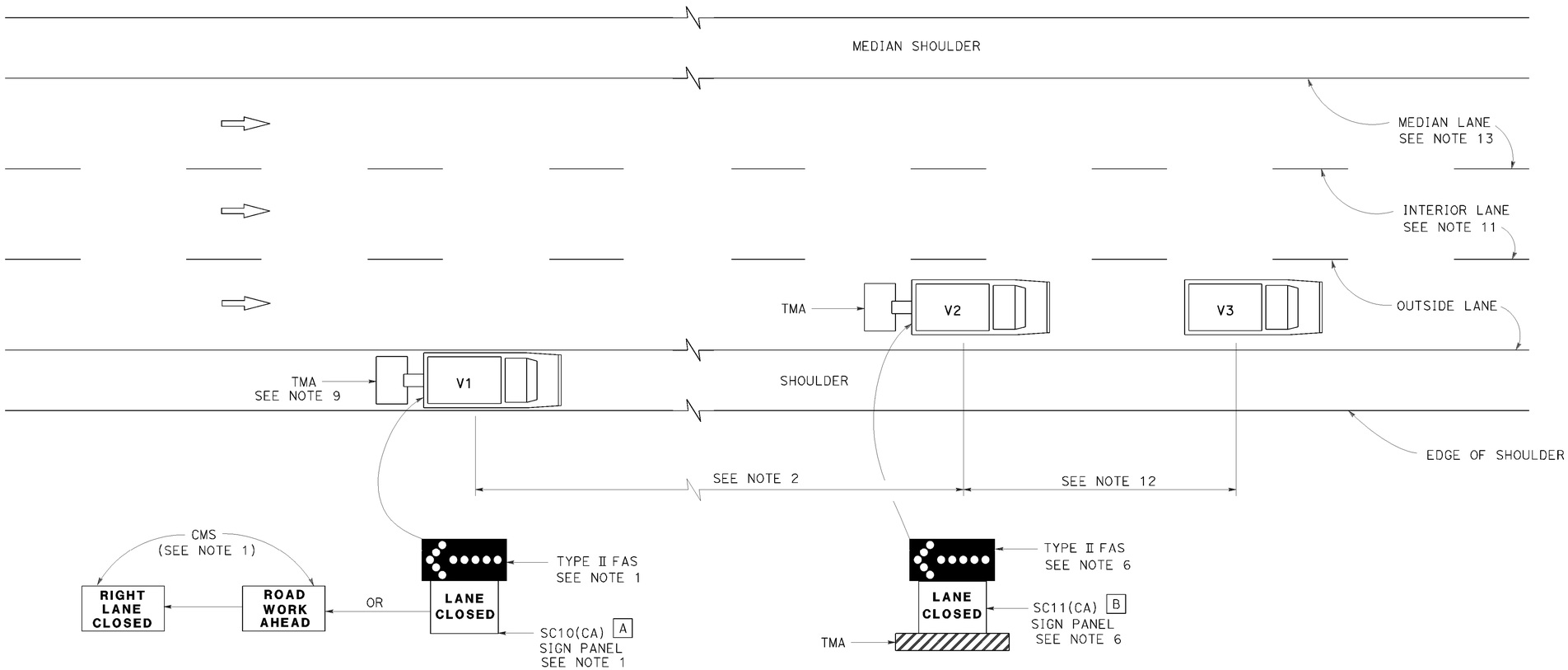

MOVING LANE CLOSURE ON MEDIAN LANE OR OUTSIDE LANE OF MULTILANE HIGHWAYS

SIGN PANEL SIZE (Min)

A 66" x 36"

B 54" x 42"

LEGEND

V1	SIGN VEHICLE
V2	SHADOW VEHICLE
V3	WORK/APPLICATION VEHICLE
	FLASHING ARROW SIGN (FAS)
CMS	CHANGEABLE MESSAGE SIGN
TMA	TRUCK-MOUNTED ATTENUATOR

NOTES:

1. Either a changeable message sign or a SC10(CA) sign panel and a Type II flashing arrow sign shall be mounted on the rear of sign vehicle V1. The changeable message sign shall be sequenced to show the "ROAD WORK AHEAD" message first, followed by the "RIGHT LANE CLOSED" message. For median lane closure, the flashing arrow symbol shall be reversed with the arrowhead on the right and the changeable message sign shall show "LEFT LANE CLOSED".
2. If traffic queues develop, sign vehicle V1 should be positioned upstream from the end of queue. Sign vehicle V1 shall be positioned where highly visible when shoulders are not available.
3. A minimum sight distance of 1500′ should be provided in advance of sign vehicle V1.
4. Sign vehicle V1 should remain at the beginning of horizontal or vertical curves until the other vehicles (V2 and V3) are far enough beyond the curve to resume the minimum sight distance of 1500′.
5. Vehicle-mounted sign panels shall have Type III or above retroreflective sheeting, black on white, or black on fluorescent orange, with 6" minimum series D letters per Caltrans sign specifications.
6. Shadow vehicle V2 shall be equipped with a truck-mounted attenuator. The sign panel shown and a Type II flashing arrow sign shall be mounted on the rear of shadow vehicle V2. For median lane closure the flashing arrow sign symbol shall be displayed with the arrowhead on the right.
7. All vehicles used for lane closures shall be equipped with two-way radios, and the vehicle operators shall maintain communication during the work or application operation.
8. All vehicles shall be equipped with flashing or rotating amber lights.
9. If sign vehicle V1 encroaches into the traffic lane due to insufficient shoulder width, sign vehicle V1 shall be equipped with a truck-mounted attenuator. Sign vehicle V1 shall stay as close to the edge of shoulder as practicable.
10. Where workers would be on foot in the work area, a stationary type lane closure (Revised Standard Plan T10, T11, etc., as applicable) shall be used instead of this plan.
11. For moving lane closure on interior lane of multilane highways, use Revised Standard Plan T16.
12. The spacing between work vehicle(s) and the shadow vehicles, and between each shadow vehicle should be minimized to deter road users from driving in between.
13. When the work/application vehicle V3 occupies the median lane, sign vehicle V1 should drive in the median shoulder and indicate left lane closed ahead.

STATE OF CALIFORNIA
DEPARTMENT OF TRANSPORTATION

TRAFFIC CONTROL SYSTEM FOR MOVING LANE CLOSURE ON MULTILANE HIGHWAYS

NO SCALE

RSP T15 DATED APRIL 19, 2013 SUPERSEDES STANDARD PLAN T15
DATED MAY 20, 2011 - PAGE 243 OF THE STANDARD PLANS BOOK DATED 2010.

REVISED STANDARD PLAN RSP T15

2010 REVISED STANDARD PLAN RSP T15

P:\PROJ\01\0B400\drafting\sheets\0112000124va014.dgn

12-18-12