ACSTP-ER-19B9(004)E

Dist	COUNTY	ROUTE	POST MILES TOTAL PROJECT	SHEET No.	TOTAL SHEETS
01	DN	199	8.7, 21.7	1	54

STATE OF CALIFORNIA
DEPARTMENT OF TRANSPORTATION

PROJECT PLANS FOR CONSTRUCTION ON
STATE HIGHWAY
IN DEL NORTE COUNTY
NEAR GASQUET AT 1.5 MILES NORTH OF MYRTLE CREEK BRIDGE AND ABOUT 8 MILES NORTH OF GASQUET AT 0.4 MILE SOUTH OF PATRICK CREEK BRIDGE

TO BE SUPPLEMENTED BY STANDARD PLANS DATED 2010

INDEX OF PLANS

SHEET No.	DESCRIPTION
1	TITLE AND LOCATION MAP
2-5	TYPICAL CROSS SECTIONS
6-7	LAYOUTS
8-11	CONSTRUCTION DETAILS
12-13	CONSTRUCTION AREA SIGNS
14-16	STAGE CONSTRUCTION PLANS, DETAILS AND QUANTITIES
17	TRAFFIC HANDLING PLAN DETAILS AND QUANTITIES
18	SUMMARY OF QUANTITIES
19-23	EROSION CONTROL PLANS, DETAILS AND QUANTITIES
24-27	ELECTRICAL PLANS DETAILS AND QUANTITIES
28-43	REVISED STANDARD PLANS
	STRUCTURE PLANS
44-54	PATRICK CREEK SLIP OUT WALL

THE STANDARD PLANS LIST APPLICABLE TO THIS CONTRACT IS INCLUDED IN THE NOTICE TO BIDDERS AND SPECIAL PROVISIONS BOOK.

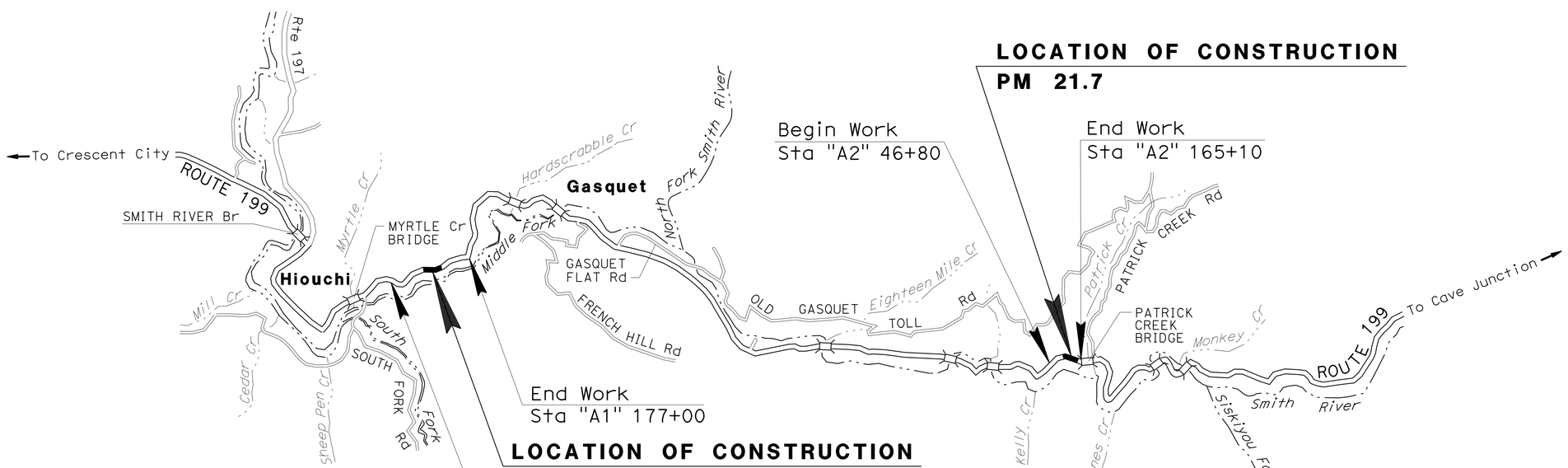

NO SCALE

THE CONTRACTOR SHALL POSSESS THE CLASS (OR CLASSES) OF LICENSE AS SPECIFIED IN THE "NOTICE TO BIDDERS."

PROJECT ENGINEER REGISTERED CIVIL ENGINEER — DATE 6/25/15

June 29, 2015
PLANS APPROVAL DATE

REGISTERED PROFESSIONAL ENGINEER — Thomas Jon Phillips — No. 64633 — Exp. 6/30/17 — CIVIL — STATE OF CALIFORNIA

THE STATE OF CALIFORNIA OR ITS OFFICERS OR AGENTS SHALL NOT BE RESPONSIBLE FOR THE ACCURACY OR COMPLETENESS OF SCANNED COPIES OF THIS PLAN SHEET.

CONTRACT No.	01-0B3104
PROJECT ID	0112000115

DESIGN MANAGER: L. R. ASHLEY
PROJECT MANAGER: KEVIN CHURCH

P:\PROJ\01\0B310\drafting\01-0B310\0112000115ab001.dgn

LAST REVISION 04-02-15 — DATE PLOTTED => 21-JUL-2015 — TIME PLOTTED => 11:05

Dist	COUNTY	ROUTE	POST MILES TOTAL PROJECT	SHEET No.	TOTAL SHEETS
01	DN	199	8.7, 21.7	2	54

REGISTERED CIVIL ENGINEER 6/25/15 DATE

June 29, 2015
PLANS APPROVAL DATE

REGISTERED PROFESSIONAL ENGINEER Thomas Jon Phillips No. 64633 Exp. 6/30/17 CIVIL STATE OF CALIFORNIA

THE STATE OF CALIFORNIA OR ITS OFFICERS OR AGENTS SHALL NOT BE RESPONSIBLE FOR THE ACCURACY OR COMPLETENESS OF SCANNED COPIES OF THIS PLAN SHEET.

NOTES:

1. DIMENSIONS OF THE PAVEMENT STRUCTURES (STRUCTURAL SECTIONS) ARE SUBJECT TO TOLERANCES SPECIFIED IN THE STANDARD SPECIFICATIONS.

ABBREVIATIONS:

HMA-O HOT MIX ASPHALT-OPEN GRADED (OPEN GRADED FRICTION COURSE)
HMA-A HOT MIX ASPHALT (TYPE A)
GPI GEOSYNTHETIC PAVEMENT INTERLAYER (PAVING FABRIC)

DESIGN DESIGNATION

ADT (2016)	4230	D	60%
ADT (2036)	4890	T	12%
DHV (2016)	580	V	55 MPH
$ESAL_{20}$		TI_{20}	10.0

PAVEMENT CLIMATE REGION

NORTH COAST

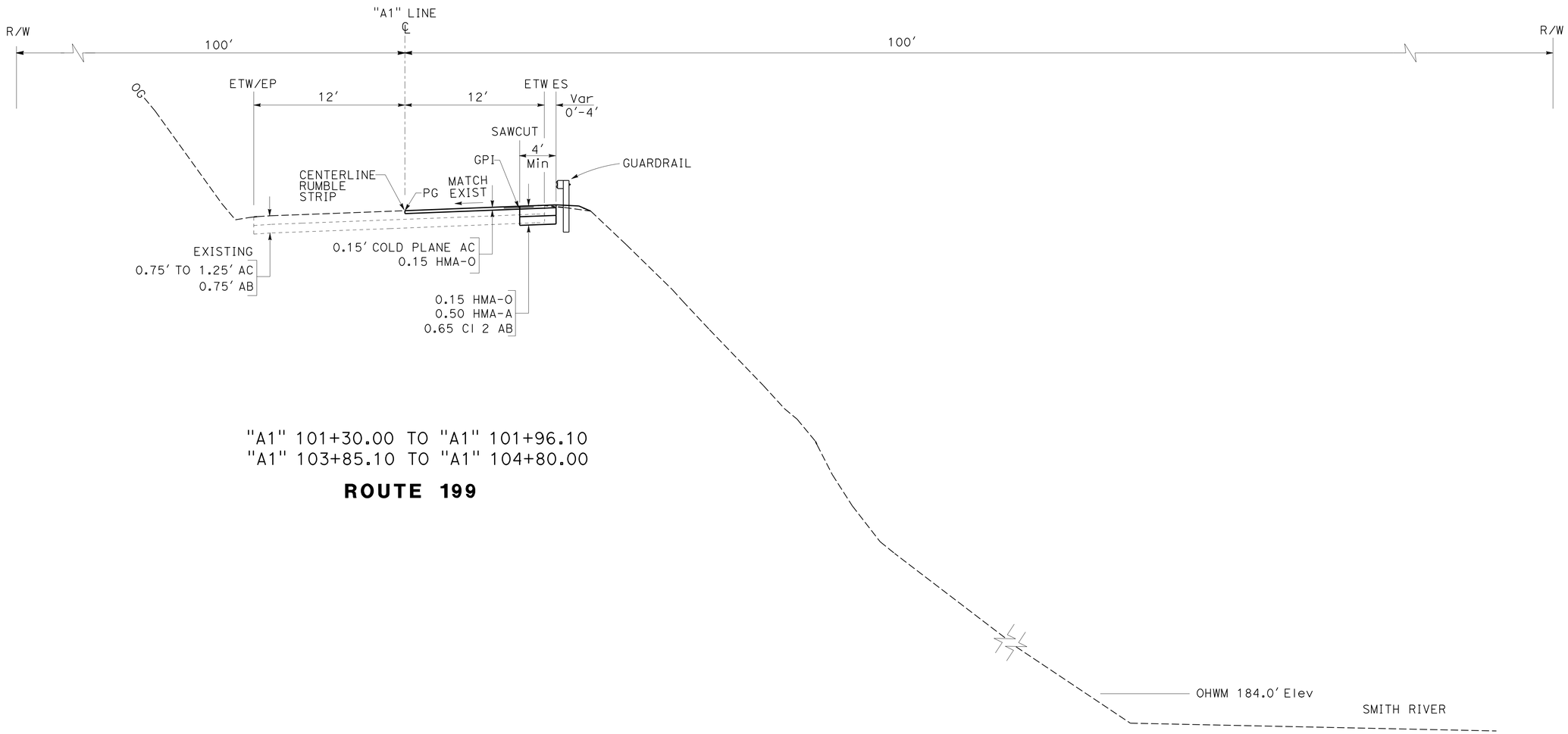

"A1" 101+30.00 TO "A1" 101+96.10
"A1" 103+85.10 TO "A1" 104+80.00

ROUTE 199

LOCATION 1
PM 8.7

TYPICAL CROSS SECTIONS

NO SCALE

X-1

REVISED BY | DATE REVISED
TOM PHILLIPS | TODD LARK
CALCULATED-DESIGNED BY | CHECKED BY
FUNCTIONAL SUPERVISOR: L.R. ASHLEY

STATE OF CALIFORNIA - DEPARTMENT OF TRANSPORTATION
Caltrans
DESIGN

P:\PROJ\01\0B310\draffing\01-0B310\0112000115ca001.dgn

LAST REVISION 04-02-15 | DATE PLOTTED => 21-JUL-2015 | TIME PLOTTED => 11:05

Dist	COUNTY	ROUTE	POST MILES TOTAL PROJECT	SHEET No.	TOTAL SHEETS
01	DN	199	8.7, 21.7	3	54

REGISTERED CIVIL ENGINEER 6/25/15 DATE

June 29, 2015
PLANS APPROVAL DATE

REGISTERED PROFESSIONAL ENGINEER Thomas Jon Phillips No. 64633 Exp. 6/30/17 CIVIL STATE OF CALIFORNIA

THE STATE OF CALIFORNIA OR ITS OFFICERS OR AGENTS SHALL NOT BE RESPONSIBLE FOR THE ACCURACY OR COMPLETENESS OF SCANNED COPIES OF THIS PLAN SHEET.

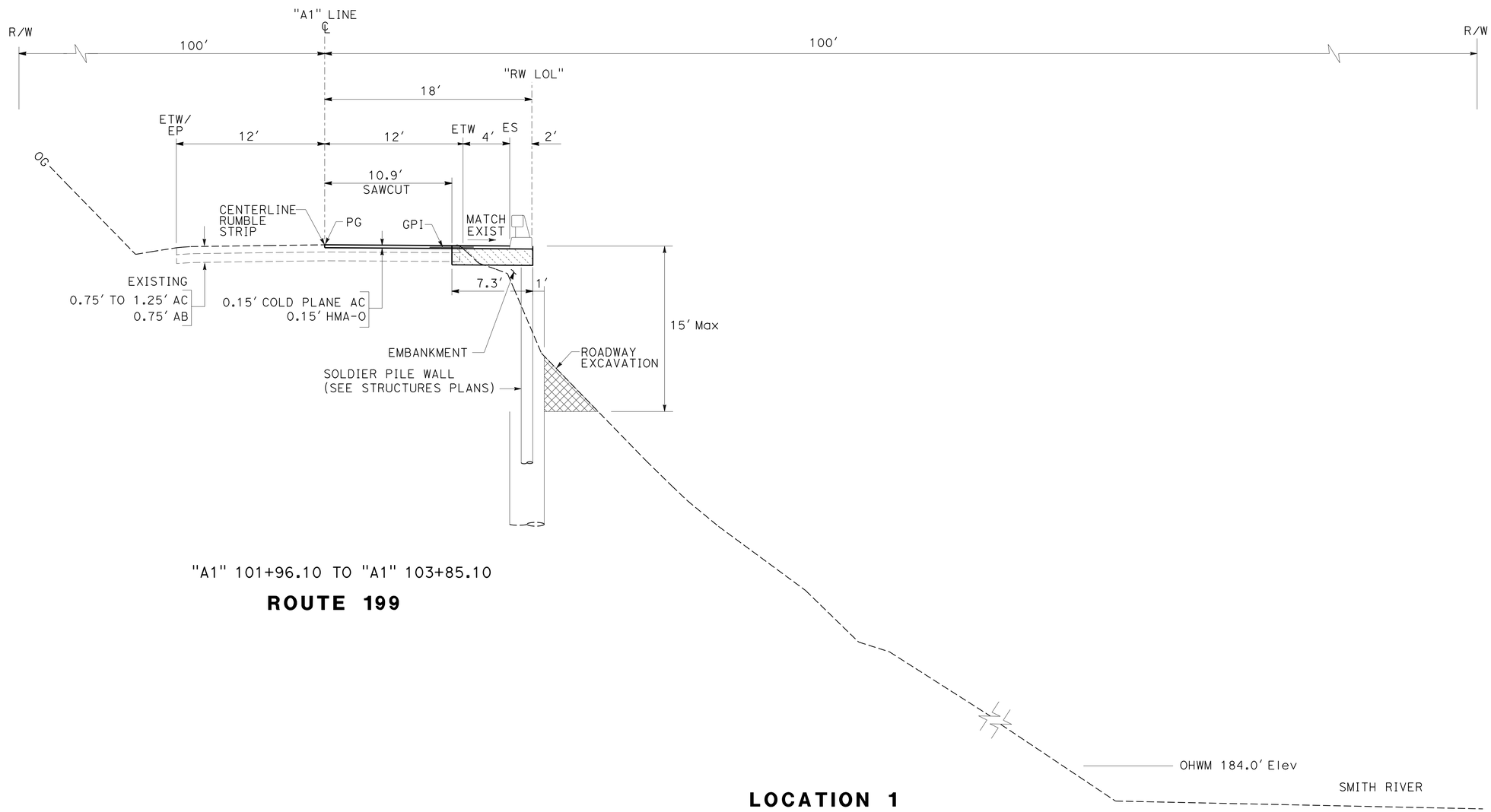

"A1" 101+96.10 TO "A1" 103+85.10

ROUTE 199

LOCATION 1
PM 8.7

TYPICAL CROSS SECTIONS
NO SCALE

X-2

STATE OF CALIFORNIA - DEPARTMENT OF TRANSPORTATION
Caltrans® **DESIGN**

FUNCTIONAL SUPERVISOR: L.R. ASHLEY
CALCULATED-DESIGNED BY: TOM PHILLIPS
CHECKED BY: TODD LARK
REVISED BY
DATE REVISED

P:\PROJ\01\0B310\drafting\01-0B310\01120001115ca002.dgn

LAST REVISION 04-02-15
DATE PLOTTED => 21-JUL-2015
TIME PLOTTED => 11:05

Dist	COUNTY	ROUTE	POST MILES TOTAL PROJECT	SHEET No.	TOTAL SHEETS
01	DN	199	8.7, 21.7	4	54

REGISTERED CIVIL ENGINEER 6/25/15 DATE

June 29, 2015
PLANS APPROVAL DATE

REGISTERED PROFESSIONAL ENGINEER
Thomas Jon Phillips
No. 64633
Exp. 6/30/17
CIVIL
STATE OF CALIFORNIA

THE STATE OF CALIFORNIA OR ITS OFFICERS OR AGENTS SHALL NOT BE RESPONSIBLE FOR THE ACCURACY OR COMPLETENESS OF SCANNED COPIES OF THIS PLAN SHEET.

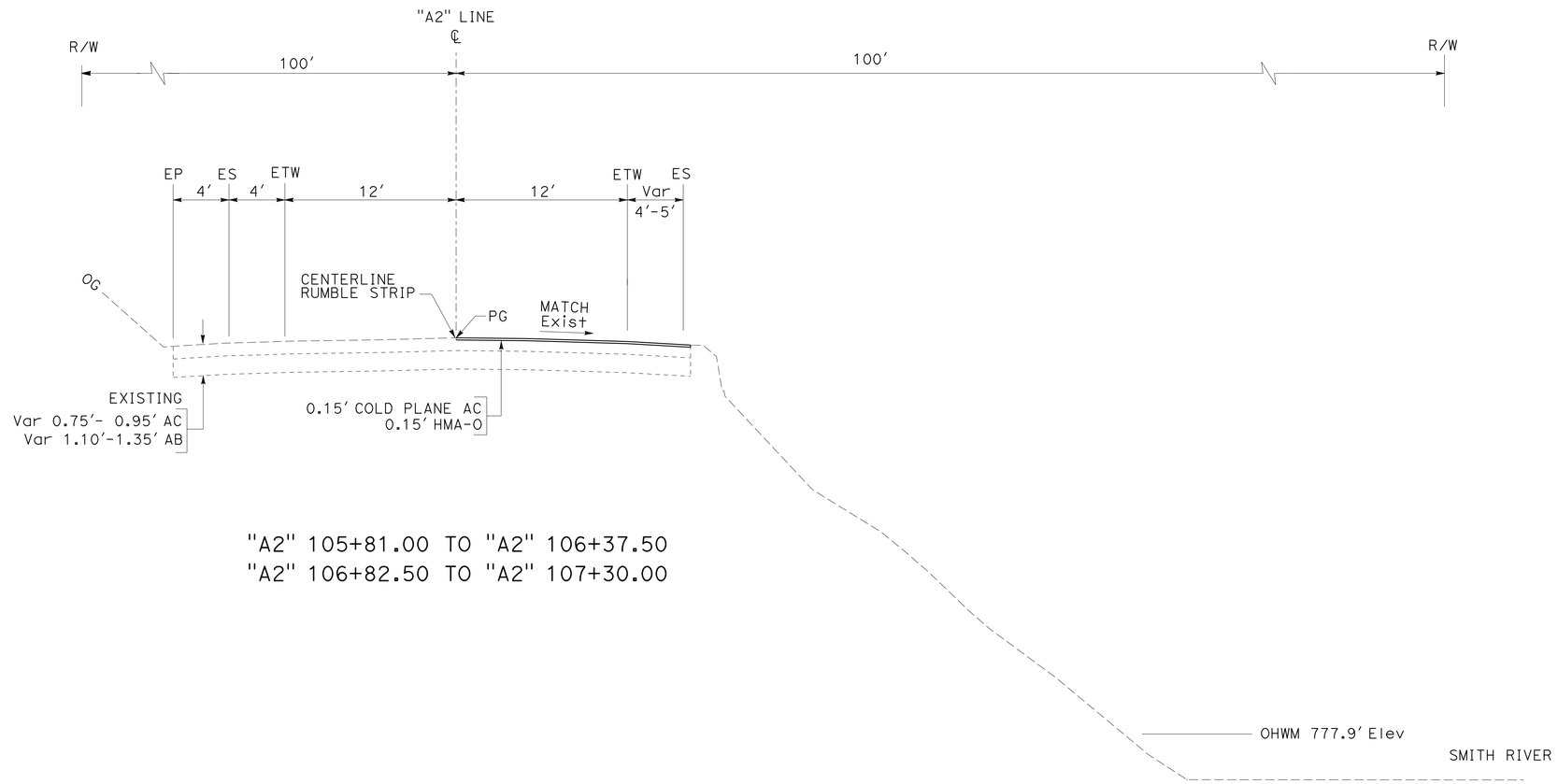

"A2" 105+81.00 TO "A2" 106+37.50
"A2" 106+82.50 TO "A2" 107+30.00

LOCATION 2
PM 21.7

TYPICAL CROSS SECTIONS
NO SCALE

X-3

REVISED BY	DATE REVISED

TOM PHILLIPS — CALCULATED-DESIGNED BY
TODD LARK — CHECKED BY
L.R. ASHLEY — FUNCTIONAL SUPERVISOR

STATE OF CALIFORNIA - DEPARTMENT OF TRANSPORTATION
Caltrans
DESIGN

P:\PROJ\01\0B310\drafting\01-0B310\01120001151ca003.dgn

LAST REVISION 04-02-15 | DATE PLOTTED => 21-JUL-2015 | TIME PLOTTED => 11:05

Dist	COUNTY	ROUTE	POST MILES TOTAL PROJECT	SHEET No.	TOTAL SHEETS
01	DN	199	8.7, 21.7	5	54

REGISTERED CIVIL ENGINEER 6/25/15 DATE

June 29, 2015
PLANS APPROVAL DATE

REGISTERED PROFESSIONAL ENGINEER
Thomas Jon Phillips
No. 64633
Exp. 6/30/17
CIVIL
STATE OF CALIFORNIA

THE STATE OF CALIFORNIA OR ITS OFFICERS OR AGENTS SHALL NOT BE RESPONSIBLE FOR THE ACCURACY OR COMPLETENESS OF SCANNED COPIES OF THIS PLAN SHEET.

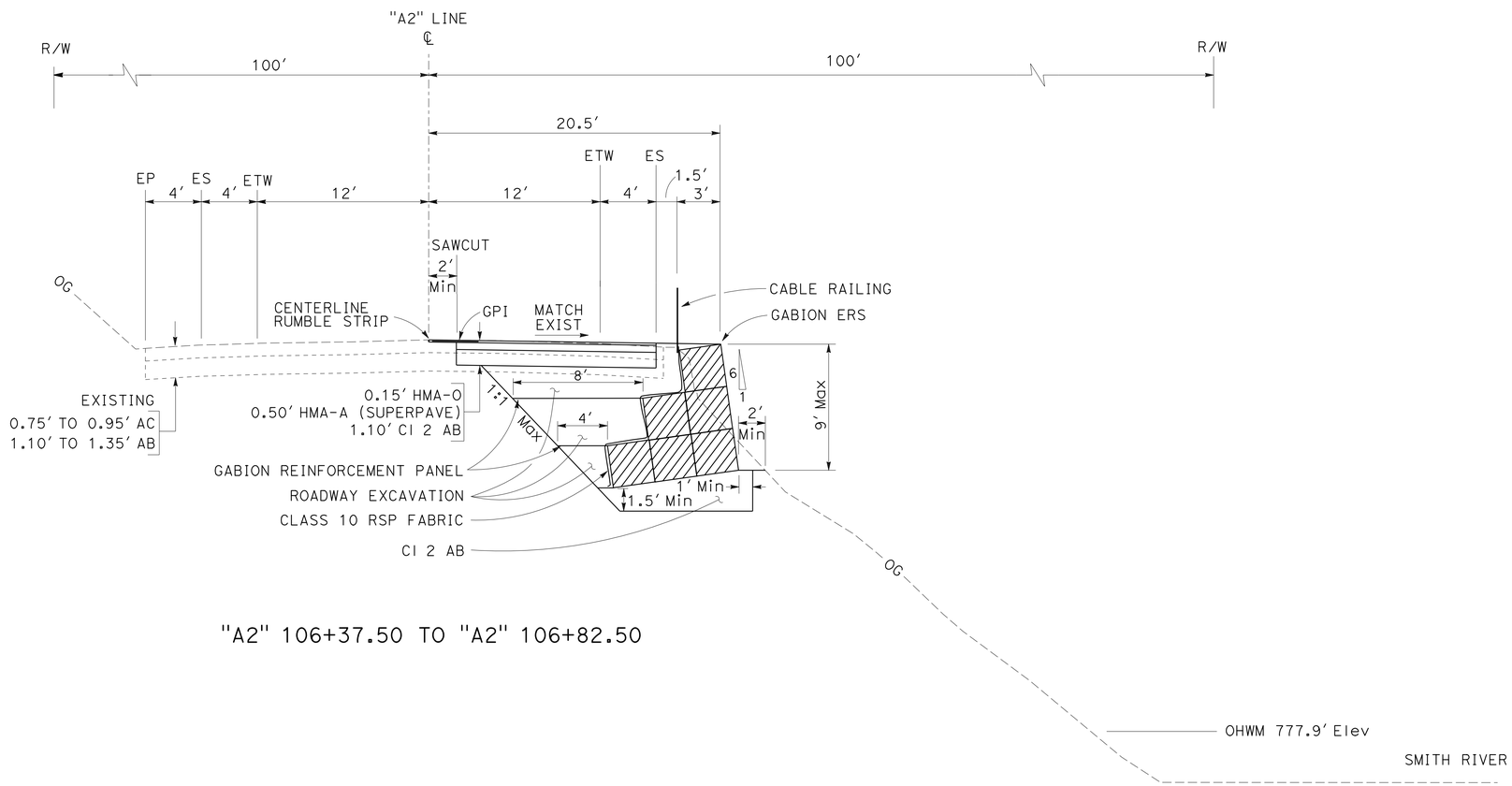

"A2" 106+37.50 TO "A2" 106+82.50

LOCATION 2
PM R21.7

TYPICAL CROSS SECTIONS

NO SCALE

X-4

REVISED BY	DATE REVISED

TOM PHILLIPS — CALCULATED-DESIGNED BY
TODD LARK — CHECKED BY
FUNCTIONAL SUPERVISOR
L.R. ASHLEY

STATE OF CALIFORNIA - DEPARTMENT OF TRANSPORTATION
Caltrans®
DESIGN

P:\PROJ\01\0B310\drafting\01-0B310\01120001151ca004.dgn

LAST REVISION 04-02-15
DATE PLOTTED => 21-JUL-2015
TIME PLOTTED => 11:05

Dist	COUNTY	ROUTE	POST MILES TOTAL PROJECT	SHEET No.	TOTAL SHEETS
01	DN	199	8.7, 21.7	6	54

REGISTERED CIVIL ENGINEER 6/25/15 DATE

June 29, 2015
PLANS APPROVAL DATE

REGISTERED PROFESSIONAL ENGINEER Thomas Jon Phillips No. 64633 Exp. 6/30/17 CIVIL STATE OF CALIFORNIA

THE STATE OF CALIFORNIA OR ITS OFFICERS OR AGENTS SHALL NOT BE RESPONSIBLE FOR THE ACCURACY OR COMPLETENESS OF SCANNED COPIES OF THIS PLAN SHEET.

NOTE:
FOR ACCURATE RIGHT OF WAY DATA, CONTACT RIGHT OF WAY ENGINEERING AT THE DISTRICT OFFICE.

LEGEND:
COLD PLANE AC PAVEMENT

ABBREVIATIONS:
TFESA TEMPORARY FENCE (TYPE ESA)
TRSF TEMPORARY REINFORCED SILT FENCE

CURVE DATA

No.	R	Δ	T	L
1	750.00′	05°17′39″	34.68′	69.30′

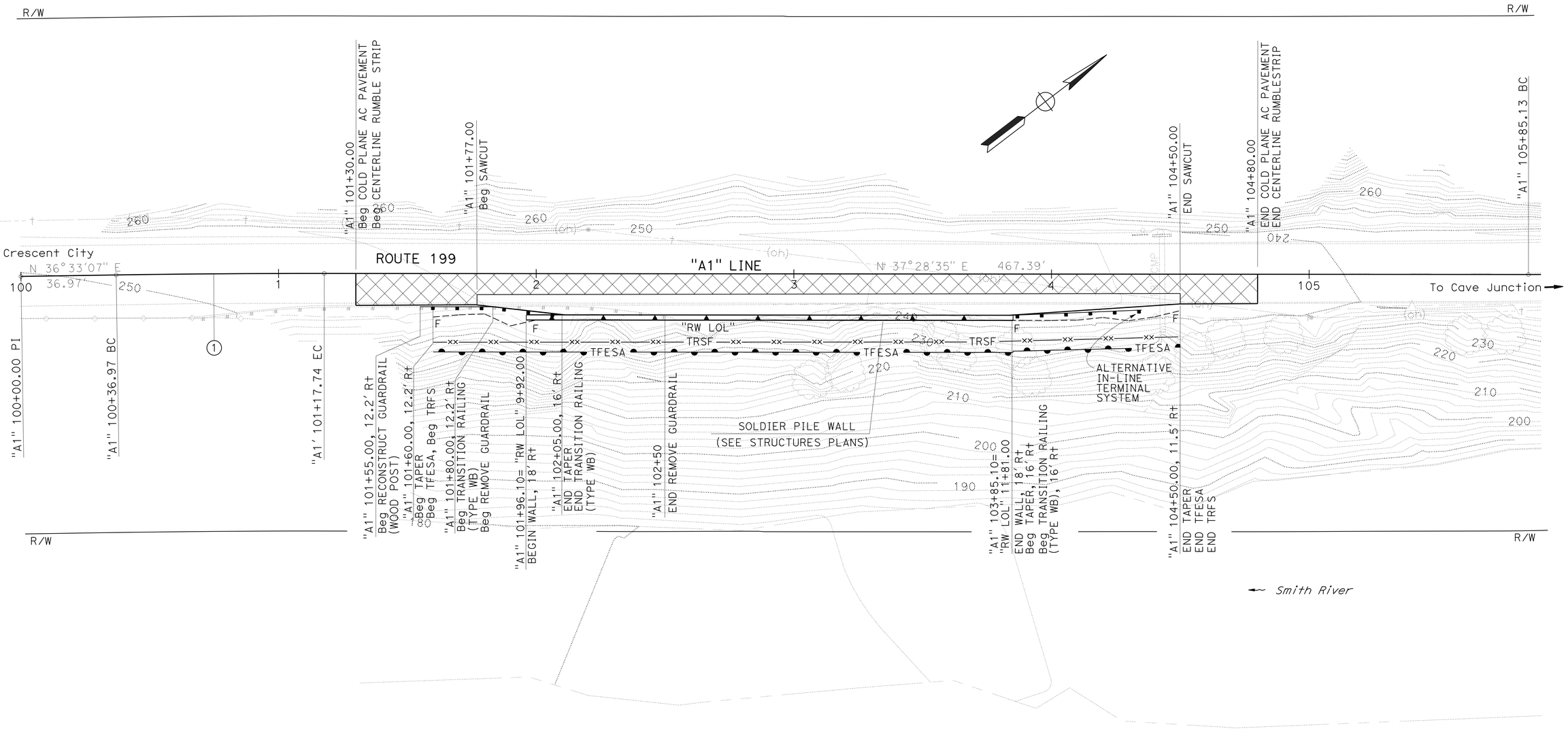

LOCATION 1
PM 8.7

LAYOUT
SCALE: 1"=20′

L-1

REVISED BY | DATE REVISED
TOM PHILLIPS | TODD LARK
CALCULATED-DESIGNED BY | CHECKED BY
FUNCTIONAL SUPERVISOR | L.R. ASHLEY

STATE OF CALIFORNIA - DEPARTMENT OF TRANSPORTATION
Caltrans
DESIGN

P:\PROJ\01\0B310\drafting\01-0B310\01120001151ea001.dgn

LAST REVISION 04-02-15 | DATE PLOTTED => 21-JUL-2015 | TIME PLOTTED => 11:05

NOTE:
FOR ACCURATE RIGHT OF WAY DATA, CONTACT
RIGHT OF WAY ENGINEERING AT THE DISTRICT OFFICE.

CURVE DATA

No.	R	Δ	T	L
2	750.00′	05°17′39"	34.68′	69.30′
3	550.00′	12°09′58"	58.61′	116.79′
4	500.00′	20°42′46"	91.37′	180.75′

Dist	COUNTY	ROUTE	POST MILES TOTAL PROJECT	SHEET No.	TOTAL SHEETS
01	DN	199	8.7, 21.7	7	54

REGISTERED CIVIL ENGINEER 6/25/15 DATE

June 29, 2015
PLANS APPROVAL DATE

REGISTERED PROFESSIONAL ENGINEER Thomas Jon Phillips No. 64633 Exp. 6/30/17 CIVIL STATE OF CALIFORNIA

THE STATE OF CALIFORNIA OR ITS OFFICERS OR AGENTS SHALL NOT BE RESPONSIBLE FOR THE ACCURACY OR COMPLETENESS OF SCANNED COPIES OF THIS PLAN SHEET.

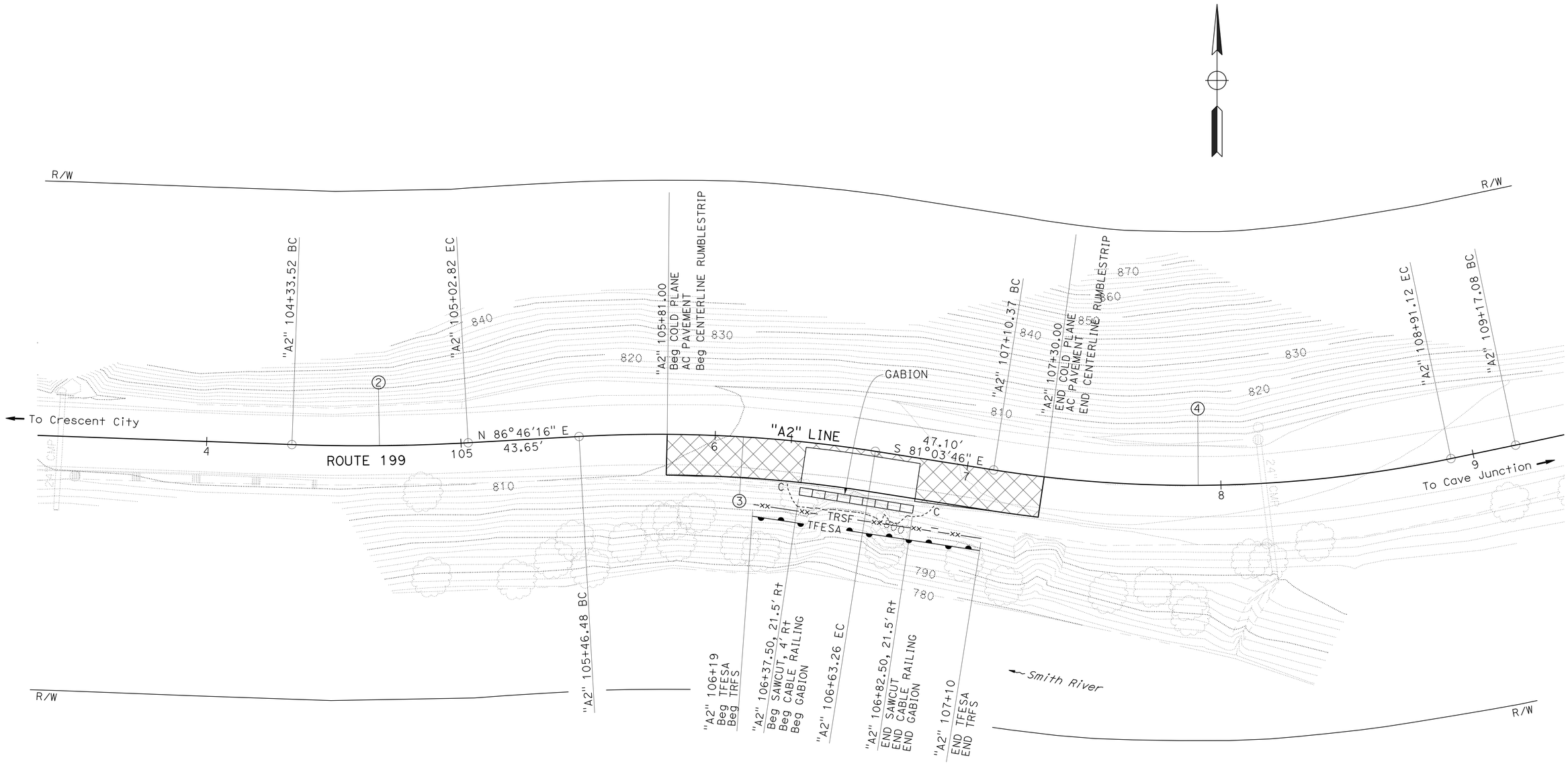

LOCATION 2
PM 21.7

LAYOUT
SCALE: 1"=20′

L-2

STATE OF CALIFORNIA - DEPARTMENT OF TRANSPORTATION
Caltrans
DESIGN

FUNCTIONAL SUPERVISOR: L.R. ASHLEY
CALCULATED-DESIGNED BY: TOM PHILLIPS
CHECKED BY: TODD LARK
REVISED BY
DATE REVISED

P:\PROJ\01\0B310\drafting\01-0B310\01120001151ea002.dgn

LAST REVISION 04-02-15
DATE PLOTTED => 21-JUL-2015
TIME PLOTTED => 11:05

Dist	COUNTY	ROUTE	POST MILES TOTAL PROJECT	SHEET No.	TOTAL SHEETS
01	DN	199	8.7, 21.7	8	54

REGISTERED CIVIL ENGINEER 6/25/15 DATE

June 29, 2015
PLANS APPROVAL DATE

REGISTERED PROFESSIONAL ENGINEER Thomas Jon Phillips No. 64633 Exp. 6/30/17 CIVIL STATE OF CALIFORNIA

THE STATE OF CALIFORNIA OR ITS OFFICERS OR AGENTS SHALL NOT BE RESPONSIBLE FOR THE ACCURACY OR COMPLETENESS OF SCANNED COPIES OF THIS PLAN SHEET.

L	THREAD LENGTH
1 3/8"	FULL THREAD LENGTH
2"	FULL THREAD LENGTH
10"	4" Min THREAD LENGTH
18"	4" Min THREAD LENGTH
20"	4" Min THREAD LENGTH
22"	4" Min THREAD LENGTH
** 2 3/4"	2" Min THREAD LENGTH
** 19"	4" Min THREAD LENGTH

** FOR NESTED RAIL APPLICATIONS

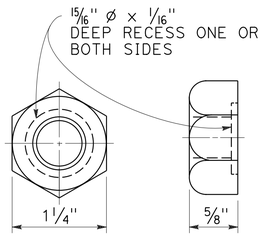

5/8"ø RECESS NUT

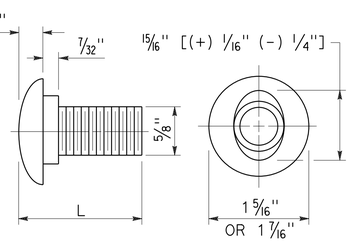

5/8"ø BUTTON HEAD BOLT

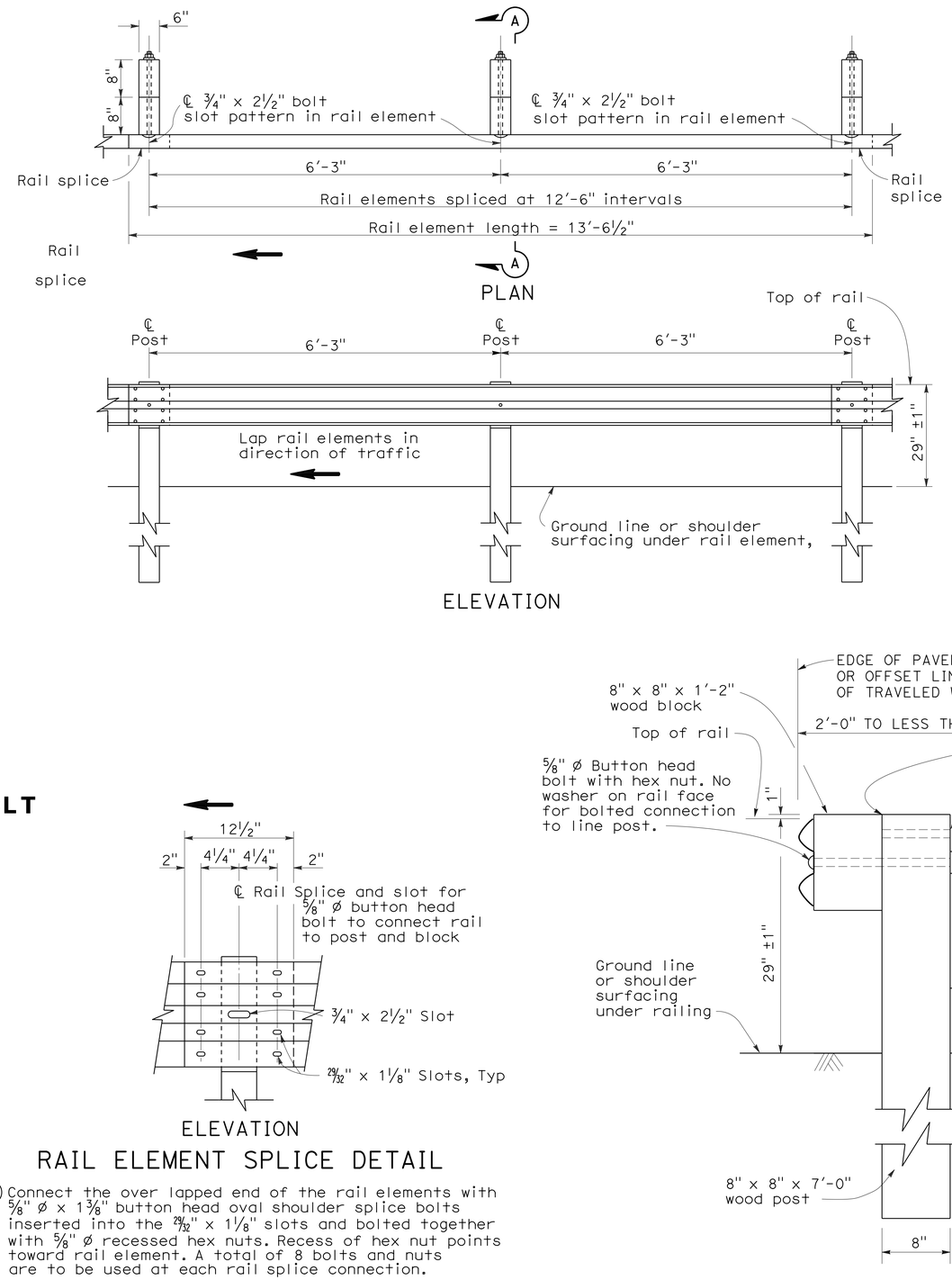

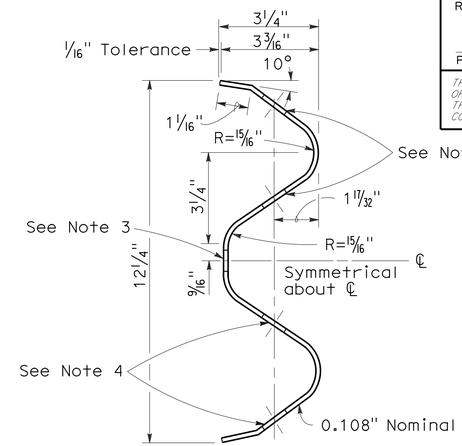

SECTION THRU
RAIL ELEMENT

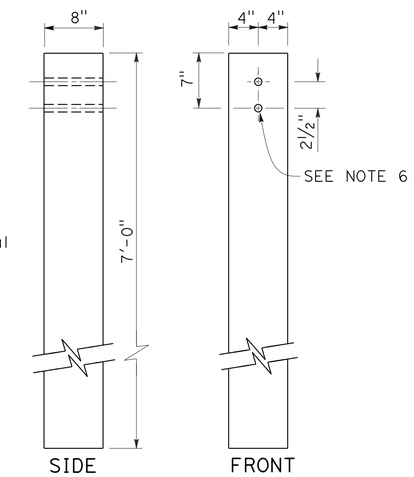

8"x8" WOOD POST

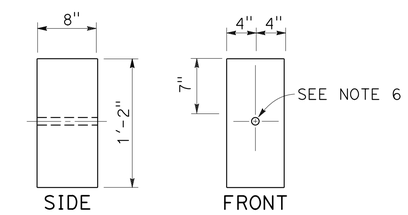

8"x8" WOOD BLOCK

ELEVATION

RAIL ELEMENT SPLICE DETAIL

a) Connect the over lapped end of the rail elements with 5/8" ø x 1 3/8" button head oval shoulder splice bolts inserted into the 29/32" x 1 1/8" slots and bolted together with 5/8" ø recessed hex nuts. Recess of hex nut points toward rail element. A total of 8 bolts and nuts are to be used at each rail splice connection.

b) The ends of the rail elements are to be overlapped in the direction of traffic (see details).

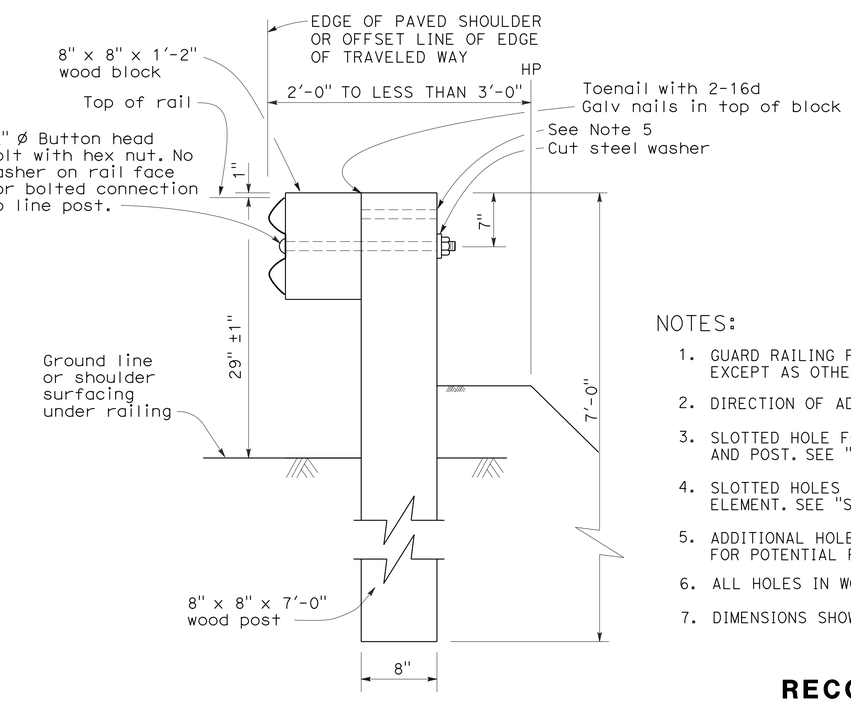

SECTION A-A

TYPICAL WOOD LINE
POST INSTALLATION

NOTES:

1. GUARD RAILING POST SPACING TO BE 6'-3" CENTER TO CENTER, EXCEPT AS OTHERWISE NOTED.
2. DIRECTION OF ADJACENT TRAFFIC INDICATED BY ⟶.
3. SLOTTED HOLE FOR BOLTED CONNECTION OF RAIL ELEMENT TO BLOCK AND POST. SEE "SECTION THRU RAIL ELEMENT".
4. SLOTTED HOLES FOR SPLICE BOLTS TO OVERLAP ENDS OF RAIL ELEMENT. SEE "SECTION THRU RAIL ELEMENT".
5. ADDITIONAL HOLE IN UPPERMOST PORTION OF LINE POST IS FOR POTENTIAL FUTURE ADJUSTMENTS OF RAILING HEIGHT.
6. ALL HOLES IN WOOD POSTS AND BLOCKS SHALL BE 3/4" Dia 1/16".
7. DIMENSIONS SHOWN FOR WOOD POST ARE NOMINAL.

RECONSTRUCT GUARDRAIL (WOOD POST)

CONSTRUCTION DETAILS

NO SCALE

C-1

REVISED BY | DATE REVISED
TOM PHILLIPS | TODD LARK
CALCULATED-DESIGNED BY | CHECKED BY
FUNCTIONAL SUPERVISOR: L.R. ASHLEY

STATE OF CALIFORNIA - DEPARTMENT OF TRANSPORTATION
Caltrans
DESIGN

P:\PROJ\01\0B310\drafting\01-0B310\01120001151ga001.dgn

LAST REVISION 04-02-15 | DATE PLOTTED => 21-JUL-2015 | TIME PLOTTED => 11:05

BORDER LAST REVISED 7/2/2010 | USERNAME => s120115 | DGN FILE => 01120001151ga001.dgn | RELATIVE BORDER SCALE IS IN INCHES 0 1 2 3 | UNIT 0313 | PROJECT NUMBER & PHASE 01120001151

Dist	COUNTY	ROUTE	POST MILES TOTAL PROJECT	SHEET No.	TOTAL SHEETS
01	DN	199	8.7, 21.7	9	54

REGISTERED CIVIL ENGINEER 6/25/15 DATE

June 29, 2015
PLANS APPROVAL DATE

REGISTERED PROFESSIONAL ENGINEER Thomas Jon Phillips No. 64633 Exp. 6/30/17 CIVIL STATE OF CALIFORNIA

THE STATE OF CALIFORNIA OR ITS OFFICERS OR AGENTS SHALL NOT BE RESPONSIBLE FOR THE ACCURACY OR COMPLETENESS OF SCANNED COPIES OF THIS PLAN SHEET.

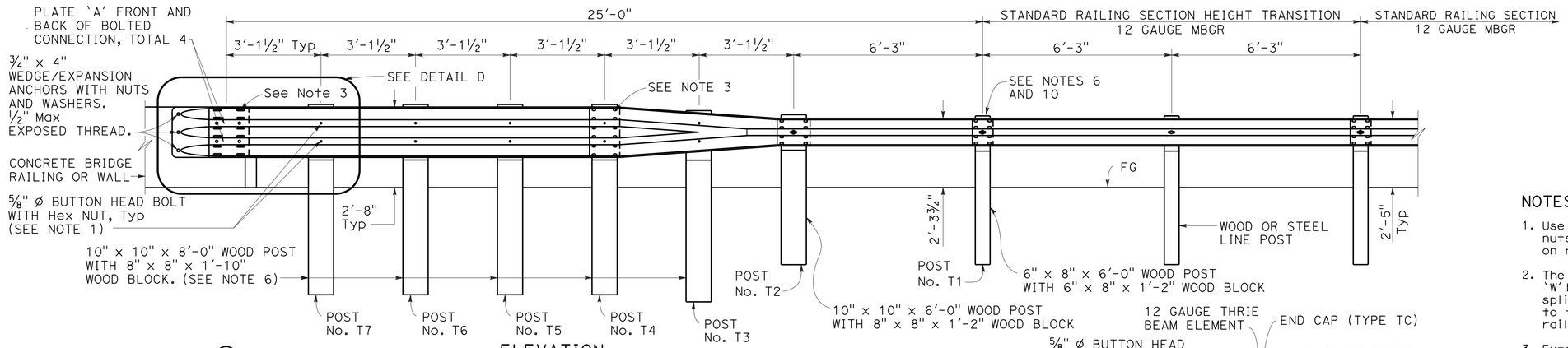

ELEVATION

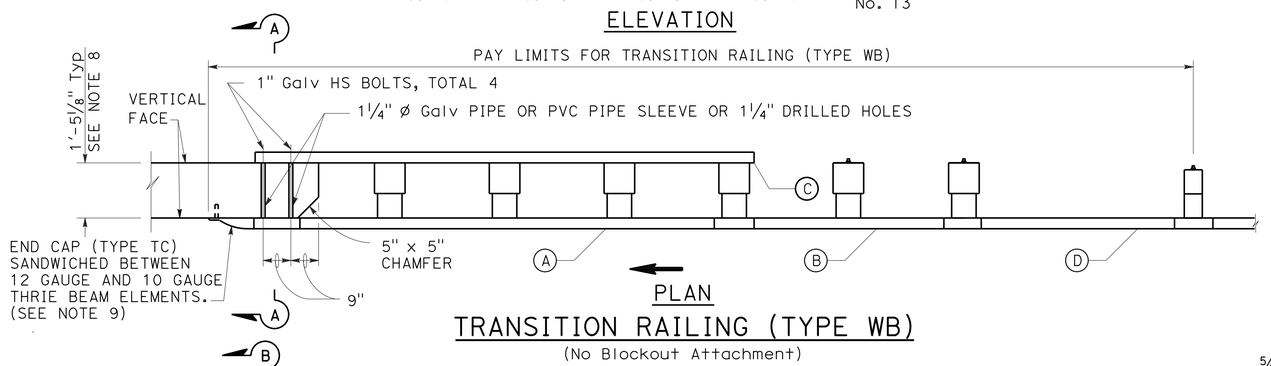

PLAN

TRANSITION RAILING (TYPE WB)

(No Blockout Attachment)

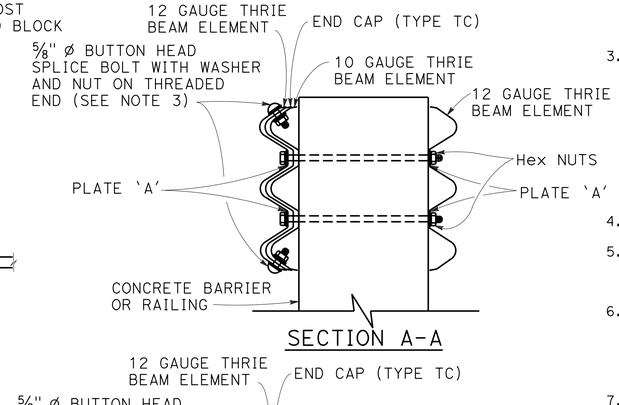

SECTION A-A

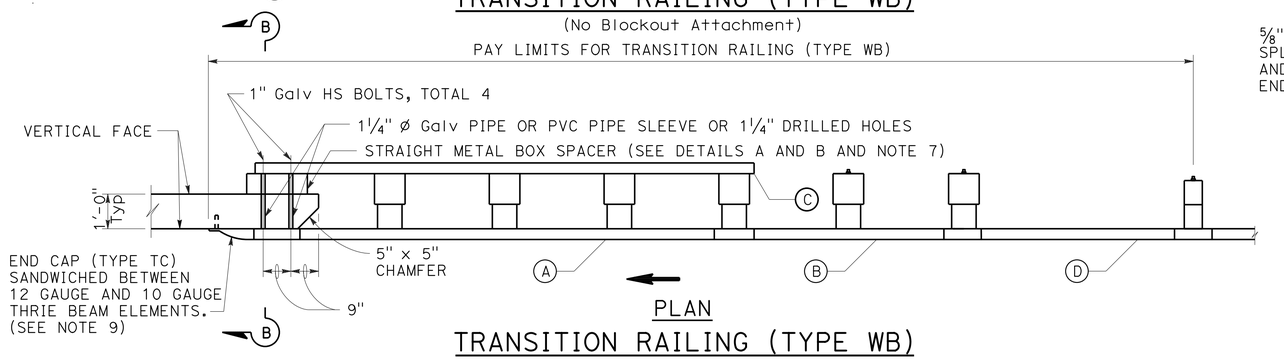

PLAN

TRANSITION RAILING (TYPE WB)

(Blockout Attachment)

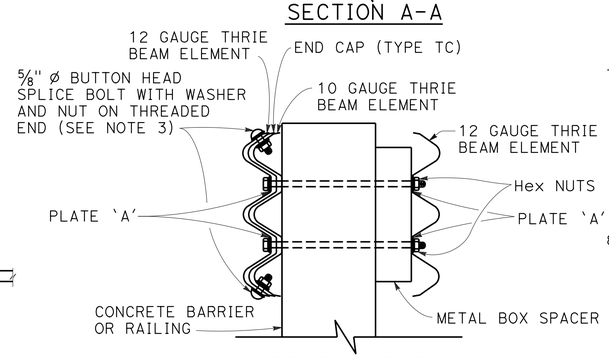

SECTION B-B

NOTES:

1. Use ⅝" Ø Button head bolts and hex nuts for connections to posts. No washer on rail face for bolted connections to post.
2. The nested rail elements, end cap, and 'W' beam to thrie beam element may be spliced together prior to bolting the elements to the wood post and concrete barrier or railing.
3. Exterior splice bolt holes for rail element splices at Post No. T4 and the connection to the concrete barrier or railing shall be the standard 29/32" x 1⅛" slot size. Interior splice bolt holes at these locations may be increased up to 1¼" Ø. Only the top 2 and the bottom 2 splice bolts with washers and nuts are required for rail splices at Post No. T4 and the connection to the concrete barrier or railing.
4. Direction of adjacent traffic indicated by ➡.
5. The top elevation of Posts No. T2 through No. T7 shall not project more than 1" above the top elevation of the rail element.
6. Typically, the railing connected to Transition Railing (Type WB) will be either standard railing section of metal beam guard railing with height transition ratio of 120:1 or an approved Caltrans end treatment attached to Post No. T1.
7. The depth of the metal box spacer varies from the 5⅛" to 1½" and is dependent on the width of the concrete railing or wall. The combined dimension for the depth of the metal box spacer plus the width of railing or wall is typically 17⅛". Where the space between the backside of the concrete railing or wall and the rear thrie beam element is less than 1½", metal plates similar to Plate 'A' are to be used as spacers.
8. Where the width of the concrete railing or wall is greater than 17⅛", wood blocks are to be used to fill the space created between the backside of Posts No. T4 through No. T7 and the rear thrie beam element. These wood blocks shall be 8" in width and 1'-2" in length. The dimension between the front thrie beam element and the rear thrie beam element is to match the width of the concrete railing or wall.
9. End cap may be installed over 12 gauge and 10 gauge thrie beam elements where transition railing is installed on the departure end of bridge railing.
10. Conform standard railing section height to 2'-3¾" at Post No. T1 using height transition ratio of 120:1.

LEGEND

- (A) NESTED THRIE BEAM ELEMENTS (ONE 12 GAUGE ELEMENT NESTED OVER ONE 10 GAUGE ELEMENT).
- (B) ONE 10 GAUGE "W" BEAM TO THRIE BEAM ELEMENT.
- (C) ONE 12 GAUGE THRIE BEAM ELEMENT.
- (D) ONE 10 GAUGE "W" BEAM RAIL ELEMENT (7'-3½" LENGTH)

10 GAUGE = 0.135" THICK

12 GAUGE = 0.108" THICK

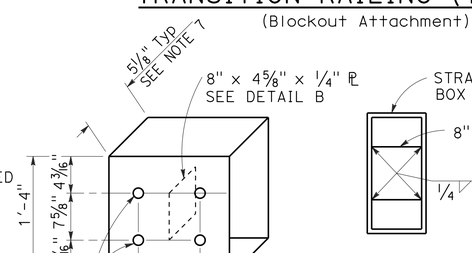

DETAIL A

STRAIGHT METAL BOX SPACER

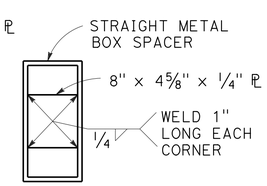

DETAIL B

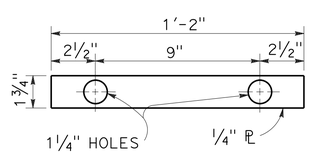

DETAIL C

PLATE 'A'

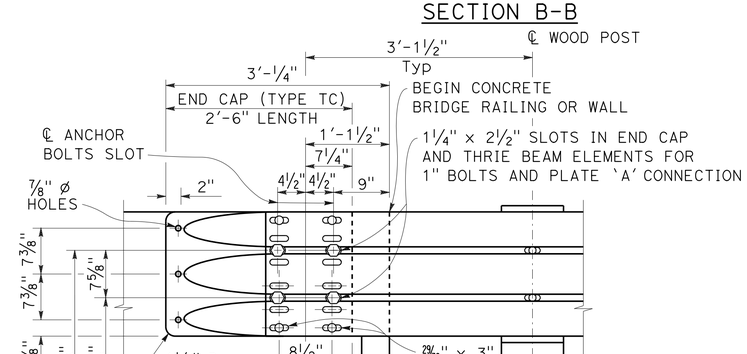

DETAIL D

TRANSITION RAILING (TYPE WB)

CONSTRUCTION DETAILS

NO SCALE

C-2

TOM PHILLIPS — TODD LARK — L.R. ASHLEY — REVISED BY — DATE REVISED — CALCULATED-DESIGNED BY — CHECKED BY — FUNCTIONAL SUPERVISOR

STATE OF CALIFORNIA - DEPARTMENT OF TRANSPORTATION — DESIGN — Caltrans

P:\PROJ\01\0B310\drafting\01-0B310\01120001151ga002.dgn

LAST REVISION 04-02-15 — DATE PLOTTED => 21-JUL-2015 — TIME PLOTTED => 11:05

Dist	COUNTY	ROUTE	POST MILES TOTAL PROJECT	SHEET No.	TOTAL SHEETS
01	DN	199	8.7, 21.7	10	54

REGISTERED CIVIL ENGINEER 6/25/15 DATE

June 29, 2015
PLANS APPROVAL DATE

REGISTERED PROFESSIONAL ENGINEER Thomas Jon Phillips No. 64633 Exp. 6/30/17 CIVIL STATE OF CALIFORNIA

THE STATE OF CALIFORNIA OR ITS OFFICERS OR AGENTS SHALL NOT BE RESPONSIBLE FOR THE ACCURACY OR COMPLETENESS OF SCANNED COPIES OF THIS PLAN SHEET.

NOTES:

1. FOR TRANSITION RAILING (TYPE WB) DETAILS, SEE SHEET C-2.
2. DIRECTION OF ADJACENT TRAFFIC INDICATED BY ➡ .

ABBREVIATIONS:

GPI GEOSYNTHETIC PAVEMENT INTERLAYER (PAVING FABRIC)

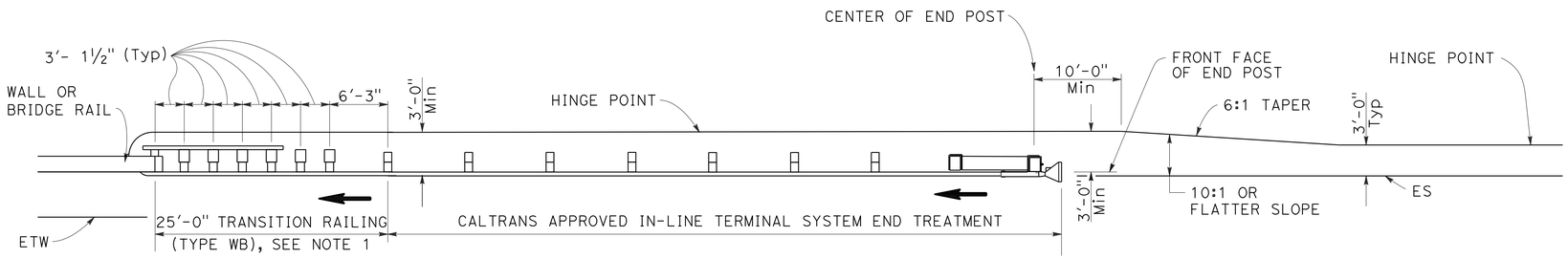

GUARDRAIL LAYOUT

(GUARD RAILING INSTALLATION AT STRUCTURE APPROACH WITH AN IN-LINE END TREATMENT AT TRAFFIC APPROACH END OF RAILING)

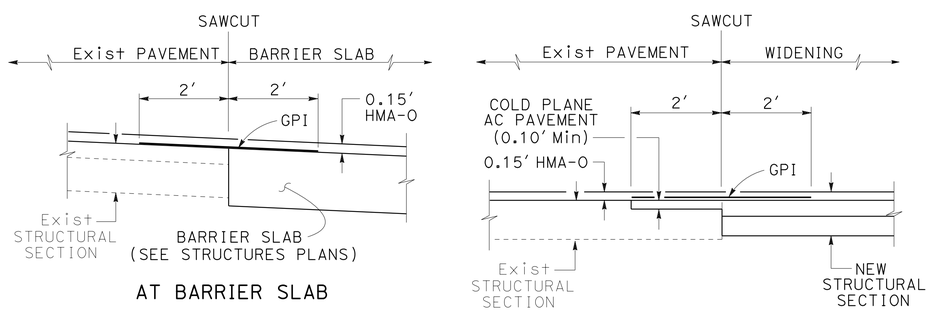

GEOSYNTHETIC PAVEMENT INTERLAYER

(PAVING FABRIC)

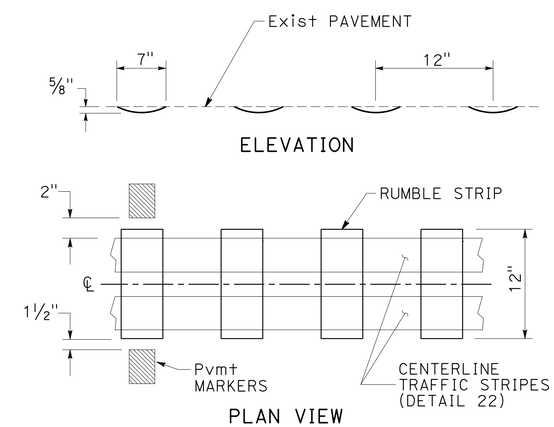

CENTERLINE RUMBLE STRIP

CONSTRUCTION DETAILS

NO SCALE

C-3

REVISED BY | DATE REVISED
TOM PHILLIPS | TODD LARK
CALCULATED-DESIGNED BY | CHECKED BY
FUNCTIONAL SUPERVISOR
L.R. ASHLEY

STATE OF CALIFORNIA - DEPARTMENT OF TRANSPORTATION
Caltrans®
DESIGN

P:\PROJ\01\0B310\drafting\01-0B310\01120001151ga003.dgn

LAST REVISION 04-02-15 | DATE PLOTTED => 21-JUL-2015 | TIME PLOTTED => 11:05

Dist	COUNTY	ROUTE	POST MILES TOTAL PROJECT	SHEET No.	TOTAL SHEETS
01	DN	199	8.7, 21.7	11	54

REGISTERED CIVIL ENGINEER 6/25/15 DATE

June 29, 2015
PLANS APPROVAL DATE

REGISTERED PROFESSIONAL ENGINEER Thomas Jon Phillips No. 64633 Exp. 6/30/17 CIVIL STATE OF CALIFORNIA

THE STATE OF CALIFORNIA OR ITS OFFICERS OR AGENTS SHALL NOT BE RESPONSIBLE FOR THE ACCURACY OR COMPLETENESS OF SCANNED COPIES OF THIS PLAN SHEET.

NOTES:

1. GRIND EXISTING SURFACES TO ACCOMODATE A MINIMUM TAPER THICKNESS OF 0.10′ WHEN EITHER:
   A. HMA MATERIAL, SUCH AS RUBBERIZED, POLYMER MODIFIED OR OPEN GRADED IS UNSUITABLE FOR RAKING TO MAXIMUM 0.20′ THICKNESS AT THE CONFORM.
   B. TEMPORARY TAPER WILL BE IN PLACE FOR MORE THAN 14 DAYS.
2. PERMANENT SURFACE MAY BE EXISTING OR NEW PAVEMENT.
3. ROADWAY SURFACE IS THE TOP OF THE EXISTING SURFACE OR THE TOP OF THE PLANED SURFACE.
4. FOR TEMPORARY TAPERS ON BRIDGE DECKS AND APPROACH SLABS, CONSTRUCT TEMPORARY TAPER WITH POYESTER CONCRETE.
5. IF AUTHORIZED, ALTERNATIVE MATERIALS OR METHODS MAY BE USED TO PRODUCE THE REQUIRED TAPER.

LEGEND:

HMA MATERIAL (TEMPORARY TAPER) (SEE NOTE 4)

IF NECESSARY, COLD PLANE ASPHALT CONCRETE PAVEMENT AND PLACE HMA MATERIAL (SEE NOTE 1)

Vert	SLOPE RATIO Horiz/Vert
0-0.10′	70:1
GREATER THAN 0.10′	160:1

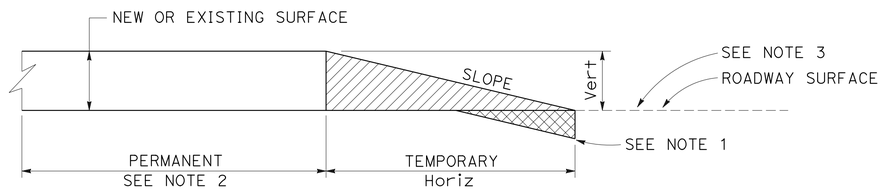

TYPICAL PAVING CONFORM FOR TEMPORARY CONSTRUCTION TAPERS

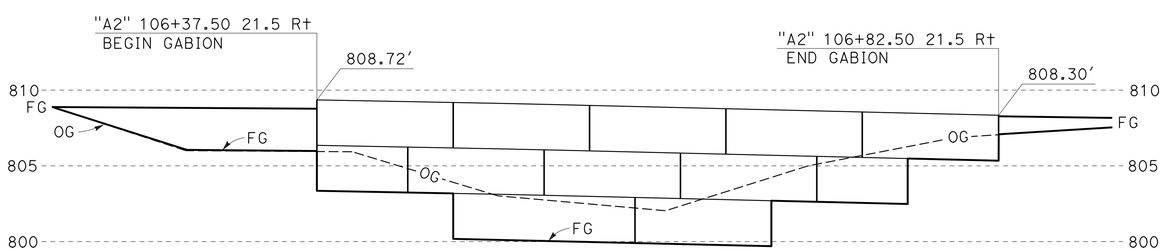

SCALE 1"=5′

GABION ELEVATION

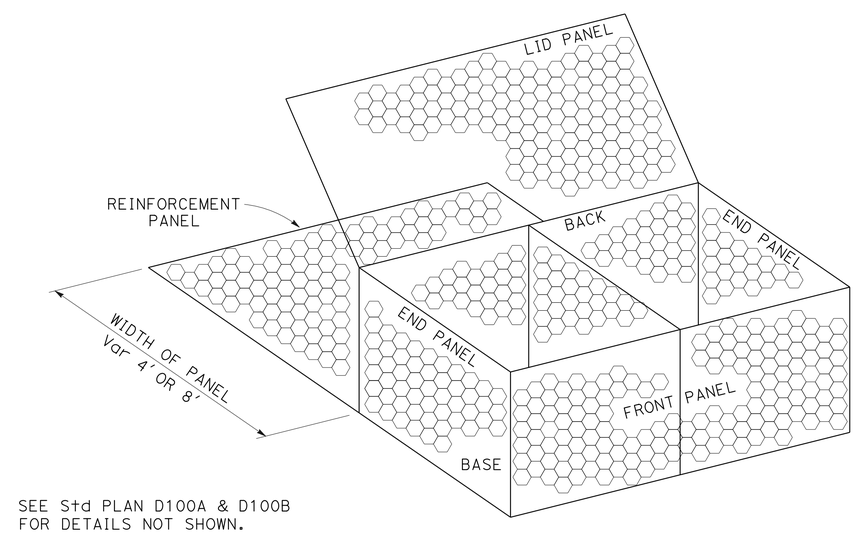

SEE Std PLAN D100A & D100B FOR DETAILS NOT SHOWN.

GABION BASKET WITH REINFORCEMENT PANEL

CONSTRUCTION DETAILS

NO SCALE

C-4

REVISED BY | DATE REVISED
TOM PHILLIPS | TODD LARK
CALCULATED-DESIGNED BY | CHECKED BY
FUNCTIONAL SUPERVISOR
L.R. ASHLEY
STATE OF CALIFORNIA - DEPARTMENT OF TRANSPORTATION
Caltrans
DESIGN

P:\PROJ\01\0B310\drafting\01-0B310\01120001151ga004.dgn

LAST REVISION 04-02-15 | DATE PLOTTED => 21-JUL-2015 | TIME PLOTTED => 11:05

Dist	COUNTY	ROUTE	POST MILES TOTAL PROJECT	SHEET No.	TOTAL SHEETS
01	DN	199	8.7, 21.7	12	54

Sheri M. Rodriguez 6-25-15
REGISTERED CIVIL ENGINEER DATE

June 29, 2015
PLANS APPROVAL DATE

REGISTERED PROFESSIONAL ENGINEER SHERI M. RODRIGUEZ No. C66861 Exp. 9-30-16 CIVIL STATE OF CALIFORNIA

THE STATE OF CALIFORNIA OR ITS OFFICERS OR AGENTS SHALL NOT BE RESPONSIBLE FOR THE ACCURACY OR COMPLETENESS OF SCANNED COPIES OF THIS PLAN SHEET.

STATIONARY MOUNTED CONSTRUCTION AREA SIGNS

◯	TYPE	SIGN MESSAGE	PANEL SIZE	No. OF POSTS AND SIZE	No. OF SIGNS
A	C40(CA)	TRAFFIC FINES DOUBLED IN CONSTRUCTION ZONES	108" x 42"	2 - 6" x 6"	4
B	W20-1	ROAD WORK AHEAD	36" x 36"	1 - 4" x 6" OR WOOD POLE	5
C	W4-11	BIKES MAY USE FULL LANE	30" x 30"	1 - 4" x 6"	4
D	W20-4	ONE LANE ROAD AHEAD	36" x 36"	1 - 4" x 6" OR WOOD POLE	4
E	W3-3	SIGNAL AHEAD SYMBOL	36" x 36"	1 - 4" x 6" OR WOOD POLE	2
F	R10-6	STOP HERE ON RED	24" x 36"	1 - 4" x 6"	2
G	W3-1	STOP AHEAD SYMBOL	36" x 36"	1 - 4" x 6"	2
	C29(CA)	500 FT	12" x 7"		
H	R1-1	STOP SIGN	30" x 30"	1 - 4" x 6"	2
I	W1-4R	REVERSE CURVE SIGN	36" x 36"	1 - 4" x 6"	2
J	G20-2	END ROAD WORK	36" x 18"	1 - 4" x 4"	4

NOTES:

1. EXACT SIGN LOCATION TO BE DETERMINED BY THE ENGINEER.
2. (CA) DESIGNATES CALIFORNIA SIGN CODES.
3. SEE SHEET CS-2 FOR ADDITIONAL CONSTRUCTION AREA SIGNS.
4. FOR SIGNS WITH FLASHING BEACON, PLACE SIGN ON WOOD POLE. (SEE ELECTRICAL PLANS)

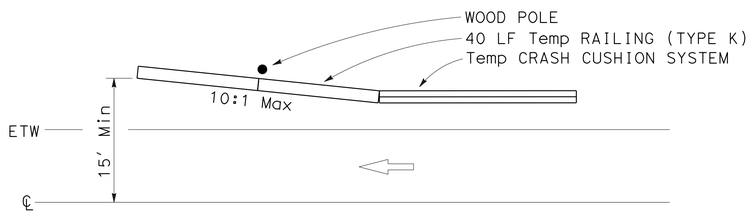

WOOD POLE PROTECTION DETAIL

ABBREVIATIONS:

FLASHING BEACON (SEE ELECTRICAL PLANS)

* WOOD POLE REQUIRES PROTECTION

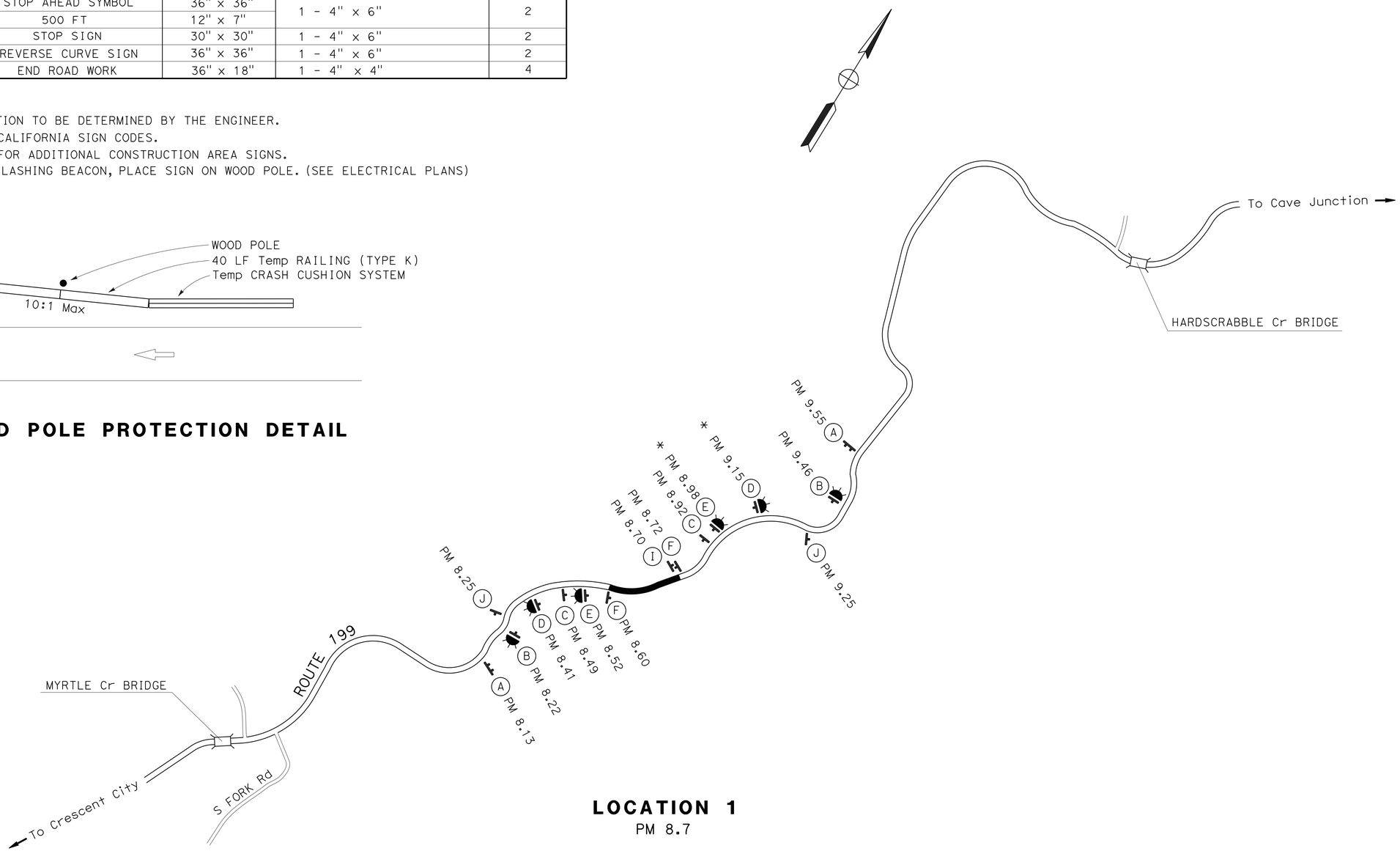

LOCATION 1
PM 8.7

APPROVED FOR CONSTRUCTION AREA SIGN WORK ONLY

CONSTRUCTION AREA SIGNS
NO SCALE

CS-1

STATE OF CALIFORNIA - DEPARTMENT OF TRANSPORTATION
Caltrans® TRAFFIC OPS

SHERI M. RODRIGUEZ | PAUL W. HAILEY | RICHARD MULLEN | REVISED BY | DATE REVISED | CALCULATED-DESIGNED BY | CHECKED BY | FUNCTIONAL SUPERVISOR

P:\PROJ\01\0B310\draffing\01-0B310\01120001151a001.dgn

LAST REVISION 04-02-15 | DATE PLOTTED => 21-JUL-2015 | TIME PLOTTED => 11:05

BORDER LAST REVISED 7/2/2010 | USERNAME => s120115 | DGN FILE => 01120001151a001.dgn | RELATIVE BORDER SCALE IS IN INCHES 0 1 2 3 | UNIT 0042 | PROJECT NUMBER & PHASE 01120001151

Dist	COUNTY	ROUTE	POST MILES TOTAL PROJECT	SHEET No.	TOTAL SHEETS
01	DN	199	8.7, 21.7	13	54

Sheri M. Rodriguez 6-25-15
REGISTERED CIVIL ENGINEER DATE

June 29, 2015
PLANS APPROVAL DATE

REGISTERED PROFESSIONAL ENGINEER
SHERI M. RODRIGUEZ
No. C66861
Exp. 9-30-16
CIVIL
STATE OF CALIFORNIA

THE STATE OF CALIFORNIA OR ITS OFFICERS OR AGENTS SHALL NOT BE RESPONSIBLE FOR THE ACCURACY OR COMPLETENESS OF SCANNED COPIES OF THIS PLAN SHEET.

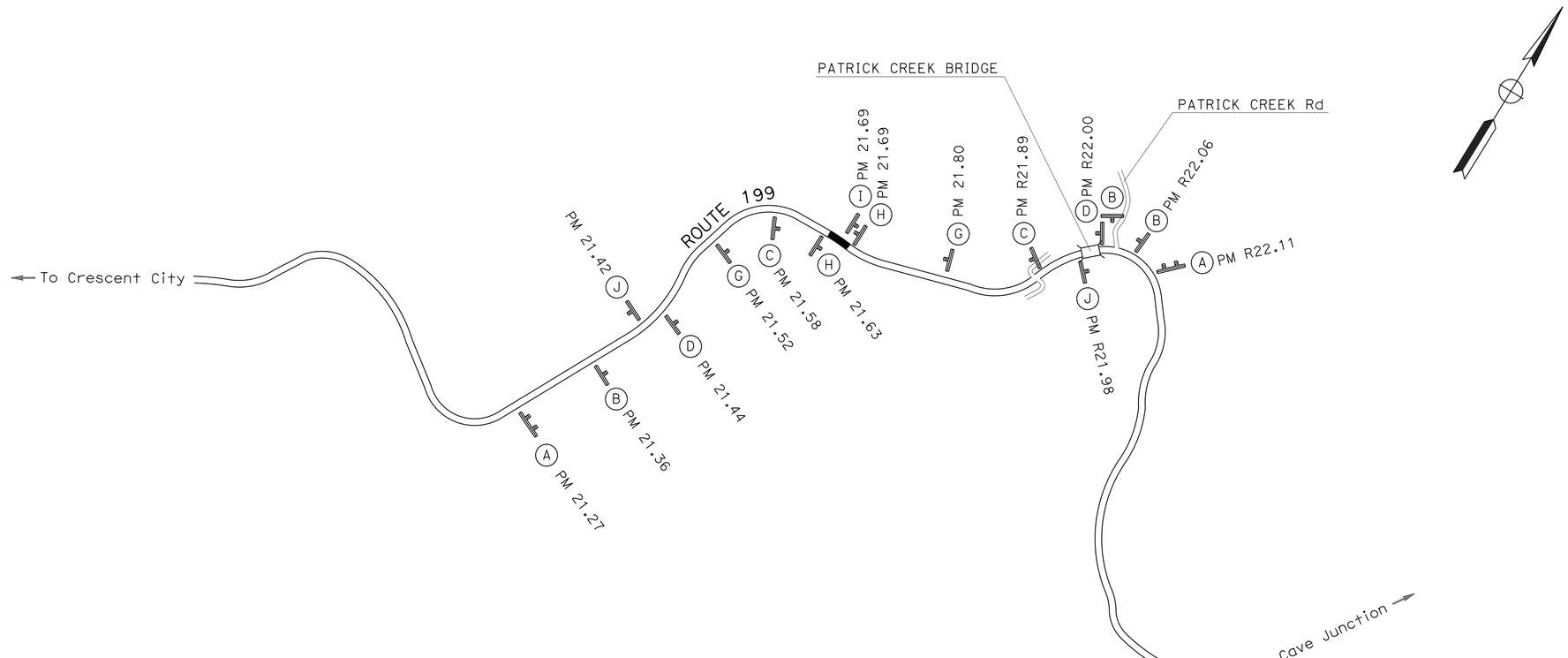

LOCATION 2
PM 21.7

APPROVED FOR CONSTRUCTION AREA SIGN WORK ONLY

CONSTRUCTION AREA SIGNS
NO SCALE

CS-2

STATE OF CALIFORNIA - DEPARTMENT OF TRANSPORTATION
Caltrans® **TRAFFIC OPS**

FUNCTIONAL SUPERVISOR: RICHARD MULLEN
CALCULATED-DESIGNED BY: SHERI M. RODRIGUEZ
CHECKED BY: PAUL W. HAILEY
REVISED BY / DATE REVISED

P:\PROJ\01\0B310\drafting\01-0B310\01120001151a002.dgn

LAST REVISION 04-02-15 | DATE PLOTTED => 21-JUL-2015 | TIME PLOTTED => 11:05

BORDER LAST REVISED 7/2/2010 | USERNAME => s120115 | DGN FILE => 01120001151a002.dgn | RELATIVE BORDER SCALE IS IN INCHES 0 1 2 3 | UNIT 0042 | PROJECT NUMBER & PHASE 01120001151

Dist	COUNTY	ROUTE	POST MILES TOTAL PROJECT	SHEET No.	TOTAL SHEETS
01	DN	199	8.7, 21.7	14	54

REGISTERED CIVIL ENGINEER Sheri M. Rodriguez DATE 6-25-15

PLANS APPROVAL DATE June 29, 2015

REGISTERED PROFESSIONAL ENGINEER SHERI M. RODRIGUEZ No. C66861 Exp. 9-30-16 CIVIL STATE OF CALIFORNIA

THE STATE OF CALIFORNIA OR ITS OFFICERS OR AGENTS SHALL NOT BE RESPONSIBLE FOR THE ACCURACY OR COMPLETENESS OF SCANNED COPIES OF THIS PLAN SHEET.

LEGEND:

YELLOW STRIPE	YELLOW THERMOPLASTIC TRAFFIC STRIPE (HAZARDOUS WASTE)
X	PAVEMENT STRIPING NUMBER
	COLD PLANE AC PAVEMENT
	GABION

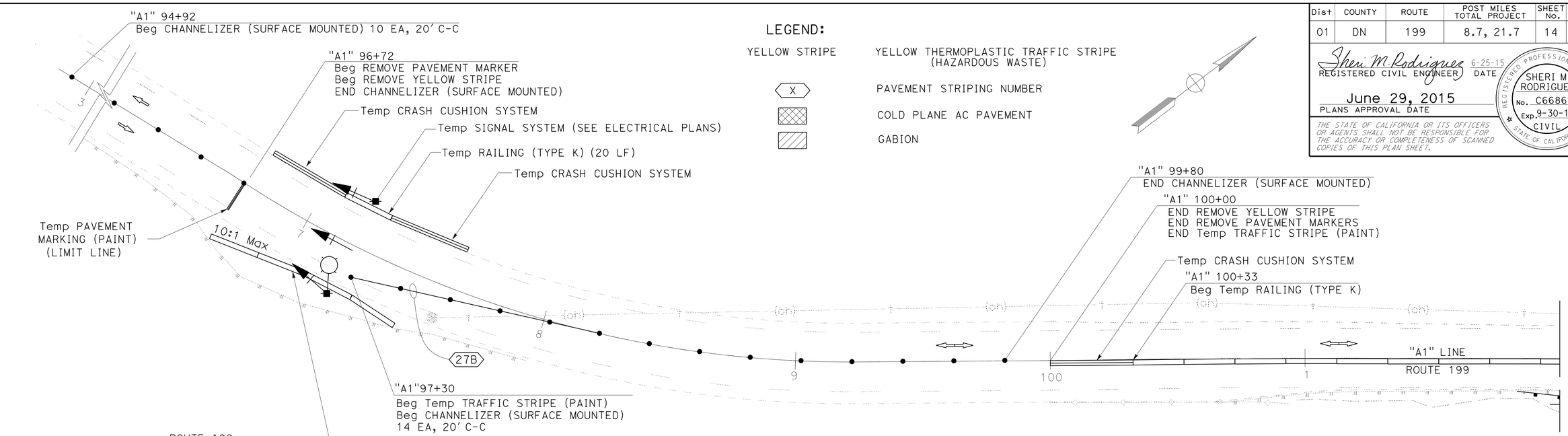

STAGE 1:

1. INSTALL Temp SIGNAL SYSTEM & TRAFFIC CONTROL DEVICES AS PER THESE PLANS.
2. CONSTRUCT RETAINING WALL PER STRUCTURE PLANS.
3. CONSTRUCT STRUCTURAL SECTION FOR NEW SHOULDER.
4. CONSTRUCT GUARDRAIL.

STAGE 2:

1. REMOVE Temp SIGNAL SYSTEM & TRAFFIC CONTROL REQUIRED FOR STAGE 1.
2. PLACE HOT MIX ASPHALT.
3. PLACE PERMANENT PAVEMENT DELINEATION.
4. COMPLETE REMAINING ROADWAY ITEMS.

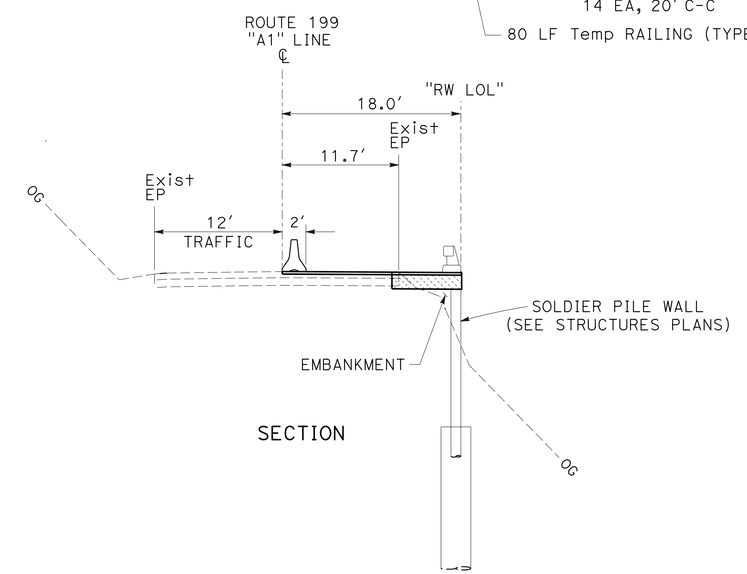

SECTION

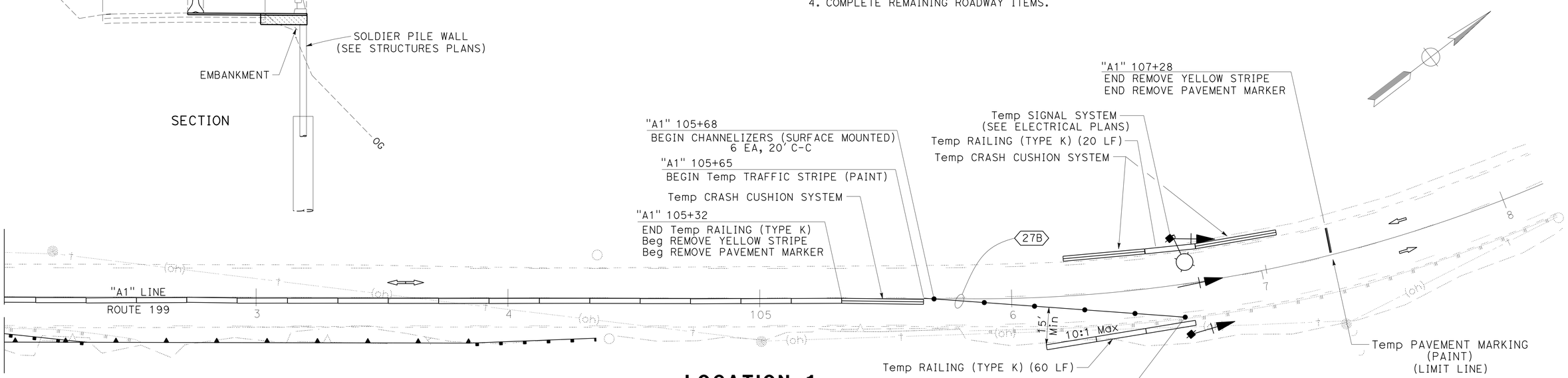

LOCATION 1
PM 8.7

APPROVED FOR STAGE CONSTRUCTION AND TRAFFIC HANDLING WORK ONLY

STAGE CONSTRUCTION TRAFFIC HANDLING PLAN SC-1

NO SCALE

STATE OF CALIFORNIA - DEPARTMENT OF TRANSPORTATION
Caltrans® TRAFFIC OPS

FUNCTIONAL SUPERVISOR: RICHARD MULLEN
CALCULATED-DESIGNED BY: SHERI M. RODRIGUEZ
CHECKED BY: PAUL W. HAILEY
REVISED BY / DATE REVISED

P:\PROJ\01\0B310\draffing\01-0B310\01120001151ma001.dgn

LAST REVISION 04-02-15 | DATE PLOTTED => 21-JUL-2015 | TIME PLOTTED => 11:05

Dist	COUNTY	ROUTE	POST MILES TOTAL PROJECT	SHEET No.	TOTAL SHEETS
01	DN	199	8.7, 21.7	15	54

Sheri M. Rodriguez 6-25-15
REGISTERED CIVIL ENGINEER DATE

June 29, 2015
PLANS APPROVAL DATE

REGISTERED PROFESSIONAL ENGINEER
SHERI M. RODRIGUEZ
No. C66861
Exp. 9-30-16
CIVIL
STATE OF CALIFORNIA

THE STATE OF CALIFORNIA OR ITS OFFICERS OR AGENTS SHALL NOT BE RESPONSIBLE FOR THE ACCURACY OR COMPLETENESS OF SCANNED COPIES OF THIS PLAN SHEET.

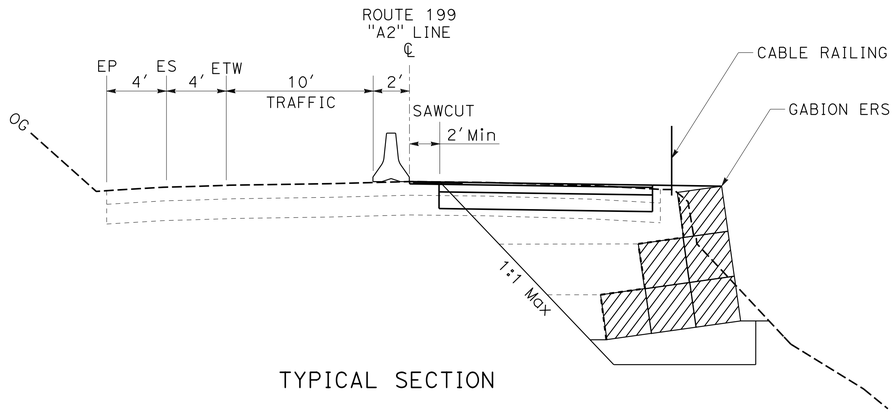

TYPICAL SECTION

NOTE:

LINE OF SIGHT BETWEEN STOP SIGNS MUST BE MAINTAINED AT ALL TIMES, OTHERWISE TRAFFIC MUST BE CONTROLLED BY FLAGGER.

STAGE 1:

1. INSTALL Temp TRAFFIC CONTROL DEVICES AS PER THESE PLANS.
2. CONSTRUCT GABION ERS AND CABLE RAILING.

STAGE 2:

1. REMOVE Temp TRAFFIC CONTROL DEVICES.
2. PLACE HOT MIX ASPHALT.
3. PLACE PERMANENT PAVEMENT DELINEATION.
4. COMPLETE REMAINING ROADWAY ITEMS.

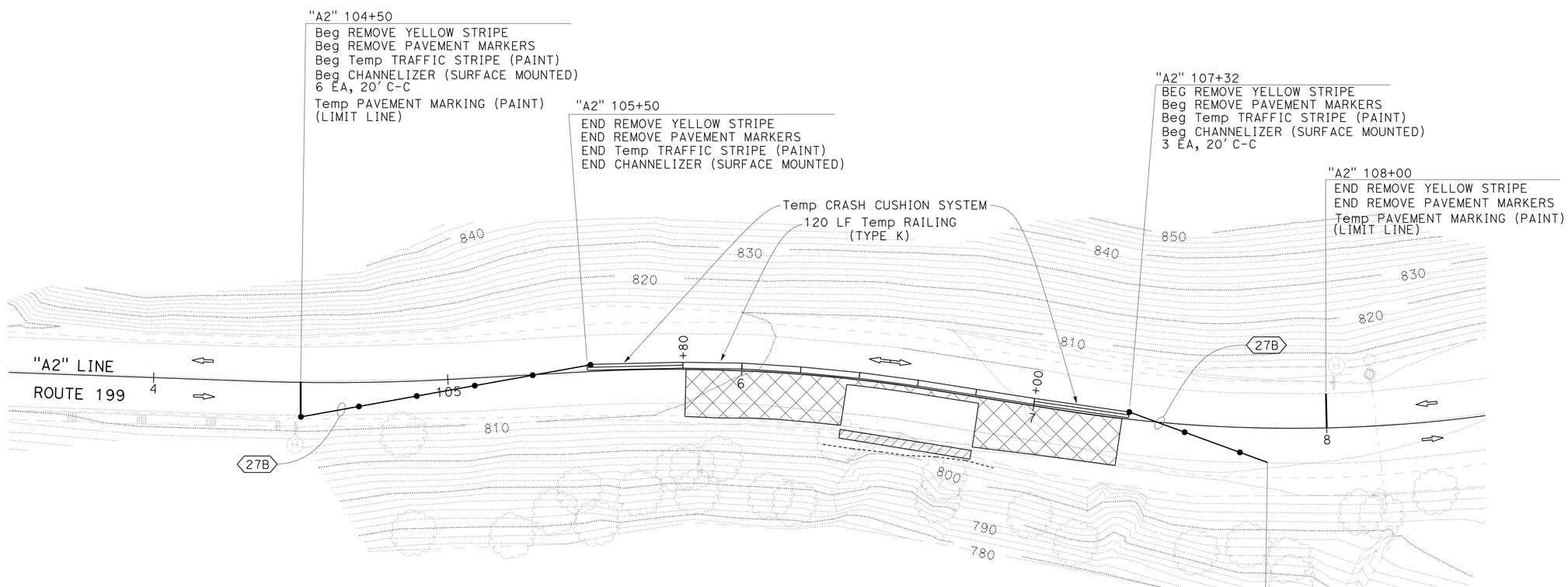

LOCATION 2

PM 21.7

APPROVED FOR STAGE CONSTRUCTION AND TRAFFIC HANDLING WORK ONLY

STAGE CONSTRUCTION TRAFFIC HANDLING PLAN SC-2

NO SCALE

REVISED BY | DATE REVISED
SHERI M. RODRIGUEZ | PAUL W. HAILEY
CALCULATED-DESIGNED BY | CHECKED BY
FUNCTIONAL SUPERVISOR: RICHARD MULLEN

STATE OF CALIFORNIA - DEPARTMENT OF TRANSPORTATION
Caltrans® TRAFFIC OPS

P:\PROJ\01\0B310\draffing\01-0B310\01120001151ma002.dgn

LAST REVISION 04-02-15 | DATE PLOTTED => 21-JUL-2015 | TIME PLOTTED => 11:05

Dist	COUNTY	ROUTE	POST MILES TOTAL PROJECT	SHEET No.	TOTAL SHEETS
01	DN	199	8.7, 21.7	16	54

Sheri M. Rodriguez 6-25-15
REGISTERED CIVIL ENGINEER DATE

June 29, 2015
PLANS APPROVAL DATE

REGISTERED PROFESSIONAL ENGINEER
SHERI M. RODRIGUEZ
No. C66861
Exp. 9-30-16
CIVIL
STATE OF CALIFORNIA

THE STATE OF CALIFORNIA OR ITS OFFICERS OR AGENTS SHALL NOT BE RESPONSIBLE FOR THE ACCURACY OR COMPLETENESS OF SCANNED COPIES OF THIS PLAN SHEET.

TRAFFIC CONTROL DEVICES

LOCATION		CHANNELIZER (SURFACE MOUNTED) WHITE	Temp RAILING (TYPE K)	Temp CRASH CUSHION SYSTEM
FROM	TO	EA	LF	EA
PM 8.98, L†			40	1
PM 9.15, L†			40	1
"A1" 94+92	"A1" 96+72	10		
"A1" 96+71, R†	"A1" 97+51, R†		80	
"A1" 96+84, L†	"A1" 97+69, L†		20	2
"A1" 97+30	"A1" 99+80	14		
"A1" 100+00				1
"A1" 100+33	"A1" 105+32		500	
"A1" 105+32				1
"A1" 105+68	"A1" 106+68	6		
"A1" 106+12, R†	"A1" 106+74, R†		60	
"A1" 106+21, L†	"A1" 107+06, L†		20	2
"A2" 104+50	"A2" 105+50	6		
"A2" 105+50				1
"A2" 105+80	"A2" 107+00		120	
"A2" 107+00				1
"A2" 107+32	"A2" 107+82	3		
	TOTAL	39	880	10

TEMPORARY PAVEMENT DELINEATION

LOCATION		LENGTH	DETAIL	REMOVE YELLOW THERMOPLASTIC TRAFFIC STRIPE (HAZARDOUS WASTE)	REMOVE PAVEMENT MARKERS	Temp TRAFFIC STRIPE (PAINT)	Temp PAVEMENT MARKING (PAINT)	REMOVE PAINTED TRAFFIC STRIPE	REMOVE PAINTED PAVEMENT MARKING
FROM	TO	LF		LF	EA	LF	SQFT	LF	SQFT
"A1" 96+72	"A1" 100+00	328	22	656	52				
"A1" 96+72			LIMIT LINE				12		12
"A1" 97+30	"A1" 100+00	270	27B			270		270	
"A1" 105+32	"A1" 107+28	163	22	326	14				
"A1" 105+65	"A1" 106+68	103	27B			103		103	
"A1" 107+28			LIMIT LINE				12		12
"A2" 104+50	"A2" 105+50	100	22	200	10				
"A2" 104+50			LIMIT LINE				12		12
"A2" 104+50	"A2" 105+50	100	27B			100		100	
"A2" 107+32	"A2" 108+00	68	22	136	6				
"A2" 107+32	"A2" 107+82	50	27B			50		50	
"A2" 108+00			LIMIT LINE				12		12
			TOTAL	1318	82	523	48	523	48

STAGE CONSTRUCTION & TRAFFIC HANDLING QUANTITIES SCQ-1

REVISED BY | DATE REVISED
SHERI M. RODRIGUEZ | PAUL W. HAILEY
CALCULATED-DESIGNED BY | CHECKED BY
FUNCTIONAL SUPERVISOR: RICHARD MULLEN
STATE OF CALIFORNIA - DEPARTMENT OF TRANSPORTATION
Caltrans® TRAFFIC OPS
P:\PROJ\01\0B310\drafting\01-0B310\01120001151mc001.dgn

LAST REVISION 04-02-15 | DATE PLOTTED => 21-JUL-2015 | TIME PLOTTED => 11:05

Dist	COUNTY	ROUTE	POST MILES TOTAL PROJECT	SHEET No.	TOTAL SHEETS
01	DN	199	8.7, 21.7	17	54

REGISTERED CIVIL ENGINEER — DATE 3-5-15

PLANS APPROVAL DATE June 29, 2015

SHERI M. RODRIGUEZ No. C66861 Exp. 9-30-16 CIVIL — REGISTERED PROFESSIONAL ENGINEER — STATE OF CALIFORNIA

THE STATE OF CALIFORNIA OR ITS OFFICERS OR AGENTS SHALL NOT BE RESPONSIBLE FOR THE ACCURACY OR COMPLETENESS OF SCANNED COPIES OF THIS PLAN SHEET.

NOTES:

1. CALIFORNIA CODES ARE DESIGNATED BY (CA). OTHERWISE, FEDERAL (MUTCD) CODES ARE SHOWN.
2. ALL SIGNS SHALL HAVE A BLACK LEGEND ON FLUORESCENT ORANGE BACKGROUND AND SHALL BE EQUIPPED WITH AT LEAST TWO 16" x 16" ORANGE FLAGS FOR DAYTIME CLOSURE OR FLASHING BEACONS FOR LANE CLOSURE DURING HOURS OF DARKNESS.
3. ALL CONES USED FOR LANE CLOSURES DURING THE HOURS OF DARKNESS SHALL BE FITTED WITH RETROREFLECTIVE BANDS OR SLEEVES.
4. WHEN A PILOT CAR IS USED, PLACE A C37 (CA) SIGN AT ALL INTERSECTIONS WITHIN TRAFFIC CONTROL AREA. WHERE VEHICULAR TRAFFIC CAN NOT EFFECTIVELY SELF-REGULATE, AT LEAST ONE FLAGGER SHALL BE USED AT EACH INTERSECTION WITHIN THE TRAFFIC CONTROL AREA.
5. FLAGGER SHOULD STAND IN A CONSPICUOUS PLACE, FACING TRAFFIC AT ALL TIMES, BE VISIBLE TO APPROACHING TRAFFIC AS WELL AS APPROACHING VEHICLES AFTER THE FIRST VEHICLE HAS STOPPED.
6. ADDITIONAL ADVANCE FLAGGERS ARE REQUIRED.
7. WHEN FLAGGER IS NOT VISIBLE FROM THIS LOCATION PLACE A C29 (CA) SIGN BELOW THE C9A (CA) SIGN.

LEGEND

- TRAFFIC CONE
- TEMPORARY SIGN
- DIRECTION OF TRAVEL
- PORTABLE FLASHING BEACON
- FLAGGER

SIGN PANEL SIZE (MINIMUM)

- A — 48" x 48" - SPEED OF 45 mph OR MORE; 36" x 36" - SPEED LESS THAN 45 mph
- B — 30" x 30"
- C — UNUSED
- D — UNUSED
- E — 20" x 7"

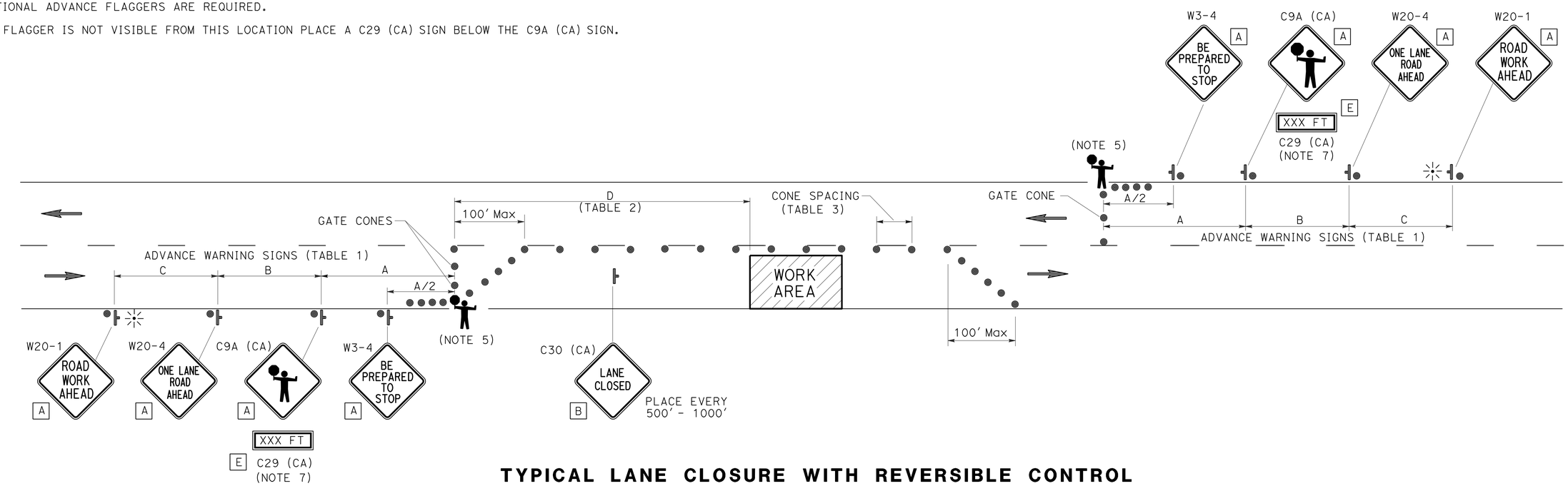

TYPICAL LANE CLOSURE WITH REVERSIBLE CONTROL

TABLE 1

ADVANCE WARNING SIGN SPACING

ROAD TYPE	Min A	Min B	Min C
	ft		
URBAN (25 mph OR LESS)	100	100	100
URBAN (30 mph TO 40 mph)	250	250	250
URBAN (MORE THAN 40 mph)	350	350	350
RURAL	500	500	500
EXPRESSWAY / FREEWAY	1000	1500	2640

TABLE 2

BUFFER SPACE

APPROACH SPEED	Min D	DOWNGRADE Min D		
		-3%*	-6%*	-9%*
mph	ft			
25 & BELOW	155	158	165	173
30	200	205	215	227
35	250	257	271	287
40	305	315	333	354
45	360	378	400	427
50	425	446	474	507
55	495	520	553	593
60	570	598	638	686
65	645	682	728	785

* USE ON SUSTAINED DOWNGRADE STEEPER THAN -3 PERCENT AND LONGER THAN 1 MILE.

TABLE 3

Max CONE SPACING

POSTED SPEED	TAPER	TANGENT	CONFLICT*
mph	ft		
20	20	40	10
25	25	50	12
30	30	60	15
35	35	70	17
40	40	80	20
45	45	90	22
50	50	100	25
55	55	110	27
60	60	120	30
65	65	130	32

* USE WHERE THERE IS A CONFLICT BETWEEN EXISTING PAVEMENT MARKINGS AND CHANNELIZERS.

TRAFFIC HANDLING PLAN

NO SCALE

TH-1

APPROVED FOR TRAFFIC HANDLING WORK ONLY

REVISED BY | DATE REVISED

SHERI M. RODRIGUEZ — TROY A. ARSENEAU

CALCULATED-DESIGNED BY | CHECKED BY

FUNCTIONAL SUPERVISOR: RICHARD MULLEN

STATE OF CALIFORNIA - DEPARTMENT OF TRANSPORTATION — Caltrans® TRAFFIC OPERATIONS

P:\PROJ\01\0B310\drafting\01-0B310\0112000115md001.dgn

LAST REVISION 03-05-15 | DATE PLOTTED => 21-JUL-2015 | TIME PLOTTED => 11:05

Dist	COUNTY	ROUTE	POST MILES TOTAL PROJECT	SHEET No.	TOTAL SHEETS
01	DN	199	8.7, 21.7	18	54

REGISTERED CIVIL ENGINEER 6/25/15 DATE

June 29, 2015
PLANS APPROVAL DATE

REGISTERED PROFESSIONAL ENGINEER Thomas Jon Phillips No. 64633 Exp. 6/30/17 CIVIL STATE OF CALIFORNIA

THE STATE OF CALIFORNIA OR ITS OFFICERS OR AGENTS SHALL NOT BE RESPONSIBLE FOR THE ACCURACY OR COMPLETENESS OF SCANNED COPIES OF THIS PLAN SHEET.

ROADWAY

LOCATION (STATION) FROM	TO	CENTERLINE RUMBLE STRIP	ROADWAY EXCAVATION	ROADWAY EXCAVATION (NATURALLY OCCURING ASBESTOS)	CLASS 2 AGGREGATE BASE (CY)	SHOULDER BACKING	GEOSYNTHETIC PAVEMENT INTERLAYER (PAVING FABRIC)	COLD PLANE AC PAVEMENT	TACK COAT	HMA (TYPE A)	HMA OPEN GRADED (OPEN GRADED FRICTION COURSE)	EMBANKMENT (N)	GABION	CABLE RAILING	RSP FABRIC (CLASS 10)
		STA	CY	CY	CY	TON	SQYD	SQYD	TON	TON	TON	CY	CY	LF	SQYD
LOCATION 1															
"A1" 101+30.00	"A1" 104+80.00	3.5				25		420	0.21		60				
"A1" 101+60.00	"A1" 104+50.00		100		100		290			140		200			
LOCATION 2															
"A2" 105+81.00	"A2" 107+30.00	1.5				25					30				
"A2" 106+37.50	"A2" 106+82.50			150	100		45	200	0.21	110		100	107	50	50
TOTAL		5.0	100	150	100	50	335	620	0.42	250	90	300	107	50	50

(N) - NOT A SEPARATE PAY ITEM, FOR INFORMATION ONLY.

GUARDRAIL

LOCATION (STATION) FROM	TO	RECONSTRUCT GUARDRAIL (WOOD POST)	REMOVE GUARDRAIL	TRANSITION RAILING (TYPE WB)	ALTERNATIVE INLINE TERMINAL SYSTEM	TREATED WOOD WASTE
		LF	LF	EA	EA	LB
LOCATION 1						
"A1" 101+55	"A1" 101+80	25				
"A1" 101+80	"A1" 102+50		70			1100
"A1" 101+80	"A1" 102+05			1		
"A1" 103+85	"A1" 104+10			1		
"A1" 104+10	"A1" 104+35				1	
TOTAL		25	70	2	1	1100

TRAFFIC STRIPE

LOCATION (STATION) FROM	TO	DETAIL	4" THERMOPLASTIC TRAFFIC STRIPE (ENHANCED WET NIGHT VISIBILITY)	PAVEMENT MARKER (RETROREFLECTIVE-RECESSED)
			LF	EA
LOCATION 1				
"A1" 101+30	"A1" 104+80	22	700	140
"A1" 101+30	"A1" 104+80	27B	350	
LOCATION 2				
"A2" 104+50	"A2" 108+00	22	700	60
"A2" 104+50	"A2" 108+00	27B	350	
TOTAL			2100	200

TEMPORARY WATER POLLUTION CONTROL

LOCATION (STATION) FROM	TO	R+/L+	TEMPORARY CHECK DAM	TEMPORARY DRAINAGE INLET PROTECTION	TEMPORARY COVER	TEMPORARY REINFORCED SILT FENCE	TEMPORARY HYDRAULIC MULCH (BONDED FIBER MATRIX)
			LF	EA	SQYD	LF	SQYD
LOCATION 1							
"A1" 104+43		R+		1			
"A1" 101+30	"A1" 104+80	R+	90		50	290	230
LOCATION 2							
"A2" 108+15		R+		1			
"A2" 105+81	"A2" 107+30	R+	90		50	91	70
		TOTAL	180	2	100	381	300

TEMPORARY FENCE

LOCATION (STATION) FROM	TO	R+/L+	TEMPORARY FENCE (TYPE ESA)
			LF
LOCATION 1			
"A1" 101+60	"A1" 104+50	R+	290
LOCATION 2			
"A2" 106+19	"A2" 107+10	R+	91
		TOTAL	381

SUMMARY OF QUANTITIES

Q-1

REVISED BY | DATE REVISED
TOM PHILLIPS | TODD LARK
CALCULATED-DESIGNED BY | CHECKED BY
FUNCTIONAL SUPERVISOR: L.R. ASHLEY
STATE OF CALIFORNIA - DEPARTMENT OF TRANSPORTATION
Caltrans® DESIGN

P:\PROJ\01\0B310\drafting\01-0B310\01120001151pa001.dgn

LAST REVISION 04-02-15 | DATE PLOTTED => 15-SEP-2015 TIME PLOTTED => 11:29

Dist	COUNTY	ROUTE	POST MILES TOTAL PROJECT	SHEET No.	TOTAL SHEETS
01	DN	199	8.7, 21.7	19	54

Laura Lazzarotto
LICENSED LANDSCAPE ARCHITECT

June 29, 2015
PLANS APPROVAL DATE

LICENSED LANDSCAPE ARCHITECT
Laura Lazzarotto LA 4045
Signature
8-31-15
Renewal Date
6-25-15
Date
STATE OF CALIFORNIA

THE STATE OF CALIFORNIA OR ITS OFFICERS OR AGENTS SHALL NOT BE RESPONSIBLE FOR THE ACCURACY OR COMPLETENESS OF SCANNED COPIES OF THIS PLAN SHEET.

NOTE:
FOR ACCURATE RIGHT OF WAY DATA, CONTACT RIGHT OF WAY ENGINEERING AT THE DISTRICT OFFICE.

LEGEND:

EROSION CONTROL TYPE 1

EROSION CONTROL TYPE 2

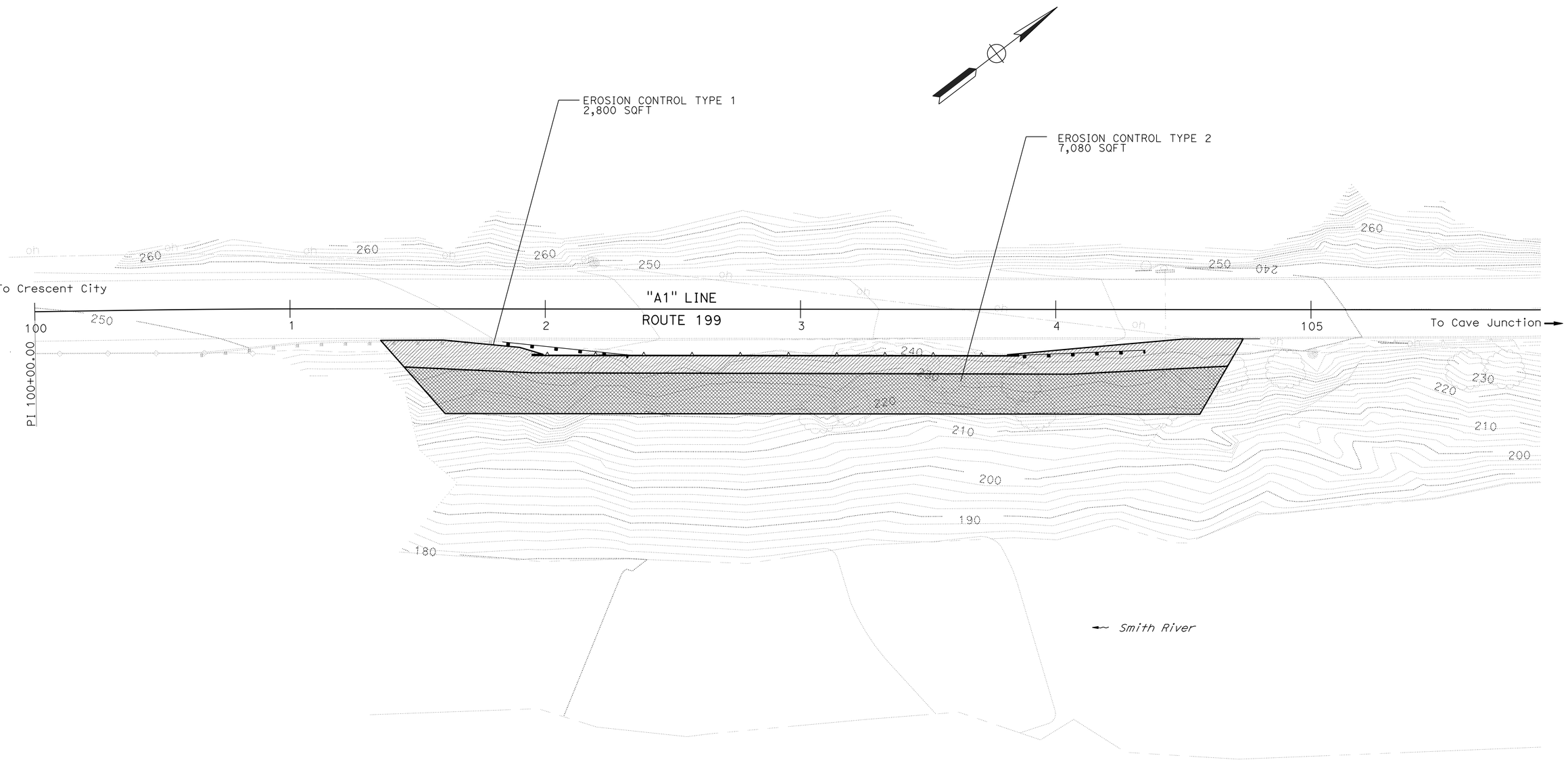

LOCATION 1
PM 8.7

APPROVED FOR EROSION CONTROL WORK ONLY

EROSION CONTROL PLAN

SCALE: 1"=20'

EC-1

REVISED BY | DATE REVISED
LOGAN MOORE | LAURA LAZZAROTTO
CALCULATED-DESIGNED BY | CHECKED BY
SENIOR LANDSCAPE ARCHITECT | RON FLORY

STATE OF CALIFORNIA - DEPARTMENT OF TRANSPORTATION
Caltrans
LANDSCAPE ARCHITECTURE

P:\PROJ\01\0B310\drafting\01-0B310\0112000115te001.dgn

LAST REVISION 04-02-15
DATE PLOTTED => 21-JUL-2015
TIME PLOTTED => 11:05

BORDER LAST REVISED 7/2/2010
USERNAME => s120115
DGN FILE => 0112000115te001.dgn
RELATIVE BORDER SCALE IS IN INCHES 0 1 2 3
UNIT 0313
PROJECT NUMBER & PHASE 01120001151

NOTE:
FOR ACCURATE RIGHT OF WAY DATA, CONTACT
RIGHT OF WAY ENGINEERING AT THE DISTRICT OFFICE.

Dist	COUNTY	ROUTE	POST MILES TOTAL PROJECT	SHEET No.	TOTAL SHEETS
01	DN	199	8.7, 21.7	20	54

Laura Lazzarotto
LICENSED LANDSCAPE ARCHITECT

June 29, 2015
PLANS APPROVAL DATE

LICENSED LANDSCAPE ARCHITECT
Laura Lazzarotto LA 4045
Signature
8-31-15
Renewal Date
6-25-15
Date
STATE OF CALIFORNIA

THE STATE OF CALIFORNIA OR ITS OFFICERS OR AGENTS SHALL NOT BE RESPONSIBLE FOR THE ACCURACY OR COMPLETENESS OF SCANNED COPIES OF THIS PLAN SHEET.

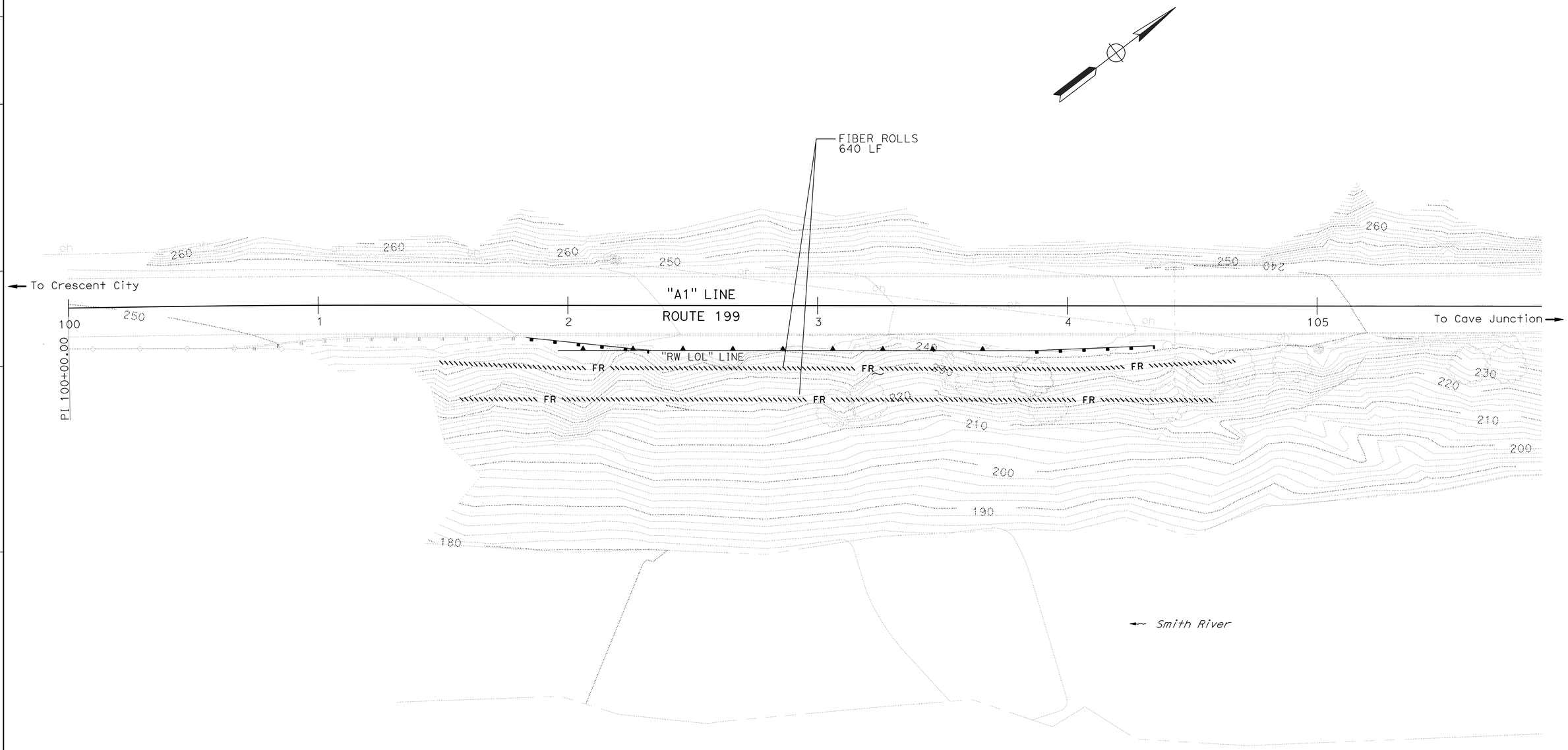

LOCATION 1
PM 8.7

EROSION CONTROL PLAN

SCALE: 1"=20'

EC-2

APPROVED FOR EROSION CONTROL WORK ONLY

REVISED BY | DATE REVISED
LOGAN MOORE | LAURA LAZZAROTTO
CALCULATED-DESIGNED BY | CHECKED BY
SENIOR LANDSCAPE ARCHITECT | RON FLORY

STATE OF CALIFORNIA - DEPARTMENT OF TRANSPORTATION
Caltrans
LANDSCAPE ARCHITECTURE

P:\PROJ\01\0B310\drafting\01-0B310\01120001151e002.dgn

LAST REVISION 04-02-15
DATE PLOTTED => 21-JUL-2015
TIME PLOTTED => 11:05

BORDER LAST REVISED 7/2/2010
USERNAME => s120115
DGN FILE => 0112000115te002.dgn
RELATIVE BORDER SCALE IS IN INCHES 0 1 2 3
UNIT 0313
PROJECT NUMBER & PHASE 01120001151

NOTE:
FOR ACCURATE RIGHT OF WAY DATA, CONTACT
RIGHT OF WAY ENGINEERING AT THE DISTRICT OFFICE.

LEGEND:

EROSION CONTROL TYPE 1

EROSION CONTROL TYPE 2

Dist	COUNTY	ROUTE	POST MILES TOTAL PROJECT	SHEET No.	TOTAL SHEETS
01	DN	199	8.7, 21.7	21	54

Laura Lazzarotto
LICENSED LANDSCAPE ARCHITECT

June 29, 2015
PLANS APPROVAL DATE

LICENSED LANDSCAPE ARCHITECT
Laura Lazzarotto LA 4045
Signature
8-31-15
Renewal Date
6-25-15
Date
STATE OF CALIFORNIA

THE STATE OF CALIFORNIA OR ITS OFFICERS OR AGENTS SHALL NOT BE RESPONSIBLE FOR THE ACCURACY OR COMPLETENESS OF SCANNED COPIES OF THIS PLAN SHEET.

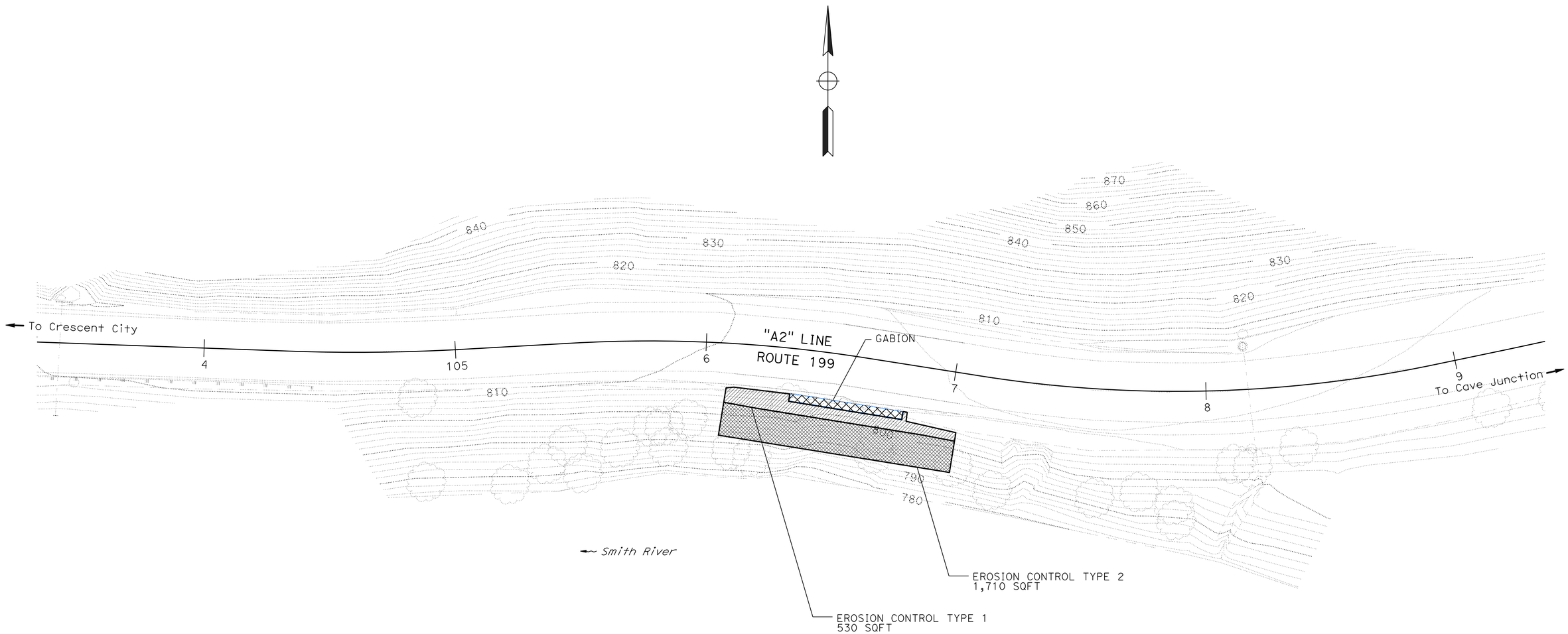

LOCATION 2
PM 21.7

APPROVED FOR EROSION CONTROL WORK ONLY

EROSION CONTROL PLAN

SCALE: 1"=20'

EC-3

REVISED BY | DATE REVISED
LOGAN MOORE | LAURA LAZZAROTTO
CALCULATED-DESIGNED BY | CHECKED BY
SENIOR LANDSCAPE ARCHITECT | RON FLORY

STATE OF CALIFORNIA - DEPARTMENT OF TRANSPORTATION
Caltrans
LANDSCAPE ARCHITECTURE

P:\PROJ\01\0B310\drafting\01-0B310\0112000115te003.dgn

LAST REVISION 04-02-15 | DATE PLOTTED => 21-JUL-2015 | TIME PLOTTED => 11:05

BORDER LAST REVISED 7/2/2010 | USERNAME => s120115 | DGN FILE => 0112000115te003.dgn | RELATIVE BORDER SCALE IS IN INCHES 0 1 2 3 | UNIT 0313 | PROJECT NUMBER & PHASE 01120001151

NOTE:
FOR ACCURATE RIGHT OF WAY DATA, CONTACT
RIGHT OF WAY ENGINEERING AT THE DISTRICT OFFICE.

Dist	COUNTY	ROUTE	POST MILES TOTAL PROJECT	SHEET No.	TOTAL SHEETS
01	DN	199	8.7, 21.7	22	54

Laura Lazzarotto
LICENSED LANDSCAPE ARCHITECT

June 29, 2015
PLANS APPROVAL DATE

LICENSED LANDSCAPE ARCHITECT
Laura Lazzarotto LA 4045
Signature
8-31-15
Renewal Date
6-25-15
Date
STATE OF CALIFORNIA

THE STATE OF CALIFORNIA OR ITS OFFICERS OR AGENTS SHALL NOT BE RESPONSIBLE FOR THE ACCURACY OR COMPLETENESS OF SCANNED COPIES OF THIS PLAN SHEET.

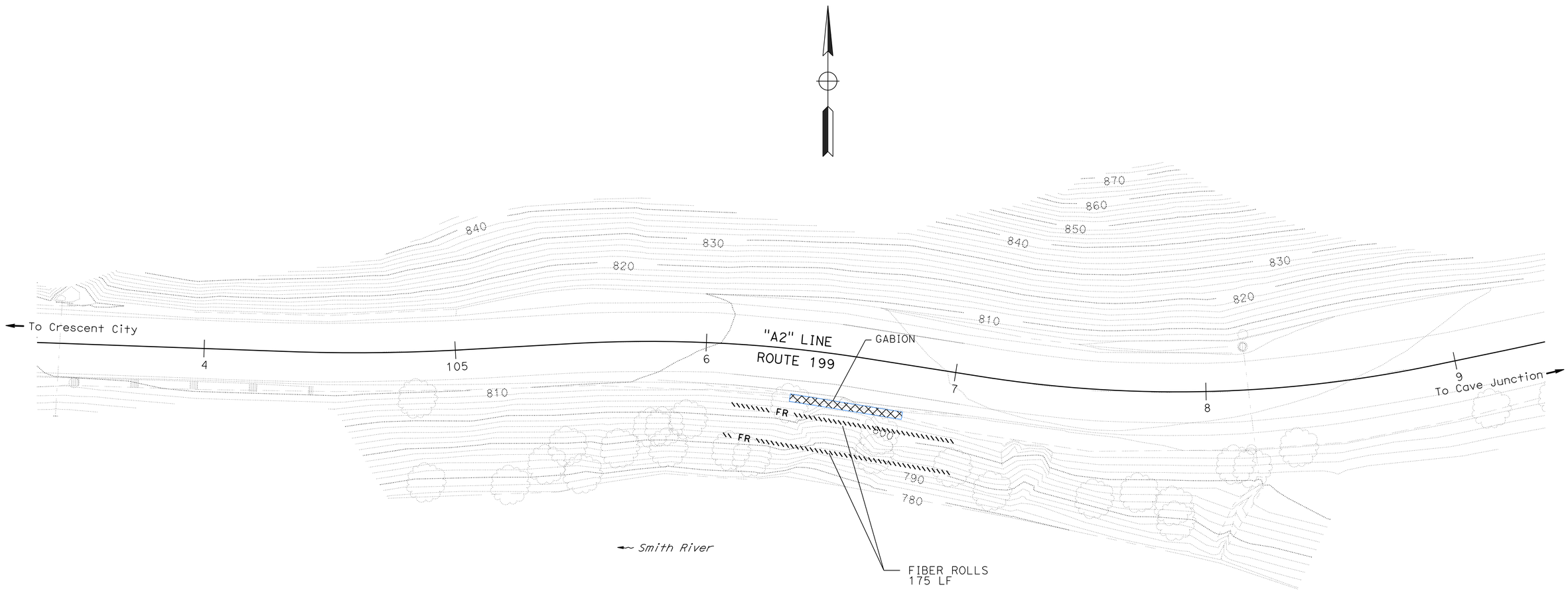

LOCATION 2
PM 21.7

APPROVED FOR EROSION CONTROL WORK ONLY

EROSION CONTROL PLAN

SCALE: 1"=20'

EC-4

REVISED BY | DATE REVISED
LOGAN MOORE | LAURA LAZZAROTTO
CALCULATED-DESIGNED BY | CHECKED BY
SENIOR LANDSCAPE ARCHITECT | RON FLORY

STATE OF CALIFORNIA - DEPARTMENT OF TRANSPORTATION
Caltrans
LANDSCAPE ARCHITECTURE

P:\PROJ\01\0B310\drafting\01-0B310\01120001151e004.dgn

LAST REVISION 04-02-15 | DATE PLOTTED => 21-JUL-2015 | TIME PLOTTED => 11:05

BORDER LAST REVISED 7/2/2010 | USERNAME => s120115 | DGN FILE => 0112000115te004.dgn | RELATIVE BORDER SCALE IS IN INCHES 0 1 2 3 | UNIT 0313 | PROJECT NUMBER & PHASE 01120001151

Dist	COUNTY	ROUTE	POST MILES TOTAL PROJECT	SHEET No.	TOTAL SHEETS
01	DN	199	8.7, 21.7	23	54

Laura Lazzarotto
LICENSED LANDSCAPE ARCHITECT

June 29, 2015
PLANS APPROVAL DATE

LICENSED LANDSCAPE ARCHITECT
Laura Lazzarotto
Expiration Date
8-31-05
Renewal Date
6-25-15
Date
STATE OF CALIFORNIA

THE STATE OF CALIFORNIA OR ITS OFFICERS OR AGENTS SHALL NOT BE RESPONSIBLE FOR THE ACCURACY OR COMPLETENESS OF SCANNED COPIES OF THIS PLAN SHEET.

FIBER ROLLS

SEQUENCE	ITEM	MATERIAL		REMARKS
		DESCRIPTION	TYPE	
FIBER ROLLS MUST BE INSTALLED BEFORE EROSION CONTROL	FIBER ROLLS	FIBER ROLL	TYPE B 8" TO 10" Dia	TYPE 1 FIBER ROLL INSTALLATION

EROSION CONTROL TYPE 1

SEQUENCE	ITEM	MATERIAL		APPLICATION RATE
		DESCRIPTION	TYPE	
STEP 1	HYDROSEED	SEED	MIX 1	152 LB/ACRE
		FIBER	WOOD	1100 LB/ACRE
		COMPOST	MEDIUM	270 CY/ACRE
STEP 2	STRAW	STRAW	WHEAT &/OR BARLEY	3 TON/ACRE
STEP 3	HYDROMULCH	FIBER	WOOD	1100 LB/ACRE
		TACKIFIER	PSYLLIUM	140 LB/ACRE
		COMPOST	MEDIUM	270 CY/ACRE

EROSION CONTROL TYPE 2

SEQUENCE	ITEM	MATERIAL		APPLICATION RATE
		DESCRIPTION	TYPE	
STEP 1	HYDROSEED	SEED	MIX 1	152 LB/ACRE
		FIBER	WOOD	1100 LB/ACRE
		COMPOST	MEDIUM	270 CY/ACRE
STEP 2	HYDROMULCH	FIBER	WOOD	1100 LB/ACRE
		TACKIFIER	PSYLLIUM	140 LB/ACRE
		COMPOST	MEDIUM	270 CY/ACRE
STEP 3	ROLLED EROSION CONTROL PRODUCT (NETTING)	NETTING	TYPE A	

SEED MIX 1

SEED	BOTANICAL NAME (COMMON NAME)	PERCENT GERMINATION (MINIMUM)	POUNDS PURE LIVE SEED PER ACRE (SLOPE MEASUREMENT)
MIX 1	ACHILLEA MILLEFOLIUM [1] (WHITE YARROW)	40	1
	BROMUS CARINATUS [1] (CALIFORNIA BROME)	45	35
	DESCHAMPSIA CESPITOSA ssp. CESPITOSA [1] (TUFTED HAIRGRASS)	40	3
	ELYMUS GLAUCUS 'BERKELEY' [1] (BLUE WILD RYE, BERKELEY)	55	20
	ELYMUS X TRITICUM (REGREEN)	10	60
	FESTUCA IDAHOENSIS [1] (IDAHO FESCUE)	50	12
	FESTUCA CALIFORNICA [1] (CALIFORNIA FESCUE)	40	8
	LOTUS PURSHIANUS 'SHASTA' [1] (PURSHING'S LOTUS, SHASTA)	40	10
	VULPIA MICROSTACHYS [1] (SIX WEEKS FESCUE)	55	3
	[1] SEED PRODUCED IN CALIFORNIA ONLY.		

EROSION CONTROL QUANTITIES

SHEET NUMBER	STATION	DESCRIPTION	HYDROSEED	STRAW	HYDROMULCH	FIBER ROLLS	ROLLED EROSION CONTROL PRODUCT (NETTING)	PURE LIVE SEED (N)
			SQFT	SQFT	SQFT	LF	SQFT	LBS
SHEET EC-1	101+17 TO 104+73 R†	EC TYPE 1	2,800	2,800	2,800	-	-	9.1
SHEET EC-1	101+24 TO 104+66 R†	EC TYPE 2	7,080	-	7,080	-	7,080	24.3
SHEET EC-2	101+52 TO 104+66 R†	FIBER ROLL	-	-	-	640	-	-
SHEET EC-3	106+09 TO 107+04 R†	EC TYPE 1	530	530	530	-	-	1.5
SHEET EC-3	106+09 TO 107+04 R†	EC TYPE 2	1,710	-	1,710	-	1,710	6.1
SHEET EC-2	106+09 TO 107+04 R†	FIBER ROLL	-	-	-	175	-	-
		TOTAL	12,120	3,330	12,120	815	8,790	41.0

NOTE: (N) NOT A SEPARATE PAY ITEM, FOR INFORMATION ONLY

EROSION CONTROL QUANTITIES
ECQ-1

REVISED BY | DATE REVISED
LOGAN MOORE | LAURA LAZZAROTTO
CALCULATED-DESIGNED BY | CHECKED BY
SENIOR LANDSCAPE ARCHITECT | RON FLORY
STATE OF CALIFORNIA - DEPARTMENT OF TRANSPORTATION
Caltrans
LANDSCAPE ARCHITECTURE
P:\PROJ\01\0B310\drafting\01-0B310\01120001151g001.dgn

LAST REVISION 04-02-15 | DATE PLOTTED => 21-JUL-2015 | TIME PLOTTED => 11:05

Dist	COUNTY	ROUTE	POST MILES TOTAL PROJECT	SHEET No.	TOTAL SHEETS
01	DN	199	8.7, 21.7	24	54

Brian T. Finck 6-25-15
REGISTERED ELECT ENGINEER DATE

June 29, 2015
PLANS APPROVAL DATE

REGISTERED PROFESSIONAL ENGINEER BRIAN T. FINCK No. 17756 Exp. 6-30-16 ELECT STATE OF CALIFORNIA

THE STATE OF CALIFORNIA OR ITS OFFICERS OR AGENTS SHALL NOT BE RESPONSIBLE FOR THE ACCURACY OR COMPLETENESS OF SCANNED COPIES OF THIS PLAN SHEET.

NOTES: (THIS SHEET ONLY)

1. 2"C, 1-DLC (#12)
2. 2"C, 4#8, 6#12, 1#10 (SC), 1#8 GND, 1-6 PAIR SIC
3. OVERHEAD 3#12, 1#10 (SC)
4. 2"C, 4#8, 3#12, 1#10 (SC), 1#8 GND, 1-6 PAIR SIC
5. 2"C, 2#8, 3-DLC (#12), 1#8 GND
6. 2"C, 2#12, 1#8 GND
7. 3"C, 4#8, 6#12, 1#10 (SC), 3-DLC (#12), 1#8 GND, 1-6 PAIR SIC

LEGEND

UPS	UNINTERUPTIBLE POWER SUPPLY
(SC)	SIGNAL COMMON
ATS	AUTOMATIC TRANSFER SWITCH
GEN	GENERATOR
C	CONTACTOR
▽	AUTO-TEST SWITCH
Y	TEMPORARY PHOTOVOLTAIC POWERED FLASHING BEACON

SEE CONSTRUCTION AREA SIGNS SHEETS, STAGE CONSTRUCTION AND TRAFFIC HANDLING SHEETS

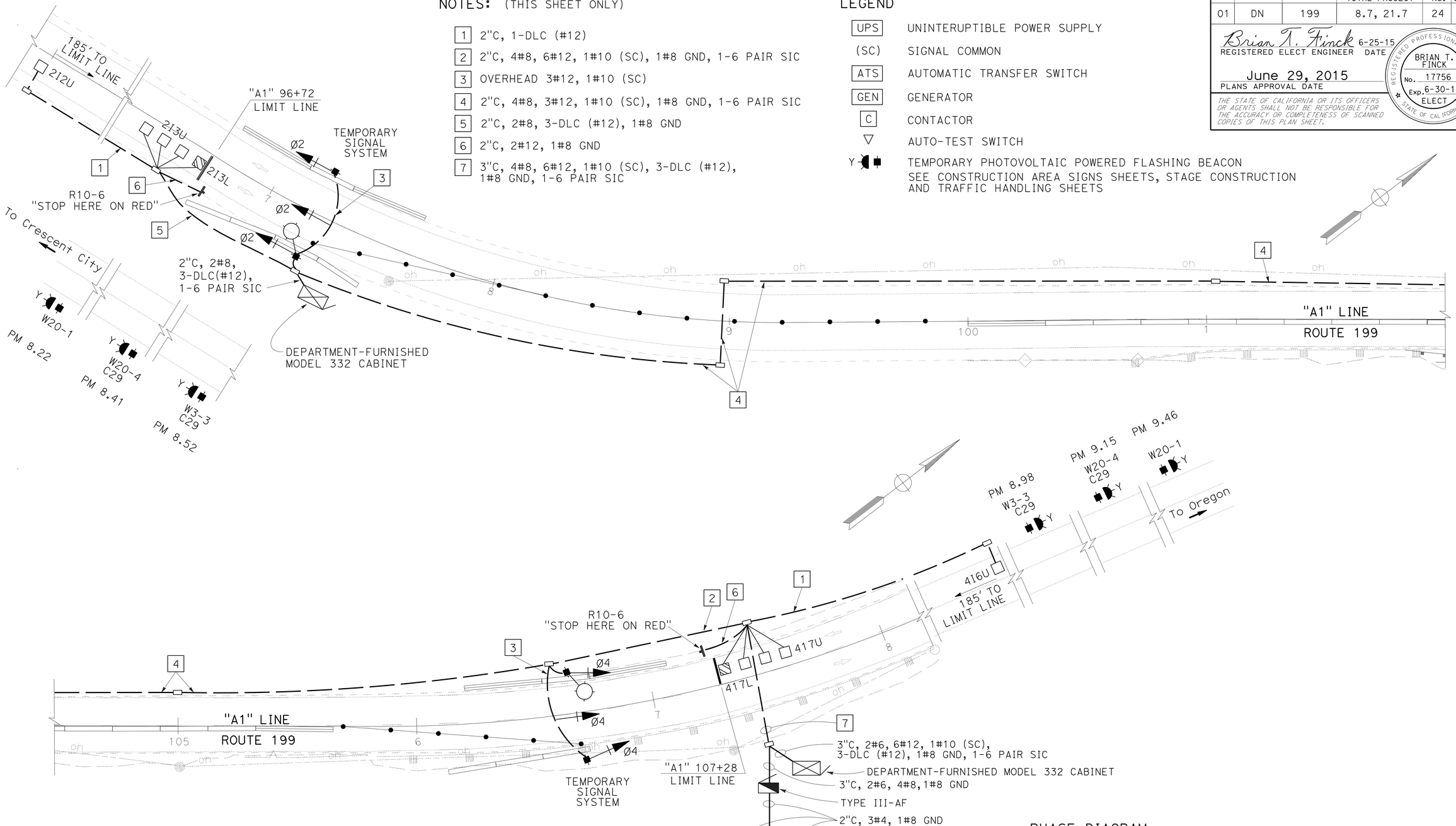

PHASE DIAGRAM

Ø2	Ø4

LOCATION 1
PM 8.7

APPROVED FOR ELECTRICAL WORK ONLY

TEMPORARY SIGNAL SYSTEM

SCALE: 1"=20'

E-1

STATE OF CALIFORNIA - DEPARTMENT OF TRANSPORTATION
Caltrans
ELECTRICAL
FUNCTIONAL SUPERVISOR: JOHN CARSON
CALCULATED-DESIGNED BY: BRIAN FINCK
CHECKED BY: WILLIAM BARTLEY
REVISED BY / DATE REVISED

P:\PROJ\01\0B310\drafting\01-0B310\01120001151ua001.dgn

LAST REVISION 04-02-15 | DATE PLOTTED => 21-JUL-2015 | TIME PLOTTED => 11:05

BORDER LAST REVISED 7/2/2010 | USERNAME => s120115 | DGN FILE => 01120001151ua001.dgn | RELATIVE BORDER SCALE IS IN INCHES 0 1 2 3 | UNIT 0313 | PROJECT NUMBER & PHASE 01120001151

Dist	COUNTY	ROUTE	POST MILES TOTAL PROJECT	SHEET No.	TOTAL SHEETS
01	DN	199	8.7, 21.7	25	54

Brian T. Finck 6-25-15
REGISTERED ELECT ENGINEER DATE

June 29, 2015
PLANS APPROVAL DATE

REGISTERED PROFESSIONAL ENGINEER BRIAN T. FINCK No. 17756 Exp. 6-30-08 ELECT STATE OF CALIFORNIA

THE STATE OF CALIFORNIA OR ITS OFFICERS OR AGENTS SHALL NOT BE RESPONSIBLE FOR THE ACCURACY OR COMPLETENESS OF SCANNED COPIES OF THIS PLAN SHEET.

NOTE: (THIS SHEET)

1 WOOD POLES SHALL BE LOCATED OUTSIDE THE CLEAR RECOVERY ZONE OR PROTECTED IN PLACE.

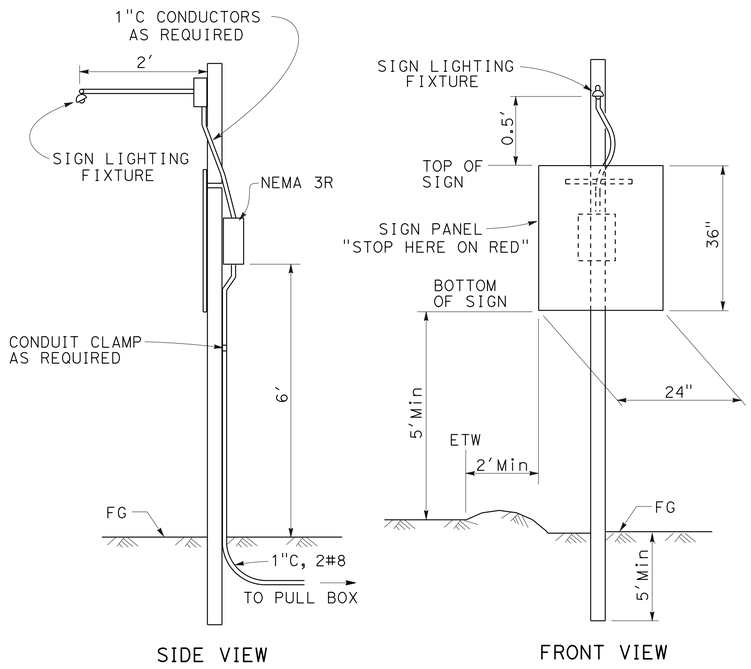

SIDE VIEW FRONT VIEW

TYPICAL SIGN ILLUMINATION

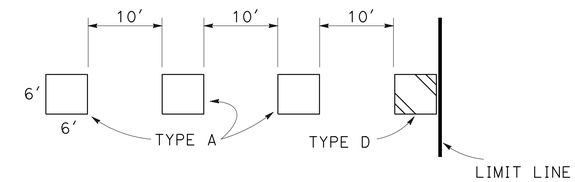

TYPICAL LOOP DETAIL

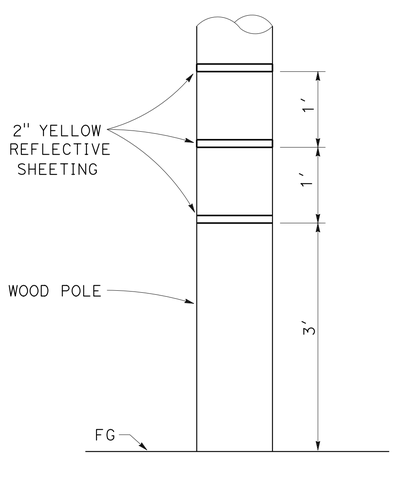

REFLECTIVE MARKING FOR WOOD POLE

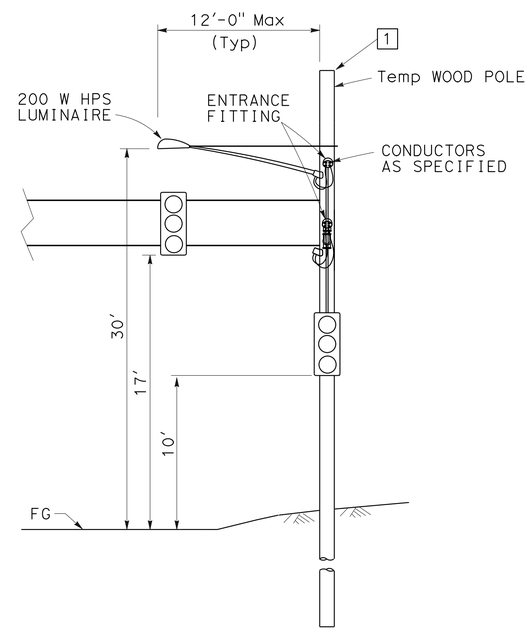

TEMPORARY TRAFFIC SIGNAL

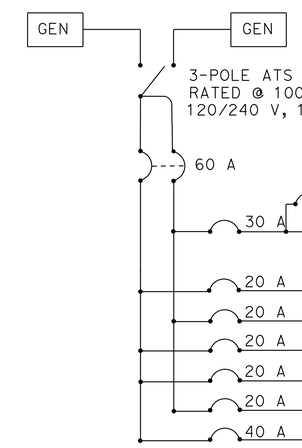

VOLT	NAMEPLATE DESCRIPTION
120	LIGHTING/ SIGN LIGHTING
120	SPARE
120	SPARE
120	SPARE
120	SPARE
120	SPARE
120	SIGNALS

SERVICE WIRING DIAGRAM

TYPE III-AF SERVICE EQUIPMENT ENCLOSURE

APPROVED FOR ELECTRICAL WORK ONLY

ELECTRICAL DETAILS

NO SCALE

E-2

REVISED BY	DATE REVISED
BRIAN FINCK	WILLIAM BARTLEY
CALCULATED-DESIGNED BY	CHECKED BY
FUNCTIONAL SUPERVISOR	JOHN CARSON

STATE OF CALIFORNIA - DEPARTMENT OF TRANSPORTATION
Caltrans
ELECTRICAL

P:\PROJ\01\0B310\draffing\01-0B310\01120001151ua002.dgn

LAST REVISION 04-02-15 | DATE PLOTTED => 21-JUL-2015 | TIME PLOTTED => 11:05

Dist	COUNTY	ROUTE	POST MILES TOTAL PROJECT	SHEET No.	TOTAL SHEETS
01	DN	199	8.7, 21.7	26	54

Brian T. Finck 6-25-15
REGISTERED ELECT ENGINEER DATE

June 29, 2015
PLANS APPROVAL DATE

REGISTERED PROFESSIONAL ENGINEER BRIAN T. FINCK No. 17756 Exp. 6-30-16 ELECT STATE OF CALIFORNIA

THE STATE OF CALIFORNIA OR ITS OFFICERS OR AGENTS SHALL NOT BE RESPONSIBLE FOR THE ACCURACY OR COMPLETENESS OF SCANNED COPIES OF THIS PLAN SHEET.

NOTES: (THIS SHEET ONLY)

1. THIS UNIT SHALL BE LOCATED IN AN UNSHADED AREA. WOOD POLE WITH PHOTOVOLTAIC PANELS SHALL BE LOCATED OUTSIDE THE CLEAR RECOVERY ZONE OR PROTECTED IN PLACE.
2. SEE SHEET CS-1 FOR SIGNS (B), (D) & (E)

ABBREVIATION:

A-h AMPERE HOUR

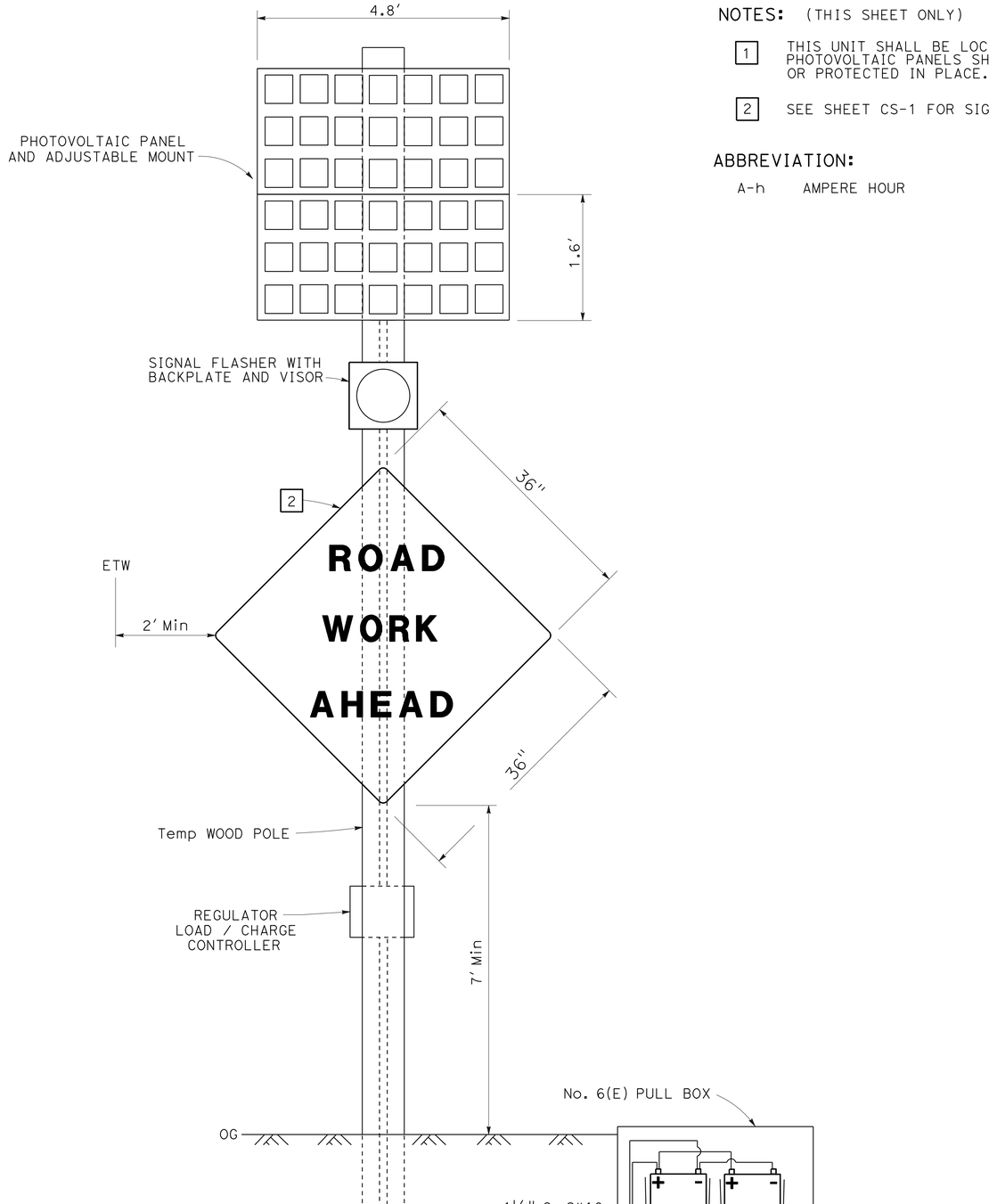

FLASHING BEACON (PHOTOVOLTAIC POWERED)

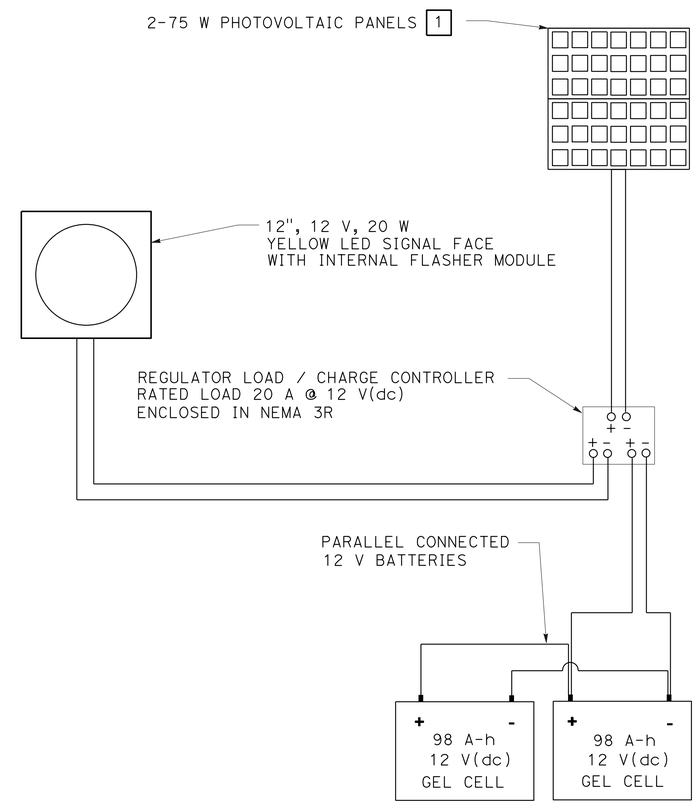

CONNECTION DIAGRAM

APPROVED FOR ELECTRICAL WORK ONLY

ELECTRICAL DETAILS

NO SCALE

E-3

REVISED BY | DATE REVISED
BRIAN FINCK | WILLIAM BARTLEY
CALCULATED-DESIGNED BY | CHECKED BY
FUNCTIONAL SUPERVISOR: JOHN CARSON
STATE OF CALIFORNIA - DEPARTMENT OF TRANSPORTATION
Caltrans
ELECTRICAL

P:\PROJ\01\0B310\drafting\01-0B310\01120001151ua003.dgn

LAST REVISION | DATE PLOTTED => 21-JUL-2015 | TIME PLOTTED => 11:05
04-02-15

BORDER LAST REVISED 7/2/2010 | USERNAME => s120115 | DGN FILE => 01120001151ua003.dgn | RELATIVE BORDER SCALE IS IN INCHES 0 1 2 3 | UNIT 0313 | PROJECT NUMBER & PHASE 01120001151

NOTE:

THE QUANTITIES ON THIS SHEET ARE NOT SEPARATE PAY ITEMS AND ARE FOR INFORMATION ONLY.

Dist	COUNTY	ROUTE	POST MILES TOTAL PROJECT	SHEET No.	TOTAL SHEETS
01	DN	199	8.7, 21.7	27	54

Brian T. Finck 6-25-15
REGISTERED ELECT ENGINEER DATE

June 29, 2015
PLANS APPROVAL DATE

REGISTERED PROFESSIONAL ENGINEER BRIAN T. FINCK No. 17756 Exp. 6-30-16 ELECT STATE OF CALIFORNIA

THE STATE OF CALIFORNIA OR ITS OFFICERS OR AGENTS SHALL NOT BE RESPONSIBLE FOR THE ACCURACY OR COMPLETENESS OF SCANNED COPIES OF THIS PLAN SHEET.

TEMPORARY SIGNAL SYSTEM

SHEET NUMBER	WOOD POLE	2" CONDUIT TYPE 3	GENERATOR	No. 5 PULL BOX	3 SECTION SIGNAL HEAD	FBCA	SIGN LIGHTING FIXTURE	200 W HPS LUMINAIRE	MESSENGER CABLE	TYPE D LOOP	TYPE A LOOP	DLC	#4 CONDUCTORS	#6 CONDUCTORS	#8 CONDUCTORS	#8 CONDUCTORS (G)	#10 CONDUCTORS	#12 CONDUCTORS	NEMA 3R ENCLOSEURE	MODEL 332L CABINET FOUNDATION PLATFORM	UPS	FUEL TANK	No. 6 (E) PULL BOX	1 SECTION SIGNAL HEAD	REGULATOR LOAD/ CHARGE CONTROLLER	98 A-h 12 V (dc) GEL CELL	75 W PHOTOVOLTAIC PANELS	TYPE III-AF SERVICE EQUIPMENT ENCLOSURE
	EA	LF	EA	EA	EA	EA	EA	EA	LF	EA	EA	LF	LF	LF	LF	LF	LF	LF	EA	EA	EA	EA	EA	EA	EA	EA	EA	EA
E-1	10	1500	2	11	6	6	2	2	100	2	8	1000	100	50	4000	2000	2000	6000	8	1	1	1	6	6	6	12	12	1

ELECTRICAL QUANTITES

E-4

APPROVED FOR ELECTRICAL WORK ONLY

BRIAN FINCK — CALCULATED-DESIGNED BY
WILLIAM BARTLEY — CHECKED BY
REVISED BY — DATE REVISED
JOHN CARSON — FUNCTIONAL SUPERVISOR

STATE OF CALIFORNIA - DEPARTMENT OF TRANSPORTATION
Caltrans
ELECTRICAL

P:\PROJ\01\0B310\drafting\01-0B310\01120001151ua004.dgn

LAST REVISION 04-02-15 | DATE PLOTTED => 21-JUL-2015 | TIME PLOTTED => 11:05

M

Maint	MAINTENANCE
Max	MAXIMUM
MB	METAL BEAM
MBB	METAL BEAM BARRIER
MBGR	METAL BEAM GUARD RAILING
Med	MEDIAN
MGS	MIDWEST GUARDRAIL SYSTEM
MH	MANHOLE
Min	MINIMUM
Misc	MISCELLANEOUS
Misc I & S	MISCELLANEOUS IRON AND STEEL
Mkr	MARKER
Mod	MODIFIED,
	MODIFY
Mon	MONUMENT
MP	METAL PLATE
MPGR	METAL PLATE GUARD RAILING
MR	MOVEMENT RATING
MSE	MECHANICALLY STABILIZED EMBANKMENT
Mt	MOUNTAIN, MOUNT
Mtl	MATERIAL
MVP	MAINTENANCE VEHICLE PULLOUT

N

N	NORTH
NB	NORTHBOUND
No.	NUMBER (MUST HAVE PERIOD)
Nos.	NUMBERS (MUST HAVE PERIOD)
NPS	NOMINAL PIPE SIZE
NS	NEAR SIDE
NSP	NEW STANDARD PLAN
NTS	NOT TO SCALE

O

Oblr	OBLITERATE
OC	OVERCROSSING
OD	OUTSIDE DIAMETER
OF	OUTSIDE FACE
OG	ORIGINAL GROUND
OGAC	OPEN GRADED ASPHALT CONCRETE
OGFC	OPEN GRADED FRICTION COURSE
OH	OVERHEAD
OHWM	ORDINARY HIGH WATER MARK
O-O	OUT TO OUT
Opp	OPPOSITE
OSD	OVERSIDE DRAIN

P

P	PAGE
PAP	PERFORATED ALUMINUM PIPE
PB	PULL BOX
PC	POINT OF CURVATURE,
	PRECAST
PCC	POINT OF COMPOUND CURVE,
	PORTLAND CEMENT CONCRETE
PCMS	PORTABLE CHANGEABLE MESSAGE SIGN
PCP	PERFORATED CONCRETE PIPE,
	PRESTRESSED CONCRETE PIPE
PCVC	POINT OF COMPOUND VERTICAL CURVE
PEC	PERMIT TO ENTER AND CONSTRUCT
Ped	PEDESTRIAN
Ped OC	PEDESTRIAN OVERCROSSING
Ped UC	PEDESTRIAN UNDERCROSSING
Perm Mtl	PERMEABLE MATERIAL

P continued

PG	PROFILE GRADE
PI	POINT OF INTERSECTION
PJP	PARTIAL JOINT PENETRATION
Pkwy	PARKWAY
ℙ,PL	PLATE
P/L	PROPERTY LINE
PM	POST MILE,
	TIME FROM NOON TO MIDNIGHT
PN	PAVING NOTCH
POC	POINT OF HORIZONTAL CURVE
POT	POINT OF TANGENT
POVC	POINT OF VERTICAL CURVE
PP	PIPE PILE,
	PLASTIC PIPE,
	POWER POLE
PPL	PREFORMED PERMEABLE LINER
PPP	PERFORATED PLASTIC PIPE
PRC	POINT OF REVERSE CURVE
PRF	PAVEMENT REINFORCING FABRIC
PRVC	POINT OF REVERSE VERTICAL CURVE
PS&E	PLANS, SPECIFICATIONS AND ESTIMATES
PS, P/S	PRESTRESSED
PSP	PERFORATED STEEL PIPE
PT	POINT OF TANGENCY
PVC	POLYVINYL CHLORIDE
Pvmt	PAVEMENT

Q

Qty	QUANTITY

R

R	RADIUS
R & D	REMOVE AND DISPOSE
R & S	REMOVE AND SALVAGE
R/C	RATE OF CHANGE
RCA	REINFORCED CONCRETE ARCH
RCB	REINFORCED CONCRETE BOX
RCP	REINFORCED CONCRETE PIPE
RCPA	REINFORCED CONCRETE PIPE ARCH
Rd	ROAD
Reinf	REINFORCED,
	REINFORCEMENT,
	REINFORCING
Rel	RELOCATE
Repl	REPLACEMENT
Ret	RETAINING
Rev	REVISED, REVISION
Rdwy	ROADWAY
RHMA	RUBBERIZED HOT MIX ASPHALT
Riv	RIVER
RM	ROAD-MIXED
RP	RADIUS POINT,
	REFERENCE POINT
RR	RAILROAD
RSP	ROCK SLOPE PROTECTION,
	REVISED STANDARD PLAN
Rt	RIGHT
Rte	ROUTE
RW	REDWOOD,
	RETAINING WALL
R/W	RIGHT OF WAY
Rwy	RAILWAY

S

S	SOUTH,
	SUPPLEMENT
SAE	STRUCTURE APPROACH EMBANKMENT
Salv	SALVAGE
SAPP	STRUCTURAL ALUMINUM PLATE PIPE
SB	SOUTHBOUND
SC	SAND CUSHION
SCSP	SLOTTED CORRUGATED STEEL PIPE
SD	STORM DRAIN
Sec	SECOND,
	SECTION
Sep	SEPARATION
SG	SUBGRADE
Shld	SHOULDER
Sht	SHEET
Sim	SIMILAR
₤	STATION LINE
SM	SELECTED MATERIAL
Spec	SPECIAL,
	SPECIFICATIONS
SPP	SLOTTED PLASTIC PIPE
SS	SLOPE STAKE
SSBM	STRAP AND SADDLE BRACKET METHOD
SSD	STRUCTURAL SECTION DRAIN
SSPA	STRUCTURAL STEEL PLATE ARCH
SSPP	STRUCTURAL STEEL PLATE PIPE
SSPPA	STRUCTURAL STEEL PLATE PIPE ARCH
SSRP	STEEL SPIRAL RIB PIPE
St	STREET
Sta	STATION
STBB	SINGLE THRIE BEAM BARRIER
Std	STANDARD
Str	STRUCTURE
Surf	SURFACING
SW	SIDEWALK,
	SOUND WALL
Swr	SEWER
Sym	SYMMETRICAL
S4S	SURFACE 4 SIDES

T

T	SEMI-TANGENT
Tan	TANGENT
TBB	THRIE BEAM BARRIER
Tbr	TIMBER
TC	TOP OF CURB
TCB	TRAFFIC CONTROL BOX
TCE	TEMPORARY CONSTRUCTION EASEMENT
Tel	TELEPHONE
Temp	TEMPORARY
TG	TOP OF GRADE
Tot	TOTAL
TP	TELEPHONE POLE
TPB	TREATED PERMEABLE BASE
TPM	TREATED PERMEABLE MATERIAL
Trans	TRANSITION

T continued

TS	TRANSVERSE,
	TRAFFIC SIGNAL,
	TUBULAR STEEL
Typ	TYPICAL

U

UC	UNDERCROSSING
UD	UNDERDRAIN
UG	UNDERGROUND
UON	UNLESS OTHERWISE NOTED
UP	UNDERPASS

V

V	VALVE,
	DESIGN SPEED
Var	VARIABLE,
	VARIES
VC	VERTICAL CURVE
VCP	VITRIFIED CLAY PIPE
Vert	VERTICAL
Via	VIADUCT
Vol	VOLUME

W

W	WEST,
	WIDTH
WB	WESTBOUND
WH	WEEP HOLE
WM	WIRE MESH
WS	WATER SURFACE
WSP	WELDED STEEL PIPE
Wt	WEIGHT
WV	WATER VALVE
WW	WINGWALL
WWLOL	WINGWALL LAYOUT LINE

X

X Sec	CROSS SECTION
Xing	CROSSING

Y

Yr	YEAR
Yrs	YEARS

Dist	COUNTY	ROUTE	POST MILES TOTAL PROJECT	SHEET No.	TOTAL SHEETS
01	DN	199	8.7, 21.7	28	54

Grace M. Tsushima
REGISTERED CIVIL ENGINEER

July 19, 2013
PLANS APPROVAL DATE

REGISTERED PROFESSIONAL ENGINEER
Grace M. Tsushima
No. C49814
Exp. 9-30-14
CIVIL
STATE OF CALIFORNIA

THE STATE OF CALIFORNIA OR ITS OFFICERS OR AGENTS SHALL NOT BE RESPONSIBLE FOR THE ACCURACY OR COMPLETENESS OF SCANNED COPIES OF THIS PLAN SHEET.

TO ACCOMPANY PLANS DATED 6-29-15

UNIT OF MEASUREMENT SYMBOLS:

Some of the symbols used in the project plan quantity tables and in the Bid Item List are:

TABLE A

SYMBOL USED	DEFINITIONS
ACRE	ACRE
CF	CUBIC FOOT
CY	CUBIC YARD
EA	EACH
GAL	GALLON
LB	POUND
LF	LINEAR FOOT
SQFT	SQUARE FOOT
SQYD	SQUARE YARD
STA	100 FEET
TAB	TABLET
TON	2,000 POUNDS

Some of the symbols used in the plans other than in the project plan quantity tables are:

TABLE B

SYMBOL USED	DEFINITIONS
ksi	KIPS PER SQUARE INCH
ksf	KIPS PER SQUARE FOOT
psi	POUNDS PER SQUARE INCH
psf	POUNDS PER SQUARE FOOT
lb/ft^3, pcf	POUNDS PER CUBIC FOOT
tsf	TONS PER SQUARE FOOT
mph, MPH *	MILES PER HOUR
ø	NOMINAL DIAMETER
oz	OUNCE
lb	POUND
kip	1,000 POUNDS
cal	CALORIE
ft	FOOT OR FEET
gal	GALLON

* For use on a sign panel only

STATE OF CALIFORNIA
DEPARTMENT OF TRANSPORTATION

ABBREVIATIONS (SHEET 2 OF 2)

NO SCALE

RSP A10B DATED JULY 19, 2013 SUPERSEDES STANDARD PLAN A10B DATED MAY 20, 2011 - PAGE 2 OF THE STANDARD PLANS BOOK DATED 2010.

REVISED STANDARD PLAN RSP A10B

2010 REVISED STANDARD PLAN RSP A10B

P:\PROJ\01\0B310\drafting\01-0B310va001.dgn

6-7-13

Dist	COUNTY	ROUTE	POST MILES TOTAL PROJECT	SHEET No.	TOTAL SHEETS
01	DN	199	8.7, 21.7	29	54

REGISTERED CIVIL ENGINEER

July 20, 2012
PLANS APPROVAL DATE

REGISTERED PROFESSIONAL ENGINEER
Roberta L. McLaughlin
No. C40375
Exp. 3-31-13
CIVIL
STATE OF CALIFORNIA

THE STATE OF CALIFORNIA OR ITS OFFICERS OR AGENTS SHALL NOT BE RESPONSIBLE FOR THE ACCURACY OR COMPLETENESS OF SCANNED COPIES OF THIS PLAN SHEET.

TO ACCOMPANY PLANS DATED 6-29-15

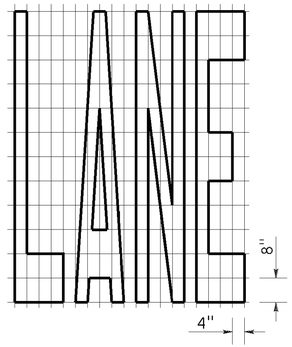

A=24 ft²

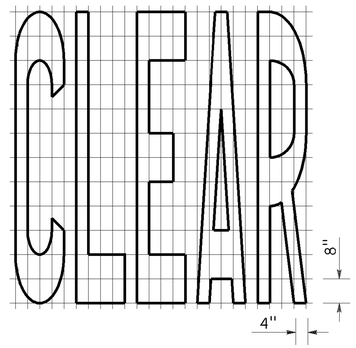

A=27 ft²

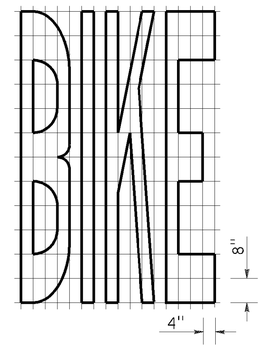

A=21 ft²

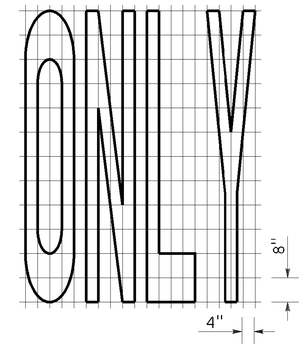

A=22 ft²

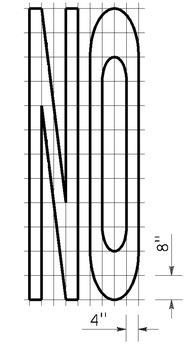

A=14 ft²

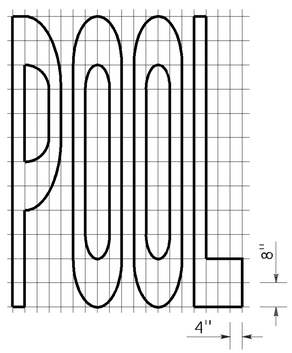

A=23 ft²

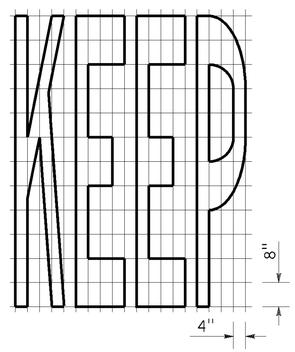

A=24 ft²

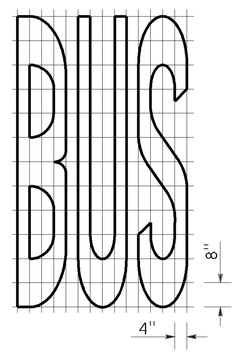

A=20 ft²

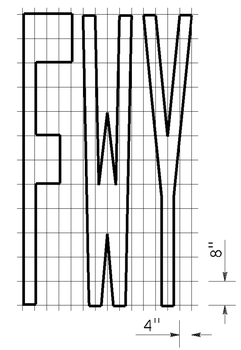

A=16 ft²

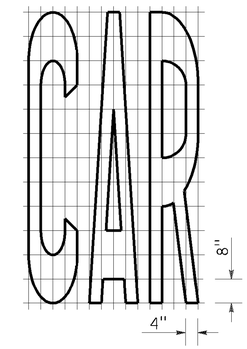

A=17 ft²

WORD MARKINGS			
ITEM	ft²	ITEM	ft²
LANE	24	NO	14
POOL	23	BIKE	21
CAR	17	BUS	20
CLEAR	27	ONLY	22
KEEP	24	FWY	16

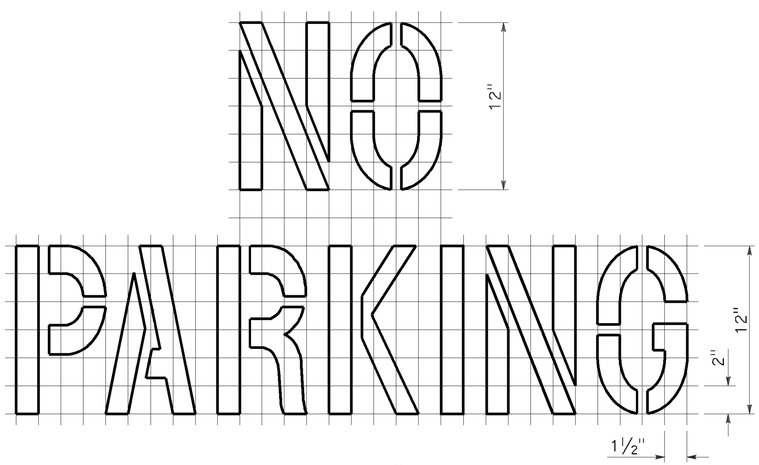

A=2 ft²
See Notes 6 and 7

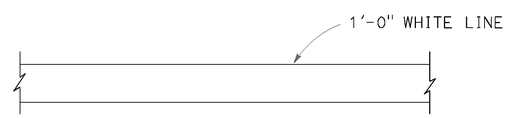

LIMIT LINE (STOP LINE)

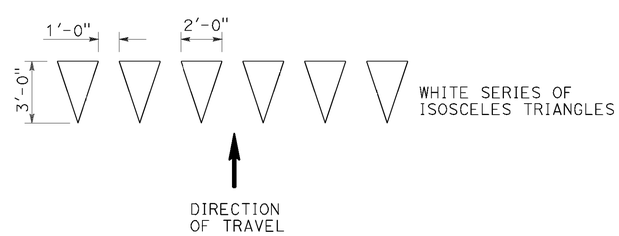

YIELD LINE

NOTES:

1. If a message consists of more than one word, it should read "UP", i.e., the first word should be nearest the driver.
2. The space between words should be at least four times the height of the characters for low speed roads, but not more than ten times the height of the characters. The space may be reduced appropriately where there is limited space because of local conditions.
3. Minor variations in dimensions may be accepted by the Engineer.
4. Portions of a letter, number or symbol may be separated by connecting segments not to exceed 2" in width.
5. The words "NO PARKING" pavement marking is to be used for parking facilities. For typical locations of markings, see Standard Plans A90A and A90B.
6. The words "NO PARKING", shall be painted in white letters no less than 1'-0" high on a contrasting background and located so that it is visible to traffic enforcement officials.

STATE OF CALIFORNIA
DEPARTMENT OF TRANSPORTATION

PAVEMENT MARKINGS WORDS, LIMIT AND YIELD LINES

NO SCALE

RSP A24E DATED JULY 20, 2012 SUPERSEDES STANDARD PLAN A24E
DATED MAY 20, 2011 - PAGE 17 OF THE STANDARD PLANS BOOK DATED 2010.

REVISED STANDARD PLAN RSP A24E

2010 REVISED STANDARD PLAN RSP A24E

P:\PROJ\01\0B310\drafting\01-0B310va002.dgn

6-12-12

Dist	COUNTY	ROUTE	POST MILES TOTAL PROJECT	SHEET No.	TOTAL SHEETS
01	DN	199	8.7, 21.7	30	54

REGISTERED CIVIL ENGINEER

July 19, 2013
PLANS APPROVAL DATE

REGISTERED PROFESSIONAL ENGINEER
Tillat Satter
No. C42892
Exp. 3-31-14
CIVIL
STATE OF CALIFORNIA

THE STATE OF CALIFORNIA OR ITS OFFICERS OR AGENTS SHALL NOT BE RESPONSIBLE FOR THE ACCURACY OR COMPLETENESS OF SCANNED COPIES OF THIS PLAN SHEET.

TO ACCOMPANY PLANS DATED 6-29-15

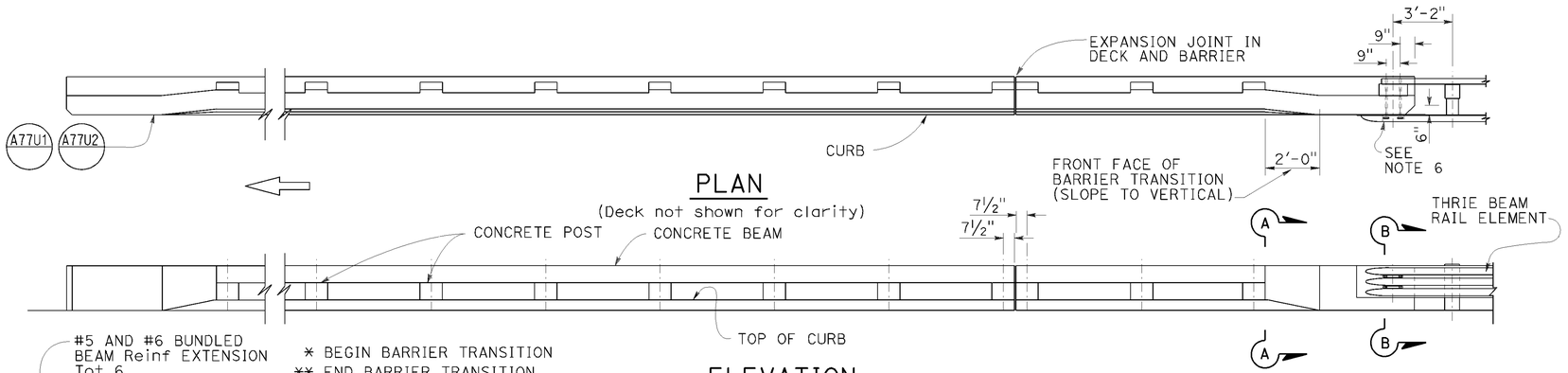

PLAN

(Deck not shown for clarity)

ELEVATION

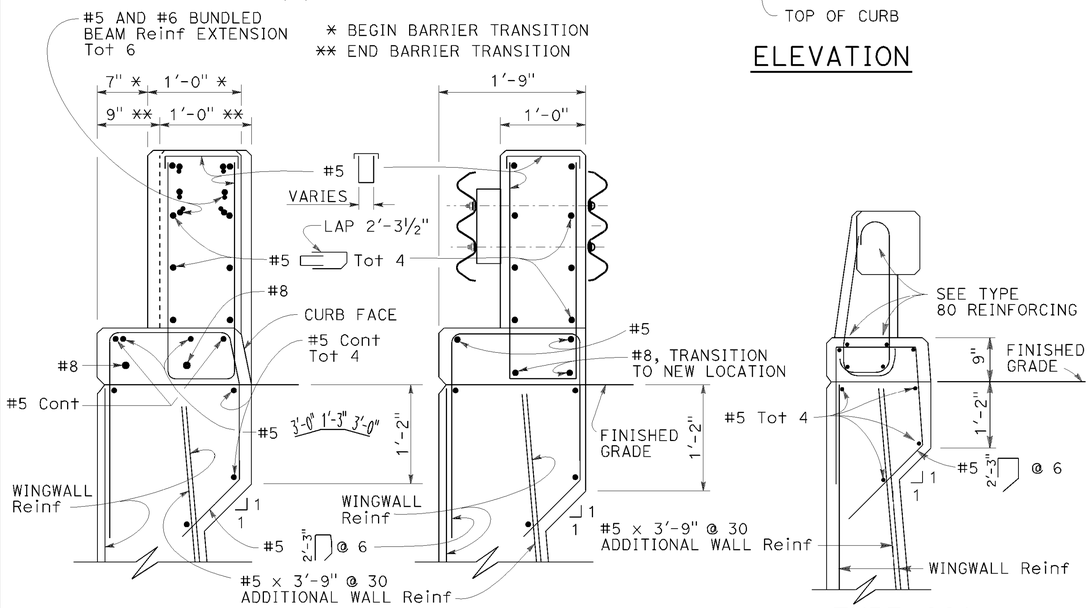

SECTION A-A

SECTION B-B

TYPE 80A

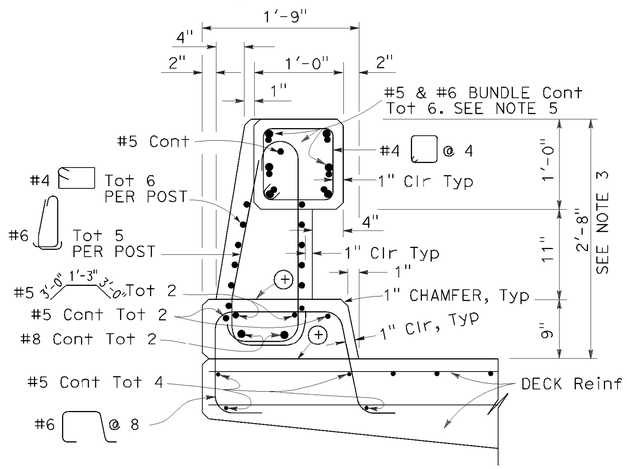

TYPE 80

⊕ Construction joint

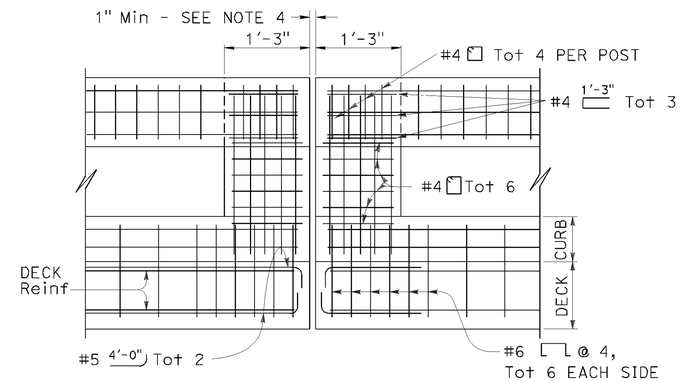

EXPANSION JOINT DETAIL

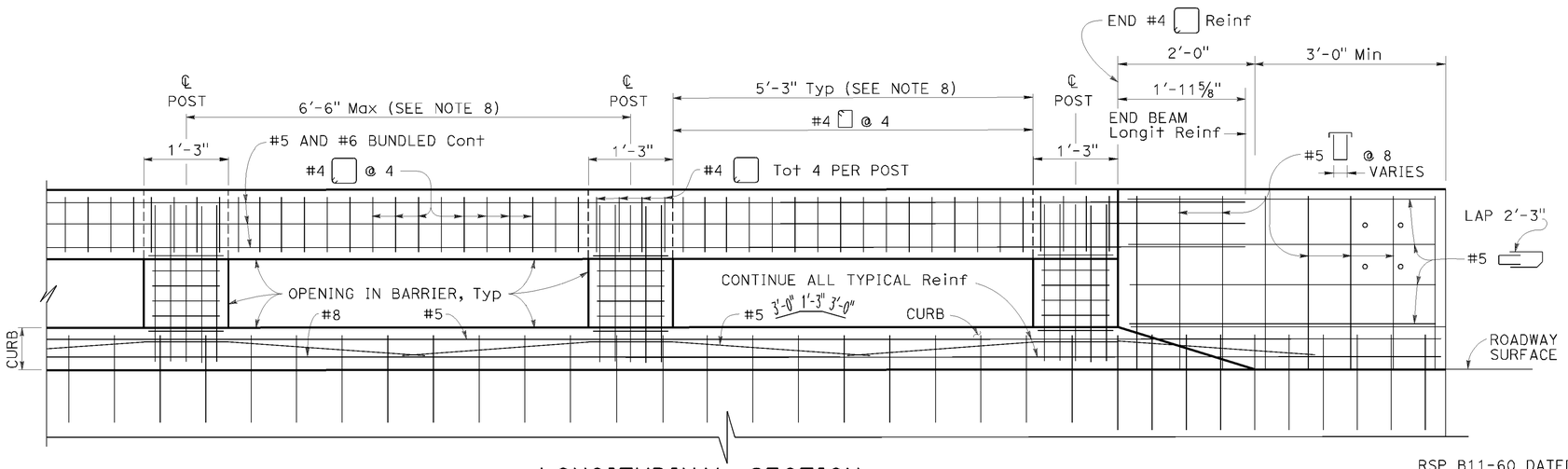

LONGITUDINAL SECTION

(Deck or wingwall reinforcing not shown)

NOTES:

1. Walls are to be backfilled before the barrier is placed.
2. Longitudinal reinforcing steel to stop at all expansion joints.
3. The front face dimensions are to be constant above the finish roadway profile, but the overall height will vary with certain thicknesses of surfacing and roadway slopes.
4. Expansion joint to match deck joint.
5. No lap splicing allowed on the longitudinal rail reinforcing. Splicing shall be staggered.
6. For typical metal railing connection details not shown, see Revised Standard Plans RSP A77U1 and RSP A77U2.
7. Chain link railing is not allowed on Type 80 Barriers.
8. Post to be spaced equally, typically 6'-6" spacing. Post spacing may be reduced where location of hinges or expansion joints or the length of wingwalls will not accommodate the 6'-6" spacing. Maximum see-through availability is to be strived for, where 6'-6" post spacing can not be achieved.

STATE OF CALIFORNIA
DEPARTMENT OF TRANSPORTATION

CONCRETE BARRIER TYPE 80 (SHEET 1 OF 2)

NO SCALE

RSP B11-60 DATED JULY 19, 2013 SUPERSEDES RSP B11-60 DATED APRIL 20, 2012 AND STANDARD PLAN B11-60 DATED MAY 20, 2011 - PAGE 300 OF THE STANDARD PLANS BOOK DATED 2010.

REVISED STANDARD PLAN RSP B11-60

2010 REVISED STANDARD PLAN RSP B11-60

P:\PROJ\01\0B310\drafting\01-0B310\va003.dgn

6-27-13

Dist	COUNTY	ROUTE	POST MILES TOTAL PROJECT	SHEET No.	TOTAL SHEETS
01	DN	199	8.7, 21.7	31	54

Theresa Gabriel
REGISTERED ELECTRICAL ENGINEER

July 19, 2013
PLANS APPROVAL DATE

Theresa Aziz Gabriel No. E15129 Exp. 6-30-14 ELECTRICAL — REGISTERED PROFESSIONAL ENGINEER — STATE OF CALIFORNIA

THE STATE OF CALIFORNIA OR ITS OFFICERS OR AGENTS SHALL NOT BE RESPONSIBLE FOR THE ACCURACY OR COMPLETENESS OF SCANNED COPIES OF THIS PLAN SHEET.

TO ACCOMPANY PLANS DATED 6-29-15

LEGEND:

AB	ABANDON. IF APPLIED TO CONDUIT, REMOVE CONDUCTORS
BC	INSTALL PULL BOX IN EXISTING CONDUIT RUN
BP	PEDESTRIAN BARRICADE, TYPE AS INDICATED ON PLAN
CB	INSTALL CONDUIT INTO EXISTING PULL BOX
CC	CONNECT NEW AND EXISTING CONDUIT. REMOVE EXISTING CONDUCTORS AND INSTALL CONDUCTORS AS INDICATED
CF	CONDUIT TO REMAIN FOR FUTURE USE. REMOVE CONDUCTORS. INSTALL PULL TAPE
DH	DETECTOR HANDHOLE
FA	FOUNDATION TO BE ABANDONED
IS	INSTALL SIGN ON SIGNAL MAST ARM
NS	NO SLIP BASE ON STANDARD
PEC	PHOTOELECTRIC CONTROL
PEU	PHOTOELECTRIC UNIT
RC	EQUIPMENT OR MATERIAL TO BE REMOVED AND BECOME THE PROPERTY OF THE CONTRACTOR
RE	REMOVE ELECTROLIER, FUSES AND BALLAST. TAPE ENDS OF CONDUCTORS
RL	RELOCATE EQUIPMENT
RR	REMOVE AND REUSE EQUIPMENT
RS	REMOVE AND SALVAGE EQUIPMENT
SC	SPLICE NEW TO EXISTING CONDUCTORS
SD	SERVICE DISCONNECT
TSP	TELEPHONE SERVICE POINT

ABBREVIATIONS

APS	ACCESSIBLE PEDESTRIAN SIGNAL
BBS	BATTERY BACKUP SYSTEM
BC	BOLT CIRCLE
BPB	BICYCLE PUSH BUTTON
C	CONDUIT
CB	CIRCUIT BREAKER
CCTV	CLOSED CIRCUIT TELEVISION
Ckt	CIRCUIT
CMS	CHANGEABLE MESSAGE SIGN
Ctid	CALTRANS IDENTIFICATION
Comm	COMMUNICATION
DLC	LOOP DETECTOR LEAD-IN CABLE
EMS	EXTINGUISHABLE MESSAGE SIGN
EVUC	EMERGENCY VEHICLE UNIT CABLE
EVUD	EMERGENCY VEHICLE UNIT DETECTOR
FB	FLASHING BEACON
FBCA	FLASHING BEACON CONTROL ASSEMBLY
FBS	FLASHING BEACON WITH SLIP BASE
FO	FIBER OPTIC
G	EQUIPMENT GROUNDING CONDUCTOR
GB	GROUND BUS
GFCI	GROUND FAULT CIRCUIT INTERRUPTER
HAR	HIGHWAY ADVISORY RADIO
Hex	HEXAGONAL
HPS	HIGH PRESSURE SODIUM
IISNS	INTERNALLY ILLUMINATED STREET NAME SIGN
ISL	INDUCTION SIGN LIGHTING
LED	LIGHT EMITTING DIODE
LMA	LUMINAIRE MAST ARM
LPS	LOW PRESSURE SODIUM
Ltg	LIGHTING
Lum	LUMINAIRE
M	METERED
MAT	MAST ARM MOUNTING TOP ATTACHMENT
MAS	MAST ARM MOUNTING SIDE ATTACHMENT
M/M	MULTIPLE TO MULTIPLE TRANSFORMER
Mtg	MOUNTING
MV	MERCURY VAPOR LIGHTING FIXTURE
MVDS	MICROWAVE VEHICLE DETECTION SYSTEM
N	NEUTRAL (GROUNDED CONDUCTOR)
NB	NEUTRAL BUS
NC	NORMALLY CLOSE
NO	NORMALLY OPEN
P	CIRCUIT BREAKER'S POLE
PB	PULL BOX
PBA	PUSH BUTTON ASSEMBLY
PEC	PHOTOELECTRIC CONTROL
Ped	PEDESTRIAN
PEU	PHOTOELECTRIC UNIT
PT	CONDUIT WITH PULL TAPE
RE	RELOCATED EQUIPMENT
RM	RAMP METERING
RWIS	ROADSIDE WEATHER INFORMATION SYSTEM
SB	SLIP BASE
SIC	SIGNAL INTERCONNECT CABLE
Sig	SIGNAL
SMA	SIGNAL MAST ARM
SNS	STREET NAME SIGN
SP	SERVICE POINT
TDC	TELEPHONE DEMARCATION CABINET
TMS	TRAFFIC MONITORING STATION
TOS	TRAFFIC OPERATIONS SYSTEM
Veh	VEHICLE
VIVDS	VIDEO IMAGE VEHICLE DETECTION SYSTEM
WIM	WEIGH-IN-MOTION
Xfmr	TRANSFORMER

SOFFIT AND WALL MOUNTED LUMINAIRES

PENDANT, 70 W HPS UNLESS OTHERWISE SPECIFIED

FLUSH, 70 W HPS UNLESS OTHERWISE SPECIFIED

WALL SURFACE, 70 W HPS UNLESS OTHERWISE SPECIFIED

EXISTING SOFFIT OR WALL LUMINAIRE TO REMAIN UNMODIFIED

EXISTING SOFFIT OR WALL LUMINAIRE TO BE MODIFIED AS SPECIFIED

NOTE:

Arrow indicates "street side" of luminaire.

MISCELLANEOUS ELECTROLIERS

NEW	EXISTING	
		LUMINAIRE ON WOOD POLE
		NON-STANDARD ELECTROLIER (SEE PROJECT NOTES OR PROJECT PLANS)
		CITY ELECTROLIER
		ELECTROLIER FOUNDATION (FUTURE INSTALLATION)

NOTES:

1. HPS luminaires shall be 310 W HPS when installed on Type 21, 21D, 30, 31 and 32 Standards, unless otherwise specified. HPS luminaires shall be 200 W when installed on other type standards or poles, unless otherwise specified.
2. LED luminaires shall be 235 W when installed on Type 21, 21D, 30, 31 and 32 Standards, unless otherwise specified. LED luminaires shall be 165 W when installed on other type standards or poles, unless otherwise specified.
3. Luminaires shall be the cutoff type, ANSI Type III medium cutoff lighting distribution, unless otherwise specified.

STANDARD ELECTROLIER

NEW	EXISTING	STANDARD TYPE
		15
		15D
		15 STRUCTURE
		15D STRUCTURE
		21
		21D
		21 STRUCTURE
		21D STRUCTURE
		30
		31
		32

COMMONLY USED SYMBOLS FOR UNITED STATES CUSTOMARY UNITS OF MEASUREMENT:

SYMBOL USED	DEFINITIONS
Ω	OHMS
min	MINUTE
s	SECOND
bps	BITS PER SECOND
Bps	BYTES PER SECOND
A	AMPERE
V	VOLT
V(dc)	VOLT (DIRECT CURRENT)
V(ac)	VOLT (ALTERNATING CURRENT)
FC	FOOT - CANDLE
W	WATTS
VA	VOLT-AMPERE
M	MEGA
k	KILO
m	MILLI
μ	MICRO
P	PICO
Hz	HERTZ

STATE OF CALIFORNIA
DEPARTMENT OF TRANSPORTATION

ELECTRICAL SYSTEMS (LEGEND AND ABBREVIATIONS)

NO SCALE

RSP ES-1A DATED JULY 19, 2013 SUPERSEDES STANDARD PLAN ES-1A DATED MAY 20, 2011 - PAGE 425 OF THE STANDARD PLANS BOOK DATED 2010.

REVISED STANDARD PLAN RSP ES-1A

2010 REVISED STANDARD PLAN RSP ES-1A

P:\PROJ\01\0B310\drafting\01-0B310\vd004.dgn

7-15-13

Dist	COUNTY	ROUTE	POST MILES TOTAL PROJECT	SHEET No.	TOTAL SHEETS
01	DN	199	8.7, 21.7	32	54

Theresa Gabriel
REGISTERED ELECTRICAL ENGINEER

July 19, 2013
PLANS APPROVAL DATE

REGISTERED PROFESSIONAL ENGINEER Theresa Aziz Gabriel No. E15129 Exp. 6-30-14 ELECTRICAL STATE OF CALIFORNIA

THE STATE OF CALIFORNIA OR ITS OFFICERS OR AGENTS SHALL NOT BE RESPONSIBLE FOR THE ACCURACY OR COMPLETENESS OF SCANNED COPIES OF THIS PLAN SHEET.

TO ACCOMPANY PLANS DATED 6-29-15

CONDUIT

NEW	EXISTING	
		LIGHTING CONDUIT, UNLESS OTHERWISE INDICATED OR NOTED
		TRAFFIC SIGNAL CONDUIT
C	c	COMMUNICATION CONDUIT
T	t	TELEPHONE CONDUIT
F	f	FIRE ALARM CONDUIT
FO	fo	FIBER OPTIC CONDUIT
		CONDUIT TERMINATION
R	r	CONDUIT RISER ATTACHED TO THE STRUCTURE OR SERVICE POLE

SERVICE EQUIPMENT

NEW	EXISTING	
OH	oh	OVERHEAD LINES
U	U	WOOD POLE, "U" INDICATES UTILITY OWNED
		POLE GUY WITH ANCHOR
		UTILITY TRANSFORMER - GROUND MOUNTED
III	III	SERVICE EQUIPMENT ENCLOSURE TYPE. DOOR INDICATES FRONT OF ENCLOSURE
T	t	TELEPHONE DEMARCATION CABINET

POLE-MOUNTED SERVICE DESIGNATION

TYPE H SERVICE, 28'-10" — TYPE OF INSTALLATION AND POLE HEIGHT ABOVE GRADE

FLASHING BEACON

NEW	EXISTING	
R	R	FLASHING BEACON (ONE VEHICLE SIGNAL HEAD WITH BACKPLATE AND VISOR) "R" INDICATES RED INDICATION, "Y" INDICATES YELLOW INDICATION
Y Y	Y Y	FLASHING BEACON WITH TYPE 15-FBS STANDARD AND A SIGN.
R R	R R	FLASHING BEACON WITH TYPES 9, 9A OR 9B SIGN UNLESS OTHERWISE SPECIFIED OR INDICATED

SIGNAL EQUIPMENT

NEW	EXISTING	
C	C	PEDESTRIAN SIGNAL HEAD "C" INDICATES COUNTDOWN PEDESTRIAN HEAD
		PUSH BUTTON ASSEMBLY POST
		PEDESTRIAN BARRICADE
		VEHICLE SIGNAL HEAD (WITH BACKPLATE AND 3-SECTIONS: RED, YELLOW AND GREEN)
		VEHICLE SIGNAL HEAD WITH ANGLE VISOR
PV	PV	MODIFICATIONS OF BASIC SYMBOL: "L" INDICATES ALL NON-ARROW SECTIONS LOUVERED "LG" INDICATES LOUVERED GREEN SECTION ONLY "PV" INDICATES ALL 12" SECTIONS PROGRAMMED VISIBILITY "8" INDICATES ALL 8" SECTIONS (ONLY WHEN SPECIFIED)
		VEHICLE SIGNAL HEAD CONSISTING OF RED, YELLOW AND GREEN LEFT ARROW SECTIONS
		VEHICLE SIGNAL HEAD CONSISTING OF RED AND YELLOW SECTIONS WITH AN UP GREEN ARROW SECTION
		VEHICLE SIGNAL HEAD (5 SECTION) CONSISTING OF RED, YELLOW AND GREEN SECTIONS WITH YELLOW AND GREEN RIGHT ARROW SECTIONS
		TYPE 15TS STANDARD WITH VEHICLE SIGNAL HEAD AND LUMINAIRE
		TYPE 21TS STANDARD WITH VEHICLE SIGNAL HEAD AND LUMINAIRE
		STANDARD WITH LUMINAIRE AND SIGNAL MAST ARMS AND ATTACHED VEHICLE SIGNAL HEADS
		TYPE 1 STANDARD WITH ATTACHED VEHICLE SIGNAL HEADS
		STANDARD WITH A SIGNAL MAST ARM, ATTACHED VEHICLE SIGNAL HEADS AND INTERNALLY ILLUMINATED STREET NAME SIGN
		CONTROLLER ASSEMBLY. DOOR INDICATES FRONT OF CABINET

SIGNAL EQUIPMENT Cont

NEW	EXISTING	
		GUARD POST
		TYPE 1 STANDARD WITH RAMP METERING SIGN
		OPTICAL DETECTOR FOR THE EMERGENCY VEHICLE DETECTION SYSTEM

NOTES:

1. All signal sections shall be 12" unless shown otherwise.
2. Signal heads shall be provided with backplates unless shown otherwise.

ILLUMINATED OVERHEAD SIGN

NEW	EXISTING	
		SINGLE POST, SINGLE ILLUMINATED SIGN, BALANCED BUTTERFLY
		SINGLE POST, DOUBLE ILLUMINATED SIGN, BALANCED BUTTERFLY
		SINGLE POST, SINGLE ILLUMINATED SIGN, FULL CANTILEVER
		DOUBLE POST, SINGLE ILLUMINATED SIGN
		SINGLE ILLUMINATED SIGN MOUNTED ON STRUCTURE
		DOUBLE POST, SINGLE ILLUMINATED SIGN WITH ELECTROLIER

STATE OF CALIFORNIA
DEPARTMENT OF TRANSPORTATION

ELECTRICAL SYSTEMS (LEGEND AND ABBREVIATIONS)

NO SCALE

RSP ES-1B DATED JULY 19, 2013 SUPERSEDES STANDARD PLAN ES-1B DATED MAY 20, 2011 - PAGE 426 OF THE STANDARD PLANS BOOK DATED 2010.

REVISED STANDARD PLAN RSP ES-1B

2010 REVISED STANDARD PLAN RSP ES-1B

P:\PROJ\01\08310\drafting\01-08310\vd005.dgn

7-15-13

Dist	COUNTY	ROUTE	POST MILES TOTAL PROJECT	SHEET No.	TOTAL SHEETS
01	DN	199	8.7, 21.7	33	54

Theresa Gabriel
REGISTERED ELECTRICAL ENGINEER

July 19, 2013
PLANS APPROVAL DATE

REGISTERED PROFESSIONAL ENGINEER Theresa Aziz Gabriel No. E15129 Exp. 6-30-14 ELECTRICAL STATE OF CALIFORNIA

THE STATE OF CALIFORNIA OR ITS OFFICERS OR AGENTS SHALL NOT BE RESPONSIBLE FOR THE ACCURACY OR COMPLETENESS OF SCANNED COPIES OF THIS PLAN SHEET.

TO ACCOMPANY PLANS DATED 6-29-15

EQUIPMENT IDENTIFICATION

ILLUMINATED SIGN IDENTIFICATION NUMBER:

SIGN No. 12345

10 ISL SCI 1.0

- SIGN NUMBER - PLACE ON POST OR STRUCTURE
- TRANSFORMER RATING (kVA)
- LIGHTING CONTROL TYPE
- NUMBER AND TYPE OF FIXTURES

DO NOT PLACE ON STANDARD OR STRUCTURE

ELECTROLIER OR EQUIPMENT IDENTIFICATION NUMBER:

12345 - 15'-0"

- MAST ARM LENGTH, IF SHOWN. DO NOT PLACE ON STANDARD OR STRUCTURE
- EQUIPMENT NUMBER - PLACE ON STANDARD OR STRUCTURE. EXISTING EQUIPMENT NUMBERS ARE SHOWN IN PARENTHESIS

CONDUIT AND CONDUCTOR IDENTIFICATION:

1½"C, 2#10, 15#14, 2 DLC, 12P#18 (PAIR)

- NUMBER AND SIZE OF CONDUCTORS AND CABLES
- SIZE OF CONDUIT IN INCHES

ø1, ø2, ø2P, etc.	TRAFFIC PHASE IDENTIFICATION FOR SIGNAL FACES, DETECTORS AND PHASE DIAGRAMS
1 2 3	LEGEND NUMBERS
A B C	EQUIPMENT, SIGNAL POLES, INSTALLATION OR ITEMS
1 2 3	CONDUIT RUN NUMBERS

SIGNAL AND LIGHTING STANDARD (TYPICAL DESIGNATION):

19A - 3 - 100

- WIND VELOCITY = 100 mph
- CASE 3 ARM LOADING
- STANDARD TYPE
- STANDARD PLAN SHEET NUMBER
- DETAIL, NUMBER, SECTION, TYPE OR ELEVATION

MISCELLANEOUS EQUIPMENT

NEW	EXISTING	
CMS	cms	CHANGEABLE MESSAGE SIGN
		CLOSED CIRCUIT TELEVISION CAMERA
		HIGHWAY ADVISORY RADIO POLE AND ANTENNA
EMS	ems	EXTINGUISHABLE MESSAGE SIGN
M V	m v	DETECTION DEVICE M = MICROWAVE SENSOR V = VIDEO IMAGE SENSOR

WIRING DIAGRAM LEGEND

- EXTERNAL CONDUCTOR
- CONDUCTOR OR BUS
- TIE POINT
- CONTACTOR COIL
- CONTACTOR, NO CONTACT
- TERMINAL BLOCKS
- CONTACTOR, NC CONTACT
- ENCLOSURE BOND
- GROUNDING ELECTRODE
- CIRCUIT BREAKER
- RECEPTACLE

PULL BOXES

NEW	EXISTING	
		PULL BOX, No. 5 UNLESS OTHERWISE INDICATED OR NOTED
3	9A(21)	PULL BOX, ADDITIONAL DESIGNATIONS OR DESCRIPTIONS

3 No. 3½ PULL BOX
5 No. 5 PULL BOX
6 No. 6 PULL BOX
7 No. 7 (CEILING PULL BOX)
8 No. 8 (PENDANT SOFFIT PULL BOX)
9 No. 9 PULL BOX
9A No. 9A PULL BOX

(C) COMMUNICATIONS PULL BOX
(E) PULL BOX WITH EXTENSION
(S) SPRINKLER CONTROL PULL BOX
(21) ANCHOR BOLTS AND CONDUIT FOR FUTURE INSTALLATION OF TYPE 21 STANDARD
(T) TRAFFIC PULL BOX

VEHICLE DETECTORS

5 J 9 U

- VEHICLE DETECTOR DESIGNATION
- U = UPPER
  L = LOWER
- SLOT NUMBER IN INPUT FILE
- INPUT FILE (I OR J)
- PHASE

NEW	EXISTING	
		TYPE A DETECTOR LOOP. OUTLINE OF SAWCUT SHOWN
		TYPE B DETECTOR LOOP. OUTLINE OF SAWCUT SHOWN
		TYPE C DETECTOR LOOP. OUTLINE OF SAWCUT SHOWN
		TYPE D DETECTOR LOOP. OUTLINE OF SAWCUT SHOWN
		TYPE E DETECTOR LOOP. OUTLINE OF SAWCUT SHOWN
		TYPE Q DETECTOR LOOP. OUTLINE OF SAWCUT SHOWN
		MAGNETIC DETECTOR
DH	dh	DETECTOR HANDHOLE
		MICROWAVE OR VIDEO DETECTION ZONE

STATE OF CALIFORNIA
DEPARTMENT OF TRANSPORTATION

ELECTRICAL SYSTEMS (LEGEND AND ABBREVIATIONS)

NO SCALE

RSP ES-1C DATED JULY 19, 2013 SUPERSEDES STANDARD PLAN ES-1C DATED MAY 20, 2011 - PAGE 427 OF THE STANDARD PLANS BOOK DATED 2010.

REVISED STANDARD PLAN RSP ES-1C

2010 REVISED STANDARD PLAN RSP ES-1C

P:\PROJ\01\0B310\drafting\01-0B310\vo0006.dgn

7-11-13

Dist	COUNTY	ROUTE	POST MILES TOTAL PROJECT	SHEET No.	TOTAL SHEETS
01	DN	199	8.7, 21.7	34	54

Theresa Gabriel
REGISTERED ELECTRICAL ENGINEER

July 19, 2013
PLANS APPROVAL DATE

REGISTERED PROFESSIONAL ENGINEER
Theresa Aziz Gabriel
No. E15129
Exp. 6-30-14
ELECTRICAL
STATE OF CALIFORNIA

THE STATE OF CALIFORNIA OR ITS OFFICERS OR AGENTS SHALL NOT BE RESPONSIBLE FOR THE ACCURACY OR COMPLETENESS OF SCANNED COPIES OF THIS PLAN SHEET.

TO ACCOMPANY PLANS DATED 6-29-15

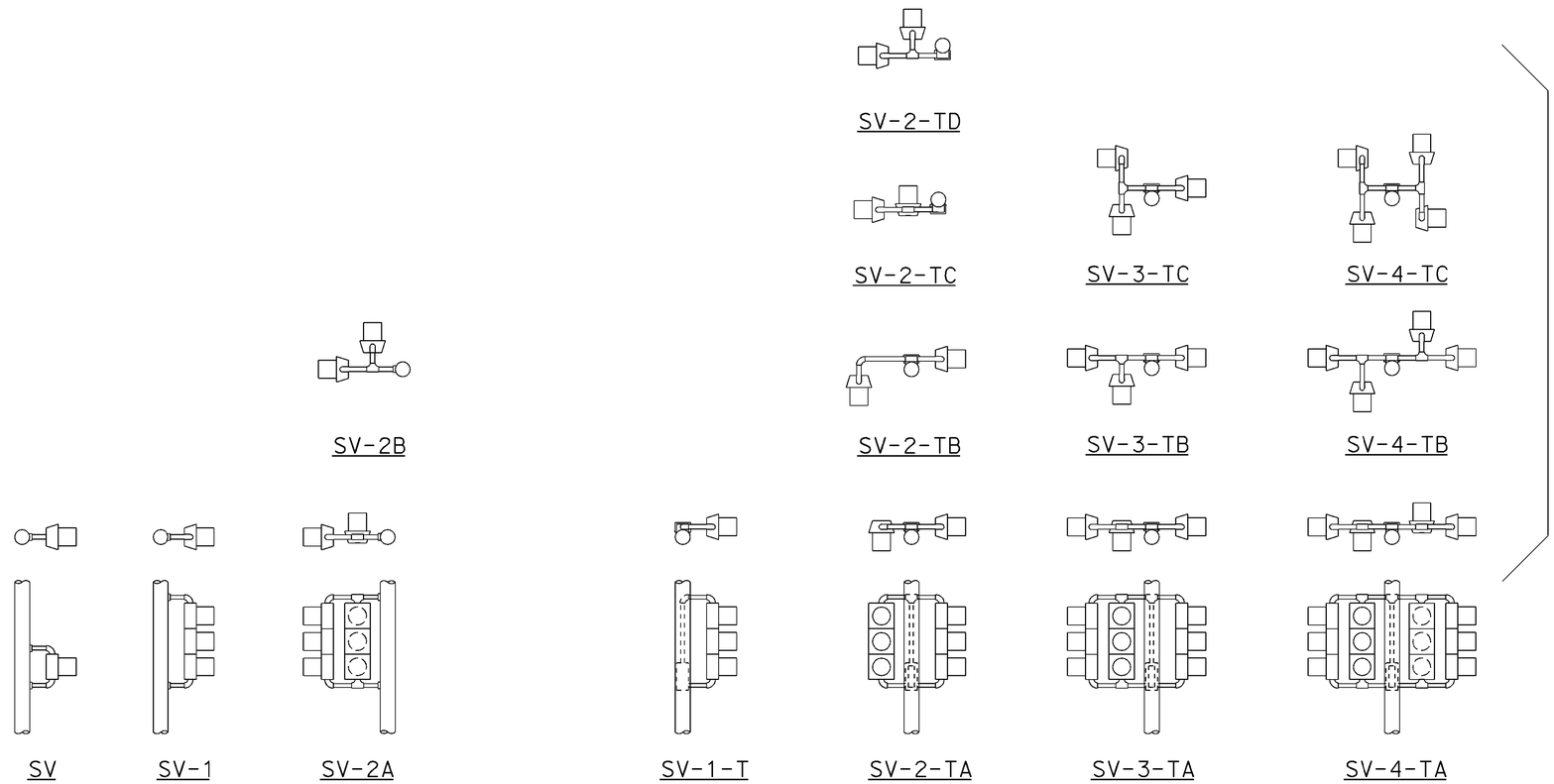

SIDE MOUNTINGS

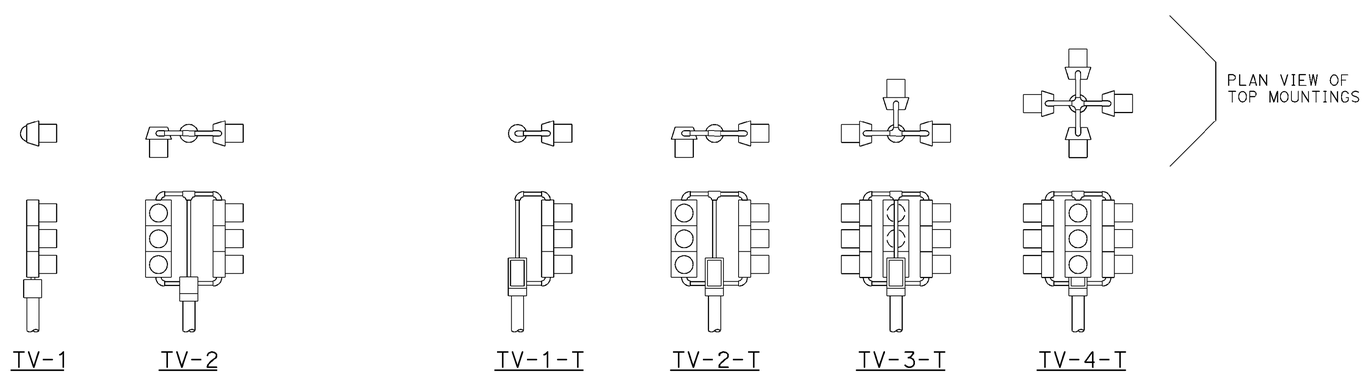

TOP MOUNTINGS

ABBREVIATIONS:

SV	SIDE MOUNTED VEHICLE SIGNALS
T	TERMINAL COMPARTMENT
TV	TOP MOUNTED VEHICLE SIGNALS
1, 2, 3, 4	NUMBER OF SIGNAL FACES (3 - SECTION, UNLESS OTHERWISE INDICATED)
A, B, C, D	CONFIGURATION OF SIGNALS

NOTES:

1. Mountings shall be oriented to provide maximum horizontal clearance to adjacent roadway.
2. Bracket arms shall be long enough to permit proper alignment of signals and backplate installation.
3. See Standard Plans ES-4D and ES-4E for attachment fitting details.

STATE OF CALIFORNIA
DEPARTMENT OF TRANSPORTATION

ELECTRICAL SYSTEMS (VEHICULAR SIGNAL HEADS AND MOUNTINGS)

NO SCALE

RSP ES-4A DATED JULY 19, 2013 SUPERSEDES STANDARD PLAN ES-4A DATED MAY 20, 2011 - PAGE 443 OF THE STANDARD PLANS BOOK DATED 2010.

REVISED STANDARD PLAN RSP ES-4A

2010 REVISED STANDARD PLAN RSP ES-4A

P:\PROJ\01\0B310\drafting\01-0B310\va007.dgn

7-9-13

Dist	COUNTY	ROUTE	POST MILES TOTAL PROJECT	SHEET No.	TOTAL SHEETS
01	DN	199	8.7, 21.7	35	54

Theresa Gabriel
REGISTERED ELECTRICAL ENGINEER

July 19, 2013
PLANS APPROVAL DATE

REGISTERED PROFESSIONAL ENGINEER
Theresa Aziz Gabriel
No. E15129
Exp. 6-30-14
ELECTRICAL
STATE OF CALIFORNIA

THE STATE OF CALIFORNIA OR ITS OFFICERS OR AGENTS SHALL NOT BE RESPONSIBLE FOR THE ACCURACY OR COMPLETENESS OF SCANNED COPIES OF THIS PLAN SHEET.

TO ACCOMPANY PLANS DATED 6-29-15

VISORS

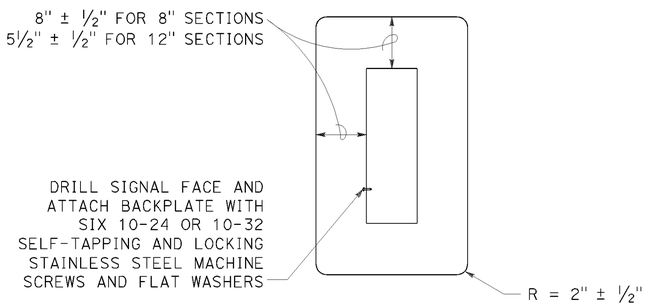

8" AND 12" SECTIONS

BACKPLATE

1/16" minimum thickness
3001-14 aluminum or plastic
when specified

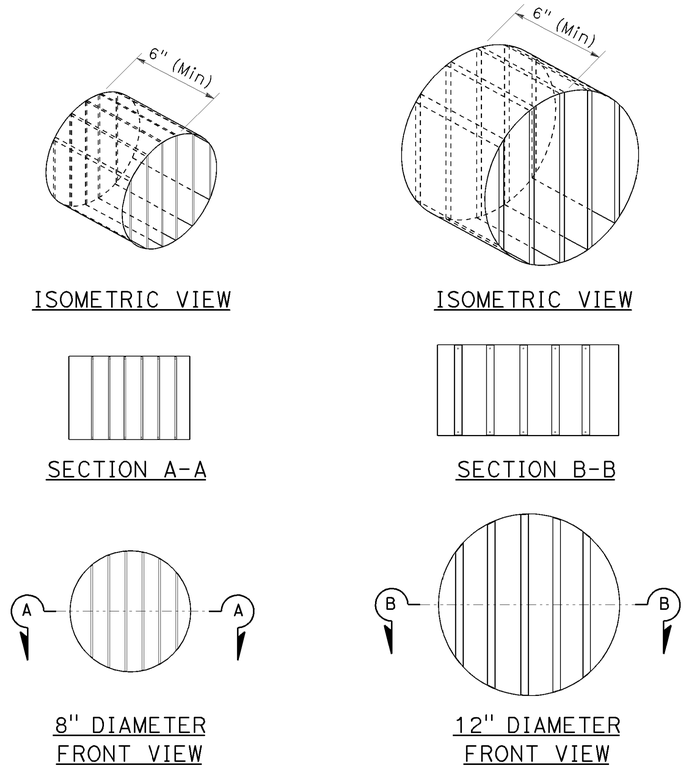

DIRECTIONAL LOUVER

Directional louvers shall be oriented as directed by the Engineer and secured in place with one plated brass machine screw and nut.

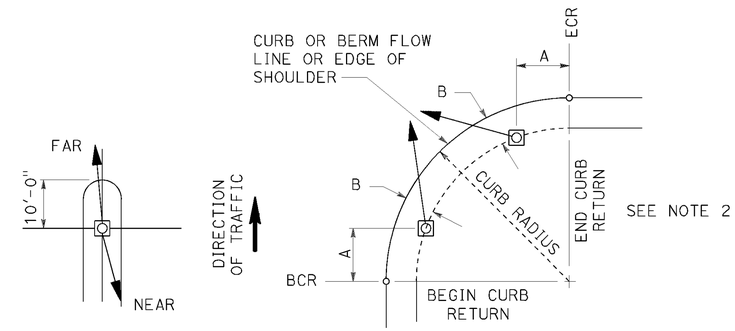

NOTES:

1. Typical signal pole placement unless dimensioned on plans.
2. For A and B dimensions, see Pole Schedule, or as directed by the Engineer.

SIGNAL STANDARD PLACEMENT DIMENSIONS AND EQUIPMENT LOCATIONS

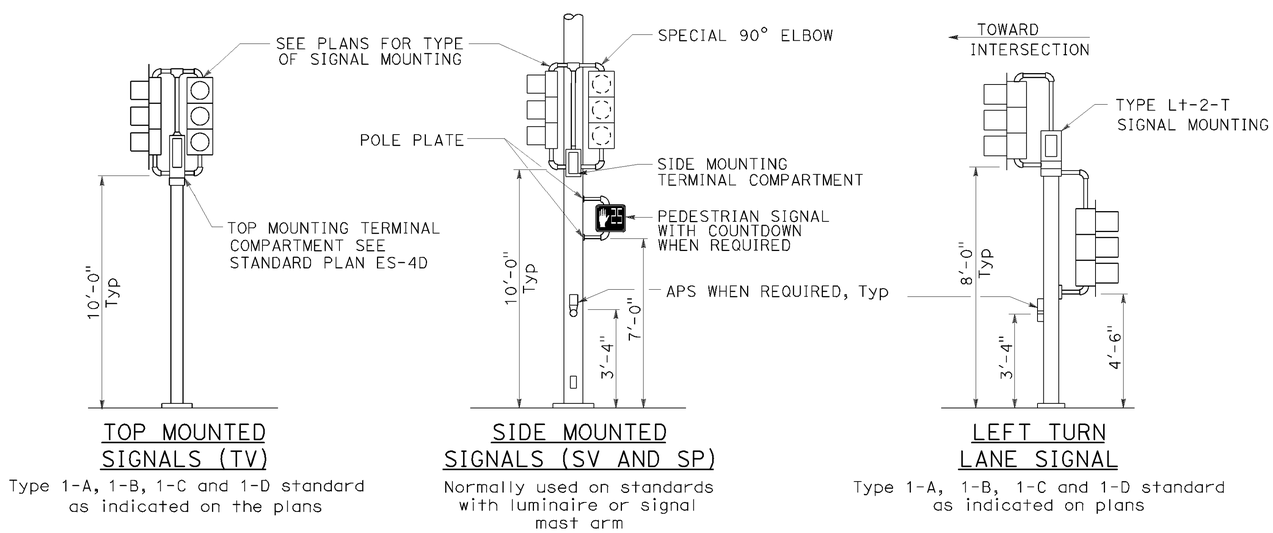

TOP MOUNTED SIGNALS (TV)
Type 1-A, 1-B, 1-C and 1-D standard as indicated on the plans

SIDE MOUNTED SIGNALS (SV AND SP)
Normally used on standards with luminaire or signal mast arm

LEFT TURN LANE SIGNAL
Type 1-A, 1-B, 1-C and 1-D standard as indicated on plans

TYPICAL SIGNAL INSTALLATIONS

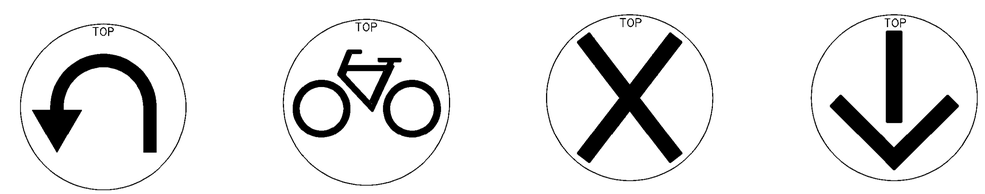

U-TURN | BICYCLE | LANE CONTROL | LANE CONTROL

SIGNAL FACES

STATE OF CALIFORNIA
DEPARTMENT OF TRANSPORTATION

ELECTRICAL SYSTEMS (VEHICULAR SIGNAL HEADS AND MOUNTINGS)

NO SCALE

RSP ES-4C DATED JULY 19, 2013 SUPERSEDES STANDARD PLAN ES-04C DATED MAY 20, 2011 - PAGE 445 OF THE STANDARD PLANS BOOK DATED 2010.

REVISED STANDARD PLAN RSP ES-4C

2010 REVISED STANDARD PLAN RSP ES-4C

P:\PROJ\01\0B310\drafting\01-0B310\va008.dgn

7-10-13

Dist	COUNTY	ROUTE	POST MILES TOTAL PROJECT	SHEET No.	TOTAL SHEETS
01	DN	199	8.7, 21.7	36	54

Theresa Gabriel
REGISTERED ELECTRICAL ENGINEER

July 19, 2013
PLANS APPROVAL DATE

REGISTERED PROFESSIONAL ENGINEER Theresa Aziz Gabriel No. E15129 Exp. 6-30-14 ELECTRICAL STATE OF CALIFORNIA

THE STATE OF CALIFORNIA OR ITS OFFICERS OR AGENTS SHALL NOT BE RESPONSIBLE FOR THE ACCURACY OR COMPLETENESS OF SCANNED COPIES OF THIS PLAN SHEET.

TO ACCOMPANY PLANS DATED 6-29-15

2010 REVISED STANDARD PLAN RSP ES-5B

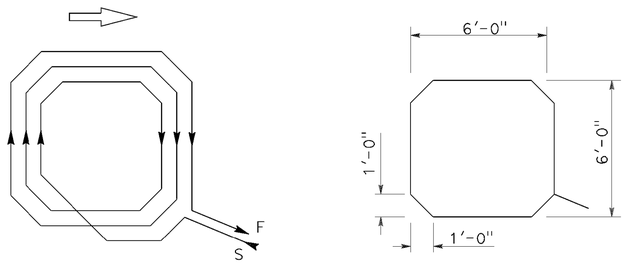

WINDING DETAIL SAWCUT DETAIL

TYPE A LOOP DETECTOR CONFIGURATION

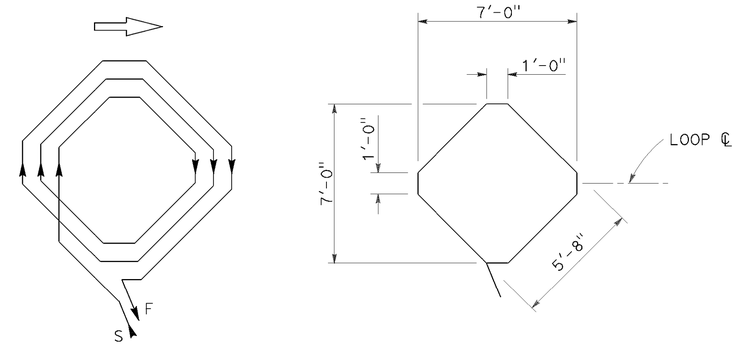

WINDING DETAIL SAWCUT DETAIL

TYPE B LOOP DETECTOR CONFIGURATION

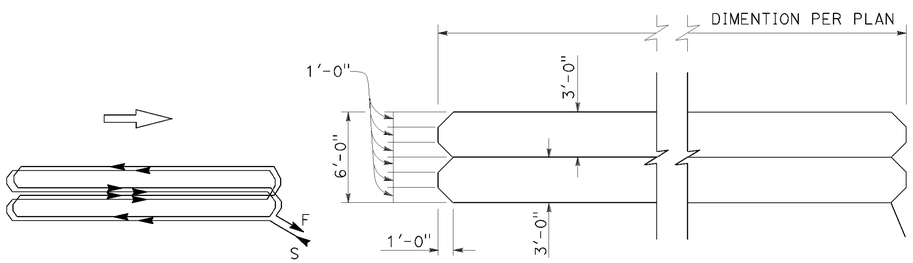

WINDING DETAIL SAWCUT DETAIL

TYPE C LOOP DETECTOR CONFIGURATION

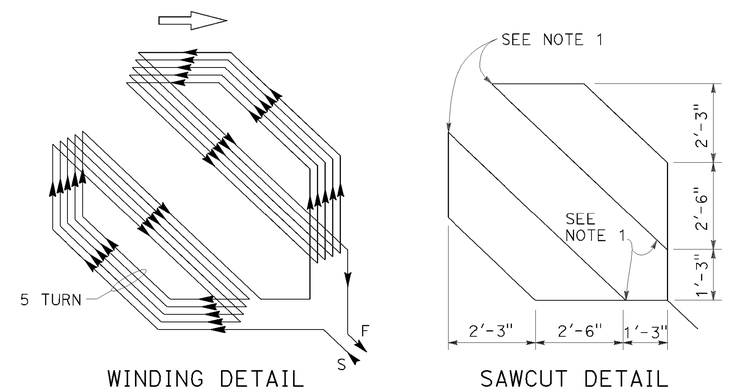

WINDING DETAIL SAWCUT DETAIL

TYPE D LOOP DETECTOR CONFIGURATION

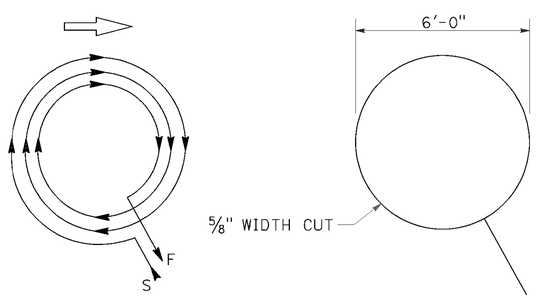

WINDING DETAIL SAWCUT DETAIL

TYPE E LOOP DETECTOR CONFIGURATION

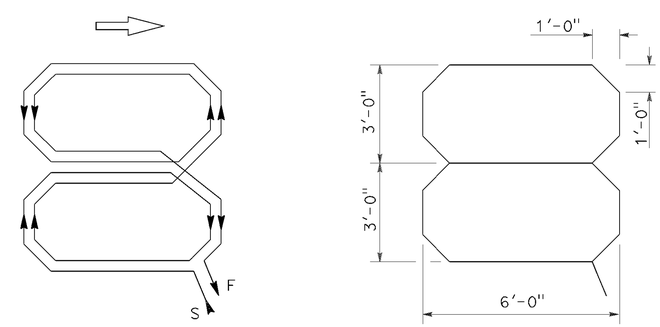

WINDING DETAIL SAWCUT DETAIL

TYPE Q LOOP DETECTOR CONFIGURATION

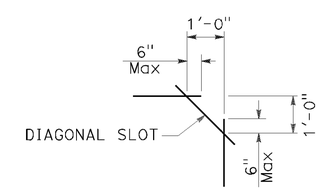

PLAN VIEW OF DIAGONAL SLOT AT CORNERS

NOTES:

1. Round corners of acute angle sawcuts to prevent damage to conductors.
2. Typical distance separating loops from edge to edge is 10' for Type A, B, D and E installation in single lane.

STATE OF CALIFORNIA
DEPARTMENT OF TRANSPORTATION

ELECTRICAL SYSTEMS (DETECTORS)

NO SCALE

RSP ES-5B DATED JULY 19, 2013 SUPERSEDES STANDARD PLAN ES-5B DATED MAY 20, 2011 - PAGE 449 OF THE STANDARD PLANS BOOK DATED 2010.

REVISED STANDARD PLAN RSP ES-5B

P:\PROJ\01\0B310\drafting\01-0B310\va009.dgn

7-9-13

Dist	COUNTY	ROUTE	POST MILES TOTAL PROJECT	SHEET No.	TOTAL SHEETS
01	DN	199	8.7, 21.7	37	54

Theresa Gabriel
REGISTERED ELECTRICAL ENGINEER

July 19, 2013
PLANS APPROVAL DATE

REGISTERED PROFESSIONAL ENGINEER Theresa Aziz Gabriel No. E15129 Exp. 6-30-14 ELECTRICAL STATE OF CALIFORNIA

THE STATE OF CALIFORNIA OR ITS OFFICERS OR AGENTS SHALL NOT BE RESPONSIBLE FOR THE ACCURACY OR COMPLETENESS OF SCANNED COPIES OF THIS PLAN SHEET.

TO ACCOMPANY PLANS DATED 6-29-15

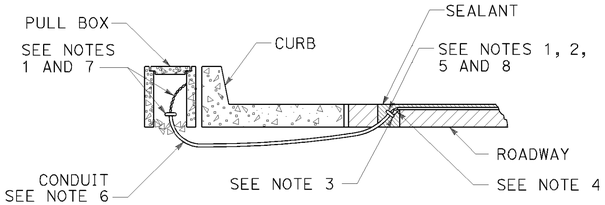

TYPE A
CURB TERMINATION DETAIL

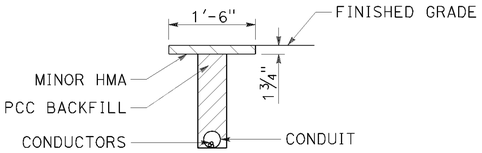

"T" TRENCH
DETAIL T

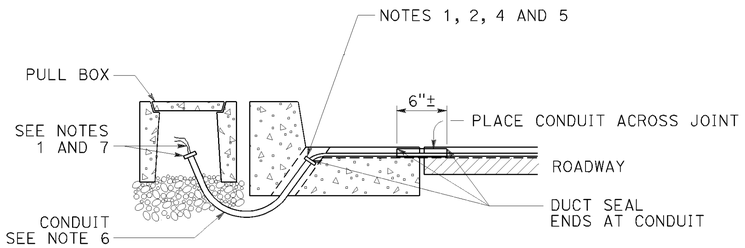

CROSS SECTION

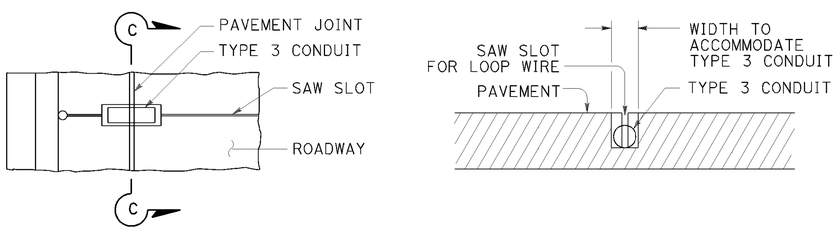

PLAN VIEW

SECTION C-C

TYPE B
CURB TERMINATION DETAIL

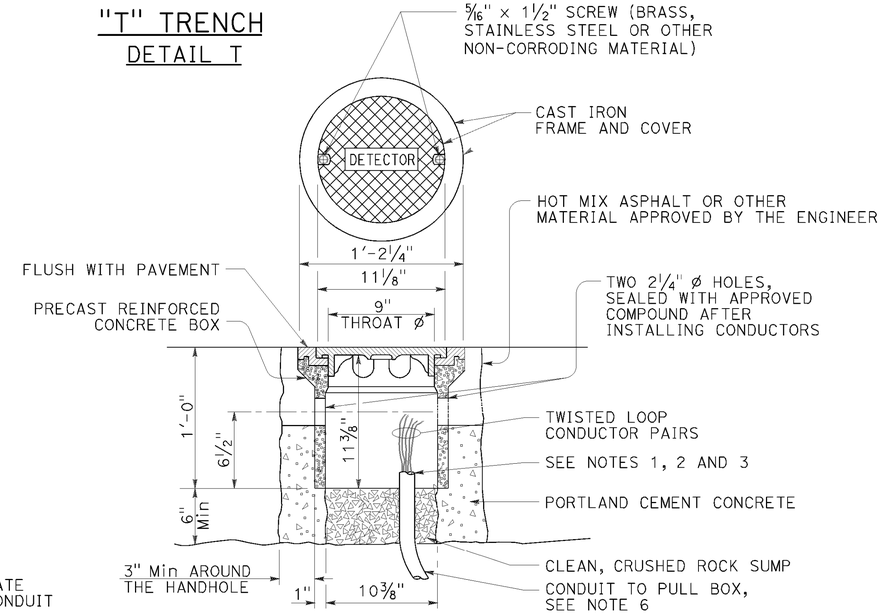

DETECTOR HANDHOLE DETAIL

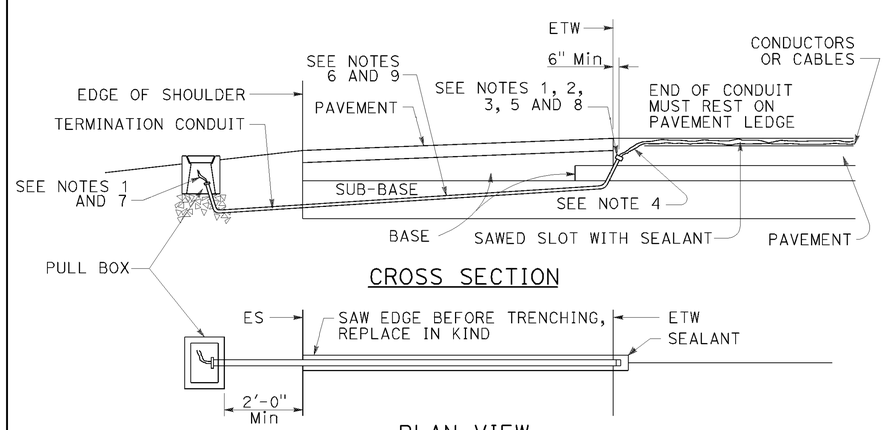

CROSS SECTION

PLAN VIEW

SHOULDER TERMINATION DETAILS

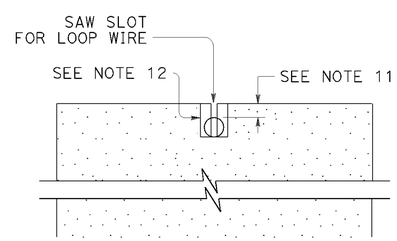

SECTION A-A

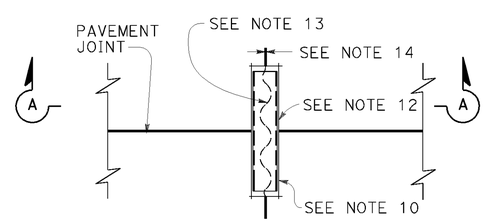

PLAN VIEW

TYPICAL LOOP LEAD-IN DETAIL
AT PAVEMENT JOINT

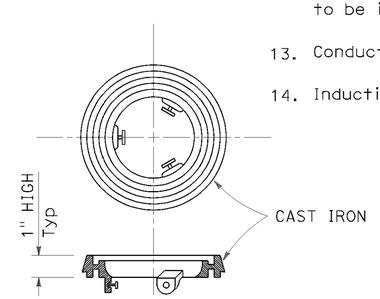

LOCKING GRADE RING

NOTES:

1. Bushing shall be used at end of conduit.
2. Tape detector conductors or cables 3" each side of bushings.
3. Install duct seal compound to each end of termination conduit before installing sealant.
4. Round all sharp edges where detector conductors or cables have to pass.
5. End of conduit shall be 3⅛" below roadway surface.
6.

Conduit size	Loop conductors
1"C minimum	1 to 2 pairs
1½"C minimum	3 to 4 pairs
2"C minimum	5 or more pairs

7. Splice detector conductors or cables to detector lead-in-cable.
8. Location of detector handhole when shown on plans.
9. When the shoulder and traveled way are paved with the same material and there is no joint between them, the conduit shall extend only 2'-0" into the shoulder pavement.
10. ¾"C, Type 3 conduit 6" long minimum, plug both ends with duct compound to keep out sealant.
11. ½" Minimum between top of conduit and pavement surface.
12. Sawcut shall not exceed 1" in width and ⅛" longer than conduit to be installed.
13. Conductors with ½" minimum slack inside conduit.
14. Inductive loop detector saw slot.

STATE OF CALIFORNIA
DEPARTMENT OF TRANSPORTATION

ELECTRICAL SYSTEMS (CURB TERMINATION AND HANDHOLE)

NO SCALE

RSP ES-5D DATED JULY 19, 2013 SUPERSEDES STANDARD PLAN ES-5D
DATED MAY 20, 2011 - PAGE 451 OF THE STANDARD PLANS BOOK DATED 2010.

REVISED STANDARD PLAN RSP ES-5D

2010 REVISED STANDARD PLAN RSP ES-5D

P:\PROJ\01\0B310\drafting\01-0B310\va0010.dgn

7-9-13

Dist	COUNTY	ROUTE	POST MILES TOTAL PROJECT	SHEET No.	TOTAL SHEETS
01	DN	199	8.7, 21.7	38	54

REGISTERED CIVIL ENGINEER

July 19, 2013
PLANS APPROVAL DATE

REGISTERED PROFESSIONAL ENGINEER
Stanley P. Johnson
No. C57793
Exp. 3-31-14
CIVIL
STATE OF CALIFORNIA

THE STATE OF CALIFORNIA OR ITS OFFICERS OR AGENTS SHALL NOT BE RESPONSIBLE FOR THE ACCURACY OR COMPLETENESS OF SCANNED COPIES OF THIS PLAN SHEET.

TO ACCOMPANY PLANS DATED 6-29-15

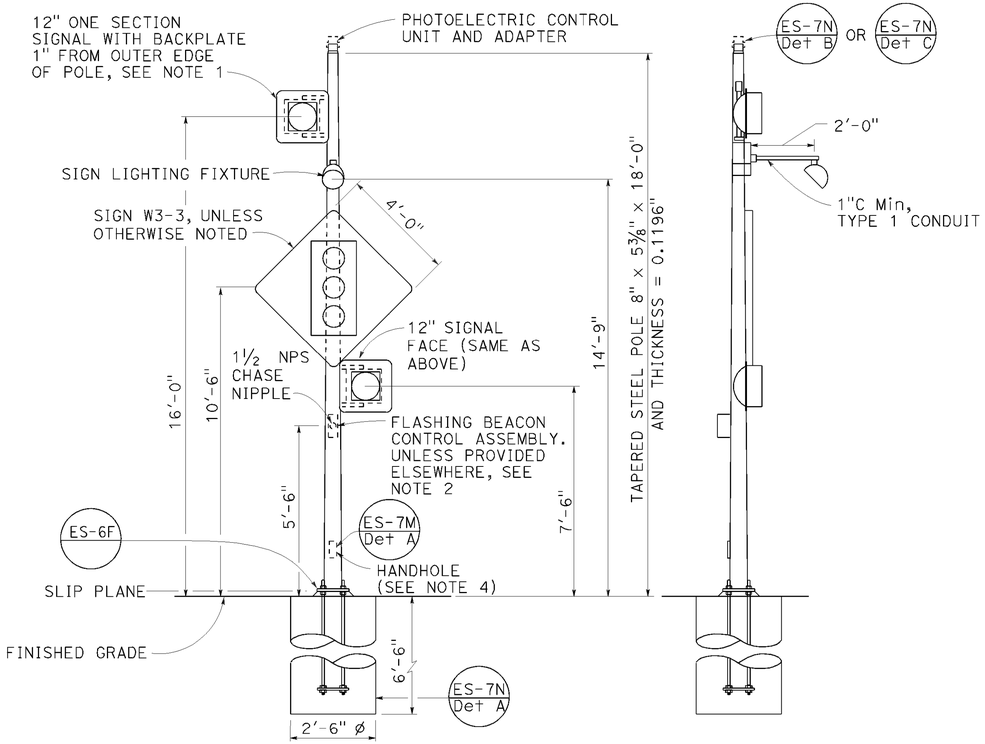

FRONT VIEW

SIDE VIEW

TYPE 15-FBS
ADVANCE FLASHING BEACON WITH SLIP BASE INSTALLATION
DETAIL A

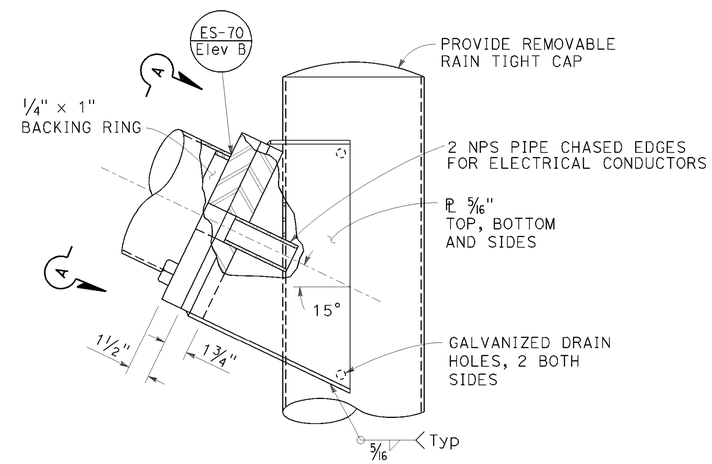

ELEVATION B

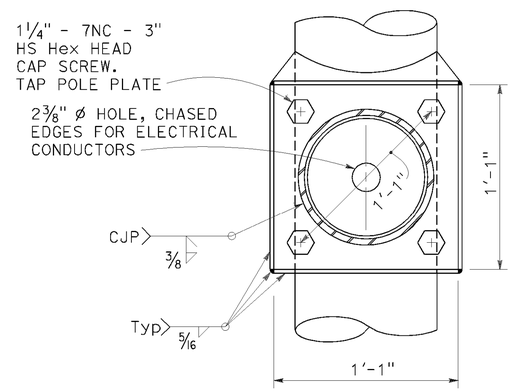

VIEW A-A

FLASHING BEACON MAST ARM CONNECTION DETAIL
DETAIL B

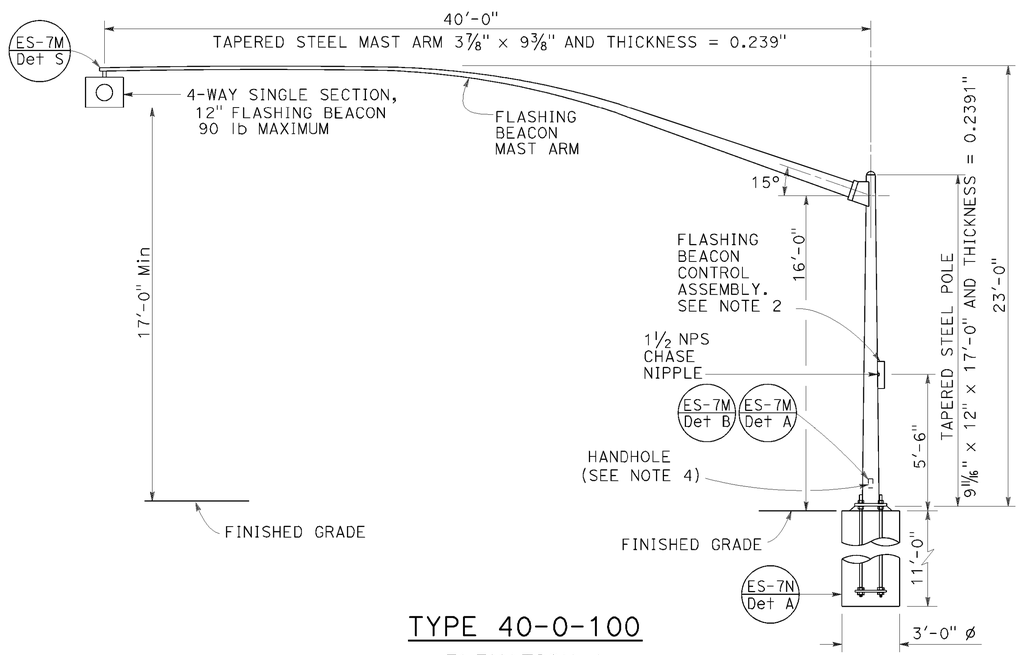

TYPE 40-0-100
ELEVATION A

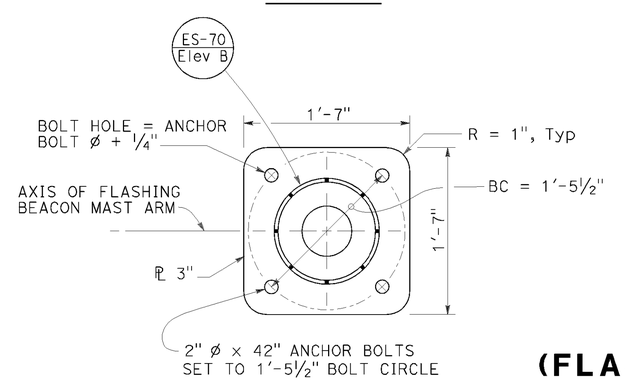

BASE PLATE
DETAIL C

NOTES:

1. See Revised Standard Plan RSP ES-4A and Standard Plan ES-4D for attachment fitting details.
2. For wiring diagram, see Standard Plan ES-14B.
3. For additional notes and details, see Standard Plans ES-7M and ES-7N.
4. Handhole shall be located on the downstream side of traffic.
5. See project plans for type of standard to be installed.

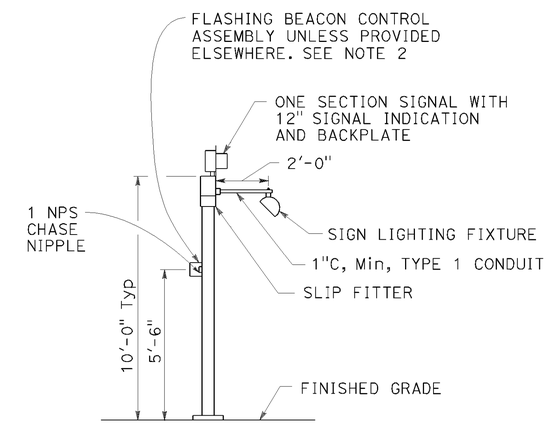

TYPE 1-A, 1-B, 1-C AND 1-D
ADVANCE FLASHING BEACON INSTALLATION
DETAIL D
See Note 5

STATE OF CALIFORNIA
DEPARTMENT OF TRANSPORTATION

ELECTRICAL SYSTEMS (FLASHING BEACON ON A TYPE 1, TYPE 15-FBS AND TYPE 40 STANDARD)

NO SCALE

RSP ES-7J DATED JULY 19, 2013 SUPERSEDES STANDARD PLAN ES-7J DATED MAY 20, 2011 - PAGE 471 OF THE STANDARD PLANS BOOK DATED 2010.

REVISED STANDARD PLAN RSP ES-7J

2010 REVISED STANDARD PLAN RSP ES-7J

P:\PROJ\01\08310\drafting\01-08310\va011.dgn

6-26-13

DIST	COUNTY	ROUTE	POST MILES TOTAL PROJECT	SHEET NO.	TOTAL SHEETS
01	DN	199	8.7, 21.7	39	54

Theresa Gabriel
REGISTERED ELECTRICAL ENGINEER

July 19, 2013
PLANS APPROVAL DATE

REGISTERED PROFESSIONAL ENGINEER Theresa Aziz Gabriel No. E15129 Exp. 6-30-14 ELECTRICAL STATE OF CALIFORNIA

THE STATE OF CALIFORNIA OR ITS OFFICERS OR AGENTS SHALL NOT BE RESPONSIBLE FOR THE ACCURACY OR COMPLETENESS OF SCANNED COPIES OF THIS PLAN SHEET.

TO ACCOMPANY PLANS DATED 6-29-15

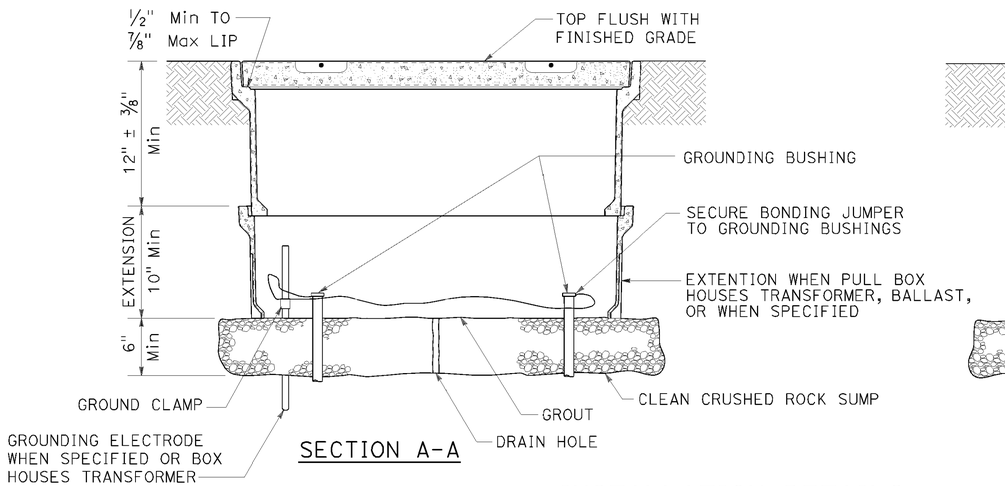

SECTION A-A

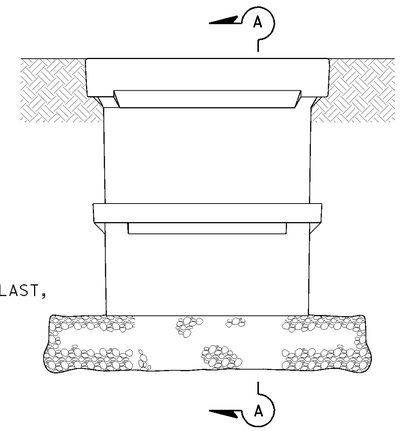

SIDE VIEW

INSTALLATION DETAILS

DETAIL A

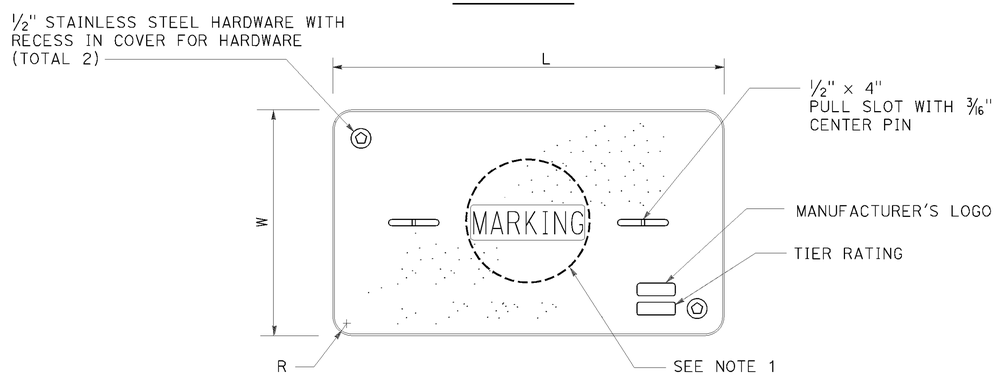

COVER TOP VIEW

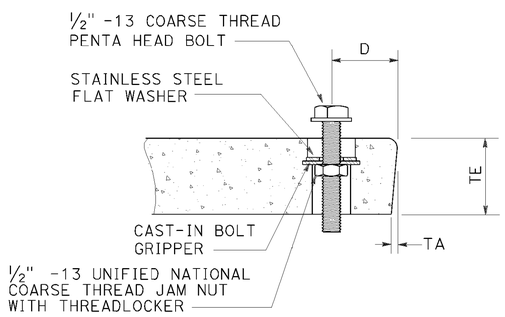

TYPICAL COVER CAPTIVE BOLT

OR SIMILAR

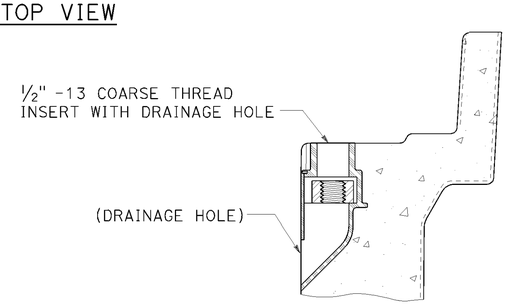

TYPICAL THREADED INSERT

OR SIMILAR

DIMENSION TABLE

PULL BOX	PULL BOX			COVER						
	MINIMUM DEPTH BOX	MINIMUM DEPTH EXTENSION	MAXIMUM WEIGHT	L	W	R	TE	TA	D	MAXIMUM WEIGHT
No. 3½	12"	N/A	40 lb	1′ - 3⅜"	10⅛"	1⅜"	2"	⅛"	1¾"	30 lb
No. 5	12"	10"	55 lb	1′ - 11¼"	1′ - 1¾"	1⅜"	2"	⅛"	1¾"	60 lb
No. 6	12"	10"	70 lb	2′ - 6½"	1′ - 5½"	1⅜"	2"	⅛"	2"	85 lb

NOTES:

1. Pull box covers shall be marked as follows: "SERVICE" Service circuits between service point and service disconnect; "SPRINKLER-CONTROL" sprinkler control circuits, 50 V or less; "CALTRANS" on all pull boxes, except pull boxes marked "SPRINKLER-CONTROL"; and "TELEPHONE" Telephone service;
   - A) No. 3½ pull box.
     - 1) "SIGNAL" - Traffic signal circuits with or without lighting or sign lighting circuits.
     - 2) "LIGHTING" - Lighting or sign lighting circuits where voltage is under 600 V.
   - B) No. 5, 6, 9 or 9A pull box.
     - 1) "TRAFFIC SIGNAL" - Traffic signal circuits with or without lighting or sign lighting circuits.
     - 2) "LIGHTING" - Lighting or sign lighting circuits where voltage is under 600 V.
     - 3) "LIGHTING-HIGH VOLTAGE" - Lighting or sign lighting circuits where voltage is above 600 V.
     - 4) "IRRIGATION" - Circuits to irrigation controller 120 V or more.
     - 5) "RAMP METER" - Ramp meter circuits.
     - 6) "COUNT STATION" - Count or speed monitor circuits.
     - 7) "COMMUNICATIONS" - Communication circuits.
     - 8) "TOS COMMUNICATIONS" - TOS communication line.
     - 9) "TOS POWER" - TOS power.
     - 10) "TDC POWER" - Telephone demarcation cabinet power.
     - 11) "CCTV" - Closed circuit television circuits.
     - 12) "TMS" - Traffic monitoring station circuits.
     - 13) "CMS" - Changeable message sign circuits.
     - 14) "HAR" - Highway advisory radio circuits.
     - 15) "BOOSTER PUMP" - Booster pump circuit.
2. The nominal dimensions of the opening in which the cover sets shall be the same as the cover dimensions except the length and width dimensions shall be ⅛" greater.
3. Covers and boxes shall be interchangeable with California standard male and female gages. When interchanged with a standard male or female gage, the top surfaces shall be flush within ⅛". Top outside radius of covers and pull boxes shall have a ⅛" radius.
4. Pull box extension may be another pull box as long as the bottom edge of the pull box can fit into the cover opening.
5. All dimensions for the cover for non-traffic pull box are nominal values.

STATE OF CALIFORNIA
DEPARTMENT OF TRANSPORTATION

ELECTRICAL SYSTEMS (NON-TRAFFIC PULL BOX)

NO SCALE

RSP ES-8A DATED JULY 19, 2013 SUPERSEDES RSP ES-8A DATED JANUARY 20, 2012 THAT SUPPLEMENTS THE STANDARD PLANS BOOK DATED 2010.

REVISED STANDARD PLAN RSP ES-8A

2010 REVISED STANDARD PLAN RSP ES-8A

P:\PROJ\01\08310\drafting\01-08310\va012.dgn

7-15-13

Dist	COUNTY	ROUTE	POST MILES TOTAL PROJECT	SHEET No.	TOTAL SHEETS
01	DN	199	8.7, 21.7	40	54

Theresa Gabriel
REGISTERED ELECTRICAL ENGINEER

July 19, 2013
PLANS APPROVAL DATE

REGISTERED PROFESSIONAL ENGINEER
Theresa Aziz Gabriel
No. E15129
Exp. 6-30-14
ELECTRICAL
STATE OF CALIFORNIA

THE STATE OF CALIFORNIA OR ITS OFFICERS OR AGENTS SHALL NOT BE RESPONSIBLE FOR THE ACCURACY OR COMPLETENESS OF SCANNED COPIES OF THIS PLAN SHEET.

TO ACCOMPANY PLANS DATED 6-29-15

ISOFOOTCANDLE CURVE - MINIMUM

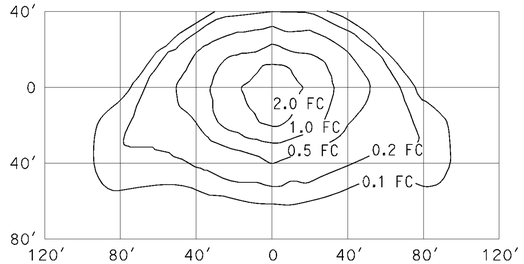

TYPE III MEDIUM CUTOFF

Cutoff Luminaire
34′ Mounting Height
Lamp operated at 22,000 lm
200-W high pressure sodium lamp
ANSI Designation S66

ISOFOOTCANDLE CURVE - MINIMUM

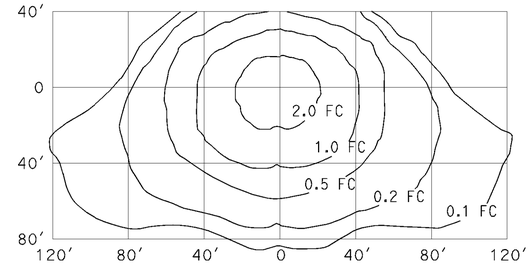

TYPE III MEDIUM CUTOFF

Cutoff Luminaire
40′ Mounting Height
Lamp operated at 37,000 lm
310-W high pressure sodium lamp
ANSI Designation S67

ISOFOOTCANDLE CURVE - MINIMUM

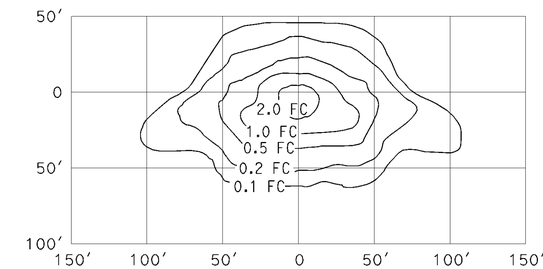

TYPE III MEDIUM CUTOFF

Cutoff Luminaire
30′ Mounting Height
Lamp operated at 16,000 lm
150-W high pressure sodium lamp
ANSI Designation S55

ISOFOOTCANDLE CURVE - MINIMUM

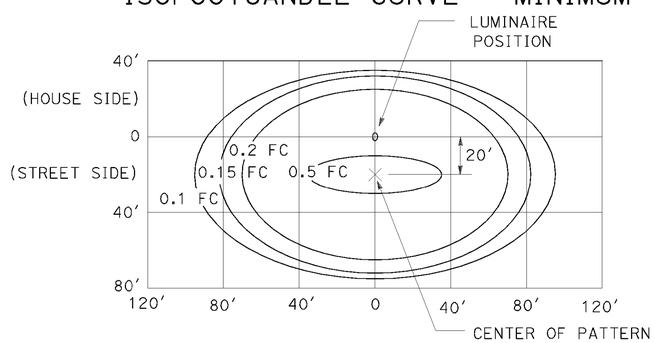

LED LUMINAIRE ROADWAY 1

165-W at 34′ Mounting Height

ISOFOOTCANDLE CURVE - MINIMUM

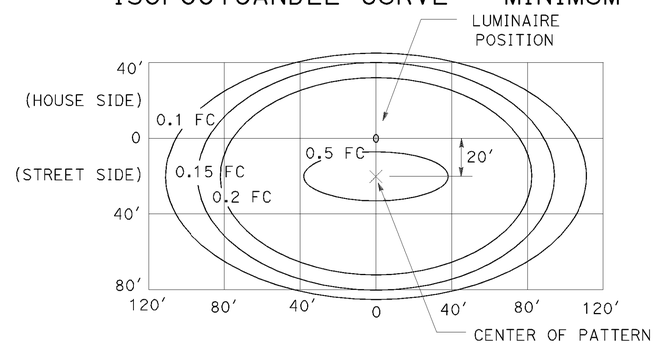

LED LUMINAIRE ROADWAY 2

235-W at 40′ Mounting Height

ISOFOOTCANDLE CURVE - MINIMUM

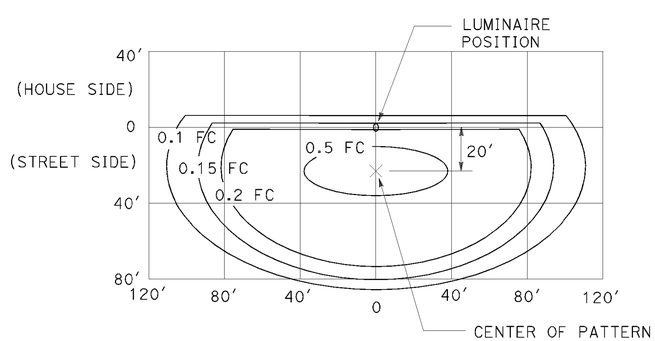

LED LUMINAIRE ROADWAY 3

235-W at 40′ Mounting Height
with back side control

ISOFOOTCANDLE CURVE - MINIMUM

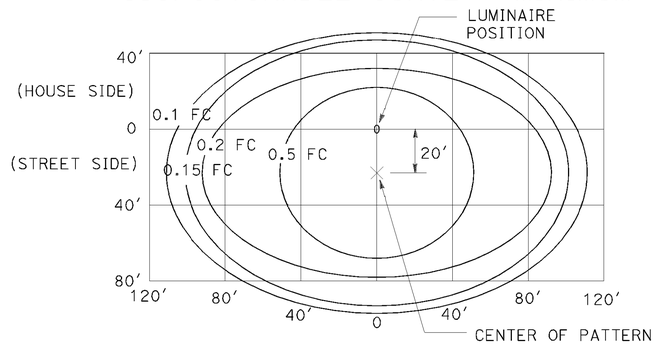

LED LUMINAIRE ROADWAY 4

300-W at 40′ Mounting Height

ISOFOOTCANDLE CURVE - MINIMUM

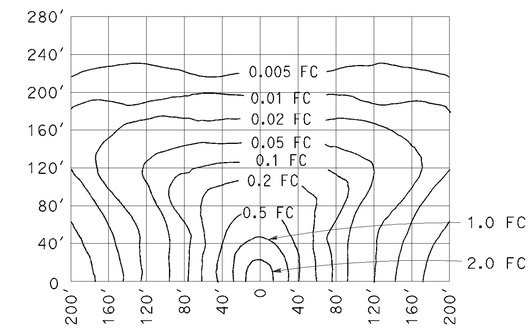

LOW PRESSURE SODIUM LUMINAIRE

40′ Mounting Height
Lamp operated at 33,000 lm
180-W low pressure sodium lamp

STATE OF CALIFORNIA
DEPARTMENT OF TRANSPORTATION

ELECTRICAL SYSTEMS (ISOFOOTCANDLE DIAGRAMS)

NO SCALE

RSP ES-10A DATED JULY 19, 2013 SUPERSEDES RSP ES-10A DATED JULY 20, 2012 THAT SUPPLEMENTS THE STANDARD PLANS BOOK DATED 2010.

REVISED STANDARD PLAN RSP ES-10A

2010 REVISED STANDARD PLAN RSP ES-10A

P:\PROJ\01\0B310\drafting\01-0B310\va013.dgn

7-9-13

Dist	COUNTY	ROUTE	POST MILES TOTAL PROJECT	SHEET No.	TOTAL SHEETS
01	DN	199	8.7, 21.7	41	54

REGISTERED ELECTRICAL ENGINEER

July 20, 2012
PLANS APPROVAL DATE

REGISTERED PROFESSIONAL ENGINEER
Jeffery G. McRae
No. E14512
Exp. 6-30-14
ELECTRICAL
STATE OF CALIFORNIA

THE STATE OF CALIFORNIA OR ITS OFFICERS OR AGENTS SHALL NOT BE RESPONSIBLE FOR THE ACCURACY OR COMPLETENESS OF SCANNED COPIES OF THIS PLAN SHEET.

TO ACCOMPANY PLANS DATED 6-29-15

ISOFOOTCANDLE CURVE - MINIMUM

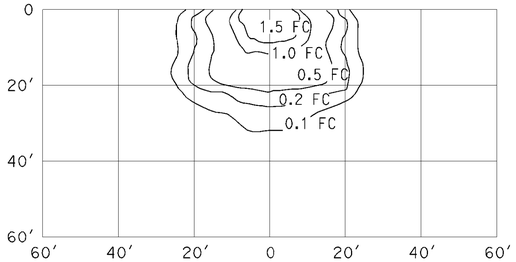

WALL LUMINAIRE
15′ Mounting Height
Lamp operated at 5,800 lm
70-W high pressure sodium lamp
ANSI Designation S62

ISOFOOTCANDLE CURVE - MINIMUM

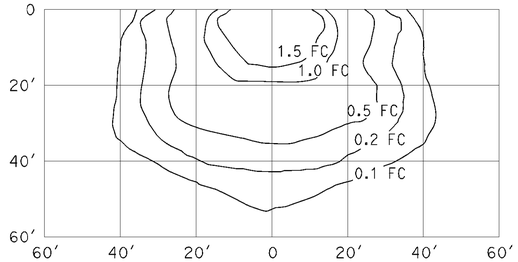

WALL LUMINAIRE
15′ Mounting Height
Lamp operated at 9,500 lm
100-W high pressure sodium lamp
ANSI Designation S54

ISOFOOTCANDLE CURVE - MINIMUM

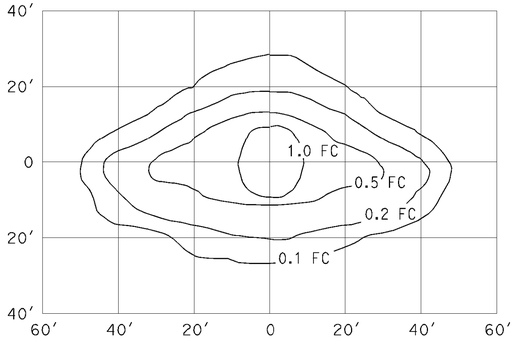

PENDANT SOFFIT LUMINAIRE
TYPE III SHORT
17′ Mounting Height
Lamp operated at 5,800 lm
70-W high pressure sodium lamp
ANSI Designation S62

ISOFOOTCANDLE CURVE - MINIMUM

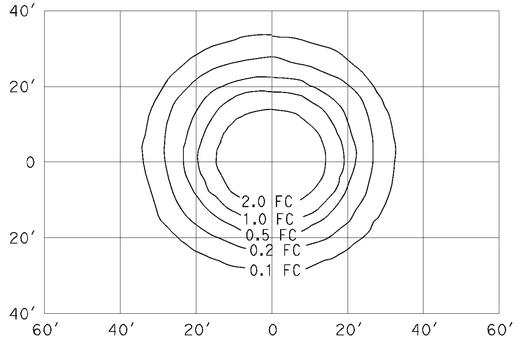

PENDANT SOFFIT LUMINAIRE
17′ Mounting Height
Lamp operated at 5,800 lm
70-W high pressure sodium lamp
ANSI Designation S62

ISOFOOTCANDLE CURVE - MINIMUM

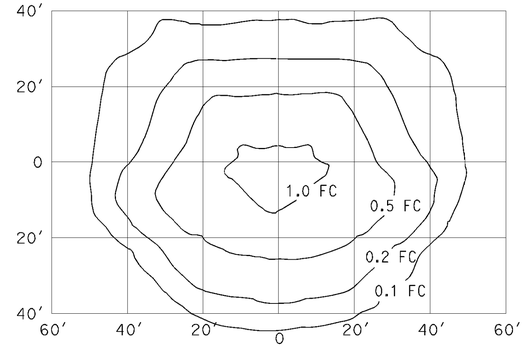

FLUSH SOFFIT LUMINAIRE
17′ Mounting Height
Lamp operated at 5,800 lm
70-W high pressure sodium lamp
ANSI Designation S62

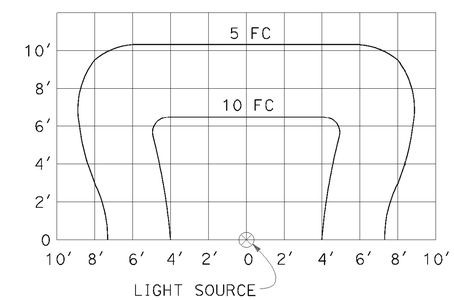

SIGN LIGHTING FIXTURE
ISOFOOTCANDLE DIAGRAM

NOTES:

1. Curves represent the minimum footcandle (FC) of initial illumination on a 10′-0″ x 20′-0″ panel.
2. The FC shown are with the fixture attached to the light fixture mounting channel which places the center of the source 4′-8″ in front of panel and 1′-0″ below the bottom edge.
3. Applicable lamp: 85-W fluorescent phosphor coated induction lamp.

STATE OF CALIFORNIA
DEPARTMENT OF TRANSPORTATION

ELECTRICAL SYSTEMS (ISOFOOTCANDLE DIAGRAMS)

NO SCALE

RSP ES-10B DATED JULY 20, 2012 SUPPLEMENTS THE STANDARD PLANS BOOK DATED 2010.

REVISED STANDARD PLAN RSP ES-10B

2010 REVISED STANDARD PLAN RSP ES-10B

P:\PROJ\01\0B310\drafting\01-0B310\va014.dgn

Dist	COUNTY	ROUTE	POST MILES TOTAL PROJECT	SHEET No.	TOTAL SHEETS
01	DN	199	8.7, 21.7	42	54

Gregory A. Bolzer
LICENSED LANDSCAPE ARCHITECT

July 19, 2013
PLANS APPROVAL DATE

THE STATE OF CALIFORNIA OR ITS OFFICERS OR AGENTS SHALL NOT BE RESPONSIBLE FOR THE ACCURACY OR COMPLETENESS OF SCANNED COPIES OF THIS PLAN SHEET.

LICENSED LANDSCAPE ARCHITECT
Gregory A. Bolzer 2516
Gregory A. Bolzer
Expiration Date
2-28-15
Renewal Date
7-19-13
Date
STATE OF CALIFORNIA

TO ACCOMPANY PLANS DATED 6-29-15

A

AB	AGGREGATE BASE
ABS	ACRYLONITRILE-BUTADIENE-STYRENE
AC	ASPHALT CONCRETE
ACC	ARMOR-CLAD CONDUCTORS
Adj	ADJACENT/ADJUSTABLE
AIC	AUXILIARY IRRIGATION CONTROLLER
Alt	ALTERNATIVE
AMEND	AMENDMENT
ARV	AIR RELEASE VALVE
AUTO	AUTOMATIC
AUX	AUXILIARY
AVB	ATMOSPHERIC VACUUM BREAKER

B

B&B	BALLED AND BURLAPPED
B/B	BRASS/BRONZE
B/B/PL	BRASS/BRONZE/PLASTIC
B/PL	BRASS/PLASTIC
BFM	BONDED FIBER MATRIX
Bit Ctd	BITUMINOUS COATED
BP	BOOSTER PUMP
BPA	BACKFLOW PREVENTER ASSEMBLY
BPE	BACKFLOW PREVENTER ENCLOSURE
BV	BALL VALVE

C

C	CONDUIT
CAP	CORRUGATED ALUMINUM PIPE
CARV	COMBINATION AIR RELEASE VALVE
CB	COUPLING BAND
CCA	CAM COUPLER ASSEMBLY
CEC	CONTROLLER ENCLOSURE CABINET
CHDPE	CORRUGATED HIGH DENSITY POLYETHYLENE
CL	CHAIN LINK
CNC	CONTROL AND NEUTRAL CONDUCTORS
Conc	CONCRETE
CP	COPPER PIPE
CS	COMPOST SOCK
CSP	CORRUGATED STEEL PIPE
CST	CENTER STRIP
CV	CHECK VALVE

D

Dia	DIAMETER
DIP	DUCTILE IRON PIPE
DIT	DRIP IRRIGATION TUBING
DG	DECOMPOSED GRANITE
DN	DIAMETER NOMINAL
DVA	DRIP VALVE ASSEMBLY

E

EC	EROSION CONTROL
ECTC	EROSION CONTROL TECHNOLOGY COUNCIL
Elect	ELECTRIC/ELECTRICAL
Elev	ELEVATION
ELL	ELBOW
ENCL	ENCLOSURE
EP	EDGE OF PAVEMENT
ES	EDGE OF SHOULDER
EST	END STRIP
ESTB	ESTABLISHMENT
ETW	EDGE OF TRAVELED WAY

F

F	FULL CIRCLE
F/P	FULL/PART CIRCLE
FCV	FLOW CONTROL VALVE
FERT	FERTILIZER
FG	FINISHED GRADE
FH	FLEXIBLE HOSE
FIPT	FEMALE IRON PIPE THREAD
FIS	FERTILIZER INJECTOR SYSTEM
FL	FLOW LINE
FR	FIBER ROLL
FS	FLOW SENSOR
FSC	FLOW SENSOR CABLE
FV	FLUSH VALVE

G

Galv	GALVANIZED
GARV	GARDEN VALVE
GARVA	GARDEN VALVE ASSEMBLY
GM	GRAVEL MULCH
GPH	GALLONS PER HOUR
GPM	GALLONS PER MINUTE
GSP	GALVANIZED STEEL PIPE
GV	GATE VALVE

H

H	HALF CIRCLE
HDPE	HIGH DENSITY POLYETHYLENE
HP	HORSEPOWER/HINGE POINT
HPL	HIGH PRESSURE LINE
Hwy	HIGHWAY

I

IC	IRRIGATION CONTROLLER
ICC	IRRIGATION CONTROLLER(S) IN CONTROLLER ENCLOSURE CABINET
ID	INSIDE DIAMETER
IFS	IRRIGATION FILTRATION SYSTEM
IPS	IRON PIPE SIZE
IPT	IRON PIPE THREAD
Irr	IRRIGATION

L

L	LENGTH

M

Max	MAXIMUM
MBGR	METAL BEAM GUARD RAILING
MCV	MANUAL CONTROL VALVE
MIC	MASTER IRRIGATION CONTROLLER
Min	MINIMUM
MIPT	MALE IRON PIPE THREAD
Misc	MISCELLANEOUS
Mtl	MATERIAL
MVP	MAINTENANCE VEHICLE PULLOUT

N

NCN	NO COMMON NAME
NL	NOZZLE LINE
No.	NUMBER
NPT	NATIONAL PIPE THREAD

O

O/C	ON CENTER
OD	OUTSIDE DIAMETER
OL	OVERLAP

P

P	PART CIRCLE
PB	PULL BOX
PCC	PORTLAND CEMENT CONCRETE
PE	POLYETHYLENE
Pkt	PACKET
PL	PLASTIC
PLS	PURE LIVE SEED
PLT	PLANT/PLANTING
PLT ESTB	PLANT ESTABLISHMENT
PM	POST MILE
PR	PRESSURE RATED
PRLV	PRESSURE RELIEF VALVE
PRV	PRESSURE REGULATING VALVE
PVC	POLYVINYL CHLORIDE
Pvmt	PAVEMENT

Q

Q	QUARTER CIRCLE
QCV	QUICK COUPLING VALVE

NOTE:

For additional abbreviations, see Standard Plans A10A and A10B.

R

R	RADIUS
RCP	REINFORCED CONCRETE PIPE
RCV	REMOTE CONTROL VALVE
RCVM	REMOTE CONTROL VALVE (MASTER)
RCVMF	REMOTE CONTROL VALVE (MASTER) W/FLOW SENSOR
RCVP	REMOTE CONTROL VALVE W/PRESSURE REGULATOR
RCW	RECYCLED WATER
RECP	ROLLED EROSION CONTROL PRODUCT
REQ	REQUIRED
RICS	REMOTE IRRIGATION CONTROL SYSTEM
R/W	RIGHT OF WAY

S

S	SLIP
SCH	SCHEDULE
SF	STATE-FURNISHED
Shld	SHOULDER
Sq	SQUARE
SST	SIDE STRIP
Sta	STATION
Std	STANDARD
SW	SIDEWALK/SOUND WALL

T

T	THIRD CIRCLE/THREAD
TLS	TRUCK LOADING STANDPIPE
TQ	THREE QUARTER CIRCLE
TRM	TURF REINFORCEMENT MAT
TT	TWO-THIRDS CIRCLE
TWSA	TREE WELL SPRINKLER ASSEMBLY
Typ	TYPICAL

U

UG	UNDERGROUND

W

W	WIDTH
W/	WITH
WM	WATER METER
WS	WYE STRAINER
WSA	WYE STRAINER ASSEMBLY
WSP	WELDED STEEL PIPE
WWM	WELDED WIRE MESH

STATE OF CALIFORNIA
DEPARTMENT OF TRANSPORTATION

LANDSCAPE AND EROSION CONTROL ABBREVIATIONS

NO SCALE

RSP H1 DATED JULY 19, 2013 SUPERSEDES STANDARD PLAN H1
DATED MAY 20, 2011 - PAGE 218 OF THE STANDARD PLANS BOOK DATED 2010.

REVISED STANDARD PLAN RSP H1

2010 REVISED STANDARD PLAN RSP H1

P:\PROJ\01\0B310\drafting\01-0B310\va015.dgn

6-28-13

Dist	COUNTY	ROUTE	POST MILES TOTAL PROJECT	SHEET No.	TOTAL SHEETS
01	DN	199	8.7, 21.7	43	54

Gregory A. Balzer
LICENSED LANDSCAPE ARCHITECT

November 15, 2013
PLANS APPROVAL DATE

LICENSED LANDSCAPE ARCHITECT
Gregory A. Balzer 2576
Signature
2-28-15
Renewal Date
11-15-13
Date
STATE OF CALIFORNIA

THE STATE OF CALIFORNIA OR ITS OFFICERS OR AGENTS SHALL NOT BE RESPONSIBLE FOR THE ACCURACY OR COMPLETENESS OF SCANNED COPIES OF THIS PLAN SHEET.

TO ACCOMPANY PLANS DATED 6-29-15

EXISTING	NEW	ITEM DESCRIPTION
		WATER METER (WM)
		BACKFLOW PREVENTER ASSEMBLY (BPA)
		BACKFLOW PREVENTER ENCLOSURE (BPE)
		BOOSTER PUMP (BP)
		TRUCK LOADING STANDPIPE (TLS)
FS	FS	FLOW SENSOR (FS)
		MASTER IRRIGATION CONTROLLER (MIC)
		AUXILIARY IRRIGATION CONTROLLER (AIC)
		IRRIGATION CONTROLLER (IC) IRRIGATION CONTROLLER (IC) (BATTERY) IRRIGATION CONTROLLER (IC) (SOLAR) IRRIGATION CONTROLLER (IC) (TWO WIRE) IRRIGATION CONTROLLER(S) IN CONTROLLER ENCLOSURE CABINET (ICC)
acc	ACC	ARMOR-CLAD CONDUCTORS (ACC)
cnc	CNC	CONTROL AND NEUTRAL CONDUCTORS (CNC)
		IRRIGATION CONDUIT
		EXTEND IRRIGATION CONDUIT
dip	DIP	DUCTILE IRON PIPE (SUPPLY LINE) (MAIN) (DIP)
		GALVANIZED STEEL PIPE (SUPPLY LINE) (MAIN) (GSP)
		GALVANIZED STEEL PIPE (SUPPLY LINE) (LATERAL) (GSP)
		PLASTIC PIPE (SUPPLY LINE) (MAIN)
		PLASTIC PIPE (SUPPLY LINE) (LATERAL)
cp	CP	COPPER PIPE (SUPPLY LINE)
dit	DIT	DRIP IRRIGATION TUBING
		REMOTE CONTROL VALVE (RCV) REMOTE CONTROL VALVE (MASTER) (RCVM) REMOTE CONTROL VALVE (MASTER) W/FLOW METER (RCVMF)
P	P	REMOTE CONTROL VALVE W/PRESSURE REGULATOR (RCVP)
		EXISTING MANUAL CONTROL VALVE (MCV)
		DRIP VALVE ASSEMBLY (DVA)
		WYE STRAINER ASSEMBLY (WSA)

EXISTING	NEW	ITEM DESCRIPTION
		GATE VALVE (GV)
		BALL VALVE (BV)
		QUICK COUPLING VALVE (QCV)
		CAM COUPLER ASSEMBLY (CCA)
		GARDEN VALVE ASSEMBLY (GARVA)
		PRESSURE REGULATING VALVE (PRV)
		PRESSURE RELIEF VALVE (PRLV)
		FLOW CONTROL VALVE (FCV)
		COMBINATION AIR RELEASE VALVE (CARV)
		CHECK VALVE (CV)
		FLUSH VALVE (FV)
		EXISTING NOZZLE LINE W/TURNING UNION
		EXISTING IRRIGATION SYSTEM
		EXISTING IRRIGATION SYSTEM TO BE REMOVED
		CHAIN LINK GATE
		QUICK COUPLING VALVE W/SPRINKLER PROTECTOR
3	3	SPRINKLER W/SPRINKLER PROTECTOR
	C	CONNECT TO EXISTING SYSTEM
		CAP
		CAP EXISTING
	\\\FR\\\	FIBER ROLL
	\\\CS\\\	COMPOST SOCK

RCV SIZE
IRRIGATION CONTROLLER
CONTROLLER STATION
VALVE IN PARALLEL (IF APPLICABLE)
GPM
QUANTITY OF SPRINKLERS (WHEN SHOWN)

* 2½"-A-2b-40-60

VALVE CODE

* VALVE CODES FOR EXISTING VALVES ARE SHOWN IN A DASHED ENCLOSURE.

STATE OF CALIFORNIA
DEPARTMENT OF TRANSPORTATION

LANDSCAPE AND EROSION CONTROL SYMBOLS

NO SCALE

RSP H2 DATED NOVEMBER 15, 2013 SUPERSEDES RSP H2 DATED JULY 19, 2013 AND STANDARD PLAN H2 DATED MAY 20, 2011 - PAGE 219 OF THE STANDARD PLANS BOOK DATED 2010.

REVISED STANDARD PLAN RSP H2

2010 REVISED STANDARD PLAN RSP H2

P:\PROJ\01\0B310\drafting\01-0B310\va016.dgn

10-9-13

DIST	COUNTY	ROUTE	POST MILES TOTAL PROJECT	SHEET No.	TOTAL SHEETS
01	DN	199	8.7, 21.7	44	54

REGISTERED CIVIL ENGINEER 04-21-15 DATE

June 29, 2015
PLANS APPROVAL DATE

REGISTERED PROFESSIONAL ENGINEER KEVIN HARPER No. 42221 Exp. 3/31/16 CIVIL STATE OF CALIFORNIA

The State of California or its officers or agents shall not be responsible for the accuracy or completeness of scanned copies of this plan sheet.

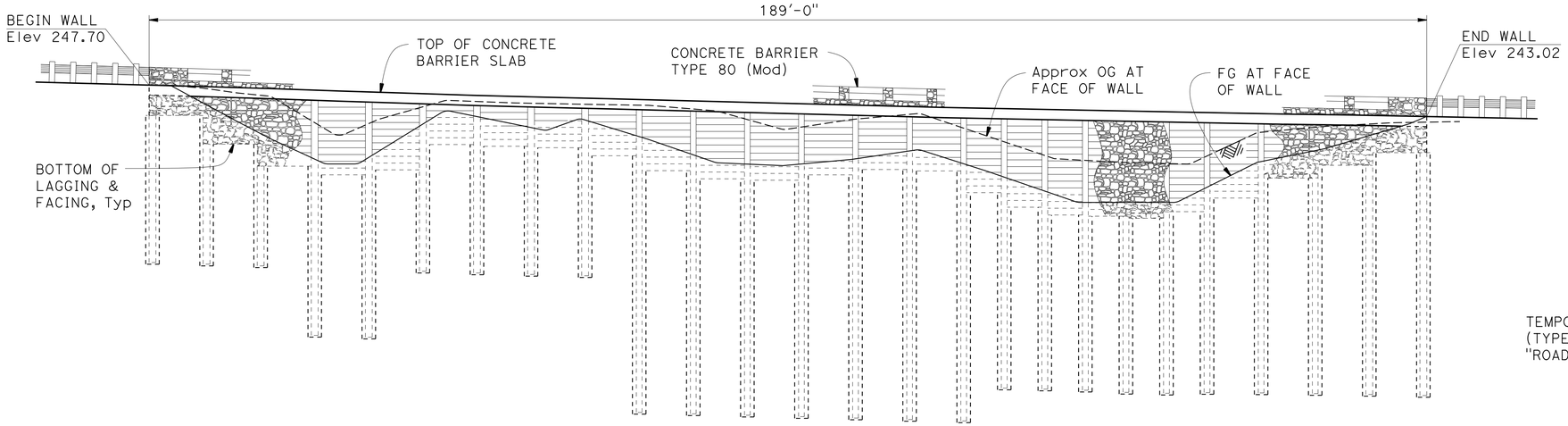

DATUM Elev 190.0

10 11

ELEVATION

1" = 10'

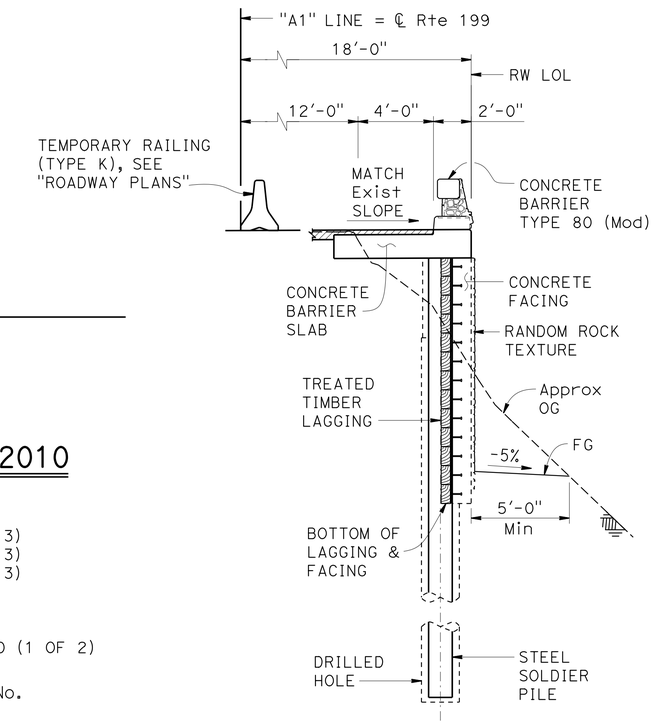

TYPICAL SECTION

¼" = 1'-0"

QUANTITIES

STRUCTURE EXCAVATION (SOLDIER PILE WALL)	190	CY
STRUCTURE BACKFILL (SOLDIER PILE WALL)	43	CY
CONCRETE BACKFILL (SOLDIER PILE WALL)	79	CY
LEAN CONCRETE BACKFILL	23	CY
STEEL SOLDIER PILE (W 16 X 67)	405	LF
STEEL SOLDIER PILE (W 16 X 89)	315	LF
STEEL SOLDIER PILE (W 14 X 120)	240	LF
24" DRILLED HOLE	920	LF
STRUCTURAL CONCRETE, RETAINING WALL	71	CY
STRUCTURAL CONCRETE, BARRIER SLAB	68	CY
RANDOM ROCK TEXTURE	1,687	SQFT
BAR REINFORCING STEEL (RETAINING WALL)	9,000	LB
TIMBER LAGGING	9	MFBM
PREPARE AND STAIN CONCRETE	1,687	SQFT
GEOCOMPOSITE DRAIN	185	SQFT
CONCRETE BARRIER (TYPE 80 MODIFIED)	189	LF

INDEX TO PLANS

SHEET No.	TITLE
1	GENERAL PLAN
2	STRUCTURE PLAN
3	FOUNDATION PLAN
4	WALL DETAILS NO. 1
5	WALL DETAILS NO. 2
6	WALL DETAILS NO. 3
7	CONCRETE BARRIER TYPE 80 (Mod) NO. 1
8	CONCRETE BARRIER TYPE 80 (Mod) NO. 2
9	FUTURE BICYCLE RAILING DETAILS
10	LOG OF TEST BORINGS (1 OF 2)
11	LOG OF TEST BORINGS (2 OF 2)

STANDARD PLANS DATED 2010

	A10A	ABBREVIATIONS (1 OF 2)
RSP	A10B	ABBREVIATIONS (2 OF 2)
	A10C	LINES AND SYMBOLS (1 OF 3)
	A10D	LINES AND SYMBOLS (2 OF 3)
	A10E	LINES AND SYMBOLS (3 OF 3)
	A10F	LEGEND - SOIL (1 OF 2)
	A10G	LEGEND - SOIL (2 OF 2)
	A10H	LEGEND - ROCK
RSP	B11-60	CONCRETE BARRIER TYPE 80 (1 OF 2)

STANDARD PLAN SHEET No.

DETAIL No.

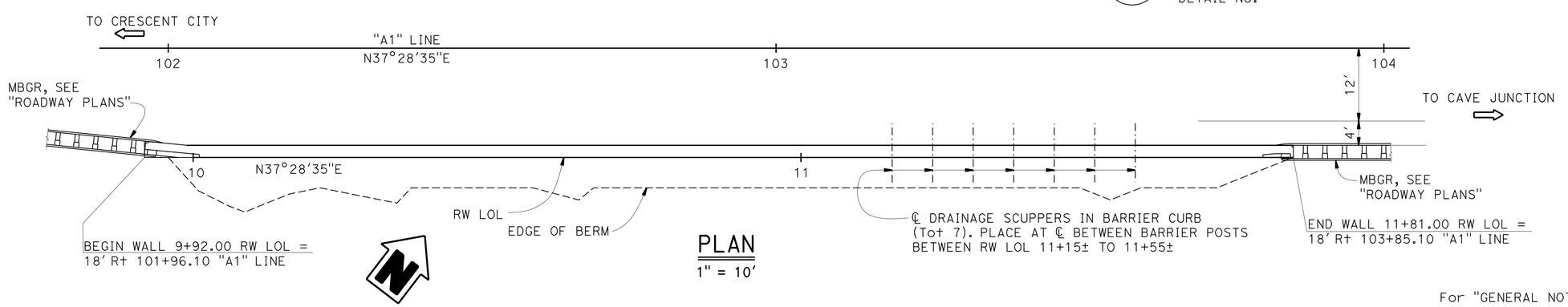

PLAN

1" = 10'

For "GENERAL NOTES", see "FOUNDATION PLAN" sheet.

Jeff Sims, DESIGN ENGINEER	DESIGN	BY Kevin Harper	CHECKED Keith Stillmunkes	LOAD & RESISTANCE FACTOR DESIGN		
	DETAILS	BY B. Huddleston/ J. Zhou	CHECKED Keith Stillmunkes	LAYOUT	BY Kevin Harper	CHECKED Keith Stillmunkes
	QUANTITIES	BY Daniel Sessions	CHECKED Jie Tang	SPECIFICATIONS	BY Sirisha Nelapatla	PLANS AND SPECS COMPARED Sirisha Nelapatla

ORIGINAL SCALE IN INCHES FOR REDUCED PLANS 0 1 2 3

STATE OF CALIFORNIA
DEPARTMENT OF TRANSPORTATION

DIVISION OF ENGINEERING SERVICES
STRUCTURE DESIGN
DESIGN BRANCH 1

BRIDGE NO. 01E0017
POST MILE 8.7

PATRICK CREEK SLIP OUT WALL
GENERAL PLAN

UNIT: 3576
PROJECT NUMBER & PHASE: 01120001151
CONTRACT NO.: 01-0B3104

DISREGARD PRINTS BEARING EARLIER REVISION DATES

REVISION DATES 08-22-14 04-20-15 04-06-15 SHEET 1 OF 11

STRUCTURES DESIGN GENERAL PLAN SHEET (ENGLISH) (REV.09-01-10)

FILE => Zpcsw-a-gp01.dgn

USERNAME => s120115 DATE PLOTTED => 21-JUL-2015 TIME PLOTTED => 11:07

DIST	COUNTY	ROUTE	POST MILES TOTAL PROJECT	SHEET No.	TOTAL SHEETS
01	DN	199	8.7, 21.7	45	54

REGISTERED CIVIL ENGINEER — DATE 04-21-15

June 29, 2015
PLANS APPROVAL DATE

REGISTERED PROFESSIONAL ENGINEER — KEVIN HARPER — No. 42221 — Exp. 3/31/16 — CIVIL — STATE OF CALIFORNIA

The State of California or its officers or agents shall not be responsible for the accuracy or completeness of scanned copies of this plan sheet.

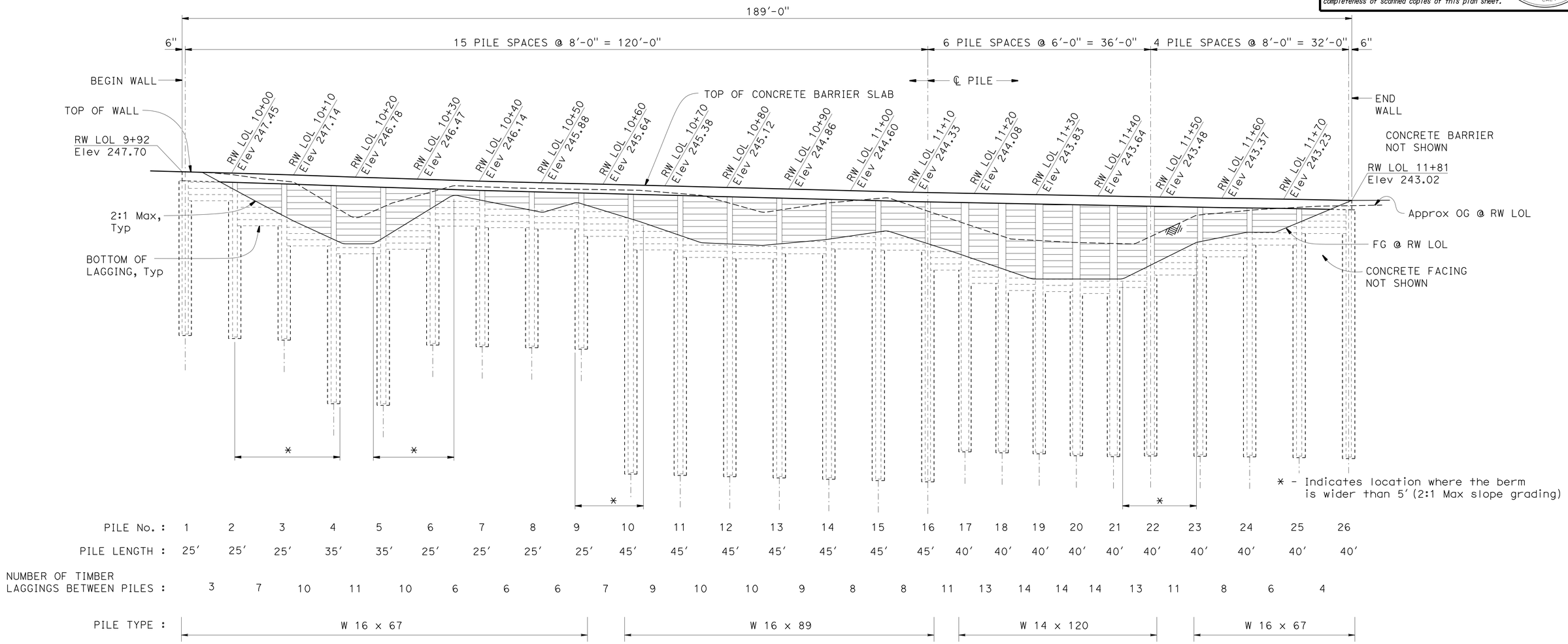

PILE No. :	1	2	3	4	5	6	7	8	9	10	11	12	13	14	15	16	17	18	19	20	21	22	23	24	25	26
PILE LENGTH :	25'	25'	25'	35'	35'	25'	25'	25'	25'	45'	45'	45'	45'	45'	45'	45'	40'	40'	40'	40'	40'	40'	40'	40'	40'	40'
NUMBER OF TIMBER LAGGINGS BETWEEN PILES :		3	7	10	11	10	6	6	6	7	9	10	10	9	8	8	11	13	14	14	14	13	11	8	6	4

PILE TYPE : W 16 x 67 | W 16 x 89 | W 14 x 120 | W 16 x 67

DATUM Elev 160.0

10 — 11

ELEVATION

1/8" = 1'-0"

DESIGN	BY Kevin Harper	CHECKED Keith Stillmunkes	
DETAILS	BY Bob Huddleston	CHECKED Keith Stillmunkes	
QUANTITIES	BY Daniel Sessions	CHECKED Jie Tang	

STATE OF CALIFORNIA
DEPARTMENT OF TRANSPORTATION

DIVISION OF ENGINEERING SERVICES
STRUCTURE DESIGN
DESIGN BRANCH 1

BRIDGE NO. 01E0017
POST MILE 8.7

PATRICK CREEK SLIP OUT WALL
STRUCTURE PLAN

STRUCTURES DESIGN DETAIL SHEET (ENGLISH) (REV. 09-01-10)

ORIGINAL SCALE IN INCHES FOR REDUCED PLANS 0 1 2 3

UNIT: 3576
PROJECT NUMBER & PHASE: 01120001151
CONTRACT NO.: 01-0B3104

DISREGARD PRINTS BEARING EARLIER REVISION DATES

REVISION DATES: 02-26-14 | 03-25-15 | 03-16-15

SHEET 2 OF 11

FILE => Zpcsw-c-sp01.dgn

USERNAME => s120115 DATE PLOTTED => 21-JUL-2015 TIME PLOTTED => 11:07

DIST	COUNTY	ROUTE	POST MILES TOTAL PROJECT	SHEET No.	TOTAL SHEETS
01	DN	199	8.7, 21.7	46	54

REGISTERED CIVIL ENGINEER 04-21-15 DATE

June 29, 2015
PLANS APPROVAL DATE

REGISTERED PROFESSIONAL ENGINEER KEVIN HARPER No. 42221 Exp. 3/31/16 CIVIL STATE OF CALIFORNIA

The State of California or its officers or agents shall not be responsible for the accuracy or completeness of electronic copies of this plan sheet.

GENERAL NOTES
LOAD AND RESISTANCE FACTOR DESIGN

DESIGN: AASHTO Bridge Design Specifications, 2012 edition with Caltrans Amendments, preface dated January 2014

LIVE LOADING:
2'-0" level earth surcharge

SOIL PARAMETERS:
(For determination of design lateral earth pressures)

RW LOL Sta	SOIL LAYER ELEVATION	ϕ_f	γ_s (pcf)	COHESION (psf)
9+92 TO 10+12	>235	38°	120	0
	≤235	35°	145	5000
10+12 TO 10+28	>225	38°	120	0
	≤225	35°	145	5000
10+28 TO 10+60	>235	38°	120	0
	≤235	35°	145	5000
10+60 TO 11+15	>213	38°	120	0
	≤213	35°	145	5000
11+15 TO 11+81	>225	38°	120	0
	217-225	42°	125	0
	≤217	35°	145	5000

REINFORCED CONCRETE:
f'c = 3.6 ksi
fy = 60 ksi
n = 8

STRUCTURAL STEEL:
fy = 50 ksi

STRUCTURAL TIMBER:
Treated Douglas Fir No. 2 or better
Timber to be full sawn

CURVE DATA

R	Δ	T	L
5000.00	00°55'32"	40.39	80.77

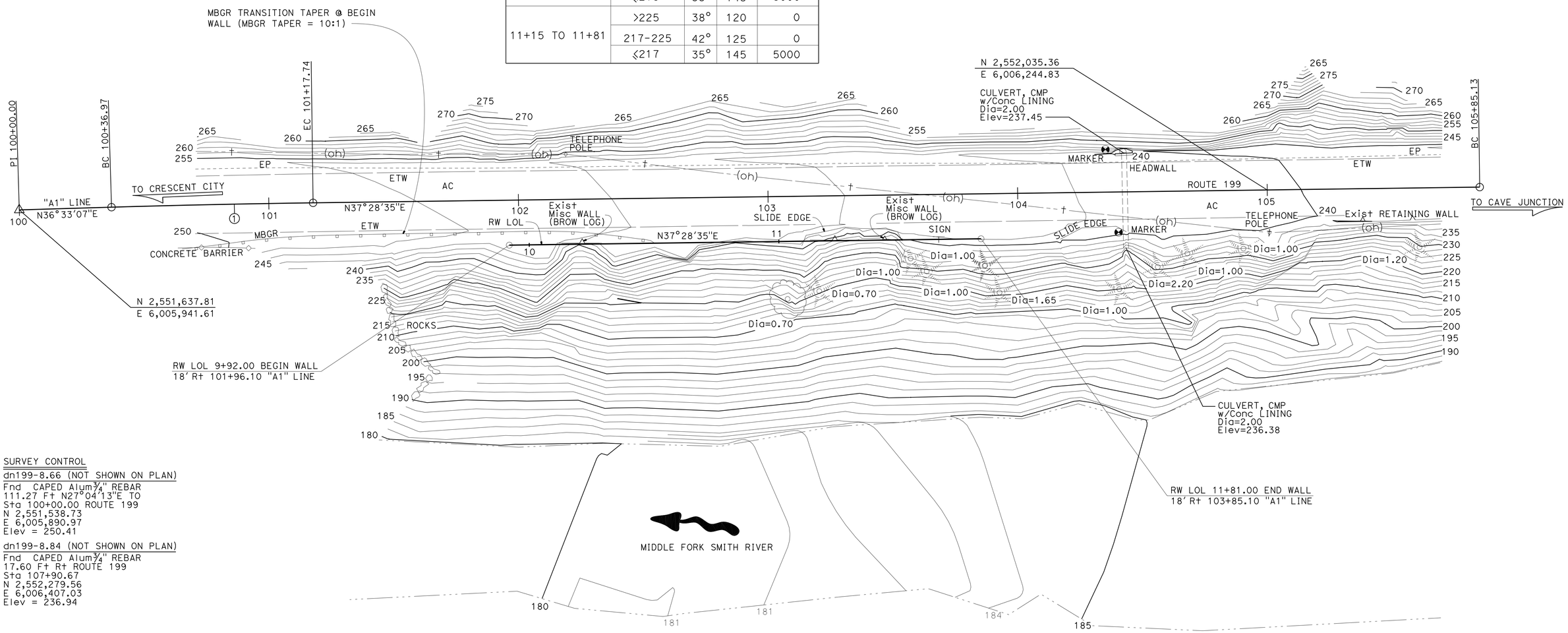

SURVEY CONTROL

dn199-8.66 (NOT SHOWN ON PLAN)
Fnd CAPED Alum 3/4" REBAR
111.27 Ft Rt N27°04'13"E TO
Sta 100+00.00 ROUTE 199
N 2,551,538.73
E 6,005,890.97
Elev = 250.41

dn199-8.84 (NOT SHOWN ON PLAN)
Fnd CAPED Alum 3/4" REBAR
17.60 Ft Rt ROUTE 199
Sta 107+90.67
N 2,552,279.56
E 6,006,407.03
Elev = 236.94

PRELIMINARY INVESTIGATION SECTION

SCALE	VERT.DATUM NAVD88	PHOTOGRAMMETRY AS OF: X			
1"=20'	HORZ.DATUM NAD83 (2004.69)	SURVEYED	BY DISTRICT	CHECKED	BY J. BORDEN 04/2014
ALIGNMENT TIES Dist TRAVERSE SHEET		DRAFTED	BY T. ZOLNIKOV 04/2014	CHECKED	BY S. SOU 04/2014

DESIGN	BY Kevin Harper	CHECKED Keith Stillmunkes
DETAILS	BY Bob Huddleston	CHECKED Keith Stillmunkes
QUANTITIES	BY Daniel Sessions	CHECKED Jie Tang

STATE OF CALIFORNIA
DEPARTMENT OF TRANSPORTATION

DIVISION OF ENGINEERING SERVICES
STRUCTURE DESIGN
DESIGN BRANCH 1

BRIDGE NO. 01E0017
POST MILE 8.7

PATRICK CREEK SLIP OUT WALL
FOUNDATION PLAN

STRUCTURES FOUNDATION PLAN SHEET (ENGLISH) (REV. 09-01-10)

ORIGINAL SCALE IN INCHES FOR REDUCED PLANS 0 1 2 3

UNIT: 3576
PROJECT NUMBER & PHASE: 01120001151
CONTRACT NO.: 01-0B3104

DISREGARD PRINTS BEARING EARLIER REVISION DATES

REVISION DATES 04/04/14 03-16-15 04-06-15

SHEET 3 OF 11

FILE => Zpcsw-e--fp101.dgn

USERNAME => s120115 DATE PLOTTED => 21-JUL-2015 TIME PLOTTED => 11:07

DIST	COUNTY	ROUTE	POST MILES TOTAL PROJECT	SHEET No.	TOTAL SHEETS
01	DN	199	8.7, 21.7	47	54

REGISTERED CIVIL ENGINEER 04-21-15 DATE

June 29, 2015
PLANS APPROVAL DATE

REGISTERED PROFESSIONAL ENGINEER KEVIN HARPER No. 42221 Exp. 3/31/16 CIVIL STATE OF CALIFORNIA

The State of California or its officers or agents shall not be responsible for the accuracy or completeness of scanned copies of this plan sheet.

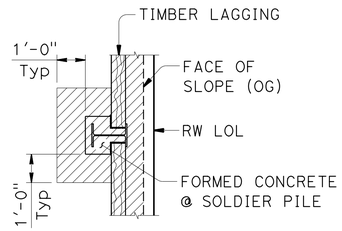

SECTION A-A

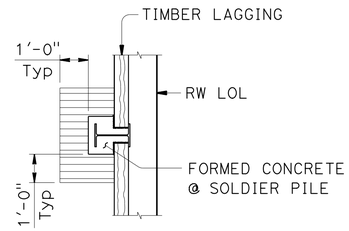

SECTION B-B

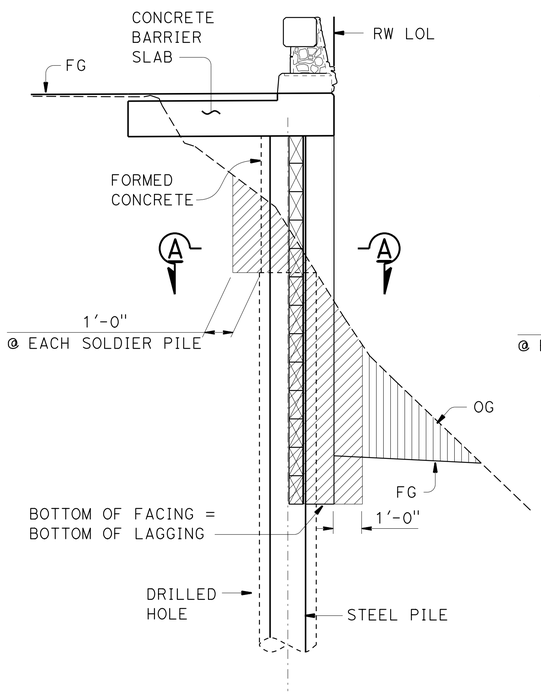

EXCAVATION

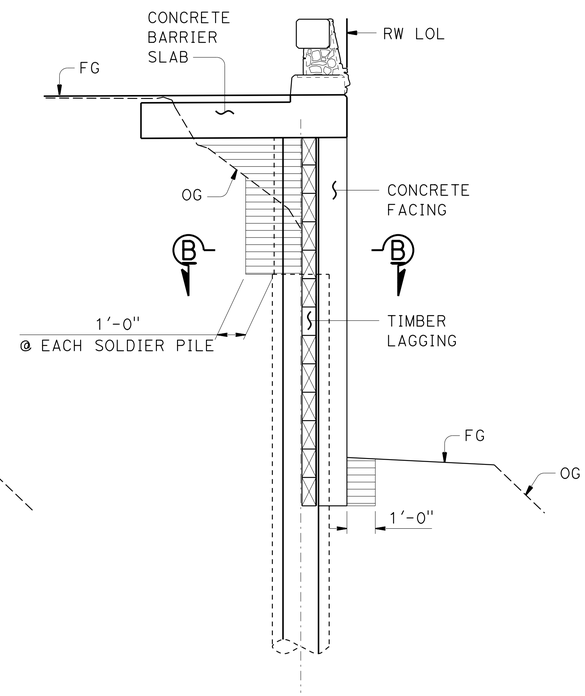

BACKFILL

LIMITS OF PAYMENT FOR EXCAVATION AND BACKFILL

3/8" = 1'-0"

LEGEND:

- Indicates Roadway Excavation, see "ROADWAY PLANS"
- Indicates Structure Excavation (Soldier Pile Wall)
- Indicates Structure Backfill (Soldier Pile Wall)

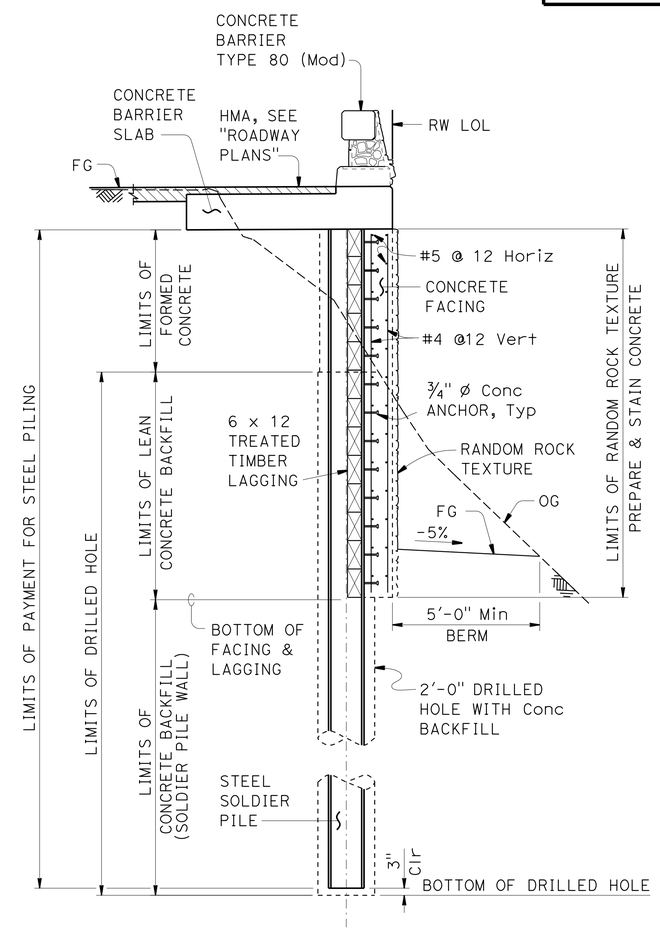

TYPICAL SECTION

3/8" = 1'-0"

NOTES:

1. For Random Rock Texture, see "ARCHITECTURAL DETAILS" on "WALL DETAILS NO. 3" sheet.
2. For "CONCRETE BARRIER SLAB DETAIL", see "WALL DETAILS NO. 2" sheet.

DESIGN	BY Kevin Harper	CHECKED Keith Stillmunkes	
DETAILS	BY B. Huddleston / J. Zhou	CHECKED Keith Stillmunkes	
QUANTITIES	BY Daniel Sessions	CHECKED Jie Tang	

STATE OF CALIFORNIA
DEPARTMENT OF TRANSPORTATION

DIVISION OF ENGINEERING SERVICES
STRUCTURE DESIGN
DESIGN BRANCH 1

BRIDGE NO. 01E0017
POST MILE 8.7

PATRICK CREEK SLIP OUT WALL
WALL DETAILS NO. 1

STRUCTURES DESIGN DETAIL SHEET (ENGLISH) (REV. 09-01-10)

ORIGINAL SCALE IN INCHES FOR REDUCED PLANS 0 1 2 3

UNIT: 3576
PROJECT NUMBER & PHASE: 01120001151
CONTRACT NO.: 01-0B3104

DISREGARD PRINTS BEARING EARLIER REVISION DATES

REVISION DATES 08-26-14 03-16-15 03-25-15

SHEET 4 OF 11

FILE => Zpcsw-g-rwdt01.dgn

USERNAME => s120115 DATE PLOTTED => 21-JUL-2015 TIME PLOTTED => 11:07

DIST	COUNTY	ROUTE	POST MILES TOTAL PROJECT	SHEET No.	TOTAL SHEETS
01	DN	199	8.7, 21.7	48	54

REGISTERED CIVIL ENGINEER 04-21-15 DATE

June 29, 2015
PLANS APPROVAL DATE

REGISTERED PROFESSIONAL ENGINEER KEVIN HARPER No. 42221 Exp. 3/31/16 CIVIL STATE OF CALIFORNIA

The State of California or its officers or agents shall not be responsible for the accuracy or completeness of scanned copies of this plan sheet.

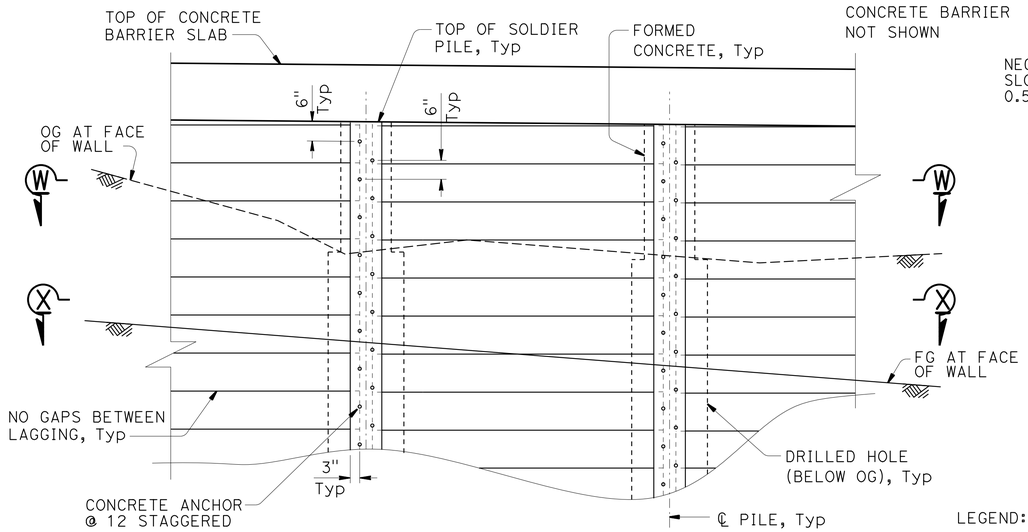

NOTE: Concrete facing not shown.

PART ELEVATION
½" = 1'-0"

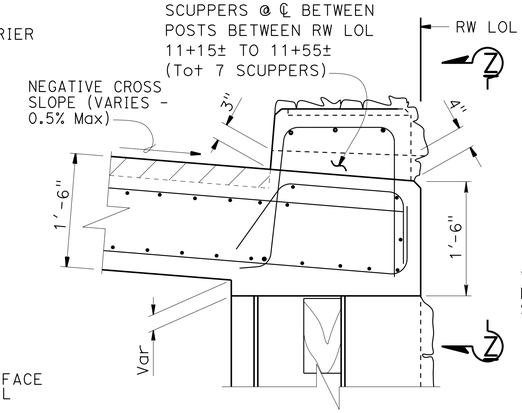

(RW LOL 11+15 TO 11+55)

DETAIL X
1" = 1'-0"

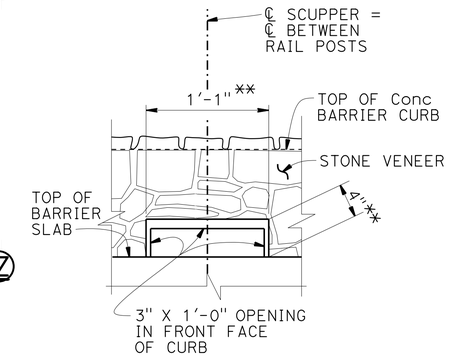

** - Dimensions @ exterior face

VIEW Z-Z
1½" = 1'-0"

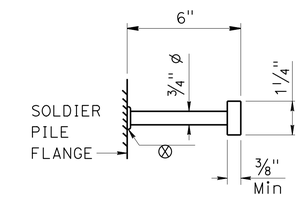

CONCRETE ANCHOR DETAIL
3" = 1'-0"

LEGEND:

- Indicates Lean Concrete Removal Limits
- * Indicates Epoxy Coated Reinforcement
- Indicates bundled bars

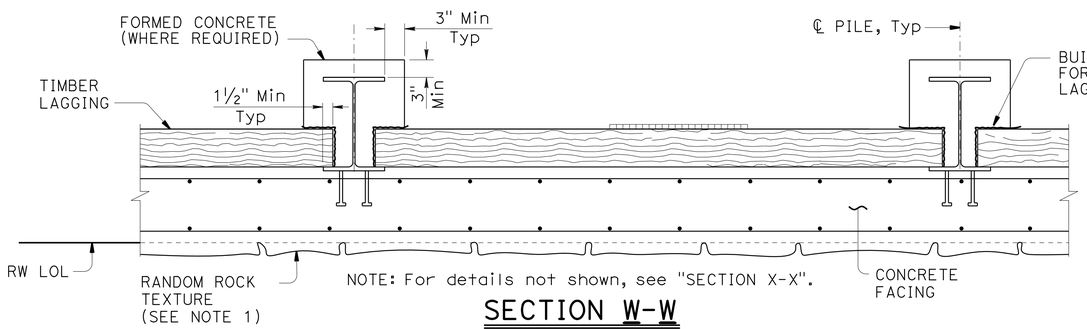

NOTE: For details not shown, see "SECTION X-X".

SECTION W-W
1" = 1'-0"

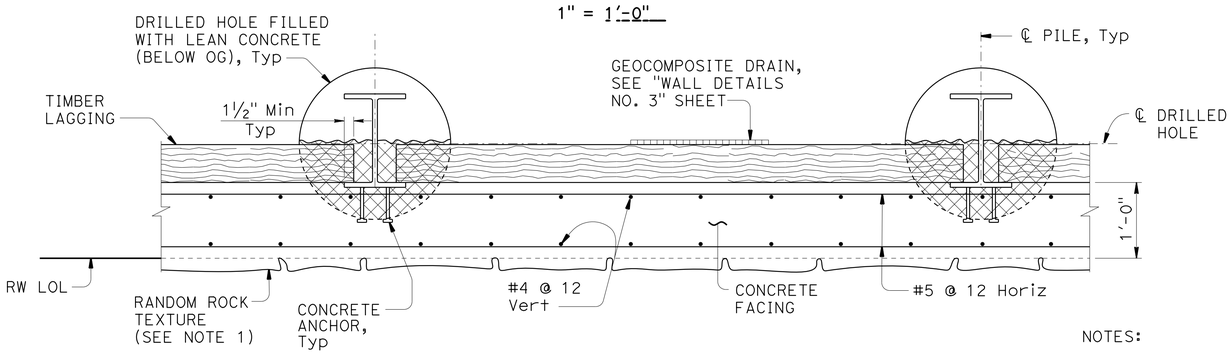

SECTION X-X
1" = 1'-0"

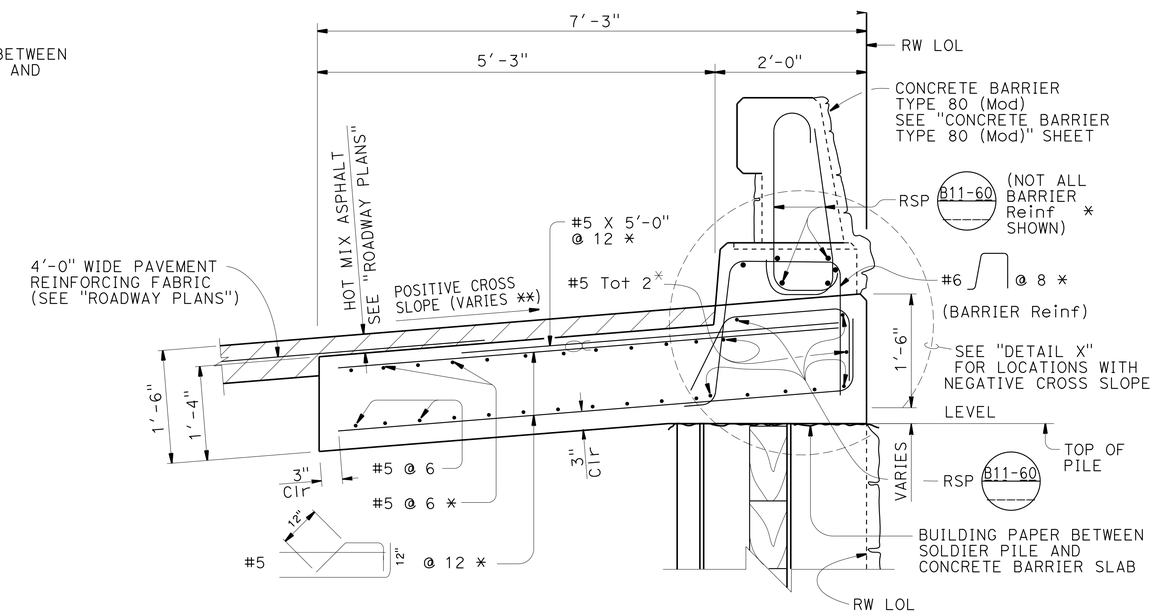

** RW LOL 9+92 TO 11+15, Max = +3.0%
RW LOL 11+55 TO 11+81, Max = +1.0%

CONCRETE BARRIER SLAB DETAIL
1" = 1'-0"

NOTES:

1. For RANDOM ROCK TEXTURE, see "ARCHITECTURAL DETAILS" on "WALL DETAILS NO. 3" sheet.
2. Steel Pile shall be centered in Drilled Hole.

	BY	CHECKED
DESIGN	Kevin Harper	Keith Stillmunkes
DETAILS	Bob Huddleston	Keith Stillmunkes
QUANTITIES	Daniel Sessions	Jie Tang

STATE OF CALIFORNIA
DEPARTMENT OF TRANSPORTATION

DIVISION OF ENGINEERING SERVICES
STRUCTURE DESIGN
DESIGN BRANCH 1

BRIDGE NO. 01E0017
POST MILE 8.7

PATRICK CREEK SLIP OUT WALL
WALL DETAILS NO. 2

STRUCTURES DESIGN DETAIL SHEET (ENGLISH) (REV. 09-01-10)

ORIGINAL SCALE IN INCHES FOR REDUCED PLANS 0 1 2 3

UNIT: 3576
PROJECT NUMBER & PHASE: 01120001151
CONTRACT NO.: 01-0B3104

DISREGARD PRINTS BEARING EARLIER REVISION DATES

REVISION DATES 02-28-13 03-16-15 10-13-15

SHEET 5 OF 11

FILE => Zpcsw-g-rwdt02.dgn

USERNAME => s120115 DATE PLOTTED => 21-JUL-2015 TIME PLOTTED => 11:07

DIST	COUNTY	ROUTE	POST MILES TOTAL PROJECT	SHEET No.	TOTAL SHEETS
01	DN	199	8.7, 21.7	49	54

Kevin J Harper 04-21-15
REGISTERED CIVIL ENGINEER DATE

June 29, 2015
PLANS APPROVAL DATE

REGISTERED PROFESSIONAL ENGINEER KEVIN HARPER No. 42221 Exp. 3/31/16 CIVIL STATE OF CALIFORNIA

The State of California or its officers or agents shall not be responsible for the accuracy or completeness of scanned copies of this plan sheet.

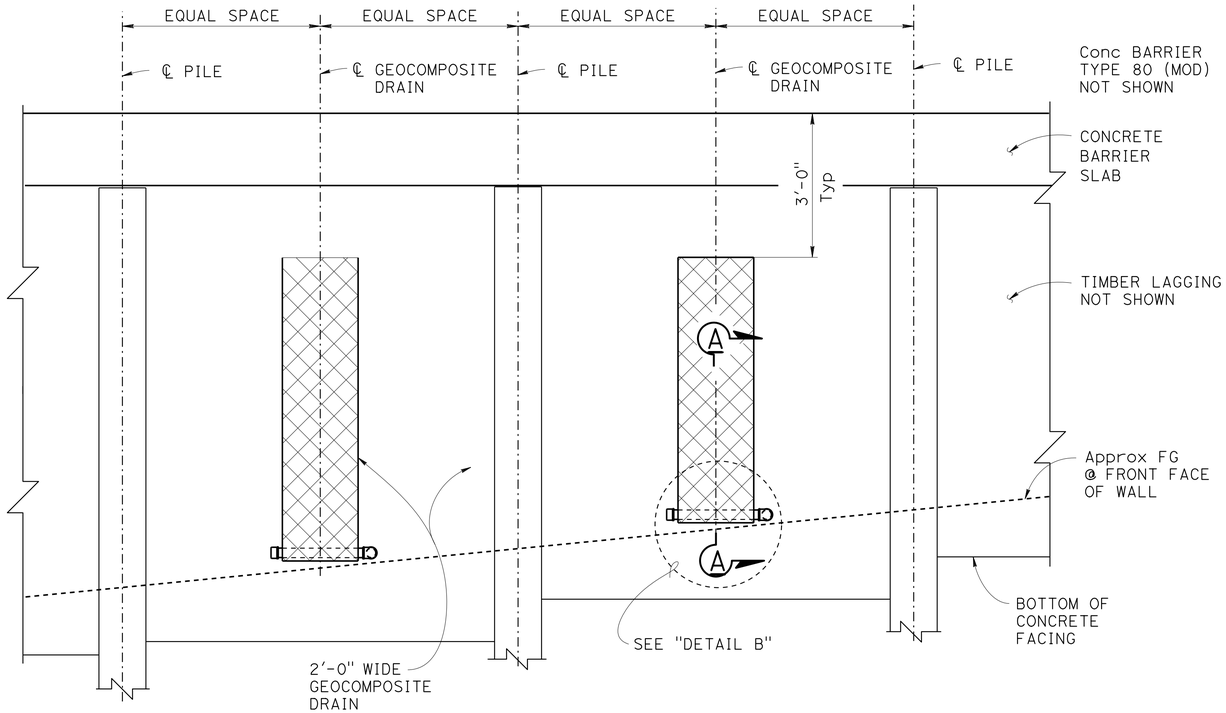

PART REAR ELEVATION - GEOCOMPOSITE DRAIN

NO SCALE

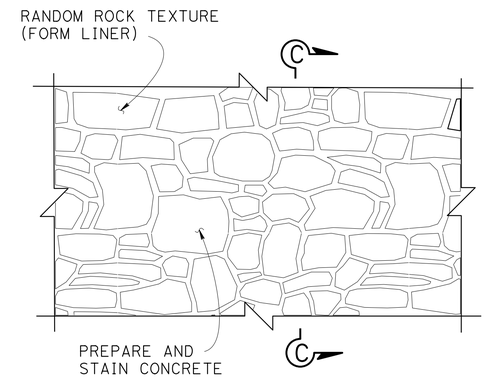

PART ELEVATION

¾" = 1'-0"

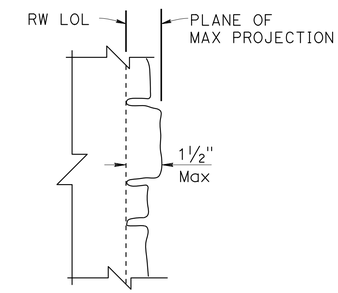

SECTION C-C

NO SCALE

ARCHITECTURAL DETAILS

NO SCALE

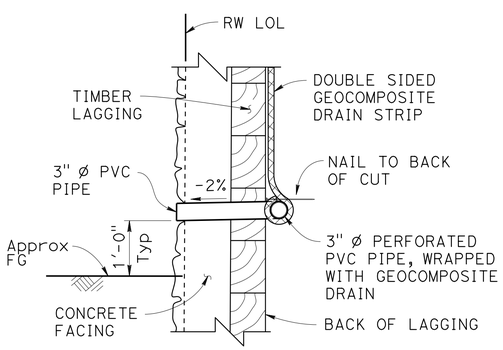

OPTION A

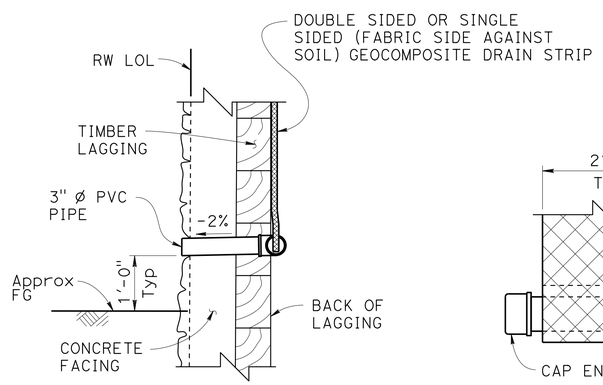

OPTION B

SECTION A-A

NO SCALE

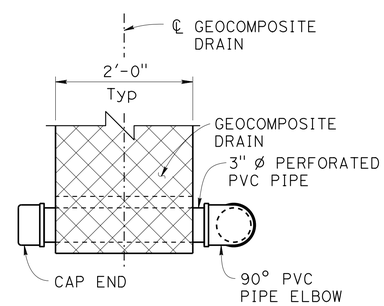

OPTION A

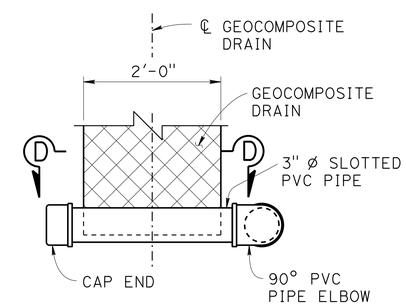

OPTION B

DETAIL B

NO SCALE

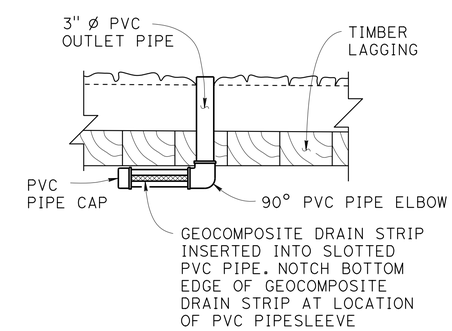

SECTION D-D

NO SCALE

DESIGN	BY Kevin Harper	CHECKED Keith Stillmunkes	
DETAILS	BY Jie Tang	CHECKED Keith Stillmunkes	
QUANTITIES	BY Daniel Sessions	CHECKED Jie Tang	

STATE OF CALIFORNIA
DEPARTMENT OF TRANSPORTATION

DIVISION OF ENGINEERING SERVICES
STRUCTURE DESIGN
DESIGN BRANCH 1

BRIDGE NO. 01E0017
POST MILE 8.7

PATRICK CREEK SLIP OUT WALL
WALL DETAILS NO. 3

STRUCTURES DESIGN DETAIL SHEET (ENGLISH) (REV. 09-01-10)

ORIGINAL SCALE IN INCHES FOR REDUCED PLANS 0 1 2 3

UNIT: 3576
PROJECT NUMBER & PHASE: 01120001151
CONTRACT NO.: 01-0B3104

DISREGARD PRINTS BEARING EARLIER REVISION DATES

REVISION DATES 08-28-14 09-29-14 10-13-14 03-09-15

SHEET 6 OF 11

FILE => Zpcsw-g-rwdt03.dgn

USERNAME => s120115 DATE PLOTTED => 21-JUL-2015 TIME PLOTTED => 11:07

DIST	COUNTY	ROUTE	POST MILES TOTAL PROJECT	SHEET No.	TOTAL SHEETS
01	DN	199	8.7, 21.7	50	54

REGISTERED CIVIL ENGINEER 04-21-15 DATE

June 29, 2015
PLANS APPROVAL DATE

REGISTERED PROFESSIONAL ENGINEER KEVIN HARPER No. 42221 Exp. 3/31/16 CIVIL STATE OF CALIFORNIA

The State of California or its officers or agents shall not be responsible for the accuracy or completeness of scanned copies of this plan sheet.

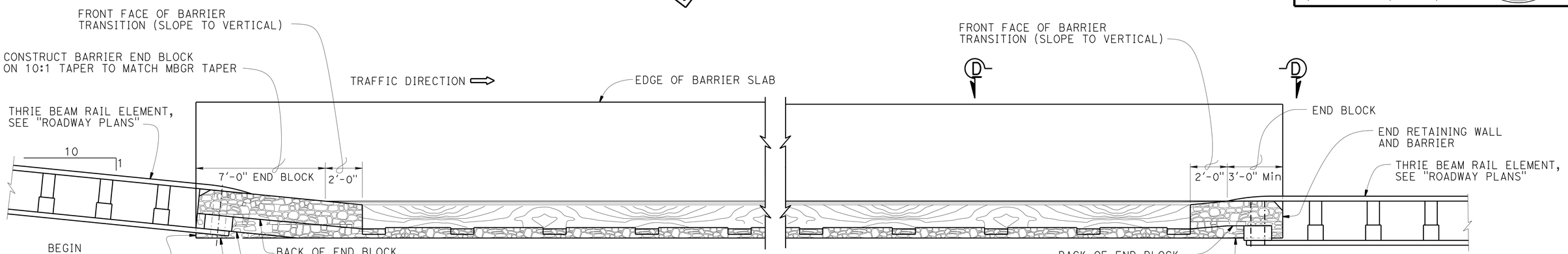

PLAN
3/8" = 1'-0"

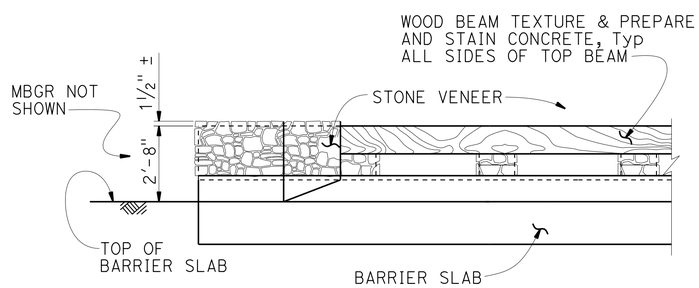

VIEW D-D
3/8" = 1'-0"

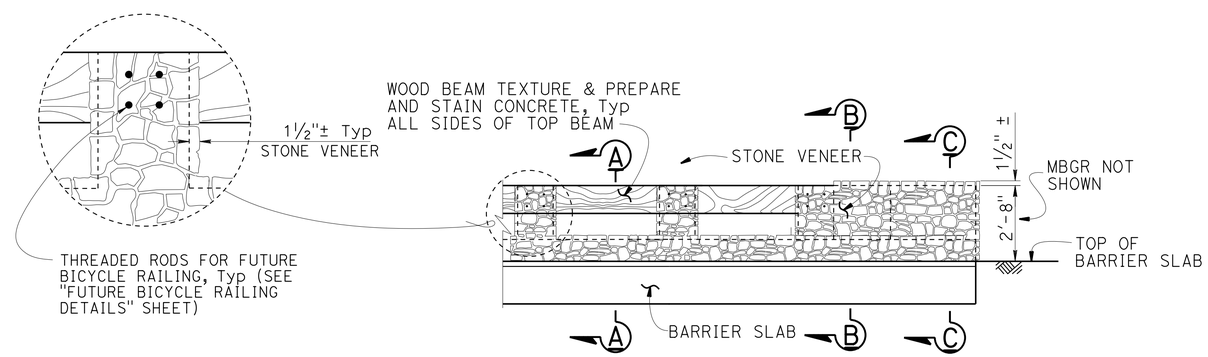

PART ELEVATION
3/8" = 1'-0"

NOTES:

1. For details not shown, see Revised Standard Plan B11-60.
2. For "SECTION A-A", "SECTION B-B" and "SECTION C-C", see "CONCRETE BARRIER TYPE 80 (Mod) No. 2" sheet.

	BY	CHECKED
DESIGN	Kevin Harper	Keith Stillmunkes
DETAILS	Jin Zhou	Keith Stillmunkes
QUANTITIES	Daniel Sessions	Jie Tang

STATE OF CALIFORNIA
DEPARTMENT OF TRANSPORTATION

DIVISION OF ENGINEERING SERVICES
STRUCTURE DESIGN
DESIGN BRANCH 1

BRIDGE NO. 01E0017
POST MILE 8.7

PATRICK CREEK SLIP OUT WALL
CONCRETE BARRIER TYPE 80 (Mod) NO. 1

STRUCTURES DESIGN DETAIL SHEET (ENGLISH) (REV. 09-01-10)

ORIGINAL SCALE IN INCHES FOR REDUCED PLANS 0 1 2 3

UNIT: 3576
PROJECT NUMBER & PHASE: 01120001151
CONTRACT NO.: 01-0B3104

DISREGARD PRINTS BEARING EARLIER REVISION DATES

REVISION DATES 03-31-15 03-25-15 04/06/15

SHEET 7 OF 11

FILE => Zpcsw-t-brdt01.dgn

USERNAME => s120115

DIST	COUNTY	ROUTE	POST MILES TOTAL PROJECT	SHEET No.	TOTAL SHEETS
01	DN	199	8.7, 21.7	51	54

REGISTERED CIVIL ENGINEER 04-21-15 DATE

June 29, 2015
PLANS APPROVAL DATE

REGISTERED PROFESSIONAL ENGINEER
KEVIN HARPER
No. 42221
Exp. 3/31/16
CIVIL
STATE OF CALIFORNIA

The State of California or its officers or agents shall not be responsible for the accuracy or completeness of scanned copies of this plan sheet.

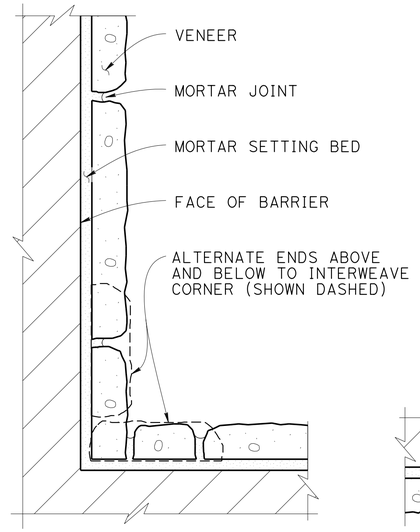

INSIDE CORNER DETAIL

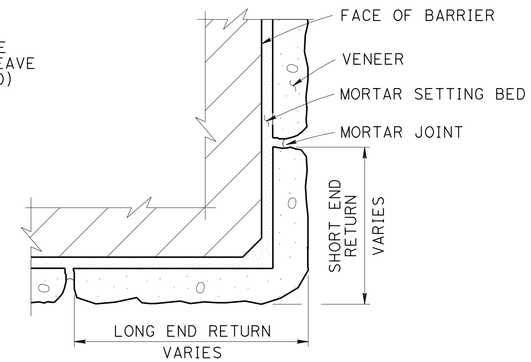

OUTSIDE CORNER DETAIL

MANUFACTURED STONE VENEER TEXTURE

NO SCALE

NOTES:

1. For details not shown, see REVISED STANDARD PLAN B11-60.
2. For Barrier Slab details, see "CONCRETE BARRIER SLAB DETAIL" on "WALL DETAILS NO. 2" sheet.
3. The average installed thickness of the stone veneer shall be approximately 1½".

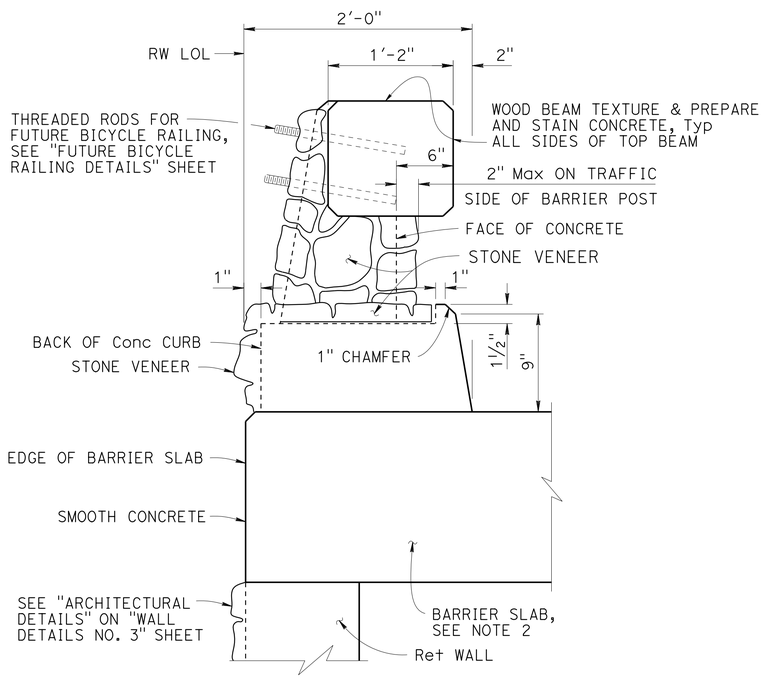

SECTION A-A

1½" = 1'-0"

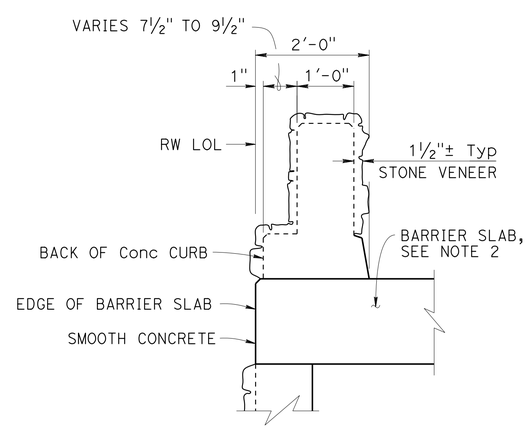

SECTION B-B

¾" = 1'-0"

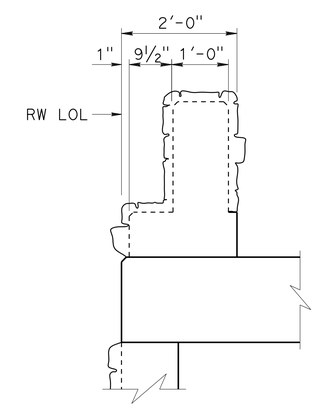

NOTE: For details not shown, see "SECTION B-B"

SECTION C-C

¾" = 1'-0"

DESIGN	BY Kevin Harper	CHECKED Keith Stillmunkes	
DETAILS	BY Jie Tang	CHECKED Keith Stillmunkes	
QUANTITIES	BY Daniel Sessions	CHECKED Jie Tang	

STATE OF CALIFORNIA
DEPARTMENT OF TRANSPORTATION

DIVISION OF ENGINEERING SERVICES
STRUCTURE DESIGN
DESIGN BRANCH 1

BRIDGE NO. 01E0017
POST MILE 8.7

PATRICK CREEK SLIP OUT WALL
CONCRETE BARRIER TYPE 80 (Mod) NO. 2

STRUCTURES DESIGN DETAIL SHEET (ENGLISH) (REV. 09-01-10)

ORIGINAL SCALE IN INCHES FOR REDUCED PLANS 0 1 2 3

UNIT: 3576
PROJECT NUMBER & PHASE: 01120001151
CONTRACT NO.: 01-0B3104

DISREGARD PRINTS BEARING EARLIER REVISION DATES

REVISION DATES 02-26-15 02-26-15 03-16-15

SHEET 8 OF 11

FILE => Zpcsw-t-brdt02.dgn

USERNAME => s120115 DATE PLOTTED => 21-JUL-2015 TIME PLOTTED => 11:07

DIST	COUNTY	ROUTE	POST MILES TOTAL PROJECT	SHEET No.	TOTAL SHEETS
01	DN	199	8.7, 21.7	52	54

REGISTERED CIVIL ENGINEER 04-21-15 DATE

June 29, 2015
PLANS APPROVAL DATE

REGISTERED PROFESSIONAL ENGINEER
KEVIN HARPER
No. 42221
Exp. 3/31/16
CIVIL
STATE OF CALIFORNIA

The State of California or its officers or agents shall not be responsible for the accuracy or completeness of scanned copies of this plan sheet.

NOTES:

1. For details not shown see "CONCRETE BARRIER TYPE 80 (Mod)" sheet.
2. Place rock veneer around threaded rods in the area of the future base plate.

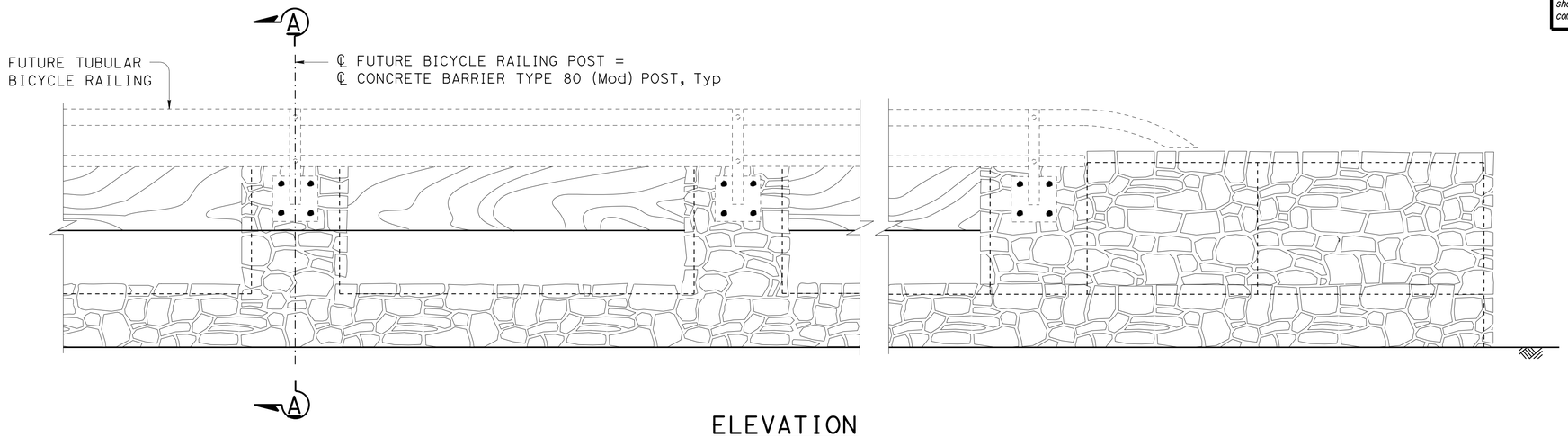

ELEVATION
1" = 1'-0"

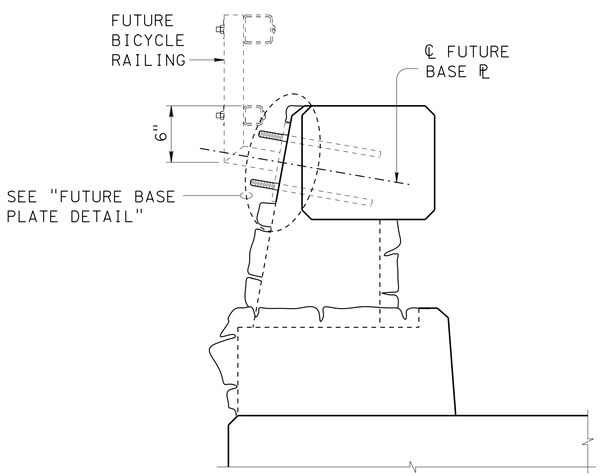

NOTE: Rock veneer is shown removed in area of future base plate for attachment of bicycle railing. See Note 2.

SECTION A-A
1½" = 1'-0"

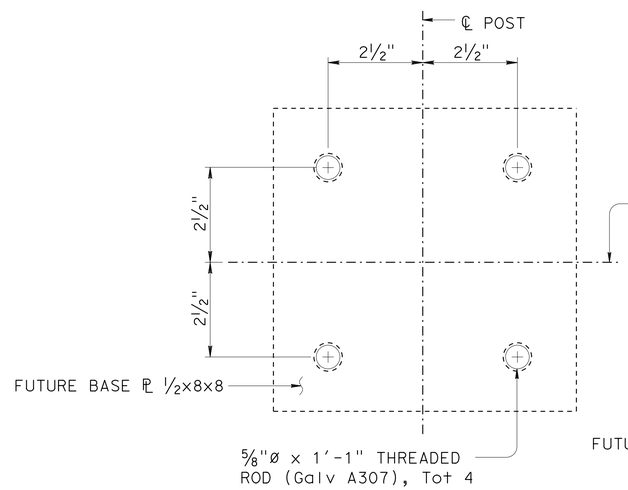

SECTION B-B
6" = 1'-0"

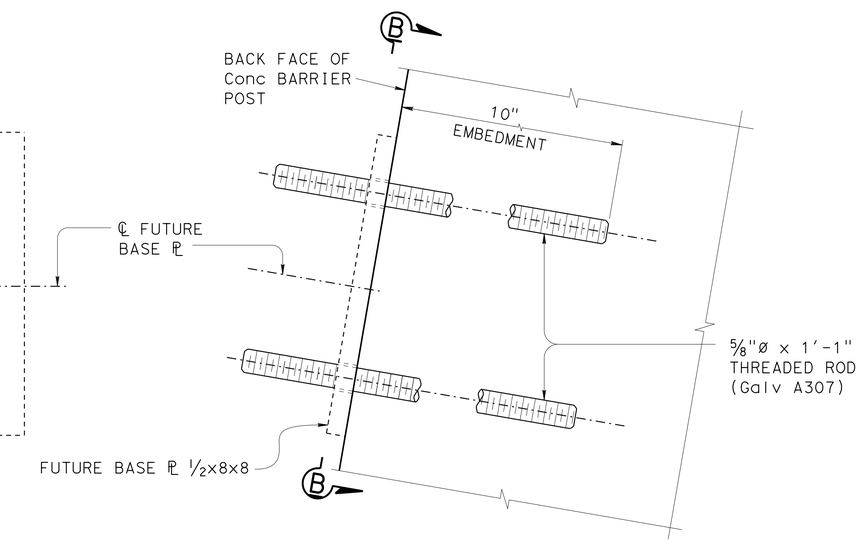

NOTE: Rock veneer not shown

FUTURE BASE PLATE DETAIL
6" = 1'-0"

	BY	CHECKED
DESIGN	Kevin Harper	Keith Stillmunkes
DETAILS	Jie Tang	Keith Stillmunkes
QUANTITIES	Daniel Sessions	Jie Tang

STATE OF CALIFORNIA
DEPARTMENT OF TRANSPORTATION

DIVISION OF ENGINEERING SERVICES
STRUCTURE DESIGN
DESIGN BRANCH 1

BRIDGE NO. 01E0017
POST MILE 8.7

PATRICK CREEK SLIP OUT WALL
FUTURE BICYCLE RAILING DETAILS

STRUCTURES DESIGN DETAIL SHEET (ENGLISH) (REV. 09-01-10)

ORIGINAL SCALE IN INCHES FOR REDUCED PLANS 0 1 2 3

UNIT: 3576
PROJECT NUMBER & PHASE: 01120001151
CONTRACT NO.: 01-0B3104

DISREGARD PRINTS BEARING EARLIER REVISION DATES

REVISION DATES 08-26-14 09-29-14

SHEET 9 OF 11

FILE => Zpcsw-u-brdt.dgn

USERNAME => s120115 DATE PLOTTED => 21-JUL-2015 TIME PLOTTED => 11:07

DIST	COUNTY	ROUTE	POST MILES TOTAL PROJECT	SHEET No	TOTAL SHEETS
01	DN	199	8.7, 21.7	53	54

REGISTERED GEOTECHNICAL ENGINEER 9-22-14

June 29, 2015
PLANS APPROVAL DATE

REGISTERED PROFESSIONAL ENGINEER Mark Hagy No. 2838 Exp. 12-31-14 GEOTECHNICAL STATE OF CALIFORNIA

The State of California or its officers or agents shall not be responsible for the accuracy or completeness of electronic copies of this plan sheet.

This LOTB sheet was prepared in accordance with the Caltrans Soil & Rock Logging, Classification, & Presentation Manual (2010 Edition).

See 2010 Standard Plans A10F and A10G for Soil Legend, and A10H for Rock Legend.

BENCH MARK

dn199-8.66
Fnd CAPPED Alum ¾" REBAR
111.27 Ft N27°04′13"E TO
Sta 100+00.00 ROUTE 199
N 2,551,538.73
E 6,005,890.97
Elev = 250.41

dn199-8.84
Fnd CAPPED Alum ¾" REBAR
17.60 Ft Rt ROUTE 199
Sta 107+90.67
N 2,552,279.56
E 6,006,407.03
Elev = 236.94

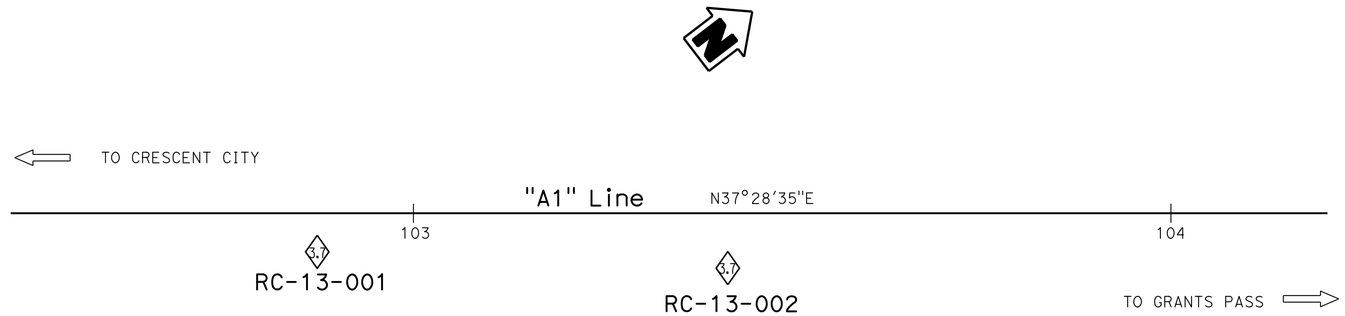

PLAN
1" = 10′

Notes:
1. Groundwater was measured in the open borehole of RC-13-001 at a depth of 20.3 feet (approximate elevation of 223.5), and in the open borehole of RC-13-002 at a depth of 22.6 (approximate elevation of 222.3). The boreholes were observed to be fully collapsed following detonation of the energy sources within the boreholes associated with the GGB Seismic Refraction Survey, and therefore, subsequent water measurements could not be made.
2. Rock core samples from the 2013 subsurface investigation are available for viewing by the bidders at the California Department of Transportation 5900 Folsom Blvd, Sacramento, CA 95819.

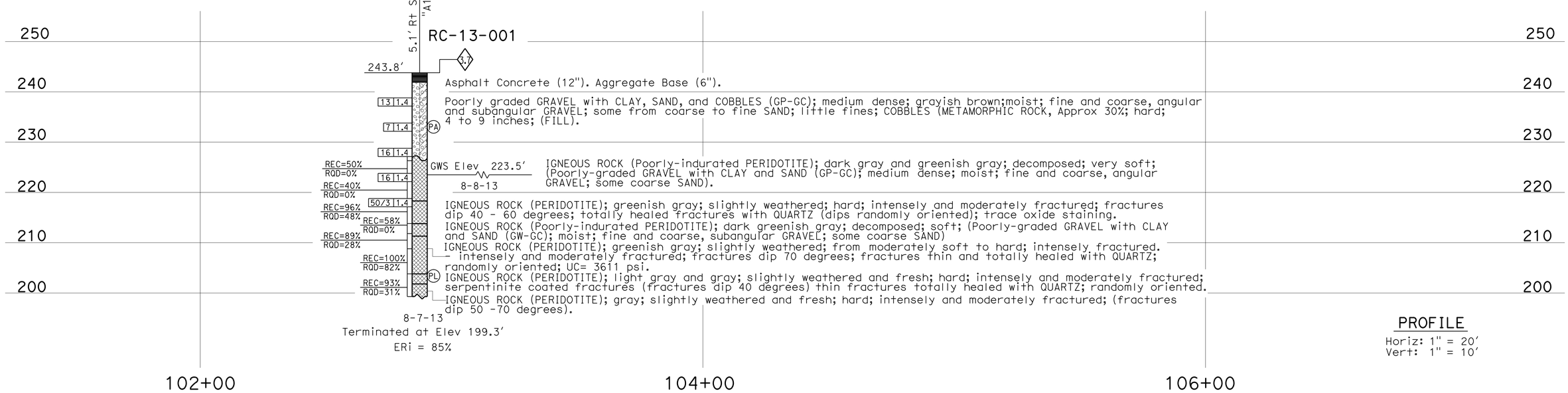

PROFILE
Horiz: 1" = 20′
Vert: 1" = 10′

ENGINEERING SERVICES	MATERIALS AND GEOTECHNICAL SERVICES	STATE OF CALIFORNIA DEPARTMENT OF TRANSPORTATION	DIVISION OF ENGINEERING SERVICES STRUCTURE DESIGN DESIGN BRANCH 1	BRIDGE NO. 01E0017 POST MILE 8.7	PATRICK CREEK SLIP OUT WALL LOG OF TEST BORINGS 1 OF 2
FUNCTIONAL SUPERVISOR NAME: J. Huang	DRAWN BY: F. Nguyen CHECKED BY: C. Koepke	FIELD INVESTIGATION BY: M. Hagy			

OGS CIVIL LOG OF TEST BORINGS SHEET

ORIGINAL SCALE IN INCHES FOR REDUCED PLANS 0 1 2 3

UNIT: 3643
PROJECT NUMBER & PHASE: 01120001151 CONTRACT NO.: 01-0B3104

DISREGARD PRINTS BEARING EARLIER REVISION DATES

REVISION DATES: 08-22-14 09-08-14 09-16-14 09-22-14 SHEET 10 OF 11

FILE => Zpcsw-z-ltb01.dgn

USERNAME => s120115 DATE PLOTTED => 21-JUL-2015 TIME PLOTTED => 11:07

DIST	COUNTY	ROUTE	POST MILES TOTAL PROJECT	SHEET No	TOTAL SHEETS
01	DN	199	8.7, 21.7	54	54

REGISTERED GEOTECHNICAL ENGINEER 9-22-14

June 29, 2015
PLANS APPROVAL DATE

REGISTERED PROFESSIONAL ENGINEER
Mark Hagy
No. 2838
Exp. 12-31-14
GEOTECHNICAL
STATE OF CALIFORNIA

The State of California or its officers or agents shall not be responsible for the accuracy or completeness of electronic copies of this plan sheet.

This LOTB sheet was prepared in accordance with the Caltrans Soil & Rock Logging, Classification, & Presentation Manual (2010 Edition).

See 2010 Standard Plans A10F and A10G for Soil Legend, and A10H for Rock Legend.

FOR PLAN VIEW, SEE
"LOG OF TEST BORINGS 1 OF 2"

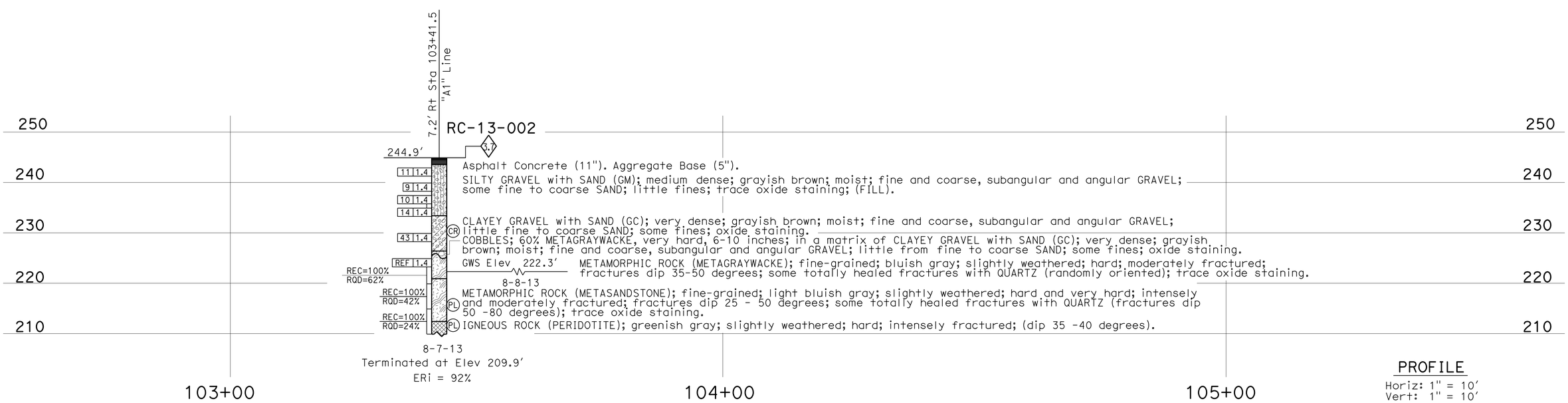

PROFILE
Horiz: 1" = 10'
Vert: 1" = 10'

ENGINEERING SERVICES	MATERIALS AND GEOTECHNICAL SERVICES	STATE OF CALIFORNIA DEPARTMENT OF TRANSPORTATION	DIVISION OF ENGINEERING SERVICES STRUCTURE DESIGN DESIGN BRANCH 1	BRIDGE NO. 01E0017 POST MILE 8.7	PATRICK CREEK SLIP OUT WALL
FUNCTIONAL SUPERVISOR NAME: J. Huang	DRAWN BY: F. Nguyen CHECKED BY: C. Koepke	FIELD INVESTIGATION BY: J. Martin			LOG OF TEST BORINGS 2 OF 2

OGS CIVIL LOG OF TEST BORINGS SHEET

ORIGINAL SCALE IN INCHES FOR REDUCED PLANS 0 1 2 3

UNIT: 3643
PROJECT NUMBER & PHASE: 01120001151 CONTRACT NO.: 01-0B3104

DISREGARD PRINTS BEARING EARLIER REVISION DATES

REVISION DATES: 08-22-14 09-09-14 09-16-14 09-22-14

SHEET 11 OF 11

FILE => Zpxaw-z-ltb02.dgn

USERNAME => s120115 DATE PLOTTED => 21-JUL-2015 TIME PLOTTED => 11:07