ACSTP-ER-19C4(004)E
ACSTP-ER-2151(004)E

Dist	COUNTY	ROUTE	POST MILES TOTAL PROJECT	SHEET No.	TOTAL SHEETS
01	DN	101	14.9/15.3	1	91

STATE OF CALIFORNIA
DEPARTMENT OF TRANSPORTATION

PROJECT PLANS FOR CONSTRUCTION ON
STATE HIGHWAY

IN DEL NORTE COUNTY
ABOUT 10 MILES NORTH OF KLAMATH
FROM 2.2 MILES TO 2.6 MILES
NORTH OF WILSON CREEK BRIDGE

TO BE SUPPLEMENTED BY STANDARD PLANS DATED 2010

INDEX OF PLANS

SHEET No	DESCRIPTION
1	TITLE SHEET
2-5	TYPICAL CROSS SECTIONS
6-8	LAYOUTS
9	CONSTRUCTION DETAILS
10	DRAINAGE PROFILE
11	DRAINAGE DETAILS
12	DRAINAGE QUANTITIES
13	CONSTRUCTION AREA SIGNS
14-15	TRAFFIC HANDLING PLAN
16	SUMMARY OF QUANTITIES
17-18	EROSION CONTROL PLAN
19-22	ELECTRICAL SYSTEMS PLANS
23-60	NEW OR REVISED STANDARD PLANS

STRUCTURE PLANS

61-75	SOUTH LAST CHANCE WALL
76-91	LAST CHANCE SOIL NAIL WALL

THE STANDARD PLANS LIST APPLICABLE TO THIS CONTRACT IS INCLUDED IN THE NOTICE TO BIDDERS AND SPECIAL PROVISIONS BOOK.

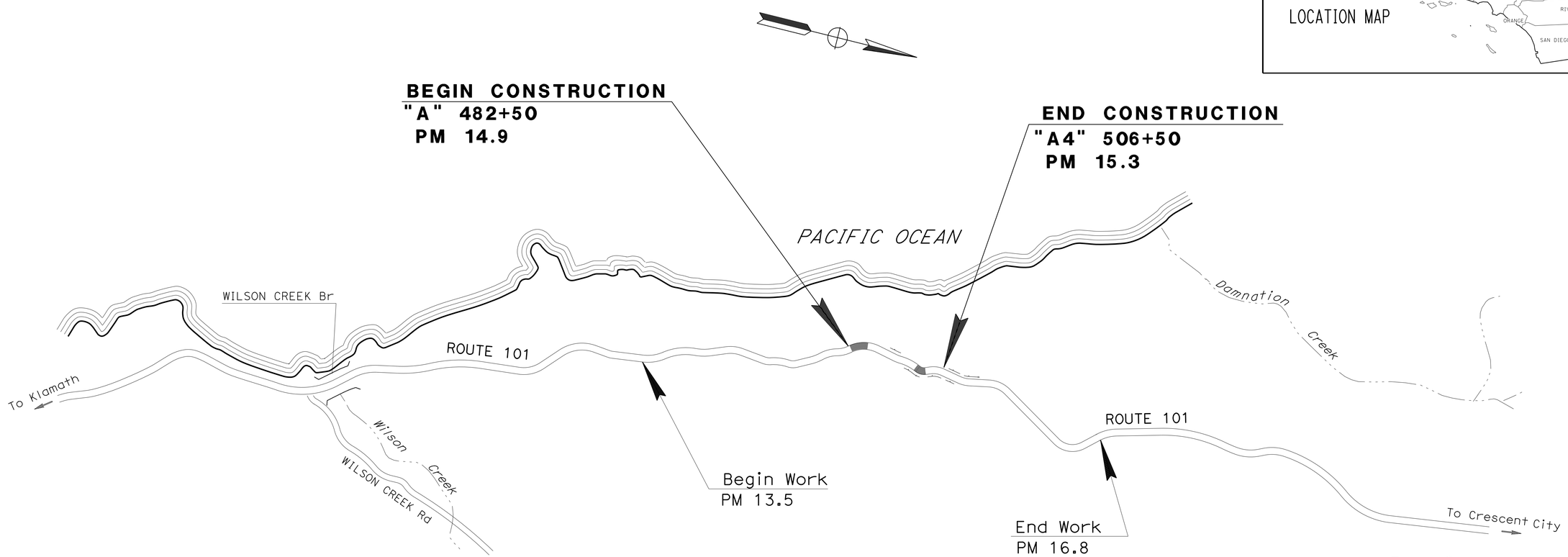

PROJECT ENGINEER
REGISTERED CIVIL ENGINEER
11/05/15
DATE

REGISTERED PROFESSIONAL ENGINEER
T. LARK
No. 52481
Exp. 12/31/16
CIVIL
STATE OF CALIFORNIA

November 30, 2015
PLANS APPROVAL DATE

THE STATE OF CALIFORNIA OR ITS OFFICERS OR AGENTS SHALL NOT BE RESPONSIBLE FOR THE ACCURACY OR COMPLETENESS OF SCANNED COPIES OF THIS PLAN SHEET.

THE CONTRACTOR SHALL POSSESS THE CLASS (OR CLASSES) OF LICENSE AS SPECIFIED IN THE "NOTICE TO BIDDERS."

NO SCALE

CONTRACT No.	01-0B27U4
PROJECT ID	0115000111

P:\PROJ\01\0B27U\drafting\01-0B27U4\010b270ab001.dgn

PROJECT MANAGER: JAMIE MATTEOLLI
DESIGN MANAGER: L. R. ASHLEY

LAST REVISION 11-05-15
DATE PLOTTED => 01-FEB-2016
TIME PLOTTED => 09:04

Dist	COUNTY	ROUTE	POST MILES TOTAL PROJECT	SHEET No.	TOTAL SHEETS
01	DN	101	14.9/15.3	2	91

REGISTERED CIVIL ENGINEER 11/05/15 DATE

November 30, 2015
PLANS APPROVAL DATE

REGISTERED PROFESSIONAL ENGINEER T. LARK No. 52481 Exp. 12/31/16 CIVIL STATE OF CALIFORNIA

THE STATE OF CALIFORNIA OR ITS OFFICERS OR AGENTS SHALL NOT BE RESPONSIBLE FOR THE ACCURACY OR COMPLETENESS OF SCANNED COPIES OF THIS PLAN SHEET.

NOTES:

1. DIMENSIONS OF THE PAVEMENT STRUCTURES (STRUCTURAL SECTIONS) ARE SUBJECT TO TOLERANCES SPECIFIED IN THE STANDARD SPECIFICATIONS.
2. SUPERELEVATIONS ARE SHOWN ON THE SUPERELEVATION DIAGRAMS.

ABBREVIATIONS:

SR	SUPERELEVATION RATE
SLC	SOUTH LAST CHANCE WALL (SEE STRUCTURES PLANS)
SNW	LAST CHANCE SOIL NAIL WALL (SEE STRUCTURES PLANS)
HMA-A	HOT MIX ASPHALT (TYPE A)
GPI	GEOSYNTHETIC PAVEMENT INTERLAYER (PAVING FABRIC)
OGFC	HOT MIX ASPHALT-OPEN GRADED (OPEN GRADED FRICTION COURSE

DESIGN DESIGNATION

ADT (2016)	4,540	D	60%
ADT (2036)	4,810	T	8%
DHV	690	V	55 mph
$ESAL_{20}$	1,575,000	TI_{20}	9.5

PAVEMENT CLIMATE REGION: NORTH COAST

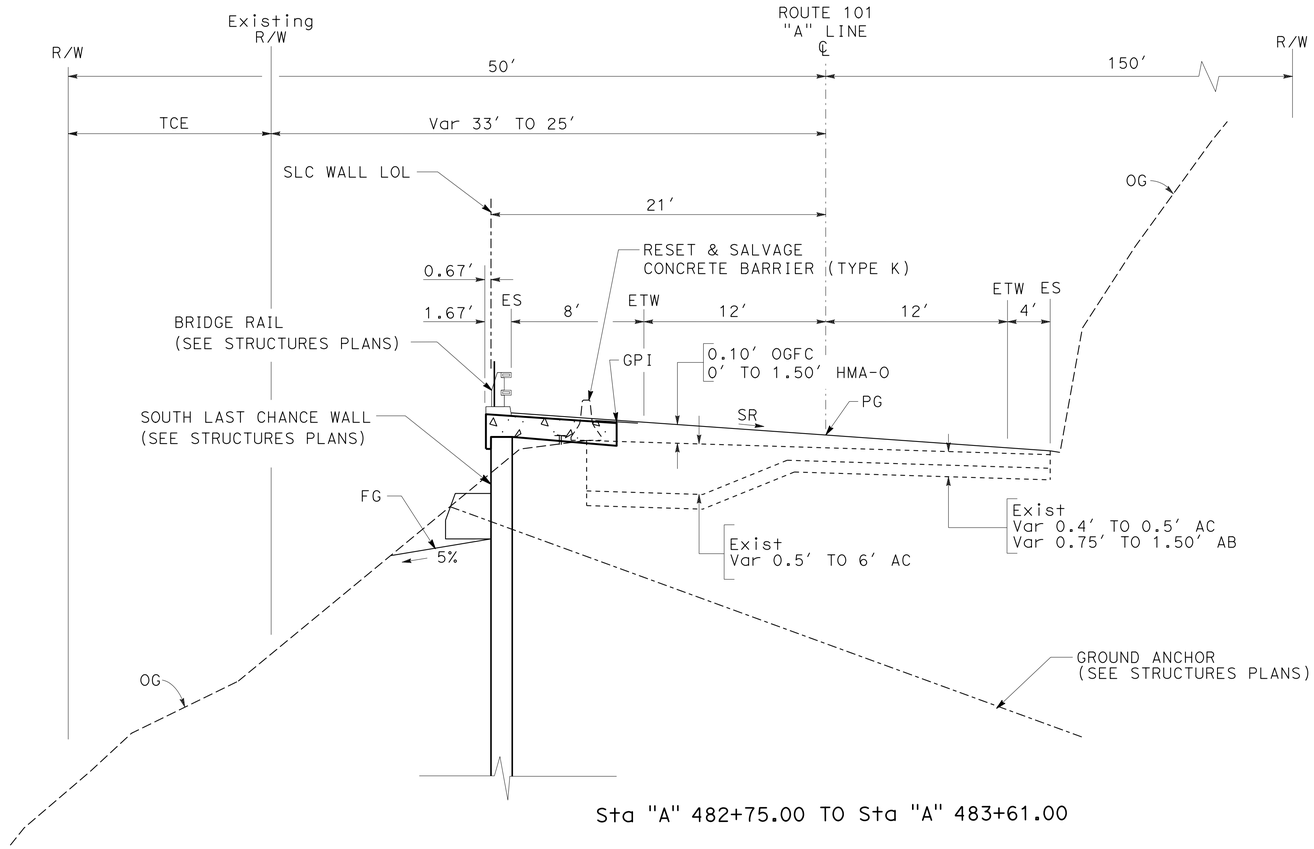

Sta "A" 482+75.00 TO Sta "A" 483+61.00

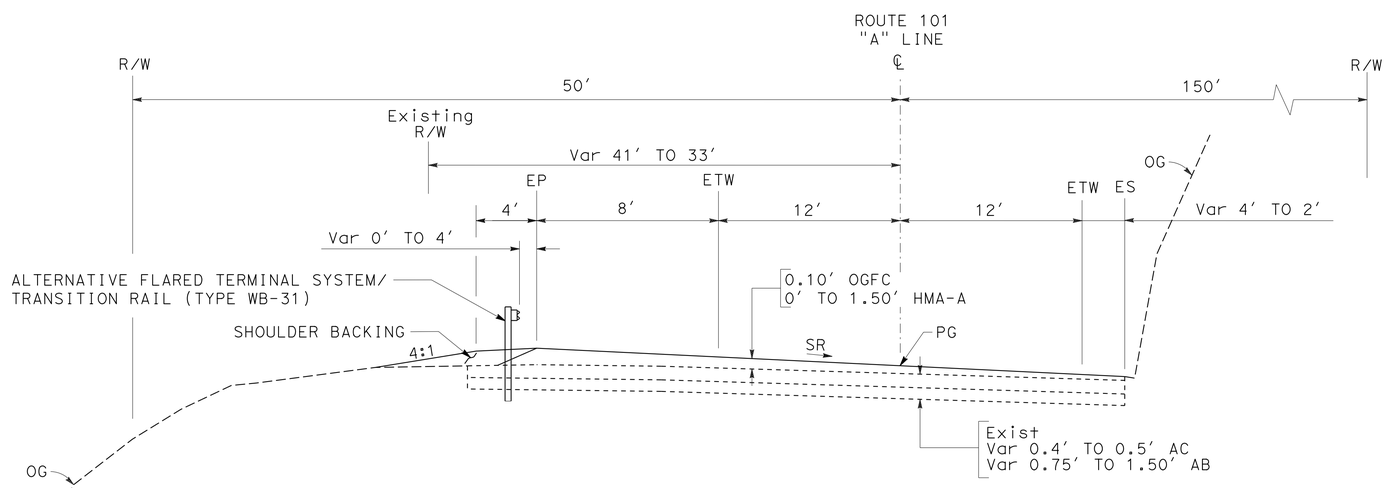

Sta "A" 482+00.00 TO Sta "A" 482+75.00

TYPICAL CROSS SECTIONS X-1

NO SCALE

REVISED BY	DATE REVISED	TODD LARK	T. PHILLIPS
CALCULATED-DESIGNED BY	CHECKED BY	FUNCTIONAL SUPERVISOR	L.R. ASHLEY

STATE OF CALIFORNIA - DEPARTMENT OF TRANSPORTATION
Caltrans
DESIGN

P:\PROJ\01\0B27U\draffing\01-0B27u4\010b270ca001.dgn

LAST REVISION 11-05-15 | DATE PLOTTED => 01-FEB-2016 | TIME PLOTTED => 09:04

Dist	COUNTY	ROUTE	POST MILES TOTAL PROJECT	SHEET No.	TOTAL SHEETS
01	DN	101	14.9/15.3	3	91

REGISTERED CIVIL ENGINEER 11/05/15 DATE

November 30, 2015
PLANS APPROVAL DATE

REGISTERED PROFESSIONAL ENGINEER T. LARK No. 52481 Exp 12/31/16 CIVIL STATE OF CALIFORNIA

THE STATE OF CALIFORNIA OR ITS OFFICERS OR AGENTS SHALL NOT BE RESPONSIBLE FOR THE ACCURACY OR COMPLETENESS OF SCANNED COPIES OF THIS PLAN SHEET.

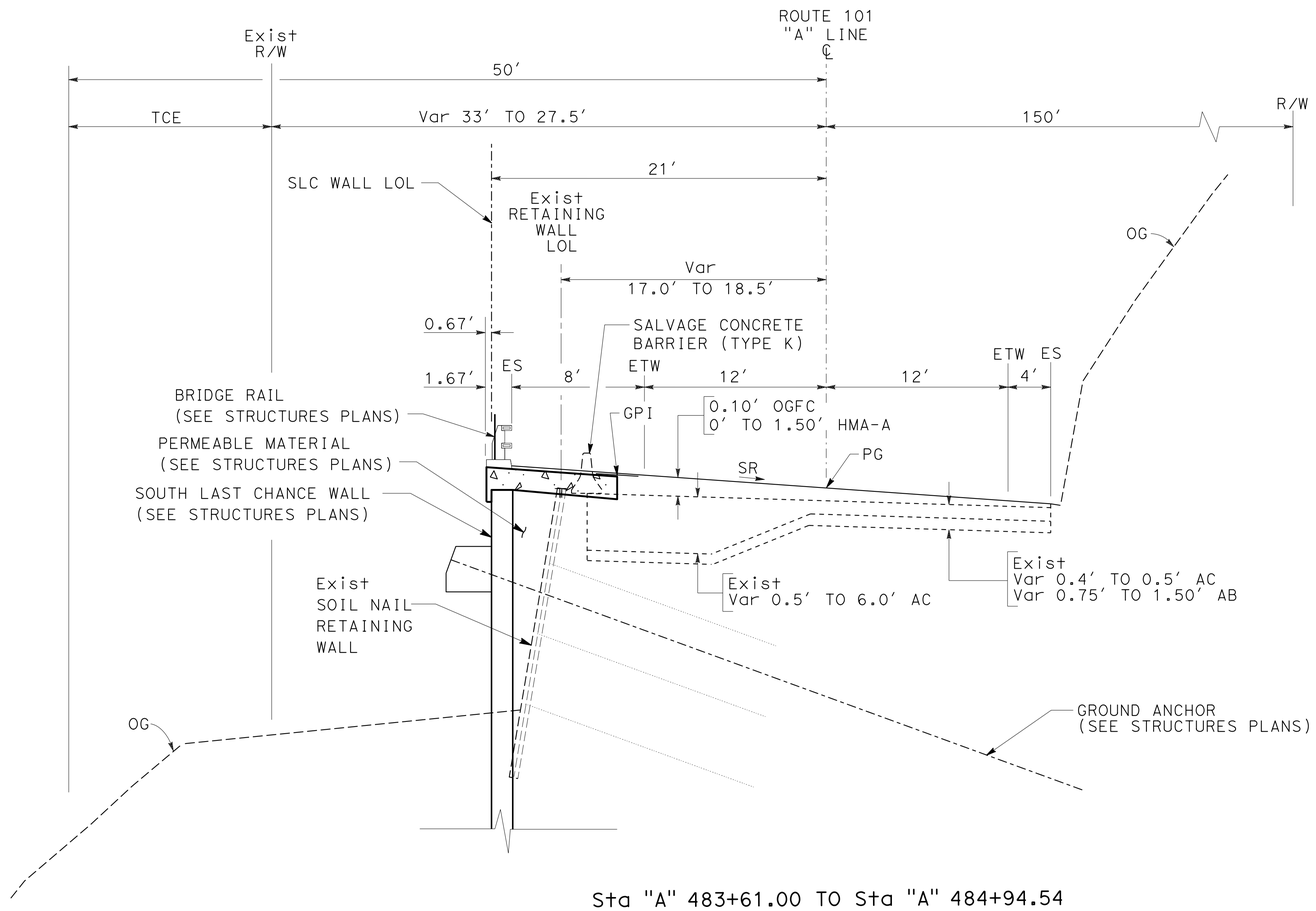

Sta "A" 483+61.00 TO Sta "A" 484+94.54

TYPICAL CROSS SECTIONS X-2

NO SCALE

REVISED BY	DATE REVISED

CALCULATED-DESIGNED BY	TODD LARK
CHECKED BY	T. PHILLIPS
FUNCTIONAL SUPERVISOR	L.R. ASHLEY

STATE OF CALIFORNIA - DEPARTMENT OF TRANSPORTATION
Caltrans
DESIGN

P:\PROJ\01\0B270\draffing\01-0B270ca002.dgn

LAST REVISION 11-05-15 | DATE PLOTTED => 01-FEB-2016 | TIME PLOTTED => 09:04

Dist	COUNTY	ROUTE	POST MILES TOTAL PROJECT	SHEET No.	TOTAL SHEETS
01	DN	101	14.9/15.3	4	91

REGISTERED CIVIL ENGINEER 11/05/15 DATE

November 30, 2015
PLANS APPROVAL DATE

REGISTERED PROFESSIONAL ENGINEER T. LARK No. 52481 Exp 12/31/16 CIVIL STATE OF CALIFORNIA

THE STATE OF CALIFORNIA OR ITS OFFICERS OR AGENTS SHALL NOT BE RESPONSIBLE FOR THE ACCURACY OR COMPLETENESS OF SCANNED COPIES OF THIS PLAN SHEET.

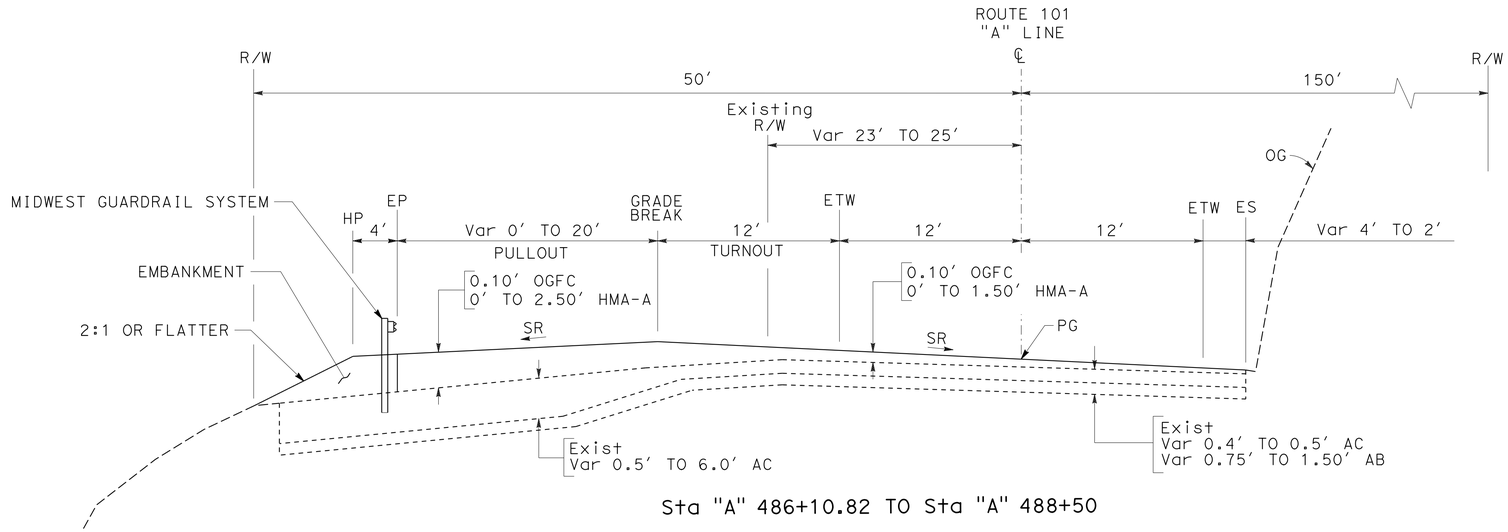

Sta "A" 486+10.82 TO Sta "A" 488+50

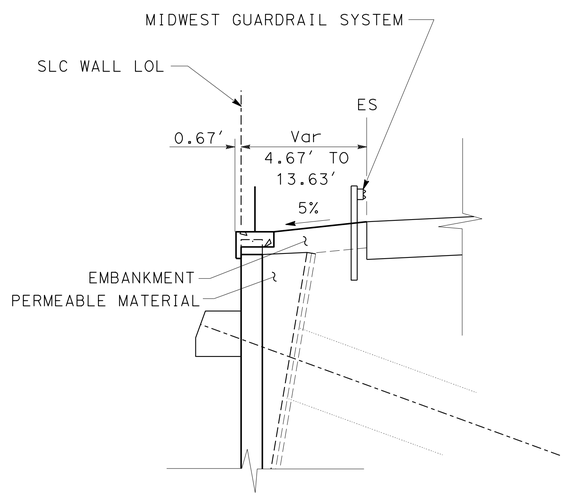

Sta "A" 485+60.00 TO Sta "A" 486+10.82

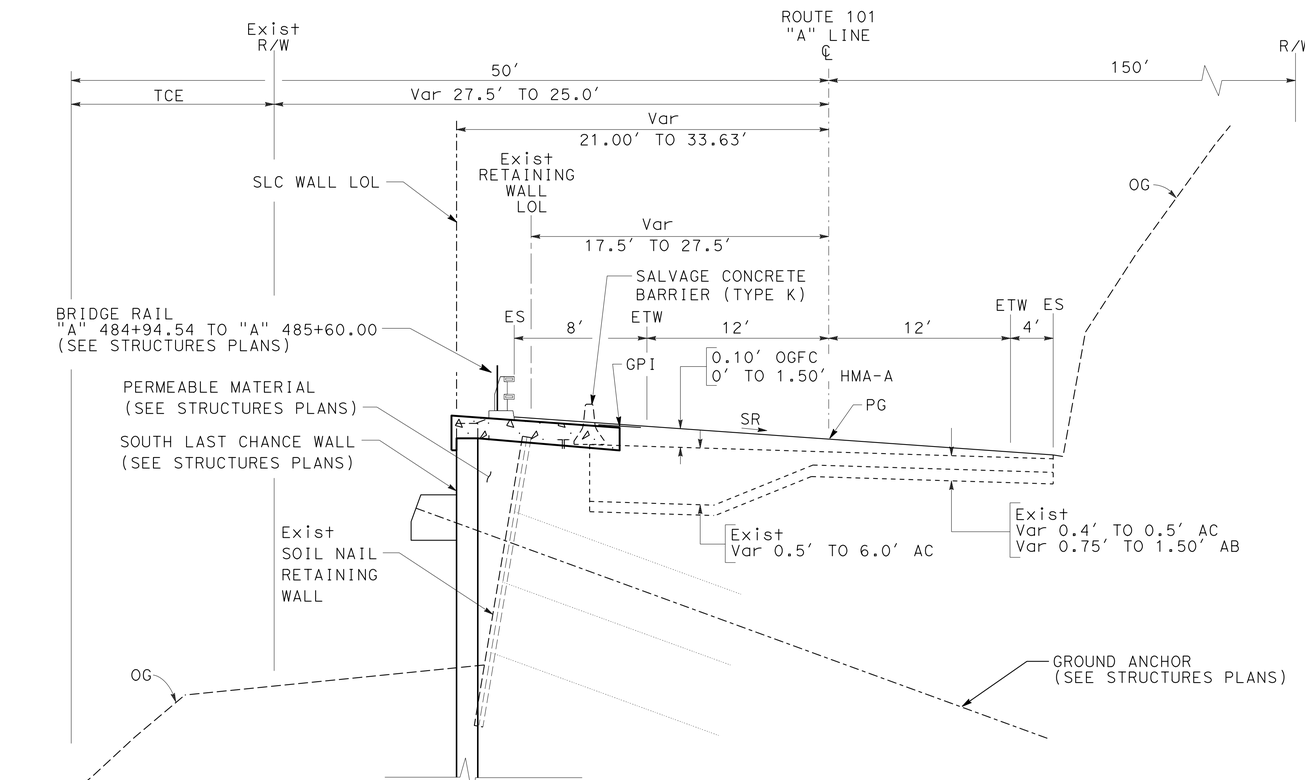

Sta "A" 484+94.54 TO Sta "A" 486+10.82

TYPICAL CROSS SECTIONS

NO SCALE

X-3

REVISED BY | DATE REVISED
TODD LARK | T. PHILLIPS
CALCULATED-DESIGNED BY | CHECKED BY
FUNCTIONAL SUPERVISOR | L.R. ASHLEY
STATE OF CALIFORNIA - DEPARTMENT OF TRANSPORTATION
Caltrans
DESIGN

P:\PROJ\01\0B27U\drafting\01-0B27u4\010b270ca003.dgn

LAST REVISION 11-05-15 | DATE PLOTTED => 01-FEB-2016 | TIME PLOTTED => 09:04

Dist	COUNTY	ROUTE	POST MILES TOTAL PROJECT	SHEET No.	TOTAL SHEETS
01	DN	101	14.9/15.3	5	91

REGISTERED CIVIL ENGINEER 11/05/15 DATE

November 30, 2015
PLANS APPROVAL DATE

REGISTERED PROFESSIONAL ENGINEER T. LARK No. 52481 Exp 12/31/16 CIVIL STATE OF CALIFORNIA

THE STATE OF CALIFORNIA OR ITS OFFICERS OR AGENTS SHALL NOT BE RESPONSIBLE FOR THE ACCURACY OR COMPLETENESS OF SCANNED COPIES OF THIS PLAN SHEET.

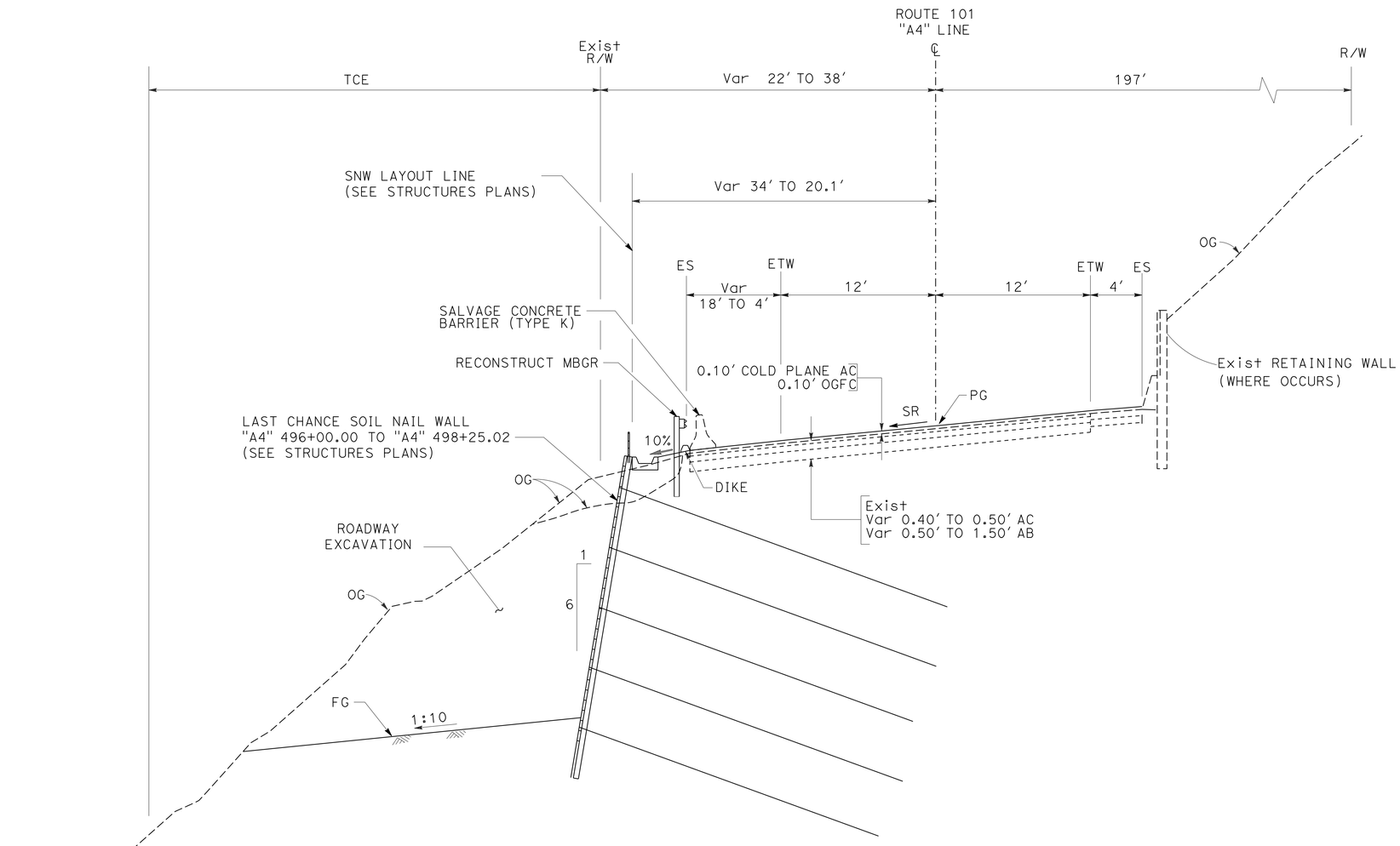

Sta "A4" 496+00.00 TO Sta "A4" 498+25.02

TYPICAL CROSS SECTIONS

NO SCALE

X-4

REVISED BY	DATE REVISED

CALCULATED-DESIGNED BY	CHECKED BY
TODD LARK	T. PHILLIPS

FUNCTIONAL SUPERVISOR: L.R. ASHLEY

STATE OF CALIFORNIA - DEPARTMENT OF TRANSPORTATION

Caltrans® **DESIGN**

P:\PROJ\01\0B27U\drafting\01-0B27u4\010b270ca004.dgn

LAST REVISION 11-05-15 | DATE PLOTTED => 01-FEB-2016 | TIME PLOTTED => 09:04

Dist	COUNTY	ROUTE	POST MILES TOTAL PROJECT	SHEET No.	TOTAL SHEETS
01	DN	101	14.9/15.3	6	91

REGISTERED CIVIL ENGINEER 11/05/15 DATE

November 30, 2015
PLANS APPROVAL DATE

REGISTERED PROFESSIONAL ENGINEER T. LARK No. 52481 Exp. 12/31/16 CIVIL STATE OF CALIFORNIA

THE STATE OF CALIFORNIA OR ITS OFFICERS OR AGENTS SHALL NOT BE RESPONSIBLE FOR THE ACCURACY OR COMPLETENESS OF SCANNED COPIES OF THIS PLAN SHEET.

NOTE:

FOR ACCURATE RIGHT OF WAY DATA, CONTACT RIGHT OF WAY ENGINEERING AT THE DISTRICT OFFICE.

ABBREVIATIONS:

VPI VERTICAL POINT OF INTERSECTION
SLC SOUTH LAST CHANCE WALL (SEE STRUCTURES PLANS)
SNW LAST CHANCE SOIL NAIL WALL (SEE STRUCTURES PLANS)
OGFC HOT MIX ASPHALT-OPEN GRADED (OPEN GRADED FRICTION COURSE)

CURVE DATA

No. ⊕	R	Δ	T	L	N	E
1	565′	44°15′35″	229.77′	436.45′	2485674.59	5983932.98

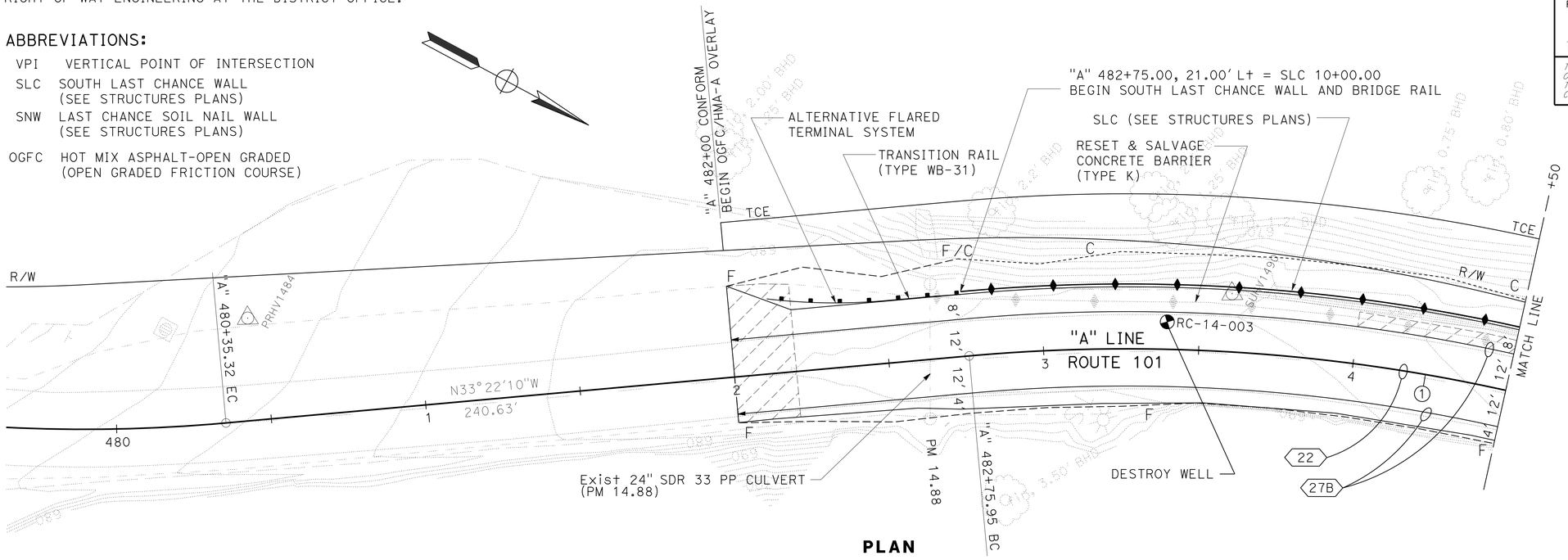

PLAN
SCALE 1" = 20′

LEGEND:

= COLD PLANE AC PAVEMENT
= TRAFFIC STRIPE DETAIL No.
= DRAINAGE SYSTEM No.

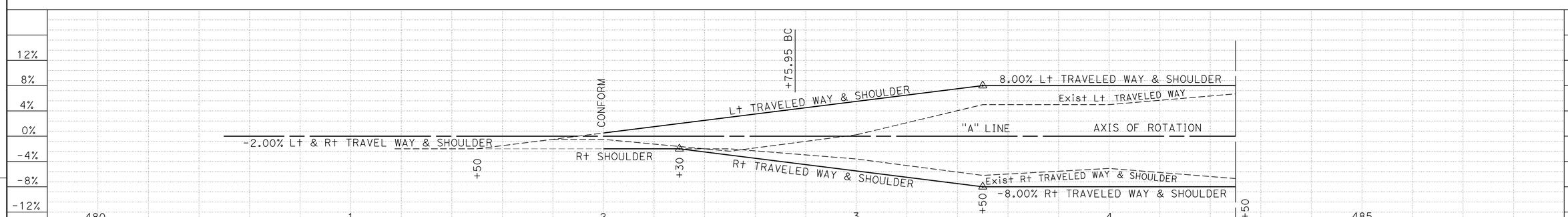

SUPERELEVATION DIAGRAM

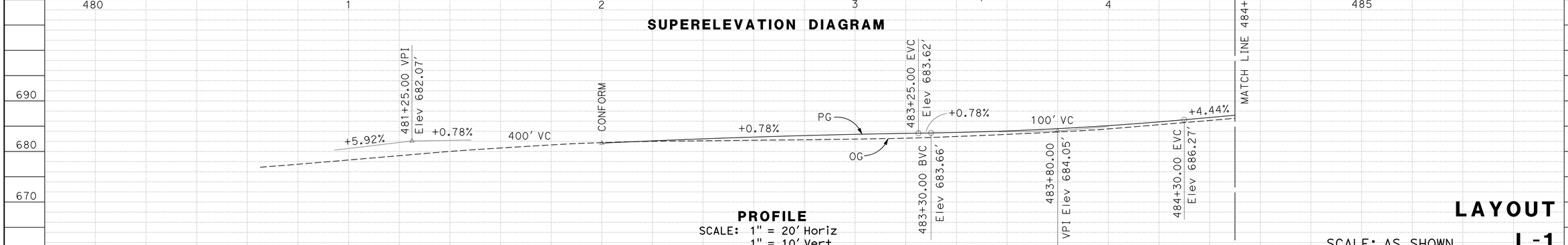

PROFILE
SCALE: 1" = 20′ Horiz
1" = 10′ Vert

LAYOUT
SCALE: AS SHOWN
L-1

STATION	480	1	2	3	4	485	TOTAL
CY Exc							
CY Emb							

REVISED BY	DATE REVISED
TODD LARK	T. PHILLIPS
CALCULATED-DESIGNED BY	CHECKED BY
FUNCTIONAL SUPERVISOR	L.R. ASHLEY

STATE OF CALIFORNIA - DEPARTMENT OF TRANSPORTATION
Caltrans DESIGN

P:\PROJ\01\0B270\draffing\01-0B270ea001.dgn

LAST REVISION 11-05-15
DATE PLOTTED => 01-FEB-2016
TIME PLOTTED => 09:04

Dist	COUNTY	ROUTE	POST MILES TOTAL PROJECT	SHEET No.	TOTAL SHEETS
01	DN	101	14.9/15.3	7	91

REGISTERED CIVIL ENGINEER 11/05/15 DATE

November 30, 2015
PLANS APPROVAL DATE

REGISTERED PROFESSIONAL ENGINEER T. LARK No. 52481 Exp 12/31/16 CIVIL STATE OF CALIFORNIA

THE STATE OF CALIFORNIA OR ITS OFFICERS OR AGENTS SHALL NOT BE RESPONSIBLE FOR THE ACCURACY OR COMPLETENESS OF SCANNED COPIES OF THIS PLAN SHEET.

NOTES:
1. FOR ACCURATE RIGHT OF WAY DATA, CONTACT RIGHT OF WAY ENGINEERING AT THE DISTRICT OFFICE.

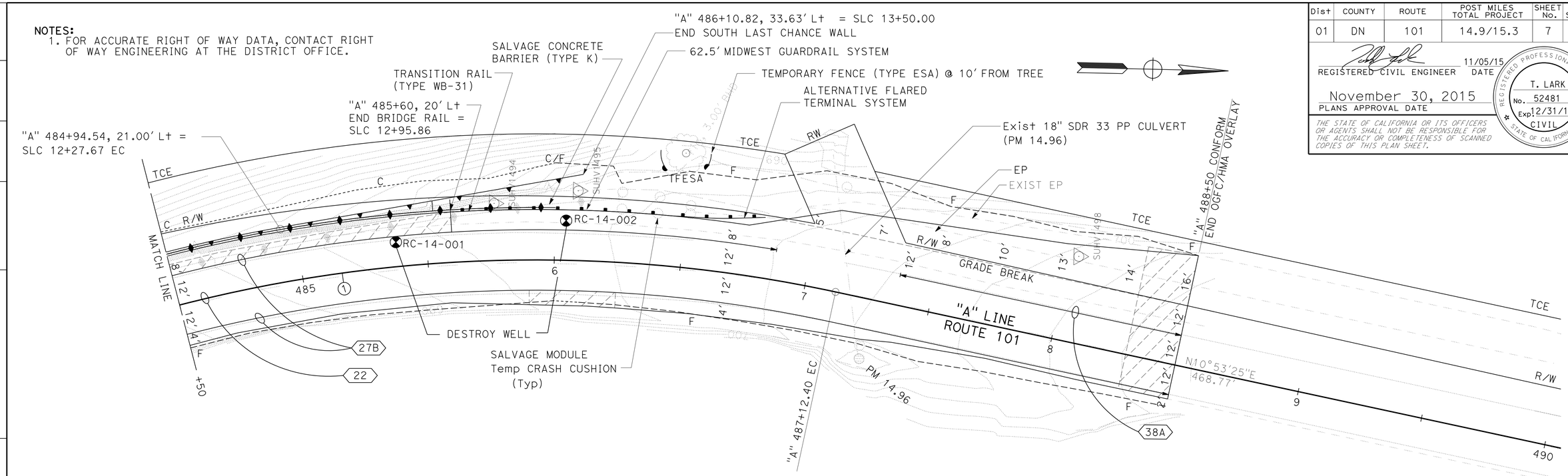

No. ⊕	R	Δ	T	L	N	E
1	565'	44°15'35"	229.77'	436.45'	2485674.59	5983932.98

PLAN
SCALE: 1" = 20'

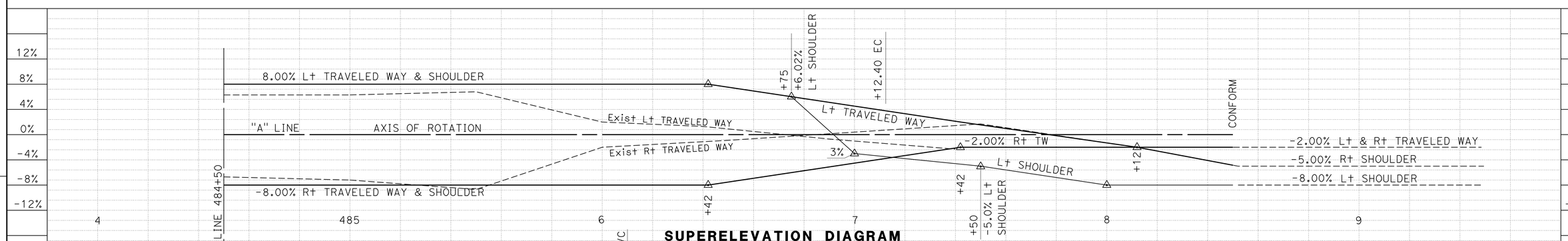

SUPERELEVATION DIAGRAM

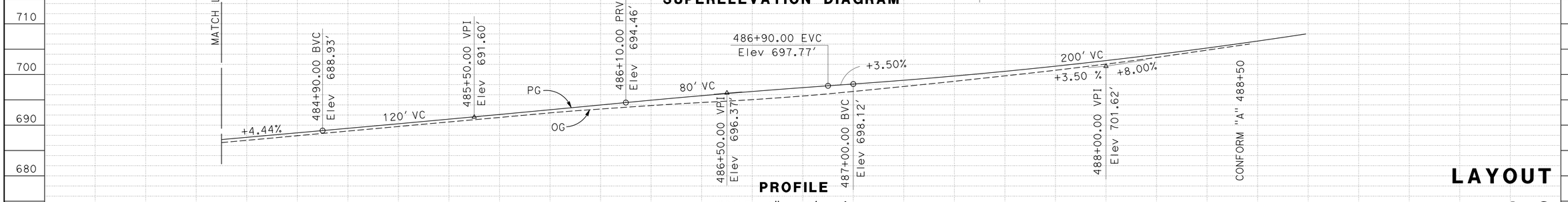

PROFILE
SCALE: 1" = 20' Horiz
1" = 10' Vert

LAYOUT
L-2
SCALE: AS SHOWN

STATION	4	485	6	7	8	9	TOTAL
CY Exc							
CY Emb							

FUNCTIONAL SUPERVISOR: L.R. ASHLEY
CALCULATED-DESIGNED BY: T. PHILLIPS
CHECKED BY: TODD LARK
REVISED BY / DATE REVISED

STATE OF CALIFORNIA - DEPARTMENT OF TRANSPORTATION
Caltrans
DESIGN

P:\PROJ\01\0B27U\drafting\01-0B27u4\010b270ea002.dgn

LAST REVISION 11-05-15 | DATE PLOTTED => 01-FEB-2016 | TIME PLOTTED => 09:04

BORDER LAST REVISED 7/2/2010 | USERNAME => s132662 | DGN FILE => 010b270ea002.dgn | RELATIVE BORDER SCALE IS IN INCHES 0 1 2 3 | UNIT 0313 | PROJECT NUMBER & PHASE 01150001111

Dist	COUNTY	ROUTE	POST MILES TOTAL PROJECT	SHEET No.	TOTAL SHEETS
01	DN	101	14.9/15.3	8	91

REGISTERED CIVIL ENGINEER 11/05/15 DATE

November 30, 2015
PLANS APPROVAL DATE

REGISTERED PROFESSIONAL ENGINEER T. LARK No. 52481 Exp 12/31/16 CIVIL STATE OF CALIFORNIA

THE STATE OF CALIFORNIA OR ITS OFFICERS OR AGENTS SHALL NOT BE RESPONSIBLE FOR THE ACCURACY OR COMPLETENESS OF SCANNED COPIES OF THIS PLAN SHEET.

NOTE:

FOR ACCURATE RIGHT OF WAY DATA, CONTACT RIGHT OF WAY ENGINEERING AT THE DISTRICT OFFICE.

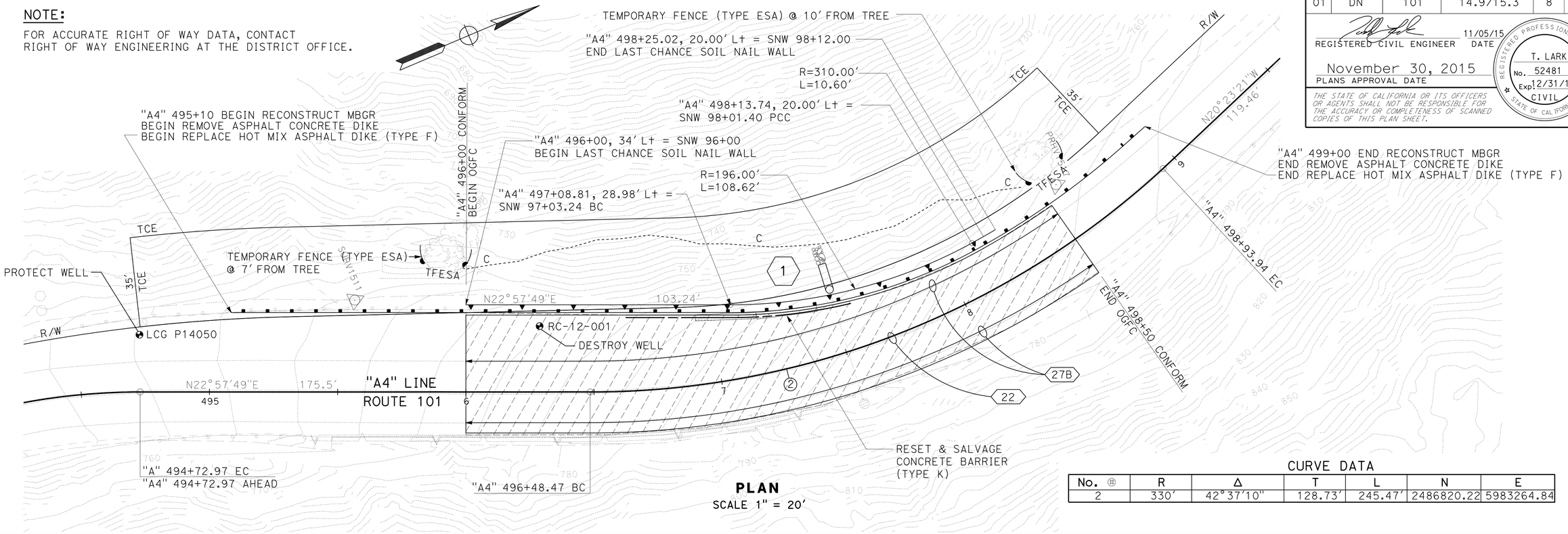

PLAN
SCALE 1" = 20'

CURVE DATA

No. ⊕	R	Δ	T	L	N	E
2	330'	42°37'10"	128.73'	245.47'	2486820.22	5983264.84

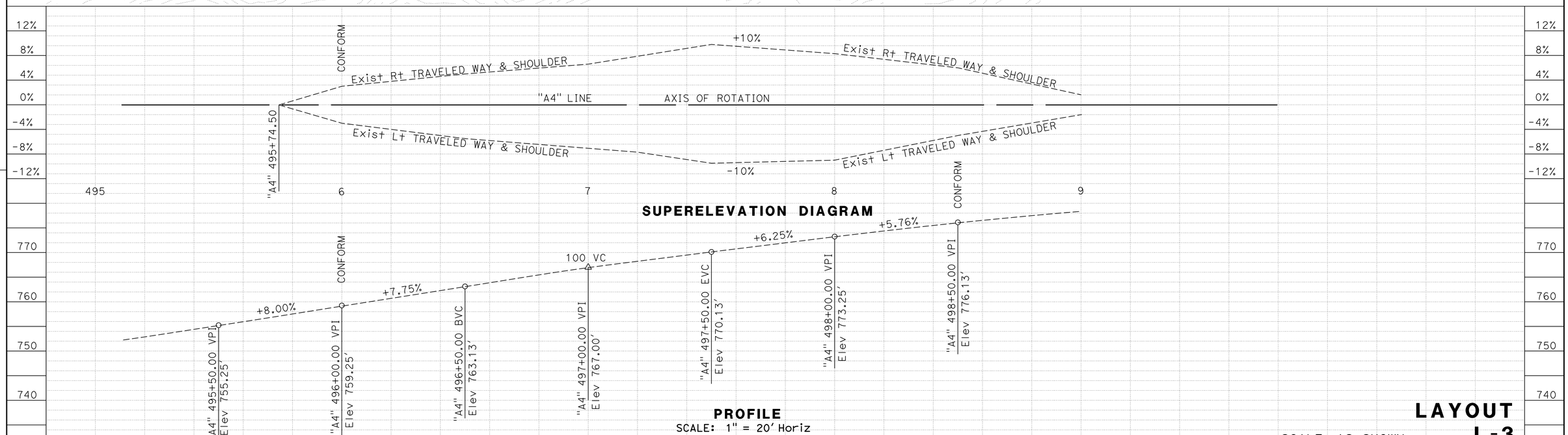

PROFILE
SCALE: 1" = 20' Horiz
1" = 10' Vert

SCALE: AS SHOWN

LAYOUT
L-3

REVISED BY	DATE REVISED
TODD LARK	T. PHILLIPS

CALCULATED-DESIGNED BY
CHECKED BY

FUNCTIONAL SUPERVISOR: L.R. ASHLEY

STATE OF CALIFORNIA - DEPARTMENT OF TRANSPORTATION
Caltrans
DESIGN

P:\PROJ\01\0B27U\drafting\01-0B27u4\010b270ea003.dgn

LAST REVISION 11-05-15
DATE PLOTTED => 01-FEB-2016
TIME PLOTTED => 09:04

Dist	COUNTY	ROUTE	POST MILES TOTAL PROJECT	SHEET No.	TOTAL SHEETS
01	DN	101	14.9/15.3	9	91

REGISTERED CIVIL ENGINEER 11/05/15 DATE

November 30, 2015
PLANS APPROVAL DATE

REGISTERED PROFESSIONAL ENGINEER T. LARK No. 52481 Exp. 12/31/16 CIVIL STATE OF CALIFORNIA

THE STATE OF CALIFORNIA OR ITS OFFICERS OR AGENTS SHALL NOT BE RESPONSIBLE FOR THE ACCURACY OR COMPLETENESS OF SCANNED COPIES OF THIS PLAN SHEET.

LEGEND:

DIRECTION OF TRAVEL ⇨

ABBREVIATIONS:

OGFC = HOT MIX ASPHALT-OPEN GRADED (OPEN GRADED FRICTION COURSE)

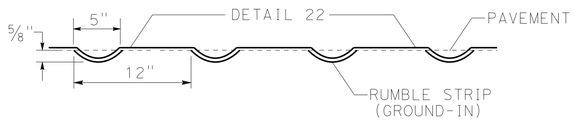

ELEVATION

SECTION B-B

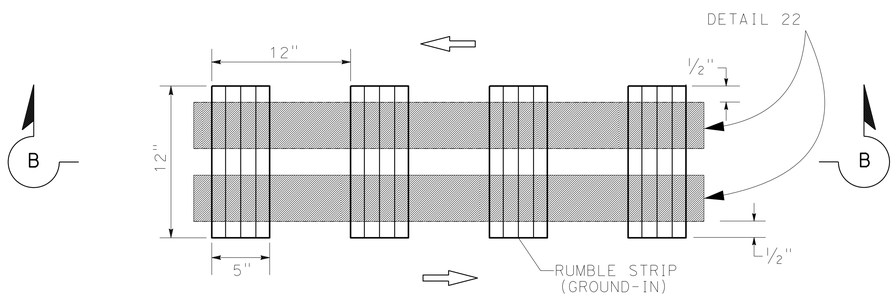

PLAN

CENTERLINE RUMBLE STRIP

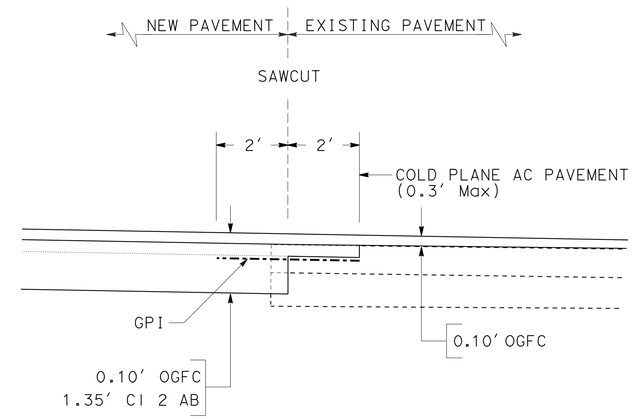

GEOSYNTHETIC PAVEMENT INTERLAYER (GPI)

LONGITUDINAL

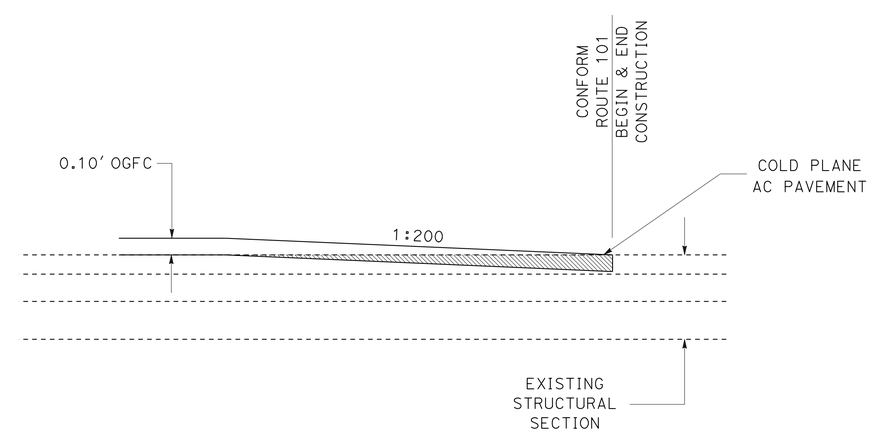

PAVING CONFORM TAPERS

TRANSVERSE

CONSTRUCTION DETAILS
C-1

REVISED BY	DATE REVISED

CALCULATED-DESIGNED BY: TODD LARK
CHECKED BY: T. PHILLIPS
FUNCTIONAL SUPERVISOR: L.R. ASHLEY

STATE OF CALIFORNIA - DEPARTMENT OF TRANSPORTATION
Caltrans
DESIGN

P:\PROJ\01\0B270\draffing\01-0B27u4\010b270ga001.dgn

LAST REVISION 11-05-15 | DATE PLOTTED => 01-FEB-2016 | TIME PLOTTED => 09:05

Dist	COUNTY	ROUTE	POST MILES TOTAL PROJECT	SHEET No.	TOTAL SHEETS
01	DN	101	14.9/15.3	10	91

REGISTERED CIVIL ENGINEER 11/05/15 DATE

November 30, 2015
PLANS APPROVAL DATE

REGISTERED PROFESSIONAL ENGINEER T. LARK No. 52481 Exp. 12/31/16 CIVIL STATE OF CALIFORNIA

THE STATE OF CALIFORNIA OR ITS OFFICERS OR AGENTS SHALL NOT BE RESPONSIBLE FOR THE ACCURACY OR COMPLETENESS OF SCANNED COPIES OF THIS PLAN SHEET.

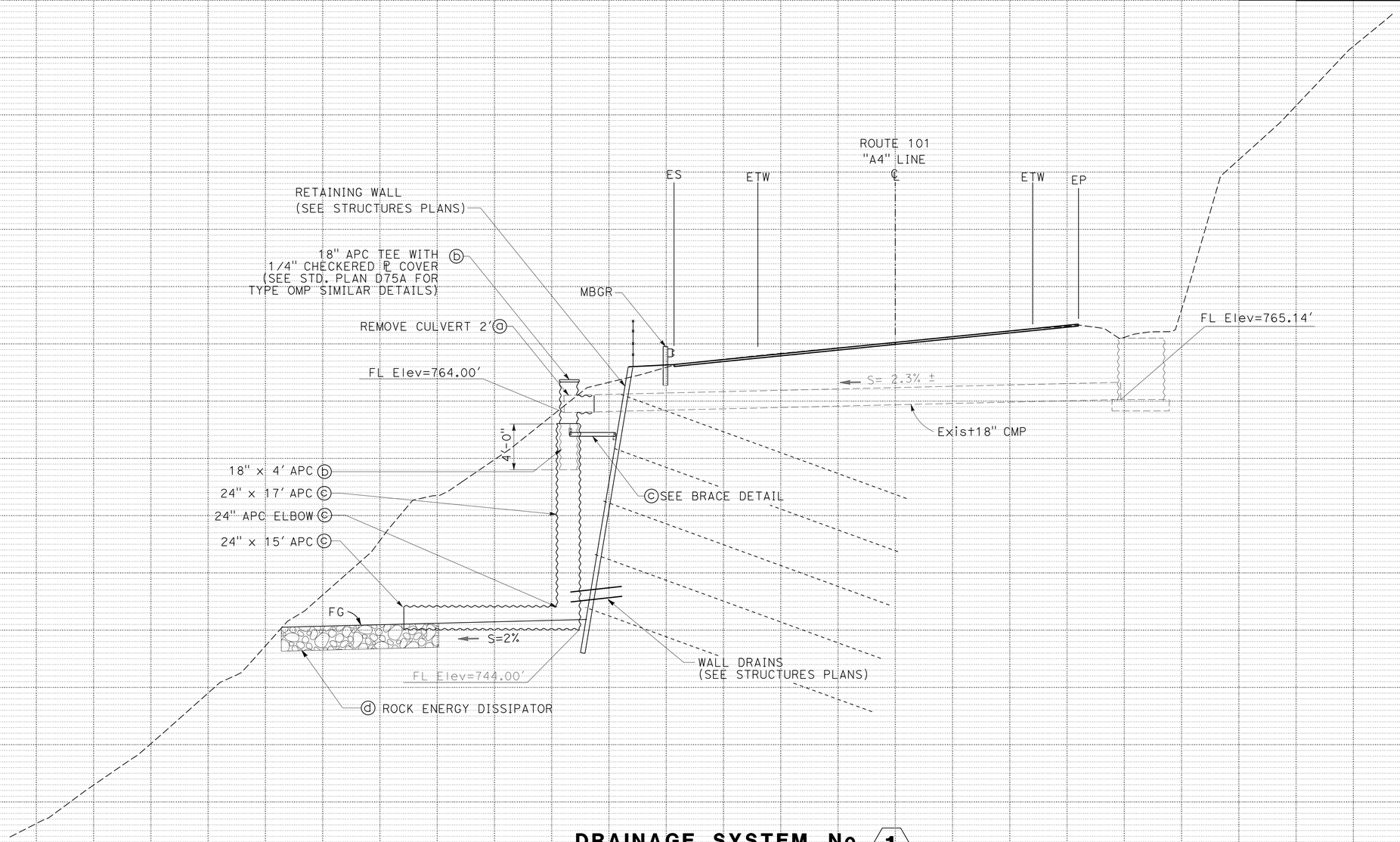

DRAINAGE SYSTEM No. 1

"A4" 497+50.8, PM 15.15
SKEW 0°

SCALE: 1" = 5' Horiz
1" = 5' Vert

DRAINAGE PROFILE DP-1

SCALE: AS NOTED

REVISED BY	DATE REVISED
TODD LARK	T. PHILLIPS

CALCULATED-DESIGNED BY	CHECKED BY

FUNCTIONAL SUPERVISOR: L.R. ASHLEY

STATE OF CALIFORNIA - DEPARTMENT OF TRANSPORTATION
Caltrans
DESIGN

P:\PROJ\01\0B27U\drafting\01-0B27u4\010b270ib001.dgn

LAST REVISION 11-05-15 | DATE PLOTTED => 01-FEB-2016 | TIME PLOTTED => 09:05

Dist	COUNTY	ROUTE	POST MILES TOTAL PROJECT	SHEET No.	TOTAL SHEETS
01	DN	101	14.9/15.3	11	91

REGISTERED CIVIL ENGINEER 11/05/15 DATE

November 30, 2015
PLANS APPROVAL DATE

REGISTERED PROFESSIONAL ENGINEER T. LARK No. 52481 Exp 12/31/16 CIVIL STATE OF CALIFORNIA

THE STATE OF CALIFORNIA OR ITS OFFICERS OR AGENTS SHALL NOT BE RESPONSIBLE FOR THE ACCURACY OR COMPLETENESS OF SCANNED COPIES OF THIS PLAN SHEET.

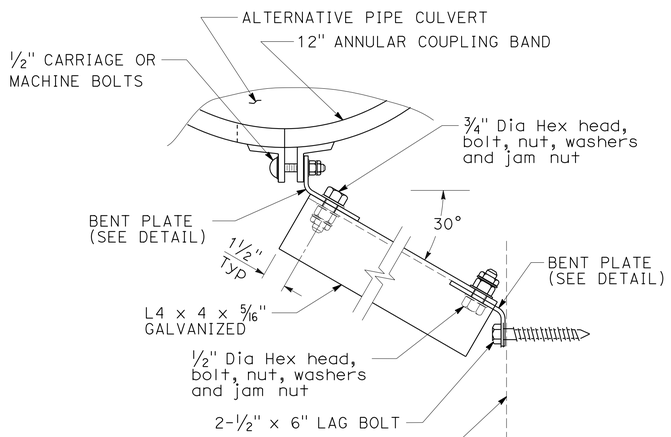

PLAN

BRACE DETAIL

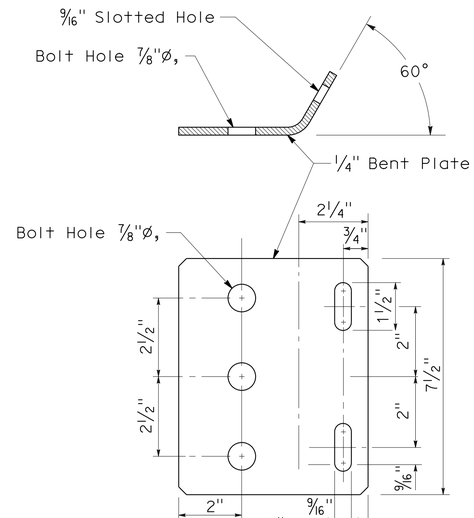

Material to be 1/4" plate galvanized after fabrication.

PLAN

BENT PLATE DETAIL

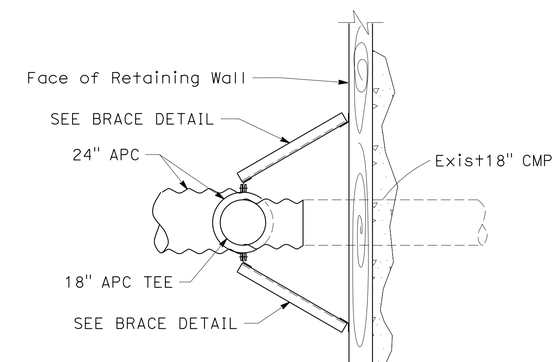

PLAN

DRAINAGE SYSTEM No. 1

"A4" 497+50.8, PM 15.15

NO SCALE:

DRAINAGE DETAILS
DD-1

REVISED BY	DATE REVISED

CALCULATED-DESIGNED BY	CHECKED BY
TODD LARK	T. PHILLIPS

FUNCTIONAL SUPERVISOR: L.R. ASHLEY

STATE OF CALIFORNIA - DEPARTMENT OF TRANSPORTATION
Caltrans® DESIGN

P:\PROJ\01\0B27U\drafting\01-0B27U4\010b270ic001.dgn

LAST REVISION 11-05-15 | DATE PLOTTED => 01-FEB-2016 | TIME PLOTTED => 09:05

Dist	COUNTY	ROUTE	POST MILES TOTAL PROJECT	SHEET No.	TOTAL SHEETS
01	DN	101	14.9/15.3	12	91

REGISTERED CIVIL ENGINEER 11/05/15 DATE

November 30, 2015
PLANS APPROVAL DATE

REGISTERED PROFESSIONAL ENGINEER T. LARK No. 52481 Exp. 12/31/16 CIVIL STATE OF CALIFORNIA

THE STATE OF CALIFORNIA OR ITS OFFICERS OR AGENTS SHALL NOT BE RESPONSIBLE FOR THE ACCURACY OR COMPLETENESS OF SCANNED COPIES OF THIS PLAN SHEET.

DRAINAGE QUANTITIES

DRAINAGE SHEET No.	DRAINAGE SYSTEM No. ⬡	DRAINAGE UNIT ○	REMOVE CULVERT (N) LF	24" APC LF	18" APC LF	ROCK SLOPE PROTECTION (No.2, METHOD B) (TON) TON	DESCRIPTION	STATION	DRAINAGE SYSTEM No. ⬡	DRAINAGE UNIT ○
D-1	1	a	2					"A4" 497+50.8	1	a
		b			8					b
		c		32						c
		d				6	4' W x 10' L x 2' D			d
SHEET TOTAL				32	8	6				

(N) NOT A SEPARATE PAY ITEM, FOR INFORMATION ONLY.

APC ALLOWABLE ALTERNATIVES

SYSTEM NUMBER ⬡	DRAINAGE UNIT ○	PLASTIC PIPE (TYPE S)	CSP GALVANIZED (0.166" THICK)	CSP GALVANIZED (0.079" THICK) POLYMERIC SHEET COATED
1	b	X	X	X
	c	X	X	X

DRAINAGE QUANTITIES
DQ-1

TODD LARK | REVISED BY
T. PHILLIPS | DATE REVISED
CALCULATED-DESIGNED BY
CHECKED BY
FUNCTIONAL SUPERVISOR
L.R. ASHLEY

STATE OF CALIFORNIA - DEPARTMENT OF TRANSPORTATION
Caltrans
DESIGN

P:\PROJ\01\0B27U\drafting\01-0B27u4\010b270id001.dgn

LAST REVISION 11-05-15 | DATE PLOTTED => 01-FEB-2016 | TIME PLOTTED => 09:05

Dist	COUNTY	ROUTE	POST MILES TOTAL PROJECT	SHEET No.	TOTAL SHEETS
01	DN	101	14.9/15.3	13	91

REGISTERED CIVIL ENGINEER 11/05/15 DATE

November 30, 2015
PLANS APPROVAL DATE

REGISTERED PROFESSIONAL ENGINEER T. LARK No. 52481 Exp. 12/31/16 CIVIL STATE OF CALIFORNIA

THE STATE OF CALIFORNIA OR ITS OFFICERS OR AGENTS SHALL NOT BE RESPONSIBLE FOR THE ACCURACY OR COMPLETENESS OF SCANNED COPIES OF THIS PLAN SHEET.

STATIONARY MOUNTED CONSTRUCTION AREA SIGNS

NOTES:

1. EXACT SIGN LOCATIONS TO BE DETERMINED BY THE ENGINEER.

LEGEND:

= Temp FLASHING BEACON (SEE ELECTRICAL PLANS)

* = Temp RAILING (TYPE K) SEE WOOD POLE SHIELDING DETAIL

SIGN LETTER	SIGN CODE FEDERAL	SIGN CODE CALIFORNIA	PANEL SIZE	SIGN MESSAGE	No. OF POST AND SIZE	No. OF SIGNS	NOTES
A		C40	108" x 42"	TRAFFIC FINES DOUBLED IN CONSTRUCTION ZONES	2 - 6" x 6"	2	
B	W20-1		36" x 36"	ROAD WORK AHEAD	WOOD POLE	2	PLACE BEHIND GUARDRAIL OR Temp RAILING
C	R4-11		30" x 30"	BICYCLE SYMBOL "MAY USE FULL LANE"	1 - 4" x 6"	2	
D	G20-2		36" x 18"	END ROAD WORK	1 - 4" x 4"	2	
E	W3-3 W16-2A		36" x 36" 24" x 12"	SIGNAL AHEAD SYMBOL 500 FT	WOOD POLE	2	PLACE BEHIND GUARDRAIL OR Temp RAILING
F	W20-4		36" x 36"	ONE LANE ROAD AHEAD	WOOD POLE	2	PLACE BEHIND GUARDRAIL OR Temp RAILING
G	R10-6		24" x 36"	STOP HERE ON RED	1 - 4" x 6"	2	
H	W1-4		36" x 36"	REVERSE CURVE SYMBOL	1 - 4" x 6"	1	

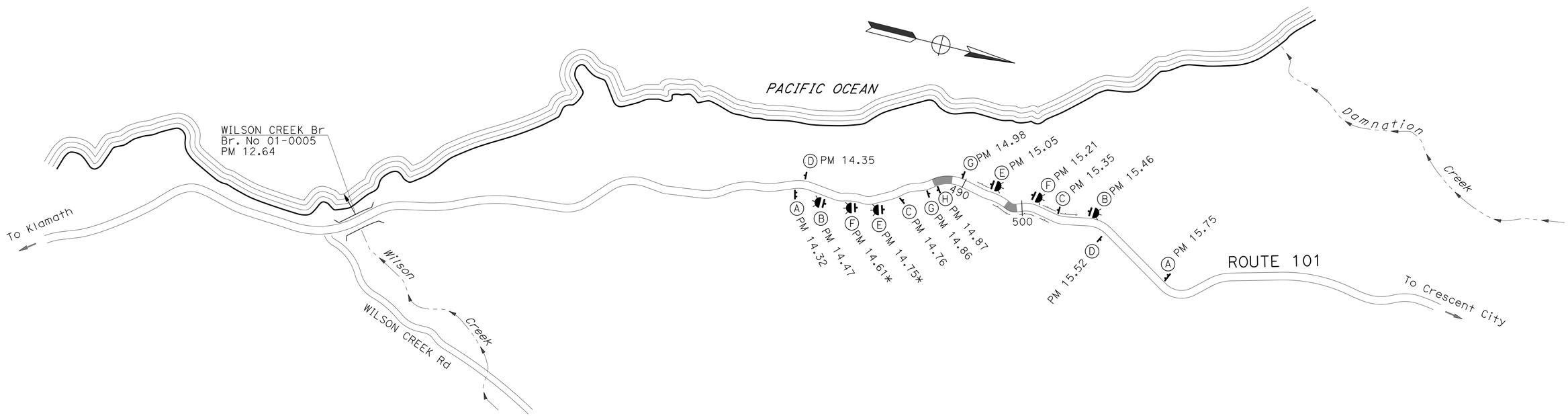

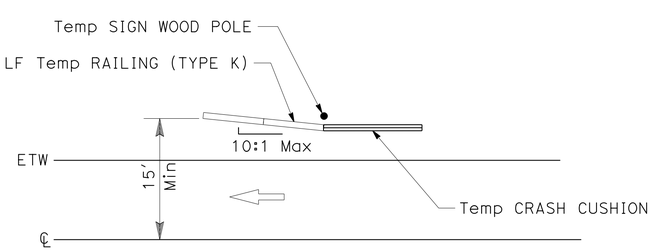

PLAN

WOOD POLE SHIELDING DETAIL

APPROVED FOR CONSTRUCTION AREA SIGN WORK ONLY

NO SCALE

CONSTRUCTION AREA SIGNS
CS-1

REVISED BY	DATE REVISED
TODD LARK	T. PHILLIPS

CALCULATED-DESIGNED BY / CHECKED BY

FUNCTIONAL SUPERVISOR: L.R. ASHLEY

STATE OF CALIFORNIA - DEPARTMENT OF TRANSPORTATION

Caltrans® DESIGN

P:\PROJ\01\0B27U\draffting\01-0B27u4\010b2701a001.dgn

LAST REVISION 11-05-15 | DATE PLOTTED => 01-FEB-2016 | TIME PLOTTED => 09:05

Dist	COUNTY	ROUTE	POST MILES TOTAL PROJECT	SHEET No.	TOTAL SHEETS
01	DN	101	14.9/15.3	14	91

REGISTERED CIVIL ENGINEER 11/05/15 DATE

November 30, 2015
PLANS APPROVAL DATE

REGISTERED PROFESSIONAL ENGINEER T. LARK No. 52481 Exp. 12/31/16 CIVIL STATE OF CALIFORNIA

THE STATE OF CALIFORNIA OR ITS OFFICERS OR AGENTS SHALL NOT BE RESPONSIBLE FOR THE ACCURACY OR COMPLETENESS OF SCANNED COPIES OF THIS PLAN SHEET.

NOTES:

1. FOR TEMPORARY PORTABLE SIGNAL SYSTEM (SEE SHEETS E-1/E-5)
2. MAINTAIN 2' SHOULDER SOUTHBOUND "A4" 495+00 TO "A4" 499+00

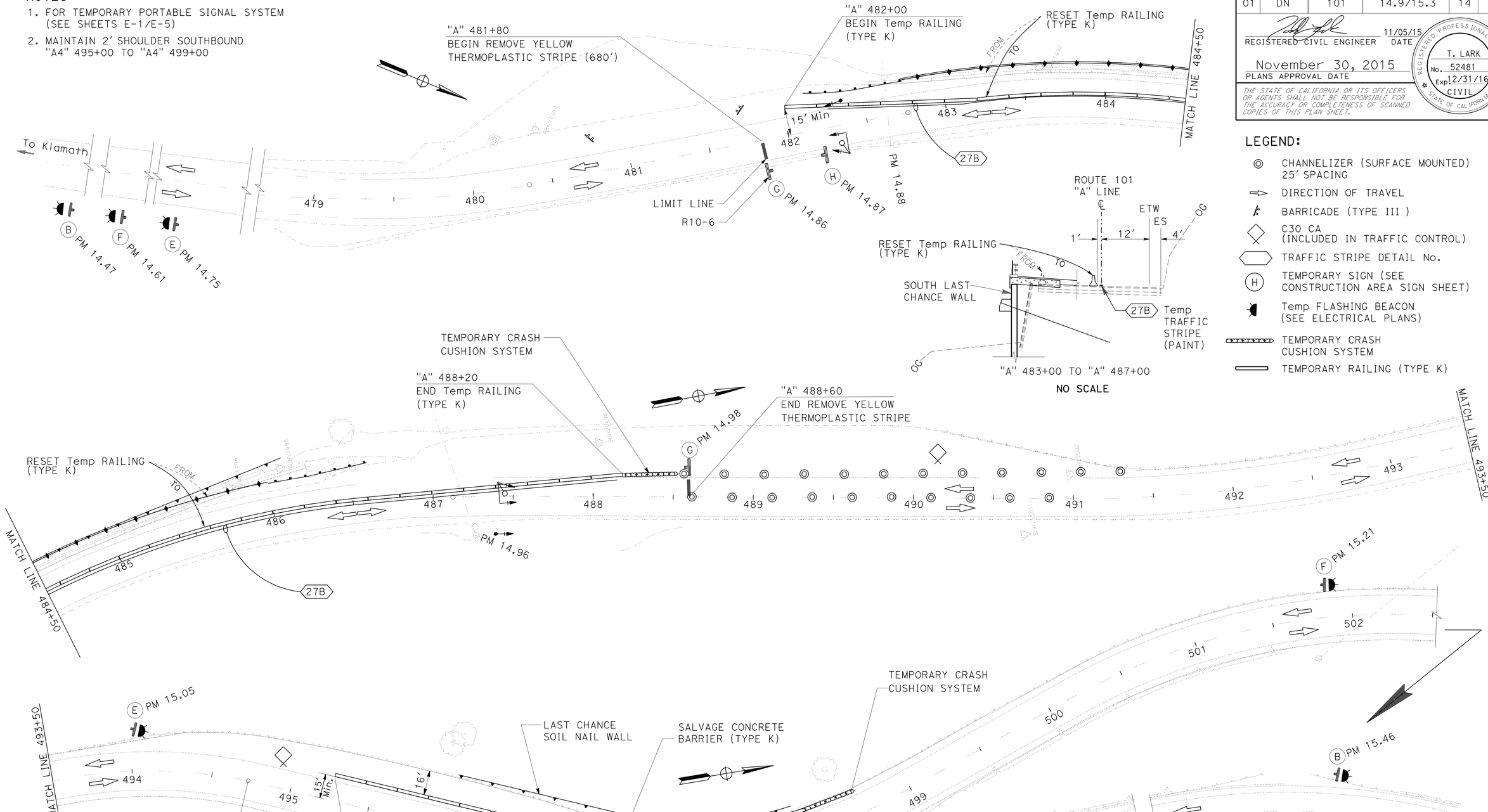

PLAN
SCALE:1"=30

LEGEND:

- CHANNELIZER (SURFACE MOUNTED) 25' SPACING
- DIRECTION OF TRAVEL
- BARRICADE (TYPE III)
- C30 CA (INCLUDED IN TRAFFIC CONTROL)
- TRAFFIC STRIPE DETAIL No.
- TEMPORARY SIGN (SEE CONSTRUCTION AREA SIGN SHEET)
- Temp FLASHING BEACON (SEE ELECTRICAL PLANS)
- TEMPORARY CRASH CUSHION SYSTEM
- TEMPORARY RAILING (TYPE K)

TRAFFIC HANDLING PLAN

APPROVED FOR TRAFFIC HANDLING WORK ONLY

SCALE: AS NOTED

TH-1

REVISED BY	DATE REVISED

CALCULATED-DESIGNED BY: TODD LARK
CHECKED BY: T. PHILLIPS
FUNCTIONAL SUPERVISOR: L.R. ASHLEY

STATE OF CALIFORNIA - DEPARTMENT OF TRANSPORTATION
Caltrans
DESIGN

P:\PROJ\01\0B270\draft\ing\01-0B27u4\010b270md001.dgn

LAST REVISION 11-05-15 | DATE PLOTTED => 01-FEB-2016 | TIME PLOTTED => 09:05

Dist	COUNTY	ROUTE	POST MILES TOTAL PROJECT	SHEET No.	TOTAL SHEETS
01	DN	101	14.9/15.3	15	97

REGISTERED CIVIL ENGINEER 11/05/15 DATE

November 30, 2015
PLANS APPROVAL DATE

REGISTERED PROFESSIONAL ENGINEER SHERI M. RODRIGUEZ No. C66861 Exp. 9-30-16 CIVIL STATE OF CALIFORNIA

THE STATE OF CALIFORNIA OR ITS OFFICERS OR AGENTS SHALL NOT BE RESPONSIBLE FOR THE ACCURACY OR COMPLETENESS OF SCANNED COPIES OF THIS PLAN SHEET.

NOTES:

1. CALIFORNIA CODES ARE DESIGNATED BY (CA). OTHERWISE, FEDERAL (MUTCD) CODES ARE SHOWN.
2. ALL SIGNS SHALL HAVE A BLACK LEGEND ON FLUORESCENT ORANGE BACKGROUND AND SHALL BE EQUIPPED WITH AT LEAST TWO 16" x 16" ORANGE FLAGS FOR DAYTIME CLOSURE OR FLASHING BEACONS FOR LANE CLOSURE DURING HOURS OF DARKNESS.
3. ALL CONES USED FOR LANE CLOSURES DURING THE HOURS OF DARKNESS SHALL BE FITTED WITH RETROREFLECTIVE BANDS OR SLEEVES.
4. WHEN A PILOT CAR IS USED, PLACE A C37 (CA) SIGN AT ALL INTERSECTIONS WITHIN TRAFFIC CONTROL AREA. WHERE VEHICULAR TRAFFIC CAN NOT EFFECTIVELY SELF-REGULATE, AT LEAST ONE FLAGGER SHALL BE USED AT EACH INTERSECTION WITHIN THE TRAFFIC CONTROL AREA.
5. FLAGGER SHOULD STAND IN A CONSPICUOUS PLACE, FACING TRAFFIC AT ALL TIMES, BE VISIBLE TO APPROACHING TRAFFIC AS WELL AS APPROACHING VEHICLES AFTER THE FIRST VEHICLE HAS STOPPED.
6. ADDITIONAL ADVANCE FLAGGERS ARE REQUIRED.
7. WHEN FLAGGER IS NOT VISIBLE FROM THIS LOCATION PLACE A C29 (CA) SIGN BELOW THE C9A (CA) SIGN.

LEGEND

- TRAFFIC CONE
- TEMPORARY SIGN
- DIRECTION OF TRAVEL
- PORTABLE FLASHING BEACON
- FLAGGER

SIGN PANEL SIZE (MINIMUM)

A	48" x 48" - SPEED OF 45 mph OR MORE 36" x 36" - SPEED LESS THAN 45 mph
B	30" x 30"
C	UNUSED
D	UNUSED
E	20" x 7"

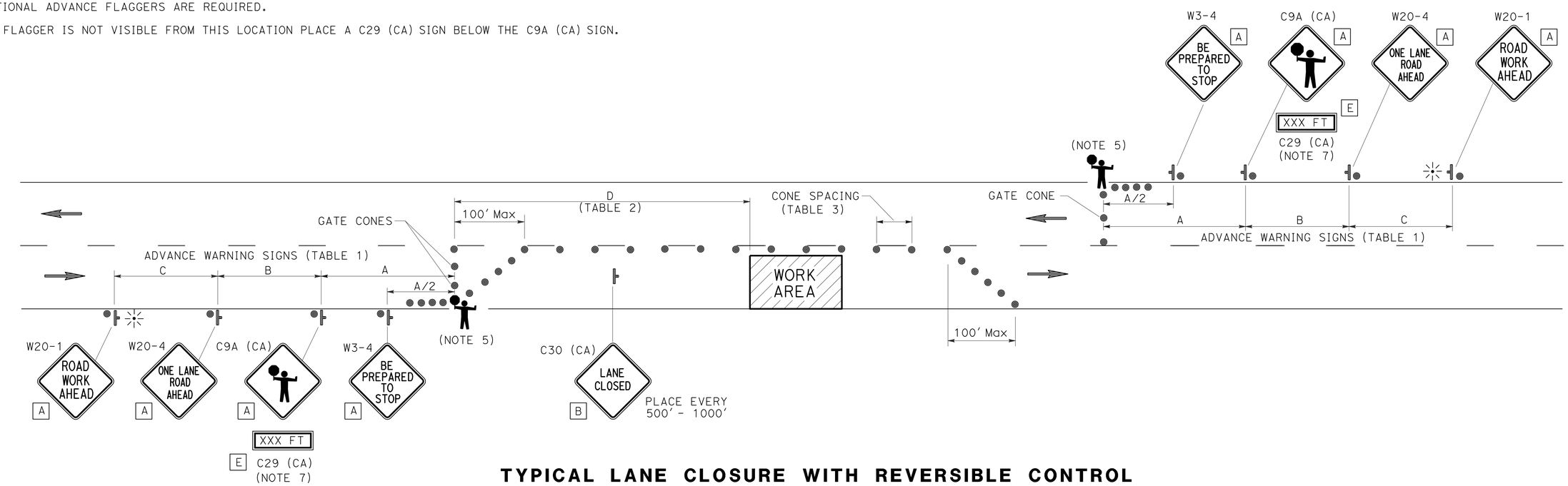

TYPICAL LANE CLOSURE WITH REVERSIBLE CONTROL

TABLE 1

ADVANCE WARNING SIGN SPACING

ROAD TYPE	Min A	Min B	Min C
	ft		
URBAN (25 mph OR LESS)	100	100	100
URBAN (30 mph TO 40 mph)	250	250	250
URBAN (MORE THAN 40 mph)	350	350	350
RURAL	500	500	500
EXPRESSWAY / FREEWAY	1000	1500	2640

TABLE 2

BUFFER SPACE

APPROACH SPEED	Min D	DOWNGRADE Min D		
		-3%*	-6%*	-9%*
mph	ft			
25 & BELOW	155	158	165	173
30	200	205	215	227
35	250	257	271	287
40	305	315	333	354
45	360	378	400	427
50	425	446	474	507
55	495	520	553	593
60	570	598	638	686
65	645	682	728	785

* USE ON SUSTAINED DOWNGRADE STEEPER THAN -3 PERCENT AND LONGER THAN 1 MILE.

TABLE 3

Max CONE SPACING

POSTED SPEED	TAPER	TANGENT	CONFLICT*
mph	ft		
20	20	40	10
25	25	50	12
30	30	60	15
35	35	70	17
40	40	80	20
45	45	90	22
50	50	100	25
55	55	110	27
60	60	120	30
65	65	130	32

* USE WHERE THERE IS A CONFLICT BETWEEN EXISTING PAVEMENT MARKINGS AND CHANNELIZERS.

APPROVED FOR TRAFFIC HANDLING WORK ONLY

NO SCALE

TRAFFIC HANDLING PLAN
TH-2

REVISED BY | DATE REVISED
SHERI M. RODRIGUEZ | TROY A. ARSENEAU
CALCULATED-DESIGNED BY | CHECKED BY
FUNCTIONAL SUPERVISOR: RICHARD MULLEN
STATE OF CALIFORNIA - DEPARTMENT OF TRANSPORTATION
Caltrans® TRAFFIC OPS

LAST REVISION 11-05-15 | DATE PLOTTED => 01-FEB-2016 | TIME PLOTTED => 09:05

P:\PROJ\01\0B27U\draft ing\01-0B27U4\010b270md002.dgn

Dist	COUNTY	ROUTE	POST MILES TOTAL PROJECT	SHEET No.	TOTAL SHEETS
01	DN	101	14.9/15.3	16	91

REGISTERED CIVIL ENGINEER 11/05/15 DATE

November 30, 2015
PLANS APPROVAL DATE

REGISTERED PROFESSIONAL ENGINEER T. LARK No. 52481 Exp. 12/31/16 CIVIL STATE OF CALIFORNIA

THE STATE OF CALIFORNIA OR ITS OFFICERS OR AGENTS SHALL NOT BE RESPONSIBLE FOR THE ACCURACY OR COMPLETENESS OF SCANNED COPIES OF THIS PLAN SHEET.

TEMPORARY RAILING

LOCATION FROM	LOCATION TO	RESET TEMPORARY RAILING (TYPE K)	SALVAGE CONCRETE BARRIER (TYPE K)	TEMPORARY RAILING (TYPE K)	TEMPORARY CRASH CUSHION SYSTEM	CHANNELIZER (SURFACE MOUNTED)	SALVAGE CRASH CUSHION MODULES	REMARKS
FROM	TO	LF	LF	LF	EA	EA	EA	
"A" 482+00	"A" 488+20	380	380	240	1		14	
"A" 488+60	"A" 491+10					10		25' C-C ℄
"A" 488+60	"A" 491+35					11		25' C-C Lt
"A4" 495+25	"A4" 498+30			300	1			
"A4" 497+00	"A4" 497+40		40					
"A4" 503+00	"A4" 505+00	200						
FROM SHEET CS-1				80	2			WOOD POLE PROTECTION
TOTAL		580	420	620	4	21	14	

TEMPORARY EROSION CONTROL

LOCATION FROM	LOCATION TO	TEMPORARY SILT FENCE	TEMPORARY FIBER ROLL	TEMPORARY DRAINAGE INLET PROTECTION	TEMPORARY MULCH
FROM	TO	LF	LF	EA	SQYD
"A" 482+50	"A" 488+00	580		2	
"A4" 495+80	"A4" 498+50	270	400	1	670
TOTAL		850	400	3	670

GUARDRAIL

LOCATION FROM	LOCATION TO	TRANSITION RAILING (TYPE WB-31)	MIDWEST GUARDRAIL SYSTEM	RECONSTRUCT GUARDRAIL	GUARD RAILING DELINEATOR	ALTERNATIVE FLARED TERMINAL SYSTEM	REMARKS
FROM	TO	EA	LF	LF	EA	EA	
"A" 482+75		1			2	1	LAYOUT 12B
"A" 485+60	"A" 486+85	1	62.5		3	1	LAYOUT 12B (STEEL POSTS)
"A4" 495+10	"A4" 499+00			390	8		
TOTAL		2	62.5	390	13	2	

ROADWAY

LOCATION FROM	LOCATION TO	COLD PLANE AC PAVEMENT	REMOVE ASPHALT CONCRETE DIKE	ROADWAY EXCAVATION	DESTROY WELL	(N) EMBANKMENT	HMA (TYPE A)	* OGFC	GEOSYNTHETIC PAVEMENT INTERLAYER (PAVING FABRIC)	ASPHALT BINDER, (GEOSYNTHETIC PAVEMENT INTERLAYER)	TACK COAT	SHOULDER BACKING	PLACE HOT MIX ASPHALT DIKE (TYPE F)	CENTERLINE RUMBLE STRIP	REMARKS
FROM	TO	SQYD	LF	CY	EA	CY	TON	TON	SQYD	TON	TON	TON	LF	STA	
"A" 482+00	"A" 488+50	226		280		250	1420	170	130	0.13	2.20	30		6.5	
"A" 485+38 Lt					1										PVC 2.5" Dia. @ 97.5' DEPTH
"A" 486+04 Lt					1										PVC 2.5" Dia. @ 108' DEPTH
"A" 483+40 Lt					1										PVC 2.5" Dia. @ 97.5' DEPTH
"A4" 496+00	"A4" 498+50	1080	390	1500		40		80			0.30		390	2.5	
"A4" 496+31 Lt					1										PVC 2.5" Dia. @ 47' DEPTH
"A4" 503+00	"A4" 505+00						100				0.45			2	
TOTAL		1106	390	1780	4	250	1520	250	130	0.13	2.95	30	390	11	

(N) - NOT A SEPARATE PAY ITEM, FOR INFORMATION ONLY

* OGFC = HOT MIX ASPHALT-OPEN GRADED (OPEN GRADED FRICTION COURSE)

PAVEMENT DELINEATION

LOCATION FROM	LOCATION TO	DETAIL No.	DETAIL LENGTH (N)	REMOVE THERMOPLASTIC TRAFFIC STRIPE	REMOVE PAVEMENT MARKER	TEMPORARY TRAFFIC STRIPE (PAINT)	TEMPORARY PAVEMENT MARKING (PAINT)	REMOVE PAINTED PAVEMENT MARKING	4" THERMOPLASTIC TRAFFIC STRIPE		8" THERMOPLASTIC TRAFFIC STRIPE	PAVEMENT MARKER (RETROREFLECTIVE-RECESSED)
									YELLOW	WHITE	WHITE	(TYPE D)
FROM	TO			LF	EA	LF	SQFT	SQFT	LF	LF	LF	EA
"A" 481+80	"A" 488+60	22	680	1360	58				1360			58
"A" 481+80 Rt							12	12				
"A" 482+00 Lt	"A" 486+80 Lt	27B	480							480		
"A" 482+00 Rt	"A" 488+50 Rt	27B	650							650		
"A" 482+10	"A" 488+10	27B	600			600						
"A" 487+35 Lt	"A" 490+35 Lt	38A	300								300	
"A" 488+60 Lt							12	12				
"A4" 495+50	"A4" 499+00	27B	350							700		
"A4" 495+50	"A4" 499+00	22	350		30				700			30
"A4" 503+00	"A4" 505+00	22, 27B	200		16				400	400		16
			SUB TOTAL	1360	104	600	24	24	2460	2230	300	104
			TOTAL	1360	104	600	24	24	4690		300	104

SUMMARY OF QUANTITIES
Q-1

REVISED BY	DATE REVISED	TODD LARK	T. PHILLIPS	CALCULATED-DESIGNED BY	CHECKED BY	FUNCTIONAL SUPERVISOR	L.R. ASHLEY

STATE OF CALIFORNIA - DEPARTMENT OF TRANSPORTATION
Caltrans DESIGN

P:\PROJ\01\0B27U\drafting\01-0B27u4\010b270pa001.dgn

LAST REVISION 11-05-15 | DATE PLOTTED => 01-FEB-2016 | TIME PLOTTED => 09:05

Dist	COUNTY	ROUTE	POST MILES TOTAL PROJECT	SHEET No.	TOTAL SHEETS
01	DN	101	14.9/15.3	17	91

Laura Lazzarotto
LICENSED LANDSCAPE ARCHITECT

November 30, 2015
PLANS APPROVAL DATE

LICENSED LANDSCAPE ARCHITECT
Laura Lazzarotto
Signature
8-31-17
Renewal Date
11/05/15
Date
STATE OF CALIFORNIA

THE STATE OF CALIFORNIA OR ITS OFFICERS OR AGENTS SHALL NOT BE RESPONSIBLE FOR THE ACCURACY OR COMPLETENESS OF SCANNED COPIES OF THIS PLAN SHEET.

NOTES:
1. FOR ACCURATE RIGHT OF WAY DATA, CONTACT RIGHT OF WAY ENGINEERING AT THE DISTRICT OFFICE.

LEGEND:
- EROSION CONTROL TYPE 1
- EROSION CONTROL TYPE 2

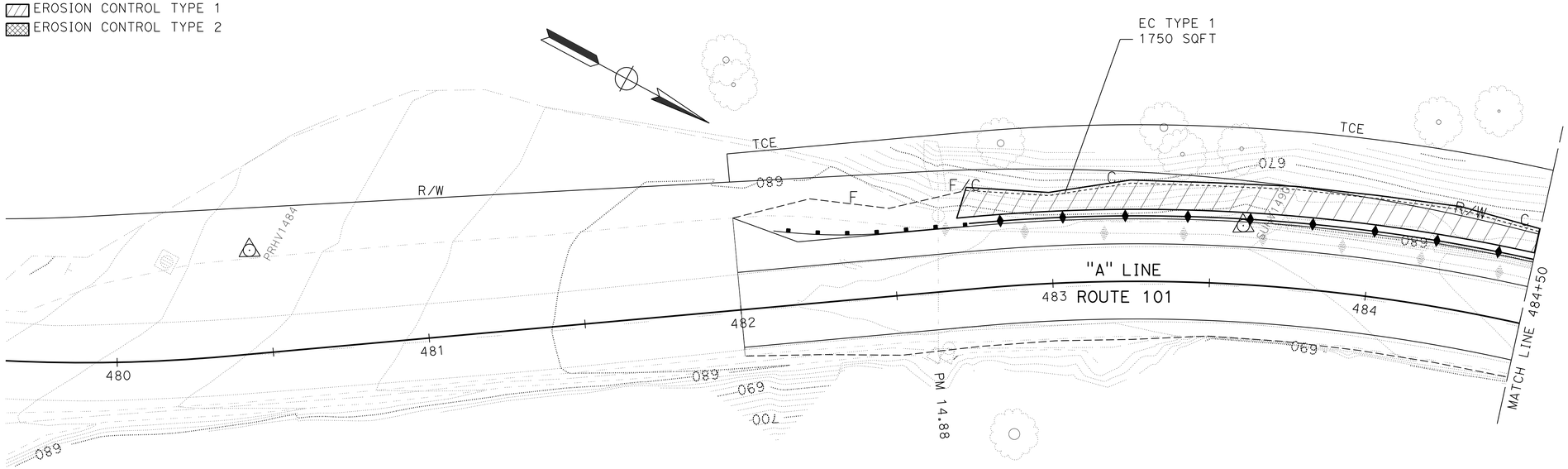

PLAN
SCALE: 1" = 20'

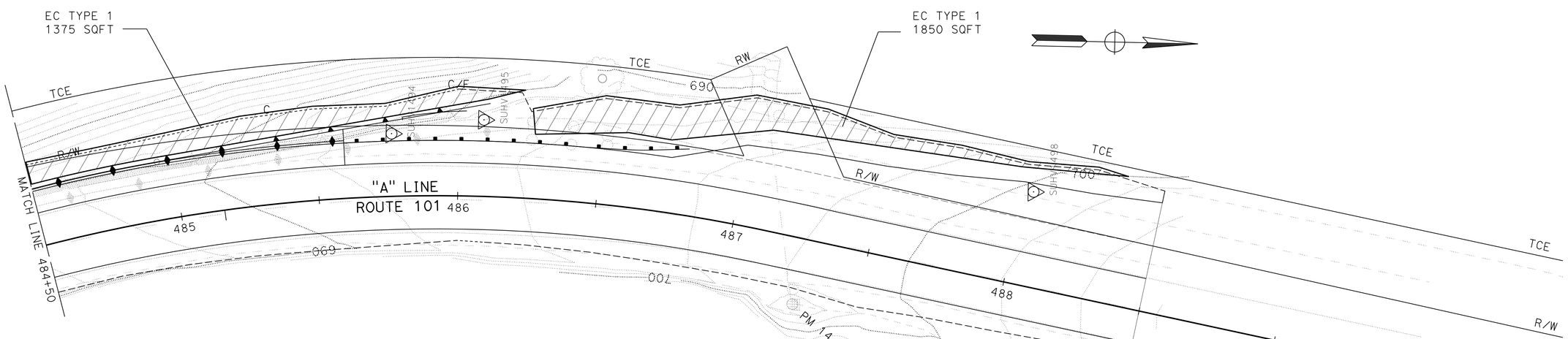

PLAN
SCALE: 1" = 20'

APPROVED FOR EROSION CONTROL WORK ONLY

EROSION CONTROL PLAN
EC-1

SCALE: AS SHOWN

STATE OF CALIFORNIA - DEPARTMENT OF TRANSPORTATION
Caltrans
LANDSCAPE

SENIOR LANDSCAPE ARCHITECT: TIM BOESE
CALCULATED-DESIGNED BY: LAURA LAZZAROTTO
CHECKED BY: TODD LARK
REVISED BY
DATE REVISED

LAST REVISION 11-05-15
DATE PLOTTED => 01-FEB-2016
TIME PLOTTED => 09:05

Dist	COUNTY	ROUTE	POST MILES TOTAL PROJECT	SHEET No.	TOTAL SHEETS
01	DN	101	14.9/15.3	18	91

LICENSED LANDSCAPE ARCHITECT

November 30, 2015
PLANS APPROVAL DATE

LICENSED LANDSCAPE ARCHITECT
Laura Lazzarotto
Signature
8-31-17
Renewal Date
11/05/15
Date
STATE OF CALIFORNIA

THE STATE OF CALIFORNIA OR ITS OFFICERS OR AGENTS SHALL NOT BE RESPONSIBLE FOR THE ACCURACY OR COMPLETENESS OF SCANNED COPIES OF THIS PLAN SHEET.

NOTES:

1. FOR ACCURATE RIGHT OF WAY DATA, CONTACT RIGHT OF WAY ENGINEERING AT THE DISTRICT OFFICE.

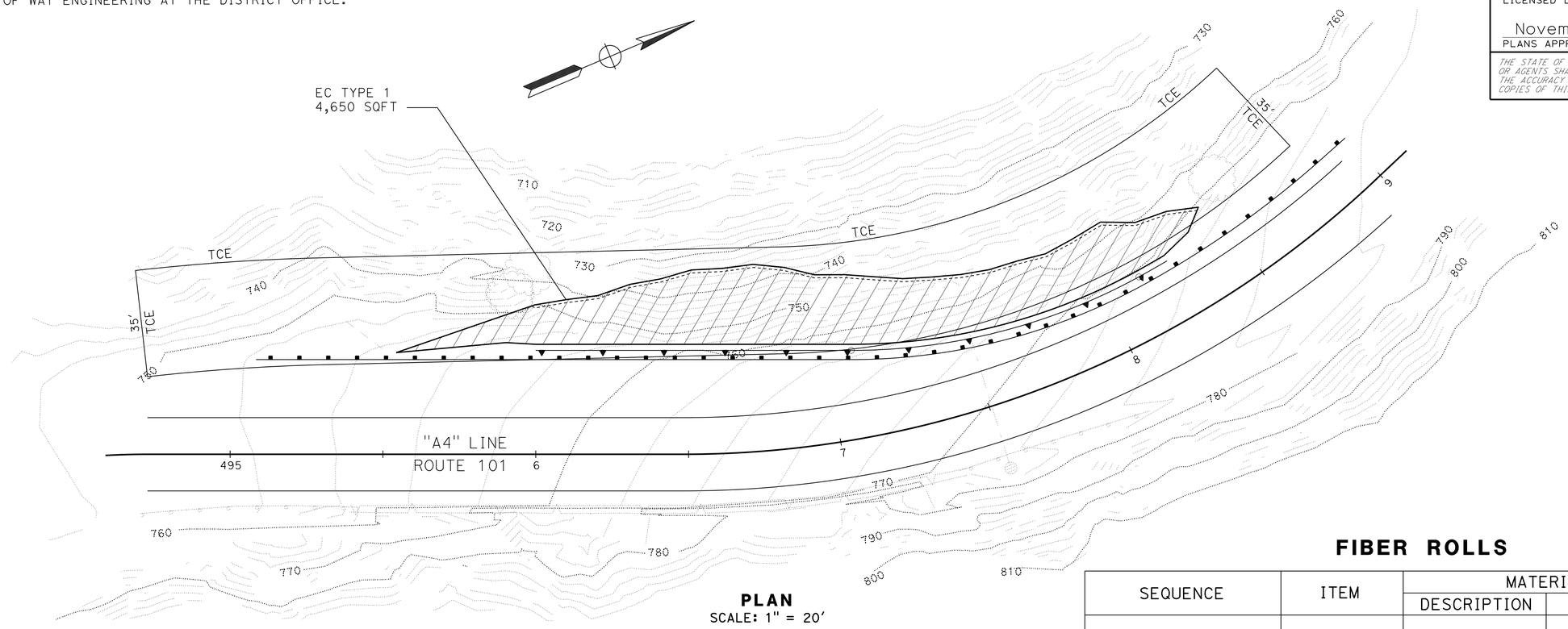

PLAN
SCALE: 1" = 20'

FIBER ROLLS

SEQUENCE	ITEM	MATERIAL		REMARKS
		DESCRIPTION	TYPE	
FIBER ROLLS MUST BE INSTALLED BEFORE EROSION CONTROL	FIBER ROLLS	FIBER ROLL	TYPE B 8" TO 10" Dia	TYPE 1 FIBER ROLL INSTALLATION

EROSION CONTROL TYPE 1

SEQUENCE	ITEM	MATERIAL		APPLICATION RATE
		DESCRIPTION	TYPE	
STEP 1	HYDROSEED	SEED	MIX 1	142 LB/ACRE
		FIBER	WOOD	1200 LB/ACRE
STEP 2	STRAW	STRAW	WHEAT AND/OR BARLEY	2 TON/ACRE
STEP 3	HYDROMULCH	FIBER	WOOD	1200 LB/ACRE
		TACKIFIER	PSYLLIUM	145 LB/ACRE

SEED MIX 1

SEED	BOTANICAL NAME (COMMON NAME)	PERCENT GERMINATION (MINIMUM)	POUNDS PURE LIVE SEED PER ACRE (SLOPE MEASUREMENT)
MIX 1	BROMUS CARINATUS var. MARITIMUS[1] (CALIFORNIA COASTAL BROME)	45	30
	ELYMUS GLAUCUS, BERKELEY[1] (BLUE WILDRYE, BERKELEY)	50	30
	ERIOGONUM LATIFOLIUM[1] (COAST BUCKWHEAT)	40	6
	ELYMUS AESTIVUM x ELYTRIGIA ELONGATA (REGREEN)	65	70
	VULPIA MICROSTACHYS[1] (SIX WEEKS FESCUE)	65	6

[1]SEED PRODUCED IN CALIFORNIA ONLY.

EROSION CONTROL QUANTITIES

LOCATION	DESCRIPTION	HYDROSEED	STRAW	HYDROMULCH	FIBER ROLLS
		SQFT	SQFT	SQFT	LF
"A" 482+75.00 Lt To "A" 488+50.00 Lt	EC TYPE 1	3,225	3,225	3,225	240
"A" 495+80.00 Lt To "A" 498+50.00 Lt	EC TYPE 1	4,650	4,650	4,650	220
	TOTAL	7,875	7,875	7,875	460

APPROVED FOR EROSION CONTROL WORK ONLY

EROSION CONTROL PLAN
EROSION CONTROL QUANTITIES
EC-2

SCALE: AS SHOWN

STATE OF CALIFORNIA - DEPARTMENT OF TRANSPORTATION
Caltrans® LANDSCAPE

SENIOR LANDSCAPE ARCHITECT: TIM BOESE
CALCULATED-DESIGNED BY: LAURA LAZZAROTTO
CHECKED BY: TODD LARK
REVISED BY
DATE REVISED

LAST REVISION 11-05-15
DATE PLOTTED => 01-FEB-2016
TIME PLOTTED => 09:05

Dist	COUNTY	ROUTE	POST MILES TOTAL PROJECT	SHEET No.	TOTAL SHEETS
01	DN	101	14.9/15.3	19	91

Brian T. Finck 11/05/15
REGISTERED ELECTRICAL ENGINEER DATE

November 30, 2015
PLANS APPROVAL DATE

REGISTERED PROFESSIONAL ENGINEER
BRIAN T. FINCK
No. 17756
Exp. 6-30-16
ELECTRICAL
STATE OF CALIFORNIA

THE STATE OF CALIFORNIA OR ITS OFFICERS OR AGENTS SHALL NOT BE RESPONSIBLE FOR THE ACCURACY OR COMPLETENESS OF SCANNED COPIES OF THIS PLAN SHEET.

LEGEND

- ATS — AUTOMATIC TRANSFER SWITCH
- C — CONTACTOR
- GEN — GENERATOR
- (SC) — SIGNAL COMMON
- UPS — UNINTERRUPTIBLE POWER SUPPLY
- ▽ — AUTO-TEST SWITCH

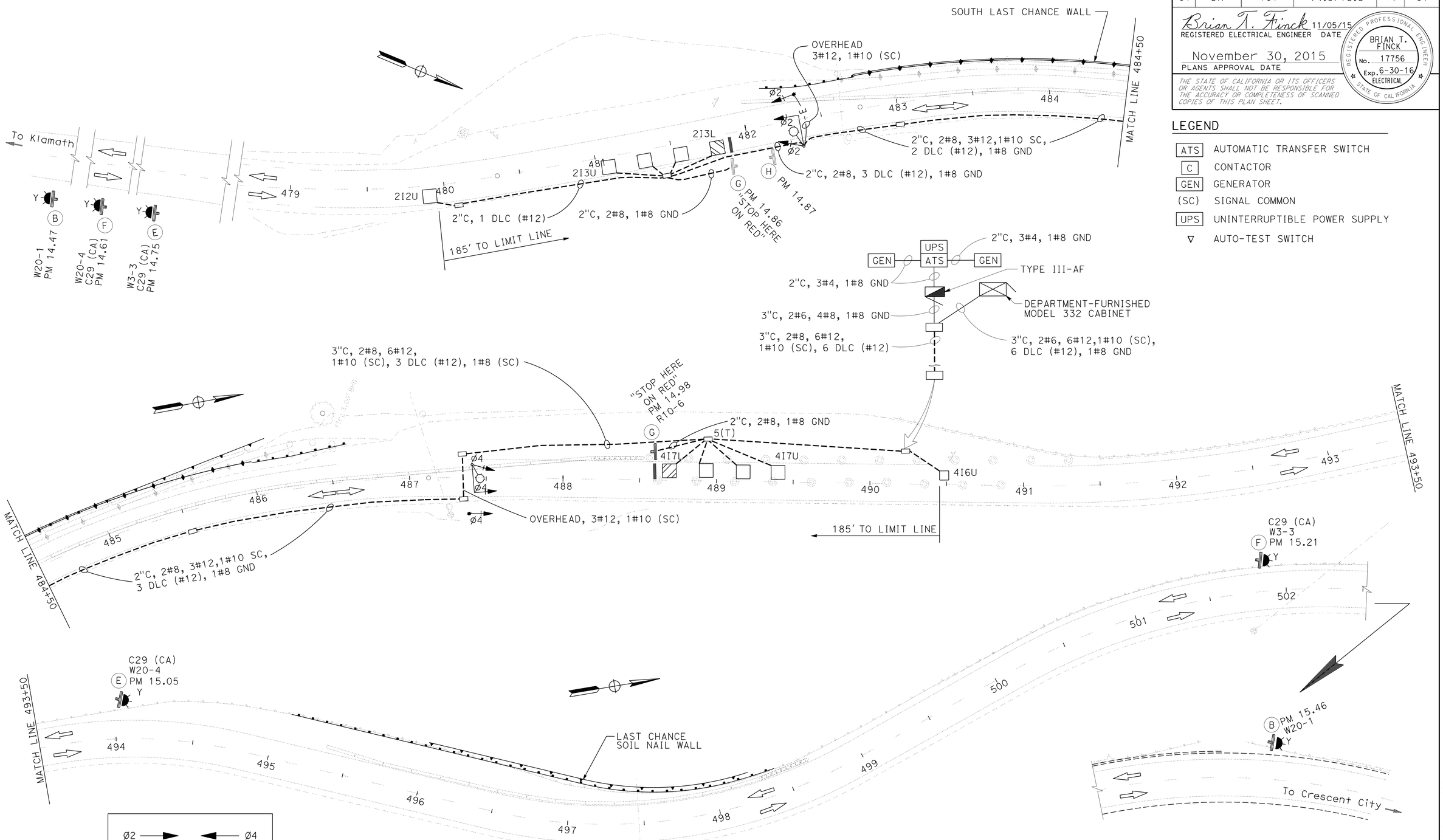

TEMPORARY SIGNAL SYSTEM

SCALE: 1"=30'

E-1

APPROVED FOR ELECTRICAL WORK ONLY

REVISED BY	
DATE REVISED	
CALCULATED-DESIGNED BY	BRIAN FINCK
CHECKED BY	TODD LARK
FUNCTIONAL SUPERVISOR	TROY ARSENEAU

STATE OF CALIFORNIA - DEPARTMENT OF TRANSPORTATION
Caltrans
ELECTRICAL

P:\PROJ\01\0B27U\drafting\01-0B27U4\010b270ua001.dgn

LAST REVISION 11-05-15 | DATE PLOTTED => 01-FEB-2016 | TIME PLOTTED => 09:06

Dist	COUNTY	ROUTE	POST MILES TOTAL PROJECT	SHEET No.	TOTAL SHEETS
01	DN	101	14.9/15.3	20	91

Brian T. Finck 11/05/15
REGISTERED ELECTRICAL ENGINEER DATE

November 30, 2015
PLANS APPROVAL DATE

REGISTERED PROFESSIONAL ENGINEER BRIAN T. FINCK No. 17756 Exp. 6-30-16 ELECTRICAL STATE OF CALIFORNIA

THE STATE OF CALIFORNIA OR ITS OFFICERS OR AGENTS SHALL NOT BE RESPONSIBLE FOR THE ACCURACY OR COMPLETENESS OF SCANNED COPIES OF THIS PLAN SHEET.

NOTE: (THIS SHEET)

1 WOOD POLES SHALL BE LOCATED OUTSIDE THE CLEAR RECOVERY ZONE OR PROTECTED IN PLACE.

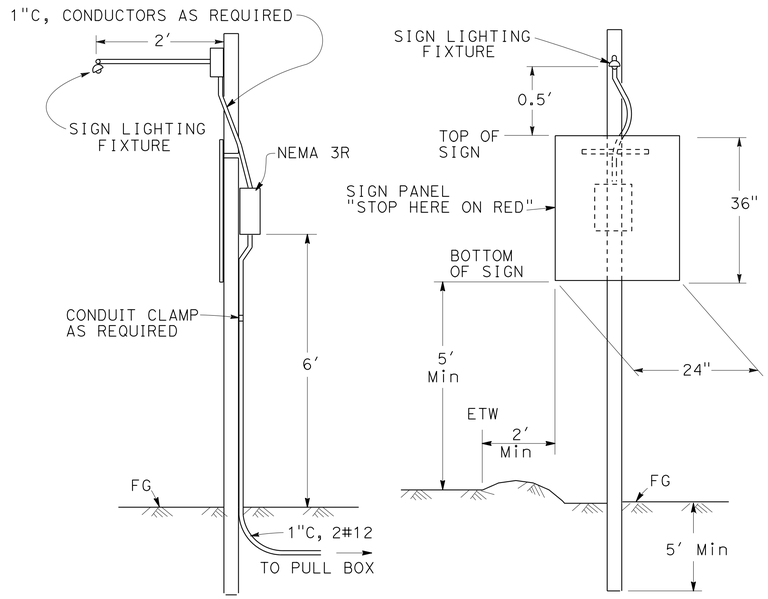

SIDE VIEW FRONT VIEW

TYPICAL SIGN ILLUMINATION

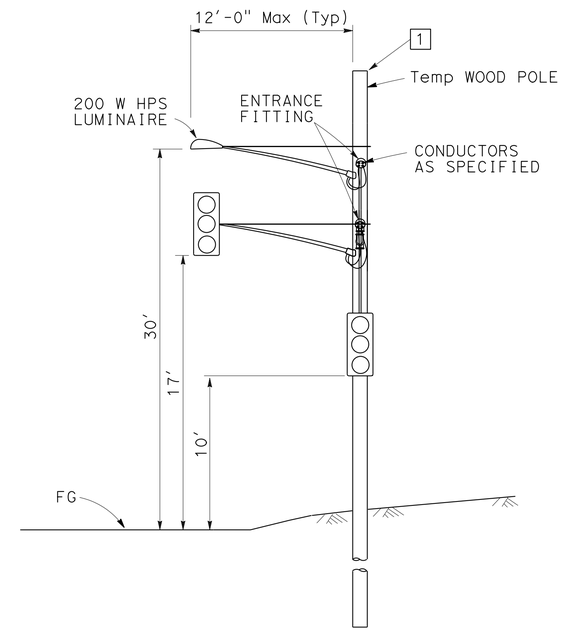

TEMPORARY TRAFFIC SIGNAL

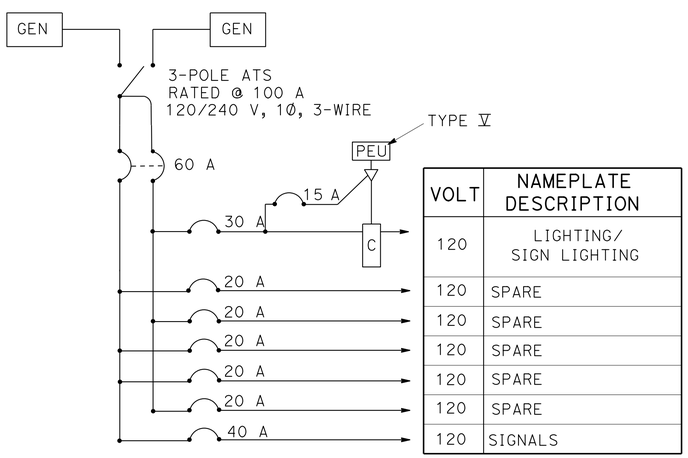

VOLT	NAMEPLATE DESCRIPTION
120	LIGHTING/ SIGN LIGHTING
120	SPARE
120	SPARE
120	SPARE
120	SPARE
120	SPARE
120	SIGNALS

SERVICE WIRING DIAGRAM

TYPE III-AF SERVICE EQUIPMENT ENCLOSURE

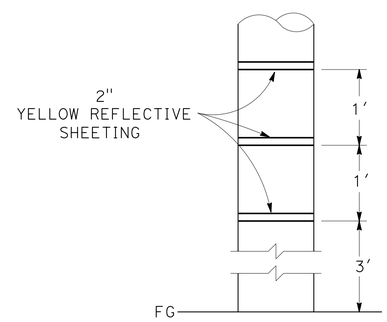

REFLECTIVE MARKING FOR WOOD POLE

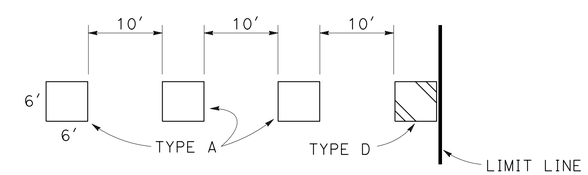

TYPICAL LOOP DETAIL

ELECTRICAL DETAILS
E-3

NO SCALE

STATE OF CALIFORNIA - DEPARTMENT OF TRANSPORTATION
Caltrans
ELECTRICAL

FUNCTIONAL SUPERVISOR: TROY ARSENEAU
CALCULATED-DESIGNED BY: BRIAN FINCK
CHECKED BY: TODD LARK
REVISED BY
DATE REVISED

P:\PROJ\01\0B27U\draft ing\01-0B27u4\010b270ug002.dgn

LAST REVISION 11-05-15
DATE PLOTTED => 01-FEB-2016
TIME PLOTTED => 09:06

Dist	COUNTY	ROUTE	POST MILES TOTAL PROJECT	SHEET No.	TOTAL SHEETS
01	DN	101	14.9/15.3	21	91

Brian T. Finck 11/05/15
REGISTERED ELECTRICAL ENGINEER DATE

November 30, 2015
PLANS APPROVAL DATE

REGISTERED PROFESSIONAL ENGINEER BRIAN T. FINCK No. 17756 Exp. 6-30-16 ELECTRICAL STATE OF CALIFORNIA

THE STATE OF CALIFORNIA OR ITS OFFICERS OR AGENTS SHALL NOT BE RESPONSIBLE FOR THE ACCURACY OR COMPLETENESS OF SCANNED COPIES OF THIS PLAN SHEET.

LEGEND:

A-h = AMPERE HOUR

NOTES: (THIS SHEET ONLY)

1. A HOOD SHALL BE INSTALLED ON EACH FLASHER HEAD TO SHIELD THE LENS FROM DIRECT EXPOSURE OF SOLAR RADIATION.
2. THIS UNIT SHALL BE LOCATED IN AN UNSHADED AREA. WOOD POLE WITH PHOTOVOLTAIC PANELS SHALL BE LOCATED OUTSIDE THE CLEAR RECOVERY ZONE OR PROTECTED IN PLACE.
3. SEE SHEET CS-1 FOR SIGNS (B) & (E) AND SHEET SCD-1 FOR SIGNS (G) & (H).

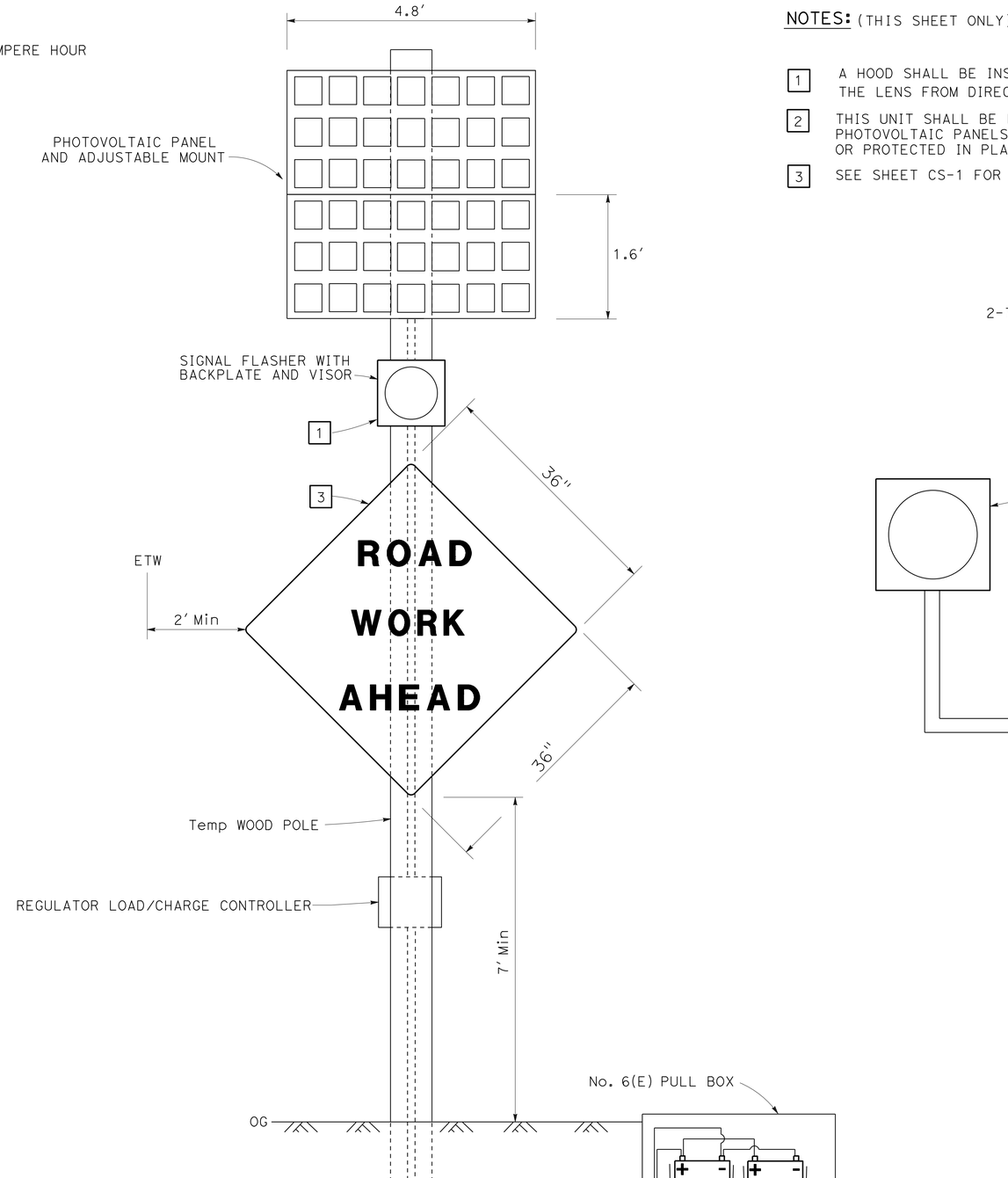

FLASHING BEACON (SOLAR POWERED)

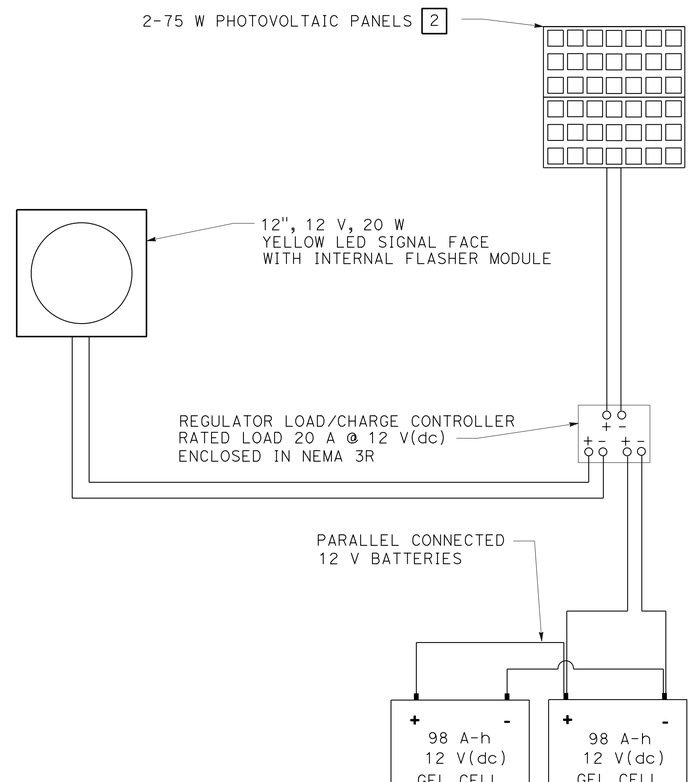

CONNECTION DIAGRAM

NO SCALE

ELECTRICAL DETAILS
E-3

FUNCTIONAL SUPERVISOR: TROY ARSENEAU
CALCULATED-DESIGNED BY: BRIAN FINCK
CHECKED BY: TODD LARK
REVISED BY
DATE REVISED

STATE OF CALIFORNIA - DEPARTMENT OF TRANSPORTATION
Caltrans®
ELECTRICAL

P:\PROJ\01\0B27U\drafting\01-0B27U4\010b270ua003.dgn

LAST REVISION 11-05-15
DATE PLOTTED => 01-FEB-2016
TIME PLOTTED => 09:06

Dist	COUNTY	ROUTE	POST MILES TOTAL PROJECT	SHEET No.	TOTAL SHEETS
01	DN	101	14.9/15.3	22	91

Brian T. Finck 11/05/15
REGISTERED ELECTRICAL ENGINEER DATE

November 30, 2015
PLANS APPROVAL DATE

REGISTERED PROFESSIONAL ENGINEER BRIAN T. FINCK No. 17756 Exp. 6-30-16 ELECTRICAL STATE OF CALIFORNIA

THE STATE OF CALIFORNIA OR ITS OFFICERS OR AGENTS SHALL NOT BE RESPONSIBLE FOR THE ACCURACY OR COMPLETENESS OF SCANNED COPIES OF THIS PLAN SHEET.

NOTES:

THE QUANTITIES ON THIS SHEET ARE NOT SEPARATE PAY ITEMS AND ARE FOR INFORMATION ONLY.

TEMPORARY SIGNAL SYSTEM

SHEET NUMBER	WOOD POLE	2" CONDUIT TYPE 3	GENERATOR	No. 5 PULL BOX	3 SECTION SIGNAL HEAD	FBCA	SIGN LIGHTING FIXTURE	200 W HPS LUMINAIRE	MESSENGER CABLE	TYPE D LOOP	TYPE A LOOP	DLC (#12)	#4 CONDUCTORS	#6 CONDUCTORS	#8 CONDUCTORS	#8 CONDUCTORS (G)	#10 CONDUCTORS	#12 CONDUCTORS	NEMA 3R SERVICE ENCLOSEURE	MODEL 332L CABINET FOUNDATION PLATFORM	UPS	FUEL TANK	No. 6 (E) PULL BOX	1 SECTION SIGNAL HEAD	REGULATION LOAD/ CHARGE CONTROLLER	98 A-h 12 V (dc) GEL CELL	75 W PHOTOVOLTAIC PANELS	TYPE III-AF SERVICE EQUIPMENT ENCLOSURE
	EA	LF	EA	EA	EA	EA	EA	EA	LF	EA	EA	LF	LF	LF	LF	LF	LF	LF	EA	EA	EA	EA	EA	EA	EA	EA	EA	EA
E-1	10	1100	2	10	6	6	2	2	100	2	8	2500	100	50	2500	1250	1250	4250	8	1	1	1	6	6	6	12	12	1

ELECTRICAL QUANTITIES
E-4

STATE OF CALIFORNIA - DEPARTMENT OF TRANSPORTATION
Caltrans
ELECTRICAL

FUNCTIONAL SUPERVISOR: TROY ARSENEAU
CALCULATED-DESIGNED BY: BRIAN FINCK
CHECKED BY: TODD LARK
REVISED BY
DATE REVISED

P:\PROJ\01\0B27U\drafting\01-0B27u4\010b270ua004.dgn

LAST REVISION 11-05-15
DATE PLOTTED => 01-FEB-2016
TIME PLOTTED => 09:06

M

Maint	MAINTENANCE
Max	MAXIMUM
MB	METAL BEAM
MBB	METAL BEAM BARRIER
MBGR	METAL BEAM GUARD RAILING
Med	MEDIAN
MGS	MIDWEST GUARDRAIL SYSTEM
MH	MANHOLE
Min	MINIMUM
Misc	MISCELLANEOUS
Misc I & S	MISCELLANEOUS IRON AND STEEL
Mkr	MARKER
Mod	MODIFIED,
	MODIFY
Mon	MONUMENT
MP	METAL PLATE
MPGR	METAL PLATE GUARD RAILING
MR	MOVEMENT RATING
MSE	MECHANICALLY STABILIZED EMBANKMENT
Mt	MOUNTAIN, MOUNT
Mtl	MATERIAL
MVP	MAINTENANCE VEHICLE PULLOUT

N

N	NORTH
NB	NORTHBOUND
No.	NUMBER (MUST HAVE PERIOD)
Nos.	NUMBERS (MUST HAVE PERIOD)
NPS	NOMINAL PIPE SIZE
NS	NEAR SIDE
NSP	NEW STANDARD PLAN
NTS	NOT TO SCALE

O

Oblr	OBLITERATE
OC	OVERCROSSING
OD	OUTSIDE DIAMETER
OF	OUTSIDE FACE
OG	ORIGINAL GROUND
OGAC	OPEN GRADED ASPHALT CONCRETE
OGFC	OPEN GRADED FRICTION COURSE
OH	OVERHEAD
OHWM	ORDINARY HIGH WATER MARK
O-O	OUT TO OUT
Opp	OPPOSITE
OSD	OVERSIDE DRAIN

P

p	PAGE
PAP	PERFORATED ALUMINUM PIPE
PB	PULL BOX
PC	POINT OF CURVATURE,
	PRECAST
PCC	POINT OF COMPOUND CURVE,
	PORTLAND CEMENT CONCRETE
PCMS	PORTABLE CHANGEABLE MESSAGE SIGN
PCP	PERFORATED CONCRETE PIPE,
	PRESTRESSED CONCRETE PIPE
PCVC	POINT OF COMPOUND VERTICAL CURVE
PEC	PERMIT TO ENTER AND CONSTRUCT
Ped	PEDESTRIAN
Ped OC	PEDESTRIAN OVERCROSSING
Ped UC	PEDESTRIAN UNDERCROSSING
Perm Mtl	PERMEABLE MATERIAL

P continued

PG	PROFILE GRADE
PI	POINT OF INTERSECTION
PJP	PARTIAL JOINT PENETRATION
Pkwy	PARKWAY
ℙ,PL	PLATE
P/L	PROPERTY LINE
PM	POST MILE,
	TIME FROM NOON TO MIDNIGHT
PN	PAVING NOTCH
POC	POINT OF HORIZONTAL CURVE
POT	POINT OF TANGENT
POVC	POINT OF VERTICAL CURVE
PP	PIPE PILE,
	PLASTIC PIPE,
	POWER POLE
PPL	PREFORMED PERMEABLE LINER
PPP	PERFORATED PLASTIC PIPE
PRC	POINT OF REVERSE CURVE
PRF	PAVEMENT REINFORCING FABRIC
PRVC	POINT OF REVERSE VERTICAL CURVE
PS&E	PLANS, SPECIFICATIONS AND ESTIMATES
PS, P/S	PRESTRESSED
PSP	PERFORATED STEEL PIPE
PT	POINT OF TANGENCY
PVC	POLYVINYL CHLORIDE
Pvmt	PAVEMENT

Q

Qty	QUANTITY

R

R	RADIUS
R & D	REMOVE AND DISPOSE
R & S	REMOVE AND SALVAGE
R/C	RATE OF CHANGE
RCA	REINFORCED CONCRETE ARCH
RCB	REINFORCED CONCRETE BOX
RCP	REINFORCED CONCRETE PIPE
RCPA	REINFORCED CONCRETE PIPE ARCH
Rd	ROAD
Reinf	REINFORCED,
	REINFORCEMENT,
	REINFORCING
Rel	RELOCATE
Repl	REPLACEMENT
Ret	RETAINING
Rev	REVISED, REVISION
Rdwy	ROADWAY
RHMA	RUBBERIZED HOT MIX ASPHALT
Riv	RIVER
RM	ROAD-MIXED
RP	RADIUS POINT,
	REFERENCE POINT
RR	RAILROAD
RSP	ROCK SLOPE PROTECTION,
	REVISED STANDARD PLAN
Rt	RIGHT
Rte	ROUTE
RW	REDWOOD,
	RETAINING WALL
R/W	RIGHT OF WAY
Rwy	RAILWAY

S

S	SOUTH,
	SUPPLEMENT
SAE	STRUCTURE APPROACH EMBANKMENT
Salv	SALVAGE
SAPP	STRUCTURAL ALUMINUM PLATE PIPE
SB	SOUTHBOUND
SC	SAND CUSHION
SCSP	SLOTTED CORRUGATED STEEL PIPE
SD	STORM DRAIN
Sec	SECOND,
	SECTION
Sep	SEPARATION
SG	SUBGRADE
Shld	SHOULDER
Sht	SHEET
Sim	SIMILAR
₤	STATION LINE
SM	SELECTED MATERIAL
Spec	SPECIAL,
	SPECIFICATIONS
SPP	SLOTTED PLASTIC PIPE
SS	SLOPE STAKE
SSBM	STRAP AND SADDLE BRACKET METHOD
SSD	STRUCTURAL SECTION DRAIN
SSPA	STRUCTURAL STEEL PLATE ARCH
SSPP	STRUCTURAL STEEL PLATE PIPE
SSPPA	STRUCTURAL STEEL PLATE PIPE ARCH
SSRP	STEEL SPIRAL RIB PIPE
St	STREET
Sta	STATION
STBB	SINGLE THRIE BEAM BARRIER
Std	STANDARD
Str	STRUCTURE
Surf	SURFACING
SW	SIDEWALK,
	SOUND WALL
Swr	SEWER
Sym	SYMMETRICAL
S4S	SURFACE 4 SIDES

T

T	SEMI-TANGENT
Tan	TANGENT
TBB	THRIE BEAM BARRIER
Tbr	TIMBER
TC	TOP OF CURB
TCB	TRAFFIC CONTROL BOX
TCE	TEMPORARY CONSTRUCTION EASEMENT
Tel	TELEPHONE
Temp	TEMPORARY
TG	TOP OF GRADE
Tot	TOTAL
TP	TELEPHONE POLE
TPB	TREATED PERMEABLE BASE
TPM	TREATED PERMEABLE MATERIAL
Trans	TRANSITION

T continued

TS	TRANSVERSE,
	TRAFFIC SIGNAL,
	TUBULAR STEEL
Typ	TYPICAL

U

UC	UNDERCROSSING
UD	UNDERDRAIN
UG	UNDERGROUND
UON	UNLESS OTHERWISE NOTED
UP	UNDERPASS

V

V	VALVE,
	DESIGN SPEED
Var	VARIABLE,
	VARIES
VC	VERTICAL CURVE
VCP	VITRIFIED CLAY PIPE
Vert	VERTICAL
Via	VIADUCT
Vol	VOLUME

W

W	WEST,
	WIDTH
WB	WESTBOUND
WH	WEEP HOLE
WM	WIRE MESH
WS	WATER SURFACE
WSP	WELDED STEEL PIPE
Wt	WEIGHT
WV	WATER VALVE
WW	WINGWALL
WWLOL	WINGWALL LAYOUT LINE

X

X Sec	CROSS SECTION
Xing	CROSSING

Y

Yr	YEAR
Yrs	YEARS

Dist	COUNTY	ROUTE	POST MILES TOTAL PROJECT	SHEET No.	TOTAL SHEETS
01	DN	101	14.9/15.3	23	91

Grace M. Tsushima
REGISTERED CIVIL ENGINEER

July 19, 2013
PLANS APPROVAL DATE

REGISTERED PROFESSIONAL ENGINEER
Grace M. Tsushima
No. C49814
Exp. 9-30-14
CIVIL
STATE OF CALIFORNIA

THE STATE OF CALIFORNIA OR ITS OFFICERS OR AGENTS SHALL NOT BE RESPONSIBLE FOR THE ACCURACY OR COMPLETENESS OF SCANNED COPIES OF THIS PLAN SHEET.

TO ACCOMPANY PLANS DATED 11/30/15

UNIT OF MEASUREMENT SYMBOLS:

Some of the symbols used in the project plan quantity tables and in the Bid Item List are:

TABLE A

SYMBOL USED	DEFINITIONS
ACRE	ACRE
CF	CUBIC FOOT
CY	CUBIC YARD
EA	EACH
GAL	GALLON
LB	POUND
LF	LINEAR FOOT
SQFT	SQUARE FOOT
SQYD	SQUARE YARD
STA	100 FEET
TAB	TABLET
TON	2,000 POUNDS

Some of the symbols used in the plans other than in the project plan quantity tables are:

TABLE B

SYMBOL USED	DEFINITIONS
ksi	KIPS PER SQUARE INCH
ksf	KIPS PER SQUARE FOOT
psi	POUNDS PER SQUARE INCH
psf	POUNDS PER SQUARE FOOT
lb/ft^3, pcf	POUNDS PER CUBIC FOOT
tsf	TONS PER SQUARE FOOT
mph, MPH *	MILES PER HOUR
ø	NOMINAL DIAMETER
oz	OUNCE
lb	POUND
kip	1,000 POUNDS
cal	CALORIE
ft	FOOT OR FEET
gal	GALLON

* For use on a sign panel only

STATE OF CALIFORNIA
DEPARTMENT OF TRANSPORTATION

ABBREVIATIONS (SHEET 2 OF 2)

NO SCALE

RSP A10B DATED JULY 19, 2013 SUPERSEDES STANDARD PLAN A10B
DATED MAY 20, 2011 - PAGE 2 OF THE STANDARD PLANS BOOK DATED 2010.

REVISED STANDARD PLAN RSP A10B

2010 REVISED STANDARD PLAN RSP A10B

DATE PLOTTED => 01-FEB-2016
TIME PLOTTED => 09:06

P:\PROJ\01\0B27U\drafting\01-0B27u4\010b270va001.dgn

USERNAME => s132662
DGN FILE => 010b270va001.dgn

6-7-13

REFERENCE: CALTRANS SOIL & ROCK LOGGING, CLASSIFICATION, AND PRESENTATION MANUAL (2010)

Dist	COUNTY	ROUTE	POST MILES TOTAL PROJECT	SHEET No.	TOTAL SHEETS
01	DN	101	14.9/15.3	24	91

CERTIFIED ENGINEERING GEOLOGIST

October 30, 2015
PLANS APPROVAL DATE

REGISTERED GEOLOGIST
CHRIS A. RISDEN
CERTIFIED ENGINEERING GEOLOGIST
No. 2541
Exp. 9-30-17
STATE OF CALIFORNIA

THE STATE OF CALIFORNIA OR ITS OFFICERS OR AGENTS SHALL NOT BE RESPONSIBLE FOR THE ACCURACY OR COMPLETENESS OF SCANNED COPIES OF THIS PLAN SHEET.

TO ACCOMPANY PLANS DATED 11/30/15

ABBREVIATION:

GWS = Ground Water Surface

CEMENTATION

DESCRIPTION	CRITERIA
WEAK	CRUMBLES OR BREAKS WITH HANDLING OR LITTLE FINGER PRESSURE.
MODERATE	CRUMBLES OR BREAKS WITH CONSIDERABLE FINGER PRESSURE.
STRONG	WILL NOT CRUMBLE OR BREAK WITH FINGER PRESSURE.

BOREHOLE IDENTIFICATION

SYMBOL	HOLE TYPE	DESCRIPTION
Size	A	AUGER BORING (HOLLOW OR SOLID STEM BUCKET)
Size	R RW RC P	ROTARY DRILLED BORING (CONVENTIONAL) ROTARY DRILLED WITH SELF-CASING WIRE-LINE ROTARY CORE WITH CONTINUOUSLY-SAMPLED, SELF-CASING WIRE-LINE ROTARY PERCUSSION BORING (AIR)
Size	R RC	ROTARY DRILLED DIAMOND CORE ROTARY DRILLED DIAMOND CORE, CONTINUOUSLY SAMPLED
Size	HD HA	HAND DRIVEN (1-INCH SOIL TUBE) HAND AUGER
●	D	DYNAMIC CONE PENETRATION BORING
▲	CPT	CONE PENETRATION TEST (ASTM D 5778)
[ ]	O	OTHER (NOTE ON LOTB)

Note: Size in inches.

CONSISTENCY OF COHESIVE SOILS

DESCRIPTION	SHEAR STRENGTH (tsf)	POCKET PENETROMETER MEASUREMENT, PP, (tsf)	TORVANE MEASUREMENT, TV, (tsf)	VANE SHEAR MEASUREMENT, VS, (tsf)
VERY SOFT	LESS THAN 0.12	LESS THAN 0.25	LESS THAN 0.12	LESS THAN 0.12
SOFT	0.12 - 0.25	0.25 - 0.5	0.12 - 0.25	0.12 - 0.25
MEDIUM STIFF	0.25 - 0.5	0.5 - 1	0.25 - 0.5	0.25 - 0.5
STIFF	0.5 - 1	1 - 2	0.5 - 1	0.5 - 1
VERY STIFF	1 - 2	2 - 4	1 - 2	1 - 2
HARD	GREATER THAN 2	GREATER THAN 4	GREATER THAN 2	GREATER THAN 2

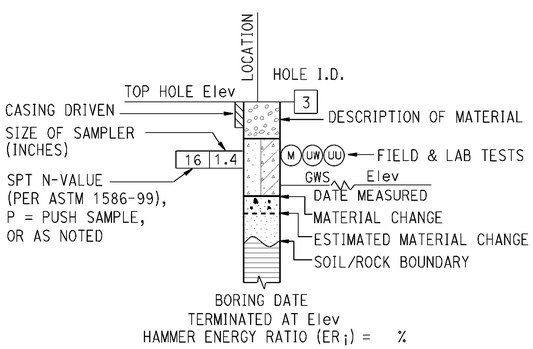

ROTARY BORING

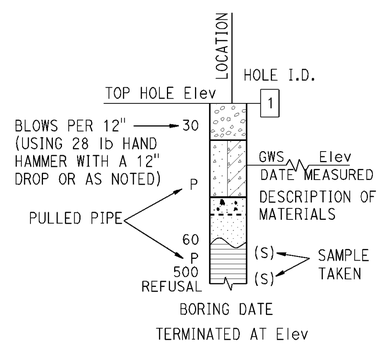

HAND BORING

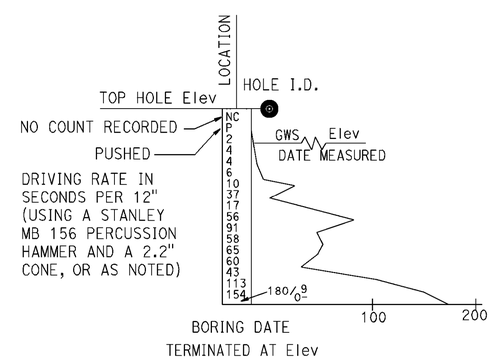

DYNAMIC CONE PENETRATION BORING

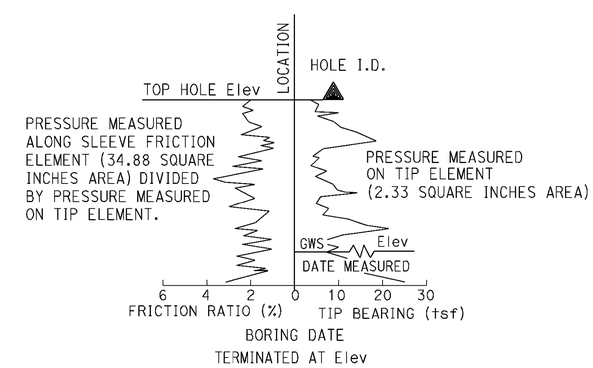

CONE PENETRATION TEST (CPT) BORING

STATE OF CALIFORNIA
DEPARTMENT OF TRANSPORTATION

LEGEND - SOIL (SHEET 1 OF 2)

NO SCALE

RSP A10F DATED OCTOBER 30, 2015 SUPERSEDES STANDARD PLAN A10F DATED MAY 20, 2011 - PAGE 6 OF THE STANDARD PLANS BOOK DATED 2010.

REVISED STANDARD PLAN RSP A10F

2010 REVISED STANDARD PLAN RSP A10F

DATE PLOTTED => 01-FEB-2016
TIME PLOTTED => 09:06

P:\PROJ\01\0B27U\drafting\01-0B27u4\010b270va002.dgn

USERNAME => s132662
DGN FILE => 010b270va002.dgn

8-18-15

REFERENCE: CALTRANS SOIL & ROCK LOGGING, CLASSIFICATION, AND PRESENTATION MANUAL (2010)

Dist	COUNTY	ROUTE	POST MILES TOTAL PROJECT	SHEET No.	TOTAL SHEETS
01	DN	101	14.9/15.3	25	91

CERTIFIED ENGINEERING GEOLOGIST

October 30, 2015
PLANS APPROVAL DATE

REGISTERED GEOLOGIST
CHRIS A. RISDEN
CERTIFIED ENGINEERING GEOLOGIST
No. 2541
Exp. 9-30-17
STATE OF CALIFORNIA

THE STATE OF CALIFORNIA OR ITS OFFICERS OR AGENTS SHALL NOT BE RESPONSIBLE FOR THE ACCURACY OR COMPLETENESS OF SCANNED COPIES OF THIS PLAN SHEET.

TO ACCOMPANY PLANS DATED 11/30/15

GROUP SYMBOLS AND NAMES

GRAPHIC/SYMBOL	GROUP NAMES	GRAPHIC/SYMBOL	GROUP NAMES
GW	WELL-GRADED GRAVEL WELL-GRADED GRAVEL WITH SAND	CL	LEAN CLAY LEAN CLAY WITH SAND LEAN CLAY WITH GRAVEL SANDY LEAN CLAY SANDY LEAN CLAY WITH GRAVEL GRAVELLY LEAN CLAY GRAVELLY LEAN CLAY WITH SAND
GP	POORLY-GRADED GRAVEL POORLY-GRADED GRAVEL WITH SAND		
GW-GM	WELL-GRADED GRAVEL WITH SILT WELL-GRADED GRAVEL WITH SILT AND SAND	CL-ML	SILTY CLAY SILTY CLAY WITH SAND SILTY CLAY WITH GRAVEL SANDY SILTY CLAY SANDY SILTY CLAY WITH GRAVEL GRAVELLY SILTY CLAY GRAVELLY SILTY CLAY WITH SAND
GW-GC	WELL-GRADED GRAVEL WITH CLAY (OR SILTY CLAY) WELL-GRADED GRAVEL WITH CLAY AND SAND (OR SILTY CLAY AND SAND)		
GP-GM	POORLY-GRADED GRAVEL WITH SILT POORLY-GRADED GRAVEL WITH SILT AND SAND	ML	SILT SILT WITH SAND SILT WITH GRAVEL SANDY SILT SANDY SILT WITH GRAVEL GRAVELLY SILT GRAVELLY SILT WITH SAND
GP-GC	POORLY-GRADED GRAVEL WITH CLAY (OR SILTY CLAY) POORLY-GRADED GRAVEL WITH CLAY AND SAND (OR SILTY CLAY AND SAND)		
GM	SILTY GRAVEL SILTY GRAVEL WITH SAND	OL	ORGANIC LEAN CLAY ORGANIC LEAN CLAY WITH SAND ORGANIC LEAN CLAY WITH GRAVEL SANDY ORGANIC LEAN CLAY SANDY ORGANIC LEAN CLAY WITH GRAVEL GRAVELLY ORGANIC LEAN CLAY GRAVELLY ORGANIC LEAN CLAY WITH SAND
GC	CLAYEY GRAVEL CLAYEY GRAVEL WITH SAND		
GC-GM	SILTY, CLAYEY GRAVEL SILTY, CLAYEY GRAVEL WITH SAND	OL	ORGANIC SILT ORGANIC SILT WITH SAND ORGANIC SILT WITH GRAVEL SANDY ORGANIC SILT SANDY ORGANIC SILT WITH GRAVEL GRAVELLY ORGANIC SILT GRAVELLY ORGANIC SILT WITH SAND
SW	WELL-GRADED SAND WELL-GRADED SAND WITH GRAVEL		
SP	POORLY-GRADED SAND POORLY-GRADED SAND WITH GRAVEL	CH	FAT CLAY FAT CLAY WITH SAND FAT CLAY WITH GRAVEL SANDY FAT CLAY SANDY FAT CLAY WITH GRAVEL GRAVELLY FAT CLAY GRAVELLY FAT CLAY WITH SAND
SW-SM	WELL-GRADED SAND WITH SILT WELL-GRADED SAND WITH SILT AND GRAVEL		
SW-SC	WELL-GRADED SAND WITH CLAY (OR SILTY CLAY) WELL-GRADED SAND WITH CLAY AND GRAVEL (OR SILTY CLAY AND GRAVEL)	MH	ELASTIC SILT ELASTIC SILT WITH SAND ELASTIC SILT WITH GRAVEL SANDY ELASTIC SILT SANDY ELASTIC SILT WITH GRAVEL GRAVELLY ELASTIC SILT GRAVELLY ELASTIC SILT WITH SAND
SP-SM	POORLY-GRADED SAND WITH SILT POORLY-GRADED SAND WITH SILT AND GRAVEL		
SP-SC	POORLY-GRADED SAND WITH CLAY (OR SILTY CLAY) POORLY-GRADED SAND WITH CLAY AND GRAVEL (OR SILTY CLAY AND GRAVEL)	OH	ORGANIC FAT CLAY ORGANIC FAT CLAY WITH SAND ORGANIC FAT CLAY WITH GRAVEL SANDY ORGANIC FAT CLAY SANDY ORGANIC FAT CLAY WITH GRAVEL GRAVELLY ORGANIC FAT CLAY GRAVELLY ORGANIC FAT CLAY WITH SAND
SM	SILTY SAND SILTY SAND WITH GRAVEL		
SC	CLAYEY SAND CLAYEY SAND WITH GRAVEL	OH	ORGANIC ELASTIC SILT ORGANIC ELASTIC SILT WITH SAND ORGANIC ELASTIC SILT WITH GRAVEL SANDY ORGANIC ELASTIC SILT SANDY ORGANIC ELASTIC SILT WITH GRAVEL GRAVELLY ORGANIC ELASTIC SILT GRAVELLY ORGANIC ELASTIC SILT WITH SAND
SC-SM	SILTY, CLAYEY SAND SILTY, CLAYEY SAND WITH GRAVEL		
PT	PEAT	OL/OH	ORGANIC SOIL ORGANIC SOIL WITH SAND ORGANIC SOIL WITH GRAVEL SANDY ORGANIC SOIL SANDY ORGANIC SOIL WITH GRAVEL GRAVELLY ORGANIC SOIL GRAVELLY ORGANIC SOIL WITH SAND
	COBBLES COBBLES AND BOULDERS BOULDERS		

FIELD AND LABORATORY TESTING

- (C) CONSOLIDATION (ASTM D2435)
- (CL) COLLAPSE POTENTIAL (ASTM D4546)
- (CP) COMPACTION CURVE (CTM 216)
- (CR) CORROSIVITY TESTING (CTM 643, CTM 422, CTM 417)
- (CU) CONSOLIDATED UNDRAINED TRIAXIAL (ASTM D4767)
- (DS) DIRECT SHEAR (ASTM D3080)
- (EI) EXPANSION INDEX (ASTM D4829)
- (M) MOISTURE CONTENT (ASTM D2216)
- (OC) ORGANIC CONTENT-% (ASTM D2974)
- (P) PERMEABILITY (CTM 220)
- (PA) PARTICLE SIZE ANALYSIS (ASTM D422)
- (PI) PLASTICITY INDEX (AASHTO T 90) LIQUID LIMIT (AASHTO T 89)
- (PL) POINT LOAD INDEX (ASTM D5731)
- (PM) PRESSURE METER
- (R) R-VALUE (CTM 301)
- (SE) SAND EQUIVALENT (CTM 217)
- (SG) SPECIFIC GRAVITY (AASHTO T 100)
- (SL) SHRINKAGE LIMIT (ASTM D4943)
- (SW) SWELL POTENTIAL (ASTM D4546)
- (UC) UNCONFINED COMPRESSION-SOIL (ASTM D2166) UNCONFINED COMPRESSION-ROCK (ASTM D7012 - METHOD C)
- (UU) UNCONSOLIDATED UNDRAINED TRIAXIAL (ASTM D2850)
- (UW) UNIT WEIGHT (ASTM D7263 - METHOD B)

APPARENT DENSITY OF COHESIONLESS SOILS

DESCRIPTION	SPT N_{60} (BLOWS / 12 INCHES)
VERY LOOSE	0 - 5
LOOSE	5 - 10
MEDIUM DENSE	10 - 30
DENSE	30 - 50
VERY DENSE	GREATER THAN 50

MOISTURE

DESCRIPTION	CRITERIA
DRY	NO DISCERNABLE MOISTURE
MOIST	MOISTURE PRESENT, BUT NO FREE WATER
WET	VISIBLE FREE WATER

PERCENT OR PROPORTION OF SOILS

DESCRIPTION	CRITERIA
TRACE	PARTICLES ARE PRESENT BUT ESTIMATED TO BE LESS THAN 5%
FEW	5% - 10%
LITTLE	15% - 25%
SOME	30% - 45%
MOSTLY	50% - 100%

PARTICLE SIZE

DESCRIPTION		SIZE
BOULDER		GREATER THAN 12"
COBBLE		3" - 12"
GRAVEL	COARSE	3/4" - 3"
	FINE	1/5" - 3/4"
SAND	COARSE	1/16" - 1/5"
	MEDIUM	1/64" - 1/16"
	FINE	1/300" - 1/64"
SILT AND CLAY		LESS THAN 1/300"

STATE OF CALIFORNIA
DEPARTMENT OF TRANSPORTATION

LEGEND - SOIL (SHEET 2 OF 2)

NO SCALE

RSP A10G DATED OCTOBER 30, 2015 SUPERSEDES STANDARD PLAN A10G DATED MAY 20, 2011 - PAGE 7 OF THE STANDARD PLANS BOOK DATED 2010.

REVISED STANDARD PLAN RSP A10G

2010 REVISED STANDARD PLAN RSP A10G

DATE PLOTTED => 01-FEB-2016
TIME PLOTTED => 09:06

P:\PROJ\01\0B27U\drafting\01-0B27u4\010b270va003.dgn

USERNAME => s132662
DGN FILE => 010b270va003.dgn

9-22-15

Dist	COUNTY	ROUTE	POST MILES TOTAL PROJECT	SHEET No.	TOTAL SHEETS
01	DN	101	14.9/15.3	26	91

REGISTERED CIVIL ENGINEER

July 20, 2012
PLANS APPROVAL DATE

REGISTERED PROFESSIONAL ENGINEER
Roberta L. McLaughlin
No. C40375
Exp. 3-31-13
CIVIL
STATE OF CALIFORNIA

THE STATE OF CALIFORNIA OR ITS OFFICERS OR AGENTS SHALL NOT BE RESPONSIBLE FOR THE ACCURACY OR COMPLETENESS OF SCANNED COPIES OF THIS PLAN SHEET.

TO ACCOMPANY PLANS DATED 11/30/15

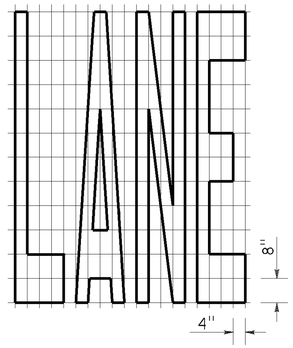

A=24 ft²

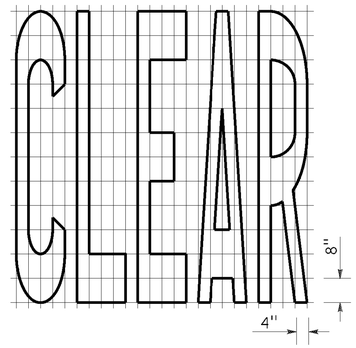

A=27 ft²

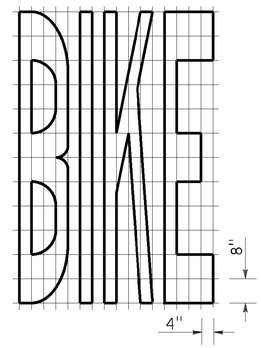

A=21 ft²

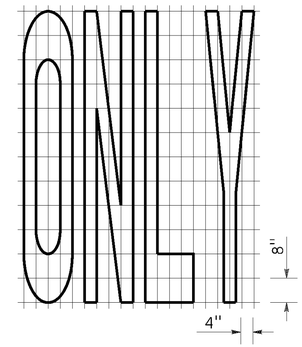

A=22 ft²

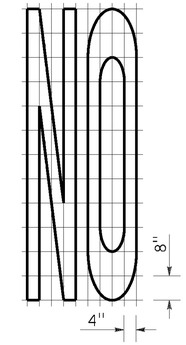

A=14 ft²

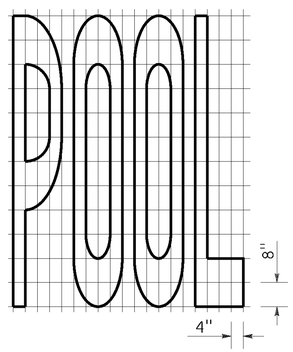

A=23 ft²

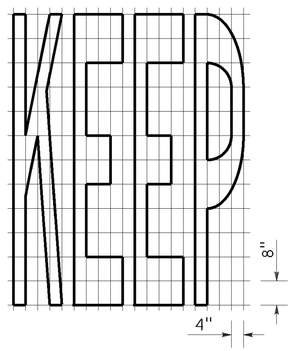

A=24 ft²

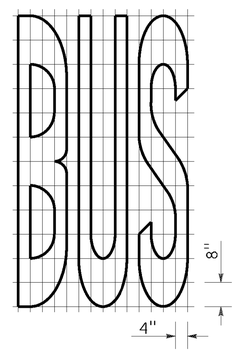

A=20 ft²

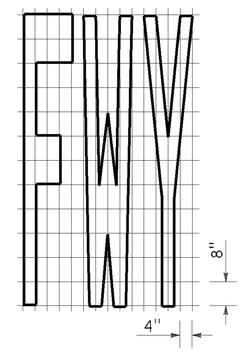

A=16 ft²

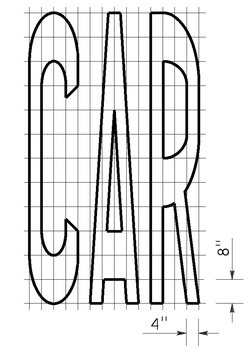

A=17 ft²

WORD MARKINGS			
ITEM	ft²	ITEM	ft²
LANE	24	NO	14
POOL	23	BIKE	21
CAR	17	BUS	20
CLEAR	27	ONLY	22
KEEP	24	FWY	16

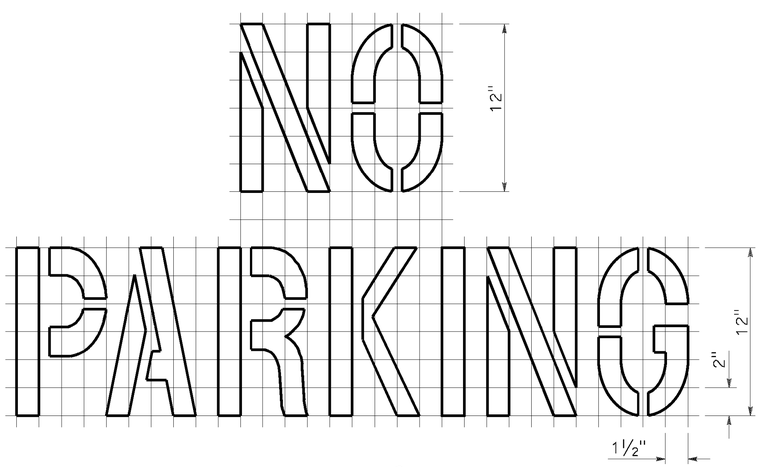

A=2 ft²
See Notes 6 and 7

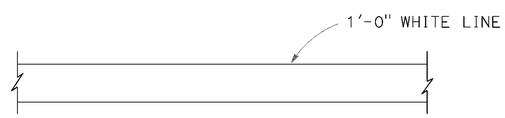

LIMIT LINE (STOP LINE)

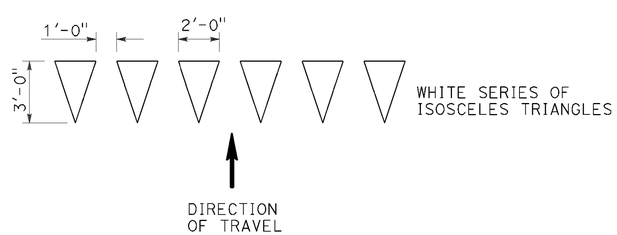

YIELD LINE

NOTES:

1. If a message consists of more than one word, it should read "UP", i.e., the first word should be nearest the driver.
2. The space between words should be at least four times the height of the characters for low speed roads, but not more than ten times the height of the characters. The space may be reduced appropriately where there is limited space because of local conditions.
3. Minor variations in dimensions may be accepted by the Engineer.
4. Portions of a letter, number or symbol may be separated by connecting segments not to exceed 2" in width.
5. The words "NO PARKING" pavement marking is to be used for parking facilities. For typical locations of markings, see Standard Plans A90A and A90B.
6. The words "NO PARKING", shall be painted in white letters no less than 1'-0" high on a contrasting background and located so that it is visible to traffic enforcement officials.

STATE OF CALIFORNIA
DEPARTMENT OF TRANSPORTATION

PAVEMENT MARKINGS WORDS, LIMIT AND YIELD LINES

NO SCALE

RSP A24E DATED JULY 20, 2012 SUPERSEDES STANDARD PLAN A24E
DATED MAY 20, 2011 - PAGE 17 OF THE STANDARD PLANS BOOK DATED 2010.

REVISED STANDARD PLAN RSP A24E

2010 REVISED STANDARD PLAN RSP A24E

DATE PLOTTED => 01-FEB-2016
TIME PLOTTED => 09:07

Dist	COUNTY	ROUTE	POST MILES TOTAL PROJECT	SHEET No.	TOTAL SHEETS
01	DN	101	14.9/15.3	27	91

REGISTERED CIVIL ENGINEER

October 30, 2015
PLANS APPROVAL DATE

REGISTERED PROFESSIONAL ENGINEER
Carl M. Duan
No. C59976
Exp. 6-30-16
CIVIL
STATE OF CALIFORNIA

THE STATE OF CALIFORNIA OR ITS OFFICERS OR AGENTS SHALL NOT BE RESPONSIBLE FOR THE ACCURACY OR COMPLETENESS OF SCANNED COPIES OF THIS PLAN SHEET.

TO ACCOMPANY PLANS DATED 11/30/15

2010 REVISED STANDARD PLAN RSP A62F

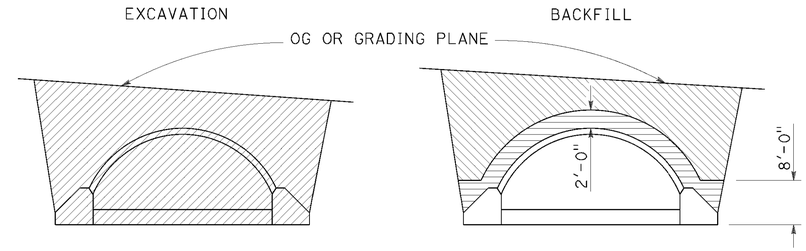

IN TRENCH

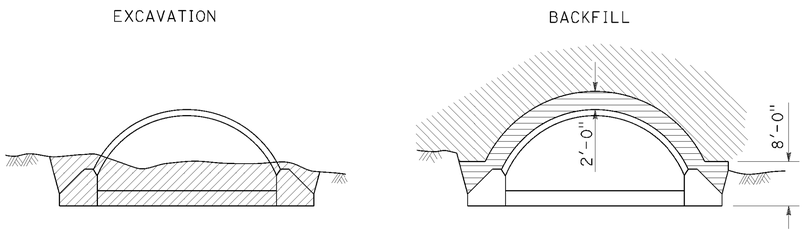

IN EMBANKMENT

STRUCTURAL STEEL PLATE ARCHES

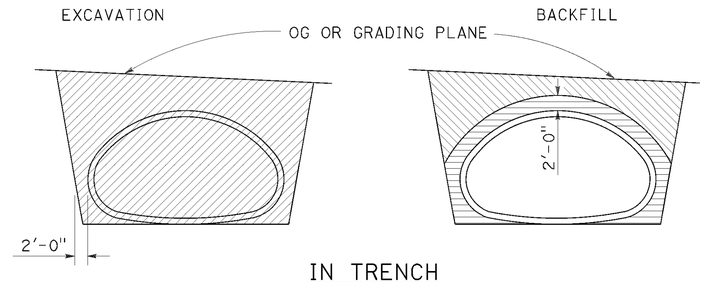

IN TRENCH

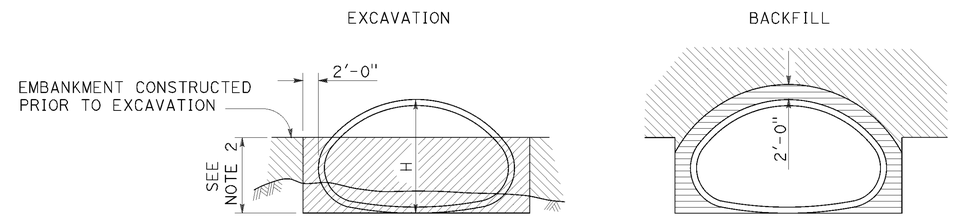

IN EMBANKMENT

STRUCTURAL STEEL PLATE PIPE ARCHES AND VEHICULAR UNDERCROSSING

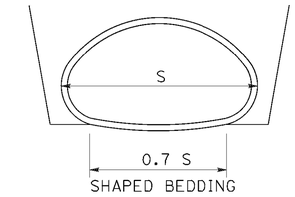

SHAPED BEDDING

S = Larger than 84"

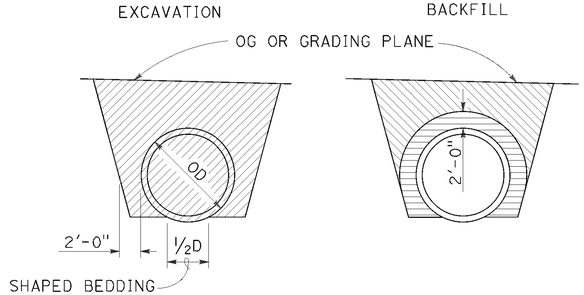

IN TRENCH

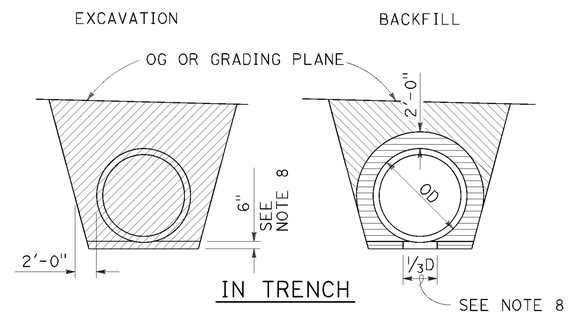

IN TRENCH

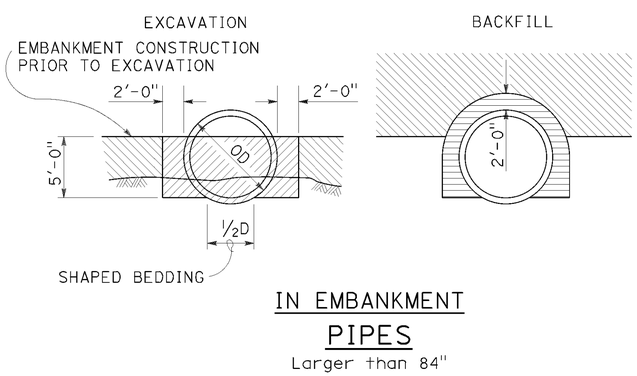

IN EMBANKMENT

PIPES

Larger than 84"

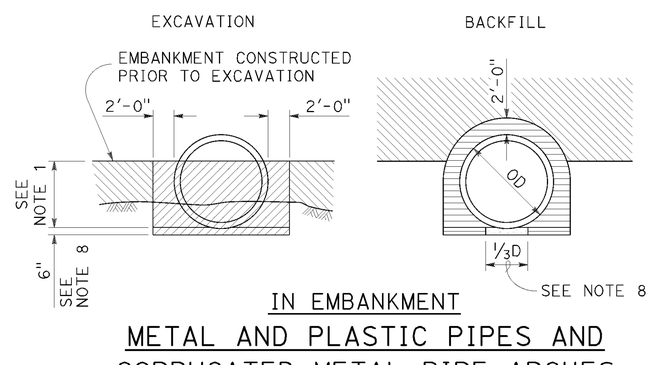

IN EMBANKMENT

METAL AND PLASTIC PIPES AND CORRUGATED METAL PIPE ARCHES

84" or Smaller

NOTES:

1. PIPES: 30" minimum for diameters up to and including 42" then ⅔ diameter but no more than 60" required. CORRUGATED METAL PIPE ARCHES: 30" maximum.
2. ⅔ H up to 60" maximum.
3. Slope or shore excavation sides as necessary.
4. Backfill shall be placed full width of excavation except as noted.
5. Diagrams do not apply to overside drains.
6. Dimensions shown are minimum.
7. Construction strutting of structural steel plate pipe, arches and vehicular undercrossing to be used when shown on the project plans. When shown, see Standard Plan D88A for strutting requirements.
8. Excavation below pipe and 80% relative compaction requirements for plastic pipes only.
9. D is the inside diameter (ID) of the pipe.

LEGEND

- STRUCTURE EXCAVATION (CULVERT)
- ROADWAY EMBANKMENT
- STRUCTURE BACKFILL (CULVERT) 95% RELATIVE COMPACTION
- STRUCTURE BACKFILL (CULVERT) 80% RELATIVE COMPACTION

STATE OF CALIFORNIA
DEPARTMENT OF TRANSPORTATION

EXCAVATION AND BACKFILL METAL AND PLASTIC CULVERTS

NO SCALE

RSP A62F DATED OCTOBER 30, 2015 SUPERSEDES STANDARD PLAN A62F DATED MAY 20, 2011 - PAGE 26 OF THE STANDARD PLANS BOOK DATED 2010.

REVISED STANDARD PLAN RSP A62F

P:\PROJ\01\0B27U\drafting\01-0B27u4\010b270va005.dgn

USERNAME => s132662
DGN FILE => 010b270va005.dgn

DATE PLOTTED => 01-FEB-2016
TIME PLOTTED => 09:07

10-13-15

Dist	COUNTY	ROUTE	POST MILES TOTAL PROJECT	SHEET No.	TOTAL SHEETS
01	DN	101	14.9/15.3	28	91

Randell D. Hiatt
REGISTERED CIVIL ENGINEER

July 19, 2013
PLANS APPROVAL DATE

REGISTERED PROFESSIONAL ENGINEER
Randell D. Hiatt
No. C50200
Exp. 6-30-15
CIVIL
STATE OF CALIFORNIA

THE STATE OF CALIFORNIA OR ITS OFFICERS OR AGENTS SHALL NOT BE RESPONSIBLE FOR THE ACCURACY OR COMPLETENESS OF SCANNED COPIES OF THIS PLAN SHEET.

TO ACCOMPANY PLANS DATED 11/30/15

2010 REVISED STANDARD PLAN RSP A77L2

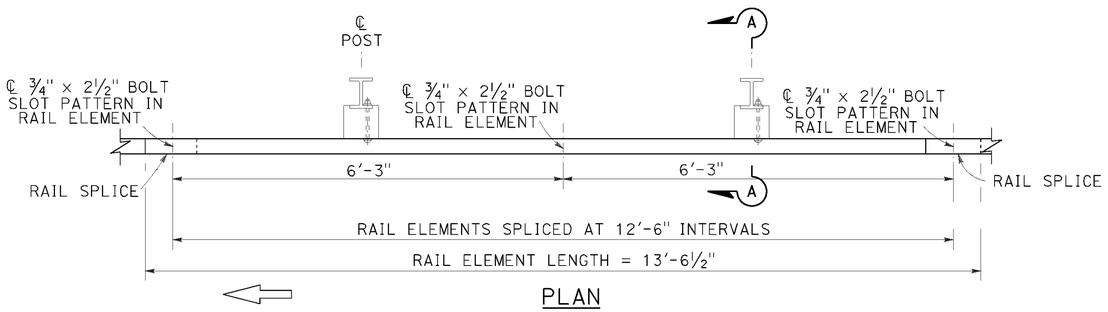

PLAN

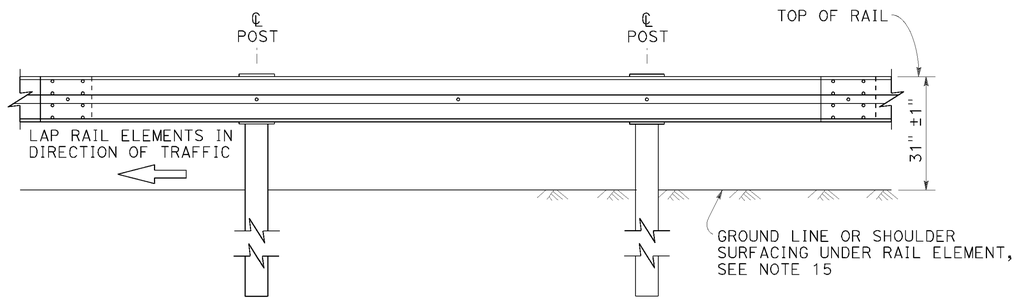

ELEVATION

MIDWEST GUARDRAIL SYSTEM WITH STEEL POSTS AND NOTCHED WOOD OR NOTCHED RECYCLED PLASTIC BLOCKS

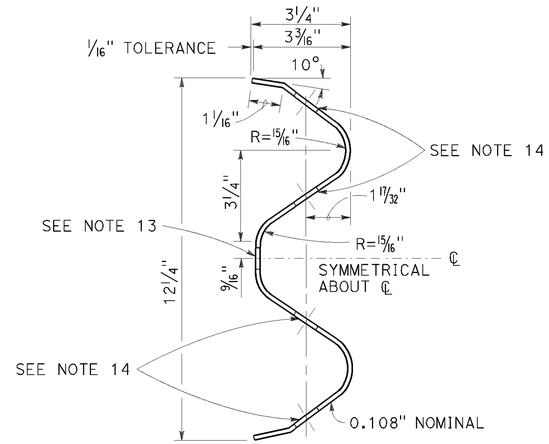

SECTION THRU RAIL ELEMENT

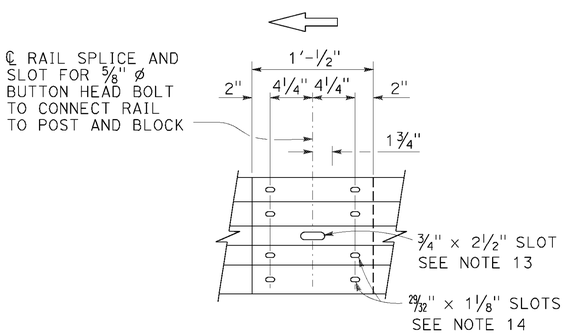

ELEVATION

RAIL ELEMENT SPLICE DETAIL

a) Connect the over lapped end of the rail elements with ⅝" ø × 1⅜" button head oval shoulder splice bolts inserted into the 29⁄32" × 1⅛" slots and bolted together with ⅝" ø recessed hex nuts. Recess of hex nut points toward rail element. A total of 8 bolts and nuts are to be used at each rail splice connection.

b) The ends of the rail elements are to be overlapped in the direction of traffic (see details).

c) Where end cap is to be attached to the end of a rail element, a total of 4 of the above described splice bolts and nuts are to be used.

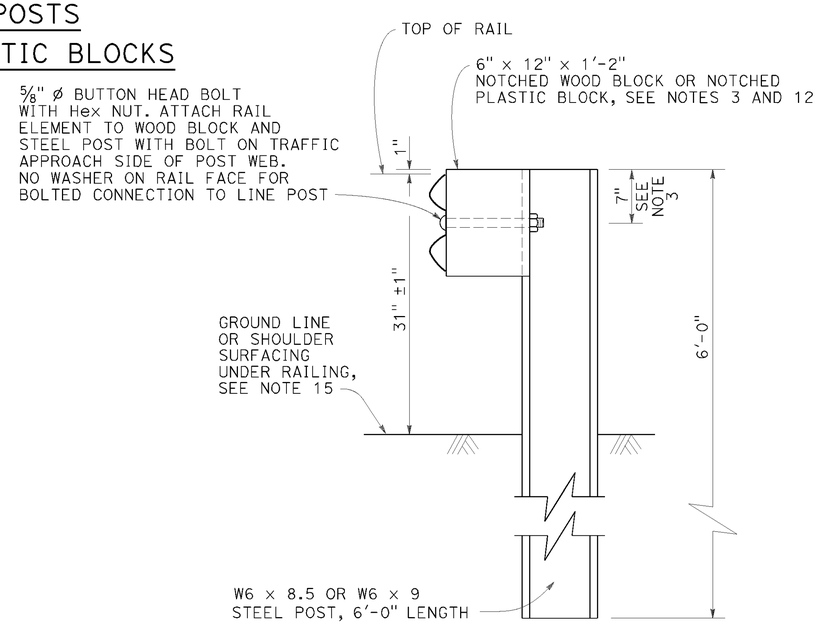

SECTION A-A

TYPICAL STEEL LINE POST INSTALLATION

See Note 4

NOTES:

1. For details of wood post installations, see Revised Standard Plan RSP A77L1.
2. For details of standard hardware used to construct MGS, see Revised Standard Plan RSP A77M1.
3. For details of steel posts and notched wood blocks used to construct MGS, see Revised Standard Plan RSP A77N2.
4. For additional installation details, see Revised Standard Plan RSP A77N3.
5. MGS post spacing to be 6'-3" center to center, except as otherwise noted.
6. For MGS typical layouts, see the A77P, A77Q and A77R Series of Standard Plans.
7. If railing is connected to terminal system end treatment, use 31" height terminal system end treatment.
8. For MGS end anchor details, see Revised Standard Plans RSP A77S1 and RSP A77T2.
9. For details of MGS transition to bridge railing, see Revised Standard Plan RSP A77U4.
10. For additional details of MGS connection to bridge railings, see Revised Standard Plans RSP A77U1, RSP A77U2 and RSP A77V1.
11. For dike positioning and MGS delineation details, see Revised Standard Plan RSP A77N4.
12. Notched face of block faces steel post.
13. Slotted hole for bolted connection of rail element to block and post. See "Section Thru Rail Element".
14. Slotted holes for splice bolts to overlap ends of rail element. See "Section Thru Rail Element".
15. Install posts in soil.

STATE OF CALIFORNIA
DEPARTMENT OF TRANSPORTATION

MIDWEST GUARDRAIL SYSTEM STANDARD RAILING SECTION (STEEL POST WITH NOTCHED WOOD OR NOTCHED RECYCLED PLASTIC BLOCK)

NO SCALE

RSP A77L2 DATED JULY 19, 2013 SUPPLEMENTS THE STANDARD PLANS BOOK DATED 2010.

REVISED STANDARD PLAN RSP A77L2

P:\PROJ\01\0B27U\drafting\01-0B27u4\010b270va006.dgn
USERNAME => s132662
DGN FILE => 010b270va006.dgn
DATE PLOTTED => 01-FEB-2016
TIME PLOTTED => 09:07
7-3-13

Dist	COUNTY	ROUTE	POST MILES TOTAL PROJECT	SHEET No.	TOTAL SHEETS
01	DN	101	14.9/15.3	29	91

Randell D. Hiatt
REGISTERED CIVIL ENGINEER

July 19, 2013
PLANS APPROVAL DATE

REGISTERED PROFESSIONAL ENGINEER
Randell D. Hiatt
No. C50200
Exp. 6-30-15
CIVIL
STATE OF CALIFORNIA

THE STATE OF CALIFORNIA OR ITS OFFICERS OR AGENTS SHALL NOT BE RESPONSIBLE FOR THE ACCURACY OR COMPLETENESS OF SCANNED COPIES OF THIS PLAN SHEET.

TO ACCOMPANY PLANS DATED 11/30/15

2010 REVISED STANDARD PLAN RSP A77L3

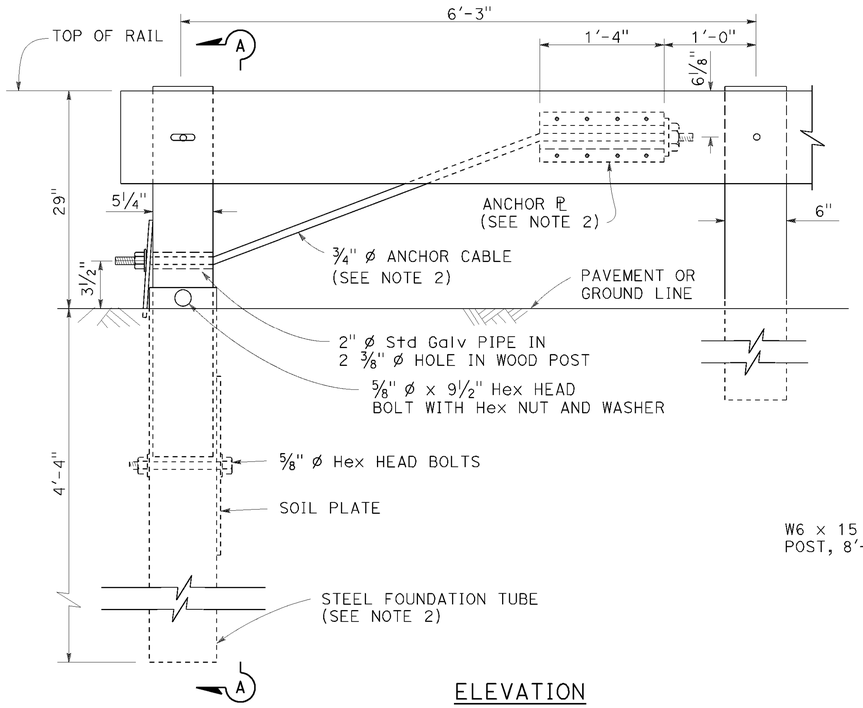

ELEVATION
END ANCHOR
ASSEMBLY (TYPE SFT)

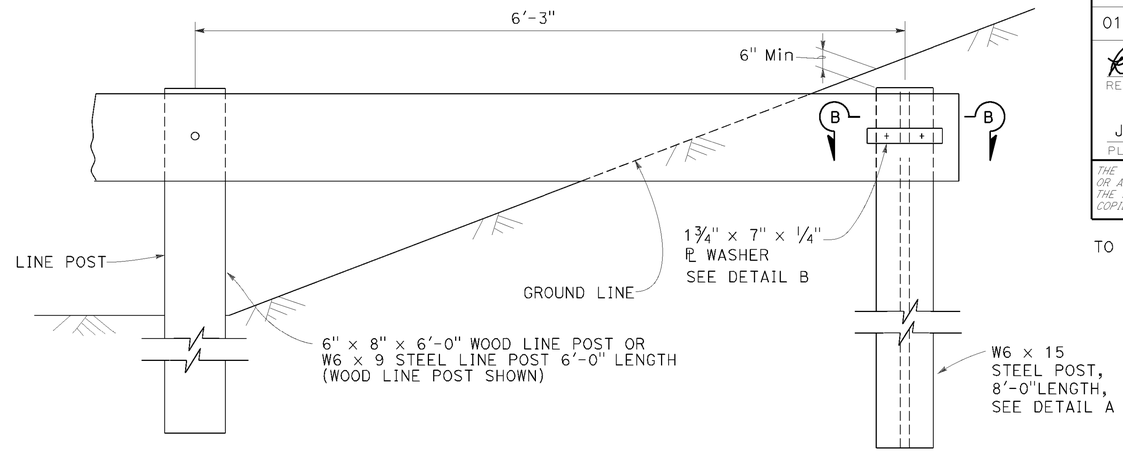

BURIED POST END ANCHOR

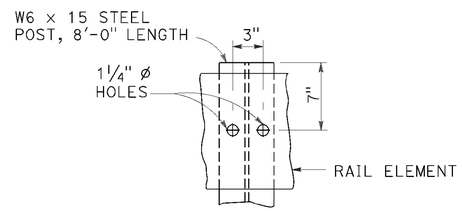

DETAIL A

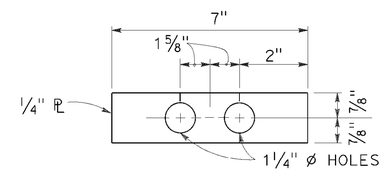

DETAIL B

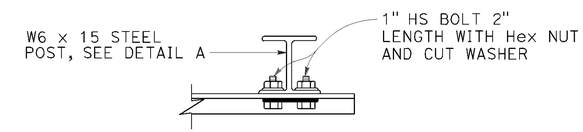

SECTION B-B

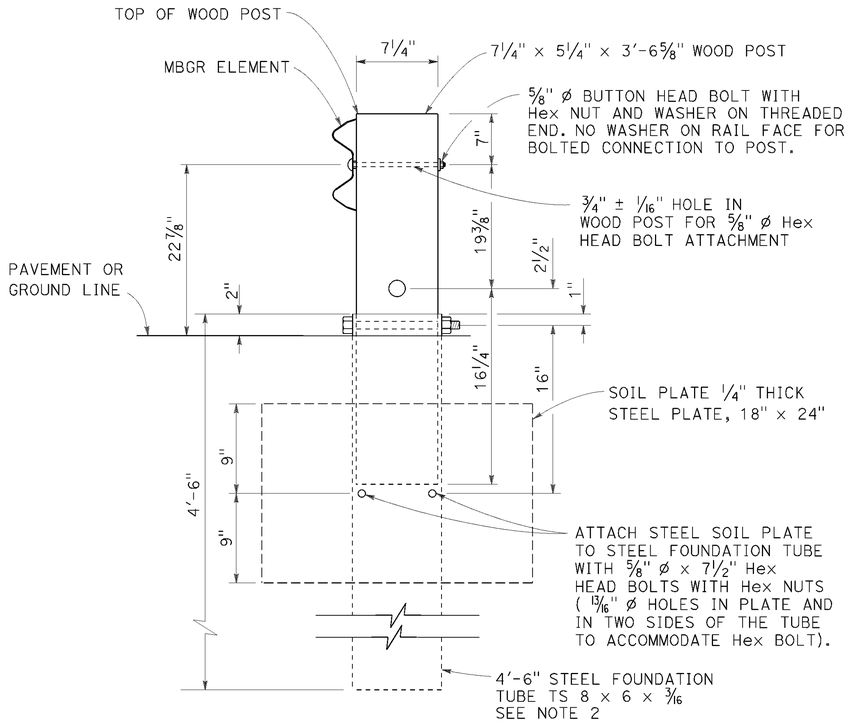

SECTION A-A

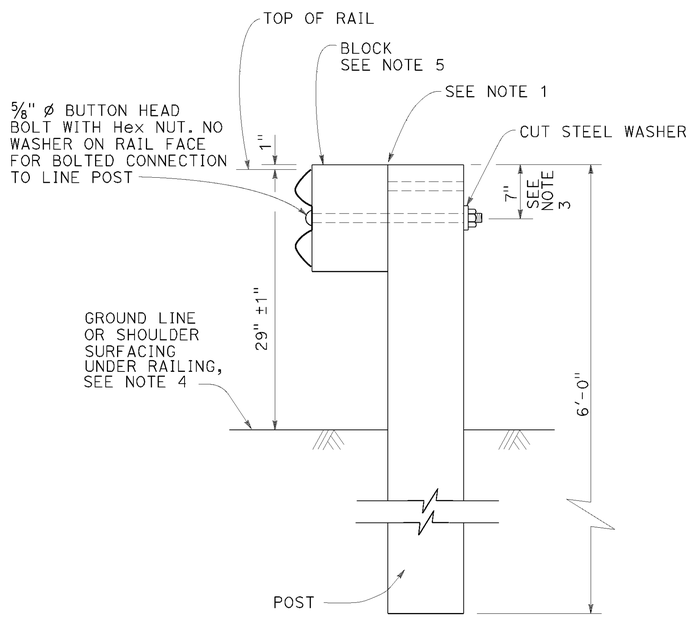

TYPICAL LINE
POST INSTALLATION

NOTES:

1. For wood post and wood block, toenail with 2-16d Galv nails in top of block. For steel post and notched wood or plastic block, notched face of block faces steel post.
2. A 6'-0" Length steel foundation tube, TS 8 x 6 x 3/16, without a soil plate, may be furnished and installed in place of the 4'-6" length steel foundation tube and soil plate shown, Minimum embadment of the 6'-0" length tube shall be 5'-9". A 5/8" ø Hex head bolt and nut shall be installed in the hole in the 6'-0" length tube to keep the wood post from dropping into the tube.
3. To connect railing to 27" terminal system end treatment, transition the top of railing height at a ratio of 120:1 to terminal system end treatment height plus one 12'-6" standard railing section at the transitioned height for a horizontal connection to the end treatment.
4. Install posts in soil.
5. See Revised Standard Plans RSP A77N1 and RSP A77N2 for details.
6. Holes excavation in the slope to construct the buried post end anchor shall be backfilled with selected earth, placed in layers approximately 1'-0" thick. Each layer shall be moistened and thoroughly compacted.

STATE OF CALIFORNIA
DEPARTMENT OF TRANSPORTATION

METAL BEAM GUARD RAILING RECONSTRUCT INSTALLATION

NO SCALE

RSP A77L3 DATED JULY 19, 2013 SUPPLEMENTS THE STANDARD PLANS BOOK DATED 2010.

REVISED STANDARD PLAN RSP A77L3

DATE PLOTTED => 01-FEB-2016
TIME PLOTTED => 09:07

Dist	COUNTY	ROUTE	POST MILES TOTAL PROJECT	SHEET No.	TOTAL SHEETS
01	DN	101	14.9/15.3	30	91

Randell D. Hiatt
REGISTERED CIVIL ENGINEER

July 19, 2013
PLANS APPROVAL DATE

REGISTERED PROFESSIONAL ENGINEER
Randell D. Hiatt
No. C50200
Exp. 6-30-15
CIVIL
STATE OF CALIFORNIA

THE STATE OF CALIFORNIA OR ITS OFFICERS OR AGENTS SHALL NOT BE RESPONSIBLE FOR THE ACCURACY OR COMPLETENESS OF SCANNED COPIES OF THIS PLAN SHEET.

TO ACCOMPANY PLANS DATED 11/30/15

2010 REVISED STANDARD PLAN RSP A77M1

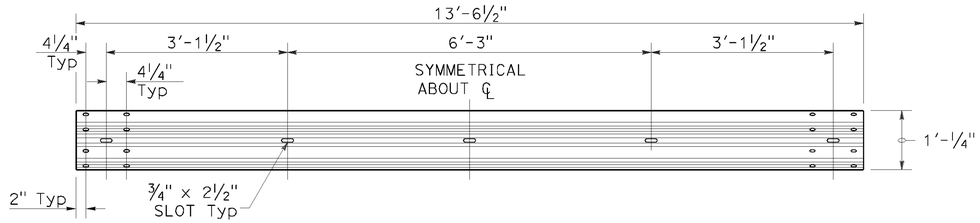

TYPICAL RAIL ELEMENT

NOTE:

1. Slotted holes for splice bolts to overlap ends of rail element.

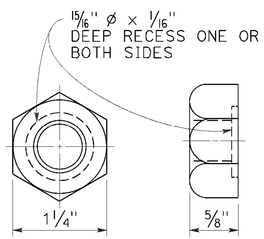

⅝" ø RECESS NUT

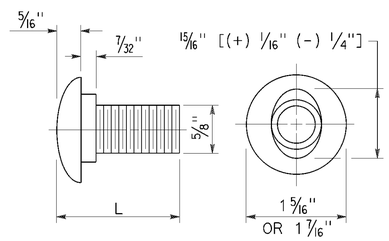

⅝" ø BUTTON HEAD BOLT

BUTTON HEAD BOLT

L	THREAD LENGTH
1⅜"	FULL THREAD LENGTH
2"	FULL THREAD LENGTH
10"	4" Min THREAD LENGTH
18"	4" Min THREAD LENGTH
20"	4" Min THREAD LENGTH
22"	4" Min THREAD LENGTH
26"	4" Min THREAD LENGTH
36"	4" Min THREAD LENGTH
** 2¾"	2" Min THREAD LENGTH
** 19"	4" Min THREAD LENGTH

** For nested rail applications.

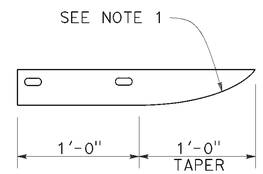

PLAN

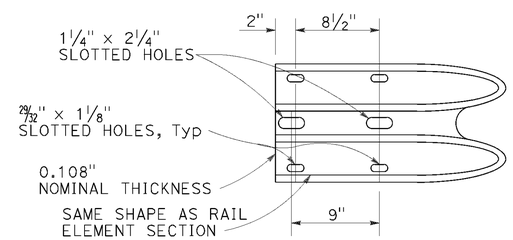

ELEVATION

END CAP (TYPE A)

STATE OF CALIFORNIA
DEPARTMENT OF TRANSPORTATION

MIDWEST GUARDRAIL SYSTEM STANDARD HARDWARE

NO SCALE

RSP A77M1 DATED JULY 19, 2013 SUPPLEMENTS THE STANDARD PLANS BOOK DATED 2010.

REVISED STANDARD PLAN RSP A77M1

DATE PLOTTED => 01-FEB-2016
TIME PLOTTED => 09:07

P:\PROJ\01\0B27U\drafting\01-0B27u4\010b270va008.dgn

USERNAME => s132662
DGN FILE => 010b270va008.dgn

7-3-13

Dist	COUNTY	ROUTE	POST MILES TOTAL PROJECT	SHEET No.	TOTAL SHEETS
01	DN	101	14.9/15.3	31	91

Randell D. Hiatt
REGISTERED CIVIL ENGINEER

November 15, 2013
PLANS APPROVAL DATE

REGISTERED PROFESSIONAL ENGINEER
Randell D. Hiatt
No. C50200
Exp. 6-30-15
CIVIL
STATE OF CALIFORNIA

THE STATE OF CALIFORNIA OR ITS OFFICERS OR AGENTS SHALL NOT BE RESPONSIBLE FOR THE ACCURACY OR COMPLETENESS OF SCANNED COPIES OF THIS PLAN SHEET.

TO ACCOMPANY PLANS DATED 11/30/15

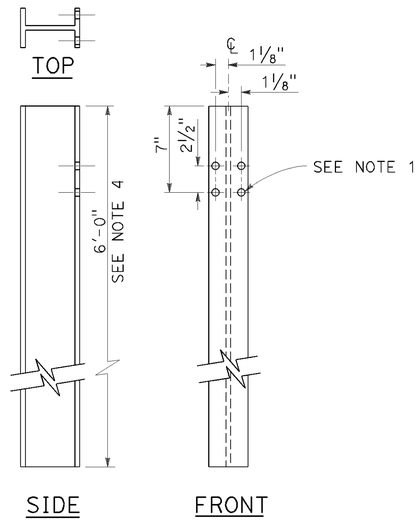

W6 x 9 OR W6 x 8.5
STEEL POST
See Note 4

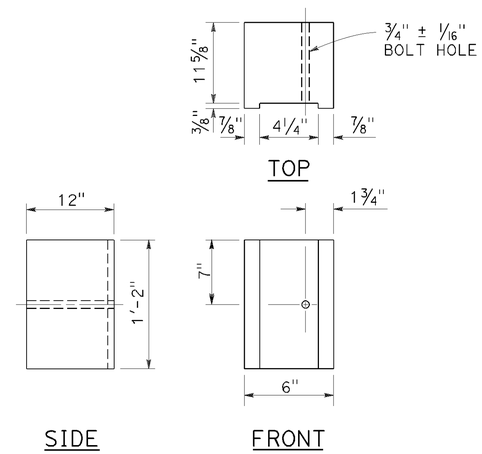

6" x 12"
NOTCHED WOOD BLOCK
See Notes 2 and 3

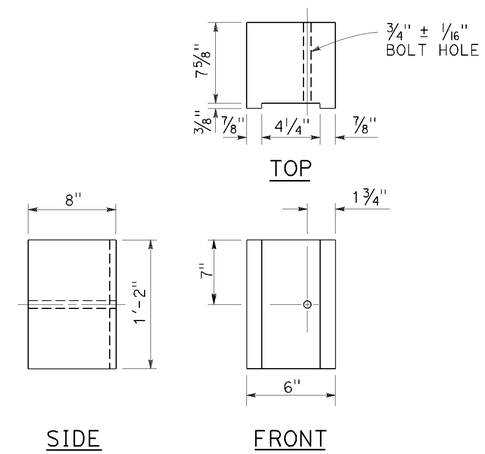

6" x 8"
NOTCHED WOOD BLOCK
Only for use with metal beam guard railing. See Note 5

NOTES:

1. All holes in steel post shall be 13/16" Dia maximum.
2. Dimensions shown for wood block are nominal.
3. Notched face of block faces steel post.
4. 6'-0" length posts to be used for typical roadway installation. See Revised Standard Plan RSP A77N3.
5. See Revised Standard Plan RSP A77L3 for use of 6" x 8" and 8" x 8" notched wood blocks.
6. This post and 8" x 12" block combination to be used for line post sections of MGS on narrow roadways and where strengthened line post sections of MGS are warranted to shield fixed objects.

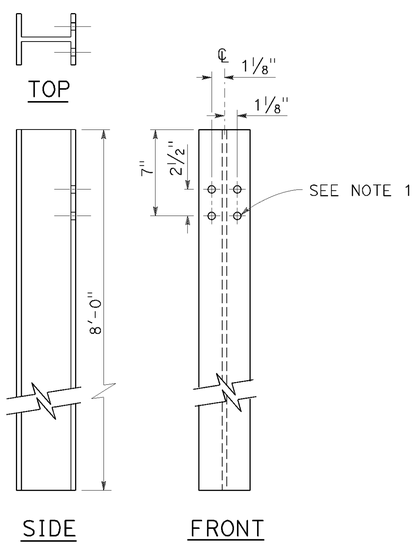

W6 x 15
STEEL POST
See Note 6

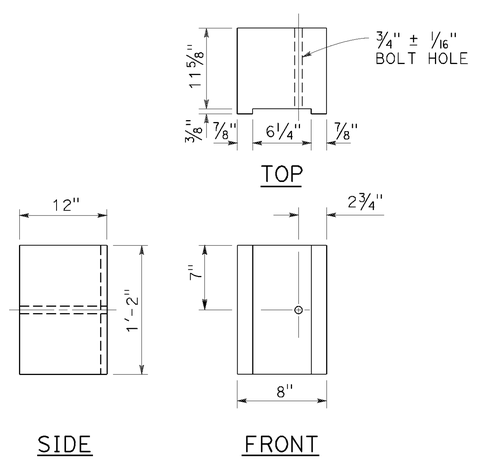

8" x 12"
NOTCHED WOOD BLOCK
See Notes 2 and 3

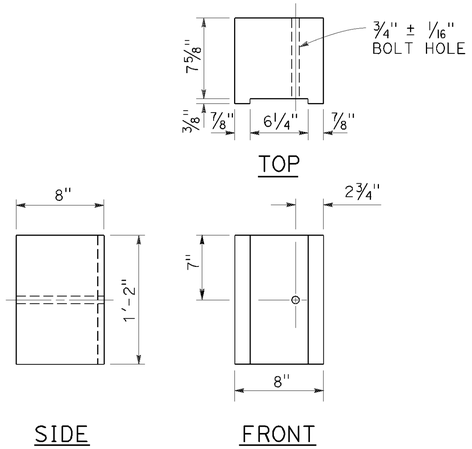

8" x 8"
NOTCHED WOOD BLOCK
Only for use with metal beam guard railing. See Note 5

STATE OF CALIFORNIA
DEPARTMENT OF TRANSPORTATION

MIDWEST GUARDRAIL SYSTEM STEEL POST AND NOTCHED WOOD BLOCK DETAILS

NO SCALE

RSP A77N2 DATED NOVEMBER 15, 2013 SUPERSEDES RSP A77N2
DATED JULY 19, 2013 THAT SUPPLEMENTS THE STANDARD PLANS BOOK DATED 2010.

REVISED STANDARD PLAN RSP A77N2

2010 REVISED STANDARD PLAN RSP A77N2

DATE PLOTTED => 01-FEB-2016
TIME PLOTTED => 09:08

P:\PROJ\01\0B27U\drafting\01-0B27U4\010b270va009.dgn

USERNAME => s132662
DGN FILE => 010b270va009.dgn

10-29-13

Dist	COUNTY	ROUTE	POST MILES TOTAL PROJECT	SHEET No.	TOTAL SHEETS
01	DN	101	14.9/15.3	32	91

Randell D. Hiatt
REGISTERED CIVIL ENGINEER

November 15, 2013
PLANS APPROVAL DATE

REGISTERED PROFESSIONAL ENGINEER
Randell D. Hiatt
No. C50200
Exp. 6-30-15
CIVIL
STATE OF CALIFORNIA

THE STATE OF CALIFORNIA OR ITS OFFICERS OR AGENTS SHALL NOT BE RESPONSIBLE FOR THE ACCURACY OR COMPLETENESS OF SCANNED COPIES OF THIS PLAN SHEET.

TO ACCOMPANY PLANS DATED 11/30/15

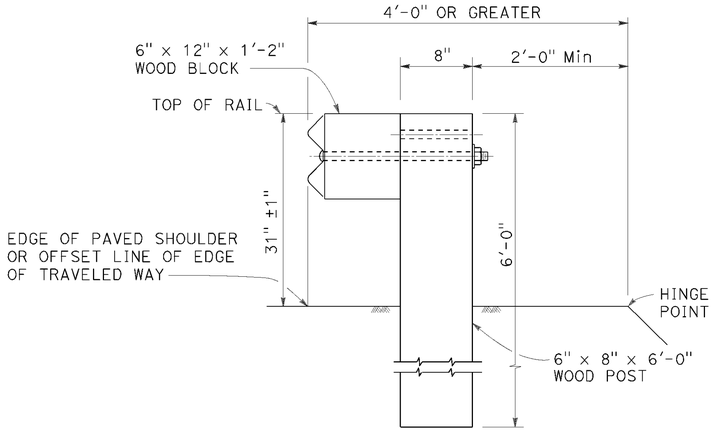

DETAIL A

TYPICAL ROADWAY INSTALLATION

See Note 1

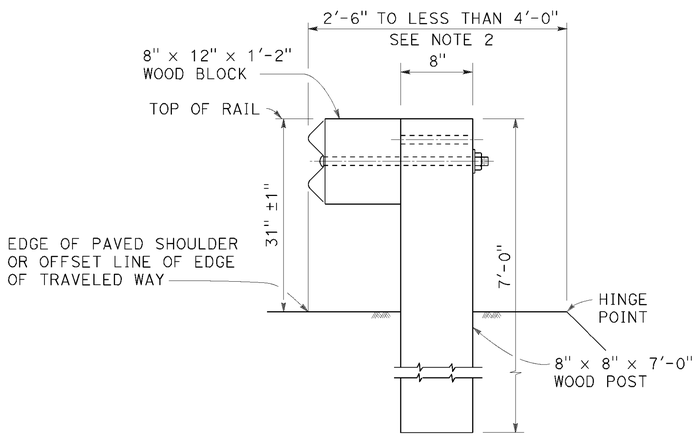

DETAIL B

NARROW ROADWAY INSTALLATION

See Note 1

POST EMBEDMENT

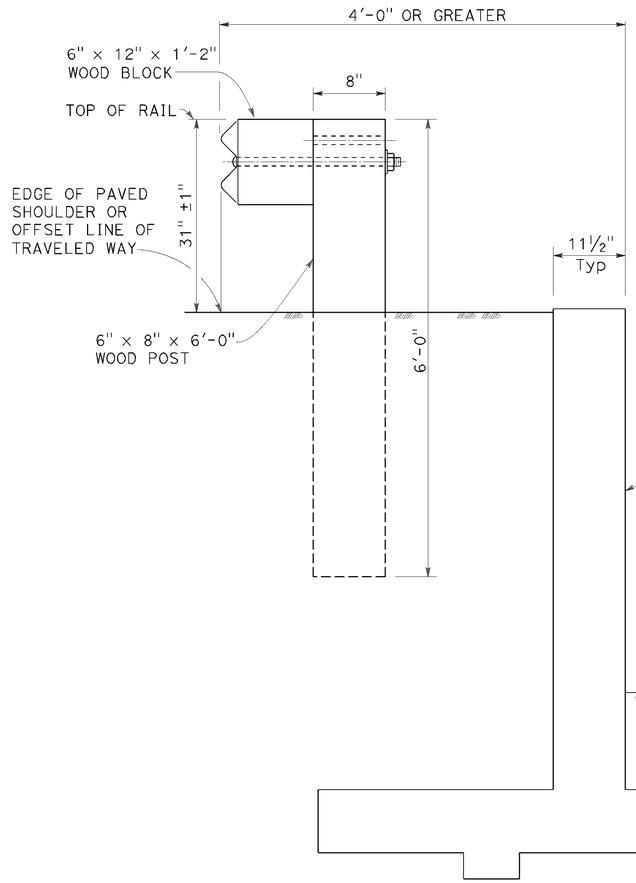

DETAIL C

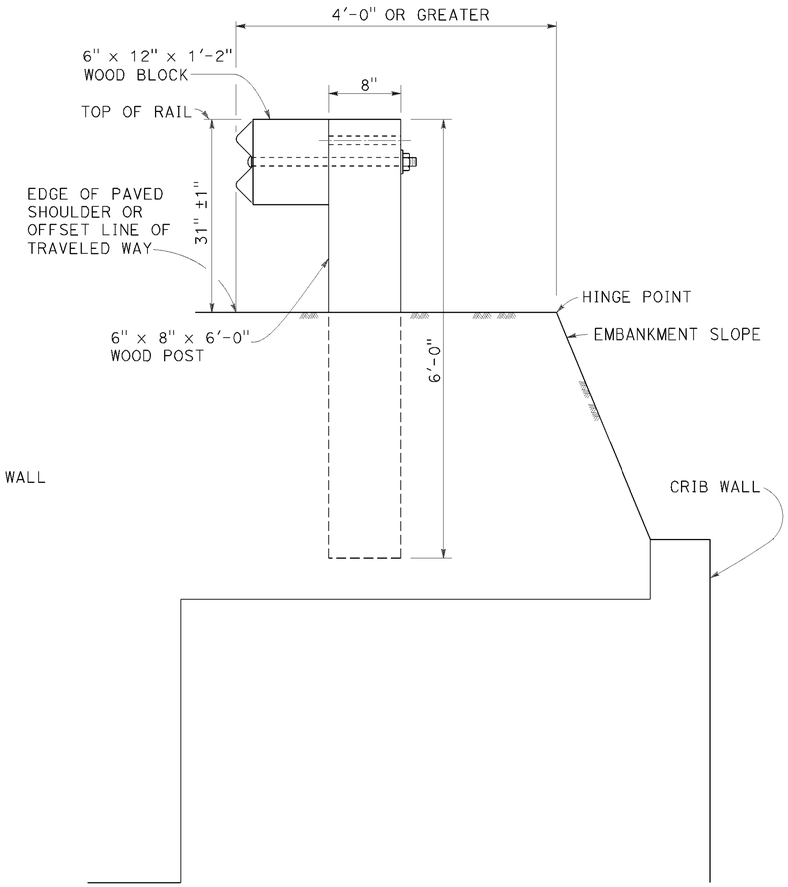

DETAIL D

INSTALLATION AT EARTH RETAINING WALLS

NOTES:

1. These installation details also applicable to steel line post installations. For Detail A, C, and D, where steel line post installations are constructed, W6 x 8.5 or W6 x 9 steel post, 6'-0" in length, with 6" x 12" x 1'-2" notched wood blocks or notched recycled plastic blocks are to be used in place of the size of wood post and wood block shown. For Detail B, where steel line post installations are constructed, W6 x 15 steel post, 8'-0" in length, with 8" x 12" x 1'-2" notched wood blocks or notched recycled plastic blocks are to be used in place of the size of wood post and wood block shown. For additional installation details, see Revised Standard Plan RSP A77L1 and RSP A77L2.

2. Where the distance between the face of the rail and the hinge point is less than 2'-6", see the Project Plans for special details.

3. For dike positioning with MGS installations, see Revised Standard Plan RSP A77N4.

STATE OF CALIFORNIA
DEPARTMENT OF TRANSPORTATION

MIDWEST GUARDRAIL SYSTEM TYPICAL LINE POST EMBEDMENT AND HINGE POINT OFFSET DETAILS

NO SCALE

RSP A77N3 DATED NOVEMBER 15, 2013 SUPERSEDES RSP A77N3 DATED JULY 19, 2013 THAT SUPPLEMENTS THE STANDARD PLANS BOOK DATED 2010.

REVISED STANDARD PLAN RSP A77N3

2010 REVISED STANDARD PLAN RSP A77N3

P:\PROJ\01\0B27U\drafting\01-0B27u4\010b270va010.dgn
USERNAME => s132662
DGN FILE => 010b270va010.dgn
DATE PLOTTED => 01-FEB-2016
TIME PLOTTED => 09:08
10-29-13

Dist	COUNTY	ROUTE	POST MILES TOTAL PROJECT	SHEET No.	TOTAL SHEETS
01	DN	101	14.9/15.3	33	91

Randell D. Hiatt
REGISTERED CIVIL ENGINEER

August 14, 2015
PLANS APPROVAL DATE

REGISTERED PROFESSIONAL ENGINEER
Randell D. Hiatt
No. C50200
Exp. 6-30-17
CIVIL
STATE OF CALIFORNIA

THE STATE OF CALIFORNIA OR ITS OFFICERS OR AGENTS SHALL NOT BE RESPONSIBLE FOR THE ACCURACY OR COMPLETENESS OF SCANNED COPIES OF THIS PLAN SHEET.

TO ACCOMPANY PLANS DATED 11/30/15

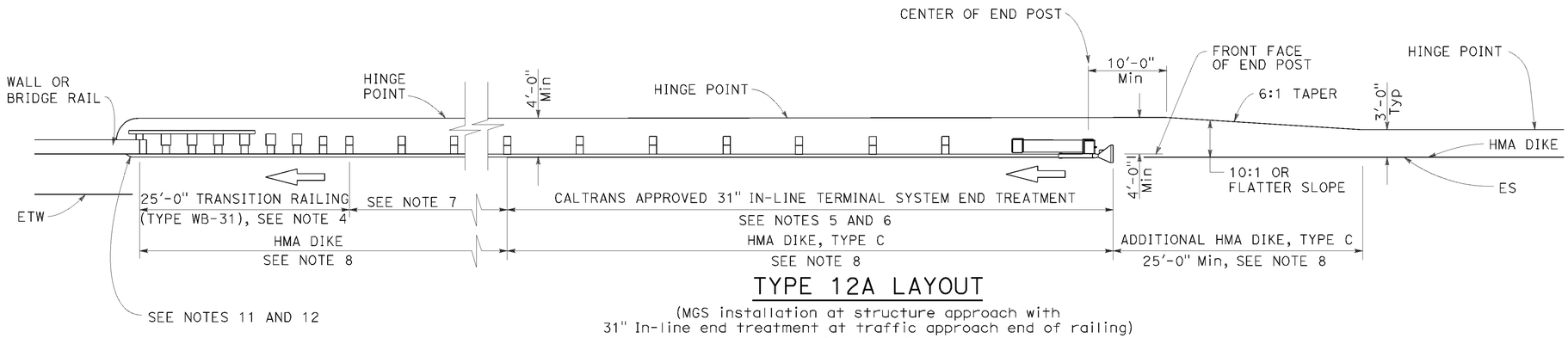

TYPE 12A LAYOUT

(MGS installation at structure approach with
31" In-line end treatment at traffic approach end of railing)
See Note 9

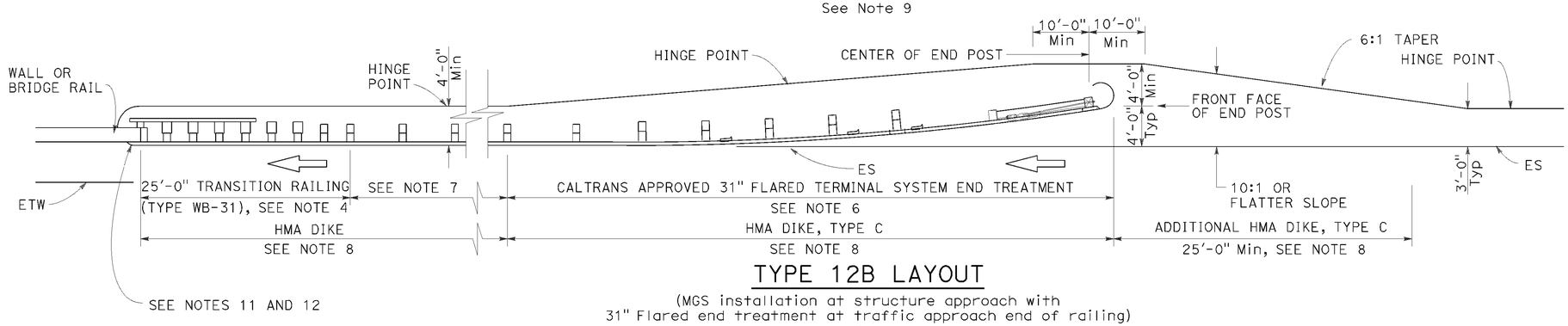

TYPE 12B LAYOUT

(MGS installation at structure approach with
31" Flared end treatment at traffic approach end of railing)
See Note 9

NOTES:

1. Line post, blocks and hardware to be used are shown on Revised Standard Plans RSP A77L1, RSP A77L2, RSP A77M1, RSP A77N1 and RSP A77N2.
2. MGS post spacing to be 6'-3" center to center, except as otherwise noted.
3. Except as noted, line posts are 6" x 8" x 6'-0" wood with 6" x 12" x 1'-2" wood blocks. W6 x 8.5 or W6 x 9 steel posts, 6'-0" in length, with 6" x 12" x 1'-2" notched wood blocks or plastic blocks may be used for 6" x 8" x 6'-0" wood posts with 6" x 12" x 1'-2" wood blocks where applicable and when specified.
4. For Transition Railing (Type WB-31) details for Types 12A and 12B Layouts, see Revised Standard Plan RSP A77U4.
5. 31" in-line terminal system end treatments are used where site conditions will not accommodate a 31" flared end treatment.
6. The type of 31" terminal system end treatment to be used will be shown on the Project Plans.
7. Dependent on site conditions (embankment height, side slopes, or other fixed objects), it may be advisable to construct additional guard railing (a length equal to multiples of 12'-6" with 6'-3" post spacing) between the transition railing and end treatment. A 12.5 degree angle of departure can be drawn on the Project Plans from the edge of traveled way through the outer most point of the fixed object to determine the additional length of railing needed.
8. Where placement of dike is required with guard railing installations, see Revised Standard Plan RSP A77N4 for dike positioning details.
9. Type 12A or Type 12B Layouts are typically used:
   a. To the right of approaching traffic, at the end of a structure, on two-lane conventional highway where the roadbed width across the structure is less than 40 feet.
   b. To the left of approaching traffic, at the end of a structure, on two-lane conventional highway where the roadbed width across the structure is less than 40 feet.
   c. To the right of approaching traffic at the end of each structure on multilane freeways or expressways with separate adjacent or parallel bridges.
   d. To the right of approaching traffic at the end of the structure on multilane freeways or expressways with decked median on the bridge.
10. See Revised Standard Plan RSP A77Q3 for typical layout used left of approaching traffic at the ends of each structure on multilane freeways or expressways with separate adjacent or parallel bridges.
11. For additional details of typical connections to bridge rail, see Connection Detail AA on Revised Standard Plans RSP A77U1 and RSP A77U2 and Connection Detail FF on Revised Standard Plans RSP A77V1 and RSP A77V2.
12. For additional details of a typical connection to walls or abutments, see Revised Standard Plan RSP A77U3.

STATE OF CALIFORNIA
DEPARTMENT OF TRANSPORTATION

MIDWEST GUARDRAIL SYSTEM TYPICAL LAYOUTS FOR STRUCTURE APPROACH

NO SCALE

RSP A77Q1 DATED AUGUST 14, 2015 SUPERSEDES RSP A77Q1 DATED JULY 19, 2013 THAT SUPPLEMENTS THE STANDARD PLANS BOOK DATED 2010.

REVISED STANDARD PLAN RSP A77Q1

2010 REVISED STANDARD PLAN RSP A77Q1

DATE PLOTTED => 01-FEB-2016
TIME PLOTTED => 09:08

P:\PROJ\01\0B27U\drafting\01-0B27u4\010b270va011.dgn

USERNAME => s132662
DGN FILE => 010b270va011.dgn

8-12-15

Dist	COUNTY	ROUTE	POST MILES TOTAL PROJECT	SHEET No.	TOTAL SHEETS
01	DN	101	14.9/15.3	34	91

Randell D. Hiatt
REGISTERED CIVIL ENGINEER

August 14, 2015
PLANS APPROVAL DATE

REGISTERED PROFESSIONAL ENGINEER
Randell D. Hiatt
No. C50200
Exp. 6-30-17
CIVIL
STATE OF CALIFORNIA

THE STATE OF CALIFORNIA OR ITS OFFICERS OR AGENTS SHALL NOT BE RESPONSIBLE FOR THE ACCURACY OR COMPLETENESS OF SCANNED COPIES OF THIS PLAN SHEET.

TO ACCOMPANY PLANS DATED 11/30/15

2010 REVISED STANDARD PLAN RSP A77Q4

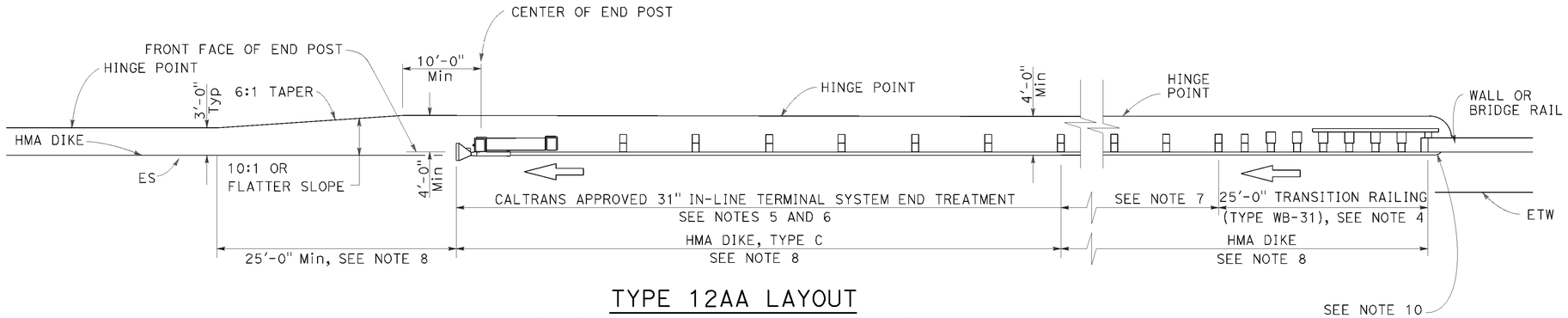

TYPE 12AA LAYOUT

(MGS installation at structure departure with
31" in-line end treatment at trailing end of railing)
See Notes 8 and 9

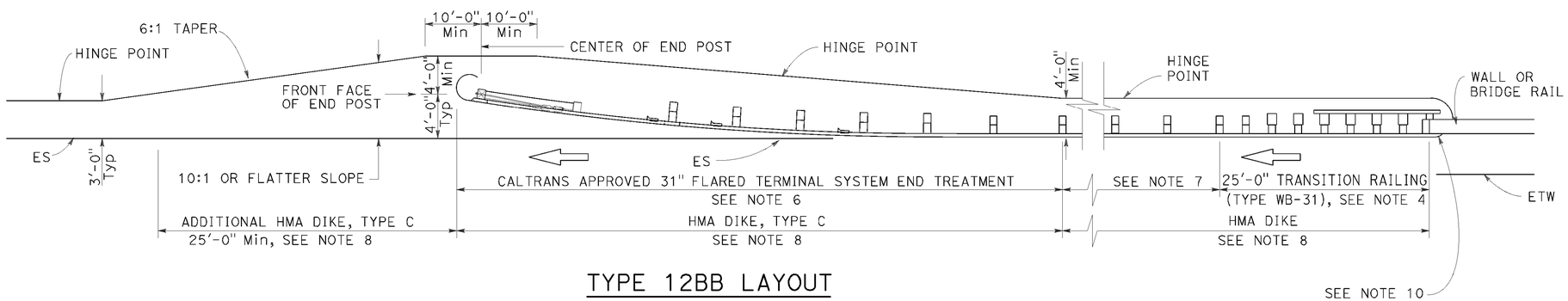

TYPE 12BB LAYOUT

(MGS installation at structure departure with
31" flared end treatment at trailing end of railing)
See Notes 8 and 9

NOTES:

1. Line post, blocks and hardware to be used are shown on Revised Standard Plans RSP A77L1, RSP A77L2, RSP A77M1, RSP A77N1 and RSP A77N2.
2. MGS post spacing to be 6'-3" center to center, except as otherwise noted.
3. Except as noted, line posts are 6" x 8" x 6'-0" wood with 6" x 12" x 1'-2" wood blocks. W6 x 8.5 or W6 x 9 steel posts, 6'-0" in length, with 6" x 12" x 1-2" notched wood blocks or notched recycled plastic blocks may be used for 6" x 8" x 6'-0" wood posts with 6" x 12" x 1'-2" wood blocks where applicable and when specified.
4. For Transition Railing (Type WB-31) details for Types 12AA and 12BB Layouts, see Revised Standard Plan RSP A77U4.
5. 31" in-line terminal system treatments are used where site conditions will not accommodate a 31" flared end treatment.
6. The type of 31" terminal system to be used will be shown on the Project Plans.
7. Dependent on site conditions (embankment height, side slopes, other fixed objects), it may be advisable to construct additional MGS (a length equal to multiples of 12'-6" with 6'-3" post spacing) between the transition railing and 31" end treatments.
8. Where placement of dike is required with MGS installations, see Revised Standard Plan RSP A77N4 for dike positioning details.
9. Type 12AA or Type 12BB Layouts are typically used to the right of traffic departing a structure on two-way conventional highways where the roadbed width across the structure is less than 40 feet.
10. For additional details of typical connections to bridge rail, see Connection Detail CC on Revised Standard Plan RSP A77U2 and Connection Detail HH on Revised Standard Plan RSP A77V2.

STATE OF CALIFORNIA
DEPARTMENT OF TRANSPORTATION

MIDWEST GUARDRAIL SYSTEM TYPICAL LAYOUTS FOR STRUCTURE DEPARTURE

NO SCALE

RSP A77Q4 DATED AUGUST 14, 2015 SUPERSEDES RSP A77Q4 DATED JULY 19, 2013 THAT SUPPLEMENTS THE STANDARD PLANS BOOK DATED 2010.

REVISED STANDARD PLAN RSP A77Q4

P:\PROJ\01\0B27U\drafting\01-0B27U4\010b270va012.dgn

DATE PLOTTED => 01-FEB-2016
TIME PLOTTED => 09:08

USERNAME => s132662
DGN FILE => 010b270va012.dgn

8-12-15

Dist	COUNTY	ROUTE	POST MILES TOTAL PROJECT	SHEET No.	TOTAL SHEETS
01	DN	101	14.9/15.3	35	91

Randell D. Hiatt
REGISTERED CIVIL ENGINEER

January 23, 2015
PLANS APPROVAL DATE

REGISTERED PROFESSIONAL ENGINEER
Randell D. Hiatt
No. C50200
Exp. 6-30-15
CIVIL
STATE OF CALIFORNIA

THE STATE OF CALIFORNIA OR ITS OFFICERS OR AGENTS SHALL NOT BE RESPONSIBLE FOR THE ACCURACY OR COMPLETENESS OF SCANNED COPIES OF THIS PLAN SHEET.

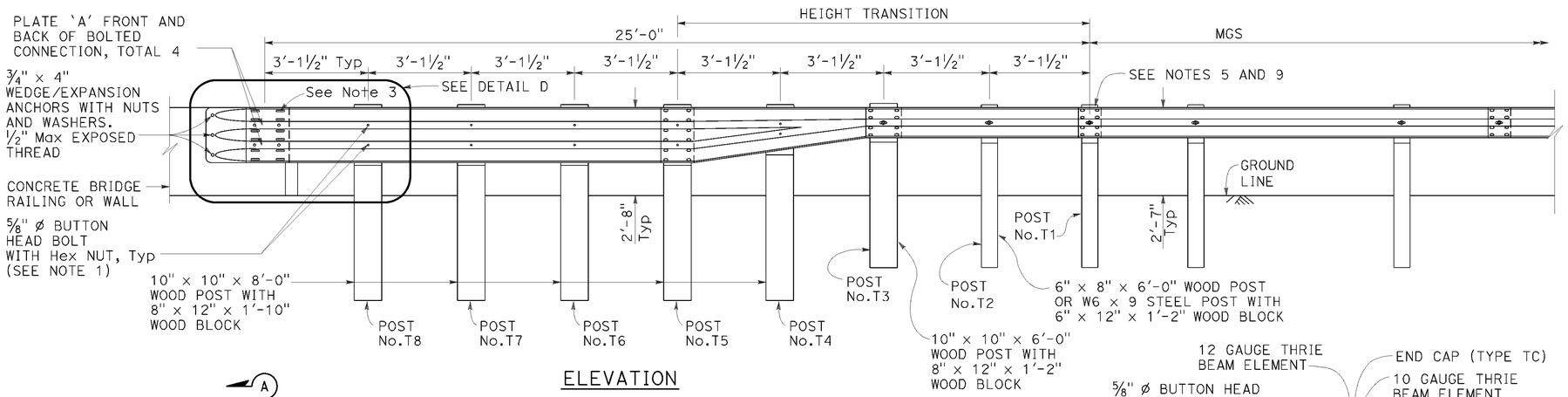

ELEVATION

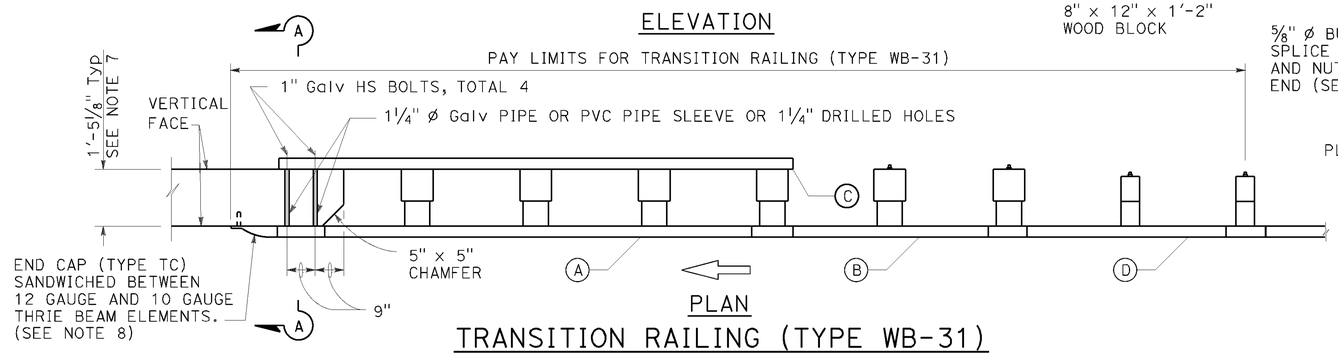

PLAN

TRANSITION RAILING (TYPE WB-31)

(No Blockout Attachment)

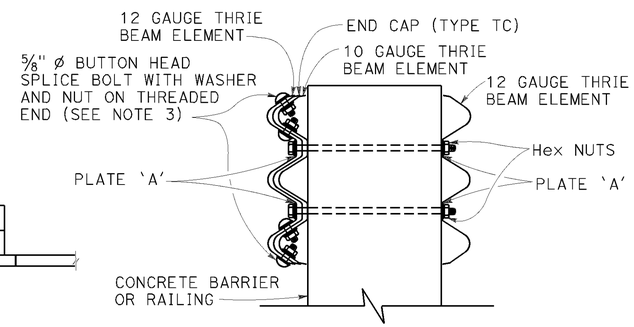

SECTION A-A

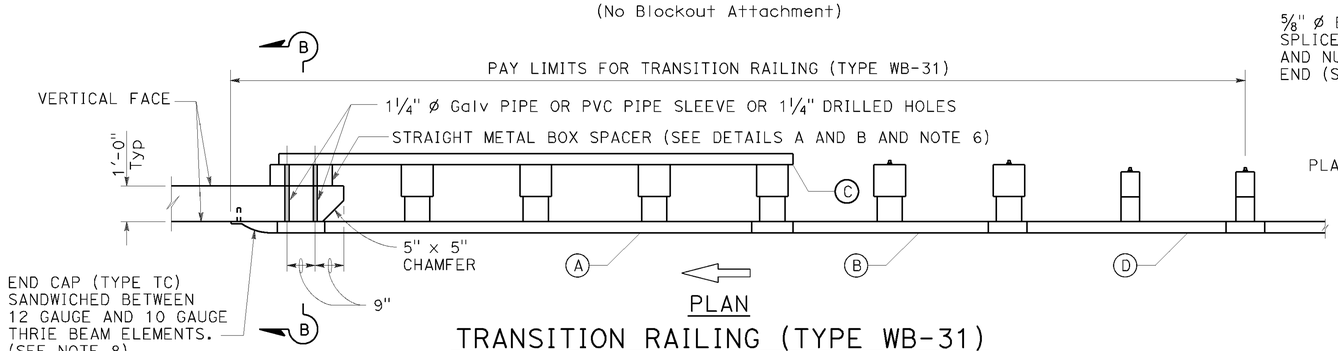

PLAN

TRANSITION RAILING (TYPE WB-31)

(Blockout Attachment)

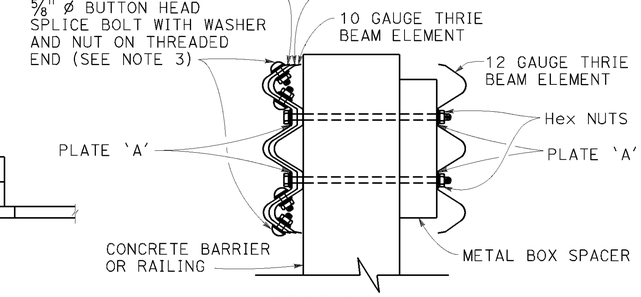

SECTION B-B

LEGEND:

- (A) NESTED THRIE BEAM ELEMENTS (ONE 12 GAUGE ELEMENT NESTED OVER ONE 10 GAUGE ELEMENT).
- (B) ONE ASYMMETRICAL 10 GAUGE "W" BEAM TO THRIE BEAM ELEMENT.
- (C) ONE 12 GAUGE THRIE BEAM ELEMENT.
- (D) ONE 10 GAUGE "W" BEAM RAIL ELEMENT (7'-3 1/2"LENGTH)

10 GAUGE = 0.138" THICK
12 GAUGE = 0.108" THICK

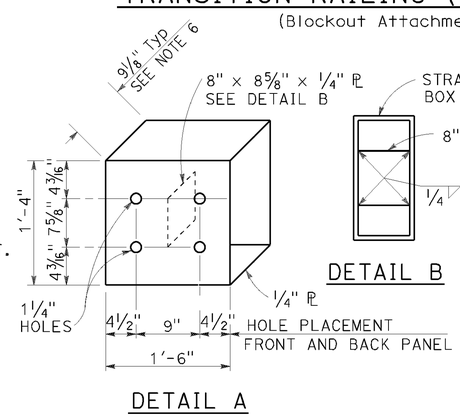

DETAIL A

STRAIGHT METAL BOX SPACER

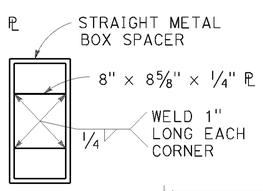

DETAIL B

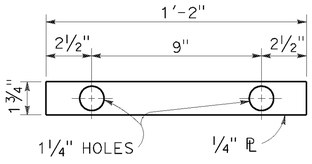

DETAIL C

PLATE 'A'

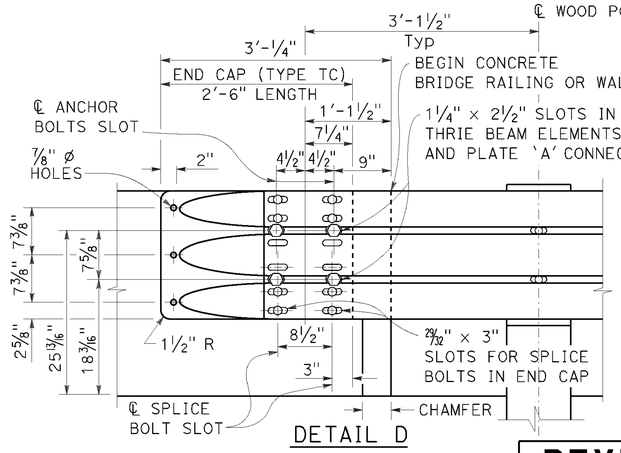

DETAIL D

NOTES:

TO ACCOMPANY PLANS DATED 11/30/15

1. Use 5/8" ø Button head bolts and hex nuts for connections to posts. No washer on rail face for bolted connections to post.
2. The nested rail elements, end cap, and 'W' beam to thrie beam element may be spliced together prior to bolting the elements to the wood post and concrete barrier or railing.
3. Exterior splice bolt holes for rail element splices at Post No. T5 and the connection to the concrete barrier or railing shall be the standard 29/32" × 1 1/8" slot size. Interior splice bolt holes at these locations may be increased up to 1 1/4" ø. Only the top 4 and the bottom 4 splice bolts with washers and nuts are required for rail splices at Post No. T5 and the connection to the concrete barrier or railing.
4. The top elevation of Posts No. T2 through No. T7 shall not project more than 1" above the top elevation of the rail element.
5. Typically, the railing connected to Transition Railing (Type WB-31) will be either standard railing section of MGS with height transition ratio of 150:1 or a Caltrans approved 31" end treatment attached to Post No. T1.
6. The depth of the metal box spacer varies from the 9 1/8" to 1 1/2" and is dependent on the width of the concrete railing or wall. The combined dimension for the depth of the metal box spacer plus the width of railing or wall is typically 21 1/8". Where the space between the backside of the concrete railing or wall and the rear thrie beam element is less than 1 1/2", metal plates similar to Plate 'A' are to be used as spacers.
7. Where the width of the concrete railing or wall is greater than 17 1/8", wood blocks are to be used to fill the space created between the backside of Posts No. T5 through No. T8 and the rear thrie beam element. These wood blocks shall be 8" in width and 1'-2" in length. The dimension between the front thrie beam element and the rear thrie beam element is to match the width of the concrete railing or wall.
8. End cap may be installed over 12 gauge and 10 gauge thrie beam elements where transition railing is installed on the departure end of bridge railing.
9. Conform standard railing section height to 31" at Post No. T1 using height transition ratio of 150:1.

STATE OF CALIFORNIA
DEPARTMENT OF TRANSPORTATION

MIDWEST GUARDRAIL SYSTEM TRANSITION RAILING (TYPE WB-31)

NO SCALE

RSP A77U4 DATED JANUARY 23, 2015 SUPERSEDES RSP A77U4 DATED NOVEMBER 15, 2013 AND RSP A77U4 DATED JULY 19, 2013 THAT SUPPLEMENTS THE STANDARD PLANS BOOK DATED 2010.

REVISED STANDARD PLAN RSP A77U4

2010 REVISED STANDARD PLAN RSP A77U4

DATE PLOTTED => 01-FEB-2016
TIME PLOTTED => 09:08

P:\PROJ\01\0B27U\drafting\01-0B27u4\010b270va013.dgn

USERNAME => s132662
DGN FILE => 010b270va013.dgn

1-8-15

Dist	COUNTY	ROUTE	POST MILES TOTAL PROJECT	SHEET No.	TOTAL SHEETS
01	DN	101	14.9/15.3	36	91

REGISTERED CIVIL ENGINEER

April 20, 2012
PLANS APPROVAL DATE

REGISTERED PROFESSIONAL ENGINEER Gary Wang No. C58298 Exp. 6-30-12 CIVIL STATE OF CALIFORNIA

THE STATE OF CALIFORNIA OR ITS OFFICERS OR AGENTS SHALL NOT BE RESPONSIBLE FOR THE ACCURACY OR COMPLETENESS OF SCANNED COPIES OF THIS PLAN SHEET.

TO ACCOMPANY PLANS DATED 11/30/15

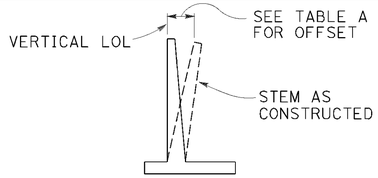

APPROXIMATE WALL OFFSET VALUES

Values for offseting forms to be determined by the Engineer.

TABLE A

H	OFFSET
4'-12'	H/200
14'-16'	H/160
18'-20'	H/140
22'-24'	H/130
26'-36'	2½"

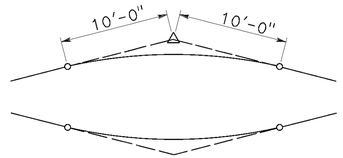

20'-0" VC AT TOP OF WALL SLOPE CHANGE

Where shown on the plans

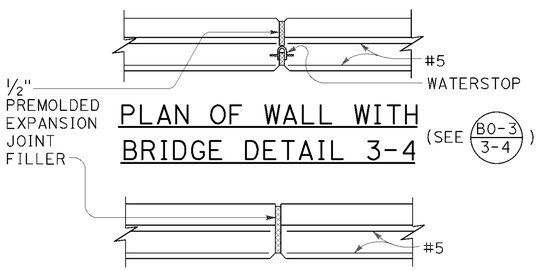

PLAN OF WALL WITH BRIDGE DETAIL 3-4

(SEE B0-3 / 3-4)

PLAN OF WALL WITH EXPANSION JOINT ONLY

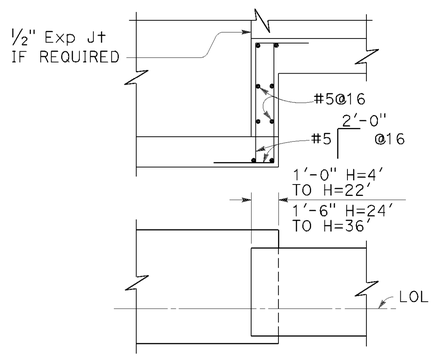

FOOTING STEP

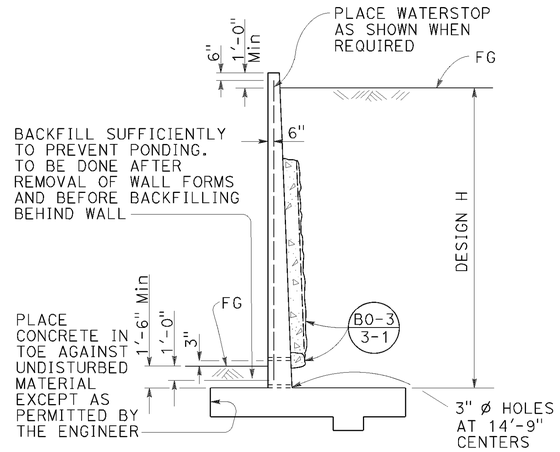

DESIGN AND DRAINAGE

DESIGN CONDITIONS:

Design "H" may be exceeded by 6" before going to the next size. Special footing design is required where foundation material is incapable of supporting bearing stress listed in table

Return wall not required unless shown elsewhere

DESIGN NOTES:

DESIGN: AASHTO LRFD Bridge Design Specifications, 4th edition with California Amendments

LIVE LOAD: Surcharge on level ground surface

SOIL: ϕ = 34°
γ = 120 pcf

REINFORCED CONCRETE: fy = 60,000 psi
fc' = 3,600 psi

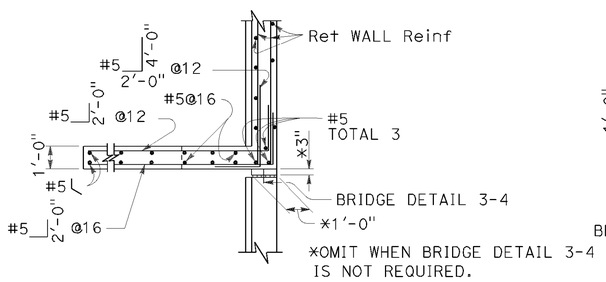

PLAN
(For return wall Type "A")

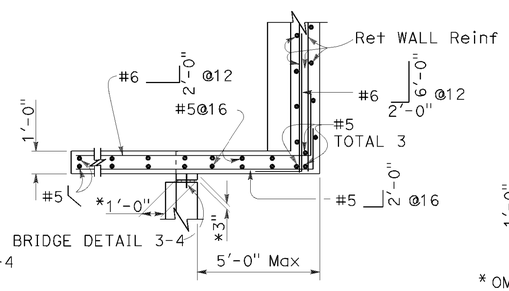

PLAN
(For return wall Type "B")

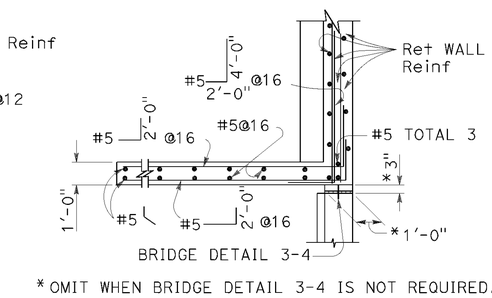

*OMIT WHEN BRIDGE DETAIL 3-4 IS NOT REQUIRED.

PLAN
(For return wall Type "C")

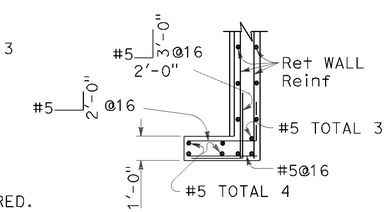

PLAN
(For return wall Type "D")

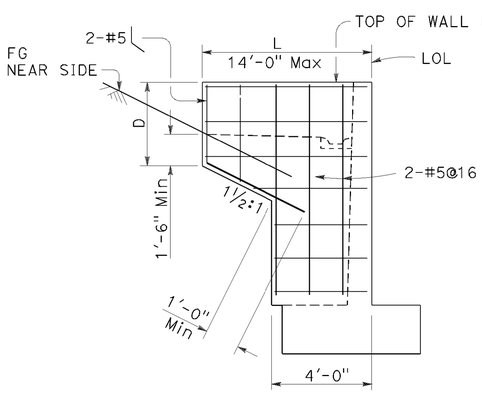

ELEVATION

RETURN WALL TYPE "A"

Use where H=8' or less

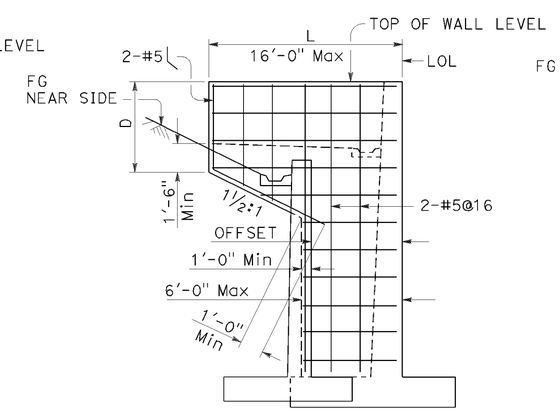

ELEVATION

RETURN WALL TYPE "B"

Use where H=10' or more on offset walls

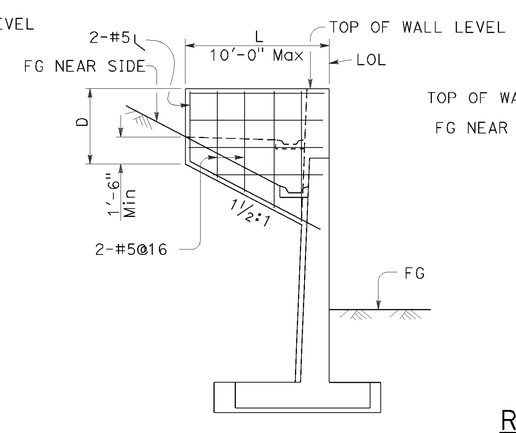

ELEVATION

RETURN WALL TYPE "C"

Use where H=10' or more on straight walls

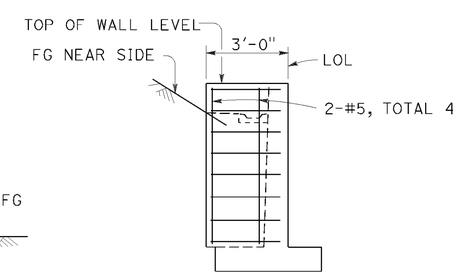

ELEVATION

RETURN WALL TYPE "D"

Use where H=6' or less

STATE OF CALIFORNIA
DEPARTMENT OF TRANSPORTATION

RETAINING WALL DETAILS No. 1

NO SCALE

RSP B3-5 DATED APRIL 20, 2012 SUPERSEDES STANDARD PLAN B3-5 DATED MAY 20, 2011 - PAGE 277 OF THE STANDARD PLANS BOOK DATED 2010.

REVISED STANDARD PLAN RSP B3-5

2010 REVISED STANDARD PLAN RSP B3-5

DATE PLOTTED => 01-FEB-2016
TIME PLOTTED => 09:09

P:\PROJ\01\0B27U\drafting\01-0B27u4\010b270va014.dgn

USERNAME => s132662
DGN FILE => 010b270va014.dgn

2-22-13

Dist	COUNTY	ROUTE	POST MILES TOTAL PROJECT	SHEET No.	TOTAL SHEETS
01	DN	101	14.9/15.3	37	91

REGISTERED CIVIL ENGINEER

October 21, 2011
PLANS APPROVAL DATE

REGISTERED PROFESSIONAL ENGINEER Tillat Satter No. C42892 Exp. 3-31-12 CIVIL STATE OF CALIFORNIA

THE STATE OF CALIFORNIA OR ITS OFFICERS OR AGENTS SHALL NOT BE RESPONSIBLE FOR THE ACCURACY OR COMPLETENESS OF SCANNED COPIES OF THIS PLAN SHEET.

TO ACCOMPANY PLANS DATED 11/30/15

2010 REVISED STANDARD PLAN RSP B11-47

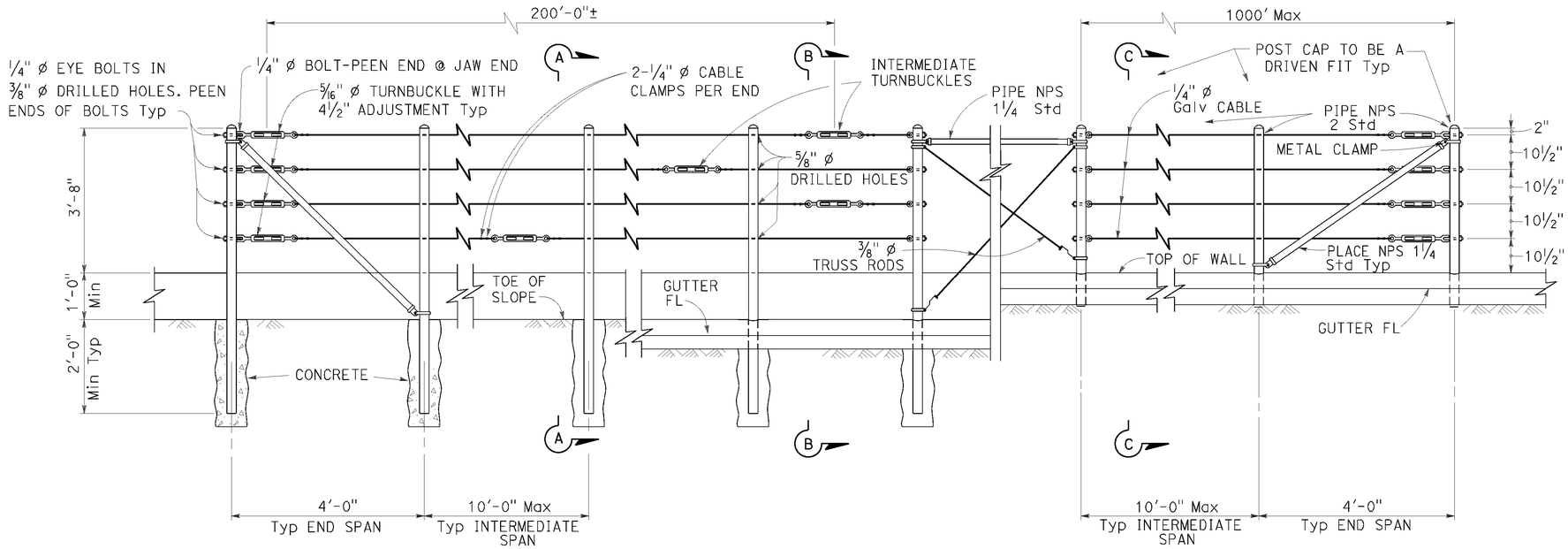

EXISTING WALL (WITHOUT GUTTER)
Existing

RETAINING WALL (WITH GUTTER)
Existing

RETAINING WALL (WITH GUTTER)
New construction

ELEVATION

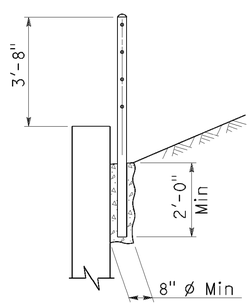

SECTION A-A
Existing

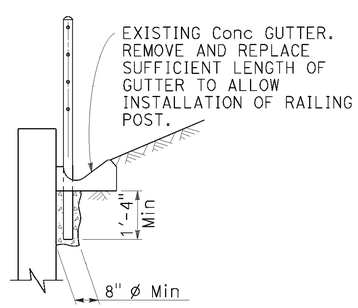

SECTION B-B
Existing

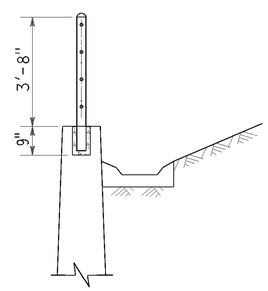

SECTION C-C
New construction

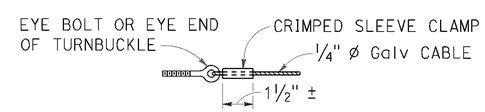

ALTERNATIVE CABLE CONNECTION

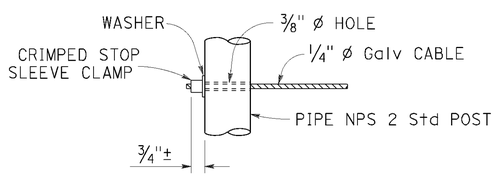

ALTERNATIVE DEAD END ANCHORAGE

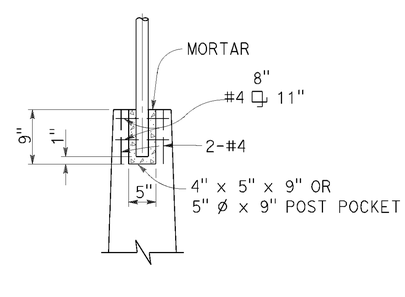

POST POCKET

NOTES:

1. Maximum distance between turnbuckles shall be 200'-0"±.
2. Intermediate turnbuckles to be placed in adjacent spans.
3. Cable shall not be spliced between intermediate turnbuckles and end posts.
4. Posts to be vertical.
5. Alignment of holes in posts may vary to conform to slope of top of retaining wall.
6. The Contractor shall verify all dependent dimensions in the field before ordering or fabricating any material.
7. Line posts shall be braced horizontally and trussed diagonally in both directions at intervals not to exceed 1000'.
8. Post pockets to be centered in top of wall.
9. Typical end spans, braced in both directions, shall be constructed at changes in line where the angle of deflection is 15° or more.
10. Provide thimbles at all cable loops.

STATE OF CALIFORNIA
DEPARTMENT OF TRANSPORTATION

CABLE RAILING

NO SCALE

RSP B11-47 DATED OCTOBER 21, 2011 SUPERSEDES STANDARD PLAN B11-47 DATED MAY 20, 2011 - PAGE 293 OF THE STANDARD PLANS BOOK DATED 2010.

REVISED STANDARD PLAN RSP B11-47

DATE PLOTTED => 01-FEB-2016
TIME PLOTTED => 09:09

Dist	COUNTY	ROUTE	POST MILES TOTAL PROJECT	SHEET No.	TOTAL SHEETS
01	DN	101	14.9/15.3	38	91

REGISTERED CIVIL ENGINEER

April 20, 2012
PLANS APPROVAL DATE

REGISTERED PROFESSIONAL ENGINEER
Tillat Satter
No. C42892
Exp. 3-31-14
CIVIL
STATE OF CALIFORNIA

THE STATE OF CALIFORNIA OR ITS OFFICERS OR AGENTS SHALL NOT BE RESPONSIBLE FOR THE ACCURACY OR COMPLETENESS OF SCANNED COPIES OF THIS PLAN SHEET.

TO ACCOMPANY PLANS DATED 11/30/15

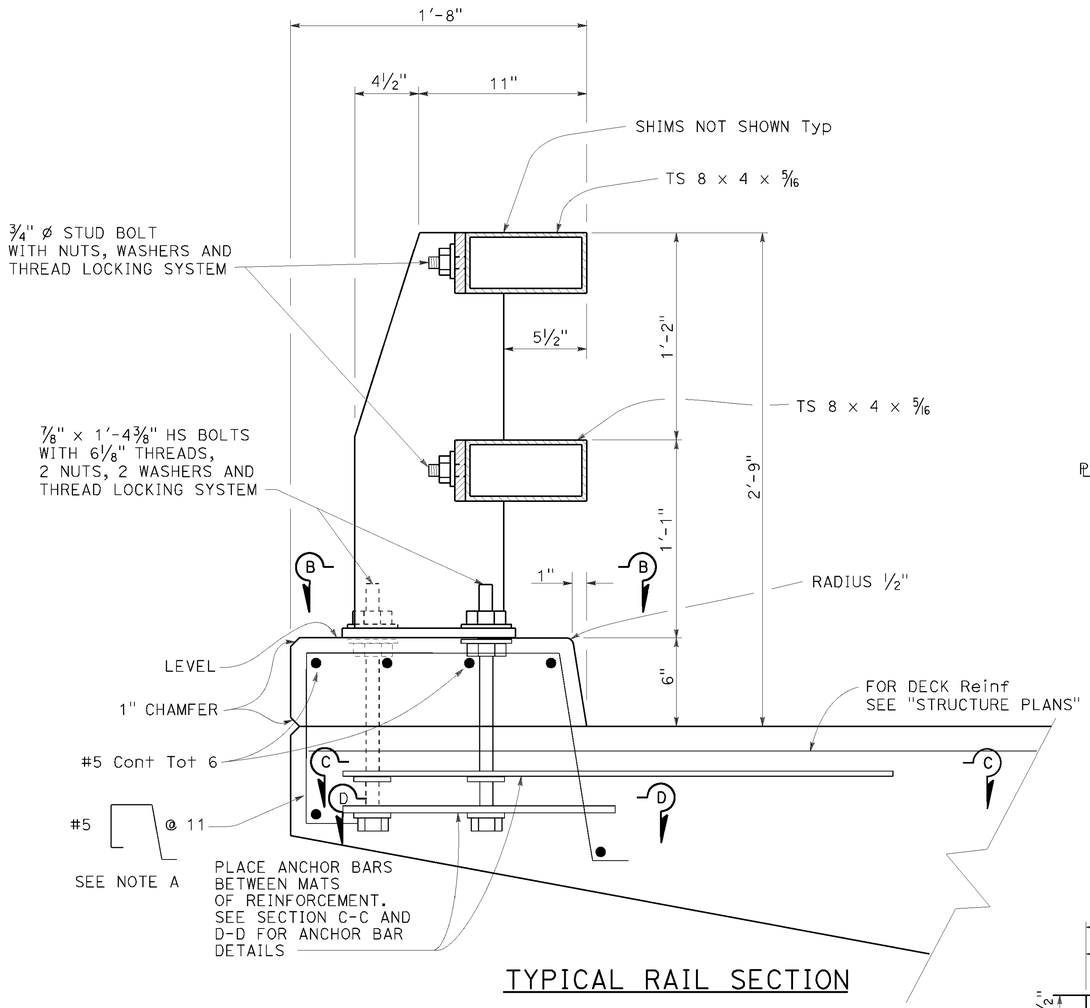

TYPICAL RAIL SECTION

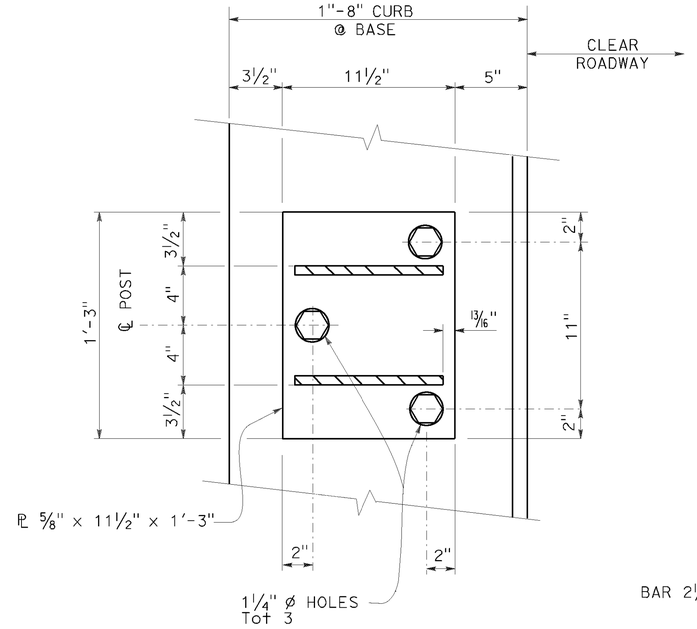

SECTION B-B

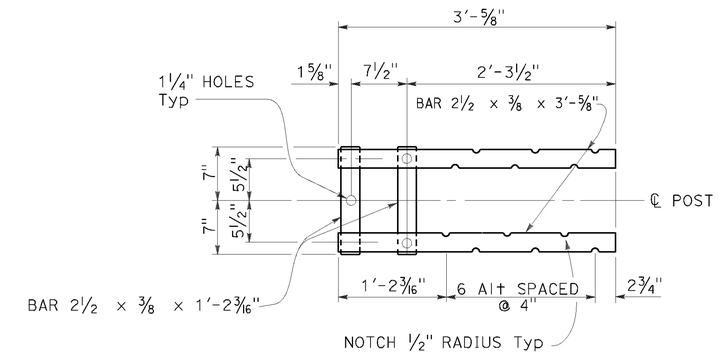

SECTION C-C
Top Anchorage

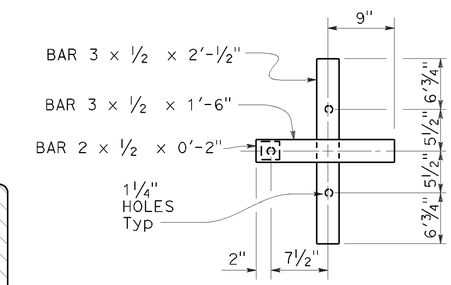

SECTION D-D
Lower Anchorage

NOTE A

Adjust spacing to clear scupper opening by 2" if applicable.

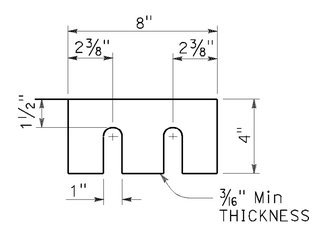

SHIMS REQUIRED FOR
TOP AND BOTTOM RAIL

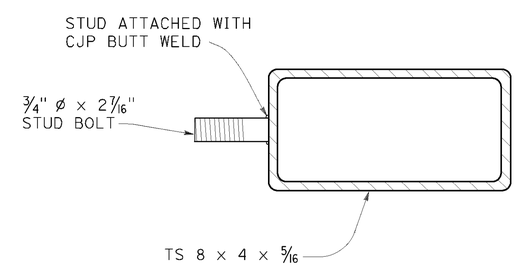

SECTION AT POST

STUD BOLT DETAIL

STATE OF CALIFORNIA
DEPARTMENT OF TRANSPORTATION

CALIFORNIA ST-10 BRIDGE RAIL (SHEET 1 OF 3)

NO SCALE

RSP B11-68 DATED APRIL 20, 2012 SUPERSEDES STANDARD PLAN B11-68
DATED MAY 20, 2011 - PAGE 308 OF THE STANDARD PLANS BOOK DATED 2010.

REVISED STANDARD PLAN RSP B11-68

2010 REVISED STANDARD PLAN RSP B11-68

Dist	COUNTY	ROUTE	POST MILES TOTAL PROJECT	SHEET No.	TOTAL SHEETS
01	DN	101	14.9/15.3	39	91

REGISTERED CIVIL ENGINEER

July 19, 2013
PLANS APPROVAL DATE

REGISTERED PROFESSIONAL ENGINEER
Tillat Satter
No. C42892
Exp. 3-31-14
CIVIL
STATE OF CALIFORNIA

THE STATE OF CALIFORNIA OR ITS OFFICERS OR AGENTS SHALL NOT BE RESPONSIBLE FOR THE ACCURACY OR COMPLETENESS OF SCANNED COPIES OF THIS PLAN SHEET.

TO ACCOMPANY PLANS DATED 11/30/15

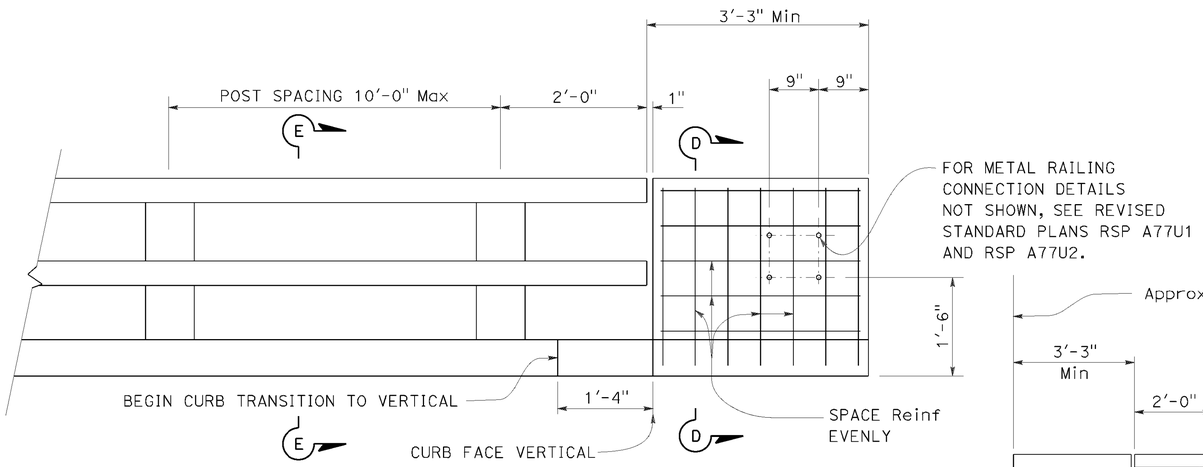

END OF RAILING ELEVATION

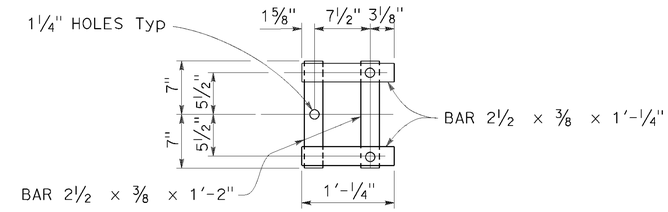

WALL ANCHOR PLATE DETAIL

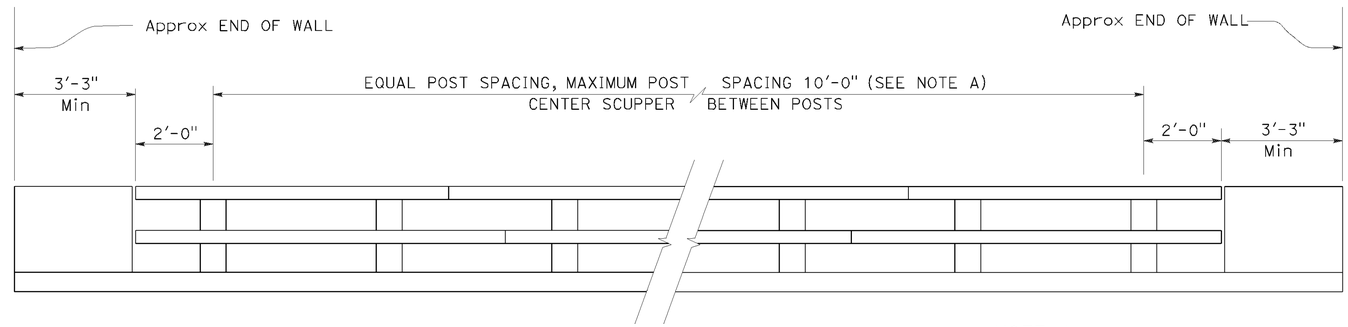

BRIDGE RAILING ELEVATION

NOTE A:

Post spacing and/or block length to be adjusted to fit bridge length or wingwall length.

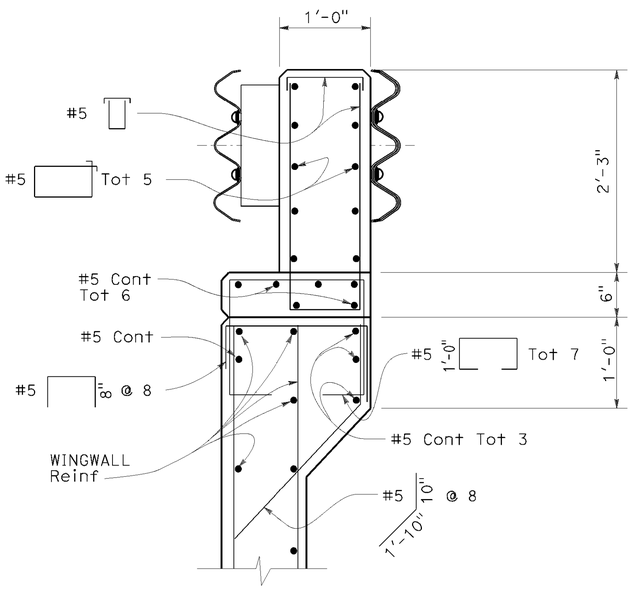

SECTION D-D

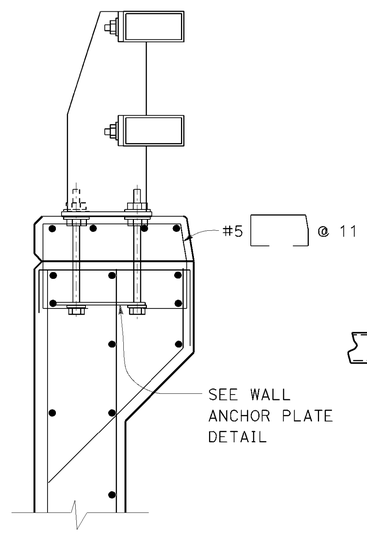

SECTION E-E

Reinf same as for Section D-D except as noted.

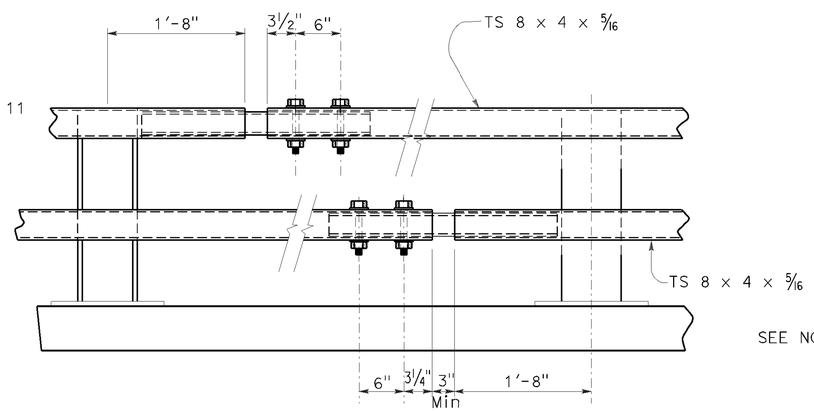

EXPANSION SPLICE

NOTE B:

Use ¾" * × 5⅝"
Hs bolts with washers, fully tensioned.
1" holes in rail Typ

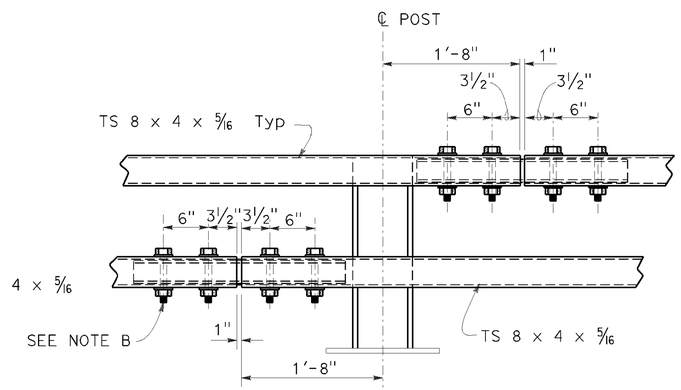

STANDARD SPLICE

STATE OF CALIFORNIA
DEPARTMENT OF TRANSPORTATION

CALIFORNIA ST-10 BRIDGE RAIL (SHEET 3 OF 3)

NO SCALE

RSP B11-70 DATED JULY 19, 2013 SUPERSEDES STANDARD PLAN B11-70 DATED MAY 20, 2011 - PAGE 310 OF THE STANDARD PLANS BOOK DATED 2010.

REVISED STANDARD PLAN RSP B11-70

2010 REVISED STANDARD PLAN RSP B11-70

P:\PROJ\01\0B27U\drafting\01-0B27U4\010b270va017.dgn
USERNAME => s132662
DGN FILE => 010b270va017.dgn
DATE PLOTTED => 01-FEB-2016
TIME PLOTTED => 09:09
6-27-13

Dist	COUNTY	ROUTE	POST MILES TOTAL PROJECT	SHEET No.	TOTAL SHEETS
01	DN	101	14.9/15.3	40	91

Theresa Gabriel
REGISTERED ELECTRICAL ENGINEER

October 30, 2015
PLANS APPROVAL DATE

REGISTERED PROFESSIONAL ENGINEER Theresa Aziz Gabriel No. E15129 Exp. 6-30-16 ELECTRICAL STATE OF CALIFORNIA

THE STATE OF CALIFORNIA OR ITS OFFICERS OR AGENTS SHALL NOT BE RESPONSIBLE FOR THE ACCURACY OR COMPLETENESS OF SCANNED COPIES OF THIS PLAN SHEET.

TO ACCOMPANY PLANS DATED 11/30/15

LEGEND:

AB	ABANDON. IF APPLIED TO CONDUIT, REMOVE CONDUCTORS
BC	INSTALL PULL BOX IN EXISTING CONDUIT RUN
BP	PEDESTRIAN BARRICADE, TYPE AS INDICATED ON PLAN
CB	INSTALL CONDUIT INTO EXISTING PULL BOX
CC	CONNECT NEW AND EXISTING CONDUIT. REMOVE EXISTING CONDUCTORS AND INSTALL CONDUCTORS AS INDICATED
CF	CONDUIT TO REMAIN FOR FUTURE USE. REMOVE CONDUCTORS. INSTALL PULL TAPE
DH	DETECTOR HANDHOLE
FA	FOUNDATION TO BE ABANDONED
IS	INSTALL SIGN ON SIGNAL MAST ARM
NS	NO SLIP BASE ON STANDARD
PEC	PHOTOELECTRIC CONTROL
PEU	PHOTOELECTRIC UNIT
RC	EQUIPMENT OR MATERIAL TO BE REMOVED AND BECOME THE PROPERTY OF THE CONTRACTOR
RE	REMOVE ELECTROLIER, FUSES AND BALLAST. TAPE ENDS OF CONDUCTORS
RL	RELOCATE EQUIPMENT
RR	REMOVE AND REUSE EQUIPMENT
RS	REMOVE AND SALVAGE EQUIPMENT
SC	SPLICE NEW TO EXISTING CONDUCTORS
SD	SERVICE DISCONNECT
TSP	TELEPHONE SERVICE POINT

ABBREVIATIONS

AC+	UNDERGROUNDED CONDUCTOR
APS	ACCESSIBLE PEDESTRIAN SIGNAL
Batt	BATTERY
BBS	BATTERY BACKUP SYSTEM
BC	BOLT CIRCLE
Blk	BLACK
BP	BYPASS
BPB	BICYCLE PUSH BUTTON
C	CONDUIT
CB	CIRCUIT BREAKER
CCTV	CLOSED CIRCUIT TELEVISION
Ckt	CIRCUIT
CMS	CHANGEABLE MESSAGE SIGN
Ctid	CALTRANS IDENTIFICATION
Comm	COMMUNICATION
Cntl	CONTROL
DF	DEPARTMENT-FURNISHED
DLC	LOOP DETECTOR LEAD-IN CABLE
EMS	EXTINGUISHABLE MESSAGE SIGN
EVUC	EMERGENCY VEHICLE UNIT CABLE
EVUD	EMERGENCY VEHICLE UNIT DETECTOR
FB	FLASHING BEACON
FBCA	FLASHING BEACON CONTROL ASSEMBLY
FBS	FLASHING BEACON WITH SLIP BASE
FO	FIBER OPTIC
G	EQUIPMENT GROUNDING CONDUCTOR
GB	GROUND BUS
GFCI	GROUND FAULT CIRCUIT INTERRUPTER
Grn	GREEN
HAR	HIGHWAY ADVISORY RADIO
Hex	HEXAGONAL
HPS	HIGH PRESSURE SODIUM
IISNS	INTERNALLY ILLUMINATED STREET NAME SIGN
ISL	INDUCTION SIGN LIGHTING
LED	LIGHT EMITTING DIODE
LMA	LUMINAIRE MAST ARM
LPS	LOW PRESSURE SODIUM
Ltg	LIGHTING
Lum	LUMINAIRE
M	METERED
MAT	MAST ARM MOUNTING TOP ATTACHMENT
MAS	MAST ARM MOUNTING SIDE ATTACHMENT
MBPS	MANUAL BYPASS SWITCH
M/M	MULTIPLE TO MULTIPLE TRANSFORMER
Mtg	MOUNTING
MV	MERCURY VAPOR LIGHTING FIXTURE
MVDS	MICROWAVE VEHICLE DETECTION SYSTEM
N	NEUTRAL (GROUNDED CONDUCTOR)
NB	NEUTRAL BUS
NC	NORMALLY CLOSE
NO	NORMALLY OPEN
P	CIRCUIT BREAKER'S POLE
PB	PULL BOX
PBA	PUSH BUTTON ASSEMBLY
PEC	PHOTOELECTRIC CONTROL
Ped	PEDESTRIAN
PEU	PHOTOELECTRIC UNIT
PT	CONDUIT WITH PULL TAPE
PTR	POWER TRANSFER RELAY
RE	RELOCATED EQUIPMENT
RM	RAMP METERING
RWIS	ROADSIDE WEATHER INFORMATION SYSTEM
SB	SLIP BASE
SIC	SIGNAL INTERCONNECT CABLE
Sig	SIGNAL
SMA	SIGNAL MAST ARM
SNS	STREET NAME SIGN
SP	SERVICE POINT
TB	TERMINAL BOARD
TDC	TELEPHONE DEMARCATION CABINET
Temp	TEMPERATURE
TMS	TRAFFIC MONITORING STATION
TOS	TRAFFIC OPERATIONS SYSTEM
UPS	UNINTERRUPTABLE POWER SUPPLY
UPSC	UNINTERRUPTABLE POWER SUPPLY CONTROLLER
Veh	VEHICLE
VIVDS	VIDEO IMAGE VEHICLE DETECTION SYSTEM
Wht	WHITE
WIM	WEIGH-IN-MOTION
Xfmr	TRANSFORMER

SOFFIT AND WALL-MOUNTED LUMINAIRES

- PENDANT SOFFIT LUMINAIRE, 70 W HPS UNLESS OTHERWISE SPECIFIED
- FLUSH-MOUNTED SOFFIT LUMINAIRE, 70 W HPS UNLESS OTHERWISE SPECIFIED
- WALL-MOUNTED LUMINAIRE, 70 W HPS UNLESS OTHERWISE SPECIFIED
- EXISTING SOFFIT OR WALL-MOUNTED LUMINAIRE TO REMAIN UNMODIFIED
- EXISTING SOFFIT OR WALL-MOUNTED LUMINAIRE TO BE MODIFIED AS SPECIFIED

NOTE:
Arrow indicates "street side" of luminaire.

COMMONLY USED SYMBOLS FOR UNITED STATES CUSTOMARY UNITS OF MEASUREMENT:

SYMBOL	DEFINITIONS
Ω	OHMS
min	MINUTE
s	SECOND
bps	BITS PER SECOND
Bps	BYTES PER SECOND
A	AMPERE
V	VOLT
V(dc)	VOLT (DIRECT CURRENT)
V(ac)	VOLT (ALTERNATING CURRENT)
FC	FOOT - CANDLE
W	WATTS
VA	VOLT-AMPERE
M	MEGA
k	KILO
m	MILLI
μ	MICRO
P	PICO
Hz	HERTZ

MISCELLANEOUS ELECTROLIERS

NEW	EXISTING	
		LUMINAIRE ON WOOD POLE
		NON-STANDARD ELECTROLIER (SEE PROJECT LEGEND)
		CITY ELECTROLIER
		ELECTROLIER FOUNDATION (FUTURE INSTALLATION)

NOTES:

1. LED luminaires shall be 235 W when installed on Type 21, 21D, 30, 31 and 32 Standards, unless otherwise specified. LED luminaires shall be 165 W when installed on other type standards or poles, unless otherwise specified.
2. Luminaires shall be the cutoff type, ANSI Type III medium cutoff lighting distribution, unless otherwise specified.

STANDARD ELECTROLIER

NEW	EXISTING	STANDARD TYPE
		15
		15D
		15 STRUCTURE
		15D STRUCTURE
		21
		21D
		21 STRUCTURE
		21D STRUCTURE
		30
		31
		32

STATE OF CALIFORNIA
DEPARTMENT OF TRANSPORTATION

ELECTRICAL SYSTEMS (LEGEND AND ABBREVIATIONS)

NO SCALE

RSP ES-1A DATED OCTOBER 30, 2015 SUPERSEDES RSP ES-1A DATED JULY 19, 2013 AND STANDARD PLAN ES-1A DATED MAY 20, 2011 - PAGE 425 OF THE STANDARD PLANS BOOK DATED 2010.

REVISED STANDARD PLAN RSP ES-1A

2010 REVISED STANDARD PLAN RSP ES-1A

P:\PROJ\01\0B27U\drafting\01-0B27u4\010b270va018.dgn
USERNAME => s132662
DGN FILE => 010b270va018.dgn
DATE PLOTTED => 01-FEB-2016
TIME PLOTTED => 09:09
9-29-15

Dist	COUNTY	ROUTE	POST MILES TOTAL PROJECT	SHEET No.	TOTAL SHEETS
01	DN	101	14.9/15.3	41	91

Theresa Gabriel
REGISTERED ELECTRICAL ENGINEER

October 30, 2015
PLANS APPROVAL DATE

REGISTERED PROFESSIONAL ENGINEER Theresa Aziz Gabriel No. E15129 Exp. 6-30-16 ELECTRICAL STATE OF CALIFORNIA

THE STATE OF CALIFORNIA OR ITS OFFICERS OR AGENTS SHALL NOT BE RESPONSIBLE FOR THE ACCURACY OR COMPLETENESS OF SCANNED COPIES OF THIS PLAN SHEET.

TO ACCOMPANY PLANS DATED 11/30/15

CONDUIT

NEW	EXISTING	
		LIGHTING CONDUIT, UNLESS OTHERWISE INDICATED OR NOTED
		TRAFFIC SIGNAL CONDUIT
C	c	COMMUNICATION CONDUIT
T	t	TELEPHONE CONDUIT
F	f	FIRE ALARM CONDUIT
FO	fo	FIBER OPTIC CONDUIT
		CONDUIT TERMINATION
R	r	CONDUIT RISER ATTACHED TO THE STRUCTURE OR SERVICE POLE

SERVICE EQUIPMENT

NEW	EXISTING	
OH	oh	OVERHEAD LINES
U	U	WOOD POLE, "U" INDICATES UTILITY OWNED
		POLE GUY WITH ANCHOR
		UTILITY TRANSFORMER - GROUND MOUNTED
III	III	SERVICE EQUIPMENT ENCLOSURE TYPE. DOOR INDICATES FRONT OF ENCLOSURE
T	t	TELEPHONE DEMARCATION CABINET

POLE-MOUNTED SERVICE DESIGNATION

TYPE H SERVICE, 28'-10" — TYPE OF INSTALLATION AND POLE HEIGHT ABOVE GRADE

FLASHING BEACON

NEW	EXISTING	
R	R	FLASHING BEACON (ONE VEHICLE SIGNAL HEAD WITH BACKPLATE AND VISOR) "R" INDICATES RED INDICATION, "Y" INDICATES YELLOW INDICATION
Y Y	Y Y	FLASHING BEACON WITH TYPE 15-FBS STANDARD AND A SIGN.
R R	R R	FLASHING BEACON WITH TYPES 9, 9A OR 9B SIGN UNLESS OTHERWISE SPECIFIED OR INDICATED

SIGNAL EQUIPMENT

NEW	EXISTING	
		PEDESTRIAN SIGNAL HEAD
		PUSH BUTTON ASSEMBLY POST
		PEDESTRIAN BARRICADE
		VEHICLE SIGNAL HEAD (WITH BACKPLATE AND 3-SECTIONS: RED, YELLOW AND GREEN)
		VEHICLE SIGNAL HEAD WITH ANGLE VISOR
PV	PV	MODIFICATIONS OF BASIC SYMBOL: "L" INDICATES ALL NON-ARROW SECTIONS LOUVERED "LG" INDICATES LOUVERED GREEN SECTION ONLY "PV" INDICATES ALL 12" SECTIONS PROGRAMMED VISIBILITY "8" INDICATES ALL 8" SECTIONS (ONLY WHEN SPECIFIED)
		VEHICLE SIGNAL HEAD CONSISTING OF RED, YELLOW AND GREEN LEFT ARROW SECTIONS
		VEHICLE SIGNAL HEAD CONSISTING OF RED AND YELLOW SECTIONS WITH AN UP GREEN ARROW SECTION
		VEHICLE SIGNAL HEAD (5 SECTION) CONSISTING OF RED, YELLOW AND GREEN SECTIONS WITH YELLOW AND GREEN RIGHT ARROW SECTIONS
		TYPE 15TS STANDARD WITH VEHICLE SIGNAL HEAD AND LUMINAIRE
		TYPE 21TS STANDARD WITH VEHICLE SIGNAL HEAD AND LUMINAIRE
		STANDARD WITH LUMINAIRE AND SIGNAL MAST ARMS AND ATTACHED VEHICLE SIGNAL HEADS
		TYPE 1 STANDARD WITH ATTACHED VEHICLE SIGNAL HEADS
		STANDARD WITH A SIGNAL MAST ARM, ATTACHED VEHICLE SIGNAL HEADS AND INTERNALLY ILLUMINATED STREET NAME SIGN
		CONTROLLER ASSEMBLY. DOOR INDICATES FRONT OF CABINET

SIGNAL EQUIPMENT Cont

NEW	EXISTING	
		GUARD POST
		TYPE 1 STANDARD WITH RAMP METERING SIGN
		OPTICAL DETECTOR FOR THE EMERGENCY VEHICLE DETECTION

NOTES:

1. All signal sections shall be 12" unless shown otherwise.
2. Signal heads shall be provided with backplates unless shown otherwise.

ILLUMINATED OVERHEAD SIGN

NEW	EXISTING	
		SINGLE POST, SINGLE ILLUMINATED SIGN, BALANCED BUTTERFLY
		SINGLE POST, DOUBLE ILLUMINATED SIGN, BALANCED BUTTERFLY
		SINGLE POST, SINGLE ILLUMINATED SIGN, FULL CANTILEVER
		DOUBLE POST, SINGLE ILLUMINATED SIGN
		SINGLE ILLUMINATED SIGN MOUNTED ON STRUCTURE
		DOUBLE POST, SINGLE ILLUMINATED SIGN WITH ELECTROLIER

STATE OF CALIFORNIA
DEPARTMENT OF TRANSPORTATION

ELECTRICAL SYSTEMS (LEGEND AND ABBREVIATIONS)

NO SCALE

RSP ES-1B DATED OCTOBER 30, 2015 SUPERSEDES RSP ES-1B DATED JULY 19, 2013 AND STANDARD PLAN ES-1B DATED MAY 20, 2011 - PAGE 426 OF THE STANDARD PLANS BOOK DATED 2010.

REVISED STANDARD PLAN RSP ES-1B

2010 REVISED STANDARD PLAN RSP ES-1B

P:\PROJ\01\0B27U\drafting\01-0B27u4\010b270va019.dgn
USERNAME => s132662
DGN FILE => 010b270va019.dgn
DATE PLOTTED => 01-FEB-2016
TIME PLOTTED => 09:09
8-19-15

Dist	COUNTY	ROUTE	POST MILES TOTAL PROJECT	SHEET No.	TOTAL SHEETS
01	DN	101	14.9/15.3	42	91

Theresa Gabriel
REGISTERED ELECTRICAL ENGINEER

October 30, 2015
PLANS APPROVAL DATE

REGISTERED PROFESSIONAL ENGINEER Theresa Aziz Gabriel No. E15129 Exp. 6-30-16 ELECTRICAL STATE OF CALIFORNIA

THE STATE OF CALIFORNIA OR ITS OFFICERS OR AGENTS SHALL NOT BE RESPONSIBLE FOR THE ACCURACY OR COMPLETENESS OF SCANNED COPIES OF THIS PLAN SHEET.

TO ACCOMPANY PLANS DATED 11/30/15

EQUIPMENT IDENTIFICATION

ILLUMINATED SIGN IDENTIFICATION NUMBER:

SIGN No. 12345
10 ISL SCI 1.0

- SIGN NUMBER - PLACE ON POST OR STRUCTURE
- TRANSFORMER RATING (kVA)
- LIGHTING CONTROL TYPE
- NUMBER AND TYPE OF FIXTURES

} DO NOT PLACE ON STANDARD OR STRUCTURE

ELECTROLIER OR EQUIPMENT IDENTIFICATION NUMBER:

12345 - 15'-0"

- MAST ARM LENGTH, IF SHOWN. DO NOT PLACE ON STANDARD OR STRUCTURE
- EQUIPMENT NUMBER - PLACE ON STANDARD OR STRUCTURE. EXISTING EQUIPMENT NUMBERS ARE SHOWN IN PARENTHESIS

CONDUIT AND CONDUCTOR IDENTIFICATION:

1½"C, 2#10, 15#14, 2 DLC, 12P#18 (PAIR)

- NUMBER AND SIZE OF CONDUCTORS AND CABLES
- SIZE OF CONDUIT IN INCHES

Ø1, Ø2, Ø2P, etc.	TRAFFIC PHASE IDENTIFICATION FOR SIGNALS, DETECTORS AND PHASE DIAGRAMS
1 2 3	LEGEND NUMBERS
A B C	EQUIPMENT, SIGNAL POLES, INSTALLATION OR ITEMS
1 2 3	CONDUIT RUN NUMBERS

SIGNAL AND LIGHTING STANDARD (TYPICAL DESIGNATION):

19A - 3 - 100

- WIND VELOCITY = 100 mph
- CASE 3 ARM LOADING
- STANDARD TYPE
- STANDARD PLAN SHEET NUMBER
- DETAIL, NUMBER, SECTION, TYPE OR ELEVATION

MISCELLANEOUS EQUIPMENT

NEW	EXISTING	
CMS	cms	CHANGEABLE MESSAGE SIGN
		CLOSED CIRCUIT TELEVISION CAMERA
		HIGHWAY ADVISORY RADIO POLE AND ANTENNA
EMS	ems	LED EXTINGUISHABLE MESSAGE SIGN
M V	m v	DETECTION DEVICE M = MICROWAVE SENSOR V = VIDEO IMAGE SENSOR

WIRING DIAGRAM LEGEND

- EXTERNAL CONDUCTOR
- CONDUCTOR OR BUS
- TIE POINT
- CONTACTOR COIL
- CONTACTOR, NO CONTACT
- TERMINAL BLOCKS
- CONTACTOR, NC CONTACT
- ENCLOSURE BOND
- GROUNDING ELECTRODE
- CIRCUIT BREAKER
- RECEPTACLE

PULL BOXES

NEW	EXISTING	
		PULL BOX, No. 5 UNLESS OTHERWISE INDICATED OR NOTED
3	9A(21)	PULL BOX, ADDITIONAL DESIGNATIONS OR DESCRIPTIONS

3 No. 3½ PULL BOX
5 No. 5 PULL BOX
6 No. 6 PULL BOX
7 No. 7 (CEILING PULL BOX)
8 No. 8 (PENDANT SOFFIT PULL BOX)
9 No. 9 PULL BOX
9A No. 9A PULL BOX

(C) COMMUNICATIONS PULL BOX
(E) PULL BOX WITH EXTENSION
(S) SPRINKLER CONTROL PULL BOX
(21) ANCHOR BOLTS AND CONDUIT FOR FUTURE INSTALLATION OF TYPE 21 STANDARD
(T) TRAFFIC PULL BOX

VEHICLE DETECTORS

5 J 9 U

- VEHICLE DETECTOR DESIGNATION
- U = UPPER
  L = LOWER
- SLOT NUMBER IN INPUT FILE
- INPUT FILE (I OR J)
- PHASE

NEW	EXISTING	
		TYPE A LOOP DETECTOR. OUTLINE OF SAWCUT SHOWN
		TYPE B LOOP DETECTOR. OUTLINE OF SAWCUT SHOWN
		TYPE C LOOP DETECTOR. OUTLINE OF SAWCUT SHOWN
		TYPE D LOOP DETECTOR. OUTLINE OF SAWCUT SHOWN
		TYPE E LOOP DETECTOR. OUTLINE OF SAWCUT SHOWN
		TYPE Q LOOP DETECTOR. OUTLINE OF SAWCUT SHOWN
DH	dh	DETECTOR HANDHOLE
		MICROWAVE OR VIDEO DETECTION ZONE

STATE OF CALIFORNIA
DEPARTMENT OF TRANSPORTATION

ELECTRICAL SYSTEMS (LEGEND AND ABBREVIATIONS)

NO SCALE

RSP ES-1C DATED OCTOBER 30, 2015 SUPERSEDES RSP ES-1C DATED JULY 19, 2013 AND STANDARD PLAN ES-1C DATED MAY 20, 2011 - PAGE 427 OF THE STANDARD PLANS BOOK DATED 2010.

REVISED STANDARD PLAN RSP ES-1C

2010 REVISED STANDARD PLAN RSP ES-1C

DATE PLOTTED => 01-FEB-2016
TIME PLOTTED => 09:10

Dist	COUNTY	ROUTE	POST MILES TOTAL PROJECT	SHEET No.	TOTAL SHEETS
01	DN	101	14.9/15.3	43	91

Theresa Gabriel
REGISTERED ELECTRICAL ENGINEER

October 30, 2015
PLANS APPROVAL DATE

REGISTERED PROFESSIONAL ENGINEER
Theresa Aziz Gabriel
No. E15129
Exp. 6-30-16
ELECTRICAL
STATE OF CALIFORNIA

THE STATE OF CALIFORNIA OR ITS OFFICERS OR AGENTS SHALL NOT BE RESPONSIBLE FOR THE ACCURACY OR COMPLETENESS OF SCANNED COPIES OF THIS PLAN SHEET.

TO ACCOMPANY PLANS DATED 11/30/15

2010 REVISED STANDARD PLAN RSP ES-2C

NOTES:

1. The plan shows the approximate location of devices within the enclosure. Components may be rearranged, however, the "working" clearances within the service equipment enclosure shall be maintained.

2. In unpaved areas a raised portland cement concrete pad 2'-0" x 4" x width of foundation shall be constructed in front of new service equipment enclosure installation. Pad shall be set to elevation of foundation.

3. Plug-in circuit breakers may be mounted in the vertical or horizontal position. Cable-in/cable-out circuit breakers shall be mounted in the vertical position.

4. Type III-AF and Type III-BF service equipment enclosures shall have the meter viewing windows located on the front side of the service equipment enclosures.

5. Type III-AR and Type III-BR service equipment enclosure shall be similarly constructed as Type III-AF and Type III-BF respectively, except the meter viewing windows shall be located on the back side of the service equipment enclosures.

STATE OF CALIFORNIA
DEPARTMENT OF TRANSPORTATION

ELECTRICAL SYSTEMS (SERVICE EQUIPMENT ENCLOSURE NOTES TYPE III SERIES)

NO SCALE

RSP ES-2C DATED OCTOBER 30, 2015 SUPERSEDES STANDARD PLAN ES-2C DATED MAY 20, 2011 - PAGE 430 OF THE STANDARD PLANS BOOK DATED 2010.

REVISED STANDARD PLAN RSP ES-2C

DATE PLOTTED => 01-FEB-2016
TIME PLOTTED => 08:10

Dist	COUNTY	ROUTE	POST MILES TOTAL PROJECT	SHEET No.	TOTAL SHEETS
01	DN	101	14.9/15.3	44	91

Theresa Gabriel
REGISTERED ELECTRICAL ENGINEER

October 30, 2015
PLANS APPROVAL DATE

REGISTERED PROFESSIONAL ENGINEER Theresa Aziz Gabriel No. E15129 Exp. 6-30-16 ELECTRICAL STATE OF CALIFORNIA

THE STATE OF CALIFORNIA OR ITS OFFICERS OR AGENTS SHALL NOT BE RESPONSIBLE FOR THE ACCURACY OR COMPLETENESS OF SCANNED COPIES OF THIS PLAN SHEET.

TO ACCOMPANY PLANS DATED 11/30/15

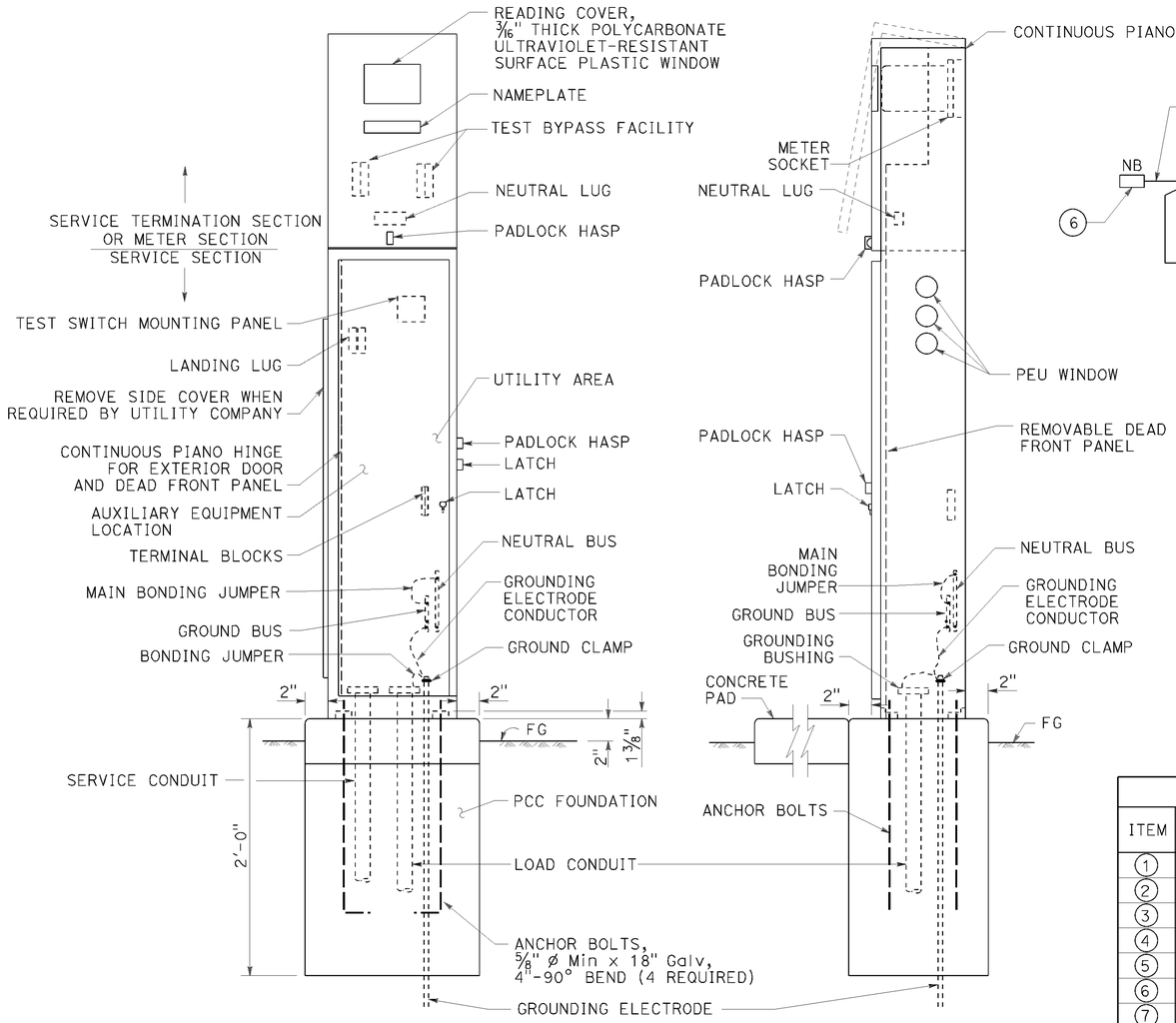

TYPE III-AF SERVICE EQUIPMENT ENCLOSURE (TYPICAL)

DETAIL A

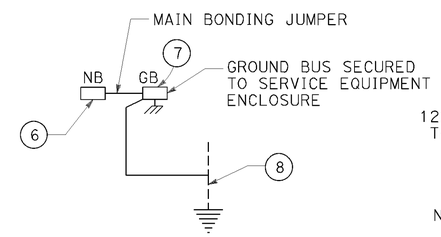

DETAIL D

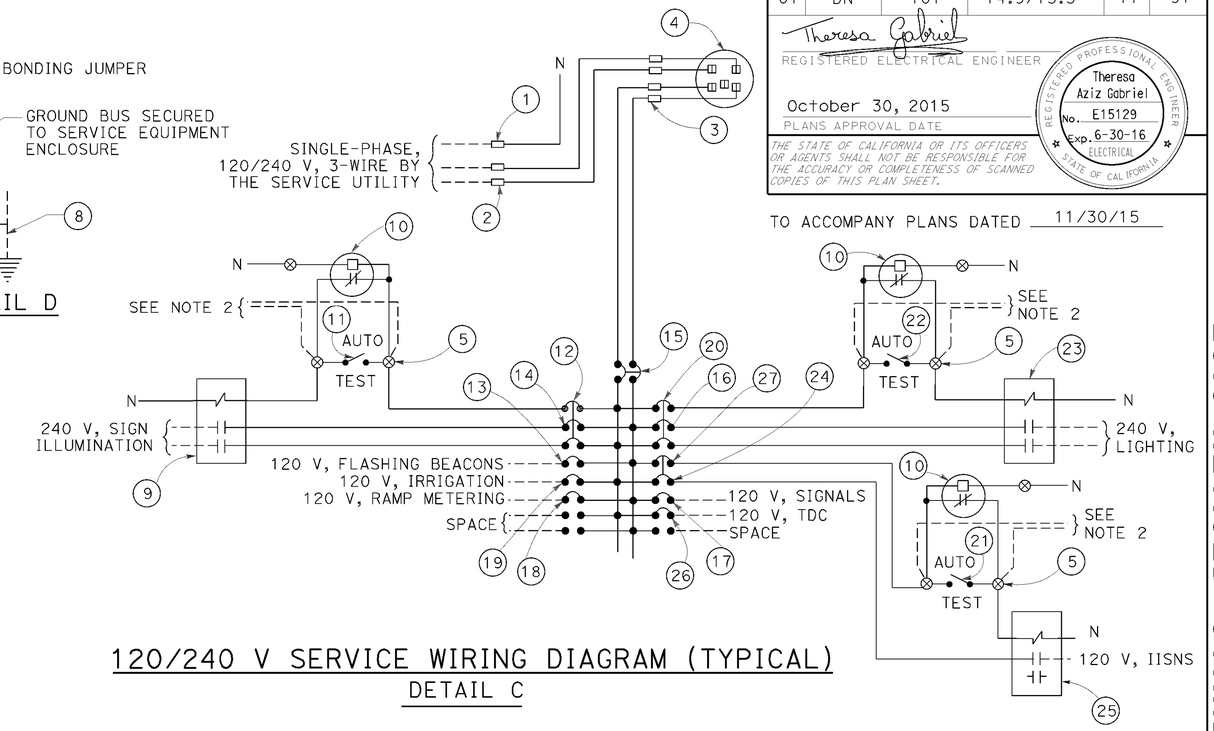

120/240 V SERVICE WIRING DIAGRAM (TYPICAL)

DETAIL C

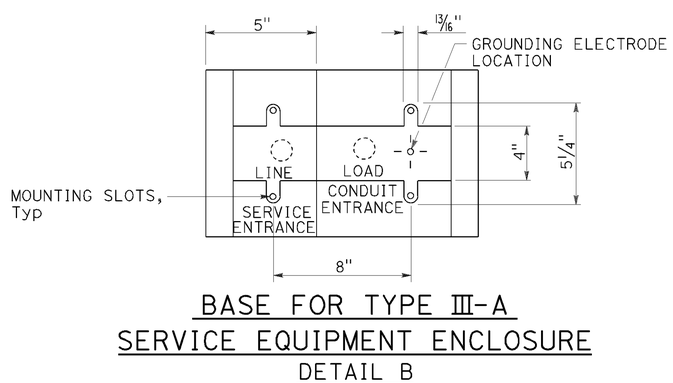

BASE FOR TYPE III-A SERVICE EQUIPMENT ENCLOSURE

DETAIL B

TYPE III-A SERVICE EQUIPMENT ENCLOSURE LEGEND (120/240 V)

ITEM	COMPONENT	NAMEPLATE DESCRIPTION	ITEM	COMPONENT	NAMEPLATE DESCRIPTION
1	NEUTRAL LUG		14	30 A, 240 V, 2P, CB	SIGN ILLUMINATION
2	LANDING LUG		15	100 A, 240 V, 2P, CB	MAIN BREAKER
3	TEST BYPASS FACILITY		16	30 A, 240 V, 2P, CB	LIGHTING
4	METER SOCKET AND SUPPORT		17	50 A, 120 V, 1P, CB	SIGNALS
5	TERMINAL BLOCKS		18	30 A, 120 V, 1P, CB	RAMP METERING
6	NEUTRAL BUS		19	20 A, 120 V, 1P, CB	IRRIGATION
7	GROUND BUS		20	15 A, 120 V, 1P, CB	LIGHTING CONTROL
8	GROUNDING ELECTRODE		21	15 A, 1P, TEST SWITCH	IISNS TEST SWITCH
9	30 A, 2P, NO CONTACTOR	SIGN ILLUMINATION	22	15 A, 1P, TEST SWITCH	LIGHTING TEST SWITCH
10	PHOTOELECTRIC UNIT (NOTE 4)	PEU	23	60 A, 2P, NO CONTACTOR	LIGHTING
11	15 A, 1P, TEST SWITCH	SIGN ILLUMINATION TEST SWITCH	24	15 A, 120 V, 1P, CB	IISNS
12	15 A, 120 V, 1P, CB	SIGN ILLUMINATION CONTROL	25	30 A, 2P, NO CONTACTOR	IISNS
13	15 A, 120 V, 1P, CB	FLASHING BEACON	26	20 A, 120 V, 1P, CB	TELEPHONE DEMARCATION CABINET
			27	15 A, 120 V, 1P, CB	IISNS CONTROL

NOTES:

1. Unless otherwise indicated on the plans, service equipment items shall be provided for each service equipment enclosure as shown.
2. Connect to remote test switch mounted on lighting standards, sign post or structure when required.
3. Items 1 and 6 shall be isolated from the service equipment enclosure.
4. Type V photoelectric control shall be used unless otherwise indicated on the plans.
5. Item 12, 20 and 27 shall be ganged operated CB.

STATE OF CALIFORNIA
DEPARTMENT OF TRANSPORTATION

ELECTRICAL SYSTEMS (SERVICE EQUIPMENT ENCLOSURE AND TYPICAL WIRING DIAGRAM, TYPE III-A SERIES)

NO SCALE

RSP ES-2D DATED OCTOBER 30, 2015 SUPERSEDES STANDARD PLAN ES-2D DATED MAY 20, 2011 - PAGE 431 OF THE STANDARD PLANS BOOK DATED 2010.

REVISED STANDARD PLAN RSP ES-2D

2010 REVISED STANDARD PLAN RSP ES-2D

DATE PLOTTED => 01-FEB-2016
TIME PLOTTED => 09:10

P:\PROJ\01\0B27U\drafting\01-0B27U4\010b270va022.dgn

USERNAME => s132662
DGN FILE => 010b270va022.dgn

8-20-15

Dist	COUNTY	ROUTE	POST MILES TOTAL PROJECT	SHEET No.	TOTAL SHEETS
01	DN	101	14.9/15.3	45	91

Theresa Gabriel
REGISTERED ELECTRICAL ENGINEER

October 30, 2015
PLANS APPROVAL DATE

REGISTERED PROFESSIONAL ENGINEER Theresa Aziz Gabriel No. E15129 Exp. 6-30-16 ELECTRICAL STATE OF CALIFORNIA

THE STATE OF CALIFORNIA OR ITS OFFICERS OR AGENTS SHALL NOT BE RESPONSIBLE FOR THE ACCURACY OR COMPLETENESS OF SCANNED COPIES OF THIS PLAN SHEET.

TO ACCOMPANY PLANS DATED 11/30/15

2010 REVISED STANDARD PLAN RSP ES-3C

NOTES:

1. Foundation shall be located to provide 2'-0" minimum clearance between face of curb and any portion of cabinet.
2. Controller units, plug-mounted equipment, shelf-mounted equipment and wall-mounted equipment shall be located to permit safe and easy removal or replacement without removing any other piece of equipment.
3. Cabinet fan may be installed at an alternate location near the top of the cabinet when approved by the Engineer.
4. Where telephone interconnect is required, a minimum of 5" clear vertical space shall be provided inside the cabinet for the equipment.
5. Telephone interconnect conductors shall be enclosed in a ¾"C or larger conduit through the foundation. Type 4 conduit shall be used to separate telephone and power conductors in cabinets.

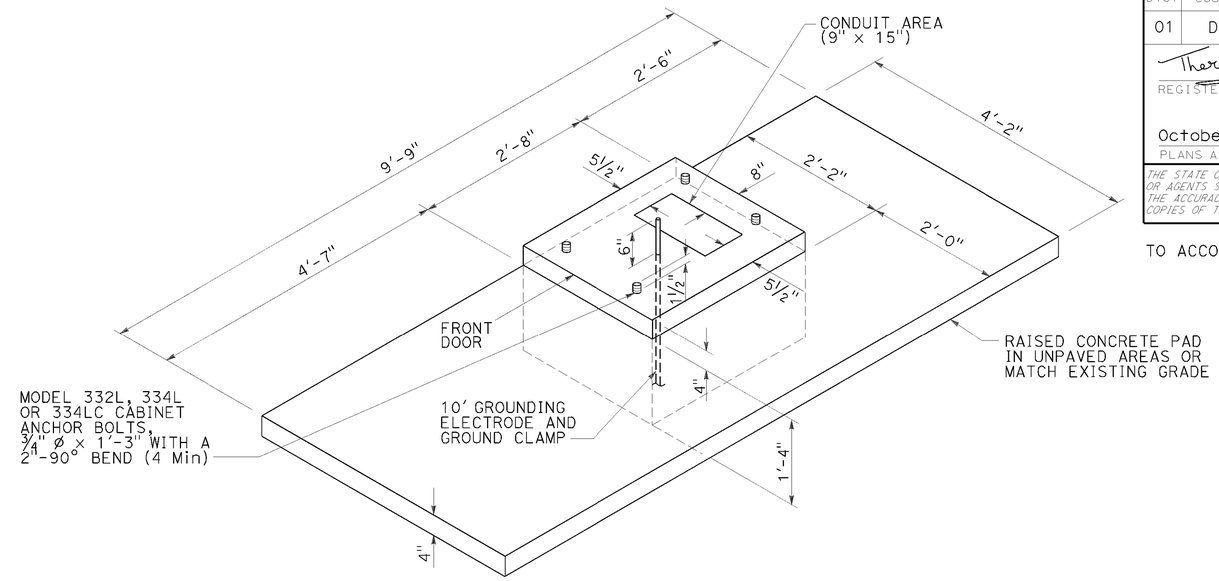

FOUNDATION AND PAD DETAIL

Model 332L, 334L and 334LC

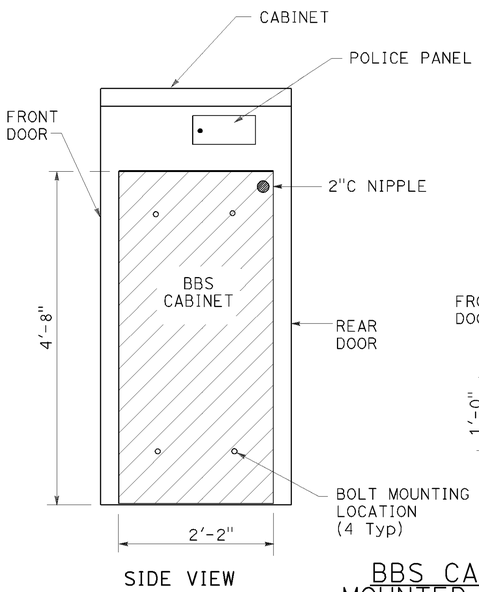

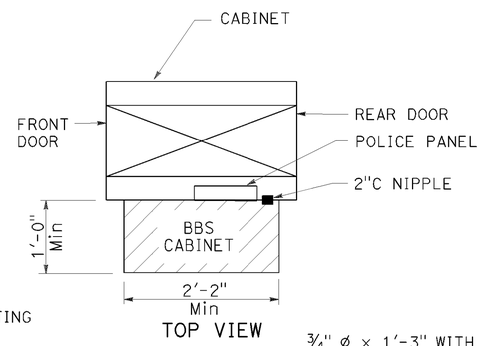

BBS CABINET MOUNTED TO THE MODEL 332L CABINET

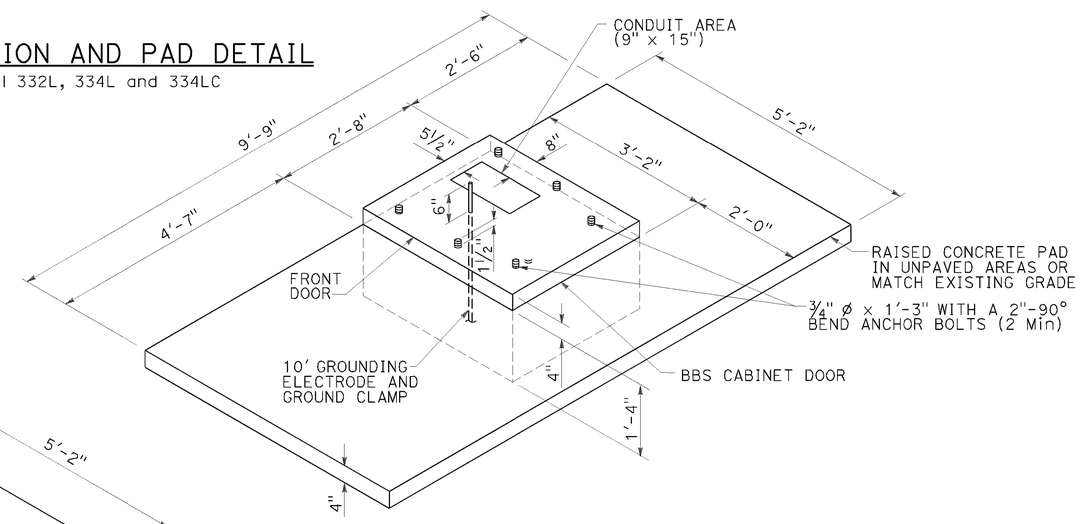

RIGHT SIDE INSTALLATION

DETAIL B

MODIFIED MODEL 332L CABINET FOUNDATION DETAIL FOR BATTERY BACKUP SYSTEM

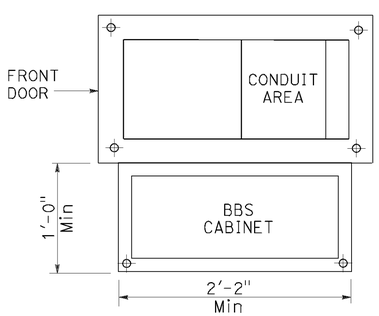

BASE PLAN FOR BBS MOUNTED TO THE MODEL 332L CABINET

(FOR DIMENSIONS AND DETAILS NOT SHOWN, SEE CABINET HOUSING DETAILS OF THE TRANSPORTATION ELECTRICAL EQUIPMENT SPECIFICATION (TEES))

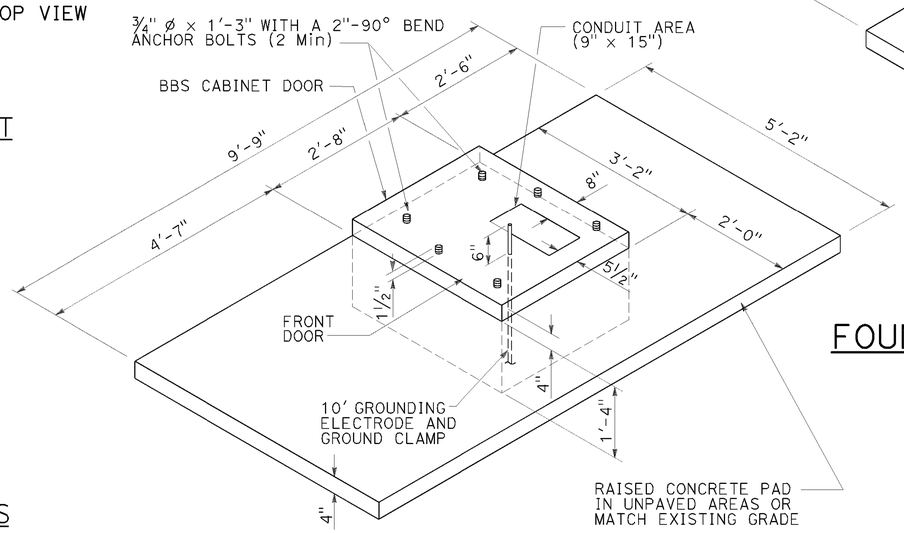

LEFT SIDE INSTALLATION

DETAIL A

STATE OF CALIFORNIA
DEPARTMENT OF TRANSPORTATION

ELECTRICAL SYSTEMS (CONTROLLER CABINET FOUNDATION AND PAD DETAILS)

NO SCALE

RSP ES-3C DATED OCTOBER 30, 2015 SUPERSEDES STANDARD PLAN ES-3C DATED MAY 20, 2011 - PAGE 437 OF THE STANDARD PLANS BOOK DATED 2010.

REVISED STANDARD PLAN RSP ES-3C

DATE PLOTTED => 01-FEB-2016
TIME PLOTTED => 09:10

Dist	COUNTY	ROUTE	POST MILES TOTAL PROJECT	SHEET No.	TOTAL SHEETS
01	DN	101	14.9/15.3	46	91

Theresa Gabriel
REGISTERED ELECTRICAL ENGINEER

October 30, 2015
PLANS APPROVAL DATE

REGISTERED PROFESSIONAL ENGINEER
Theresa Aziz Gabriel
No. E15129
Exp. 6-30-16
ELECTRICAL
STATE OF CALIFORNIA

THE STATE OF CALIFORNIA OR ITS OFFICERS OR AGENTS SHALL NOT BE RESPONSIBLE FOR THE ACCURACY OR COMPLETENESS OF SCANNED COPIES OF THIS PLAN SHEET.

TO ACCOMPANY PLANS DATED 11/30/15

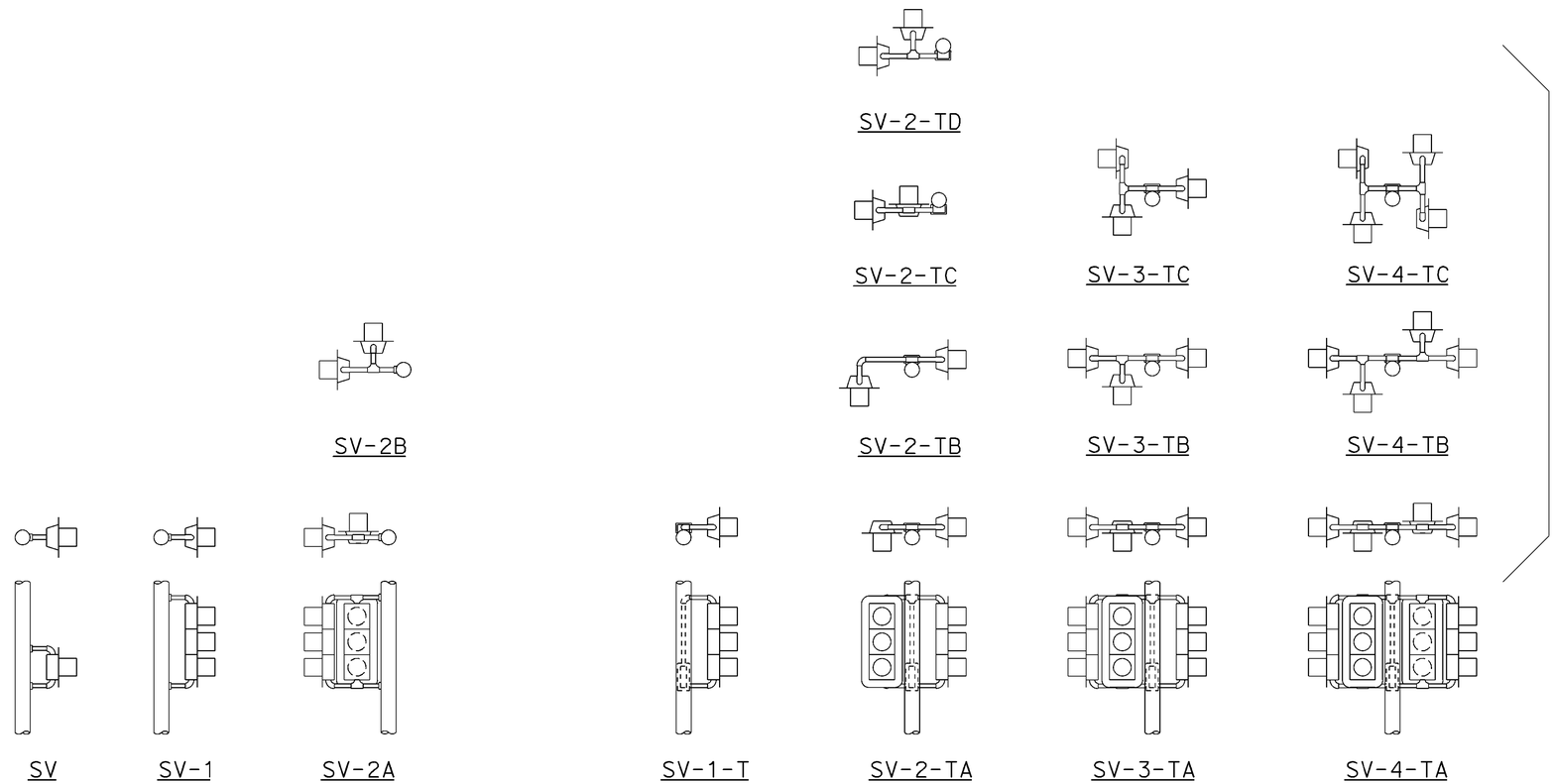

SIDE MOUNTINGS

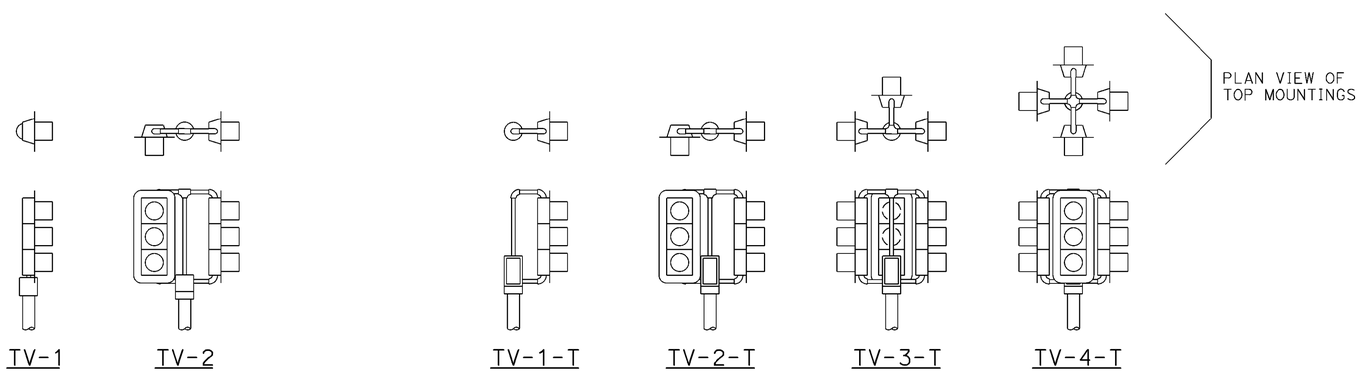

TOP MOUNTINGS

ABBREVIATIONS:

SV	SIDE MOUNTED SIGNAL HEADS
T	TERMINAL COMPARTMENT
TV	TOP MOUNTED SIGNAL HEADS
1, 2, 3, 4	NUMBER OF SIGNAL FACES (3 - SECTION, UNLESS OTHERWISE INDICATED)
A, B, C, D	CONFIGURATION OF SIGNALS

NOTES:

1. Mountings shall be oriented to provide maximum horizontal clearance to adjacent roadway.
2. Bracket arms shall be long enough to permit proper alignment of signals and backplate installation.
3. See Revised Standard Plans RSP ES-4D and RSP ES-4E for attachment fitting details.

STATE OF CALIFORNIA
DEPARTMENT OF TRANSPORTATION

ELECTRICAL SYSTEMS (SIGNAL HEADS AND MOUNTINGS)

NO SCALE

RSP ES-4A DATED OCTOBER 30, 2015 SUPERSEDES RSP ES-4A DATED JULY 19, 2013 AND STANDARD PLAN ES-4A DATED MAY 20, 2011 - PAGE 443 OF THE STANDARD PLANS BOOK DATED 2010.

REVISED STANDARD PLAN RSP ES-4A

2010 REVISED STANDARD PLAN RSP ES-4A

DATE PLOTTED => 01-FEB-2016
TIME PLOTTED => 09:10

P:\PROJ\01\0B27U\drafting\01-0B27u4\010b270va024.dgn

USERNAME => s132662
DGN FILE => 010b270va024.dgn

9-28-15

Dist	COUNTY	ROUTE	POST MILES TOTAL PROJECT	SHEET No.	TOTAL SHEETS
01	DN	101	14.9/15.3	47	91

Theresa Gabriel
REGISTERED ELECTRICAL ENGINEER

October 30, 2015
PLANS APPROVAL DATE

REGISTERED PROFESSIONAL ENGINEER Theresa Aziz Gabriel No. E15129 Exp. 6-30-16 ELECTRICAL STATE OF CALIFORNIA

THE STATE OF CALIFORNIA OR ITS OFFICERS OR AGENTS SHALL NOT BE RESPONSIBLE FOR THE ACCURACY OR COMPLETENESS OF SCANNED COPIES OF THIS PLAN SHEET.

TO ACCOMPANY PLANS DATED 11/30/15

VISORS

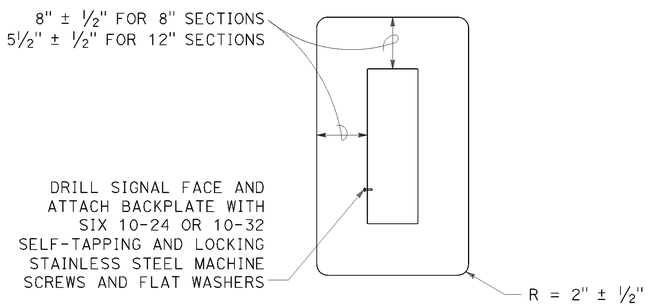

8" AND 12" SECTIONS

BACKPLATE

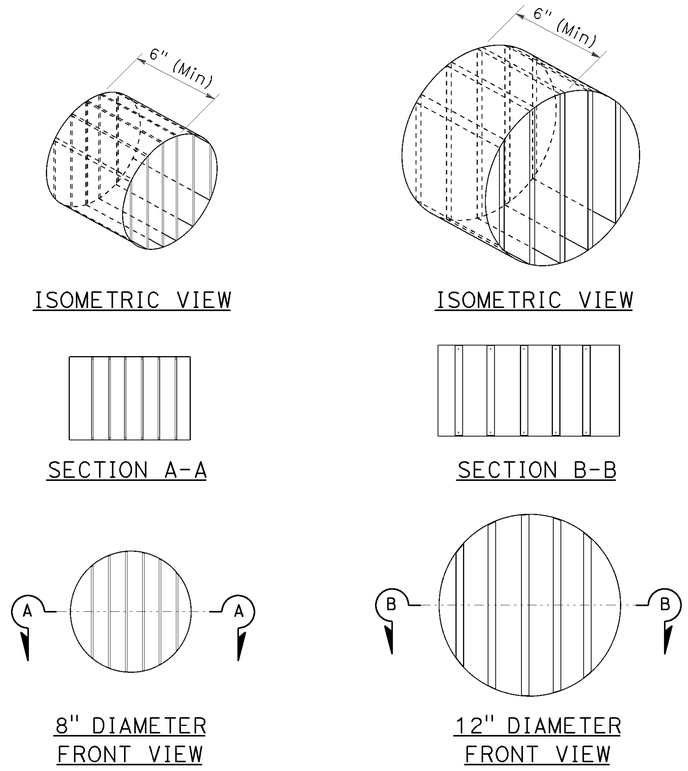

DIRECTIONAL LOUVER

Directional louvers shall be oriented and secured in place with one plated brass machine screw and nut.

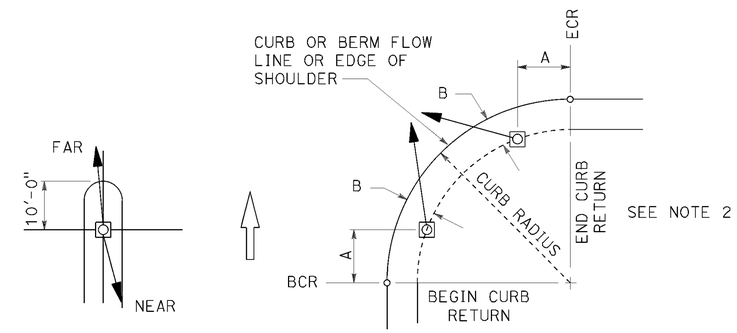

NOTES:

1. Typical signal pole placement unless dimensioned on plans.
2. For A and B dimensions, see Pole Schedule.

SIGNAL STANDARD PLACEMENT DIMENSIONS AND EQUIPMENT LOCATIONS

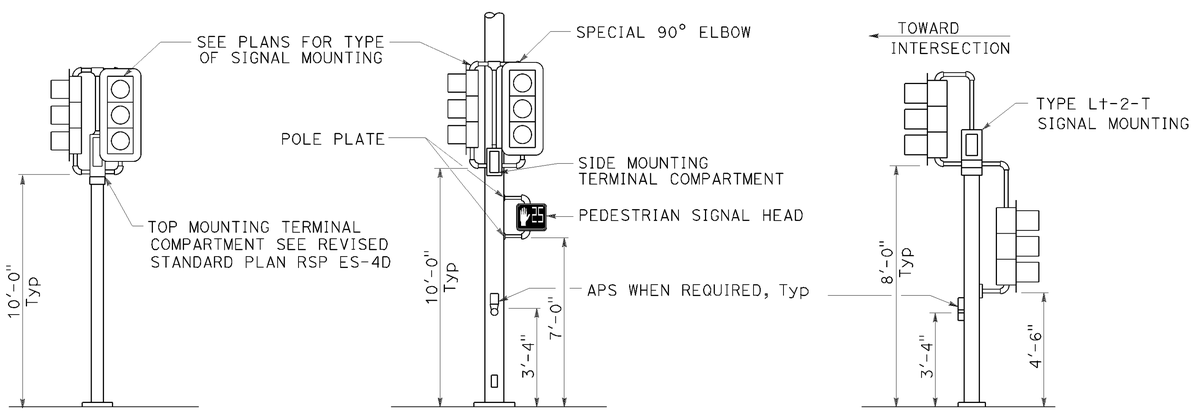

TOP MOUNTED SIGNALS (TV)
Type 1-A, 1-B, 1-C and 1-D standard as indicated on the plans

SIDE MOUNTED SIGNALS (SV AND SP)
Normally used on standards with luminaire or signal mast arm

LEFT TURN LANE SIGNAL
Type 1-A, 1-B, 1-C and 1-D standard as indicated on plans

TYPICAL SIGNAL HEAD INSTALLATIONS

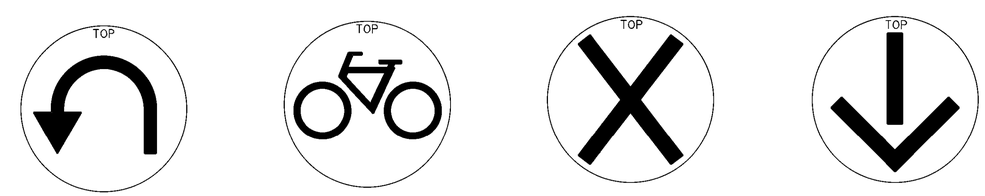

U-TURN | BICYCLE | LANE CONTROL | LANE CONTROL

SIGNAL FACES

STATE OF CALIFORNIA
DEPARTMENT OF TRANSPORTATION

ELECTRICAL SYSTEMS (SIGNAL HEADS AND MOUNTINGS)

NO SCALE

RSP ES-4C DATED OCTOBER 30, 2015 SUPERSEDES RSP ES-4C DATED JULY 19, 2013 AND STANDARD PLAN ES-4C DATED MAY 20, 2011 - PAGE 445 OF THE STANDARD PLANS BOOK DATED 2010.

REVISED STANDARD PLAN RSP ES-4C

2010 REVISED STANDARD PLAN RSP ES-4C

DATE PLOTTED => 01-FEB-2016
TIME PLOTTED => 09:11

P:\PROJ\01\0B27U\drafting\01-0B27u4\010b270va025.dgn

USERNAME => s132662
DGN FILE => 010b270va025.dgn

9-28-15

Dist	COUNTY	ROUTE	POST MILES TOTAL PROJECT	SHEET No.	TOTAL SHEETS
01	DN	101	14.9/15.3	48	91

Theresa Gabriel
REGISTERED ELECTRICAL ENGINEER

October 30, 2015
PLANS APPROVAL DATE

REGISTERED PROFESSIONAL ENGINEER Theresa Aziz Gabriel No. E15129 Exp. 6-30-16 ELECTRICAL STATE OF CALIFORNIA

THE STATE OF CALIFORNIA OR ITS OFFICERS OR AGENTS SHALL NOT BE RESPONSIBLE FOR THE ACCURACY OR COMPLETENESS OF SCANNED COPIES OF THIS PLAN SHEET.

TO ACCOMPANY PLANS DATED 11/30/15

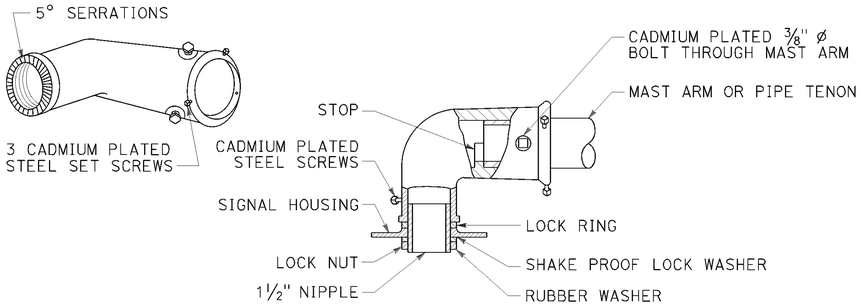

TYPE MAT
MAST ARM MOUNTING
For 2 NPS pipe, see Note 1.

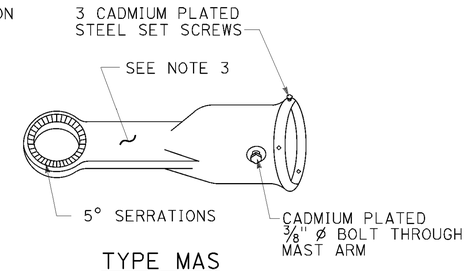

TYPE MAS
MAST ARM MOUNTING
For 2 NPS pipe, see Note 1.

SIGNAL SLIP FITTERS

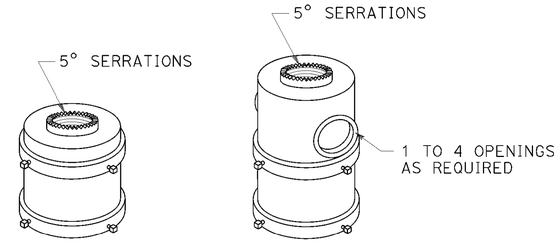

FOR ONE MOUNTING FOR MULTIPLE MOUNTINGS

TOP MOUNTINGS
For 4 NPS pipe, see Note 2.

NOTES:

1. After mast arm signal has been plumbed and secured, drill 7/16" hole through mast arm tenon in line with slip fitter hole. Place a cadmium plated ⅜" ø galvanized bolt with washer under bolt head through hole and secure with washer, nut, and locknut. Seal openings between mast arm mountings and mast arm with mastic.
2. (A) Threaded top mounted slip fitter openings shall be 1½ NPS.
   (B) Serrations in fittings shall match those on bottom of signal heads or in lock ring.
   (C) Top opening shall be offset when backplate is used.
3. Wireway shall have a cross section area of 0.95 square inch minimum. Minimum width of ½".

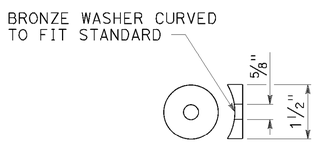

DETAIL C

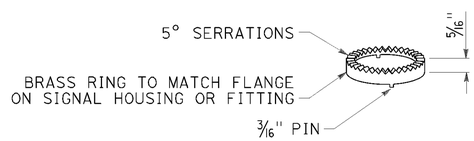

LOCK RING
Use where locking ring is not integral With signal housing or fitting.

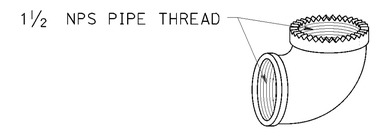

SPECIAL 90° ELBOW
One for each signal head, except those With special slip fitter mounting

MISCELLANEOUS MOUNTING HARDWARE

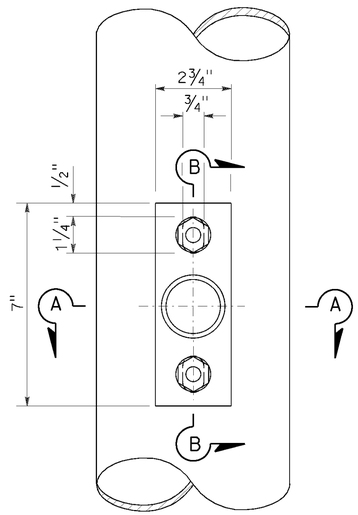

TOP VIEW

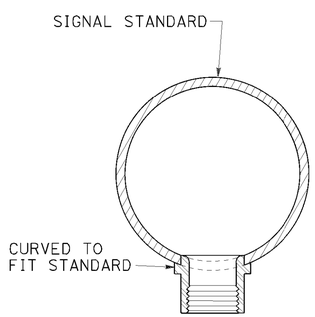

SECTION A-A

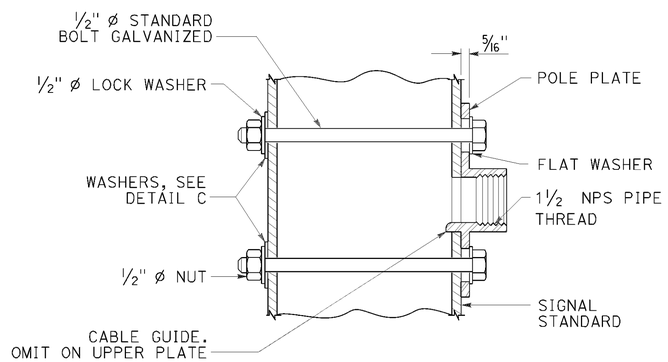

SECTION B-B

POLE PLATE FOR SIDE MOUNTED SIGNAL HEAD
WITHOUT TERMINAL COMPARTMENT

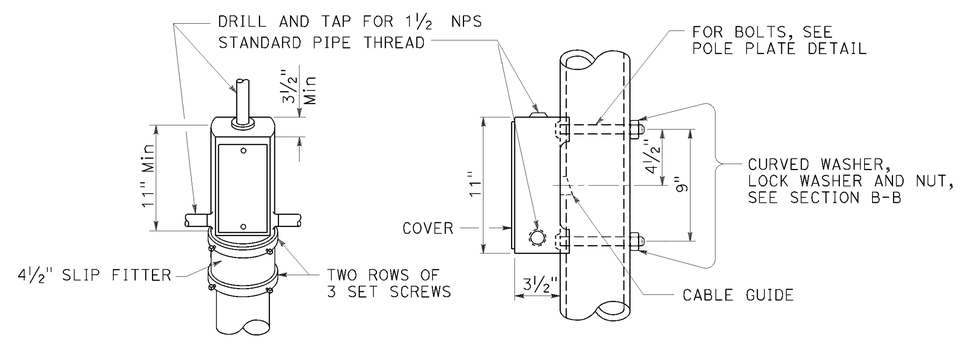

TOP MOUNTING SIDE MOUNTING

TERMINAL COMPARTMENT

STATE OF CALIFORNIA
DEPARTMENT OF TRANSPORTATION

ELECTRICAL SYSTEMS (SIGNAL HEAD MOUNTING)

NO SCALE

RSP ES-4D DATED OCTOBER 30, 2015 SUPERSEDES STANDARD PLAN ES-4D DATED MAY 20, 2011 - PAGE 446 OF THE STANDARD PLANS BOOK DATED 2010.

REVISED STANDARD PLAN RSP ES-4D

2010 REVISED STANDARD PLAN RSP ES-4D

P:\PROJ\01\0B27U\drafting\01-0B27u4\010b270va026.dgn
USERNAME => s132662
DGN FILE => 010b270va026.dgn
DATE PLOTTED => 01-FEB-2016
TIME PLOTTED => 09:11
8-20-15

Dist	COUNTY	ROUTE	POST MILES TOTAL PROJECT	SHEET No.	TOTAL SHEETS
01	DN	101	14.9/15.3	49	91

Theresa Gabriel
REGISTERED ELECTRICAL ENGINEER

October 30, 2015
PLANS APPROVAL DATE

REGISTERED PROFESSIONAL ENGINEER
Theresa Aziz Gabriel
No. E15129
Exp. 6-30-16
ELECTRICAL
STATE OF CALIFORNIA

THE STATE OF CALIFORNIA OR ITS OFFICERS OR AGENTS SHALL NOT BE RESPONSIBLE FOR THE ACCURACY OR COMPLETENESS OF SCANNED COPIES OF THIS PLAN SHEET.

TO ACCOMPANY PLANS DATED 11/30/15

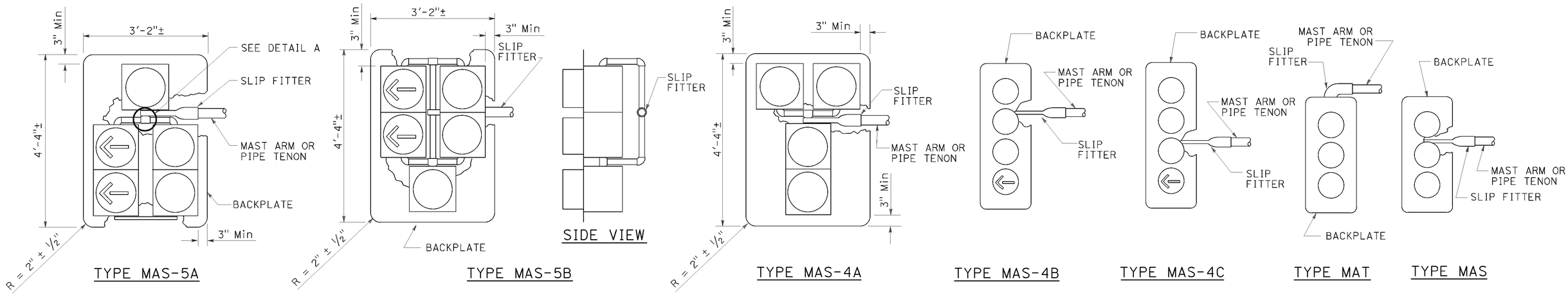

MAST ARM MOUNTINGS

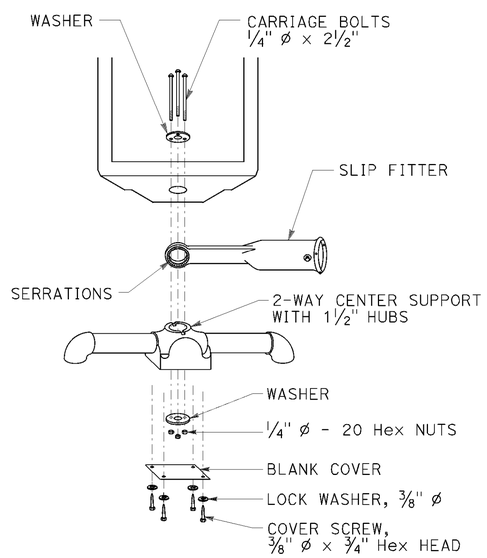

DETAIL A

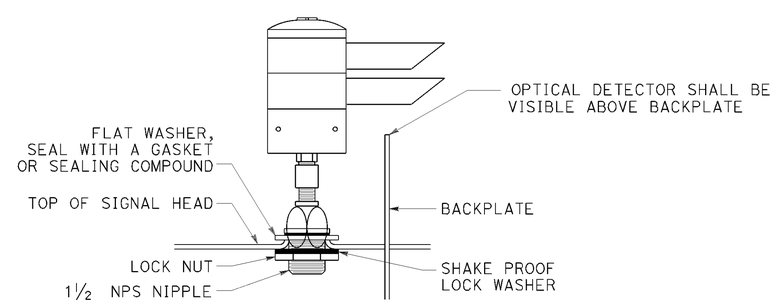

OPTICAL DETECTOR MOUNTING FOR EMERGENCY VEHICLE DETECTION

DETAIL B

STATE OF CALIFORNIA
DEPARTMENT OF TRANSPORTATION

ELECTRICAL SYSTEMS (SIGNAL HEADS AND OPTICAL DETECTOR MOUNTING)

NO SCALE

RSP ES-4E DATED OCTOBER 30, 2015 SUPERSEDES RSP ES-4E DATED JULY 19, 2013 AND STANDARD PLAN ES-4E DATED MAY 20, 2011 - PAGE 447 OF THE STANDARD PLANS BOOK DATED 2010.

REVISED STANDARD PLAN RSP ES-4E

2010 REVISED STANDARD PLAN RSP ES-4E

DATE PLOTTED => 01-FEB-2016
TIME PLOTTED => 09:11

P:\PROJ\01\0B27U\drafting\01-0B27u4\010b270va027.dgn

USERNAME => s132662
DGN FILE => 010b270va027.dgn

8-19-15

Dist	COUNTY	ROUTE	POST MILES TOTAL PROJECT	SHEET No.	TOTAL SHEETS
01	DN	101	14.9/15.3	50	91

Theresa Gabriel
REGISTERED ELECTRICAL ENGINEER

October 30, 2015
PLANS APPROVAL DATE

REGISTERED PROFESSIONAL ENGINEER
Theresa Aziz Gabriel
No. E15129
Exp. 6-30-16
ELECTRICAL
STATE OF CALIFORNIA

THE STATE OF CALIFORNIA OR ITS OFFICERS OR AGENTS SHALL NOT BE RESPONSIBLE FOR THE ACCURACY OR COMPLETENESS OF SCANNED COPIES OF THIS PLAN SHEET.

TO ACCOMPANY PLANS DATED 11/30/15

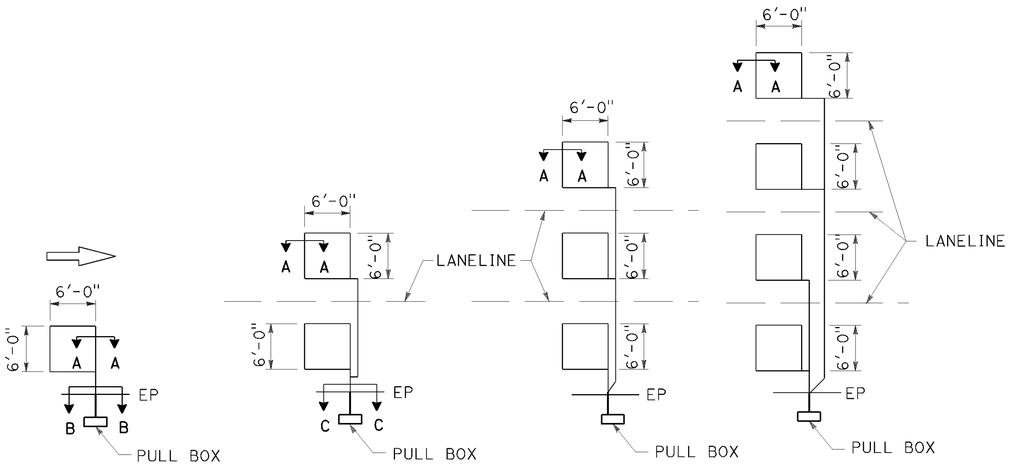

TYPE 1A INSTALLATION | TYPE 2A INSTALLATION | TYPE 3A INSTALLATION | TYPE 4A INSTALLATION

SAWCUT DETAILS

Type A loop detector configurations illustrated

1. 1A thru 4A = 1 Type A loop configuration in each lane.
2. 1B thru 4B = 1 Type B loop configuration in each lane.
3. 1C = 1 Type C loop configuration entering lanes as required.
4. 1D thru 4D = 1 Type D loop configuration in each lane.
5. 1E thru 4E = 1 Type E loop configuration in each lane.
6. 1Q thru 4Q = 1 Type Q loop configuration in each lane.
   Use Type A, B, C, D, E or Q loop detector configurations only when specified or shown on plans.

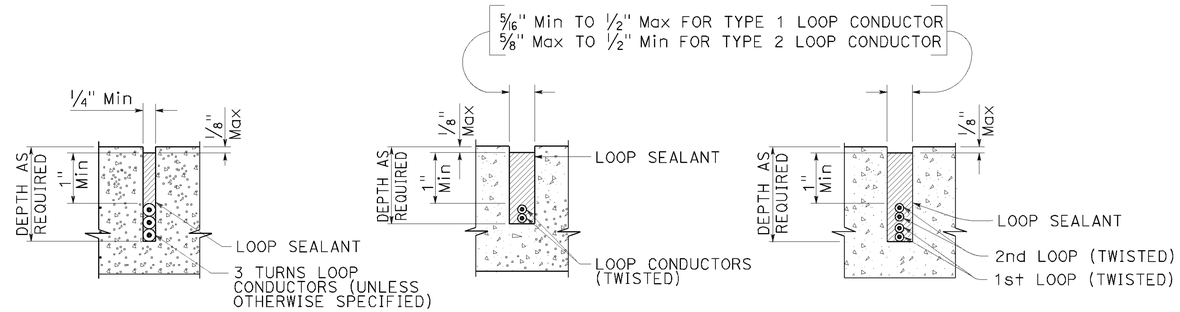

SECTION A-A | SECTION B-B | SECTION C-C

SLOT DETAILS - TYPE 1 AND TYPE 2 LOOP CONDUCTOR

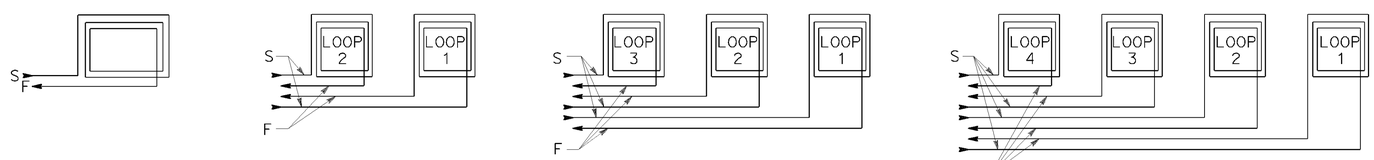

WINDING DETAILS

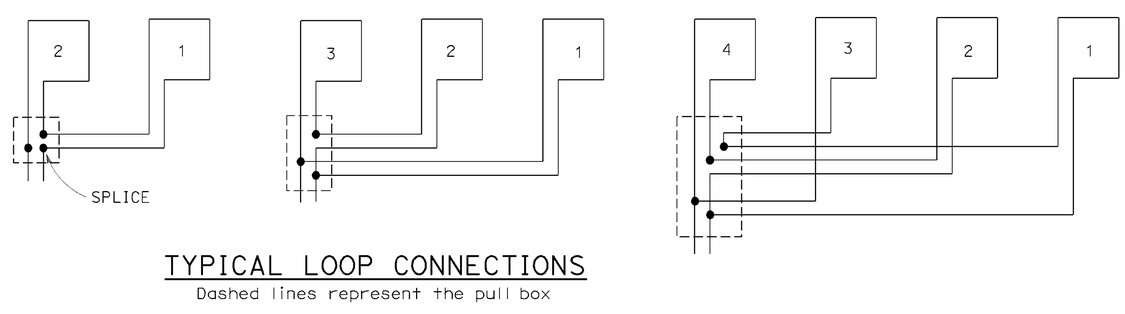

TYPICAL LOOP CONNECTIONS

Dashed lines represent the pull box

ABBREVIATIONS:

S - START
F - FINISH

STATE OF CALIFORNIA
DEPARTMENT OF TRANSPORTATION

ELECTRICAL SYSTEMS (LOOP DETECTORS)

NO SCALE

RSP ES-5A DATED OCTOBER 30, 2015 SUPERSEDES STANDARD PLAN ES-5A DATED MAY 20, 2011 - PAGE 448 OF THE STANDARD PLANS BOOK DATED 2010.

REVISED STANDARD PLAN RSP ES-5A

2010 REVISED STANDARD PLAN RSP ES-5A

DATE PLOTTED => 01-FEB-2016
TIME PLOTTED => 09:11

P:\PROJ\01\0B27U\drafting\01-0B27u4\010b270va028.dgn

USERNAME => s132662
DGN FILE => 010b270va028.dgn

8-24-15

Dist	COUNTY	ROUTE	POST MILES TOTAL PROJECT	SHEET No.	TOTAL SHEETS
01	DN	101	14.9/15.3	51	91

Theresa Gabriel
REGISTERED ELECTRICAL ENGINEER

October 30, 2015
PLANS APPROVAL DATE

REGISTERED PROFESSIONAL ENGINEER Theresa Aziz Gabriel No. E15129 Exp. 6-30-16 ELECTRICAL STATE OF CALIFORNIA

THE STATE OF CALIFORNIA OR ITS OFFICERS OR AGENTS SHALL NOT BE RESPONSIBLE FOR THE ACCURACY OR COMPLETENESS OF SCANNED COPIES OF THIS PLAN SHEET.

TO ACCOMPANY PLANS DATED 11/30/15

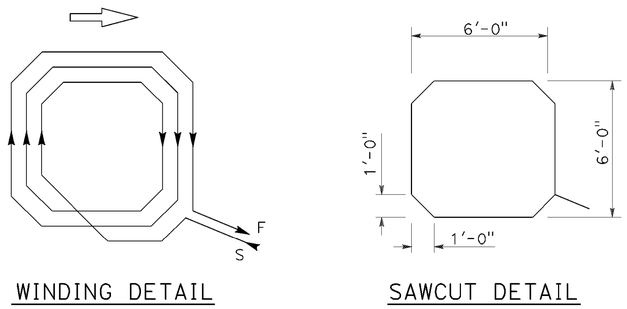

WINDING DETAIL SAWCUT DETAIL

TYPE A LOOP DETECTOR CONFIGURATION

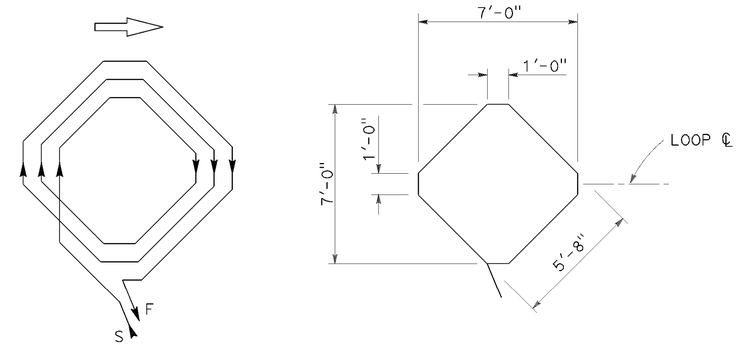

WINDING DETAIL SAWCUT DETAIL

TYPE B LOOP DETECTOR CONFIGURATION

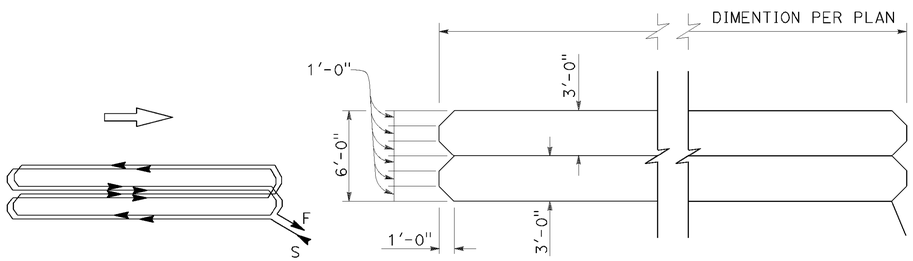

WINDING DETAIL SAWCUT DETAIL

TYPE C LOOP DETECTOR CONFIGURATION

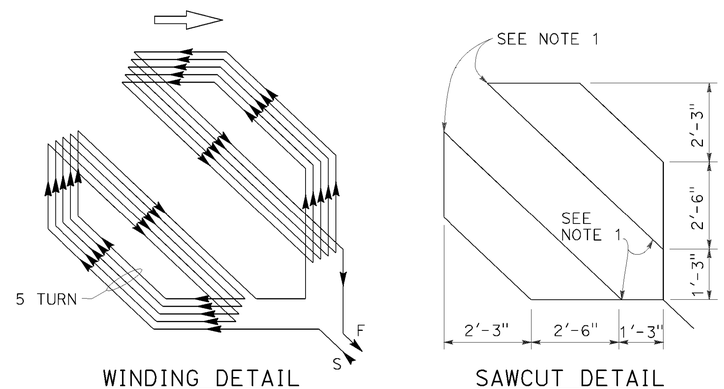

WINDING DETAIL SAWCUT DETAIL

TYPE D LOOP DETECTOR CONFIGURATION

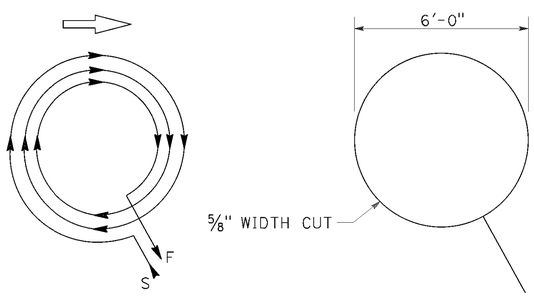

WINDING DETAIL SAWCUT DETAIL

TYPE E LOOP DETECTOR CONFIGURATION

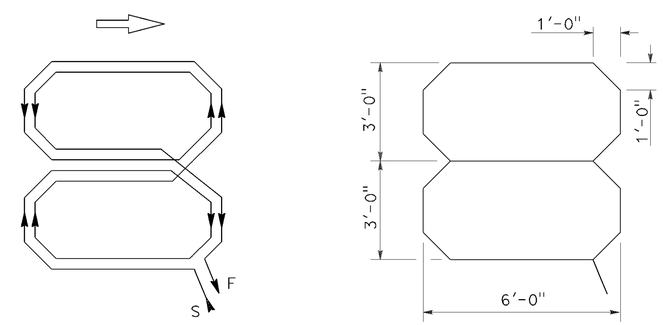

WINDING DETAIL SAWCUT DETAIL

TYPE Q LOOP DETECTOR CONFIGURATION

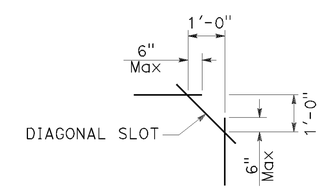

PLAN VIEW OF DIAGONAL SLOT AT CORNERS

NOTES:

1. Round corners of acute angle sawcuts to prevent damage to conductors.
2. Typical distance separating loops from edge to edge is 10' for Type A, B, D and E installation in single lane.
3. Use Type D loops for limit line detector installations in left turn and bicycle lanes.

STATE OF CALIFORNIA
DEPARTMENT OF TRANSPORTATION

ELECTRICAL SYSTEMS (DETECTORS)

NO SCALE

RSP ES-5B DATED OCTOBER 30, 2015 SUPERSEDES RSP ES-5B DATED JULY 19, 2013 AND STANDARD PLAN ES-5B DATED MAY 20, 2011 - PAGE 449 OF THE STANDARD PLANS BOOK DATED 2010.

REVISED STANDARD PLAN RSP ES-5B

2010 REVISED STANDARD PLAN RSP ES-5B

DATE PLOTTED => 01-FEB-2016
TIME PLOTTED => 09:11

P:\PROJ\01\0B27U\drafting\01-0B27u4\010b270va029.dgn

USERNAME => s132662
DGN FILE => 010b270va029.dgn

9-25-15

Dist	COUNTY	ROUTE	POST MILES TOTAL PROJECT	SHEET No.	TOTAL SHEETS
01	DN	101	14.9/15.3	52	91

Theresa Gabriel
REGISTERED ELECTRICAL ENGINEER

October 30, 2015
PLANS APPROVAL DATE

REGISTERED PROFESSIONAL ENGINEER Theresa Aziz Gabriel No. E15129 Exp. 6-30-16 ELECTRICAL STATE OF CALIFORNIA

THE STATE OF CALIFORNIA OR ITS OFFICERS OR AGENTS SHALL NOT BE RESPONSIBLE FOR THE ACCURACY OR COMPLETENESS OF SCANNED COPIES OF THIS PLAN SHEET.

TO ACCOMPANY PLANS DATED 11/30/15

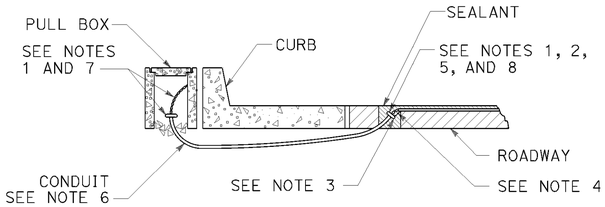

TYPE A
CURB TERMINATION DETAIL

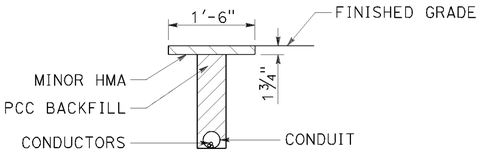

"T" TRENCH DETAIL T

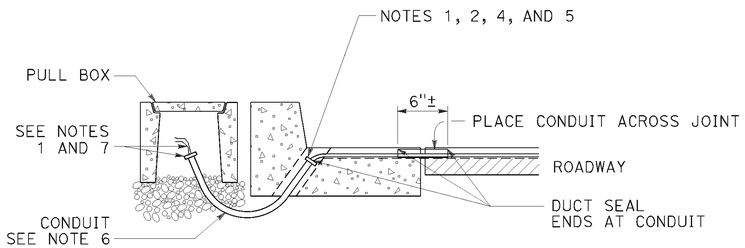

CROSS SECTION

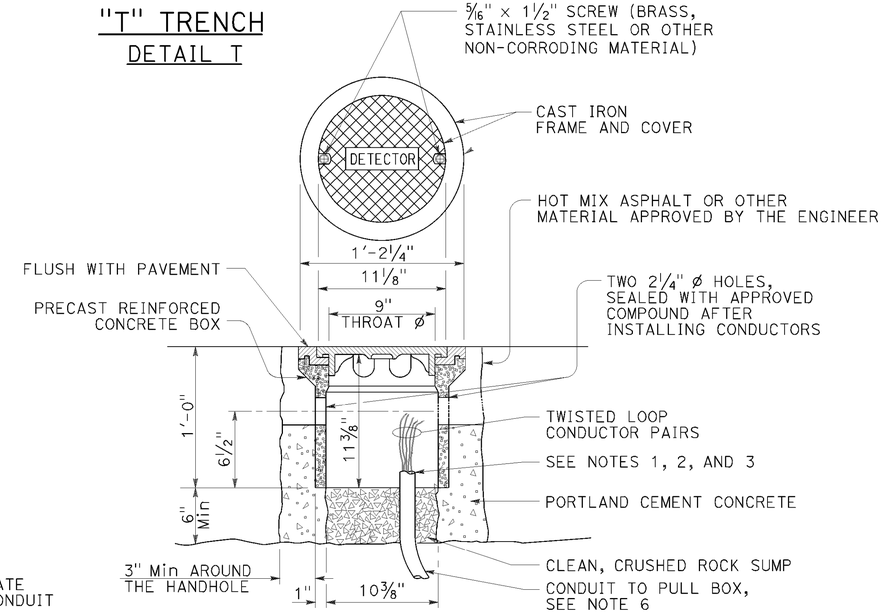

DETECTOR HANDHOLE DETAIL

NOTES:

1. Bushing shall be used at end of conduit.
2. Tape detector conductors or cables 3" each side of bushings.
3. Install duct seal compound to each end of termination conduit before installing sealant.
4. Round all sharp edges where detector conductors or cables have to pass.
5. End of conduit shall be 3⅛" below roadway surface.
6.

Conduit size	Loop conductors
1"C minimum	1 to 2 pairs
1½"C minimum	3 to 4 pairs
2"C minimum	5 or more pairs

7. Splice detector conductors or cables to detector lead-in-cable.
8. Location of detector handhole when shown on plans.
9. When the shoulder and traveled way are paved with the same material and there is no joint between them, the conduit shall extend only 2'-0" into the shoulder pavement.
10. ¾"C, Type 3 conduit 6" long minimum, plug both ends with duct compound to keep out sealant.
11. ½" Minimum between top of conduit and pavement surface.
12. Sawcut shall not exceed 1" in width and ⅛" longer than conduit to be installed.
13. Conductors with ½" minimum slack inside conduit.
14. Inductive loop detector saw slot.

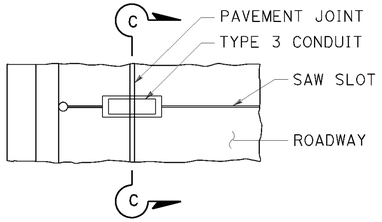

PLAN VIEW

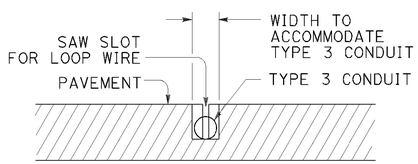

SECTION C-C

TYPE B
CURB TERMINATION DETAIL

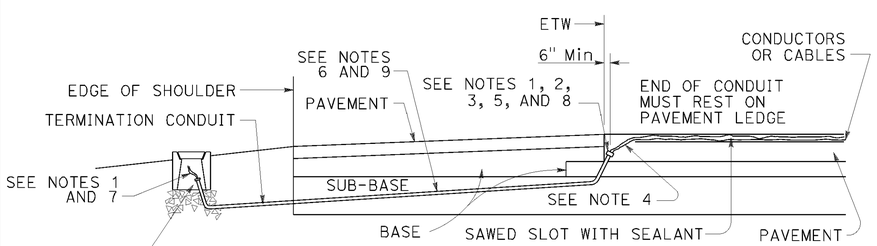

CROSS SECTION

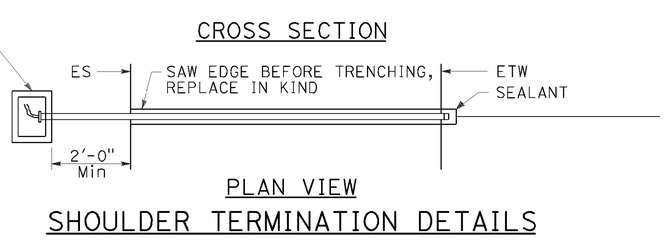

PLAN VIEW

SHOULDER TERMINATION DETAILS

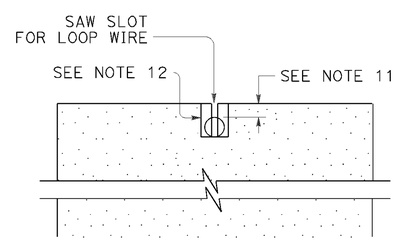

SECTION A-A

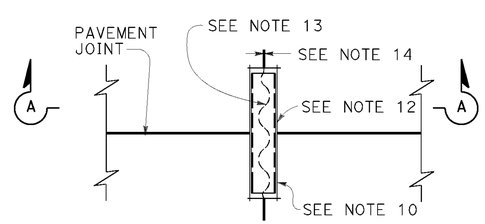

PLAN VIEW

TYPICAL LOOP LEAD-IN DETAIL AT PAVEMENT JOINT

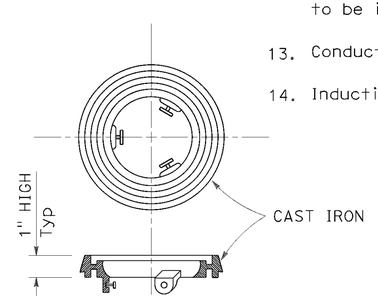

LOCKING GRADE RING

STATE OF CALIFORNIA
DEPARTMENT OF TRANSPORTATION

ELECTRICAL SYSTEMS (CURB AND SHOULDER TERMINATION, TRENCH, AND HANDHOLE DETAILS)

NO SCALE

RSP ES-5D DATED OCTOBER 30, 2015 SUPERSEDES RSP ES-5D DATED JULY 19, 2013 AND STANDARD PLAN ES-5D DATED MAY 20, 2011 - PAGE 451 OF THE STANDARD PLANS BOOK DATED 2010.

REVISED STANDARD PLAN RSP ES-5D

2010 REVISED STANDARD PLAN RSP ES-5D

DATE PLOTTED => 01-FEB-2016
TIME PLOTTED => 09:12

P:\PROJ\01\0B27U\drafting\01-0B27u4\010b270va030.dgn

USERNAME => s132662
DGN FILE => 010b270va030.dgn

8-19-15

Dist	COUNTY	ROUTE	POST MILES TOTAL PROJECT	SHEET No.	TOTAL SHEETS
01	DN	101	14.9/15.3	53	91

REGISTERED CIVIL ENGINEER

October 30, 2015
PLANS APPROVAL DATE

REGISTERED PROFESSIONAL ENGINEER
Stanley P. Johnson
No. C57793
Exp. 3-31-16
CIVIL
STATE OF CALIFORNIA

THE STATE OF CALIFORNIA OR ITS OFFICERS OR AGENTS SHALL NOT BE RESPONSIBLE FOR THE ACCURACY OR COMPLETENESS OF SCANNED COPIES OF THIS PLAN SHEET.

TO ACCOMPANY PLANS DATED 11/30/15

2010 REVISED STANDARD PLAN RSP ES-6A

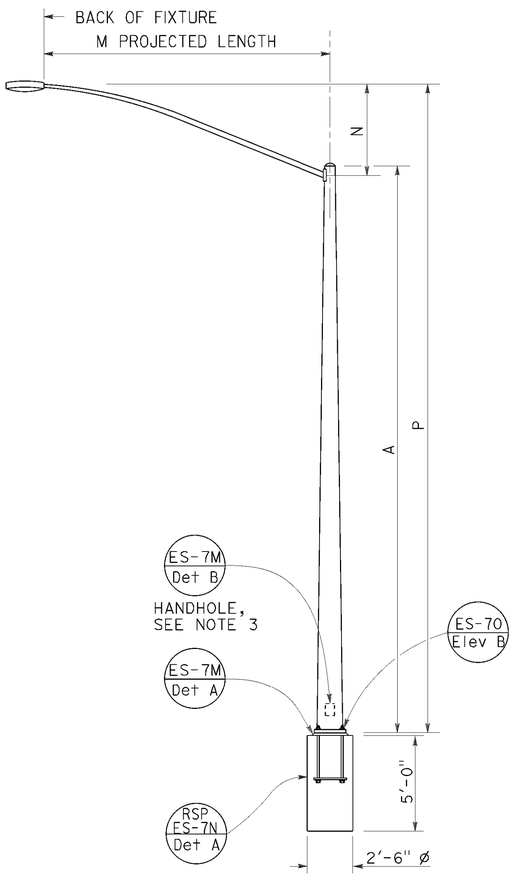

TYPE 15 AND TYPE 21
ELEVATION A

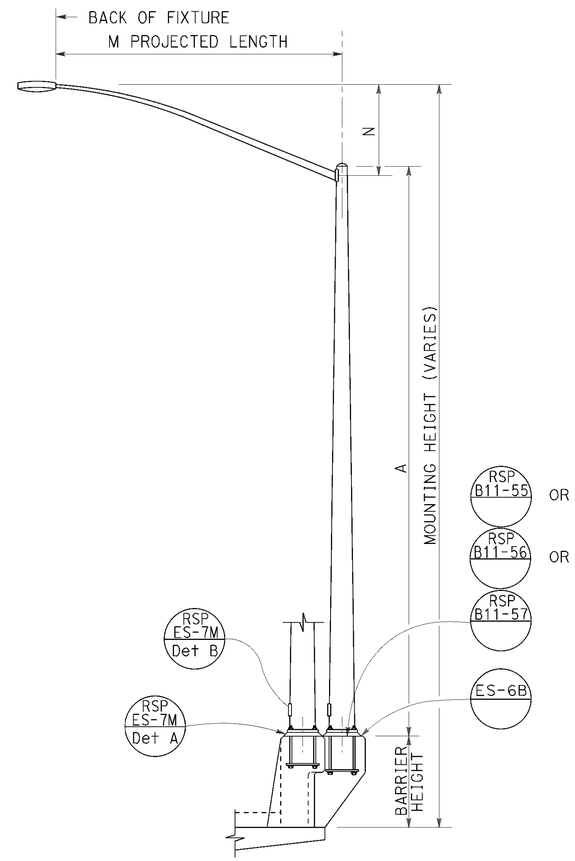

TYPE 15 AND TYPE 21 BARRIER RAIL MOUNTED
ELEVATION B

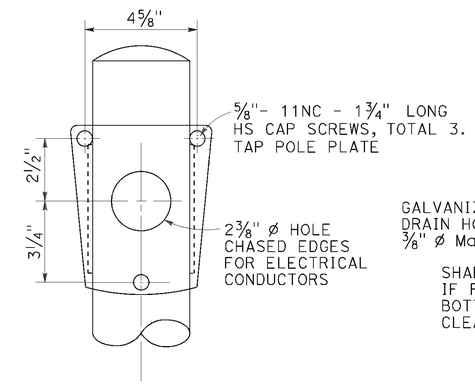

FRONT VIEW

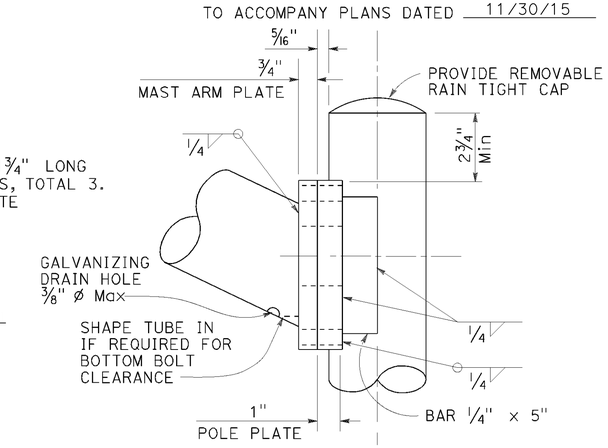

SIDE VIEW

LUMINAIRE MAST ARM CONNECTION
DETAIL R

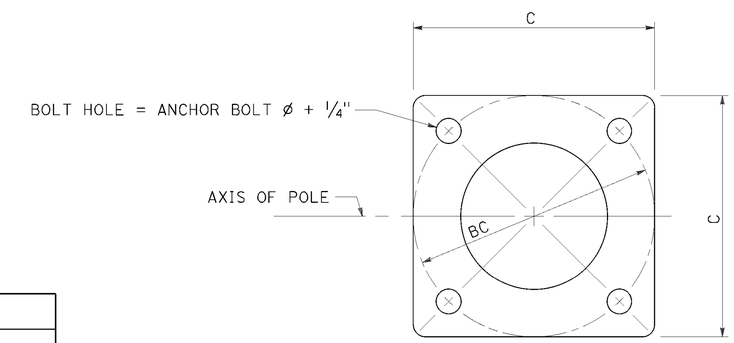

BASE PLATE
DETAIL A

POLE TYPE	POLE DATA				BASE PLATE DATA			
	A HEIGHT	Min OD BASE	Min OD TOP	WALL THICKNESS	C	BC = BOLT CIRCLE	THICKNESS	ANCHOR BOLT SIZE
15	30'-0"	8"	3 11/16"	0.1196"	1'-0"	1'-0"	2"	1" ø x 3'-0" *
21	35'-0"	8 5/8"	3 9/16"	0.1793"				1 1/4" ø x 3'-0" *

* FOR BARRIER RAIL BOLTS, SEE STANDARD PLAN ES-6B.

LUMINAIRE MAST ARM DATA					
M PROJECTED LENGTH	N RISE	Min OD AT POLE	NOMINAL THICKNESS	P TYPE 15	P TYPE 21
6'-0"	2'-0"±	3 1/4"	0.1196"	31'-6"±	36'-6"±
8'-0"	2'-6"±	3 1/2"		32'-0"±	37'-0"±
10'-0"	3'-3"±	3 7/8"		32'-9"±	37'-9"±
12'-0"	4'-3"±			33'-9"±	38'-9"±
15'-0"	4'-9"±	4 1/4"		34'-3"±	39'-3"±

NOTES:

1. [ ] Indicates mast arm length to be used unless otherwise noted on the plans.
2. For Type 15-SB, use Type 15 standard with Type 30 slip base plate details, see Revised Standard Plan RSP ES-6F.
3. Handhole shall be located on the downstream side of traffic.
4. For additional notes and details, see Revised Standard Plans RSP ES-7M and RSP ES-7N.

STATE OF CALIFORNIA
DEPARTMENT OF TRANSPORTATION

ELECTRICAL SYSTEMS (LIGHTING STANDARD, TYPES 15 AND 21)

NO SCALE

RSP ES-6A DATED OCTOBER 30, 2015 SUPERSEDES STANDARD PLAN ES-6A DATED MAY 20, 2011 - PAGE 452 OF THE STANDARD PLANS BOOK DATED 2010.

REVISED STANDARD PLAN RSP ES-6A

P:\PROJ\01\0B27U\drafting\01-0B27u4\010b270va031.dgn
USERNAME => s132662
DGN FILE => 010b270va031.dgn
DATE PLOTTED => 01-FEB-2016
TIME PLOTTED => 09:12
8-24-15

Dist	COUNTY	ROUTE	POST MILES TOTAL PROJECT	SHEET No.	TOTAL SHEETS
01	DN	101	14.9/15.3	54	91

REGISTERED CIVIL ENGINEER

October 30, 2015
PLANS APPROVAL DATE

REGISTERED PROFESSIONAL ENGINEER
Stanley P. Johnson
No. C57793
Exp. 3-31-16
CIVIL
STATE OF CALIFORNIA

THE STATE OF CALIFORNIA OR ITS OFFICERS OR AGENTS SHALL NOT BE RESPONSIBLE FOR THE ACCURACY OR COMPLETENESS OF SCANNED COPIES OF THIS PLAN SHEET.

TO ACCOMPANY PLANS DATED 11/30/15

NOTES:

1. [ ] Indicates mast arm length to be used unless otherwise noted on the plans.
2. For additional notes and details, see Revised Standard Plans RSP ES-7M and RSP ES-7N.
3. See Concrete Barrier Details Type 60E and 60SE.
4. For locations with one arm, plug unused cap screw holes and chased outlet with galvanized cap screws and knockout plug.
5. Handhole shall be located perpendicular to the luminaire mast arm and as directed by the Engineer.

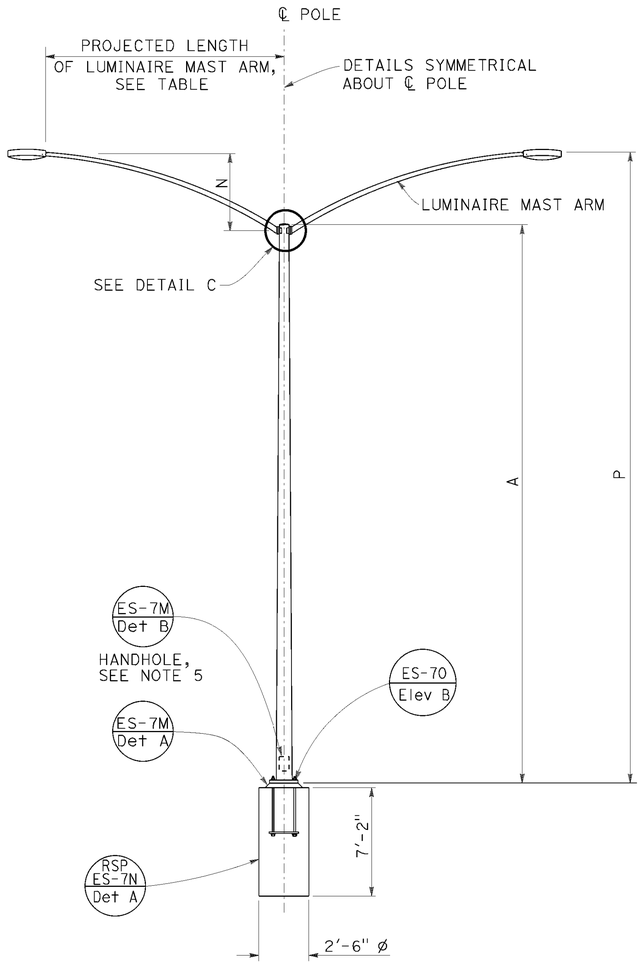

TYPE 15D AND TYPE 21D

ELEVATION A

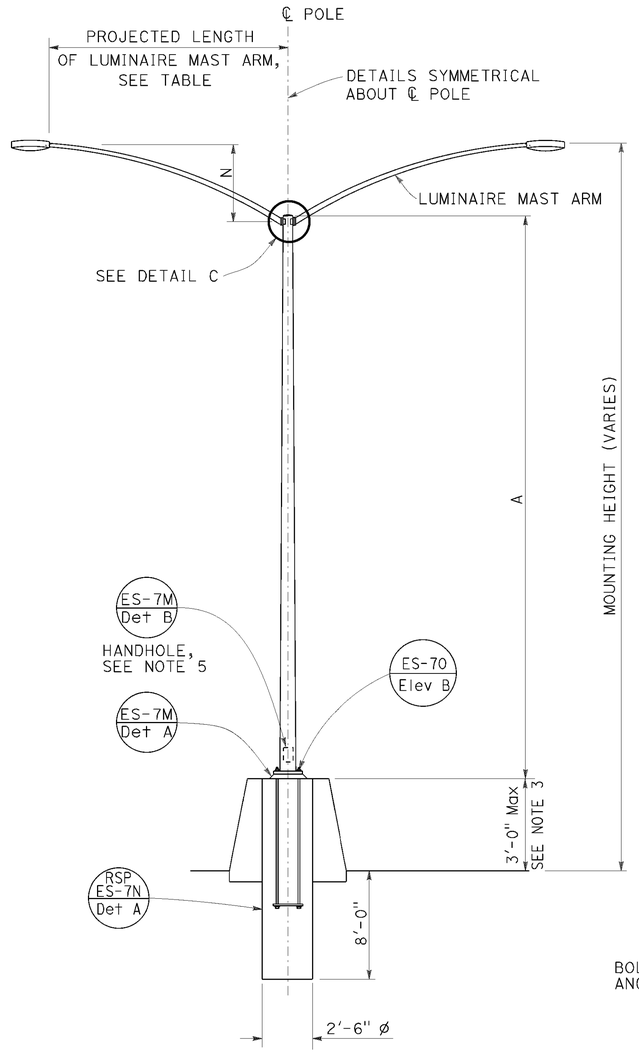

TYPE 15D AND TYPE 21D
MEDIAN BARRIER MOUNTED

ELEVATION B

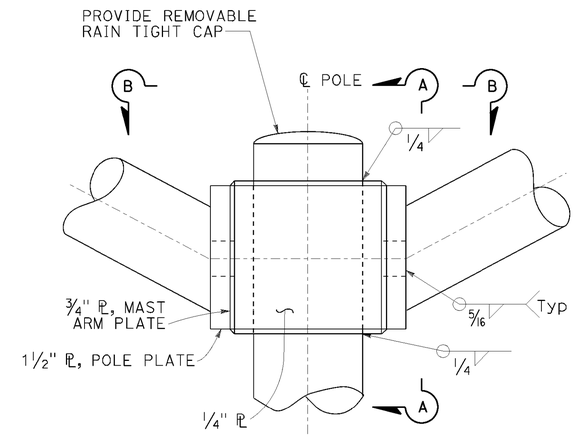

DETAIL C

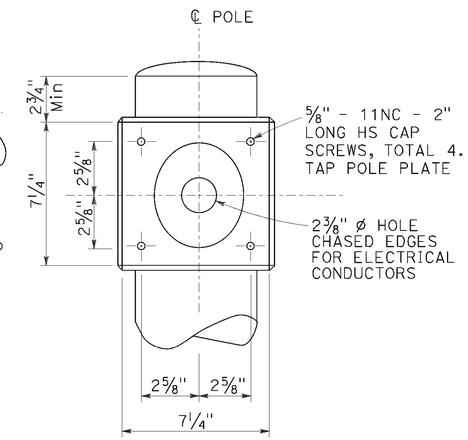

SECTION A-A

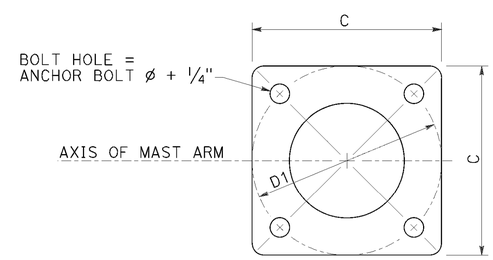

BASE PLATE

DETAIL B

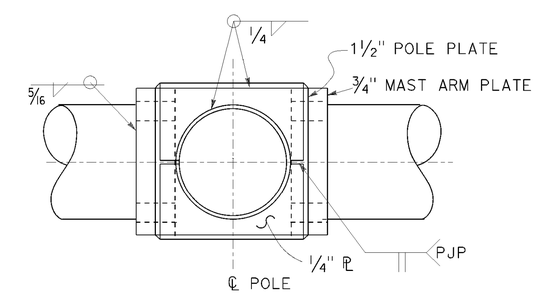

SECTION B-B

POLE TYPE	POLE DATA				BASE PLATE DATA			
	A HEIGHT	Min OD BASE	Min OD TOP	Min THICKNESS	C	BC = BOLT CIRCLE	THICKNESS	ANCHOR BOLT SIZE
15D	30'-0"	8"	3 11/16"	0.1793"	1'-0"	1'-0"	2"	1 1/4" ø x 42"
21D	35'-0"	8 5/8"	3 9/16"					

LUMINAIRE MAST ARM DATA					
PROJECTED LENGTH	N RISE	Min OD AT POLE	NOMINAL THICKNESS	P TYPE 15D	P TYPE 21D
6'-0"	2'-0"±	3 1/4"	0.1196"	31'-6"±	36'-6"±
8'-0"	2'-6"±	3 1/2"		32'-0"±	37'-0"±
10'-0"	3'-3"±	3 7/8"		32'-9"±	37'-9"±
[12'-0"]	4'-3"±			33'-9"±	38'-9"±

STATE OF CALIFORNIA
DEPARTMENT OF TRANSPORTATION

ELECTRICAL SYSTEMS (LIGHTING STANDARD, TYPES 15D AND 21D, DOUBLE LUMINAIRE MAST ARM)

NO SCALE

RSP ES-6D DATED OCTOBER 30, 2015 SUPERSEDES STANDARD PLAN ES-6D DATED MAY 20, 2011 - PAGE 455 OF THE STANDARD PLANS BOOK DATED 2010.

REVISED STANDARD PLAN RSP ES-6D

2010 REVISED STANDARD PLAN RSP ES-6D

P:\PROJ\01\0B27U\drafting\01-0B27u4\010b270va032.dgn
USERNAME => s132662
DGN FILE => 010b270va032.dgn
DATE PLOTTED => 01-FEB-2016
TIME PLOTTED => 09:12
8-24-15

DIST	COUNTY	ROUTE	POST MILES TOTAL PROJECT	SHEET NO.	TOTAL SHEETS
01	DN	101	14.9/15.3	55	91

Theresa Gabriel
REGISTERED ELECTRICAL ENGINEER

October 30, 2015
PLANS APPROVAL DATE

REGISTERED PROFESSIONAL ENGINEER Theresa Aziz Gabriel No. E15129 Exp. 6-30-16 ELECTRICAL STATE OF CALIFORNIA

THE STATE OF CALIFORNIA OR ITS OFFICERS OR AGENTS SHALL NOT BE RESPONSIBLE FOR THE ACCURACY OR COMPLETENESS OF SCANNED COPIES OF THIS PLAN SHEET.

TO ACCOMPANY PLANS DATED 11/30/15

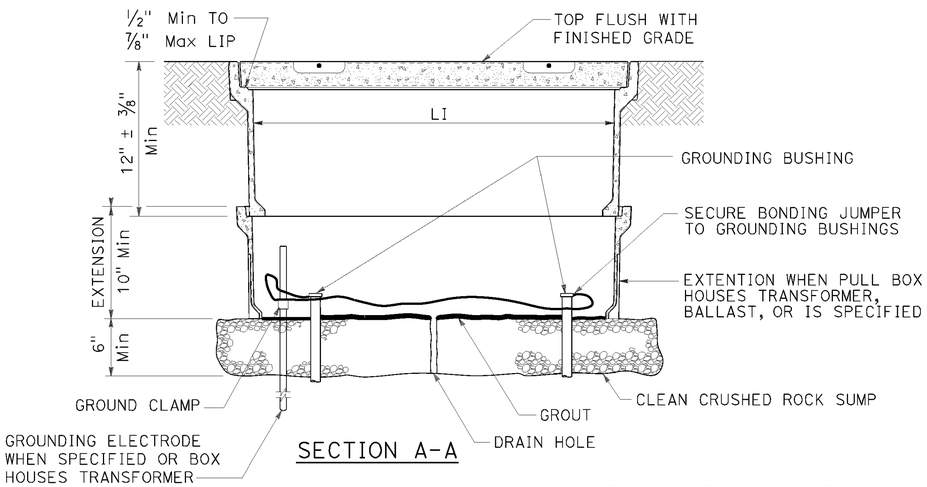

SECTION A-A

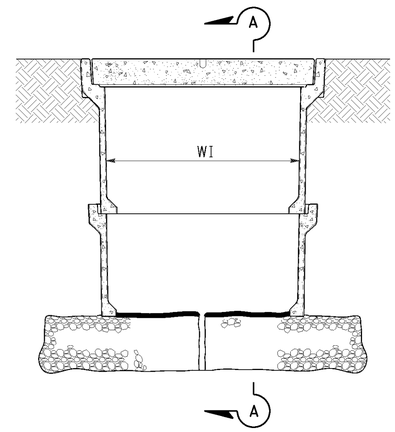

SIDE VIEW

INSTALLATION DETAILS

DETAIL A

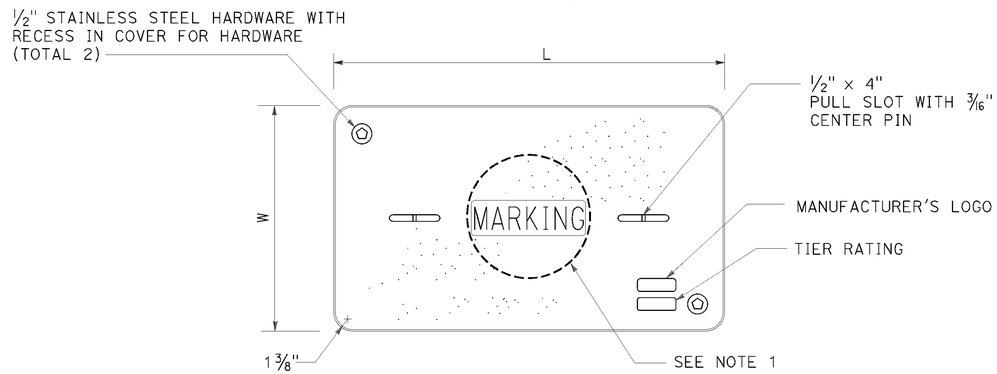

COVER TOP VIEW

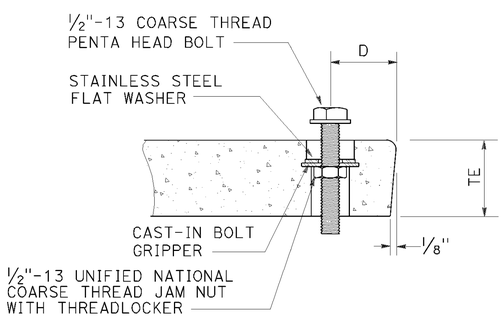

TYPICAL COVER CAPTIVE BOLT

OR SIMILAR

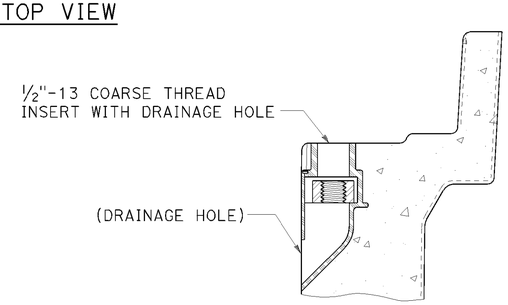

TYPICAL THREADED INSERT

OR SIMILAR

NOTES:

1. Pull box covers shall be marked as follows: "SERVICE" Service circuits between service point and service disconnect; "SPRINKLER-CONTROL" sprinkler control circuits, 50 V or less; "CALTRANS" on all pull boxes, except pull boxes marked "SPRINKLER-CONTROL"; and "TELEPHONE" Telephone service;
   - A) No. 3½ pull box.
     - 1) "SIGNAL" - Traffic signal circuits with or without lighting or sign lighting circuits.
     - 2) "LIGHTING" - Lighting or sign lighting circuits where voltage is under 600 V.
   - B) No. 5, 6, 9 or 9A pull box.
     - 1) "TRAFFIC SIGNAL" - Traffic signal circuits with or without lighting or sign lighting circuits.
     - 2) "LIGHTING" - Lighting or sign lighting circuits where voltage is under 600 V.
     - 3) "LIGHTING-HIGH VOLTAGE" - Lighting or sign lighting circuits where voltage is above 600 V.
     - 4) "IRRIGATION" - Circuits to irrigation controller 120 V or more.
     - 5) "RAMP METER" - Ramp meter circuits.
     - 6) "COUNT STATION" - Count or speed monitor circuits.
     - 7) "COMMUNICATIONS" - Communication circuits.
     - 8) "TOS COMMUNICATIONS" - TOS communication line.
     - 9) "TOS POWER" - TOS power.
     - 10) "TDC POWER" - Telephone demarcation cabinet power.
     - 11) "CCTV" - Closed circuit television circuits.
     - 12) "TMS" - Traffic monitoring station circuits.
     - 13) "CMS" - Changeable message sign circuits.
     - 14) "HAR" - Highway advisory radio circuits.
     - 15) "BOOSTER PUMP" - Booster pump circuit.
2. The nominal dimensions of the opening in which the cover sets shall be the same as the cover dimensions except the length and width dimensions shall be 1/8" greater.
3. Covers and boxes shall be interchangeable with California standard male and female gages. When interchanged with a standard male or female gage, the top surfaces shall be flush within 1/8". Top outside radius of covers and pull boxes shall have a 1/8" radius.
4. Pull box extension may be another pull box as long as the bottom edge of the pull box can fit into the cover opening.
5. Dimensions for the cover for non-traffic pull box are nominal values.

DIMENSION TABLE

PULL BOX	PULL BOX					COVER				
	MINIMUM DEPTH BOX	MINIMUM DEPTH EXTENSION	MINIMUM WEIGHT	LI Min	WI Min	TE	D	L	W	MINIMUM WEIGHT
No. 3½	12"	N/A	40 lb	1' - 3"	9"	1¾"	1¾"	1'-3¼" - 1'-3⅜"	10" - 10⅛"	30 lb
No. 5	12"	10"	55 lb	1' - 8"	11"	2"	1¾"	1'-11¼"	1'-1¾"	60 lb
No. 6	12"	10"	70 lb	2' - 4¼"	1' - 3¼"	2"	2"	2'-6½"	1'-5½"	85 lb

STATE OF CALIFORNIA
DEPARTMENT OF TRANSPORTATION

ELECTRICAL SYSTEMS (NON-TRAFFIC PULL BOX)

NO SCALE

RSP ES-8A DATED OCTOBER 30, 2015 SUPERSEDES RSP ES-8A DATED JULY 19, 2013 AND RSP ES-8A DATED JANUARY 20, 2012 THAT SUPPLEMENTS THE STANDARD PLANS BOOK DATED 2010.

REVISED STANDARD PLAN RSP ES-8A

2010 REVISED STANDARD PLAN RSP ES-8A

DATE PLOTTED => 01-FEB-2016
TIME PLOTTED => 09:12

P:\PROJ\01\0B27U\drafting\01-0B27u4\010b270va033.dgn

USERNAME => s132662
DGN FILE => 010b270va033.dgn

8-25-15

Dist	COUNTY	ROUTE	POST MILES TOTAL PROJECT	SHEET No.	TOTAL SHEETS
01	DN	101	14.9/15.3	56	91

Theresa Gabriel
REGISTERED ELECTRICAL ENGINEER

October 30, 2015
PLANS APPROVAL DATE

REGISTERED PROFESSIONAL ENGINEER
Theresa Aziz Gabriel
No. E15129
Exp. 6-30-16
ELECTRICAL
STATE OF CALIFORNIA

THE STATE OF CALIFORNIA OR ITS OFFICERS OR AGENTS SHALL NOT BE RESPONSIBLE FOR THE ACCURACY OR COMPLETENESS OF SCANNED COPIES OF THIS PLAN SHEET.

TO ACCOMPANY PLANS DATED 11/30/15

NOTE:

Curves represent the minimum footcandle (FC).

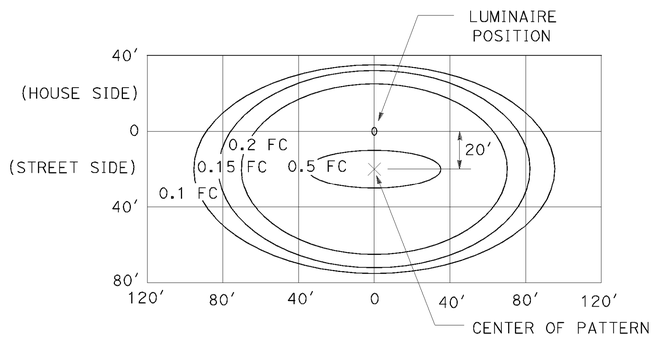

LED LUMINAIRE 165 W
34′ Mounting Height

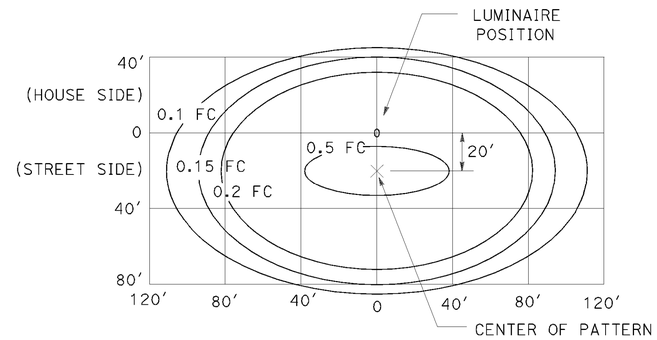

LED LUMINAIRE 235 W
40′ Mounting Height

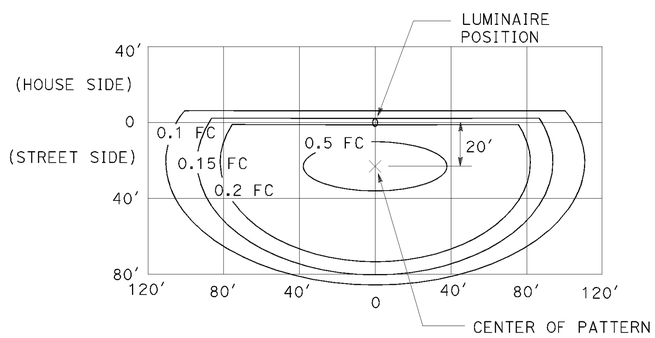

LED LUMINAIRE 235 W
40′ Mounting Height
with back side control

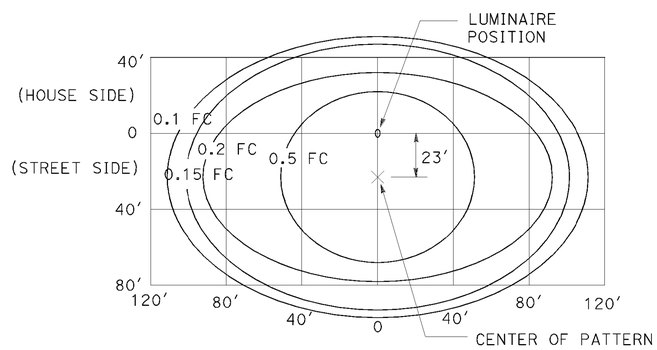

LED LUMINAIRE 300 W
40′ Mounting Height

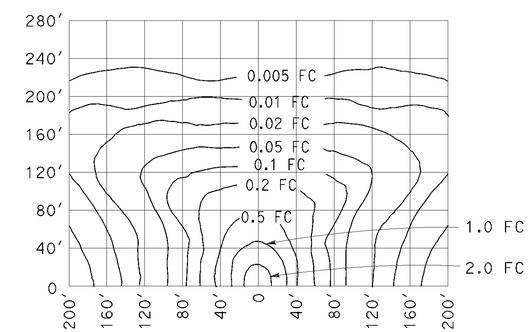

LOW-PRESSURE SODIUM LUMINAIRE 180 W
40′ Mounting Height
Lamp operated at 33,000 lm

STATE OF CALIFORNIA
DEPARTMENT OF TRANSPORTATION

ELECTRICAL SYSTEMS (ISOFOOTCANDLE CURVES)

NO SCALE

RSP ES-10A DATED OCTOBER 30, 2015 SUPERSEDES RSP ES-10A DATED JULY 19, 2013 THAT SUPPLEMENTS THE STANDARD PLANS BOOK DATED 2010.

REVISED STANDARD PLAN RSP ES-10A

2010 REVISED STANDARD PLAN RSP ES-10A

DATE PLOTTED => 01-FEB-2016
TIME PLOTTED => 09:12

P:\PROJ\01\0B27U\drafting\01-0B27u4\010b270va034.dgn

USERNAME => s132662
DGN FILE => 010b270va034.dgn

9-29-15

Dist	COUNTY	ROUTE	POST MILES TOTAL PROJECT	SHEET No.	TOTAL SHEETS
01	DN	101	14.9/15.3	57	91

Theresa Gabriel
REGISTERED ELECTRICAL ENGINEER

October 30, 2015
PLANS APPROVAL DATE

REGISTERED PROFESSIONAL ENGINEER
Theresa Aziz Gabriel
No. E15129
Exp. 6-30-16
ELECTRICAL
STATE OF CALIFORNIA

THE STATE OF CALIFORNIA OR ITS OFFICERS OR AGENTS SHALL NOT BE RESPONSIBLE FOR THE ACCURACY OR COMPLETENESS OF SCANNED COPIES OF THIS PLAN SHEET.

TO ACCOMPANY PLANS DATED 11/30/15

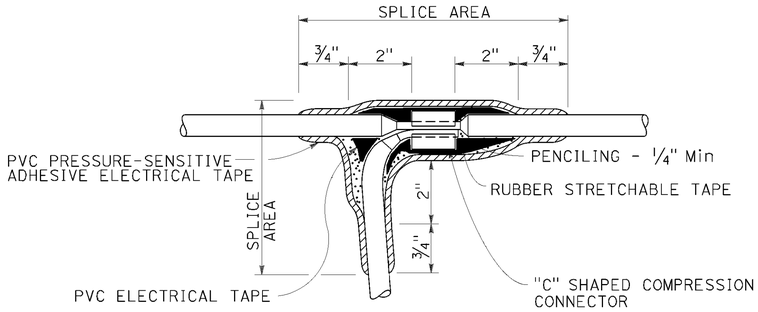

TYPE C SPLICE

See Note 3

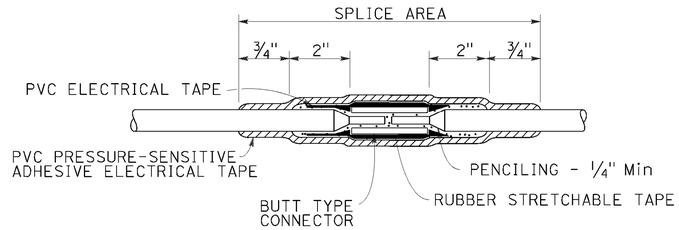

TYPE S SPLICE

See Note 4

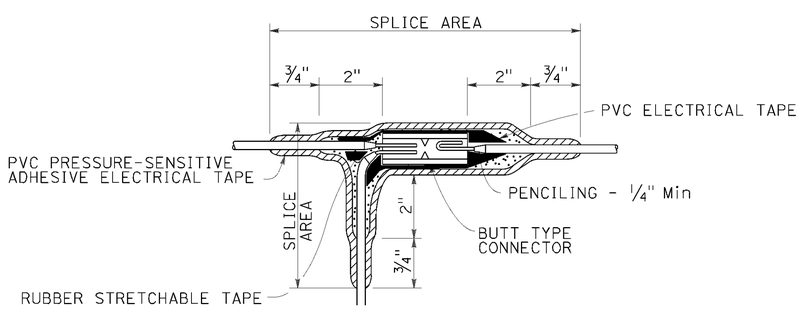

TYPE ST SPLICE

See Note 5

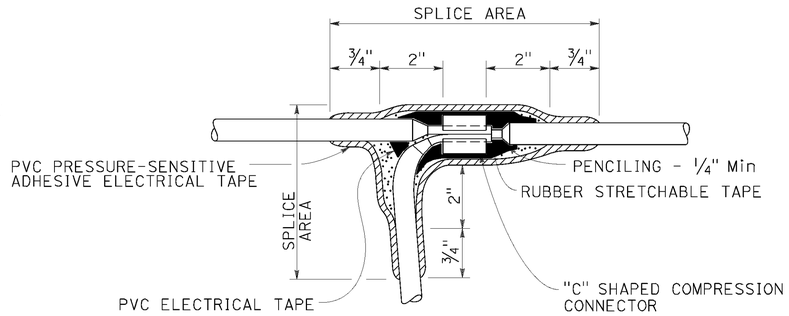

TYPE T SPLICE

See Note 5

NOTES:

1. Dimensions are minimum.
2. Rubber tapes shall be rolled after application.
3. Between 1 free-end and 1 through conductor.
4. Between 2 free-end conductors.
5. Between 3 free-end conductors.

STATE OF CALIFORNIA
DEPARTMENT OF TRANSPORTATION

ELECTRICAL SYSTEMS (SPLICING DETAILS)

NO SCALE

RSP ES-13A DATED OCTOBER 30, 2015 SUPERSEDES STANDARD PLAN ES-13A DATED MAY 20, 2011 - PAGE 491 OF THE STANDARD PLANS BOOK DATED 2010.

REVISED STANDARD PLAN RSP ES-13A

2010 REVISED STANDARD PLAN RSP ES-13A

DATE PLOTTED => 01-FEB-2016
TIME PLOTTED => 09:13

Dist	COUNTY	ROUTE	POST MILES TOTAL PROJECT	SHEET No.	TOTAL SHEETS
01	DN	101	14.9/15.3	58	91

LICENSED LANDSCAPE ARCHITECT

July 19, 2013
PLANS APPROVAL DATE

LICENSED LANDSCAPE ARCHITECT — Gregory A. Balzer 2576 — Expiration Date 2-28-15 — Renewal Date 7-19-13 — Date — STATE OF CALIFORNIA

THE STATE OF CALIFORNIA OR ITS OFFICERS OR AGENTS SHALL NOT BE RESPONSIBLE FOR THE ACCURACY OR COMPLETENESS OF SCANNED COPIES OF THIS PLAN SHEET.

TO ACCOMPANY PLANS DATED 11/30/15

A

AB	AGGREGATE BASE
ABS	ACRYLONITRILE-BUTADIENE-STYRENE
AC	ASPHALT CONCRETE
ACC	ARMOR-CLAD CONDUCTORS
Adj	ADJACENT/ADJUSTABLE
AIC	AUXILIARY IRRIGATION CONTROLLER
Alt	ALTERNATIVE
AMEND	AMENDMENT
ARV	AIR RELEASE VALVE
AUTO	AUTOMATIC
AUX	AUXILIARY
AVB	ATMOSPHERIC VACUUM BREAKER

B

B&B	BALLED AND BURLAPPED
B/B	BRASS/BRONZE
B/B/PL	BRASS/BRONZE/PLASTIC
B/PL	BRASS/PLASTIC
BFM	BONDED FIBER MATRIX
Bit Ctd	BITUMINOUS COATED
BP	BOOSTER PUMP
BPA	BACKFLOW PREVENTER ASSEMBLY
BPE	BACKFLOW PREVENTER ENCLOSURE
BV	BALL VALVE

C

C	CONDUIT
CAP	CORRUGATED ALUMINUM PIPE
CARV	COMBINATION AIR RELEASE VALVE
CB	COUPLING BAND
CCA	CAM COUPLER ASSEMBLY
CEC	CONTROLLER ENCLOSURE CABINET
CHDPE	CORRUGATED HIGH DENSITY POLYETHYLENE
CL	CHAIN LINK
CNC	CONTROL AND NEUTRAL CONDUCTORS
Conc	CONCRETE
CP	COPPER PIPE
CS	COMPOST SOCK
CSP	CORRUGATED STEEL PIPE
CST	CENTER STRIP
CV	CHECK VALVE

D

Dia	DIAMETER
DIP	DUCTILE IRON PIPE
DIT	DRIP IRRIGATION TUBING
DG	DECOMPOSED GRANITE
DN	DIAMETER NOMINAL
DVA	DRIP VALVE ASSEMBLY

E

EC	EROSION CONTROL
ECTC	EROSION CONTROL TECHNOLOGY COUNCIL
Elect	ELECTRIC/ELECTRICAL
Elev	ELEVATION
ELL	ELBOW
ENCL	ENCLOSURE
EP	EDGE OF PAVEMENT
ES	EDGE OF SHOULDER
EST	END STRIP
ESTB	ESTABLISHMENT
ETW	EDGE OF TRAVELED WAY

F

F	FULL CIRCLE
F/P	FULL/PART CIRCLE
FCV	FLOW CONTROL VALVE
FERT	FERTILIZER
FG	FINISHED GRADE
FH	FLEXIBLE HOSE
FIPT	FEMALE IRON PIPE THREAD
FIS	FERTILIZER INJECTOR SYSTEM
FL	FLOW LINE
FR	FIBER ROLL
FS	FLOW SENSOR
FSC	FLOW SENSOR CABLE
FV	FLUSH VALVE

G

Galv	GALVANIZED
GARV	GARDEN VALVE
GARVA	GARDEN VALVE ASSEMBLY
GM	GRAVEL MULCH
GPH	GALLONS PER HOUR
GPM	GALLONS PER MINUTE
GSP	GALVANIZED STEEL PIPE
GV	GATE VALVE

H

H	HALF CIRCLE
HDPE	HIGH DENSITY POLYETHYLENE
HP	HORSEPOWER/HINGE POINT
HPL	HIGH PRESSURE LINE
Hwy	HIGHWAY

I

IC	IRRIGATION CONTROLLER
ICC	IRRIGATION CONTROLLER(S) IN CONTROLLER ENCLOSURE CABINET
ID	INSIDE DIAMETER
IFS	IRRIGATION FILTRATION SYSTEM
IPS	IRON PIPE SIZE
IPT	IRON PIPE THREAD
Irr	IRRIGATION

L

L	LENGTH

M

Max	MAXIMUM
MBGR	METAL BEAM GUARD RAILING
MCV	MANUAL CONTROL VALVE
MIC	MASTER IRRIGATION CONTROLLER
Min	MINIMUM
MIPT	MALE IRON PIPE THREAD
Misc	MISCELLANEOUS
Mtl	MATERIAL
MVP	MAINTENANCE VEHICLE PULLOUT

N

NCN	NO COMMON NAME
NL	NOZZLE LINE
No.	NUMBER
NPT	NATIONAL PIPE THREAD

O

O/C	ON CENTER
OD	OUTSIDE DIAMETER
OL	OVERLAP

P

P	PART CIRCLE
PB	PULL BOX
PCC	PORTLAND CEMENT CONCRETE
PE	POLYETHYLENE
Pkt	PACKET
PL	PLASTIC
PLS	PURE LIVE SEED
PLT	PLANT/PLANTING
PLT ESTB	PLANT ESTABLISHMENT
PM	POST MILE
PR	PRESSURE RATED
PRLV	PRESSURE RELIEF VALVE
PRV	PRESSURE REGULATING VALVE
PVC	POLYVINYL CHLORIDE
Pvmt	PAVEMENT

Q

Q	QUARTER CIRCLE
QCV	QUICK COUPLING VALVE

R

R	RADIUS
RCP	REINFORCED CONCRETE PIPE
RCV	REMOTE CONTROL VALVE
RCVM	REMOTE CONTROL VALVE (MASTER)
RCVMF	REMOTE CONTROL VALVE (MASTER) W/FLOW SENSOR
RCVP	REMOTE CONTROL VALVE W/PRESSURE REGULATOR
RCW	RECYCLED WATER
RECP	ROLLED EROSION CONTROL PRODUCT
REQ	REQUIRED
RICS	REMOTE IRRIGATION CONTROL SYSTEM
R/W	RIGHT OF WAY

S

S	SLIP
SCH	SCHEDULE
SF	STATE-FURNISHED
Shld	SHOULDER
Sq	SQUARE
SST	SIDE STRIP
Sta	STATION
Std	STANDARD
SW	SIDEWALK/SOUND WALL

T

T	THIRD CIRCLE/THREAD
TLS	TRUCK LOADING STANDPIPE
TQ	THREE QUARTER CIRCLE
TRM	TURF REINFORCEMENT MAT
TT	TWO-THIRDS CIRCLE
TWSA	TREE WELL SPRINKLER ASSEMBLY
Typ	TYPICAL

U

UG	UNDERGROUND

W

W	WIDTH
W/	WITH
WM	WATER METER
WS	WYE STRAINER
WSA	WYE STRAINER ASSEMBLY
WSP	WELDED STEEL PIPE
WWM	WELDED WIRE MESH

NOTE:

For additional abbreviations, see Standard Plans A10A and A10B.

STATE OF CALIFORNIA
DEPARTMENT OF TRANSPORTATION

LANDSCAPE AND EROSION CONTROL ABBREVIATIONS

NO SCALE

RSP H1 DATED JULY 19, 2013 SUPERSEDES STANDARD PLAN H1 DATED MAY 20, 2011 - PAGE 218 OF THE STANDARD PLANS BOOK DATED 2010.

REVISED STANDARD PLAN RSP H1

2010 REVISED STANDARD PLAN RSP H1

DATE PLOTTED => 01-FEB-2016
TIME PLOTTED => 09:13

P:\PROJ\01\0B27U\drafting\01-0B27U4\010b270va036.dgn

USERNAME => s132662
DGN FILE => 010b270va036.dgn

6-28-13

Dist	COUNTY	ROUTE	POST MILES TOTAL PROJECT	SHEET No.	TOTAL SHEETS
01	DN	101	14.9/15.3	59	91

LICENSED LANDSCAPE ARCHITECT

November 15, 2013
PLANS APPROVAL DATE

THE STATE OF CALIFORNIA OR ITS OFFICERS OR AGENTS SHALL NOT BE RESPONSIBLE FOR THE ACCURACY OR COMPLETENESS OF SCANNED COPIES OF THIS PLAN SHEET.

LICENSED LANDSCAPE ARCHITECT — Gregory A. Balzer 2576 — 02-28-15 Renewal Date — 11-15-13 Date — STATE OF CALIFORNIA

TO ACCOMPANY PLANS DATED 11/30/15

2010 REVISED STANDARD PLAN RSP H2

EXISTING	NEW	ITEM DESCRIPTION
		WATER METER (WM)
		BACKFLOW PREVENTER ASSEMBLY (BPA)
		BACKFLOW PREVENTER ENCLOSURE (BPE)
		BOOSTER PUMP (BP)
		TRUCK LOADING STANDPIPE (TLS)
	FS	FLOW SENSOR (FS)
		MASTER IRRIGATION CONTROLLER (MIC)
		AUXILIARY IRRIGATION CONTROLLER (AIC)
		IRRIGATION CONTROLLER (IC) IRRIGATION CONTROLLER (IC) (BATTERY) IRRIGATION CONTROLLER (IC) (SOLAR) IRRIGATION CONTROLLER (IC) (TWO WIRE) IRRIGATION CONTROLLER(S) IN CONTROLLER ENCLOSURE CABINET (ICC)
acc	ACC	ARMOR-CLAD CONDUCTORS (ACC)
cnc	CNC	CONTROL AND NEUTRAL CONDUCTORS (CNC)
		IRRIGATION CONDUIT
		EXTEND IRRIGATION CONDUIT
dip	DIP	DUCTILE IRON PIPE (SUPPLY LINE) (MAIN) (DIP)
		GALVANIZED STEEL PIPE (SUPPLY LINE) (MAIN) (GSP)
		GALVANIZED STEEL PIPE (SUPPLY LINE) (LATERAL) (GSP)
		PLASTIC PIPE (SUPPLY LINE) (MAIN)
		PLASTIC PIPE (SUPPLY LINE) (LATERAL)
cp	CP	COPPER PIPE (SUPPLY LINE)
dit	DIT	DRIP IRRIGATION TUBING
		REMOTE CONTROL VALVE (RCV) REMOTE CONTROL VALVE (MASTER) (RCVM) REMOTE CONTROL VALVE (MASTER) W/FLOW METER (RCVMF)
P	P	REMOTE CONTROL VALVE W/PRESSURE REGULATOR (RCVP)
		EXISTING MANUAL CONTROL VALVE (MCV)
	V	DRIP VALVE ASSEMBLY (DVA)
	Y	WYE STRAINER ASSEMBLY (WSA)

EXISTING	NEW	ITEM DESCRIPTION
		GATE VALVE (GV)
		BALL VALVE (BV)
		QUICK COUPLING VALVE (QCV)
		CAM COUPLER ASSEMBLY (CCA)
		GARDEN VALVE ASSEMBLY (GARVA)
		PRESSURE REGULATING VALVE (PRV)
		PRESSURE RELIEF VALVE (PRLV)
		FLOW CONTROL VALVE (FCV)
		COMBINATION AIR RELEASE VALVE (CARV)
		CHECK VALVE (CV)
		FLUSH VALVE (FV)
		EXISTING NOZZLE LINE W/TURNING UNION
		EXISTING IRRIGATION SYSTEM
		EXISTING IRRIGATION SYSTEM TO BE REMOVED
		CHAIN LINK GATE
		QUICK COUPLING VALVE W/SPRINKLER PROTECTOR
3	3	SPRINKLER W/SPRINKLER PROTECTOR
	C	CONNECT TO EXISTING SYSTEM
		CAP
		CAP EXISTING
	\\\FR\\\	FIBER ROLL
	\\\CS\\\	COMPOST SOCK

RCV SIZE
IRRIGATION CONTROLLER
CONTROLLER STATION
VALVE IN PARALLEL (IF APPLICABLE)
GPM
QUANTITY OF SPRINKLERS (WHEN SHOWN)

* 2½"-A-2b-40-60

VALVE CODE

* VALVE CODES FOR EXISTING VALVES ARE SHOWN IN A DASHED ENCLOSURE.

STATE OF CALIFORNIA
DEPARTMENT OF TRANSPORTATION

LANDSCAPE AND EROSION CONTROL SYMBOLS

NO SCALE

RSP H2 DATED NOVEMBER 15, 2013 SUPERSEDES RSP H2 DATED JULY 19, 2013 AND STANDARD PLAN H2 DATED MAY 20, 2011 - PAGE 219 OF THE STANDARD PLANS BOOK DATED 2010.

REVISED STANDARD PLAN RSP H2

DATE PLOTTED => 01-FEB-2016
TIME PLOTTED => 09:13

P:\PROJ\01\0B27U\drafting\01-0B27u4\010b270va037.dgn

USERNAME => s132662
DGN FILE => 010b270va037.dgn

10-9-13

Dist	COUNTY	ROUTE	POST MILES TOTAL PROJECT	SHEET No.	TOTAL SHEETS
01	DN	101	14.9/15.3	60	91

REGISTERED CIVIL ENGINEER

April 19, 2013
PLANS APPROVAL DATE

REGISTERED PROFESSIONAL ENGINEER Gurinderpal Bhullar No. C48815 Exp. 9-30-14 CIVIL STATE OF CALIFORNIA

THE STATE OF CALIFORNIA OR ITS OFFICERS OR AGENTS SHALL NOT BE RESPONSIBLE FOR THE ACCURACY OR COMPLETENESS OF SCANNED COPIES OF THIS PLAN SHEET.

TO ACCOMPANY PLANS DATED 11/30/15

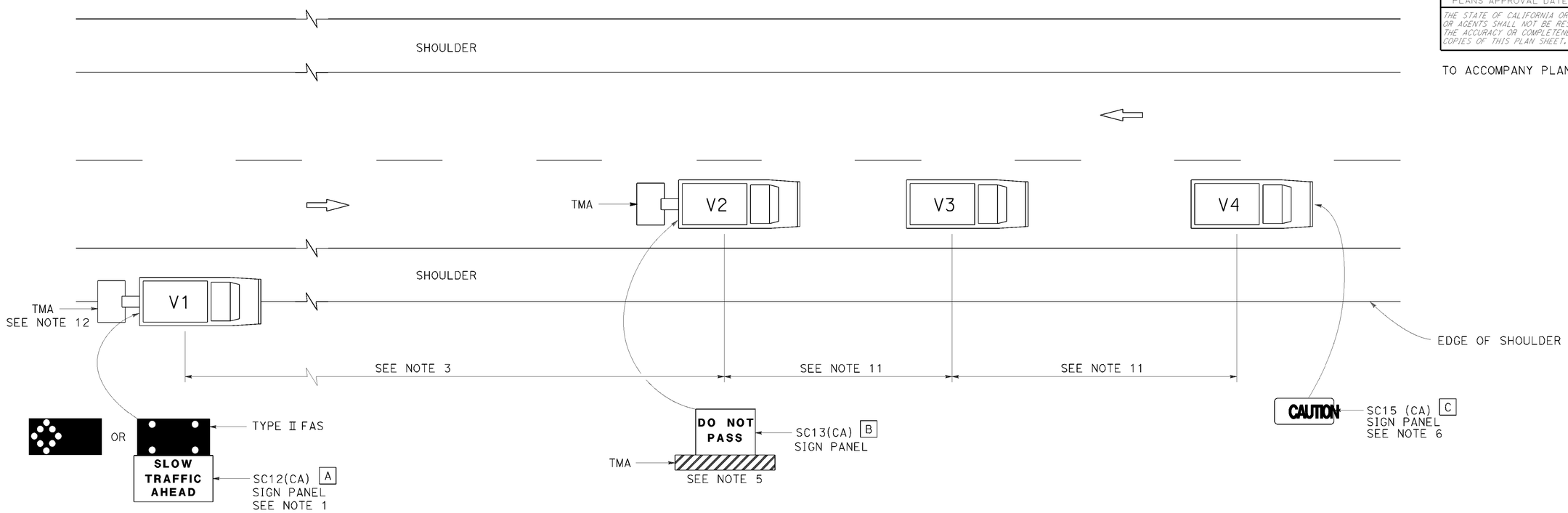

LEGEND

V1	SIGN VEHICLE
V2	SHADOW VEHICLE
V3	WORK/APPLICATION VEHICLE
V4	SIGN VEHICLE
TMA	TRUCK-MOUNTED ATTENUATOR
	FLASHING ARROW SIGN (FAS) IN FLASHING CAUTION MODE
	FLASHING ARROW SIGN (FAS) IN ALTERNATING DIAMOND CAUTION

SIGN PANEL SIZE (Min)

A	72" x 42"
B	54" x 42"
C	54" x 24"

NOTES:

1. Either a changeable message sign or a SC12(CA) "SLOW TRAFFIC AHEAD" sign shall be mounted on the rear of sign vehicle V1. The changeable message sign shall be sequenced to show the "CAUTION" message first, follow by the "SLOW TRAFFIC AHEAD" message. A Type II flashing arrow sign may be used with the SC12(CA) sign panel.
2. Sign vehicle V1 should be positioned where highly visible when shoulders are not available.
3. If traffic queues develop, sign vehicle V1 should be positioned upstream from the end of queue.
4. Vehicle-mounted sign panels shall have Type III or above retroreflective sheeting, black on white, or black on fluorescent orange, with 6" minimum series D letters per Caltrans sign specifications.
5. Shadow vehicle shall be equipped with a truck-mounted attenuator. The sign panel shown shall be mounted on the rear of shadow vehicle V2. The message "LANE CLOSED" may be used in place of the "DO NOT PASS" message.
6. The sign panel shown shall be mounted on the front of sign vehicle V4, facing opposing traffic.
7. All vehicles shall be equipped with flashing or rotating amber lights.
8. Sign vehicle V4 will not be required when the work and vehicles V2 and V3 are 2' or more from the centerline of the highway during the work or application operations.
9. All vehicles used for lane closures shall be equipped with two-way radios and the vehicle operators shall maintain communication during the work or application operation.
10. This plan shall not be used where workers would be on foot in the work area. Use a stationary type lane closure (Revised Standard Plan T13) for this condition.
11. Minimize spacing between vehicles V2 and V3 and vehicles V3 and V4 to deter road users from driving in between them.
12. If sign vehicle V1 encroaches into the traffic lane due to insufficient shoulder width, sign vehicle V1 shall be equipped with a truck-mounted attenuator. Sign vehicle V1 shall stay as close to the edge of shoulder as practicable.

STATE OF CALIFORNIA
DEPARTMENT OF TRANSPORTATION

TRAFFIC CONTROL SYSTEM FOR MOVING LANE CLOSURE ON TWO LANE HIGHWAYS

NO SCALE

RSP T17 DATED APRIL 19, 2013 SUPERSEDES STANDARD PLAN T17
DATED MAY 20, 2011 - PAGE 245 OF THE STANDARD PLANS BOOK DATED 2010.

REVISED STANDARD PLAN RSP T17

2010 REVISED STANDARD PLAN RSP T17

P:\PROJ\01\0B27U\drafting\01-0B27u4\010b270va038.dgn
USERNAME => s132662
DGN FILE => 010b270va038.dgn
DATE PLOTTED => 01-FEB-2016
TIME PLOTTED => 09:13
12-18-12

DIST	COUNTY	ROUTE	POST MILES TOTAL PROJECT	SHEET No.	TOTAL SHEETS
01	DN	101	14.9/15.3	61	91

REGISTERED CIVIL ENGINEER 09-09-15 DATE

November 30, 2015
PLANS APPROVAL DATE

REGISTERED PROFESSIONAL ENGINEER Vadim Shostak No. 78424 Exp. 9-30-17 CIVIL STATE OF CALIFORNIA

The State of California or its officers or agents shall not be responsible for the accuracy or completeness of scanned copies of this plan sheet.

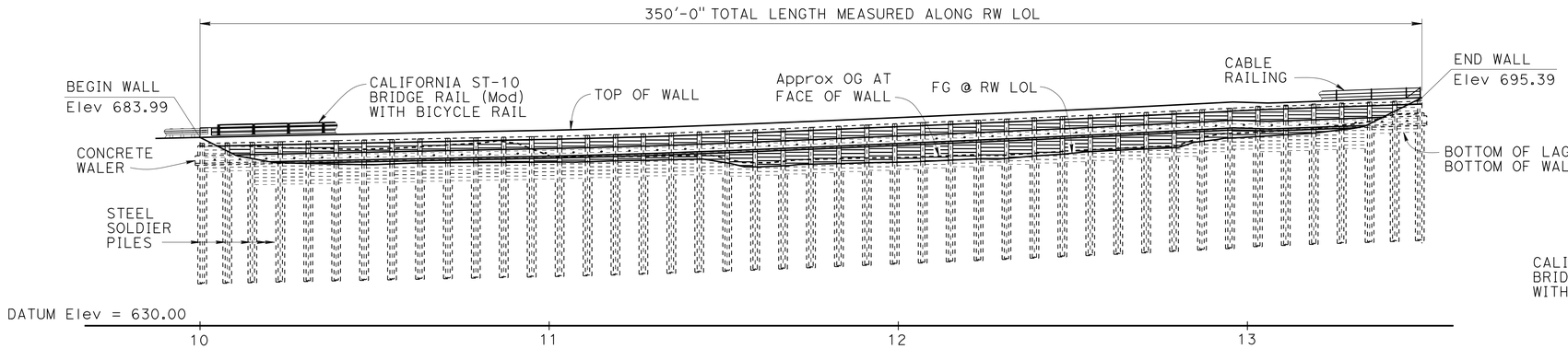

DEVELOPED MIRROR ELEVATION

1" = 20'

QUANTITIES

REMOVE RETAINING WALL (PORTION) (LS)	LUMP	SUM
STRUCTURE EXCAVATION (SOLDIER PILE WALL)	112	CY
STRUCTURE BACKFILL (SOLDIER PILE WALL)	72	CY
CONCRETE BACKFILL (SOLDIER PILE WALL)	228	CY
LEAN CONCRETE BACKFILL	48	CY
GROUND ANCHOR (SUBHORIZONTAL)	44	EA
STEEL SOLDIER PILE (HP 14 X 117)	1,800	LF
30" DRILLED HOLE	1,530	LF
STRUCTURAL CONCRETE (WALER)	73	CY
STRUCTURAL CONCRETE (PILE CAP)	6	CY
STRUCTURAL CONCRETE, BARRIER SLAB	142	CY
BAR REINFORCING STEEL - EPOXY COATED (PILE CAP)	590	LB
BAR REINFORCING STEEL - EPOXY COATED (WALER)	20,400	LB
TIMBER LAGGING	23	MFBM
CLEAN AND PAINT STEEL SOLDIER PILING	LUMP	SUM
PREPARE AND STAIN CONCRETE	1,590	SQFT
CLASS 1 PERMEABLE MATERIAL (TYPE B)	116	CY
CABLE RAILING	57	LF
CALIFORNIA ST-10 BRIDGE RAILING (MODIFIED) WITH BICYCLE RAILING	296	LF

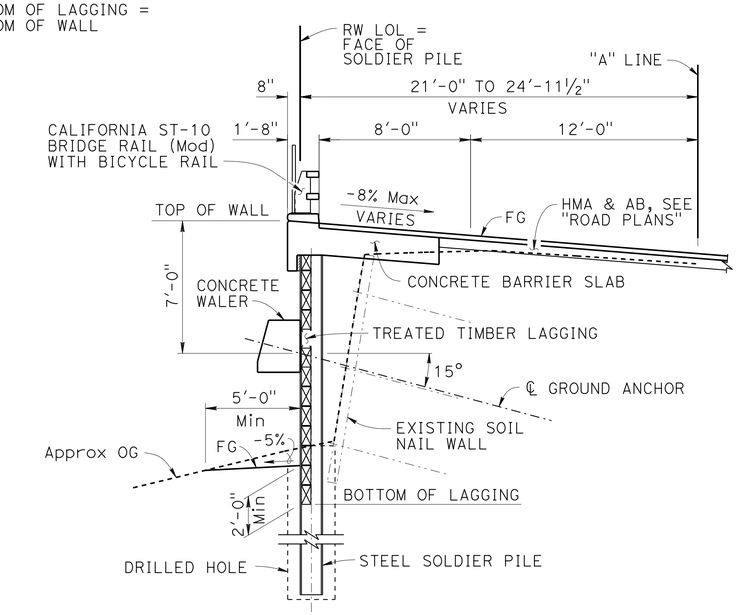

TYPICAL SECTION

¼" = 1'-0"

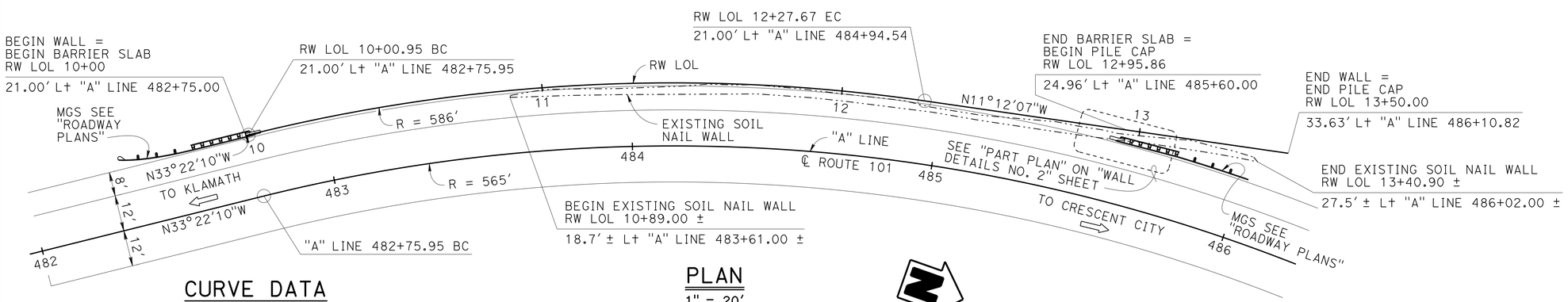

PLAN

1" = 20'

CURVE DATA

"A1" LINE	RW LOL
R = 565.00'	R = 586.00'
Δ = 44°15'35"	Δ = 22°10'03"
T = 229.77'	T = 114.80'
L = 436.45'	L = 226.72'

Jeff Sims, DESIGN ENGINEER	DESIGN	BY Vadim Shostak	CHECKED Greg Thornton	LOAD & RESISTANCE FACTOR DESIGN	
	DETAILS	BY Jie Tang	CHECKED Greg Thornton	LAYOUT: BY R. Ferreira/ V. Shostak	CHECKED Greg Thornton
	QUANTITIES	BY Bob Huddleston	CHECKED Gerald Dickerson	SPECIFICATIONS: BY Sirisha Nelapatla	PLANS AND SPECS COMPARED Andrea Mcphee

ORIGINAL SCALE IN INCHES FOR REDUCED PLANS 0 1 2 3

STATE OF CALIFORNIA
DEPARTMENT OF TRANSPORTATION

DIVISION OF ENGINEERING SERVICES
STRUCTURE DESIGN
DESIGN BRANCH 1

BRIDGE NO. 01E0021
POST MILE 14.89

SOUTH LAST CHANCE WALL
GENERAL PLAN

UNIT: 3576
PROJECT NUMBER & PHASE: 0115000111 4
CONTRACT NO.: 01-0B27U4

DISREGARD PRINTS BEARING EARLIER REVISION DATES

REVISION DATES 03/24/15 07/16/15 09/14/15

SHEET 1 OF 15

STRUCTURES DESIGN GENERAL PLAN SHEET (ENGLISH) (REV.09-01-10)

FILE => Z01-0b27u-a-gp.dgn

USERNAME => s132662 DATE PLOTTED => 01-FEB-2016 TIME PLOTTED => 09:13

DIST	COUNTY	ROUTE	POST MILES TOTAL PROJECT	SHEET No.	TOTAL SHEETS
01	DN	101	14.9/15.3	62	91

REGISTERED CIVIL ENGINEER 09-09-15 DATE

November 30, 2015
PLANS APPROVAL DATE

REGISTERED PROFESSIONAL ENGINEER Vadim Shostak No. 78424 Exp. 9-30-17 CIVIL STATE OF CALIFORNIA

The State of California or its officers or agents shall not be responsible for the accuracy or completeness of electronic copies of this plan sheet.

INDEX TO PLANS

SHEET NO.	TITLE
1.	GENERAL PLAN
2.	INDEX TO PLANS
3.	STRUCTURE PLAN NO. 1
4.	STRUCTURE PLAN NO. 2
5.	STRUCTURE PLAN NO. 3
6.	FOUNDATION PLAN
7.	TYPICAL SECTION
8.	WALL DETAILS No. 1
9.	WALL DETAILS No. 2
10.	WALL DETAILS NO. 3
11.	GROUND ANCHOR DETAILS
12.	BARRIER RAIL DETAILS
13.	LOG OF TEST BORINGS 1 OF 3
14.	LOG OF TEST BORINGS 2 OF 3
15.	LOG OF TEST BORINGS 3 OF 3

STANDARD PLANS DATED MAY 2010

A10A	ABBREVIATIONS (SHEET 1 OF 2)
RSP A10B	ABBREVIATIONS (SHEET 2 OF 2)
A10C	LINES AND SYMBOLS (SHEET 1 OF 3)
A10D	LINES AND SYMBOLS (SHEET 2 OF 3)
A10E	LINES AND SYMBOLS (SHEET 3 OF 3)
RSP A10F	LEGEND - SOIL (SHEET 1 OF 2)
RSP A10G	LEGEND - SOIL (SHEET 2 OF 2)
A10H	LEGEND - ROCK
RSP B11-47	CABLE RAILING
RSP B11-68	CALIFORNIA ST-10 BRIDGE RAIL (SHEET 1 OF 3)
B11-69	CALIFORNIA ST-10 BRIDGE RAIL (SHEET 2 OF 3)
RSP B11-70	CALIFORNIA ST-10 BRIDGE RAIL (SHEET 3 OF 3)

STANDARD PLAN SHEET No.

DETAIL No.

GENERAL NOTES
LOAD AND RESISTANCE FACTOR DESIGN

DESIGN: AASHTO LRFD Bridge Design Specifications, Sixth Edition with California Amendments, Preface Dated January 2014

LIVE LOADING: 2'-0" Level Earth Surcharge

SOIL PARAMETERS: (For determination of design lateral earth pressures)
$\phi = 34°$, $\gamma = 120$ pcf (top 12' of soil)
$\phi = 33.5°$, $\gamma = 115$ pcf, c = 75 psf (below 12' of soil)

SEISMIC LOADING: PGA = 0.48 g
Horizontal Seismic Coefficient (K_h) = 0.16
Vertical Seismic Coefficient (K_v) = 0.0

PRESTRESSING STEEL: (GROUND ANCHORS)
Strands - ASTM designation: A416 (270 ksi low Relaxation Steel)
FTL = Factored Test Load Per Anchor (kips)
FDL = Factored Design Load Per Anchor (kips)
(Single Ground Anchor) FDL = 180 k
FTL = 1.0 FDL
LL = Lock off Load = 0.55 FDL
f_{pu} = Minimum ultimate tensile stress of steel in ground anchor (ksi)
A_s(Min) = Minimum cross sectional area of prestressing steel in Ground Anchor (in^2)

$$A_s(\text{Min}) = \frac{1.0\ \text{FTL}}{0.75\ f_{pu}}$$

REINFORCED CONCRETE: (Waler, Pile Cap and Barrier Slab)
$f_y = 60$ ksi
$f'_c = 3.6$ ksi
n = 8

STRUCTURAL STEEL: $f_y = 50$ ksi

STRUCTURAL TIMBER: Treated Douglas Fir Grade No. 1 or better
Timber to be full sawn

DESIGN	BY Vadim Shostak	CHECKED Greg Thornton	
DETAILS	BY Jie Tang	CHECKED Greg Thornton	
QUANTITIES	BY Bob Huddleston	CHECKED Gerald Dickerson	

STATE OF CALIFORNIA
DEPARTMENT OF TRANSPORTATION

DIVISION OF ENGINEERING SERVICES
STRUCTURE DESIGN
DESIGN BRANCH 1

BRIDGE NO. 01E0021
POST MILE 14.89

SOUTH LAST CHANCE WALL
INDEX TO PLANS

STRUCTURES DESIGN DETAIL SHEET (ENGLISH) (REV. 09-01-10)

ORIGINAL SCALE IN INCHES FOR REDUCED PLANS 0 1 2 3

UNIT: 3576
PROJECT NUMBER & PHASE: 0115000111 4 CONTRACT NO.: 01-0B27U4

DISREGARD PRINTS BEARING EARLIER REVISION DATES

REVISION DATES 04/09/15 05/26/15 07/01/15

SHEET 2 OF 15

FILE => Z01-0b27u-a-itp.dgn

USERNAME => s132662 DATE PLOTTED => 01-FEB-2016 TIME PLOTTED => 09:13

DIST	COUNTY	ROUTE	POST MILES TOTAL PROJECT	SHEET No.	TOTAL SHEETS
01	DN	101	14.9/15.3	63	91

REGISTERED CIVIL ENGINEER 09-09-15 DATE

November 30, 2015
PLANS APPROVAL DATE

REGISTERED PROFESSIONAL ENGINEER Vadim Shostak No. 78424 Exp. 9-30-17 CIVIL STATE OF CALIFORNIA

The State of California or its officers or agents shall not be responsible for the accuracy or completeness of electronic copies of this plan sheet.

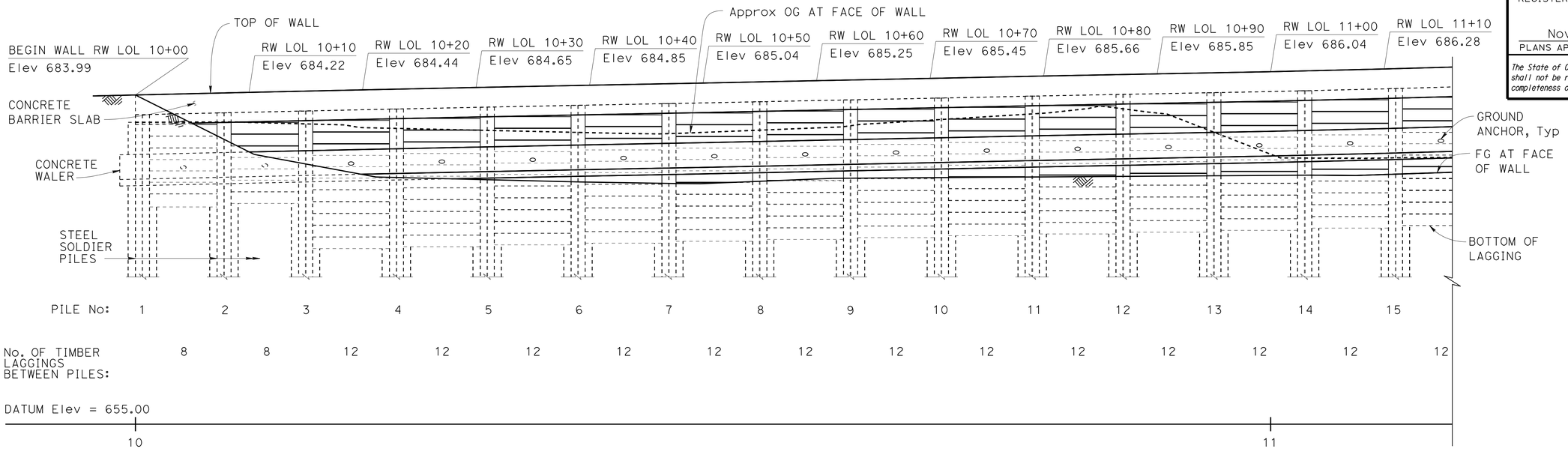

DEVELOPED MIRROR ELEVATION

1" = 5'

NOTES:

1. All Steel Soldier Piles are HP 14 X 117, 40'-0" long. See "GENERAL NOTES" on "INDEX TO PLANS" sheet for specifications.
2. California ST-10 Bridge Rail (Mod) not shown on DEVELOPED MIRROR ELEVATION or PLAN.
3. Concrete barrier slab not shown on PLAN.

-·-·- Indicates existing structure

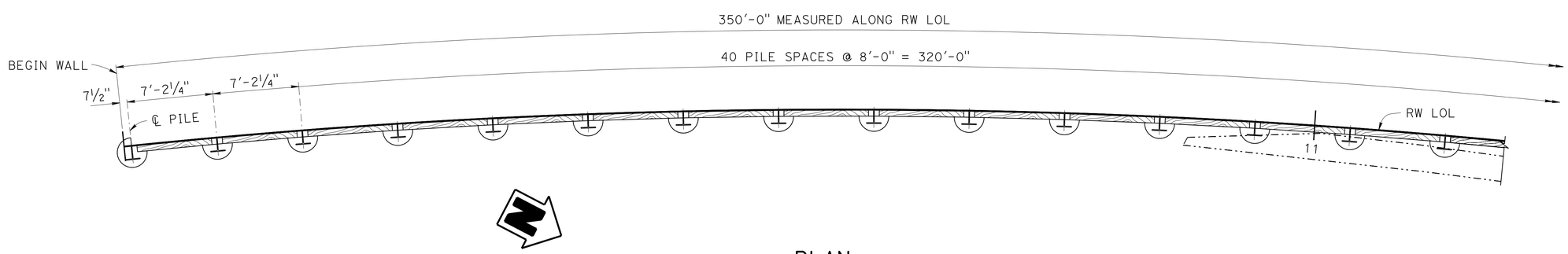

PLAN

1" = 5'

DESIGN	BY Vadim Shostak	CHECKED Greg Thornton	
DETAILS	BY Jie Tang	CHECKED Greg Thornton	
QUANTITIES	BY Bob Huddleston	CHECKED Gerald Dickerson	

STATE OF CALIFORNIA
DEPARTMENT OF TRANSPORTATION

DIVISION OF ENGINEERING SERVICES
STRUCTURE DESIGN
DESIGN BRANCH 1

BRIDGE NO. 01E0021
POST MILE 14.89

SOUTH LAST CHANCE WALL
STRUCTURE PLAN NO. 1

STRUCTURES DESIGN DETAIL SHEET (ENGLISH) (REV. 09-01-10)

ORIGINAL SCALE IN INCHES FOR REDUCED PLANS 0 1 2 3

UNIT: 3576
PROJECT NUMBER & PHASE: 0115000111 4 CONTRACT NO.: 01-0B27U4

DISREGARD PRINTS BEARING EARLIER REVISION DATES

REVISION DATES 04/04/15 04/28/15 05/20/15

SHEET 3 OF 15

FILE => Z01-0b27u-b-sp01.dgn

USERNAME => s132662 DATE PLOTTED => 01-FEB-2016 TIME PLOTTED => 09:14

DIST	COUNTY	ROUTE	POST MILES TOTAL PROJECT	SHEET No.	TOTAL SHEETS
01	DN	101	14.9/15.3	64	91

REGISTERED CIVIL ENGINEER 09-09-15 DATE

November 30, 2015
PLANS APPROVAL DATE

REGISTERED PROFESSIONAL ENGINEER Vadim Shostak No. 78424 Exp. 9-30-17 CIVIL STATE OF CALIFORNIA

The State of California or its officers or agents shall not be responsible for the accuracy or completeness of electronic copies of this plan sheet.

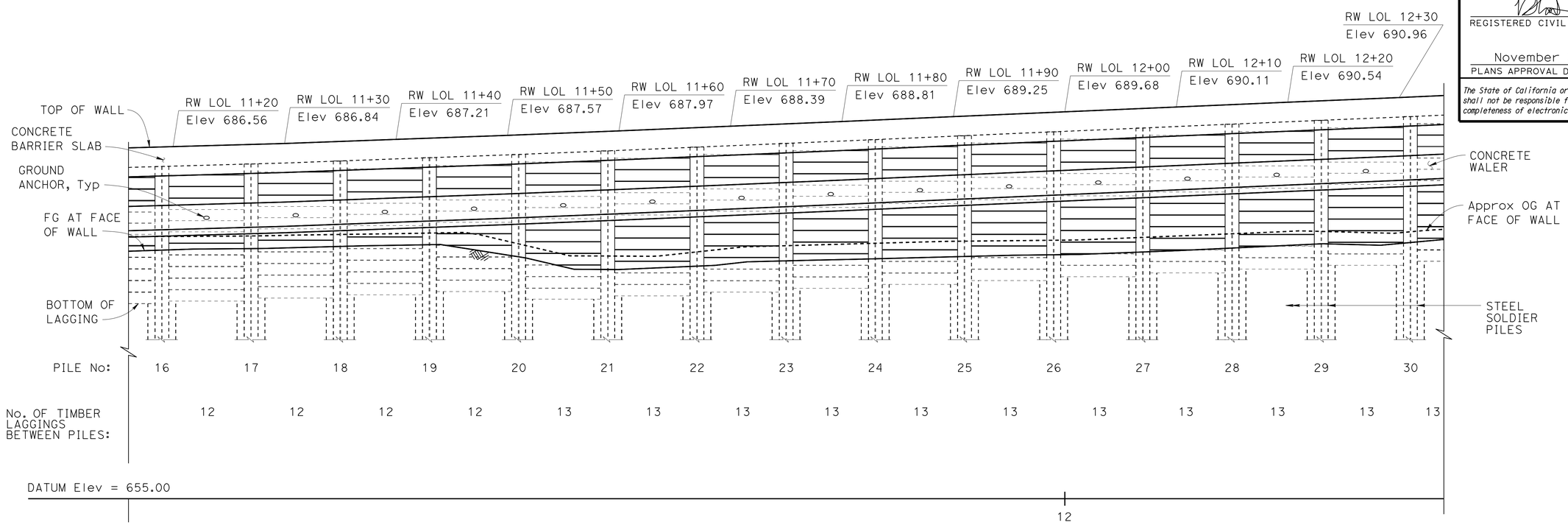

DEVELOPED MIRROR ELEVATION

1" = 5'

NOTES:

1. All Steel Soldier Piles are HP 14 X 117, 40'-0" long. See "GENERAL NOTES" on "INDEX TO PLANS" sheet for specifications.
2. California ST-10 Bridge Rail (Mod) not shown on DEVELOPED MIRROR ELEVATION or PLAN.
3. Concrete barrier slab not shown on PLAN.

-·-·- Indicates existing structure

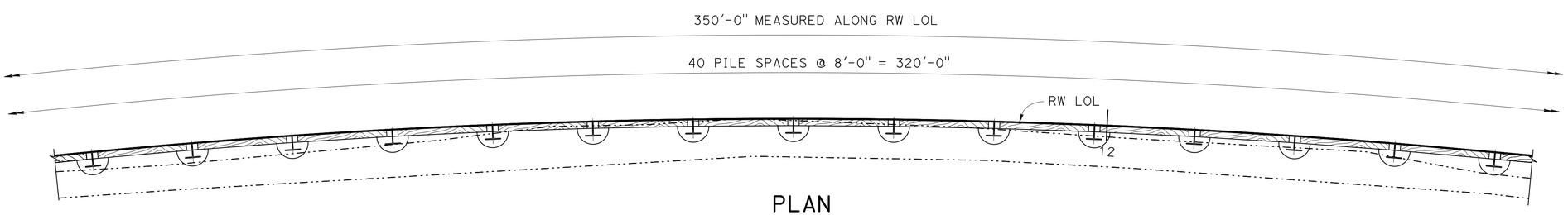

PLAN

1" = 5'

DESIGN	BY Vadim Shostak	CHECKED Greg Thornton	
DETAILS	BY Jie Tang	CHECKED Greg Thornton	
QUANTITIES	BY Bob Huddleston	CHECKED Gerald Dickerson	

STATE OF CALIFORNIA
DEPARTMENT OF TRANSPORTATION

DIVISION OF ENGINEERING SERVICES
STRUCTURE DESIGN
DESIGN BRANCH 1

BRIDGE NO. 01E0021
POST MILE 14.89

SOUTH LAST CHANCE WALL
STRUCTURE PLAN NO. 2

STRUCTURES DESIGN DETAIL SHEET (ENGLISH) (REV. 09-01-10)

ORIGINAL SCALE IN INCHES FOR REDUCED PLANS 0 1 2 3

UNIT: 3576
PROJECT NUMBER & PHASE: 0115000111 4 CONTRACT NO.: 01-0B27U4

DISREGARD PRINTS BEARING EARLIER REVISION DATES

REVISION DATES 04/08/15 04/28/15 06/29/15

SHEET 4 OF 15

FILE => Z01-0b27u-b-sp02.dgn

USERNAME => s132662 DATE PLOTTED => 01-FEB-2016 TIME PLOTTED => 09:14

DIST	COUNTY	ROUTE	POST MILES TOTAL PROJECT	SHEET No.	TOTAL SHEETS
01	DN	101	14.9/15.3	65	91

REGISTERED CIVIL ENGINEER 09-09-15 DATE

November 30, 2015
PLANS APPROVAL DATE

REGISTERED PROFESSIONAL ENGINEER Vadim Shostak No. 78424 Exp. 9-30-17 CIVIL STATE OF CALIFORNIA

The State of California or its officers or agents shall not be responsible for the accuracy or completeness of electronic copies of this plan sheet.

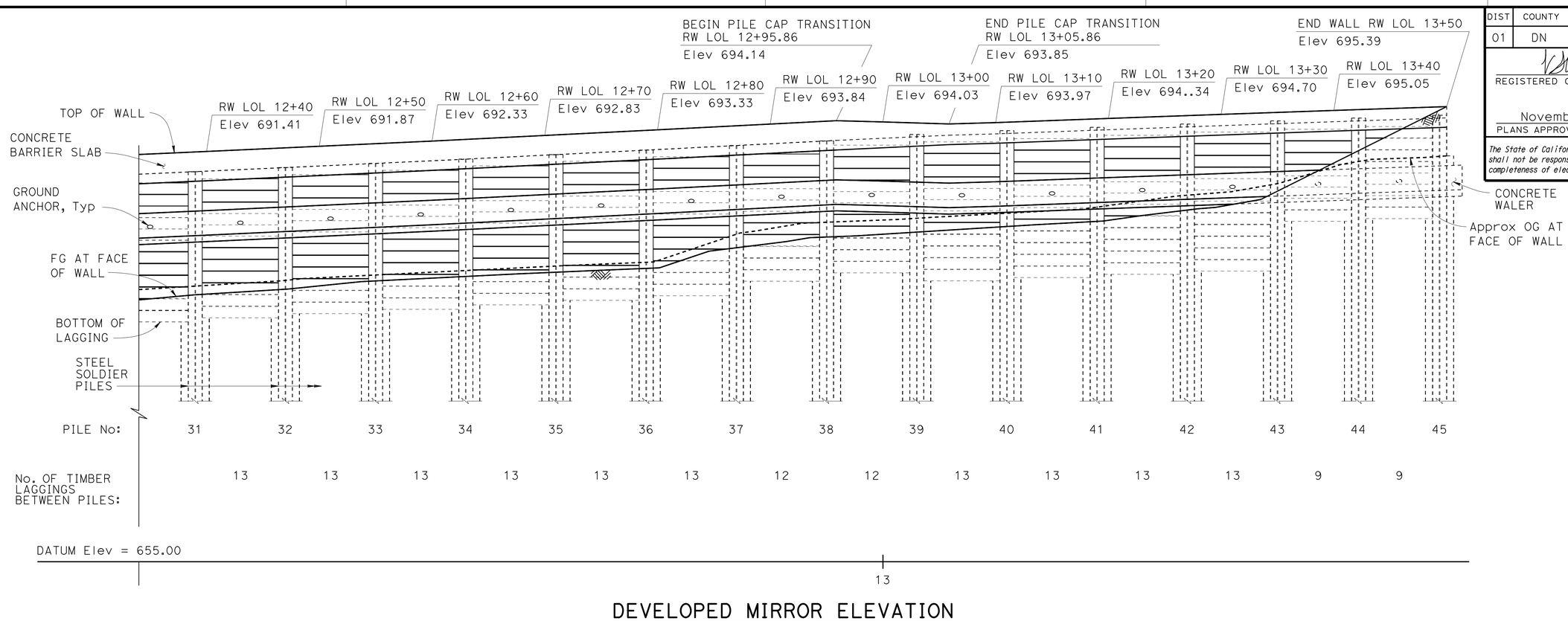

DEVELOPED MIRROR ELEVATION

1" = 5'

NOTES:

1. All Steel Soldier Piles are HP 14 X 117, 40'-0" long. See "GENERAL NOTES" on "INDEX TO PLANS" sheet for specifications.
2. California ST-10 Bridge Rail (Mod) not shown on DEVELOPED MIRROR ELEVATION or PLAN.
3. Concrete barrier slab not shown on PLAN.

-·-·-·- Indicates existing structure

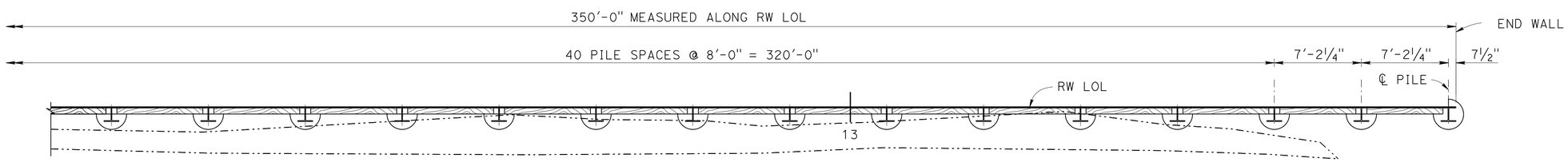

PLAN

1" = 5'

DESIGN	BY Vadim Shostak	CHECKED Greg Thornton	
DETAILS	BY Jie Tang	CHECKED Greg Thornton	
QUANTITIES	BY Bob Huddleston	CHECKED Gerald Dickerson	

STATE OF CALIFORNIA
DEPARTMENT OF TRANSPORTATION

DIVISION OF ENGINEERING SERVICES
STRUCTURE DESIGN
DESIGN BRANCH 1

BRIDGE NO. 01E0021
POST MILE 14.89

SOUTH LAST CHANCE WALL
STRUCTURE PLAN NO. 3

STRUCTURES DESIGN DETAIL SHEET (ENGLISH) (REV. 09-01-10)

ORIGINAL SCALE IN INCHES FOR REDUCED PLANS 0 1 2 3

UNIT: 3576
PROJECT NUMBER & PHASE: 0115000111 4 CONTRACT NO.: 01-0B27U4

DISREGARD PRINTS BEARING EARLIER REVISION DATES

REVISION DATES 04/08/15 04/28/15 05/18/15 05/21/15

SHEET 5 OF 15

FILE => Z01-0b27u-b-sp03.dgn

USERNAME => s132662 DATE PLOTTED => 01-FEB-2016 TIME PLOTTED => 09:14

DIST	COUNTY	ROUTE	POST MILES TOTAL PROJECT	SHEET No.	TOTAL SHEETS
01	DN	101	14.9/15.3	66	91

REGISTERED CIVIL ENGINEER 09-09-15 DATE

November 30, 2015
PLANS APPROVAL DATE

REGISTERED PROFESSIONAL ENGINEER Vadim Shostak No. 78424 Exp. 9-30-17 CIVIL STATE OF CALIFORNIA

The State of California or its officers or agents shall not be responsible for the accuracy or completeness of electronic copies of this plan sheet.

CURVE DATA				
No.	R	Δ	T	L
Ⓐ	586.00′	22°10′03"	114.80′	226.72′
Ⓑ	565.00′	44°15′35"	229.77′	436.45′

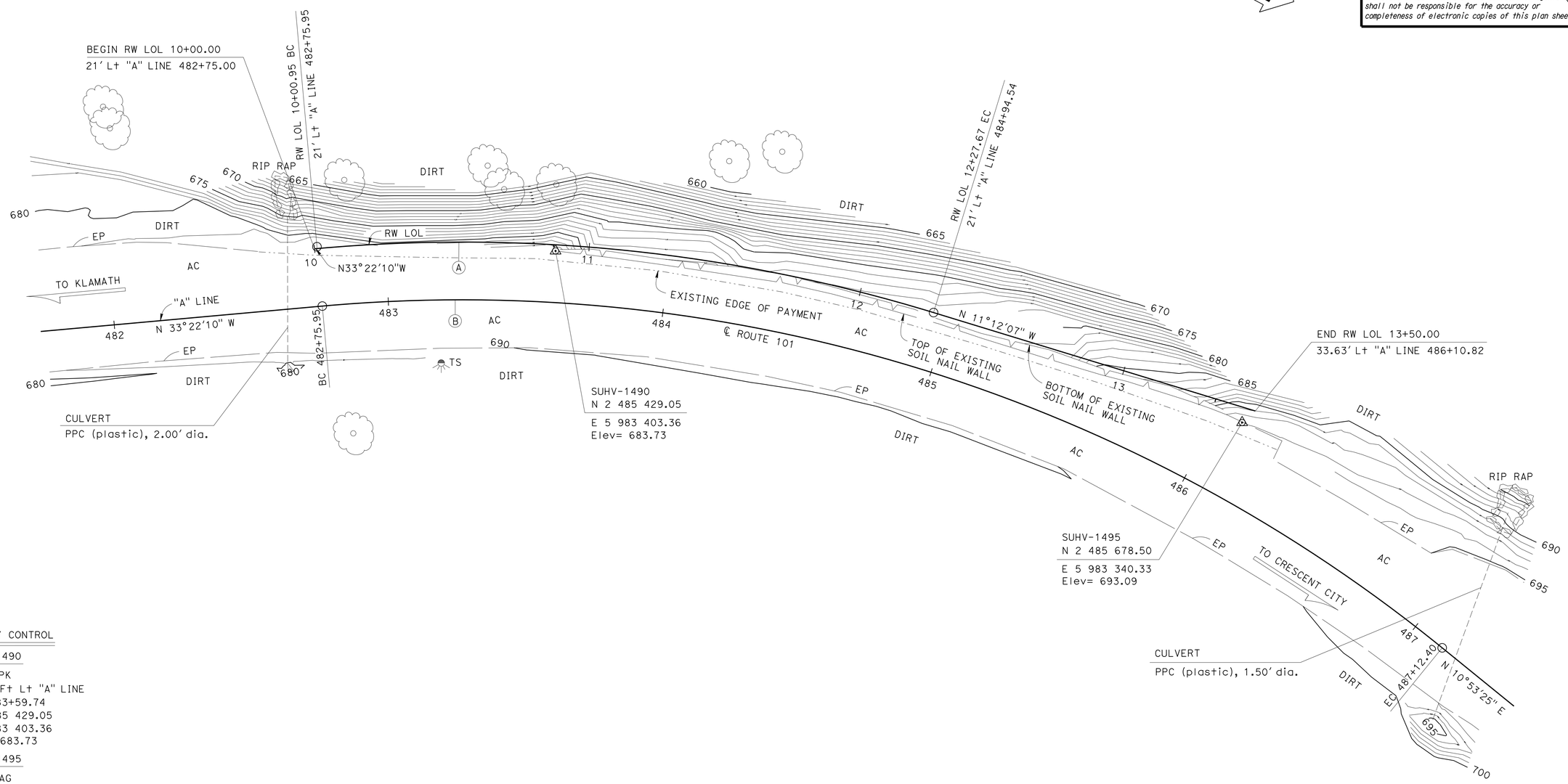

SURVEY CONTROL

SUHV-1490

FND: SPK
18.77 Ft Lt "A" LINE
Sta 483+59.74
N 2 485 429.05
E 5 983 403.36
Elev= 683.73

SUHV-1495

FND: MAG
27.66 Ft Lt "A" LINE
Sta 486+08.74
N 2 485 678.50
E 5 983 340.33
Elev= 693.09

PRELIMINARY INVESTIGATION SECTION

SCALE 1"=20′	VERT.DATUM NAVD88	PHOTOGRAMMETRY AS OF: X		
	HORZ.DATUM NAD83 (2004.69)	SURVEYED BY DISTRICT 01	CHECKED	BY T.PHUNG 02/2014
ALIGNMENT TIES Dist. Traverse Sheet		DRAFTED BY V.PHAM 02/2014	CHECKED	BY S.ALIVIO 02/2014

DESIGN	BY Vadim Shostak	CHECKED Greg Thornton
DETAILS	BY Jie Tang	CHECKED Greg Thornton
QUANTITIES	BY Bob Huddleston	CHECKED Gerald Dickerson

STATE OF CALIFORNIA
DEPARTMENT OF TRANSPORTATION

DIVISION OF ENGINEERING SERVICES
STRUCTURE DESIGN
DESIGN BRANCH 1

BRIDGE NO. 01E0021
POST MILE 14.89

SOUTH LAST CHANCE WALL
FOUNDATION PLAN

STRUCTURES FOUNDATION PLAN SHEET (ENGLISH) (REV. 09-01-10)

ORIGINAL SCALE IN INCHES FOR REDUCED PLANS 0 1 2 3

UNIT: 3647
PROJECT NUMBER & PHASE: 0115000111 4
CONTRACT NO.: 01-0B27U4

DISREGARD PRINTS BEARING EARLIER REVISION DATES

REVISION DATES 02/28/14 05/24/15 07/15/15

SHEET 6 OF 15

FILE => Z01-0b27u-c-fp.dgn

USERNAME => s132662 DATE PLOTTED => 01-FEB-2016 TIME PLOTTED => 09:14

DIST	COUNTY	ROUTE	POST MILES TOTAL PROJECT	SHEET No.	TOTAL SHEETS
01	DN	101	14.9/15.3	67	91

REGISTERED CIVIL ENGINEER 09-09-15 DATE

November 30, 2015
PLANS APPROVAL DATE

REGISTERED PROFESSIONAL ENGINEER Vadim Shostak No. 78424 Exp. 9-30-17 CIVIL STATE OF CALIFORNIA

The State of California or its officers or agents shall not be responsible for the accuracy or completeness of electronic copies of this plan sheet.

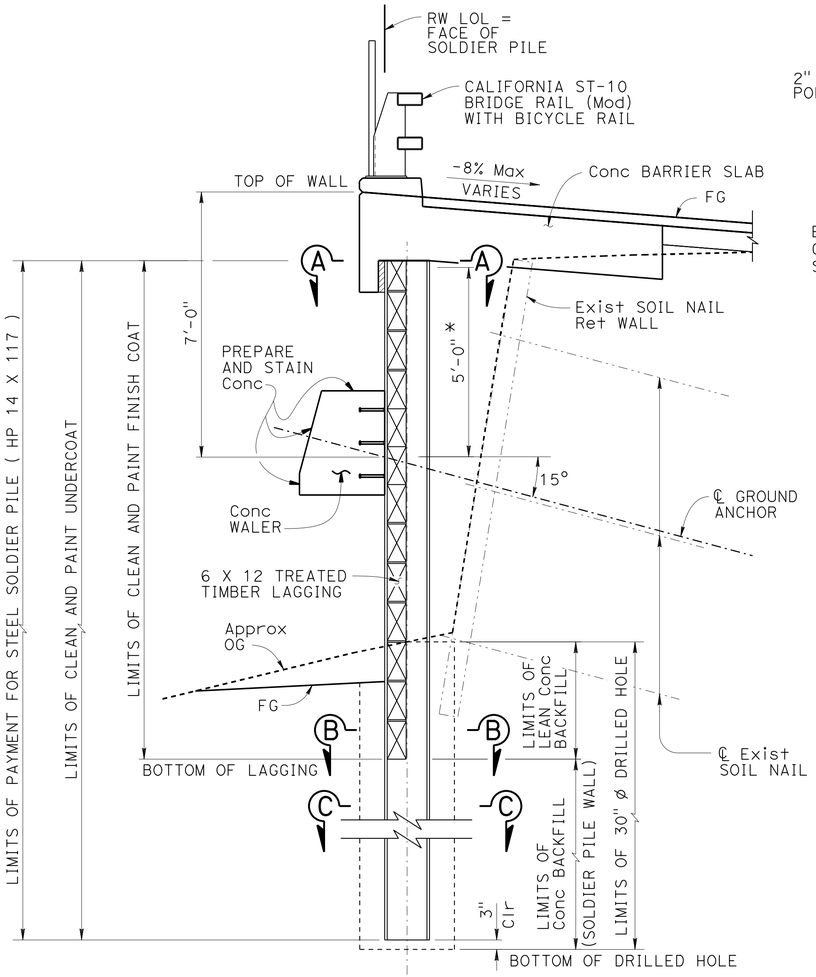

TYPICAL SECTION

½" = 1'-0"

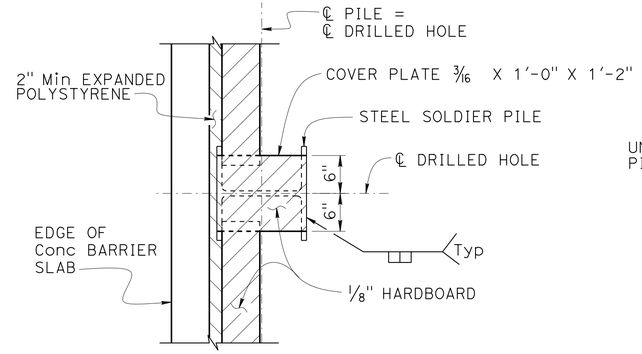

NOTES:

1. Clean and paint undercoat on all cover plate surfaces after welding.

SECTION A-A

1" = 1'-0"

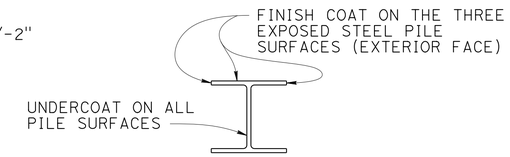

LIMITS OF CLEAN AND PAINT STEEL SOLDIER PILE

NO SCALE

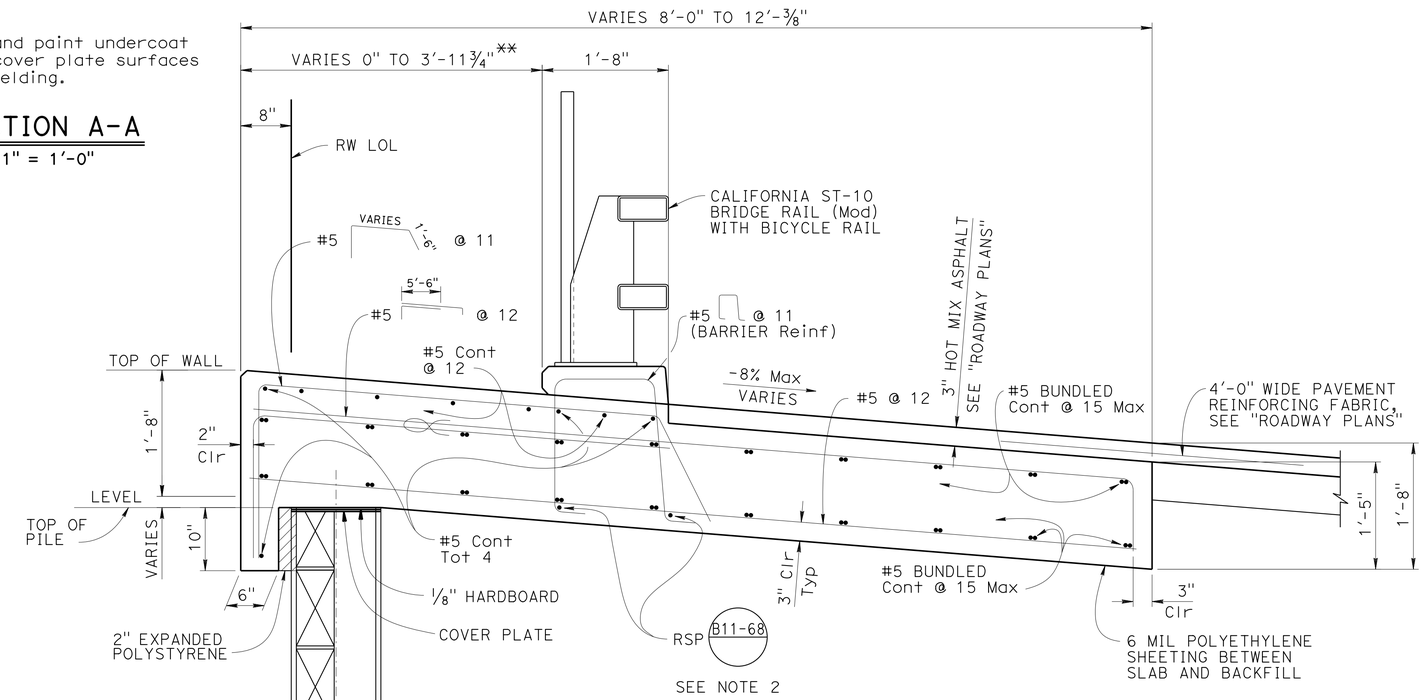

CONCRETE BARRIER SLAB DETAIL

1" = 1'-0"

NOTES:

1. All dimensions are perpendicular to RW LOL.
2. Not all bridge rail reinforcement shown.
3. Bridge rail bolts, fasteners and anchor bars not shown.
4. All bar reinforcing steel to be epoxy coated.

LEGEND:

* - Indicates Min level of backfill prior to stressing ground anchor

** - Indicates offset from 0" at Sta 12+27.67 to 3'-11¾" at Sta 12+95.86

∝ - Indicates bundled bars

- - - - - - - Indicates existing structure

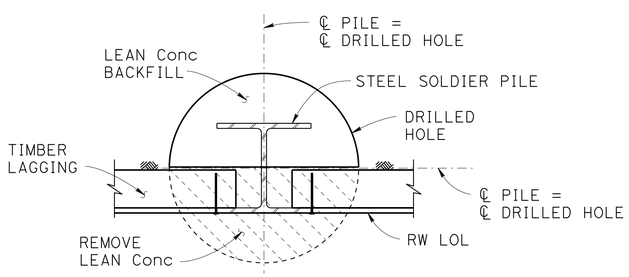

SECTION B-B

1" = 1'-0"

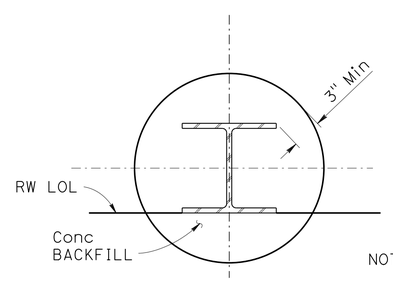

NOTE: For details not shown, see "SECTION B-B".

SECTION C-C

1" = 1'-0"

DESIGN	BY Vadim Shostak	CHECKED Greg Thornton	
DETAILS	BY Jie Tang / Jin Zhou	CHECKED Greg Thornton	
QUANTITIES	BY Bob Huddleston	CHECKED Gerald Dickerson	

STATE OF CALIFORNIA
DEPARTMENT OF TRANSPORTATION

DIVISION OF ENGINEERING SERVICES
STRUCTURE DESIGN
DESIGN BRANCH 1

BRIDGE NO. 01E0021
POST MILE 14.89

SOUTH LAST CHANCE WALL
TYPICAL SECTION

STRUCTURES DESIGN DETAIL SHEET (ENGLISH) (REV. 09-01-10)

ORIGINAL SCALE IN INCHES FOR REDUCED PLANS 0 1 2 3

UNIT: 3576
PROJECT NUMBER & PHASE: 0115000111 4 CONTRACT NO.: 01-0B27U4

DISREGARD PRINTS BEARING EARLIER REVISION DATES → 04/23/15 09/14/15 08/06/15

SHEET 7 OF 15

FILE => Z01-0b27u-e-ts.dgn

USERNAME => s132662 DATE PLOTTED => 01-FEB-2016 TIME PLOTTED => 09:14

DIST	COUNTY	ROUTE	POST MILES TOTAL PROJECT	SHEET No.	TOTAL SHEETS
01	DN	101	14.9/15.3	68	91

REGISTERED CIVIL ENGINEER 09-09-15 DATE

November 30, 2015
PLANS APPROVAL DATE

REGISTERED PROFESSIONAL ENGINEER Vadim Shostak No. 78424 Exp. 9-30-17 CIVIL STATE OF CALIFORNIA

The State of California or its officers or agents shall not be responsible for the accuracy or completeness of electronic copies of this plan sheet.

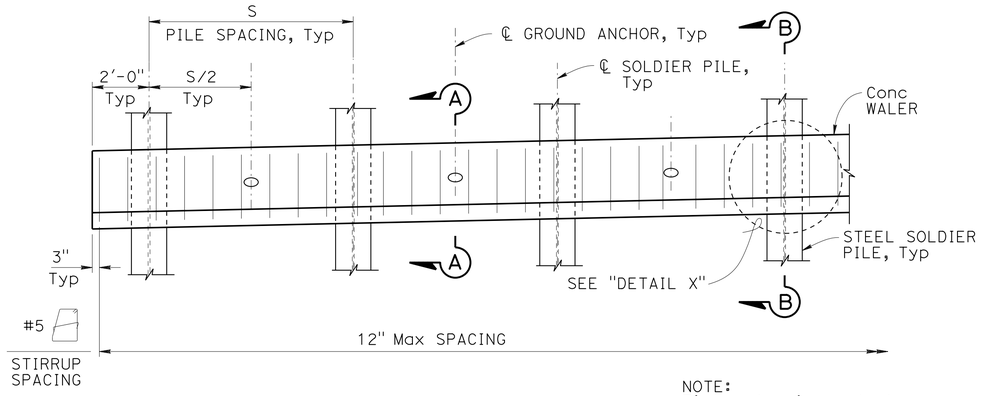

NOTE:
Timber lagging not shown

WALER PART ELEVATION

3/8" = 1'-0"

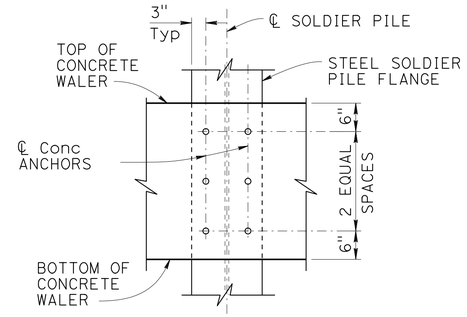

DETAIL X

3/4" = 1'-0"

NOTES:

1. Concrete walers may be poured to face of lagging.
2. Bearing plates may be recessed or on face of concrete waler.
3. No clipping of timber lagging corners allowed.
4. Spikes shall not be bent.
5. All bar reinforcing steel to be epoxy coated.

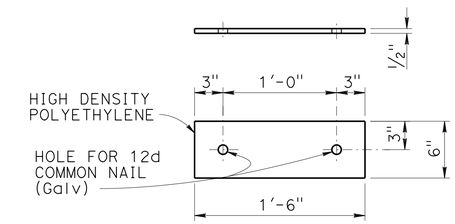

SHIM DETAIL

1 1/2" = 1'-0"

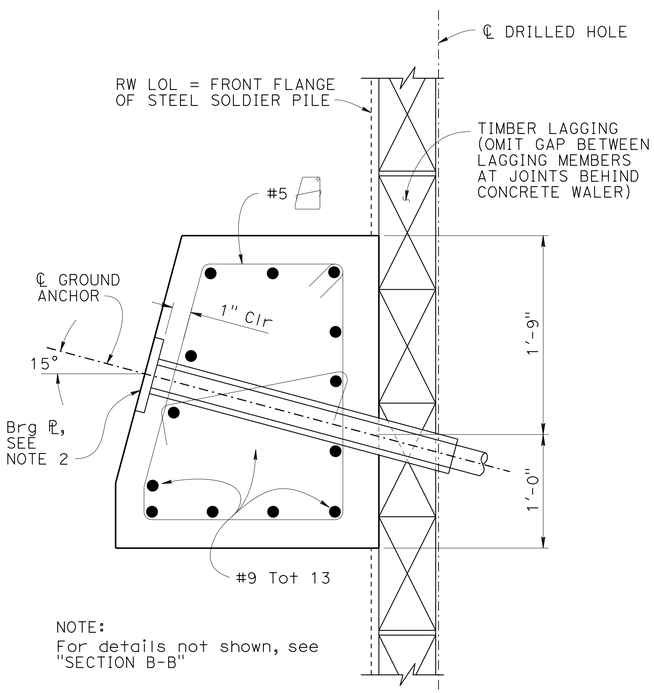

NOTE:
For details not shown, see "SECTION B-B"

SECTION A-A

1 1/2" = 1'-0"

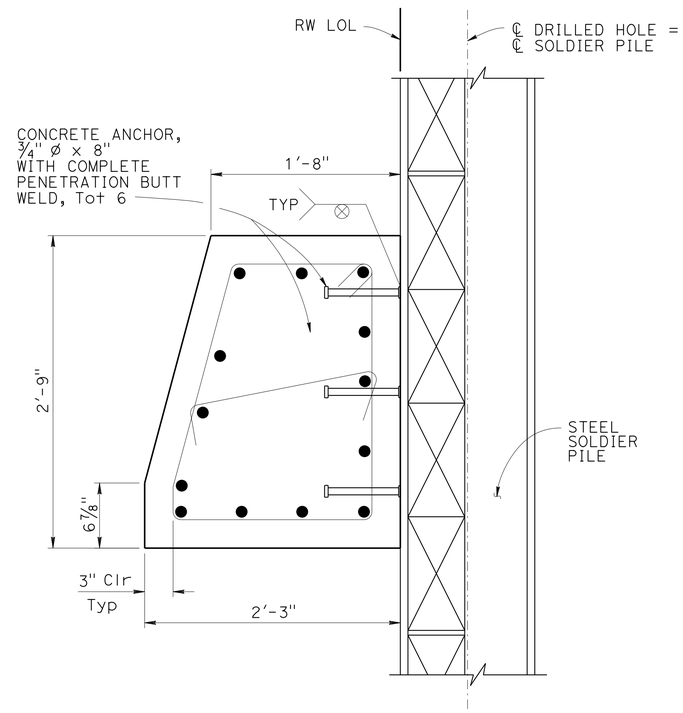

SECTION B-B

1 1/2" = 1'-0"

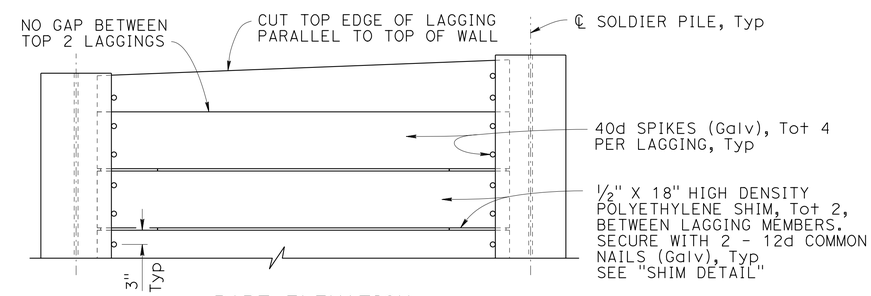

PART ELEVATION

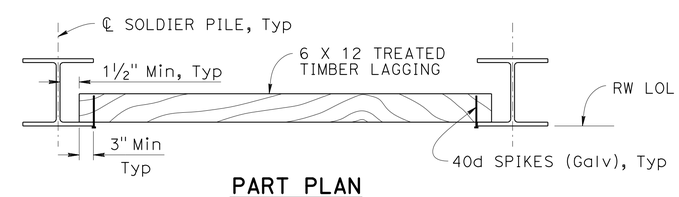

PART PLAN

LAGGING DETAILS

3/4" = 1'-0"

DESIGN	BY Vadim Shostak	CHECKED Greg Thornton	
DETAILS	BY Jie Tang	CHECKED Greg Thornton	
QUANTITIES	BY Bob Huddleston	CHECKED Gerald Dickerson	

STATE OF CALIFORNIA
DEPARTMENT OF TRANSPORTATION

DIVISION OF ENGINEERING SERVICES
STRUCTURE DESIGN
DESIGN BRANCH 1

BRIDGE NO. 01E0021
POST MILE 14.89

SOUTH LAST CHANCE WALL
WALL DETAILS NO. 1

STRUCTURES DESIGN DETAIL SHEET (ENGLISH) (REV. 09-01-10)

ORIGINAL SCALE IN INCHES FOR REDUCED PLANS 0 1 2 3

UNIT: 3576
PROJECT NUMBER & PHASE: 0115000111 4
CONTRACT NO.: 01-0B27U4

DISREGARD PRINTS BEARING EARLIER REVISION DATES

REVISION DATES 04/15/15 09/14/15 08/31/15

SHEET 8 OF 15

FILE => Z01-0b27u-g-walldet01.dgn

USERNAME => s132662 DATE PLOTTED => 01-FEB-2016 TIME PLOTTED => 09:14

DIST	COUNTY	ROUTE	POST MILES TOTAL PROJECT	SHEET No.	TOTAL SHEETS
01	DN	101	14.9/15.3	69	91

REGISTERED CIVIL ENGINEER 09-09-15 DATE

November 30, 2015
PLANS APPROVAL DATE

REGISTERED PROFESSIONAL ENGINEER Vadim Shostak No. 78424 Exp. 9-30-17 CIVIL STATE OF CALIFORNIA

The State of California or its officers or agents shall not be responsible for the accuracy or completeness of electronic copies of this plan sheet.

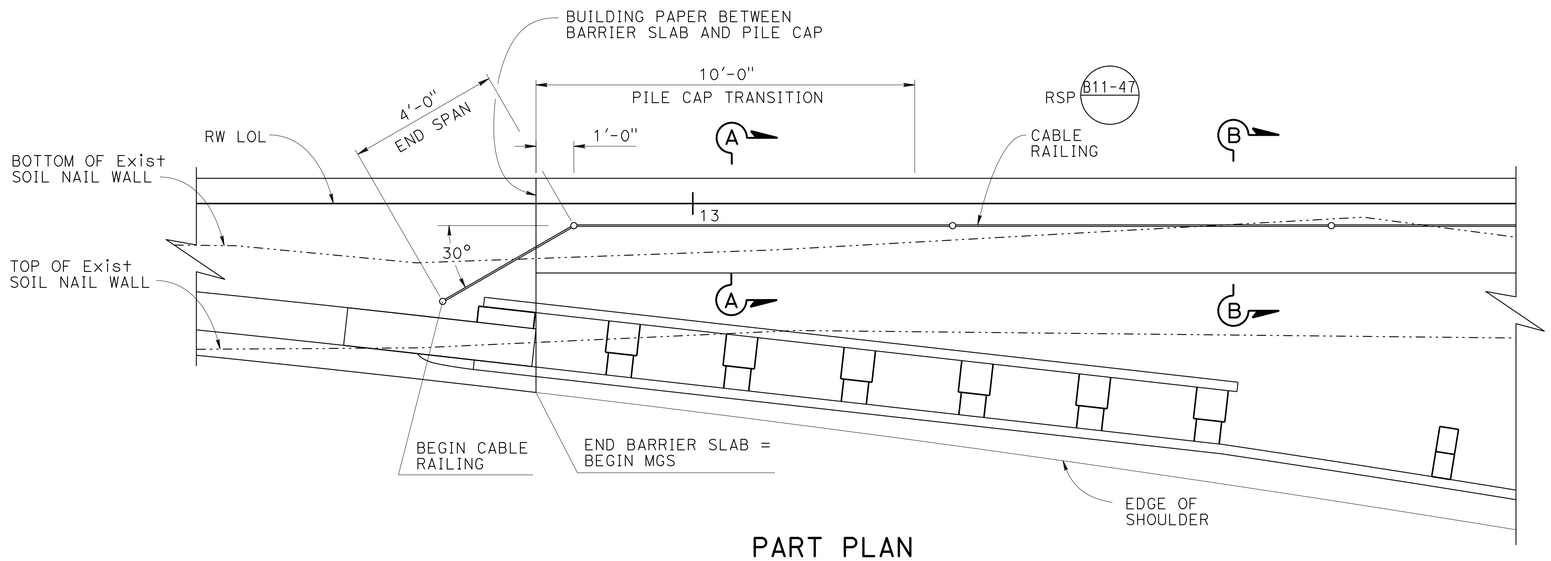

PART PLAN

½" = 1'-0"

NOTES:

* - Varies from 1'-9¾" at RW LOL Sta 12+95.86 to 1'-0" at RW LOL Sta 13+05.86

** - Varies from 1'-7⅜" at RW LOL Sta 12+95.86 to 1'-0" at RW LOL Sta 13+05.86

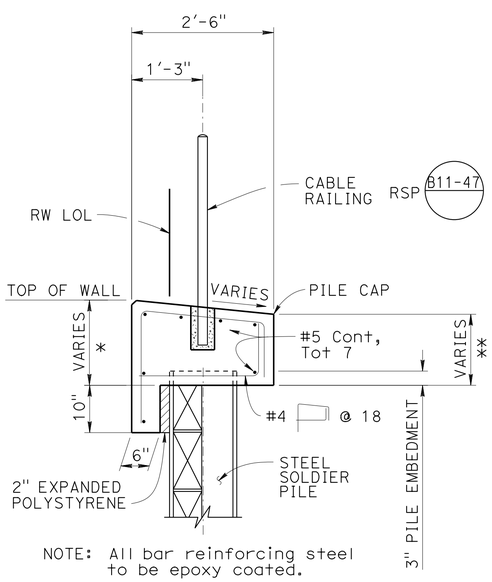

NOTE: All bar reinforcing steel to be epoxy coated.

SECTION A-A

¾" = 1'-0"

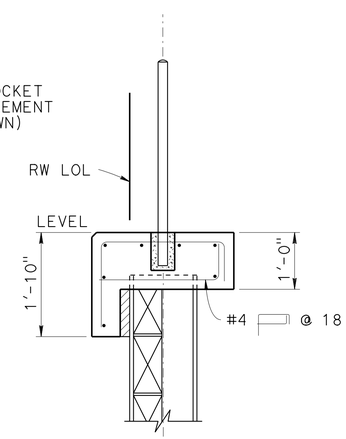

NOTE: For details not shown, see "SECTION A-A".

SECTION B-B

¾" = 1'-0"

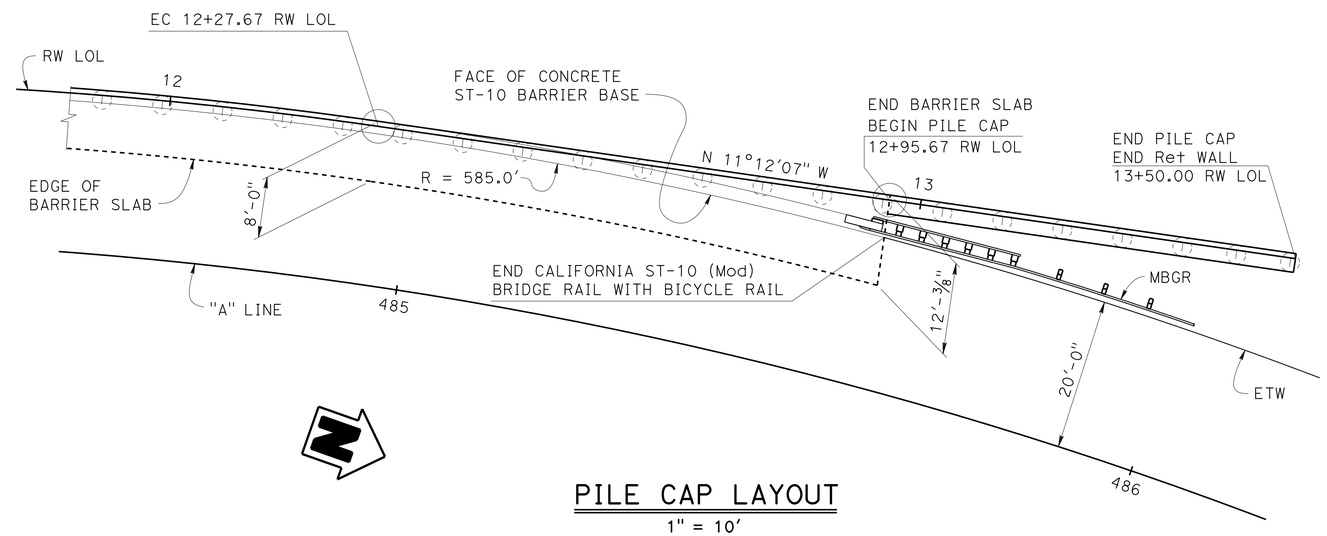

PILE CAP LAYOUT

1" = 10'

DESIGN	BY Vadim Shostak	CHECKED Greg Thornton	
DETAILS	BY Jie Tang	CHECKED Greg Thornton	
QUANTITIES	BY Bob Huddleston	CHECKED Gerald Dickerson	

STATE OF CALIFORNIA
DEPARTMENT OF TRANSPORTATION

DIVISION OF ENGINEERING SERVICES
STRUCTURE DESIGN
DESIGN BRANCH 1

BRIDGE NO. 01E0021
POST MILE 14.89

SOUTH LAST CHANCE WALL
WALL DETAILS NO. 2

STRUCTURES DESIGN DETAIL SHEET (ENGLISH) (REV. 09-01-10)

ORIGINAL SCALE IN INCHES FOR REDUCED PLANS 0 1 2 3

UNIT: 3576
PROJECT NUMBER & PHASE: 0115000111 4 CONTRACT NO.: 01-0B27U4

DISREGARD PRINTS BEARING EARLIER REVISION DATES

REVISION DATES 04/14/15 09/14/15 07/04/15

SHEET 9 OF 15

FILE => Z01-0b27u-g-walldet02.dgn

USERNAME => s132662 DATE PLOTTED => 01-FEB-2016 TIME PLOTTED => 09:14

DIST	COUNTY	ROUTE	POST MILES TOTAL PROJECT	SHEET No.	TOTAL SHEETS
01	DN	101	14.9/15.3	70	91

REGISTERED CIVIL ENGINEER 09-09-15 DATE

November 30, 2015
PLANS APPROVAL DATE

REGISTERED PROFESSIONAL ENGINEER Vadim Shostak No. 78424 Exp. 9-30-17 CIVIL STATE OF CALIFORNIA

The State of California or its officers or agents shall not be responsible for the accuracy or completeness of electronic copies of this plan sheet.

NOTE:

1. At drilled hole locations, remove bottom of existing soil nail wall. Length of removal should not be longer than 3'-0" along RW LOL, per drilled hole. Remove portion of soil nails as needed.

LEGEND:

- Indicates Structure Excavation (Soldier Pile Wall)
- Indicates Structure Backfill (Soldier Pile Wall)
- Indicates Roadway Excavation, see "ROADWAY PLANS"
- Indicates Class 1 Permeable Material (Type B) Backfill
- Indicates Roadway Backfill, see "ROADWAY PLANS"
- Indicates Remove Retaining Wall (Portion)

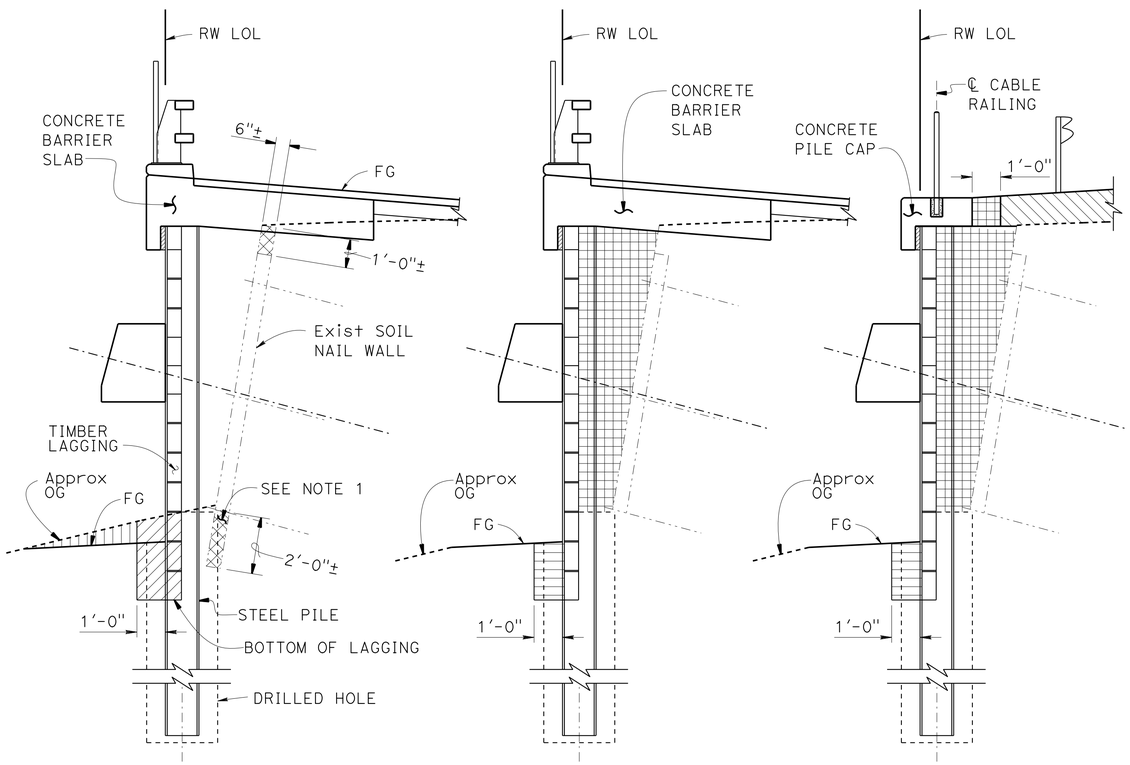

NOTE: For details not shown, see "STRUCTURE EXCAVATION".

NOTE: For details not shown, see "STRUCTURE EXCAVATION".

STRUCTURE EXCAVATION AND WALL REMOVAL (PORTION)

STRUCTURE BACKFILL AT BARRIER SLAB

STRUCTURE BACKFILL AT PILE CAP

PAY LIMITS NEAR EXISTING SOIL NAIL WALL

3/8" = 1'-0"

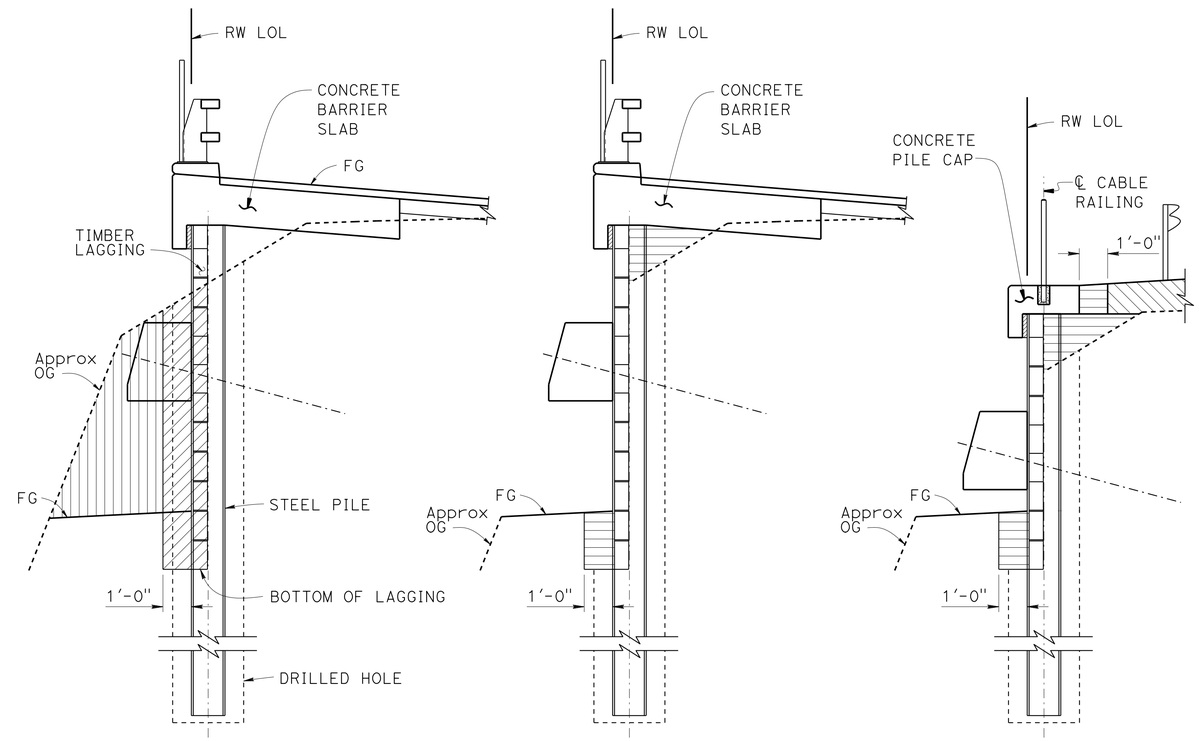

NOTE: For details not shown, see "STRUCTURE EXCAVATION".

NOTE: For details not shown, see "STRUCTURE EXCAVATION".

STRUCTURE EXCAVATION

STRUCTURE BACKFILL AT BARRIER SLAB

STRUCTURE BACKFILL AT PILE CAP

TYPICAL PAY LIMITS

3/8" = 1'-0"

DESIGN	BY Vadim Shostak	CHECKED Greg Thornton	
DETAILS	BY Jie Tang / Jin Zhou	CHECKED Greg Thornton	
QUANTITIES	BY Bob Huddleston	CHECKED Gerald Dickerson	

STATE OF CALIFORNIA
DEPARTMENT OF TRANSPORTATION

DIVISION OF ENGINEERING SERVICES
STRUCTURE DESIGN
DESIGN BRANCH 1

BRIDGE NO. 01E0021
POST MILE 14.89

SOUTH LAST CHANCE WALL
WALL DETAILS NO. 3

STRUCTURES DESIGN DETAIL SHEET (ENGLISH) (REV. 09-01-10)

ORIGINAL SCALE IN INCHES FOR REDUCED PLANS 0 1 2 3

UNIT: 3576
PROJECT NUMBER & PHASE: 0115000111 4 CONTRACT NO.: 01-0B27U4

DISREGARD PRINTS BEARING EARLIER REVISION DATES

REVISION DATES 04/16/15 05/28/15 07/02/15 07/08/15

SHEET 10 OF 15

FILE => Z01-0b27u-g-walldet03.dgn

USERNAME => s132662 DATE PLOTTED => 01-FEB-2016 TIME PLOTTED => 09:14

DIST	COUNTY	ROUTE	POST MILES TOTAL PROJECT	SHEET No.	TOTAL SHEETS
01	DN	101	14.9/15.3	71	91

REGISTERED CIVIL ENGINEER 09-09-15 DATE

November 30, 2015
PLANS APPROVAL DATE

REGISTERED PROFESSIONAL ENGINEER Vadim Shostak No. 78424 Exp. 9-30-17 CIVIL STATE OF CALIFORNIA

The State of California or its officers or agents shall not be responsible for the accuracy or completeness of electronic copies of this plan sheet.

NOTES:

(A) Level of initial grouting for drilled hole 6" in diameter or smaller.

(B) Level of secondary grouting.

(C) Level of initial grouting inside corrugated sheathing.

(D) Bonded length shall be determined by the Contractor.

NOTES:

1. Anchorage enclosure shall only be used when anchor head assembly is not encapsulated in concrete.
2. Anchorage enclosure shall have provisions to allow injecting grout at low end and venting at high end. Galvanize after fabrication.
3. Silicone sealant to cover full width of flange.
4. Galvanize assembly after fabrication.
5. Core through existing soil nail wall.

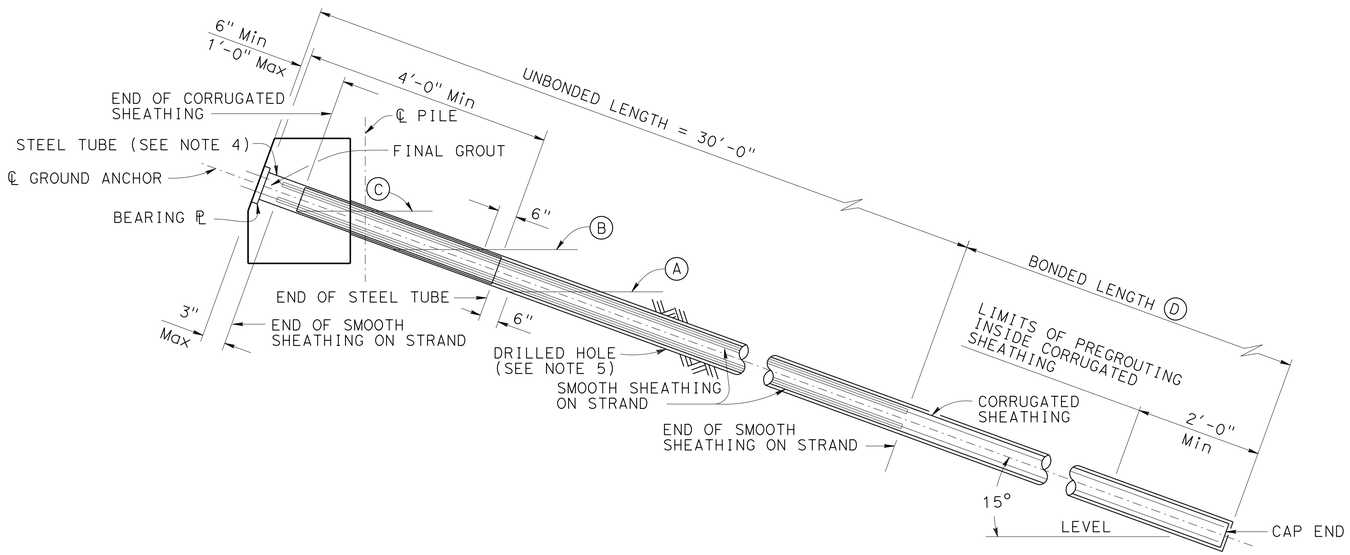

GROUND ANCHOR TENDON DETAIL (STRAND)

NO SCALE

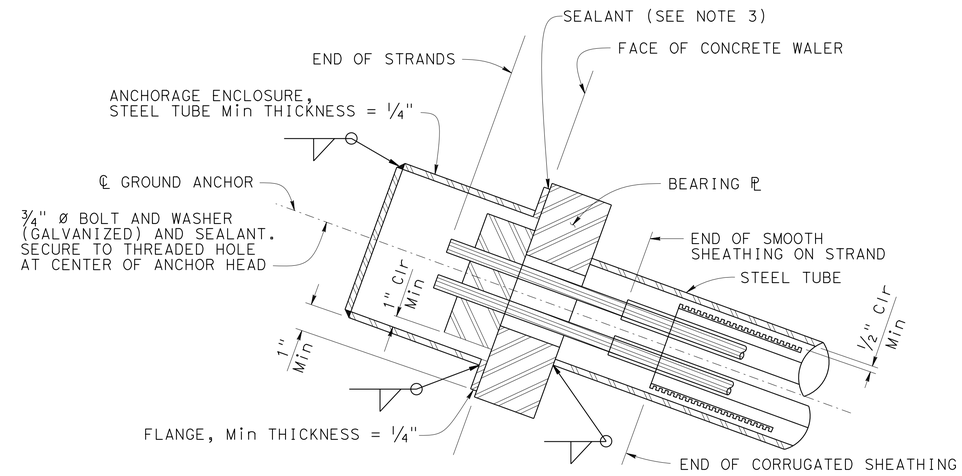

ALTERNATIVE X

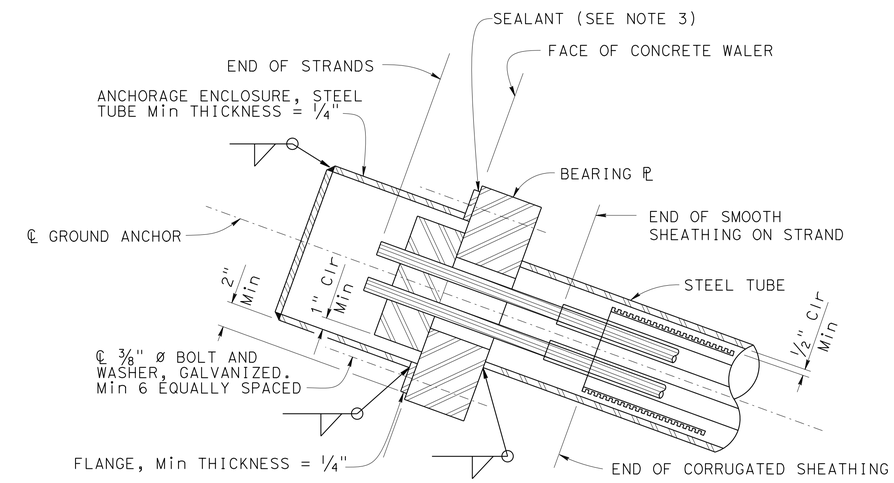

ALTERNATIVE Y

ANCHORAGE ENCLOSURE DETAILS

NO SCALE

DESIGN	BY Vadim Shostak	CHECKED Greg Thornton	
DETAILS	BY Jie Tang	CHECKED Greg Thornton	
QUANTITIES	BY Bob Huddleston	CHECKED Gerald Dickerson	

STATE OF CALIFORNIA
DEPARTMENT OF TRANSPORTATION

DIVISION OF ENGINEERING SERVICES
STRUCTURE DESIGN
DESIGN BRANCH 1

BRIDGE NO. 01E0021
POST MILE 14.89

SOUTH LAST CHANCE WALL
GROUND ANCHOR DETAILS

STRUCTURES DESIGN DETAIL SHEET (ENGLISH) (REV. 09-01-10)

ORIGINAL SCALE IN INCHES FOR REDUCED PLANS 0 1 2 3

UNIT: 3576
PROJECT NUMBER & PHASE: 0115000111 4
CONTRACT NO.: 01-0B27U4

DISREGARD PRINTS BEARING EARLIER REVISION DATES

REVISION DATES 04/16/15 05/26/15 07/02/15

SHEET 11 OF 15

FILE => Z01-0b27u-s-gadet.dgn

USERNAME => s132662 DATE PLOTTED => 01-FEB-2016 TIME PLOTTED => 09:14

DIST	COUNTY	ROUTE	POST MILES TOTAL PROJECT	SHEET No.	TOTAL SHEETS
01	DN	101	14.9/15.3	72	91

REGISTERED CIVIL ENGINEER 09-09-15 DATE

November 30, 2015
PLANS APPROVAL DATE

REGISTERED PROFESSIONAL ENGINEER Vadim Shostak No. 78424 Exp. 9-30-17 CIVIL STATE OF CALIFORNIA

The State of California or its officers or agents shall not be responsible for the accuracy or completeness of electronic copies of this plan sheet.

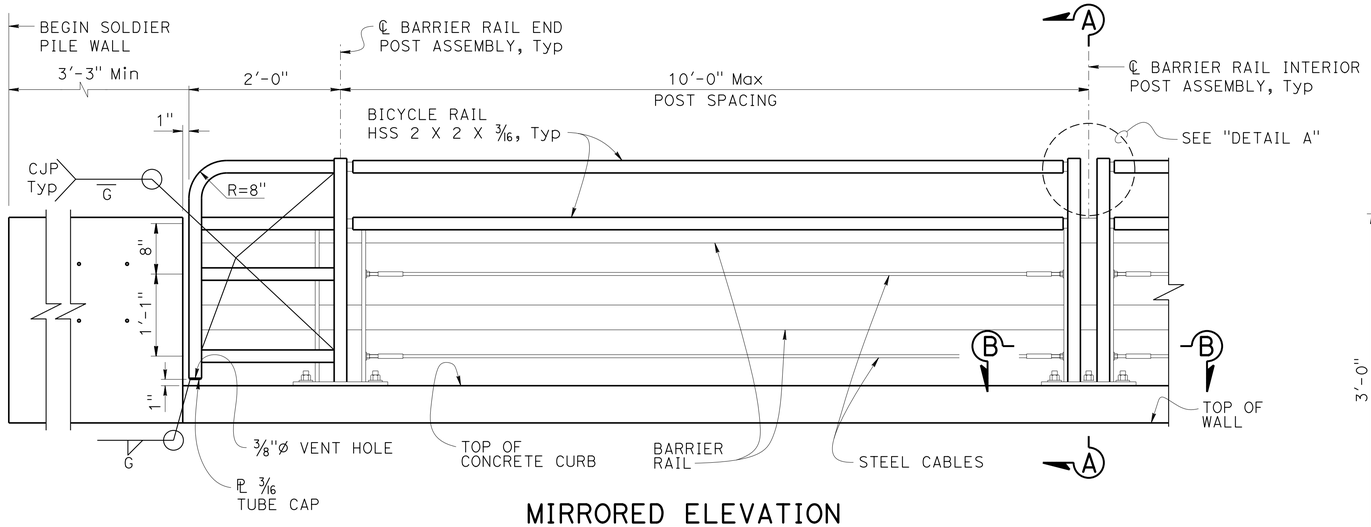

MIRRORED ELEVATION
1" = 1'-0"

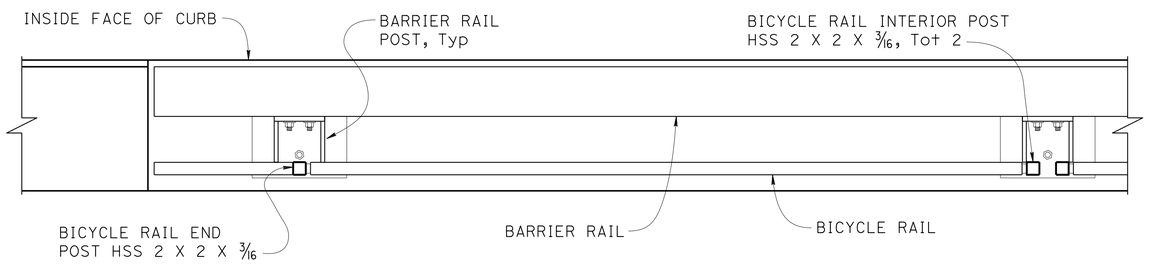

PLAN
1" = 1'-0"

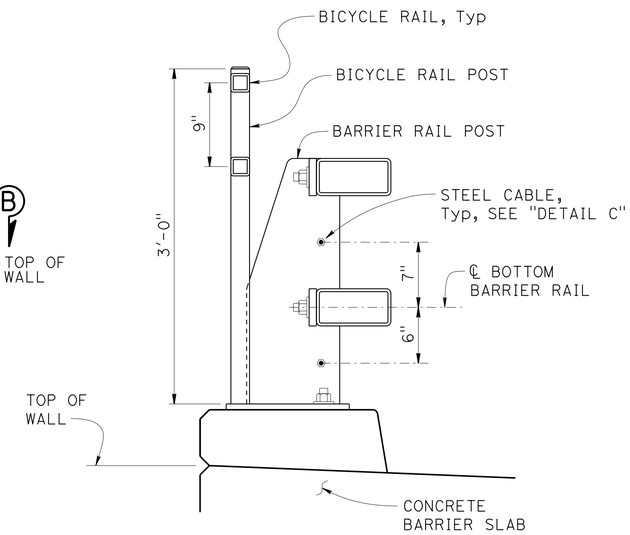

SECTION A-A
1½" = 1'-0"

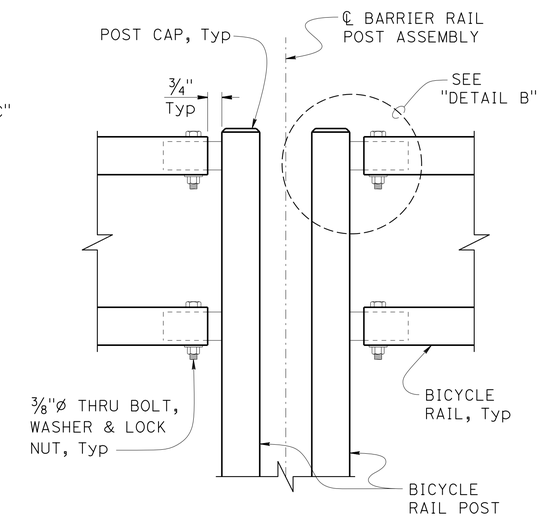

NOTE:
Details for Barrier Rail End Post Assembly similar.

DETAIL A
3" = 1'-0"

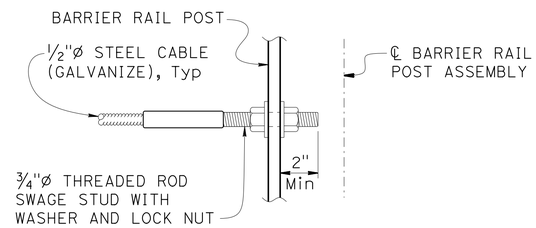

DETAIL C
3" = 1'-0"

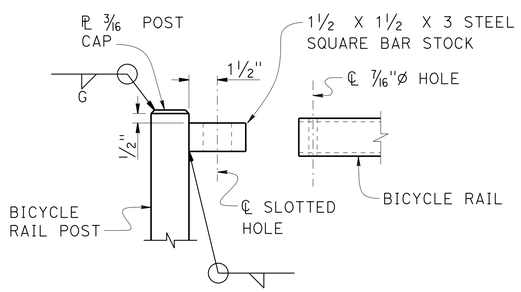

ELEVATION

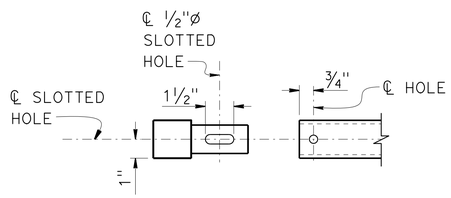

PLAN

NOTE:
1. Bicycle Rail shown separated for clarity.
2. For details not shown, see "ELEVATION".

DETAIL B
3" = 1'-0"

NOTES:

1. For California ST-10 Bridge Rail details not shown, see Standard Plans RSP B11-68, B11-69 and RSP B11-70.
2. Posts shall be normal to railing.
3. All bolts and fasteners shall be A307 with Thread Locking System.
4. Galvanize rail assembly and all components after fabrication.

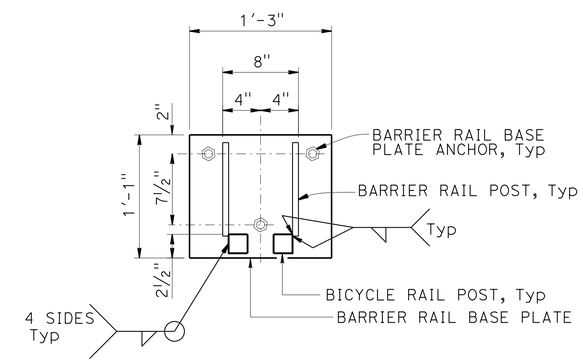

SECTION B-B
1½" = 1'-0"

DESIGN	BY Vadim Shostak	CHECKED Greg Thornton	
DETAILS	BY Jie Tang	CHECKED Greg Thornton	
QUANTITIES	BY Bob Huddleston	CHECKED Gerald Dickerson	

STATE OF CALIFORNIA
DEPARTMENT OF TRANSPORTATION

DIVISION OF ENGINEERING SERVICES
STRUCTURE DESIGN
DESIGN BRANCH 1

BRIDGE NO. 01E0021
POST MILE 14.89

SOUTH LAST CHANCE WALL
BARRIER RAIL DETAILS

STRUCTURES DESIGN DETAIL SHEET (ENGLISH) (REV. 09-01-10)

ORIGINAL SCALE IN INCHES FOR REDUCED PLANS 0 1 2 3

UNIT: 3576
PROJECT NUMBER & PHASE: 0115000111 4
CONTRACT NO.: 01-0B27U4

DISREGARD PRINTS BEARING EARLIER REVISION DATES

REVISION DATES 05/26/15 05/29/15 07/08/15

SHEET 12 OF 15

FILE => Z01-0b27u-t-brdt.dgn

USERNAME => s132662 DATE PLOTTED => 01-FEB-2016 TIME PLOTTED => 09:14

DIST	COUNTY	ROUTE	POST MILES TOTAL PROJECT	SHEET No.	TOTAL SHEETS
01	DN	101	14.9/15.3	73	91

REGISTERED CIVIL ENGINEER 5-21-15 DATE

November 30, 2015
PLANS APPROVAL DATE

REGISTERED PROFESSIONAL ENGINEER Marietta J. James No. C55009 Exp. 6-30-16 CIVIL STATE OF CALIFORNIA

The State of California or its officers or agents shall not be responsible for the accuracy or completeness of electronic copies of this plan sheet.

This LOTB sheet was prepared in accordance with the Caltrans Soil & Rock Logging, Classification, & Presentation Manual (2010 Edition).

See 2010 Standard Plans A10F and A10G for Soil Legend, and A10H for Rock Legend.

BENCH MARK

BM Elev 683.73
FND SPK
18.77 FT LT "A" LINE
STA 483+59.74
N 2 485 429.05
E 5 983 403.36
NAVD 88

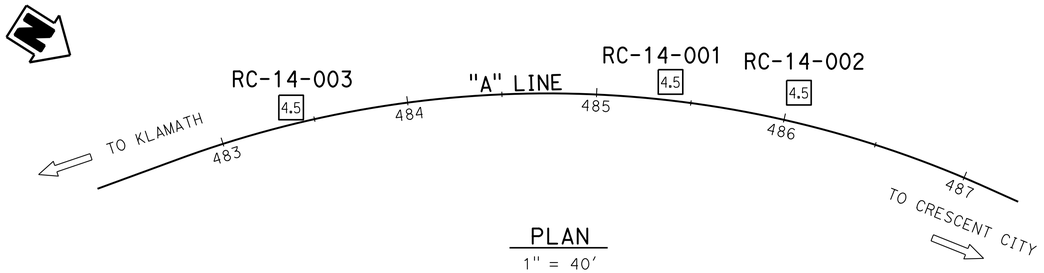

PLAN
1" = 40'

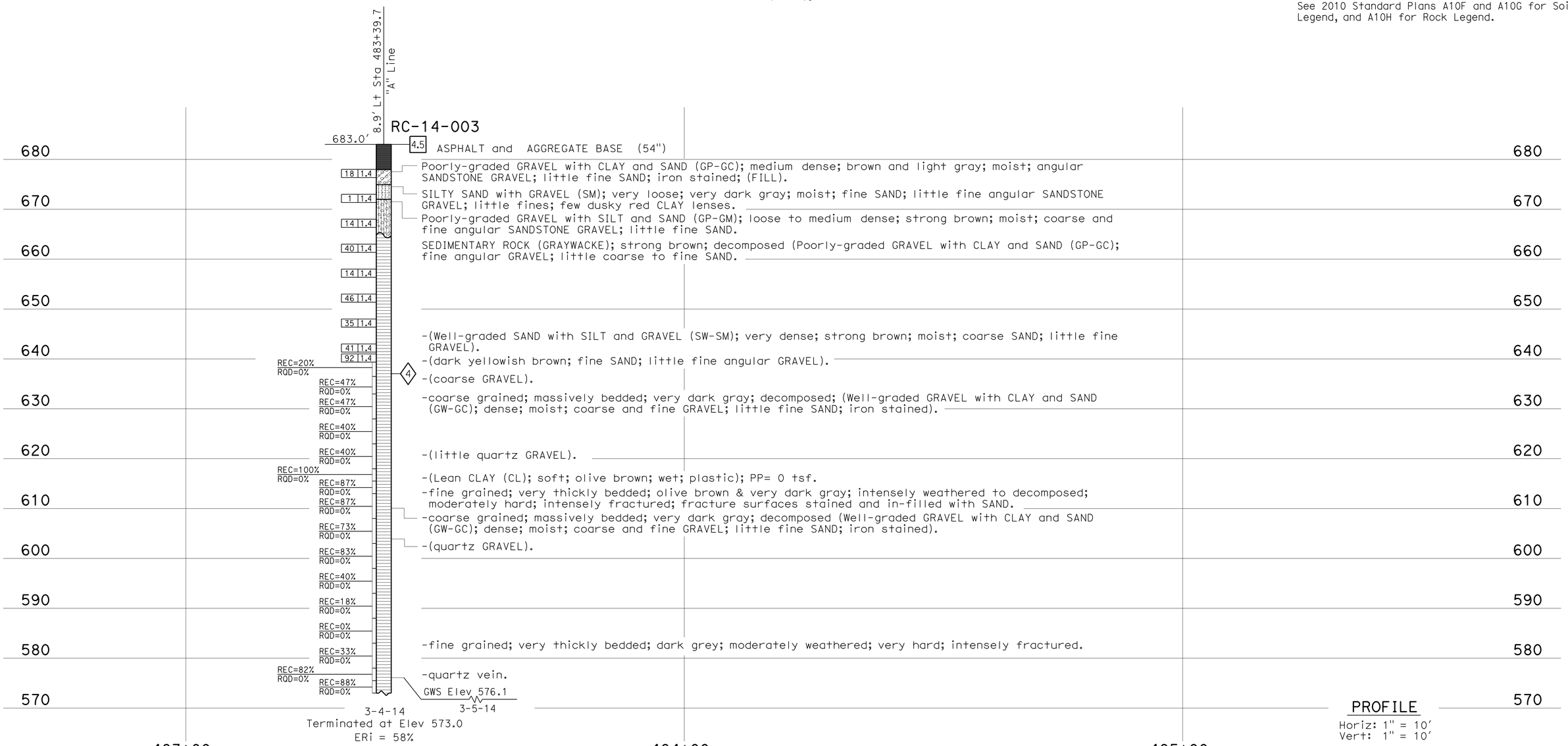

PROFILE
Horiz: 1" = 10'
Vert: 1" = 10'

ENGINEERING SERVICES	MATERIALS AND GEOTECHNICAL SERVICES	STATE OF CALIFORNIA DEPARTMENT OF TRANSPORTATION	DIVISION OF ENGINEERING SERVICES STRUCTURE DESIGN DESIGN BRANCH 1	BRIDGE NO. 01E0021 POST MILE 14.89	SOUTH LAST CHANCE WALL LOG OF TEST BORINGS 1 OF 3
FUNCTIONAL SUPERVISOR NAME: C. Narwold	DRAWN BY: I. G-Remmen CHECKED BY: R. Newman	FIELD INVESTIGATION BY: M. J. James			

OGS CIVIL LOG OF TEST BORINGS SHEET

ORIGINAL SCALE IN INCHES FOR REDUCED PLANS 0 1 2 3

UNIT: 3650
PROJECT NUMBER & PHASE: 0115000111 4 CONTRACT NO.: 01-0B27U4

DISREGARD PRINTS BEARING EARLIER REVISION DATES

REVISION DATES 04-27-15 05-26-15 07/15/15 SHEET 13 OF 15

FILE => Z01-0b27u-z-ltb01.dgn

USERNAME => s132682 DATE PLOTTED => 01-FEB-2016 TIME PLOTTED => 09:15

DIST	COUNTY	ROUTE	POST MILES TOTAL PROJECT	SHEET No	TOTAL SHEETS
01	DN	101	14.9/15.3	74	91

Marietta James 5-21-15
REGISTERED CIVIL ENGINEER DATE

November 30, 2015
PLANS APPROVAL DATE

REGISTERED PROFESSIONAL ENGINEER Marietta J. James No. C55009 Exp. 6-30-16 CIVIL STATE OF CALIFORNIA

The State of California or its officers or agents shall not be responsible for the accuracy or completeness of electronic copies of this plan sheet.

This LOTB sheet was prepared in accordance with the Caltrans Soil & Rock Logging, Classification, & Presentation Manual (2010 Edition).

See 2010 Standard Plans A10F and A10G for Soil Legend, and A10H for Rock Legend.

FOR PLAN VIEW, SEE
"LOG OF TEST BORINGS 1 OF 3"

Note: Groundwater was not encountered in Boring RC-14-001.

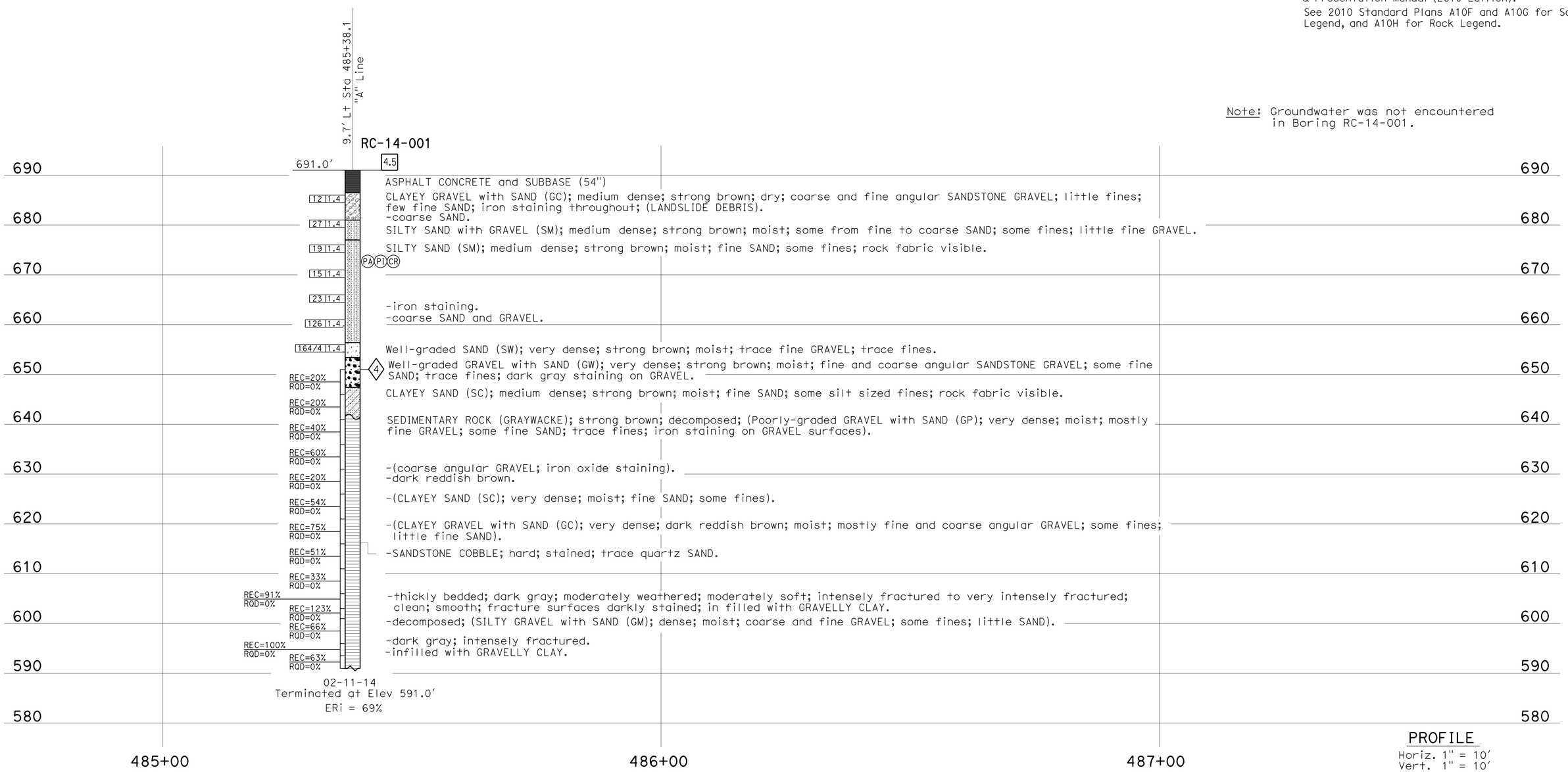

PROFILE
Horiz. 1" = 10'
Vert. 1" = 10'

ENGINEERING SERVICES	MATERIALS AND GEOTECHNICAL SERVICES	STATE OF CALIFORNIA DEPARTMENT OF TRANSPORTATION	DIVISION OF ENGINEERING SERVICES STRUCTURE DESIGN DESIGN BRANCH 1	BRIDGE NO. 01E0021 POST MILE 14.89	SOUTH LAST CHANCE WALL LOG OF TEST BORINGS 2 OF 3
FUNCTIONAL SUPERVISOR NAME: C. Narwold	DRAWN BY: F. Nguyen CHECKED BY: R. Newman	FIELD INVESTIGATION BY: M. J. James			

OGS CIVIL LOG OF TEST BORINGS SHEET

ORIGINAL SCALE IN INCHES FOR REDUCED PLANS 0 1 2 3

UNIT: 3650
PROJECT NUMBER & PHASE: 0115000111 4 CONTRACT NO.: 01-0B27U4

DISREGARD PRINTS BEARING EARLIER REVISION DATES → REVISION DATES 04-27-15 05-26-15 07-15-15 SHEET 14 OF 15

FILE => Z01-0b27u-z-ltb02.dgn

USERNAME => s132662 DATE PLOTTED => 01-FEB-2016 TIME PLOTTED => 09:15

DIST	COUNTY	ROUTE	POST MILES TOTAL PROJECT	SHEET No	TOTAL SHEETS
01	DN	101	14.9/15.3	75	91

REGISTERED CIVIL ENGINEER — DATE 5-21-15

November 30, 2015
PLANS APPROVAL DATE

REGISTERED PROFESSIONAL ENGINEER — Kathy Gallagher — No. C62012 — Exp. 9-30-15 — CIVIL — STATE OF CALIFORNIA

The State of California or its officers or agents shall not be responsible for the accuracy or completeness of electronic copies of this plan sheet.

This LOTB sheet was prepared in accordance with the Caltrans Soil & Rock Logging, Classification, & Presentation Manual (2010 Edition).

See 2010 Standard Plans A10F and A10G for Soil Legend, and A10H for Rock Legend.

FOR PLAN VIEW, SEE
"LOG OF TEST BORINGS 1 OF 3"

Note: Groundwater was not encountered in Boring RC-14-002.

PROFILE
Horiz. 1" = 10'
Vert. 1" = 10'

ENGINEERING SERVICES	MATERIALS AND GEOTECHNICAL SERVICES	STATE OF CALIFORNIA DEPARTMENT OF TRANSPORTATION	DIVISION OF ENGINEERING SERVICES STRUCTURE DESIGN DESIGN BRANCH 1	BRIDGE NO. 01E0021 POST MILE 14.89	SOUTH LAST CHANCE WALL LOG OF TEST BORINGS 3 OF 3
FUNCTIONAL SUPERVISOR NAME: C. Narwold	DRAWN BY: F. Nguyen CHECKED BY: R. Newman	FIELD INVESTIGATION BY: K. Gallagher			

OGS CIVIL LOG OF TEST BORINGS SHEET

ORIGINAL SCALE IN INCHES FOR REDUCED PLANS 0 1 2 3

UNIT: 3650
PROJECT NUMBER & PHASE: 0115000111 4 CONTRACT NO.: 01-0B27U4

DISREGARD PRINTS BEARING EARLIER REVISION DATES → REVISION DATES ~~04-27-15~~ 05-26-15 07/15/15 SHEET 15 OF 15

FILE => Z01-0b27u-z-ltb03.dgn

USERNAME => s132662 DATE PLOTTED => 01-FEB-2016 TIME PLOTTED => 09:15

DIST	COUNTY	ROUTE	POST MILES TOTAL PROJECT	SHEET No.	TOTAL SHEETS
01	DN	101	14.9/15.3	76	91

REGISTERED CIVIL ENGINEER — DATE 9-10-15

November 30, 2015
PLANS APPROVAL DATE

REGISTERED PROFESSIONAL ENGINEER — MAMUNUR RAHMAN — No. C48515 — Exp. 06-30-16 — CIVIL — STATE OF CALIFORNIA

The State of California or its officers or agents shall not be responsible for the accuracy or completeness of electronic copies of this plan sheet.

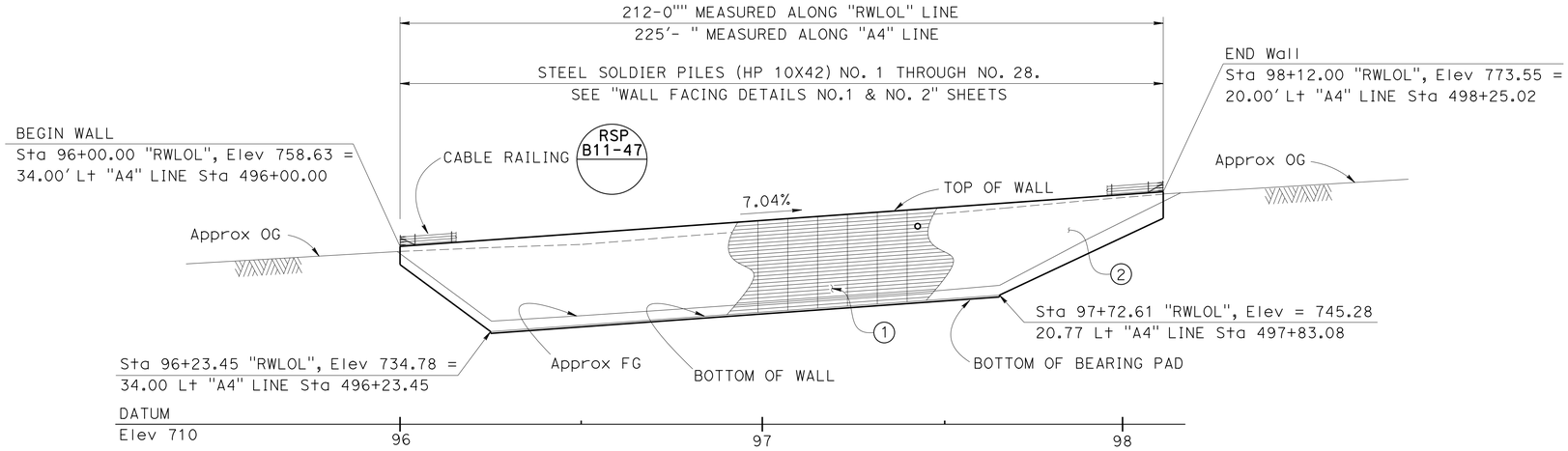

MIRRORED ELEVATION

1" = 20'

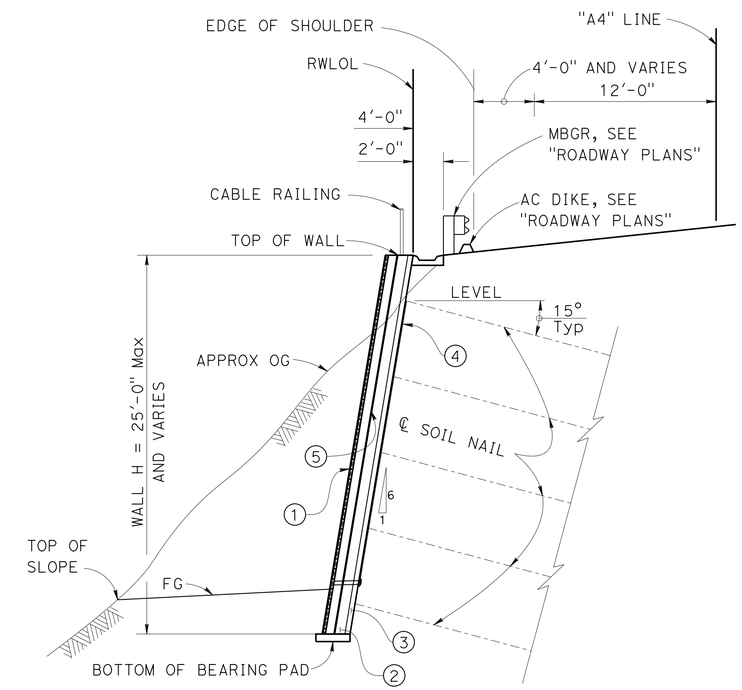

TYPICAL SECTION

1" = 5'

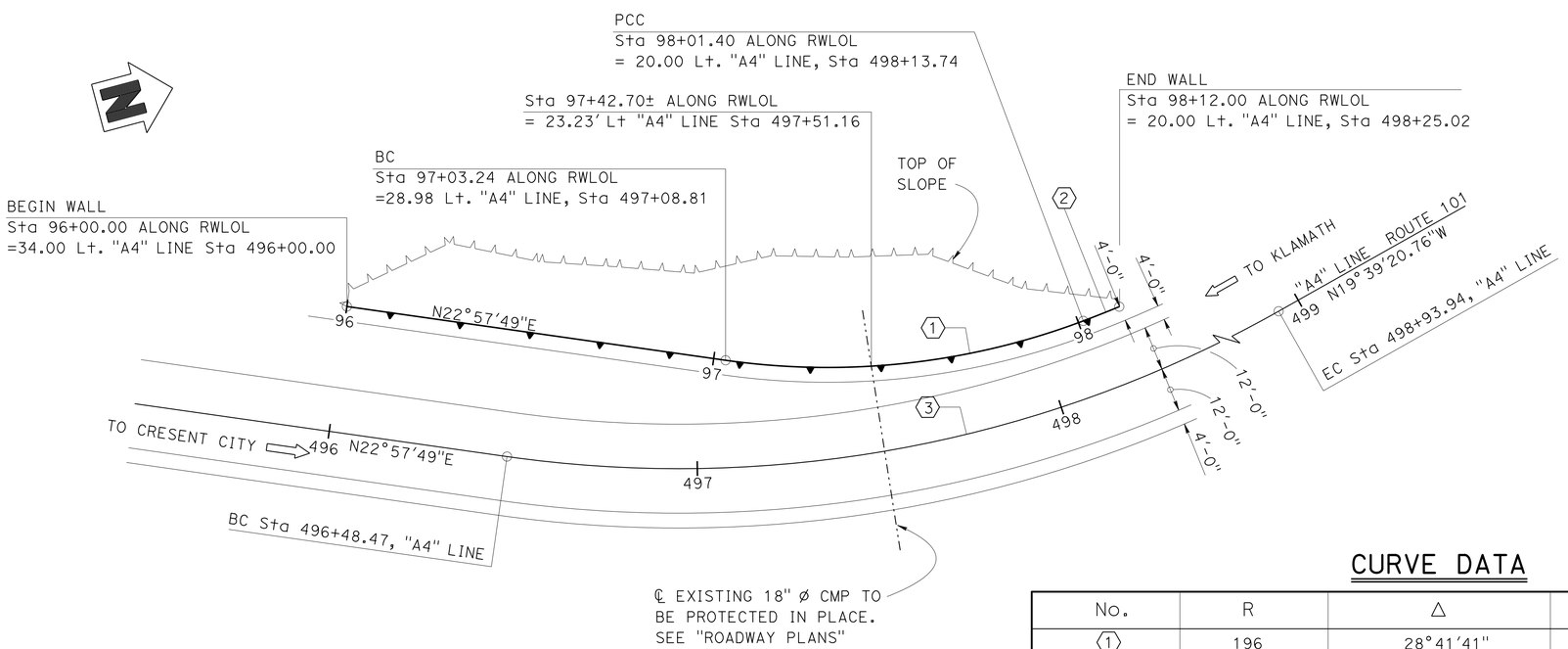

PLAN

1" = 20'

NOTE:
THE CONTRACTOR SHALL VERIFY ALL CONTROLLING FIELD DIMENSIONS BEFORE ORDERING OR FABRICATING ANY MATERIAL.

CURVE DATA

No.	R	Δ	T	L
1	196	28°41'41"	50.13	98.16
2	310	01°57'33"	5.30	10.60
3	330	42°37'10"	128.73	245.47

NOTES:

1. Treated Timber Lagging.
2. Structural Concrete (Soil Nail Wall).
3. Structural Shotcrete.
4. Geocomposite Drainage System.
5. Steel Soldier Pile (HP 10X42)

LEGEND:

⟹ Direction of traffic

B. Gunter
DESIGN ENGINEER

	BY	CHECKED		BY	CHECKED
DESIGN	M. RAHMAN	R. WANG	LOAD & RESISTANCE FACTOR DESIGN		
DETAILS	H. INIGUEZ	R. WANG	LAYOUT	M. RAHMAN	R. WANG
QUANTITIES	R. WANG	S. YEH	SPECIFICATIONS	S. NELAPATLA	PLANS AND SPECS COMPARED A. McPHEE

ORIGINAL SCALE IN INCHES FOR REDUCED PLANS 0 1 2 3

STATE OF CALIFORNIA
DEPARTMENT OF TRANSPORTATION

DIVISION OF ENGINEERING SERVICES
STRUCTURE DESIGN
DESIGN BRANCH 19

BRIDGE NO. 01E0020
POST MILE 15.10/15.14

LAST CHANCE SOIL NAIL WALL
GENERAL PLAN NO. 1

UNIT: 3621
PROJECT NUMBER & PHASE: 0115000111 - 4 CONTRACT NO.: 01-0B27U4

DISREGARD PRINTS BEARING EARLIER REVISION DATES

REVISION DATES: 09-30-14 07-09-15 07-02-15

SHEET 1 OF 16

STRUCTURES DESIGN GENERAL PLAN SHEET (ENGLISH) (REV.09-01-10)

FILE => Z01e0020-a-gp_01.dgn

USERNAME => s132662 DATE PLOTTED => 01-FEB-2016 TIME PLOTTED => 09:15

DIST	COUNTY	ROUTE	POST MILES TOTAL PROJECT	SHEET No.	TOTAL SHEETS
01	DN	101	14.9/15.3	77	91

REGISTERED CIVIL ENGINEER 9-10-15 DATE

November 30, 2015
PLANS APPROVAL DATE

REGISTERED PROFESSIONAL ENGINEER
Mamunur Rahman
No. C48515
Exp. 6/30/16
CIVIL
STATE OF CALIFORNIA

The State of California or its officers or agents shall not be responsible for the accuracy or completeness of electronic copies of this plan sheet.

GENERAL NOTES:

Design Procedures: Allowable Stress Design, BRIDGE DESIGN SPECIFICATIONS (1996 AASHTO with Interims and Revisions by Caltrans); "Geotechnical Engineering Circular No. 7 - Soil Nail Walls" (FHWAO-IF-03-017); Manual for Design and Construction Monitoring or Soil Nail Walls (FHWA 1998).

Flexure of Facings: "Building Code Requirements for Structural Concrete (ACI 318-08)".

Strucutal Shotcrete: f'c = 3,600 psi
fy = 65,000 psi (Plain Welded Wire Reinforcement)
fy = 60,000 psi (Waler Bar Reinforcement)

Structural Concrete: (Soil Nail Wall) f'c = 3,600 psi
fy = 60,000 psi

Concrete Anchors: fy = 50,000 psi
ft = 60,000 psi

Structural Steel: fy = 36,000 psi

Soil Nail: fy = 75,000 psi

Soil Design Parameters (Shear Zone):

Φ = 33° (Angle of Internal Friction)

c = 0 psi (Cohesion)

γ = 125 pcf (Unit Weight)

QUANTITIES

STRUCTURE EXCAVATION (SOIL NAIL WALL)	528	CY
STRUCTURE BACKFILL (SOIL NAIL WALL)	4	CY
SOIL NAIL	11,700	LF
STEEL SOLDIER PILE (HP 10X42)	638	LF
STRUCTURAL CONCRETE (SOIL NAIL WALL)	137	CY
BAR REINFORCING STEEL (SOIL NAIL WALL)	18,400	LB
STRUCTURAL SHOTCRETE	115	CY
TIMBER LAGGING	19	MFBM
CLEAN AND PAINT STEEL SOLDIER PILING	LUMP	SUM
MINOR CONCRETE (GUTTER)	212	LF
CABLE RAILING	212	LF

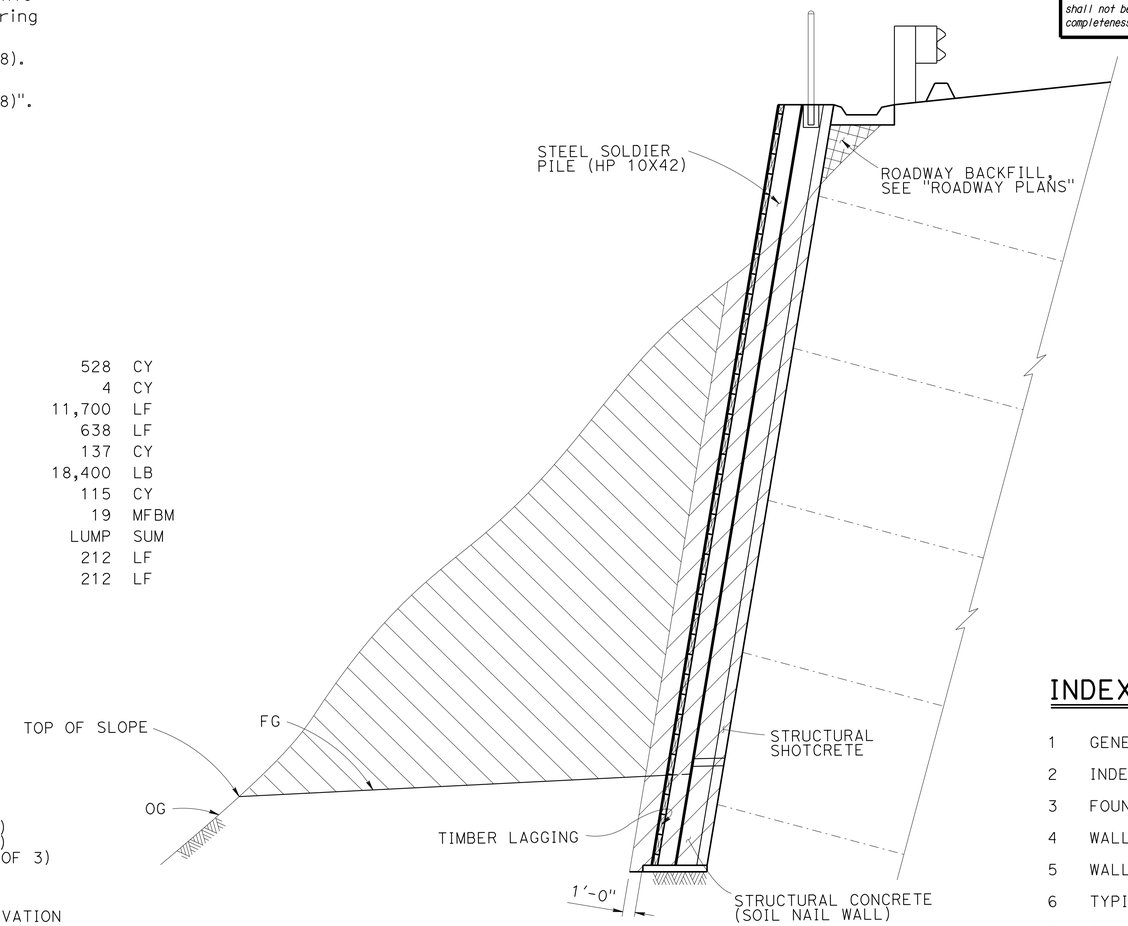

EXCAVATION LIMITS

NO SCALE

INDEX TO PLANS

1 GENERAL PLAN
2 INDEX TO PLANS
3 FOUNDATION PLAN
4 WALL LAYOUT No. 1
5 WALL LAYOUT No. 2
6 TYPICAL SECTION
7 SOIL NAIL DETAILS
8 DRAINAGE DETAILS
9 WALL FACIING DETAILS NO. 1
10 WALL FACING DETAILS NO. 2
11 LOG OF TEST BORINGS 1 OF 6
12 LOG OF TEST BORINGS 2 OF 6
13 LOG OF TEST BORINGS 3 OF 6
14 LOG OF TEST BORINGS 4 OF 6
15 LOG OF TEST BORINGS 5 OF 6
16 LOG OF TEST BORINGS 6 OF 6

SYMBOLS:

f'c - concrete strength at 28 day

fy - yield strength of reinforcement or bearing plate

ft - tensile strength of headed stud

WWF - welded wire fabric

STANDARD PLANS DATED 2010

	A10A	ABBREVIATIONS (SHEET 1 OF 2)
RSP	A10B	ABBREVIATIONS (SHEET 2 OF 2)
	A10C	LINES AND SYMBOLS (SHEET 1 OF 3)
RSP	A10F	LEGEND-SOIL (SHEET 1 OF 2)
RSP	A10G	LEGEND-SOIL (SHEET 2 OF 2)
	A10H	LEGEND-ROCK
	A62C	LIMITS OF PAYMENT FOR EXCAVATION AND BACKFILL-BRIDGE
	B3-6	RETAINING WALL DETAILS NO. 2
RSP	B11-47	CABLE RAILING

STANDARD PLAN SHEET NO.

DETAIL NO.

LEGEND:

TIMBER LAGGING

STRUCTURE EXCAVATION (SOIL NAIL WALL)

ROADWAY EXCAVATION (SEE "ROAD PLANS")

STRUCTURE BACKFILL (SOIL NAIL WALL)

	BY	CHECKED
DESIGN	M. RAHMAN	R. WANG
DETAILS	H. INIGUEZ	R. WANG
QUANTITIES	R. WANG	S. YEH

STATE OF CALIFORNIA
DEPARTMENT OF TRANSPORTATION

DIVISION OF ENGINEERING SERVICES
STRUCTURE DESIGN
DESIGN BRANCH 19

BRIDGE NO. 01E0020
POST MILE 15.10/15.14

LAST CHANCE SOIL NAIL WALL
INDEX TO PLANS

STRUCTURES DESIGN DETAIL SHEET (ENGLISH) (REV. 09-01-10)

ORIGINAL SCALE IN INCHES FOR REDUCED PLANS 0 1 2 3

UNIT: 3621
PROJECT NUMBER & PHASE: 0115000111 - 4 CONTRACT NO.: 01-0B27U4

DISREGARD PRINTS BEARING EARLIER REVISION DATES

REVISION DATES 10-22-14 07-09-15 07-09-15

SHEET 2 OF 16

FILE => Z01e0020-b-itp.dgn

USERNAME => s132662 DATE PLOTTED => 01-FEB-2016 TIME PLOTTED => 09:15

DIST	COUNTY	ROUTE	POST MILES TOTAL PROJECT	SHEET No.	TOTAL SHEETS
01	DN	101	14.9/15.3	78	91

REGISTERED CIVIL ENGINEER — DATE 9-10-15

PLANS APPROVAL DATE November 30, 2015

REGISTERED PROFESSIONAL ENGINEER — MAMUNUR RAHMAN — No. C48515 — Exp. 6/30/14 — CIVIL — STATE OF CALIFORNIA

The State of California or its officers or agents shall not be responsible for the accuracy or completeness of electronic copies of this plan sheet.

SURVEY CONTROL

PC 15.17
Fnd Alum CAP ON REBAR
21.66 Ft Lt "A4" LINE ROUTE 101
Sta 498+56.41
N 2,486,890.31
E 5,983,565.11
Elev = 774.72

DN 101-15.21 (NOT SHOWN ON PLAN)
Fnd Alum CAP ON REBAR
19.29 Ft Lt "A4" LINE ROUTE 101
Sta 501+54.43
N 2,487,180.94
E 5,983,489.04
Elev = 782.45

CURVE DATA

No ⊛	R	Δ	T	L
①	196.00	28°41'40"	50.13	98.16
②	310.00	01°56'02"	5.23	10.46
③	330.00	42°37'10"	128.73	245.47

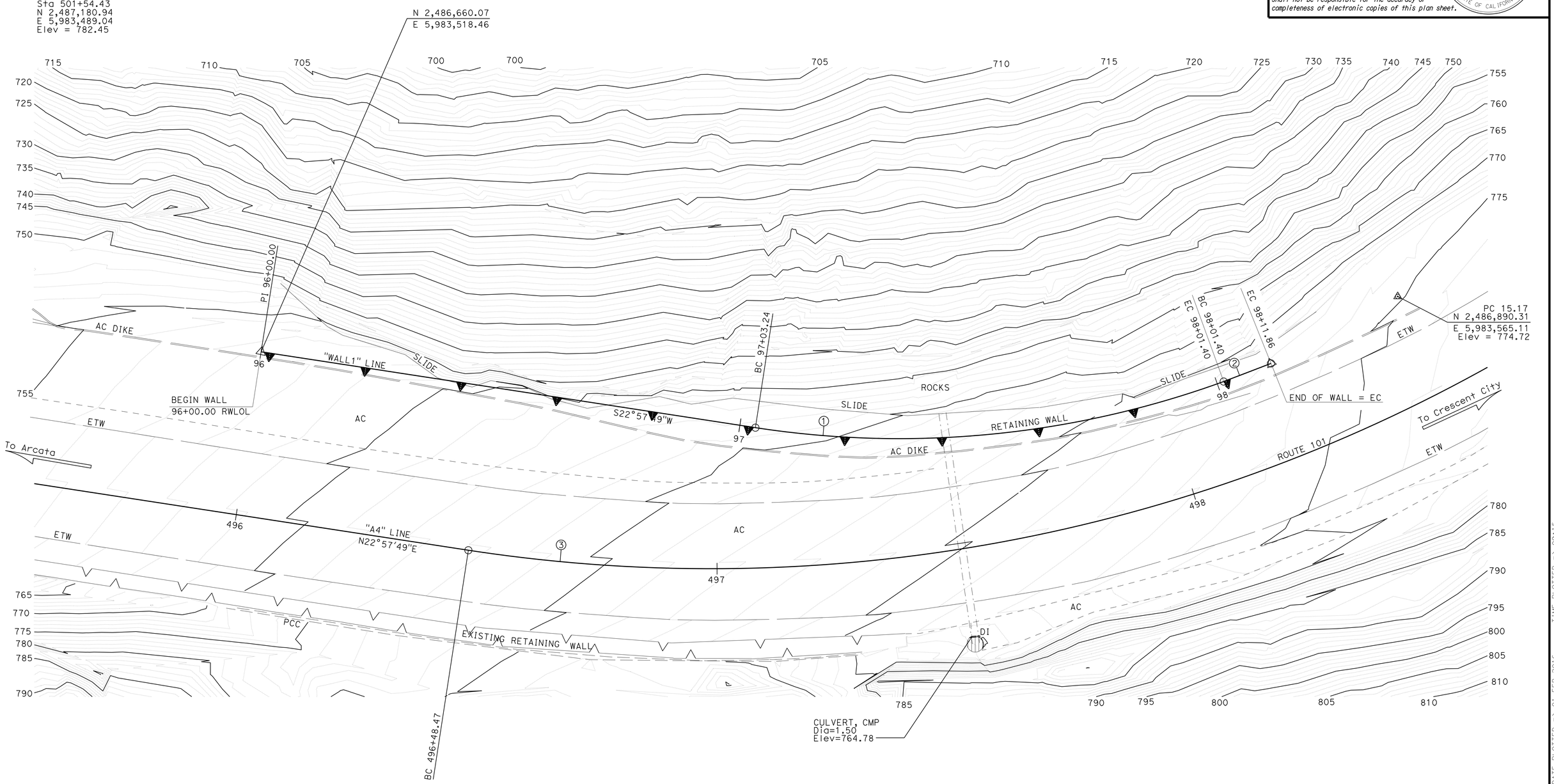

PRELIMINARY INVESTIGATION SECTION

SCALE	VERT.DATUM NAVD88	PHOTOGRAMMETRY AS OF: X			
1"=10'	HORZ.DATUM NAD83 (2004.69)	SURVEYED	BY DISTRICT	CHECKED	BY C. FASSET 01/2014
ALIGNMENT TIES Dist TRAVERSE SHEET		DRAFTED	BY T. ZOLNIKOV 01/2014	CHECKED	BY C. FASSET 01/2014

DESIGN	BY M. RAHMAN	CHECKED R. WANG
DETAILS	BY H. INIGUEZ	CHECKED R. WANG
QUANTITIES	BY R. WANG	CHECKED S. YEH

STATE OF CALIFORNIA
DEPARTMENT OF TRANSPORTATION

DIVISION OF ENGINEERING SERVICES
STRUCTURE DESIGN
DESIGN BRANCH 19

BRIDGE NO. 01E0020
POST MILE 15.10-15.14

LAST CHANCE SOIL NAIL WALL
FOUNDATION PLAN

STRUCTURES FOUNDATION PLAN SHEET (ENGLISH) (REV. 09-01-10)

ORIGINAL SCALE IN INCHES FOR REDUCED PLANS 0 1 2 3

UNIT: 3646
PROJECT NUMBER & PHASE: 0115000111 - 4 CONTRACT NO.: 01-0B27U4

DISREGARD PRINTS BEARING EARLIER REVISION DATES

REVISION DATES: 06-05-14 07-09-15 07-02-15

SHEET 3 OF 16

FILE => Z01e0020-e-fp_01.dgn

USERNAME => s132662 DATE PLOTTED => 01-FEB-2016 TIME PLOTTED => 09:15

DIST	COUNTY	ROUTE	POST MILES TOTAL PROJECT	SHEET No.	TOTAL SHEETS
01	DN	101	14.9/15.3	79	91

REGISTERED CIVIL ENGINEER 9-10-15 DATE

November 30, 2015
PLANS APPROVAL DATE

REGISTERED PROFESSIONAL ENGINEER Mamunur Rahman No. C48515 Exp. 6/30/16 CIVIL STATE OF CALIFORNIA

The State of California or its officers or agents shall not be responsible for the accuracy or completeness of electronic copies of this plan sheet.

NOTES:

1. Soil Nail Spacings are measured along RWLOL

LEGEND:

- ● Denotes location of Additional Soil Nails. Total Number this sheet = 2
- ⊕ Denotes location of Soil Nail. Total Number this sheet = 116
- ▲ Denotes Location of Proof Test Nail. Total Number this sheet = 9

SOIL NAIL DATA (THIS SHEET ONLY)

ROW #	NO. OF NAILS	EMBEDMENT LENGTH (FT)
1	26	50'-0"
2	25	50'-0"
3	23	50'-0"
4	22	50'-0"
5	20	50'-0"
ADDED NAILS	2	50'-0"

PART ELEVATION

1/4" = 1'-0"

	BY	CHECKED
DESIGN	M. RAHMAN	R. WANG
DETAILS	H. INIGUEZ	R. WANG
QUANTITIES	R. WANG	S. YEH

STATE OF CALIFORNIA
DEPARTMENT OF TRANSPORTATION

DIVISION OF ENGINEERING SERVICES
STRUCTURE DESIGN
DESIGN BRANCH 19

BRIDGE NO. 01E0020
POST MILE 15.10/15.14

LAST CHANCE SOIL NAIL WALL
WALL LAYOUT NO. 1

STRUCTURES DESIGN DETAIL SHEET (ENGLISH) (REV. 09-01-10)

ORIGINAL SCALE IN INCHES FOR REDUCED PLANS 0 1 2 3

UNIT: 3621
PROJECT NUMBER & PHASE: 0115000111 - 4 CONTRACT NO.: 01-0B27U4

DISREGARD PRINTS BEARING EARLIER REVISION DATES

REVISION DATES: 10-22-14 06-23-15 07-02-15

SHEET 4 OF 16

FILE => Z01e0020-f-lo_01.dgn

USERNAME => s132662 DATE PLOTTED => 01-FEB-2016 TIME PLOTTED => 09:15

DIST	COUNTY	ROUTE	POST MILES TOTAL PROJECT	SHEET No.	TOTAL SHEETS
01	DN	101	14.9/15.3	80	91

REGISTERED CIVIL ENGINEER 9-10-15 DATE

November 30, 2015
PLANS APPROVAL DATE

REGISTERED PROFESSIONAL ENGINEER Mamunur Rahman No. C48515 Exp. 6/30/16 CIVIL STATE OF CALIFORNIA

The State of California or its officers or agents shall not be responsible for the accuracy or completeness of electronic copies of this plan sheet.

NOTES:

1. Soil Nail Spacings are measured along RWLOL.
2. Place special reinforcement for both shotcrete and structural concrete layers.

LEGEND:

- Denotes location of Additional Soil Nails. Total Number this sheet = 3
- Denotes location of Soil Nail. Total Number this sheet = 113
- Denotes Location of Proof Test Nail. Total Number this sheet = 10

SOIL NAIL DATA (THIS SHEET ONLY)

ROW #	NO. OF NAILS	EMBEDMENT LENGTH (FT)
1	27	50'-0"
2	26	50'-0"
3	23	50'-0"
4	20	50'-0"
5	17	50'-0"
ADDED NAILS	3	50'-0"

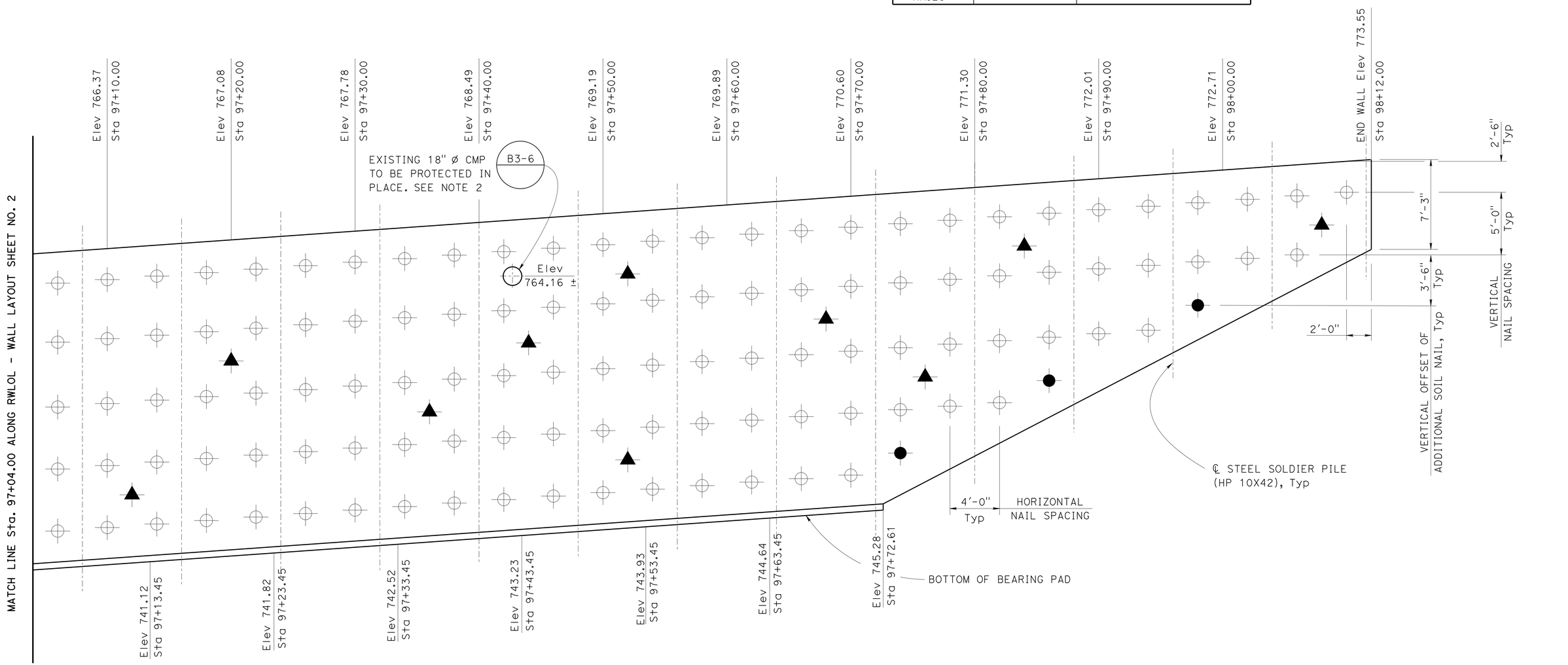

PART ELEVATION

1/4" = 1'-0"

DESIGN	BY M. RAHMAN	CHECKED R. WANG	
DETAILS	BY H. INIGUEZ	CHECKED R. WANG	
QUANTITIES	BY R. WANG	CHECKED S. YEH	

STATE OF CALIFORNIA
DEPARTMENT OF TRANSPORTATION

DIVISION OF ENGINEERING SERVICES
STRUCTURE DESIGN
DESIGN BRANCH 19

BRIDGE NO. 01E0020
POST MILE 15.10/15.14

LAST CHANCE SOIL NAIL WALL
WALL LAYOUT NO. 2

STRUCTURES DESIGN DETAIL SHEET (ENGLISH) (REV. 09-01-10)

ORIGINAL SCALE IN INCHES FOR REDUCED PLANS 0 1 2 3

UNIT: 3621
PROJECT NUMBER & PHASE: 0115000111 - 4 CONTRACT NO.: 01-0B27U4

DISREGARD PRINTS BEARING EARLIER REVISION DATES

REVISION DATES 10-22-14 06-25-15 07-02-15

SHEET 5 OF 16

FILE => Z01e0020-f-lo_02.dgn

USERNAME => s132662 DATE PLOTTED => 01-FEB-2016 TIME PLOTTED => 09:15

DIST	COUNTY	ROUTE	POST MILES TOTAL PROJECT	SHEET No.	TOTAL SHEETS
01	DN	101	14.9/15.3	81	91

REGISTERED CIVIL ENGINEER 9-10-15 DATE

November 30, 2015
PLANS APPROVAL DATE

REGISTERED PROFESSIONAL ENGINEER
Mamunur Rahman
No. C48515
Exp. 6/30/16
CIVIL
STATE OF CALIFORNIA

The State of California or its officers or agents shall not be responsible for the accuracy or completeness of electronic copies of this plan sheet.

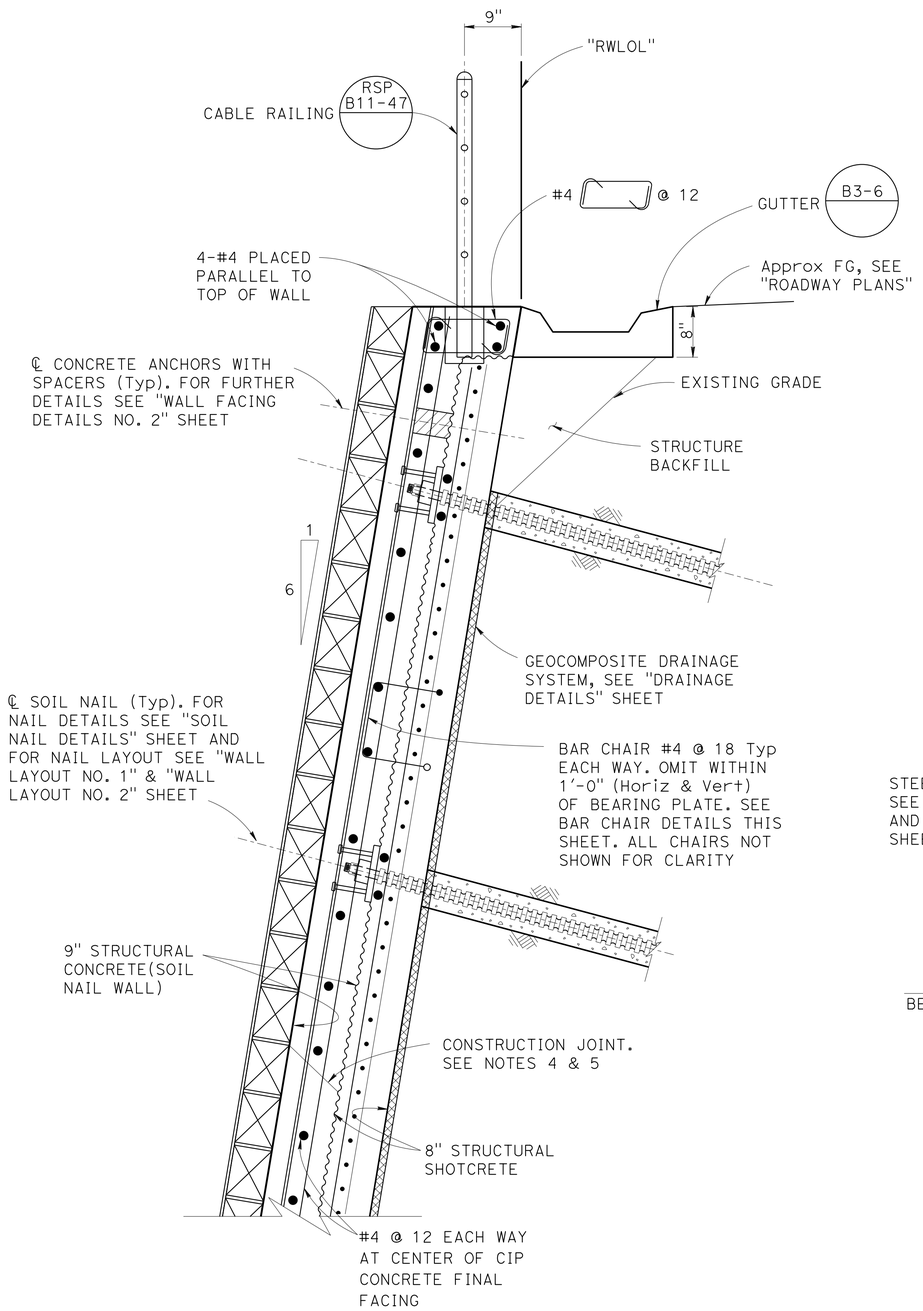

TYPICAL SECTION

1" = 1'-0"

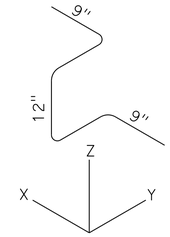

BAR CHAIR DETAIL

NO SCALE

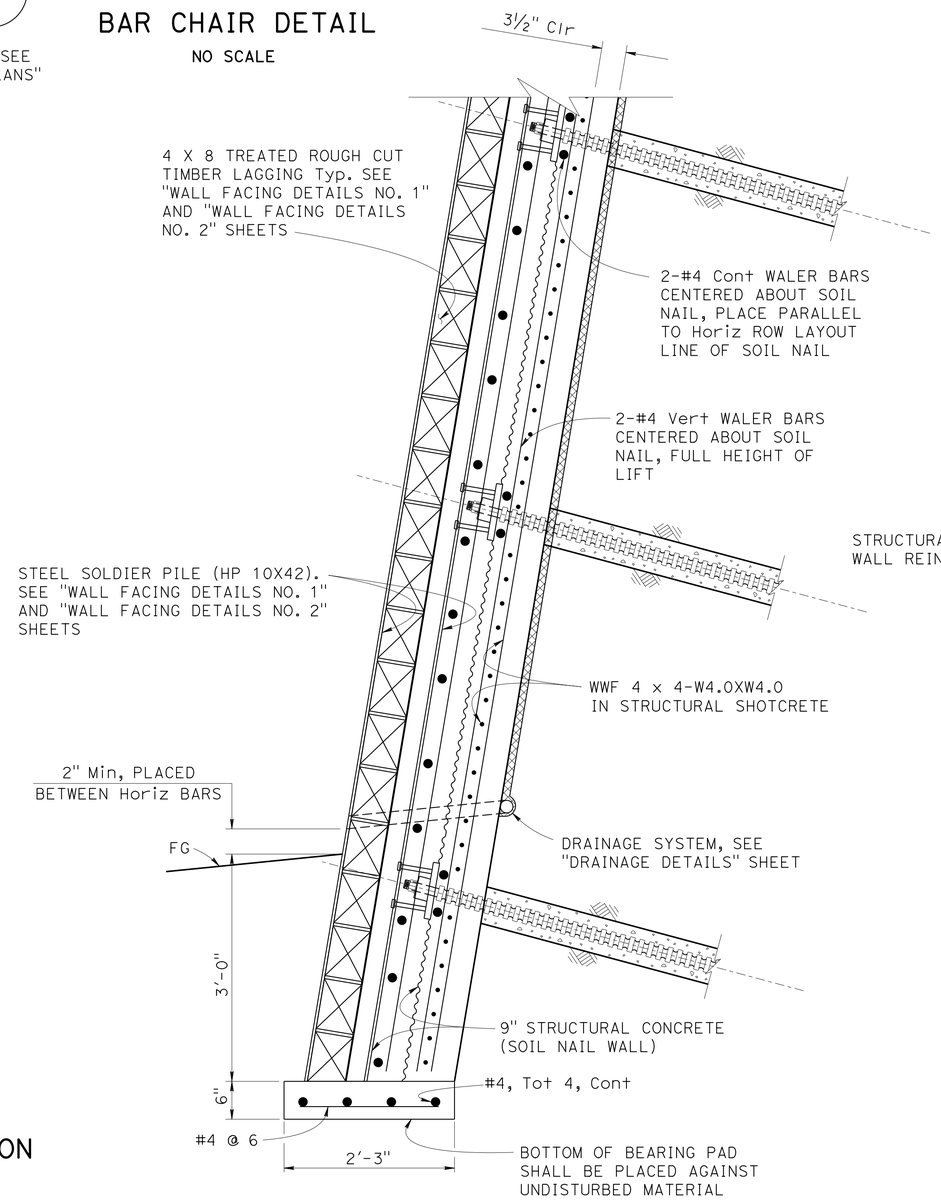

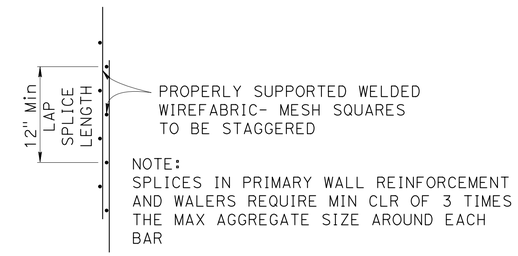

NOTE:
SPLICES IN PRIMARY WALL REINFORCEMENT AND WALERS REQUIRE MIN CLR OF 3 TIMES THE MAX AGGREGATE SIZE AROUND EACH BAR

LAP SPLICE

NO SCALE

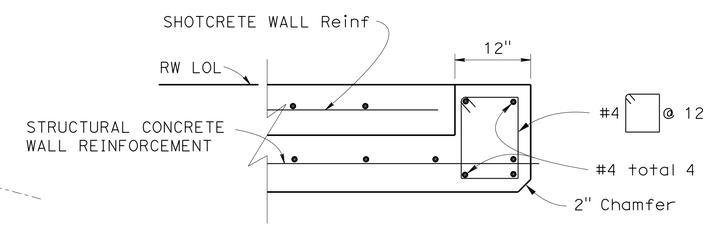

BEGIN/END WALL DETAIL

1" = 1'-0"

NOTES:

1. A return wall is not required for the wall ends.
2. For wall elevations, nail spacing, nail length and nail size see "WALL LAYOUT NO. 1" & "WALL LAYOUT NO.2" sheets.
3. For Wall Alignment see "GENERAL PLAN" & "FOUNDATION" sheets.
4. The Vertical and Horizontal Construction Joints in the Temporary Shotcrete Layer shall be located a minimum of 1'-6" from adjacent Soil Nails.
5. The Vertical and Horizontal Construction Joints in the Structural Concrete (Soil Nail Wall) Facing shall be located a minimum of 1'-6" from the adjacent Construction Joints in the Structural Shotcrete Layer.

	BY	CHECKED
DESIGN	M. RAHMAN	R. WANG
DETAILS	H. INIGUEZ	R. WANG
QUANTITIES	R. WANG	S. YEH

STATE OF CALIFORNIA
DEPARTMENT OF TRANSPORTATION

DIVISION OF ENGINEERING SERVICES
STRUCTURE DESIGN
DESIGN BRANCH 19

BRIDGE NO. 01E0020
POST MILE 15.10/15.14

LAST CHANCE SOIL NAIL WALL
TYPICAL SECTION

STRUCTURES DESIGN DETAIL SHEET (ENGLISH) (REV. 09-01-10)

ORIGINAL SCALE IN INCHES FOR REDUCED PLANS 0 1 2 3

UNIT: 3621
PROJECT NUMBER & PHASE: 0115000111 - 4 CONTRACT NO.: 01-0B27U4

DISREGARD PRINTS BEARING EARLIER REVISION DATES

REVISION DATES: 10-29-14 | 07-09-15 | 08-28-15

SHEET 6 OF 16

FILE => Z01e0020-k-ts.dgn

USERNAME => s132662 DATE PLOTTED => 01-FEB-2016 TIME PLOTTED => 09:15

DIST	COUNTY	ROUTE	POST MILES TOTAL PROJECT	SHEET No.	TOTAL SHEETS
01	DN	101	14.9/15.3	82	91

REGISTERED CIVIL ENGINEER 9-10-15 DATE

November 30, 2015
PLANS APPROVAL DATE

REGISTERED PROFESSIONAL ENGINEER
Mamunur Rahman
No. C48515
Exp. 6/30/16
CIVIL
STATE OF CALIFORNIA

The State of California or its officers or agents shall not be responsible for the accuracy or completeness of electronic copies of this plan sheet.

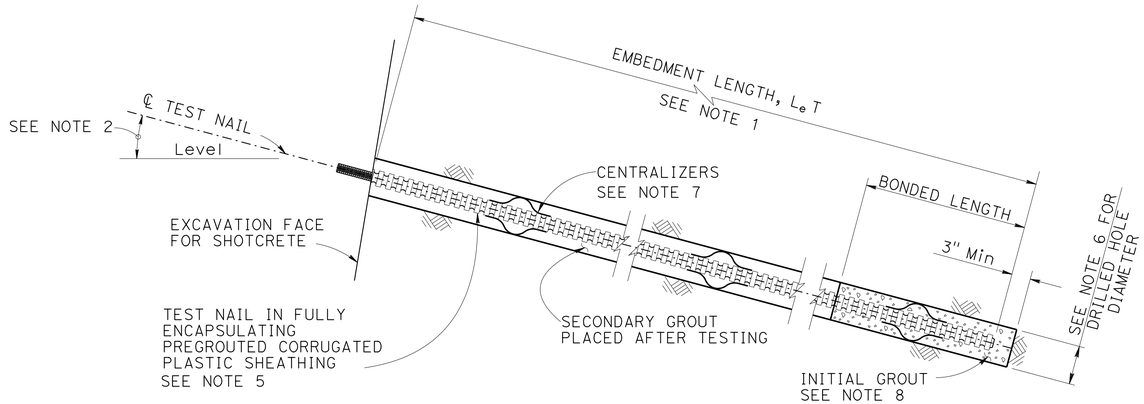

TEST NAIL DETAIL

1" = 1'-0"

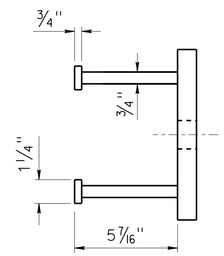

SECTION A-A

3" = 1'-0"

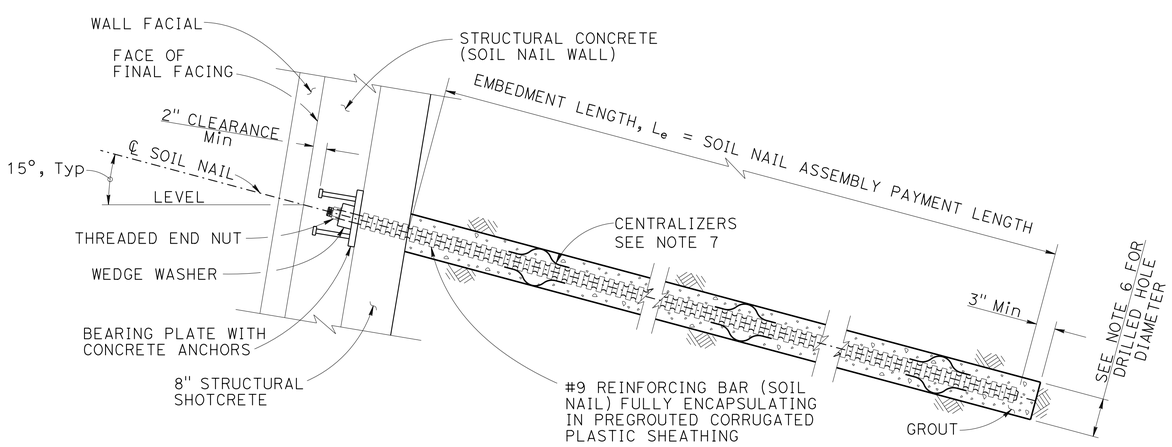

PRODUCTION SOIL NAIL DETAIL

1" = 1'-0"

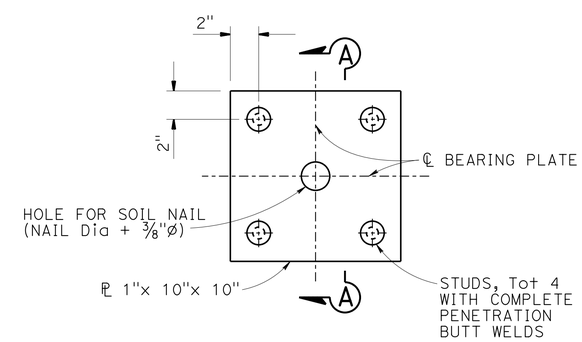

BEARING PLATE DETAIL

3" = 1'-0"

NOTES:

1. The test nail embedment length, LeT, shall be equal to 2/3 of the embedment length, Le, of adjacent production nail assemblies, but not less than 12'-0".
2. Test Soil Nail inclination shall be the same as that of the production Soil Nail.
3. The total length of the test soil nail equals the embedment length plus the length required for the jacking equipment.
4. For location of proof test nails see "WALL LAYOUT No. 1" and "WALL LAYOUT No.2" sheet. Additional proof test nails will be installed and tested as per the Special Provisions.
5. Contractor is responsible for selecting the size and strength of reinforcing bar for the Test Soil Nails.
6. Contractor to determine drilled hole diameter.
7. The centralizers should be made from a plastic material to be attached to the nail in a way that will not impede the free flow of grout.
8. Finished grout surface for test nails to be normal to the bar.
9. Facing and Architectural details not shown for clarity.

	BY	CHECKED
DESIGN	M. RAHMAN	R. WANG
DETAILS	H. INIGUEZ	R. WANG
QUANTITIES	R. WANG	S. YEH

STATE OF CALIFORNIA
DEPARTMENT OF TRANSPORTATION

DIVISION OF ENGINEERING SERVICES
STRUCTURE DESIGN
DESIGN BRANCH 19

BRIDGE NO. 01E0020
POST MILE 15.10/15.14

LAST CHANCE SOIL NAIL WALL
SOIL NAIL DETAILS

STRUCTURES DESIGN DETAIL SHEET (ENGLISH) (REV. 09-01-10)

ORIGINAL SCALE IN INCHES FOR REDUCED PLANS 0 1 2 3

UNIT: 3621
PROJECT NUMBER & PHASE: 0115000111 - 4 CONTRACT NO.: 01-0B27U4

DISREGARD PRINTS BEARING EARLIER REVISION DATES

REVISION DATES: 10-21-14 06-18-15 07-02-15

SHEET 7 OF 16

FILE => Z01e0020-q-sn-det.dgn

USERNAME => s132662 DATE PLOTTED => 01-FEB-2016 TIME PLOTTED => 09:16

DIST	COUNTY	ROUTE	POST MILES TOTAL PROJECT	SHEET No.	TOTAL SHEETS
01	DN	101	14.9/15.3	83	91

REGISTERED CIVIL ENGINEER 9-10-15 DATE

November 30, 2015
PLANS APPROVAL DATE

REGISTERED PROFESSIONAL ENGINEER
Mamunur Rahman
No. C48515
Exp. 6/30/16
CIVIL
STATE OF CALIFORNIA

The State of California or its officers or agents shall not be responsible for the accuracy or completeness of electronic copies of this plan sheet.

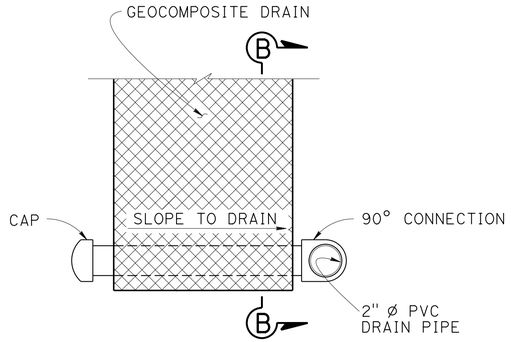

DETAIL A
NO SCALE

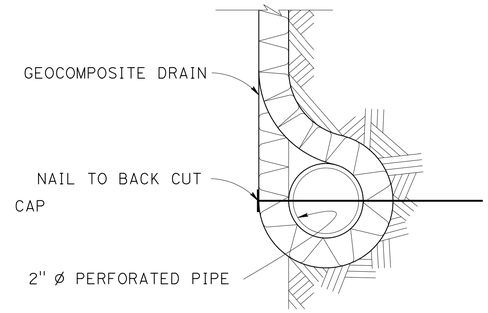

SECTION B-B
NO SCALE

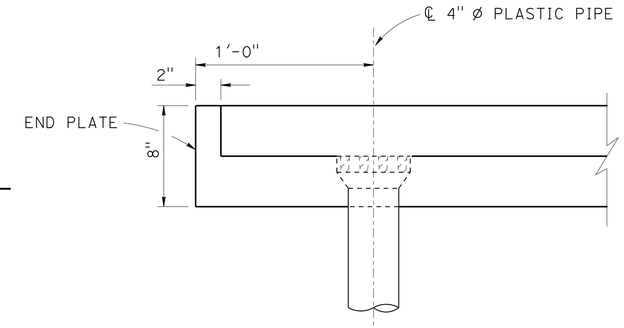

SECTION D-D
No Scale

NOTES:

1. Geocomposite Drainage System may be omitted when conflicting with Test Soil Nails.
2. S = 4'-0"
3. Geocomposite drain not to be placed above top soil nail.

LEGEND:

⊕ - Indicates Soil Nail Assembly.

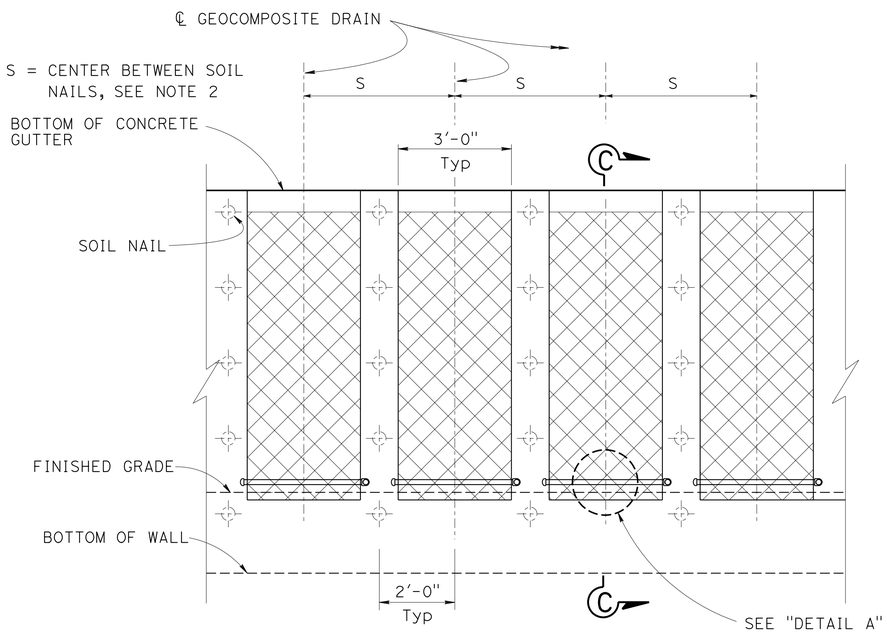

PARTIAL ELEVATION - GEOCOMPOSITE DRAINAGE SYSTEM AT SOIL NAIL
NO SCALE

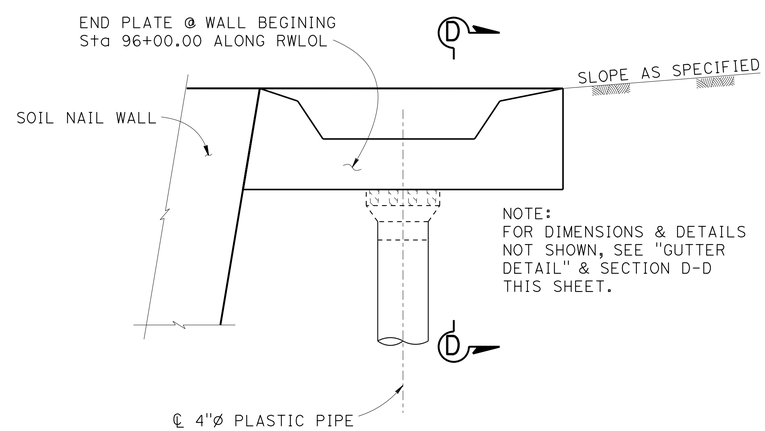

GUTTER DETAIL AT WALL BEGINING
No Scale

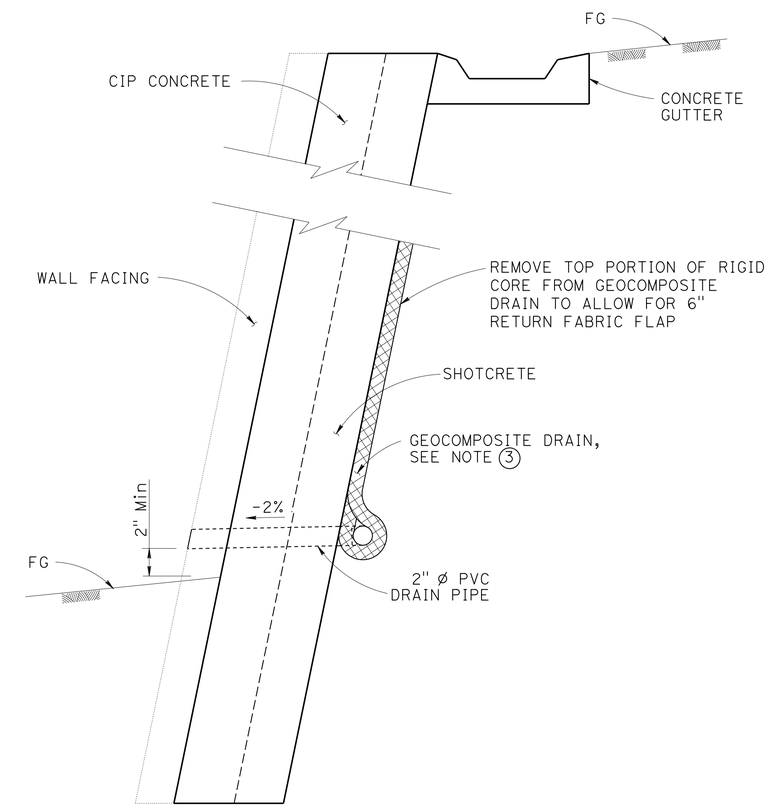

SECTION C-C
No Scale

DESIGN	BY M. RAHMAN	CHECKED R. WANG	
DETAILS	BY H. INIGUEZ	CHECKED R. WANG	
QUANTITIES	BY R. WANG	CHECKED S. YEH	

STATE OF CALIFORNIA
DEPARTMENT OF TRANSPORTATION

DIVISION OF ENGINEERING SERVICES
STRUCTURE DESIGN
DESIGN BRANCH 19

BRIDGE NO. 01E0020
POST MILE 15.10/15.14

LAST CHANCE SOIL NAIL WALL
DRAINAGE DETAILS

STRUCTURES DESIGN DETAIL SHEET (ENGLISH) (REV. 09-01-10)

ORIGINAL SCALE IN INCHES FOR REDUCED PLANS 0 1 2 3

UNIT: 3621
PROJECT NUMBER & PHASE: 0115000111 - 4 CONTRACT NO.: 01-0B27U4

DISREGARD PRINTS BEARING EARLIER REVISION DATES

REVISION DATES: 09-09-14 08-28-15 07-02-15

SHEET 8 OF 16

FILE => Z01e0020-r-drn-det_01.dgn

USERNAME => s132662 DATE PLOTTED => 01-FEB-2016 TIME PLOTTED => 09:16

DIST	COUNTY	ROUTE	POST MILES TOTAL PROJECT	SHEET No.	TOTAL SHEETS
01	DN	101	14.9/15.3	84	91

REGISTERED CIVIL ENGINEER 9-10-15 DATE

November 30, 2015
PLANS APPROVAL DATE

REGISTERED PROFESSIONAL ENGINEER Mamunur Rahman No. C48515 Exp. 6/30/16 CIVIL STATE OF CALIFORNIA

The State of California or its officers or agents shall not be responsible for the accuracy or completeness of electronic copies of this plan sheet.

NOTES:

1. No clipping of timber lagging corners allowed.
2. Use 40d Galv wire spikes.
3. Spikes shall not be bent.

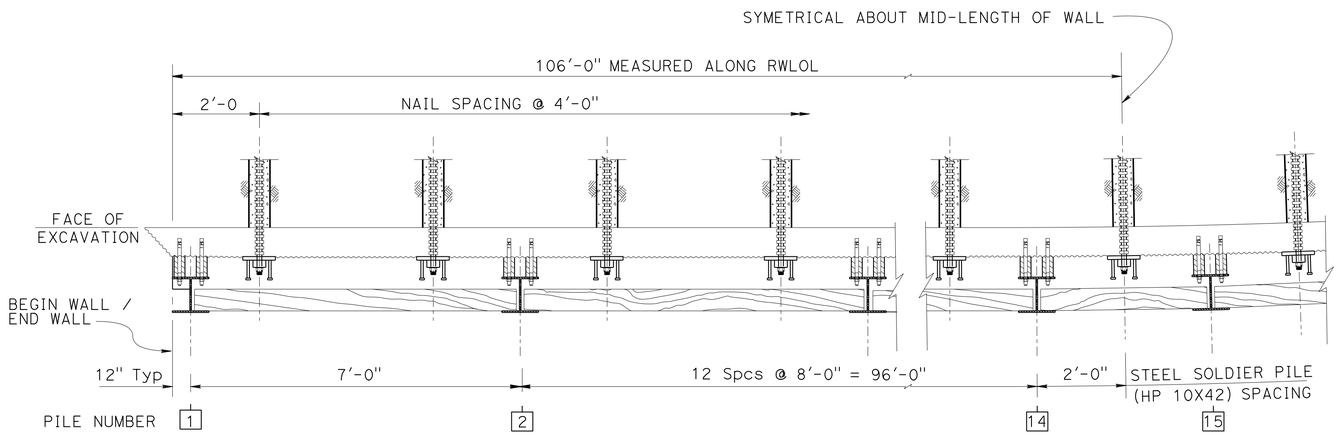

PART PLAN
NO SCALE

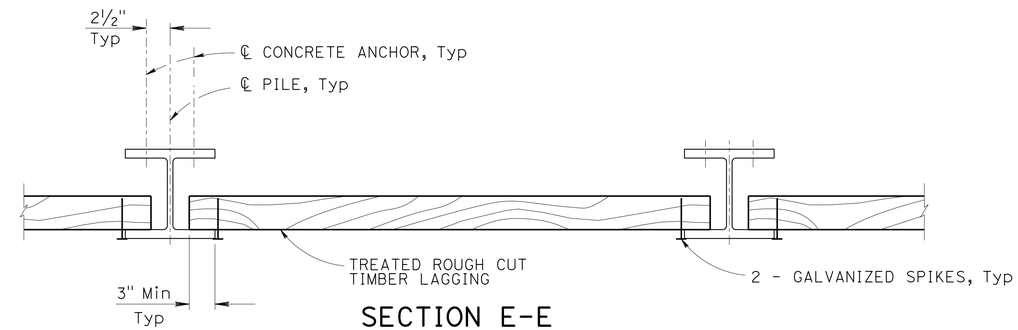

SECTION E-E
NO SCALE

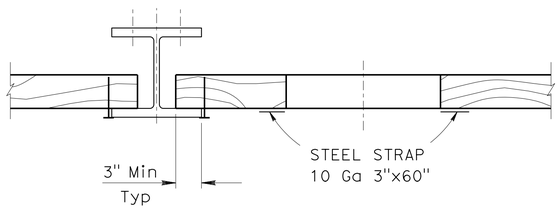

SECTION G-G
NO SCALE

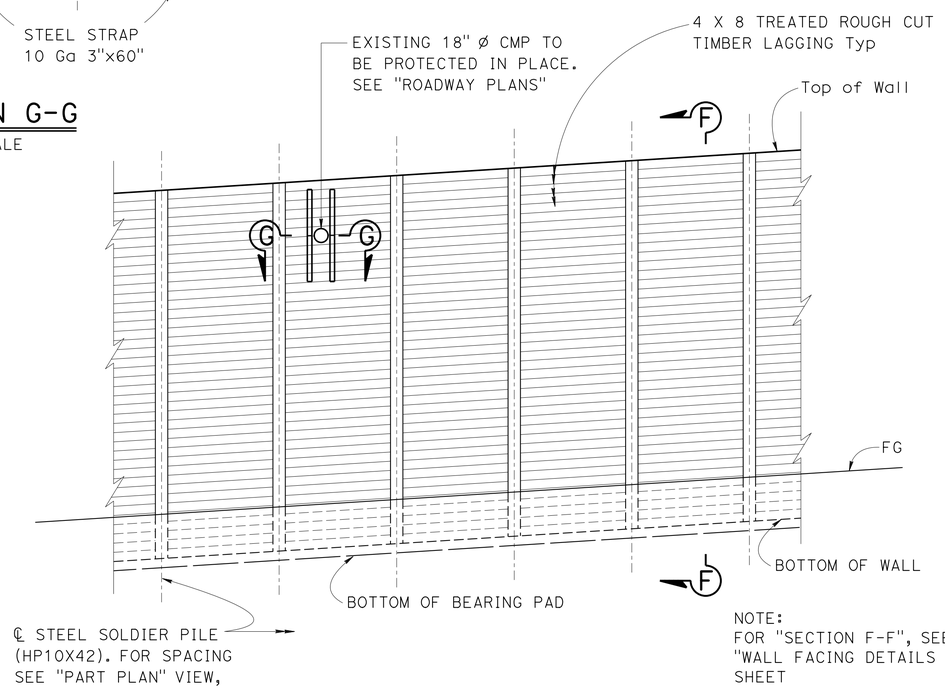

NOTE:
FOR "SECTION F-F", SEE "WALL FACING DETAILS NO. 2" SHEET

WALL FACING PART ELEVATION
NO SCALE

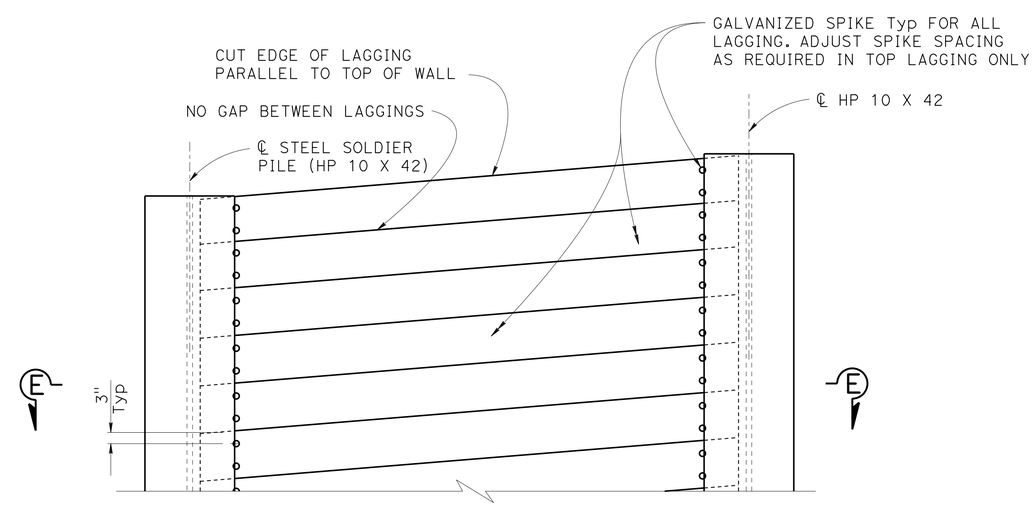

LAGGING DETAILS PART ELEVATION
NO SCALE

DESIGN	BY M. RAHMAN	CHECKED R. WANG	
DETAILS	BY H. INIGUEZ	CHECKED R. WANG	
QUANTITIES	BY R. WANG	CHECKED S. YEH	

STATE OF CALIFORNIA
DEPARTMENT OF TRANSPORTATION

DIVISION OF ENGINEERING SERVICES
STRUCTURE DESIGN
DESIGN BRANCH 19

BRIDGE NO. 01E0020
POST MILE 15.10/15.14

LAST CHANCE SOIL NAIL WALL
WALL FACING DETAILS NO. 1

STRUCTURES DESIGN DETAIL SHEET (ENGLISH) (REV. 09-01-10)

ORIGINAL SCALE IN INCHES FOR REDUCED PLANS 0 1 2 3

UNIT: 3621
PROJECT NUMBER & PHASE: 0115000111 - 4 CONTRACT NO.: 01-0B27U4

DISREGARD PRINTS BEARING EARLIER REVISION DATES

REVISION DATES: 09-09-14 07-09-15 08-28-15

SHEET 9 OF 16

FILE => Z01e0020-u-arch-det_01.dgn

USERNAME => s132662 DATE PLOTTED => 01-FEB-2016 TIME PLOTTED => 08:16

DIST	COUNTY	ROUTE	POST MILES TOTAL PROJECT	SHEET No.	TOTAL SHEETS
01	DN	101	14.9/15.3	85	91

REGISTERED CIVIL ENGINEER — DATE 9-10-15

November 30, 2015
PLANS APPROVAL DATE

REGISTERED PROFESSIONAL ENGINEER — Mamunur Rahman — No. C48515 — Exp. 6/30/16 — CIVIL — STATE OF CALIFORNIA

The State of California or its officers or agents shall not be responsible for the accuracy or completeness of electronic copies of this plan sheet.

PILE NO.	STATION ALONG RWLOL	TOP OF WALL ELEVATION (Ft)	BOTTOM OF PILE ELEVATION (Ft)	NUMBER OF LAGGINGS BETWEEN PILES		PILE SECTION	ROWS OF CONCRETE ANCHOR
1	96+00.42	758.66	748.79	1 & 2	15	HP 10 X 42	2
2	96+08.00	759.19	742.53	2 & 3	25	HP 10 X 42	3
3	96+16.00	759.76	736.70	3 & 4	35	HP 10 X 42	4
4	96+24.00	760.32	735.15	4 & 5	38	HP 10 X 42	5
5	96+32.00	760.88	735.72	5 & 6	38	HP 10 X 42	5
6	96+40.00	761.45	736.28	6 & 7	38	HP 10 X 42	5
7	96+48.00	762.01	736.84	7 & 8	38	HP 10 X 42	5
8	96+56.00	762.57	737.40	8 & 9	38	HP 10 X 42	5
9	96+64.00	763.14	737.97	9 & 10	38	HP 10 X 42	5
10	96+72.00	763.70	738.53	10 & 11	38	HP 10 X 42	5
11	96+80.00	764.26	739.09	11 & 12	38	HP 10 X 42	5
12	96+88.00	764.83	739.66	12 & 13	38	HP 10 X 42	5
13	96+96.00	765.39	740.22	13 & 14	38	HP 10 X 42	5
14	97+04.00	765.95	740.78	14 & 15	38	HP 10 X 42	5
15	97+08.00	766.23	741.07	15 & 16	38	HP 10 X 42	5
16	97+16.00	766.80	741.63	16 & 17	38	HP 10 X 42	5
17	97+24.00	767.36	742.19	17 & 18	38	HP 10 X 42	5
18	97+32.00	767.92	742.76	18 & 19	38	HP 10 X 42	5
19	97+40.00	768.49	743.32	19 & 20	38	HP 10 X 42	5
20	97+48.00	769.05	743.88	20 & 21	38	HP 10 X 42	5
21	97+56.00	769.61	744.44	21 & 22	38	HP 10 X 42	5
22	97+64.00	770.18	745.01	22 & 23	38	HP 10 X 42	5
23	97+72.00	770.74	745.57	23 & 24	38	HP 10 X 42	5
24	97+80.00	771.30	747.20	24 & 25	36	HP 10 X 42	4
25	97+88.00	771.87	751.05	25 & 26	31	HP 10 X 42	4
26	97+96.00	772.43	755.21	26 & 27	26	HP 10 X 42	3
27	98+04.00	772.99	759.38	27 & 28	21	HP 10 X 42	2
28	98+11.58	773.53	763.55			HP 10 X 42	

PILE DATA TABLE

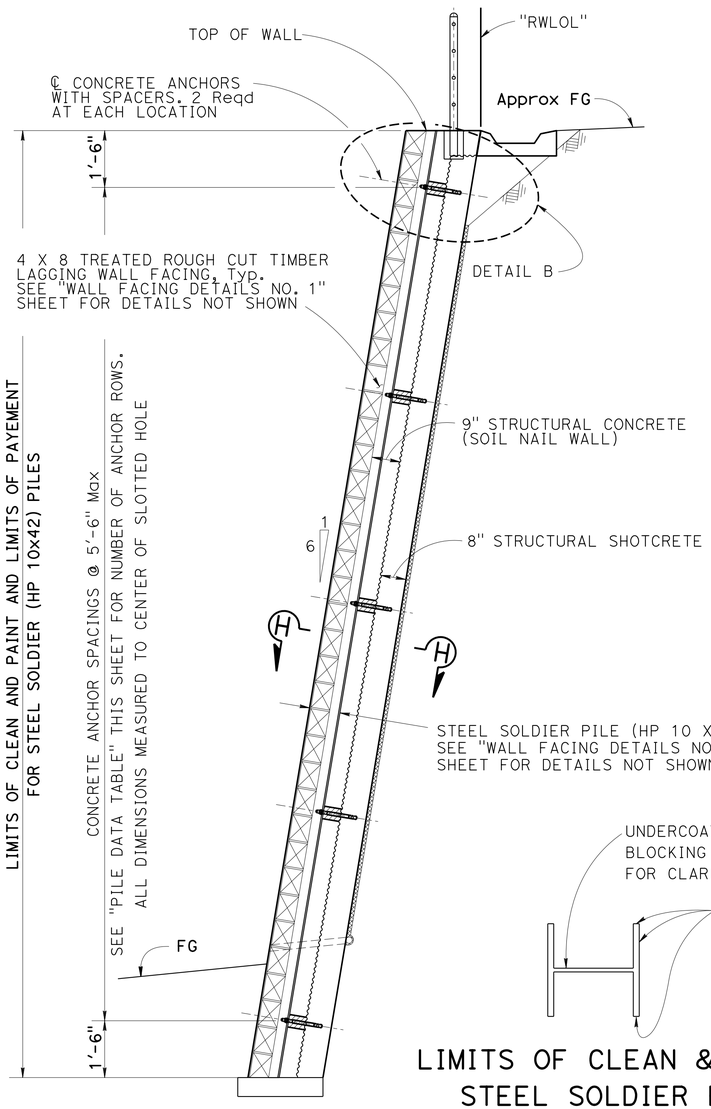

SECTION F-F

½" = 1'-0"

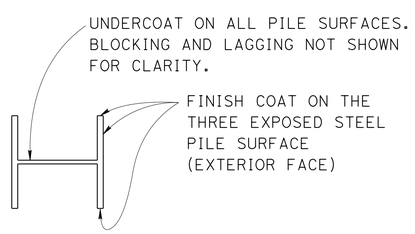

LIMITS OF CLEAN & PAINT
STEEL SOLDIER PILE

SECTION H-H

NO SCALE

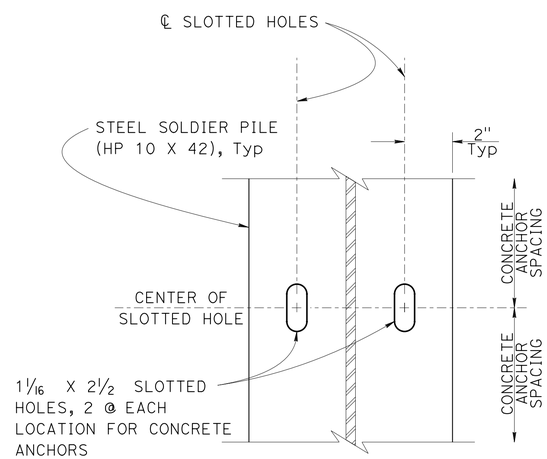

TYPICAL SLOTTED HOLE DETAIL

NO SCALE

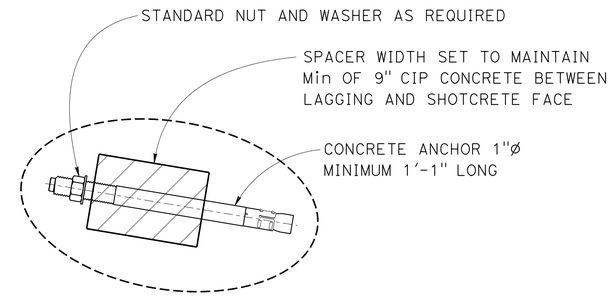

DETAIL B

NO SCALE

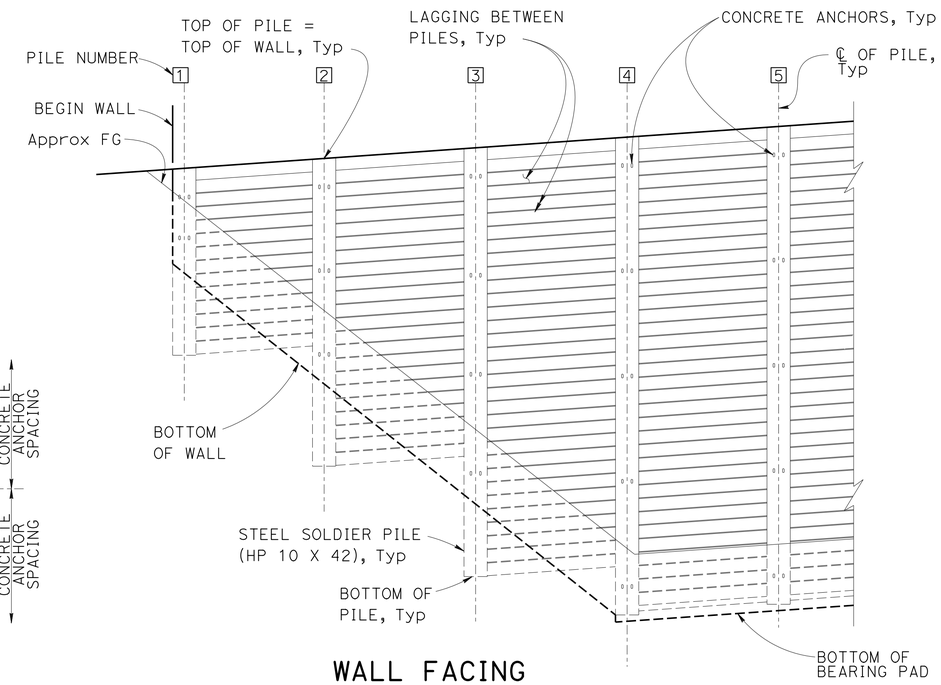

WALL FACING DETAILS AT WALL ENDS

NO SCALE

NOTE:
BEGIN WALL SHOWN, END WALL SIMILAR

DESIGN	BY MAMUNUR RAHMAN	CHECKED R. WANG	
DETAILS	BY H. INIGUEZ	CHECKED R. WANG	
QUANTITIES	BY R. WANG	CHECKED S. YEH	

STATE OF CALIFORNIA
DEPARTMENT OF TRANSPORTATION

DIVISION OF ENGINEERING SERVICES
STRUCTURE DESIGN
DESIGN BRANCH 19

BRIDGE NO. 01E0020
POST MILE 15.10/15.14

LAST CHANCE SOIL NAIL WALL
WALL FACING DETAILS NO. 2

STRUCTURES DESIGN DETAIL SHEET (ENGLISH) (REV. 09-01-10)

ORIGINAL SCALE IN INCHES FOR REDUCED PLANS 0 1 2 3

UNIT: 3621
PROJECT NUMBER & PHASE: 0115000111 - 4 CONTRACT NO.: 01-0B27U4

DISREGARD PRINTS BEARING EARLIER REVISION DATES

REVISION DATES: 02-04-15 08-28-15 07-09-15

SHEET 10 OF 16

FILE => Z01e0020-u-arch-det_02.dgn

USERNAME => s132662 DATE PLOTTED => 01-FEB-2016 TIME PLOTTED => 09:16

DIST	COUNTY	ROUTE	POST MILES TOTAL PROJECT	SHEET No	TOTAL SHEETS
01	DN	101	14.9/15.3	86	91

Maretta James 5-6-15
REGISTERED CIVIL ENGINEER DATE

November 30, 2015
PLANS APPROVAL DATE

REGISTERED PROFESSIONAL ENGINEER
Maretta J. James
No. C55009
Exp. 6-30-16
CIVIL
STATE OF CALIFORNIA

The State of California or its officers or agents shall not be responsible for the accuracy or completeness of electronic copies of this plan sheet.

This LOTB sheet was prepared in accordance with the Caltrans Soil & Rock Logging, Classification, & Presentation Manual (2010 Edition).

See 2010 Standard Plans A10F and A10G for Soil Legend, and A10H for Rock Legend.

BENCH MARK

PC 15.17 Elev 774.72
FND ALUM CAP ON REBAR
21.66′ LT "A" LINE RTE 101
STA 498+56.41
N 2,486,890.31
E 5,983,565.11
NAVD 88

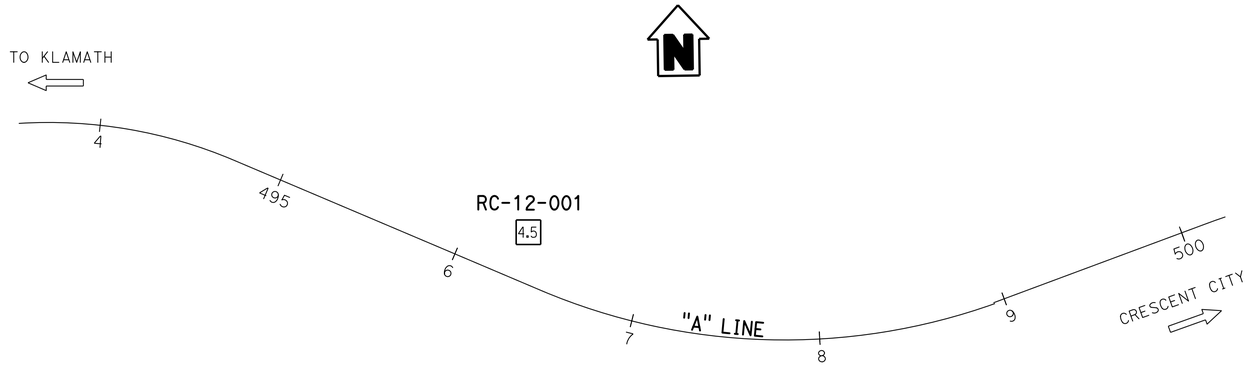

PLAN

1" = 40′

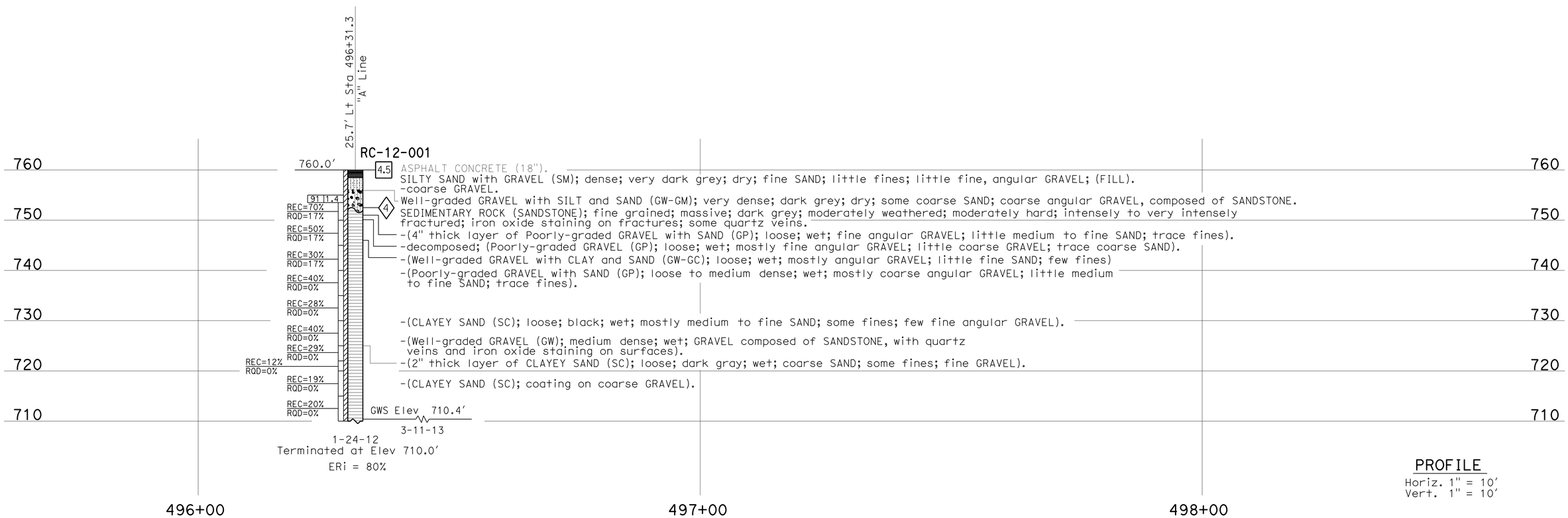

PROFILE

Horiz. 1" = 10′
Vert. 1" = 10′

ENGINEERING SERVICES	MATERIALS AND GEOTECHNICAL SERVICES	STATE OF CALIFORNIA DEPARTMENT OF TRANSPORTATION	DIVISION OF ENGINEERING SERVICES STRUCTURE DESIGN DESIGN BRANCH 19	BRIDGE NO. 01E0020 POST MILE 15.1	LAST CHANCE SOIL NAIL WALL LOG OF TEST BORINGS 1 OF 6
FUNCTIONAL SUPERVISOR NAME: C. Narwold	DRAWN BY: F. Nguyen CHECKED BY: R. Newman	FIELD INVESTIGATION BY: M. J. James			

OGS CIVIL LOG OF TEST BORINGS SHEET

ORIGINAL SCALE IN INCHES FOR REDUCED PLANS 0 1 2 3

UNIT: 3650
PROJECT NUMBER & PHASE: 0115000111 - 4 CONTRACT NO.: 01-0B27U4

DISREGARD PRINTS BEARING EARLIER REVISION DATES

REVISION DATES: 04-14-15 04-29-15 05-06-15 06-10-15 SHEET 11 OF 16

FILE => Z01e0020-z-lotb_01.dgn

USERNAME => s132662 DATE PLOTTED => 01-FEB-2016 TIME PLOTTED => 09:16

DIST	COUNTY	ROUTE	POST MILES TOTAL PROJECT	SHEET No	TOTAL SHEETS
01	DN	101	14.8/15.6	87	91

GEOTECHNICAL PROFESSIONAL — DATE 10-15-07

PLANS APPROVAL DATE November 30, 2015

REGISTERED PROFESSIONAL ENGINEER — MARK H. STANLEY — No. G.E. 002397 — Exp. 9-30-08 — STATE OF CALIFORNIA

The State of California or its officers or agents shall not be responsible for the accuracy or completeness of electronic copies of this plan sheet.

KLEINFELDER
2240 NORTHPOINT PKWY.
SANTA ROSA, CA 95407

WEATHERING DESCRIPTORS

Modified from United States Bureau of Reclamation, Engineering Geology Field Manual.

Descriptors		Diagnostic features					
		Chemical weathering-Discoloration and/or oxidation		Mechanical weathering-Grain boundary conditions (disaggregation) primarily for granitics and some coarse-grained sediments	Texture and solutioning		General characteristics (strength, excavation, etc.)§
Alphanumeric descriptor	Descriptive term	Body of rock	Fracture surfaces †		Texture	Solutioning	
W1	Fresh	No discoloration, not oxidized.	No discoloration or oxidation.	No separation, intact (tight).	No change.	No solutioning.	Hammer rings when crystalline rocks are struck. Almost always rock excavation except for naturally weak or weakly cemented rocks such as siltstones or shales.
W2	Slightly weathered to fresh °						
W3	Slightly weathered	Discoloration or oxidation is limited to surface of, or short distance from, fractures; some feldspar crystals are dull.	Minor to complete discoloration or oxidation of most surfaces.	No visible separation, intact (tight).	Preserved.	Minor leaching of some soluble minerals may be noted.	Hammer rings when crystalline rocks are struck. Body of rock not weakened. With few exceptions, such as siltstones or shales, classified as rock excavation.
W4	Moderately to slightly weathered °						
W5	Moderately weathered	Discoloration or oxidation extends from fractures usually throughout; Fe-Mg minerals are "rusty," feldspar crystals are "cloudy."	All fracture surfaces are discolored or oxidized.	Partial separation of boundaries visible.	Generally preserved.	Soluble minerals may be mostly leached.	Hammer does not ring when rock is struck. Body of rock is slightly weakened. Depending on fracturing, usually is rock excavation except in naturally weak rocks such as siltstones or shales.
W6	Intensely to moderately weathered °						
W7	Intensely weathered	Discoloration or oxidation throughout; all feldspars and Fe-Mg minerals are altered to clay to some extent; or chemical alteration produces in-situ disaggregation, see grain boundary conditions.	All fracture surfaces are discolored or oxidized, surfaces friable.	Partial separation, rock is friable; in semiarid conditions granitics are disaggregated.	Texture altered by chemical disintegration (hydration, argillation).	Leaching of soluble minerals may be complete.	Dull sound when struck with hammer, usually can be broken with moderate to heavy manual pressure or by light hammer blow without reference to planes of weakness such as incipient or hairline fractures, or veinlets. Rock is significantly weakened. Usually common excavation.
W8	Very intensely weathered						
W9	Decomposed	Discolored or oxidized throughout, but resistant minerals such as quartz may be unaltered; all feldspars and Fe-Mg minerals are completely altered to clay.		Complete separation of grain boundaries (disaggregated).	Resembles a soil, partial or complete remnant rock structure may be preserved; leaching of soluble minerals usually complete.		Can be granulated by hand. Always common excavation. Resistant minerals such as quartz may be present as "stringers" or "dikes."

Note: This chart and its horizontal categories are more readily applied to rocks with feldspars and mafic minerals. Weathering in various sedimentary rocks, particularly limestones and poorly indurated sediments, will not always fit the categories established. This chart and weathering categories may have to be modified for particular site conditions or alteration such as hydrothermal effects; however, the basic framework and similar descriptors are to be used.

° Combination descriptors are permissible where equal distribution of both weathering characteristics are present over significant intervals or where characteristics present are "in between" the diagnostic feature. However, dual descriptors should not be used where significant, identifiable zones can be delineated. When given as a range, only two adjacent terms may be combined. "Decomposed to slightly weathered," or "moderately weathered to fresh" are not acceptable.

† Does not include directional weathering along shears or faults and their associated features. For example, a shear zone that carried weathering to great depths into a fresh rock mass would not require the rock mass to be classified as weathered.

§ These are generalizations and should not be used as diagnostic features for weathering or excavation classification. These characteristics vary to a large extent based on naturally weak materials or cementation and type of excavation.

BEDDING, FOLIATION, OR FLOW TEXTURE DESCRIPTORS

Descriptors	Thickness / Spacing
Massive	Greater than 10 ft
Very thickly (bedded, foliated, or banded)	3 to 10 ft
Thickly	1 to 3 ft
Moderately	0.3 to 1 ft
Thinly	0.1 to 0.3 ft
Very thinly	0.03 (3/8 in) to 0.1 ft
Laminated (intensely foliated or banded)	Less than 0.03 ft (3/8 in)

Modified from United States Bureau of Reclamation, Engineering Geology Field Manual.

DIVISION OF ENGINEERING SERVICES - MATERIALS AND GEOTECHNICAL SERVICES

The information shown on this drawing was not the result of any work developed, performed or completed by this Department (Caltrans). All such activity appears to be by those parties presented on this drawing who would bear all responsibility. This drawing is available and presented only for the convenience of any bidder, contractor or other interested party. It should be understood that Caltrans assumes no responsibility with respect to the sufficiency, accuracy, completeness, or interpretation set forth therein or any other aspect of the information shown on this drawing.

DIST.	COUNTY	ROUTE	POST MILE-TOTAL PROJECT	Sheet No.	Total Sheets
01	DN	101			

REGISTERED CIVIL ENGINEER — DATE 8-1-2015

REGISTERED PROFESSIONAL ENGINEER — Marietta J. James — No. C55009 — Exp. 6-30-16 — CIVIL — STATE OF CALIFORNIA

LAST CHANCE SOIL NAIL WALL

LOG OF TEST BORINGS 2 OF 6

UNIT: 3650	CONTRACT No.	BRIDGE No.
PROJ. No. & PHASE: 01120001111	01-0B2704	01E0020
	Sheet	of

FRACTURE DENSITY

Modified from United States Bureau of Reclamation, Engineering Geology Field Manual.

FRACTURE DENSITY- Based on the spacing of all natural fractures in an exposure or core recovery lengths in boreholes; excludes mechanical breaks, shears, and shear zones; however, shear-disturbed zones (fracturing outside the shear) are included. Descriptors for fracture density apply to all rock exposures such as tunnel walls, dozer trenches, outcrops, or foundation cut slopes and inverts, as well as boreholes. Descriptive criteria presented below are based on borehole cores where lengths are measured along the core axis, for other exposures the criteria is distance measured between fractures (size of blocks).

UNFRACTURED (FDØ): No fractures.

VERY SLIGHTLY FRACTURED (FD1): Core recovered mostly in lengths greater than 3 ft.

SLIGHTLY TO VERY SLIGHTLY FRACTURED (FD2)*

SLIGHTLY FRACTURED (FD3): Core recovered mostly in lengths from 1 to 3 ft. with few scattered lengths less than 1 ft or greater than 3 ft.

MODERATELY TO SLIGHTLY FRACTURED (FD4)*

MODERATELY FRACTURED (FD5): Core recovered mostly in 0.3 to 1.0 ft lengths with most lengths about 0.6 ft.

INTENSELY TO MODERATELY FRACTURED (FD6)*

INTENSELY FRACTURED (FD7): Lengths average from 0.1 to 0.3 ft with scattered fragmented intervals. Core recovered mostly in lengths less than 0.3 ft.

VERY INTENSELY TO INTENSELY FRACTURED (FD8)*

VERY INTENSELY FRACTURED (FD9): Core recovered mostly as chips and fragments with a few scattered short core lengths.

* Combinations of fracture densities (e.g. very intensely to intensely fractured, or moderately to slightly fractured) are used where equal distribution of both fracture density characteristics are present over a significant interval or exposure, or where characteristics are "in between" the descriptor definitions.

ROCK HARDNESS DESCRIPTORS

Alphanumeric Descriptor	Descriptor	Criteria
H1	Extremely hard	Core, fragment, or exposure cannot be scratched with knife or sharp pick; can only be chipped with repeated heavy hammer blows.
H2	Very hard	Cannot be scratched with knife on sharp pick. Core or fragment breaks with repeated heavy hammer blows.
H3	Hard	Can be scratched with knife or sharp pick with difficulty (heavy pressure). Heavy hammer blow required to break specimen.
H4	Moderately hard	Can be scratched with knife or sharp pick with light or moderate pressure. Core or fragment breaks with moderate hammer blow.
H5	Moderately soft	Can be grooved 1/16 inch deep by knife or sharp pick with moderate or heavy pressure. Core or fragment breaks with light hammer blow or heavy manual pressure.
H6	Soft	Can be grooved or gouged easily by knife or sharp pick with light pressure, can be scratched with fingernail. Breaks with light to moderate manual pressure.
H7	Very soft	Can be readily indented, grooved or gouged with fingernail, or carved with a knife. Breaks with light manual pressure.

Any bedrock unit softer than H7, very soft, is to be described using ASTM D-2488 consistency descriptors.

Note: Although "sharp pick" is included in these definitions, descriptions of ability to be scratched, grooved or gouged by a knife is the preferred criteria.

Modified from United States Bureau of Reclamation, Engineering Geology Field Manual.

LEGEND OF BORING OPERATIONS

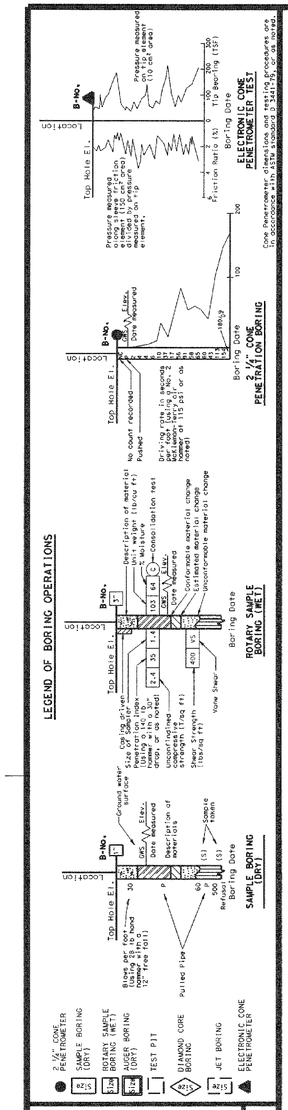

LEGEND OF EARTH MATERIALS

GRAVEL · SAND · SILT · CLAY · SANDY CLAY or CLAYEY SAND · SANDY SILT or SILTY SAND · SILTY CLAY · CLAYEY SILT · PEAT and/or ORGANIC WATER · FILL MATERIAL · IGNEOUS ROCK · SEDIMENTARY ROCK · METAMORPHIC

CONSISTENCY CLASSIFICATION FOR SOILS

According to the Standard Penetration Test

SPT N-Value (Blows/foot)	Granular	SPT N-Value (Blows/foot)	Cohesive
0-4	Very Loose	<2	Very Soft
5-10	Loose	2-4	Soft
11-30	Medium Dense	5-8	Firm
31-50	Dense	9-15	Stiff
>50	Very Dense	16-30	Very Stiff
		>31	Hard

NOTE: Classification of earth material as shown on this sheet is based upon field inspection and is not to be construed to imply mechanical analysis.

DESIGN OVERSIGHT	DRAWN BY	A. Sanchez	KLEINFELDER FIELD INVESTIGATION BY:	PREPARED FOR THE STATE OF CALIFORNIA DEPARTMENT OF TRANSPORTATION	X PROJECT ENGINEER	BRIDGE NO. X	"LAST CHANCE GRADE" RETAINING WALL NO. 2
SIGN OFF DATE	CHECKED BY	J. Richmond, C.E.G	DATE: March-May 2007			POST MILE 15.13/15.14	LOG OF TEST BORINGS 1 OF 5

OSF GEOTECHNICAL LOG OF TEST BORINGS SHEET (ENGLISH) (REV. 2/25/05)

ORIGINAL SCALE IN INCHES FOR REDUCED PLANS 0 1 2 3

CU 01
EA 324700

FILE => $REQUEST

DISREGARD PRINTS BEARING EARLIER REVISION DATES 10-1-07

REVISION DATES (PRELIMINARY STAGE ONLY) — SHEET X OF X

USERNAME => $USER — DATE PLOTTED => $DATE — TIME PLOTTED => $TIME

DATE PLOTTED => 01-FEB-2016
TIME PLOTTED => 09:16

P:\PROJ\01\0B27U\drafting\01-0B27U4\Z01e0020-z-lotb_02.dgn

USERNAME => s132662
DGN FILE => Z01e0020-z-lotb_02.dgn

DIST	COUNTY	ROUTE	POST MILES TOTAL PROJECT	SHEET No	TOTAL SHEETS
01	DN	101	14.8/15.6	88	91

GEOTECHNICAL PROFESSIONAL — DATE 10-15-07

PLANS APPROVAL DATE November 30, 2015

REGISTERED PROFESSIONAL ENGINEER — MARK H. STANLEY — No. G.E. 002397 — Exp. 9-30-08 — STATE OF CALIFORNIA

The State of California or its officers or agents shall not be responsible for the accuracy or completeness of electronic copies of this plan sheet.

KLEINFELDER
2240 NORTHPOINT PKWY.
SANTA ROSA, CA 95407

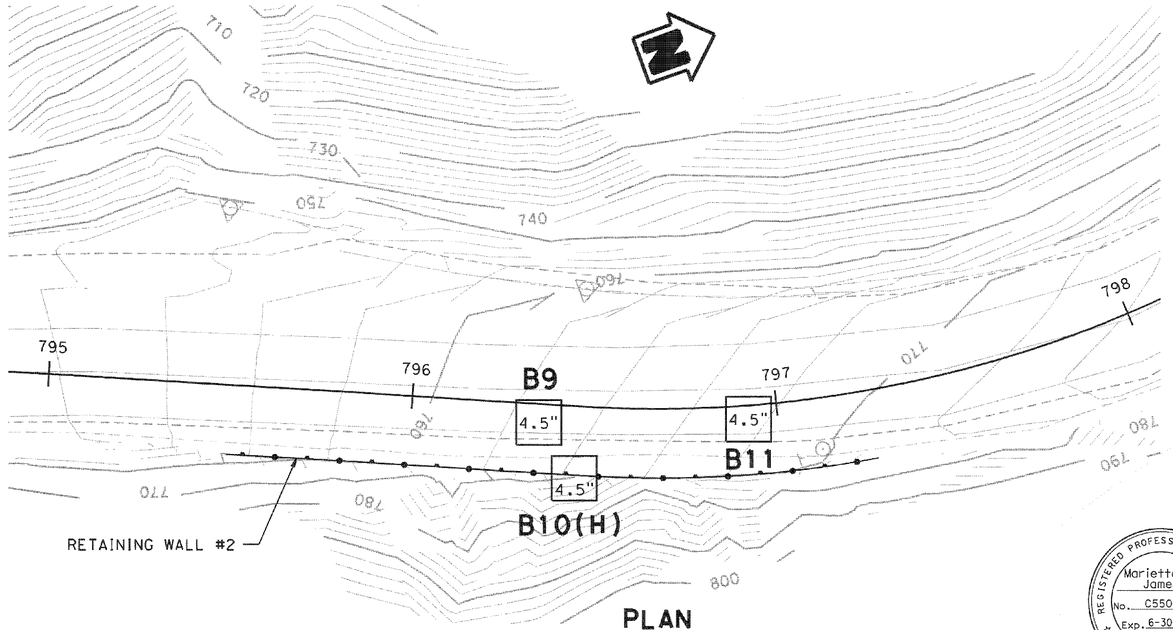

PLAN
1"=20'

DIVISION OF ENGINEERING SERVICES - MATERIALS AND GEOTECHNICAL SERVICES

The information shown on this drawing was not the result of any work developed, performed or completed by this Department (Caltrans). All such activity appears to be by those parties presented on this drawing who would bear all responsibility. This drawing is available and presented only for the convenience of any bidder, contractor or other interested party. It should be understood that Caltrans assumes no responsibility with respect to the sufficiency, accuracy, completeness, or interpretation set forth therein or any other aspect of the information shown on this drawing.

DIST.	COUNTY	ROUTE	POST MILE-TOTAL PROJECT	Sheet No.	Total Sheets
01	DN	101			

REGISTERED CIVIC ENGINEER — DATE 8-1-2015

REGISTERED PROFESSIONAL ENGINEER — Marietta J. James — No. C55009 — Exp. 6-30-16 — CIVIL — STATE OF CALIFORNIA

LAST CHANCE SOIL NAIL WALL

LOG OF TEST BORINGS 3 OF 6

UNIT:	3650	CONTRACT No.	BRIDGE No.
PROJ. No. & PHASE:	01120001111	01-0B2704	01E0020

Sheet ___ of ___

LEGEND OF BORING OPERATIONS

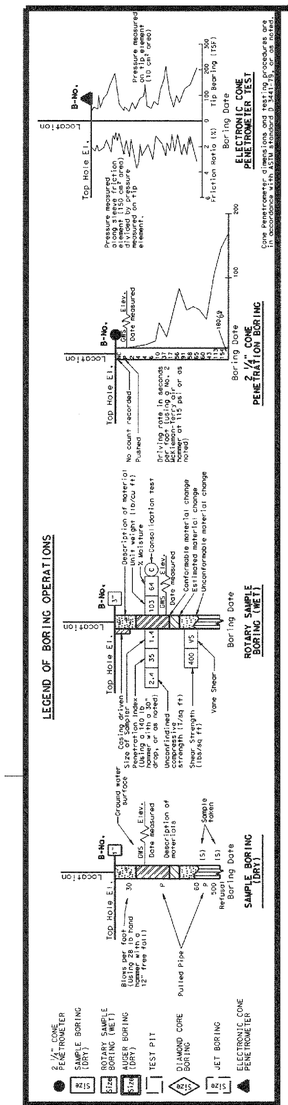

LEGEND OF EARTH MATERIALS

GRAVEL · SAND · SILT · CLAY · SANDY CLAY or CLAYEY SAND · SANDY SILT or SILTY SAND · SILTY CLAY · CLAYEY SILT · PEAT and/or ORGANIC MATTER · FILL MATERIAL · IGNEOUS ROCK · SEDIMENTARY ROCK · METAMORPHIC

CONSISTENCY CLASSIFICATION FOR SOILS

According to the Standard Penetration Test

SPT N-Value (Blows/foot)	Granular	SPT N-Value (Blows/foot)	Cohesive
0-4	Very Loose	<2	Very Soft
5-10	Loose	2-4	Soft
11-30	Medium Dense	5-8	Firm
31-50	Dense	9-15	Stiff
>50	Very Dense	16-30	Very Stiff
		>31	Hard

NOTE: Classification of earth material as shown on this sheet is based upon field inspection and is not to be construed to imply mechanical analysis.

ROCK QUALITY DESIGNATION (ROD) & PERCENT RECOVERY (REC) LOGGING

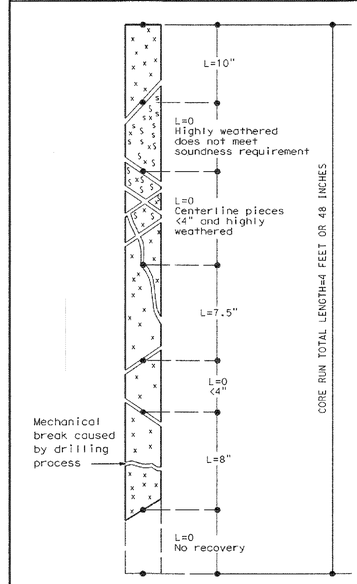

$$ROD = \frac{\sum \text{Length of sound core} \geq 4 \text{ inches pieces}}{\text{Total core run length}}$$

$$ROD = \frac{10 + 7.5 + 8}{48} \times 100\%$$

ROD = 53% (fair)

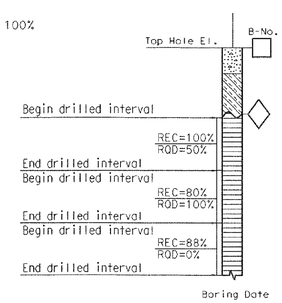

ROD (ROCK QUALITY DESIGNATION)	DESCRIPTION OF ROCK QUALITY
0 - 25%	VERY POOR
25 - 50%	POOR
50 - 75%	FAIR
75 - 90%	GOOD
90 - 100%	EXCELLENT

After Deere & Deere, 1989

Notes:

1. Samples were taken using a California and modified California split-barrel sampler with an inside diameter (I.D.) of 2.5 in. and 2 in. and an outside diameter (O.D.) of 3 in. and 2.5 in. respectively.
2. A safety semi-automatic hammer (140 lb) with a 30 inch drop was used to advance the sampler.
3. Blowcounts noted for boring are field blowcounts and have not been corrected.
4. Samples were taken using a SPT split-barrel sampler with an inside diameter (I.D.) of 1.4 in. and an outside diameter (O.D.) of 2 in.
5. Core samples were taken using an HQ core sampler with a 2.5 in. inside diameter (I.D.) and 3.7 in. outside diameter (O.D.) core barrel.
6. Blowcounts 50/4 means 50 blows per 4 in. penetration.
7. Horizontal Borings were started approximately 5.5 to 6.0 ft. above existing pavement grade and inclined downward at approximately a 10 degree angle.

IN-SITU, LAB & FIELD TEST DESIGNATIONS

- (AL) ATTERBERG LIMITS
- (CA) CHEMICAL ANALYSIS
- (CN) CONSOLIDATION
- (CU) CONSOLIDATED UNDRAINED TRIAXIAL
- (DS) DIRECT SHEAR
- (MD) MAX. DRY DENSITY
- (PL) POINT LOAD
- (PP) POCKET PENETROMETER
- (SA) SIEVE ANALYSIS
- (TV) TORVANE
- (UC) UNCONFINED COMPRESSION
- (UU) UNCONSOLIDATED UNDRAINED TRIAXIAL
- (VS) VANE SHEAR
- (WC) MOISTURE CONTENT

DESIGN OVERSIGHT	DRAWN BY: A. Sanchez	KLEINFELDER FIELD INVESTIGATION BY:	PREPARED FOR THE STATE OF CALIFORNIA DEPARTMENT OF TRANSPORTATION
SIGN OFF DATE	CHECKED BY: J. Richmond, C.E.G	DATE: March-May 2007	

X — PROJECT ENGINEER

BRIDGE NO. X — POST MILE 15.13/15.14

"LAST CHANCE GRADE" RETAINING WALL NO. 2

LOG OF TEST BORINGS 2 OF 5

OSF GEOTECHNICAL LOG OF TEST BORINGS SHEET (ENGLISH) (REV. 2/25/05)

ORIGINAL SCALE IN INCHES FOR REDUCED PLANS 0 1 2 3

CU 01
EA 324700

DISREGARD PRINTS BEARING EARLIER REVISION DATES 10-1-07

REVISION DATES (PRELIMINARY STAGE ONLY) — SHEET X OF X

FILE => $REQUEST

USERNAME => $USER — DATE PLOTTED => $DATE — TIME PLOTTED => $TIME

DATE PLOTTED => 01-FEB-2016
TIME PLOTTED => 09:16

P:\PROJ\01\0B27U\drafting\01-0B27u4\Z01e0020-z-lotb_03.dgn

USERNAME => s132662
DGN FILE => Z01e0020-z-lotb_03.dgn

DIST	COUNTY	ROUTE	POST MILES TOTAL PROJECT	SHEET No	TOTAL SHEETS
01	DN	101	14.8/15.6	89	91

GEOTECHNICAL PROFESSIONAL — DATE 10-15-07

PLANS APPROVAL DATE November 30, 2015

REGISTERED PROFESSIONAL ENGINEER — MARK H. STANLEY — No. G.E. 002397 — Exp. 9-30-08 — STATE OF CALIFORNIA

The State of California or its officers or agents shall not be responsible for the accuracy or completeness of electronic copies of this plan sheet.

KLEINFELDER
2240 NORTHPOINT PKWY.
SANTA ROSA, CA 95407

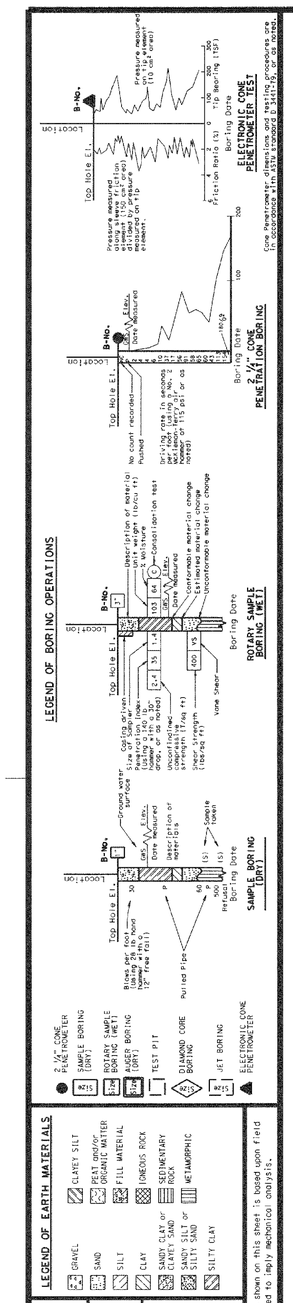

FOR PLAN VIEW AND ADDITIONAL NOTES, SEE "LOG OF TEST BORINGS" SHEET 2 OF 5

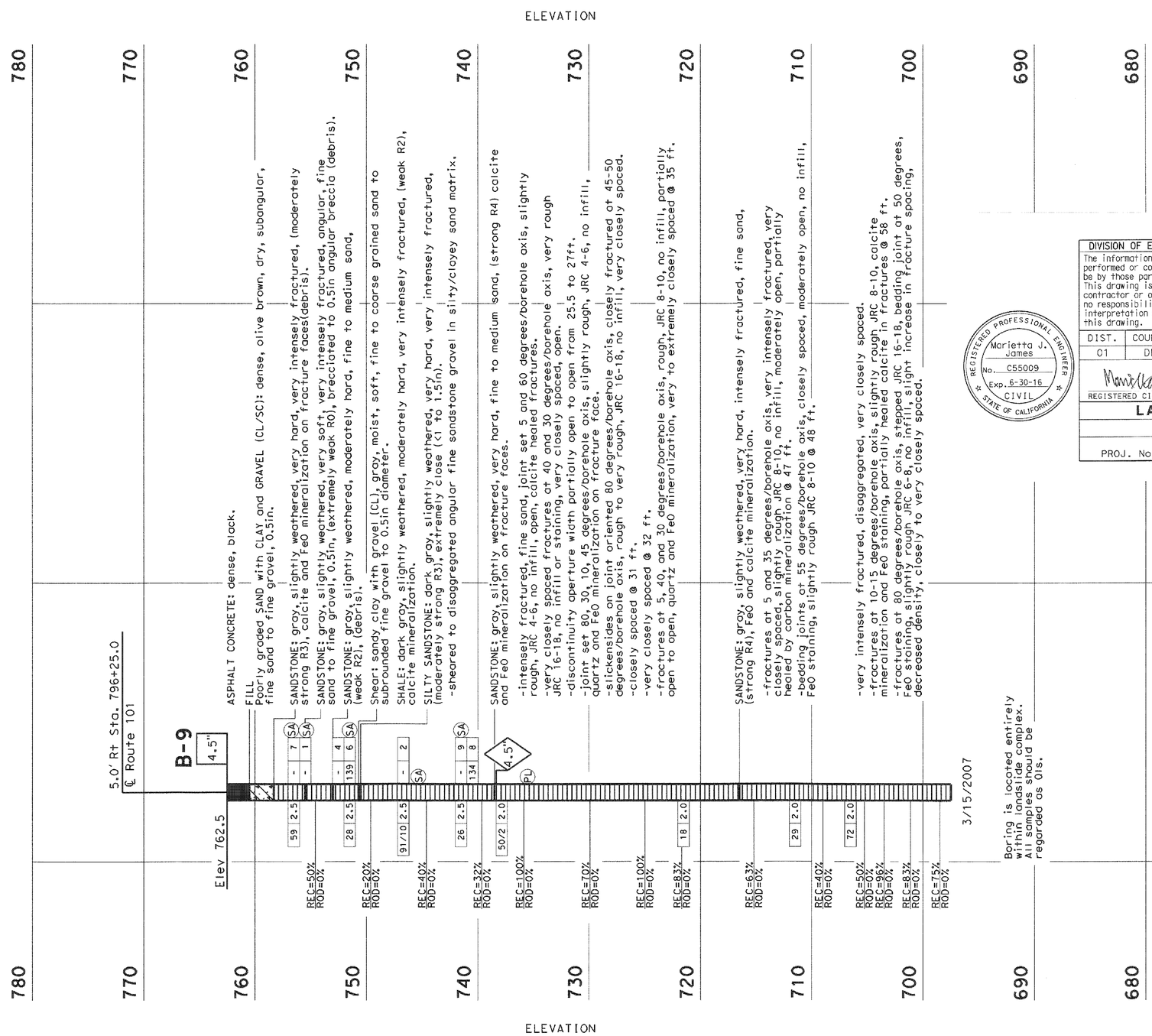

DIVISION OF ENGINEERING SERVICES - MATERIALS AND GEOTECHNICAL SERVICES
The information shown on this drawing was not the result of any work developed, performed or completed by this Department (Caltrans). All such activity appears to be by those parties presented on this drawing who would bear all responsibility. This drawing is available and presented only for the convenience of any bidder, contractor or other interested party. It should be understood that Caltrans assumes no responsibility with respect to the sufficiency, accuracy, completeness, or interpretation set forth therein or any other aspect of the information shown on this drawing.

DIST.	COUNTY	ROUTE	POST MILE-TOTAL PROJECT	Sheet No.	Total Sheets
01	DN	101			

REGISTERED CIVIL ENGINEER — DATE 5-1-2015

REGISTERED PROFESSIONAL ENGINEER — Marietta J. James — No. C55009 — Exp. 6-30-16 — CIVIL — STATE OF CALIFORNIA

LAST CHANCE SOIL NAIL WALL

LOG OF TEST BORINGS 4 OF 6

UNIT: 3650	CONTRACT No.	BRIDGE No.
PROJ. No. & PHASE: 01120001111	01-0B2704	01E0020
	Sheet	of

DESIGN OVERSIGHT — SIGN OFF DATE

DRAWN BY A. Sanchez — CHECKED BY J. Richmond, C.E.G

KLEINFELDER — FIELD INVESTIGATION BY: — DATE: March-May 2007

PREPARED FOR THE STATE OF CALIFORNIA DEPARTMENT OF TRANSPORTATION

X — PROJECT ENGINEER

BRIDGE NO. X — POST MILE 15.13/15.14

"LAST CHANCE GRADE" RETAINING WALL NO. 2

LOG OF TEST BORINGS 3 OF 5

OSF GEOTECHNICAL LOG OF TEST BORINGS SHEET (ENGLISH) (REV. 2/25/05)

ORIGINAL SCALE IN INCHES FOR REDUCED PLANS 0 1 2 3

CU 01
EA 324700

DISREGARD PRINTS BEARING EARLIER REVISION DATES 10-1-07

REVISION DATES (PRELIMINARY STAGE ONLY) — SHEET X OF X

FILE => $REQUEST

USERNAME => $USER — DATE PLOTTED => $DATE — TIME PLOTTED => $TIME

DATE PLOTTED => 01-FEB-2016
TIME PLOTTED => 09:16

P:\PROJ\01\0B27U\drafting\01-0B27u4\Z01e0020-z-lotb_04.dgn

USERNAME => s132662
DGN FILE => Z01e0020-z-lotb_04.dgn

DIST	COUNTY	ROUTE	POST MILES TOTAL PROJECT	SHEET No	TOTAL SHEETS
01	DN	101	14.8/15.6	90	91

GEOTECHNICAL PROFESSIONAL 10-15-07 DATE

November 30, 2015
PLANS APPROVAL DATE

REGISTERED PROFESSIONAL ENGINEER MARK H. STANLEY No. G.E. 002397 Exp. 9-30-08 STATE OF CALIFORNIA

The State of California or its officers or agents shall not be responsible for the accuracy or completeness of electronic copies of this plan sheet.

KLEINFELDER
2240 NORTHPOINT PKWY.
SANTA ROSA, CA 95407

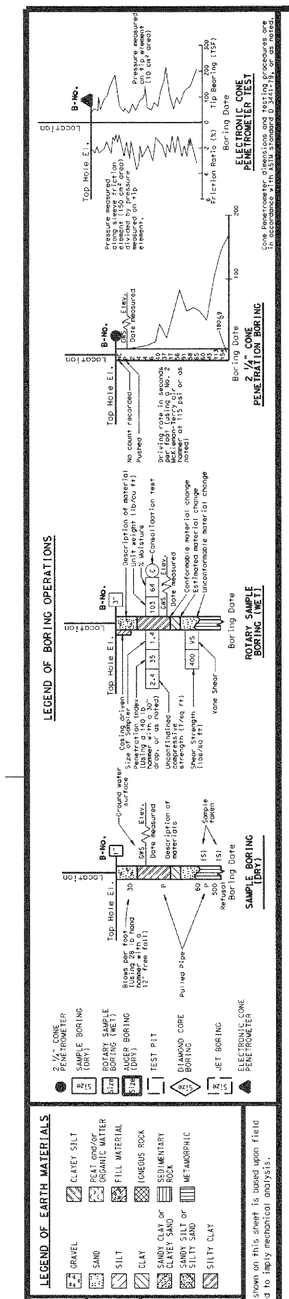

FOR PLAN VIEW AND ADDITIONAL NOTES, SEE "LOG OF TEST BORINGS" SHEET 2 OF 5

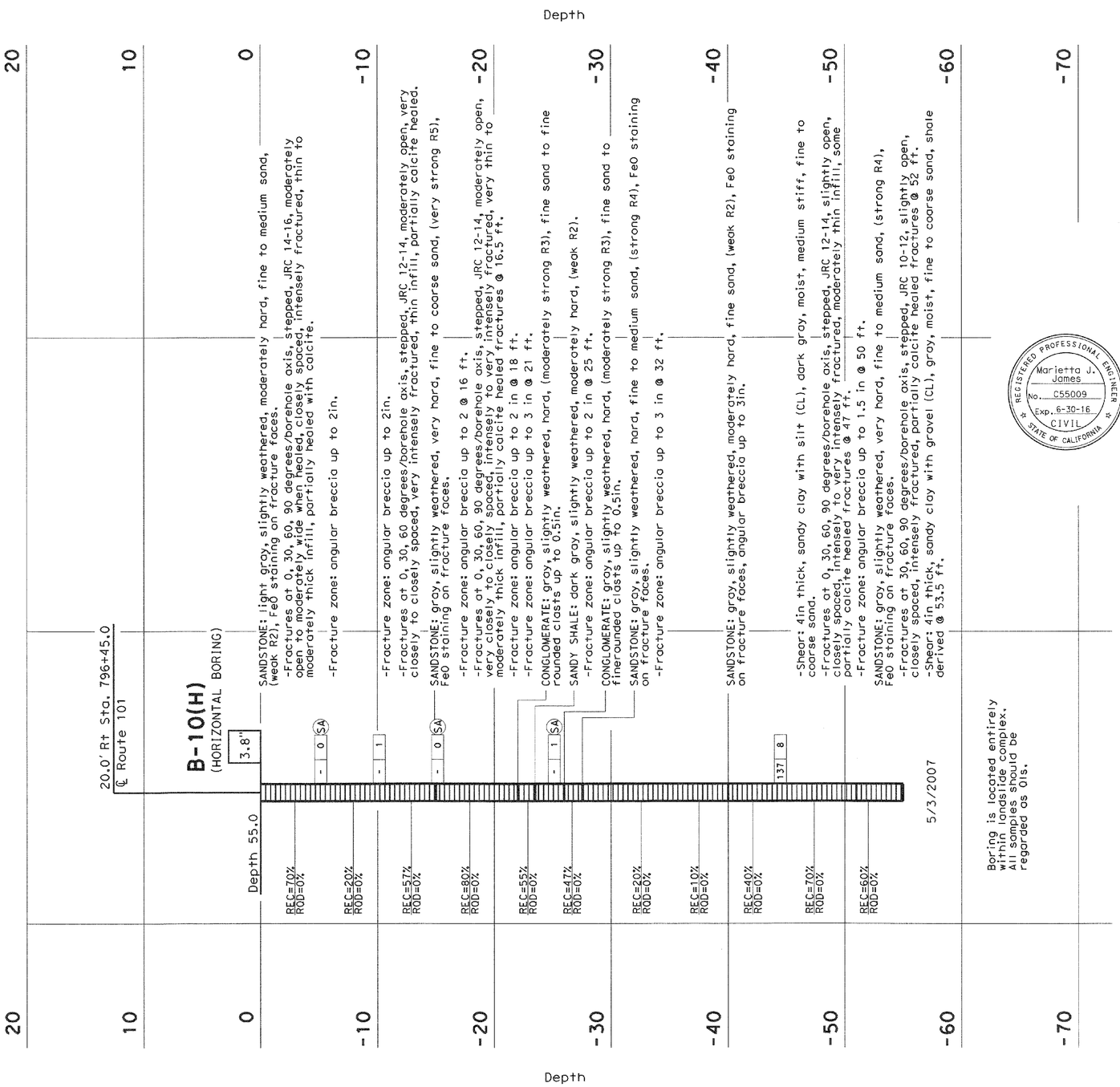

PROFILE
HOR. 1"=20'
VER. 1"=5'

REGISTERED PROFESSIONAL ENGINEER Marietta J. James No. C55009 Exp. 6-30-16 CIVIL STATE OF CALIFORNIA

DIVISION OF ENGINEERING SERVICES - MATERIALS AND GEOTECHNICAL SERVICES

The information shown on this drawing was not the result of any work developed, performed or completed by this Department (Caltrans). All such activity appears to be by those parties presented on this drawing who would bear all responsibility. This drawing is available and presented only for the convenience of any bidder, contractor or other interested party. It should be understood that Caltrans assumes no responsibility with respect to the sufficiency, accuracy, completeness, or interpretation set forth therein or any other aspect of the information shown on this drawing.

DIST.	COUNTY	ROUTE	POST MILE-TOTAL PROJECT	Sheet No.	Total Sheets
01	DN	101			

REGISTERED CIVIL ENGINEER 9-1-2015 DATE

LAST CHANCE SOIL NAIL WALL

LOG OF TEST BORINGS 5 OF 6

UNIT: 3650	CONTRACT No.	BRIDGE No.
PROJ. No. & PHASE: 01120001111	01-0B2704	01E0020
	Sheet	of

DESIGN OVERSIGHT
SIGN OFF DATE

DRAWN BY A. Sanchez
CHECKED BY J. Richmond, C.E.G

KLEINFELDER
FIELD INVESTIGATION BY:
DATE: March-May 2007

PREPARED FOR THE STATE OF CALIFORNIA DEPARTMENT OF TRANSPORTATION

X
PROJECT ENGINEER

BRIDGE NO. X
POST MILE 15.13/15.14

"LAST CHANCE GRADE" RETAINING WALL NO. 2

LOG OF TEST BORINGS 4 OF 5

OSF GEOTECHNICAL LOG OF TEST BORINGS SHEET (ENGLISH) (REV. 2/25/05)

ORIGINAL SCALE IN INCHES FOR REDUCED PLANS 0 1 2 3

CU 01
EA 324700

DISREGARD PRINTS BEARING EARLIER REVISION DATES 10-1-07

REVISION DATES (PRELIMINARY STAGE ONLY) SHEET X OF X

FILE => $REQUEST

USERNAME => $USER DATE PLOTTED => $DATE TIME PLOTTED => $TIME

DATE PLOTTED => 01-FEB-2016
TIME PLOTTED => 09:17

P:\PROJ\01\0B27U\drafting\01-0B27u4\Z01e0020-z-lotb_05.dgn

USERNAME => s132662
DGN FILE => Z01e0020-z-lotb_05.dgn

DIST	COUNTY	ROUTE	POST MILES TOTAL PROJECT	SHEET No	TOTAL SHEETS
01	DN	101	14.8/15.6	91	91

GEOTECHNICAL PROFESSIONAL 10-15-07 DATE

November 30, 2015
PLANS APPROVAL DATE

REGISTERED PROFESSIONAL ENGINEER MARK H. STANLEY No. G.E. 002397 Exp. 9-30-08 STATE OF CALIFORNIA

The State of California or its officers or agents shall not be responsible for the accuracy or completeness of electronic copies of this plan sheet.

KLEINFELDER
2240 NORTHPOINT PKWY.
SANTA ROSA, CA 95407

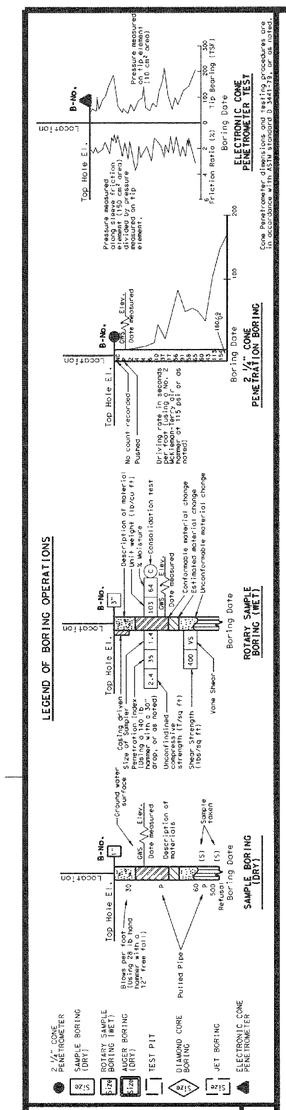

CONSISTENCY CLASSIFICATION FOR SOILS
According to the Standard Penetration Test

SPT N-Value (Blows/foot)	Granular	SPT N-Value (Blows/foot)	Cohesive
0-4	Very Loose	<2	Very Soft
5-10	Loose	2-4	Soft
11-30	Medium Dense	5-8	Firm
31-50	Dense	9-15	Stiff
>50	Very Dense	16-30	Very Stiff
		>31	Hard

NOTE: Classification of earth material as shown on this sheet is based upon field inspection and is not to be construed to imply mechanical analysis.

FOR PLAN VIEW AND ADDITIONAL NOTES, SEE "LOG OF TEST BORINGS" SHEET 2 OF 5

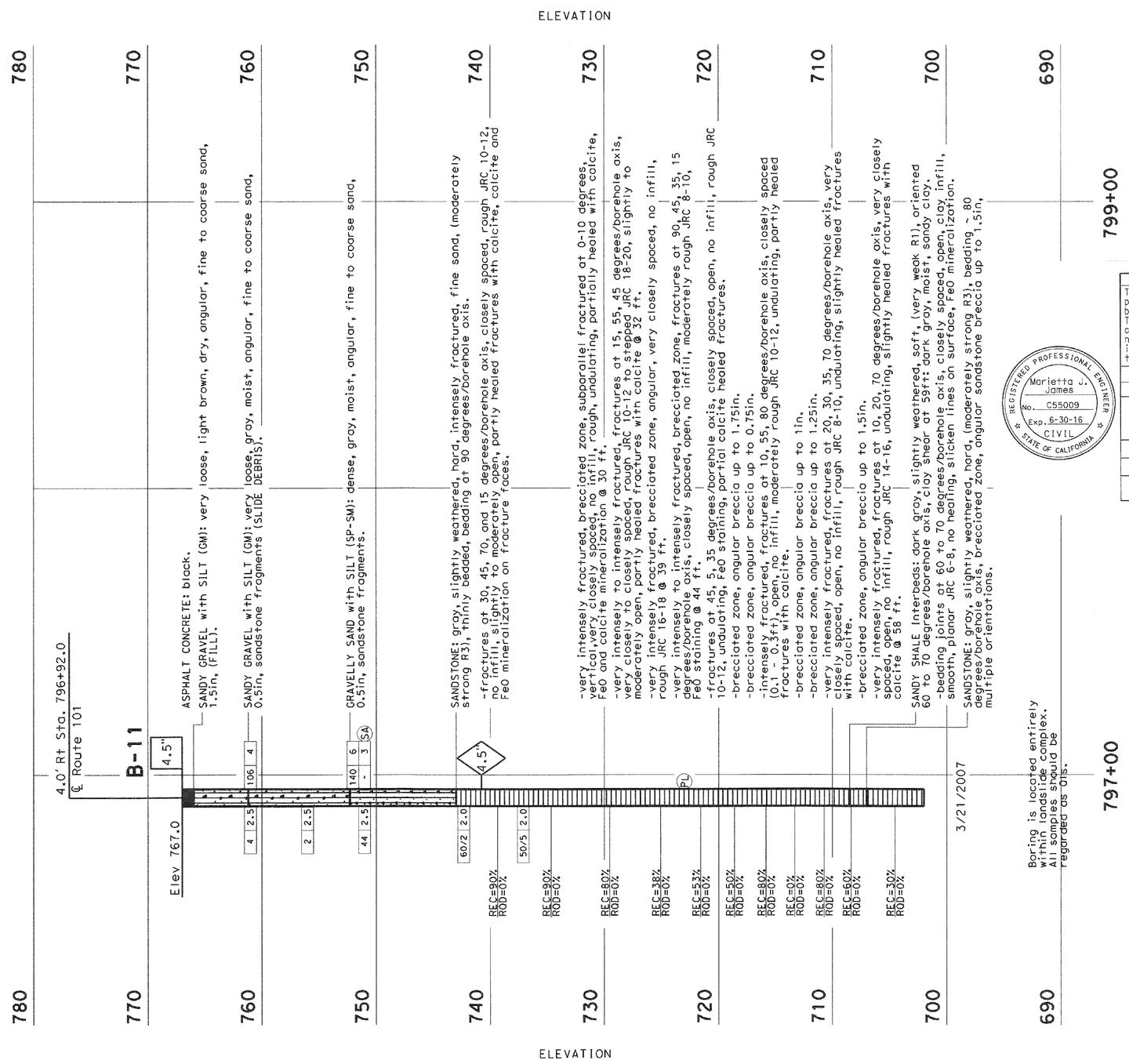

PROFILE
HOR. 1"=20'
VER. 1"=5'

REGISTERED PROFESSIONAL ENGINEER Marietta J. James No. C55009 Exp. 6-30-16 CIVIL STATE OF CALIFORNIA

DIVISION OF ENGINEERING SERVICES - MATERIALS AND GEOTECHNICAL SERVICES

The information shown on this drawing was not the result of any work developed, performed or completed by this Department (Caltrans). All such activity appears to be by those parties presented on this drawing who would bear all responsibility. This drawing is available and presented only for the convenience of any bidder, contractor or other interested party. It should be understood that Caltrans assumes no responsibility with respect to the sufficiency, accuracy, completeness, or interpretation set forth therein or any other aspect of the information shown on this drawing.

DIST.	COUNTY	ROUTE	POST MILE-TOTAL PROJECT	Sheet No.	Total Sheets
01	DN	101			

REGISTERED CIVIL ENGINEER 5-1-2015 DATE

LAST CHANCE SOIL NAIL WALL
LOG OF TEST BORINGS 6 OF 6

UNIT: 3650	CONTRACT No.	BRIDGE No.
PROJ. No. & PHASE: 01120001111	01-0B2704	01E0020
		Sheet of

DESIGN OVERSIGHT
SIGN OFF DATE

DRAWN BY A. Sanchez
CHECKED BY J. Richmond, C.E.G

KLEINFELDER
FIELD INVESTIGATION BY:
DATE: March-May 2007

PREPARED FOR THE STATE OF CALIFORNIA DEPARTMENT OF TRANSPORTATION

X
PROJECT ENGINEER

BRIDGE NO. X
POST MILE 15.13/15.14

"LAST CHANCE GRADE" RETAINING WALL NO. 2
LOG OF TEST BORINGS 5 OF 5

OSF GEOTECHNICAL LOG OF TEST BORINGS SHEET (ENGLISH) (REV. 2/25/05)

ORIGINAL SCALE IN INCHES FOR REDUCED PLANS 0 1 2 3

CU 01
EA 324700

DISREGARD PRINTS BEARING EARLIER REVISION DATES 10-1-07

REVISION DATES (PRELIMINARY STAGE ONLY) SHEET X OF X

FILE => $REQUEST

USERNAME => $USER DATE PLOTTED => $DATE TIME PLOTTED => $TIME

P:\PROJ\01\0B27U\drafting\01-0B27u4\Z01e0020-z-lotb_06.dgn

DATE PLOTTED => 01-FEB-2016
TIME PLOTTED => 09:17

USERNAME => s132662
DGN FILE => Z01e0020-z-lotb_06.dgn