Dist	COUNTY	ROUTE	POST MILES TOTAL PROJECT	SHEET No.	TOTAL SHEETS
01	Lak	20	13.5/30.5	1	37

STATE OF CALIFORNIA

DEPARTMENT OF TRANSPORTATION

ACST-P020(174)E

PROJECT PLANS FOR CONSTRUCTION ON

STATE HIGHWAY

IN LAKE COUNTY

NEAR LUCERNE AT VARIOUS LOCATIONS

FROM 0.1 MILE WEST OF SAYRE AVENUE

TO 1.1 MILES WEST OF ROUTE 53

TO BE SUPPLEMENTED BY STANDARD PLANS DATED 2010

INDEX OF PLANS

SHEET No.	DESCRIPTION
1	TITLE AND LOCATION MAP
2-17	CONSTRUCTION DETAILS
18	DRAINAGE DETAILS AND QUANTITIES
19	CONSTRUCTION AREA SIGNS
20	TRAFFIC HANDLING PLAN
21-22	SUMMARY OF QUANTITIES
23-37	REVISED STANDARD PLANS

THE STANDARD PLANS LIST APPLICABLE TO THIS CONTRACT IS INCLUDED IN THE NOTICE TO BIDDERS AND SPECIAL PROVISIONS BOOK.

LOCATION MAP

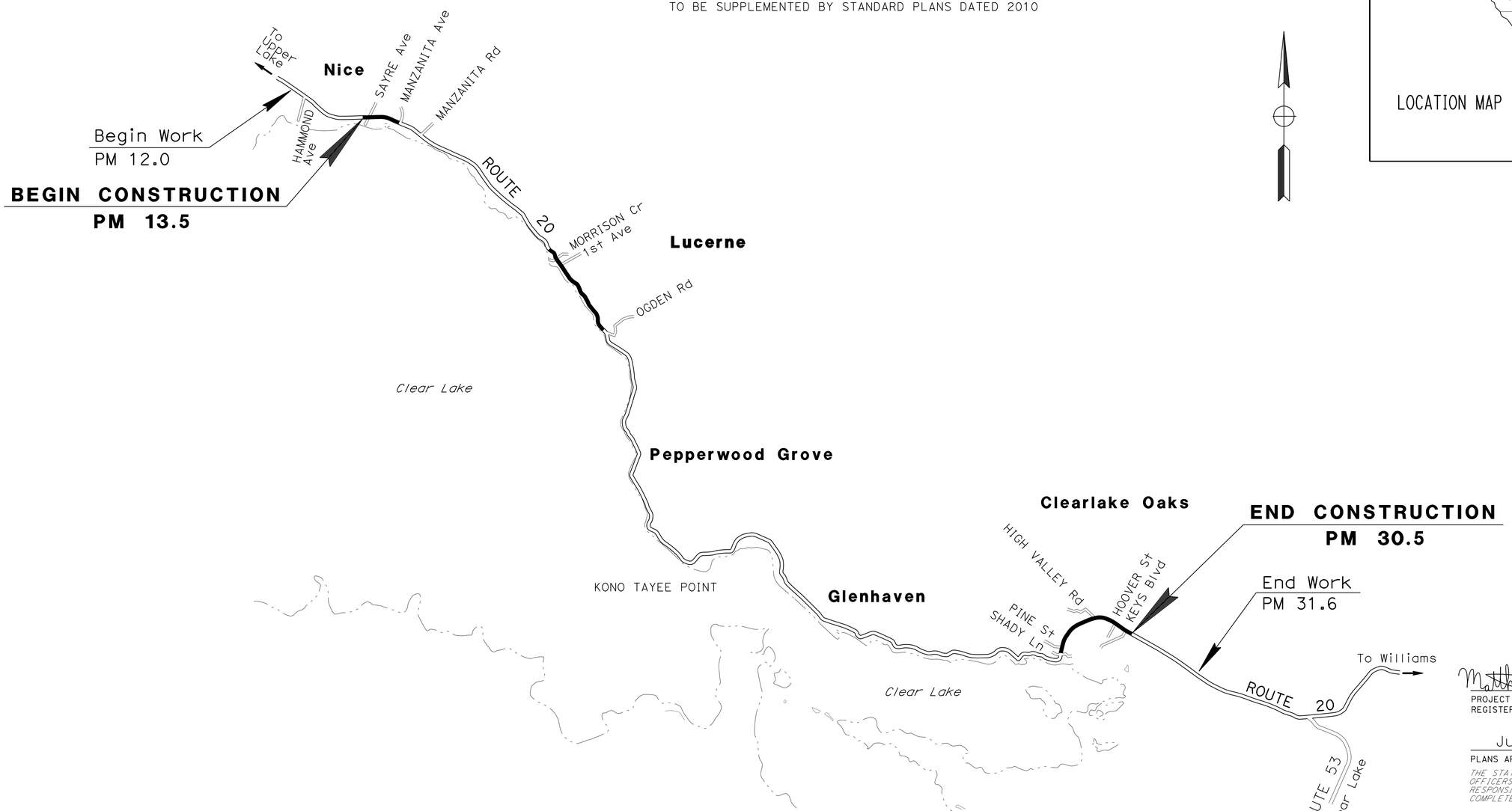

THE CONTRACTOR SHALL POSSESS THE CLASS (OR CLASSES) OF LICENSE AS SPECIFIED IN THE "NOTICE TO BIDDERS."

Matthew Smith 06-03-16
PROJECT ENGINEER DATE
REGISTERED CIVIL ENGINEER

June 13, 2016
PLANS APPROVAL DATE

REGISTERED PROFESSIONAL ENGINEER MATTHEW A. SMITH No. 79116 Exp. 3-31-18 CIVIL STATE OF CALIFORNIA

THE STATE OF CALIFORNIA OR ITS OFFICERS OR AGENTS SHALL NOT BE RESPONSIBLE FOR THE ACCURACY OR COMPLETENESS OF SCANNED COPIES OF THIS PLAN SHEET.

CONTRACT No.	01-0B1204
PROJECT ID	0112000010

LAST REVISION 06-03-16

DATE PLOTTED => 16-AUG-2016
TIME PLOTTED => 14:26

P:\PROJ\01\0B120\drafting\Sheets\0112000010ab001.dgn

DESIGN MANAGER: KELLY B. TIMMONS
PROJECT MANAGER: JAMIE MATTEOLI

Dist	COUNTY	ROUTE	POST MILES TOTAL PROJECT	SHEET No.	TOTAL SHEETS
01	Lak	20	13.5/30.5	2	37

REGISTERED CIVIL ENGINEER DATE 06/13/16

PLANS APPROVAL DATE June 13, 2016

REGISTERED PROFESSIONAL ENGINEER MATTHEW A. SMITH No. 79116 Exp. 3-31-18 CIVIL STATE OF CALIFORNIA

THE STATE OF CALIFORNIA OR ITS OFFICERS OR AGENTS SHALL NOT BE RESPONSIBLE FOR THE ACCURACY OR COMPLETENESS OF SCANNED COPIES OF THIS PLAN SHEET.

LEGEND:

REMOVAL LIMITS

DETECTABLE WARNING SURFACE

ABBREVIATIONS:

BW	BACK OF SIDEWALK
BR	BACK OF RAMP
MINOR Conc	MINOR CONCRETE (CURB, SIDEWALK, AND CURB RAMP)

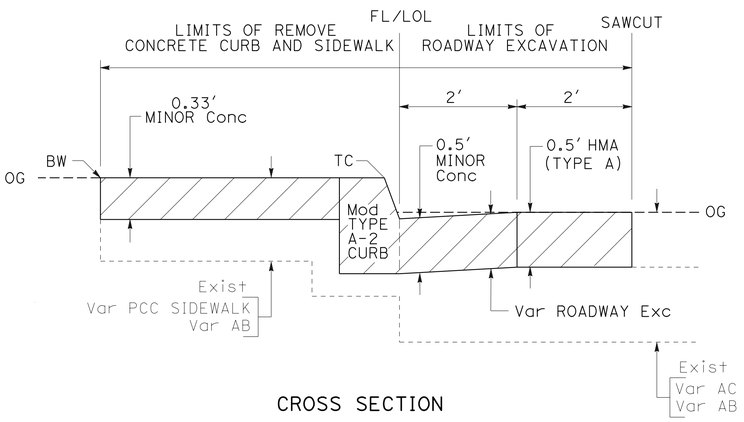

CROSS SECTION

TYPICAL RAMP REPLACEMENT

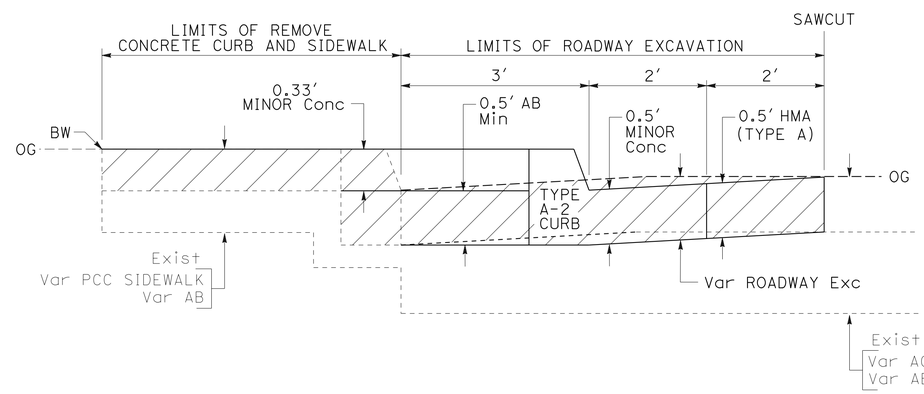

CROSS SECTION

BULBOUT DETAIL

R10	PM 16.94	R31	PM 17.57
R22A	PM 17.32	R36	PM 17.74
R30	PM 17.56		

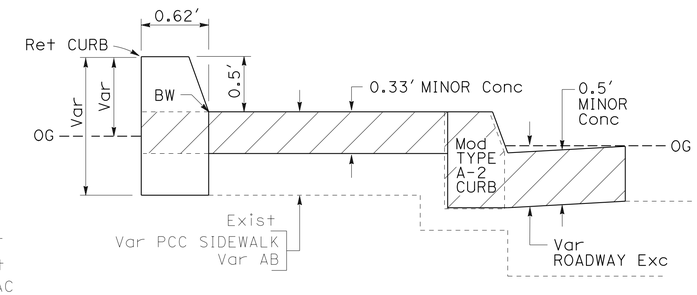

CROSS SECTION

RETAINING CURB DETAIL

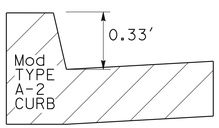

CROSS SECTION

MODIFIED TYPE A-2 CURB

CONSTRUCTION DETAILS

NO SCALE

C-1

STATE OF CALIFORNIA - DEPARTMENT OF TRANSPORTATION

DESIGN

FUNCTIONAL SUPERVISOR: KELLY B. TIMMONS

CALCULATED-DESIGNED BY: MATT SMITH

CHECKED BY: ERIC SHADA

REVISED BY

DATE REVISED

P:\PROJ\01\0B120\drafting\Sheets\0112000010ga001.dgn

LAST REVISION 06-01-16

DATE PLOTTED => 16-AUG-2016

TIME PLOTTED => 14:26

Dist	COUNTY	ROUTE	POST MILES TOTAL PROJECT	SHEET No.	TOTAL SHEETS
01	Lak	20	13.5/30.5	3	37

Matthew Smith 06/13/16
REGISTERED CIVIL ENGINEER DATE

June 13, 2016
PLANS APPROVAL DATE

REGISTERED PROFESSIONAL ENGINEER MATTHEW A. SMITH No. 79116 Exp. 3-31-18 CIVIL STATE OF CALIFORNIA

THE STATE OF CALIFORNIA OR ITS OFFICERS OR AGENTS SHALL NOT BE RESPONSIBLE FOR THE ACCURACY OR COMPLETENESS OF SCANNED COPIES OF THIS PLAN SHEET.

LEGEND:

REMOVAL LIMITS

DETECTABLE WARNING SURFACE

ABBREVIATIONS:

BW	BACK OF SIDEWALK
BR	BACK OF RAMP
MINOR Conc	MINOR CONCRETE (CURB, SIDEWALK AND CURB RAMP)

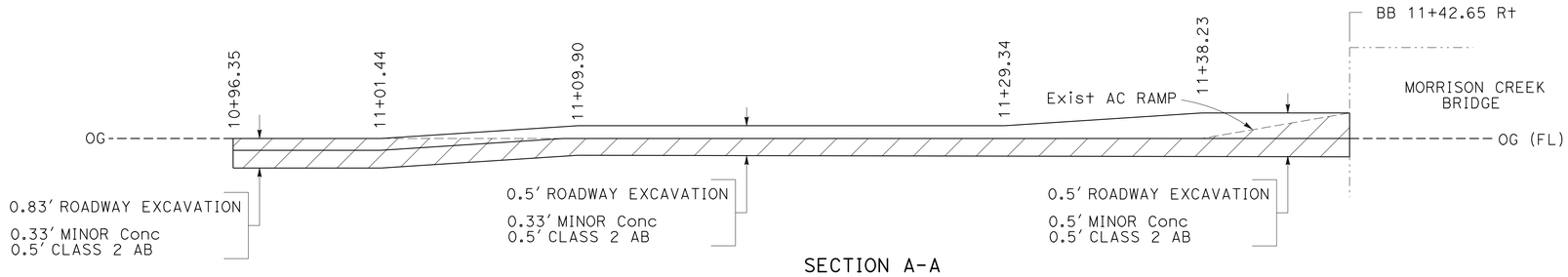

SECTION A-A

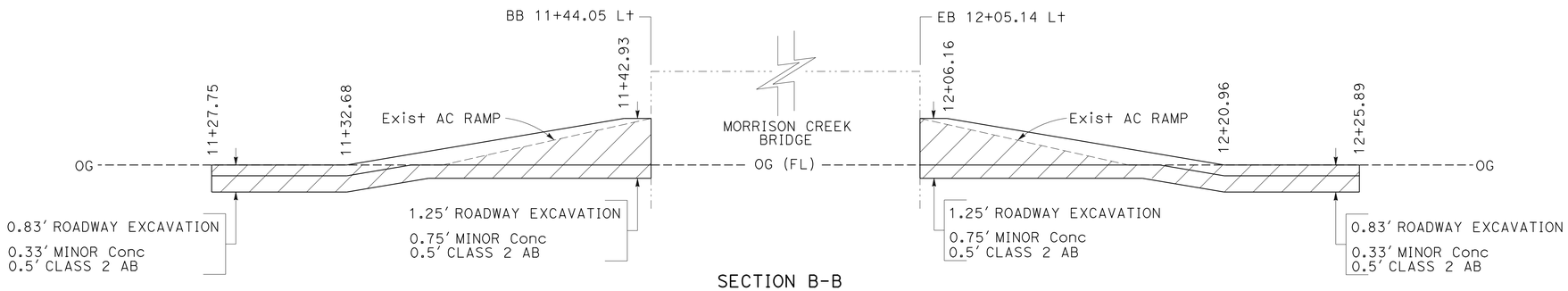

SECTION B-B

MORRISON Cr Br
(SEE SHEET C-5)

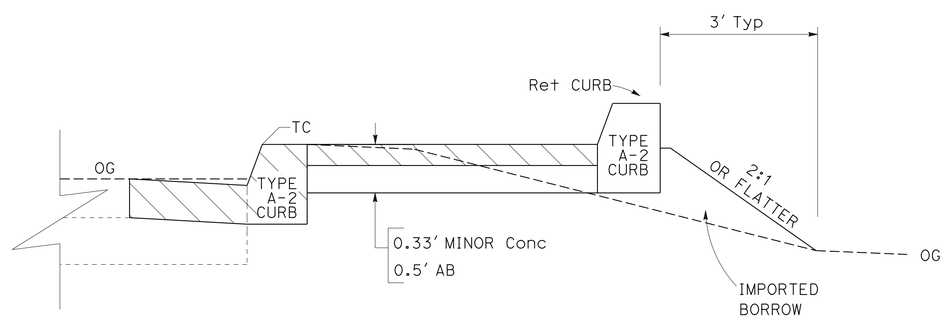

SECTION C-C
"R23B"
(SEE SHEET C-10)

CONSTRUCTION DETAILS
NO SCALE

C-2

REVISED BY | DATE REVISED
MATT SMITH | ERIC SHADA
CALCULATED-DESIGNED BY | CHECKED BY
FUNCTIONAL SUPERVISOR
KELLY B. TIMMONS

STATE OF CALIFORNIA - DEPARTMENT OF TRANSPORTATION
Caltrans
DESIGN

P:\PROJ\01\QB120\drafting\Sheets\0112000010ga002.dgn

LAST REVISION 06-01-16 | DATE PLOTTED => 16-AUG-2016 | TIME PLOTTED => 14:26

Dist	COUNTY	ROUTE	POST MILES TOTAL PROJECT	SHEET No.	TOTAL SHEETS
01	Lak	20	13.5/30.5	4	37

Matthew Smith 06/13/16
REGISTERED CIVIL ENGINEER DATE

June 13, 2016
PLANS APPROVAL DATE

REGISTERED PROFESSIONAL ENGINEER MATTHEW A. SMITH No. 79116 Exp. 3-31-18 CIVIL STATE OF CALIFORNIA

THE STATE OF CALIFORNIA OR ITS OFFICERS OR AGENTS SHALL NOT BE RESPONSIBLE FOR THE ACCURACY OR COMPLETENESS OF SCANNED COPIES OF THIS PLAN SHEET.

NOTES:

1. LOCATION OF EXISTING UTILITIES SHOWN ON THESE PLANS ARE APPROXIMATE AND SHALL BE VERIFIED BY CONTRACTOR PRIOR TO CONSTRUCTION.
2. FOR ACCURATE RIGHT OF WAY DATA CONTACT RIGHT OF WAY ENGINEERING AT THE DISTRICT OFFICE.

CURVE DATA

No.	RADIUS	DELTA	T	L
1	19.5′	82°48′45"	17.20′	28.18′

POINT NAME	STATION	OFFSET	ELEVATION	NOTES
R1-1	10+18.05	0.13 Lt	1344.96	TC
R1-7	10+21.16	5.57 Lt	1344.98	BW
R1-2	10+22.66	0.13 Lt	1344.91	TC
R1-3	10+29.21	0	1344.43	TC/FL
R1-8	10+29.39	5.56 Lt	1344.51	BW
R1-9	10+36.32	5.55 Lt	1344.51	BW
R1-4	10+36.76	0	1344.43	TC
R1-10	10+43.12	5.52 Lt	1344.87	BW
R1-5	10+43.14	0.13 Lt	1344.86	TC
R1-6	10+48.85	0.13 Lt	1344.82	TC
R1-11	10+48.94	5.97 Lt	1344.98	BW

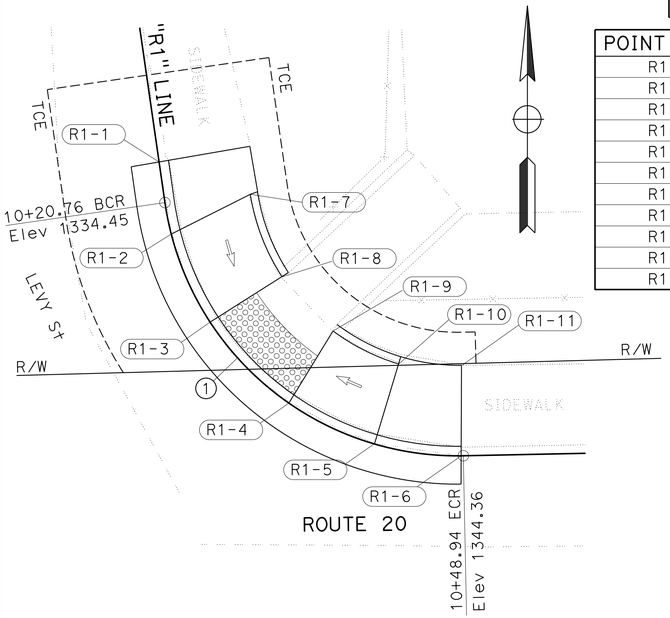

"R1" (CASE A, MODIFIED)
PM 13.65

CURVE DATA

No.	RADIUS	DELTA	T	L
2	19.00′	84°45′46"	17.34′	28.11′

POINT NAME	STATION	OFFSET	ELEVATION	NOTES
R2-6	20+25.75	5.80 Lt	1342.86	BW
R2-1	20+26.11	0.13 Lt	1342.85	TC
R2-2	20+34.81	0	1342.35	TC/FL
R2-7	20+34.94	5.64 Lt	1342.43	BR
R2-3	20+43.08	0	1342.25	TC/FL
R2-8	20+43.63	5.60 Lt	1342.33	BR
R2-9	20+48.33	6.01 Lt	1342.61	BW
R2-4	20+48.73	0.13 Lt	1342.53	TC
R2-10	20+58.80	6.09 Lt	1342.64	TC
R2-5	20+58.98	0.13 Lt	1342.57	TC

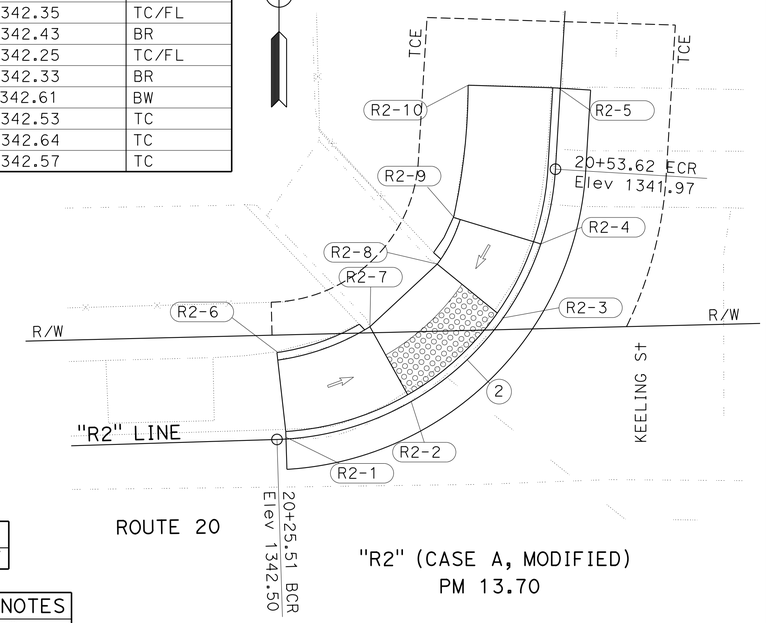

"R2" (CASE A, MODIFIED)
PM 13.70

CURVE DATA

No.	RADIUS	DELTA	T	L
3	14.0′	95°31′38"	15.42′	23.34′

POINT NAME	STATION	OFFSET	ELEVATION	NOTES
R3-1	30+00.00	0.13 Lt	1340.44	TC
R3-5	30+00.00	4.63 Lt	1340.61	TC
R3-6	30+00.62	4.63 Lt	1340.11	BW
R3-2	30+00.63	0	1340.06	TC/FL
R3-7	30+05.65	4.63 Lt	1340.04	BW
R3-3	30+05.65	0	1339.99	TC/FL
R3-8	30+10.14	4.63 Lt	1340.33	BW
R3-4	30+10.14	0.13 Lt	1340.28	TC
R3-9	30+13.14	4.46 Lt	1340.29	BW

POINT NAME	STATION	OFFSET	ELEVATION	NOTES
R3-10	30+81.09	0.13 Lt	1339.17	TC
R3-17	30+81.17	4.48 Lt	1339.22	BW
R3-18	30+88.08	4.47 Lt	1339.19	BW
R3-19	30+92.10	5.50 Lt	1339.19	BW
R3-11	30+93.80	0.13 Lt	1339.12	TC
R3-12	31+00.80	0	1338.60	TC/FL
R3-20	31+00.80	5.50 Lt	1338.67	BW
R3-13	31+05.80	0	1338.61	TC/FL
R3-21	31+05.80	5.50 Lt	1338.68	BW
R3-22	31+11.31	5.50 Lt	1331.09	BW
R3-14	31+11.80	0.13 Lt	1339.03	TC
R3-15	31+14.97	0	1339.12	TC
R3-23	31+14.97	5.50 Lt	1339.18	BW
R3-16	31+18.84	0.13 Lt	1339.21	TC
R3-24	31+18.84	4.53 Lt	1339.27	BW

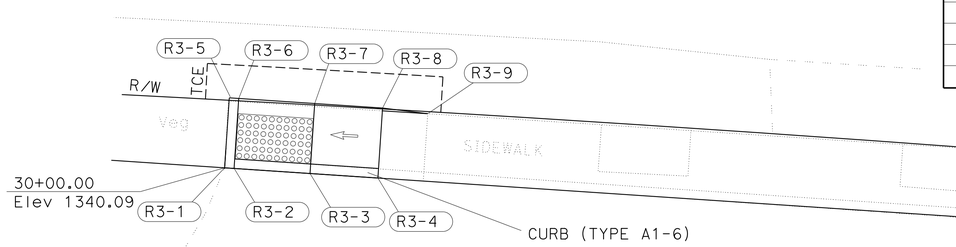

"R3" (CASE C)
PM 13.74

ROUTE 20

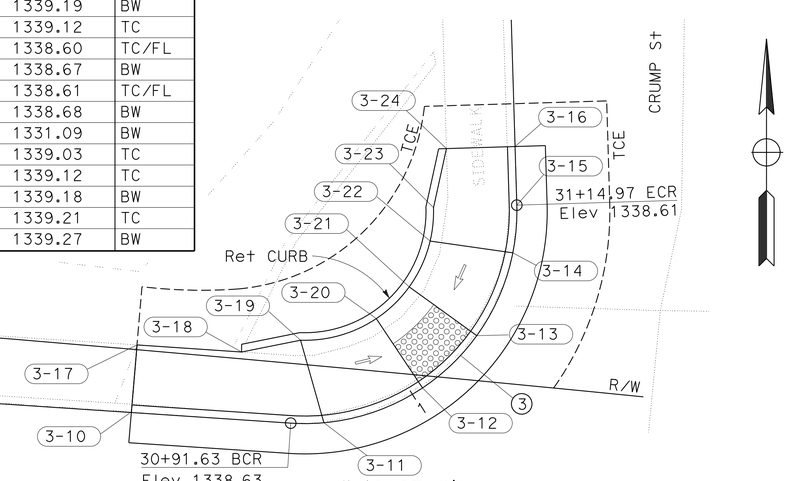

"R3" (CASE C)
PM 13.76

CONSTRUCTION DETAILS

SCALE: 1" = 5′

C-3

STATE OF CALIFORNIA - DEPARTMENT OF TRANSPORTATION
Caltrans DESIGN

MATT SMITH | ERIC SHADA | KELLY B. TIMMONS | REVISED BY | DATE REVISED | CALCULATED-DESIGNED BY | CHECKED BY | FUNCTIONAL SUPERVISOR

P:\PROJ\01\0B120\drafting\Sheets\0112000010ga003.dgn

LAST REVISION 06-01-16 | DATE PLOTTED => 16-AUG-2016 | TIME PLOTTED => 14:27

Dist	COUNTY	ROUTE	POST MILES TOTAL PROJECT	SHEET No.	TOTAL SHEETS
01	Lak	20	13.5/30.5	5	37

REGISTERED CIVIL ENGINEER 06/13/16 DATE

June 13, 2016
PLANS APPROVAL DATE

REGISTERED PROFESSIONAL ENGINEER MATTHEW A. SMITH No. 79116 Exp. 3-31-18 CIVIL STATE OF CALIFORNIA

THE STATE OF CALIFORNIA OR ITS OFFICERS OR AGENTS SHALL NOT BE RESPONSIBLE FOR THE ACCURACY OR COMPLETENESS OF SCANNED COPIES OF THIS PLAN SHEET.

NOTES:

1. LOCATION OF EXISTING UTILITIES SHOWN ON THESE PLANS ARE APPROXIMATE AND SHALL BE VERIFIED BY CONTRACTOR PRIOR TO CONSTRUCTION.
2. FOR ACCURATE RIGHT OF WAY DATA CONTACT RIGHT OF WAY ENGINEERING AT THE DISTRICT OFFICE.

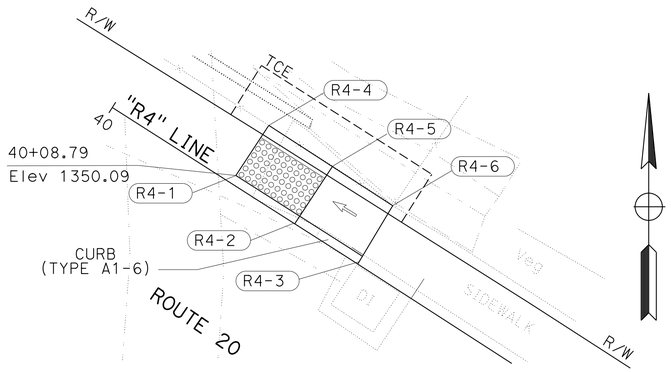

"R4" (CASE C)
PM 14.21

POINT NAME	STATION	OFFSET	ELEVATION	NOTES
R4-1	40+08.79	0	1350.09	TC/FL
R4-4	40+08.84	4.56 Lt	1350.15	BW
R4-2	40+13.78	0	1350.15	TC/FL
R4-5	40+13.84	4.56 Lt	1350.21	BW
R4-3	40+18.54	0.13 Lt	1350.46	TC
R4-6	40+18.56	4.49 Lt	1350.54	BW

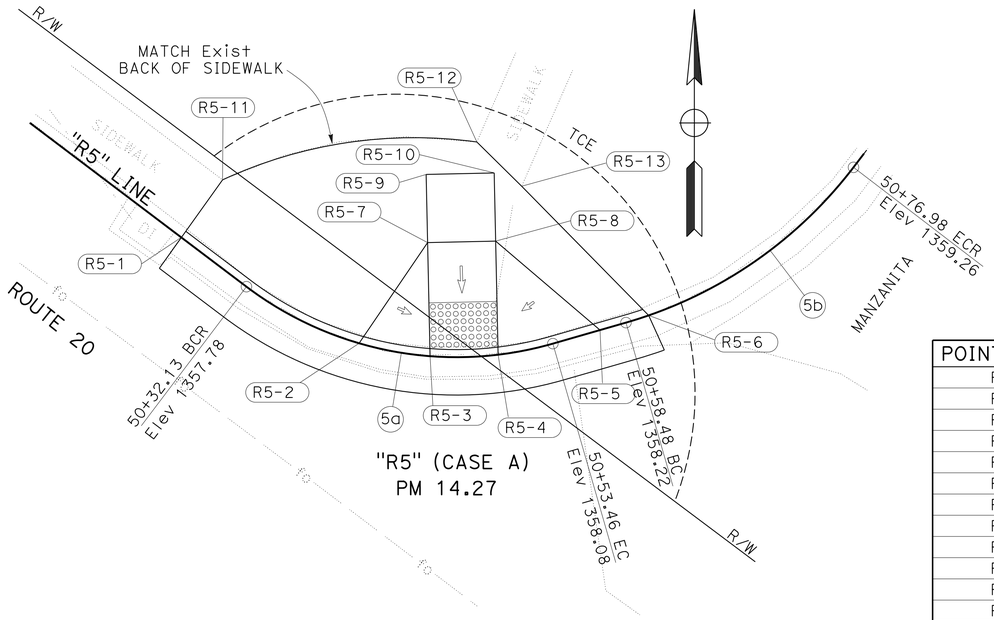

"R5" (CASE A)
PM 14.27

CURVE DATA

No.	RADIUS	DELTA	T	L
5a	23.0′	53°07′43"	11.50′	21.33′
5b	29.0′	36°32′29"	9.57′	18.50′

POINT NAME	STATION	OFFSET	ELEVATION	NOTES
R5-11	50+26.62	4.67 Lt	1358.35	BW
R5-1	50+26.73	0.13 Lt	1358.32	TC
R5-2	50+40.50	0.13 Lt	1358.39	TC
R5-12	50+41.57	14.22 Lt	1358.60	BW
R5-9	50+42.84	11.88 Lt	1358.58	SW
R5-7	50+44.19	7.45 Lt	1358.51	BR
R5-3	50+45.27	0 Lt	1357.96	TC/FL
R5-4	50+49.77	0 Lt	1358.01	TC/FL
R5-12	50+50.49	14.10 Lt	1358.69	BW
R5-8	50+50.85	7.45 Lt	1358.57	BR
R5-13	50+52.20	11.88 Lt	1358.63	SW
R5-14	50+54.35	10.55 Lt	1358.63	BW
R5-5	50+56.70	0.13 Lt	1358.64	TC
R5-6	50+59.75	0.13 Lt	1358.68	TC

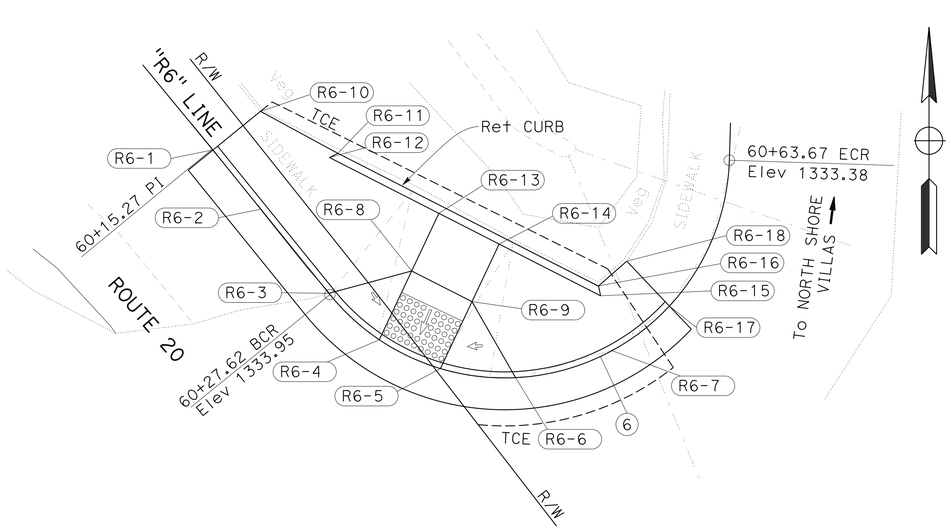

"R6" (CASE A)
PM 16.70

CURVE DATA

No.	RADIUS	DELTA	T	L
6	14.84′	139°10′59"	39.89′	36.05′

POINT NAME	STATION	OFFSET	ELEVATION	NOTES
R6-1	60+15.27	0.13 Lt	1334.44	TC
R6-10	60+15.33	4.05 Lt	1334.55	BW
R6-2	60+20.37	0.13 Lt	1334.45	TC
R6-11	60+20.37	5.58 Lt	1334.53	BW
R6-12	60+20.37	6.13 Lt	1334.53	BW
R6-3	60+27.51	0.12 Lt	1334.42	TC
R6-13	60+28.52	8.95 Lt	1334.43	BW
R6-8	60+30.92	4.93 Lt	1334.37	BR
R6-4	60+32.05	0 Lt	1334.01	TC/FL
R6-5	60+36.53	0 Lt	1334.05	TC/FL
R6-9	60+37.62	4.80 Lt	1334.41	BR
R6-14	60+39.93	8.82 Lt	1334.47	BW
R6-6	60+41.55	0.13 Lt	1334.48	TC
R6-7	60+48.27	0.13 Lt	1334.37	TC
R6-15	60+49.61	3.49 Lt	1334.42	BW
R6-16	60+49.96	4.10 Lt	1334.42	BW
R6-17	60+53.07	0.18 Lt	1334.26	TC
R6-18	60+53.39	4.08 Lt	1334.37	BW

CONSTRUCTION DETAILS

SCALE: 1" = 5′

C-4

REVISED BY | DATE REVISED
MATT SMITH | ERIC SHADA
CALCULATED-DESIGNED BY | CHECKED BY
FUNCTIONAL SUPERVISOR
KELLY B. TIMMONS

STATE OF CALIFORNIA - DEPARTMENT OF TRANSPORTATION
Caltrans
DESIGN

P:\PROJ\01\0B120\drafting\Sheets\0112000010ga004.dgn

LAST REVISION 06-01-16 | DATE PLOTTED => 16-AUG-2016 | TIME PLOTTED => 14:27

Dist	COUNTY	ROUTE	POST MILES TOTAL PROJECT	SHEET No.	TOTAL SHEETS
01	Lak	20	13.5/30.5	6	37

Matthew Smith 06/13/16
REGISTERED CIVIL ENGINEER DATE

June 13, 2016
PLANS APPROVAL DATE

REGISTERED PROFESSIONAL ENGINEER MATTHEW A. SMITH No. 79116 Exp. 3-31-18 CIVIL STATE OF CALIFORNIA

THE STATE OF CALIFORNIA OR ITS OFFICERS OR AGENTS SHALL NOT BE RESPONSIBLE FOR THE ACCURACY OR COMPLETENESS OF SCANNED COPIES OF THIS PLAN SHEET.

POINT NAME	STATION	OFFSET	ELEVATION	NOTES
A-7	10+96.35	20.14 Lt	1332.76	BW
A-14	10+96.38	24.63 Lt	1332.82	SW
A-1	11+01.38	14.70 Lt	1332.95	FL
A-8	11+01.44	20.10 Lt	1332.83	SW
A-15	11+01.49	24.59 Lt	1332.89	BW
A-2	11+04.34	14.67 Lt	1332.95	FL
A-9	11+09.90	19.99 Lt	1332.97	SW
A-16	11+09.98	24.47 Lt	1332.97	BW
A-17	11+16.81	24.34 Lt	1332.94	BW
A-10	11+17.08	19.84 Lt	1332.92	SW
A-3	11+17.38	14.44 Lt	1332.89	FL
A-18	11+29.13	24.70 Lt	1333.15	SW
A-11	11+29.34	20.20 Lt	1333.12	SW
A-4	11+35.19	14.92 Lt	1332.17	FL
A-19	11+37.84	24.87 Lt	1333.67	BW
A-12	11+38.02	20.37 Lt	1333.72	SW
A-5	11+38.23	14.98 Lt	1333.72	TC
A-20	11+42.44	24.92 Lt	1333.73	BW
A-13	11+42.65	20.43 Lt	1333.78	SW
A-6	11+44.99	15.06 Lt	1333.45	SW

NOTES:

1. LOCATION OF EXISTING UTILITIES SHOWN ON THESE PLANS ARE APPROXIMATE AND SHALL BE VERIFIED BY CONTRACTOR PRIOR TO CONSTRUCTION
2. FOR ACCURATE RIGHT OF WAY DATA CONTACT RIGHT OF WAY ENGINEERING AT THE DISTRICT OFFICE.

POINT NAME	STATION	OFFSET	ELEVATION	NOTES
A-29	12+03.76	15.20 Lt	1333.54	SW
A-32	12+06.01	20.87 Lt	1333.70	SW
A-33	12+06.78	28.25 Lt	1333.70	SW
A-31	12+11.25	15.32 Lt	1333.48	TC
A-30	12+11.60	14.96 Lt	1331.85	FL
A-35	12+11.71	23.52 Lt	1333.68	TC
A-34	12+12.20	23.04 Lt	1332.40	FL
A-36	12+12.57	28.57 Lt	1333.75	SW
A-37	12+13.67	29.63 Lt	1333.75	SW
A-39	12+27.79	24.29 Lt	1333.71	TC
A-40	12+27.79	30.29 Lt	1333.80	SW
A-38	12+27.86	23.80 Lt	1332.52	FL
A-43	12+37.60	30.57 Lt	1333.90	SW
A-42	12+37.74	24.57 Lt	1333.81	TC
A-41	12+37.75	24.07 Lt	1332.75	FL
A-46	12+41.88	31.70 Lt	1333.95	SW
A-45	12+46.33	27.35 Lt	1333.87	TC
A-44	12+46.83	27.08 Lt	1333.22	FL
A-48	12+47.93	38.72 Lt	1334.04	SW
A-47	12+52.54	34.63 Lt	1333.95	TC/FL
A-49	12+55.03	38.83 Lt	1334.30	

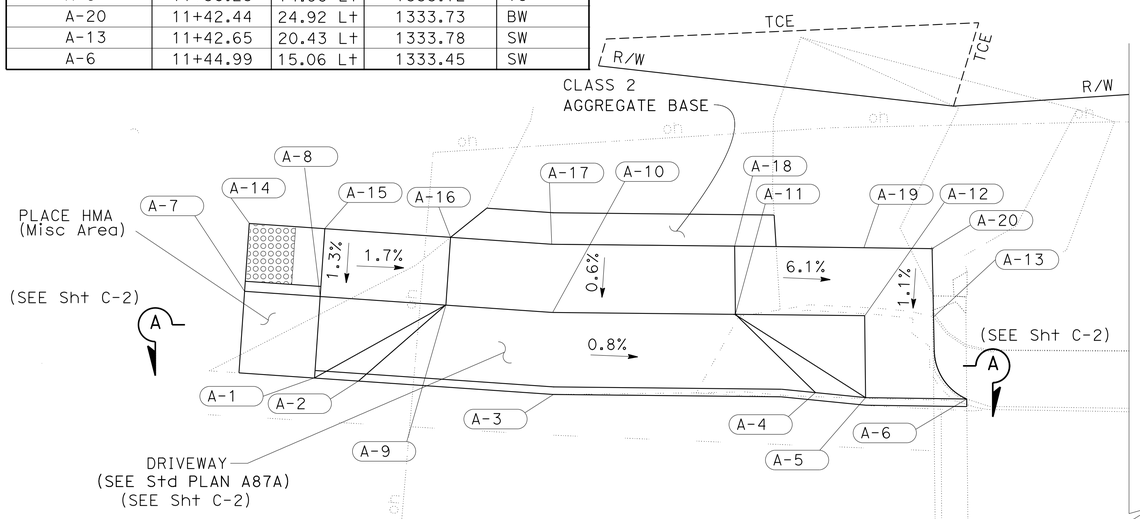

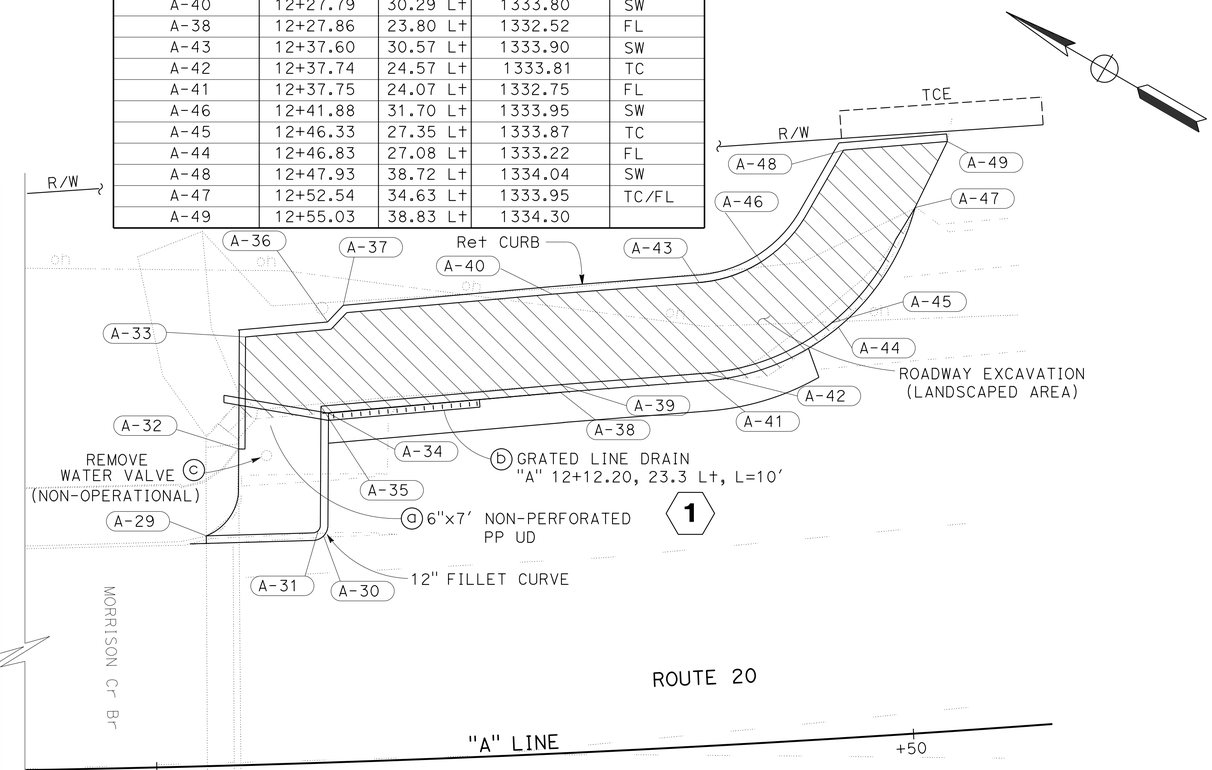

POINT NAME	STATION	OFFSET	ELEVATION	NOTES
A-50	12+03.71	16.10 Rt	1334.54	SW
A-54	12+05.14	21.59 Rt	1334.28	BW
A-55	12+06.09	21.60 Rt	1334.28	BW
A-51	12+06.16	16.15 Rt	1334.54	SW
A-56	12+20.83	21.86 Rt	1333.53	BW
A-52	12+20.96	16.05 Rt	1333.46	FL
A-57	12+25.73	21.99 Rt	1333.56	BW
A-53	12+25.89	16.23 Rt	1333.38	FL

CURVE DATA

No.	RADIUS	DELTA	T	L
A1	1200.0'	12°49'14"	134.82'	268.52'

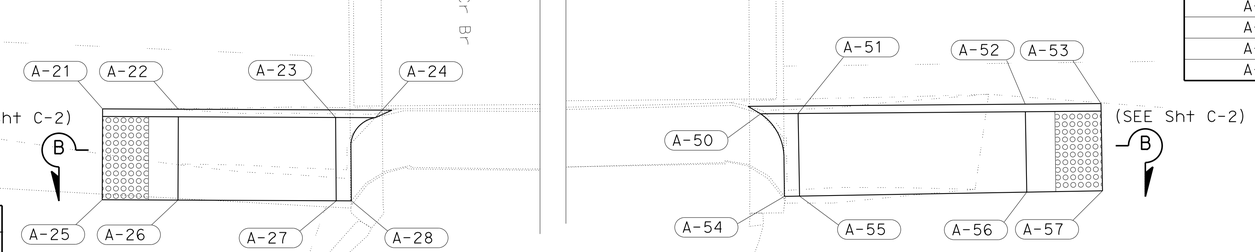

POINT NAME	STATION	OFFSET	ELEVATION	NOTES
A-21	11+27.75	16.21 Rt	1333.91	FL
A-25	11+27.94	22.21 Rt	1333.82	BW
A-22	11+32.68	16.06 Rt	1333.90	FL
A-26	11+32.85	22.06 Rt	1333.86	BW
A-23	11+42.93	16.32 Rt	1334.60	SW
A-27	11+43.10	21.82 Rt	1334.70	BW
A-28	11+44.08	21.79 Rt	1334.70	BW
A-24	11+45.52	16.27 Rt	1334.60	SW

MORRISON CREEK BRIDGE
PM 16.81

CONSTRUCTION DETAILS

SCALE: 1" = 10'

C-5

REVISED BY | DATE REVISED
MATT SMITH | ERIC SHADA
CALCULATED-DESIGNED BY | CHECKED BY
FUNCTIONAL SUPERVISOR
KELLY B. TIMMONS

STATE OF CALIFORNIA - DEPARTMENT OF TRANSPORTATION
Caltrans
DESIGN

P:\PROJ\01\0B120\drafting\Sheets\0112000010ga005.dgn

LAST REVISION 06-01-16 | DATE PLOTTED => 16-AUG-2016 | TIME PLOTTED => 14:27

Dist	COUNTY	ROUTE	POST MILES TOTAL PROJECT	SHEET No.	TOTAL SHEETS
01	Lak	20	13.5/30.5	7	37

REGISTERED CIVIL ENGINEER 06/13/16 DATE

June 13, 2016
PLANS APPROVAL DATE

REGISTERED PROFESSIONAL ENGINEER MATTHEW A. SMITH No. 79116 Exp. 3-31-18 CIVIL STATE OF CALIFORNIA

THE STATE OF CALIFORNIA OR ITS OFFICERS OR AGENTS SHALL NOT BE RESPONSIBLE FOR THE ACCURACY OR COMPLETENESS OF SCANNED COPIES OF THIS PLAN SHEET.

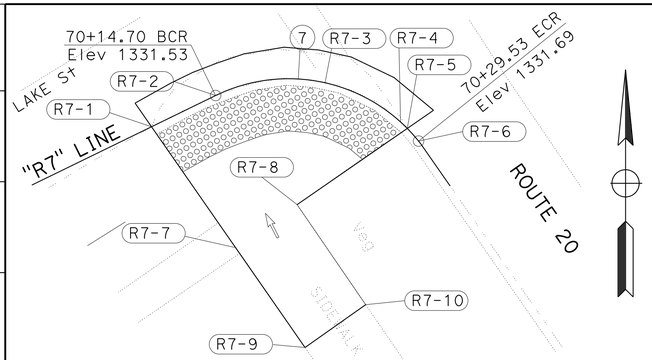

"R7" (CASE CM) PM 16.84

CURVE DATA

No.	RADIUS	DELTA	T	L
7	11.00′	77°14′32"	8.79′	14.83′

POINT NAME	STATION	OFFSET	ELEVATION	NOTES
R7-1	70+10.00	0	1331.46	TC/FL
R7-7	70+11.51	9.63 Rt	1331.60	BW
R7-2	70+14.70	0	1331.53	TC/FL
R7-8	70+21.95	8.25 Rt	1331.67	BW
R7-3	70+22.12	0	1331.65	TC/FL
R7-4	70+27.83	0	1331.71	TC/FL
R7-5	70+28.45	0.13 Rt	1331.83	TC
R7-6	70+29.53	0.13 Rt	1331.82	TC
R7-10	70+36.40	9.05 Rt	1331.87	BW
R7-9	70+36.43	13.95 Rt	1331.93	BW

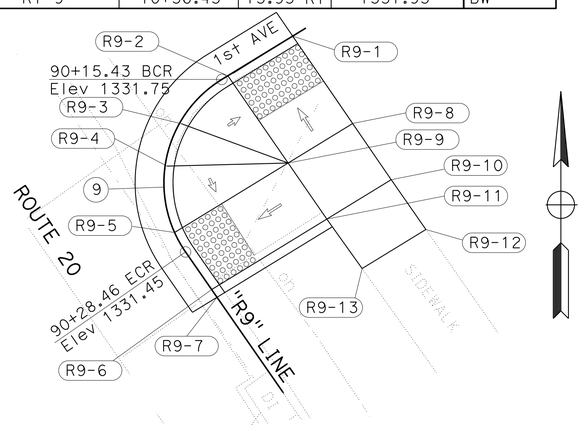

"R9" (CASE A, MODIFIED, CASE G)
PM 16.90

CURVE DATA

No.	RADIUS	DELTA	T	L
9	8.0′	93°18′46"	8.48′	13.03′

POINT NAME	STATION	OFFSET	ELEVATION	NOTES
R9-10	90+09.35	11.48 Lt	1332.13	BW
R9-8	90+09.56	6.99 Lt	1332.18	BR
R9-1	90+09.95	0	1331.83	TC/FL
R9-9	90+14.58	6.99 Lt	1332.10	BR
R9-2	90+14.96	0	1331.76	TC/FL
R9-3	90+19.46	0.13 Lt	1332.02	TC/FL
R9-4	90+22.48	0.13 Lt	1331.86	TC/FL
R9-5	90+26.98	0	1331.47	TC/FL
R9-6	90+31.48	0	1331.40	TC/FL
R9-11	90+32.00	8.9 Lt	1332.05	TR
R9-7	90+32.11	0.13 Lt	1331.91	TC/FL
R9-13	90+37.01	8.96 Lt	1331.17	BW
R9-12	90+37.29	13.89 Lt	1331.21	BW

NOTES:

1. LOCATION OF EXISTING UTILITIES SHOWN ON THESE PLANS ARE APPROXIMATE AND SHALL BE VERIFIED BY CONTRACTOR PRIOR TO CONSTRUCTION.
2. FOR ACCURATE RIGHT OF WAY DATA CONTACT RIGHT OF WAY ENGINEERING AT THE DISTRICT OFFICE.

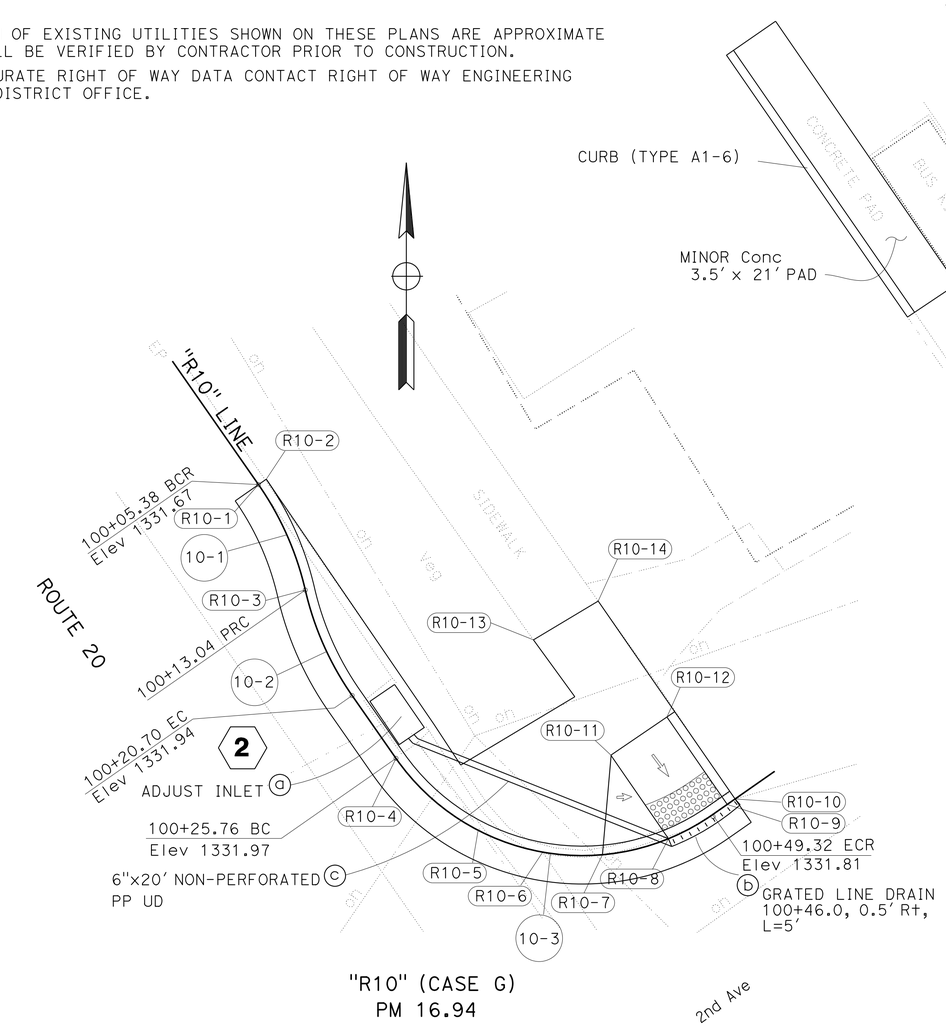

"R10" (CASE G)
PM 16.94

CURVE DATA

No.	RADIUS	DELTA	T	L
10-1	20.00′	21°55′37"	3.88	7.66
10-2	20.00′	21°56′49"	3.88′	7.66′
10-3	15.00′	90°00′00"	15.00′	23.56′

POINT NAME	STATION	OFFSET	ELEVATION	NOTES
R10-1	100+05.38	0	1331.67	FL
R10-2	100+13.04	0	1331.81	FL
R10-3	100+20.70	0	1331.94	FL
R10-13	100+25.16	11.93 Lt	1332.31	BW
R10-4	100+25.76	0	1331.97	FL
R10-5	100+33.78	0	1331.82	FL
R10-6	100+38.48	0	1331.82	FL
R10-7	100+41.50	0.12 Lt	1332.15	TC
R10-11	100+43.48	6.42 Lt	1332.26	BR
R10-8	100+46.00	0	1331.81	TC/FL
R10-9	100+50.50	0	1331.81	TC/FL
R10-12	100+50.54	7.01 Lt	1332.29	BR
R10-10	100+51.13	0.13 Lt	1332.07	TC
R10-14	100+51.20	15.25 Lt	1332.36	BW

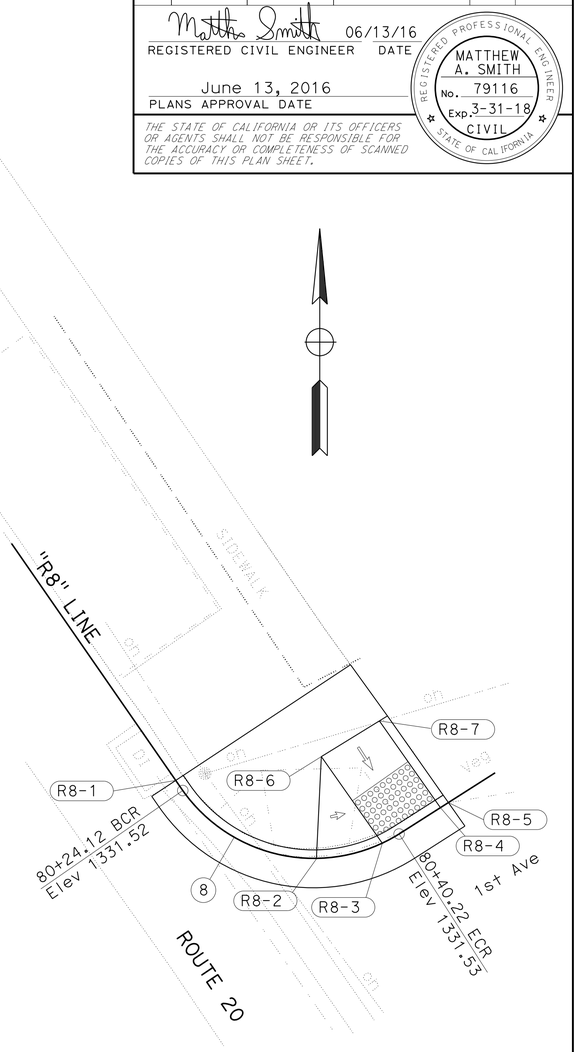

"R8" (CASE G)
PM 16.89

CURVE DATA

No.	RADIUS	DELTA	T	L
8	10.5′	87°49′56"	10.11′	16.10′

POINT NAME	STATION	OFFSET	ELEVATION	NOTES
R8-1	80+23.31	0.13 Lt	1331.88	TC
R8-2	80+34.45	0.13 Lt	1331.86	TC
R8-6	80+35.70	6.72 Lt	1332.02	BW
R8-3	80+38.95	0	1331.53	TC/FL
R8-7	80+43.14	6.99 Lt	1332.07	BW
R8-4	80+43.45	0	1331.55	TC/FL
R8-5	80+44.07	0.13 Lt	1331.89	TC

CONSTRUCTION DETAILS

SCALE: 1" = 5′

C-6

REVISED BY | DATE REVISED
MATT SMITH | ERIC SHADA
CALCULATED-DESIGNED BY | CHECKED BY
FUNCTIONAL SUPERVISOR
KELLY B. TIMMONS

STATE OF CALIFORNIA - DEPARTMENT OF TRANSPORTATION
DESIGN

P:\PROJ\01\0B120\drafting\Sheets\0112000010ga006.dgn

LAST REVISION DATE PLOTTED => 16-AUG-2016
06-01-16 TIME PLOTTED => 14:27

Dist	COUNTY	ROUTE	POST MILES TOTAL PROJECT	SHEET No.	TOTAL SHEETS
01	Lak	20	13.5/30.5	8	37

REGISTERED CIVIL ENGINEER 06/13/16 DATE

June 13, 2016
PLANS APPROVAL DATE

REGISTERED PROFESSIONAL ENGINEER MATTHEW A. SMITH No. 79116 Exp. 3-31-18 CIVIL STATE OF CALIFORNIA

THE STATE OF CALIFORNIA OR ITS OFFICERS OR AGENTS SHALL NOT BE RESPONSIBLE FOR THE ACCURACY OR COMPLETENESS OF SCANNED COPIES OF THIS PLAN SHEET.

NOTES:

1. LOCATION OF EXISTING UTILITIES SHOWN ON THESE PLANS ARE APPROXIMATE AND SHALL BE VERIFIED BY CONTRACTOR PRIOR TO CONSTRUCTION.
2. FOR ACCURATE RIGHT OF WAY DATA CONTACT RIGHT OF WAY ENGINEERING AT THE DISTRICT OFFICE.

CURVE DATA

No.	RADIUS	DELTA	T	L
11	9.0′	84°42′20"	8.20′	13.31′

POINT NAME	STATION	OFFSET	ELEVATION	NOTES
R11-1	110+09.88	0.13 Lt	1332.3	TC
R11-2	110+10.50	0	1331.98	TC/FL
R11-11	110+10.73	12.34 Lt	1332.42	BW
R11-9	110+10.91	7.23 Lt	1332.35	BR
R11-3	110+15.00	0	1331.9	TC/FL
R11-10	110+15.38	6.63 Lt	1332.29	BR
R11-4	110+19.50	0.13 Lt	1332.18	TC
R11-5	110+21.50	0.12 Lt	1332.18	TC
R11-6	110+26.00	0	1331.82	TC/FL
R11-7	110+30.50	0	1331.75	TC/FL
R11-12	110+30.87	9.01 Lt	1332.35	BR
R11-8	110+31.12	0.13 Lt	1332.11	TC
R11-13	110+31.73	9.05 Lt	1332.35	BW

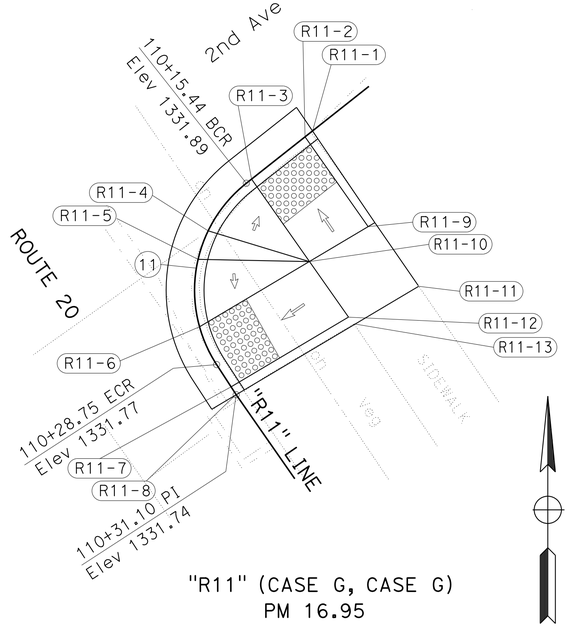

"R11" (CASE G, CASE G)
PM 16.95

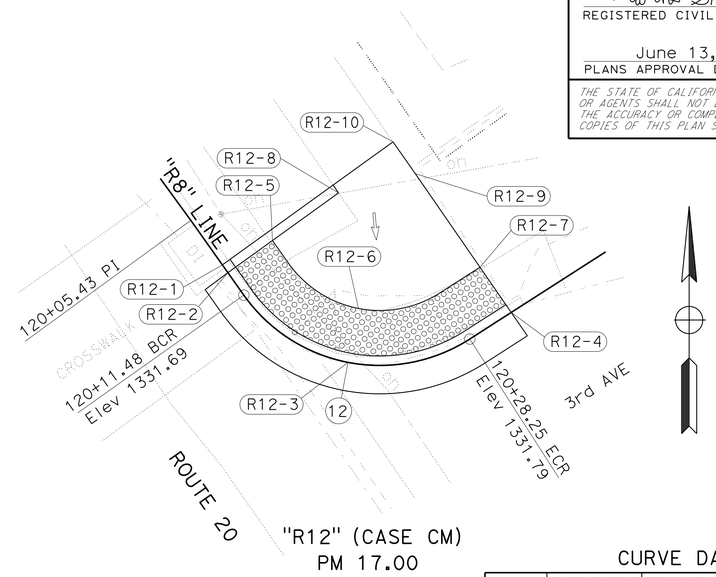

"R12" (CASE CM)
PM 17.00

CURVE DATA

No.	RADIUS	DELTA	T	L
12	11.0′	87°21′12"	10.50′	16.77′

POINT NAME	STATION	OFFSET	ELEVATION	NOTES
R12-1	120+09.03	0.13 Lt	1331.98	TC
R12-8	120+09.59	9.00 Lt	1332.12	BW
R12-5	120+09.63	3.62 Lt	1331.73	BR
R12-2	120+09.66	0	1331.68	TC/FL
R12-6	120+19.86	3.62 Lt	1331.76	BR
R12-3	120+20.79	0	1331.72	TC/FL
R12-10	120+31.00	13.69Lt	1332.17	BW
R12-9	120+31.20	8.62 Lt	1331.93	BW
R12-7	120+31.38	3.62 Lt	1331.86	BR
R12-4	120+31.50	0	1331.82	TC/FL

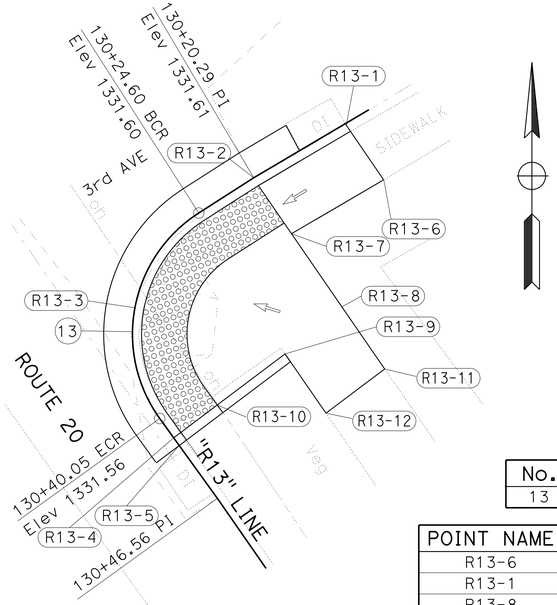

"R13" (CASE CM, MODIFIED)
PM 17.01

CURVE DATA

No.	RADIUS	DELTA	T	L
13	9.5′	93°10′27"	10.04′	15.45′

POINT NAME	STATION	OFFSET	ELEVATION	NOTES
R13-6	130+12.90	4.49 Lt	1332.05	BW
R13-1	130+13.21	0.13 Lt	1331.90	TC
R13-8	130+19.62	10.52 Lt	1331.74	BW
R13-7	130+20.02	4.44 Lt	1331.69	BW
R13-2	130+20.70	0	1331.61	TC/FL
R13-3	130+32.33	0	1331.59	TC/FL
R13-9	130+41.44	9.20 Lt	1331.67	SW
R13-10	130+41.56	3.60 Lt	1331.58	BR
R13-4	130+41.63	0	1331.55	TC/FL
R13-5	130+42.26	0.13 Lt	1331.89	TC
R13-11	130+46.10	13.95 Lt	1332.06	BW
R13-12	130+46.20	9.10 Lt	1332.01	BW

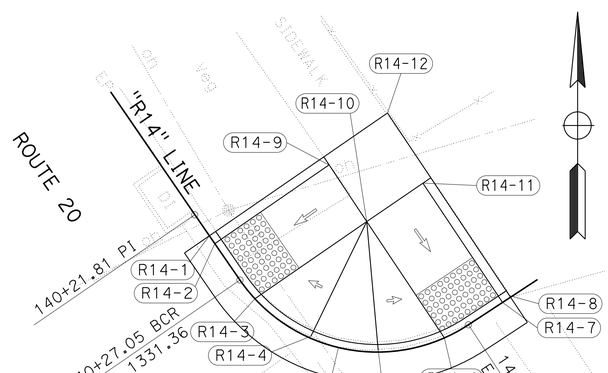

"R14" (CASE G, CASE G)
PM 17.05

CURVE DATA

No.	RADIUS	DELTA	T	L
14	11.0′	88°40′10"	10.75′	17.02′

POINT NAME	STATION	OFFSET	ELEVATION	NOTES
R14-1	140+23.50	0.12 Lt	1331.83	TC
R14-11	140+23.50	14.20 Lt	1332.00	BW
R14-9	140+24.13	9.15 Lt	1331.99	BW
R14-2	140+24.13	0	1331.32	TC/FL
R14-3	140+28.63	0	1331.38	TC/FL
R14-4	140+33.13	0.12 Lt	1331.70	TC
R14-10	140+34.62	8.52 Lt	1331.99	BR
R14-5	140+37.76	0.12 Lt	1331.71	TC
R14-6	140+42.26	0	1331.47	TC/FL
R14-12	140+46.68	9.47 Lt	1332.00	BW
R14-7	140+46.76	0	1331.54	TC/FL
R14-8	140+47.39	0.13 Lt	1331.87	TC

CONSTRUCTION DETAILS

SCALE: 1" = 5′

C-7

REVISED BY | DATE REVISED
MATT SMITH | ERIC SHADA
CALCULATED-DESIGNED BY | CHECKED BY
FUNCTIONAL SUPERVISOR: KELLY B. TIMMONS

STATE OF CALIFORNIA - DEPARTMENT OF TRANSPORTATION
Caltrans DESIGN

P:\PROJ\01\0B120\drafting\Sheets\0112000010ga007.dgn

LAST REVISION | DATE PLOTTED => 16-AUG-2016 | TIME PLOTTED => 14:27
06-01-16

Dist	COUNTY	ROUTE	POST MILES TOTAL PROJECT	SHEET No.	TOTAL SHEETS
01	Lak	20	13.5/30.5	9	37

REGISTERED CIVIL ENGINEER 06/13/16 DATE

PLANS APPROVAL DATE June 13, 2016

REGISTERED PROFESSIONAL ENGINEER MATTHEW A. SMITH No. 79116 Exp. 3-31-18 CIVIL STATE OF CALIFORNIA

THE STATE OF CALIFORNIA OR ITS OFFICERS OR AGENTS SHALL NOT BE RESPONSIBLE FOR THE ACCURACY OR COMPLETENESS OF SCANNED COPIES OF THIS PLAN SHEET.

NOTES:

1. LOCATION OF EXISTING UTILITIES SHOWN ON THESE PLANS ARE APPROXIMATE AND SHALL BE VERIFIED BY CONTRACTOR PRIOR TO CONSTRUCTION.
2. FOR ACCURATE RIGHT OF WAY DATA CONTACT RIGHT OF WAY ENGINEERING AT THE DISTRICT OFFICE.

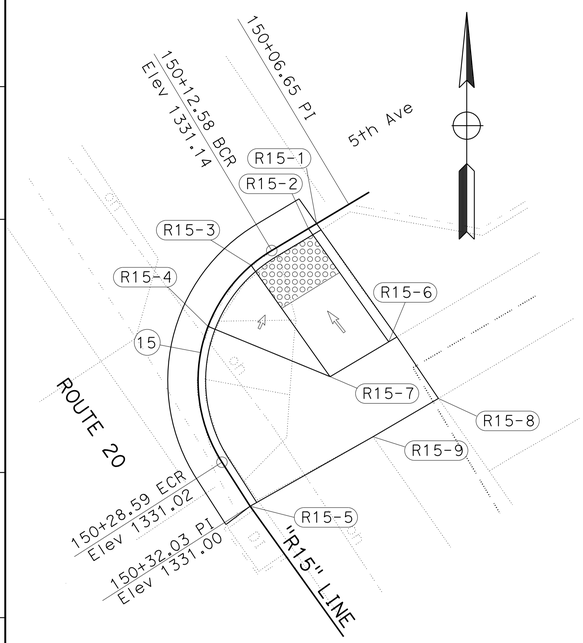

"R15" (CASE G)
PM 17.13

CURVE DATA

No.	RADIUS	DELTA	T	L
15	10.0′	92°42′49"	10.30′	16.01′

POINT NAME	STATION	OFFSET	ELEVATION	NOTES
R15-8	150+08.15	14.03 Lt	1331.86	BW
R15-6	150+09.05	9.14 Lt	1331.83	BR
R15-1	150+09.13	0.13 Lt	1331.66	TC
R15-2	150+09.76	0 Lt	1331.16	TC/FL
R15-3	150+14.26	0 Lt	1331.13	TC/FL
R15-4	150+19.24	0.13 Lt	1331.58	TC
R15-7	150+20.92	8.68 Lt	1331.78	BR
R15-5	150+32.03	0.13 Lt	1331.72	TC
R15-9	150+33.04	9.26 Lt	1331.78	BW

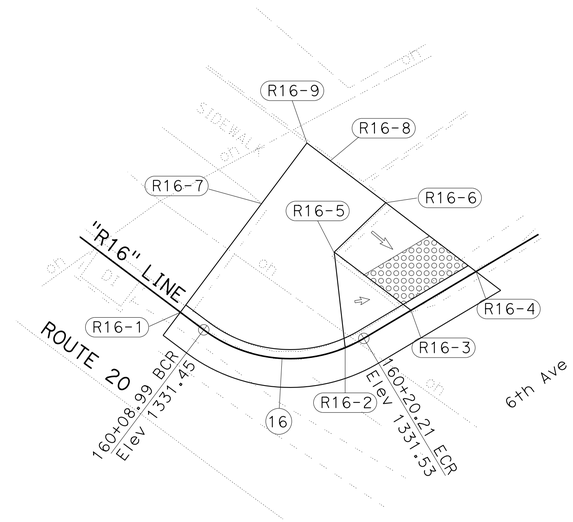

"R16" (CASE A, MODIFIED)
PM 17.18

CURVE DATA

No.	RADIUS	DELTA	T	L
16	9.5′	67°39′49"	6.37′	11.22′

POINT NAME	STATION	OFFSET	ELEVATION	NOTES
R16-7	160+07.04	8.95 Lt	1331.93	BW
R16-1	160+07.05	0.13 Lt	1331.79	TC
R16-2	160+18.83	0.13 Lt	1331.85	TC
R16-5	160+21.44	5.89 Lt	1331.85	BR
R16-9	160+23.57	13.00 Lt	1331.90	BW
R16-3	160+23.83	0	1331.55	TC/FL
R16-8	160+24.31	11.18 Lt	1331.85	BW
R16-6	160+26.03	6.46 Lt	1331.79	BR
R16-4	160+28.83	0	1331.55	TC/FL

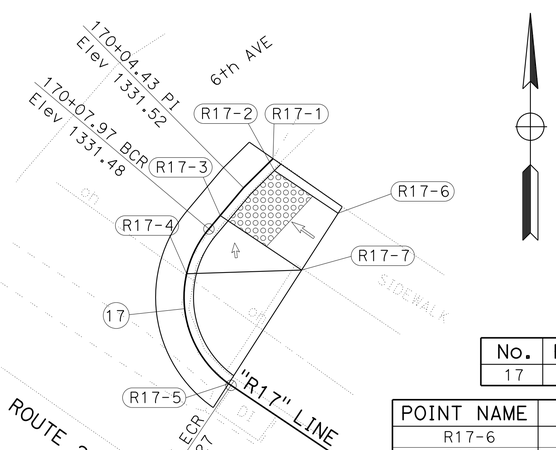

"R17" (CASE G)
PM 17.19

CURVE DATA

No.	RADIUS	DELTA	T	L
17	7.0′	96°13′34"	7.81′	11.76′

POINT NAME	STATION	OFFSET	ELEVATION	NOTES
R17-6	170+01.17	5.58 Lt	1331.70	BR
R17-1	170+01.69	0.13 Lt	1331.66	TC
R17-2	170+02.32	0 Lt	1331.54	TC/FL
R17-7	170+06.11	6.43 Lt	1331.53	BR
R17-3	170+06.82	0 Lt	1331.49	TC/FL
R17-4	170+11.31	0.13 Lt	1331.77	TC
R17-5	170+19.54	0.13 Lt	1331.67	TC

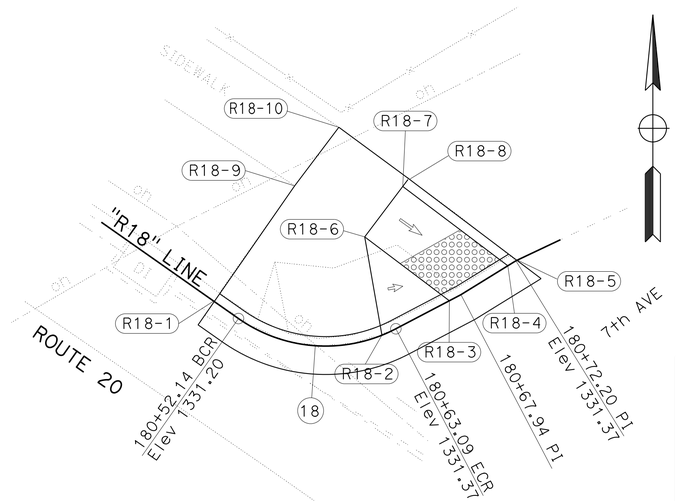

"R18" (CASE G)
PM 17.24

CURVE DATA

No.	RADIUS	DELTA	T	L
18	10.0′	62°43′53"	6.10′	10.95′

POINT NAME	STATION	OFFSET	ELEVATION	NOTES
R18-9	180+50.14	9.3 Lt	1331.70	BW
R18-1	180+50.19	0.13 Lt	1331.65	TC
R18-2	180+62.08	0.13 Lt	1331.70	TC
R18-6	180+64.09	6.33 Lt	1331.68	BR
R18-10	180+65.93	13.53 Lt	1331.75	BW
R18-3	180+67.08	0	1331.37	TC/FL
R18-7	180+68.42	8.1 Lt	1331.73	BR
R18-8	180+69.02	8.33 Lt	1331.73	BR
R18-4	180+71.58	0	1331.37	TC/FL
R18-5	180+72.21	0.13 Lt	1331.70	TC

CONSTRUCTION DETAILS

SCALE: 1" = 5′

C-8

REVISED BY | DATE REVISED
MATT SMITH | ERIC SHADA
CALCULATED-DESIGNED BY | CHECKED BY
FUNCTIONAL SUPERVISOR
KELLY B. TIMMONS

STATE OF CALIFORNIA - DEPARTMENT OF TRANSPORTATION
Caltrans
DESIGN

P:\PROJ\01\0B120\drafting\Sheets\0112000010ga008.dgn

LAST REVISION 06-01-16 | DATE PLOTTED => 16-AUG-2016 | TIME PLOTTED => 14:27

Dist	COUNTY	ROUTE	POST MILES TOTAL PROJECT	SHEET No.	TOTAL SHEETS
01	Lak	20	13.5/30.5	10	37

REGISTERED CIVIL ENGINEER DATE 06/13/16

PLANS APPROVAL DATE June 13, 2016

REGISTERED PROFESSIONAL ENGINEER MATTHEW A. SMITH No. 79116 Exp. 3-31-18 CIVIL STATE OF CALIFORNIA

THE STATE OF CALIFORNIA OR ITS OFFICERS OR AGENTS SHALL NOT BE RESPONSIBLE FOR THE ACCURACY OR COMPLETENESS OF SCANNED COPIES OF THIS PLAN SHEET.

NOTES:

1. LOCATION OF EXISTING UTILITIES SHOWN ON THESE PLANS ARE APPROXIMATE AND SHALL BE VERIFIED BY CONTRACTOR PRIOR TO CONSTRUCTION.
2. FOR ACCURATE RIGHT OF WAY DATA CONTACT RIGHT OF WAY ENGINEERING AT THE DISTRICT OFFICE.

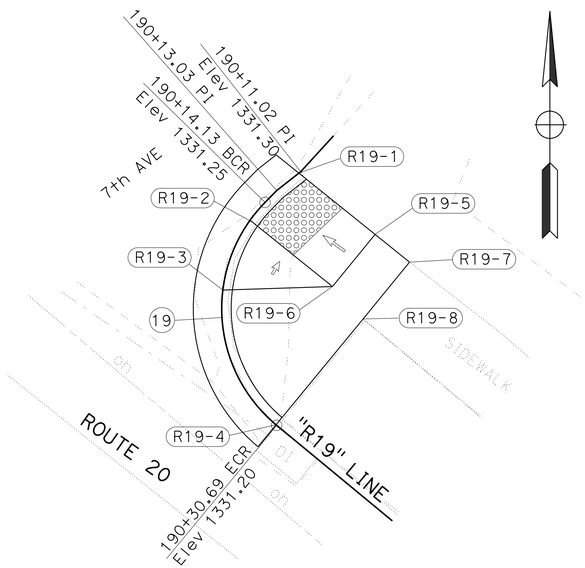

"R19" (CASE A, MODIFIED)
PM 17.25

CURVE DATA

No.	RADIUS	DELTA	T	L
19	10.0′	94°52′36"	10.89′	16.56′

POINT NAME	STATION	OFFSET	ELEVATION	NOTES
R19-7	190+10.58	9.33 L+	1331.60	BW
R19-5	190+10.76	6.42 L+	1331.55	BR
R19-1	190+11.17	0 L+	1331.29	TC/FL
R19-2	190+15.67	0 L+	1331.23	TC/FL
R19-6	190+16.94	6.95 L+	1331.49	BR
R19-3	190+20.67	0.13 L+	1331.49	TC
R19-8	190+29.92	9.04 L+	1331.53	BW
R19-4	190+30.64	0.13 L+	1331.42	TC

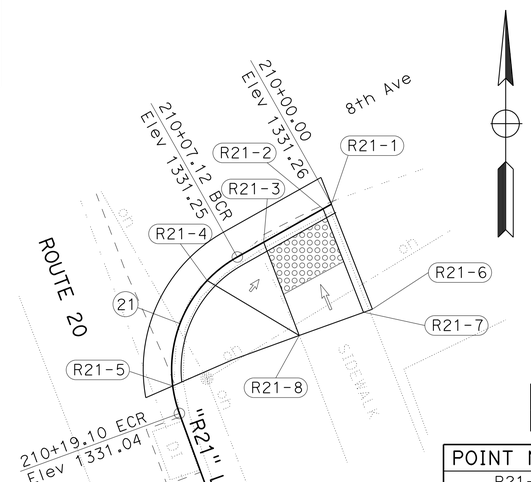

"R21" (CASE G)
PM 17.30

CURVE DATA

No.	RADIUS	DELTA	T	L
21	8.5′	80°42′22"	7.22′	11.97′

POINT NAME	STATION	OFFSET	ELEVATION	NOTES
R21-1	210+00.00	0	1331.59	TC
R21-2	210+00.63	0	1331.26	TC/FL
R21-6	210+01.25	7.34 L+	1331.74	BR
R21-7	210+01.65	7.25 L+	1331.74	BR
R21-3	210+05.13	0	1331.26	TC/FL
R21-8	210+06.10	6.52 L+	1331.72	BR
R21-4	210+09.63	0.13 L+	1331.57	TC
R21-5	210+17.19	0.13 L+	1331.54	TC

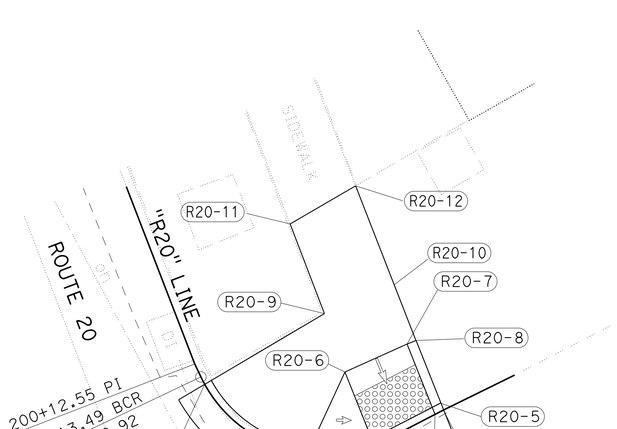

"R20" (CASE G)
PM 17.29

CURVE DATA

No.	RADIUS	DELTA	T	L
20	9.0′	91°54′10"	9.30′	14.44′

POINT NAME	STATION	OFFSET	ELEVATION	NOTES
R20-12	200+05.40	14.14 L+	1331.45	BW
R20-11	200+06.19	9.20 L+	1331.31	BW
R20-9	200+13.22	9.16 L+	1331.25	BW
R20-1	200+14.04	0.13 L+	1331.10	TC
R20-2	200+22.52	0.13 L+	1331.24	TC
R20-6	200+26.97	5.19 L+	1331.24	BR
R20-3	200+27.02	0	1331.08	TC/FL
R20-4	200+31.52	0	1331.10	TC/FL
R20-7	200+32.01	4.97 L+	1331.27	BR
R20-5	200+32.14	0.13 L+	1331.46	TC
R20-8	200+32.54	4.92 L+	1331.27	BR
R20-10	200+32.91	9.49 L+	1331.33	BW

CONSTRUCTION DETAILS

SCALE: 1" = 5′

C-9

REVISED BY | DATE REVISED
MATT SMITH | ERIC SHADA
CALCULATED-DESIGNED BY | CHECKED BY
FUNCTIONAL SUPERVISOR
KELLY B. TIMMONS

STATE OF CALIFORNIA - DEPARTMENT OF TRANSPORTATION
Caltrans
DESIGN

P:\PROJ\01\0B120\drafting\Sheets\0112000010ga009.dgn

LAST REVISION 06-01-16 | DATE PLOTTED => 16-AUG-2016 | TIME PLOTTED => 14:27

Dist	COUNTY	ROUTE	POST MILES TOTAL PROJECT	SHEET No.	TOTAL SHEETS
01	Lak	20	13.5/30.5	11	37

REGISTERED CIVIL ENGINEER 06/13/16 DATE

June 13, 2016
PLANS APPROVAL DATE

REGISTERED PROFESSIONAL ENGINEER MATTHEW A. SMITH No. 79116 Exp. 3-31-18 CIVIL STATE OF CALIFORNIA

THE STATE OF CALIFORNIA OR ITS OFFICERS OR AGENTS SHALL NOT BE RESPONSIBLE FOR THE ACCURACY OR COMPLETENESS OF SCANNED COPIES OF THIS PLAN SHEET.

NOTES:

1. LOCATION OF EXISTING UTILITIES SHOWN ON THESE PLANS ARE APPROXIMATE AND SHALL BE VERIFIED BY CONTRACTOR PRIOR TO CONSTRUCTION.
2. FOR ACCURATE RIGHT OF WAY DATA CONTACT RIGHT OF WAY ENGINEERING AT THE DISTRICT OFFICE.

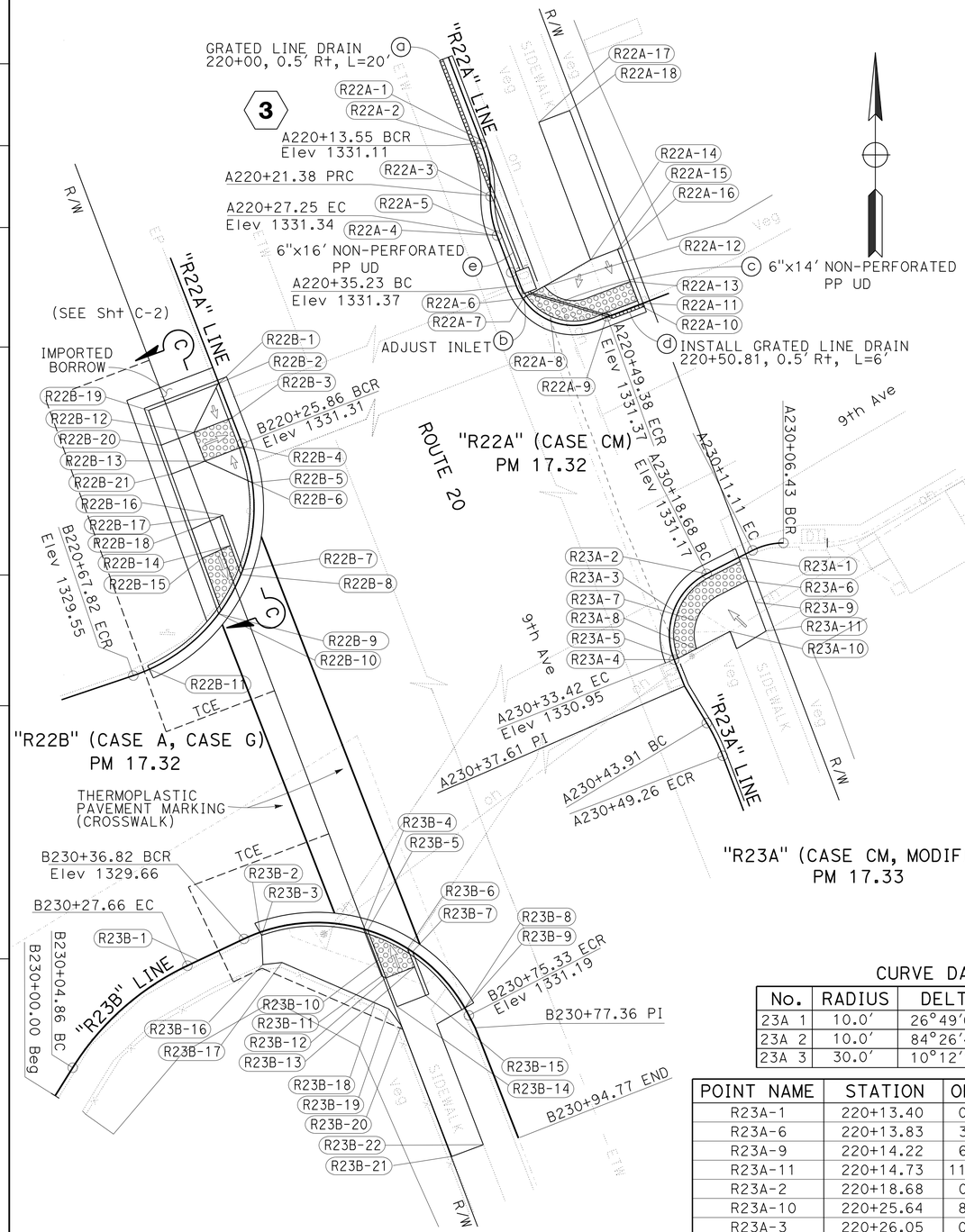

CURVE DATA

No.	RADIUS	DELTA	T	L
22A 1	19.71′	22°47′02"	3.97′	7.84′
22A 2	14.82′	22°41′11"	2.97′	5.87′
22A 3	9.0′	90°04′47"	9.01′	14.15′

POINT NAME	STATION	OFFSET	ELEVATION	NOTES
22A-1	220+13.55	0	1331.11	FL
22A-2	220+13.55	0.13 Lt	1331.48	TC
22A-17	220+13.55	8.95 Lt	1331.75	SW
22A-18	220+13.55	13.79 Lt	1331.83	SW
22A-3	220+21.38	0	1331.23	FL
22A-4	220+27.25	0	1331.34	FL
22A-5	220+27.25	0.13 Lt	1331.46	TC
22A-7	220+37.13	0.13 Lt	1331.70	TC
22A-6	220+37.28	0	1331.37	FL
22A-12	220+37.78	3.63 Lt	1331.41	BR
22A-8	220+42.31	0	1331.37	FL
22A-9	220+49.38	0	1331.37	FL
22A-14	220+51.91	8.69 Lt	1331.45	SW
22A-15	220+56.15	8.71 Lt	1331.50	SW
22A-13	220+56.18	3.63 Lt	1331.44	BR
22A-10	220+56.19	0	1331.40	TC/FL
22A-11	220+56.82	0	1331.73	TC
22A-16	220+56.83	8.72 Lt	1331.83	SW

CURVE DATA

No.	RADIUS	DELTA	T	L
22B	26.0′	92°28′25"	27.15′	41.96′

POINT NAME	STATION	OFFSET	ELEVATION	NOTES
22B-19	220+16.38	10.98 Lt	1331.50	BW
22B-2	220+16.40	0.13 Lt	1331.80	TC
22B-1	220+16.40	0	1331.35	FL
22B-20	220+21.79	11.00 Lt	1331.46	BW
22B-13	220+21.79	6.00 Lt	1331.42	BR
22B-3	220+21.80	0	1331.33	TC/FL
22B-4	220+26.30	0	1331.31	TC/FL
22B-14	220+26.42	6.00 Lt	1331.40	BR
22B-21	220+26.60	10.99 Lt	1331.44	BW
22B-6	220+31.70	0.12 Lt	1331.69	TC
22B-5	220+31.78	0	1331.27	FL
22B-22	220+35.83	10.93 Lt	1331.17	BW
22B-17	220+36.79	4.52 Lt	1331.07	SW
22B-18	220+39.88	8.43 Lt	1331.00	SW
22B-15	220+41.40	2.40 Lt	1331.00	BR
22B-7	220+43.98	0	1330.71	TC
22B-8	220+44.76	0	1330.71	TC/FL
22B-16	220+44.96	5.81 Lt	1330.93	BR
22B-23	220+45.07	11.01 Lt	1330.90	BW
22B-9	220+50.92	0	1330.62	TC/FL
22B-11	220+55.50	0.13 Lt	1330.55	TC
22B-10	220+55.56	0	1330.23	FL
22B-12	220+56.06	0.13 Lt	1330.88	TC

CURVE DATA

No.	RADIUS	DELTA	T	L
23A 1	10.0′	26°49′01"	2.38′	4.68′
23A 2	10.0′	84°26′43"	9.07′	14.74′
23A 3	30.0′	10°12′19"	2.68′	5.34′

POINT NAME	STATION	OFFSET	ELEVATION	NOTES
R23A-1	220+13.40	0	1331.24	TC/FL
R23A-6	220+13.83	3.61 Lt	1331.28	BR
R23A-9	220+14.22	6.90 Lt	1331.42	BW
R23A-11	220+14.73	11.43 Lt	1331.40	BW
R23A-2	220+18.68	0	1331.17	TC/FL
R23A-10	220+25.64	8.79 Lt	1331.20	BW
R23A-3	220+26.05	0	1331.06	TC/FL
R23A-7	220+26.05	3.63 Lt	1331.10	BR
R23A-8	220+33.01	3.63 Lt	1330.99	BR
R23A-4	220+33.42	0	1330.95	TC/FL
R23A-5	220+33.56	0.13 Lt	1331.26	TC

CURVE DATA

No.	RADIUS	DELTA	T	L
23B_1	40.0′	32°39′58"	11.72′	22.81′
23B_2	25.0′	88°15′07"	24.25′	38.51′

POINT NAME	STATION	OFFSET	ELEVATION	NOTES
23B-1	230+29.49	0	1329.32	FL
23B-16	230+37.92	4.57 Rt	1330.28	BW
23B-2	230+39.51	0	1329.79	FL
23B-3	230+39.51	0.13 Rt	1330.29	TC
23B-17	230+41.33	5.19 Rt	1330.42	BW
23B-4	230+54.78	0	1331.13	TC
23B-5	230+55.41	0	1330.74	TC/FL
23B-10	230+58.75	3.44 Rt	1330.77	
23B-11	230+60.49	5.40 Rt	1330.98	BR
23B-12	230+61.38	5.32 Rt	1330.98	BR
23B-6	230+61.88	0	1330.83	TC/FL
23B-18	230+62.19	9.28 Rt	1331.04	BW
23B-7	230+62.73	0	1331.24	TC
23B-13	230+64.33	1.60 Rt	1331.04	BR
23B-19	230+65.57	8.78 Rt	1331.04	BW
23B-14	230+66.56	7.71 Rt	1331.04	SW
23B-15	230+68.86	3.57 Rt	1331.1	BR
23B-20	230+70.25	9.18 Rt	1331.18	BW
23B-8	230+74.08	0	1331.14	FL
23B-9	230+74.08	0.13 Rt	1331.66	TC
23B-21	230+93.68	10.06 Rt	1332.04	SW
23B-22	230+93.76	5.14 Rt	1332.00	SW

CONSTRUCTION DETAILS

SCALE: 1" = 10′

C-10

STATE OF CALIFORNIA - DEPARTMENT OF TRANSPORTATION
Caltrans® DESIGN

FUNCTIONAL SUPERVISOR: KELLY B. TIMMONS
CALCULATED-DESIGNED BY: MATT SMITH
CHECKED BY: ERIC SHADA
REVISED BY / DATE REVISED

P:\PROJ\01\0B120\drafting\Sheets\0112000010ga010.dgn

LAST REVISION 06-01-16
DATE PLOTTED => 16-AUG-2016
TIME PLOTTED => 14:27

Dist	COUNTY	ROUTE	POST MILES TOTAL PROJECT	SHEET No.	TOTAL SHEETS
01	Lak	20	13.5/30.5	12	37

REGISTERED CIVIL ENGINEER 06/13/16 DATE

June 13, 2016
PLANS APPROVAL DATE

REGISTERED PROFESSIONAL ENGINEER MATTHEW A. SMITH No. 79116 Exp. 3-31-18 CIVIL STATE OF CALIFORNIA

THE STATE OF CALIFORNIA OR ITS OFFICERS OR AGENTS SHALL NOT BE RESPONSIBLE FOR THE ACCURACY OR COMPLETENESS OF SCANNED COPIES OF THIS PLAN SHEET.

NOTES:

1. LOCATION OF EXISTING UTILITIES SHOWN ON THESE PLANS ARE APPROXIMATE AND SHALL BE VERIFIED BY CONTRACTOR PRIOR TO CONSTRUCTION.
2. FOR ACCURATE RIGHT OF WAY DATA CONTACT RIGHT OF WAY ENGINEERING AT THE DISTRICT OFFICE.

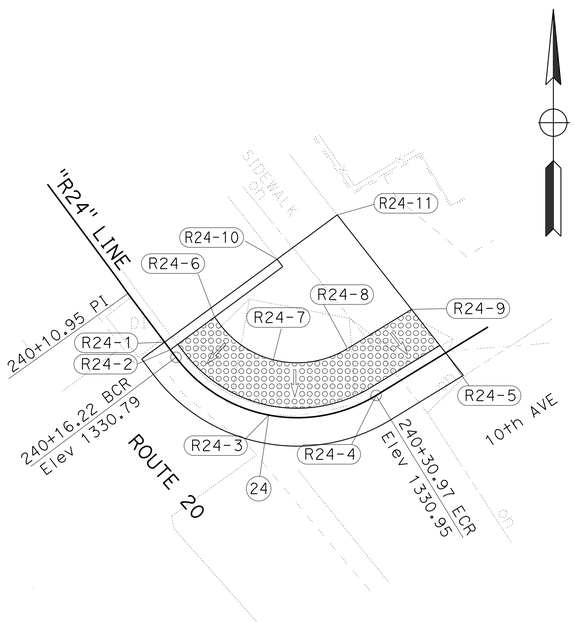

"R24" (CASE CM)
PM 17.38

CURVE DATA

No.	RADIUS	DELTA	T	L
24	10.0′	84°29′59"	9.08′	14.75′

POINT NAME	STATION	OFFSET	ELEVATION	NOTES
24-1	240+14.98	0.13 Lt	1331.21	TC
24-10	240+15.06	9.23 Lt	1331.38	BW
24-2	240+15.60	0 Lt	1330.79	TC/FL
24-6	240+15.63	3.64 Lt	1330.83	BW
24-3	240+23.00	0 Lt	1330.83	TC/FL
24-7	240+23.59	3.63 Lt	1330.87	BR
24-4	240+29.00	0 Lt	1330.95	TC/FL
24-8	240+30.97	3.62 Lt	1330.96	BR
24-11	240+34.99	11.51 Lt	1331.41	BW
24-9	240+35.95	3.62 Lt	1331.05	BR
24-5	240+36.35	0 Lt	1331.03	TC/FL

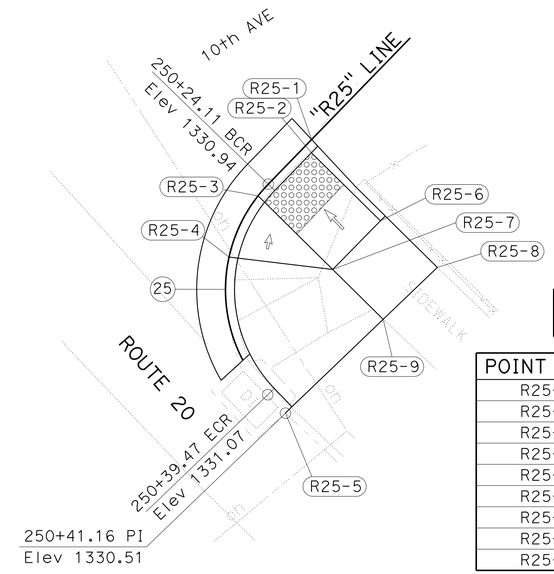

"R25" (CASE G)
PM 17.39

CURVE DATA

NO.	RADIUS	DELTA	T	L
25	10.0′	88°00′40"	9.66′	15.36′

POINT NAME	STATION	OFFSET	ELEVATION	NOTES
R25-1	250+20.00	0.13 Lt	1331.27	TC
R25-8	250+20.28	11.83 Lt	1331.34	BW
R25-2	250+20.63	0	1330.98	TC/FL
R25-6	250+20.69	7.00 Lt	1331.27	BR
R25-3	250+25.13	0	1330.93	TC/FL
R25-7	250+27.53	6.79 Lt	1331.27	BR
R25-4	250+29.63	0.13 Lt	1331.20	TC
R25-5	250+41.17	0.13 Lt	1331.02	TC
R25-9	250+41.60	8.93 Lt	1331.27	BW

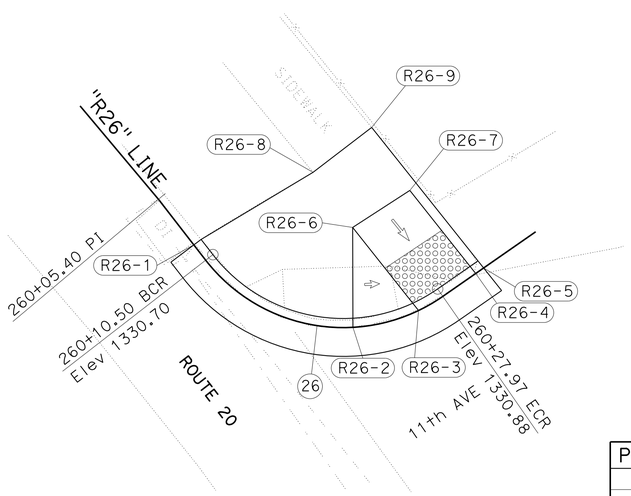

"R26" (CASE G)
PM 17.44

CURVE DATA

NO.	RADIUS	DELTA	T	L
26	11.50′	87°01′01"	10.92′	17.47′

POINT NAME	STATION	OFFSET	ELEVATION	NOTES
R26-1	260+09.23	0.13 Lt	1330.95	TC
R26-8	260+10.27	9.15 Lt	1331.17	BW
R26-2	260+21.61	0.13 Lt	1331.07	TC
R26-3	260+26.11	0	1330.87	TC/FL
R26-7	260+30.17	6.98 Lt	1331.00	BR
R26-9	260+30.48	11.84 Lt	1331.23	BW
R26-4	260+30.61	0	1330.88	TC/FL
R26-5	260+31.24	0.13 Lt	1331.13	TC

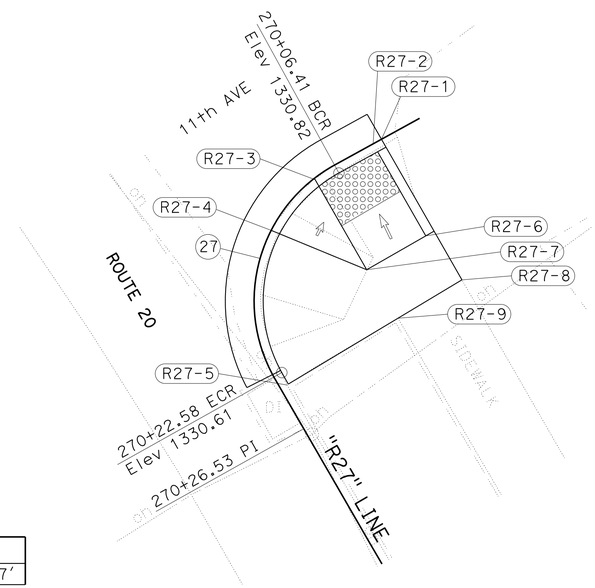

"R27" (CASE G)
PM 17.45

CURVE DATA

NO.	RADIUS	DELTA	T	L
27	10.25′	90°26′03"	10.33′	16.18′

POINT NAME	STATION	OFFSET	ELEVATION	NOTES
R27-8	270+02.69	10.69 Lt	1331.24	BW
R27-1	270+02.87	0.13 Lt	1330.87	TC
R27-6	270+03.38	7.00 Lt	1331.18	BR
R27-2	270+03.50	0	1330.86	TC/FL
R27-3	270+08.00	0	1330.80	TC/FL
R27-7	270+10.85	6.75 Lt	1331.18	BR
R27-4	270+12.50	0.13 Lt	1331.08	TC
R27-9	270+23.20	9.04 Lt	1331.14	BW
R27-5	270+23.47	0.13 Lt	1330.98	TC

CONSTRUCTION DETAILS

SCALE: 1" = 5′

C-11

REVISED BY | DATE REVISED
MATT SMITH | ERIC SHADA
CALCULATED-DESIGNED BY | CHECKED BY
FUNCTIONAL SUPERVISOR
KELLY B. TIMMONS

STATE OF CALIFORNIA - DEPARTMENT OF TRANSPORTATION
Caltrans
DESIGN

P:\PROJ\01\0B120\drafting\Sheets\0112000010ga011.dgn

LAST REVISION 06-01-16 | DATE PLOTTED => 16-AUG-2016 | TIME PLOTTED => 14:27

Dist	COUNTY	ROUTE	POST MILES TOTAL PROJECT	SHEET No.	TOTAL SHEETS
01	Lak	20	13.5/30.5	13	37

REGISTERED CIVIL ENGINEER 06/13/16 DATE

June 13, 2016
PLANS APPROVAL DATE

REGISTERED PROFESSIONAL ENGINEER MATTHEW A. SMITH No. 79116 Exp. 3-31-18 CIVIL STATE OF CALIFORNIA

THE STATE OF CALIFORNIA OR ITS OFFICERS OR AGENTS SHALL NOT BE RESPONSIBLE FOR THE ACCURACY OR COMPLETENESS OF SCANNED COPIES OF THIS PLAN SHEET.

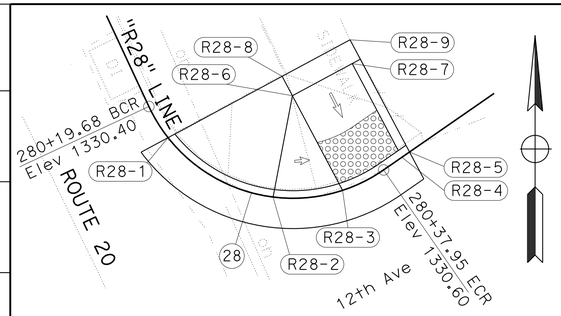

"R28" (CASE G)
PM 17.50

CURVE DATA

NO.	RADIUS	DELTA	T	L
28	10.50′	99°41′24"	12.44′	18.27′

POINT NAME	STATION	OFFSET	ELEVATION	NOTES
R28-1	280+22.13	0.13 Lt	1330.79	TC
R28-8	280+29.58	8.13 Lt	1330.94	BW
R28-2	280+30.28	0.13 Lt	1330.81	TC
R28-6	280+31.48	6.77 Lt	1330.93	BR
R28-3	280+34.92	0	1330.56	TC/FL
R28-4	280+39.42	0	1330.62	TC/FL
R28-5	280+40.05	0.13 Lt	1330.63	TC
R28-7	280+40.25	6.95 Lt	1330.98	BR
R28-9	280+41.03	8.32 Lt	1330.99	BW

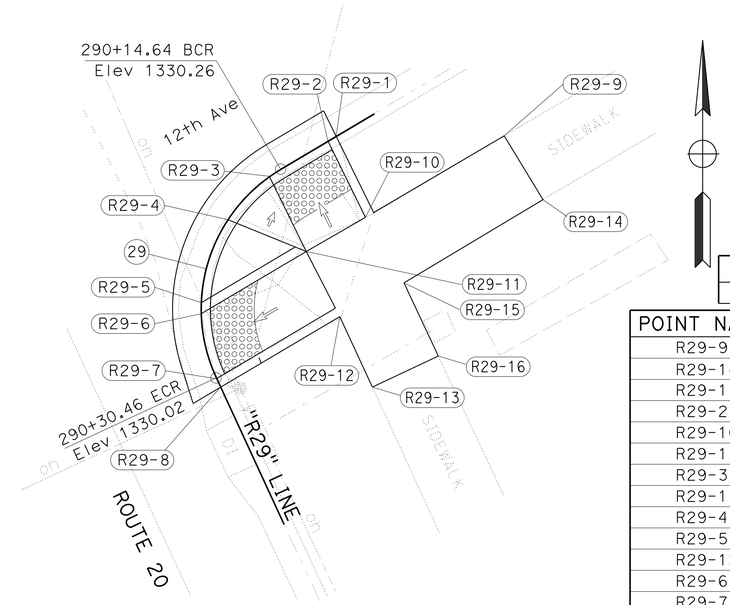

"R29" (CASE G, CASE F)
PM 17.51

CURVE DATA

NO.	RADIUS	DELTA	T	L
29	10.75′	84°18′25"	9.73′	15.82′

POINT NAME	STATION	OFFSET	ELEVATION	NOTES
R29-9	290+00.82	5.64 Lt	1331.17	SW
R29-14	290+01.22	10.57 Lt	1331.22	BW
R29-1	290+10.38	0.13 Lt	1330.80	TC
R29-2	290+11.01	0	1330.31	TC/FL
R29-10	290+11.45	5.6 Lt	1330.71	BR
R29-15	290+11.47	10.61 Lt	1330.78	BW
R29-3	290+15.51	0	1330.24	TC/FL
R29-11	290+17.30	5.38 Lt	1330.64	BR
R29-4	290+19.51	0.13 Lt	1330.60	TC
R29-5	290+25.45	0.13 Lt	1330.55	TC
R29-12	290+25.50	8.85 Lt	1330.70	BR
R29-6	290+26.08	0	1330.04	TC/FL
R29-7	290+30.51	0	1330.02	TC/FL
R29-8	290+31.14	0.13 Lt	1330.48	TC
R29-16	290+34.94	13.90 Lt	1331.02	BW
R29-13	290+35.36	9.10 Lt	1330.91	SW

CURVE DATA

No.	RADIUS	DELTA	T	L
30-1	30.0′	18°13′38"	4.81′	9.54′
30-2	30.0′	20°12′14"	5.34′	10.58′
30-3	15.0′	93°27′32"	15.93′	24.47′
30-4	30.0′	18°03′22"	4.77′	9.45′
30-5	30.0′	18°14′06"	4.81′	9.55′

POINT NAME	STATION	OFFSET	ELEVATION	NOTES
30-1	300+16.33	0	1330.38	FL
30-2	300+16.33	0.13 Lt	1330.65	TC
30-3	300+25.87	0	1330.43	FL
30-4	300+27.38	0.13 Lt	1330.76	TC
30-5	300+36.45	0	1330.46	FL
30-26	300+36.67	11.86 Lt	1330.74	BW
30-25	300+41.53	16.77 Lt	1330.80	BW
30-7	300+43.50	0.12 Lt	1330.79	TC
30-6	300+43.50	0	1330.92	FL
30-8	300+47.77	0	1330.57	TC/FL
30-20	300+51.34	7.76 Lt	1330.86	BR
30-9	300+52.63	0	1330.50	TC/FL
30-11	300+56.62	0.13 Lt	1330.65	TC
30-10	300+56.62	0	1330.40	FL
30-21	300+57.14	4.70 Lt	1330.81	BR
30-13	300+59.15	0.13 Lt	1330.65	TC
30-12	300+59.15	0	1330.39	FL
30-22	300+61.25	5.74 Lt	1330.82	BR
30-14	300+63.46	0	1330.38	TC/FL
30-15	300+68.00	0	1330.36	TC/FL
30-23	300+68.46	6.33 Lt	1330.75	BR
30-16	300+68.49	0.13 Lt	1330.65	TC
30-24	300+69.29	10.78 Lt	1330.77	BW
30-17	300+72.51	0	1330.36	FL
30-18	300+81.97	0	1330.37	FL
30-19	300+91.52	0	1330.38	FL

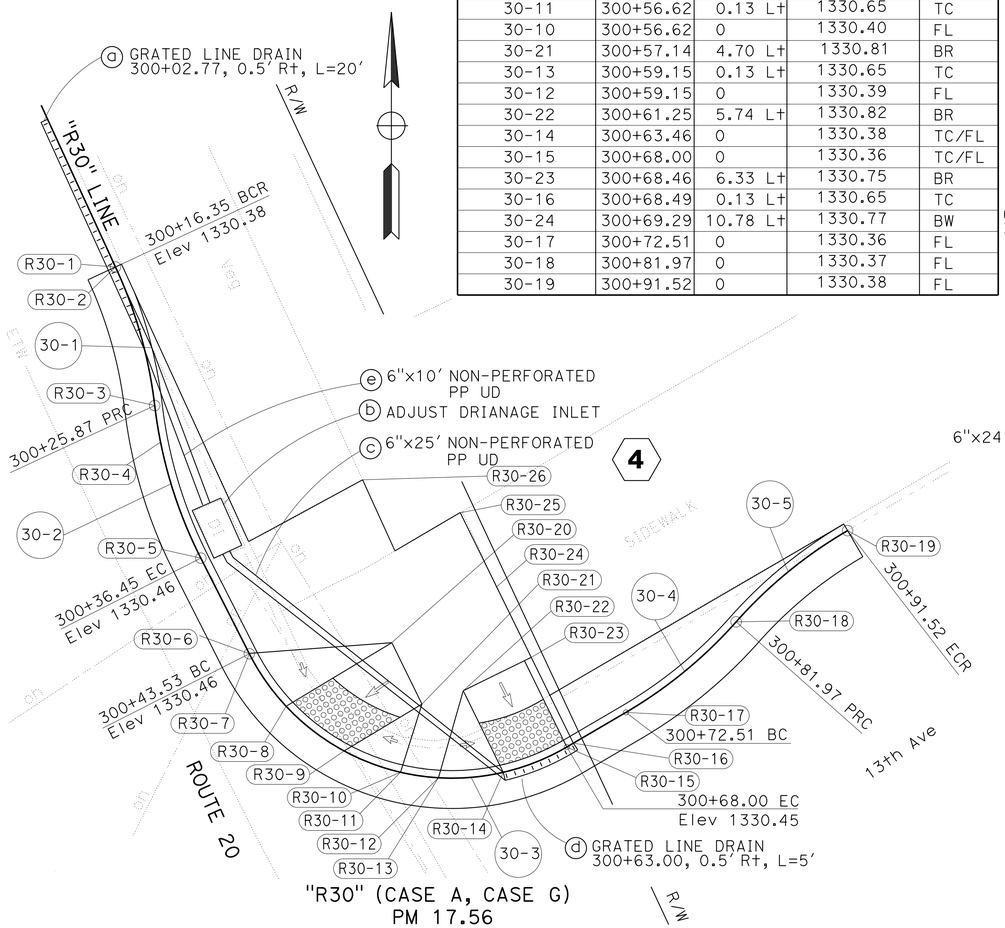

"R30" (CASE A, CASE G)
PM 17.56

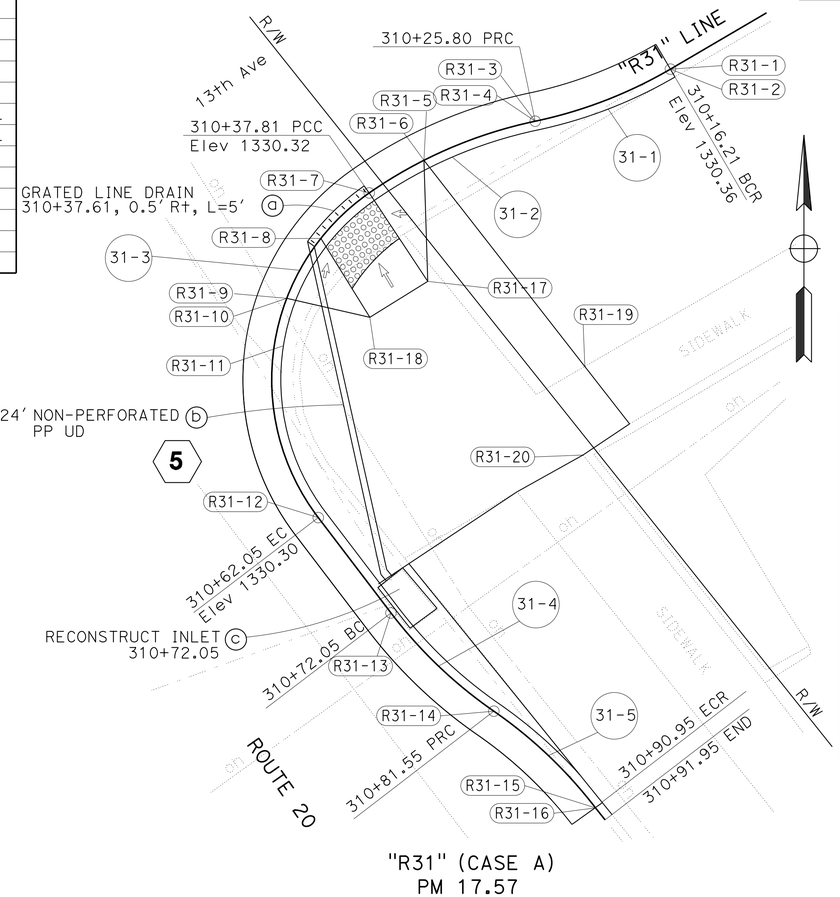

"R31" (CASE A)
PM 17.57

CURVE DATA

No.	RADIUS	DELTA	T	L
31-1	30.0′	18°20′29"	4.84′	9.60′
31-2	30.0′	22°56′40"	6.09′	12.02′
31-3	15.0′	92°28′54"	15.68′	24.24′
31-4	30.0′	18°00′21"	4.75′	9.43′
31-5	30.0′	17°45′50"	4.69′	9.30′

POINT NAME	STATION	OFFSET	ELEVATION	NOTES
31-1	310+16.19	0	1330.36	FL
31-2	310+16.19	0.13 Lt	1330.84	TC
31-19	310+25.63	16.39 Lt	1330.83	SW
31-3	310+25.80	0	1330.35	FL
31-4	310+25.80	0.12 Lt	1330.68	TC
31-5	310+33.60	0	1330.33	FL
31-6	310+33.65	0.12 Lt	1330.66	TC
31-7	310+37.61	0	1330.32	TC/FL
31-17	310+38.12	7.00 Lt	1330.65	BR
31-8	310+42.21	0	1330.31	TC/FL
31-18	310+45.53	5.54 Lt	1330.59	BR
31-10	310+46.76	0.12 Lt	1330.64	TC
31-9	310+46.78	0	1330.31	FL
31-11	310+49.93	0	1330.31	TC
31-12	310+62.05	0	1330.30	FL
31-20	310+69.36	16.40 Lt	1330.79	BW
31-13	310+69.96	0	1330.30	FL
31-14	310+81.55	0	1330.23	FL
31-16	310+90.95	0.13 Lt	1330.50	TC
31-15	310+90.95	0	1330.18	FL

CONSTRUCTION DETAILS

SCALE: 1" = 5′

C-12

REVISED BY | DATE REVISED
MATT SMITH | ERIC SHADA
CALCULATED-DESIGNED BY | CHECKED BY
FUNCTIONAL SUPERVISOR: KELLY B. TIMMONS

STATE OF CALIFORNIA - DEPARTMENT OF TRANSPORTATION
Caltrans DESIGN

P:\PROJ\01\0B120\drafting\Sheets\0112000010ga012.dgn

LAST REVISION | DATE PLOTTED => 16-AUG-2016 | TIME PLOTTED => 14:28

BORDER LAST REVISED 7/2/2010 | USERNAME => s132662 | DGN FILE => 0112000010ga012.dgn | RELATIVE BORDER SCALE IS IN INCHES 0 1 2 3 | UNIT 0312 | PROJECT NUMBER & PHASE 01 1200 0010 1

Dist	COUNTY	ROUTE	POST MILES TOTAL PROJECT	SHEET No.	TOTAL SHEETS
01	Lak	20	13.5/30.5	14	37

Matthew Smith 06/13/16
REGISTERED CIVIL ENGINEER DATE

June 13, 2016
PLANS APPROVAL DATE

REGISTERED PROFESSIONAL ENGINEER MATTHEW A. SMITH No. 79116 Exp. 3-31-18 CIVIL STATE OF CALIFORNIA

THE STATE OF CALIFORNIA OR ITS OFFICERS OR AGENTS SHALL NOT BE RESPONSIBLE FOR THE ACCURACY OR COMPLETENESS OF SCANNED COPIES OF THIS PLAN SHEET.

NOTES:

1. LOCATION OF EXISTING UTILITIES SHOWN ON THESE PLANS ARE APPROXIMATE AND SHALL BE VERIFIED BY CONTRACTOR PRIOR TO CONSTRUCTION.
2. FOR ACCURATE RIGHT OF WAY DATA CONTACT RIGHT OF WAY ENGINEERING AT THE DISTRICT OFFICE.

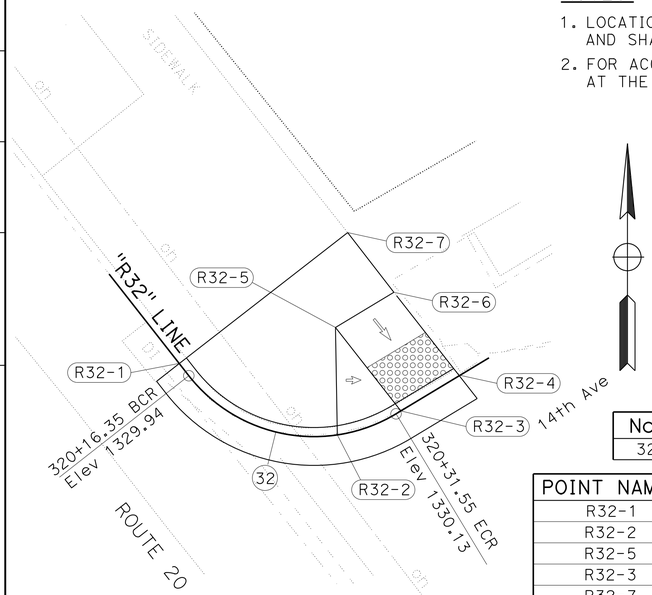

"R32" (CASE A, MODIFIED)
PM 17.62

CURVE DATA

No.	RADIUS	DELTA	T	L
32	10.5′	87°57′09"	9.28′	15.20′

POINT NAME	STATION	OFFSET	ELEVATION	NOTES
R32-1	320+15.32	0.13 Lt	1330.46	TC
R32-2	320+27.42	0.13 Lt	1330.54	TC
R32-5	320+30.13	6.91 Lt	1330.57	BR
R32-3	320+31.92	0	1330.15	TC/FL
R32-7	320+34.99	11.89 Lt	1330.64	BW
R32-6	320+35.56	6.94 Lt	1330.62	BR
R32-4	320+36.42	0	1330.22	TC/FL

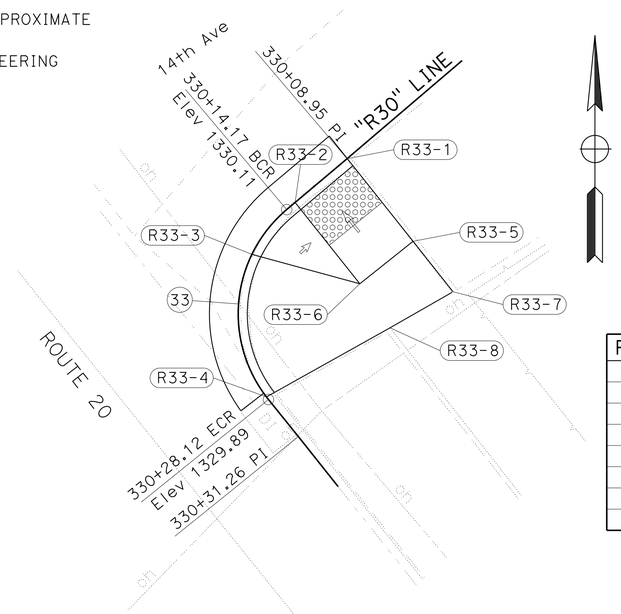

"R33" (CASE A, MODIFIED)
PM 17.63

CURVE DATA

No.	RADIUS	DELTA	T	L
33	9.0′	88°47′01"	8.81′	13.95′

POINT NAME	STATION	OFFSET	ELEVATION	NOTES
R33-1	330+08.94	0	1330.20	TC/FL
R33-5	330+09.14	6.98 Lt	1330.52	BR
R33-7	330+09.27	11.22 Lt	1330.58	BW
R33-2	330+13.44	0	1330.13	TC/FL
R33-6	330+13.63	6.86 Lt	1330.50	BR
R33-3	330+17.94	0.13 Lt	1330.35	TC
R33-4	330+27.90	0.13 Lt	1330.38	TC
R33-8	330+29.47	9.22 Lt	1330.53	BW

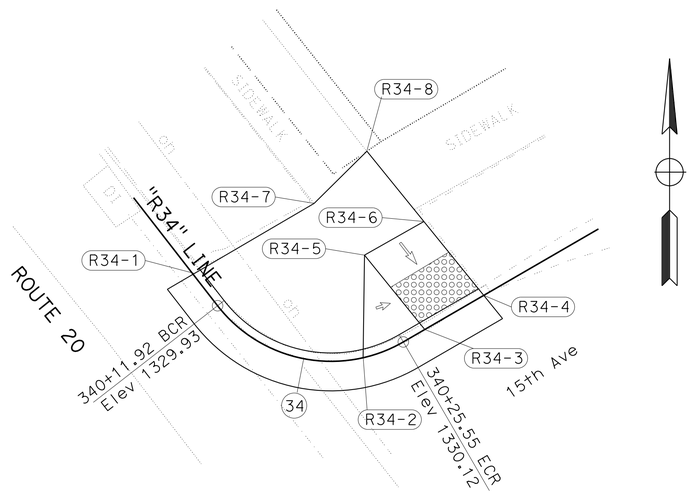

"R34" (CASE A, MODIFIED)
PM 17.68

CURVE DATA

No.	RADIUS	DELTA	T	L
34	9.5′	82°12′17"	8.29′	13.63′

POINT NAME	STATION	OFFSET	ELEVATION	NOTES
R34-1	340+09.20	0.13 Lt	1330.33	TC
R34-7	340+10.50	9.18 Lt	1330.56	SW
R34-2	340+22.69	0.13 Lt	1330.34	TC
R34-5	340+26.21	6.24 Lt	1330.42	BR
R34-3	340+27.19	0	1330.18	TC/FL
R34-8	340+29.77	12.10Lt	1330.61	SW
R34-6	340+30.71	6.20 Lt	1330.48	BR
R34-4	340+31.69	0	1330.21	TC/FL

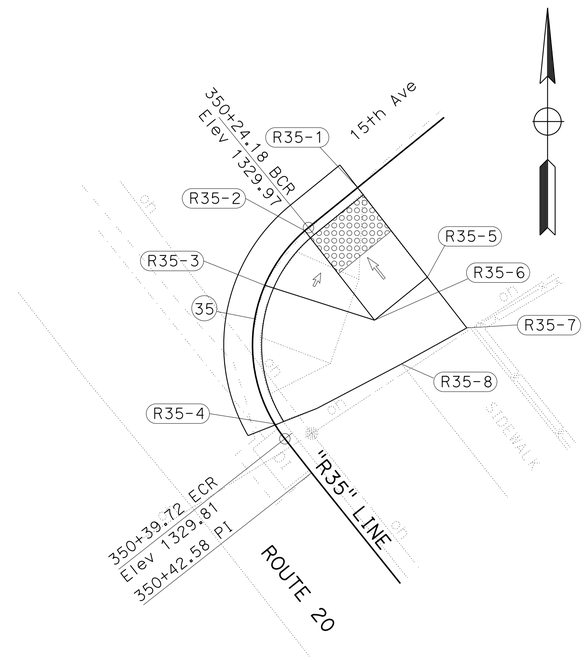

"R35" (CASE A, MODIFIED)
PM 17.69

CURVE DATA

No.	RADIUS	DELTA	T	L
35	10.0′	89°03′36"	9.84′	15.54′

POINT NAME	STATION	OFFSET	ELEVATION	NOTES
R35-1	350+20.00	0 Lt	1330.01	TC/FL
R35-5	350+20.15	7.49 Lt	1330.56	BR
R35-7	350+20.24	11.73 Lt	1330.62	BW
R35-2	350+24.50	0 Lt	1329.97	TC/FL
R35-6	350+26.03	7.45 Lt	1330.50	BR
R35-3	350+29.00	0.13 Lt	1330.34	TC
R35-4	350+38.63	0.13 Lt	1330.29	TC
R35-8	350+40.60	9.11 Lt	1330.54	BW

CONSTRUCTION DETAILS

SCALE: 1" = 5′

C-13

STATE OF CALIFORNIA - DEPARTMENT OF TRANSPORTATION
DESIGN
FUNCTIONAL SUPERVISOR: KELLY B. TIMMONS
CALCULATED-DESIGNED BY: MATT SMITH
CHECKED BY: ERIC SHADA
REVISED BY
DATE REVISED
P:\PROJ\01\0B120\drafting\Sheets\0112000010ga013.dgn

LAST REVISION 06-01-16
DATE PLOTTED => 16-AUG-2016
TIME PLOTTED => 14:28

Dist	COUNTY	ROUTE	POST MILES TOTAL PROJECT	SHEET No.	TOTAL SHEETS
01	Lak	20	13.5/30.5	15	37

Matthew Smith 06/13/16
REGISTERED CIVIL ENGINEER DATE

June 13, 2016
PLANS APPROVAL DATE

REGISTERED PROFESSIONAL ENGINEER MATTHEW A. SMITH No. 79116 Exp. 3-31-18 CIVIL STATE OF CALIFORNIA

THE STATE OF CALIFORNIA OR ITS OFFICERS OR AGENTS SHALL NOT BE RESPONSIBLE FOR THE ACCURACY OR COMPLETENESS OF SCANNED COPIES OF THIS PLAN SHEET.

NOTES:

1. LOCATION OF EXISTING UTILITIES SHOWN ON THESE PLANS ARE APPROXIMATE AND SHALL BE VERIFIED BY CONTRACTOR PRIOR TO CONSTRUCTION.
2. FOR ACCURATE RIGHT OF WAY DATA CONTACT RIGHT OF WAY ENGINEERING AT THE DISTRICT OFFICE.

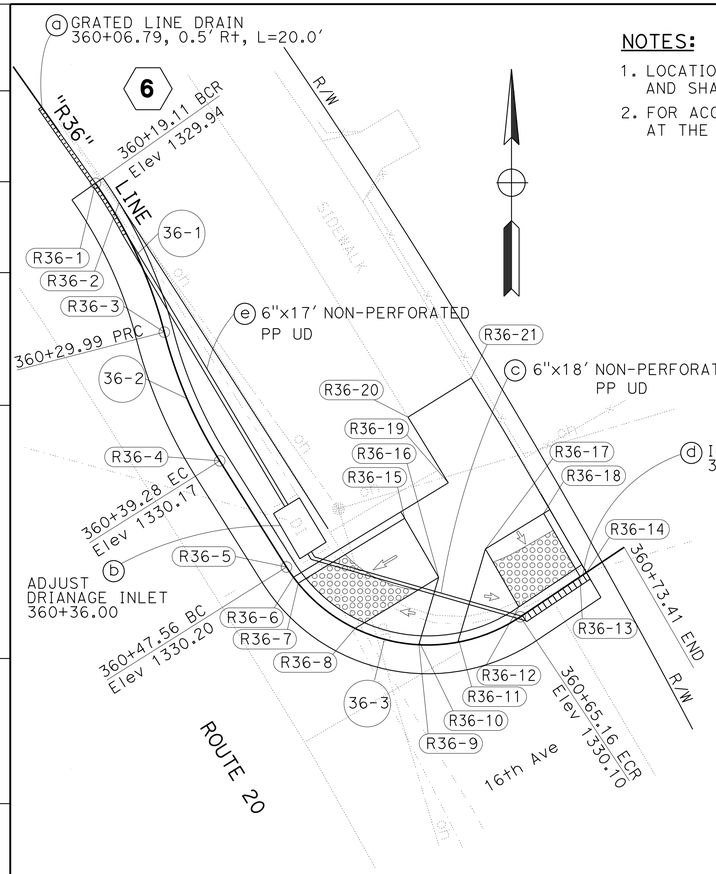

"R36" (CASE G, CASE G)
PM 17.74

CURVE DATA

No.	RADIUS	DELTA	T	L
36-1	30.0'	20°47'24"	5.50'	10.89'
36-2	30.0'	17°44'32"	4.68'	9.29'
36-3	11.0'	91°38'49"	11.32'	17.59'

POINT NAME	STATION	OFFSET	ELEVATION	NOTES
R36-1	360+19.11	0	1329.95	FL
R36-2	360+21.37	0.13 Lt	1330.19	TC
R36-3	360+29.99	0	1329.97	FL
R36-4	360+39.28	0	1330.17	FL
R36-20	360+43.49	12.06 Lt	1330.34	BW
R36-5	360+47.56	0	1330.20	FL
R36-6	360+48.41	0.13 Lt	1330.54	TC
R36-7	360+48.91	0	1330.21	TC/FL
R36-15	360+53.05	7.94 Lt	1330.24	BR
R36-8	360+53.76	0	1330.16	FL
R36-9	360+58.11	0	1330.14	FL
R36-10	360+58.15	0.13 Lt	1330.47	TC
R36-16	360+59.92	4.39 Lt	1330.22	BR
R36-11	360+60.77	0.13 Lt	1330.45	TC
R36-12	360+65.39	0	1330.10	FL
R36-17	360+65.73	4.97 Lt	1330.26	BR
R36-19	360+66.12	9.96 Lt	1330.30	SW
R36-13	360+69.91	0	1330.11	TC/FL
R36-18	360+70.23	4.78 Lt	1330.30	BR
R36-14	360+70.41	0.13 Lt	1330.12	TC
R36-21	360+71.23	14.87 Lt	1330.38	BW

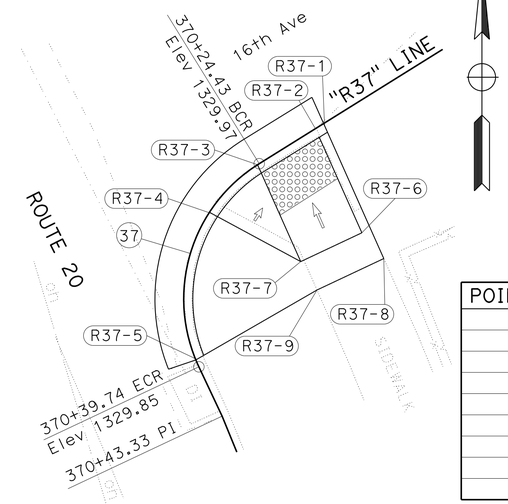

"R37" (CASE G)
PM 17.75

CURVE DATA

No.	RADIUS	DELTA	T	L
37-1	10.5'	83°31'15"	9.38'	15.31'

POINT NAME	STATION	OFFSET	ELEVATION	NOTES
R37-1	370+19.44	0.13 Lt	1330.34	TC
R37-2	370+20.06	0	1330.00	TC/FL
R37-8	370+20.72	9.65 Lt	1330.31	BW
R37-6	370+21.06	7.44 Lt	1330.3	BR
R37-3	370+24.56	0	1329.97	TC/FL
R37-7	370+27.47	6.78 Lt	1330.24	BR
R37-4	370+29.06	0.13 Lt	1330.27	TC
R37-9	370+31.56	8.70 Lt	1330.25	BW
R37-5	370+39.24	0.13 Lt	1330.12	TC

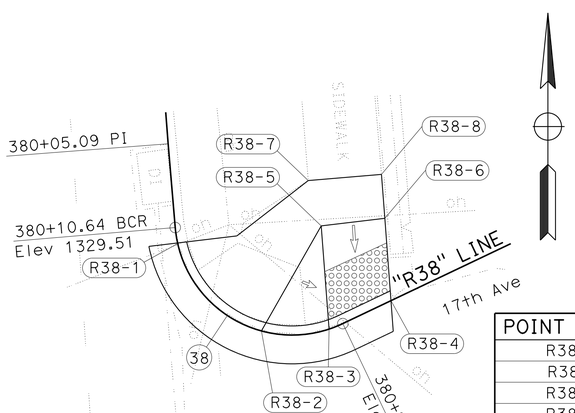

"R38" (CASE A, MODIFIED)
PM 17.80

CURVE DATA

No.	RADIUS	DELTA	T	L
38	7.75'	110°41'03"	11.21'	14.97'

POINT NAME	STATION	OFFSET	ELEVATION	NOTES
R38-7	380+08.29	9.01 Lt	1330.22	BW
R38-1	380+11.67	0.13 Lt	1329.94	TC
R38-2	380+20.13	0.13 Lt	1330.01	TC
R38-3	380+24.63	0	1329.86	TC/FL
R38-5	380+27.10	6.43 Lt	1330.17	BR
R38-4	380+29.13	0	1329.92	TC/FL
R38-6	380+31.11	5.08 Lt	1330.20	BR
R38-8	380+32.15	7.79 Lt	1330.27	BW

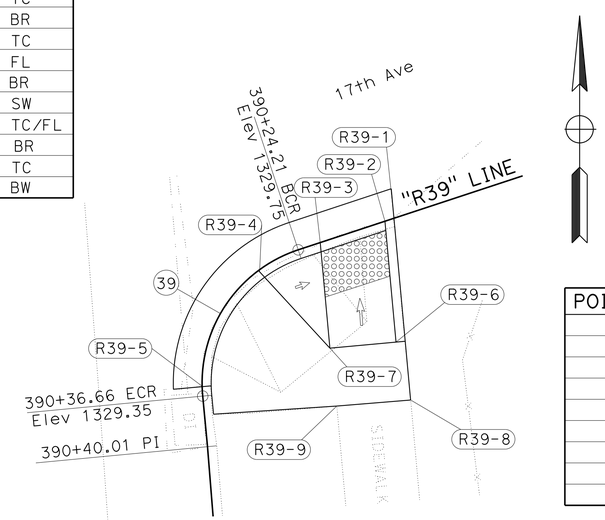

"R39" (CASE G)
PM 17.81

CURVE DATA

No.	RADIUS	DELTA	T	L
39	9.25'	77°06'08"	7.37'	12.45'

POINT NAME	STATION	OFFSET	ELEVATION	NOTES
R39-1	390+17.58	0.13 Lt	1330.19	TC
R39-2	390+18.18	0	1329.85	TC/FL
R39-6	390+19.99	7.81 Lt	1330.25	BR
R39-8	390+20.27	11.74 Lt	1330.28	BW
R39-3	390+22.68	0	1329.79	TC/FL
R39-7	390+24.41	6.82 Lt	1330.21	BR
R39-4	390+27.18	0.13 Lt	1330.01	TC
R39-5	390+36.01	0.13 Lt	1330.03	TC
R39-9	390+38.15	8.75 Lt	1330.22	BW

CONSTRUCTION DETAILS

SCALE: 1" = 5'

C-14

REVISED BY | DATE REVISED
MATT SMITH | ERIC SHADA
CALCULATED-DESIGNED BY | CHECKED BY
FUNCTIONAL SUPERVISOR
KELLY B. TIMMONS

STATE OF CALIFORNIA - DEPARTMENT OF TRANSPORTATION
Caltrans DESIGN

P:\PROJ\01\0B120\drafting\Sheets\0112000010ga014.dgn

LAST REVISION 06-01-16 | DATE PLOTTED => 16-AUG-2016 | TIME PLOTTED => 14:28

Dist	COUNTY	ROUTE	POST MILES TOTAL PROJECT	SHEET No.	TOTAL SHEETS
01	Lak	20	13.5/30.5	16	37

REGISTERED CIVIL ENGINEER 06/13/16 DATE

PLANS APPROVAL DATE June 13, 2016

REGISTERED PROFESSIONAL ENGINEER MATTHEW A. SMITH No. 79116 Exp. 3-31-18 CIVIL STATE OF CALIFORNIA

THE STATE OF CALIFORNIA OR ITS OFFICERS OR AGENTS SHALL NOT BE RESPONSIBLE FOR THE ACCURACY OR COMPLETENESS OF SCANNED COPIES OF THIS PLAN SHEET.

NOTES:

1. LOCATION OF EXISTING UTILITIES SHOWN ON THESE PLANS ARE APPROXIMATE AND SHALL BE VERIFIED BY CONTRACTOR PRIOR TO CONSTRUCTION.
2. FOR ACCURATE RIGHT OF WAY DATA CONTACT RIGHT OF WAY ENGINEERING AT THE DISTRICT OFFICE.

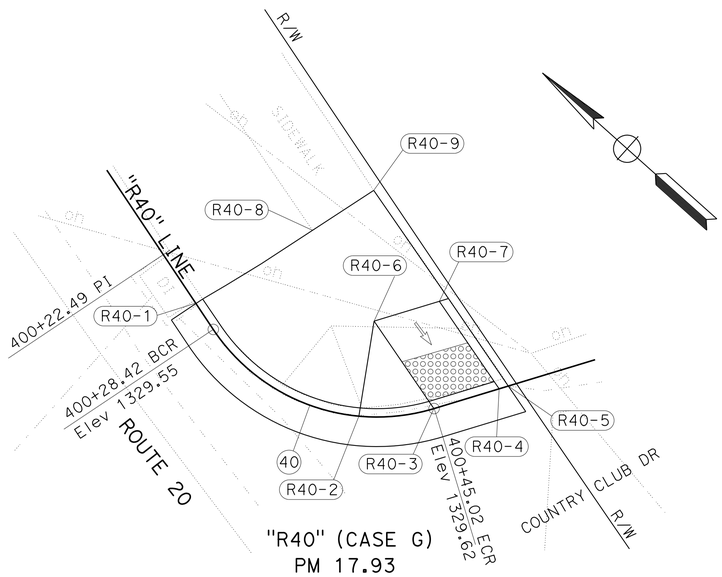

"R40" (CASE G)
PM 17.93

CURVE DATA

No.	RADIUS	DELTA	T	L
40	13.0	73°08′23"	9.64′	16.59′

POINT NAME	STATION	OFFSET	ELEVATION	NOTES
R40-1	400+26.34	0.13 Lt	1329.91	TC
R40-8	400+26.62	9.08 Lt	1329.90	BW
R40-9	400+26.68	13.91 Lt	1329.90	BW
R40-2	400+40.00	0.13 Lt	1329.93	TC
R40-6	400+40.81	6.33 Lt	1329.80	BR
R40-3	400+45.00	0	1329.62	TC/FL
R40-7	400+47.40	6.67 Lt	1329.80	BR
R40-4	400+49.50	0	1329.64	TC/FL
R40-5	400+50.13	0.13 Lt	1329.64	TC

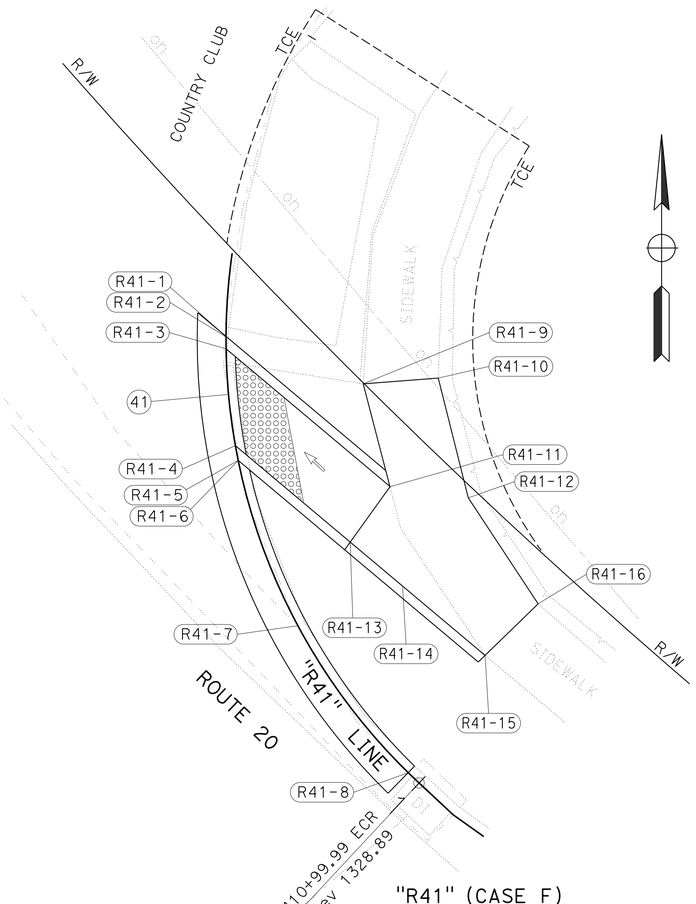

"R41" (CASE F)
PM 17.94

CURVE DATA

No.	RADIUS	DELTA	T	L
41	40.0′	117°43′10"	66.70	82.18

POINT NAME	STATION	OFFSET	ELEVATION	NOTES
R41-1	410+66.95	0	1329.14	FL
R41-2	410+67.05	0.13 Lt	1329.64	TC
R41-3	410+67.77	0	1329.14	TC/FL
R41-9	410+70.93	8.92 Lt	1330.20	SW
R41-10	410+71.07	13.89 Lt	1330.25	BW
R41-4	410+74.20	0	1329.13	TC/FL
R41-5	410+75.19	0	1329.12	FL
R41-6	410+75.35	0.13 Lt	1329.62	TC
R41-11	410+80.02	9.24 Lt	1229.93	BR
R41-13	410+83.08	5.5 Lt	1329.86	BR
R41-12	410+83.58	13.81 Lt	1330.00	BW
R41-7	410+86.76	0	1329.10	FL
R41-14	410+88.00	7.31 Lt	1229.92	SW
R41-16	410+96.46	13.91 Lt	1329.83	BW
R41-15	410+96.70	9.03 Lt	1329.72	BW
R41-8	410+98.98	0	1328.99	FL

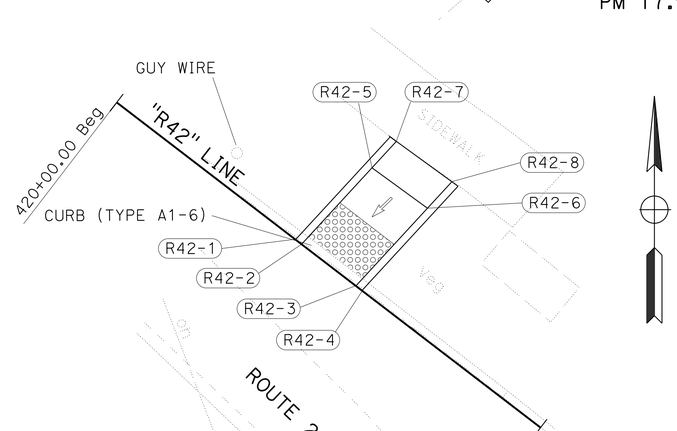

"R42" (CASE F)
PM 17.99

POINT NAME	STATION	OFFSET	ELEVATION	NOTES
R42-1	420+19.34	0.13 Lt	1329.47	TC
R42-2	420+19.84	0	1329.24	TC/FL
R42-5	420+20.50	6.97 Lt	1329.63	BR
R42-7	420+20.71	9.32 Lt	1329.66	SW
R42-3	420+24.37	0	1329.27	TC/FL
R42-4	420+24.87	0.13 Lt	1329.48	TC
R42-6	420+25.00	6.97 Lt	1329.63	BR
R42-8	420+25.20	9.33 Lt	1329.63	SW

CONSTRUCTION DETAILS

SCALE: 1" = 5′

C-15

REVISED BY | DATE REVISED
MATT SMITH | ERIC SHADA
CALCULATED-DESIGNED BY | CHECKED BY
FUNCTIONAL SUPERVISOR
KELLY B. TIMMONS

STATE OF CALIFORNIA - DEPARTMENT OF TRANSPORTATION
Caltrans
DESIGN

P:\PROJ\01\08120\drafting\Sheets\0112000010ga015.dgn

LAST REVISION 06-01-16 | DATE PLOTTED => 16-AUG-2016 | TIME PLOTTED => 14:28

Dist	COUNTY	ROUTE	POST MILES TOTAL PROJECT	SHEET No.	TOTAL SHEETS
01	Lak	20	13.5/30.5	17	37

REGISTERED CIVIL ENGINEER 06/13/16 DATE

June 13, 2016
PLANS APPROVAL DATE

REGISTERED PROFESSIONAL ENGINEER MATTHEW A. SMITH No. 79116 Exp. 3-31-18 CIVIL STATE OF CALIFORNIA

THE STATE OF CALIFORNIA OR ITS OFFICERS OR AGENTS SHALL NOT BE RESPONSIBLE FOR THE ACCURACY OR COMPLETENESS OF SCANNED COPIES OF THIS PLAN SHEET.

NOTES:

1. LOCATION OF EXISTING UTILITIES SHOWN ON THESE PLANS ARE APPROXIMATE AND SHALL BE VERIFIED BY CONTRACTOR PRIOR TO CONSTRUCTION.
2. FOR ACCURATE RIGHT OF WAY DATA CONTACT RIGHT OF WAY ENGINEERING AT THE DISTRICT OFFICE.

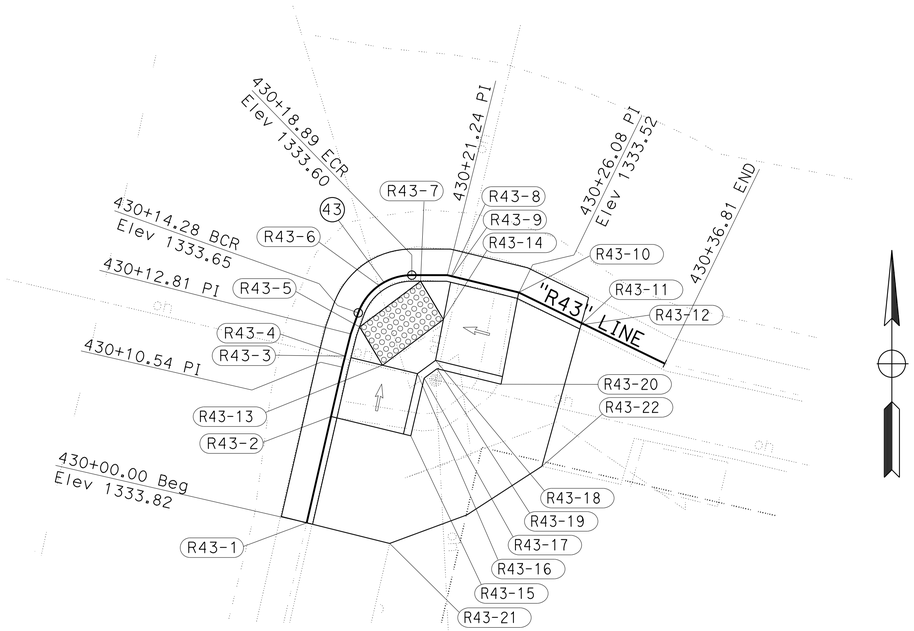

"R43" (CASE C, MODIFIED)
PM 27.87

POINT NAME	STATION	OFFSET	ELEVATION	NOTES
R43-1	430+00.00	0.13 R+	1334.26	TC
R43-15	430+07.13	5.42 R+	1334.04	SW
R43-2	430+07.20	0.13 R+	1334.00	TC
R43-17	430+11.11	5.41 R+	1334.10	TC
R43-4	430+11.24	0.13 R+	1333.70	TC
R43-3	430+11.24	0 R+	1333.70	FL
R43-13	430+11.27	2.59 R+	1333.70	BR
R43-16	430+11.29	4.91 R+	1333.74	BW
R43-5	430+13.77	0 R+	1333.66	TC/FL
R43-6	430+16.59	0 R+	1333.63	TC/FL
R43-7	430+19.23	0 R+	1333.60	TC/FL
R43-18	430+20.55	5.60 R+	1333.71	BW
R43-8	430+21.62	0 R+	1333.57	FL
R43-9	430+21.62	0.13 R+	1333.63	TC
R43-21	430+21.70	18.11 R+	1334.37	SW
R43-14	430+21.76	2.99 R+	1333.68	BR
R43-19	430+22.12	6.11 R+	1334.10	TC
R43-10	430+26.11	0.13 R+	1333.96	TC
R43-20	430+27.67	5.91 R+	1334.04	SW
R43-11	430+30.70	0	1333.46	FL
R43-12	430+30.70	0.13 R+	1333.85	TC
R43-22	430+32.48	9.64 R+	1334.16	SW

CURVE DATA

No.	RADIUS	DELTA	T	L
43	3.75′	70°25′44"	2.65′	4.61′

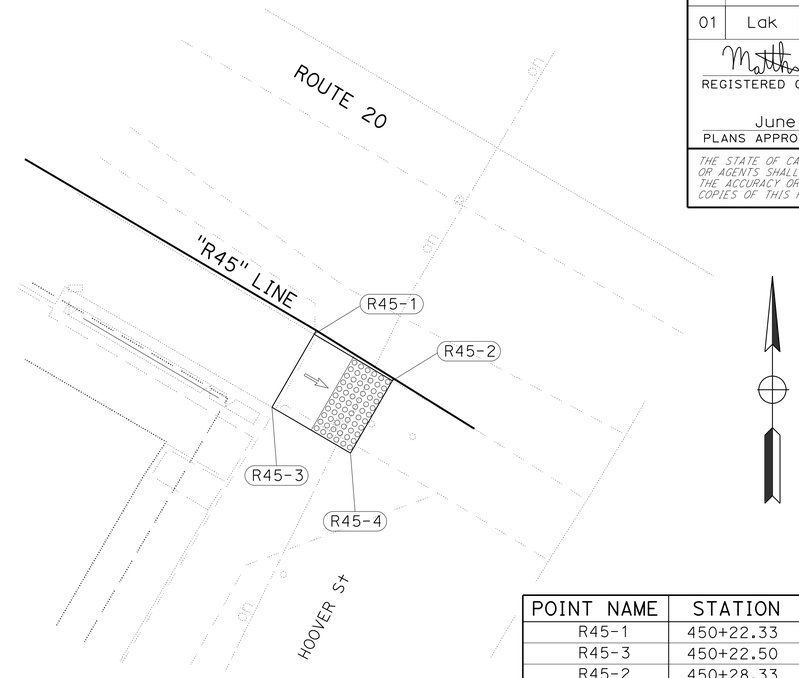

"R45" (CASE A, MODIFIED)
PM 28.70

POINT NAME	STATION	OFFSET	ELEVATION	NOTES
R45-1	450+22.33	0.13 L+	1345.20	BR
R45-3	450+22.50	5.85 L+	1345.35	BR
R45-2	450+28.33	0	1344.93	FL
R45-4	450+28.50	5.68 L+	1345.00	FL

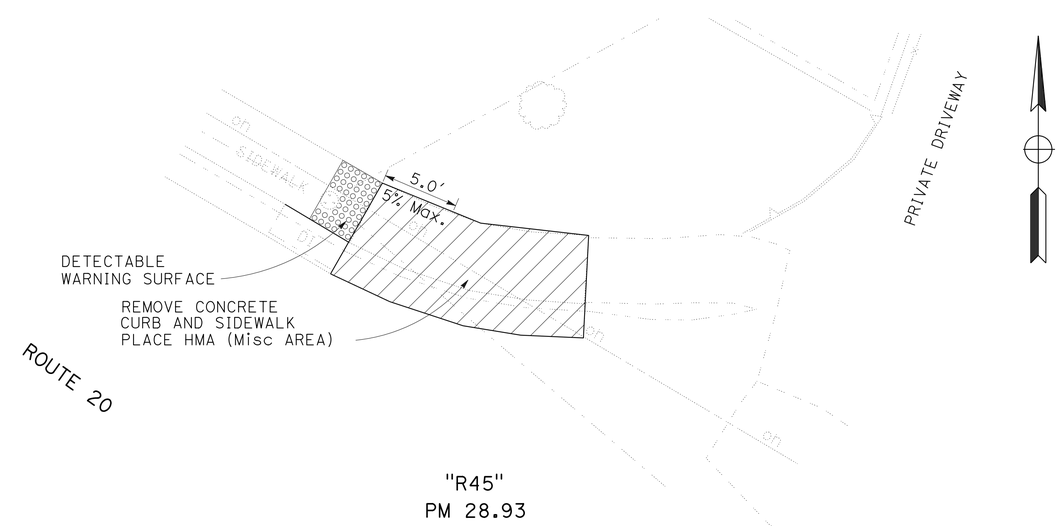

"R45"
PM 28.93

CONSTRUCTION DETAILS

SCALE: 1" = 5′

C-16

REVISED BY | DATE REVISED
MATT SMITH | ERIC SHADA
CALCULATED-DESIGNED BY | CHECKED BY
FUNCTIONAL SUPERVISOR
KELLY B. TIMMONS

STATE OF CALIFORNIA - DEPARTMENT OF TRANSPORTATION
Caltrans
DESIGN

P:\PROJ\01\0B120\drafting\Sheets\0112000010ga016.dgn

LAST REVISION 06-01-16 | DATE PLOTTED => 16-AUG-2016 | TIME PLOTTED => 14:28

Dist	COUNTY	ROUTE	POST MILES TOTAL PROJECT	SHEET No.	TOTAL SHEETS
01	Lak	20	13.5/30.5	18	37

REGISTERED CIVIL ENGINEER 06/13/16 DATE

June 13, 2016
PLANS APPROVAL DATE

REGISTERED PROFESSIONAL ENGINEER MATTHEW A. SMITH No. 79116 Exp. 3-31-18 CIVIL STATE OF CALIFORNIA

THE STATE OF CALIFORNIA OR ITS OFFICERS OR AGENTS SHALL NOT BE RESPONSIBLE FOR THE ACCURACY OR COMPLETENESS OF SCANNED COPIES OF THIS PLAN SHEET.

LOCATION		INLET TYPE	ELEVATION		h
ALIGNMENT	STA		EXIST GRATE (ft)	FINISH PLATE (ft)	(ft)
"R-10"	100+23.48	G3	1331.72	1332.22	0.50
"R-22A"	220+34.70	G3	1331.12	1331.65	0.53
"R-30"	300+35.06	G3	1330.29	1330.79	0.50
"R-36"	360+45.85	G3	1329.82	1330.54	0.72

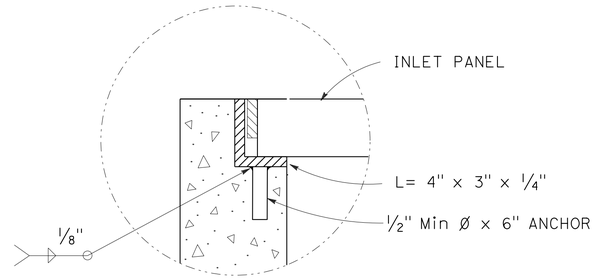

DETAIL "A"

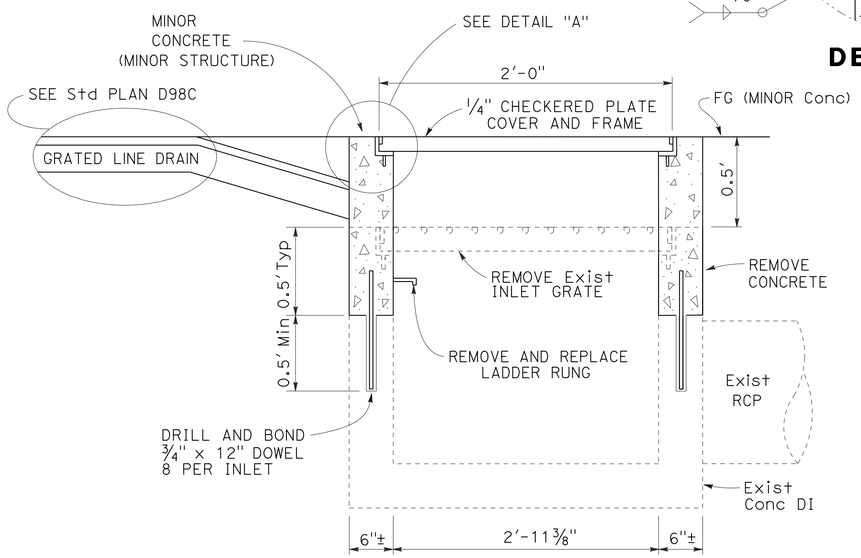

ADJUSTED DRAINAGE INLET

(2) ⓐ
(3) ⓑ
(4) ⓑ
(6) ⓑ

SYSTEM NUMBER ⬡	DRAINAGE UNIT ◯	CONSTRUCTION DETAIL SHEETS No.	REMOVE WATER VALVE (NON-OPERATIONAL)	ADJUST INLET	RECONSTRUCT INLET	MINOR CONCRETE (MINOR STRUCTURE)	MISC IRON AND STEEL	GRATED LINE DRAIN *	6" NON-PERFORATED PP UD	REMARKS
			EA	EA	EA	CY	LB	LF	LF	
1	a	C-5							7	MORRISION CREEK
	b							10		
	c		1							
2	a	C-6		1		0.2	176			2nd Ave
	b							5		
	c								21	
3	a	C-10						20		9th Ave
	b			1		0.2	176			
	c								14	
	d							6		
	e								16	
4	a	C-12						20		13th Ave
	b			1		0.2	176			
	c								28	
	d							5		
	e								10	
5	a	C-12						5		
	b								24	
	c				1	0.7	174			RECONSTRUCT TO TYPE OS
6	a	C-14						20		16th Ave
	b			1		0.2	176			
	c								18	
	d							5		
	e								17	
		TOTAL	1	4	1	1.5	878	96	155	

* GRATED LINE DRAIN WITHIN PEDESTRIAN PATH OF TRAVEL SHALL HAVE A MAXIMUM GRATE OPENING OF 1/2" PER Std PLAN D98C

DRAINAGE DETAILS AND QUANTITIES

NO SCALE

DD-1

REVISED BY | DATE REVISED
MATT SMITH | ERIC SHADA
CALCULATED-DESIGNED BY | CHECKED BY
FUNCTIONAL SUPERVISOR: KELLY B. TIMMONS

STATE OF CALIFORNIA - DEPARTMENT OF TRANSPORTATION
Caltrans **DESIGN**

P:\PROJ\01\0B120\drafting\Sheets\0112000010ic001.dgn

LAST REVISION 06-01-16 | DATE PLOTTED => 16-AUG-2016 | TIME PLOTTED => 14:28

Dist	COUNTY	ROUTE	POST MILES TOTAL PROJECT	SHEET No.	TOTAL SHEETS
01	Lak	20	13.5/30.5	19	37

REGISTERED CIVIL ENGINEER 06/13/16 DATE

PLANS APPROVAL DATE June 13, 2016

REGISTERED PROFESSIONAL ENGINEER MATTHEW A. SMITH No. 79116 Exp. 3-31-18 CIVIL STATE OF CALIFORNIA

THE STATE OF CALIFORNIA OR ITS OFFICERS OR AGENTS SHALL NOT BE RESPONSIBLE FOR THE ACCURACY OR COMPLETENESS OF SCANNED COPIES OF THIS PLAN SHEET.

NOTES:

1. CALIFORNIA SIGN CODES ARE DESIGNATED BY (CA) OTHERWISE FEDERAL CODES ARE SHOWN
2. EXACT SIGN LOCATION TO BE DETERMINED BY THE ENGINEER.

STATIONARY MOUNTED CONSTRUCTION AREA SIGNS

◯	TYPE	SIGN MESSAGE	PANEL SIZE	No. OF POSTS AND SIZE	No. OF SIGNS (N)
A	C40(CA)	TRAFFIC FINES DOUBLED IN CONSTRUCTION ZONE	108" x 42"	2 - 6" x 6"	4
B	W20-1	ROAD WORK AHEAD	36" x 36"	1 - 4" x 6"	4 *
C	W11-1	BICYCLE SYMBOL	36" x 36"	1 - 4" x 6"	4
	W16-1	SHARE THE ROAD	24" x 30"		
D	G20-2	END ROAD WORK	36" x 18"	1 - 4" x 6"	4

(N) NOT A SEPARATE PAY ITEM, FOR INFORMATION ONLY.

* AFFECTED SIDE STREETS WILL USE BARRICADE MOUNTED SIGNS. BARRICADE MOUNTED Const AREA SIGNS ARE CONSIDERED PART OF Const AREA SIGN LUMP SUM ITEMS.

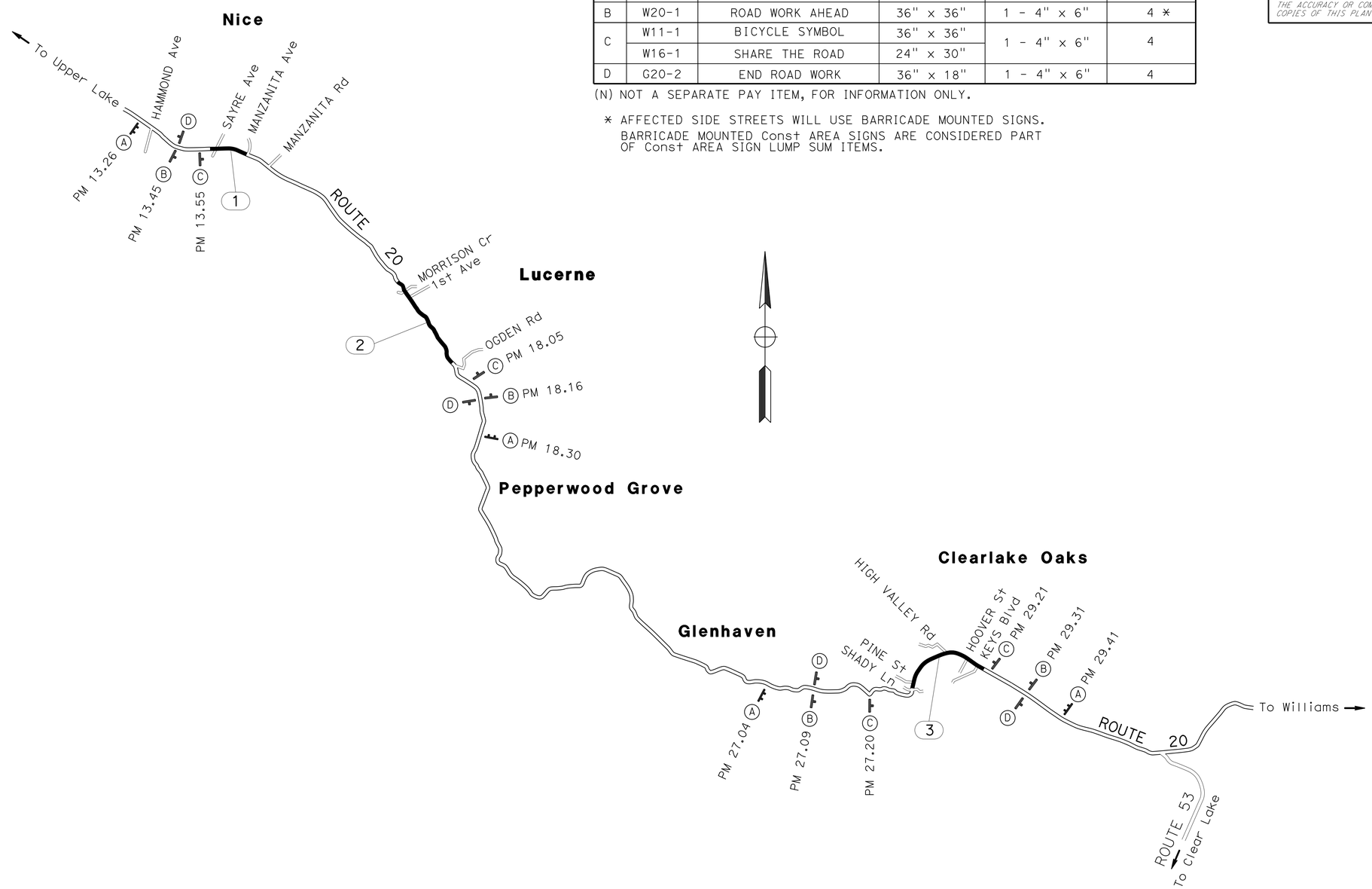

APPROVED FOR CONSTRUCTION AREA SIGN WORK ONLY

CONSTRUCTION AREA SIGNS

NO SCALE

CS-1

REVISED BY | DATE REVISED

MATT SMITH | ERIC SHADA

CALCULATED-DESIGNED BY | CHECKED BY

FUNCTIONAL SUPERVISOR: KELLY B. TIMMONS

STATE OF CALIFORNIA - DEPARTMENT OF TRANSPORTATION

Caltrans® **DESIGN**

P:\PROJ\01\08120\drafting\Sheets\01120000101a001.dgn

LAST REVISION 06-01-16 | DATE PLOTTED => 16-AUG-2016 TIME PLOTTED => 14:28

Dist	COUNTY	ROUTE	POST MILES TOTAL PROJECT	SHEET No.	TOTAL SHEETS
01	Lak	20	13.5/30.5	20	31

REGISTERED CIVIL ENGINEER — DATE 5-18-16

June 13, 2016
PLANS APPROVAL DATE

REGISTERED PROFESSIONAL ENGINEER — SCOTT LEZCHUK — No. C79030 — Exp. 3-31-18 — CIVIL — STATE OF CALIFORNIA

THE STATE OF CALIFORNIA OR ITS OFFICERS OR AGENTS SHALL NOT BE RESPONSIBLE FOR THE ACCURACY OR COMPLETENESS OF SCANNED COPIES OF THIS PLAN SHEET.

NOTES:

This sheet replaces 2010 Standard Plan T13 for District 1 Projects.

See Revised Standard Plan T9 for tables.

Use cone spacing X for taper segment, Y for tangent segment or Z for conflict situations, as appropriate, per Table 1, unless X, Y, or Z cone spacing is shown on this sheet.

All temporary warning signs shall have black legend on fluorescent orange background.

California codes are designated by (CA). Otherwise, Federal (MUTCD) codes are shown.

TYPICAL LANE CLOSURE WITH REVERSIBLE CONTROL

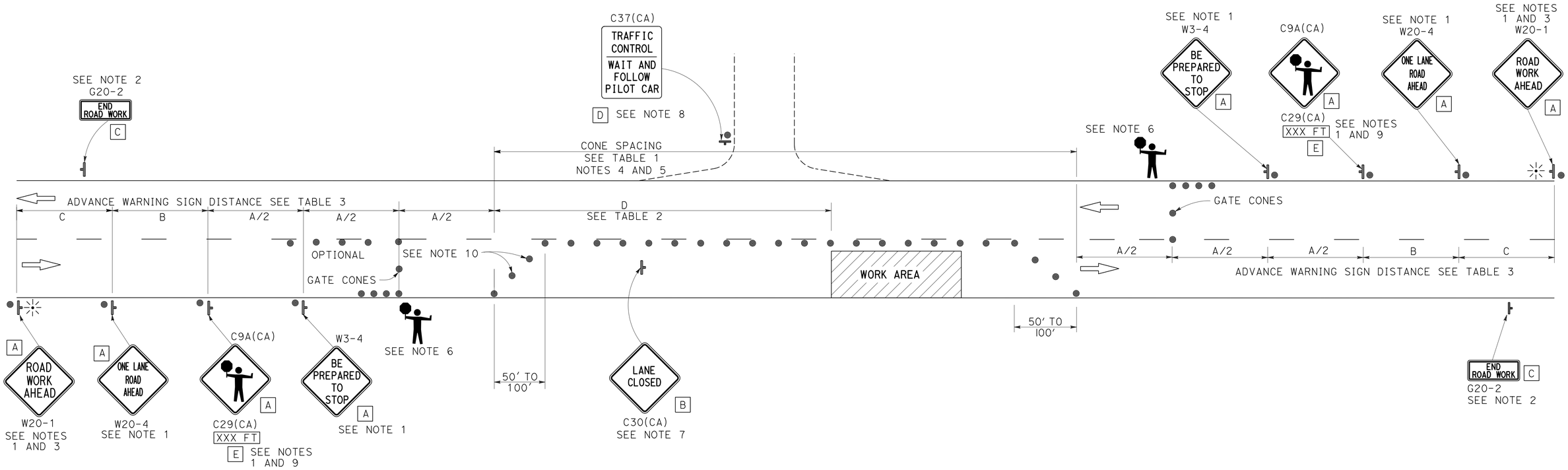

NOTES:

1. Each advance warning sign in each direction of travel shall be equipped with at least two flags for daytime closure. Each flag shall be at least 16" x 16" in size and shall be orange or fluorescent red-orange in color. Flashing beacons shall be placed at the locations indicated for lane closure during hours of darkness.
2. A G20-2 "END ROAD WORK" sign, as appropriate, shall be placed at the end of the lane control unless the end of work area is obvious, or ends within a larger project's limits.
3. If the W20-1 sign would follow within 2000' of a stationary W20-1 or G20-1 "ROAD WORK NEXT _____ MILES", use a W20-4 sign for the first advance warning sign.
4. All cones used for lane closures during the hours of darkness shall be fitted with retroreflective bands (or sleeves) as specified in the specifications.
5. Portable delineators, placed at one-half the spacing indicated for traffic cones, may be used instead of cones for daytime closures only.
6. Additional advance flaggers may be required. Flagger should stand in a conspicuous place, be visible to approaching traffic as well as approaching vehicles after the first vehicle has stopped. During the hours of darkness, the flagging-station and flagger shall be illuminated and clearly visible to approaching traffic. The illumination footprint of the lighting on the ground shall be at least 20' in diameter. Place a minimum of four cones at 50' intervals in advance of flagger station as shown.
7. Place C30(CA) "LANE CLOSED" sign at 500' to 1000' intervals throughout extended work areas. They are optional if the work area is visible from the flagger station.
8. When a pilot car is used, place a C37(CA) "TRAFFIC CONTROL-WAIT AND FOLLOW PILOT CAR" sign with black legend on white background at all intersections, driveways and alleys without a flagger within traffic control area. Signs shall be clean and visible at all times. Where traffic can not be effectively self-regulated, at least one flagger shall be used at each intersection within traffic control area.
9. An optional C29(CA) sign may be placed below the C9A(CA) sign.
10. Either traffic cones or barricades shall be placed on the taper. Barricades shall be Type I, II, or III.

SIGN PANEL SIZE (Min)

A	48" x 48"
B	30" x 30"
C	36" x 18"
D	36" x 42"
E	20" x 7"

LEGEND

- TRAFFIC CONE
- TEMPORARY TRAFFIC CONTROL SIGN
- PORTABLE FLASHING BEACON
- FLAGGER

APPROVED FOR TRAFFIC HANDLING WORK ONLY

STATE OF CALIFORNIA
DEPARTMENT OF TRANSPORTATION

TRAFFIC CONTROL SYSTEM FOR LANE CLOSURE ON TWO LANE CONVENTIONAL HIGHWAYS

NO SCALE

TH-1

REVISED BY | DATE REVISED
SCOTT LEZCHUK | PAUL HAILEY
CALCULATED-DESIGNED BY | CHECKED BY
FUNCTIONAL SUPERVISOR: KEVIN CHURCH
STATE OF CALIFORNIA - DEPARTMENT OF TRANSPORTATION
Caltrans® TRAFFIC OPERATIONS
P:\PROJ\01\0B120\drafting\Sheets\0112000010md001.dgn

LAST REVISION 00-00-00 | DATE PLOTTED => 16-AUG-2016 | TIME PLOTTED => 14:28

Dist	COUNTY	ROUTE	POST MILES TOTAL PROJECT	SHEET No.	TOTAL SHEETS
01	Lak	20	13.5/30.5	21	37

Matthew Smith 06/13/16
REGISTERED CIVIL ENGINEER DATE

June 13, 2016
PLANS APPROVAL DATE

REGISTERED PROFESSIONAL ENGINEER MATTHEW A. SMITH No. 79116 Exp. 3-31-18 CIVIL STATE OF CALIFORNIA

THE STATE OF CALIFORNIA OR ITS OFFICERS OR AGENTS SHALL NOT BE RESPONSIBLE FOR THE ACCURACY OR COMPLETENESS OF SCANNED COPIES OF THIS PLAN SHEET.

CURB RAMP QUANTITIES

LOCATION (ALIGNMENT NAME)	CLASS 2 AGGREGATE BASE	ROADWAY EXCAVATION	REMOVE CONCRETE CURB AND SIDEWALK	HMA (TYPE A)	PLACE HMA (Misc AREA)	TACK COAT	DETECTABLE WARNING SURFACE	MINOR CONCRETE (CURB, SIDEWALK AND CURB RAMP)	COMMENTS
	CY	CY	SQYD	TON	SQYD	LB	SQFT	CY	
"R1"		5.3	16.4	3.1	8.3	5.0	16.5	3.5	LEVY St
"R2"		5.3	16.4	3.1	8.3	5.0	16.5	3.5	KEELING St
"R3"		8.0	27.2	5.1	13.6	8.1	28.5	6.2	CRUMP St
PM 13.84 Lt							12.0		HOWARD St
"R4"		2.4	7.3	2.0	5.4	2.7	15.0	1.3	PM 14.21 Lt
"R5"		5.2	32.6	3.3	8.9	5.4	13.5	5.4	MANZANITA
"R6"		6.1	21.3	2.8	7.70	4.5	13.5	4.2	
"A" 10+89.27 TO 11+45.00 Lt	10.2	23.5		5.6	15.0	8.4	13.5	8.1	NW CORNER
"A" 11+27.75 TO 11+45.52 Rt	2.0	10.0		2.0	5.1	3.1	16.5	2.3	SW CORNER
"A" 12+03.68 TO 12+51.79 Lt	7.6	21.5	2.5	3.9	10.6	6.6		9.5	NE CORNER
"A" 12+03.71 TO 12+45.52 Rt	2.1	10.0		2.0	5.1	3.1	15.0	2.6	SE CORNER
"R7"		3.1	15.8	2.0	5.1	3.0	46.0	2.7	LAKE St.
"R8"	4.1	4.3	15.6	3.8	10.4	6.1	13.5	4.1	1st Ave.
PM 16.89 Rt							13.5		1st Ave. PARK SIDE
"R9"		3.7	15.9	2.3	6.1	3.6	27.0	3.2	1st Ave.
"R10"	1.5	9.7	16.4	5.9	15.9	9.4	13.5	5.0	2nd Ave
"R11"		3.6	15.4	2.2	5.9	3.5	27.0	3.2	2nd Ave
"R12"		3.7	17.5	2.3	6.1	3.6	60.0	3.3	3rd Ave
"R13"		4.2	21.6	2.6	6.9	4.1	61.5	3.9	3rd Ave
"R14"		4.0	18.3	2.4	6.5	3.9	27.0	3.4	4th Ave
PM 17.06 Lt							36.0		4th Ave
"R15"		3.9	19.1	2.4	6.4	3.8	13.5	3.5	5th Ave
"R16"		3.6	16.3	2.2	5.9	3.5	13.5	3.0	6th Ave
"R17"		3.2	8.7	2.0	5.1	3.0	13.5	2.0	6th Ave
"R18"		3.7	16.9	2.3	6.0	3.6	13.5	3.2	7th Ave
"R19"		3.3	12.6	2.1	5.5	3.3	13.5	2.5	7th Ave
"R20"		3.1	15.5	2.0	5.1	3.0	13.5	2.8	8th Ave
"R21"		2.9	8.6	2.0	5.1	2.8	13.5	2.0	8th Ave
"R22a"	1.5	9.7	24.6	4.2	11.2	6.6	55.5	5.4	9th Ave
"R22b"	5.7	10.0	2.3	3.9	10.6	6.2	27.0	7.0	PARK SW CORNER
"R23a"		3.3	13.7	2.0	5.5	3.3	57.0	2.6	9th Ave
"R23b"		6.0	31.8	3.4	9.5	5.4	13.5	6.0	PARK SE CORNER
"R24"		3.4	15.0	2.2	5.9	3.5	61.5	2.9	10th Ave
"R25"		3.4	12.8	2.2	5.9	3.5	13.5	2.7	10th Ave
"R26"		3.5	15.6	2.2	6.0	3.6	13.5	3.1	11th Ave
"R27"		3.2	14.1	2.0	5.5	3.3	13.5	2.8	11th Ave
"R28"		2.9	10.5	2.0	5.4	2.9	13.5	2.3	12th Ave
PM 17.48 Rt		0.4		0.7	2.0	1.2	13.5		RECONSTRUCT AC RAMP
"R29"		3.3	22.2	2.2	5.7	3.4	27.0	3.8	12th Ave
PM 17.51 Rt		0.4		0.7	2.0	1.2	13.5		RECONSTRUCT AC RAMP
"R30	4.5	16.5	29.3	7.3	19.6	11.5	27.0	9.1	13th Ave
"R31"	4.7	16.5	29.4	7.1	19.1	11.2	13.5	9.0	13th Ave
"R32"		3.5	15.3	2.1	5.6	3.3	13.5	2.8	14th Ave
"R33"		3.2	13.4	2.0	5.1	3.0	13.5	2.6	14th Ave
"R34"		3.7	17.0	2.3	6.1	3.6	13.5	3.1	15th Ave
"R35"		3.1	13.7	2.0	5.1	3.0	13.5	2.5	15th Ave
"R36"	2.8	10.9	18.3	4.9	13.1	7.7	27.0	5.7	16th Ave
"R37"		3.3	11.8	2.1	5.5	3.3	13.5	2.5	16th Ave
"R38"		3.1	11.1	2.0	5.1	3.0	13.5	2.2	17th Ave
"R39"		3.1	14.3	2.0	5.1	3.0	13.5	2.8	17th Ave
"R40"		3.9	19.2	2.4	6.4	3.8	13.5	3.6	COUNTRY CLUB
"R41"	1.4	5.0	11.5	4.2	11.2	6.6	13.5	4.9	COUNTRY CLUB
"R42"		2.1	10.3	0.6	1.3	0.8	13.5	1.5	END OF LUCERNE
PM 27.72 Rt							13.5		BEGIN SIDEWALK
"R43"		4.7	30.7	3.5	9.4	5.6	15.0	4.5	SHORT St
PM 27.89 Lt							15.0		ACORN St
PM 28.42 Lt							15.0		HIGH VALLEY Rd
PM 28.55 Lt	0.6	1.1		1.1	3.3		13.5		DOLLAR GENERAL- 5'x6' HMA PAD
"R45"	0.4	1.0	4.1	0.7	1.8	1.1	13.5	0.8	HOOVER St.
PM 28.81 Lt							13.5		DRIVEWAY -CHEVERON
PM 28.84 Rt							20.0		KEYS Blvd.
"R48"		4.8	11.1	5.3	14.0	8.3	13.5		END SIDEWALK
TOTAL	49.1	296.3	781.0	150.8	402.0	235.0	1237.5	190.6	

SUMMARY OF QUANTITIES

Q-1

REVISED BY | DATE REVISED
MATT SMITH | ERIC SHADA
CALCULATED-DESIGNED BY | CHECKED BY
FUNCTIONAL SUPERVISOR
KELLY B. TIMMONS

STATE OF CALIFORNIA - DEPARTMENT OF TRANSPORTATION
Caltrans®
DESIGN

P:\PROJ\01\08120\drafting\Sheets\0112000010pa001.dgn

LAST REVISION | DATE PLOTTED => 16-AUG-2016
06-01-16 | TIME PLOTTED => 14:28

Dist	COUNTY	ROUTE	POST MILES TOTAL PROJECT	SHEET No.	TOTAL SHEETS
01	Lak	20	13.5/30.5	22	37

Matthew Smith 06/13/16
REGISTERED CIVIL ENGINEER DATE

June 13, 2016
PLANS APPROVAL DATE

REGISTERED PROFESSIONAL ENGINEER MATTHEW A. SMITH No. 79116 Exp. 3-31-18 CIVIL STATE OF CALIFORNIA

THE STATE OF CALIFORNIA OR ITS OFFICERS OR AGENTS SHALL NOT BE RESPONSIBLE FOR THE ACCURACY OR COMPLETENESS OF SCANNED COPIES OF THIS PLAN SHEET.

EARTHWORK

LOCATION (ALIGNMENT NAME)	IMPORTED BORROW CY	REMARKS
"R23b"	5.1	PARK LOT
TOTAL	5.1	

PAVEMENT MARKING

LOCATION (ALIGNMENT NAME)	THERMOPLASTIC PAVEMENT MARKING SQFT	REMARKS
"R2"	2	LIMIT LINE
"R3"	2	LIMIT LINE
"R5"	2	LIMIT LINE
"R7"	2	LIMIT LINE
"R8"	2	LIMIT LINE
"R9"	2	CROSSWALK
"R10"	2	LIMIT LINE
"R11"	2	CROSSWALK
"R12"	4	LIMIT LINE/CROSSWALK
"R14"	18	CROSSWALK
"R15"	4	CROSSWALK
"R16"	2	LIMIT LINE
"R18"	2	LIMIT LINE
"R20"	2	LIMIT LINE
"R22a"	16	LIMIT LINE/CROSSWALK
"R22B"	331	CROSSWALK
"R24"	6	LIMIT LINE/CROSSWALK
"R26"	2	LIMIT LINE
"R28"	2	LIMIT LINE
"R30"	16	LIMIT LINE/CROSSWALK
"R32"	2	LIMIT LINE
"R34"	2	LIMIT LINE
"R36"	16	LIMIT LINE/CROSSWALK
"R38"	2	LIMIT LINE
"R44"	24	LIMIT LINE/CROSSWALK
TOTAL	467	

TEMPORARY WATER POLLUTION CONTROL QUANTITIES

LOCATION (ALIGNMENT NAME)	Temp DI PROTECTION EA	Temp FIBER ROLL LF	COMMENTS
"R-4"	1		
"R-5"	1		MANZANITA
"A"		150	MORRISON CREEK
"R-8"	1		1st Ave.
"R-9"	1		1st Ave.
"R-10"	1		2nd Ave
"R-11"	1		2nd Ave
"R-12"	1		3rd Ave
"R-13"	1		3rd Ave
"R-14"	1		4th Ave
"R-15"	1		5th Ave
"R-16"	1		6th Ave
"R-17"	1		6th Ave
"R-18"	1		7th Ave
"R-19"	1		7th Ave
"R-20"	1		8th Ave
"R-21"	1		8th Ave
"R-22a"	1		9th Ave
"R-22a"	1		9th Ave
"R-23b"		50	9th Ave, PARK
"R-24"	1		10th Ave
"R-25"	1		10th Ave
"R-26"	1		11th Ave
"R-27"	1		11th Ave
"R-28"	1		12th Ave
"R-29"	1		12th Ave
PM 17.51 Rt	1		12th Ave
"R-30	1		13th Ave
"R-31"	1		13th Ave
"R-32"	1		14th Ave
"R-33"	1		14th Ave
"R-34"	1		15th Ave
"R-35"	1		15th Ave
"R-36"	1		16th Ave
"R-37"	1		16th Ave
"R-38"	1		17th Ave
"R-39"	1		17th Ave
"R-40"	1		COUNTRY CLUB
"R-41"	1		COUNTRY CLUB
"R-44"	1		HIGH VALLEY RD
"R-48"	1		END
TOTAL	39	200	

ROADSIDE SIGN

LOCATION (ALIGNMENT NAME)	SIGN CODE	SIGN MESSAGE	PANEL SIZE	POST SIZE	RESET ROADSIDE SIGN (METAL POST) EA	REMOVE ROADSIDE SIGN EA	ROADSIDE SIGN ONE POST EA	FURNISH SINGLE SHEET ALUMINUM SIGN (0.063"-UNFRAMED) SQFT	RETROREFLECTIVE SHEETING (TYPE XI) SQFT
"R3"	D3-1	CRUMP AVE			1				
"R3"	R1-1	STOP	30"x30"	4"x4"		1	1	6.25	6.25
				TOTAL	1	1	1	6.25	6.25

SUMMARY OF QUANTITIES
Q-2

STATE OF CALIFORNIA - DEPARTMENT OF TRANSPORTATION
Caltrans® DESIGN

FUNCTIONAL SUPERVISOR: KELLY B. TIMMONS
CALCULATED-DESIGNED BY: MATT SMITH
CHECKED BY: ERIC SHADA
REVISED BY
DATE REVISED

P:\PROJ\01\0B120\drafting\Sheets\0112000010pa002.dgn

LAST REVISION 06-01-16
DATE PLOTTED => 16-AUG-2016
TIME PLOTTED => 14:29

Dist	COUNTY	ROUTE	POST MILES TOTAL PROJECT	SHEET No.	TOTAL SHEETS
01	Lak	20	13.5/30.5	23	37

REGISTERED CIVIL ENGINEER

July 20, 2012
PLANS APPROVAL DATE

REGISTERED PROFESSIONAL ENGINEER
Roberta L. McLaughlin
No. C40375
Exp. 3-31-13
CIVIL
STATE OF CALIFORNIA

THE STATE OF CALIFORNIA OR ITS OFFICERS OR AGENTS SHALL NOT BE RESPONSIBLE FOR THE ACCURACY OR COMPLETENESS OF SCANNED COPIES OF THIS PLAN SHEET.

TO ACCOMPANY PLANS DATED 06-13-16

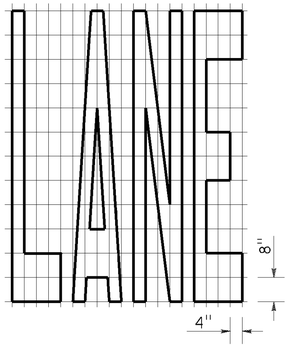

A=24 ft²

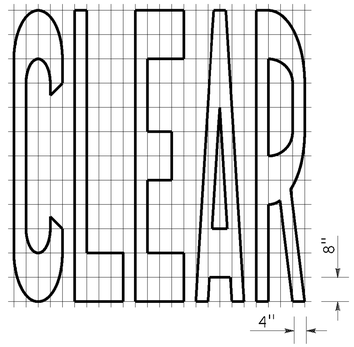

A=27 ft²

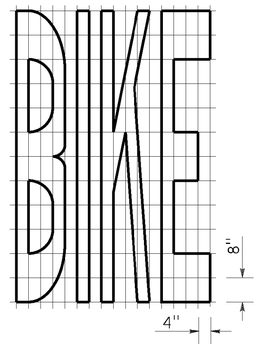

A=21 ft²

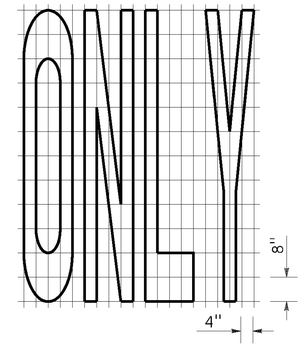

A=22 ft²

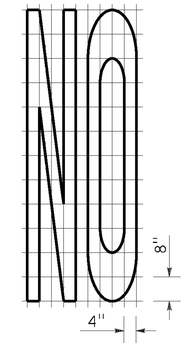

A=14 ft²

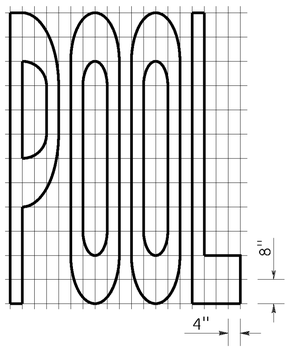

A=23 ft²

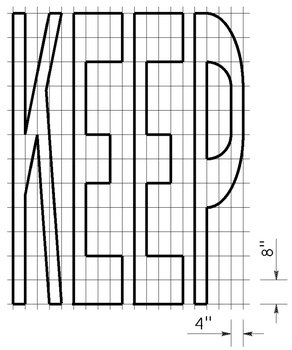

A=24 ft²

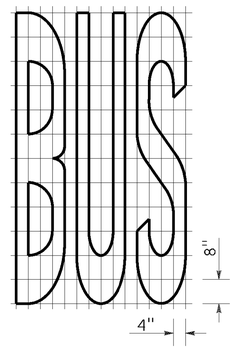

A=20 ft²

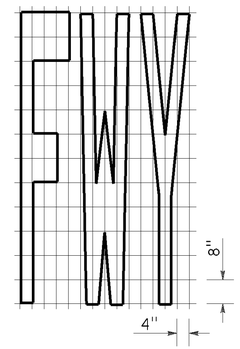

A=16 ft²

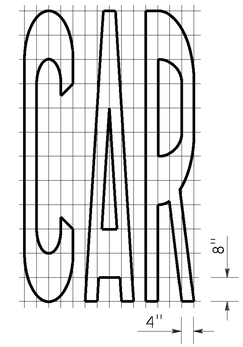

A=17 ft²

WORD MARKINGS			
ITEM	ft²	ITEM	ft²
LANE	24	NO	14
POOL	23	BIKE	21
CAR	17	BUS	20
CLEAR	27	ONLY	22
KEEP	24	FWY	16

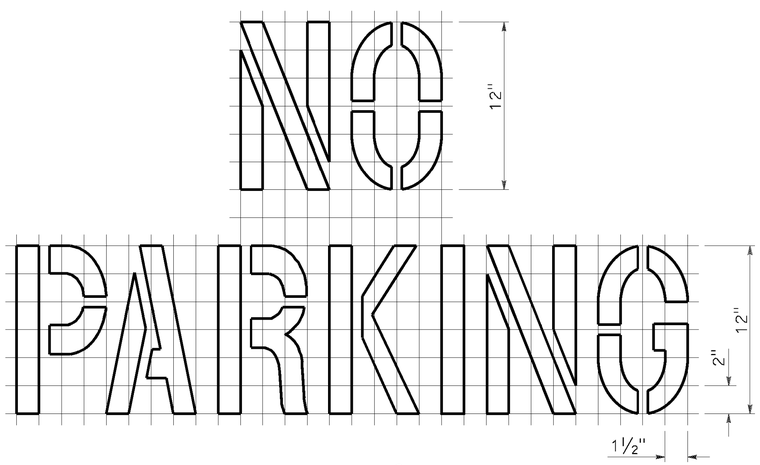

A=2 ft²
See Notes 6 and 7

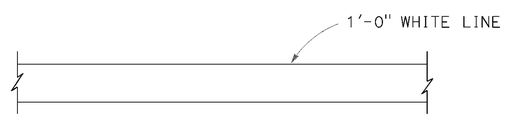

LIMIT LINE (STOP LINE)

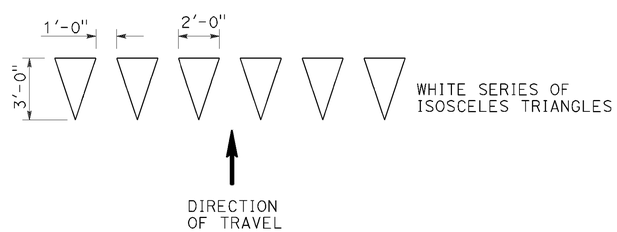

YIELD LINE

NOTES:

1. If a message consists of more than one word, it should read "UP", i.e., the first word should be nearest the driver.
2. The space between words should be at least four times the height of the characters for low speed roads, but not more than ten times the height of the characters. The space may be reduced appropriately where there is limited space because of local conditions.
3. Minor variations in dimensions may be accepted by the Engineer.
4. Portions of a letter, number or symbol may be separated by connecting segments not to exceed 2" in width.
5. The words "NO PARKING" pavement marking is to be used for parking facilities. For typical locations of markings, see Standard Plans A90A and A90B.
6. The words "NO PARKING", shall be painted in white letters no less than 1'-0" high on a contrasting background and located so that it is visible to traffic enforcement officials.

STATE OF CALIFORNIA
DEPARTMENT OF TRANSPORTATION

PAVEMENT MARKINGS WORDS, LIMIT AND YIELD LINES

NO SCALE

RSP A24E DATED JULY 20, 2012 SUPERSEDES STANDARD PLAN A24E
DATED MAY 20, 2011 - PAGE 17 OF THE STANDARD PLANS BOOK DATED 2010.

REVISED STANDARD PLAN RSP A24E

2010 REVISED STANDARD PLAN RSP A24E

DATE PLOTTED => 16-AUG-2016
TIME PLOTTED => 14:29

Dist	COUNTY	ROUTE	POST MILES TOTAL PROJECT	SHEET No.	TOTAL SHEETS
01	Lak	20	13.5/30.5	24	37

REGISTERED CIVIL ENGINEER

July 20, 2012
PLANS APPROVAL DATE

REGISTERED PROFESSIONAL ENGINEER
Roberta L. McLaughlin
No. C40375
Exp. 3-31-13
CIVIL
STATE OF CALIFORNIA

THE STATE OF CALIFORNIA OR ITS OFFICERS OR AGENTS SHALL NOT BE RESPONSIBLE FOR THE ACCURACY OR COMPLETENESS OF SCANNED COPIES OF THIS PLAN SHEET.

TO ACCOMPANY PLANS DATED 06-13-16

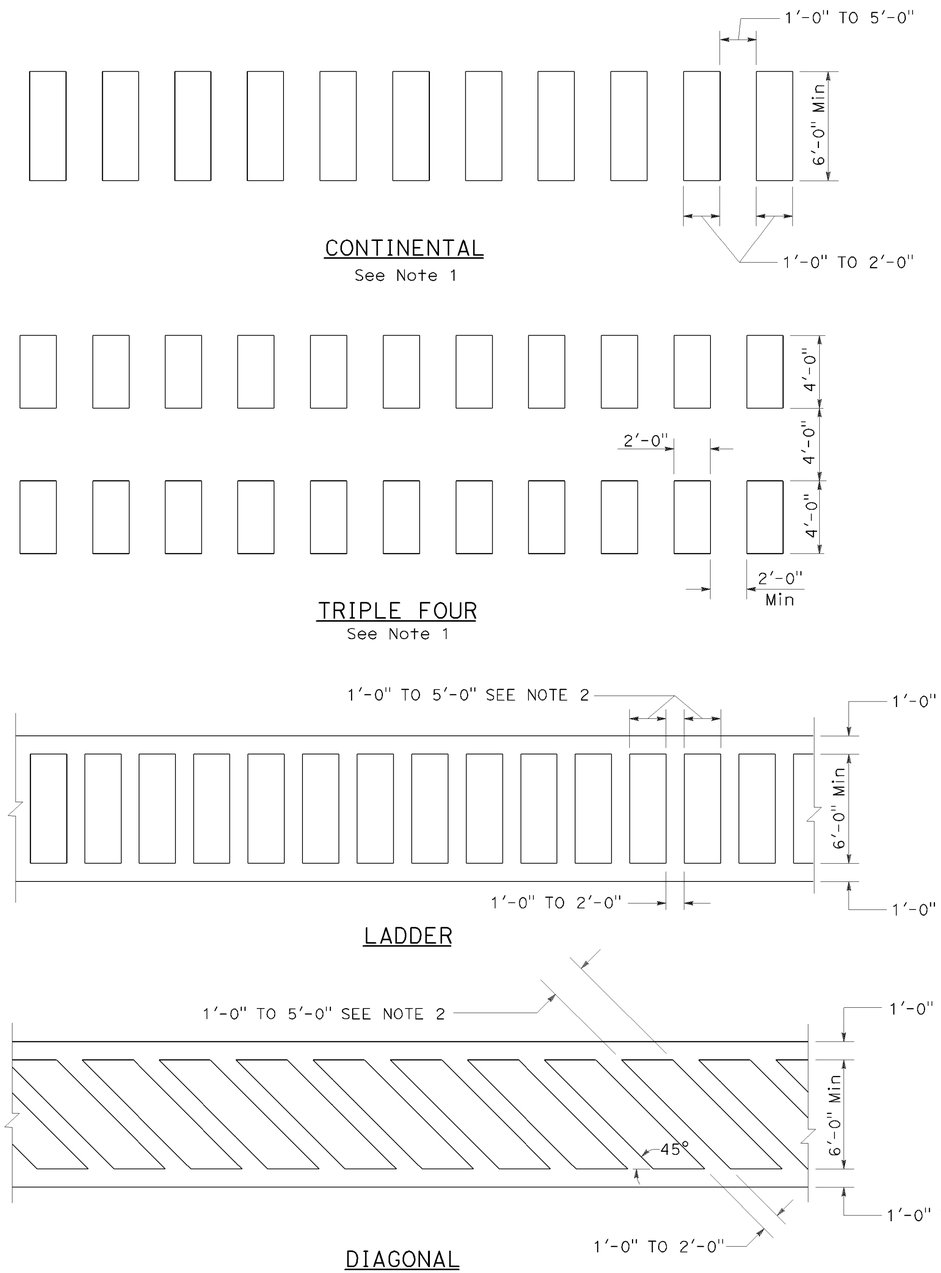

HIGHER VISIBILITY CROSSWALKS

NOTES:

1. Spaces between markings should be placed in wheel tracks of each lane.
2. Spacings not to exceed 2.5 times width of longitudinal line.
3. All crosswalk markings must be white except for those near schools must be yellow.

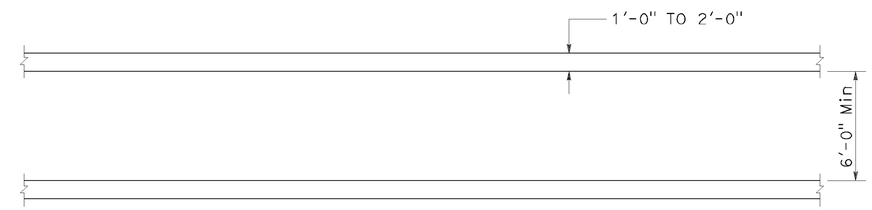

BASIC

STATE OF CALIFORNIA
DEPARTMENT OF TRANSPORTATION

PAVEMENT MARKINGS CROSSWALKS

NO SCALE

RSP A24F DATED JULY 20, 2012 SUPPLEMENTS THE STANDARD PLANS BOOK DATED 2010.

REVISED STANDARD PLAN RSP A24F

2010 REVISED STANDARD PLAN RSP A24F

DATE PLOTTED => 16-AUG-2016
TIME PLOTTED => 14:29

Dist	COUNTY	ROUTE	POST MILES TOTAL PROJECT	SHEET No.	TOTAL SHEETS
01	Lak	20	13.5/30.5	25	37

REGISTERED CIVIL ENGINEER

July 19, 2013
PLANS APPROVAL DATE

REGISTERED PROFESSIONAL ENGINEER Michael Janzen No. 44788 Exp. 03-31-14 CIVIL STATE OF CALIFORNIA

THE STATE OF CALIFORNIA OR ITS OFFICERS OR AGENTS SHALL NOT BE RESPONSIBLE FOR THE ACCURACY OR COMPLETENESS OF SCANNED COPIES OF THIS PLAN SHEET.

TO ACCOMPANY PLANS DATED 06-13-16

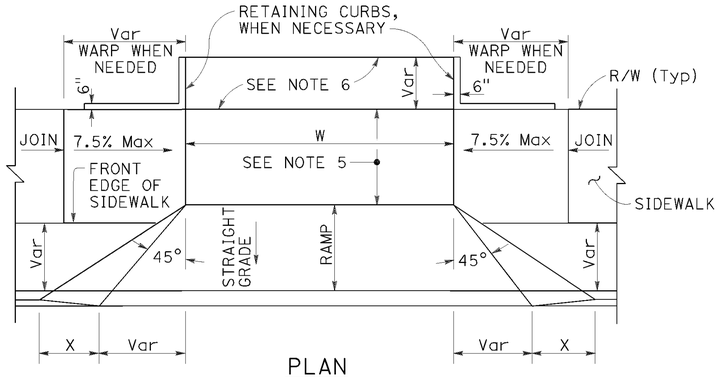

PLAN

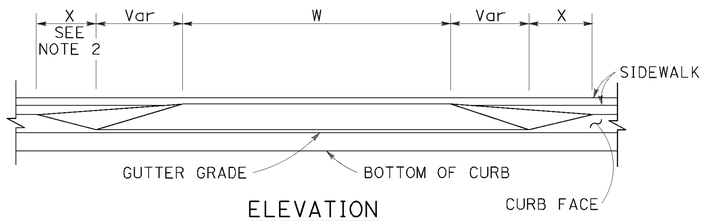

ELEVATION

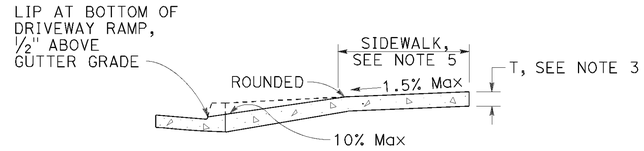

CASE A

Typical driveway, sidewalk not depressed

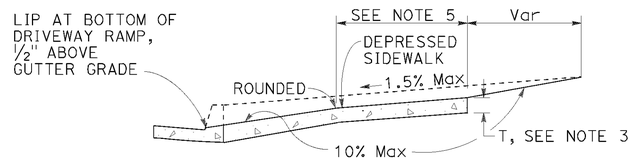

CASE B

Driveway with depressed sidewalk

SECTIONS

DRIVEWAYS

TABLE A

CURB TYPE	DIMENSIONS			
	"H1"	"H2"	"W1"	"W2"
A1-6	1'-2"	6"	7½"	1½"
A1-8	1'-4"	8"	8"	2"
A2-6	1'-0"	6"	2'-7½"	1½"
A2-8	1'-2"	8"	2'-8"	2"
A3-6	6"	5"	7¼"	1¼"
A3-8	8"	7"	7¾"	1¾"
B1-4	1'-0"	4"	7½"	2½"
B1-6	1'-2"	6"	9"	4"
B2-4	10"	4"	2'-7½"	2½"
B2-6	1'-0"	6"	2'-9"	4"
B3-4	4"	3"	7"	2"
B3-6	6"	5"	8½"	3½"
D-4	10"	4"	1'-6"	1'-1"
D-6	1'-0"	6"	2'-2"	1'-9"

CURB QUANTITIES

TYPE	CUBIC YARDS PER LINEAR FOOT
A1-6	0.02585
A1-8	0.03084
A2-6	0.05903
A2-8	0.06379
A3-6	0.01036
A3-8	0.01435
B1-4	0.02185
B1-6	0.02930
B2-4	0.05515
B2-6	0.06171
B3-4	0.00641
B3-6	0.01074
B4	0.05709
D-4	0.04083
D-6	0.06804
E	0.06661

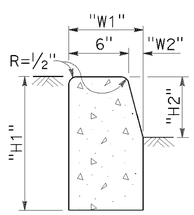

TYPE A1 CURBS

See Table A

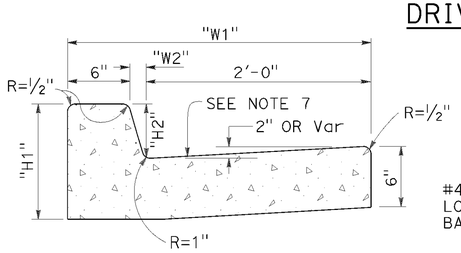

TYPE A2 CURBS

See Table A

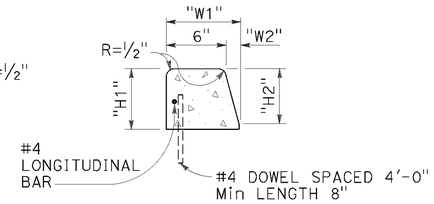

TYPE A3 CURBS

Superimposed on existing pavement
See Table A

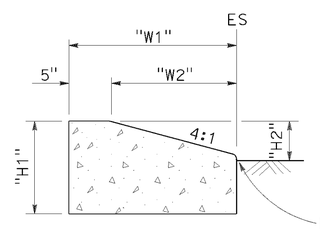

TYPE D CURBS

See Table A

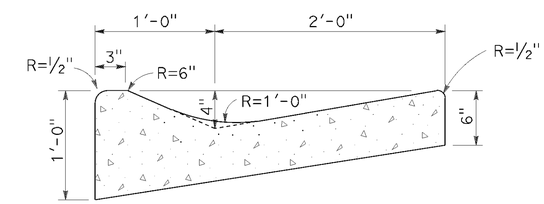

TYPE E CURB

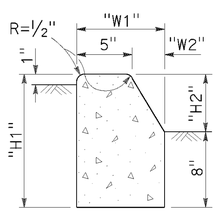

TYPE B1 CURBS

See Table A

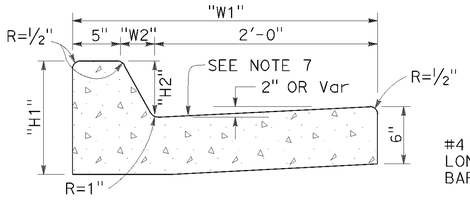

TYPE B2 CURBS

See Table A

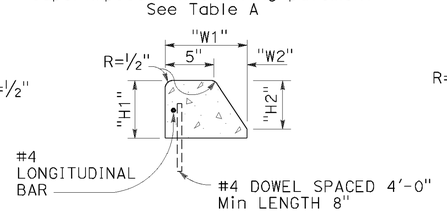

TYPE B3 CURBS

Superimposed on existing pavement
See Table A

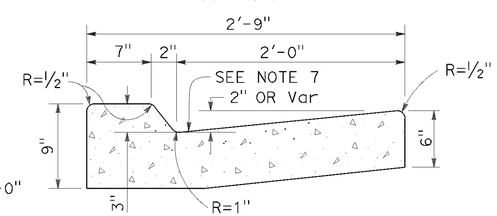

TYPE B4 CURBS

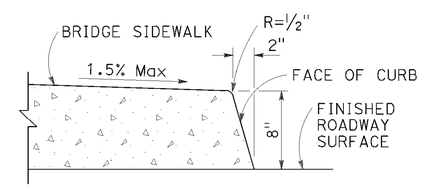

TYPE H CURB

On Bridges

CURBS

NOTES:

1. Case A driveway section typically applies.
2. X=3'-0" except for curb heights over 10" where 4:1 slopes shall be used on curb slope.
3. Sidewalk and ramp thickness "T" at driveway shall be 4" for residental and 6" for commercial.
4. Difference in slope of the driveway ramp and the slope of a line between the gutter and a point on the roadway 5'-0" from gutter line shall not exceed 15%. Reduce driveway ramp slope, not gutter slope, where required.
5. Minimum width of clear passageway for sidewalk shall be 4'-2".
6. Retaining curbs and acquisition of construction easement may be necessary for narrow sidewalks or curb heights in excess of 6".
7. Across the pedestrian route at curb ramp locations, the gutter pan slope shall not exceed 1" of depth for each 2'-0" of width.

STATE OF CALIFORNIA
DEPARTMENT OF TRANSPORTATION

CURBS AND DRIVEWAYS

NO SCALE

RSP A87A DATED JULY 19, 2013 SUPERSEDES STANDARD PLAN A87A
DATED MAY 20, 2011 - PAGE 119 OF THE STANDARD PLANS BOOK DATED 2010.

REVISED STANDARD PLAN RSP A87A

2010 REVISED STANDARD PLAN RSP A87A

DATE PLOTTED => 16-AUG-2016
TIME PLOTTED => 14:29

Dist	COUNTY	ROUTE	POST MILES TOTAL PROJECT	SHEET No.	TOTAL SHEETS
01	Lak	20	13.5/30.5	26	37

REGISTERED CIVIL ENGINEER

July 15, 2016
PLANS APPROVAL DATE

REGISTERED PROFESSIONAL ENGINEER
Hector David Cordova
No. C41957
Exp. 3-31-18
CIVIL
STATE OF CALIFORNIA

THE STATE OF CALIFORNIA OR ITS OFFICERS OR AGENTS SHALL NOT BE RESPONSIBLE FOR THE ACCURACY OR COMPLETENESS OF SCANNED COPIES OF THIS PLAN SHEET.

TO ACCOMPANY PLANS DATED 06-13-16

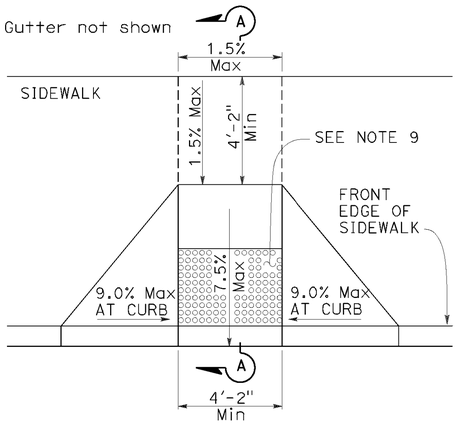

CASE A

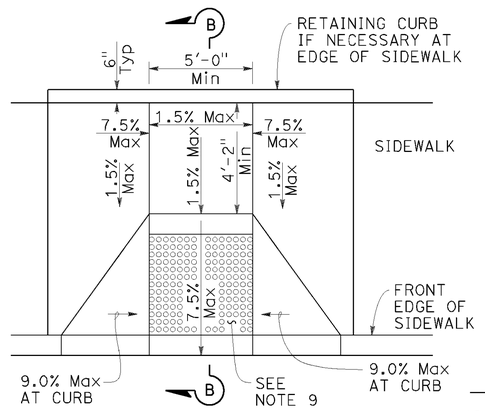

CASE B

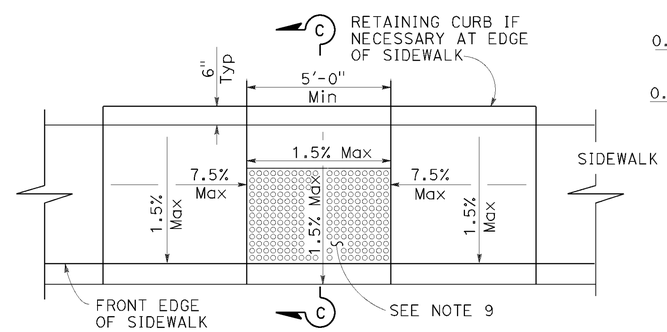

CASE C

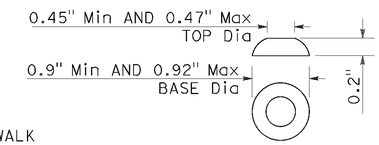

RAISED TRUNCATED DOME

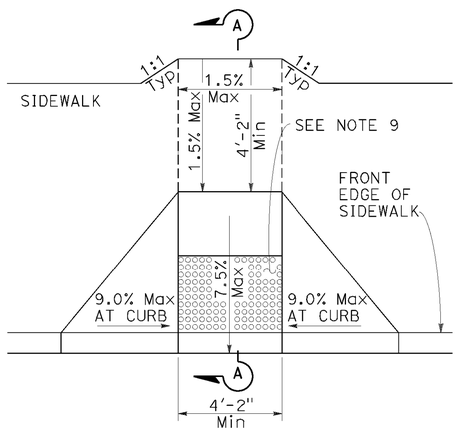

CASE D

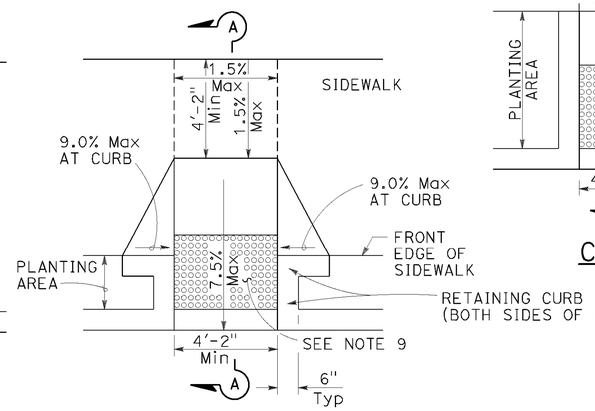

CASE E

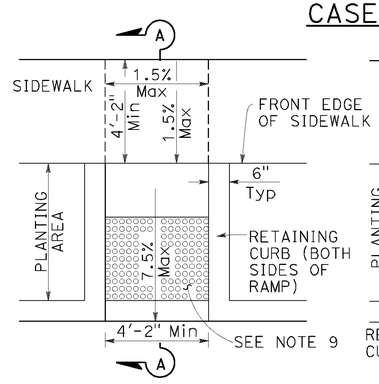

CASE F

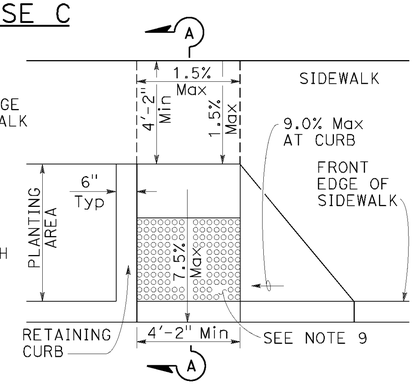

CASE G
See Note 4

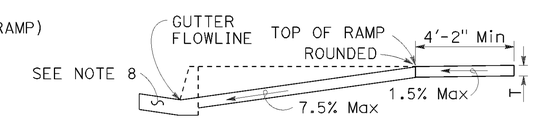

SECTION A-A

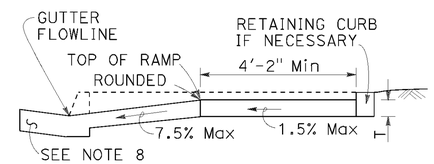

SECTION B-B
Depress entire sidewalk as required

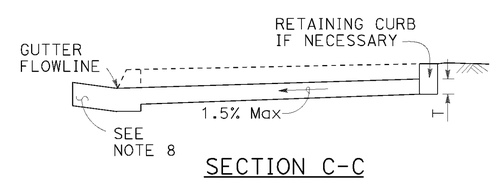

SECTION C-C

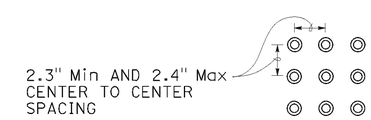

RAISED TRUNCATED DOME PATTERN (IN-LINE)

DETECTABLE WARNING SURFACE
See Note 9

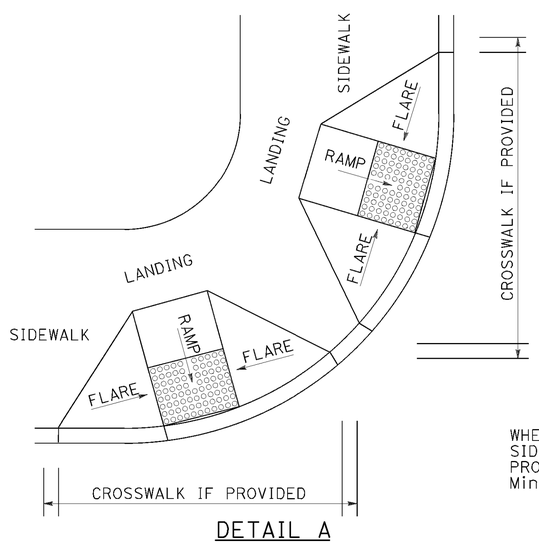

DETAIL A

TYPICAL TWO-RAMP CORNER INSTALLATION
See Note 1

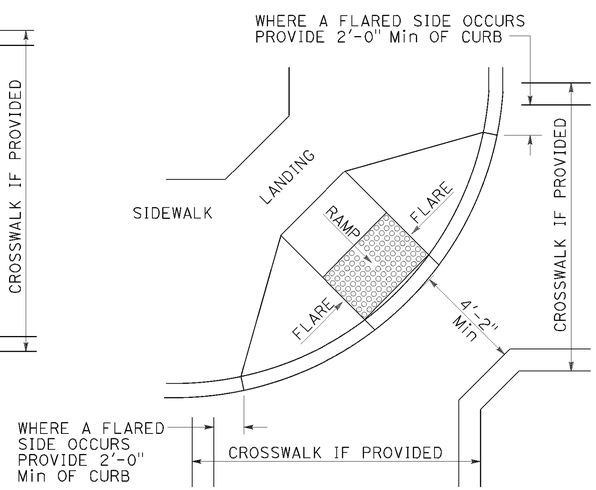

DETAIL B

TYPICAL ONE-RAMP CORNER INSTALLATION
See Notes 1 and 3

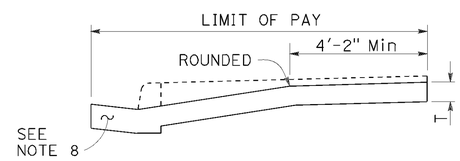

RETROFIT PAY LIMITS
Existing curb and sidewalk

NOTES:

1. As site conditions dictate, Case A through Case G curb ramps may be used for corner installations similar to those shown in Detail A and Detail B. The case of curb ramps used in Detail A do not have to be the same. Case A through Case G curb ramps also may be used at mid block locations, as site conditions dictate.
2. If distance from curb to back of sidewalk is too short to accommodate ramp and 4'-2" platform (landing) as shown in Case A, the sidewalk may be depressed longitudinally as in Case B, or C or may be widened as in Case D.
3. When ramp is located in center of curb return, crosswalk configuration must be similar to that shown for Detail B.
4. As site conditions dictate, the retaining curb side and the flared side of the Case G ramp shall be constructed in reversed position.
5. If located on a curve, the sides of the ramp need not be parallel, but the minimum width of the ramp shall be 4'-2".
6. Side slope of ramp flares vary uniformly from a maximum of 9.0% at curb to conform with longitudinal sidewalk slope adjacent to top of the ramp, except in Case C and Case F.
7. The adjacent surfaces at transitions at curb ramps to walks, gutters, and streets shall be at the same level.
8. Counter slopes of adjoining gutters and road surfaces immediately adjacent to and within 24 inches of the curb ramp shall not be steeper than 1:20 (5.0%). Gutter pan slope shall not exceed 1" of depth for each 2'-0" of width.
9. Curb ramps shall have a detectable warning surface that extends the full width and 3'-0" depth of the ramp. A 4'-0" wide detectable warning surface may be used on a 4'-2" wide curb ramp. Detectable Warning Surfaces shall conform to the requirements in the Standard Specifications.
10. Sidewalk and ramp thickness, "T", shall be 3½" minimum.
11. Utility pull boxes, manholes, vaults and all other utility facilities within the boundaries of the curb ramp will be relocated or adjusted to grade by the owner prior to, or in conjunction with, curb ramp construction.
12. Detectable warning surface may have to be cut to allow removal of utility covers while maintaining full detectable warning width and depth.

STATE OF CALIFORNIA
DEPARTMENT OF TRANSPORTATION

CURB RAMP DETAILS

NO SCALE

RSP A88A DATED JULY 15, 2016 SUPERSEDES RSP A88A DATED JULY 3, 2015, RSP A88A DATED MARCH 21, 2014 AND RSP A88A DATED JULY 19, 2013 AND STANDARD PLAN A88A DATED MAY 20, 2011 - PAGE 121 OF THE STANDARD PLANS BOOK DATED 2010.

REVISED STANDARD PLAN RSP A88A

2010 REVISED STANDARD PLAN RSP A88A

DATE PLOTTED => 16-AUG-2016
TIME PLOTTED => 14:29

Dist	COUNTY	ROUTE	POST MILES TOTAL PROJECT	SHEET No.	TOTAL SHEETS
01	Lak	20	13.5/30.5	27	37

REGISTERED CIVIL ENGINEER

July 15, 2016
PLANS APPROVAL DATE

REGISTERED PROFESSIONAL ENGINEER Hector David Cordova No. C41957 Exp. 3-31-18 CIVIL STATE OF CALIFORNIA

THE STATE OF CALIFORNIA OR ITS OFFICERS OR AGENTS SHALL NOT BE RESPONSIBLE FOR THE ACCURACY OR COMPLETENESS OF SCANNED COPIES OF THIS PLAN SHEET.

TO ACCOMPANY PLANS DATED 06-13-16

Gutter not shown

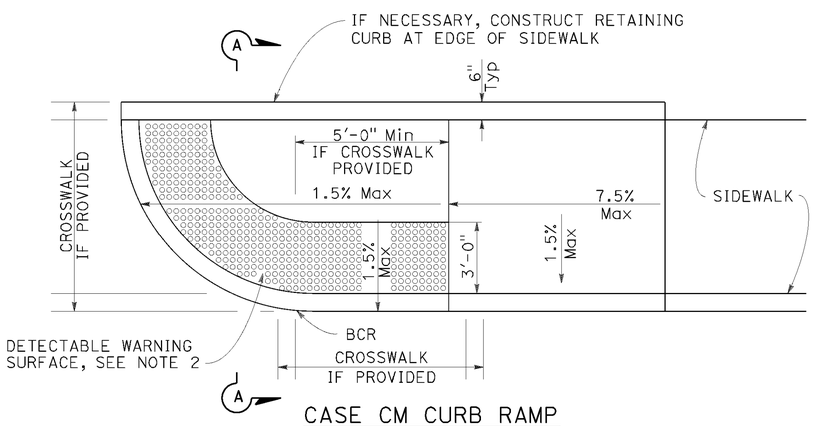

CASE CM CURB RAMP

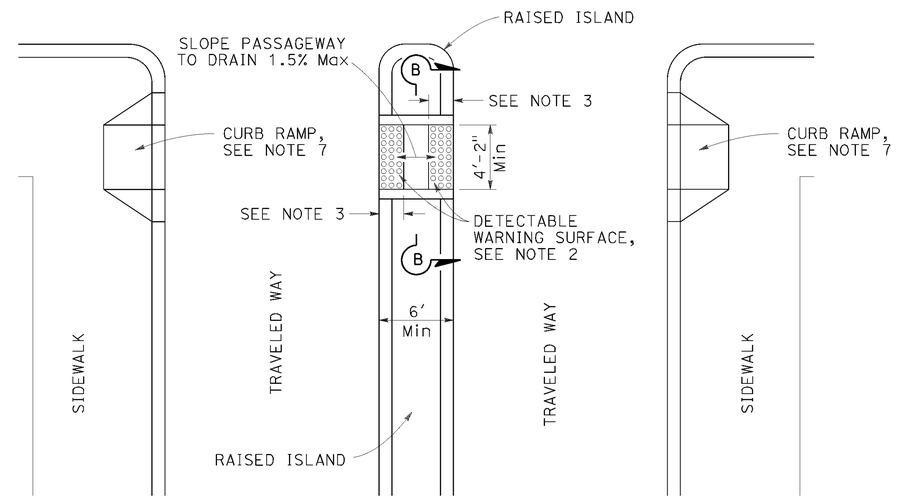

TYPE A PASSAGEWAY

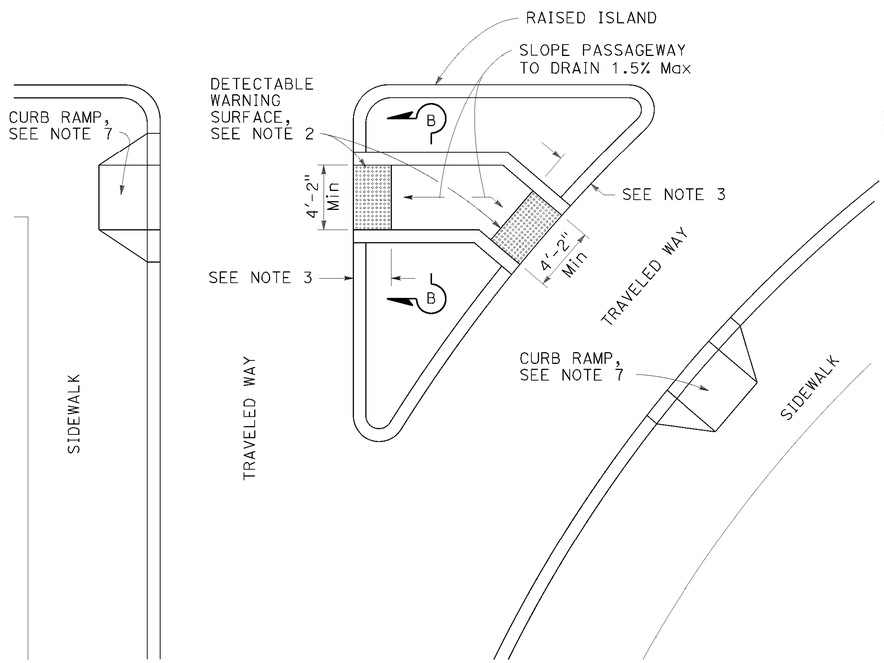

TYPE B PASSAGEWAY

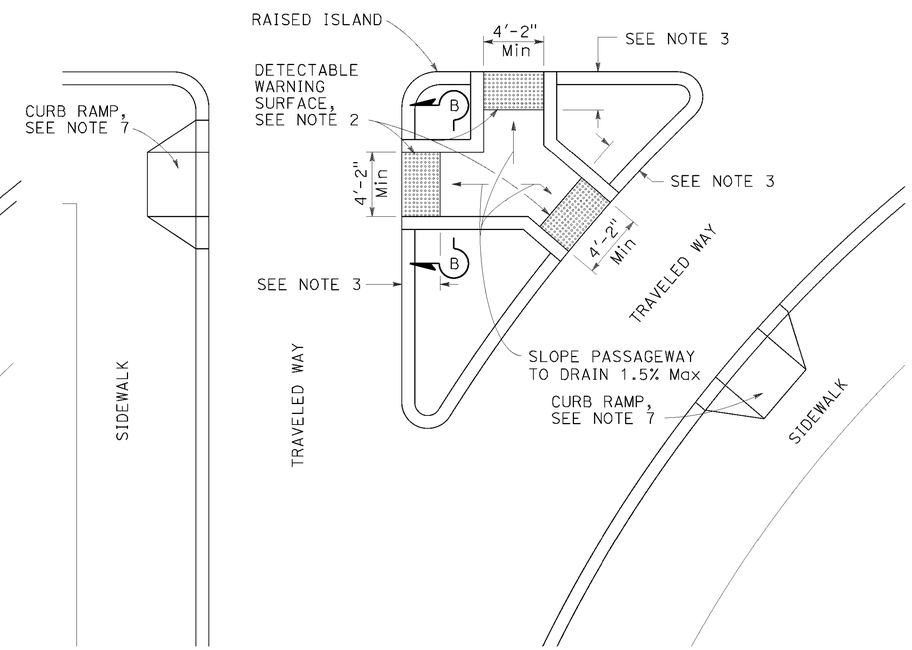

TYPE C PASSAGEWAY

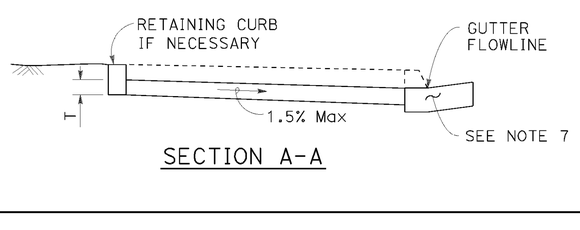

SECTION A-A

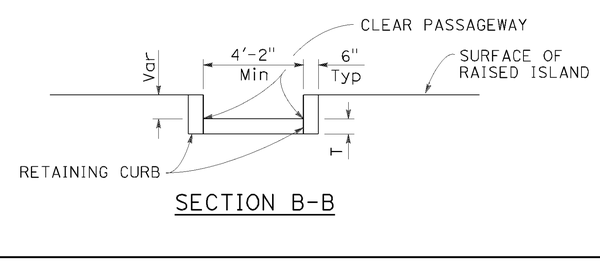

SECTION B-B

NOTES:

1. Sidewalk, ramp and passageway thickness, "T", shall be 3½" minimum.
2. For details of detectable warning surfaces, see Revised Standard Plan RSP A88A.
3. Where an island passageway length is greater than or equal to 6'-0", but less than 8'-0", each detectable warning surface shall extend the full width and 2'-0" depth of the passageway length. Where an island passageway length is greater than or equal to 8'-0", each detectable warning surface shall extend the full width and 3'-0" depth of the passageway length. A 4'-0" wide detectable warning surface may be used on a 4'-2" wide island passageway.
4. The adjacent surfaces at transitions at curb ramps to walks, gutters, and streets shall be at the same level.
5. Utility pull boxes, manholes, vaults and all other utility facilities within the boundaries of the curb ramp will be relocated or adjusted to grade by the owner prior to, or in conjunction with, curb ramp construction.
6. Detectable warning surface may have to be cut to allow removal of utility covers while maintaining full detectable warning width and depth.
7. For additional curb ramp details, see Revised Standard Plan RSP A88A.

STATE OF CALIFORNIA
DEPARTMENT OF TRANSPORTATION

CURB RAMP AND ISLAND PASSAGEWAY DETAILS

NO SCALE

RSP A88B DATED JULY 15, 2016 SUPERSEDES RSP A88B DATED JULY 3, 2015, RSP A88B DATED MARCH 21, 2014 AND RSP A88B DATED JULY 19, 2013 AND STANDARD PLAN A88B DATED MAY 20, 2011 - PAGE 122 OF THE STANDARD PLANS BOOK DATED 2010.

REVISED STANDARD PLAN RSP A88B

2010 REVISED STANDARD PLAN RSP A88B

DATE PLOTTED => 16-AUG-2016
TIME PLOTTED => 14:30

Dist	COUNTY	ROUTE	POST MILES TOTAL PROJECT	SHEET No.	TOTAL SHEETS
01	Lak	20	13.5/30.5	28	37

Raymond Don Tsztoo
REGISTERED CIVIL ENGINEER

April 19, 2013
PLANS APPROVAL DATE

REGISTERED PROFESSIONAL ENGINEER Raymond Don Tsztoo No. C37332 Exp. 6-30-14 CIVIL STATE OF CALIFORNIA

THE STATE OF CALIFORNIA OR ITS OFFICERS OR AGENTS SHALL NOT BE RESPONSIBLE FOR THE ACCURACY OR COMPLETENESS OF SCANNED COPIES OF THIS PLAN SHEET.

TO ACCOMPANY PLANS DATED 06-13-16

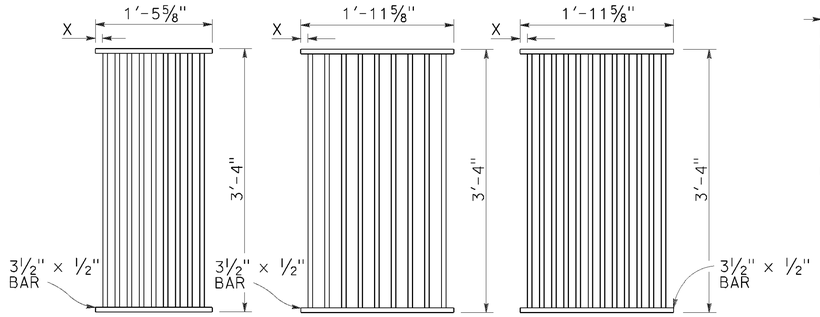

TYPE 18-9

1⅜" Clear spacing. Use within the roadbed on highways where bicycles and pedestrians are excluded.

TYPE 24-9

2" Clear spacing. Use in locations off the roadbed on all types of highways.

TYPE 24-12

1⅜" Clear spacing. Use within the roadbed on highways where bicycles and pedestrians are excluded.

RECTANGULAR GRATE DETAILS

(See table below)

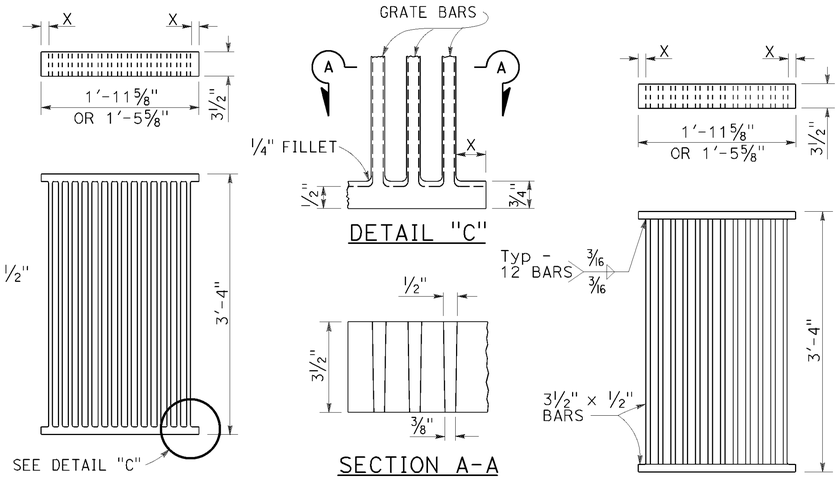

ALTERNATIVE CAST DUCTILE IRON GRATE OR CAST CARBON STEEL GRATE

ALTERNATIVE WELDED GRATE

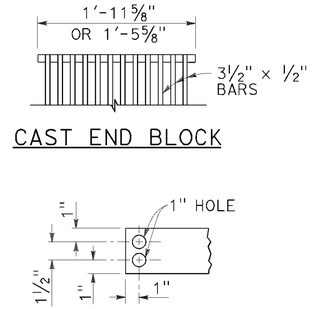

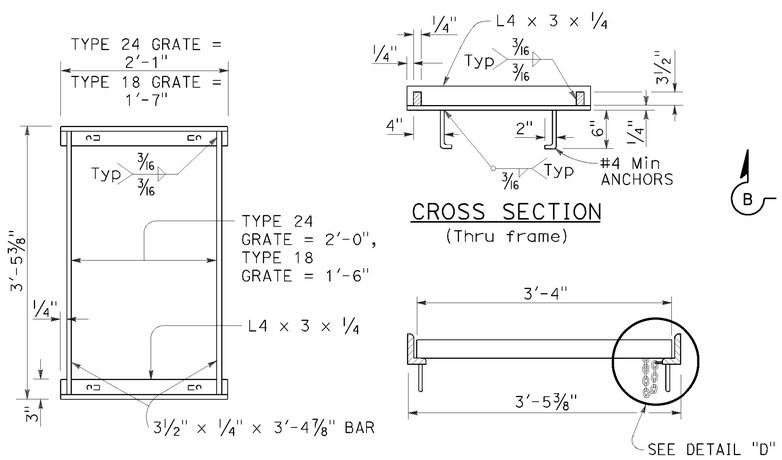

RECTANGULAR FRAME DETAILS

(For all rectangular grates)

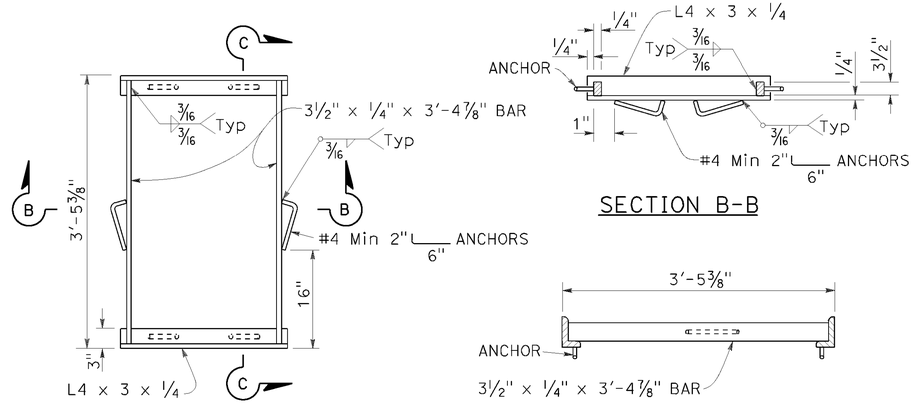

ALTERNATIVE ANCHOR FOR RECTANGULAR FRAME

(For details not shown, See Rectangular Frame Details)

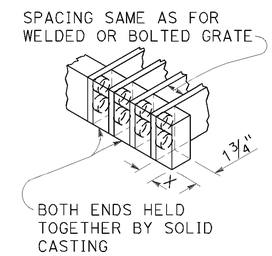

ALTERNATIVE CAST DUCTILE IRON OR CAST CARBON STEEL END BLOCK GRATE

NOTES:

1. Grate type numbers refer to approximate width of grate in inches and number of bars, respectively.
2. Contractor has the option of using cast ductile iron, cast carbon steel, welded, bolted, or cast end block grate.
3. Rounded top of bars optional on all grates.
4. Pipe inlets with a grate shall be placed so that bars parallel direction of principle surface flow.
5. Complete joint penetration butt welds may be substituted for the fillet welds on all anchors.
6. Standard square, hexagon, round or equivalent headed anchors may be substituted for the right angle hooks on the anchors shown on this plan.
7. Grate and frame weights are based on welded grates (weights of face angles, steps, protection bars, etc. are not included).
8. Connect chain to grate and frame only at locations shown on the plans. When chain is required, do not use cast ductile iron grates.

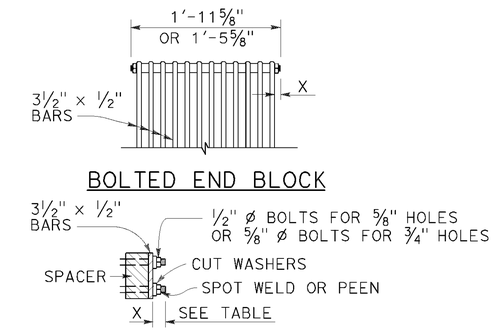

ALTERNATIVE BOLTED GRATE

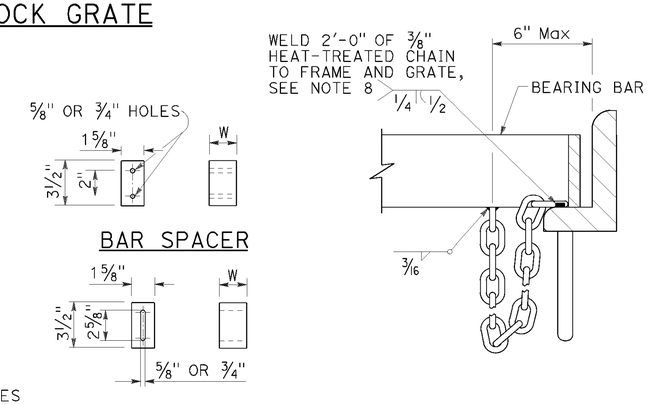

GRATE BAR SPACING TABLE

TYPE	No. OF BARS	CLEAR BAR SPACING	X
18-9	9	1⅜"	1 1/16"
24-9	9	2"	1 9/16"
24-12	12	1⅜"	1¼"

INLET TYPE	COVER TYPE	WEIGHT LB
OS	PLATE	174
OL-7	PLATE	170
OL-10	PLATE	170
OL-14	PLATE	170
OL-21	PLATE	170
OCP	PLATE	112
OCPI	PLATE	112
OCPI	REDWOOD	42
OMP	PLATE	177
OMPI	PLATE	177

INLET TYPE	GRATE TYPE	No. OF GRATES	WEIGHT LB
GDO	24-12	2	634
GOL-7	24-12	1	326
GOL-10	24-12	1	326
GO,G1,G2,G3,G4 (TYPE 24)	24-9	1	263
	24-12	1	326
G4 (TYPE 18),G5,G6	18-9	1	249
GT1	18-9	2	498
GT2	18-9	2	498
GT3	24-12	2	652
GT4	24-12	2	652
TRASH RACK			22
GRATE CHAIN			3

BASIS FOR Misc IRON & STEEL FINAL PAY WEIGHTS FOR DRAINAGE INLETS

(See Note 7)

STATE OF CALIFORNIA
DEPARTMENT OF TRANSPORTATION

GRATE DETAILS No. 1

NO SCALE

RSP D77A DATED APRIL 19, 2013 SUPERSEDES RSP D77A DATED JULY 20, 2012 AND STANDARD PLAN D77A DATED MAY 20, 2011 - PAGE 164 OF THE STANDARD PLANS BOOK DATED 2010.

REVISED STANDARD PLAN RSP D77A

2010 REVISED STANDARD PLAN RSP D77A

DATE PLOTTED => 16-AUG-2016
TIME PLOTTED => 14:30

Dist	COUNTY	ROUTE	POST MILES TOTAL PROJECT	SHEET No.	TOTAL SHEETS
01	Lak	20	13.5/30.5	29	37

REGISTERED CIVIL ENGINEER

April 19, 2013
PLANS APPROVAL DATE

Raymond Don Tsztoo No. C37332 Exp. 6-30-14 CIVIL — REGISTERED PROFESSIONAL ENGINEER — STATE OF CALIFORNIA

THE STATE OF CALIFORNIA OR ITS OFFICERS OR AGENTS SHALL NOT BE RESPONSIBLE FOR THE ACCURACY OR COMPLETENESS OF SCANNED COPIES OF THIS PLAN SHEET.

TO ACCOMPANY PLANS DATED 06-13-16

2010 REVISED STANDARD PLAN RSP D77B

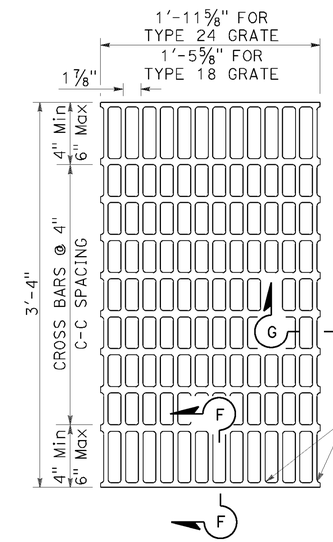

NOTES:

Bearing bars to be 3½" × ¼" bars on 1⅞" centers.

⅜"± ø Cross bars may be fillet welded, resistance welded or electroforged to bearing bars.

Weight of Type 24 grate = 141 LBS.

Weight of Type 18 grate = 107 LBS. (Type 24 grate shown).

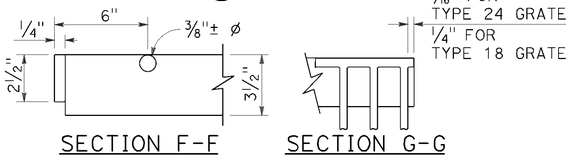

SECTION F-F SECTION G-G

TYPE 18-10 AND 24-13 GRATE

(Welded Steel)

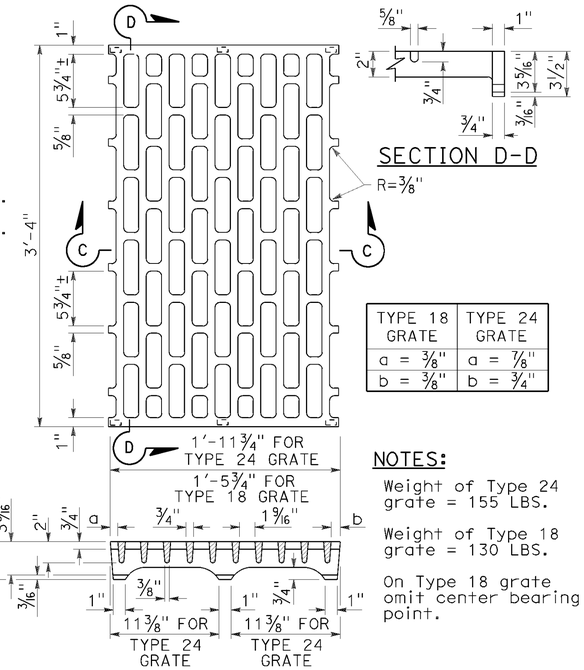

TYPE 18 GRATE	TYPE 24 GRATE
a = ⅜"	a = ⅞"
b = ⅜"	b = ¾"

NOTES:

Weight of Type 24 grate = 155 LBS.

Weight of Type 18 grate = 130 LBS.

On Type 18 grate omit center bearing point.

SECTION C-C

TYPE 18-8C AND 24-10C GRATE

(Cast ductile iron)

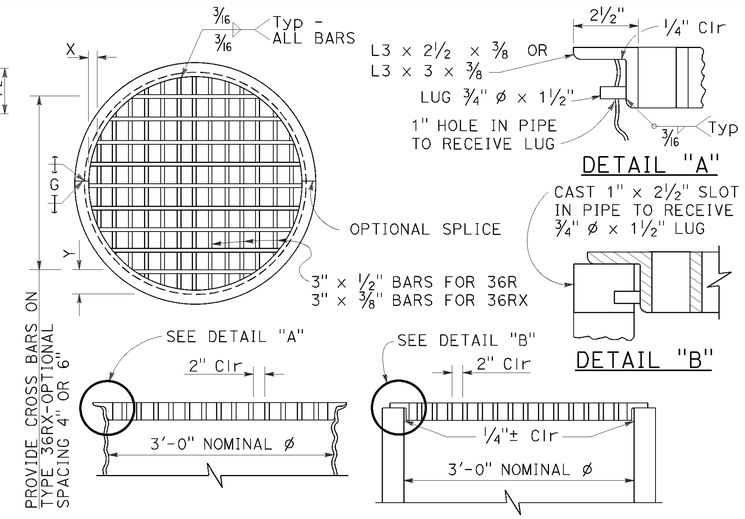

DETAIL "A"

DETAIL "B"

TYPE 36R AND 36RX GRATE DETAILS

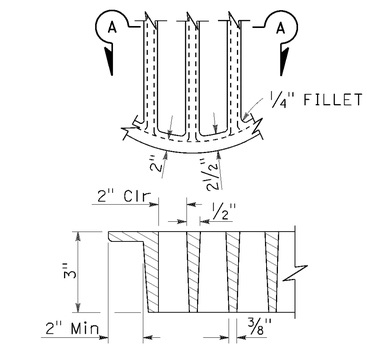

SECTION A-A

ALTERNATIVE CAST DUCTILE IRON GRATE OR CAST CARBON STEEL GRATE TYPE 36R AND 36RX

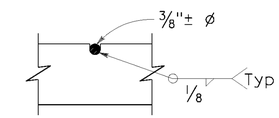

⅜"± ø Cross bars may be fillet welded, resistance welded or electroforged to bearing bars.

CROSS BAR DETAIL TYPE 36RX GRATE (WELDED STEEL)

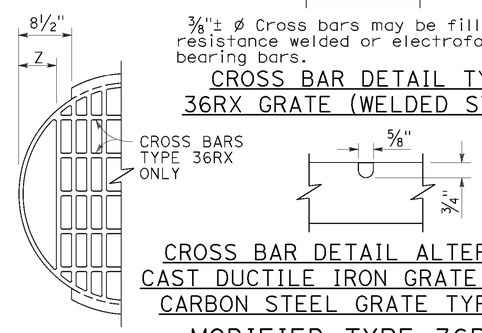

CROSS BAR DETAIL ALTERNATIVE CAST DUCTILE IRON GRATE OR CAST CARBON STEEL GRATE TYPE 36RX

MODIFIED TYPE 36R AND 36RX GRATE FOR ODI INLET

BASIS FOR Misc IRON AND STEEL FINAL PAY WEIGHTS FOR DRAINAGE INLETS

INLET TYPE	GRATE TYPE	No. OF GRATES	WEIGHT LB
GDO (SEE NOTE 4)	24-10C	2	391
	24-10S	2	456
	24-12X	2	473
	24-13	2	374
GO,GOL,G1,G2, G3,G4 (TYPE 24)	24-10C	1	202
	24-10S	1	229
	24-12X	1	239
	24-13	1	188
G4 (TYPE 18) G5,G6	18-8S	1	187
	18-9X	1	187
	18-10	1	149
GT1,GT2	18-8S	2	374
	18-9X	2	374
	18-10	2	298
GT3,GT4	24-10C	2	404
	24-10S	2	458
	24-12X	2	478
	24-13	2	376
ODI	36RX (Mod)	1	196
GMP,GCP,GCPI	36RX	1	215
ODI	36R (Mod)	1	220
GMP,GCP,GCPI	36R	1	236
TRASH RACK			22
GRATE CHAIN			3

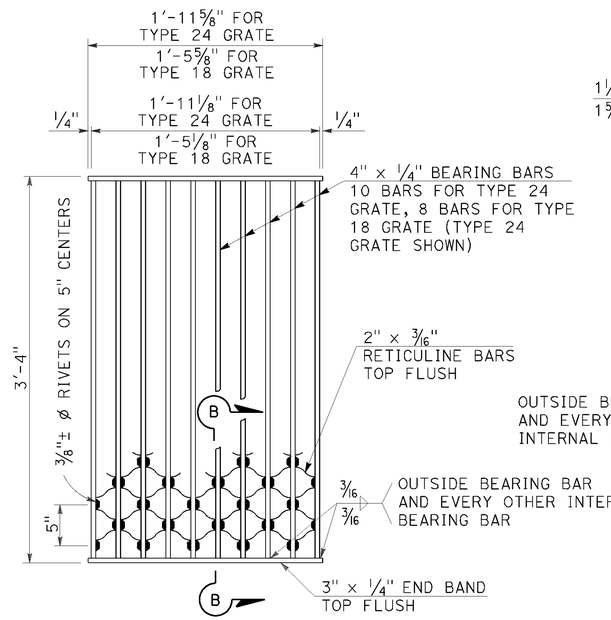

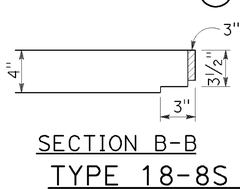

NOTES:

Weight of Type 24 grate = 182 LBS.
Weight of Type 18 grate = 145 LBS.

SECTION B-B

TYPE 18-8S AND 24-10S GRATE

(Welded Steel) Reticuline type

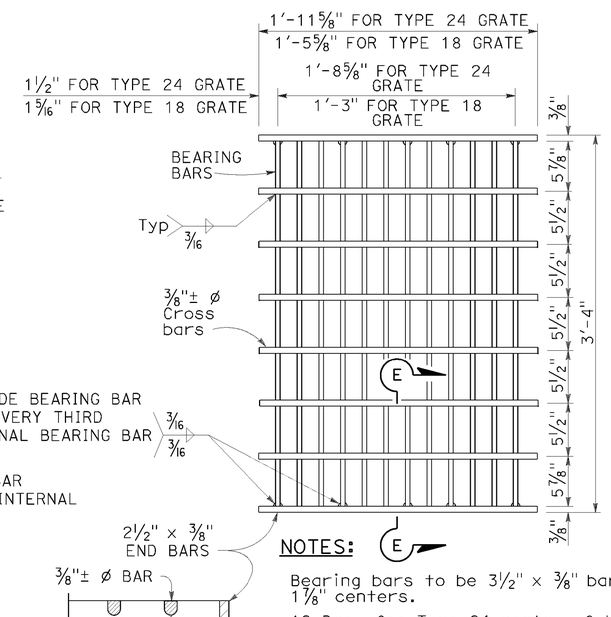

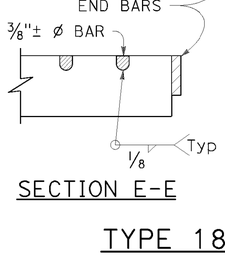

SECTION E-E

NOTES:

Bearing bars to be 3½" × ⅜" bars on 1⅞" centers.

12 Bars for Type 24 grate - 9 bars for Type 18 grates. (Type 24 grate shown).

Weight of Type 24 grate = 192 LBS.

Weight of Type 18 grate = 145 LBS.

⅜"± ø Cross bars may be fillet welded, resistance welded or electroforged to bearing bars.

TYPE 18-9X AND 24-12X GRATE

(Welded Steel)

NOTES:

1. When alternative grates are allowed - Final pay based on alternative with the lesser weight.
2. Use frame shown on Standard Plan D74A, D74B or RSP D77A as appropriate.
3. When Type 24-10S, 24-12X or 24-13 grates are used with GDO Inlets, a ¼" × 3½" × 3'-4⅞" steel bar shall be welded across the center of inlet frame to separate the individual grates.
4. See Revised Standard Plan RSP D77A for connecting chain to welded grate and frame. When chain is required, do not use cast ductile iron grate.

GRATE BAR SPACING TABLE

TYPE	No. OF BARS	CLEAR BAR SPACING	X	Y 4" SPACING	Y 6" SPACING	Z
36R	13	2"	2⅛"	-	-	-
36RX (STEEL)	15	2"	9/16"	3¾"	5¾"	-
36RX (CAST)	13	2"	2⅛"	3¾"	5¾"	-
36R Mod	12	2"	2⅛"	-	-	5"
36RX Mod (STEEL)	13	2"	9/16"	3¾"	5¾"	5 11/16"
36RX Mod (CAST)	12	2"	2⅛"	3¾"	5¾"	5"

STATE OF CALIFORNIA
DEPARTMENT OF TRANSPORTATION

GRATE DETAILS No. 2

NO SCALE

RSP D77B DATED APRIL 19, 2013 SUPERSEDES RSP D77B DATED JULY 20, 2012 AND STANDARD PLAN D77B DATED MAY 20, 2011 - PAGE 165 OF THE STANDARD PLANS BOOK DATED 2010.

REVISED STANDARD PLAN RSP D77B

DATE PLOTTED => 16-AUG-2016
TIME PLOTTED => 14:30

Dist	COUNTY	ROUTE	POST MILES TOTAL PROJECT	SHEET No.	TOTAL SHEETS
01	Lak	20	13.5/30.5	30	37

REGISTERED CIVIL ENGINEER

July 19, 2013
PLANS APPROVAL DATE

REGISTERED PROFESSIONAL ENGINEER Gurinderpal Bhullar No. C48815 Exp. 9-30-14 CIVIL STATE OF CALIFORNIA

THE STATE OF CALIFORNIA OR ITS OFFICERS OR AGENTS SHALL NOT BE RESPONSIBLE FOR THE ACCURACY OR COMPLETENESS OF SCANNED COPIES OF THIS PLAN SHEET.

TO ACCOMPANY PLANS DATED 06-13-16

2010 REVISED STANDARD PLAN RSP T9

TABLE 1

TAPER LENGTH CRITERIA AND CHANNELIZING DEVICE SPACING

SPEED (S)	MINIMUM TAPER LENGTH * FOR WIDTH OF OFFSET 12 FEET (W)				MAXIMUM CHANNELIZING DEVICE SPACING		
					X	Y	Z **
	TANGENT 2L	MERGING L	SHIFTING L/2	SHOULDER L/3	TAPER	TANGENT	CONFLICT
mph	ft	ft	ft	ft	ft	ft	ft
20	160	80	40	27	20	40	10
25	250	125	63	42	25	50	12
30	360	180	90	60	30	60	15
35	490	245	123	82	35	70	17
40	640	320	160	107	40	80	20
45	1080	540	270	180	45	90	22
50	1200	600	300	200	50	100	25
55	1320	660	330	220	55	110	27
60	1440	720	360	240	60	120	30
65	1560	780	390	260	65	130	32
70	1680	840	420	280	70	140	35

* - For other offsets, use the following merging taper length formula for L:
For speed of 40 mph or less, $L = WS^2/60$
For speed of 45 mph or more, $L = WS$

Where: L = Taper length in feet
W = Width of offset in feet
S = Posted speed limit, off-peak 85th-percentile speed prior to work starting, or the anticipated operating speed in mph

** - Use for taper and tangent sections where there are no pavement markings or where there is a conflict between existing pavement markings and channelizers (CA).

TABLE 2

LONGITUDINAL BUFFER SPACE AND FLAGGER STATION SPACING

SPEED *	Min D **	DOWNGRADE Min D ***		
		-3%	-6%	-9%
mph	ft	ft	ft	ft
20	115	116	120	126
25	155	158	165	173
30	200	205	215	227
35	250	257	271	287
40	305	315	333	354
45	360	378	400	427
50	425	446	474	507
55	495	520	553	593
60	570	598	638	686
65	645	682	728	785
70	730	771	825	891

* - Speed is posted speed limit, off-peak 85th-percentile speed prior to work starting, or the anticipated operating speed in mph

** - Longitudinal buffer space or flagger station spacing

*** - Use on sustained downgrade steeper than -3 percent and longer than 1 mile.

TABLE 3

ADVANCE WARNING SIGN SPACING

ROAD TYPE	DISTANCE BETWEEN SIGNS *		
	A	B	C
	ft	ft	ft
URBAN - 25 mph OR LESS	100	100	100
URBAN - MORE THAN 25 mph TO 40 mph	250	250	250
URBAN - MORE THAN 40 mph	350	350	350
RURAL	500	500	500
EXPRESSWAY / FREEWAY	1000	1500	2640

* - The distances are approximate, are intended for guidance purposes only, and should be applied with engineering judgment. These distances should be adjusted by the Engineer for field conditions, if necessary, by increasing or decreasing the recommmended distances.

STATE OF CALIFORNIA
DEPARTMENT OF TRANSPORTATION

TRAFFIC CONTROL SYSTEM TABLES FOR LANE AND RAMP CLOSURES

NO SCALE

RSP T9 DATED JULY 19, 2013 SUPERSEDES RSP T9 DATED APRIL 19, 2013 THAT SUPPLEMENTS THE STANDARD PLANS BOOK DATED 2010.

REVISED STANDARD PLAN RSP T9

DATE PLOTTED => 16-AUG-2016
TIME PLOTTED => 14:30

Dist	COUNTY	ROUTE	POST MILES TOTAL PROJECT	SHEET No.	TOTAL SHEETS
01	Lak	20	13.5/30.5	31	37

REGISTERED CIVIL ENGINEER

April 19, 2013
PLANS APPROVAL DATE

REGISTERED PROFESSIONAL ENGINEER
Gurinderpal Bhullar
No. C48815
Exp. 9-30-14
CIVIL
STATE OF CALIFORNIA

THE STATE OF CALIFORNIA OR ITS OFFICERS OR AGENTS SHALL NOT BE RESPONSIBLE FOR THE ACCURACY OR COMPLETENESS OF SCANNED COPIES OF THIS PLAN SHEET.

TO ACCOMPANY PLANS DATED 06-13-16

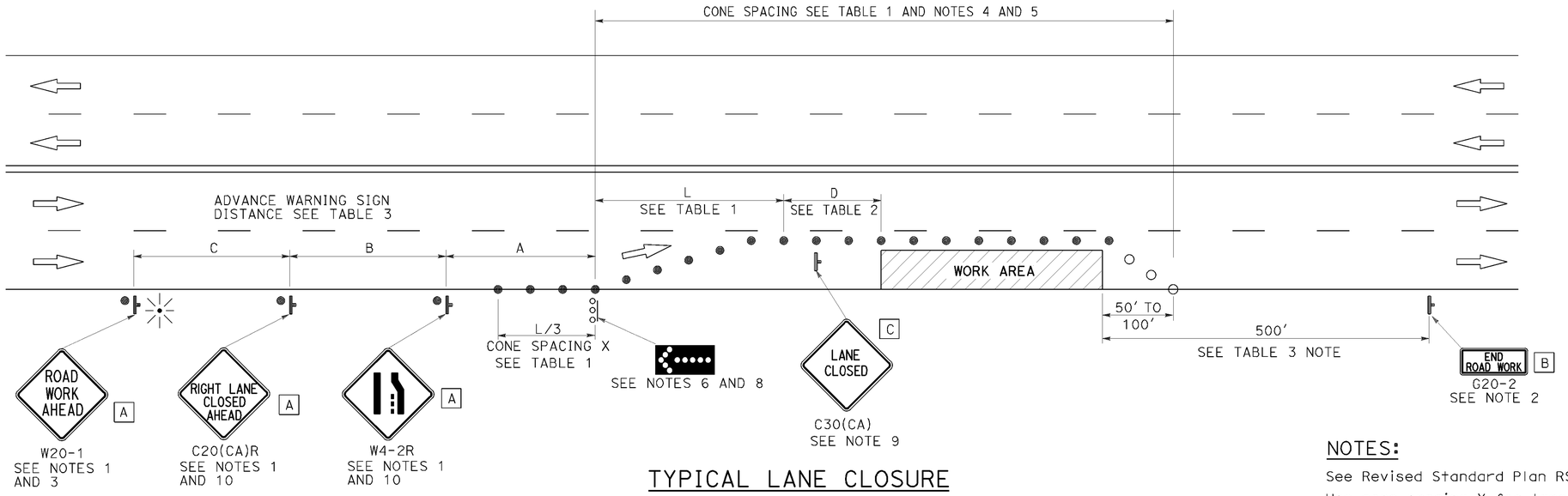

TYPICAL LANE CLOSURE

NOTES:

See Revised Standard Plan RSP T9 for tables.

Use cone spacing X for taper segment, Y for tangent segment or Z for conflict situations, as approriate, per Table 1, unless X, Y, or Z cone spacing is shown on this sheet.

Unless otherwise specified in the special provisions, all temporary warning signs shall have black legend on fluorescent orange background.

California codes are designated by (CA). Otherwise, Federal (MUTCD) codes are shown.

NOTES:

1. Each advance warning sign shall be equipped with at least two flags for daytime closure. Each flag shall be at least 16" x 16" in size and shall be orange or fluorescent red-orange in color. Flashing beacons shall be placed at the locations indicated for lane closure during hours of darkness.
2. A G20-2 "END ROAD WORK" sign, as appropriate, shall be placed at the end of the lane closure unless the end of work area is obvious, or ends within a larger project's limits.
3. If the W20-1 sign would follow within 2000' of a stationary W20-1 or G20-1 "ROAD WORK NEXT _____ MILES", use a C20(CA) sign for the first advance warning sign.
4. All cones used for lane closures during the hours of darkness shall be fitted with retroreflective bands (or sleeves) as specified in the specifications.
5. Portable delineators, placed at one-half the spacing indicated for traffic cones, may be used instead of cones for daytime closures only.
6. Flashing arrow sign shall be either Type I or Type II.
7. For approach speeds over 50 mph, use the "Traffic Control System for Lane Closure On Freeways And Expressways" plan for lane closure details and requirements.
8. A minimum 1500' of sight distance shall be provided where possible for vehicles approaching the first flashing arrow sign. Lane closures shall not begin at the top of crest vertical curve or on a horizontal curve.
9. Place a C30(CA) sign every 2000' throughout length of lane closure.
10. Median lane closures shall conform to the details as shown except that C20(CA)L and W4-2L signs shall be used.
11. At least one person shall be assigned to provide full time maintenance of traffic control devices for lane closure unless, otherwise directed by the Engineer.

LEGEND

- TRAFFIC CONE
- TRAFFIC CONE (OPTIONAL TAPER)
- TEMPORARY TRAFFIC CONTROL SIGN
- FLASHING ARROW SIGN (FAS)
- FAS SUPPORT OR TRAILER
- PORTABLE FLASHING BEACON

SIGN PANEL SIZE (Min)

A	48" x 48"
B	36" x 18"
C	30" x 30"

STATE OF CALIFORNIA
DEPARTMENT OF TRANSPORTATION

TRAFFIC CONTROL SYSTEM FOR LANE CLOSURE ON MULTILANE CONVENTIONAL HIGHWAYS

NO SCALE

RSP T11 DATED APRIL 19, 2013 SUPERSEDES STANDARD PLAN T11 DATED MAY 20, 2011 - PAGE 239 OF THE STANDARD PLANS BOOK DATED 2010.

REVISED STANDARD PLAN RSP T11

2010 REVISED STANDARD PLAN RSP T11

DATE PLOTTED => 16-AUG-2016
TIME PLOTTED => 14:30

Dist	COUNTY	ROUTE	POST MILES TOTAL PROJECT	SHEET No.	TOTAL SHEETS
01	Lak	20	13.5/30.5	32	37

REGISTERED CIVIL ENGINEER

July 15, 2016
PLANS APPROVAL DATE

REGISTERED PROFESSIONAL ENGINEER — Carl M. Duan — No. C59976 — Exp. 6-30-18 — CIVIL — STATE OF CALIFORNIA

THE STATE OF CALIFORNIA OR ITS OFFICERS OR AGENTS SHALL NOT BE RESPONSIBLE FOR THE ACCURACY OR COMPLETENESS OF SCANNED COPIES OF THIS PLAN SHEET.

TO ACCOMPANY PLANS DATED 06-13-16

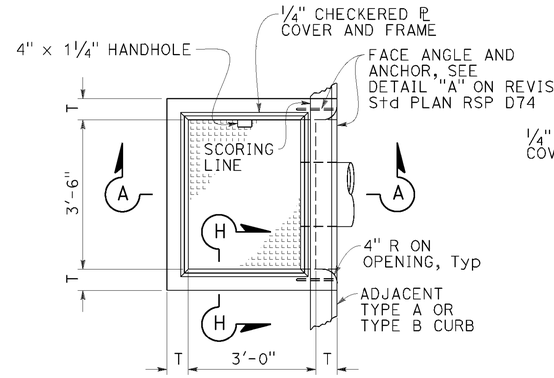

PLAN
TYPE OS

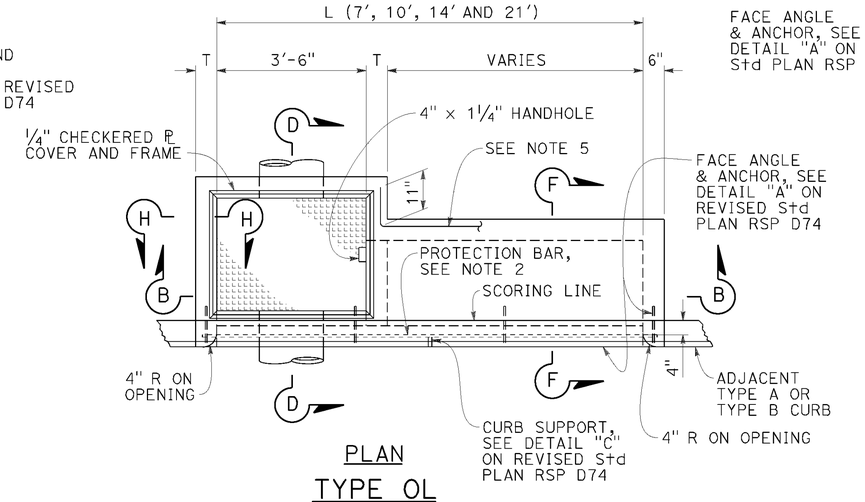

PLAN
TYPE OL

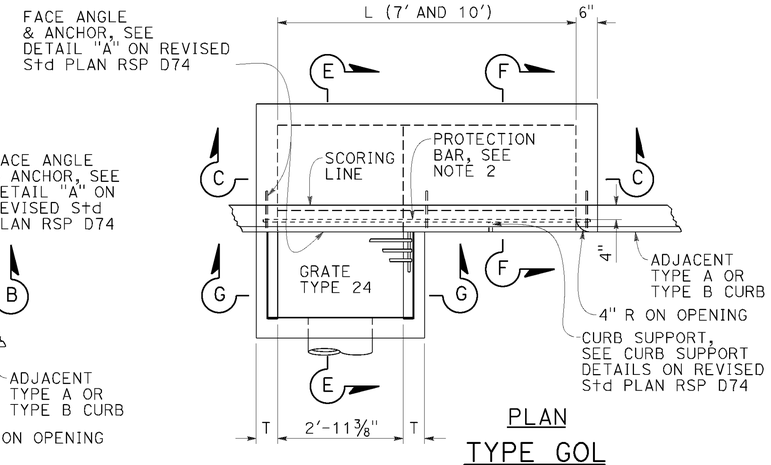

PLAN
TYPE GOL

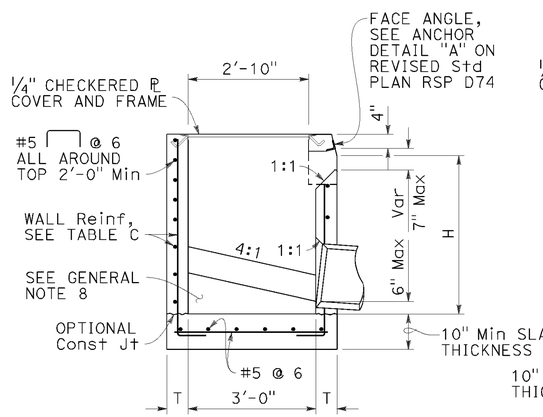

SECTION A-A

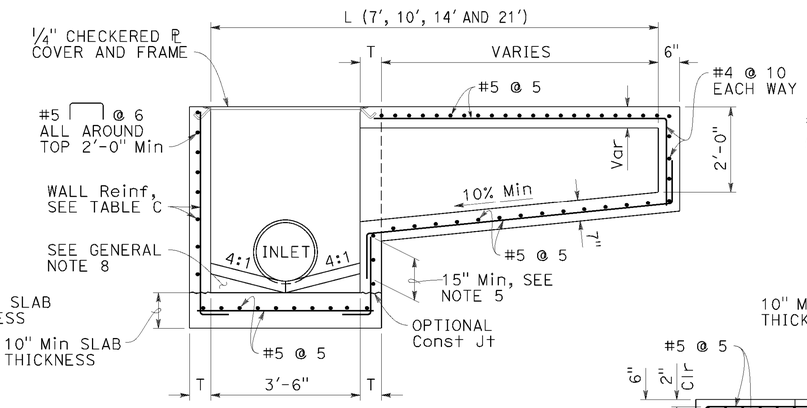

SECTION B-B

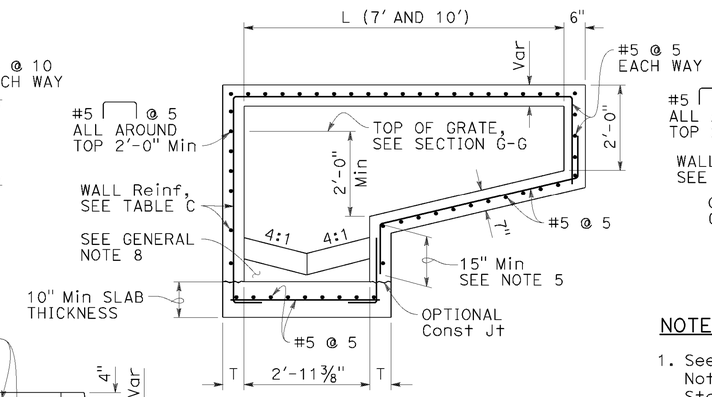

SECTION C-C

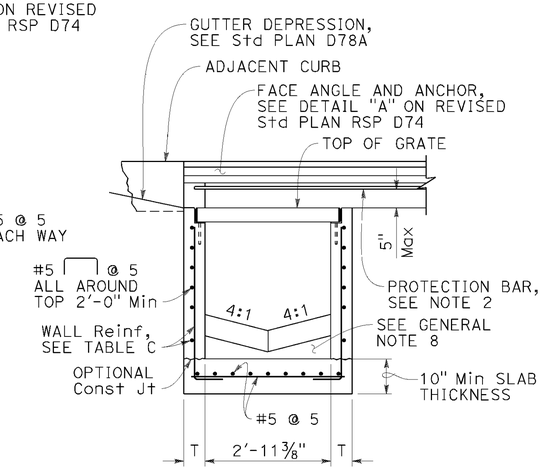

SECTION G-G

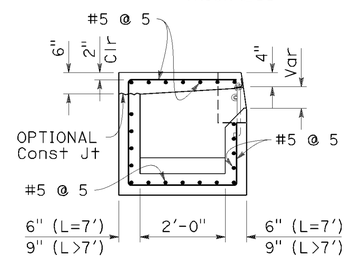

SECTION F-F
(SEE NOTE 5)

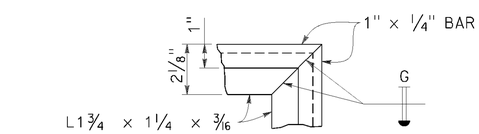

COVER FRAME
TYPICAL EACH CORNER
(CHECKERED ℙ COVER NOT SHOWN)

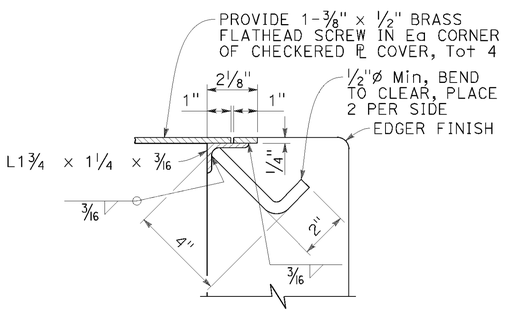

SECTION H-H

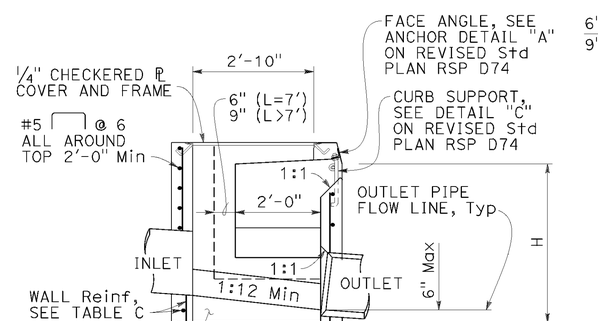

SECTION D-D

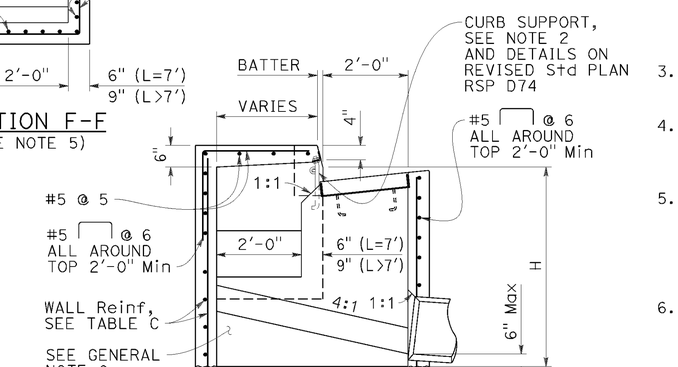

SECTION E-E

NOTES:

1. See Revised Standard Plan RSP D72F for General Notes and additional details. See Revised Standard Plan RSP D72G for tables, wall thickness "T" and quantities.
2. Where shown on the project plans, place a 3/4"Ø plain round protection bar horizontally across the length of the opening and bend back 4" into the inlet wall on each side.
3. Complete joint penetration butt welds may be substituted for the fillet welds on all anchors.
4. Standard square, hexagon, round or equivalent headed anchors may be substituted for the right angle hooks on the anchors shown on this plan.
5. Extend all horizontal bars from inlet extensions into adjacent concrete elements of main inlet box a minimum of 15". Where shown, bend horizontal bars into box. If necessary rotate bars to maintain 2" clear coverage.
6. Height of curb opening will vary with the type of curb and the depth of the local depression.

STATE OF CALIFORNIA
DEPARTMENT OF TRANSPORTATION

CIP DRAINAGE INLETS TYPES OS, OL AND GOL

NO SCALE

RSP D72A DATED JULY 15, 2016 SUPPLEMENTS THE STANDARD PLANS BOOK DATED 2010.

REVISED STANDARD PLAN RSP D72A

2010 REVISED STANDARD PLAN RSP D72A

DATE PLOTTED => 16-AUG-2016
TIME PLOTTED => 14:31

Dist	COUNTY	ROUTE	POST MILES TOTAL PROJECT	SHEET No.	TOTAL SHEETS
01	Lak	20	13.5/30.5	33	37

REGISTERED CIVIL ENGINEER

July 15, 2016
PLANS APPROVAL DATE

REGISTERED PROFESSIONAL ENGINEER Carl M. Duan No. C59976 Exp. 6-30-18 CIVIL STATE OF CALIFORNIA

THE STATE OF CALIFORNIA OR ITS OFFICERS OR AGENTS SHALL NOT BE RESPONSIBLE FOR THE ACCURACY OR COMPLETENESS OF SCANNED COPIES OF THIS PLAN SHEET.

TO ACCOMPANY PLANS DATED 06-13-16

NOTE:

1. For notes and Table 2, See Revised Standard Plan RSP D72C.

TABLE 1		
	T_1	Vert BARS
L_1 AND L_2 < 2'-10"	9"	#4 @ 12
L_1 OR L_2 > 2'-10"	12"	#5 @ 12

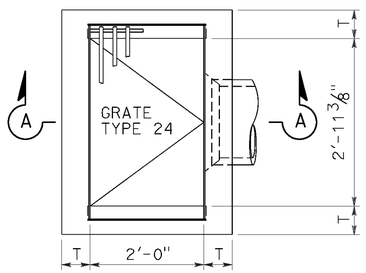

PLAN
TYPE G1

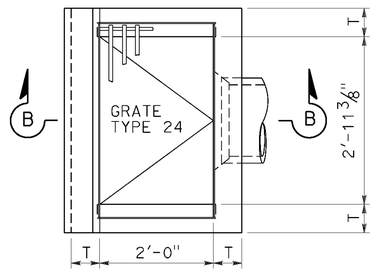

PLAN
TYPE G3

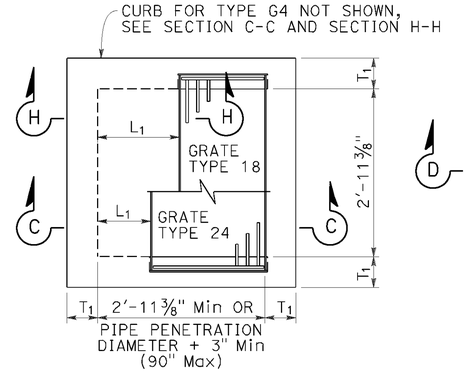

PLAN
STANDARD
TYPE G2 OR G4

FOR "L1", "L2" AND "T1" VALUES, SEE "TABLE 1"

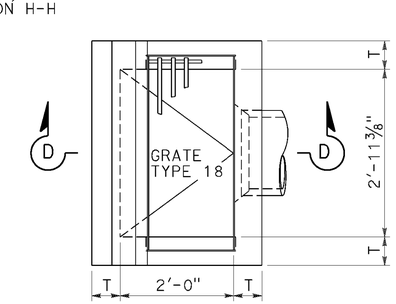

PLAN
TYPE G5

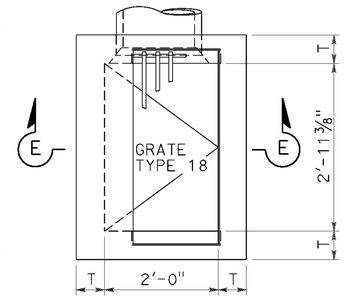

PLAN
TYPE G6

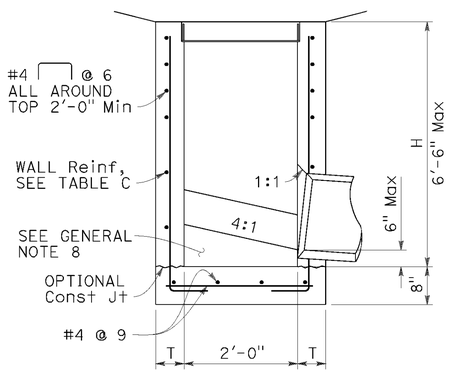

SECTION A-A

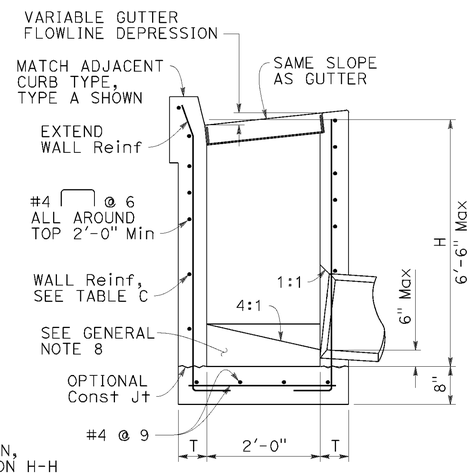

SECTION B-B

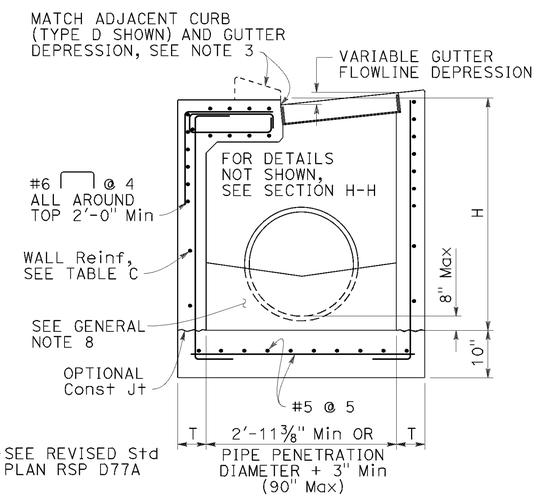

SECTION C-C

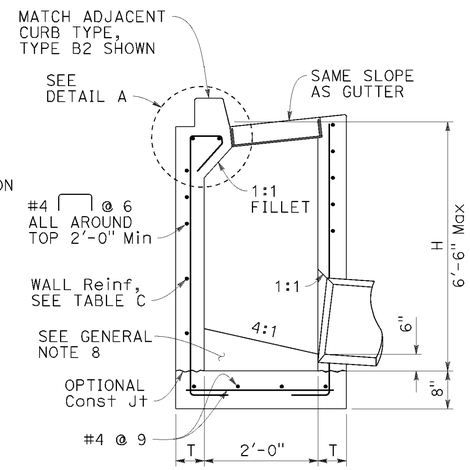

SECTION D-D

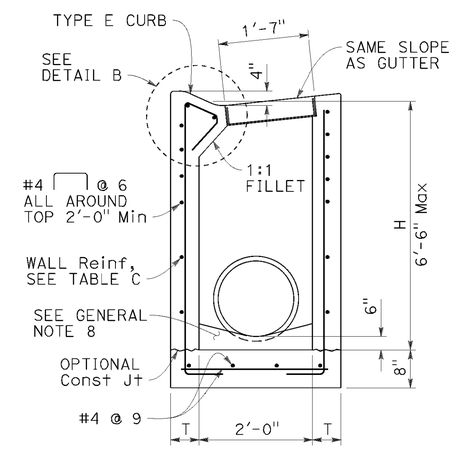

SECTION E-E

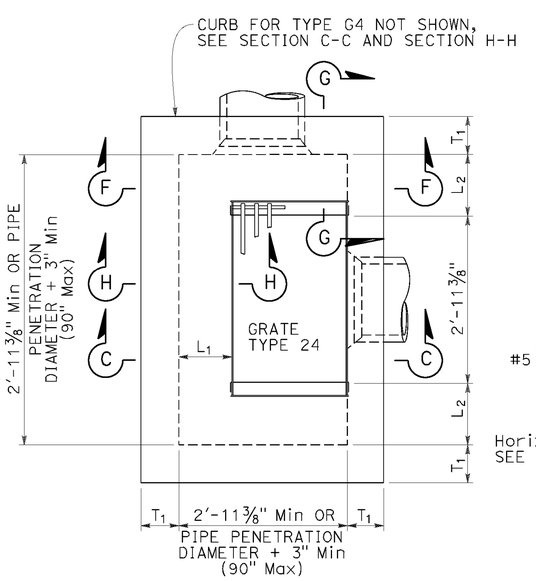

PLAN
EXPANDED
TYPE G2 OR G4

(INTEGRAL TOP ALTERNATIVE)
FOR "L" AND "T" VALUES, SEE TABLE 1

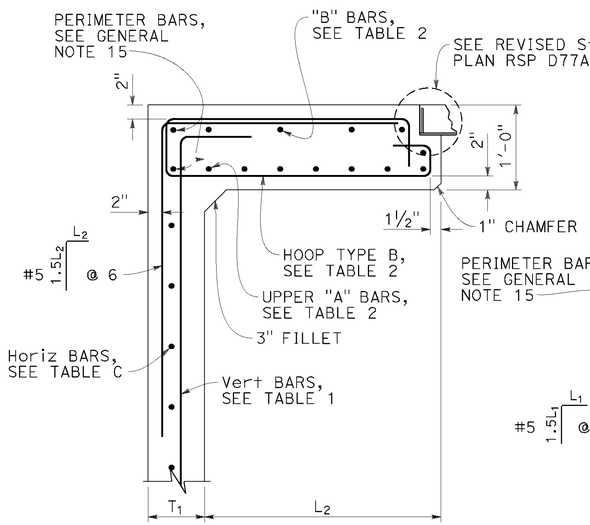

SECTION G-G

FOR "L1", "L2" AND "T1" VALUES, SEE "TABLE 1"

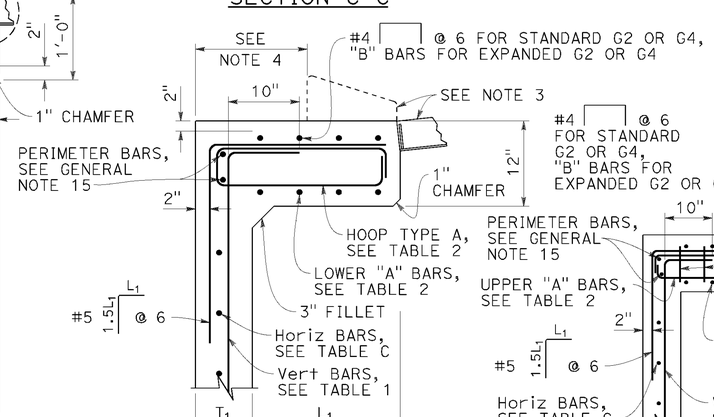

SECTION H-H

FOR "L1", "L2" AND "T1" VALUES, SEE "TABLE 1"

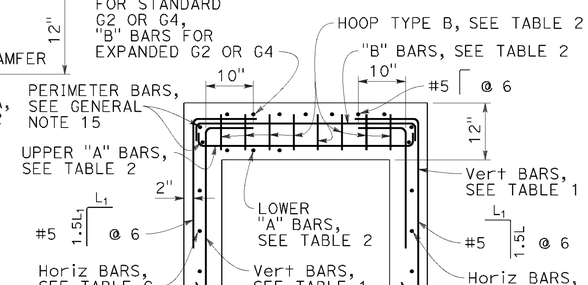

SECTION F-F

FOR "L1", "L2" AND "T1" VALUES, SEE "TABLE 1"

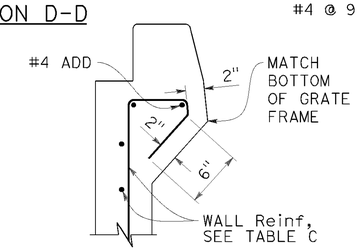

DETAIL A

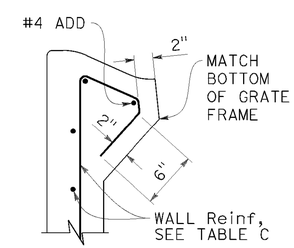

DETAIL B

STATE OF CALIFORNIA
DEPARTMENT OF TRANSPORTATION

CIP DRAINAGE INLETS TYPES G1, G2, G3, G4, G5 AND G6

NO SCALE

RSP D72A DATED JULY 15, 2016 SUPPLEMENTS THE STANDARD PLANS BOOK DATED 2010.

REVISED STANDARD PLAN RSP D72B

2010 REVISED STANDARD PLAN RSP D72B

DATE PLOTTED => 16-AUG-2016
TIME PLOTTED => 14:31

Dist	COUNTY	ROUTE	POST MILES TOTAL PROJECT	SHEET No.	TOTAL SHEETS
01	Lak	20	13.5/30.5	34	37

REGISTERED CIVIL ENGINEER

July 15, 2016
PLANS APPROVAL DATE

REGISTERED PROFESSIONAL ENGINEER
Carl M. Duan
No. C59976
Exp. 6-30-18
CIVIL
STATE OF CALIFORNIA

THE STATE OF CALIFORNIA OR ITS OFFICERS OR AGENTS SHALL NOT BE RESPONSIBLE FOR THE ACCURACY OR COMPLETENESS OF SCANNED COPIES OF THIS PLAN SHEET.

TO ACCOMPANY PLANS DATED 06-13-16

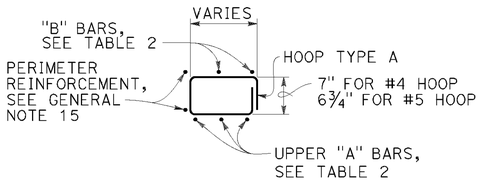

HOOP TYPE A

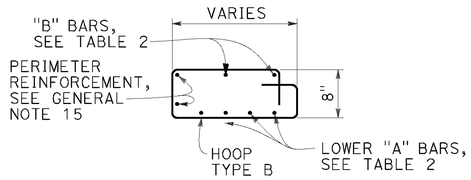

HOOP TYPE B

NOTES:

1. See Revised Standard Plan RSP D72F for General Notes and additional details. See Revised Standard Plan RSP D72G for tables and quantities.
2. Type G4 inlet can use Grate Type 18 or 24. Type G2 inlet uses Grate Type 24.
3. Type G4 inlet details are similar to Type G2 inlet details, except for the addition of a curb and sloped grate to match the adjacent curb and gutter depression.
4. Dimension will vary with different grates, curb types, box width and wall thickness.

TABLE 2 - TOP SLAB REINFORCEMENT

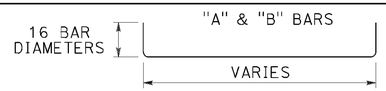

	W/ CURB	W/O CURB
"A" BARS	#4 @ 5 (2 BARS Min)	#5 @ 5 (3 BARS Min)
"B" BARS	#4 @ 10 (2 BARS Min)	#4 @ 12 (2 BARS Min)
HOOPS ("A" & "B")	#4 @ 5	#5 @ 5

ROTATE "A" AND "B" BARS SO HOOKED ENDS WILL MAINTAIN 2" CLEAR COVERAGE.

STATE OF CALIFORNIA
DEPARTMENT OF TRANSPORTATION

CIP DRAINAGE INLETS TYPES G1, G2, G3, G4, G5 AND G6

NO SCALE

RSP D72C DATED JULY 15, 2016 SUPPLEMENTS THE STANDARD PLANS BOOK DATED 2010.

REVISED STANDARD PLAN RSP D72C

2010 REVISED STANDARD PLAN RSP D72C

DATE PLOTTED => 16-AUG-2016
TIME PLOTTED => 14:31

Dist	COUNTY	ROUTE	POST MILES TOTAL PROJECT	SHEET No.	TOTAL SHEETS
01	Lak	20	13.5/30.5	35	37

REGISTERED CIVIL ENGINEER

July 15, 2016
PLANS APPROVAL DATE

REGISTERED PROFESSIONAL ENGINEER — Carl M. Duan, No. C59976, Exp. 6-30-18, CIVIL, STATE OF CALIFORNIA

THE STATE OF CALIFORNIA OR ITS OFFICERS OR AGENTS SHALL NOT BE RESPONSIBLE FOR THE ACCURACY OR COMPLETENESS OF SCANNED COPIES OF THIS PLAN SHEET.

TO ACCOMPANY PLANS DATED 06-13-16

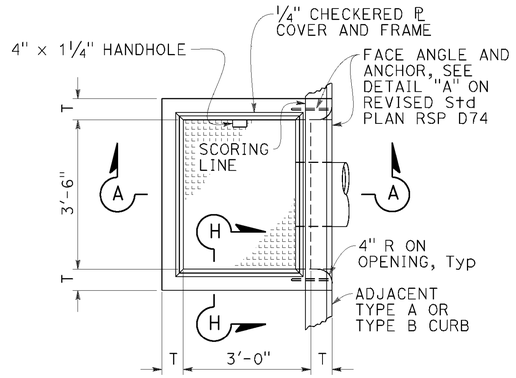

PLAN
TYPE OS

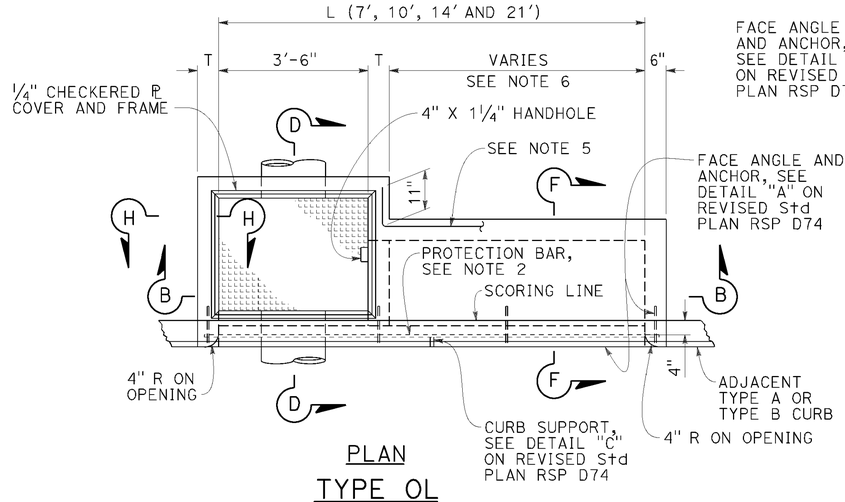

PLAN
TYPE OL

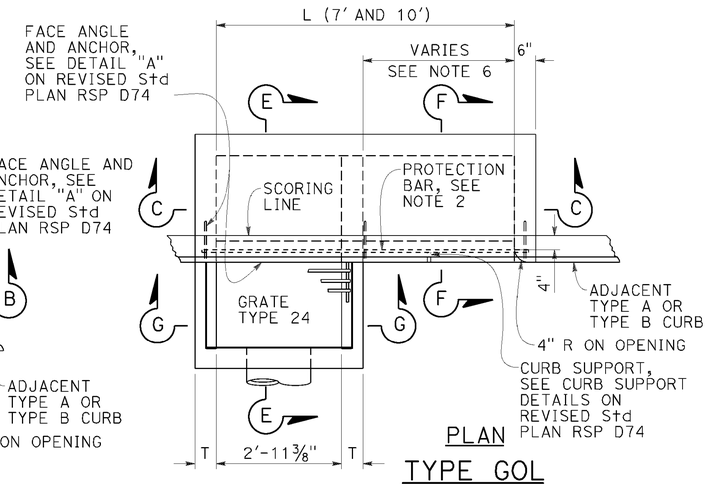

PLAN
TYPE GOL

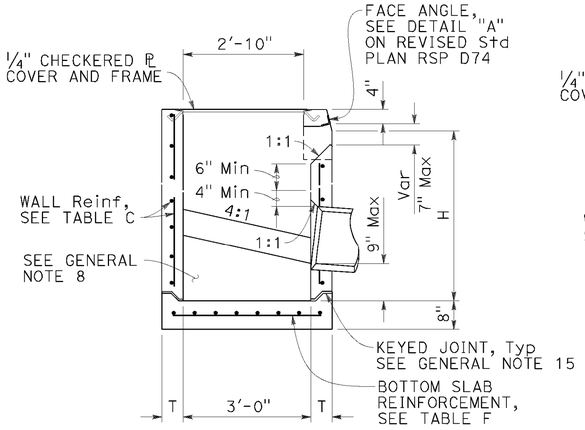

SECTION A-A

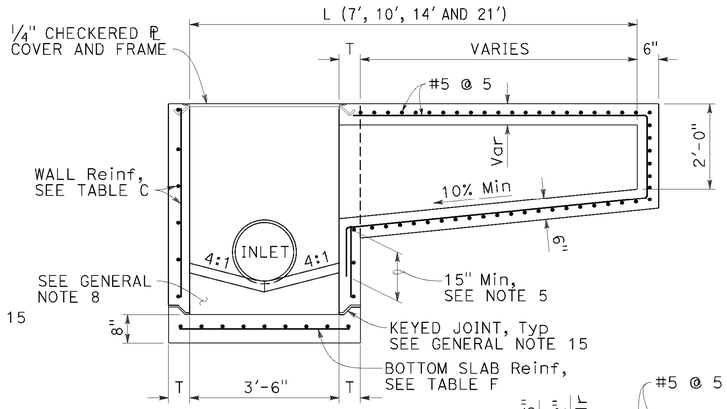

SECTION B-B

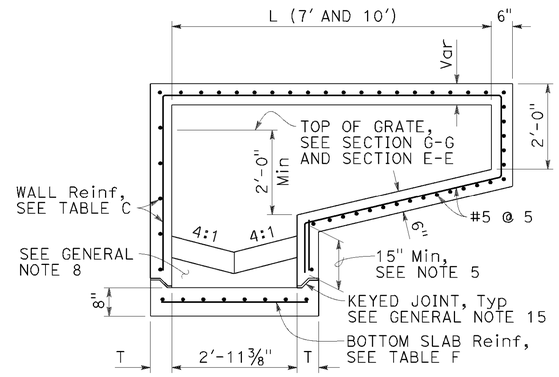

SECTION C-C

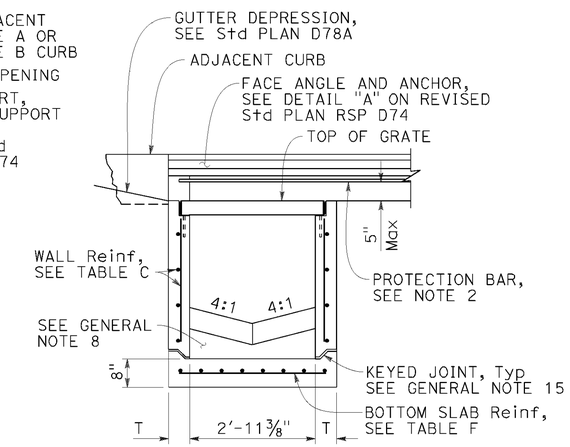

SECTION G-G

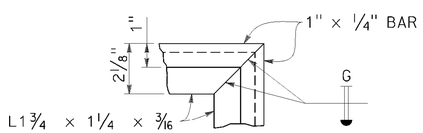

COVER FRAME
TYPICAL EACH CORNER
(CHECKERED ℙ COVER NOT SHOWN)

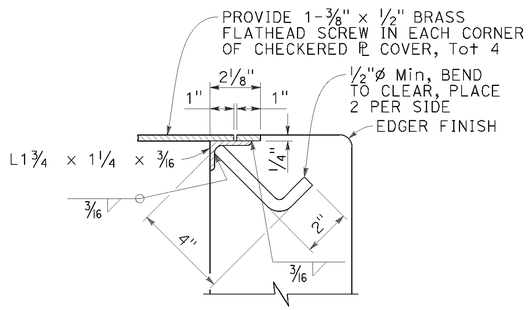

SECTION H-H

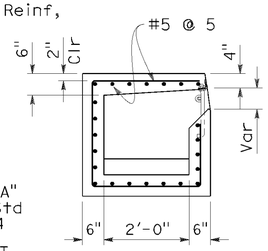

SECTION F-F
SEE NOTE 5

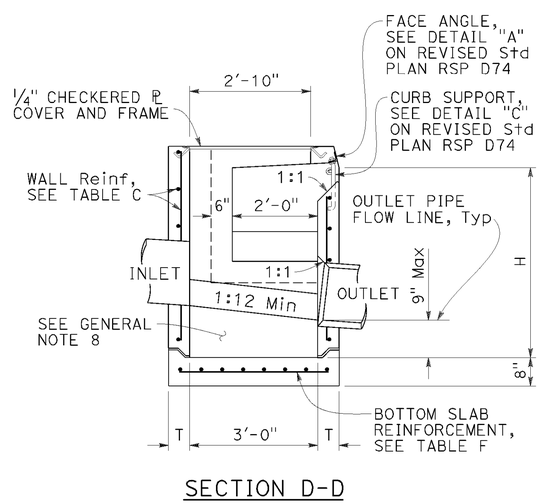

SECTION D-D

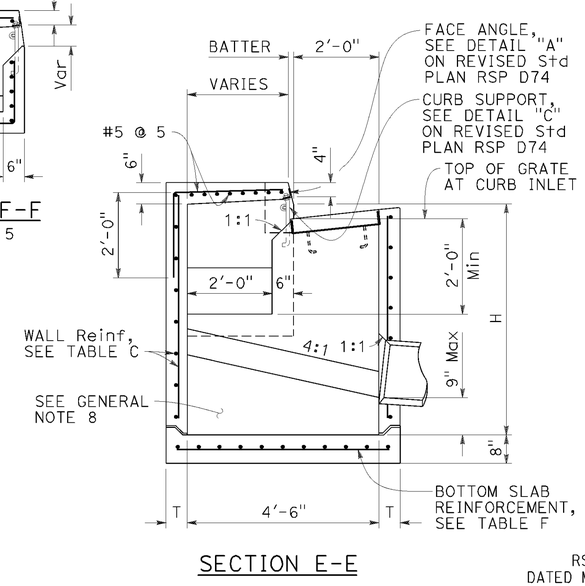

SECTION E-E

NOTES:

1. See Revised Standard Plan RSP D73F for General Notes and additional details. See Revised Standard Plan RSP D73G for tables, wall thickness "T" and quantities.
2. When shown on the project plans, place a ¾"Ø plain round protection bar horizontally across the length of the opening and bend back 4" into the inlet wall on each side.
3. Complete joint penetration butt welds may be substituted for the fillet welds on all anchors.
4. Standard square, hexagon, round or equivalent headed anchors may be substituted for the right angle hooks on the anchors shown on this plan.
5. Extend all horizontal bars from inlet extensions into adjacent concrete elements of main inlet box a minimum of 15". Where shown, bend horizontal bars into box. If necessary rotate bars to maintain 2" clear coverage.
6. Height of curb opening will vary with the type of curb and the depth of the local depression.

STATE OF CALIFORNIA
DEPARTMENT OF TRANSPORTATION

PRECAST DRAINAGE INLETS TYPES OS, OL AND GOL

NO SCALE

RSP D73A DATED JULY 15, 2016 SUPERSEDES STANDARD PLAN D73A DATED MAY 20, 2011 - PAGE 157 OF THE STANDARD PLANS BOOK DATED 2010.

REVISED STANDARD PLAN RSP D73A

2010 REVISED STANDARD PLAN RSP D73A

DATE PLOTTED => 16-AUG-2016
TIME PLOTTED => 14:32

Dist	COUNTY	ROUTE	POST MILES TOTAL PROJECT	SHEET No.	TOTAL SHEETS
01	Lak	20	13.5/30.5	36	37

REGISTERED CIVIL ENGINEER

July 15, 2016
PLANS APPROVAL DATE

REGISTERED PROFESSIONAL ENGINEER — Carl M. Duan — No. C59976 — Exp. 6-30-18 — CIVIL — STATE OF CALIFORNIA

THE STATE OF CALIFORNIA OR ITS OFFICERS OR AGENTS SHALL NOT BE RESPONSIBLE FOR THE ACCURACY OR COMPLETENESS OF SCANNED COPIES OF THIS PLAN SHEET.

TO ACCOMPANY PLANS DATED 06-13-16

NOTE:

1. For notes and Table 2, See Revised Standard Plan RSP D73C.

TABLE 1		
	T_1	Vert BARS
L_1 AND L_2 < 2'-10"	8"	#4 @ 12
L_1 OR L_2 > 2'-10"	12"	#5 @ 12

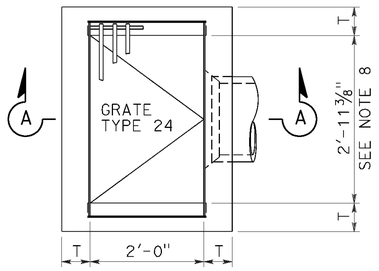

PLAN
TYPE G1

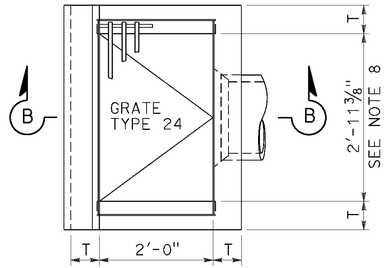

PLAN
TYPE G3

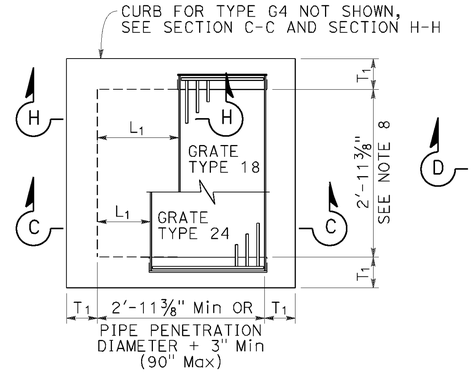

PLAN
STANDARD TYPE G2 OR G4
(INTEGRAL TOP ALTERNATIVE)
FOR "L" AND "T" VALUES, SEE TABLE 1

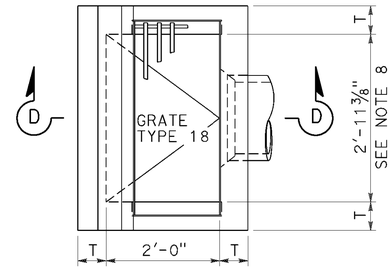

PLAN
TYPE G5

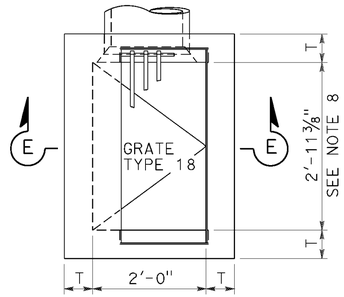

PLAN
TYPE G6

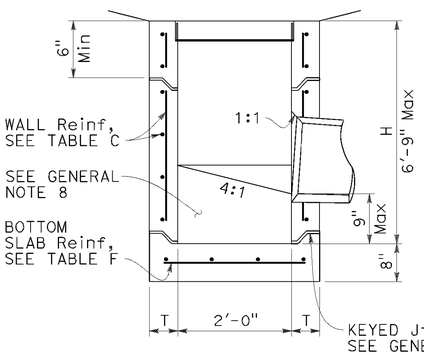

SECTION A-A

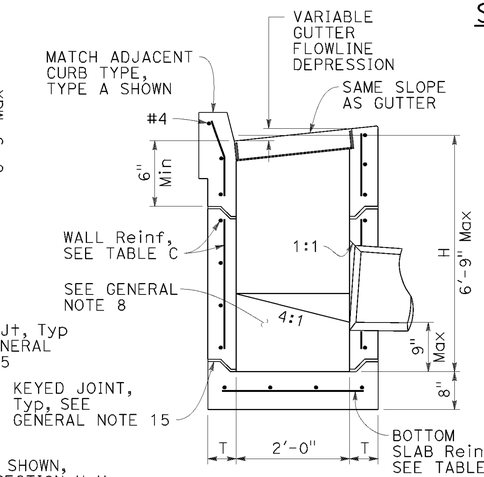

SECTION B-B

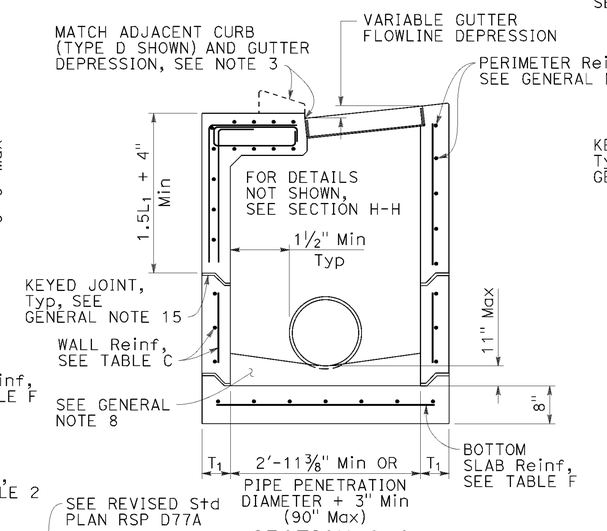

SECTION C-C
FOR "L1", "L2" AND "T1" VALUES, SEE "TABLE 1"

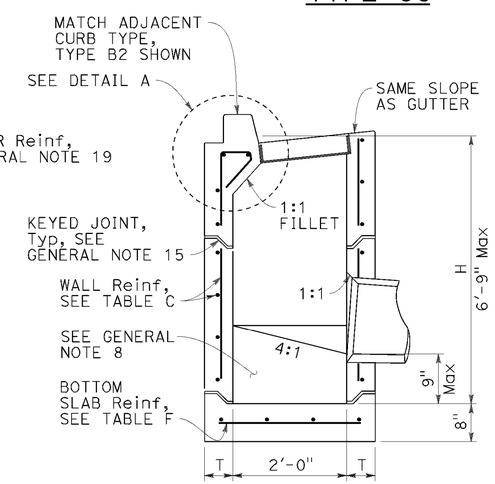

SECTION D-D

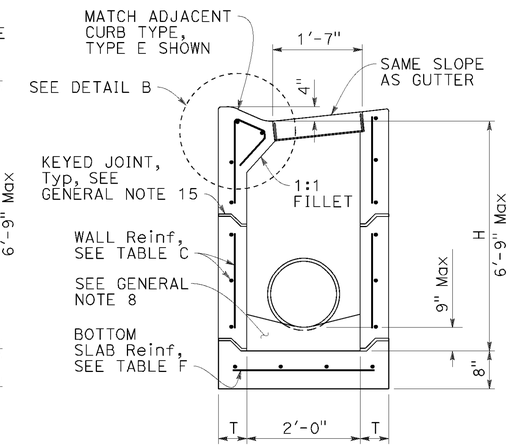

SECTION E-E

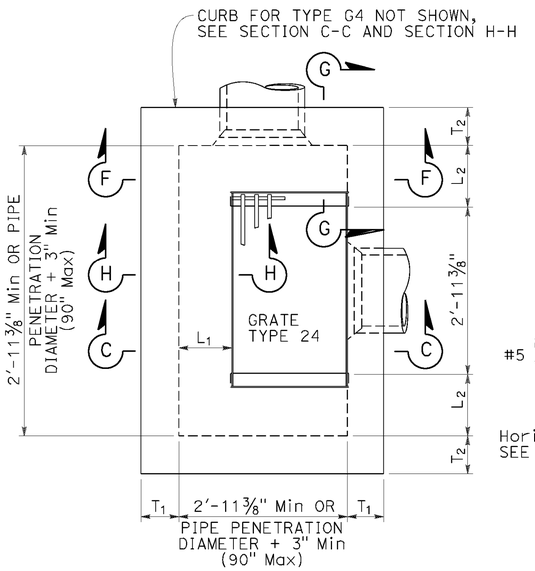

PLAN
EXPANDED
TYPE G2 OR G4
(INTEGRAL TOP ALTERNATIVE)
FOR "L1", "L2" AND "T1" VALUES, SEE "TABLE 1"

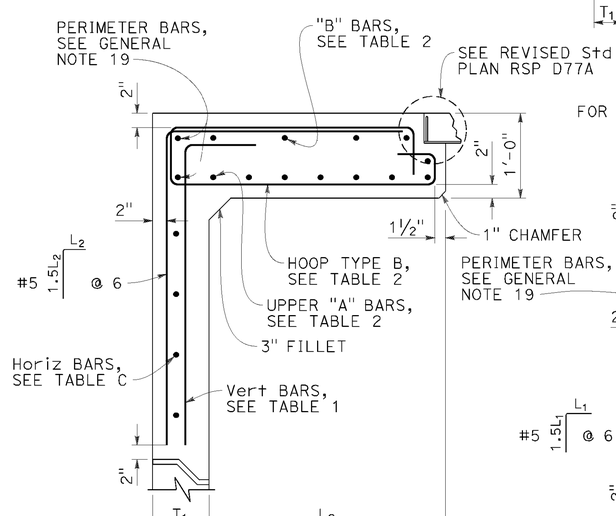

SECTION G-G
FOR "L1", "L2" AND "T1" VALUES, SEE "TABLE 1"

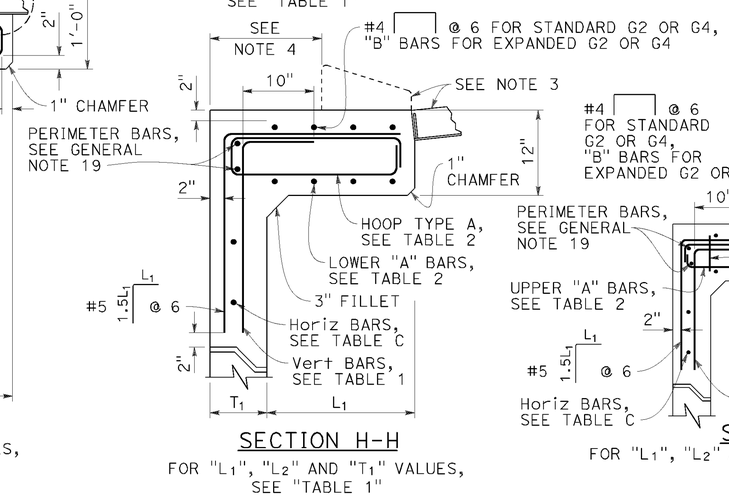

SECTION H-H
FOR "L1", "L2" AND "T1" VALUES, SEE "TABLE 1"

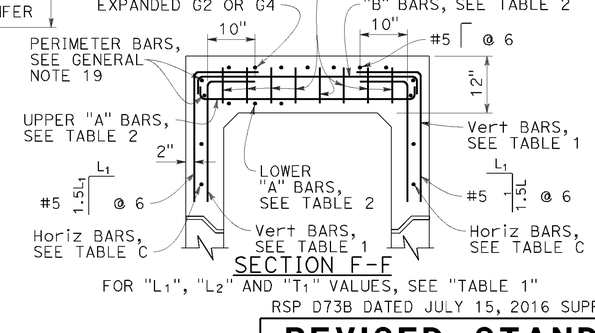

SECTION F-F
FOR "L1", "L2" AND "T1" VALUES, SEE "TABLE 1"

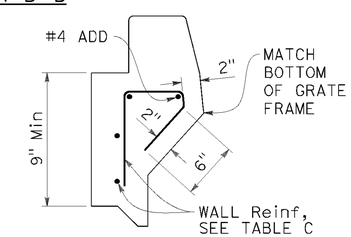

DETAIL A

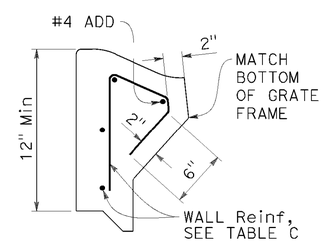

DETAIL B

STATE OF CALIFORNIA
DEPARTMENT OF TRANSPORTATION

PRECAST DRAINAGE INLETS TYPES G1, G2, G3, G4, G5 AND G6

NO SCALE

RSP D73B DATED JULY 15, 2016 SUPPLEMENTS THE STANDARD PLANS BOOK DATED 2010.

REVISED STANDARD PLAN RSP D73B

2010 REVISED STANDARD PLAN RSP D73B

DATE PLOTTED => 16-AUG-2016
TIME PLOTTED => 14:32

Dist	COUNTY	ROUTE	POST MILES TOTAL PROJECT	SHEET No.	TOTAL SHEETS
01	Lak	20	13.5/30.5	37	37

REGISTERED CIVIL ENGINEER

July 15, 2016
PLANS APPROVAL DATE

REGISTERED PROFESSIONAL ENGINEER
Carl M. Duan
No. C59976
Exp. 6-30-18
CIVIL
STATE OF CALIFORNIA

THE STATE OF CALIFORNIA OR ITS OFFICERS OR AGENTS SHALL NOT BE RESPONSIBLE FOR THE ACCURACY OR COMPLETENESS OF SCANNED COPIES OF THIS PLAN SHEET.

TO ACCOMPANY PLANS DATED 06-13-16

FACE ANGLE DETAIL "A"	
LENGTH OF CURB OPENING	No. OF ANCHORS
3'-6" OR LESS	2
7'-0"	3
10'-0"	4
14'-0"	5
21'-0"	7

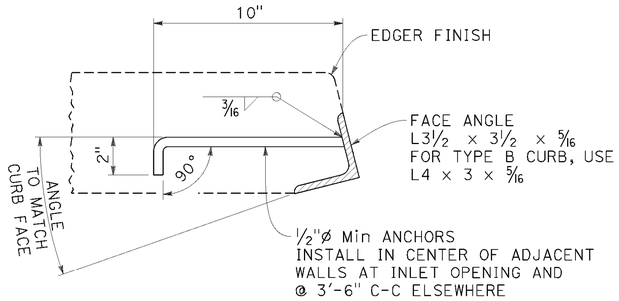

DETAIL "A"

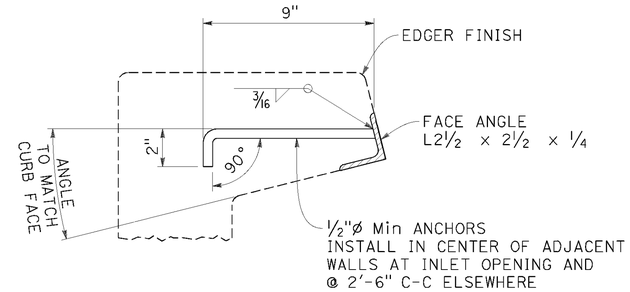

DETAIL "B"

FACE ANGLE AND ANCHOR

NOTE:

1. When shown on the project plans, place a ¾"ø plain round protection bar horizontally across the length of the opening and bend back 4" into the inlet wall on each side.

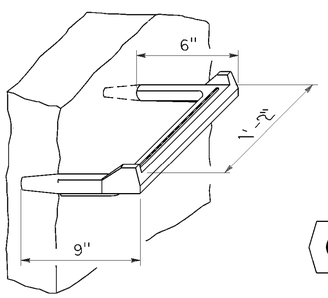

STEP INSERT

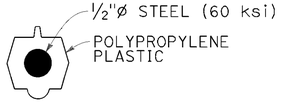

TYPICAL SECTION
(STEP INSERT)

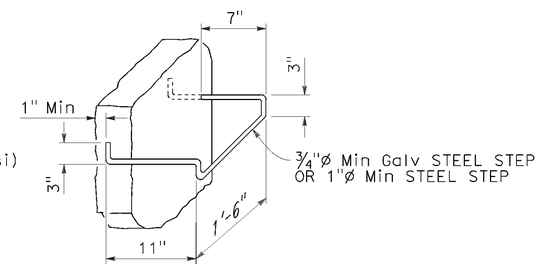

BAR STEP

STEP DETAILS

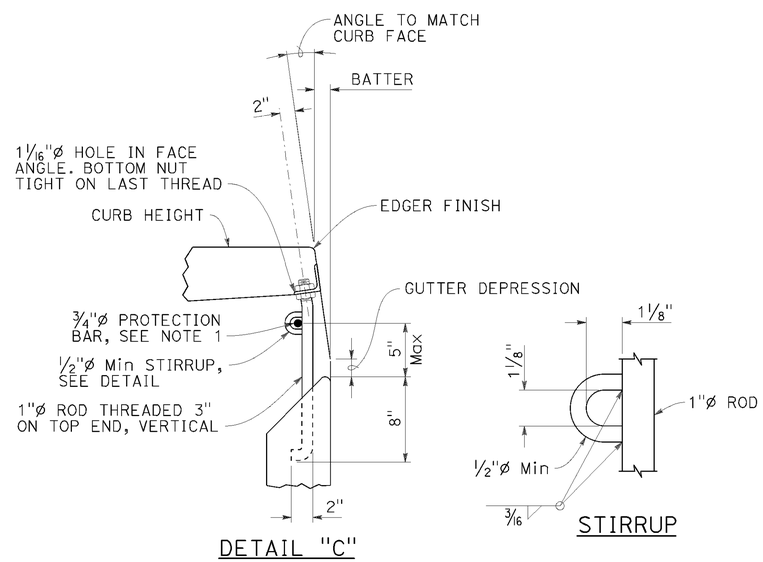

DETAIL "C"

STIRRUP

CURB SUPPORT

CURB SUPPORTS SHALL BE EVENLY SPACED AND MINIMAL IN NUMBER SUCH THAT MAXIMUM SPAN OF UNSUPPORTED CURB IS 7'-0".

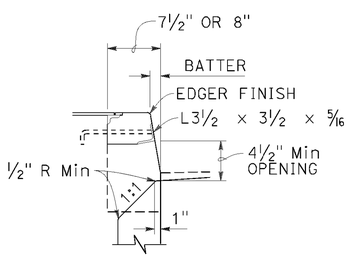

TYPE A CURBS

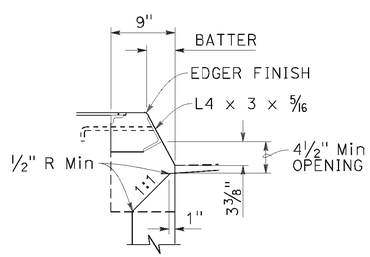

TYPE B CURBS

CURB OPENING DETAILS

STATE OF CALIFORNIA
DEPARTMENT OF TRANSPORTATION

DRAINAGE INLET DETAILS

NO SCALE

RSP D74 DATED JULY 15, 2016 SUPPLEMENTS THE STANDARD PLANS BOOK DATED 2010.

REVISED STANDARD PLAN RSP D74

2010 REVISED STANDARD PLAN RSP D74

DATE PLOTTED => 16-AUG-2016
TIME PLOTTED => 14:32