Dist	COUNTY	ROUTE	POST MILES TOTAL PROJECT	SHEET No.	TOTAL SHEETS
01	Hum	96	R6.2/6.6	1	55

ACHSSTP-P096(058)E

STATE OF CALIFORNIA
DEPARTMENT OF TRANSPORTATION

PROJECT PLANS FOR CONSTRUCTION ON
STATE HIGHWAY

IN HUMBOLDT COUNTY
6.2 MILES EAST OF WILLOW CREEK
TO 2.6 MILES WEST OF TISH-TANG CAMPGROUND

INDEX OF PLANS

SHEET No.	DESCRIPTION
1	TITLE AND LOCATION MAP
2	TYPICAL CROSS SECTIONS
3-5	LAYOUTS
6-7	PROFILES AND SUPERELEVATION DIAGRAMS
8-11	CONSTRUCTION DETAILS
12-25	DRAINAGE PLANS, PROFILES, DETAILS AND QUANTITIES
26	CONSTRUCTION AREA SIGNS
27	TRAFFIC HANDLING PLAN
28-29	PAVEMENT DELINEATION AND SIGN PLANS, DETAILS AND QUANTITIES
30	SUMMARY OF QUANTITIES
31-37	EROSION CONTROL PLANS, DETAILS, AND QUANTITIES
38-55	REVISED STANDARD PLANS

TO BE SUPPLEMENTED BY STANDARD PLANS DATED 2010

THE STANDARD PLANS LIST APPLICABLE TO THIS CONTRACT IS INCLUDED IN THE NOTICE TO BIDDERS AND SPECIAL PROVISIONS BOOK.

LOCATION MAP

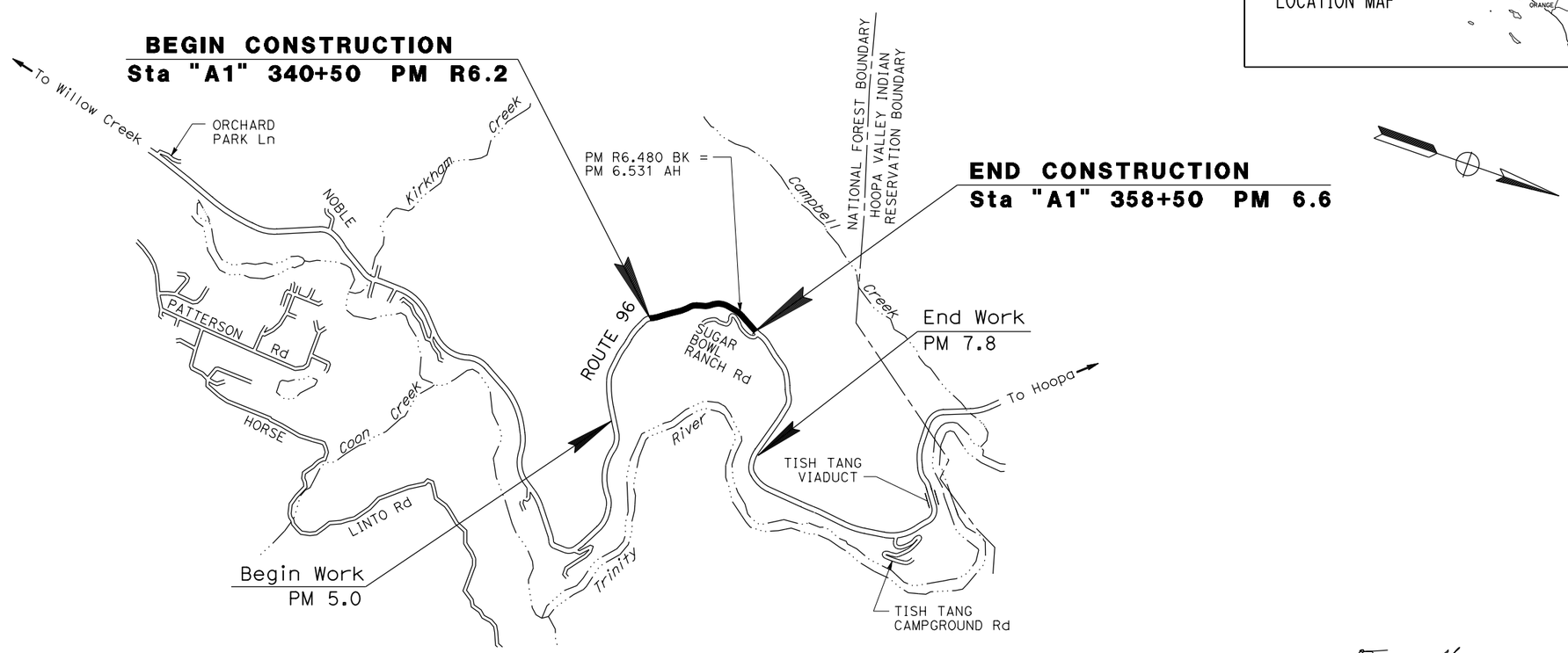

NO SCALE

PROJECT ENGINEER REGISTERED CIVIL ENGINEER — DATE 11-19-15

November 19, 2015
PLANS APPROVAL DATE

REGISTERED PROFESSIONAL ENGINEER — TRAVIS A. GURNEY — No. C77417 — Exp. 06-30-17 — CIVIL — STATE OF CALIFORNIA

THE STATE OF CALIFORNIA OR ITS OFFICERS OR AGENTS SHALL NOT BE RESPONSIBLE FOR THE ACCURACY OR COMPLETENESS OF SCANNED COPIES OF THIS PLAN SHEET.

PROJECT MANAGER: TROY ARSENEAU
DESIGN MANAGER: JOHN L. MARTIN

THE CONTRACTOR SHALL POSSESS THE CLASS (OR CLASSES) OF LICENSE AS SPECIFIED IN THE "NOTICE TO BIDDERS."

CONTRACT No.	01-0A9901
PROJECT ID	0112000001

LAST REVISION 00-00-00 — DATE PLOTTED => 10-DEC-2015 — TIME PLOTTED => 12:35

Dist	COUNTY	ROUTE	POST MILES TOTAL PROJECT	SHEET No.	TOTAL SHEETS
01	HUM	96	R6.2/6.6	2	55

REGISTERED CIVIL ENGINEER 11/19/15 DATE

11/19/15
PLANS APPROVAL DATE

REGISTERED PROFESSIONAL ENGINEER TRAVIS A. GURNEY No. C77417 Exp. 06/30/17 CIVIL STATE OF CALIFORNIA

THE STATE OF CALIFORNIA OR ITS OFFICERS OR AGENTS SHALL NOT BE RESPONSIBLE FOR THE ACCURACY OR COMPLETENESS OF SCANNED COPIES OF THIS PLAN SHEET.

NOTES:

1. DIMENSIONS OF THE PAVEMENT STRUCTURES (STRUCTURAL SECTIONS) ARE SUBJECT TO TOLERANCES SPECIFIED IN THE STANDARD SPECIFICATIONS.
2. SUPERELEVATIONS ARE SHOWN ON THE SUPERELEVATION DIAGRAMS.
3. SEE REVISED STANDARD PLANS FOR TAPERED EDGE DETAILS.
4. FOR MGS LOCATIONS SEE LAYOUT SHEETS.
5. FOR DIKE LOCATIONS SEE LAYOUT SHEETS.

DESIGN DESIGNATION

ADT (2016)	2,010	D	60%
ADT (2036)	2,390	T	1%
TI_{20}	7.0	V	55 mph

PAVEMENT CLIMATE REGION: LOW MOUNTAIN

ABBREVIATIONS:

CRS	CENTERLINE RUMBLE STRIP (HMA, GROUND-IN INDENTATIONS)
HMA-A	HOT MIX ASPHALT (TYPE A)
MGS	MIDWEST GUARDRAIL SYSTEM (STEEL POST)
RBWC-O	RUBBERIZED HOT MIX ASHALT-OPEN GRADED (BONDED WEARING COURSE)
REW	RAIL ELEMENT WALL
RHMA-G	RUBBERIZED HOT MIX ASPHALT (GAP GRADED)
TE	TAPERED EDGE
SB	SHOULDER BACKING
SUPER	SUPERELEVATION
VC	VEGETATION CONTROL (MINOR CONCRETE)

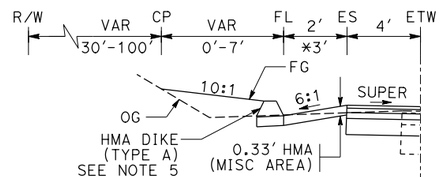

"A1" STA 342+25.00 TO 342+75.00
"A1" STA 343+75.00 TO 344+50.00
"A1" STA 346+00.00 TO 348+00.00
*"A1" STA 354+42.00 TO 355+00.00

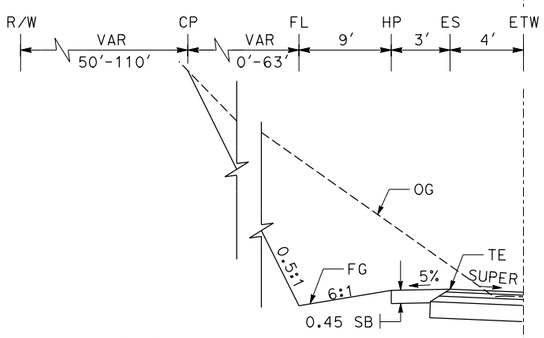

"A1" STA 350+00.00 TO 353+25.00

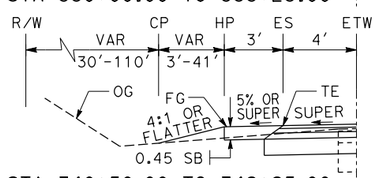

"A1" STA 340+50.00 TO 342+25.00
"A1" STA 348+00.00 TO 350+00.00
"A1" STA 353+25.00 TO 354+42.00

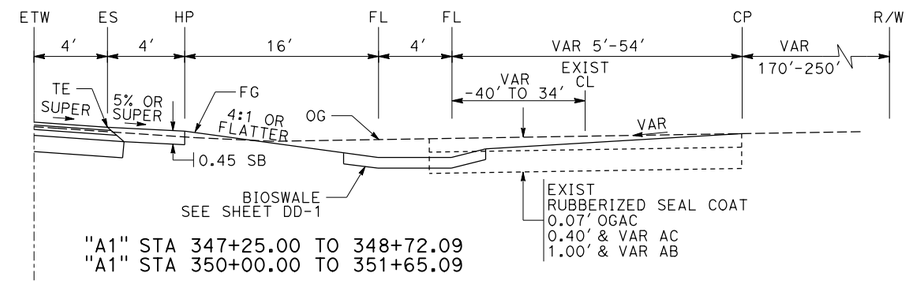

"A1" STA 347+25.00 TO 348+72.09
"A1" STA 350+00.00 TO 351+65.09

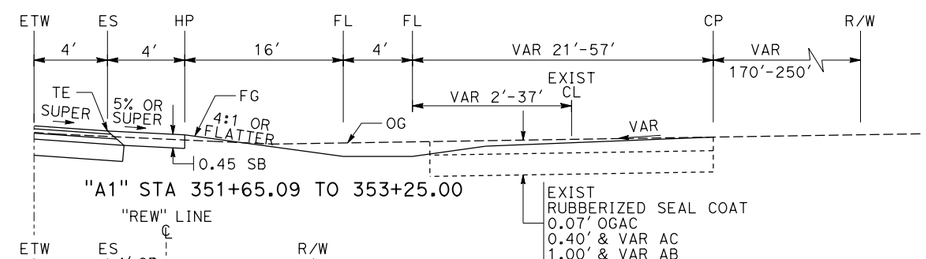

"A1" STA 351+65.09 TO 353+25.00

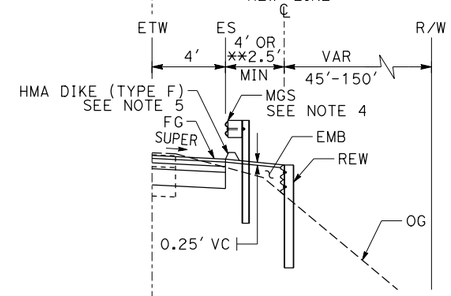

"A1" STA 345+25.00 TO 346+87.50
**"A1" STA 356+44.50 TO 357+32.00

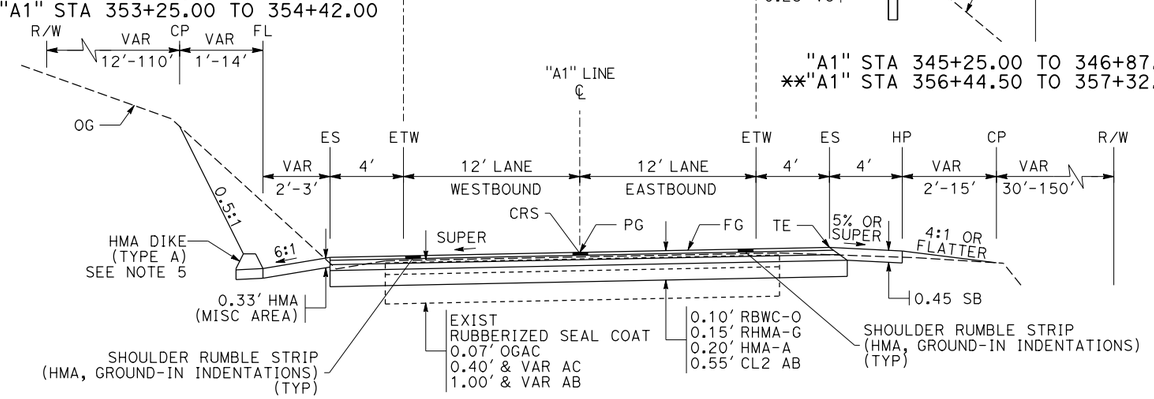

"A1" STA 340+50.00 TO 358+50.00

ROUTE 96

TYPICAL CROSS SECTIONS

NO SCALE

X-1

REVISED BY	DATE REVISED
TRAVIS A. GURNEY	JOHN L. MARTIN
CALCULATED-DESIGNED BY	CHECKED BY
FUNCTIONAL SUPERVISOR	JOHN L. MARTIN

STATE OF CALIFORNIA - DEPARTMENT OF TRANSPORTATION

Caltrans DESIGN

P:\proj2\01\0A990_plans\pse\0112000001ca001.dgn

LAST REVISION 05-11-15 | DATE PLOTTED => 01-DEC-2015 | TIME PLOTTED => 12:45

Dist	COUNTY	ROUTE	POST MILES TOTAL PROJECT	SHEET No.	TOTAL SHEETS
01	HUM	96	R6.2/6.6	3	55

REGISTERED CIVIL ENGINEER 11/19/15 DATE

11/19/15
PLANS APPROVAL DATE

REGISTERED PROFESSIONAL ENGINEER TRAVIS A. GURNEY No. C77417 Exp. 06/30/17 CIVIL STATE OF CALIFORNIA

THE STATE OF CALIFORNIA OR ITS OFFICERS OR AGENTS SHALL NOT BE RESPONSIBLE FOR THE ACCURACY OR COMPLETENESS OF SCANNED COPIES OF THIS PLAN SHEET.

NOTE:

1. FOR ACCURATE RIGHT OF WAY DATA, CONTACT RIGHT OF WAY ENGINEERING AT THE DISTRICT OFFICE.

LEGEND:

- # BENCHMARK NUMBER
- 1 CURVE NUMBER
- NEW STRUCTURAL SECTION

ABBREVIATIONS:

ALUM	ALUMINUM
AFTS	ALTERNATIVE FLARED TERMINAL SYSTEM
CRS	CENTERLINE RUMBLE STRIP (HMA, GROUND-IN INDENTATIONS)
REW	RAIL ELEMENT WALL
TE	TAPERED EDGE
SRS	SHOULDER RUMBLE STRIP (HMA, GROUND-IN INDENTATIONS)
TCE	TEMPORARY CONSTRUCTION EASEMENT
VC	VEGETATION CONTROL (MINOR CONCRETE)

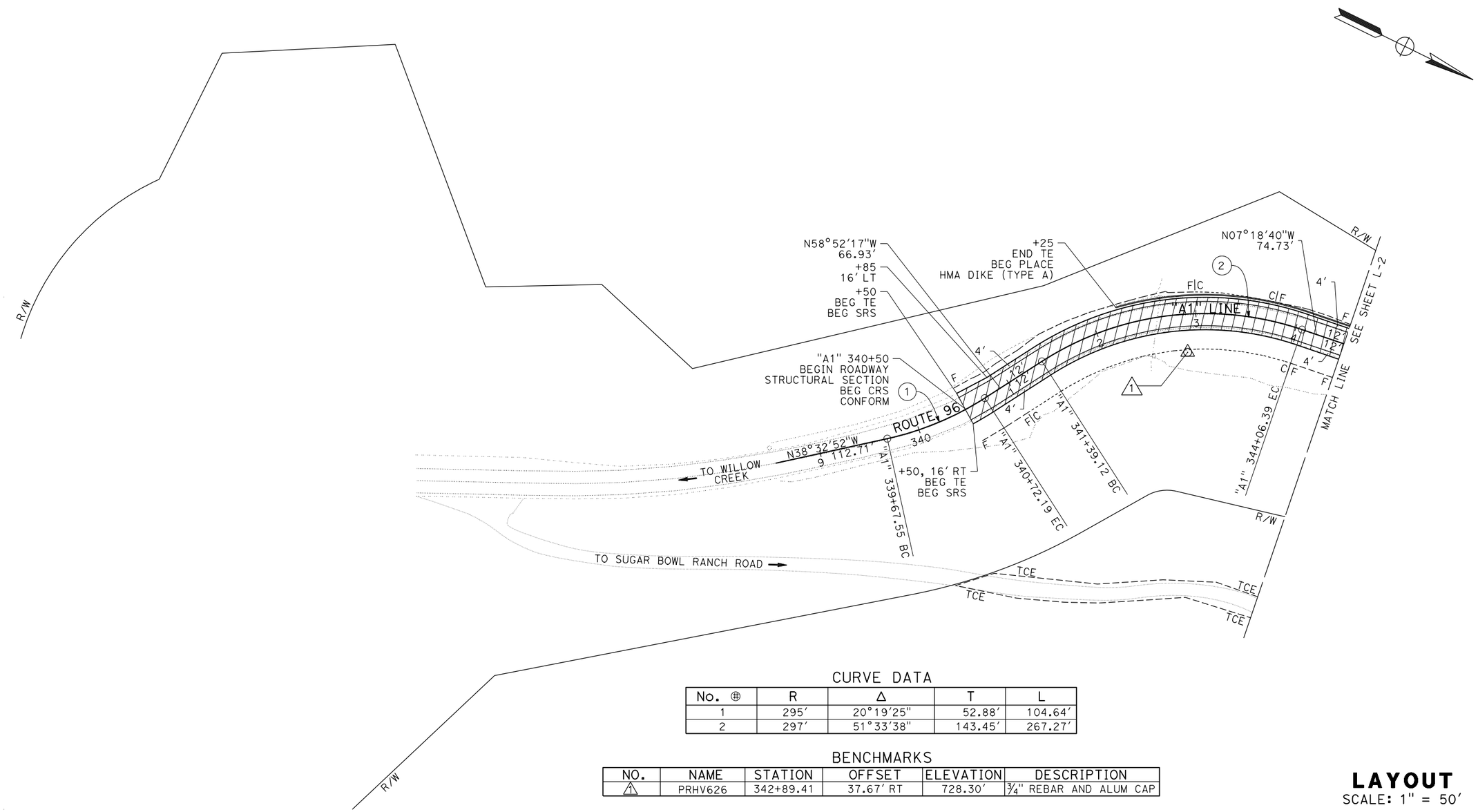

CURVE DATA

No. ⊕	R	Δ	T	L
1	295'	20°19'25"	52.88'	104.64'
2	297'	51°33'38"	143.45'	267.27'

BENCHMARKS

NO.	NAME	STATION	OFFSET	ELEVATION	DESCRIPTION
1	PRHV626	342+89.41	37.67' RT	728.30'	3/4" REBAR AND ALUM CAP

LAYOUT

SCALE: 1" = 50'

L-1

REVISED BY	DATE REVISED
TRAVIS A. GURNEY	JOHN L. MARTIN

CALCULATED-DESIGNED BY: TRAVIS A. GURNEY
CHECKED BY: JOHN L. MARTIN

FUNCTIONAL SUPERVISOR: JOHN L. MARTIN

STATE OF CALIFORNIA - DEPARTMENT OF TRANSPORTATION
Caltrans DESIGN

P:\proj2\01\0A990_plans\pse\0112000001ea001.dgn

LAST REVISION 05-11-15 | DATE PLOTTED => 01-DEC-2015 | TIME PLOTTED => 12:45

Dist	COUNTY	ROUTE	POST MILES TOTAL PROJECT	SHEET No.	TOTAL SHEETS
01	HUM	96	R6.2/6.6	4	55

REGISTERED CIVIL ENGINEER 11/19/15 DATE

11/19/15
PLANS APPROVAL DATE

REGISTERED PROFESSIONAL ENGINEER TRAVIS A. GURNEY No. C77417 Exp. 06/30/17 CIVIL STATE OF CALIFORNIA

THE STATE OF CALIFORNIA OR ITS OFFICERS OR AGENTS SHALL NOT BE RESPONSIBLE FOR THE ACCURACY OR COMPLETENESS OF SCANNED COPIES OF THIS PLAN SHEET.

NOTE:

1. FOR ACCURATE RIGHT OF WAY DATA, CONTACT RIGHT OF WAY ENGINEERING AT THE DISTRICT OFFICE.

BENCHMARKS

NO.	NAME	STATION	OFFSET	ELEVATION	DESCRIPTION
2	PRHV636	348+79.22	23.76′ RT	714.66′	3/4" REBAR AND ALUM CAP
3	PRHV647	354+30.09	21.99′ RT	722.43′	3/4" REBAR AND ALUM CAP

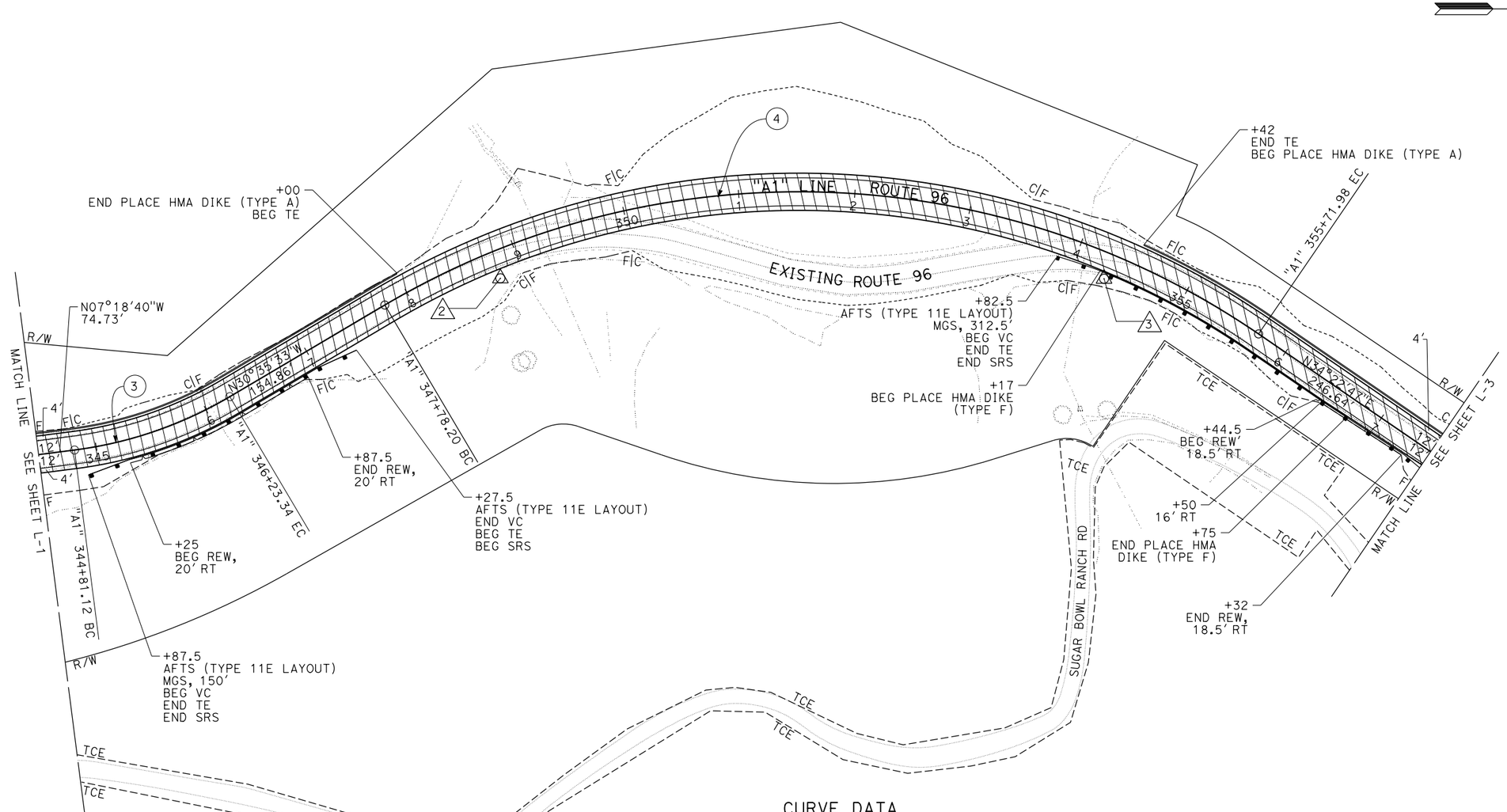

CURVE DATA

No. ⊕	R	Δ	T	L
3	350′	23°16′54"	72.10′	142.22′
4	700′	64°58′20"	445.71′	793.79′

LAYOUT
SCALE: 1" = 50′

L-2

REVISED BY	DATE REVISED
TRAVIS A. GURNEY	JOHN L. MARTIN
CALCULATED-DESIGNED BY	CHECKED BY
FUNCTIONAL SUPERVISOR	JOHN L. MARTIN

STATE OF CALIFORNIA - DEPARTMENT OF TRANSPORTATION
Caltrans DESIGN

P:\proj2\01\0A990_plans\pse\0112000001ea002.dgn

LAST REVISION 05-11-15 | DATE PLOTTED => 01-DEC-2015 | TIME PLOTTED => 12:45

Dist	COUNTY	ROUTE	POST MILES TOTAL PROJECT	SHEET No.	TOTAL SHEETS
01	HUM	96	R6.2/6.6	5	55

REGISTERED CIVIL ENGINEER 11/19/15 DATE

11/19/15
PLANS APPROVAL DATE

REGISTERED PROFESSIONAL ENGINEER TRAVIS A. GURNEY No. C77417 Exp. 06/30/17 CIVIL STATE OF CALIFORNIA

THE STATE OF CALIFORNIA OR ITS OFFICERS OR AGENTS SHALL NOT BE RESPONSIBLE FOR THE ACCURACY OR COMPLETENESS OF SCANNED COPIES OF THIS PLAN SHEET.

NOTE:

1. FOR ACCURATE RIGHT OF WAY DATA, CONTACT RIGHT OF WAY ENGINEERING AT THE DISTRICT OFFICE.

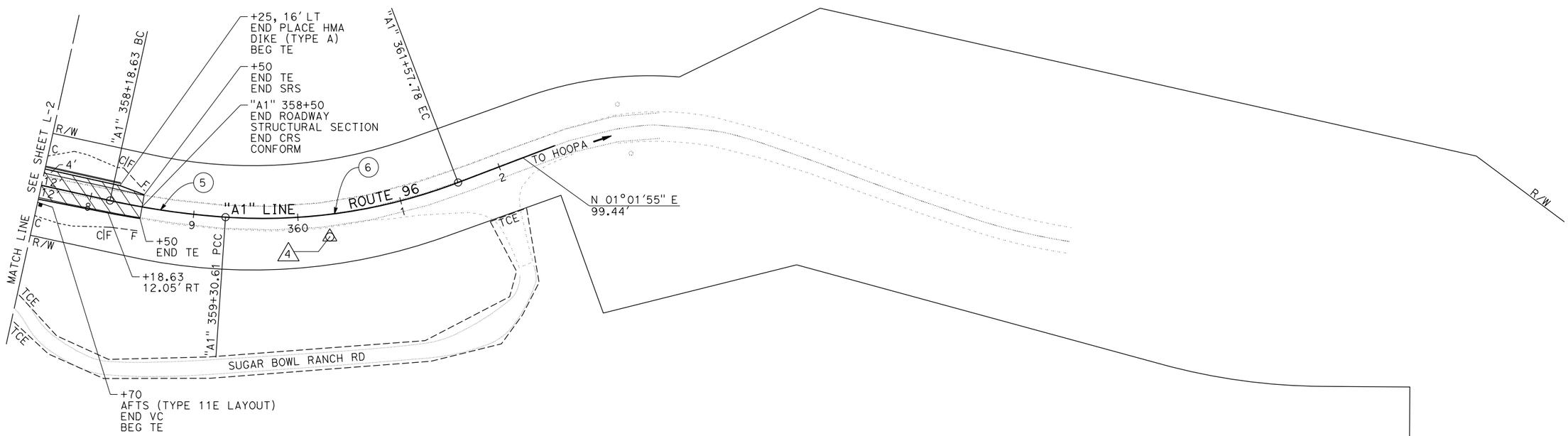

CURVE DATA

No. ⊕	R	Δ	T	L
5	750'	08°33'18"	56.10'	111.98'
6	525'	24°47'34"	115.39'	227.18'

BENCHMARKS

NO.	NAME	STATION	OFFSET	ELEVATION	DESCRIPTION
4	PRHV656	360+28.25	21.45' RT	740.37'	3/4" REBAR AND ALUM CAP

LAYOUT
SCALE: 1" = 50'

L-3

REVISED BY	DATE REVISED
TRAVIS A. GURNEY	JOHN L. MARTIN

CALCULATED-DESIGNED BY: TRAVIS A. GURNEY
CHECKED BY: JOHN L. MARTIN

FUNCTIONAL SUPERVISOR: JOHN L. MARTIN

STATE OF CALIFORNIA - DEPARTMENT OF TRANSPORTATION
Caltrans
DESIGN

P:\proj2\01\0A990_plans\pse\0112000001ea003.dgn

LAST REVISION 05-11-15
DATE PLOTTED => 01-DEC-2015
TIME PLOTTED => 12:45

Dist	COUNTY	ROUTE	POST MILES TOTAL PROJECT	SHEET No.	TOTAL SHEETS
01	HUM	96	R6.2/6.6	6	55

REGISTERED CIVIL ENGINEER 11/19/15 DATE

11/19/15
PLANS APPROVAL DATE

REGISTERED PROFESSIONAL ENGINEER TRAVIS A. GURNEY No. C77417 Exp. 06/30/17 CIVIL STATE OF CALIFORNIA

THE STATE OF CALIFORNIA OR ITS OFFICERS OR AGENTS SHALL NOT BE RESPONSIBLE FOR THE ACCURACY OR COMPLETENESS OF SCANNED COPIES OF THIS PLAN SHEET.

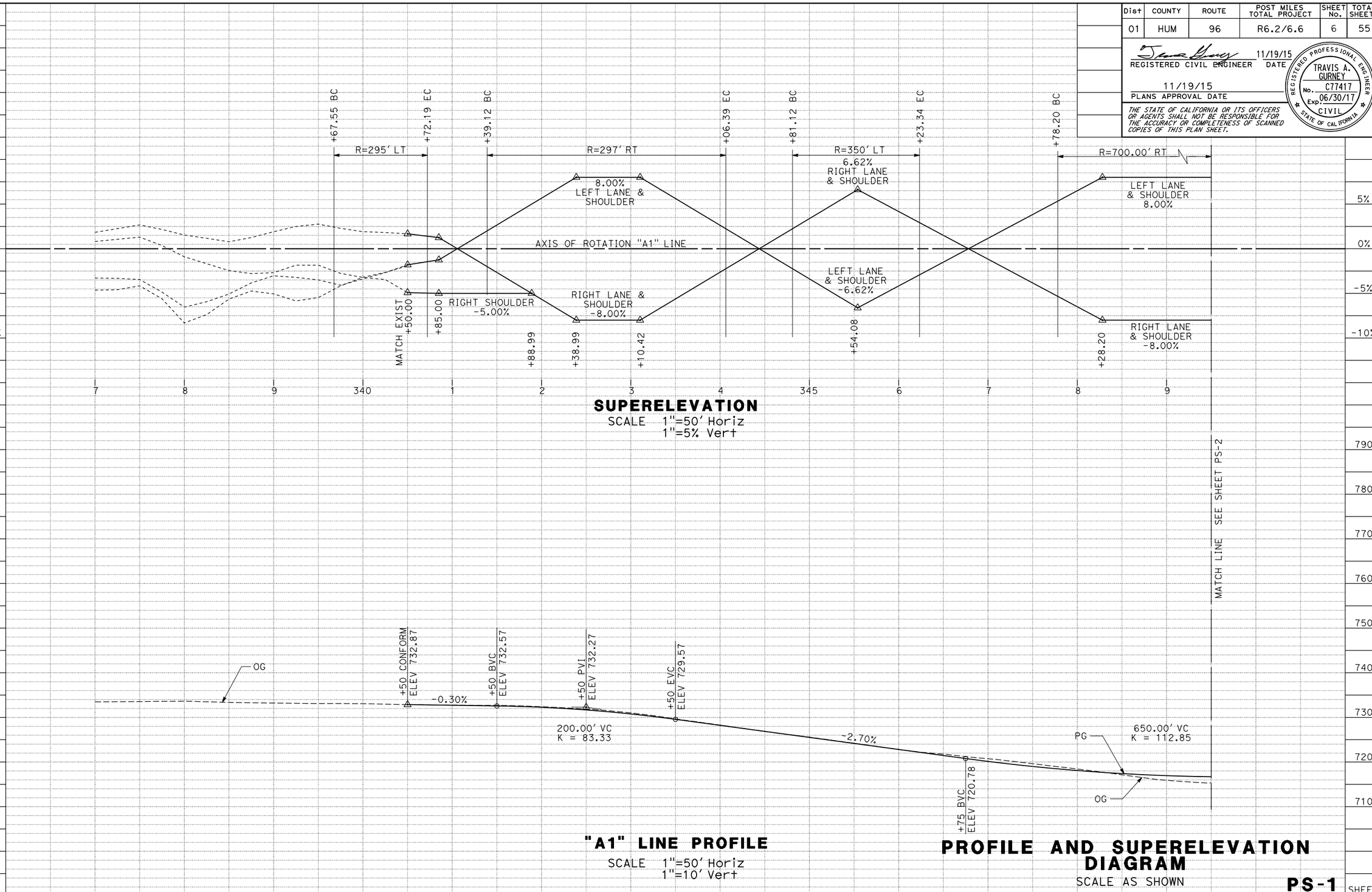

SUPERELEVATION
SCALE 1"=50' Horiz
1"=5% Vert

"A1" LINE PROFILE
SCALE 1"=50' Horiz
1"=10' Vert

PROFILE AND SUPERELEVATION DIAGRAM
SCALE AS SHOWN

PS-1

STATION		7	8	9	340	1	2	3	4	345	6	7	8	9	SHEET	TOTAL
CY	Exc	220	166	150	114	182	147	318	179						1476	
	Emb	12	40	11	21	17	10	3	437						551	

REVISED BY | DATE REVISED
TRAVIS A. GURNEY | JOHN L. MARTIN
CALCULATED-DESIGNED BY | CHECKED BY
FUNCTIONAL SUPERVISOR: JOHN L. MARTIN

STATE OF CALIFORNIA - DEPARTMENT OF TRANSPORTATION
Caltrans DESIGN

P:\proj2\01\0A990_plans\pse\0112000001fb001.dgn

LAST REVISION 05-11-15 | DATE PLOTTED => 01-DEC-2015 TIME PLOTTED => 12:45

Dist	COUNTY	ROUTE	POST MILES TOTAL PROJECT	SHEET No.	TOTAL SHEETS
01	HUM	96	R6.2/6.6	7	55

REGISTERED CIVIL ENGINEER 11/19/15 DATE

11/19/15
PLANS APPROVAL DATE

REGISTERED PROFESSIONAL ENGINEER TRAVIS A. GURNEY No. C77417 Exp. 06/30/17 CIVIL STATE OF CALIFORNIA

THE STATE OF CALIFORNIA OR ITS OFFICERS OR AGENTS SHALL NOT BE RESPONSIBLE FOR THE ACCURACY OR COMPLETENESS OF SCANNED COPIES OF THIS PLAN SHEET.

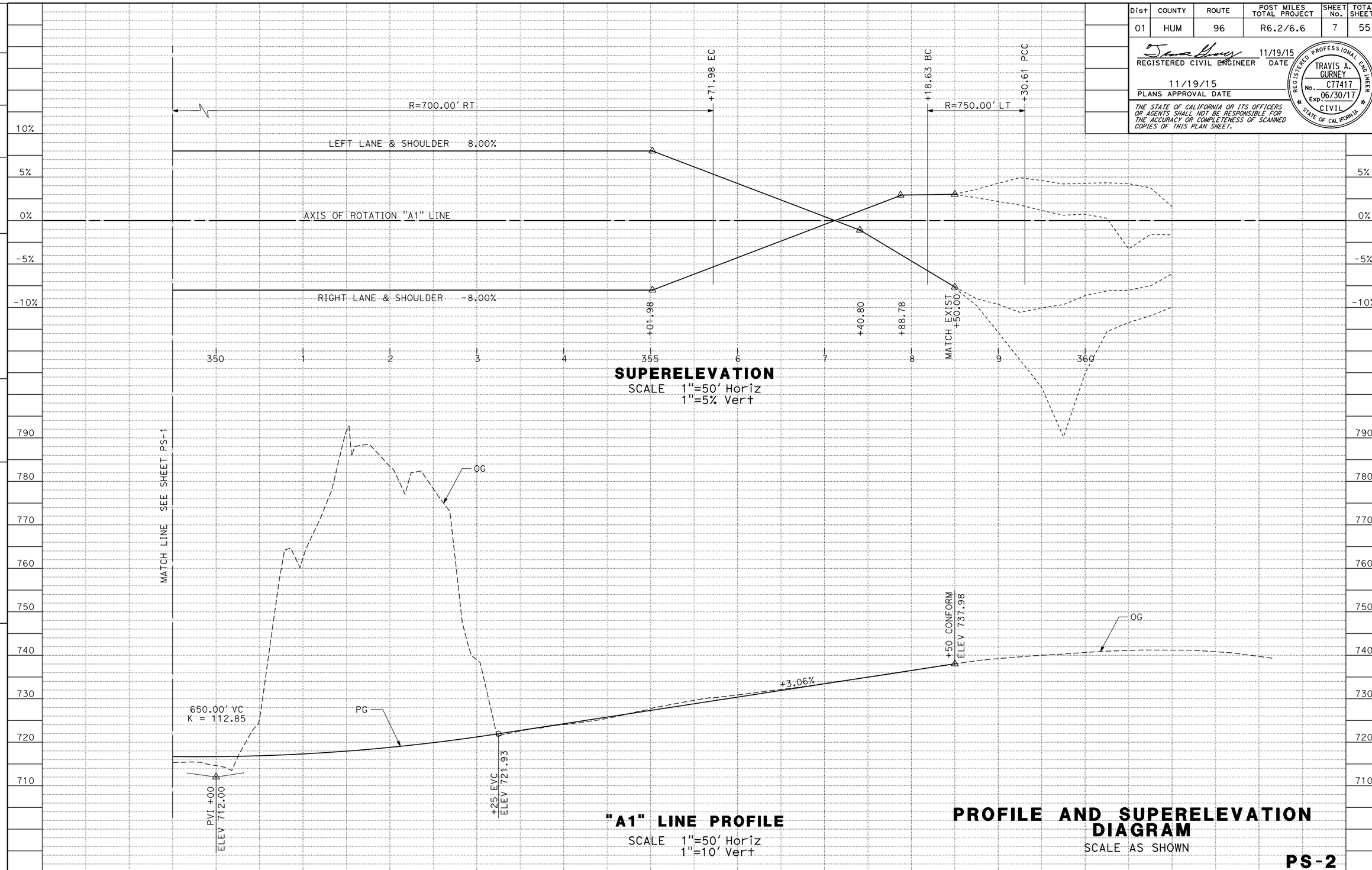

SUPERELEVATION
SCALE 1"=50' Horiz
1"=5% Vert

"A1" LINE PROFILE
SCALE 1"=50' Horiz
1"=10' Vert

PROFILE AND SUPERELEVATION DIAGRAM
SCALE AS SHOWN

PS-2

STATION	350	1	2	3	4	355	6	7	8	9	360	SHEET TOTAL	TOTAL
CY Exc	7464	24,408	15,470	1017	111	442	556	617				50,085	51,561
CY Emb	154	0	0	8	25	1	2	4				194	745

REVISED BY | DATE REVISED
TRAVIS A. GURNEY | JOHN L. MARTIN
CALCULATED-DESIGNED BY | CHECKED BY
FUNCTIONAL SUPERVISOR | JOHN L. MARTIN

STATE OF CALIFORNIA - DEPARTMENT OF TRANSPORTATION
Caltrans DESIGN

P:\proj2\01\0A990_plans\pse\0112000001fb002.dgn

DATE PLOTTED => 01-DEC-2015
TIME PLOTTED => 12:45
LAST REVISION 05-11-15

Dist	COUNTY	ROUTE	POST MILES TOTAL PROJECT	SHEET No.	TOTAL SHEETS
01	HUM	96	R6.2/6.6	8	55

REGISTERED CIVIL ENGINEER 11/19/15 DATE

PLANS APPROVAL DATE 11/19/15

REGISTERED PROFESSIONAL ENGINEER TRAVIS A. GURNEY No. C77417 Exp. 06/30/17 CIVIL STATE OF CALIFORNIA

THE STATE OF CALIFORNIA OR ITS OFFICERS OR AGENTS SHALL NOT BE RESPONSIBLE FOR THE ACCURACY OR COMPLETENESS OF SCANNED COPIES OF THIS PLAN SHEET.

NOTES:

1. FOR TEMPORARY CONSTRUCTION TAPERS, GRIND EXISTING SURFACES TO ACCOMMODATE A MINIMUM TAPER THICKNESS OF 0.10′ WHEN EITHER:
   - A. HMA MATERIAL SUCH AS RUBBERIZED, POLYMER MODIFIED OR OPEN GRADED IS UNSUITABLE FOR RAKING TO A MAXIMUM 0.02′ THICKNESS AT THE CONFORM.
   - B. TEMPORARY TAPER WILL BE IN PLACE FOR MORE THAN 14 DAYS.
2. PERMANENT SURFACE MAY BE EXISTING OR NEW PAVEMENT.
3. ROADWAY SURFACE IS THE TOP OF EXISTING SURFACE OR THE TOP OF THE PLANED SURFACE.

LEGEND:

HMA MATERIAL (TEMPORARY TAPER)

IF NECESSARY, COLD PLANE ASPHALT CONCRETE PAVEMENT AND PLACE HMA MATERIAL (SEE NOTE 3)

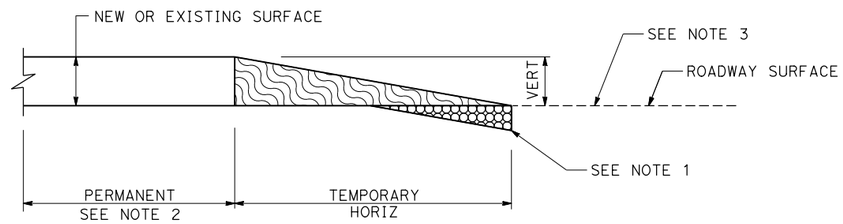

VERT	SLOPE RATIO HORIZ/VERT
0-0.10′	70:1
GREATER THAN 0.10′	160:1

TYPICAL PAVING CONFORM FOR TEMPORARY CONSTRUCTION TAPERS

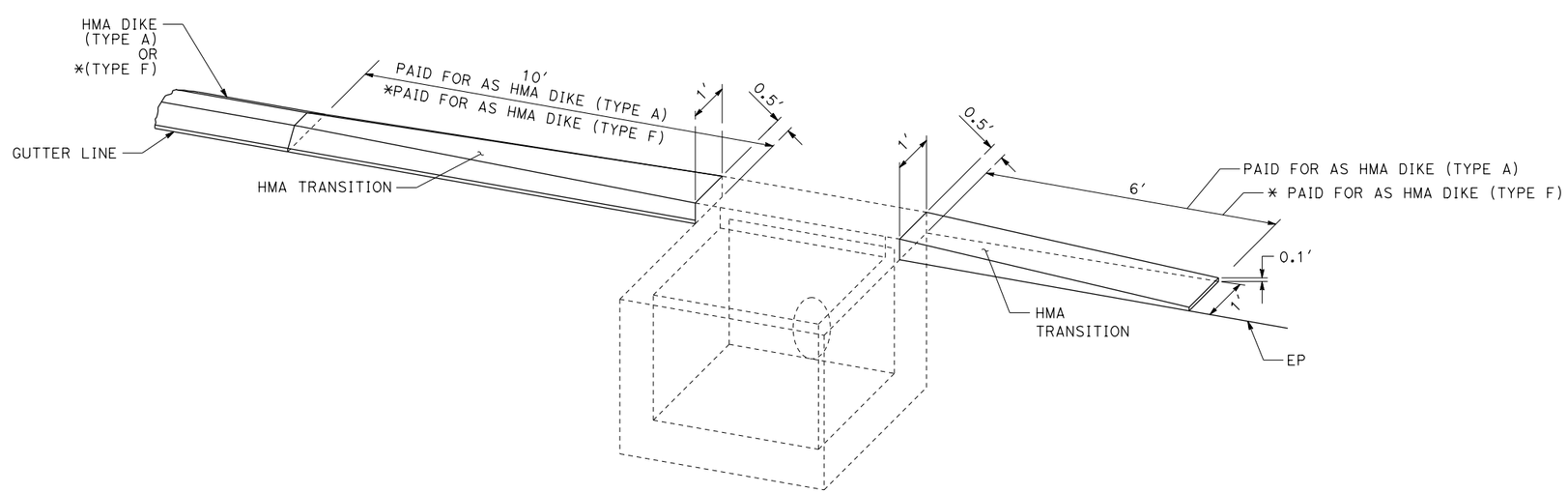

TRANSITION HMA DIKE TO DI

CONSTRUCTION DETAILS

NO SCALE

C-1

REVISED BY	DATE REVISED
TRAVIS A. GURNEY	JOHN L. MARTIN
CALCULATED-DESIGNED BY	CHECKED BY
FUNCTIONAL SUPERVISOR	JOHN L. MARTIN

STATE OF CALIFORNIA - DEPARTMENT OF TRANSPORTATION

Caltrans DESIGN

P:\proj2\01\0A990_plans\pse\0112000001ga001.dgn

LAST REVISION 07-20-15 | DATE PLOTTED => 01-DEC-2015 TIME PLOTTED => 12:45

Dist	COUNTY	ROUTE	POST MILES TOTAL PROJECT	SHEET No.	TOTAL SHEETS
01	HUM	96	R6.2/6.6	9	55

REGISTERED CIVIL ENGINEER 11/19/15 DATE

11/19/15
PLANS APPROVAL DATE

REGISTERED PROFESSIONAL ENGINEER TRAVIS A. GURNEY No. C77417 Exp. 06/30/17 CIVIL STATE OF CALIFORNIA

THE STATE OF CALIFORNIA OR ITS OFFICERS OR AGENTS SHALL NOT BE RESPONSIBLE FOR THE ACCURACY OR COMPLETENESS OF SCANNED COPIES OF THIS PLAN SHEET.

NOTE:

1. RUMBLE STRIPS MUST BE CONSTRUCTED PRIOR TO INSTALLING FINAL TRAFFIC STRIPES.

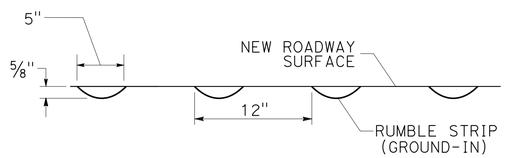

ELEVATION
SECTION A-A

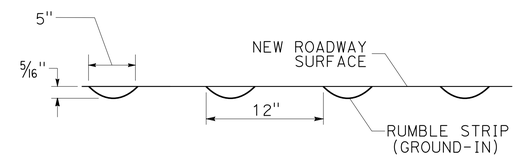

ELEVATION
SECTION B-B

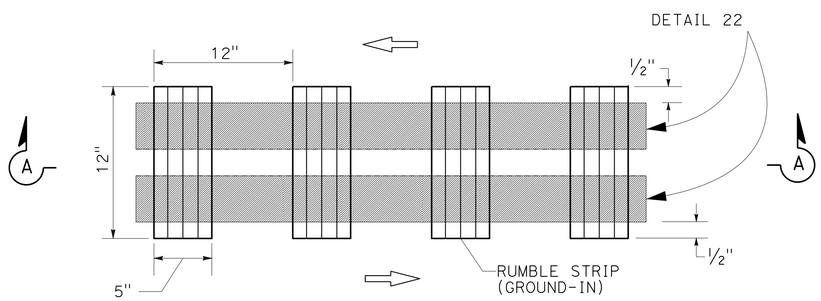

PLAN

CENTERLINE RUMBLE STRIP
(HMA, GROUND-IN INDENTATIONS)

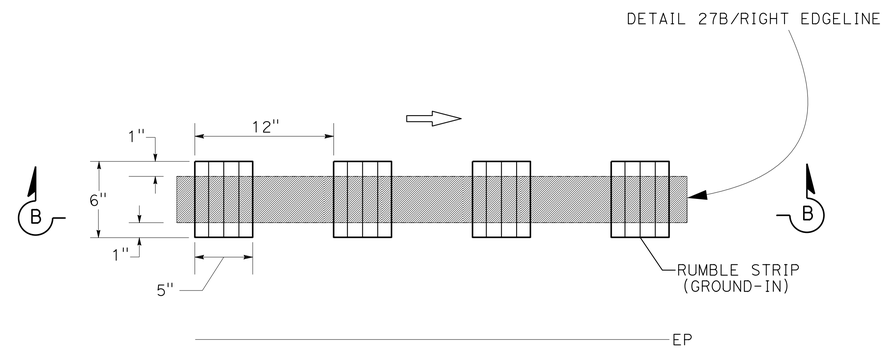

PLAN

SHOULDER RUMBLE STRIP
(HMA, GROUND-IN INDENTATIONS)

GROUND-IN RUMBLE STRIP

CONSTRUCTION DETAILS
NO SCALE

C-2

STATE OF CALIFORNIA - DEPARTMENT OF TRANSPORTATION
Caltrans
DESIGN

FUNCTIONAL SUPERVISOR: JOHN L. MARTIN
CALCULATED-DESIGNED BY: TRAVIS A. GURNEY
CHECKED BY: JOHN L. MARTIN
REVISED BY
DATE REVISED

P:\proj2\01\0A990_plans\pse\0112000001ga002.dgn

LAST REVISION 07-20-15
DATE PLOTTED => 04-JAN-2016
TIME PLOTTED => 11:38

Dist	COUNTY	ROUTE	POST MILES TOTAL PROJECT	SHEET No.	TOTAL SHEETS
01	HUM	96	R6.2/6.6	10	55

REGISTERED CIVIL ENGINEER 11/19/15 DATE

11/19/15
PLANS APPROVAL DATE

REGISTERED PROFESSIONAL ENGINEER TRAVIS A. GURNEY No. C77417 Exp. 06/30/17 CIVIL STATE OF CALIFORNIA

THE STATE OF CALIFORNIA OR ITS OFFICERS OR AGENTS SHALL NOT BE RESPONSIBLE FOR THE ACCURACY OR COMPLETENESS OF SCANNED COPIES OF THIS PLAN SHEET.

NOTES:

1. SPLICES ON RAIL ELEMENT WALL MUST BE THE STANDARD MGS SPLICE.
2. FOR MGS USE 7′ POST FROM STATION 356+20.00 TO 357+45.00.

ABBREVIATIONS:

REW RAIL ELEMENT WALL

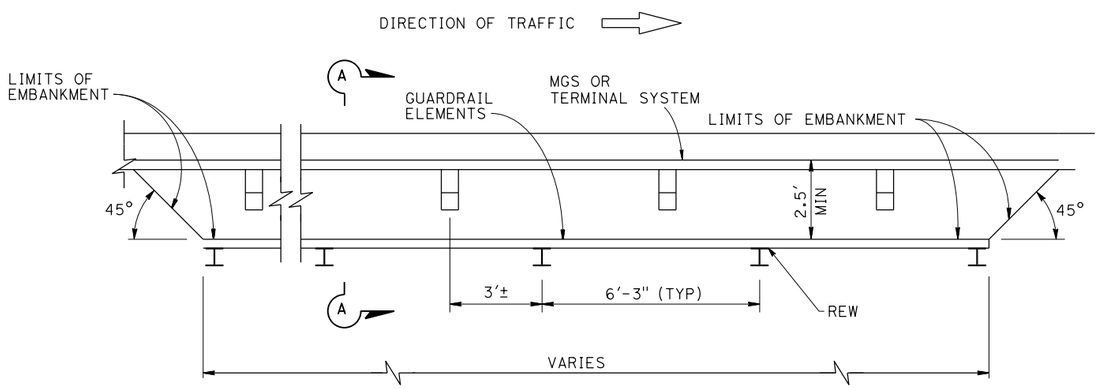

PLAN

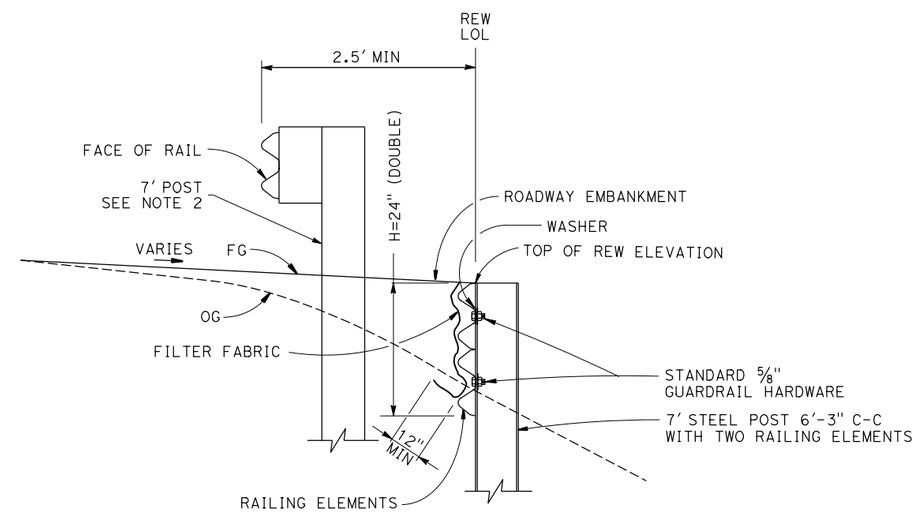

SECTION A-A
"A1" STA 345+25.00 TO 346+87.50, RT
"A1" STA 356+44.50 TO 357+32.00, RT

CONSTRUCTION DETAILS

NO SCALE

RAIL ELEMENT WALL

C-3

REVISED BY	DATE REVISED
TRAVIS A. GURNEY	JOHN L. MARTIN

CALCULATED-DESIGNED BY / CHECKED BY

FUNCTIONAL SUPERVISOR: JOHN L. MARTIN

STATE OF CALIFORNIA - DEPARTMENT OF TRANSPORTATION
Caltrans DESIGN

P:\proj2\01\0A990_plans\pse\0112000001ga003.dgn

LAST REVISION 05-11-15 | DATE PLOTTED => 01-DEC-2015 | TIME PLOTTED => 12:45

Dist	COUNTY	ROUTE	POST MILES TOTAL PROJECT	SHEET No.	TOTAL SHEETS
01	HUM	96	R6.2/6.6	11	55

REGISTERED CIVIL ENGINEER 11/19/15 DATE

11/19/15
PLANS APPROVAL DATE

REGISTERED PROFESSIONAL ENGINEER TRAVIS A. GURNEY No. C77417 Exp. 06/30/17 CIVIL STATE OF CALIFORNIA

THE STATE OF CALIFORNIA OR ITS OFFICERS OR AGENTS SHALL NOT BE RESPONSIBLE FOR THE ACCURACY OR COMPLETENESS OF SCANNED COPIES OF THIS PLAN SHEET.

NOTES:

1. FOR VEGETATION CONTROL DETAILS SEE STANDARD PLANS RSP A77N5 AND RSP A77N6.
2. DIKE OR CURB MUST BE PLACED IN THE STD POSITION UNLESS OTHERWISE SHOWN.

ABBREVIATIONS:

REW RAIL ELEMENT WALL

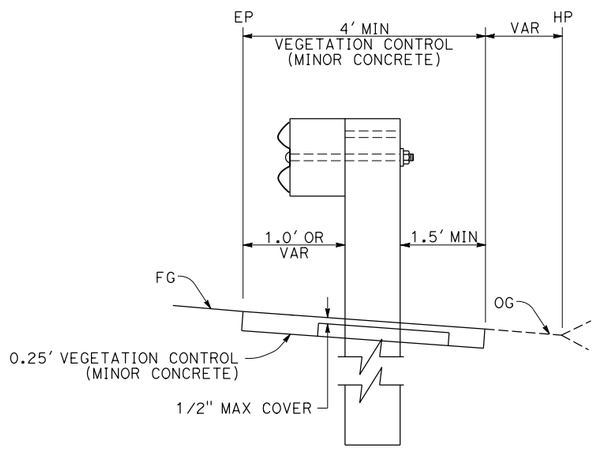

TYPICAL VEGETATION CONTROL INSTALLATION

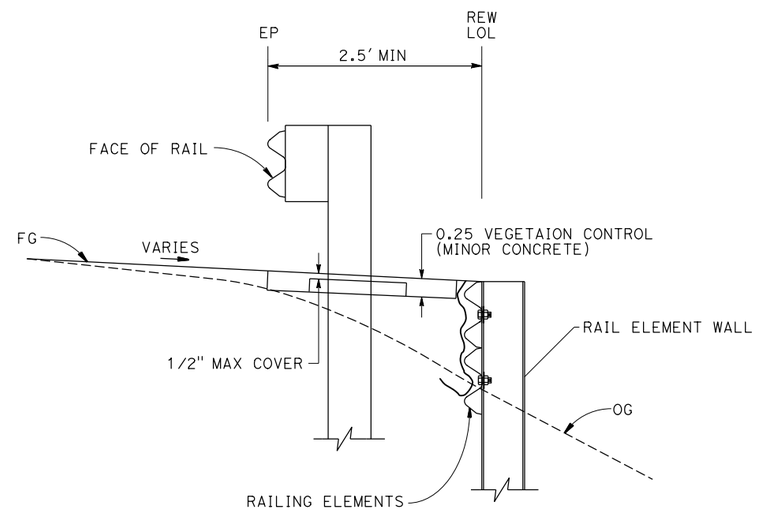

TYPICAL VEGETATION CONTROL FOR REW INSTALLATION

"A1" STA 345+25.00 TO 346+87.50, RT
"A1" STA 356+44.50 TO 357+32.00, RT

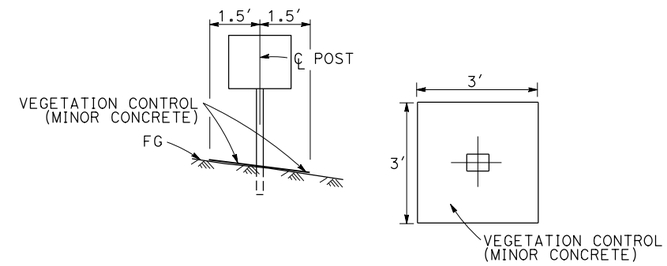

PLACEMENT UNDER ROADSIDE SIGN (ONE POST)

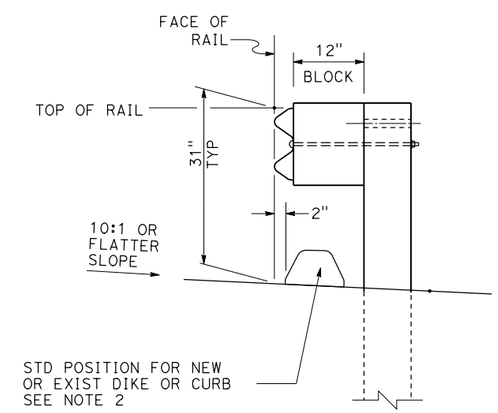

MGS DIKE POSITIONING

CONSTRUCTION DETAILS
NO SCALE

VEGETATION CONTROL (MINOR CONCRETE)

C-4

REVISED BY	DATE REVISED
TRAVIS A. GURNEY	JOHN L. MARTIN

CALCULATED-DESIGNED BY TRAVIS A. GURNEY
CHECKED BY JOHN L. MARTIN
FUNCTIONAL SUPERVISOR JOHN L. MARTIN

STATE OF CALIFORNIA - DEPARTMENT OF TRANSPORTATION
Caltrans DESIGN

P:\proj2\01\0A990_plans\pse\0112000001ga004.dgn

LAST REVISION 07-20-15
DATE PLOTTED => 01-DEC-2015
TIME PLOTTED => 12:46

Dist	COUNTY	ROUTE	POST MILES TOTAL PROJECT	SHEET No.	TOTAL SHEETS
01	HUM	96	R6.2/6.6	12	55

REGISTERED CIVIL ENGINEER 11/19/15 DATE

11/19/15
PLANS APPROVAL DATE

REGISTERED PROFESSIONAL ENGINEER TRAVIS A. GURNEY No. C77417 Exp. 06/30/17 CIVIL STATE OF CALIFORNIA

THE STATE OF CALIFORNIA OR ITS OFFICERS OR AGENTS SHALL NOT BE RESPONSIBLE FOR THE ACCURACY OR COMPLETENESS OF SCANNED COPIES OF THIS PLAN SHEET.

NOTE:

1. FOR ACCURATE RIGHT OF WAY DATA, CONTACT RIGHT OF WAY ENGINEERING AT THE DISTRICT OFFICE.

LEGEND:

- BS# — BIOSWALE No.
- LIMITS OF BIOSWALE
- S# — BIO-STRIP No.
- LIMITS OF BIO-STRIP

ABBREVIATIONS:

RSP (NO. 1)	RSP (NO. 1, METHOD B)
RSP (1/4TON)	RSP (1/4 T, METHOD B)

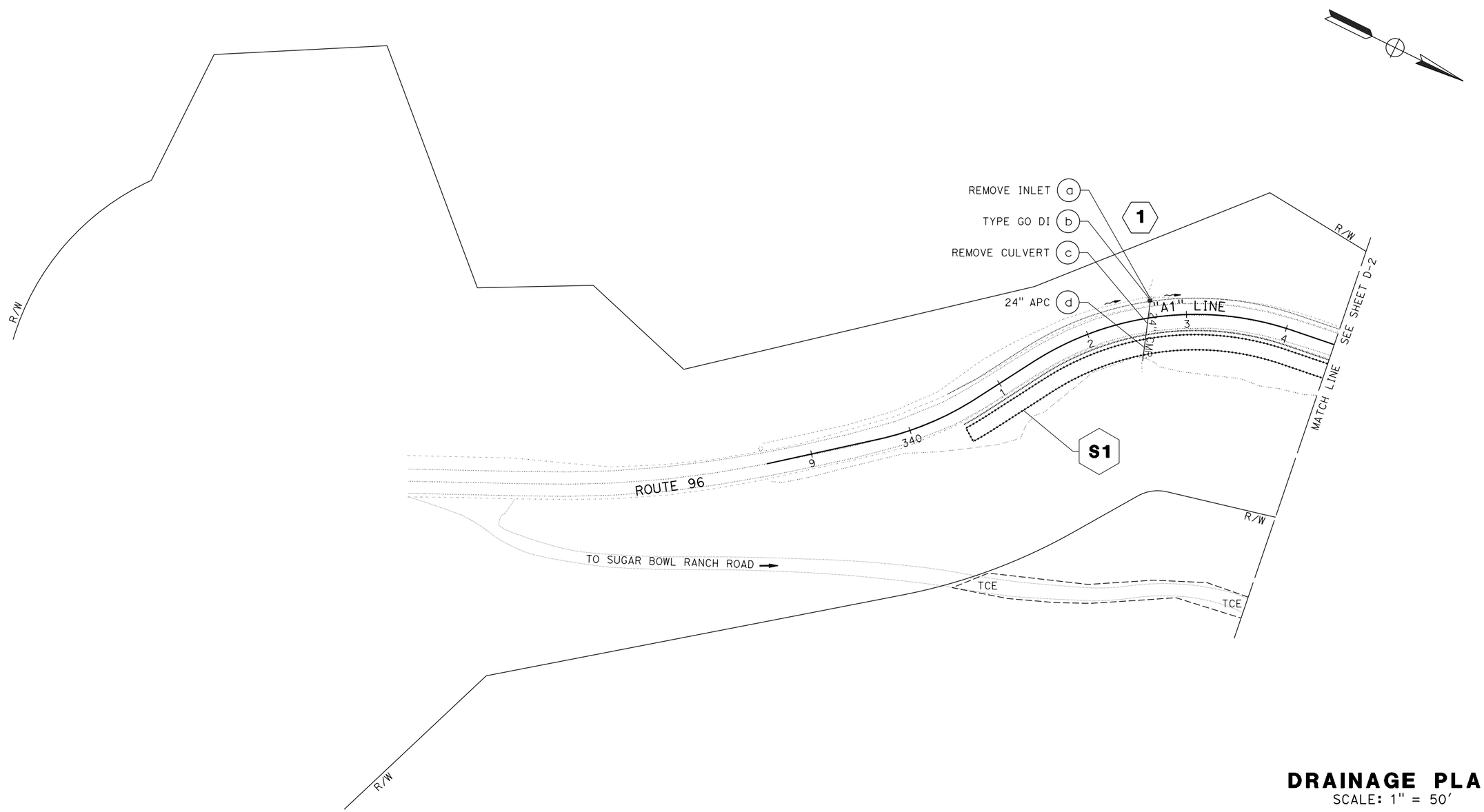

DRAINAGE PLAN

SCALE: 1" = 50'

APPROVED FOR DRAINAGE WORK ONLY

D-1

REVISED BY	TRAVIS A. GURNEY
DATE REVISED	JOHN L. MARTIN
CALCULATED-DESIGNED BY	FUNCTIONAL SUPERVISOR
CHECKED BY	JOHN L. MARTIN

STATE OF CALIFORNIA - DEPARTMENT OF TRANSPORTATION

Caltrans® DESIGN

P:\proj2\01\0A990_plans\pse\01120000011a001.dgn

LAST REVISION 05-11-15 | DATE PLOTTED => 01-DEC-2015 | TIME PLOTTED => 12:46

Dist	COUNTY	ROUTE	POST MILES TOTAL PROJECT	SHEET No.	TOTAL SHEETS
01	HUM	96	R6.2/6.6	13	55

REGISTERED CIVIL ENGINEER 11/19/15 DATE

11/19/15
PLANS APPROVAL DATE

REGISTERED PROFESSIONAL ENGINEER TRAVIS A. GURNEY No. C77417 Exp. 06/30/17 CIVIL STATE OF CALIFORNIA

THE STATE OF CALIFORNIA OR ITS OFFICERS OR AGENTS SHALL NOT BE RESPONSIBLE FOR THE ACCURACY OR COMPLETENESS OF SCANNED COPIES OF THIS PLAN SHEET.

NOTES:

1. FOR ACCURATE RIGHT OF WAY DATA, CONTACT RIGHT OF WAY ENGINEERING AT THE DISTRICT OFFICE.
2. TEMPORARY CLEAR WATER DIVERSION WILL BE NEEDED DURING THE CONSTRUCTION OF DRAINAGE SYSTEM #3.

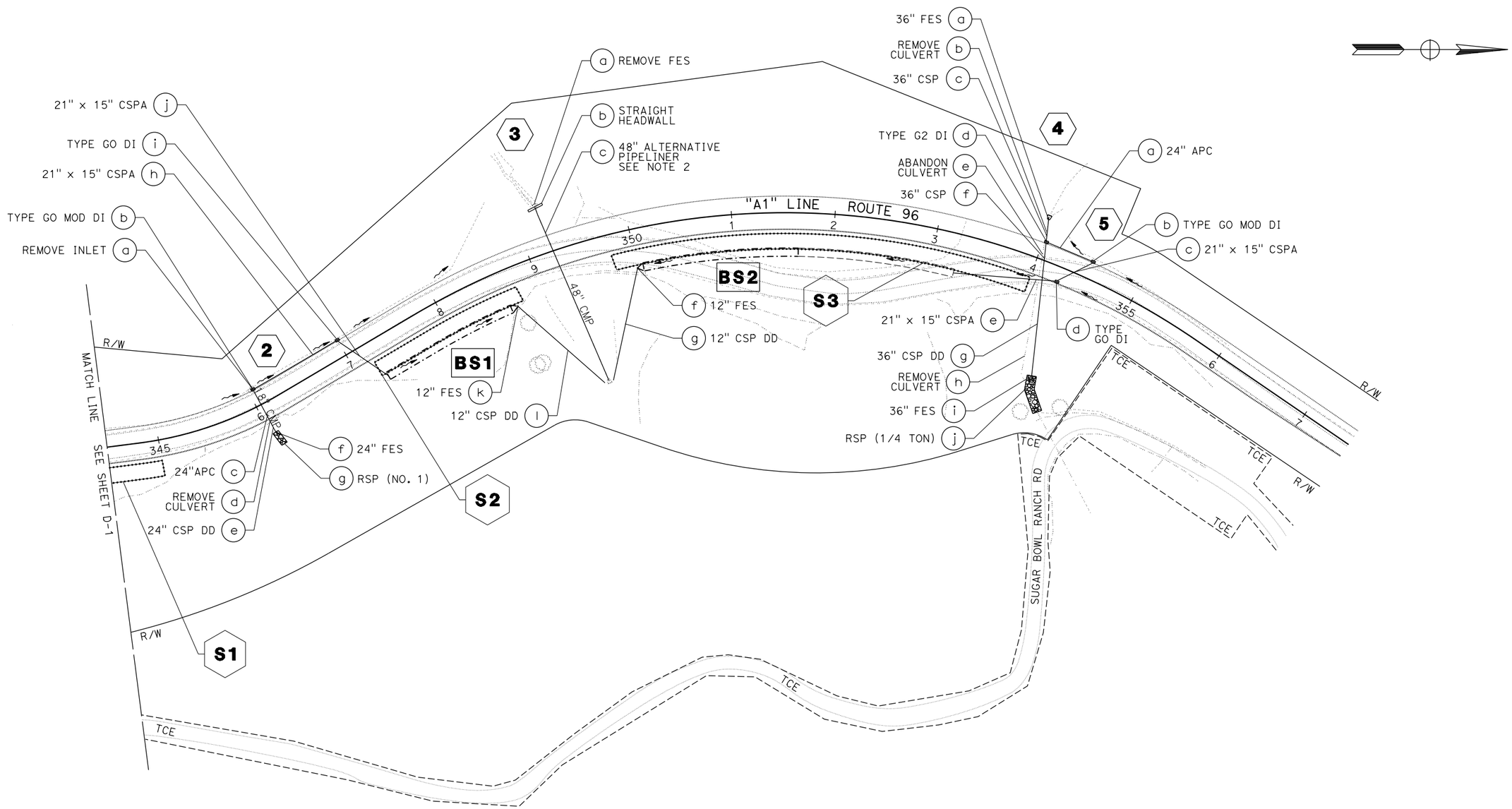

DRAINAGE PLAN

SCALE: 1" = 50'

D-2

APPROVED FOR DRAINAGE WORK ONLY

REVISED BY	TRAVIS A. GURNEY
DATE REVISED	JOHN L. MARTIN
CALCULATED-DESIGNED BY	FUNCTIONAL SUPERVISOR
CHECKED BY	JOHN L. MARTIN

STATE OF CALIFORNIA - DEPARTMENT OF TRANSPORTATION
Caltrans DESIGN

P:\proj2\01\0A990_plans\pse\01120000011a002.dgn

LAST REVISION 05-11-15
DATE PLOTTED => 01-DEC-2015
TIME PLOTTED => 12:46

Dist	COUNTY	ROUTE	POST MILES TOTAL PROJECT	SHEET No.	TOTAL SHEETS
01	HUM	96	R6.2/6.6	14	55

REGISTERED CIVIL ENGINEER 11/19/15 DATE

11/19/15
PLANS APPROVAL DATE

REGISTERED PROFESSIONAL ENGINEER TRAVIS A. GURNEY No. C77417 Exp. 06/30/17 CIVIL STATE OF CALIFORNIA

THE STATE OF CALIFORNIA OR ITS OFFICERS OR AGENTS SHALL NOT BE RESPONSIBLE FOR THE ACCURACY OR COMPLETENESS OF SCANNED COPIES OF THIS PLAN SHEET.

ABBREVIATIONS:

RSP (NO. 1) RSP (NO. 1, METHOD B)
RSP (1/4TON) RSP (1/4 T, METHOD B)

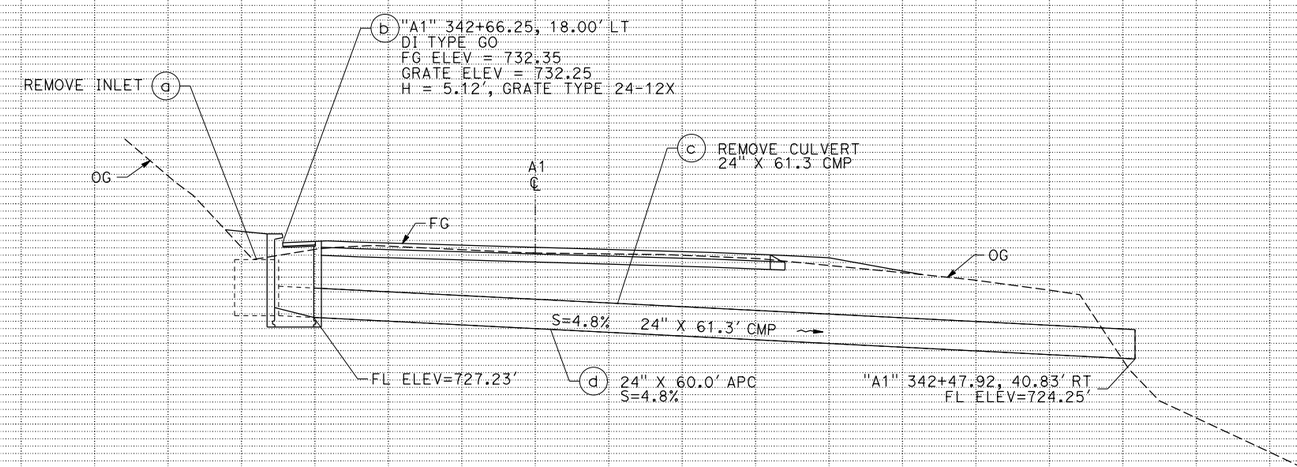

DRAINAGE SYSTEM NO. 1

"A1" 342+66.25, 18.00' LT TO "A1" 342+47.92, 40.83' RT
PM R6.25

DRAINAGE PROFILES

SCALE: 1" = 5' Horiz
1" = 5' Vert

DP-1

REVISED BY | DATE REVISED
JOLENA ASTIN | TRAVIS A. GURNEY
CALCULATED-DESIGNED BY | CHECKED BY
FUNCTIONAL SUPERVISOR: JOHN L. MARTIN

STATE OF CALIFORNIA - DEPARTMENT OF TRANSPORTATION
Caltrans DESIGN

P:\proj2\01\0A990_plans\pse\0112000001ib001.dgn

LAST REVISION 05-11-15 | DATE PLOTTED => 01-DEC-2015 TIME PLOTTED => 12:46

Dist	COUNTY	ROUTE	POST MILES TOTAL PROJECT	SHEET No.	TOTAL SHEETS
01	HUM	96	R6.2/6.6	15	55

REGISTERED CIVIL ENGINEER 11/19/15 DATE

11/19/15
PLANS APPROVAL DATE

REGISTERED PROFESSIONAL ENGINEER TRAVIS A. GURNEY No. C77417 Exp. 06/30/17 CIVIL STATE OF CALIFORNIA

THE STATE OF CALIFORNIA OR ITS OFFICERS OR AGENTS SHALL NOT BE RESPONSIBLE FOR THE ACCURACY OR COMPLETENESS OF SCANNED COPIES OF THIS PLAN SHEET.

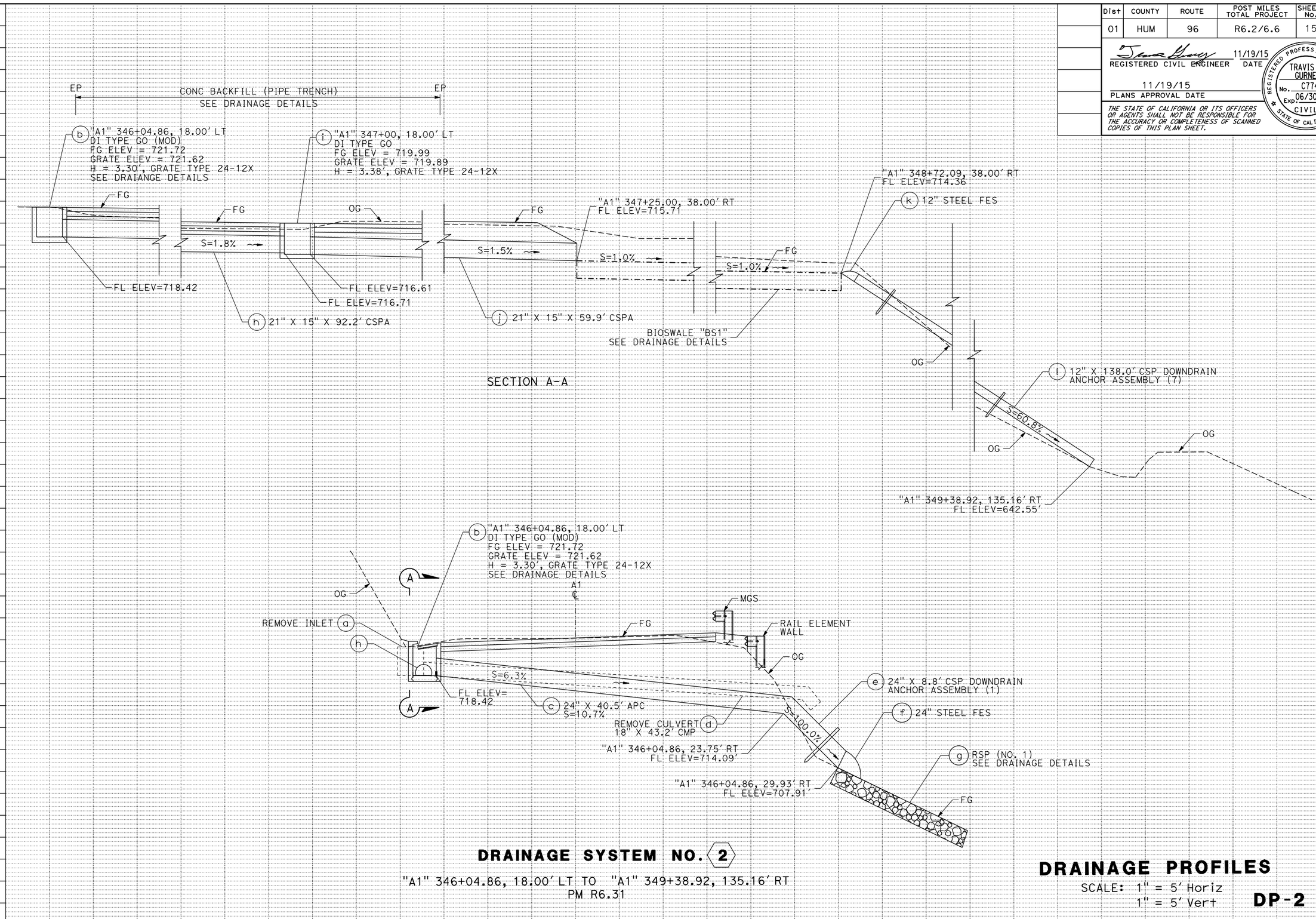

DRAINAGE SYSTEM NO. 2

"A1" 346+04.86, 18.00' LT TO "A1" 349+38.92, 135.16' RT
PM R6.31

DRAINAGE PROFILES

SCALE: 1" = 5' Horiz
1" = 5' Vert

DP-2

REVISED BY | DATE REVISED
JOLENA ASTIN | TRAVIS A. GURNEY
CALCULATED-DESIGNED BY | CHECKED BY
FUNCTIONAL SUPERVISOR: JOHN L. MARTIN

STATE OF CALIFORNIA - DEPARTMENT OF TRANSPORTATION
Caltrans DESIGN

P:\proj2\01\0A990_plans\pse\0112000001ib002.dgn

LAST REVISION 05-11-15 | DATE PLOTTED => 01-DEC-2015 | TIME PLOTTED => 12:46

Dist	COUNTY	ROUTE	POST MILES TOTAL PROJECT	SHEET No.	TOTAL SHEETS
01	HUM	96	R6.2/6.6	16	55

REGISTERED CIVIL ENGINEER 11/19/15 DATE

11/19/15
PLANS APPROVAL DATE

REGISTERED PROFESSIONAL ENGINEER TRAVIS A. GURNEY No. C77417 Exp. 06/30/17 CIVIL STATE OF CALIFORNIA

THE STATE OF CALIFORNIA OR ITS OFFICERS OR AGENTS SHALL NOT BE RESPONSIBLE FOR THE ACCURACY OR COMPLETENESS OF SCANNED COPIES OF THIS PLAN SHEET.

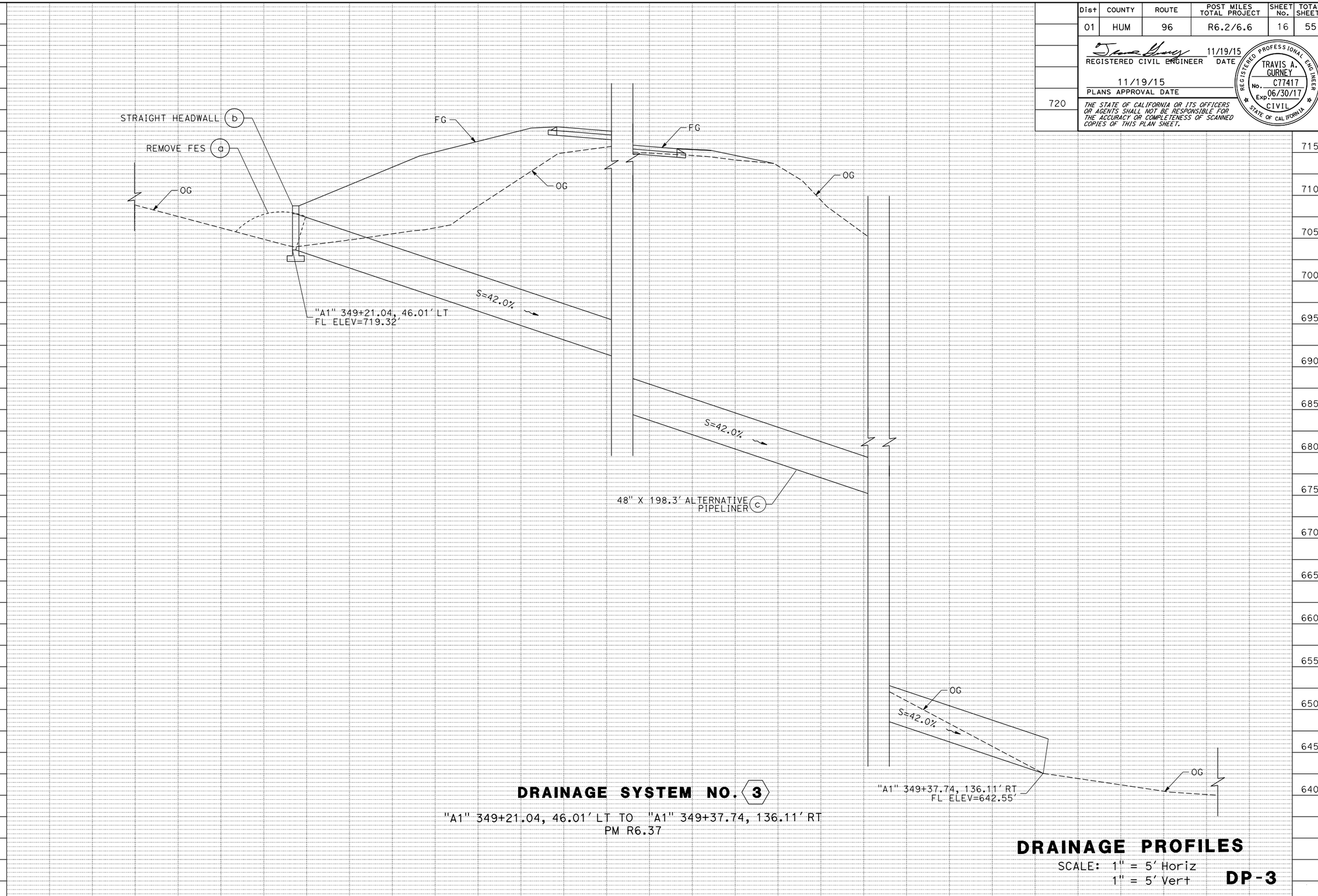

DRAINAGE SYSTEM NO. 3

"A1" 349+21.04, 46.01' LT TO "A1" 349+37.74, 136.11' RT
PM R6.37

DRAINAGE PROFILES

SCALE: 1" = 5' Horiz
1" = 5' Vert

DP-3

REVISED BY | DATE REVISED
JOLENA ASTIN | TRAVIS A. GURNEY
CALCULATED-DESIGNED BY | CHECKED BY
FUNCTIONAL SUPERVISOR: JOHN L. MARTIN

STATE OF CALIFORNIA - DEPARTMENT OF TRANSPORTATION
Caltrans
DESIGN

P:\proj2\01\0A990_plans\pse\0112000001ib003.dgn

LAST REVISION 05-11-15 | DATE PLOTTED => 01-DEC-2015 | TIME PLOTTED => 12:46

Dist	COUNTY	ROUTE	POST MILES TOTAL PROJECT	SHEET No.	TOTAL SHEETS
01	HUM	96	R6.2/6.6	17	55

REGISTERED CIVIL ENGINEER 11/19/15 DATE

11/19/15
PLANS APPROVAL DATE

REGISTERED PROFESSIONAL ENGINEER TRAVIS A. GURNEY No. C77417 Exp. 06/30/17 CIVIL STATE OF CALIFORNIA

THE STATE OF CALIFORNIA OR ITS OFFICERS OR AGENTS SHALL NOT BE RESPONSIBLE FOR THE ACCURACY OR COMPLETENESS OF SCANNED COPIES OF THIS PLAN SHEET.

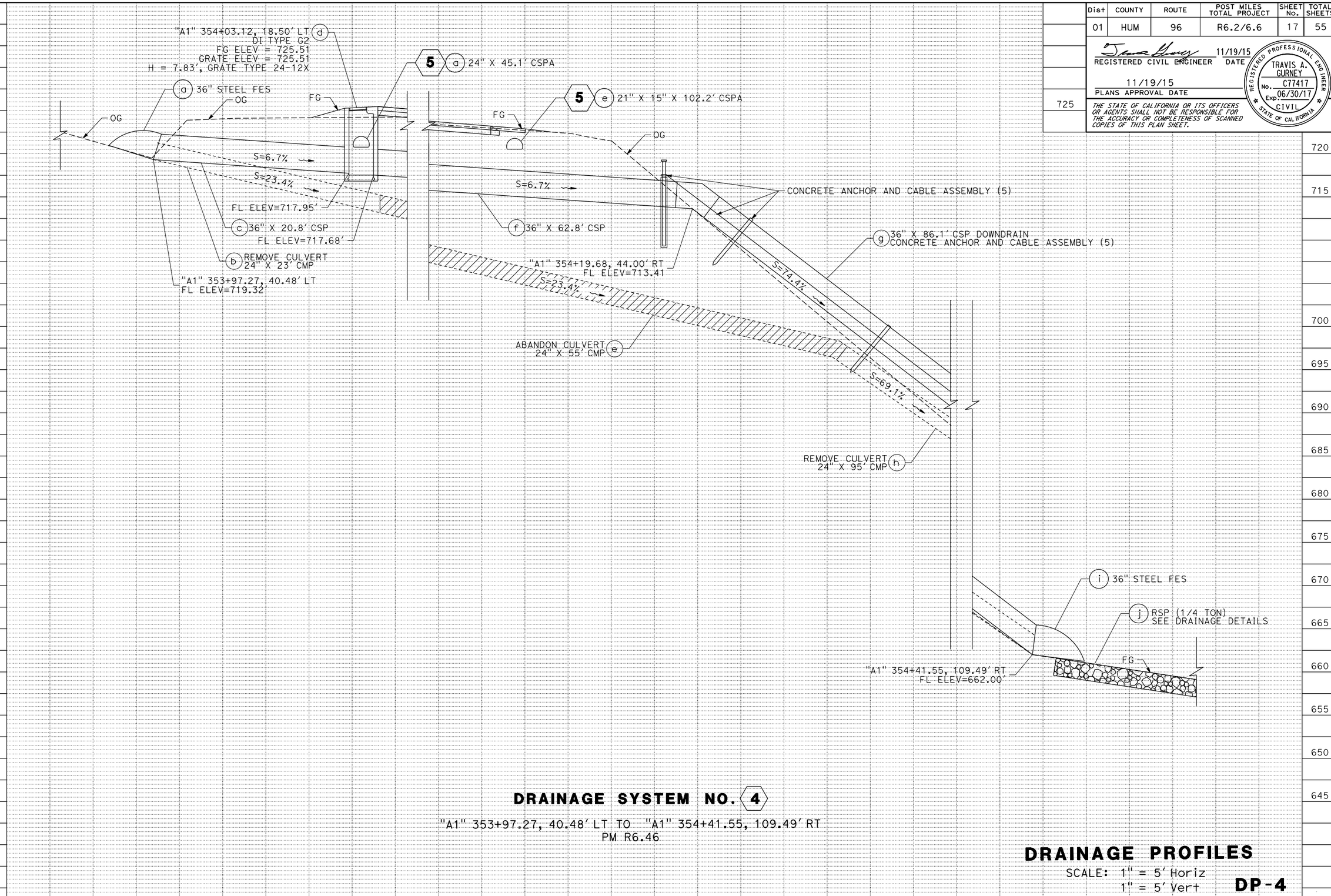

DRAINAGE SYSTEM NO. 4

"A1" 353+97.27, 40.48' LT TO "A1" 354+41.55, 109.49' RT
PM R6.46

DRAINAGE PROFILES

SCALE: 1" = 5' Horiz
1" = 5' Vert

DP-4

REVISED BY | DATE REVISED
JOLENA ASTIN | TRAVIS A. GURNEY
CALCULATED-DESIGNED BY | CHECKED BY
FUNCTIONAL SUPERVISOR: JOHN L. MARTIN

STATE OF CALIFORNIA - DEPARTMENT OF TRANSPORTATION
Caltrans
DESIGN

P:\proj2\01\0A990_plans\pse\01120000011b004.dgn

LAST REVISION 05-11-15 | DATE PLOTTED => 01-DEC-2015 | TIME PLOTTED => 12:46

Dist	COUNTY	ROUTE	POST MILES TOTAL PROJECT	SHEET No.	TOTAL SHEETS
01	HUM	96	R6.2/6.6	18	55

REGISTERED CIVIL ENGINEER 11/19/15 DATE

11/19/15
PLANS APPROVAL DATE

REGISTERED PROFESSIONAL ENGINEER TRAVIS A. GURNEY No. C77417 Exp. 06/30/17 CIVIL STATE OF CALIFORNIA

THE STATE OF CALIFORNIA OR ITS OFFICERS OR AGENTS SHALL NOT BE RESPONSIBLE FOR THE ACCURACY OR COMPLETENESS OF SCANNED COPIES OF THIS PLAN SHEET.

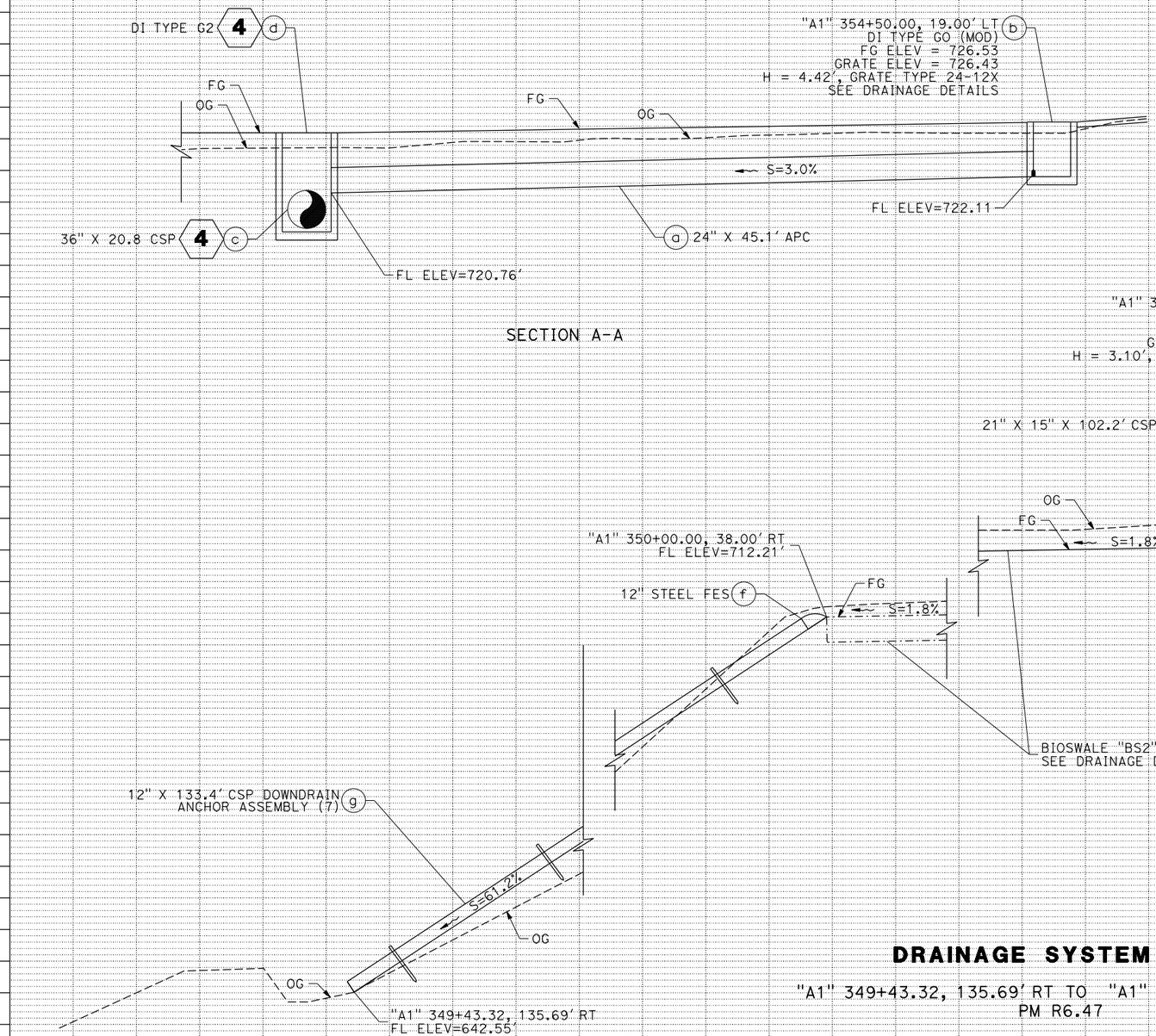

DRAINAGE SYSTEM NO. 5

"A1" 349+43.32, 135.69' RT TO "A1" 354+50, 18.30' LT
PM R6.47

DRAINAGE PROFILES

SCALE: 1" = 5' Horiz
1" = 5' Vert

DP-5

REVISED BY | DATE REVISED
JOLENA ASTIN | TRAVIS A. GURNEY
CALCULATED-DESIGNED BY | CHECKED BY
FUNCTIONAL SUPERVISOR | JOHN L. MARTIN

STATE OF CALIFORNIA - DEPARTMENT OF TRANSPORTATION
Caltrans DESIGN

P:\proj2\01\0A990_plans\pse\01120000011b005.dgn

LAST REVISION 05-11-15 | DATE PLOTTED => 01-DEC-2015 | TIME PLOTTED => 12:46

BORDER LAST REVISED 7/2/2010 | USERNAME => s116738 | DGN FILE => 01120000011b005.dgn | RELATIVE BORDER SCALE IS IN INCHES 0 1 2 3 | UNIT 0315 | PROJECT NUMBER & PHASE 01120000011

Dist	COUNTY	ROUTE	POST MILES TOTAL PROJECT	SHEET No.	TOTAL SHEETS
01	HUM	96	R6.2/6.6	19	55

REGISTERED CIVIL ENGINEER 11/19/15 DATE

11/19/15
PLANS APPROVAL DATE

REGISTERED PROFESSIONAL ENGINEER TRAVIS A. GURNEY No. C77417 Exp. 06/30/17 CIVIL STATE OF CALIFORNIA

THE STATE OF CALIFORNIA OR ITS OFFICERS OR AGENTS SHALL NOT BE RESPONSIBLE FOR THE ACCURACY OR COMPLETENESS OF SCANNED COPIES OF THIS PLAN SHEET.

CURVE DATA

No. ⊕	R	Δ	T	L
7	662′	09°58′11"	57.74′	115.19′
8	662′	34°44′58"	207.14′	401.50′

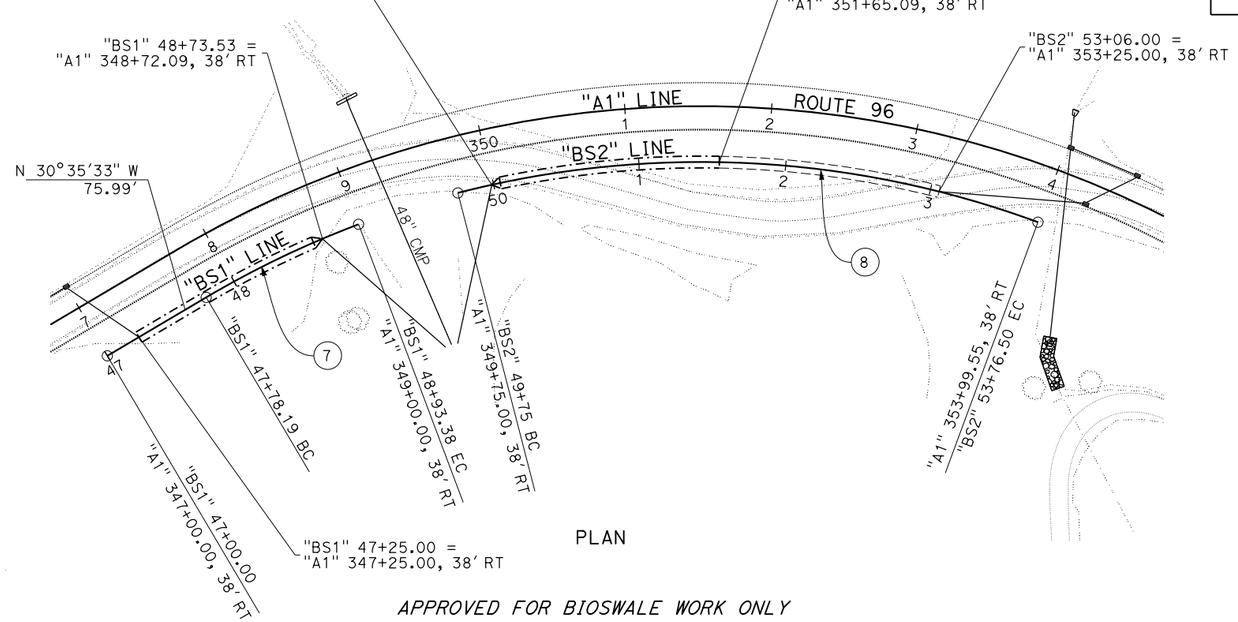

PLAN

APPROVED FOR BIOSWALE WORK ONLY

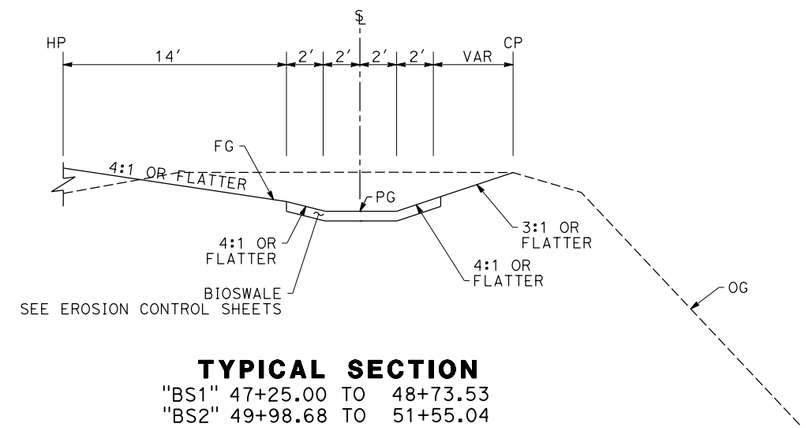

TYPICAL SECTION

"BS1" 47+25.00 TO 48+73.53
"BS2" 49+98.68 TO 51+55.04
NO SCALE

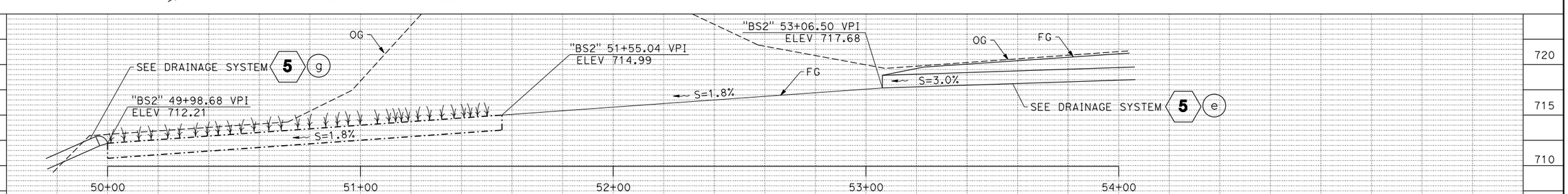

"BS2" PROFILE

"A1" 350+00.00, 38.00′ RT TO 351+65.09, 38.00′ RT
"BS2" 49+98.68 TO 51+55.04

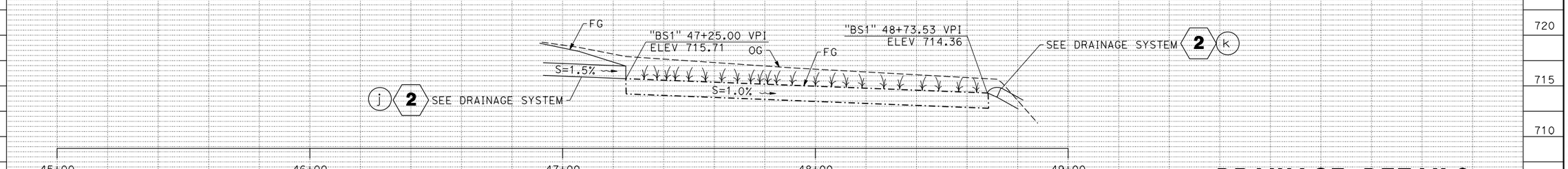

"BS1" PROFILE

"A1" 347+25.00, 38.00′ RT TO 348+72.09, 38.00′ RT
"BS1" 47+25.00 TO 48+73.53

DRAINAGE DETAILS

SCALE: 1" = 20′ HORIZ
1" = 5′ VERT

DD-1

REVISED BY | DATE REVISED
TRAVIS A. GURNEY | JOHN L. MARTIN
CALCULATED-DESIGNED BY | CHECKED BY
FUNCTIONAL SUPERVISOR | JOHN L. MARTIN

STATE OF CALIFORNIA - DEPARTMENT OF TRANSPORTATION
Caltrans
DESIGN

P:\proj2\01\0A990_plans\pse\01120000001ic001.dgn

LAST REVISION 05-11-15
DATE PLOTTED => 01-DEC-2015
TIME PLOTTED => 12:46

Dist	COUNTY	ROUTE	POST MILES TOTAL PROJECT	SHEET No.	TOTAL SHEETS
01	HUM	96	R6.2/6.6	20	55

REGISTERED CIVIL ENGINEER 11/19/15 DATE

11/19/15
PLANS APPROVAL DATE

REGISTERED PROFESSIONAL ENGINEER TRAVIS A. GURNEY No. C77417 Exp. 06/30/17 CIVIL STATE OF CALIFORNIA

THE STATE OF CALIFORNIA OR ITS OFFICERS OR AGENTS SHALL NOT BE RESPONSIBLE FOR THE ACCURACY OR COMPLETENESS OF SCANNED COPIES OF THIS PLAN SHEET.

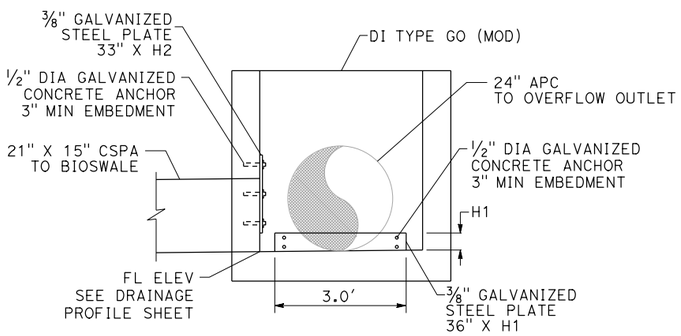

SECTION A-A

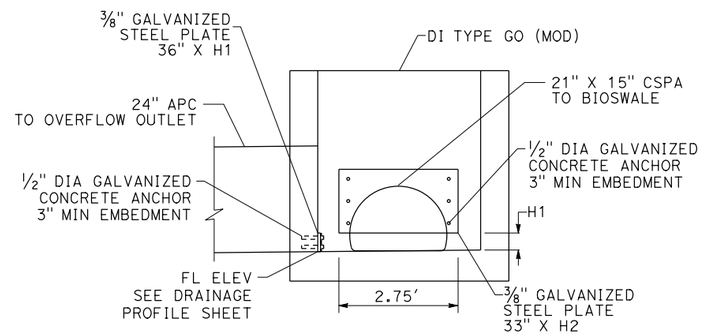

SECTION B-B

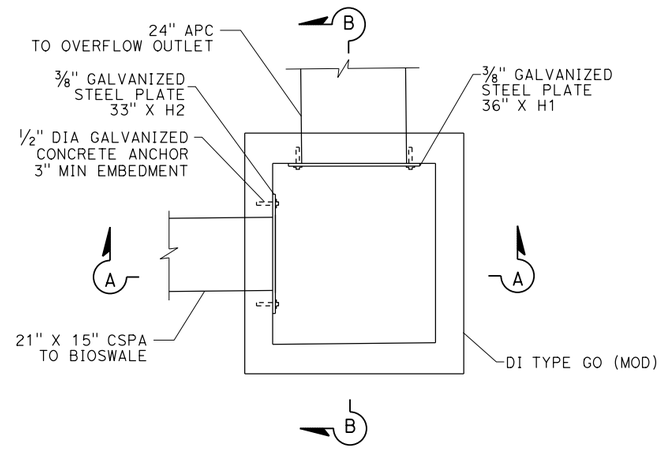

PLAN

DI TYPE GO (MOD)

2 b 5 b

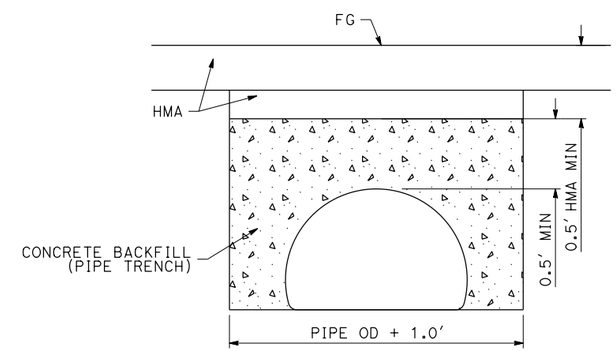

CONCRETE BACKFILL (PIPE TRENCH)

2 h j 5 c e

GALVANIZED STEEL PLATE VARIABLES

DRAINAGE SYSTEM NO. AND UNIT NO.	ALIGNMENT	STATION	"H1"	"H2"
2b	"A1"	346+04.86	0.36'	1.39'
5b	"A1"	354+50.00	0.42'	1.33'

DRAINAGE DETAILS

NO SCALE

DD-2

CALCULATED-DESIGNED BY
CHECKED BY
FUNCTIONAL SUPERVISOR JOHN L. MARTIN
TRAVIS A. GURNEY
JOHN L. MARTIN
REVISED BY
DATE REVISED

STATE OF CALIFORNIA - DEPARTMENT OF TRANSPORTATION
Caltrans DESIGN

P:\proj2\01\0A990_plans\pse\01120000001ic002.dgn

LAST REVISION 05-11-15
DATE PLOTTED => 01-DEC-2015
TIME PLOTTED => 12:46

Dist	COUNTY	ROUTE	POST MILES TOTAL PROJECT	SHEET No.	TOTAL SHEETS
01	HUM	96	R6.2/6.6	21	55

REGISTERED CIVIL ENGINEER 11/19/15 DATE

11/19/15
PLANS APPROVAL DATE

REGISTERED PROFESSIONAL ENGINEER TRAVIS A. GURNEY No. C77417 Exp. 06/30/17 CIVIL STATE OF CALIFORNIA

THE STATE OF CALIFORNIA OR ITS OFFICERS OR AGENTS SHALL NOT BE RESPONSIBLE FOR THE ACCURACY OR COMPLETENESS OF SCANNED COPIES OF THIS PLAN SHEET.

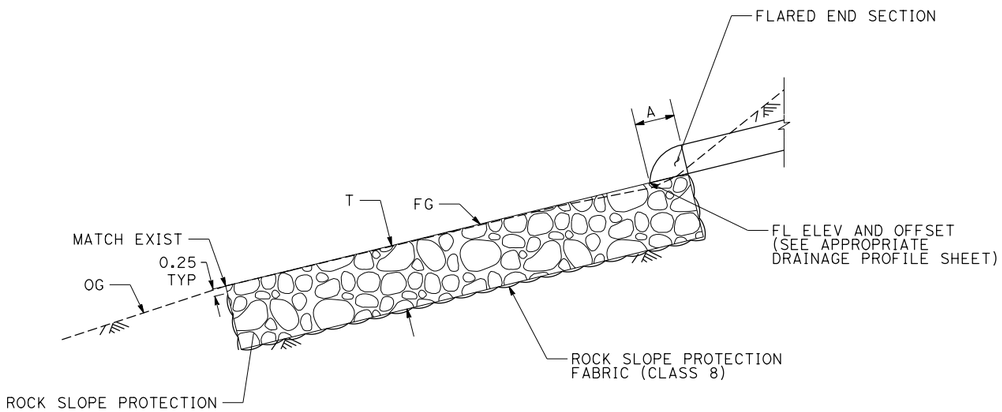

SECTION A-A

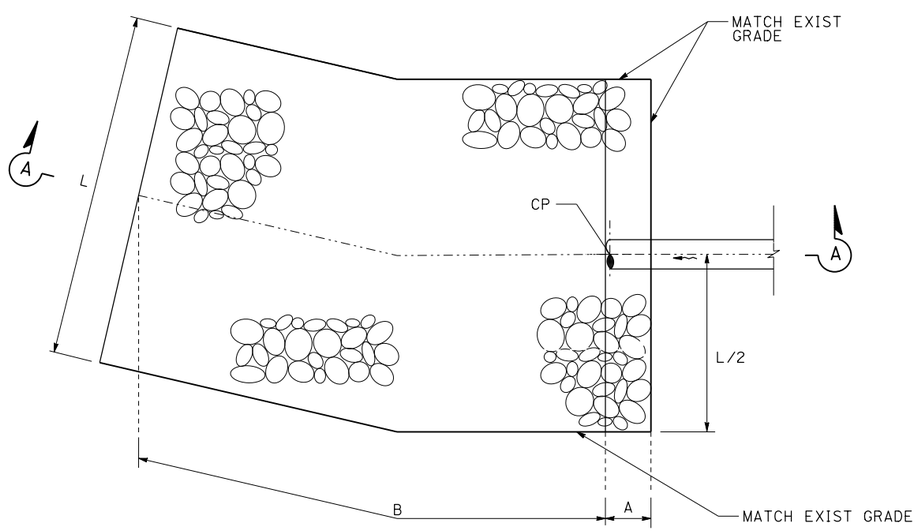

PLAN

ROCK SLOPE PROTECTION

2 g 4 j

ROCK SLOPE PROTECTION LOCATION AND VARIABLES

DRAINAGE SYSTEM No.	CP STATION & OFFSET	VARIABLE "A" FT	"B" FT	"L" FT	"T" FT	RSP CLASS METHOD B	NOTES
2 g	"A1" 346+04.86, 29.93' RT	2	12	6	1.5	BACKING NO. 1	FG ELEV TO CONFORM WITH EXIST
4 j	"A1" 354+41.55, 109.49' RT	2	32	9	3.0	1/4 TON	FG ELEV TO CONFORM WITH EXIST

DRAINAGE DETAILS

NO SCALE

DD-3

REVISED BY	DATE REVISED
TRAVIS A. GURNEY	JOHN L. MARTIN

CALCULATED-DESIGNED BY
CHECKED BY

FUNCTIONAL SUPERVISOR JOHN L. MARTIN

STATE OF CALIFORNIA - DEPARTMENT OF TRANSPORTATION
Caltrans
DESIGN

P:\proj2\01\0A990_plans\pse\01120000001ic003.dgn

LAST REVISION 05-11-15
DATE PLOTTED => 01-DEC-2015
TIME PLOTTED => 12:46

Dist	COUNTY	ROUTE	POST MILES TOTAL PROJECT	SHEET No.	TOTAL SHEETS
01	HUM	96	R6.2/6.6	22	55

REGISTERED CIVIL ENGINEER 11/19/15 DATE

11/19/15
PLANS APPROVAL DATE

REGISTERED PROFESSIONAL ENGINEER TRAVIS A. GURNEY No. C77417 Exp. 06/30/17 CIVIL STATE OF CALIFORNIA

THE STATE OF CALIFORNIA OR ITS OFFICERS OR AGENTS SHALL NOT BE RESPONSIBLE FOR THE ACCURACY OR COMPLETENESS OF SCANNED COPIES OF THIS PLAN SHEET.

NOTES:
1. (N) NOT A SEPARATE PAY ITEM, FOR INFORMATION ONLY.
2. ALL CULVERT PIPES MUST HAVE POSITIVE WATERTIGHT JOINTS.

ABBREVIATIONS

MSWPVC MACHINE SPIRAL WOUND PVC
PS POLYMERIC SHEET COATING

LEGEND

APPLY TREATMENT TO INTERIOR AND EXTERIOR OF THE ENTIRE CULVERT PIPE.

ALTERNATIVE PIPELINER PIPE LINER MATERIAL

DESIGNATION	MIN ID	PLASTIC PIPELINER	MSWPVC PIPELINER, GROUTED
48" ALTERNATIVE PIPLINER	42"	X	X

ALTERNATIVE PIPE CULVERT ALLOWABLE PIPE MATERIAL AND PROTECTION

DESIGNATION	CSP (TYPE 1)		CSP (TYPE 2)	
	T (IN)	COATING LINING	T (IN)	COATING LINING ##
24" APC	0.109	NONE	0.079	PS

DRAINAGE QUANTITIES

DRAINAGE PROFILE SHEET NO.	DRAINAGE SYSTEM NO.	DRAINAGE UNIT NO.	ABANDON CULVERT (LF)	REMOVE FLARED END SECTION	REMOVE CULVERT (LF)	REMOVE INLET	SALVAGE GRATE	48" ALTERNATIVE PIPELINER	CLEANING, INSPECTING, AND PREPARING CULVERT (LF)	SAND BACKFILL	MNINOR CONCRETE (MINOR STRUCTURE)	24" ALTERNATIVE PIPE CULVERT	CONCRETE BACKFILL (PIPE TRENCH)	36" CORRUGATED STEEL PIPE (.138" THICK)	21" X 15" CORRUGATED STEEL PIPE ARCH (.109" THICK)	DRAINAGE SYSTEM NO.	DRAINAGE UNIT NO.	ALIGNMENT	STATION	DESCRIPTION
			LF	EA	LF	EA	EA	LF	LF	CY	CY	LF	CY	LF	LF					
DP-1	1	a				1	1									1	a	A1	342+66.25	REMOVE INLET, TYPE GCP
DP-1	1	b									1.8					1	b	A1	342+66.25	TYPE G0 DI, W/ (1) GRATE TYPE 24-12X
DP-1	1	c			61.3											1	c	A1	342+66.25	REMOVE CULVERT 24" X 61.3' CMP
DP-1	1	d										60.0				1	d	A1	342+66.25	24" x 60.0' APC
DP-2	2	a				1	1									2	a	A1	346+04.86	REMOVE INLET, TYPE GCP
DP-2	2	b									1.3					2	b	A1	346+04.86	TYPE GO MOD DI, W/ (1) GRATE TYPE 24-12X
DP-2	2	c										40.5				2	c	A1	346+04.86	24" x 40.5' APC
DP-2	2	d			43.2											2	d	A1	346+04.86	REMOVE CULVERT 18" X 43.2' CMP
DP-2	2	e														2	e	A1	346+04.86	24" x 8.8' CSP DD, ANCHOR ASSEMBLY (1)
DP-2	2	f														2	f	A1	346+04.86	FLARED END SECTION
DP-2	2	g														2	g	A1	346+04.86	RSP (NO. 1)
DP-2	2	h											10.8		92.2	2	h	A1	346+04.86	21" X 15" X 92.2' CSPA
DP-2	2	i									1.3					2	i	A1	347+00.00	TYPE GO DI, W/ (1) GRATE TYPE 24-12X
DP-2	2	j											4.2		59.9	2	j	A1	347+00.00	21" X 15" X 59.9' CSPA
DP-2	2	k														2	k	A1	348+72.09	FLARED END SECTION
DP-2	2	l														2	l	A1	349+38.92	24" X 138.0' CSP DD, ANCHOR ASSEMBLY (7)
DP-3	3	a		1												3	a	A1	349+21.04	REMOVE 48" FES
DP-3	3	b									2.8					3	b	A1	349+21.04	STRAIGHT HEADWALL
DP-3	3	c						198.3	198.3							3	c	A1	349+21.04	48" X 198.3' ALTERNATIVE PIPELINER
SUBTOTAL				1	104.5	2	2	198.3	198.3		7.2	100.5	15.0		152.1					

DRAINAGE QUANTITIES
DQ-1

REVISED BY | DATE REVISED
JOLENA ASTIN | TRAVIS A. GURNEY
CALCULATED-DESIGNED BY | CHECKED BY
FUNCTIONAL SUPERVISOR: JOHN L. MARTIN

STATE OF CALIFORNIA - DEPARTMENT OF TRANSPORTATION
Caltrans DESIGN

P:\proj2\01\0A990_plans\pse\01120000001id001.dgn

LAST REVISION 05-11-15 | DATE PLOTTED => 01-DEC-2015 | TIME PLOTTED => 12:46

Dist	COUNTY	ROUTE	POST MILES TOTAL PROJECT	SHEET No.	TOTAL SHEETS
01	HUM	96	R6.2/6.6	23	55

REGISTERED CIVIL ENGINEER 11/19/15 DATE

11/19/15
PLANS APPROVAL DATE

REGISTERED PROFESSIONAL ENGINEER TRAVIS A. GURNEY No. C77417 Exp. 06/30/17 CIVIL STATE OF CALIFORNIA

THE STATE OF CALIFORNIA OR ITS OFFICERS OR AGENTS SHALL NOT BE RESPONSIBLE FOR THE ACCURACY OR COMPLETENESS OF SCANNED COPIES OF THIS PLAN SHEET.

NOTES:
1. (N) NOT A SEPARATE PAY ITEM, FOR INFORMATION ONLY.
2. ALL CULVERT PIPES MUST HAVE POSITIVE WATERTIGHT JOINTS.

DRAINAGE QUANTITIES

DRAINAGE PROFILE SHEET NO.	DRAINAGE SYSTEM NO.	DRAINAGE UNIT NO.	12" CORRUGATED STEEL PIPE DOWNDRAIN (.079" THICK)	24" CORRUGATED STEEL PIPE DOWNDRAIN (.109" THICK)	36" CORRUGATED STEEL PIPE DOWNDRAIN (.138" THICK)	ANCHOR ASSEMBLY	CONCRETE ANCHOR AND CABLE ASSEMBLY	12" STEEL FLARED END SECTION	24" STEEL FLARED END SECTION	36" STEEL FLARED END SECTION	ROCK SLOPE PROTECTION (1/4 T, METHOD B) (CY)	ROCK SLOPE PROTECTION (NO. 1, METHOD B) (CY)	ROCK SLOPE PROTECTION FABRIC (CLASS 8)	MISCELLANEOUS IRON AND STEEL	(N) DI HEIGHT	(N) MAX COVER	DRAINAGE SYSTEM NO.	DRAINAGE UNIT NO.	ALIGNMENT	STATION	DESCRIPTION
			LF	LF	LF	EA	EA	EA	EA	EA	CY	CY	SQYD	LB	FT	FT					
DP-1	1	a													3.82		1	a	A1	342+66.25	REMOVE INLET, TYPE GCP
DP-1	1	b												239	5.12		1	b	A1	342+66.25	TYPE GO DI, W/ (1) GRATE TYPE 24-12X
DP-1	1	c														3.22	1	c	A1	342+66.25	REMOVE CULVERT 24" X 61.3' CMP
DP-1	1	d														3.22	1	d	A1	342+66.25	24" x 60.0' APC
DP-2	2	a													3.25		2	a	A1	346+04.86	REMOVE INLET, TYPE GCP
DP-2	2	b												304	3.30		2	b	A1	346+04.86	TYPE GO MOD DI, W/ (1) GRATE TYPE 24-12X
DP-2	2	c														6.36	2	c	A1	346+04.86	24" x 40.5' APC
DP-2	2	d														4.83	2	d	A1	346+04.86	REMOVE CULVERT 18" X 43.2' CMP
DP-2	2	e		8.8		1											2	e	A1	346+04.86	24" x 8.8' CSP DD, ANCHOR ASSEMBLY (1)
DP-2	2	f							1								2	f	A1	346+04.86	FLARED END SECTION
DP-2	2	g										4.7	14.9				2	g	A1	346+04.86	RSP (NO. 1)
DP-2	2	h														2.05	2	h	A1	346+04.86	21" X 15" X 92.2' CSPA
DP-2	2	i												239	3.38		2	i	A1	347+00.00	TYPE GO DI, W/ (1) GRATE TYPE 24-12X
DP-2	2	j														2.13	2	j	A1	347+00.00	21" X 15" X 59.9' CSPA
DP-2	2	k						1									2	k	A1	348+72.09	FLARED END SECTION
DP-2	2	l	138.0			7											2	l	A1	349+38.92	24" X 138.0' CSP DD, ANCHOR ASSEMBLY (7)
DP-3	3	a															3	a	A1	349+21.04	REMOVE 48" FES
DP-3	3	b												160			3	b	A1	349+21.04	STRAIGHT HEADWALL
DP-3	3	c															3	c	A1	349+21.04	48" X 198.3' ALTERNATIVE PIPELINER
SUBTOTAL			138.0	8.8		8		1	1			4.7	14.9	942							

DRAINAGE QUANTITIES
DQ-2

CALCULATED-DESIGNED BY JOLENA ASTIN
CHECKED BY TRAVIS A. GURNEY
REVISED BY
DATE REVISED
FUNCTIONAL SUPERVISOR JOHN L. MARTIN

STATE OF CALIFORNIA - DEPARTMENT OF TRANSPORTATION
Caltrans DESIGN

P:\proj2\01\0A990_plans\pse\01120000011d002.dgn

LAST REVISION 05-11-15
DATE PLOTTED => 01-DEC-2015
TIME PLOTTED => 12:46

Dist	COUNTY	ROUTE	POST MILES TOTAL PROJECT	SHEET No.	TOTAL SHEETS
01	HUM	96	R6.2/6.6	24	55

REGISTERED CIVIL ENGINEER 11/19/15 DATE

11/19/15
PLANS APPROVAL DATE

REGISTERED PROFESSIONAL ENGINEER TRAVIS A. GURNEY No. C77417 Exp. 06/30/17 CIVIL STATE OF CALIFORNIA

THE STATE OF CALIFORNIA OR ITS OFFICERS OR AGENTS SHALL NOT BE RESPONSIBLE FOR THE ACCURACY OR COMPLETENESS OF SCANNED COPIES OF THIS PLAN SHEET.

NOTE:

1. (N) NOT A SEPARATE PAY ITEM, FOR INFORMATION ONLY.

DRAINAGE QUANTITIES

DRAINAGE PROFILE SHEET NO.	DRAINAGE SYSTEM NO. (#)	DRAINAGE UNIT NO. (#)	ABANDON CULVERT (LF)	REMOVE FLARED END SECTION	REMOVE CULVERT (LF)	REMOVE INLET	SALVAGE GRATE	48" ALTERNATIVE PIPELINER	CLEANING, INSPECTING, AND PREPARING CULVERT (LF)	SAND BACKFILL	MNINOR CONCRETE (MINOR STRUCTURE)	24" ALTERNATIVE PIPE CULVERT	CONCRETE BACKFILL (PIPE TRENCH)	36" CORRUGATED STEEL PIPE (.138" THICK)	21" X 15" CORRUGATED STEEL PIPE ARCH (.109" THICK)	DRAINAGE SYSTEM NO. (#)	DRAINAGE UNIT NO. (#)	ALIGNMENT	STATION	DESCRIPTION
			LF	EA	LF	EA	EA	LF	LF	CY	CY	LF	CY	LF	LF					
DP-4	4	a														4	a	A1	353+97.27	FLARED END SECTION
DP-4	4	b			23.0											4	b	A1	353+97.27	REMOVE CULVERT 24" X 23' CMP
DP-4	4	c												20.8		4	c	A1	353+97.27	36" x 20.8' CSP
DP-4	4	d									2.5					4	d	A1	354+03.12	TYPE G2 MOD DI, W/ (1) GRATE TYPE 24-12X
DP-4	4	e	55							6.4						4	e	A1	354+03.12	ABANDON CULVERT 24" X 55' CMP
DP-4	4	f												62.8		4	f	A1	354+03.12	36" x 62.8' CSP
DP-4	4	g														4	g	A1	354+19.68	36" x 86.1' CSP DD, CONCRETE ANCHOR (5)
DP-4	4	h			95.0											4	h	A1	354+19.68	REMOVE CULVERT 24" X 95' CMP
DP-4	4	i														4	i	A1	354+41.55	FLARED END SECTION
DP-4	4	j														4	j	A1	354+41.55	RSP (1/4 TON)
DP-5	5	a										45.1				5	a	A1	354+03.12	24" x 45.1' APC
DP-5	5	b									1.6					5	b	A1	354+50.00	TYPE GO MOD DI, W/ (1) GRATE TYPE 24-12X
DP-5	5	c											4.6		42.5	5	c	A1	354+50.00	21" X 15" X 42.5' CSPA
DP-5	5	d									1.3					5	d	A1	354+25.00	TYPE GO DI, W/ (1) GRATE TYPE 24-12X
DP-5	5	e											1.1		102.2	5	e	A1	354+25.00	21" X 15" X 102.2' CSPA
DP-5	5	f														5	f	A1	350+00.00	FLARED END SECTION
DP-5	5	g														5	g	A1	350+00.00	12" x 132.0' CSP DD, ANCHOR ASSEMBLY (7)
SUBTOTAL			60		118.0					6.4	5.4	45.1	5.7	83.6	144.7					
FROM DQ-1				1	104.5	2	2	198.3	198.3		7.2	100.5	15.0		152.1					
TOTAL			60	1	222.5	2	2	198.3	198.3	6.4	12.6	145.6	20.7	83.6	296.8					

DRAINAGE QUANTITIES
DQ-3

CALCULATED-DESIGNED BY JOLENA ASTIN
CHECKED BY TRAVIS A. GURNEY
FUNCTIONAL SUPERVISOR JOHN L. MARTIN
REVISED BY
DATE REVISED

STATE OF CALIFORNIA - DEPARTMENT OF TRANSPORTATION
Caltrans DESIGN

P:\proj2\01\0A990_plans\pse\0112000001id003.dgn

LAST REVISION 05-11-15
DATE PLOTTED => 01-DEC-2015
TIME PLOTTED => 12:46

Dist	COUNTY	ROUTE	POST MILES TOTAL PROJECT	SHEET No.	TOTAL SHEETS
01	HUM	96	R6.2/6.6	25	55

REGISTERED CIVIL ENGINEER 11/19/15 DATE

11/19/15
PLANS APPROVAL DATE

REGISTERED PROFESSIONAL ENGINEER TRAVIS A. GURNEY No. C77417 Exp. 06/30/17 CIVIL STATE OF CALIFORNIA

THE STATE OF CALIFORNIA OR ITS OFFICERS OR AGENTS SHALL NOT BE RESPONSIBLE FOR THE ACCURACY OR COMPLETENESS OF SCANNED COPIES OF THIS PLAN SHEET.

NOTE:
1. (N) NOT A SEPARATE PAY ITEM, FOR INFORMATION ONLY.

DRAINAGE QUANTITIES

DRAINAGE PROFILE SHEET NO.	DRAINAGE SYSTEM NO.	DRAINAGE UNIT NO.	12" CORRUGATED STEEL PIPE DOWNDRAIN (.079" THICK)	24" CORRUGATED STEEL PIPE DOWNDRAIN (.109" THICK)	36" CORRUGATED STEEL PIPE DOWNDRAIN (.138" THICK)	ANCHOR ASSEMBLY	CONCRETE ANCHOR AND CABLE ASSEMBLY	12" STEEL FLARED END SECTION	24" STEEL FLARED END SECTION	36" STEEL FLARED END SECTION	ROCK SLOPE PROTECTION (1/4 T, METHOD B) (CY)	ROCK SLOPE PROTECTION (NO. 1, METHOD B) (CY)	ROCK SLOPE PROTECTION FABRIC (CLASS 8)	MISCELLANEOUS IRON AND STEEL	(N) DI HEIGHT	(N) MAX COVER	DRAINAGE SYSTEM NO.	DRAINAGE UNIT NO.	ALIGNMENT	STATION	DESCRIPTION
			LF	LF	LF	EA	EA	EA	EA	EA	CY	CY	SQYD	LB	FT	FT					
DP-4	4	a								1							4	a	A1	353+97.27	FLARED END SECTION
DP-4	4	b														8.0	4	b	A1	353+97.27	REMOVE CULVERT 24" X 23′ CMP
DP-4	4	c														4.5	4	c	A1	353+97.27	36" x 20.8′ CSP
DP-4	4	d												239	7.8		4	d	A1	354+03.12	TYPE G2 MOD DI, W/ (1) GRATE TYPE 24-12X
DP-4	4	e														17.0	4	e	A1	354+03.12	ABANDON CULVERT 24" X 55′ CMP
DP-4	4	f														4.7	4	f	A1	354+03.12	36" x 62.8′ CSP
DP-4	4	g			86.1		5										4	g	A1	354+19.68	36" x 86.1′ CSP DD, CONCRETE ANCHOR (5)
DP-4	4	h														3.0	4	h	A1	354+19.68	REMOVE CULVERT 24" X 95′ CMP
DP-4	4	i								1							4	i	A1	354+41.55	FLARED END SECTION
DP-4	4	j									34.0		60.3				4	j	A1	354+41.55	RSP (1/4 TON)
DP-5	5	a														3.6	5	a	A1	354+03.12	24" x 45.1′ APC
DP-5	5	b												304	4.4		5	b	A1	354+50.00	TYPE GO MOD DI, W/ (1) GRATE TYPE 24-12X
DP-5	5	c														3.0	5	c	A1	354+50.00	21" X 15" X 42.5′ CSPA
DP-5	5	d												239	3.1		5	d	A1	354+25.00	TYPE GO DI, W/ (1) GRATE TYPE 24-12X
DP-5	5	e														1.9	5	e	A1	354+25.00	21" X 15" X 102.2′ CSPA
DP-5	5	f						1									5	f	A1	350+00.00	FLARED END SECTION
DP-5	5	g	133.4			7											5	g	A1	350+00.00	12" x 132.0′ CSP DD, ANCHOR ASSEMBLY (7)
SUBTOTAL			133.4		86.1	7	5	1		2	34.0		60.3	782							
FROM DQ-2			138.0	8.8		8		1	1			4.7	14.9	942							
TOTAL			271.4	8.8	86.1	15	5	2	1	2	34.0	4.7	75.2	1724							

DRAINAGE QUANTITIES
DQ-4

REVISED BY | DATE REVISED
JOLENA ASTIN | TRAVIS A. GURNEY
CALCULATED-DESIGNED BY | CHECKED BY
FUNCTIONAL SUPERVISOR
JOHN L. MARTIN

STATE OF CALIFORNIA - DEPARTMENT OF TRANSPORTATION
Caltrans DESIGN

P:\proj2\01\0A990_plans\pse\01120000011d004.dgn

LAST REVISION 05-11-15 | DATE PLOTTED => 01-DEC-2015 TIME PLOTTED => 12:46

Dist	COUNTY	ROUTE	POST MILES TOTAL PROJECT	SHEET No.	TOTAL SHEETS
01	HUM	96	R6.2/6.6	26	55

REGISTERED CIVIL ENGINEER 11/19/15 DATE

PLANS APPROVAL DATE 11/19/15

REGISTERED PROFESSIONAL ENGINEER TRAVIS A. GURNEY No. C77417 Exp. 06/30/17 CIVIL STATE OF CALIFORNIA

THE STATE OF CALIFORNIA OR ITS OFFICERS OR AGENTS SHALL NOT BE RESPONSIBLE FOR THE ACCURACY OR COMPLETENESS OF SCANNED COPIES OF THIS PLAN SHEET.

NOTES:

1. EXACT LOCATION OF ALL SIGNS TO BE DETERMINED BY THE ENGINEER.
2. CALIFORNIA CODES ARE DESIGNATED BY (CA), OTHERWISE FEDERAL CODES ARE SHOWN.
3. ALL CONSTRUCTION AREA SIGNS EXCEPT C40(CA) MUST HAVE A BLACK LEGEND WITH AN ORANGE BACKGROUND.
4. (N) NOT A SEPARATE PAY ITEM, FOR INFORMATION ONLY.

CONSTRUCTION AREA SIGNS (STATIONARY MOUNTED)

◯	TYPE	PANEL SIZE	SIGN MESSAGE	NUMBER AND SIZE OF POSTS	(N) NO. OF SIGNS
A	W20-1 C23B(CA)	36" x 36" 36" x 18"	ROAD WORK AHEAD CURVE IMPROVEMENT	1 - 4" x 6"	2
B	C40(CA)	108" x 42"	TRAFFIC FINES DOUBLED IN CONSTRUCTION ZONES	2 - 6" x 6"	2
C	G20-2	36" x 18"	END ROAD WORK	1 - 4" x 4"	2
D	W11-1 W16-1P	36" x 36" 24" x 30"	BICYCLE (SYMBOL) SHARE THE ROAD	1 - 4" x 6"	2
E	W20-1	36" x 36"	ROAD WORK AHEAD	1 - 4" x 6"	1

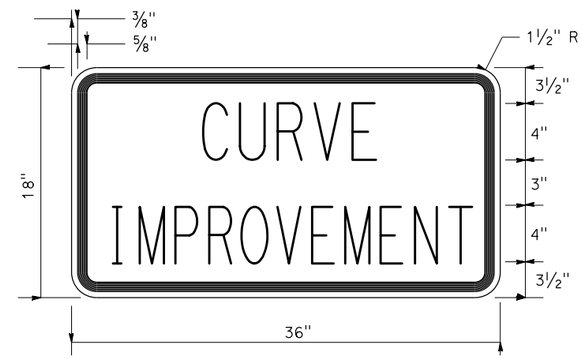

C23B(CA) SIGN PANEL DETAIL
TYPE "C" LETTERING

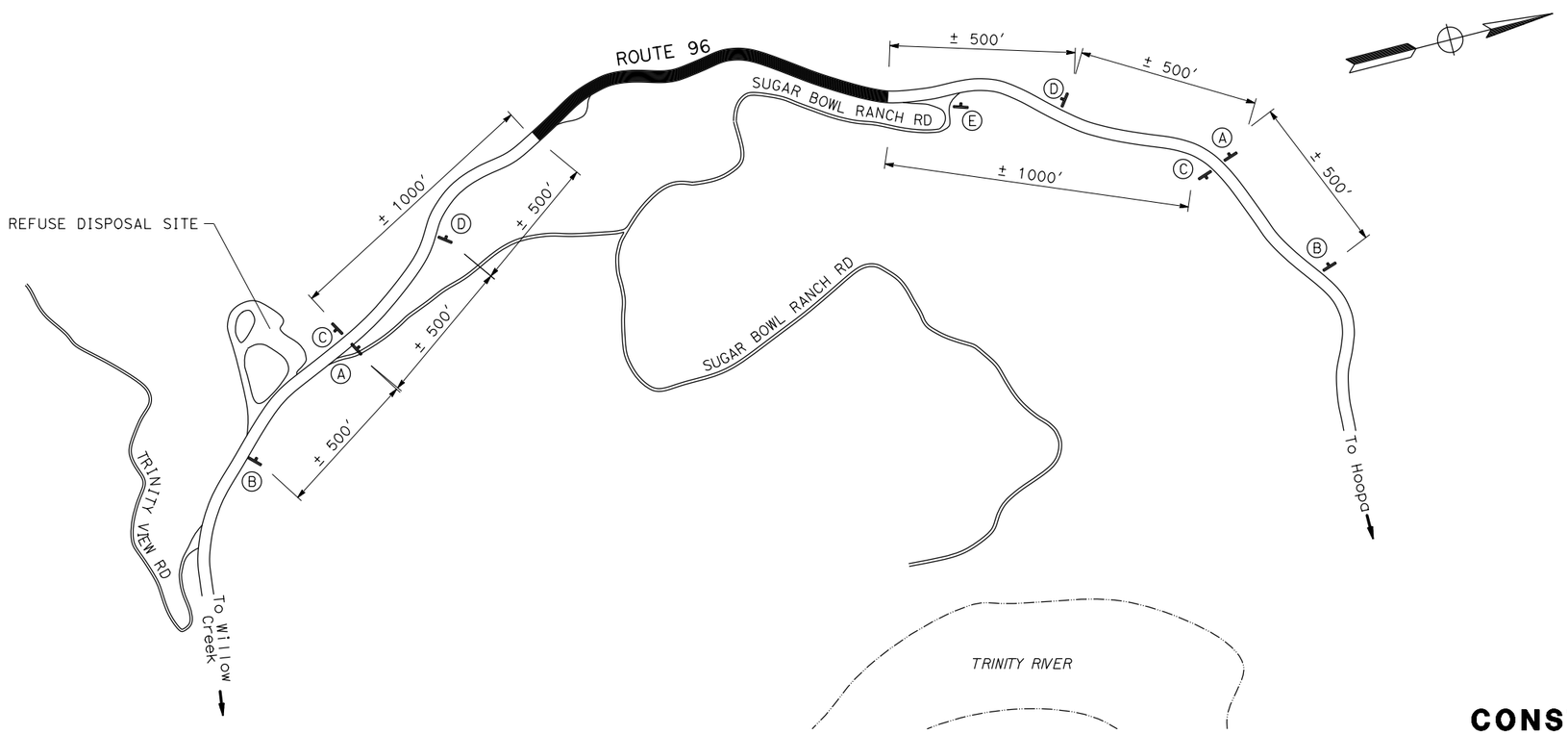

APPROVED FOR CONSTRUCTION AREA SIGN WORK ONLY

CONSTRUCTION AREA SIGNS
NO SCALE

CS-1

REVISED BY | DATE REVISED
TRAVIS A. GURNEY | JOHN L. MARTIN
CALCULATED-DESIGNED BY | CHECKED BY
FUNCTIONAL SUPERVISOR: JOHN L. MARTIN

STATE OF CALIFORNIA - DEPARTMENT OF TRANSPORTATION
Caltrans DESIGN

P:\proj2\01\0A990_plans\pse\01120000011a001.dgn

LAST REVISION 05-26-15 | DATE PLOTTED => 01-DEC-2015 | TIME PLOTTED => 12:46

BORDER LAST REVISED 7/2/2010 | USERNAME => s116738 | DGN FILE => 01120000011a001.dgn | RELATIVE BORDER SCALE IS IN INCHES 0 1 2 3 | UNIT 0315 | PROJECT NUMBER & PHASE 01120000011

Dist	COUNTY	ROUTE	POST MILES TOTAL PROJECT	SHEET No.	TOTAL SHEETS
01	HUM	96	R6.2/6.6	27	55

REGISTERED CIVIL ENGINEER — DATE 3-5-15

November 19, 2015
PLANS APPROVAL DATE

THE STATE OF CALIFORNIA OR ITS OFFICERS OR AGENTS SHALL NOT BE RESPONSIBLE FOR THE ACCURACY OR COMPLETENESS OF SCANNED COPIES OF THIS PLAN SHEET.

REGISTERED PROFESSIONAL ENGINEER — SHERI M. RODRIGUEZ — No. C66861 — Exp. 9-30-16 — CIVIL — STATE OF CALIFORNIA

NOTES:

1. CALIFORNIA CODES ARE DESIGNATED BY (CA). OTHERWISE, FEDERAL (MUTCD) CODES ARE SHOWN.
2. ALL SIGNS SHALL HAVE A BLACK LEGEND ON FLUORESCENT ORANGE BACKGROUND AND SHALL BE EQUIPPED WITH AT LEAST TWO 16" x 16" ORANGE FLAGS FOR DAYTIME CLOSURE OR FLASHING BEACONS FOR LANE CLOSURE DURING HOURS OF DARKNESS.
3. ALL CONES USED FOR LANE CLOSURES DURING THE HOURS OF DARKNESS SHALL BE FITTED WITH RETROREFLECTIVE BANDS OR SLEEVES.
4. WHEN A PILOT CAR IS USED, PLACE A C37 (CA) SIGN AT ALL INTERSECTIONS WITHIN TRAFFIC CONTROL AREA. WHERE VEHICULAR TRAFFIC CAN NOT EFFECTIVELY SELF-REGULATE, AT LEAST ONE FLAGGER SHALL BE USED AT EACH INTERSECTION WITHIN THE TRAFFIC CONTROL AREA.
5. FLAGGER SHOULD STAND IN A CONSPICUOUS PLACE, FACING TRAFFIC AT ALL TIMES, BE VISIBLE TO APPROACHING TRAFFIC AS WELL AS APPROACHING VEHICLES AFTER THE FIRST VEHICLE HAS STOPPED.
6. ADDITIONAL ADVANCE FLAGGERS ARE REQUIRED.
7. WHEN FLAGGER IS NOT VISIBLE FROM THIS LOCATION PLACE A C29 (CA) SIGN BELOW THE C9A (CA) SIGN.

LEGEND

- TRAFFIC CONE
- TEMPORARY SIGN
- DIRECTION OF TRAVEL
- PORTABLE FLASHING BEACON
- FLAGGER

SIGN PANEL SIZE (MINIMUM)

- A — 48" x 48" - SPEED OF 45 mph OR MORE; 36" x 36" - SPEED LESS THAN 45 mph
- B — 30" x 30"
- C — UNUSED
- D — UNUSED
- E — 20" x 7"

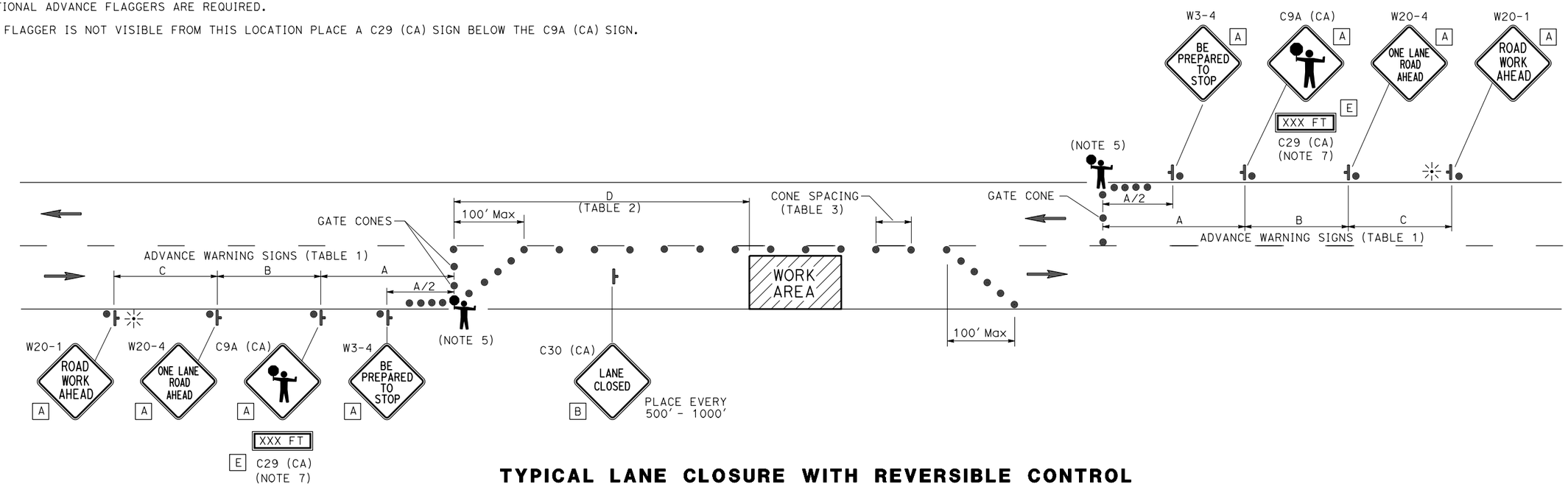

TYPICAL LANE CLOSURE WITH REVERSIBLE CONTROL

TABLE 1
ADVANCE WARNING SIGN SPACING

ROAD TYPE	MIN A	MIN B	MIN C
	FT		
URBAN (25 MPH OR LESS)	100	100	100
URBAN (30 MPH TO 40 MPH)	250	250	250
URBAN (MORE THAN 40 MPH)	350	350	350
RURAL	500	500	500
EXPRESSWAY / FREEWAY	1000	1500	2640

TABLE 2
BUFFER SPACE

APPROACH SPEED	MIN D	DOWNGRADE MIN D		
		-3%*	-6%*	-9%*
MPH	FT			
25 & BELOW	155	158	165	173
30	200	205	215	227
35	250	257	271	287
40	305	315	333	354
45	360	378	400	427
50	425	446	474	507
55	495	520	553	593
60	570	598	638	686
65	645	682	728	785

* USE ON SUSTAINED DOWNGRADE STEEPER THAN -3 PERCENT AND LONGER THAN 1 MILE.

TABLE 3
MAX CONE SPACING

POSTED SPEED	TAPER	TANGENT	CONFLICT*
MPH	FT		
20	20	40	10
25	25	50	12
30	30	60	15
35	35	70	17
40	40	80	20
45	45	90	22
50	50	100	25
55	55	110	27
60	60	120	30
65	65	130	32

* USE WHERE THERE IS A CONFLICT BETWEEN EXISTING PAVEMENT MARKINGS AND CHANNELIZERS.

TRAFFIC HANDLING PLAN

NO SCALE

APPROVED FOR TRAFFIC HANDLING WORK ONLY

TH-1

REVISED BY	DATE REVISED
SHERI M. RODRIGUEZ	TROY A. ARSENEAU

CALCULATED-DESIGNED BY — CHECKED BY

FUNCTIONAL SUPERVISOR: RICHARD MULLEN

STATE OF CALIFORNIA - DEPARTMENT OF TRANSPORTATION — Caltrans® TRAFFIC OPERATIONS

P:\proj2\01\0A990_plans\pse\0112000001md001.dgn

LAST REVISION 05-11-15 — DATE PLOTTED => 01-DEC-2015 — TIME PLOTTED => 12:46

Dist	COUNTY	ROUTE	POST MILES TOTAL PROJECT	SHEET No.	TOTAL SHEETS
01	HUM	96	R6.2/6.6	28	55

REGISTERED CIVIL ENGINEER 11/19/15 DATE

11/19/15
PLANS APPROVAL DATE

REGISTERED PROFESSIONAL ENGINEER TRAVIS A. GURNEY No. C77417 Exp. 06/30/17 CIVIL STATE OF CALIFORNIA

THE STATE OF CALIFORNIA OR ITS OFFICERS OR AGENTS SHALL NOT BE RESPONSIBLE FOR THE ACCURACY OR COMPLETENESS OF SCANNED COPIES OF THIS PLAN SHEET.

NOTES:

1. FOR ACCURATE RIGHT OF WAY DATA, CONTACT RIGHT OF WAY ENGINEERING AT THE DISTRICT OFFICE.
2. EXACT SIGN LOCATION TO BE DETERMINED BY ENGINEER.

LEGEND

- DELINEATOR (CLASS 2) (TYPE E)
- #-# PAVEMENT DELINEATION STRIPE DETAIL NUMBER
- MILEPOST MARKER
- C MARKER (CULVERT)
- P OBJECT MARKER (TYPE P)
- S=##.# DELINEATOR SPACING (FT)
- #-# ROADSIDE SIGN NUMBER
- EXISTING ROADSIDE SIGN ONE POST
- NEW ROADSIDE SIGN ONE POST
- REMOVE ROADSIDE SIGN

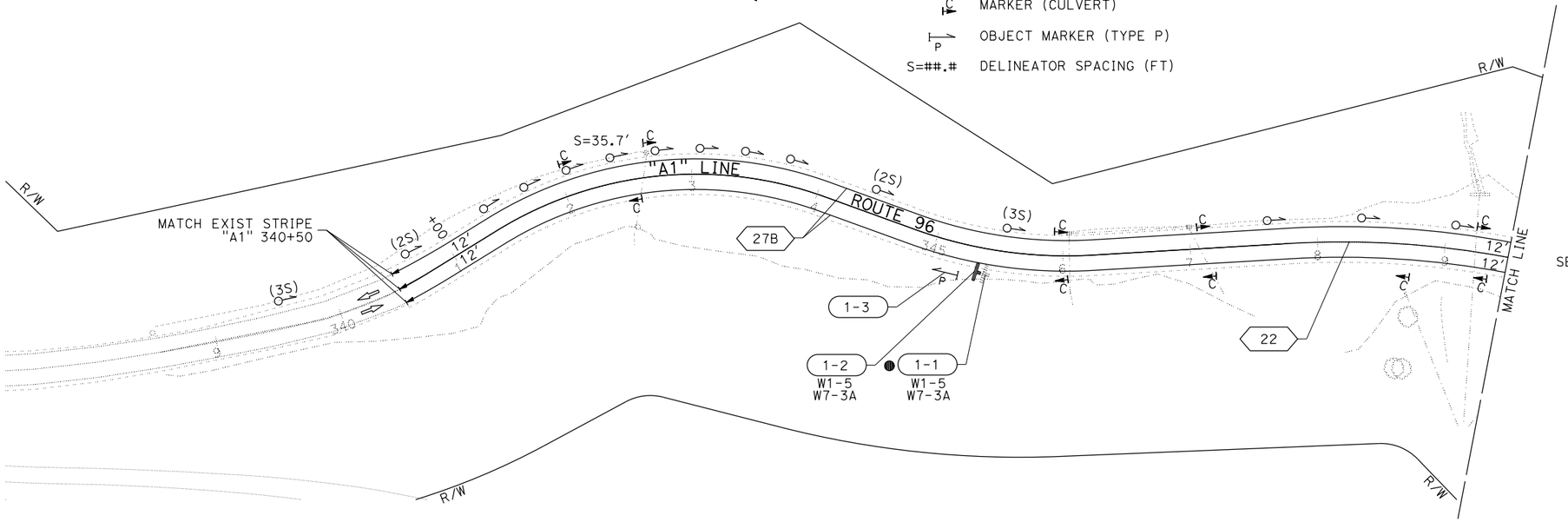

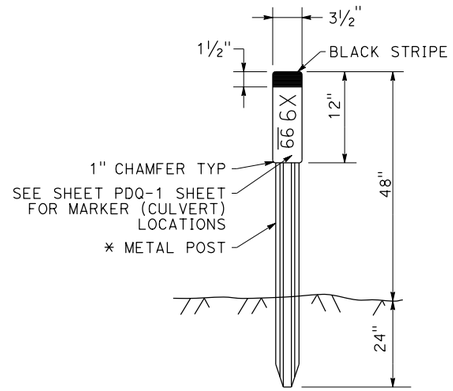

* SEE STANDARD PLAN A73B FOR METAL POST DETAILS

MARKER (CULVERT)

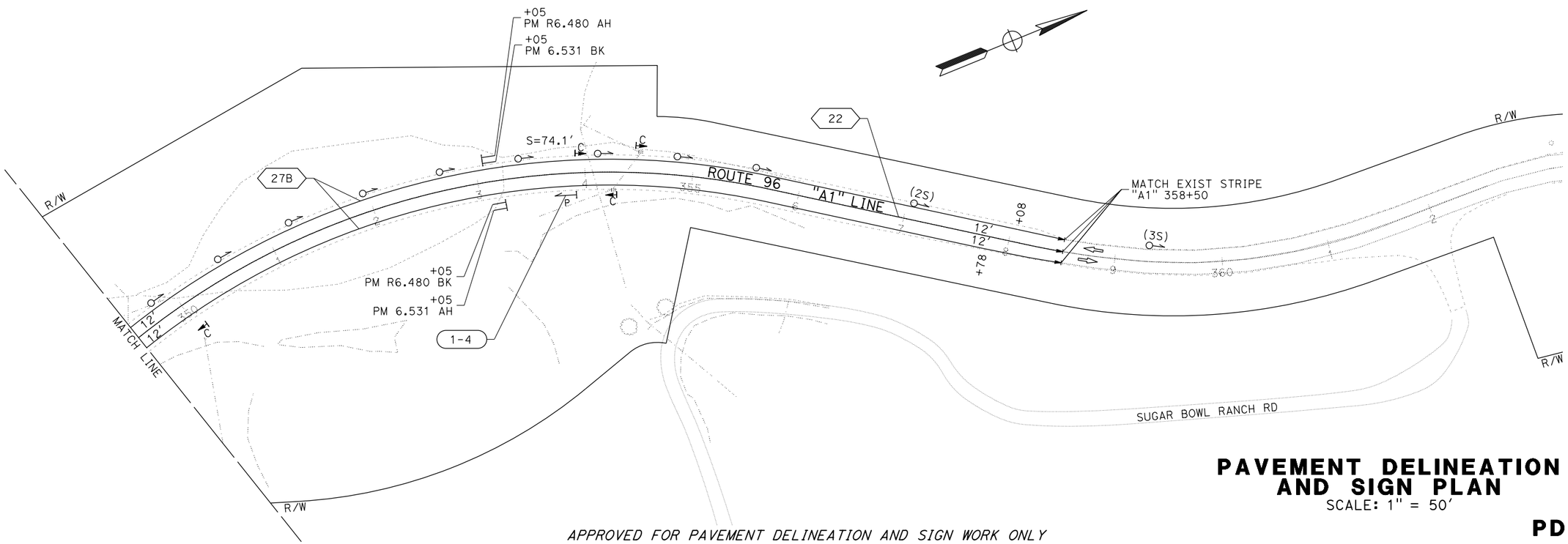

PAVEMENT DELINEATION AND SIGN PLAN

SCALE: 1" = 50'

PD-1

APPROVED FOR PAVEMENT DELINEATION AND SIGN WORK ONLY

REVISED BY	DATE REVISED
TRAVIS A. GURNEY	JOHN L. MARTIN
CALCULATED-DESIGNED BY	CHECKED BY
FUNCTIONAL SUPERVISOR	JOHN L. MARTIN

STATE OF CALIFORNIA - DEPARTMENT OF TRANSPORTATION
Caltrans
DESIGN

P:\proj2\01\0A990_plans\pse\0112000001na001.dgn

LAST REVISION 05-11-15
DATE PLOTTED => 01-DEC-2015
TIME PLOTTED => 12:46

Dist	COUNTY	ROUTE	POST MILES TOTAL PROJECT	SHEET No.	TOTAL SHEETS
01	HUM	96	R6.2/6.6	29	55

REGISTERED CIVIL ENGINEER 11/19/15 DATE

11/19/15
PLANS APPROVAL DATE

REGISTERED PROFESSIONAL ENGINEER TRAVIS A. GURNEY No. C77417 Exp. 06/30/17 CIVIL STATE OF CALIFORNIA

THE STATE OF CALIFORNIA OR ITS OFFICERS OR AGENTS SHALL NOT BE RESPONSIBLE FOR THE ACCURACY OR COMPLETENESS OF SCANNED COPIES OF THIS PLAN SHEET.

NOTES:

1. (N) - NOT A SEPARATE PAY ITEM, FOR INFORMATION ONLY.
2. EXACT LOCATION AND POSITION OF ROADSIDE SIGN TO BE DETERMINED BY THE ENGINEER.
3. POST SIZE AND LENGTH GIVEN ARE APPROXIMATE.

ROADSIDE SIGNS

SHEET No.	SIGN No.	SIGN CODE	PANEL SIZE	(N) POST SIZE & LENGTH WOOD POST 4" x 6"	TREATED WOOD WASTE	REMOVE ROADSIDE SIGN	ROADSIDE SIGN (ONE POST)	VEGETATION CONTROL (MINOR CONCRETE)	SIGN PANEL DESCRIPTION
				LF	LB	EA	EA	SQYD	
PD-1	1-1	W1-5 W7-3A	36" x 36" 32" x 18"		100	1			WINDING ROAD LEFT NEXT 3 MILES
	1-2	W1-5 W7-3A	36" x 36" 24" x 18"	15			1	1	WINDING ROAD LEFT NEXT 3 MILES
			TOTAL	15	100	1	1	1 *	

* ADDITIONAL QUANTITIES SHOWN ELSEWHERE, SEE SHEET Q-1.

DELINEATORS AND MARKERS

LOCATION	DELINEATOR (CLASS 2) TYPE E	MILEPOST MARKER	OBJECT MARKER (TYPE P)
	EA	EA	EA
"A1" 340+50 TO "A1" 358+50	26	4	2
TOTAL	26	4	2

TRAFFIC STRIPE AND MARKERS

PD SHEET	LOCATION	THERMOPLASTIC TRAFFIC STRIPE (ENHANCED WET NIGHT VISIBILITY) YELLOW 4" DETAIL 22	WHITE 4" DETAIL 27B	PAVEMENT MARKER (RETRO-REFLECTIVE) TYPE D
		LF	LF	EA
PD-1	"A1" 340+50 TO 358+50	3600	3600	152
	SUB TOTAL	3600	3600	152
	TOTAL	7200		152

MATERIAL SUMMARY CONTRACTOR FURNISHED SIGNS

SIGN No.	SIGN CODE	SIGN SIZE (L x D)	SINGLE FACED	DOUBLE FACED	BACKGROUND SHEETING COLOR	BACKGROUND RETROREFLECTIVE ASTM TYPE	LEGEND SHEETING COLOR	LEGEND RETROREFLECTIVE ASTM TYPE	FURNISH SINGLE SHEET ALUMINUM SIGN (0.063"-UNFRAMED) FOR RETROREFLECTIVE SHEETING (TYPE XI)	RETROREFLECTIVE SHEETING (TYPE XI)	DESCRIPTION (REMARKS)
									SQFT	SQFT	
1-2	W1-5	36" X 36"	X		FL. YELLOW	XI	BLACK		9	9	WINDING ROAD LEFT
	W7-3A	24" X 18"	X		FL. YELLOW	XI	BLACK		3	3	NEXT 3 MILES
1-3	TYPE P (CA)	12" X 36"	X		FL. YELLOW	XI	BLACK		3	3	OBJECT MARKER
1-4	TYPE P (CA)	12" X 36"	X		FL. YELLOW	XI	BLACK		3	3	OBJECT MARKER
								TOTAL	18	18	

MARKER (CULVERT)

DRAINAGE SYSTEM NO. AND UNIT NO.	ALIGNMENT	STATION	POST MILE	LEFT	RIGHT	MARKER (CULVERT)
						EA
1c	"A1"	342+66.25	R6.25	X	X	2
2c	"A1"	346+04.86	R6.31	X	X	2
2j	"A1"	347+00.00	R6.33	X	X	2
2l	"A1"	348+72.09	R6.36		X	1
3d	"A1"	349+21.04	R6.37	X	X	2
4d	"A1"	353+97.27	R6.46	X		1
5h	"A1"	350+00.00	R6.39		X	1
5f	"A1"	354+25.00	R6.47		X	1
5d	"A1"	354+50.00	R6.47	X		1
					TOTAL	13

PAVEMENT DELINEATION AND SIGN QUANTITIES

PDQ-1

REVISED BY	DATE REVISED
TRAVIS A. GURNEY	JOHN L. MARTIN
CALCULATED-DESIGNED BY	CHECKED BY
FUNCTIONAL SUPERVISOR	JOHN L. MARTIN

STATE OF CALIFORNIA - DEPARTMENT OF TRANSPORTATION
Caltrans® DESIGN

P:\proj2\01\0A990_plans\pse\0112000001nc001.dgn

LAST REVISION 05-11-15 | DATE PLOTTED => 01-DEC-2015 TIME PLOTTED => 12:46

Dist	COUNTY	ROUTE	POST MILES TOTAL PROJECT	SHEET No.	TOTAL SHEETS
01	HUM	96	R6.2/6.6	30	55

REGISTERED CIVIL ENGINEER 11/19/15 DATE

11/19/15
PLANS APPROVAL DATE

REGISTERED PROFESSIONAL ENGINEER TRAVIS A. GURNEY No. C77417 Exp. 06/30/17 CIVIL STATE OF CALIFORNIA

THE STATE OF CALIFORNIA OR ITS OFFICERS OR AGENTS SHALL NOT BE RESPONSIBLE FOR THE ACCURACY OR COMPLETENESS OF SCANNED COPIES OF THIS PLAN SHEET.

NOTE:

1. (N) - NOT A SEPARATE PAY ITEM, FOR INFORMATION ONLY.

ROADWAY ITEMS

STATION	ROADWAY EXCAVATION	(N) ROADWAY EMBANKMENT	SHOULDER BACKING	CLASS 2 AGGREGATE BASE (CY)	HOT MIX ASPHALT (TYPE A)	RUBBERIZED HOT MIX ASPHALT (GAP GRADED)	SHOULDER RUMBLE STRIP (HMA, GROUND-IN INDENTATIONS)	CENTERLINE RUMBLE STRIP (HMA, GROUND-IN INDENTATIONS)	RUBBERIZED HOT MIX ASPHALT-OPEN GRADED (BONDED WEARING COURSE)	TACK COAT
	CY	TON	TON	CY	TON	TON	STA	STA	TON	TON
"A1" 340+50.00 TO 358+50.00	51,561	745	235	1164	914.0	685.0	29	18	457.0	2.6
FROM HOT MIX ASPHALT QUANTITIES TABLE THIS SHEET					75.3					
FROM TAPERED EDGE QUANTITIES TABLE THIS SHEET				41	19.7	7.4			1.5	
TOTAL	51,561	745	235	1205	1009.0	692.4	29	18	458.5	2.6

ROADWAY EMBANKMENT QUANTITY DOES NOT INCLUDE EXPANSION FACTOR.

STORM WATER POLLUTION PREVENTION

ITEM	UNIT	QTY
RAIN EVENT ACTION PLAN	EA	61
STORM WATER SAMPLING AND ANALYSIS DAY	EA	30
STORM WATER ANNUAL REPORT	EA	2
MOVE-IN/MOVE-OUT (TEMPORARY EROSION CONTROL)	EA	4
TEMPORARY HYDRAULIC MULCH (BONDED FIBER MATRIX)	SQYD	5400
TEMPORARY COVER	SQYD	1800
TEMPORARY CHECK DAM	LF	645
TEMPORARY DRAINAGE INLET PROTECTION	EA	5
TEMPORARY FIBER ROLL	LF	1500
TEMPORARY GRAVEL BAG BERM	LF	615
TEMPORARY REINFORCED SILT FENCE	LF	40
TEMPORARY SILT FENCE	LF	250
TEMPORARY CONSTRUCTION ENTRANCE	EA	3
TEMPORARY CREEK DIVERSION SYSTEM	EA	1
ROLLED EROSION CONTROL PRODUCT (NETTING)	SQFT	5000

GUARDRAIL

STATION	LOCATION	RAIL ELEMENT WALL	MIDWEST GUARDRAIL SYSTEM	MIDWEST GUARDRAIL SYSTEM (7' POST)	VEGETATION CONTROL (MINOR CONCRETE)	ALTERNATIVE FLARED TERMINAL SYSTEM
	RT/LT	SQFT	LF	LF	SQYD	EA
"A1" 344+87.50 TO 346+27.50	RT	325	150.0		135	2
"A1" 353+82.50 TO 357+70.00	RT	175	187.5	125	208	2
FROM ROADSIDE SIGN QUANTITIES TABLE SHEET PDQ-1	RT				1	
TOTAL		500	337.5	125	344	4

HOT MIX ASPHALT

STATION	LOCATION	HOT MIX ASPHALT (TYPE A)	PLACE HOT MIX ASPHALT DIKE (TYPE A)	PLACE HOT MIX ASPHALT DIKE (TYPE F)	PLACE HOT MIX ASPHALT (MISCELLANEOUS AREA)
	RT/LT	TON	LF	LF	SQYD
"A1" 342+25.00 TO 348+00.00	LT	38.1	575		128
"A1" 354+17.00 TO 356+75.00	RT	1.7		258	
"A1" 354+42.00 TO 358+25.00	LT	35.5	383		128
TOTAL		75.3*	958	258	256

*ADDITIONAL QUANTITIES SHOWN ELSEWHERE. SEE ROADWAY QUANTITIES TABLE THIS SHEET.

TAPERED EDGE

STATION	LOCATION	(N) LENGTH	CLASS 2 AGGREGATE BASE (CY)	HOT MIX ASPHALT (TYPE A)	RUBBERIZED HOT MIX ASPHALT (GAP GRADED)	RUBBERIZED HOT MIX ASPHALT (BONDED WEARING COURSE-OPEN GRADED)
	LT/RT	LF	CY	TON	TON	TON
"A1" 340+50.00 TO 342+25.00	LT	175	3.6	1.7	0.6	0.1
"A1" 348+00.00 TO 354+42.00	LT	642	13.1	6.3	2.4	0.4
"A1" 358+25.00 TO 358+50.00	LT	25	0.5	0.2	0.1	0.1
"A1" 340+50.00 TO 344+87.50	RT	438	8.9	4.3	1.6	0.3
"A1" 347+27.50 TO 353+82.50	RT	655	13.3	6.4	2.4	0.5
"A1" 357+70.00 TO 358+50.00	RT	80	1.6	0.8	0.3	0.1
TOTAL			41.0*	19.7*	7.4*	1.5*

*ADDITIONAL QUANTITIES SHOWN ELSEWHERE. SEE ROADWAY QUANTITIES TABLE THIS SHEET.

SUMMARY OF QUANTITIES

Q-1

REVISED BY | DATE REVISED
JOLENA ASTIN | TRAVIS A. GURNEY
CALCULATED-DESIGNED BY | CHECKED BY
FUNCTIONAL SUPERVISOR: JOHN L. MARTIN

STATE OF CALIFORNIA - DEPARTMENT OF TRANSPORTATION
Caltrans DESIGN

P:\proj2\01\0A990_plans\pse\0112000001pa001.dgn

LAST REVISION 05-11-15 | DATE PLOTTED => 01-DEC-2015 | TIME PLOTTED => 12:46

Dist	COUNTY	ROUTE	POST MILES TOTAL PROJECT	SHEET No.	TOTAL SHEETS
01	HUM	96	R6.2/6.6	31	55

LICENSED LANDSCAPE ARCHITECT

11/19/15
PLANS APPROVAL DATE

THE STATE OF CALIFORNIA OR ITS OFFICERS OR AGENTS SHALL NOT BE RESPONSIBLE FOR THE ACCURACY OR COMPLETENESS OF SCANNED COPIES OF THIS PLAN SHEET.

LICENSED LANDSCAPE ARCHITECT
Laura Lazzarotto
Signature
8-31-17
Renewal Date
11-19-15
Date
STATE OF CALIFORNIA

NOTE:

1. FOR ACCURATE RIGHT OF WAY DATA, CONTACT RIGHT OF WAY ENGINEERING AT THE DISTRICT OFFICE.

LEGEND:

- EROSION CONTROL TYPE 1
- EROSION CONTROL TYPE 2
- FR FIBER ROLLS
- EROSION CONTROL TYPE 3 (BIOFILTRATION SWALE)
- EROSION CONTROL TYPE 4
- EROSION CONTROL TYPE 5

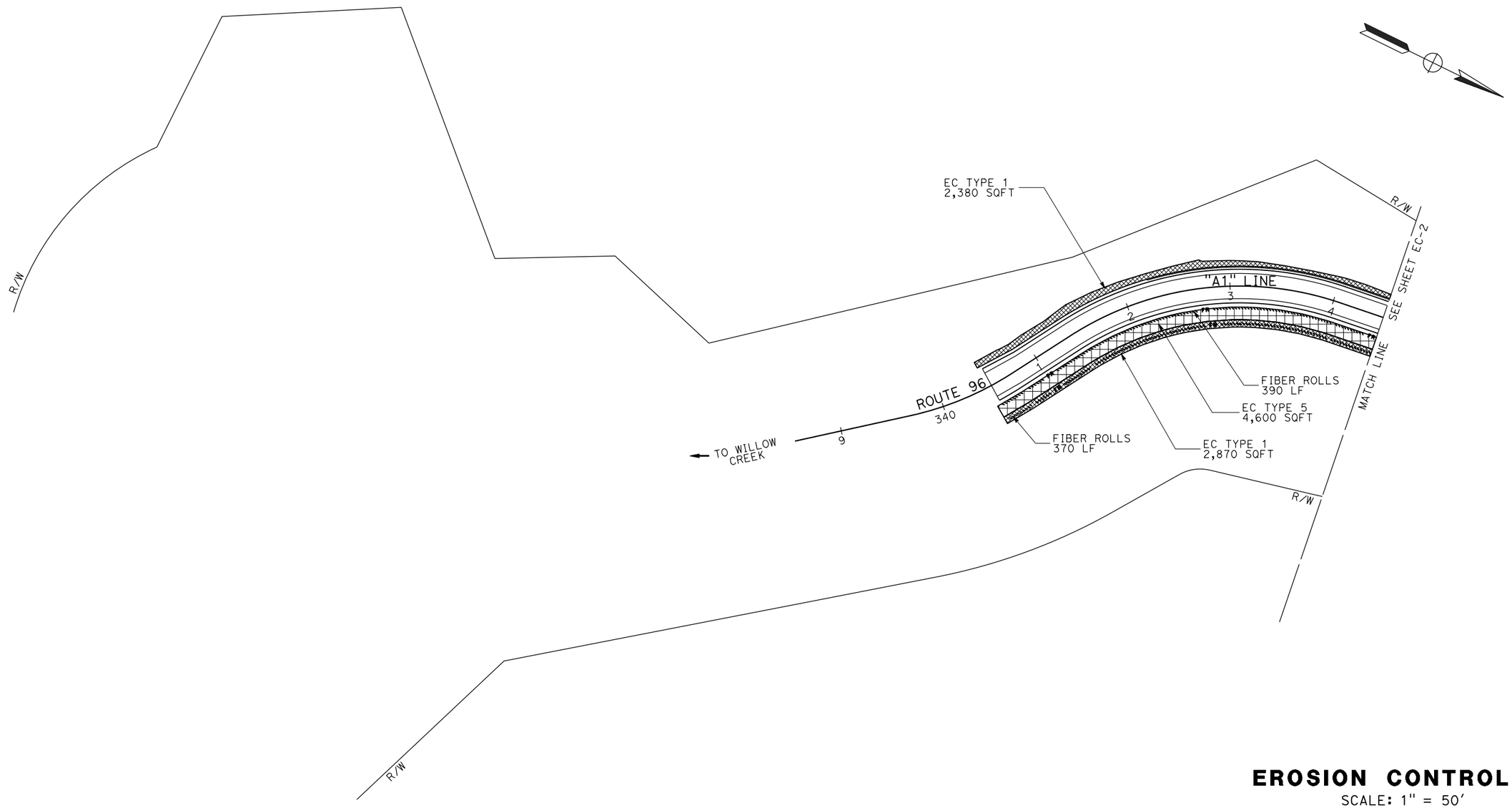

EROSION CONTROL PLAN

SCALE: 1" = 50'

EC-1

APPROVED FOR EROSION CONTROL WORK ONLY

REVISED BY	DATE REVISED
LOGAN MOORE	LAURA LAZZAROTTO

CALCULATED-DESIGNED BY	CHECKED BY

LANDSCAPE ARCHITECT SUPERVISOR: STEVE THORNE

STATE OF CALIFORNIA - DEPARTMENT OF TRANSPORTATION
Caltrans® LANDSCAPE ARCHITECTURE

P:\proj2\01\0A990_plans\pse\0112000001te001.dgn

LAST REVISION 09-01-15
DATE PLOTTED => 01-DEC-2015
TIME PLOTTED => 12:46

Dist	COUNTY	ROUTE	POST MILES TOTAL PROJECT	SHEET No.	TOTAL SHEETS
01	HUM	96	R6.2/6.6	32	55

Laura Lazzarotto
LICENSED LANDSCAPE ARCHITECT

11/19/15
PLANS APPROVAL DATE

LICENSED LANDSCAPE ARCHITECT
Laura Lazzarotto
Signature
8-31-17
Renewal Date
11-19-15
Date
STATE OF CALIFORNIA

THE STATE OF CALIFORNIA OR ITS OFFICERS OR AGENTS SHALL NOT BE RESPONSIBLE FOR THE ACCURACY OR COMPLETENESS OF SCANNED COPIES OF THIS PLAN SHEET.

NOTE:

1. FOR ACCURATE RIGHT OF WAY DATA, CONTACT RIGHT OF WAY ENGINEERING AT THE DISTRICT OFFICE.

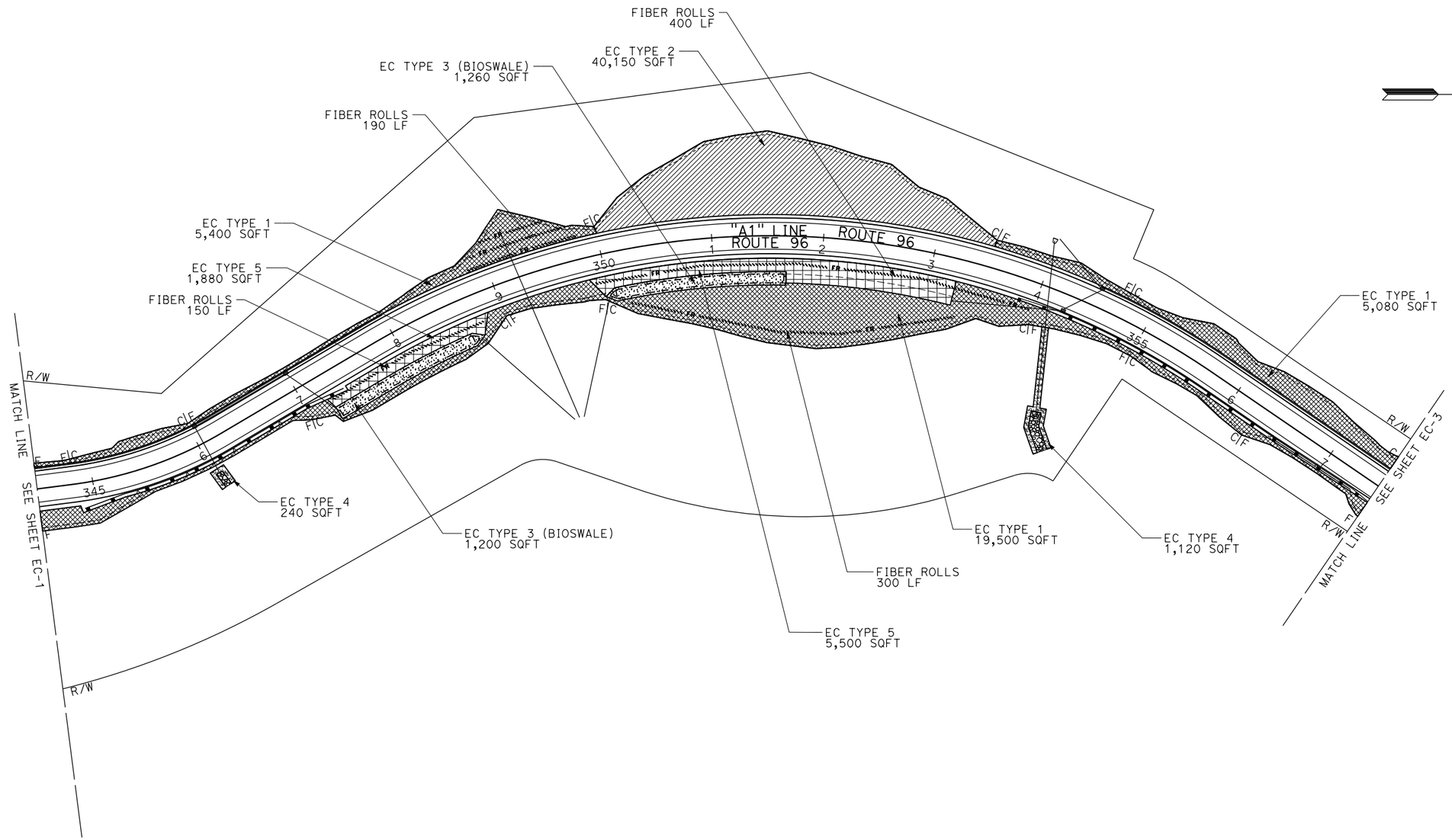

EROSION CONTROL PLAN

SCALE: 1" = 50'

EC-2

APPROVED FOR EROSION CONTROL WORK ONLY

REVISED BY	DATE REVISED
LOGAN MOORE	LAURA LAZZAROTTO
CALCULATED-DESIGNED BY	CHECKED BY
LANDSCAPE ARCHITECT SUPERVISOR	STEVE THORNE

STATE OF CALIFORNIA - DEPARTMENT OF TRANSPORTATION
Caltrans® LANDSCAPE ARCHITECTURE

P:\proj2\01\0A990_plans\pse\0112000001te002.dgn

LAST REVISION 09-01-15 | DATE PLOTTED => 01-DEC-2015 | TIME PLOTTED => 12:46

Dist	COUNTY	ROUTE	POST MILES TOTAL PROJECT	SHEET No.	TOTAL SHEETS
01	HUM	96	R6.2/6.6	33	55

Laura Lazzarotto
LICENSED LANDSCAPE ARCHITECT

11/19/15
PLANS APPROVAL DATE

LICENSED LANDSCAPE ARCHITECT
Laura Lazzarotto
Signature
8-31-17
Renewal Date
11-19-15
Date
STATE OF CALIFORNIA

THE STATE OF CALIFORNIA OR ITS OFFICERS OR AGENTS SHALL NOT BE RESPONSIBLE FOR THE ACCURACY OR COMPLETENESS OF SCANNED COPIES OF THIS PLAN SHEET.

NOTE:

1. FOR ACCURATE RIGHT OF WAY DATA, CONTACT RIGHT OF WAY ENGINEERING AT THE DISTRICT OFFICE.

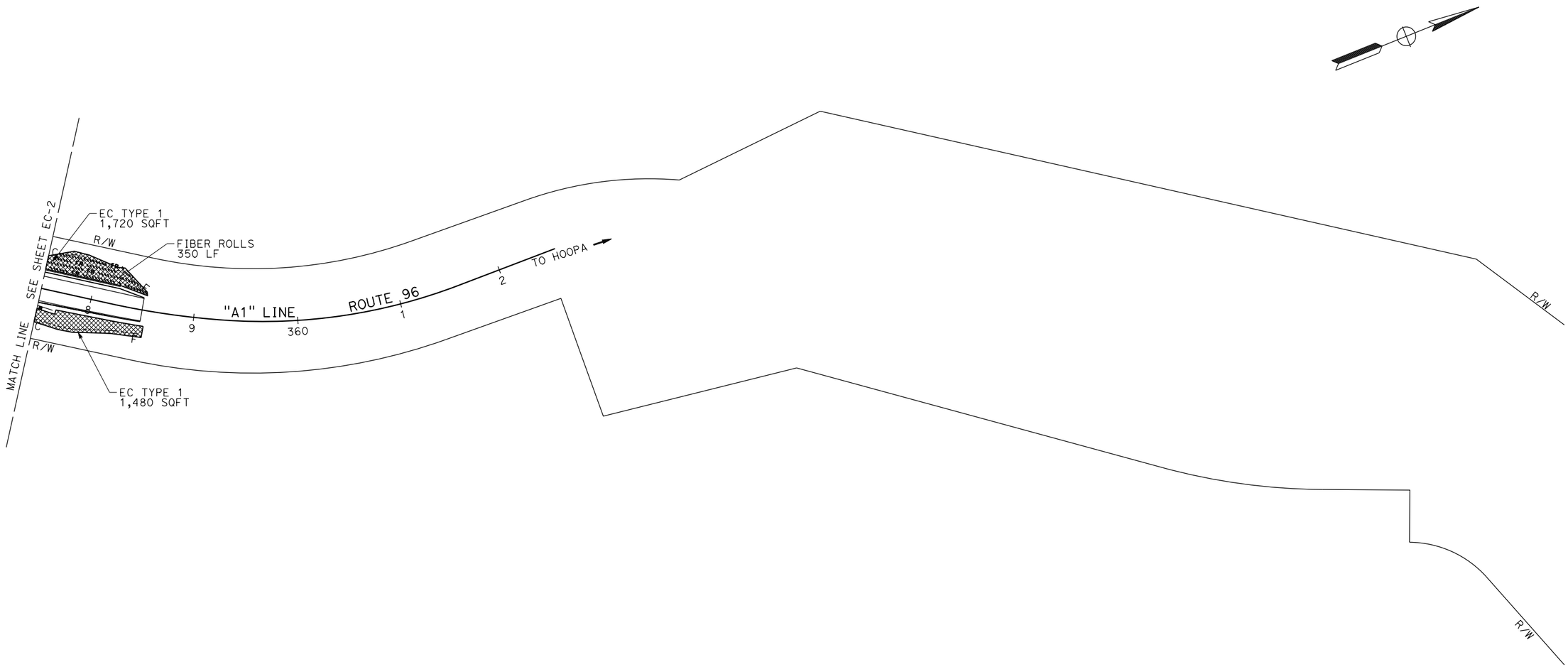

EROSION CONTROL PLAN

SCALE: 1" = 50'

EC-3

APPROVED FOR EROSION CONTROL WORK ONLY

REVISED BY	
DATE REVISED	
LOGAN MOORE	
LAURA LAZZAROTTO	
CALCULATED-DESIGNED BY	
CHECKED BY	
LANDSCAPE ARCHITECT SUPERVISOR	
STEVE THORNE	

STATE OF CALIFORNIA - DEPARTMENT OF TRANSPORTATION
Caltrans® LANDSCAPE ARCHITECTURE

P:\proj2\01\0A990_plans\pse\0112000001te003.dgn

LAST REVISION 09-01-15
DATE PLOTTED => 01-DEC-2015
TIME PLOTTED => 12:46

Dist	COUNTY	ROUTE	POST MILES TOTAL PROJECT	SHEET No.	TOTAL SHEETS
01	HUM	96	R6.2/6.6	34	55

Laura Lazzarotto
LICENSED LANDSCAPE ARCHITECT

11/19/15
PLANS APPROVAL DATE

THE STATE OF CALIFORNIA OR ITS OFFICERS OR AGENTS SHALL NOT BE RESPONSIBLE FOR THE ACCURACY OR COMPLETENESS OF SCANNED COPIES OF THIS PLAN SHEET.

LICENSED LANDSCAPE ARCHITECT
Laura Lazzarotto
Signature
8-31-17
Renewal Date
11-19-15
Date
STATE OF CALIFORNIA

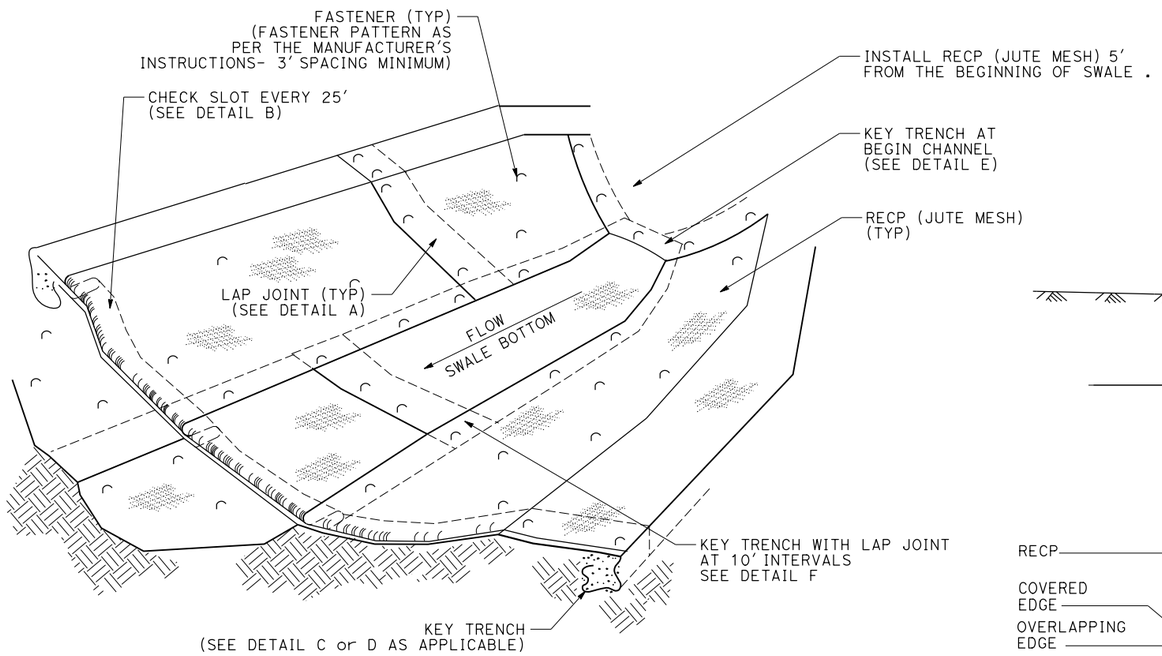

ISOMETRIC

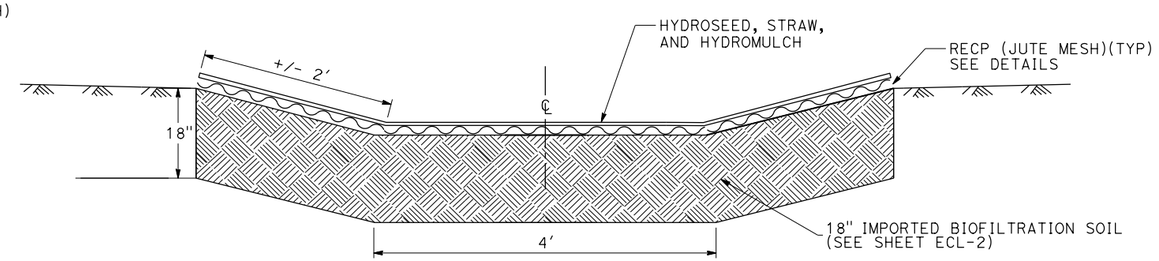

SECTION (TYP)

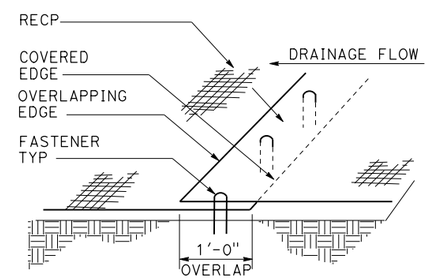

PERSPECTIVE

DETAIL A
LAP JOINT

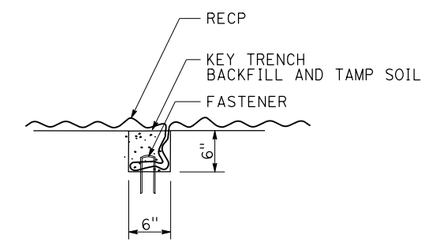

SECTION

DETAIL B
CHECK SLOT

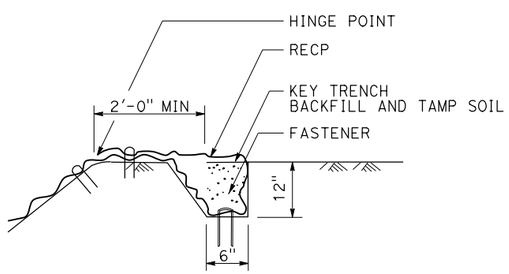

SECTION

DETAIL C
KEY TRENCH AT TOP OF SLOPE

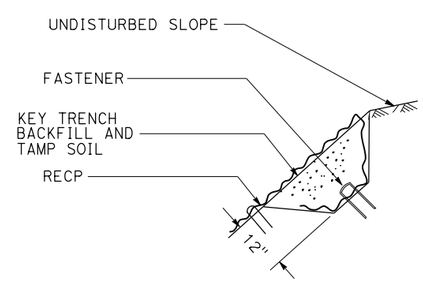

SECTION

DETAIL D
KEY TRENCH AT UPPER CONFORM

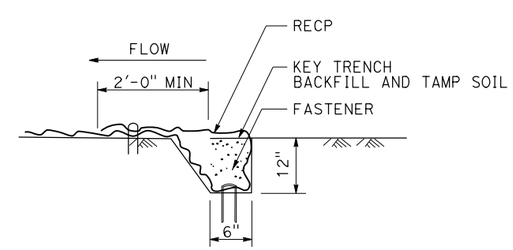

SECTION

DETAIL E
KEY TRENCH AT BEGIN/END SWALE

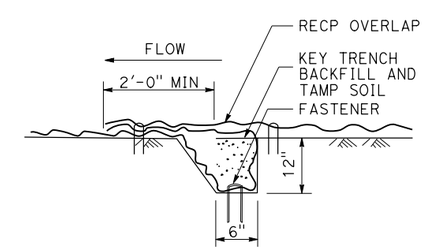

SECTION

DETAIL F
KEY TRENCH WITH LAP JOINT

BIOSWALE

EROSION CONTROL DETAILS

NO SCALE

ECD-1

REVISED BY	DATE REVISED
LOGAN MOORE	LAURA LAZZAROTTO
CALCULATED-DESIGNED BY	CHECKED BY
LANDSCAPE ARCHITECT SUPERVISOR	STEVE THORNE

STATE OF CALIFORNIA - DEPARTMENT OF TRANSPORTATION
Caltrans® LANDSCAPE ARCHITECTURE

P:\proj2\01\0A990_plans\pse\0112000001f001.dgn

LAST REVISION 09-01-15
DATE PLOTTED => 01-DEC-2015
TIME PLOTTED => 12:46

Dist	COUNTY	ROUTE	POST MILES TOTAL PROJECT	SHEET No.	TOTAL SHEETS
01	HUM	96	R6.2/6.6	35	55

Laura Lazzarotto
LICENSED LANDSCAPE ARCHITECT

11/19/15
PLANS APPROVAL DATE

LICENSED LANDSCAPE ARCHITECT
Laura Lazzarotto
Signature
8-31-17
Renewal Date
11-19-15
Date
STATE OF CALIFORNIA

THE STATE OF CALIFORNIA OR ITS OFFICERS OR AGENTS SHALL NOT BE RESPONSIBLE FOR THE ACCURACY OR COMPLETENESS OF SCANNED COPIES OF THIS PLAN SHEET.

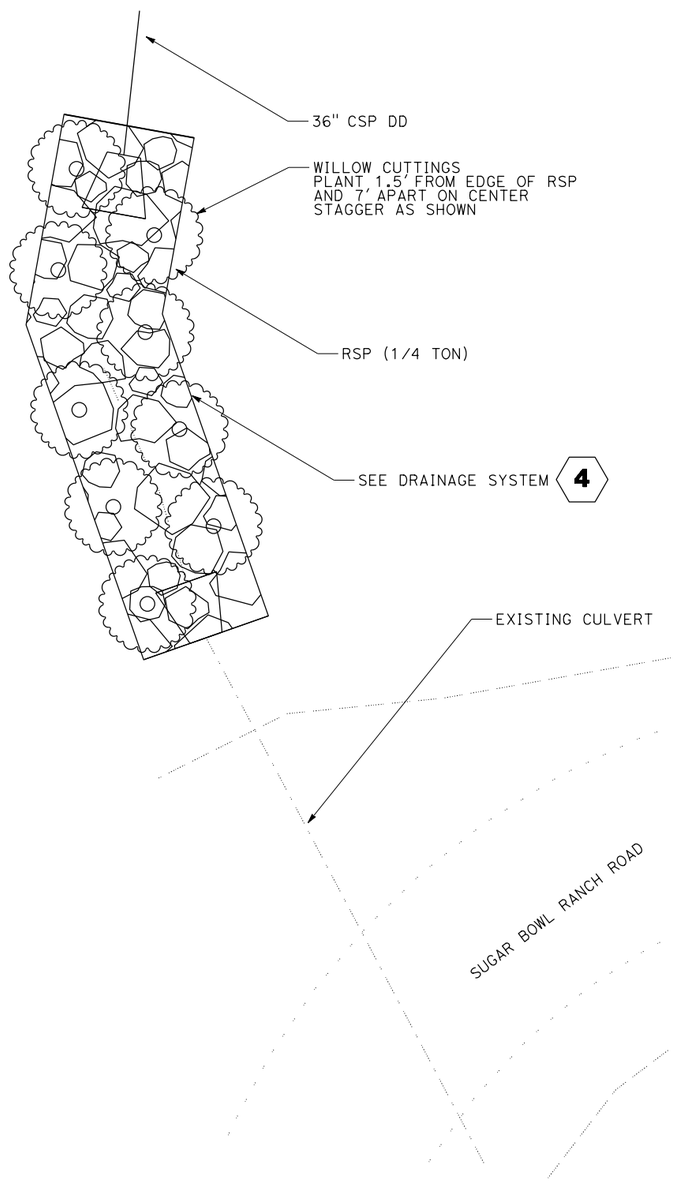

PLAN
ROCK SLOPE PROTECTION WILLOW PLANTING
SCALE: 1" = 5'

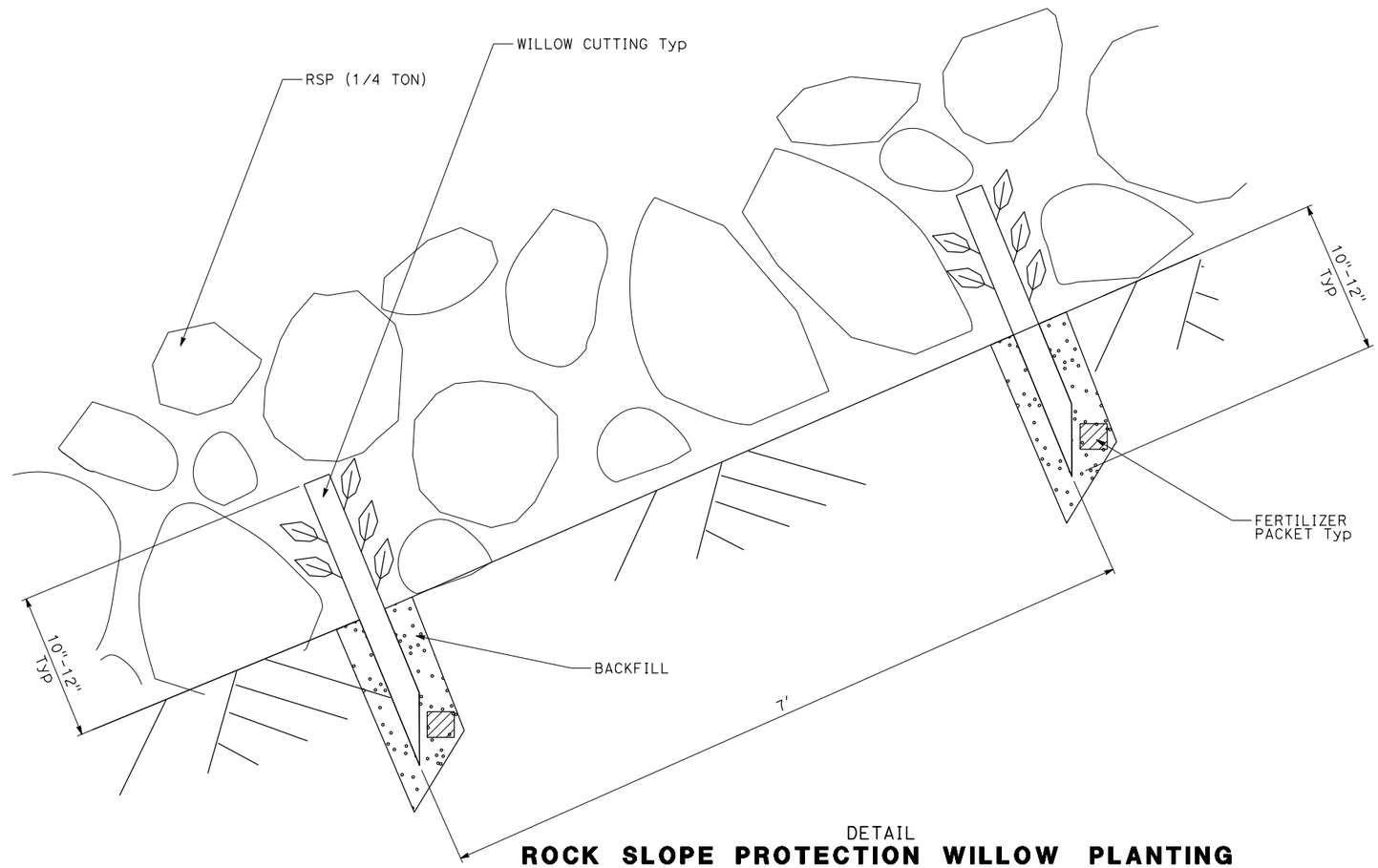

DETAIL
ROCK SLOPE PROTECTION WILLOW PLANTING
NO SCALE

EROSION CONTROL DETAILS

SCALE AS SHOWN

ECD-2

REVISED BY	DATE REVISED

LOGAN MOORE — LAURA LAZZAROTTO
CALCULATED-DESIGNED BY — CHECKED BY
LANDSCAPE ARCHITECT SUPERVISOR — STEVE THORNE

STATE OF CALIFORNIA - DEPARTMENT OF TRANSPORTATION
Caltrans® LANDSCAPE ARCHITECTURE

P:\proj2\01\0A990_plans\pse\0112000001f002.dgn

LAST REVISION 09-01-15
DATE PLOTTED => 01-DEC-2015
TIME PLOTTED => 12:46

Dist	COUNTY	ROUTE	POST MILES TOTAL PROJECT	SHEET No.	TOTAL SHEETS
01	HUM	96	R6.2/6.6	36	55

Laura Lazzarotto
LICENSED LANDSCAPE ARCHITECT

11/19/15
PLANS APPROVAL DATE

LICENSED LANDSCAPE ARCHITECT
Laura Lazzarotto
Laura Lazzarotto
Signature
8-31-17
Renewal Date
11-19-15
Date
STATE OF CALIFORNIA

THE STATE OF CALIFORNIA OR ITS OFFICERS OR AGENTS SHALL NOT BE RESPONSIBLE FOR THE ACCURACY OR COMPLETENESS OF SCANNED COPIES OF THIS PLAN SHEET.

EROSION CONTROL TYPE 1

SEQUENCE	ITEM	MATERIAL DESCRIPTION	MATERIAL TYPE	APPLICATION RATE
STEP 1	HYDROSEED	SEED	MIX 1	189 LB/ACRE
		FIBER	WOOD	1,100 LB/ACRE
		COMPOST	MEDIUM	270 CY/ACRE
STEP 2	STRAW	STRAW	WHEAT &/OR BARLEY	3 TON/ACRE
STEP 3	HYDROMULCH	FIBER	WOOD	1,100 LB/ACRE
		TACKIFIER	PSYLLIUM	140 LB/ACRE
		COMPOST	MEDIUM	270 CY/ACRE

EROSION CONTROL TYPE 2

SEQUENCE	ITEM	MATERIAL DESCRIPTION	MATERIAL TYPE	APPLICATION RATE	REMARKS
STEP 1	BONDED FIBER MATRIX	SEED	SEED MIX 1	189 LB/ACRE	
		FIBER		1,000 LB/ACRE	APPLICATION RATE IS FOR FIBER & TACKIFIER COMBINED
		TACKIFIER			
STEP 2	BONDED FIBER MATRIX	FIBER		3,500 LB/ACRE	
		TACKIFIER			

EROSION CONTROL TYPE 3

SEQUENCE	ITEM	MATERIAL DESCRIPTION	MATERIAL TYPE	APPLICATION RATE	REMARKS
STEP 1	IMPORTED BIOFILTRATION SOIL	COMPOST	MEDIUM	687 CY/ACRE	SEE SHEET ECD-1
		SAND	--	1,374 CY/ACRE	
		LOCAL TOPSOIL	--	344 CY/ACRE	
STEP 2	RECP NETTING	JUTE MESH	--	43,560 SQFT/ACRE	
STEP 3	HYDROSEED	SEED	MIX 2	163 LB/ACRE	
		FIBER	WOOD	1,100 LB/ACRE	
		COMPOST	MEDIUM	270 CY/ACRE	
STEP 4	STRAW	STRAW	WHEAT &/OR BARLEY	3 TON/ACRE	
STEP 5	HYDROMULCH	FIBER	WOOD	1,100 LB/ACRE	
		TACKIFIER	PSYLLIUM	140 LB/ACRE	
		COMPOST	MEDIUM	270 CY/ACRE	

EROSION CONTROL TYPE 4

SEQUENCE	ITEM	MATERIAL DESCRIPTION	MATERIAL TYPE	APPLICATION RATE
STEP 1	WOOD MULCH	WOOD MULCH	WOOD CHIPS	403 CY/ACRE

EROSION CONTROL TYPE 5

SEQUENCE	ITEM	MATERIAL DESCRIPTION	MATERIAL TYPE	APPLICATION RATE	REMARKS
STEP 1	INCORPORATE MATERIALS	COMPOST	MEDIUM	540 CY/ACRE	INCORPORATE TO 12 INCHES
STEP 2	HYDROSEED	SEED	MIX 2	163 LB/ACRE	
		FIBER	WOOD	1,100 LB/ACRE	
		COMPOST	MEDIUM	270 CY/ACRE	
STEP 3	STRAW	STRAW	WHEAT &/OR BARLEY	3 TON/ACRE	
STEP 4	HYDROMULCH	FIBER	WOOD	1,100 LB/ACRE	
		TACKIFIER	PSYLLIUM	140 LB/ACRE	
		COMPOST	MEDIUM	270 CY/ACRE	

FIBER ROLLS

SEQUENCE	ITEM	MATERIAL DESCRIPTION	MATERIAL TYPE	REMARKS
FIBER ROLLS MUST BE INSTALLED BEFORE EROSION CONTROL	FIBER ROLLS	FIBER ROLL	8" TO 10" Dia	TYPE 2 FIBER ROLL INSTALLATION

EROSION CONTROL QUANTITIES

ECQ-1

REVISED BY | DATE REVISED
LOGAN MOORE | LAURA LAZZAROTTO
CALCULATED-DESIGNED BY | CHECKED BY
LANDSCAPE ARCHITECT SUPERVISOR | STEVE THORNE

STATE OF CALIFORNIA - DEPARTMENT OF TRANSPORTATION
Caltrans® LANDSCAPE ARCHITECTURE

P:\proj2\01\0A990_plans\pse\0112000001tg001.dgn

LAST REVISION 09-01-15 | DATE PLOTTED => 01-DEC-2015 | TIME PLOTTED => 12:46

Dist	COUNTY	ROUTE	POST MILES TOTAL PROJECT	SHEET No.	TOTAL SHEETS
01	HUM	96	R6.2/6.6	37	55

LICENSED LANDSCAPE ARCHITECT

11/19/15
PLANS APPROVAL DATE

THE STATE OF CALIFORNIA OR ITS OFFICERS OR AGENTS SHALL NOT BE RESPONSIBLE FOR THE ACCURACY OR COMPLETENESS OF SCANNED COPIES OF THIS PLAN SHEET.

LICENSED LANDSCAPE ARCHITECT — Laura Lazzarotto — Signature — 8-31-17 Renewal Date — 11-19-15 Date — STATE OF CALIFORNIA

EROSION CONTROL QUANTITIES

SHEET	STATION "A1 LINE"	DESCRIPTION	HYDROSEED SQFT	STRAW SQFT	HYDROMULCH SQFT	BONDED FIBER MATRIX (SQFT) SQFT	FIBER ROLLS LF	WOOD MULCH CY	INCORPORATE MATERIALS SQFT	COMPOST SQFT	PURE LIVE SEED (N) LBS
EC-1	341+45 TO 344+50 L+	EC TYPE 1	2,380	2,380	2,380	-	-	-	-	-	9.45
EC-1	341+45 TO 344+50 R+	EC TYPE 1	2,870	2,870	2,870	-	-	-	-	-	13.23
EC-1	341+45 TO 344+50 R+	EC TYPE 5	4,600	4,600	4,600	-	-	-	4,600	4,600	17.93
EC-1	341+45 TO 344+50 R+	FIBER ROLL	-	-	-	-	760	-	-	-	-
EC-2	344+50 TO 350+00 L+	EC TYPE 1	5,400	5,400	5,400	-	-	-	-	-	22.68
EC-2	350+00 TO 353+51 L+	EC TYPE 2	-	-	-	40,150	-	-	-	-	149.96
EC-2	353+51 TO 357+51 L+	EC TYPE 1	5,080	5,080	5,080	-	-	-	-	-	22.68
EC-2	348+82 TO 349+85 L+	FIBER ROLL	-	-	-	-	190	-	-	-	-
EC-2	344+50 TO 357+51 R+	EC TYPE 1	19,500	19,500	19,500	-	-	-	-	-	85.05
EC-2	347+23 TO 348+88 R+	EC TYPE 5	1,880	1,880	1,880	-	-	-	1,880	1,880	6.52
EC-2	349+85 TO 353+23 R+	EC TYPE 5	5,500	5,500	5,500	-	-	-	5,500	5,500	21.19
EC-2	347+23 TO 348+79 R+	FIBER ROLL	-	-	-	-	150	-	-	-	-
EC-2	349+90 TO 353+94 R+	FIBER ROLL	-	-	-	-	700	-	-	-	-
EC-2	346+00 TO 346+14 R+	EC TYPE 4	-	-	-	-	-	2.3	-	-	-
EC-2	354+04 TO 354+39 R+	EC TYPE 4	-	-	-	-	-	10.4	-	-	-
EC-3	357+51 TO 358+53 L+	EC TYPE 1	1,720	1,720	1,720	-	-	-	-	-	7.56
EC-3	357+51 TO 358+53 L+	FIBER ROLL	-	-	-	-	350	-	-	-	-
EC-3	357+51 TO 358+53 R+	EC TYPE 1	1,480	1,480	1,480	-	-	-	-	-	5.67
FROM BIOSWALE QUANTITIES TABLE THIS SHEET			2,460	2,460	2,460	-	-	-	-	-	9.20
		TOTAL	52,870	52,870	52,870	40,150	2,150	12.7	11,980	11,980	371.12

(N) NOT A SEPARATE PAY ITEM, FOR INFORMATION ONLY

WILLOW PLANTING QUANTITIES

SHEET	LOCATION STATION "A1" LINE	PACKET FERTILIZER EA	PLANT (GROUP H) EA
EC-5	354+41.55	9	9
	TOTAL	9	9

BIOSWALE QUANTITIES

SHEET	LOCATION STATION "A1" LINE	LENGTH (LF) (N)	AREA (SQFT) (N)	DESCRIPTION	IMPORTED BIOFILTRATION SOIL CY	COMPOST (N) CY	SAND (N) CY	LOCAL TOPSOIL (N) CY	HYDROSEED SQFT	HYDROMULCH SQFT	STRAW SQFT	RECP (JUTE MESH) SQFT	PURE LIVE SEED (N) LBS
EC-2	345+25.03 TO 348+72.01 R+	141.88	1,109	BIOFILTRATION SOIL	63	18	36	9	-	-	-	-	-
EC-2	350+6.32 TO 351+64.41 R+	156.18	1,225	BIOFILTRATION SOIL	69	20	39	10	-	-	-	-	-
EC-2	345+25.03 TO 348+72.01 R+	-	-	EC TYPE 3	-	-	-	-	1,200	1,200	1,200	1,200	4.49
EC-2	350+6.32 TO 351+64.41 R+	-	-	EC TYPE 3	-	-	-	-	1,260	1,260	1,260	1,260	4.71
				TOTAL	132	38	75	19	2,460*	2,460*	2,460*	2,460	9.20*

*ADDITIONAL QUANTITIES SHOWN ELSEWHERE. SEE EROSION CONTROL QUANTITIES TABLE THIS SHEET.
(N) NOT A SEPARATE PAY ITEM, FOR INFORMATION ONLY

SEED MIX 1

SEED	BOTANICAL NAME (COMMON NAME)	PERCENT GERMINATION (MINIMUM)	POUNDS PURE LIVE SEED PER ACRE (SLOPE MEASUREMENT)
MIX 1	ACHILLEA MILLEFOLIUM [1] (WHITE YARROW)	45	2
	BROMUS CARINATUS [1] (CALIFORNIA BROME)	85	20
	ELYMUS ELYMOIDES [1] (BOTTLE BRUSH SQUIRRELTAIL)	55	10
	ELYMUS GLAUCUS 'ANDERSON' [1] (BLUE WILDRYE, ANDERSON)	65	25
	FESTUCA CALIFORNICA [1] (CALIFORNIA FESCUE)	75	20
	FESTUCA IDAHOENSIS [1] (IDAHO FESCUE)	80	12
	HORDEUM VULGARE (COMMON BARLEY)	75	90
	ACMISPON AMERICANUS (LOTUS PURSHIANUS) (PURSHING'S LOTUS)	45	10

[1] SEED PRODUCED IN CALIFORNIA ONLY

SEED MIX 2

SEED	BOTANICAL NAME (COMMON NAME)	PERCENT GERMINATION (MINIMUM)	POUNDS PURE LIVE SEED PER ACRE (SLOPE MEASUREMENT)
MIX 2	ACHILLEA MILLEFOLIUM [1] (WHITE YARROW)	45	2
	FESTUCA RUBRA [1] (RED FESCUE)	70	9
	HORDEUM BRACHYANTHERUM [1] (MEADOW BARLEY)	80	15
	HORDEUM CALIFORNICUM (CALIFORNIA BARLEY)	80	40
	HORDEUM VULGARE (COMMON BARLEY)	75	90
	NASSELLA PULCHRA [1] (PURPLE NEEDLEGRASS)	70	7

[1] SEED PRODUCED IN CALIFORNIA ONLY

EROSION CONTROL QUANTITIES
ECQ-2

REVISED BY | DATE REVISED
LOGAN MOORE | LAURA LAZZAROTTO
CALCULATED-DESIGNED BY | CHECKED BY
LANDSCAPE ARCHITECT SUPERVISOR | STEVE THORNE

STATE OF CALIFORNIA - DEPARTMENT OF TRANSPORTATION
Caltrans® LANDSCAPE ARCHITECTURE

P:\proj2\01\0A990_plans\pse\0112000001tg002.dgn

LAST REVISION 09-01-15 | DATE PLOTTED => 01-DEC-2015 | TIME PLOTTED => 12:46

M

Maint	MAINTENANCE
Max	MAXIMUM
MB	METAL BEAM
MBB	METAL BEAM BARRIER
MBGR	METAL BEAM GUARD RAILING
Med	MEDIAN
MGS	MIDWEST GUARDRAIL SYSTEM
MH	MANHOLE
Min	MINIMUM
Misc	MISCELLANEOUS
Misc I & S	MISCELLANEOUS IRON AND STEEL
Mkr	MARKER
Mod	MODIFIED,
	MODIFY
Mon	MONUMENT
MP	METAL PLATE
MPGR	METAL PLATE GUARD RAILING
MR	MOVEMENT RATING
MSE	MECHANICALLY STABILIZED EMBANKMENT
Mt	MOUNTAIN, MOUNT
Mtl	MATERIAL
MVP	MAINTENANCE VEHICLE PULLOUT

N

N	NORTH
NB	NORTHBOUND
No.	NUMBER (MUST HAVE PERIOD)
Nos.	NUMBERS (MUST HAVE PERIOD)
NPS	NOMINAL PIPE SIZE
NS	NEAR SIDE
NSP	NEW STANDARD PLAN
NTS	NOT TO SCALE

O

Oblr	OBLITERATE
OC	OVERCROSSING
OD	OUTSIDE DIAMETER
OF	OUTSIDE FACE
OG	ORIGINAL GROUND
OGAC	OPEN GRADED ASPHALT CONCRETE
OGFC	OPEN GRADED FRICTION COURSE
OH	OVERHEAD
OHWM	ORDINARY HIGH WATER MARK
O-O	OUT TO OUT
Opp	OPPOSITE
OSD	OVERSIDE DRAIN

P

P	PAGE
PAP	PERFORATED ALUMINUM PIPE
PB	PULL BOX
PC	POINT OF CURVATURE,
	PRECAST
PCC	POINT OF COMPOUND CURVE,
	PORTLAND CEMENT CONCRETE
PCMS	PORTABLE CHANGEABLE MESSAGE SIGN
PCP	PERFORATED CONCRETE PIPE,
	PRESTRESSED CONCRETE PIPE
PCVC	POINT OF COMPOUND VERTICAL CURVE
PEC	PERMIT TO ENTER AND CONSTRUCT
Ped	PEDESTRIAN
Ped OC	PEDESTRIAN OVERCROSSING
Ped UC	PEDESTRIAN UNDERCROSSING
Perm Mtl	PERMEABLE MATERIAL

P continued

PG	PROFILE GRADE
PI	POINT OF INTERSECTION
PJP	PARTIAL JOINT PENETRATION
Pkwy	PARKWAY
ℙ,PL	PLATE
P/L	PROPERTY LINE
PM	POST MILE,
	TIME FROM NOON TO MIDNIGHT
PN	PAVING NOTCH
POC	POINT OF HORIZONTAL CURVE
POT	POINT OF TANGENT
POVC	POINT OF VERTICAL CURVE
PP	PIPE PILE,
	PLASTIC PIPE,
	POWER POLE
PPL	PREFORMED PERMEABLE LINER
PPP	PERFORATED PLASTIC PIPE
PRC	POINT OF REVERSE CURVE
PRF	PAVEMENT REINFORCING FABRIC
PRVC	POINT OF REVERSE VERTICAL CURVE
PS&E	PLANS, SPECIFICATIONS AND ESTIMATES
PS, P/S	PRESTRESSED
PSP	PERFORATED STEEL PIPE
PT	POINT OF TANGENCY
PVC	POLYVINYL CHLORIDE
Pvmt	PAVEMENT

Q

Qty	QUANTITY

R

R	RADIUS
R & D	REMOVE AND DISPOSE
R & S	REMOVE AND SALVAGE
R/C	RATE OF CHANGE
RCA	REINFORCED CONCRETE ARCH
RCB	REINFORCED CONCRETE BOX
RCP	REINFORCED CONCRETE PIPE
RCPA	REINFORCED CONCRETE PIPE ARCH
Rd	ROAD
Reinf	REINFORCED,
	REINFORCEMENT,
	REINFORCING
Rel	RELOCATE
Repl	REPLACEMENT
Ret	RETAINING
Rev	REVISED, REVISION
Rdwy	ROADWAY
RHMA	RUBBERIZED HOT MIX ASPHALT
Riv	RIVER
RM	ROAD-MIXED
RP	RADIUS POINT,
	REFERENCE POINT
RR	RAILROAD
RSP	ROCK SLOPE PROTECTION,
	REVISED STANDARD PLAN
Rt	RIGHT
Rte	ROUTE
RW	REDWOOD,
	RETAINING WALL
R/W	RIGHT OF WAY
Rwy	RAILWAY

S

S	SOUTH,
	SUPPLEMENT
SAE	STRUCTURE APPROACH EMBANKMENT
Salv	SALVAGE
SAPP	STRUCTURAL ALUMINUM PLATE PIPE
SB	SOUTHBOUND
SC	SAND CUSHION
SCSP	SLOTTED CORRUGATED STEEL PIPE
SD	STORM DRAIN
Sec	SECOND,
	SECTION
Sep	SEPARATION
SG	SUBGRADE
Shld	SHOULDER
Sht	SHEET
Sim	SIMILAR
℄	STATION LINE
SM	SELECTED MATERIAL
Spec	SPECIAL,
	SPECIFICATIONS
SPP	SLOTTED PLASTIC PIPE
SS	SLOPE STAKE
SSBM	STRAP AND SADDLE BRACKET METHOD
SSD	STRUCTURAL SECTION DRAIN
SSPA	STRUCTURAL STEEL PLATE ARCH
SSPP	STRUCTURAL STEEL PLATE PIPE
SSPPA	STRUCTURAL STEEL PLATE PIPE ARCH
SSRP	STEEL SPIRAL RIB PIPE
St	STREET
Sta	STATION
STBB	SINGLE THRIE BEAM BARRIER
Std	STANDARD
Str	STRUCTURE
Surf	SURFACING
SW	SIDEWALK,
	SOUND WALL
Swr	SEWER
Sym	SYMMETRICAL
S4S	SURFACE 4 SIDES

T

T	SEMI-TANGENT
Tan	TANGENT
TBB	THRIE BEAM BARRIER
Tbr	TIMBER
TC	TOP OF CURB
TCB	TRAFFIC CONTROL BOX
TCE	TEMPORARY CONSTRUCTION EASEMENT
Tel	TELEPHONE
Temp	TEMPORARY
TG	TOP OF GRADE
Tot	TOTAL
TP	TELEPHONE POLE
TPB	TREATED PERMEABLE BASE
TPM	TREATED PERMEABLE MATERIAL
Trans	TRANSITION

T continued

TS	TRANSVERSE,
	TRAFFIC SIGNAL,
	TUBULAR STEEL
Typ	TYPICAL

U

UC	UNDERCROSSING
UD	UNDERDRAIN
UG	UNDERGROUND
UON	UNLESS OTHERWISE NOTED
UP	UNDERPASS

V

V	VALVE,
	DESIGN SPEED
Var	VARIABLE,
	VARIES
VC	VERTICAL CURVE
VCP	VITRIFIED CLAY PIPE
Vert	VERTICAL
Via	VIADUCT
Vol	VOLUME

W

W	WEST,
	WIDTH
WB	WESTBOUND
WH	WEEP HOLE
WM	WIRE MESH
WS	WATER SURFACE
WSP	WELDED STEEL PIPE
Wt	WEIGHT
WV	WATER VALVE
WW	WINGWALL
WWLOL	WINGWALL LAYOUT LINE

X

X Sec	CROSS SECTION
Xing	CROSSING

Y

Yr	YEAR
Yrs	YEARS

Dist	COUNTY	ROUTE	POST MILES TOTAL PROJECT	SHEET No.	TOTAL SHEETS
01	Hum	96	R6.2/6.6	38	55

Grace M. Tsushima
REGISTERED CIVIL ENGINEER

July 19, 2013
PLANS APPROVAL DATE

REGISTERED PROFESSIONAL ENGINEER Grace M. Tsushima No. C49814 Exp. 9-30-14 CIVIL STATE OF CALIFORNIA

THE STATE OF CALIFORNIA OR ITS OFFICERS OR AGENTS SHALL NOT BE RESPONSIBLE FOR THE ACCURACY OR COMPLETENESS OF SCANNED COPIES OF THIS PLAN SHEET.

TC ACCOMPANY PLANS DATED 11-19-15

UNIT OF MEASUREMENT SYMBOLS:

Some of the symbols used in the project plan quantity tables and in the Bid Item List are:

TABLE A

SYMBOL USED	DEFINITIONS
ACRE	ACRE
CF	CUBIC FOOT
CY	CUBIC YARD
EA	EACH
GAL	GALLON
LB	POUND
LF	LINEAR FOOT
SQFT	SQUARE FOOT
SQYD	SQUARE YARD
STA	100 FEET
TAB	TABLET
TON	2,000 POUNDS

Some of the symbols used in the plans other than in the project plan quantity tables are:

TABLE B

SYMBOL USED	DEFINITIONS
ksi	KIPS PER SQUARE INCH
ksf	KIPS PER SQUARE FOOT
psi	POUNDS PER SQUARE INCH
psf	POUNDS PER SQUARE FOOT
lb/ft^3, pcf	POUNDS PER CUBIC FOOT
tsf	TONS PER SQUARE FOOT
mph, MPH *	MILES PER HOUR
ø	NOMINAL DIAMETER
oz	OUNCE
lb	POUND
kip	1,000 POUNDS
cal	CALORIE
ft	FOOT OR FEET
gal	GALLON

* For use on a sign panel only

STATE OF CALIFORNIA
DEPARTMENT OF TRANSPORTATION

ABBREVIATIONS (SHEET 2 OF 2)

NO SCALE

RSP A10B DATED JULY 19, 2013 SUPERSEDES STANDARD PLAN A10B DATED MAY 20, 2011 - PAGE 2 OF THE STANDARD PLANS BOOK DATED 2010.

REVISED STANDARD PLAN RSP A10B

2010 REVISED STANDARD PLAN RSP A10B

DATE PLOTTED => 01-DEC-2015
TIME PLOTTED => 12:46

Dist	COUNTY	ROUTE	POST MILES TOTAL PROJECT	SHEET No.	TOTAL SHEETS
01	Hum	96	R6.2/6.6	39	55

REGISTERED CIVIL ENGINEER

October 30, 2015
PLANS APPROVAL DATE

REGISTERED PROFESSIONAL ENGINEER Carl M. Duan No. C59976 Exp. 6-30-16 CIVIL STATE OF CALIFORNIA

THE STATE OF CALIFORNIA OR ITS OFFICERS OR AGENTS SHALL NOT BE RESPONSIBLE FOR THE ACCURACY OR COMPLETENESS OF SCANNED COPIES OF THIS PLAN SHEET.

TO ACCOMPANY PLANS DATED 11-19-15

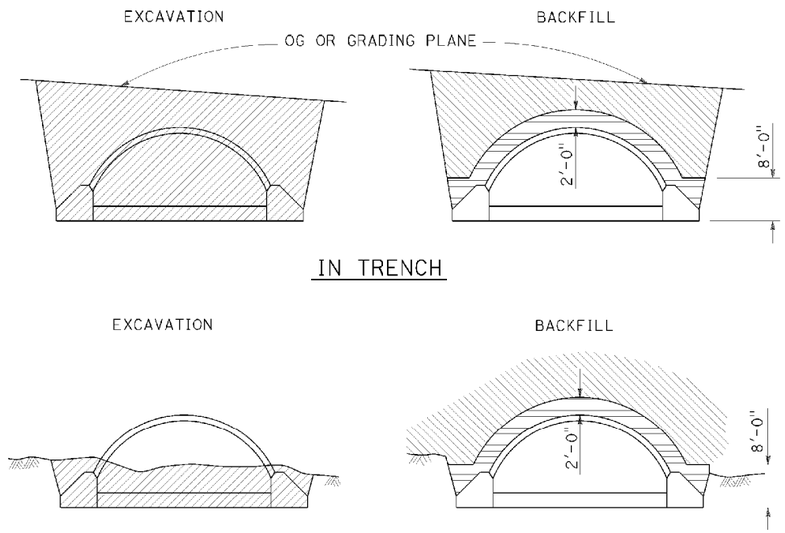

STRUCTURAL STEEL PLATE ARCHES

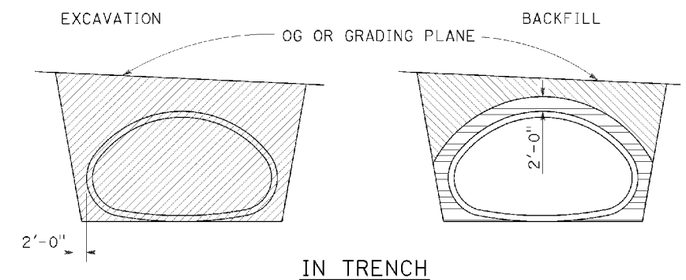

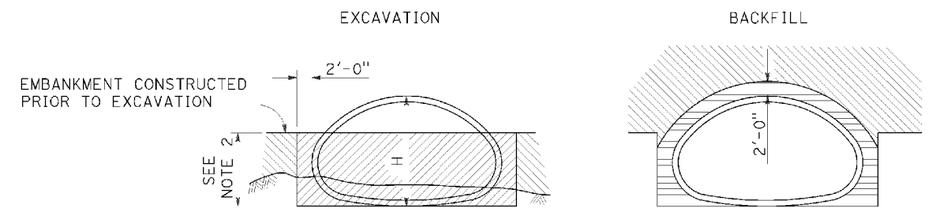

STRUCTURAL STEEL PLATE PIPE ARCHES AND VEHICULAR UNDERCROSSING

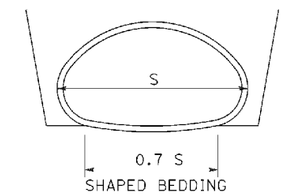

SHAPED BEDDING

S = Larger than 84"

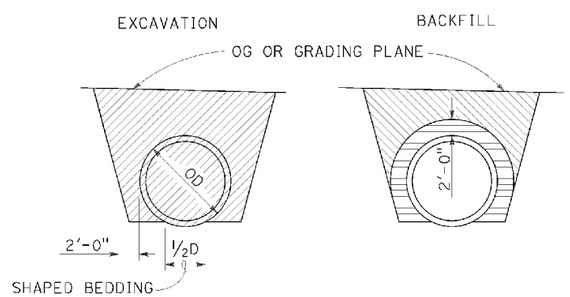

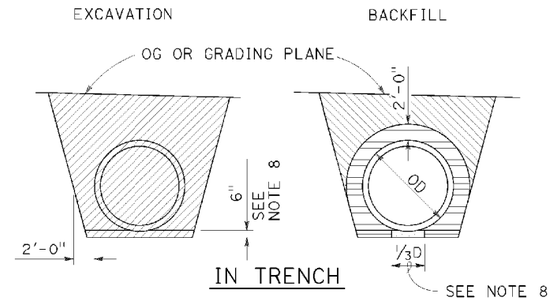

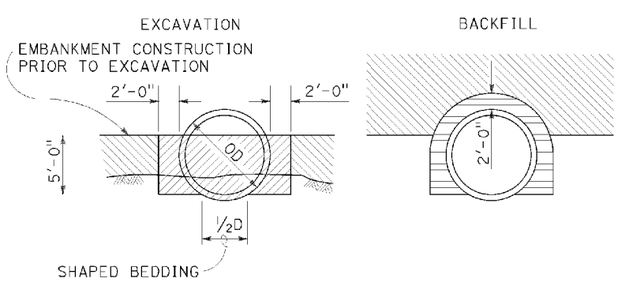

PIPES

Larger than 84"

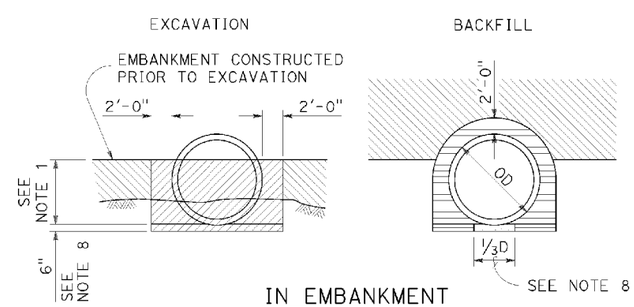

METAL AND PLASTIC PIPES AND CORRUGATED METAL PIPE ARCHES

84" or Smaller

NOTES:

1. PIPES: 30" minimum for diameters up to and including 42" then ⅔ diameter but no more than 60" required. CORRUGATED METAL PIPE ARCHES: 30" maximum.
2. ⅔ H up to 60" maximum.
3. Slope or shore excavation sides as necessary.
4. Backfill shall be placed full width of excavation except as noted.
5. Diagrams do not apply to overside drains.
6. Dimensions shown are minimum.
7. Construction strutting of structural steel plate pipe, arches and vehicular undercrossing to be used when shown on the project plans. When shown, see Standard Plan D88A for strutting requirements.
8. Excavation below pipe and 80% relative compaction requirements for plastic pipes only.
9. D is the inside diameter (ID) of the pipe.

LEGEND

- STRUCTURE EXCAVATION (CULVERT)
- ROADWAY EMBANKMENT
- STRUCTURE BACKFILL (CULVERT) 95% RELATIVE COMPACTION
- STRUCTURE BACKFILL (CULVERT) 80% RELATIVE COMPACTION

STATE OF CALIFORNIA
DEPARTMENT OF TRANSPORTATION

EXCAVATION AND BACKFILL METAL AND PLASTIC CULVERTS

NO SCALE

RSP A62F DATED OCTOBER 30, 2015 SUPERSEDES STANDARD PLAN A62F DATED MAY 20, 2011 - PAGE 26 OF THE STANDARD PLANS BOOK DATED 2010.

REVISED STANDARD PLAN RSP A62F

2010 REVISED STANDARD PLAN RSP A62F

DATE PLOTTED => 01-DEC-2015
TIME PLOTTED => 12:46

Dist	COUNTY	ROUTE	POST MILES TOTAL PROJECT	SHEET No.	TOTAL SHEETS
01	Hum	96	R6.2/6.6	40	55

Randell D. Hiatt
REGISTERED CIVIL ENGINEER

July 19, 2013
PLANS APPROVAL DATE

REGISTERED PROFESSIONAL ENGINEER Randell D. Hiatt No. C50200 Exp. 6-30-15 CIVIL STATE OF CALIFORNIA

THE STATE OF CALIFORNIA OR ITS OFFICERS OR AGENTS SHALL NOT BE RESPONSIBLE FOR THE ACCURACY OR COMPLETENESS OF SCANNED COPIES OF THIS PLAN SHEET.

TO ACCOMPANY PLANS DATED 11-19-15

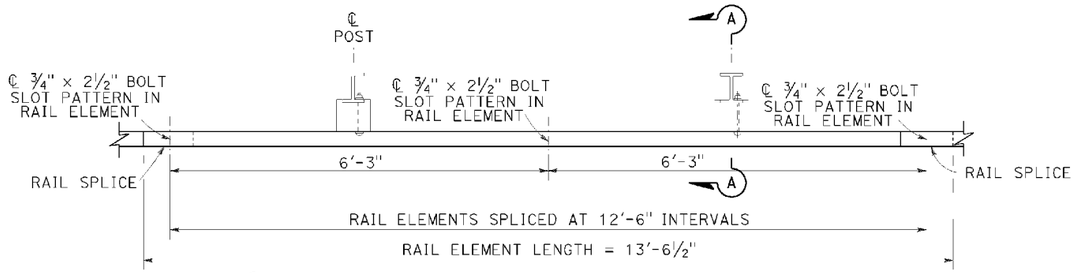

PLAN

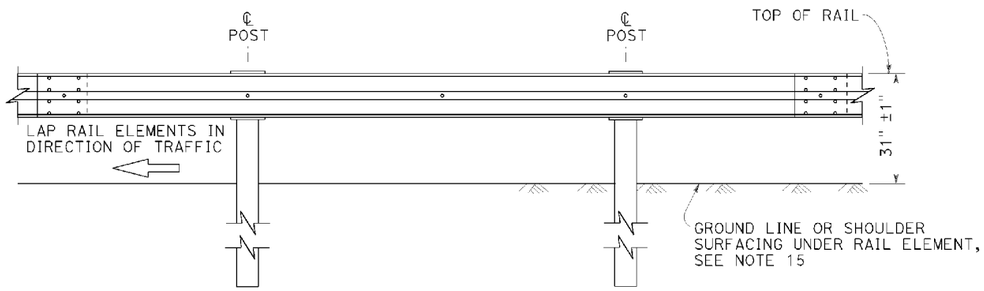

ELEVATION

MIDWEST GUARDRAIL SYSTEM WITH STEEL POSTS AND NOTCHED WOOD OR NOTCHED RECYCLED PLASTIC BLOCKS

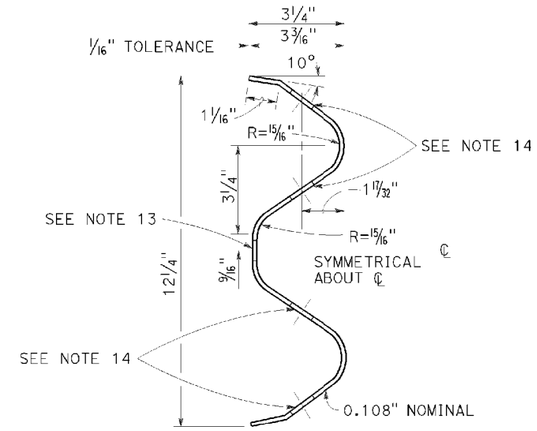

SECTION THRU RAIL ELEMENT

NOTES:

1. For details of wood post installations, see Revised Standard Plan RSP A77L1.
2. For details of standard hardware used to construct MGS, see Revised Standard Plan RSP A77M1.
3. For details of steel posts and notched wood blocks used to construct MGS, see Revised Standard Plan RSP A77N2.
4. For additional installation details, see Revised Standard Plan RSP A77N3.
5. MGS post spacing to be 6'-3" center to center, except as otherwise noted.
6. For MGS typical layouts, see the A77P, A77Q and A77R Series of Standard Plans.
7. If railing is connected to terminal system end treatment, use 31" height terminal system end treatment.
8. For MGS end anchor details, see Revised Standard Plans RSP A77S1 and RSP A77T2.
9. For details of MGS transition to bridge railing, see Revised Standard Plan RSP A77U4.
10. For additional details of MGS connection to bridge railings, see Revised Standard Plans RSP A77U1, RSP A77U2 and RSP A77V1.
11. For dike positioning and MGS delineation details, see Revised Standard Plan RSP A77N4.
12. Notched face of block faces steel post.
13. Slotted hole for bolted connection of rail element to block and post. See "Section Thru Rail Element".
14. Slotted holes for splice bolts to overlap ends of rail element. See "Section Thru Rail Element".
15. Install posts in soil.

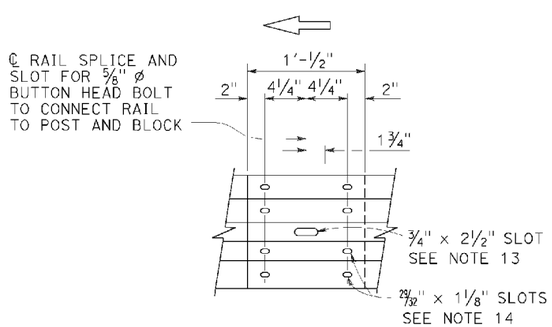

ELEVATION

RAIL ELEMENT SPLICE DETAIL

a) Connect the over lapped end of the rail elements with ⅝" ø × 1⅜" button head oval shoulder splice bolts inserted into the 29/32" × 1⅛" slots and bolted together with ⅝" ø recessed hex nuts. Recess of hex nut points toward rail element. A total of 8 bolts and nuts are to be used at each rail splice connection.

b) The ends of the rail elements are to be overlapped in the direction of traffic (see details).

c) Where end cap is to be attached to the end of a rail element, a total of 4 of the above described splice bolts and nuts are to be used.

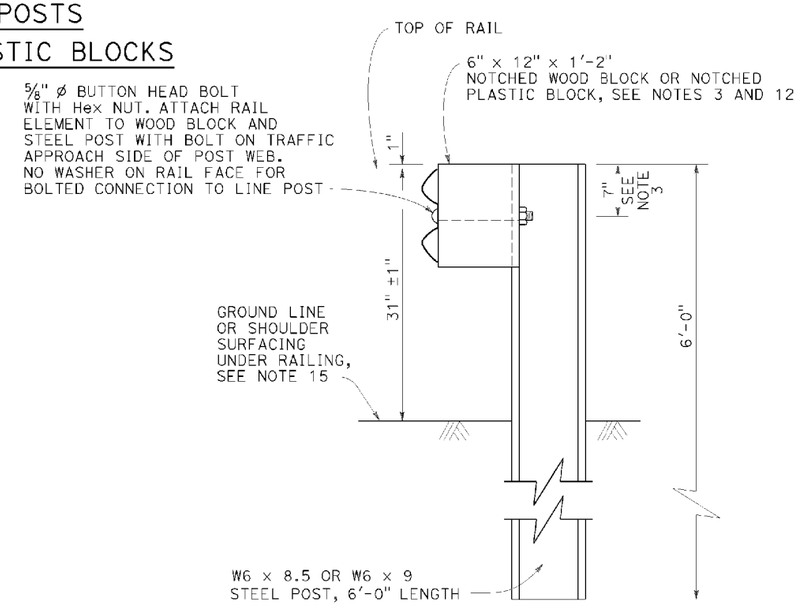

SECTION A-A

TYPICAL STEEL LINE POST INSTALLATION

See Note 4

STATE OF CALIFORNIA
DEPARTMENT OF TRANSPORTATION

MIDWEST GUARDRAIL SYSTEM STANDARD RAILING SECTION (STEEL POST WITH NOTCHED WOOD OR NOTCHED RECYCLED PLASTIC BLOCK)

NO SCALE

RSP A77L2 DATED JULY 19, 2013 SUPPLEMENTS THE STANDARD PLANS BOOK DATED 2010.

REVISED STANDARD PLAN RSP A77L2

2010 REVISED STANDARD PLAN RSP A77L2

DATE PLOTTED => 01-DEC-2015
TIME PLOTTED => 12:46

Dist	COUNTY	ROUTE	POST MILES TOTAL PROJECT	SHEET No.	TOTAL SHEETS
01	Hum	96	R6.2/6.6	41	55

Randell D. Hiatt
REGISTERED CIVIL ENGINEER

July 19, 2013
PLANS APPROVAL DATE

REGISTERED PROFESSIONAL ENGINEER
Randell D. Hiatt
No. C50200
Exp. 6-30-15
CIVIL
STATE OF CALIFORNIA

THE STATE OF CALIFORNIA OR ITS OFFICERS OR AGENTS SHALL NOT BE RESPONSIBLE FOR THE ACCURACY OR COMPLETENESS OF SCANNED COPIES OF THIS PLAN SHEET.

TO ACCOMPANY PLANS DATED 11-19-15

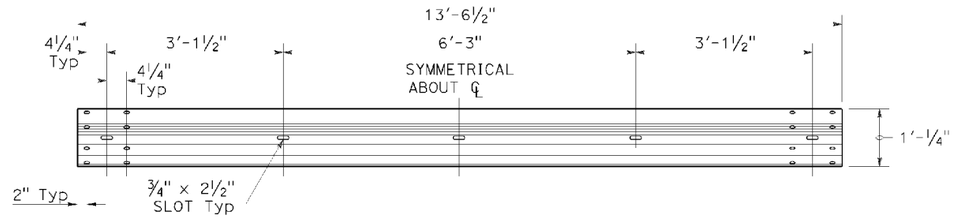

TYPICAL RAIL ELEMENT

NOTE:

1. Slotted holes for splice bolts to overlap ends of rail element.

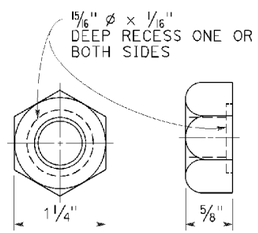

⅝" ø RECESS NUT

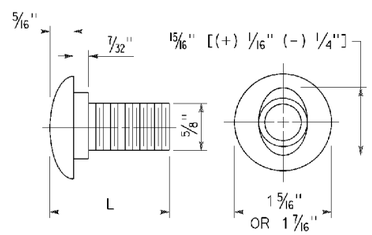

⅝" ø BUTTON HEAD BOLT

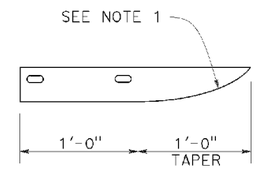

PLAN

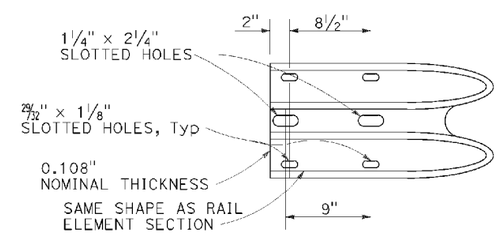

ELEVATION
END CAP
(TYPE A)

BUTTON HEAD BOLT

L	THREAD LENGTH
1⅜"	FULL THREAD LENGTH
2"	FULL THREAD LENGTH
10"	4" Min THREAD LENGTH
18"	4" Min THREAD LENGTH
20"	4" Min THREAD LENGTH
22"	4" Min THREAD LENGTH
26"	4" Min THREAD LENGTH
36"	4" Min THREAD LENGTH
** 2¾"	2" Min THREAD LENGTH
** 19"	4" Min THREAD LENGTH

** For nested rail applications.

STATE OF CALIFORNIA
DEPARTMENT OF TRANSPORTATION

MIDWEST GUARDRAIL SYSTEM STANDARD HARDWARE

NO SCALE

RSP A77M1 DATED JULY 19, 2013 SUPPLEMENTS THE STANDARD PLANS BOOK DATED 2010.

REVISED STANDARD PLAN RSP A77M1

2010 REVISED STANDARD PLAN RSP A77M1

DATE PLOTTED => 01-DEC-2015
TIME PLOTTED => 12:46

Dist	COUNTY	ROUTE	POST MILES TOTAL PROJECT	SHEET No.	TOTAL SHEETS
01	Hum	96	R6.2/6.6	42	55

Randell D. Hiatt
REGISTERED CIVIL ENGINEER

November 15, 2013
PLANS APPROVAL DATE

REGISTERED PROFESSIONAL ENGINEER
Randell D. Hiatt
No. C50200
Exp. 6-30-15
CIVIL
STATE OF CALIFORNIA

THE STATE OF CALIFORNIA OR ITS OFFICERS OR AGENTS SHALL NOT BE RESPONSIBLE FOR THE ACCURACY OR COMPLETENESS OF SCANNED COPIES OF THIS PLAN SHEET.

TC ACCOMPANY PLANS DATED 11-19-15

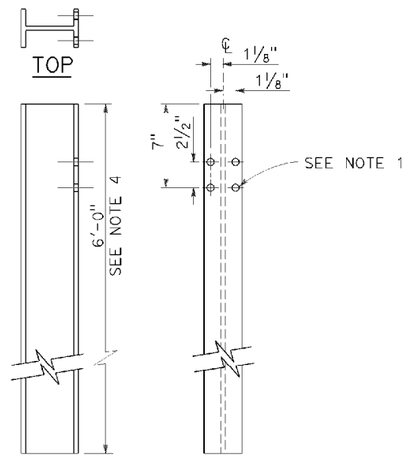

SIDE FRONT

W6 x 9 OR W6 x 8.5
STEEL POST
See Note 4

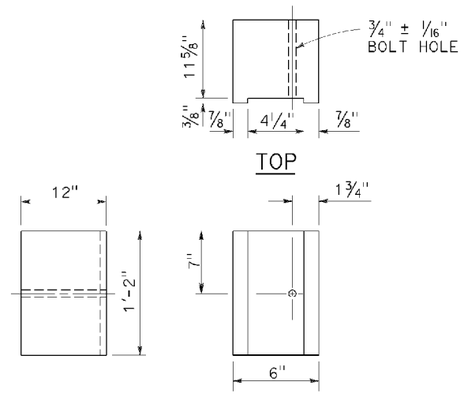

SIDE FRONT

6" x 12"
NOTCHED WOOD BLOCK
See Notes 2 and 3

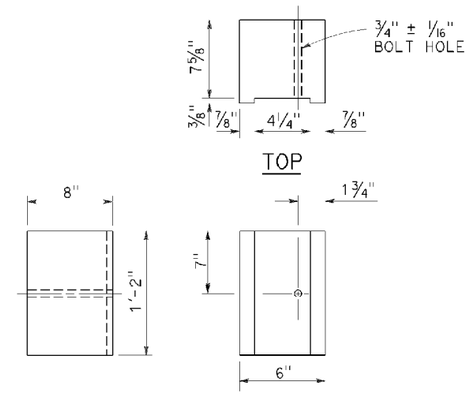

SIDE FRONT

6" x 8"
NOTCHED WOOD BLOCK
Only for use with metal beam guard railing. See Note 5

NOTES:

1. All holes in steel post shall be 13/16" Dia maximum.
2. Dimensions shown for wood block are nominal.
3. Notched face of block faces steel post.
4. 6'-0" length posts to be used for typical roadway installation. See Revised Standard Plan RSP A77N3.
5. See Revised Standard Plan RSP A77L3 for use of 6" x 8" and 8" x 8" notched wood blocks.
6. This post and 8" x 12" block combination to be used for line post sections of MGS on narrow roadways and where strengthened line post sections of MGS are warranted to shield fixed objects.

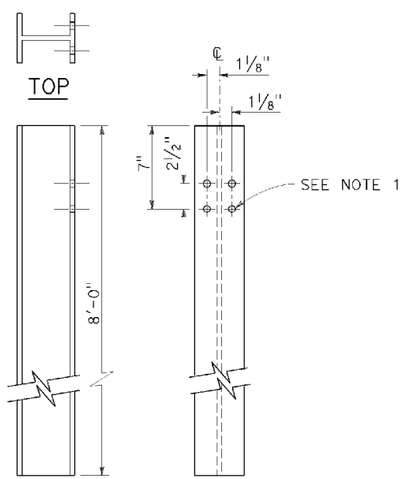

SIDE FRONT

W6 x 15
STEEL POST
See Note 6

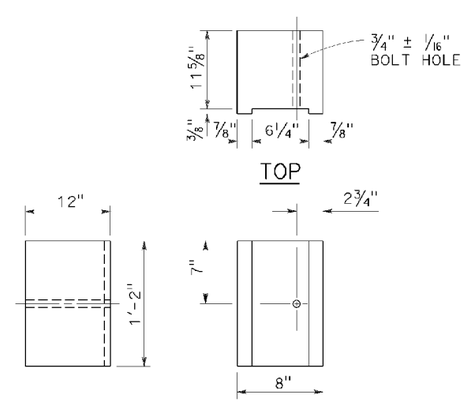

SIDE FRONT

8" x 12"
NOTCHED WOOD BLOCK
See Notes 2 and 3

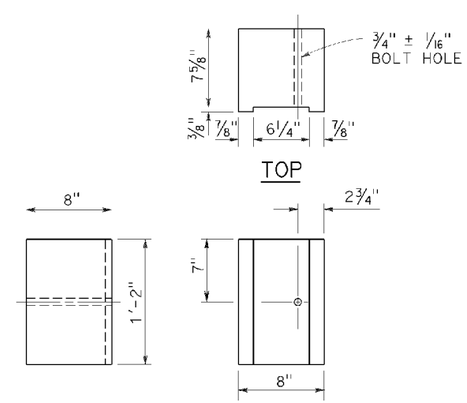

SIDE FRONT

8" x 8"
NOTCHED WOOD BLOCK
Only for use with metal beam guard railing. See Note 5

STATE OF CALIFORNIA
DEPARTMENT OF TRANSPORTATION

MIDWEST GUARDRAIL SYSTEM STEEL POST AND NOTCHED WOOD BLOCK DETAILS

NO SCALE

RSP A77N2 DATED NOVEMBER 15, 2013 SUPERSEDES RSP A77N2
DATED JULY 19, 2013 THAT SUPPLEMENTS THE STANDARD PLANS BOOK DATED 2010.

REVISED STANDARD PLAN RSP A77N2

2010 REVISED STANDARD PLAN RSP A77N2

DATE PLOTTED => 01-DEC-2015
TIME PLOTTED => 12:46

Dist	COUNTY	ROUTE	POST MILES TOTAL PROJECT	SHEET No.	TOTAL SHEETS
01	Hum	96	R6.2/6.6	43	55

Randell D. Hiatt
REGISTERED CIVIL ENGINEER

November 15, 2013
PLANS APPROVAL DATE

REGISTERED PROFESSIONAL ENGINEER
Randell D. Hiatt
No. C50200
Exp. 6-30-15
CIVIL
STATE OF CALIFORNIA

THE STATE OF CALIFORNIA OR ITS OFFICERS OR AGENTS SHALL NOT BE RESPONSIBLE FOR THE ACCURACY OR COMPLETENESS OF SCANNED COPIES OF THIS PLAN SHEET.

TO ACCOMPANY PLANS DATED 11-19-15

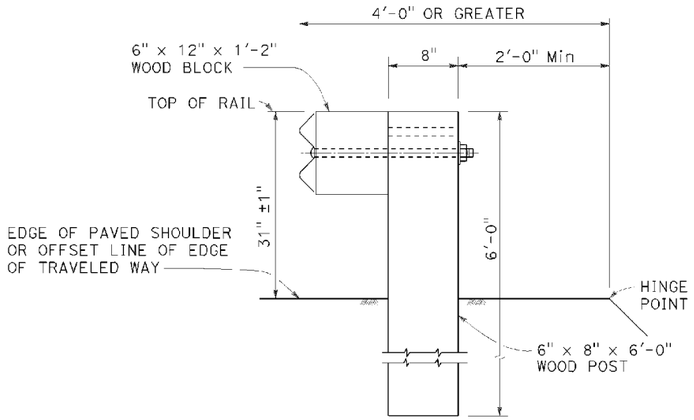

DETAIL A

TYPICAL ROADWAY INSTALLATION

See Note 1

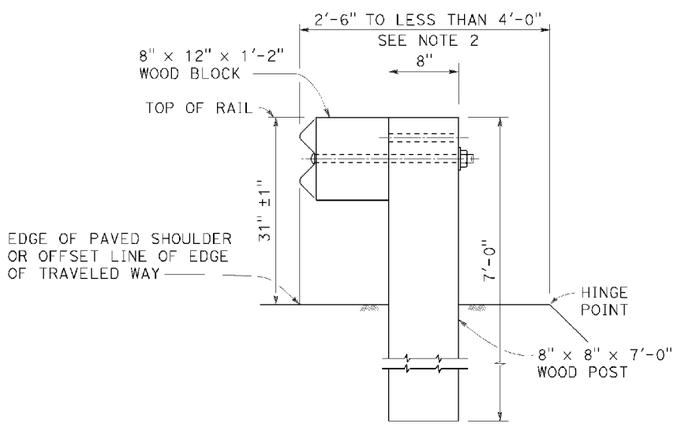

DETAIL B

NARROW ROADWAY INSTALLATION

See Note 1

POST EMBEDMENT

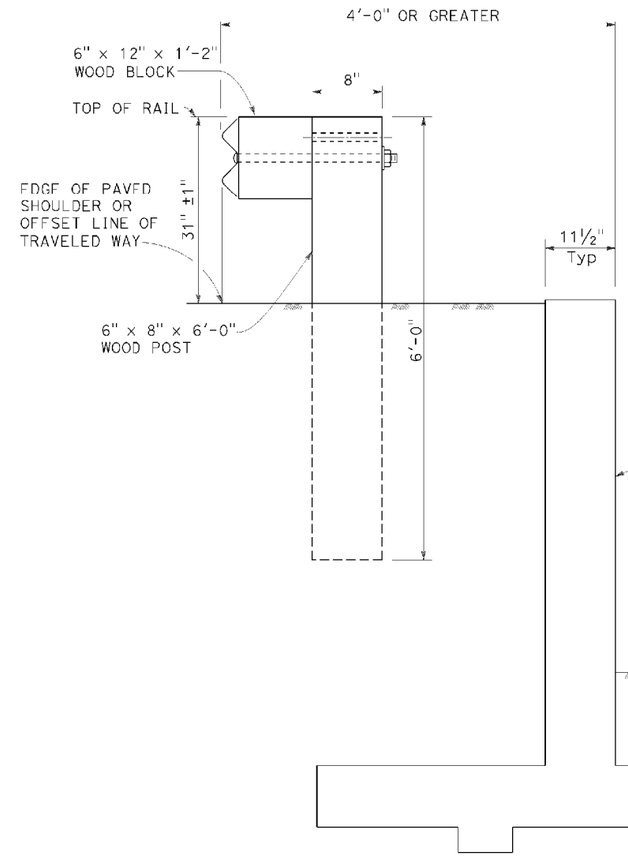

DETAIL C

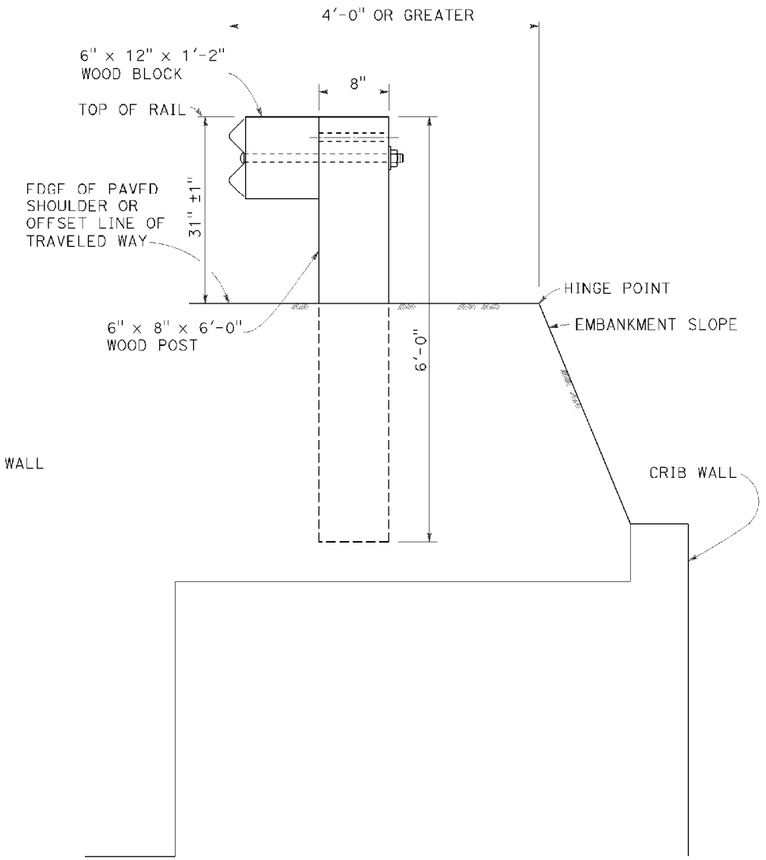

DETAIL D

INSTALLATION AT EARTH RETAINING WALLS

NOTES:

1. These installation details also applicable to steel line post installations. For Detail A, C, and D, where steel line post installations are constructed, W6 x 8.5 or W6 x 9 steel post, 6'-0" in length, with 6" x 12" x 1'-2" notched wood blocks or notched recycled plastic blocks are to be used in place of the size of wood post and wood block shown. For Detail B, where steel line post installations are constructed, W6 x 15 steel post, 8'-0" in length, with 8" x 12" x 1'-2" notched wood blocks or notched recycled plastic blocks are to be used in place of the size of wood post and wood block shown. For additional installation details, see Revised Standard Plan RSP A77L1 and RSP A77L2.
2. Where the distance between the face of the rail and the hinge point is less than 2'-6", see the Project Plans for special details.
3. For dike positioning with MGS installations, see Revised Standard Plan RSP A77N4.

STATE OF CALIFORNIA
DEPARTMENT OF TRANSPORTATION

MIDWEST GUARDRAIL SYSTEM TYPICAL LINE POST EMBEDMENT AND HINGE POINT OFFSET DETAILS

NO SCALE

RSP A77N3 DATED NOVEMBER 15, 2013 SUPERSEDES RSP A77N3 DATED JULY 19, 2013 THAT SUPPLEMENTS THE STANDARD PLANS BOOK DATED 2010.

REVISED STANDARD PLAN RSP A77N3

2010 REVISED STANDARD PLAN RSP A77N3

DATE PLOTTED => 01-DEC-2015
TIME PLOTTED => 12:47

Dist	COUNTY	ROUTE	POST MILES TOTAL PROJECT	SHEET No.	TOTAL SHEETS
01	Hum	96	R6.2/6.6	44	55

Randell D. Hiatt
REGISTERED CIVIL ENGINEER

July 19, 2013
PLANS APPROVAL DATE

REGISTERED PROFESSIONAL ENGINEER
Randell D. Hiatt
No. C50200
Exp. 6-30-15
CIVIL
STATE OF CALIFORNIA

THE STATE OF CALIFORNIA OR ITS OFFICERS OR AGENTS SHALL NOT BE RESPONSIBLE FOR THE ACCURACY OR COMPLETENESS OF SCANNED COPIES OF THIS PLAN SHEET.

TO ACCOMPANY PLANS DATED 11-19-15

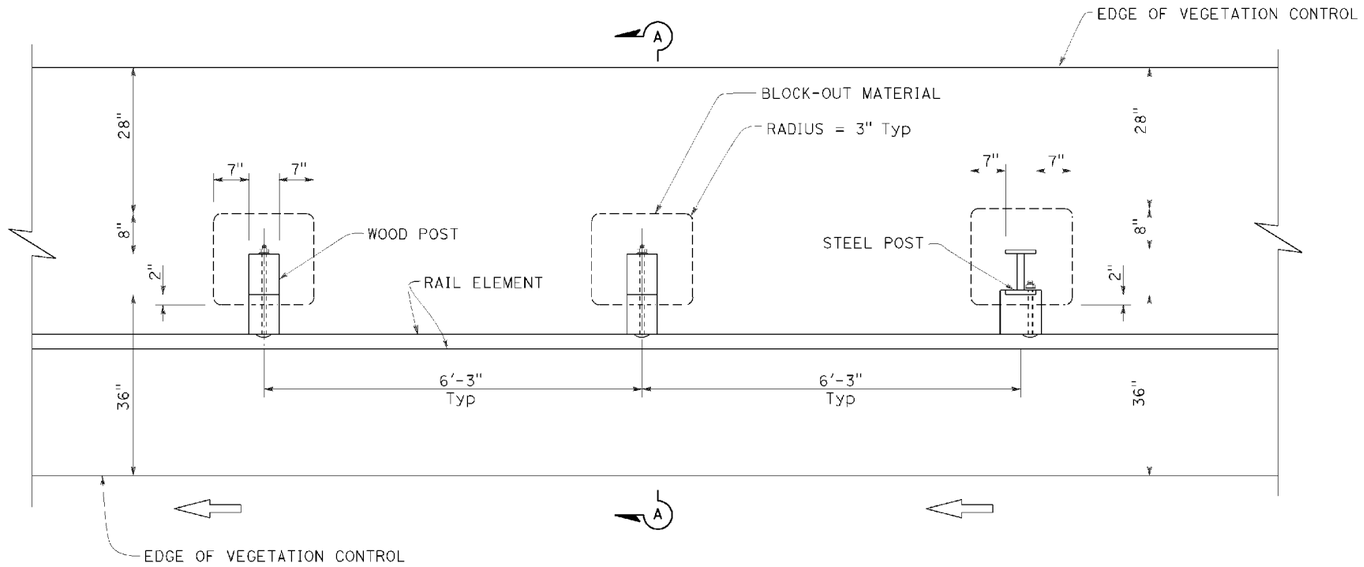

PLAN

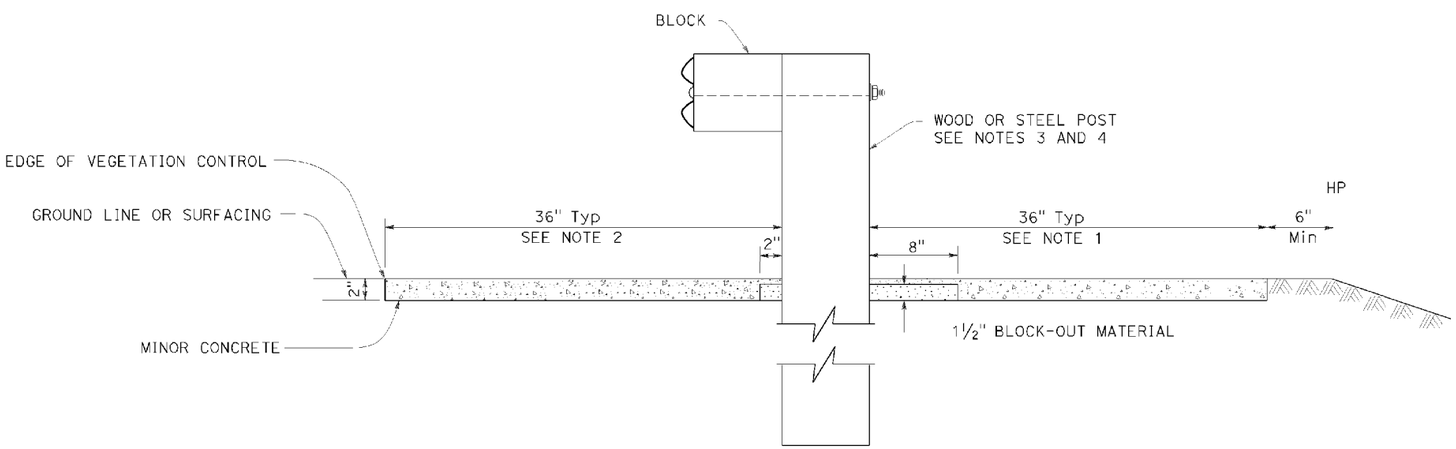

SECTION A-A

NOTES:

1. Where the distance between back of post and hinge point is less than 42", construct vegetation control to 6" from hinge point while maintaining the 8" block-out at back of post. If the 8" block-out at back of post can not be maintained, construct vegetation control flush with the back edge of post.
2. Where dike is constructed under railing, construct vegetation control to back edge of dike. Where paved shoulder is constructed within 36" in front of the post, construct vegetation control to the edge of paved shoulder.
3. For wood post sizes, see Revised Standard Plan RSP A77N1.
4. For steel post sizes, see Revised Standard Plan RSP A77N2.
5. For details not shown, see Revised Standard Plans RSP A77L1 and RSP A77L2.

STATE OF CALIFORNIA
DEPARTMENT OF TRANSPORTATION

MIDWEST GUARDRAIL SYSTEM TYPICAL VEGETATION CONTROL STANDARD RAILING SECTION

NO SCALE

RSP A77N5 DATED JULY 19, 2013 SUPPLEMENTS THE STANDARD PLANS BOOK DATED 2010.

REVISED STANDARD PLAN RSP A77N5

2010 REVISED STANDARD PLAN RSP A77N5

DATE PLOTTED => 01-DEC-2015
TIME PLOTTED => 12:47

Dist	COUNTY	ROUTE	POST MILES TOTAL PROJECT	SHEET No.	TOTAL SHEETS
01	Hum	96	R6.2/6.6	45	55

Randell D. Hiatt
REGISTERED CIVIL ENGINEER

July 19, 2013
PLANS APPROVAL DATE

REGISTERED PROFESSIONAL ENGINEER
Randell D. Hiatt
No. C50200
Exp. 6-30-15
CIVIL
STATE OF CALIFORNIA

THE STATE OF CALIFORNIA OR ITS OFFICERS OR AGENTS SHALL NOT BE RESPONSIBLE FOR THE ACCURACY OR COMPLETENESS OF SCANNED COPIES OF THIS PLAN SHEET.

TO ACCOMPANY PLANS DATED 11-19-15

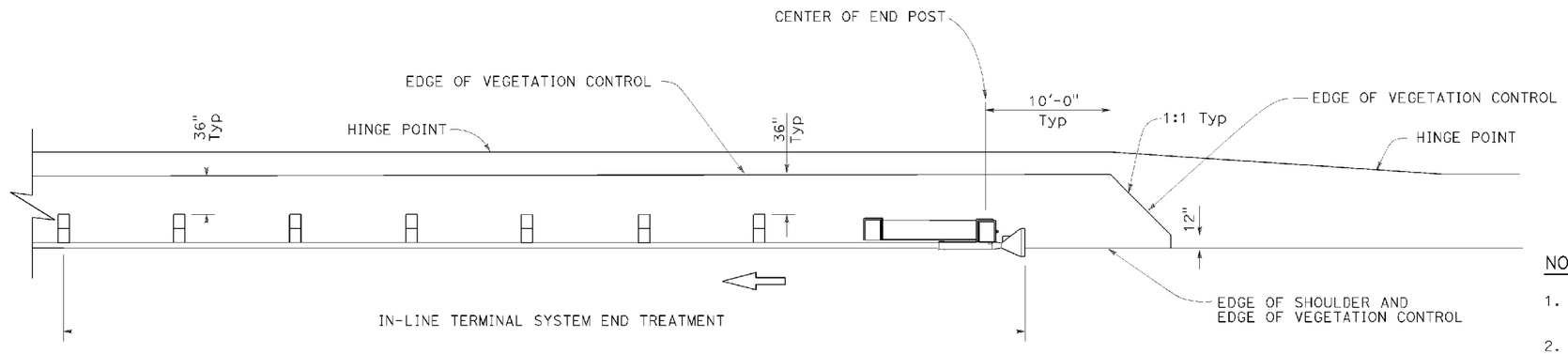

PLAN

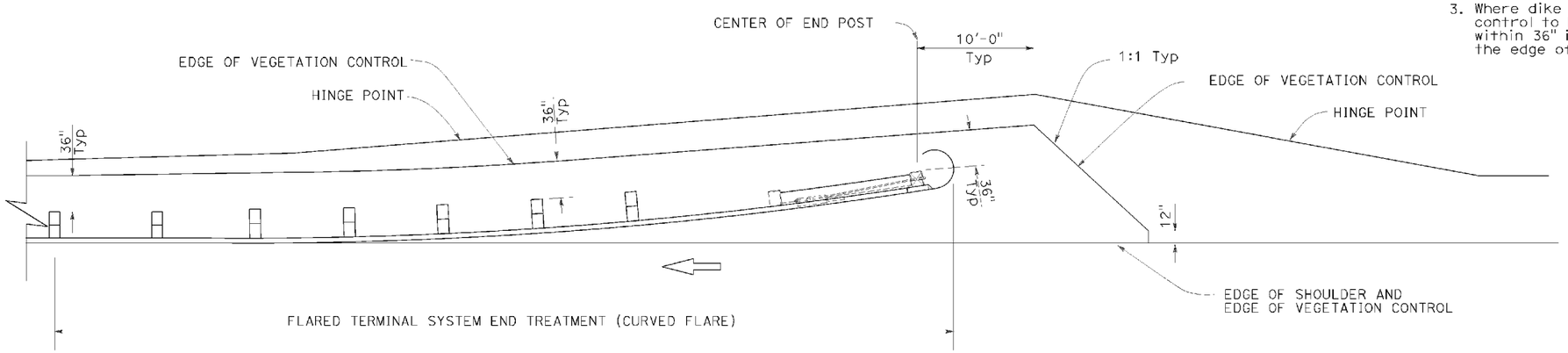

PLAN

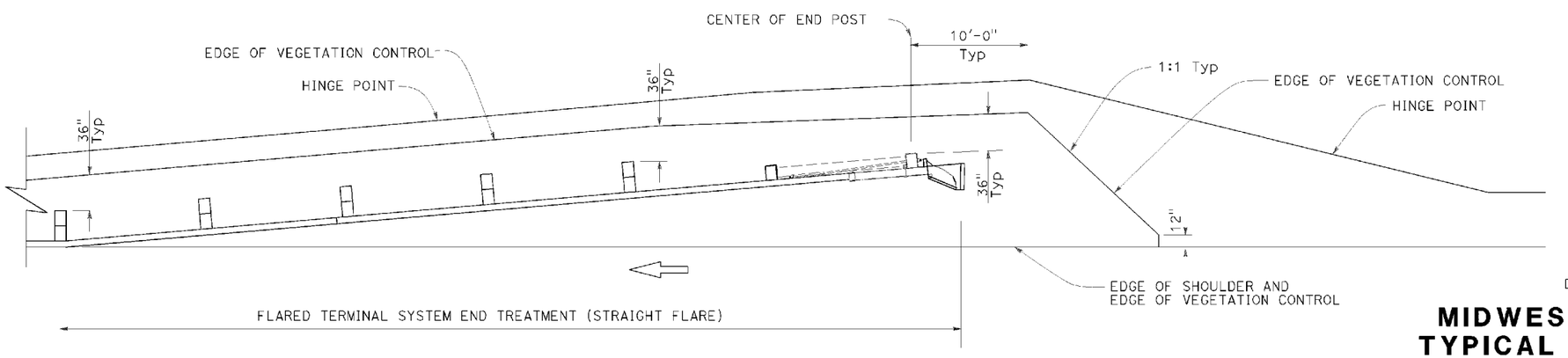

PLAN

NOTES:

1. See Revised Standard Plan RSP A77N5 for additional vegetation control details.
2. Where the distance between back of post and hinge point is less than 42", construct vegetation control to 6" from hinge point while maintaining the 8" block-out at back of post. If the 8" block-out at back of post can not be maintained, construct vegetation control flush with the back edge of post.
3. Where dike is constructed under railing, construct vegetation control to back edge of dike. Where paved shoulder is constructed within 36" in front of the post, construct vegetation control to the edge of paved shoulder.

STATE OF CALIFORNIA
DEPARTMENT OF TRANSPORTATION

MIDWEST GUARDRAIL SYSTEM TYPICAL VEGETATION CONTROL FOR TERMINAL SYSTEM END TREATMENTS

NO SCALE

RSP A77N6 DATED JULY 19, 2013 SUPPLEMENTS THE STANDARD PLANS BOOK DATED 2010.

REVISED STANDARD PLAN RSP A77N6

2010 REVISED STANDARD PLAN RSP A77N6

DATE PLOTTED => 01-DEC-2015
TIME PLOTTED => 12:47

Dist	COUNTY	ROUTE	POST MILES TOTAL PROJECT	SHEET No.	TOTAL SHEETS
01	Hum	96	R6.2/6.6	46	55

Randell D. Hiatt
REGISTERED CIVIL ENGINEER

July 19, 2013
PLANS APPROVAL DATE

REGISTERED PROFESSIONAL ENGINEER
Randell D. Hiatt
No. C50200
Exp. 6-30-15
CIVIL
STATE OF CALIFORNIA

THE STATE OF CALIFORNIA OR ITS OFFICERS OR AGENTS SHALL NOT BE RESPONSIBLE FOR THE ACCURACY OR COMPLETENESS OF SCANNED COPIES OF THIS PLAN SHEET.

TO ACCOMPANY PLANS DATED 11-19-15

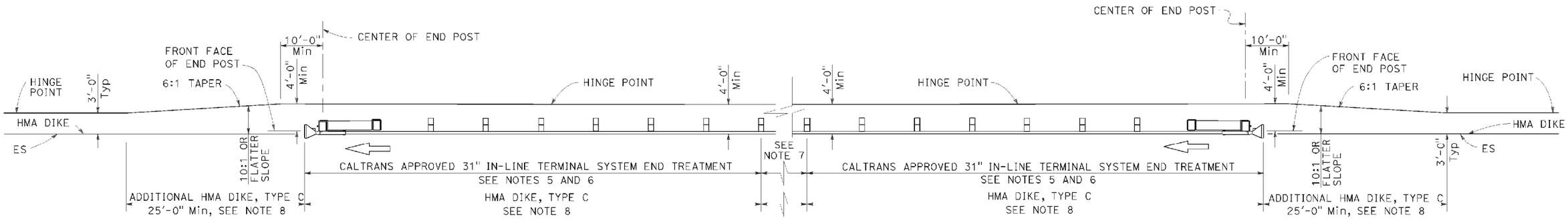

TYPE 11D LAYOUT

(Embankment MGS installation with
31" in-line end treatment at each end of railing)
See Note 4

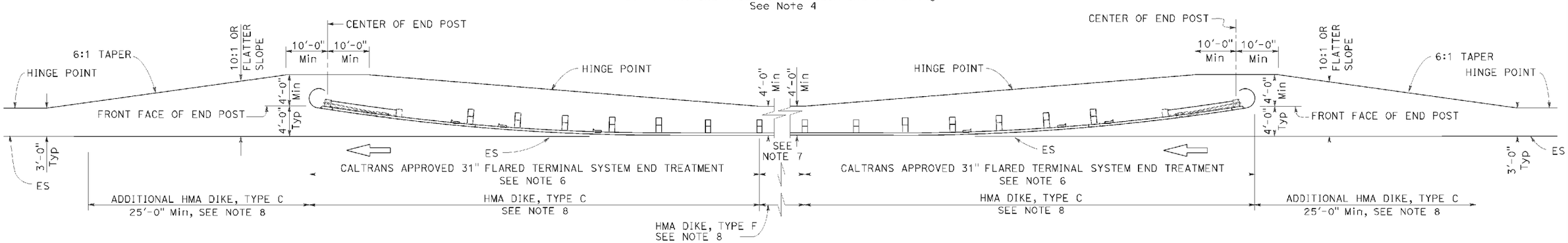

TYPE 11E LAYOUT

(Embankment MGS installation with
31" flared end treatment at each end of railing)
See Note 4

NOTES:

1. Line post, blocks and hardware to be used are shown on Revised Standard Plans RSP A77L1, RSP A77L2, RSP A77M1, RSP A77N1 and RSP A77N2.
2. MGS post spacing to be 6'-3" center to center, except as otherwise noted.
3. Except as noted, line posts are 6" x 8" x 6'-0" wood with 6" x 12" x 1'-2" wood blocks. W6 x 8.5 or W6 x 9 steel posts, 6'-0" in length, with 6" x 12" x 1'-2" notched wood blocks or plastic blocks may be used for 6" x 8" x 6'-0" wood post with 6" x 12" x 1'-2" wood blocks where applicable and when specified.
4. Layout Types 11D through 11L, shown on the A77P Series of Standard Plans, are typically used where MGS is recommended to shield embankment slopes and a crashworthy 31" end treatment is required for both directions of traffic.
5. 31" in-line terminal system end treatments are used where site conditions will not accommodate a flared end treatment.
6. The type of 31" terminal system end treatment to be used will be shown on the Project Plans.
7. Dependent on site conditions (embankment height and side slope), construction of additional MGS (length equal to multiples of 12'-6" with 6'-3" post spacing) may be advisable.
8. Where placement of dike is required with MGS installations, see Revised Standard Plan RSP A77N4 for dike positioning details.

STATE OF CALIFORNIA
DEPARTMENT OF TRANSPORTATION

MIDWEST GUARDRAIL SYSTEM TYPICAL LAYOUTS FOR EMBANKMENTS

NO SCALE

RSP A77P2 DATED JULY 19, 2013 SUPPLEMENTS THE STANDARD PLANS BOOK DATED 2010.

REVISED STANDARD PLAN RSP A77P2

2010 REVISED STANDARD PLAN RSP A77P2

DATE PLOTTED => 01-DEC-2015
TIME PLOTTED => 12:47

Dist	COUNTY	ROUTE	POST MILES TOTAL PROJECT	SHEET No.	TOTAL SHEETS
01	Hum	96	R6.2/6.6	47	55

REGISTERED CIVIL ENGINEER

January 15, 2016
PLANS APPROVAL DATE

REGISTERED PROFESSIONAL ENGINEER
Michael Janzen
No. 44788
Exp. 3-31-16
CIVIL
STATE OF CALIFORNIA

THE STATE OF CALIFORNIA OR ITS OFFICERS OR AGENTS SHALL NOT BE RESPONSIBLE FOR THE ACCURACY OR COMPLETENESS OF SCANNED COPIES OF THIS PLAN SHEET.

TO ACCOMPANY PLANS DATED 11-19-15

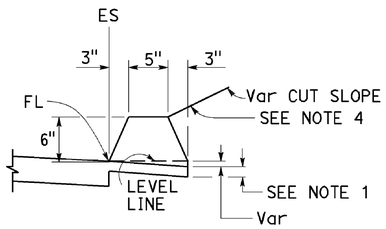

TYPE A
See Notes 3 and 5

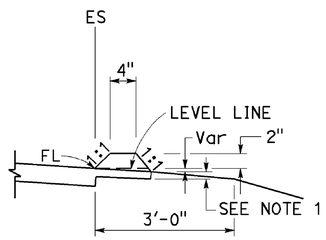

TYPE C

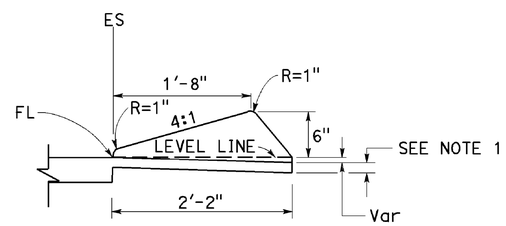

TYPE D

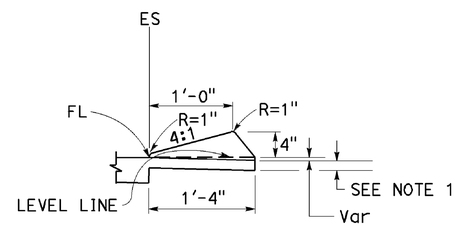

TYPE E

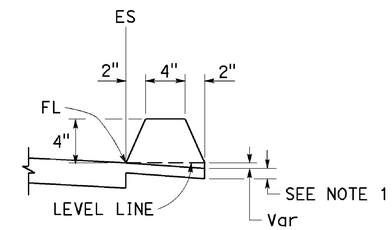

TYPE F
See Note 5

DIKES

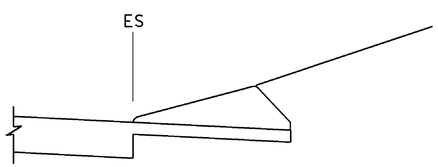

CASE C-1
Cut Slope

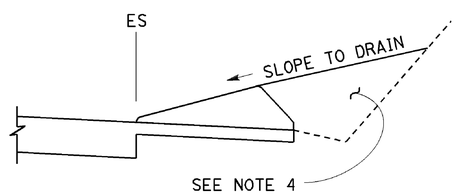

CASE C-2
Cut Slope

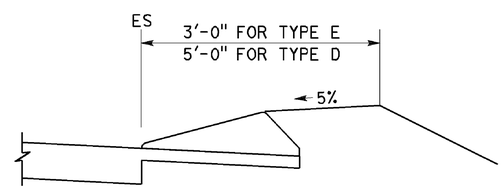

CASE F

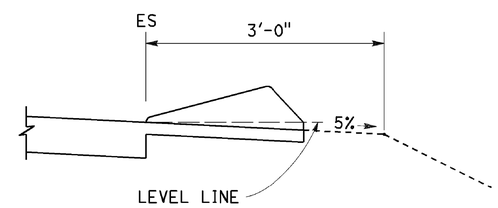

CASE R
See Note 2

TYPE D AND E BACKFILL DETAILS

NOTES:

1. For HMA shoulders only, extend top layer of HMA placed on the shoulder under dike with no joint at the ES. For projects with OGFC shoulders, do not extend OGFC under dike. See project plans for modified dike detail.
2. Case R applies to retrofit only projects where restrictive conditions do not provide enough width for Case F backfill.
3. Type A dike only to be used where restrictive slope conditions do not provide enough width to use Type D or Type E dike.
4. Fill and compact with excavated material to top of dike.
5. Use Type A or F dike, where dike is required with guardrail installations. See Revised Standard Plan RSP A77N4 for dike positioning details. See Revised Standard Plan RSP A77N3 for hinge point offsets with guardrail.

DIKE QUANTITIES

TYPE	CUBIC YARDS PER LINEAR FOOT
A	0.0135
C	0.0038
D	0.0293
E	0.0130
F	0.0066

Quantities based on 5% cross slope.

STATE OF CALIFORNIA
DEPARTMENT OF TRANSPORTATION

HOT MIX ASPHALT DIKES

NO SCALE

RSP A87B DATED JANUARY 15, 2016 SUPERSEDES RSP A87B DATED JULY 19, 2013 AND STANDARD PLAN A87B DATED MAY 20, 2011 - PAGE 120 OF THE STANDARD PLANS BOOK DATED 2010.

REVISED STANDARD PLAN RSP A87B

2010 REVISED STANDARD PLAN RSP A87B

DATE PLOTTED => 21-JAN-2016
TIME PLOTTED => 10:25

Dist	COUNTY	ROUTE	POST MILES TOTAL PROJECT	SHEET NO.	TOTAL SHEETS
01	Hum	96	R6.2/6.6	48	55

REGISTERED CIVIL ENGINEER

October 30, 2015
PLANS APPROVAL DATE

REGISTERED PROFESSIONAL ENGINEER Srikanth N. Balasubramanian No. C56426 Exp. 6-30-17 CIVIL STATE OF CALIFORNIA

THE STATE OF CALIFORNIA OR ITS OFFICERS OR AGENTS SHALL NOT BE RESPONSIBLE FOR THE ACCURACY OR COMPLETENESS OF SCANNED COPIES OF THIS PLAN SHEET.

TO ACCOMPANY PLANS DATED 11-19-15

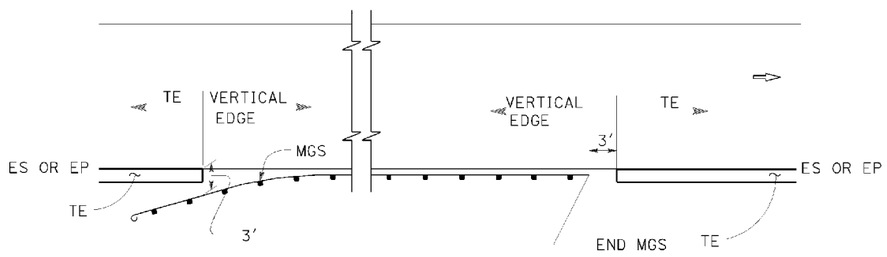

MGS

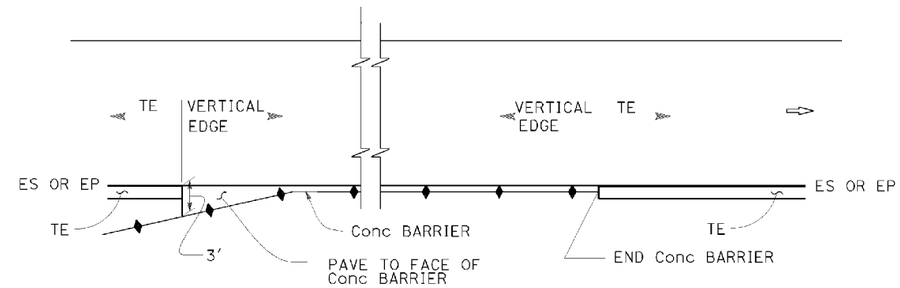

CONCRETE BARRIER

ABBREVIATIONS:

TE TAPERED EDGE

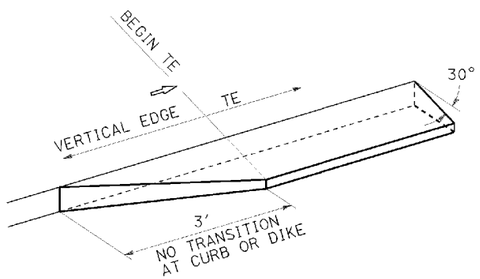

TRANSITION DETAIL
FOR CONCRETE ONLY

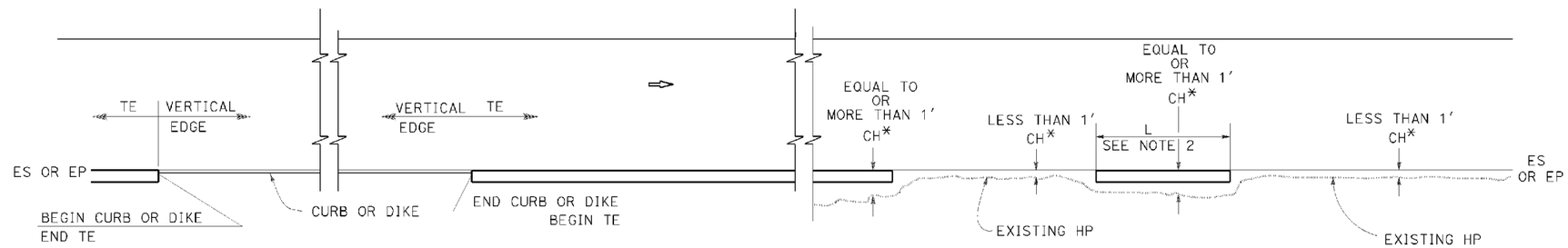

CURB OR DIKE

NARROW SIDE SLOPE

* CH = Distance from ES or EP to existing HP.

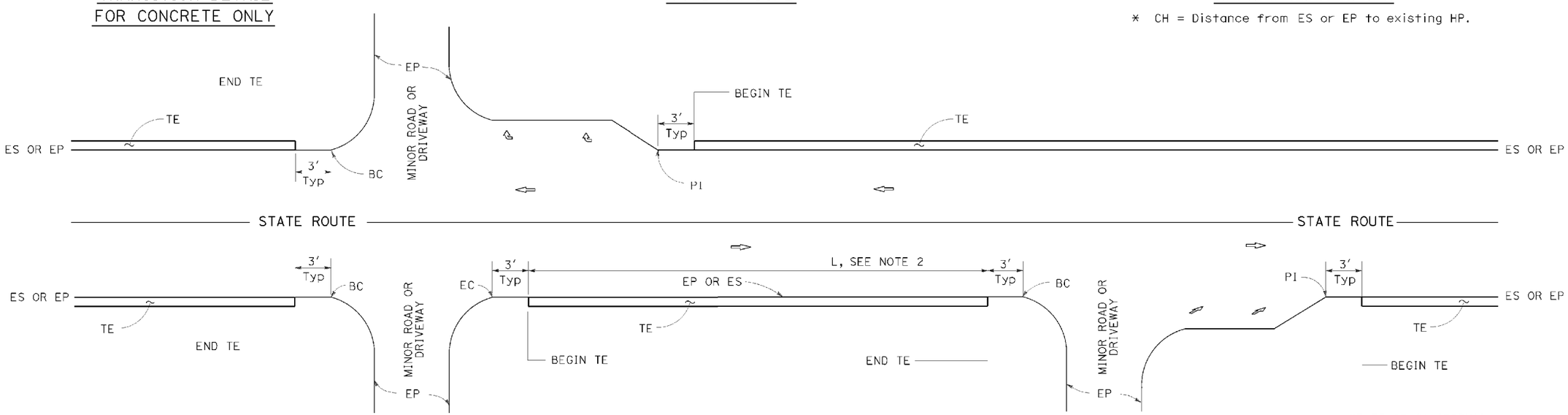

INTERTECTION

DRIVEWAY AND INTERSECTION

MINOR ROADWAY OR DRIVEWAY

STATE OF CALIFORNIA
DEPARTMENT OF TRANSPORTATION

PAVEMENT EDGE TREATMENTS

NO SCALE

NOTES:

1. For details not shown, see Revised Standard Plans RSP P75 and RSP P76.
2. Tapered edge is optional when L is less than 30'.

RSP P74 DATED OCTOBER 30, 2015 SUPERSEDES RSP P74 DATED NOVEMBER 15, 2013 AND RSP P74 DATED JANUARY 20, 2012 THAT SUPPLEMENTS THE STANDARD PLANS BOOK DATED 2010.

REVISED STANDARD PLAN RSP P74

2010 REVISED STANDARD PLAN RSP P74

DATE PLOTTED => 01-DEC-2015
TIME PLOTTED => 12:47

Dist	COUNTY	ROUTE	POST MILES TOTAL PROJECT	SHEET No.	TOTAL SHEETS
01	Hum	96	R6.2/6.6	49	55

REGISTERED CIVIL ENGINEER

October 30, 2015
PLANS APPROVAL DATE

REGISTERED PROFESSIONAL ENGINEER Srikanth N. Balasubramanian No. C56426 Exp. 6-30-17 CIVIL STATE OF CALIFORNIA

THE STATE OF CALIFORNIA OR ITS OFFICERS OR AGENTS SHALL NOT BE RESPONSIBLE FOR THE ACCURACY OR COMPLETENESS OF SCANNED COPIES OF THIS PLAN SHEET.

TO ACCOMPANY PLANS DATED 11-19-15

LEGEND:

- HMA PAVEMENT
- HMA OR CONCRETE PAVEMENT
- CONCRETE PAVEMENT

ABBREVIATIONS:

TE TAPERED EDGE
TT TOTAL THICKNESS OF TE
HW HINGE WIDTH, DISTANCE FROM ES OR EP TO HP

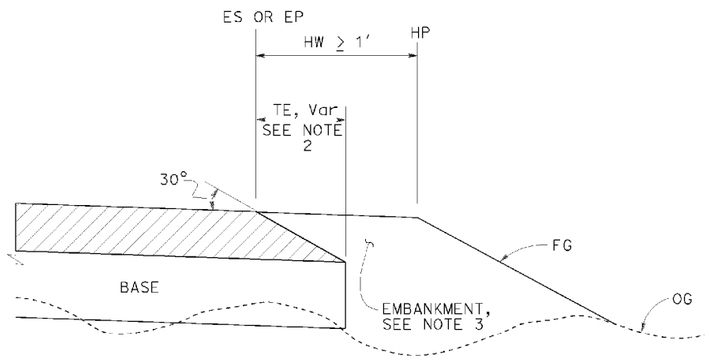

CASE K
Tapered Edge - Fill Section, HW ≥ 1′

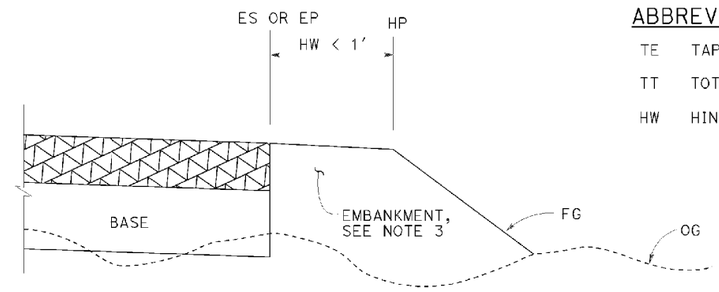

CASE L
Vertical Edge - Fill Section, HW < 1′

FILL SECTION

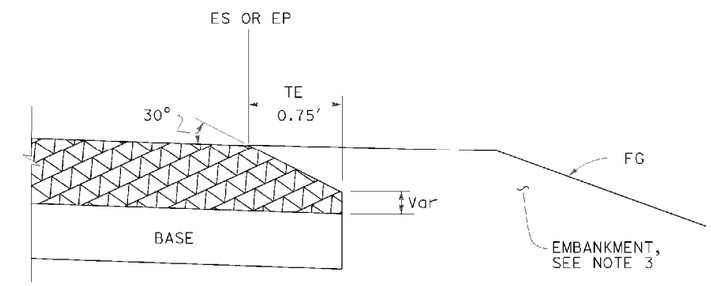

DETAIL "B"
For HMA pavement thickness more than 0.43′ or concrete pavement

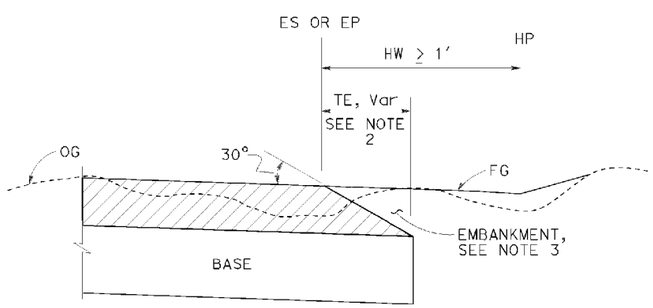

CASE M
Tapered Edge - Cut Section, HW ≥ 1′

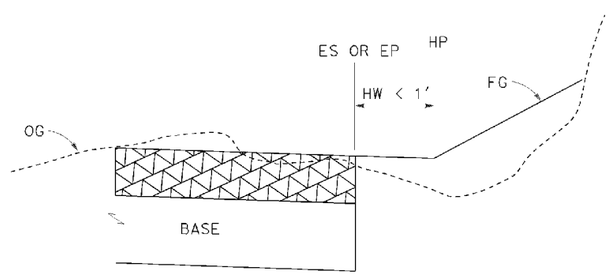

CASE N
Vertical Edge - Cut Section, HW < 1′

CUT SECTION

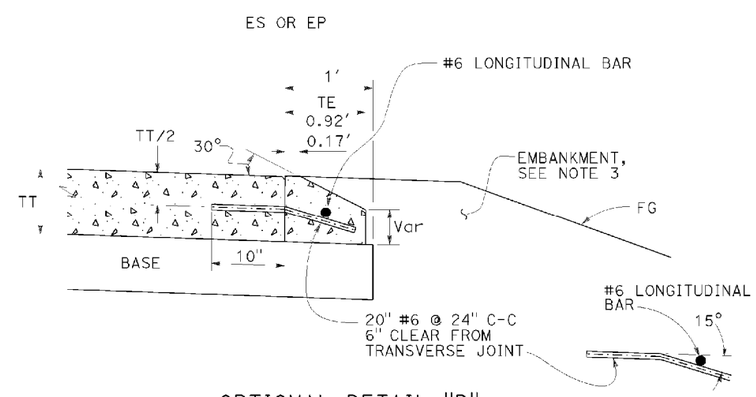

OPTIONAL DETAIL "B"
For concrete pavement
See Note 4

NOTES:

1. For limits of tapered edge and vertical edge treatments, see Revised Standard Plan RSP P74
2. Details shown for HMA pavement thickness less than 0.43′. See Detail "B" for HMA pavement thickness more than 0.43′ or concrete pavement.
3. For locations and limits of embankment see project plans.
4. Tapered edge transverse joint must match pavement transverse joint. End of #6 longitudinal bar must be 2" ±½" clear from transverse joint.
5. Tapered edge is not needed in the area of MGS, barrier, right turn lane and acceleration lane. See Revised Standard Plan RSP P74.

STATE OF CALIFORNIA
DEPARTMENT OF TRANSPORTATION

PAVEMENT EDGE TREATMENTS-NEW CONSTRUCTION

NO SCALE

RSP P76 DATED OCTOBER 30, 2015 SUPERSEDES RSP P76 DATED NOVEMBER 15, 2013 AND RSP P76 DATED JANUARY 20, 2012 THAT SUPPLEMENTS THE STANDARD PLANS BOOK DATED 2010.

REVISED STANDARD PLAN RSP P76

2010 REVISED STANDARD PLAN RSP P76

DATE PLOTTED => 01-DEC-2015
TIME PLOTTED => 12:47

DIST	COUNTY	ROUTE	POST MILES TOTAL PROJECT	SHEET No.	TOTAL SHEETS
01	Hum	96	R6.2/6.6	50	55

REGISTERED CIVIL ENGINEER

October 30, 2015
PLANS APPROVAL DATE

REGISTERED PROFESSIONAL ENGINEER Carl M. Duan No. C59976 Exp. 6-30-16 CIVIL STATE OF CALIFORNIA

THE STATE OF CALIFORNIA OR ITS OFFICERS OR AGENTS SHALL NOT BE RESPONSIBLE FOR THE ACCURACY OR COMPLETENESS OF SCANNED COPIES OF THIS PLAN SHEET.

TO ACCOMPANY PLANS DATED 11-19-15

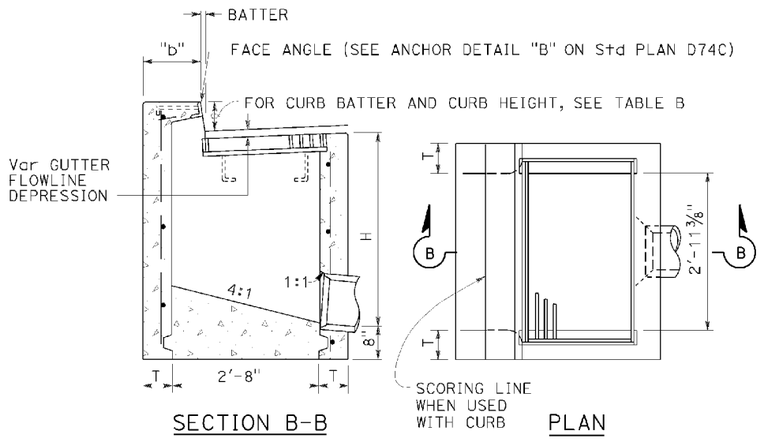

SECTION B-B PLAN

TYPE GO

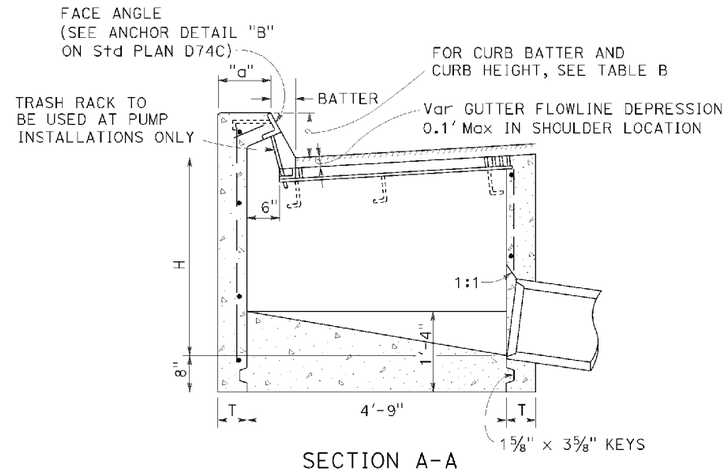

SECTION A-A

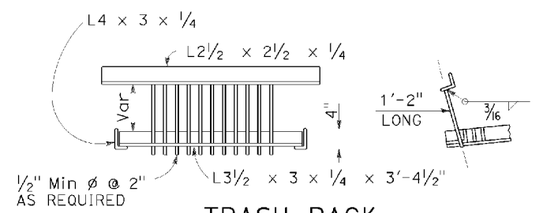

TRASH RACK

(For use with pump installation)

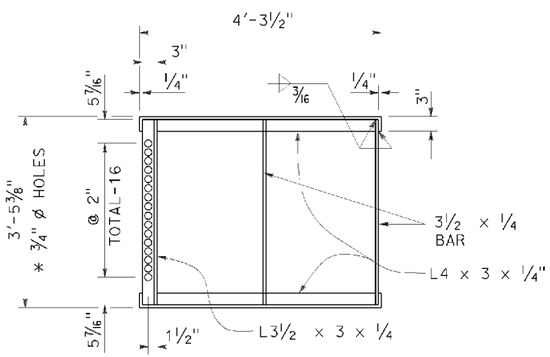

* 3/4" ø Holes required only with trash rack

GRATE FRAME FOR TYPE GDO INLET

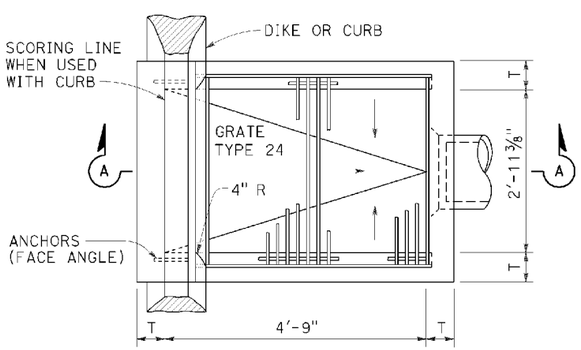

PLAN

TYPE GDO

TABLE A

CONCRETE QUANTITIES				
TYPE	H=3'-0" TO 8'-0" (T=6")		H=8'-1" TO 20'-0" (T=8")	
	H=3'-0" (CY)	ADDITIONAL PCC PER FOOT (CY)	H=8'-1" (CY)	ADDITIONAL PCC PER FOOT (CY)
GO	1.24	0.245	3.39	0.346
GDO	1.62	0.322	4.36	0.446

Table based on 8" floor slab, and curb type giving highest quantity of concrete. no deductions or adjustments are to be made to these quantities because of pipe openings, different floor alternatives or different curb type.

TABLE B

CURB TYPE	NORMAL CURB HEIGHT	CURB BATTER	"a" DIMENSION	"b" DIMENSION
A1-6	6"	1 1/2"	T+7 1/2"	T+6 1/2"
A1-8	8"	2"	T+7"	T+6"
B1-6	6"	4"	T+5"	T+4"
TYPE A DIKE	6"	3"	T+6"	T+5"

NOTES:

1. "H" is the difference in elevation between the outlet pipe flow line and the normal gutter grade line undepressed.
2. For "T" wall thickness, see Table A below.
3. Wall reinforcing not required when "H" is 8'-0" or less and the unsupported width or length is 7'-0" or less. Walls exceeding these limits shall be reinforced with #4 @ 18"± centers placed 1 1/2" clear to inside of box unless otherwise shown.
4. Inlet bottom reinforcing not required. See Standard Plan D74C for alternative reinforced bottom.
5. Steps - None required where "H" is less than 2'-6" Where "H" is 2'-6" or more, install steps with lowest rung 1'-0" above the floor and highest rung not more than 6" below top of inlet. The distance between steps shall not exceed 1'-0" and shall be uniform throughout the length of the wall. Place steps in the wall without an opening. Step inserts may be substituted for the bar steps. Step Inserts shall comply with State Industrial Safety requirements. See Standard Plan D74C for step details.
6. When shown on the project plans, place a 3/4" plain round protection bar horizontally across the length of the opening and bend back 4" into the inlet wall on each side.
7. Pipe(s) can be placed in any wall.
8. Curb section shall match adjacent curb.
9. Basin floors shall have wood trowel finish and shall slope toward the outlet pipe as shown.
10. See Revised Standard Plans RSP D77A and RSP D77B for grate and frame details and weights of miscellaneous iron and Steel.
11. See Standard Plan D78A for gutter depression details.
12. Complete joint penetration butt welds may be substituted for the fillet welds on all anchors.
13. Standard square, hexagon, round or equivalent headed anchors may be substituted for the right angle hooks on the anchors shown on this plan.
14. Cast-in-place inlets to be formed around all pipes/stubs intersecting the inlet and concrete poured in one continuous operation. Precast inlets shall have mortared pipe connections conforming to details for Type GCP inlets on Revised Standard Plan RSP D75B. See Standard Specifications for mortar composition.

STATE OF CALIFORNIA
DEPARTMENT OF TRANSPORTATION

DRAINAGE INLETS

NO SCALE

RSP D74B DATED OCTOBER 30, 2015 SUPERSEDES STANDARD PLAN D74B DATED MAY 20, 2011 - PAGE 159 OF THE STANDARD PLANS BOOK DATED 2010.

REVISED STANDARD PLAN RSP D74B

2010 REVISED STANDARD PLAN RSP D74B

DATE PLOTTED => 01-DEC-2015
TIME PLOTTED => 12:47

DIST	COUNTY	ROUTE	POST MILES TOTAL PROJECT	SHEET No.	TOTAL SHEETS
01	Hum	96	R6.2/6.6	51	55

REGISTERED CIVIL ENGINEER

April 19, 2013
PLANS APPROVAL DATE

REGISTERED PROFESSIONAL ENGINEER Raymond Don Tsztoo No. C37332 Exp. 6-30-14 CIVIL STATE OF CALIFORNIA

THE STATE OF CALIFORNIA OR ITS OFFICERS OR AGENTS SHALL NOT BE RESPONSIBLE FOR THE ACCURACY OR COMPLETENESS OF SCANNED COPIES OF THIS PLAN SHEET.

TC ACCOMPANY PLANS DATED 11-19-15

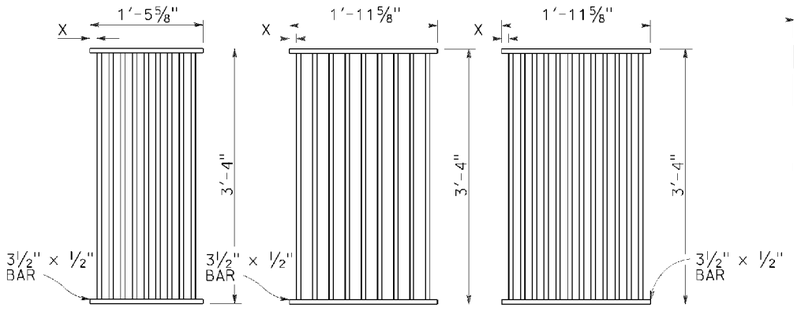

RECTANGULAR GRATE DETAILS

(See table below)

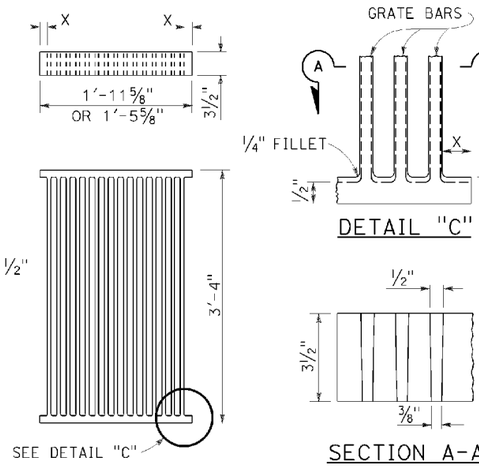

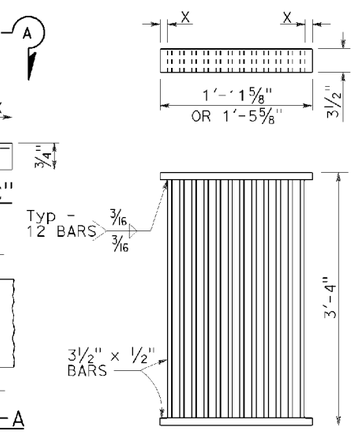

ALTERNATIVE CAST DUCTILE IRON GRATE OR CAST CARBON STEEL GRATE

ALTERNATIVE WELDED GRATE

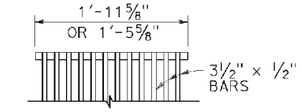

CAST END BLOCK

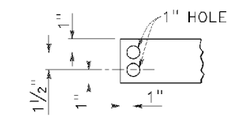

END OF BAR

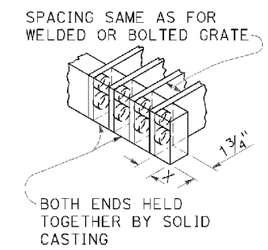

ALTERNATIVE CAST DUCTILE IRON OR CAST CARBON STEEL END BLOCK GRATE

NOTES:

1. Grate type numbers refer to approximate width of grate in inches and number of bars, respectively.
2. Contractor has the option of using cast ductile iron, cast carbon steel, welded, bolted, or cast end block grate.
3. Rounded top of bars optional on all grates.
4. Pipe inlets with a grate shall be placed so that bars parallel direction of principle surface flow.
5. Complete joint penetration butt welds may be substituted for the fillet welds on all anchors.
6. Standard square, hexagon, round or equivalent headed anchors may be substituted for the right angle hooks on the anchors shown on this plan.
7. Grate and frame weights are based on welded grates (weights of face angles, steps, protection bars, etc. are not included).
8. Connect chain to grate and frame only at locations shown on the plans. When chain is required, do not use cast ductile iron grates.

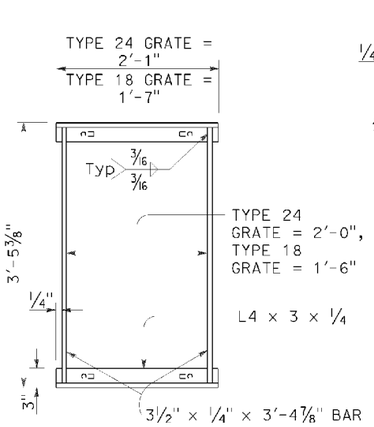

TYPICAL FRAME

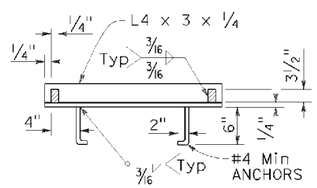

CROSS SECTION

(Thru frame)

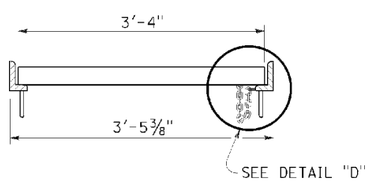

LONGITUDINAL SECTION

(Thru frame and grate)

RECTANGULAR FRAME DETAILS

(For all rectangular grates)

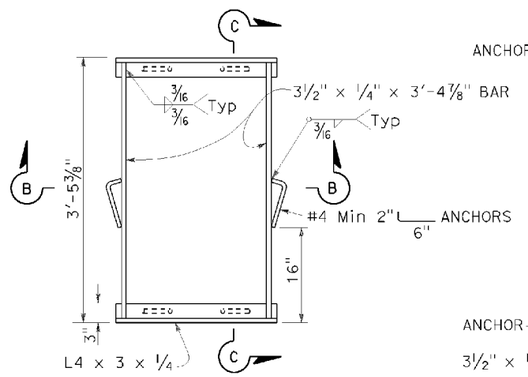

TYPICAL FRAME

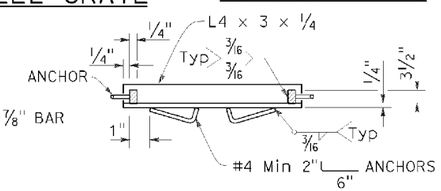

SECTION B-B

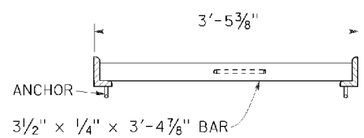

SECTION C-C

ALTERNATIVE ANCHOR FOR RECTANGULAR FRAME

(For details not shown, See Rectangular Frame Details)

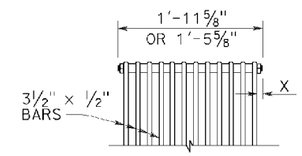

BOLTED END BLOCK

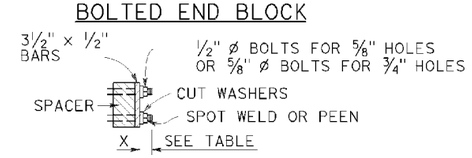

BOLTING DETAIL

ALTERNATIVE BOLTED GRATE

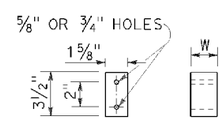

BAR SPACER

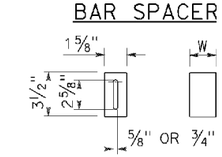

ALTERNATIVE SPACER

W = 1⅜" or 2"

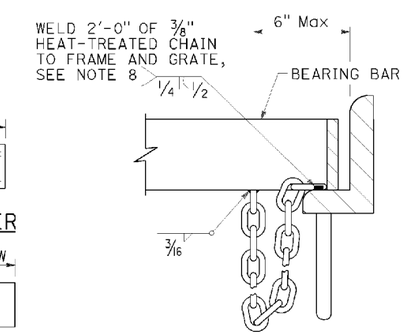

DETAIL "D"

(Steel grates only)

GRATE BAR SPACING TABLE

TYPE	No. OF BARS	CLEAR BAR SPACING	X
18-9	9	1⅜"	1 1/16"
24-9	9	2"	1 9/16"
24-12	12	1⅜"	1¼"

INLET TYPE	COVER TYPE	WEIGHT LB
OS	PLATE	174
OL-7	PLATE	170
OL-10	PLATE	170
OL-14	PLATE	170
OL-21	PLATE	170
OCP	PLATE	112
OCPI	PLATE	112
OCPI	REDWOOD	42
OMP	PLATE	177
OMPI	PLATE	177

INLET TYPE	GRATE TYPE	No. OF GRATES	WEIGHT LB
GDO	24-12	2	634
GOL-7	24-12	1	326
GOL-10	24-12	1	326
GO,G1,G2,G3,G4 (TYPE 24)	24-9	1	263
	24-12	1	326
G4 (TYPE 18),G5,G6	18-9	1	249
GT1	18-9	2	498
GT2	18-9	2	498
GT3	24-12	2	652
GT4	24-12	2	652
TRASH RACK			22
GRATE CHAIN			3

BASIS FOR Misc IRON & STEEL FINAL PAY WEIGHTS FOR DRAINAGE INLETS

(See Note 7)

STATE OF CALIFORNIA
DEPARTMENT OF TRANSPORTATION

GRATE DETAILS No. 1

NO SCALE

RSP D77A DATED APRIL 19, 2013 SUPERSEDES RSP D77A DATED JULY 20, 2012 AND STANDARD PLAN D77A DATED MAY 20, 2011 - PAGE 164 OF THE STANDARD PLANS BOOK DATED 2010.

REVISED STANDARD PLAN RSP D77A

2010 REVISED STANDARD PLAN RSP D77A

DATE PLOTTED => 01-DEC-2015
TIME PLOTTED => 12:47

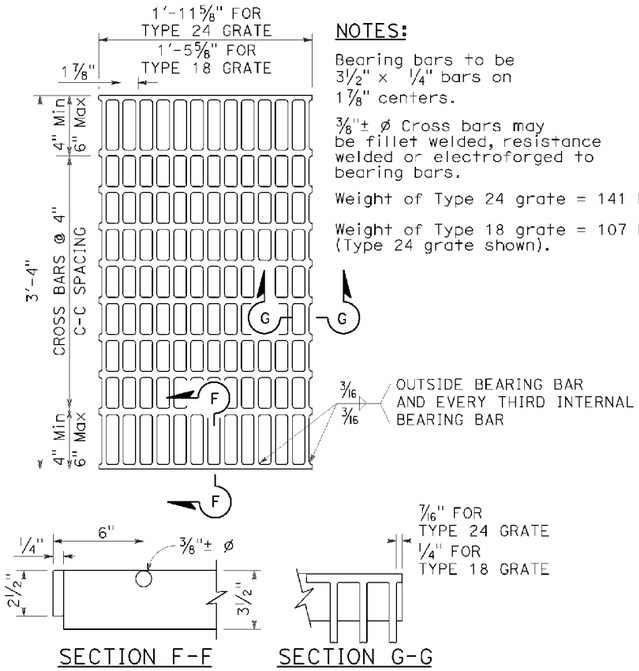

SECTION F-F SECTION G-G

TYPE 18-10 AND 24-13 GRATE

(Welded Steel)

NOTES:

Bearing bars to be 3½" x ¼" bars on 1⅞" centers.

⅜"± ø Cross bars may be fillet welded, resistance welded or electroforged to bearing bars.

Weight of Type 24 grate = 141 LBS.

Weight of Type 18 grate = 107 LBS. (Type 24 grate shown).

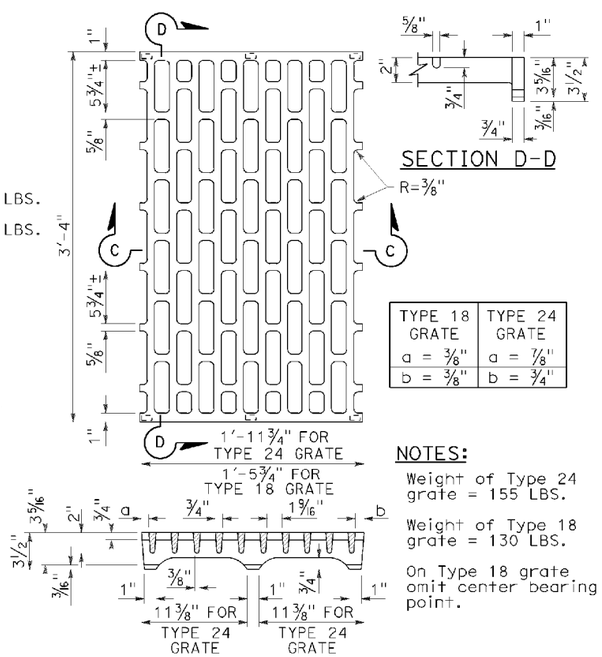

SECTION D-D

TYPE 18 GRATE	TYPE 24 GRATE
a = ⅜"	a = ⅞"
b = ⅜"	b = ¾"

SECTION C-C

TYPE 18-8C AND 24-10C GRATE

(Cast ductile iron)

NOTES:

Weight of Type 24 grate = 155 LBS.

Weight of Type 18 grate = 130 LBS.

On Type 18 grate omit center bearing point.

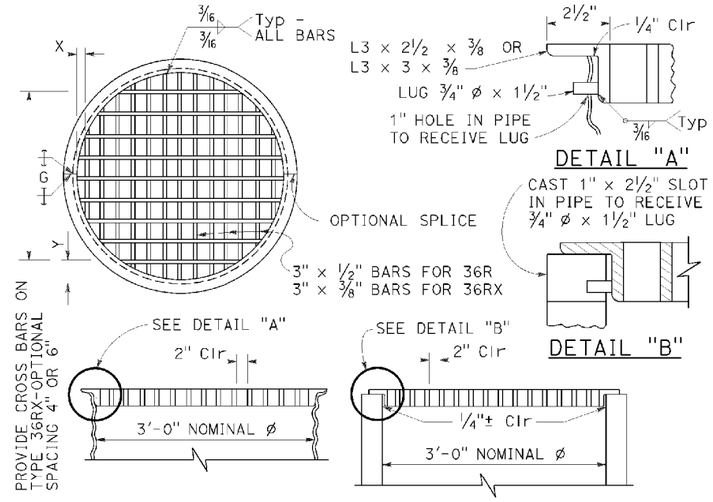

DETAIL "A"

DETAIL "B"

TYPE 36R AND 36RX GRATE DETAILS

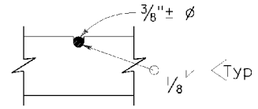

⅜"± ø Cross bars may be fillet welded, resistance welded or electroforged to bearing bars.

CROSS BAR DETAIL TYPE 36RX GRATE (WELDED STEEL)

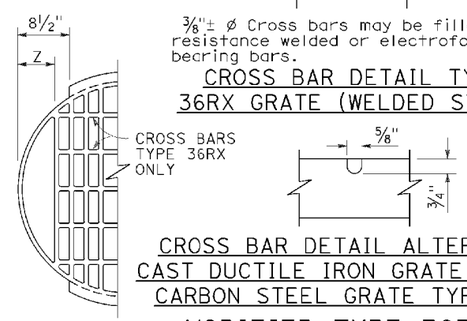

CROSS BAR DETAIL ALTERNATIVE CAST DUCTILE IRON GRATE OR CAST CARBON STEEL GRATE TYPE 36RX

MODIFIED TYPE 36R AND 36RX GRATE FOR ODI INLET

NOTES:

1. When alternative grates are allowed - Final pay based on alternative with the lesser weight.
2. Use frame shown on Standard Plan D74A, D74B or RSP D77A as appropriate.
3. When Type 24-10S, 24-12X or 24-13 grates are used with GDO Inlets, a ¼" x 3½" x 3'-4⅞" steel bar shall be welded across the center of inlet frame to separate the individual grates.
4. See Revised Standard Plan RSP D77A for connecting chain to welded grate and frame. When chain is required, do not use cast ductile iron grate.

DIST	COUNTY	ROUTE	POST MILES TOTAL PROJECT	SHEET No.	TOTAL SHEETS
01	Hum	96	R6.2/6.6	52	55

REGISTERED CIVIL ENGINEER

April 19, 2013
PLANS APPROVAL DATE

REGISTERED PROFESSIONAL ENGINEER Raymond Don Tsztoo No. C37332 Exp. 6-30-14 CIVIL STATE OF CALIFORNIA

THE STATE OF CALIFORNIA OR ITS OFFICERS OR AGENTS SHALL NOT BE RESPONSIBLE FOR THE ACCURACY OR COMPLETENESS OF SCANNED COPIES OF THIS PLAN SHEET.

TO ACCOMPANY PLANS DATED 11-19-15

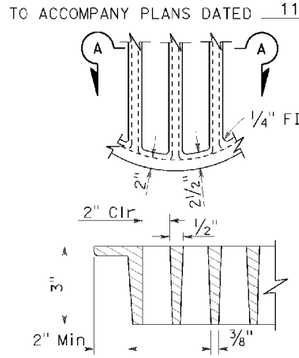

SECTION A-A

ALTERNATIVE CAST DUCTILE IRON GRATE OR CAST CARBON STEEL GRATE TYPE 36R AND 36RX

BASIS FOR Misc IRON AND STEEL FINAL PAY WEIGHTS FOR DRAINAGE INLETS

INLET TYPE	GRATE TYPE	No. OF GRATES	WEIGHT LB
GDO (SEE NOTE 4)	24-10C	2	391
	24-10S	2	456
	24-12X	2	473
	24-13	2	374
G0,G0L,G1,G2, G3,G4 (TYPE 24)	24-10C	1	202
	24-10S	1	229
	24-12X	1	239
G4 (TYPE 18) G5,G6	24-13	1	188
	18-8S	1	187
	18-9X	1	187
	18-10	1	149
GT1,GT2	18-8S	2	374
	18-9X	2	374
	18-10	2	298
GT3,GT4	24-10C	2	404
	24-10S	2	458
	24-12X	2	478
	24-13	2	376
ODI GMP,GCP,GCPI	36RX (Mod)	1	196
	36RX	1	215
ODI	36R (Mod)	1	220
GMP,GCP,GCPI	36R	1	236
TRASH RACK			22
GRATE CHAIN			3

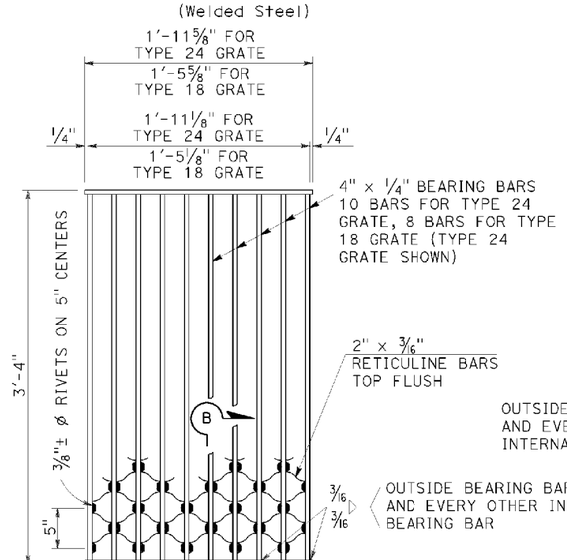

SECTION B-B

NOTES:

Weight of Type 24 grate = 182 LBS.
Weight of Type 18 grate = 145 LBS.

TYPE 18-8S AND 24-10S GRATE

(Welded Steel) Reticuline type

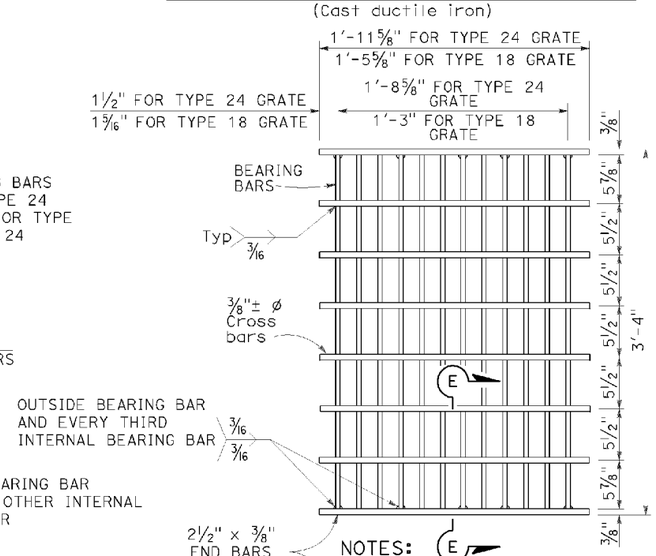

SECTION E-E

NOTES:

Bearing bars to be 3½" x ⅜" bars on 1⅞" centers.

12 Bars for Type 24 grate - 9 bars for Type 18 grates. (Type 24 grate shown).

Weight of Type 24 grate = 192 LBS.

Weight of Type 18 grate = 145 LBS.

⅜"± ø Cross bars may be fillet welded, resistance welded or electroforged to bearing bars.

TYPE 18-9X AND 24-12X GRATE

(Welded Steel)

GRATE BAR SPACING TABLE

TYPE	No. OF BARS	CLEAR BAR SPACING	X	Y 4" SPACING	Y 6" SPACING	Z
36R	13	2"	2⅛"	-	-	-
36RX (STEEL)	15	2"	9/16"	3¾"	5¾"	-
36RX (CAST)	13	2"	2⅛"	3¾"	5¾"	-
36R Mod	12	2"	2⅛"	-	-	5"
36RX Mod (STEEL)	13	2"	9/16"	3¾"	5¾"	5 11/16"
36RX Mod (CAST)	12	2"	2⅛"	3¾"	5¾"	5"

STATE OF CALIFORNIA
DEPARTMENT OF TRANSPORTATION

GRATE DETAILS No. 2

NO SCALE

RSP D77B DATED APRIL 19, 2013 SUPERSEDES RSP D77B DATED JULY 20, 2012 AND STANDARD PLAN D77B DATED MAY 20, 2011 - PAGE 165 OF THE STANDARD PLANS BOOK DATED 2010.

REVISED STANDARD PLAN RSP D77B

2010 REVISED STANDARD PLAN RSP D77B

DATE PLOTTED => 01-DEC-2015
TIME PLOTTED => 12:47

Dist	COUNTY	ROUTE	POST MILES TOTAL PROJECT	SHEET No.	TOTAL SHEETS
01	Hum	96	R6.2/6.6	53	55

Raymond Don Tsztoo
REGISTERED CIVIL ENGINEER

October 30, 2015
PLANS APPROVAL DATE

REGISTERED PROFESSIONAL ENGINEER
Raymond Don Tsztoo
No. C37332
Exp. 6-30-16
CIVIL
STATE OF CALIFORNIA

THE STATE OF CALIFORNIA OR ITS OFFICERS OR AGENTS SHALL NOT BE RESPONSIBLE FOR THE ACCURACY OR COMPLETENESS OF SCANNED COPIES OF THIS PLAN SHEET.

TO ACCOMPANY PLANS DATED 11-19-15

ANNULAR AND HELICAL PROFILE

COUPLING TYPE	PIPE CORRUGATION	PIPE SIZE	W OR A	PIPE WALL THICKNESS		BAND THICKNESS		BAR AND STRAP (CSP ONLY)				ANGLE						
												DIMENSIONS		BOLTS (No.- Dia)		RIVETS ANGLE TO BAND		SPOT WELDS ANGLE TO BAND
				CSP	CAP	CSP	CAP	STRAP THICKNESS	BOLTS Dia	BAR Dia	BAR YIELD STRENGTH	CSP	CAP	CSP	CAP	CSP	CAP	CSP
TWO PIECE INTEGRAL FLANGE	1½' × ¼"	6"	7"	0.064"-0.168"		0.052"								3-⅜"				
	1½' × ¼"	8"-10"	7"	0.064"-0.168"	0.060"-0.164"	0.064"	0.060"							3-⅜"	3-⅜"			
ANNULAR	2⅔" × ½"	THROUGH 24"	12"	0.064"-0.168"	0.060"-0.164"	0.064"	0.060"					2" × 2" × 3/16"	2" × 2" × 3/16"	3-½"	3-½"	3-⅜"	3-⅜"	3-½"
HUGGER	2⅔" × ½" REROLLED END	THROUGH 24"	10½"	0.064"-0.168"		0.064"		0.079"	½"	⅞"	32 ksi							

SPIRAL RIB PROFILE

COUPLING TYPE	PIPE CORRUGATION	PIPE SIZE	W	PIPE WALL THICKNESS		BAND THICKNESS		BAR AND STRAP (SSRP ONLY)				ANGLE						
												DIMENSIONS		BOLTS (No.- Dia)		RIVETS ANGLE TO BAND		SPOT WELDS ANGLE TO BAND
				SSRP	ASRP	SSRP	ASRP	STRAP THICKNESS	BOLTS Dia	BAR Dia	BAR YIELD STRENGTH	SSRP	ASRP	SSRP	ASRP	SSRP	ASRP	SSRP
ANNULAR	2⅔" × ½" * REROLLED END	24"	12"	0.064"-0.168"	0.060"-0.164"	0.064"	0.060"					2" × 2" × 3/16"	2" × 2" × 3/16"	3-½"	3-½"	3-⅜"	3-⅜"	3-½"
HUGGER	2⅔" × ½" * REROLLED END	24"	10½"	0.064"-0.168"		0.064"		0.079"	½"	⅞"	32 ksi							

* See Note 11.

11. All profiles of Spiral Rib Pipe (¾" × ¾" ribs at 7½" pitch and ¾" × 1" ribs at 11½" pitch in both steel and aluminum and ¾" × 1" ribs at 8½" pitch in steel only) shall be manufactured with rerolled ends. Corrugation profile of the rerolled ends shall be 2⅔" × ½" annual corrugations with a minimum of two full corrugations at each end.

NOTES:

1. For helically corrugated coupling bands, the connection angles may be oriented parallel to the pipe axis, provided connecting holes are slotted lengthwise sufficiently to allow adjustment for the helix angle.
2. Tension strap may be connected to band with either spot welds or fillet welds that develop minimum required strength of strap.
3. Use 1¼" gage line dimension on attached angle leg for rivets and spot welds.
4. Band thickness shall not be less than:
   a. 3 standard thicknesses lighter than the thickness of the pipe for Corrugated Steel Pipe.
   b. 2 standard thicknesses lighter than the thickness of the pipe and in no case lighter than 0.060" for Corrugated Aluminum Pipe.
5. Dimensions, thicknesses and strengths shown are minimum.
6. For pipe arches use same width band as for round pipe of equal periphery.
7. Fillet welds of equivalent strength may be substituted for spot welds or rivets.
8. Spot welds shall develop minimum required strength of strap.
9. Pipe with rerolled ends having at least two 2⅔" × ½" annular corrugations at each end with or without an upturned flange may be connected with any of the annular coupling bands shown for pipe of the same diameter and wall thickness and having 2⅔" × ½" corrugations.
10. For downdrain applications, two piece integral flange couplers shall have factory applied sleeve type rubber gaskets with a minimum length of 7" measured along the length of the pipe.

STATE OF CALIFORNIA
DEPARTMENT OF TRANSPORTATION

CORRUGATED METAL PIPE COUPLING DETAILS No. 7 DOWNDRAIN

NO SCALE

RSP D97G DATED OCTOBER 30, 2015 SUPERSEDES STANDARD PLAN D97G DATED MAY 20, 2011 - PAGE 202 OF THE STANDARD PLANS BOOK DATED 2010.

REVISED STANDARD PLAN RSP D97G

2010 REVISED STANDARD PLAN RSP D97G

DATE PLOTTED => 01-DEC-2015
TIME PLOTTED => 12:47

Dist	COUNTY	ROUTE	POST MILES TOTAL PROJECT	SHEET No.	TOTAL SHEETS
01	Hum	96	R6.2/6.6	54	55

Gregory A. Bolzer
LICENSED LANDSCAPE ARCHITECT

July 19, 2013
PLANS APPROVAL DATE

LICENSED LANDSCAPE ARCHITECT Gregory A. Bolzer 2572 Expires 2-28-15 Renewal Date 7-19-13 STATE OF CALIFORNIA

THE STATE OF CALIFORNIA OR ITS OFFICERS OR AGENTS SHALL NOT BE RESPONSIBLE FOR THE ACCURACY OR COMPLETENESS OF SCANNED COPIES OF THIS PLAN SHEET.

TO ACCOMPANY PLANS DATED 11-19-15

A

AB	AGGREGATE BASE
ABS	ACRYLONITRILE-BUTADIENE-STYRENE
AC	ASPHALT CONCRETE
ACC	ARMOR-CLAD CONDUCTORS
Adj	ADJACENT/ADJUSTABLE
AIC	AUXILIARY IRRIGATION CONTROLLER
Alt	ALTERNATIVE
AMEND	AMENDMENT
ARV	AIR RELEASE VALVE
AUTO	AUTOMATIC
AUX	AUXILIARY
AVB	ATMOSPHERIC VACUUM BREAKER

B

B&B	BALLED AND BURLAPPED
B/B	BRASS/BRONZE
B/B/PL	BRASS/BRONZE/PLASTIC
B/PL	BRASS/PLASTIC
BFM	BONDED FIBER MATRIX
Bit Ctd	BITUMINOUS COATED
BP	BOOSTER PUMP
BPA	BACKFLOW PREVENTER ASSEMBLY
BPE	BACKFLOW PREVENTER ENCLOSURE
BV	BALL VALVE

C

C	CONDUIT
CAP	CORRUGATED ALUMINUM PIPE
CARV	COMBINATION AIR RELEASE VALVE
CB	COUPLING BAND
CCA	CAM COUPLER ASSEMBLY
CEC	CONTROLLER ENCLOSURE CABINET
CHDPE	CORRUGATED HIGH DENSITY POLYETHYLENE
CL	CHAIN LINK
CNC	CONTROL AND NEUTRAL CONDUCTORS
Conc	CONCRETE
CP	COPPER PIPE
CS	COMPOST SOCK
CSP	CORRUGATED STEEL PIPE
CST	CENTER STRIP
CV	CHECK VALVE

D

Dia	DIAMETER
DIP	DUCTILE IRON PIPE
DIT	DRIP IRRIGATION TUBING
DG	DECOMPOSED GRANITE
DN	DIAMETER NOMINAL
DVA	DRIP VALVE ASSEMBLY

E

EC	EROSION CONTROL
ECTC	EROSION CONTROL TECHNOLOGY COUNCIL
Elect	ELECTRIC/ELECTRICAL
Elev	ELEVATION
ELL	ELBOW
ENCL	ENCLOSURE
EP	EDGE OF PAVEMENT
ES	EDGE OF SHOULDER
EST	END STRIP
ESTB	ESTABLISHMENT
ETW	EDGE OF TRAVELED WAY

F

F	FULL CIRCLE
F/P	FULL/PART CIRCLE
FCV	FLOW CONTROL VALVE
FERT	FERTILIZER
FG	FINISHED GRADE
FH	FLEXIBLE HOSE
FIPT	FEMALE IRON PIPE THREAD
FIS	FERTILIZER INJECTOR SYSTEM
FL	FLOW LINE
FR	FIBER ROLL
FS	FLOW SENSOR
FSC	FLOW SENSOR CABLE
FV	FLUSH VALVE

G

Galv	GALVANIZED
GARV	GARDEN VALVE
GARVA	GARDEN VALVE ASSEMBLY
GM	GRAVEL MULCH
GPH	GALLONS PER HOUR
GPM	GALLONS PER MINUTE
GSP	GALVANIZED STEEL PIPE
GV	GATE VALVE

H

H	HALF CIRCLE
HDPE	HIGH DENSITY POLYETHYLENE
HP	HORSEPOWER/HINGE POINT
HPL	HIGH PRESSURE LINE
Hwy	HIGHWAY

I

IC	IRRIGATION CONTROLLER
ICC	IRRIGATION CONTROLLER(S) IN CONTROLLER ENCLOSURE CABINET
ID	INSIDE DIAMETER
IFS	IRRIGATION FILTRATION SYSTEM
IPS	IRON PIPE SIZE
IPT	IRON PIPE THREAD
Irr	IRRIGATION

L

L	LENGTH

M

Max	MAXIMUM
MBGR	METAL BEAM GUARD RAILING
MCV	MANUAL CONTROL VALVE
MIC	MASTER IRRIGATION CONTROLLER
Min	MINIMUM
MIPT	MALE IRON PIPE THREAD
Misc	MISCELLANEOUS
Mtl	MATERIAL
MVP	MAINTENANCE VEHICLE PULLOUT

N

NCN	NO COMMON NAME
NL	NOZZLE LINE
No.	NUMBER
NPT	NATIONAL PIPE THREAD

O

O/C	ON CENTER
OD	OUTSIDE DIAMETER
OL	OVERLAP

P

P	PART CIRCLE
PB	PULL BOX
PCC	PORTLAND CEMENT CONCRETE
PE	POLYETHYLENE
Pkt	PACKET
PL	PLASTIC
PLS	PURE LIVE SEED
PLT	PLANT/PLANTING
PLT ESTB	PLANT ESTABLISHMENT
PM	POST MILE
PR	PRESSURE RATED
PRLV	PRESSURE RELIEF VALVE
PRV	PRESSURE REGULATING VALVE
PVC	POLYVINYL CHLORIDE
Pvmt	PAVEMENT

Q

Q	QUARTER CIRCLE
QCV	QUICK COUPLING VALVE

NOTE:

For additional abbreviations, see Standard Plans A10A and A10B.

R

R	RADIUS
RCP	REINFORCED CONCRETE PIPE
RCV	REMOTE CONTROL VALVE
RCVM	REMOTE CONTROL VALVE (MASTER)
RCVMF	REMOTE CONTROL VALVE (MASTER) W/FLOW SENSOR
RCVP	REMOTE CONTROL VALVE W/PRESSURE REGULATOR
RCW	RECYCLED WATER
RECP	ROLLED EROSION CONTROL PRODUCT
REQ	REQUIRED
RICS	REMOTE IRRIGATION CONTROL SYSTEM
R/W	RIGHT OF WAY

S

S	SLIP
SCH	SCHEDULE
SF	STATE-FURNISHED
Shld	SHOULDER
Sq	SQUARE
SST	SIDE STRIP
Sta	STATION
Std	STANDARD
SW	SIDEWALK/SOUND WALL

T

T	THIRD CIRCLE/THREAD
TLS	TRUCK LOADING STANDPIPE
TQ	THREE QUARTER CIRCLE
TRM	TURF REINFORCEMENT MAT
TT	TWO-THIRDS CIRCLE
TWSA	TREE WELL SPRINKLER ASSEMBLY
Typ	TYPICAL

U

UG	UNDERGROUND

W

W	WIDTH
W/	WITH
WM	WATER METER
WS	WYE STRAINER
WSA	WYE STRAINER ASSEMBLY
WSP	WELDED STEEL PIPE
WWM	WELDED WIRE MESH

STATE OF CALIFORNIA
DEPARTMENT OF TRANSPORTATION

LANDSCAPE AND EROSION CONTROL ABBREVIATIONS

NO SCALE

RSP H1 DATED JULY 19, 2013 SUPERSEDES STANDARD PLAN H1
DATED MAY 20, 2011 - PAGE 218 OF THE STANDARD PLANS BOOK DATED 2010.

REVISED STANDARD PLAN RSP H1

2010 REVISED STANDARD PLAN RSP H1

DATE PLOTTED => 01-DEC-2015
TIME PLOTTED => 12:47

Dist	COUNTY	ROUTE	POST MILES TOTAL PROJECT	SHEET No.	TOTAL SHEETS
01	Hum	96	R6.2/6.6	55	55

REGISTERED CIVIL ENGINEER

April 19, 2013
PLANS APPROVAL DATE

REGISTERED PROFESSIONAL ENGINEER Gurinderpal Bhullar No. C48815 Exp. 9-30-14 CIVIL STATE OF CALIFORNIA

THE STATE OF CALIFORNIA OR ITS OFFICERS OR AGENTS SHALL NOT BE RESPONSIBLE FOR THE ACCURACY OR COMPLETENESS OF SCANNED COPIES OF THIS PLAN SHEET.

TO ACCOMPANY PLANS DATED 11-19-15

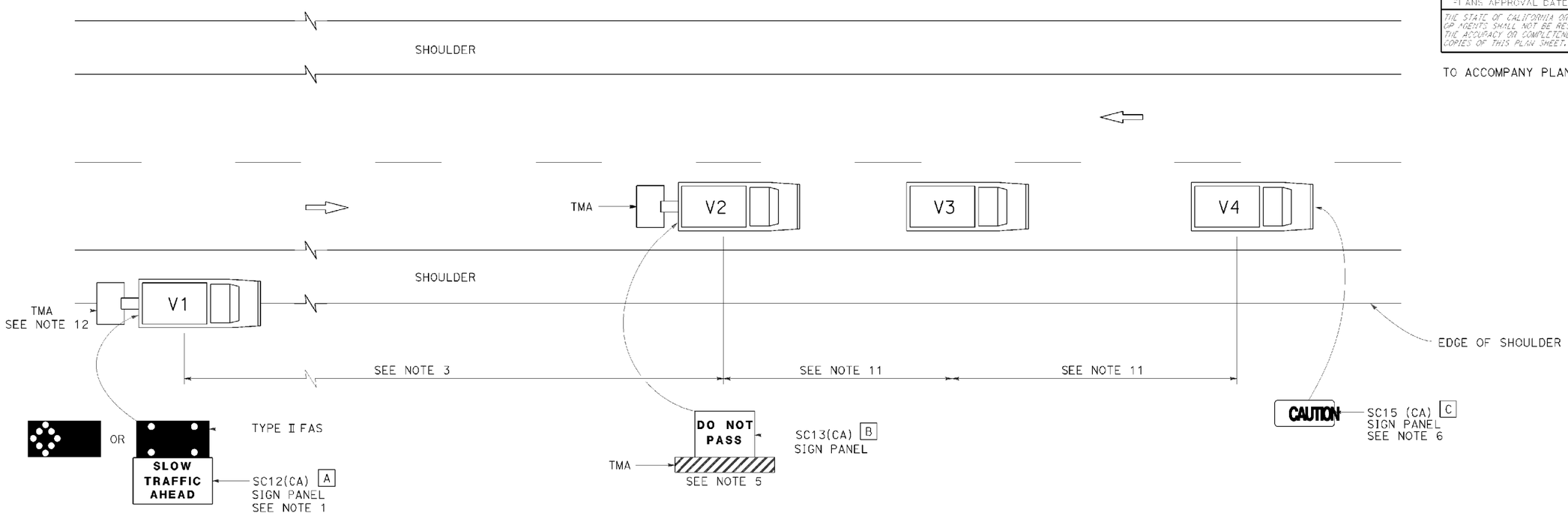

LEGEND

V1	SIGN VEHICLE
V2	SHADOW VEHICLE
V3	WORK/APPLICATION VEHICLE
V4	SIGN VEHICLE
TMA	TRUCK-MOUNTED ATTENUATOR
	FLASHING ARROW SIGN (FAS) IN FLASHING CAUTION MODE
	FLASHING ARROW SIGN (FAS) IN ALTERNATING DIAMOND CAUTION

SIGN PANEL SIZE (Min)

A	72" x 42"
B	54" x 42"
C	54" x 24"

NOTES:

1. Either a changeable message sign or a SC12(CA) "SLOW TRAFFIC AHEAD" sign shall be mounted on the rear of sign vehicle V1. The changeable message sign shall be sequenced to show the "CAUTION" message first, follow by the "SLOW TRAFFIC AHEAD" message. A Type II flashing arrow sign may be used with the SC12(CA) sign panel.
2. Sign vehicle V1 should be positioned where highly visible when shoulders are not available.
3. If traffic queues develop, sign vehicle V1 should be positioned upstream from the end of queue.
4. Vehicle-mounted sign panels shall have Type III or above retroreflective sheeting, black on white, or black on fluorescent orange, with 6" minimum series D letters per Caltrans sign specifications.
5. Shadow vehicle shall be equipped with a truck-mounted attenuator. The sign panel shown shall be mounted on the rear of shadow vehicle V2. The message "LANE CLOSED" may be used in place of the "DO NOT PASS" message.
6. The sign panel shown shall be mounted on the front of sign vehicle V4, facing opposing traffic.
7. All vehicles shall be equipped with flashing or rotating amber lights.
8. Sign vehicle V4 will not be required when the work and vehicles V2 and V3 are 2' or more from the centerline of the highway during the work or application operations.
9. All vehicles used for lane closures shall be equipped with two-way radios and the vehicle operators shall maintain communication during the work or application operation.
10. This plan shall not be used where workers would be on foot in the work area. Use a stationary type lane closure (Revised Standard Plan T13) for this condition.
11. Minimize spacing between vehicles V2 and V3 and vehicles V3 and V4 to deter road users from driving in between them.
12. If sign vehicle V1 encroaches into the traffic lane due to insufficient shoulder width, sign vehicle V1 shall be equipped with a truck-mounted attenuator. Sign vehicle V1 shall stay as close to the edge of shoulder as practicable.

STATE OF CALIFORNIA
DEPARTMENT OF TRANSPORTATION

TRAFFIC CONTROL SYSTEM FOR MOVING LANE CLOSURE ON TWO LANE HIGHWAYS

NO SCALE

RSP T17 DATED APRIL 19, 2013 SUPERSEDES STANDARD PLAN T17 DATED MAY 20, 2011 - PAGE 245 OF THE STANDARD PLANS BOOK DATED 2010.

REVISED STANDARD PLAN RSP T17

2010 REVISED STANDARD PLAN RSP T17

DATE PLOTTED => 01-DEC-2015
TIME PLOTTED => 12:47