| Dist | COUNTY | ROUTE | POST MILES TOTAL PROJECT | SHEET No. | TOTAL SHEETS |
|---|---|---|---|---|---|
| 12 | Ora | 57 | 12.2/15.2 | 2 | 527 |

REGISTERED CIVIL ENGINEER 11/15/10 DATE

4-18-11
PLANS APPROVAL DATE

REGISTERED PROFESSIONAL ENGINEER R.SCOTT BACSIKIN No. C 48774 Exp. 9-30-12 CIVIL STATE OF CALIFORNIA

*THE STATE OF CALIFORNIA OR ITS OFFICERS OR AGENTS SHALL NOT BE RESPONSIBLE FOR THE ACCURACY OR COMPLETENESS OF SCANNED COPIES OF THIS PLAN SHEET.*

HDR ENGINEERING, INC.
3230 EL CAMINO REAL
SUITE 200
IRVINE, CA 92602-1377

OCTA
550 SOUTH MAIN STREET
P.O. BOX 14184
ORANGE, CA 92863-1584

## NOTES:

1. DIMENSIONS OF THE PAVEMENT STRUCTURES (STRUCTURAL SECTIONS) ARE SUBJECT TO TOLERANCES SPECIFIED IN THE STANDARD SPECIFICATIONS.
2. SUPERELEVATIONS AS SHOWN OR AS DIRECTED BY THE ENGINEER.
3. SEE LAYOUTS FOR HMA DIKE, CONCRETE BARRIER, FENCING AND MBGR; LOCATIONS, LAYOUT AND TYPE.
4. SAWCUT AND JOIN PER CALTRANS LANE SCHEMATICS AND ISOLATION JOINT DETAIL, CASE 1, P18 OF STANDARD PLANS.

## TYPICAL STRUCTURAL SECTIONS:

1
- 1.05' JPCP
- 0.35' LCB
- 0.70' CL2 AS
- 1.90' OVER EXCAVATION

2
- 0.15' RHMA (GAP GRADED)
- 0.20' HMA TYPE A
- 0.95' CL2 AB
- 2.70' OVER EXCAVATION

3
- 0.20' RHMA (GAP GRADED)
- 0.20' HMA TYPE A
- 1.15' CL2 AB
- 2.45' OVER EXCAVATION

4
- 1.05' JPCP
- 0.35' LCB
- 0.70' CL2 AB

5
- 0.15' RHMA (GAP GRADED)
- 0.20' HMA TYPE A
- 0.95' CL2 AB

6
- 0.20' RHMA (GAP GRADED)
- 0.20' HMA TYPE A
- 1.15' CL2 AB

7
- 0.20' RHMA( GAP GRADED)
- 0.20' COLD PLANE AC Pvmt

8
- 0.33' MINOR Conc (PATTERNED)
- 0.50' CL2 AB

10
- 1.05' JPCP
- 0.35' LCB

11
- 0.20' RHMA (GAP GRADED)
- 0.55' HMA TYPE A
- 0.40' CL2 AB

12
- 0.33' HMA TYPE A
- 0.50' CL2 AB

13
- 0.20' HMA TYPE A
- 0.30' CL2 AS

14
- 0.20' MINOR Conc (PATTERNED)
- 0.30' CL2 AS

15
- 0.20' COLD PLANE AC Pvmt
- 0.20' HMA TYPE A

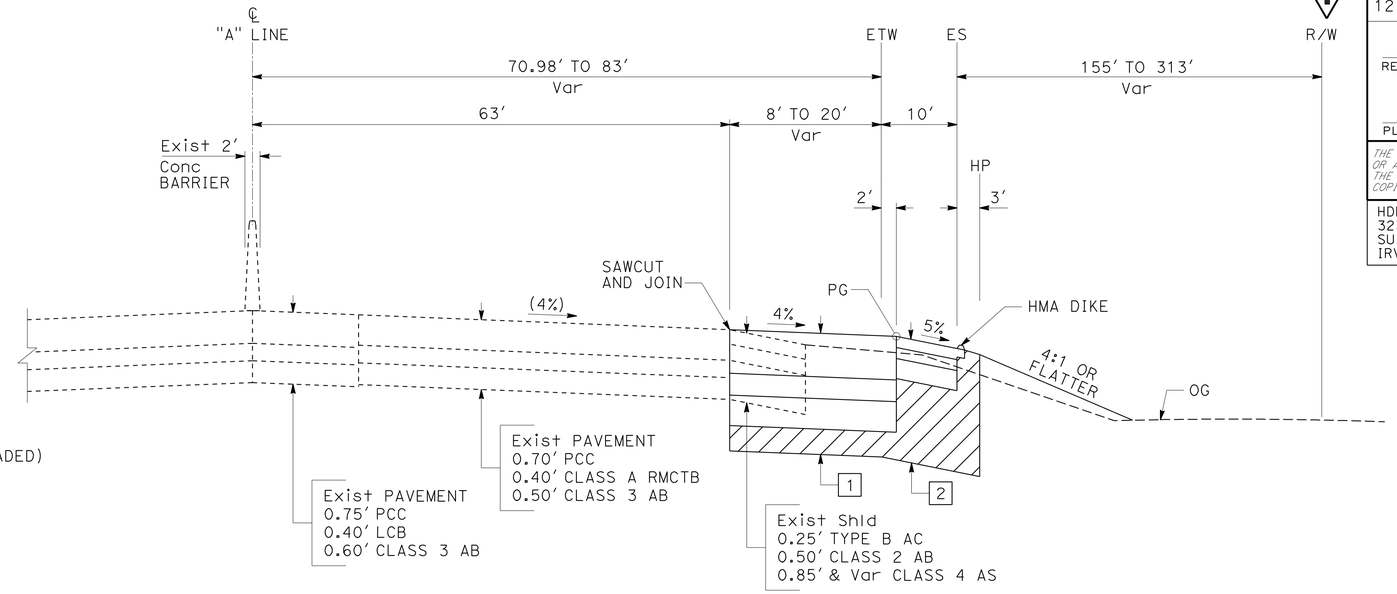


**ROUTE 57 NORTHBOUND**
Sta 258+67.61 TO 260+96.83

## DESIGN DESIGNATION:

ADT (127,860)
ADT (166,252)
2035
HV 4%
ESAL 83,000,000

D 54.4%
T 8%
V 70 MPH
$TI_{20}$ 15.5

## LEGEND:

- OVER EXCAVATION

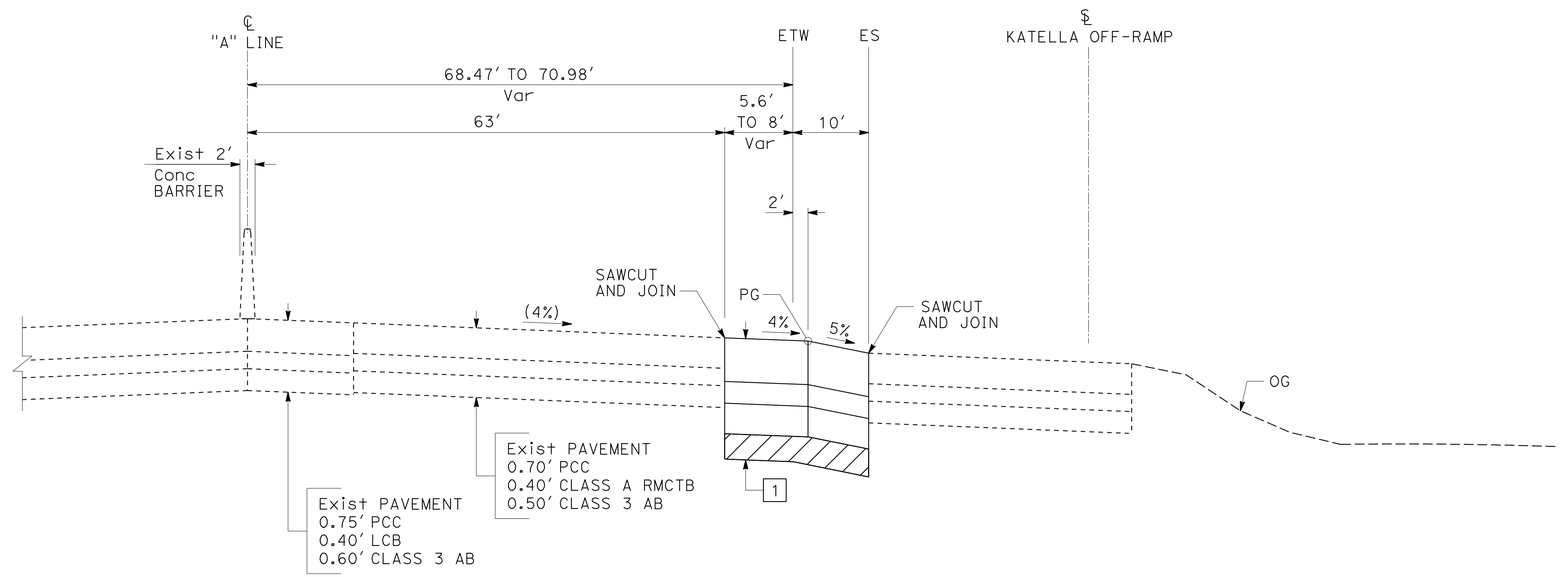


**ROUTE 57 NORTHBOUND**
Sta 257+58.89 TO 258+67.61

## ABBREVIATIONS:

| | |
|---|---|
| RHMA | RUBBERIZED HOT MIX ASPHALT |
| RMCTB | ROAD MIXED CEMENT TREATED BASE |
| ADT | AVERAGE DAILY TRAFFIC |
| D | DIRECTIONAL FACTOR |
| T | TRUCK VOLUME |
| HV | HOURLY VOLUME |
| V | SPEED |
| ESAL | EQUIVALENT SINGLE AXLE LOAD |
| TI | TRAFFIC INDEX |

**1 REVISED PER ADDENDUM No. 1 DATED AUGUST 22, 2011**

# TYPICAL CROSS SECTIONS

NO SCALE

X-1

REVISED BY | DATE REVISED
SHIVA BOUSTANI | LIEM A. NGUYEN
CALCULATED-DESIGNED BY | CHECKED BY
CONSULTANT FUNCTIONAL SUPERVISOR | R. SCOTT BACSIKIN
STATE OF CALIFORNIA - DEPARTMENT OF TRANSPORTATION
Caltrans

LAST REVISION 10-12-10
DATE PLOTTED => 19-AUG-2011
TIME PLOTTED => 15:42

| Dist | COUNTY | ROUTE | POST MILES TOTAL PROJECT | SHEET No. | TOTAL SHEETS |
|---|---|---|---|---|---|
| 12 | Ora | 57 | 12.2/15.2 | 10 | 527 |

REGISTERED CIVIL ENGINEER 11/15/10 DATE

4-18-11
PLANS APPROVAL DATE

REGISTERED PROFESSIONAL ENGINEER R.SCOTT BACSIKIN No. C 48774 Exp. 9-30-12 CIVIL STATE OF CALIFORNIA

*THE STATE OF CALIFORNIA OR ITS OFFICERS OR AGENTS SHALL NOT BE RESPONSIBLE FOR THE ACCURACY OR COMPLETENESS OF SCANNED COPIES OF THIS PLAN SHEET.*

HDR ENGINEERING, INC.
3230 EL CAMINO REAL
SUITE 200
IRVINE, CA 92602-1377

OCTA
550 SOUTH MAIN STREET
P.O. BOX 14184
ORANGE, CA 92863-1584

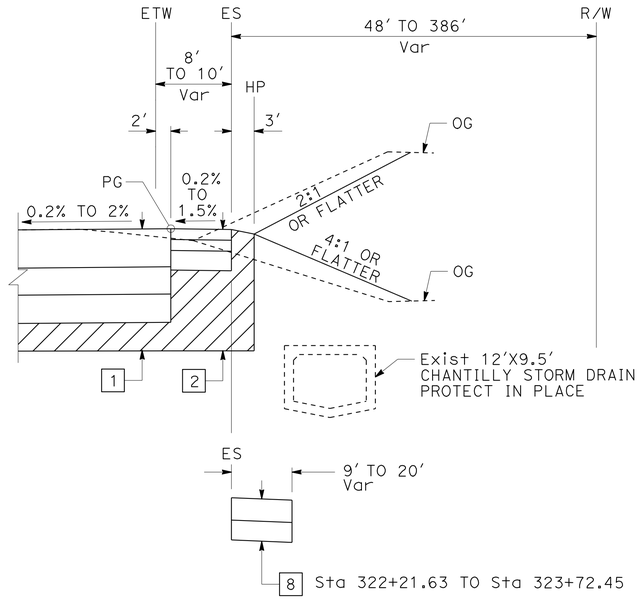


Sta 321+00.00 TO 322+50.00

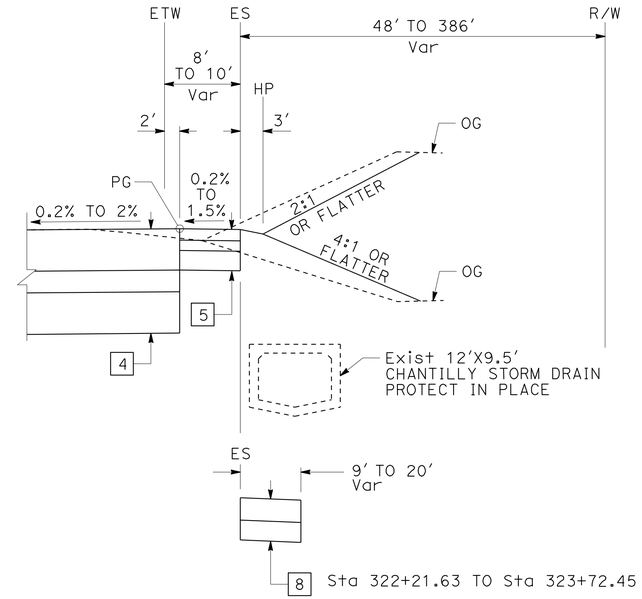


Sta 322+50.00 TO 323+39.64

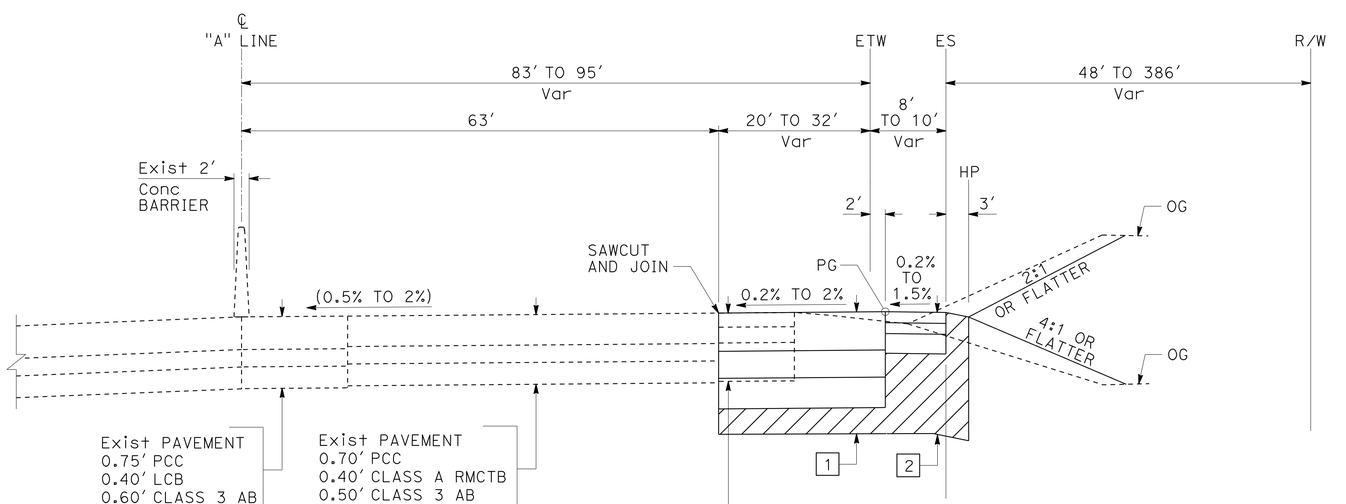


**ROUTE 57 NORTHBOUND**

Sta 317+60.00 TO 323+39.64

# TYPICAL CROSS SECTIONS

NO SCALE

1 **REVISED PER ADDENDUM No. 1 DATED AUGUST 22, 2011**

**X-9**

STATE OF CALIFORNIA - DEPARTMENT OF TRANSPORTATION

Caltrans

CONSULTANT FUNCTIONAL SUPERVISOR: R. SCOTT BACSIKIN

CALCULATED-DESIGNED BY: SHIVA BOUSTANI

CHECKED BY: LIEM A. NGUYEN

REVISED BY

DATE REVISED

LAST REVISION 10-12-10 | DATE PLOTTED => 19-AUG-2011 | TIME PLOTTED => 15:42

| Dist | COUNTY | ROUTE | POST MILES TOTAL PROJECT | SHEET No. | TOTAL SHEETS |
|---|---|---|---|---|---|
| 12 | Ora | 57 | 12.2/15.2 | 11 | 527 |

REGISTERED CIVIL ENGINEER 11/15/10 DATE

4-18-11
PLANS APPROVAL DATE

REGISTERED PROFESSIONAL ENGINEER R.SCOTT BACSIKIN No. C 48774 Exp. 9-30-12 CIVIL STATE OF CALIFORNIA

*THE STATE OF CALIFORNIA OR ITS OFFICERS OR AGENTS SHALL NOT BE RESPONSIBLE FOR THE ACCURACY OR COMPLETENESS OF SCANNED COPIES OF THIS PLAN SHEET.*

HDR ENGINEERING, INC.
3230 EL CAMINO REAL
SUITE 200
IRVINE, CA 92602-1377

OCTA
550 SOUTH MAIN STREET
P.O. BOX 14184
ORANGE, CA 92863-1584

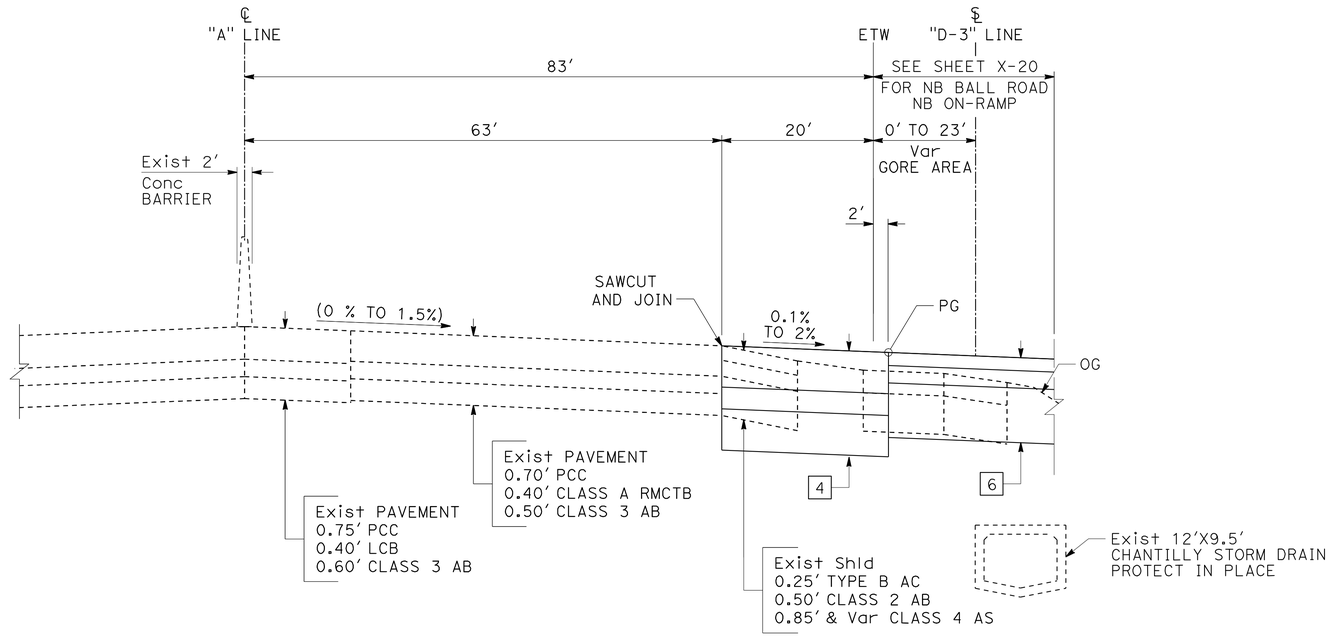


## ROUTE 57 NORTHBOUND

Sta 323+72.45 TO 329+58.00

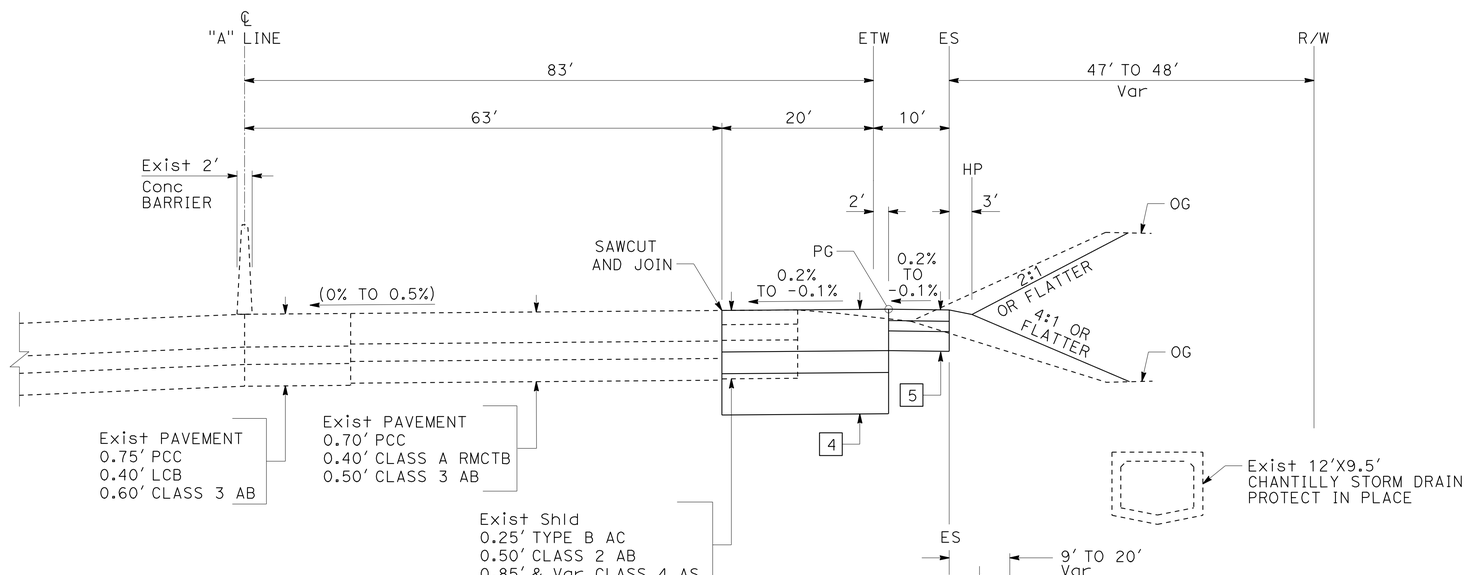


## ROUTE 57 NORTHBOUND

Sta 323+39.64 TO 323+72.45

# TYPICAL CROSS SECTIONS

NO SCALE

X-10

1 REVISED PER ADDENDUM No. 1 DATED AUGUST 22, 2011

STATE OF CALIFORNIA - DEPARTMENT OF TRANSPORTATION

Caltrans

CONSULTANT FUNCTIONAL SUPERVISOR: R. SCOTT BACSIKIN

CALCULATED-DESIGNED BY: SHIVA BOUSTANI

CHECKED BY: LIEM A. NGUYEN

REVISED BY

DATE REVISED

LAST REVISION 10-12-10 | DATE PLOTTED => 19-AUG-2011 | TIME PLOTTED => 15:42

| Dist | COUNTY | ROUTE | POST MILES TOTAL PROJECT | SHEET No. | TOTAL SHEETS |
|---|---|---|---|---|---|
| 12 | Ora | 57 | 12.2/15.2 | 12 | 527 |

REGISTERED CIVIL ENGINEER 11/15/10 DATE

4-18-11
PLANS APPROVAL DATE

REGISTERED PROFESSIONAL ENGINEER R.SCOTT BACSIKIN No. C 48774 Exp. 9-30-12 CIVIL STATE OF CALIFORNIA

*THE STATE OF CALIFORNIA OR ITS OFFICERS OR AGENTS SHALL NOT BE RESPONSIBLE FOR THE ACCURACY OR COMPLETENESS OF SCANNED COPIES OF THIS PLAN SHEET.*

HDR ENGINEERING, INC.
3230 EL CAMINO REAL
SUITE 200
IRVINE, CA 92602-1377

OCTA
550 SOUTH MAIN STREET
P.O. BOX 14184
ORANGE, CA 92863-1584

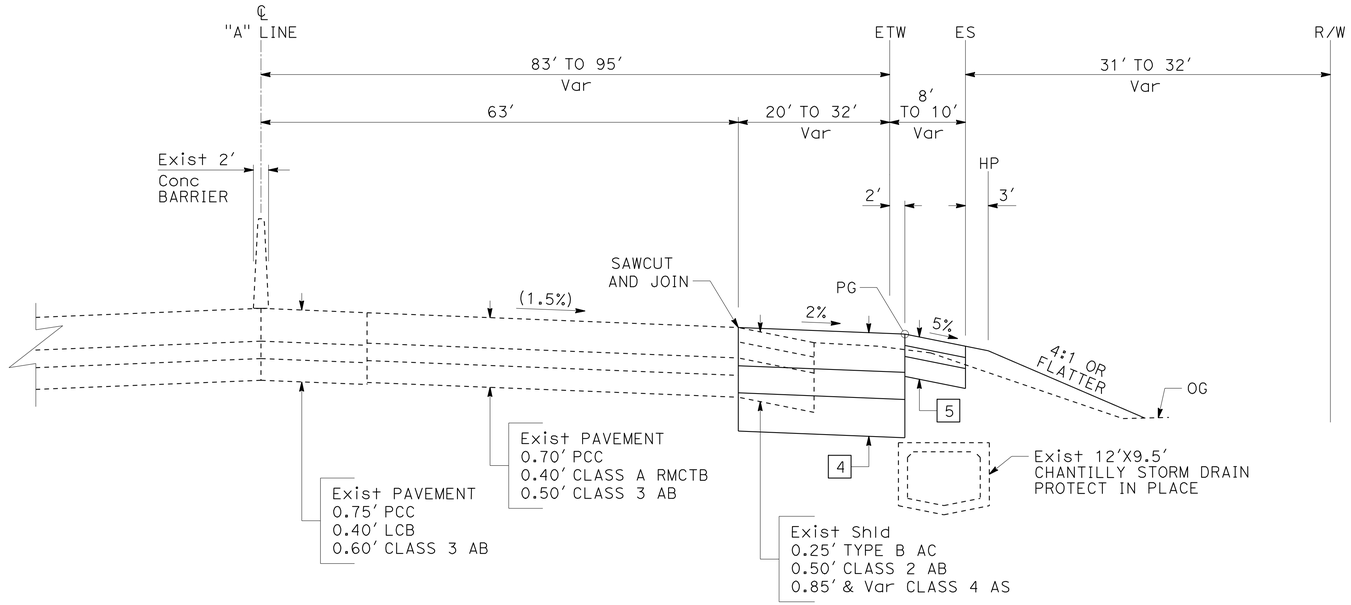


## ROUTE 57 NORTHBOUND

Sta 332+00.00 TO 335+58.14

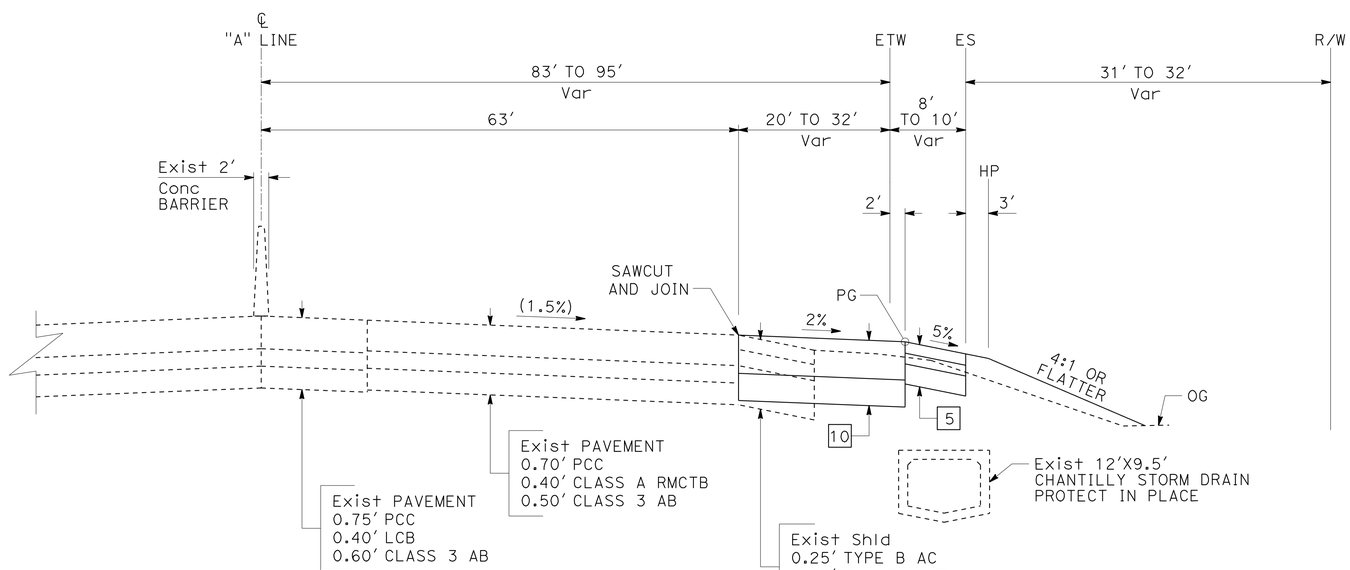


## ROUTE 57 NORTHBOUND

Sta 329+58.00 TO 332+00.00

1 **REVISED PER ADDENDUM No. 1 DATED AUGUST 22, 2011**

# TYPICAL CROSS SECTIONS

NO SCALE

**X-11**

STATE OF CALIFORNIA - DEPARTMENT OF TRANSPORTATION
Caltrans

CONSULTANT FUNCTIONAL SUPERVISOR: R. SCOTT BACSIKIN
CALCULATED-DESIGNED BY: SHIVA BOUSTANI
CHECKED BY: LIEM A. NGUYEN
REVISED BY
DATE REVISED

LAST REVISION 10-12-10 | DATE PLOTTED => 19-AUG-2011 | TIME PLOTTED => 15:42

| Dist | COUNTY | ROUTE | POST MILES TOTAL PROJECT | SHEET No. | TOTAL SHEETS |
|---|---|---|---|---|---|
| 12 | Ora | 57 | 12.2/15.2 | 13 | 527 |

REGISTERED CIVIL ENGINEER 11/15/10 DATE

4-18-11
PLANS APPROVAL DATE

REGISTERED PROFESSIONAL ENGINEER R.SCOTT BACSIKIN No. C 48774 Exp. 9-30-12 CIVIL STATE OF CALIFORNIA

*THE STATE OF CALIFORNIA OR ITS OFFICERS OR AGENTS SHALL NOT BE RESPONSIBLE FOR THE ACCURACY OR COMPLETENESS OF SCANNED COPIES OF THIS PLAN SHEET.*

HDR ENGINEERING, INC.
3230 EL CAMINO REAL
SUITE 200
IRVINE, CA 92602-1377

OCTA
550 SOUTH MAIN STREET
P.O. BOX 14184
ORANGE, CA 92863-1584

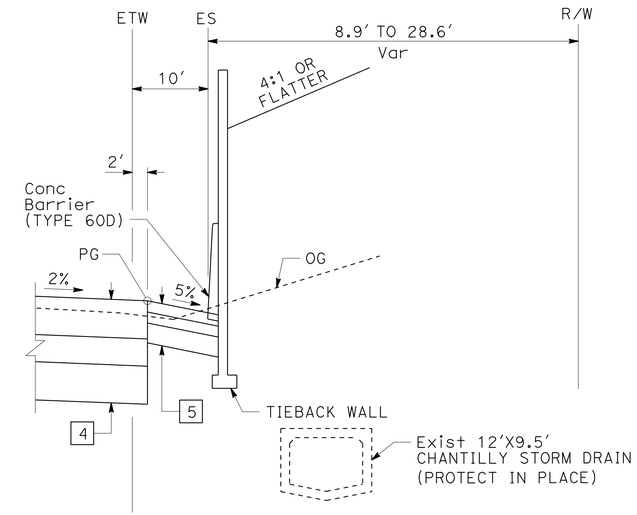


Sta 339+94.40 TO 341+83.41
Sta 366+52.60 TO 368+21.42

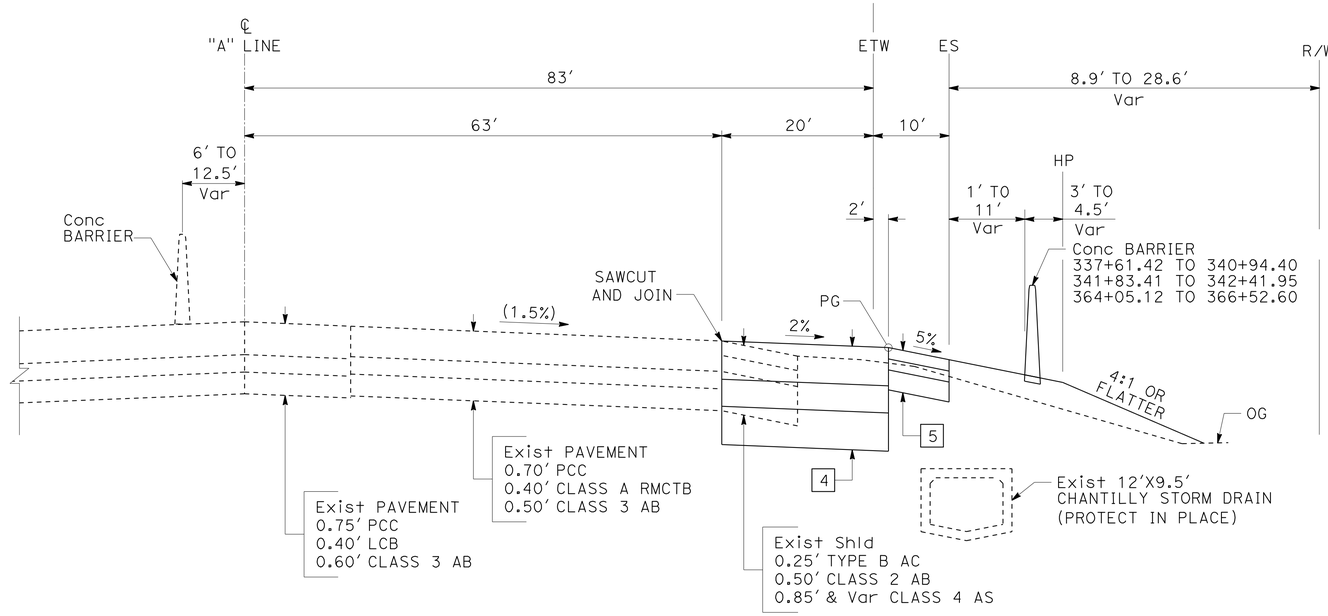


## ROUTE 57 NORTHBOUND

Sta 335+58.14 TO 339+94.40
Sta 341+83.41 TO 366+52.60
Sta 368+21.42 TO 372+58.54

# TYPICAL CROSS SECTIONS

NO SCALE

**1 REVISED PER ADDENDUM No. 1 DATED AUGUST 22, 2011**

**X-12**

STATE OF CALIFORNIA - DEPARTMENT OF TRANSPORTATION
Caltrans

CONSULTANT FUNCTIONAL SUPERVISOR: R. SCOTT BACSIKIN
CALCULATED-DESIGNED BY: SHIVA BOUSTANI
CHECKED BY: LIEM A. NGUYEN
REVISED BY
DATE REVISED

LAST REVISION 10-12-10
DATE PLOTTED => 19-AUG-2011
TIME PLOTTED => 15:42

| Dist | COUNTY | ROUTE | POST MILES TOTAL PROJECT | SHEET No. | TOTAL SHEETS |
|---|---|---|---|---|---|
| 12 | Ora | 57 | 12.2/15.2 | 14 | 527 |

REGISTERED CIVIL ENGINEER 11/15/10 DATE

4-18-11
PLANS APPROVAL DATE

REGISTERED PROFESSIONAL ENGINEER R.SCOTT BACSIKIN No. C 48774 Exp. 9-30-12 CIVIL STATE OF CALIFORNIA

*THE STATE OF CALIFORNIA OR ITS OFFICERS OR AGENTS SHALL NOT BE RESPONSIBLE FOR THE ACCURACY OR COMPLETENESS OF SCANNED COPIES OF THIS PLAN SHEET.*

HDR ENGINEERING, INC.
3230 EL CAMINO REAL
SUITE 200
IRVINE, CA 92602-1377

OCTA
550 SOUTH MAIN STREET
P.O. BOX 14184
ORANGE, CA 92863-1584

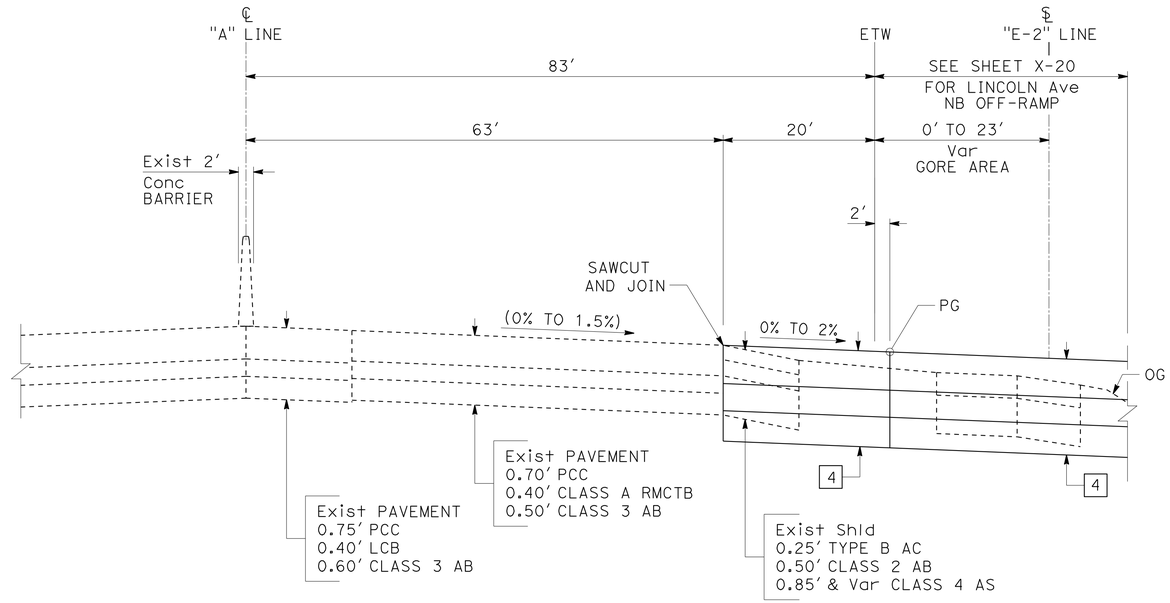


## ROUTE 57 NORTHBOUND

Sta 374+00.00 TO 376+70.00

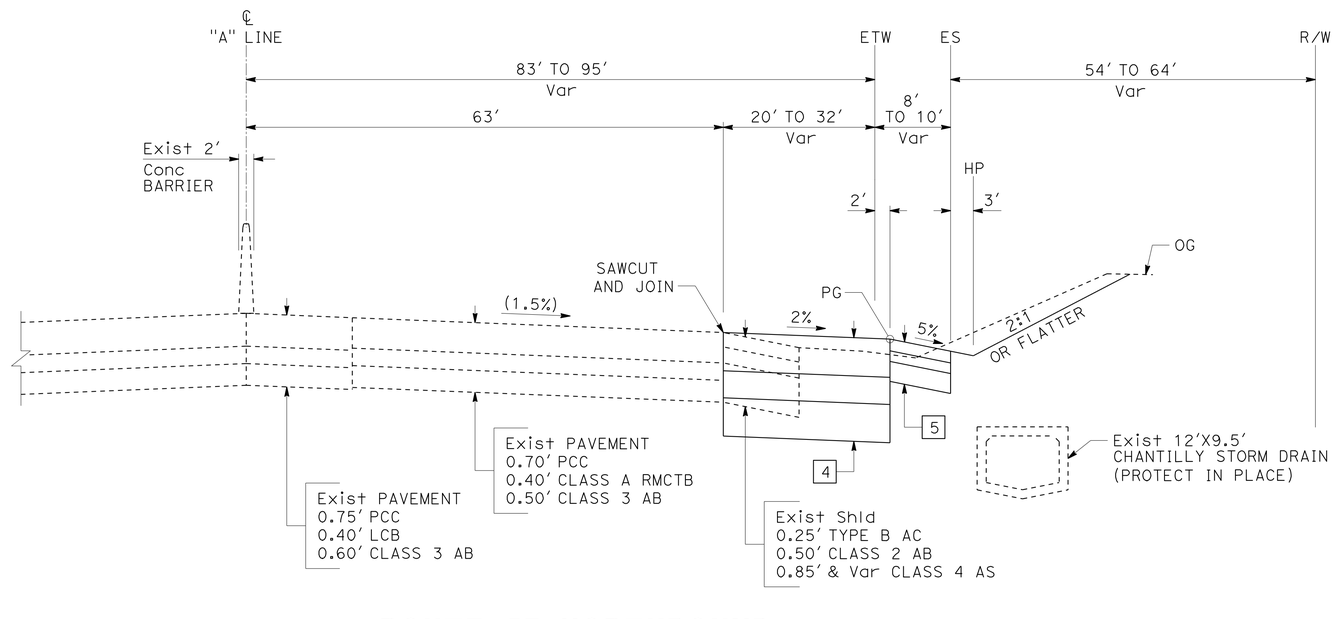


## ROUTE 57 NORTHBOUND

Sta 372+58.54 TO 374+00.00

# TYPICAL CROSS SECTIONS

NO SCALE

1 REVISED PER ADDENDUM No. 1 DATED AUGUST 22, 2011

X-13

STATE OF CALIFORNIA - DEPARTMENT OF TRANSPORTATION
Caltrans

CONSULTANT FUNCTIONAL SUPERVISOR: R. SCOTT BACSIKIN
CALCULATED-DESIGNED BY: SHIVA BOUSTANI
CHECKED BY: LIEM A. NGUYEN
REVISED BY
DATE REVISED

LAST REVISION 10-12-10
DATE PLOTTED => 19-AUG-2011
TIME PLOTTED => 15:42

| Dist | COUNTY | ROUTE | POST MILES TOTAL PROJECT | SHEET No. | TOTAL SHEETS |
|---|---|---|---|---|---|
| 12 | Ora | 57 | 12.2/15.2 | 17 | 527 |

REGISTERED CIVIL ENGINEER 11/15/10 DATE

4-18-11
PLANS APPROVAL DATE

REGISTERED PROFESSIONAL ENGINEER R.SCOTT BACSIKIN No. C 48774 Exp. 9-30-12 CIVIL STATE OF CALIFORNIA

*THE STATE OF CALIFORNIA OR ITS OFFICERS OR AGENTS SHALL NOT BE RESPONSIBLE FOR THE ACCURACY OR COMPLETENESS OF SCANNED COPIES OF THIS PLAN SHEET.*

HDR ENGINEERING, INC.
3230 EL CAMINO REAL
SUITE 200
IRVINE, CA 92602-1377

OCTA
550 SOUTH MAIN STREET
P.O. BOX 14184
ORANGE, CA 92863-1584

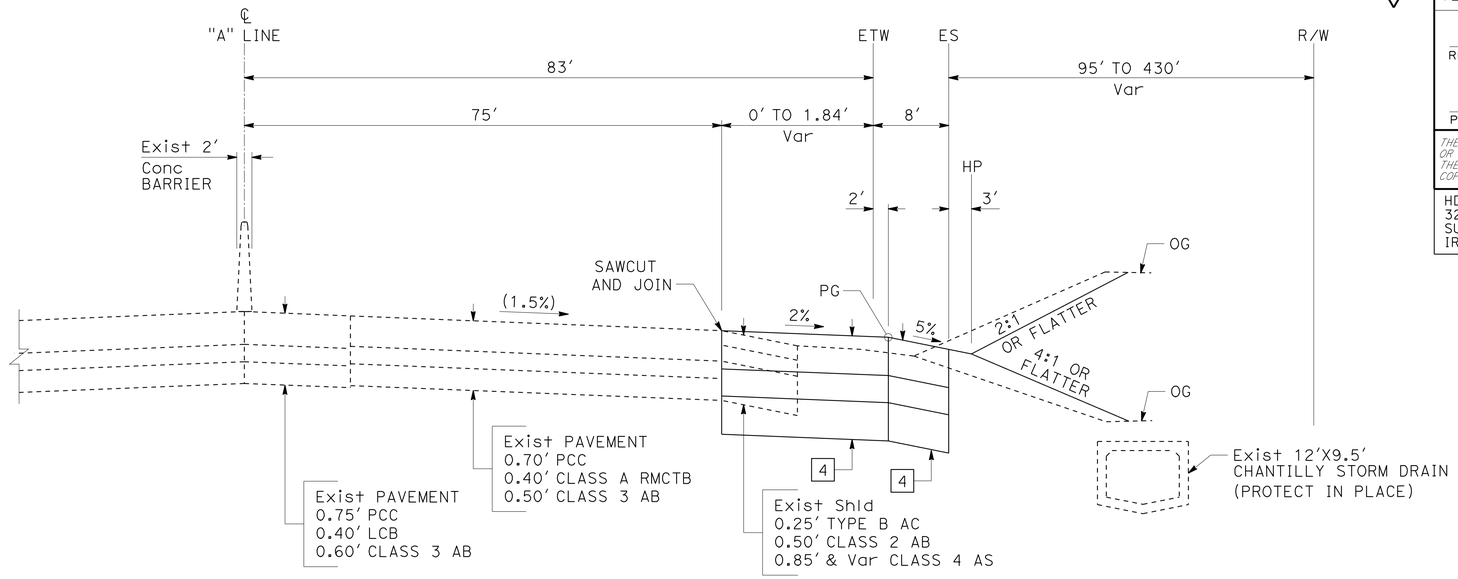


## ROUTE 57 NORTHBOUND

Sta 398+26.00 TO 400+20.00

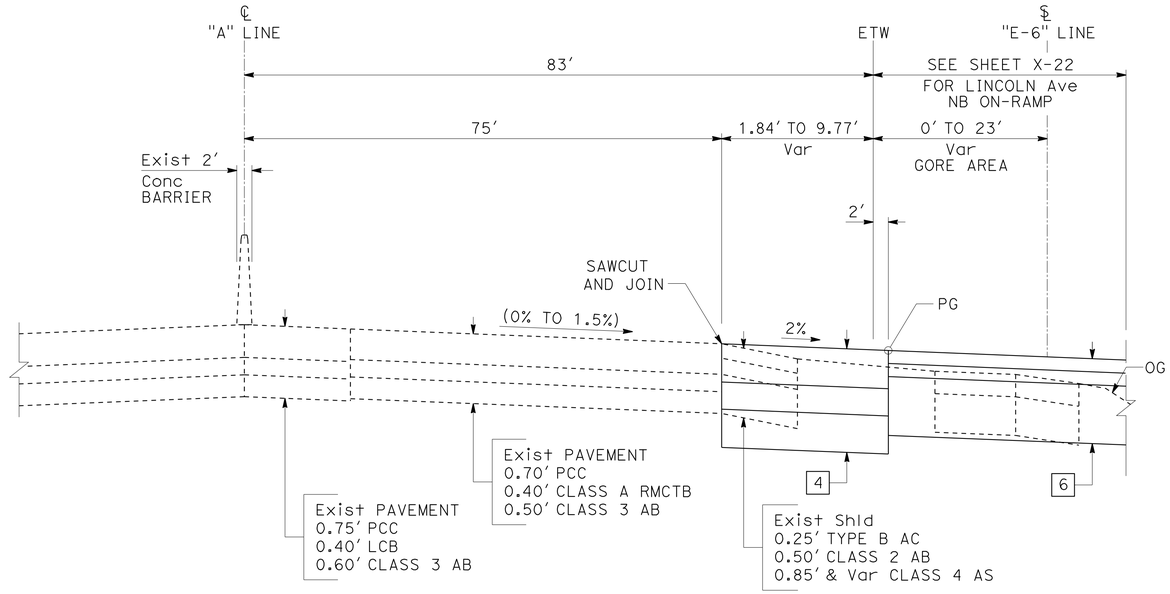


## ROUTE 57 NORTHBOUND

Sta 392+35.39 TO 398+26.00

# TYPICAL CROSS SECTIONS

NO SCALE

1 REVISED PER ADDENDUM No. 1 DATED AUGUST 22, 2011

X-16

STATE OF CALIFORNIA - DEPARTMENT OF TRANSPORTATION
Caltrans

CONSULTANT FUNCTIONAL SUPERVISOR: R. SCOTT BACSIKIN
CALCULATED-DESIGNED BY: SHIVA BOUSTANI
CHECKED BY: LIEM A. NGUYEN
REVISED BY
DATE REVISED

LAST REVISION 10-12-10
DATE PLOTTED => 19-AUG-2011
TIME PLOTTED => 15:42

| Dist | COUNTY | ROUTE | POST MILES TOTAL PROJECT | SHEET No. | TOTAL SHEETS |
|---|---|---|---|---|---|
| 12 | Ora | 57 | 12.2/15.2 | 18 | 527 |

REGISTERED CIVIL ENGINEER 11/15/10 DATE

4-18-11
PLANS APPROVAL DATE

REGISTERED PROFESSIONAL ENGINEER R.SCOTT BACSIKIN No. C 48774 Exp. 9-30-12 CIVIL STATE OF CALIFORNIA

*THE STATE OF CALIFORNIA OR ITS OFFICERS OR AGENTS SHALL NOT BE RESPONSIBLE FOR THE ACCURACY OR COMPLETENESS OF SCANNED COPIES OF THIS PLAN SHEET.*

HDR ENGINEERING, INC.
3230 EL CAMINO REAL
SUITE 200
IRVINE, CA 92602-1377

OCTA
550 SOUTH MAIN STREET
P.O. BOX 14184
ORANGE, CA 92863-1584

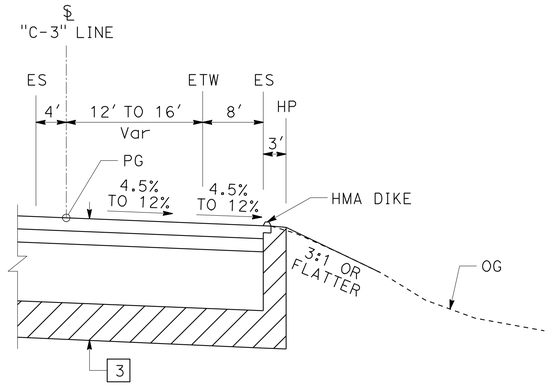


## KATELLA Ave NORTHBOUND LOOP ON-RAMP

Sta 65+89.37 TO 68+01.95

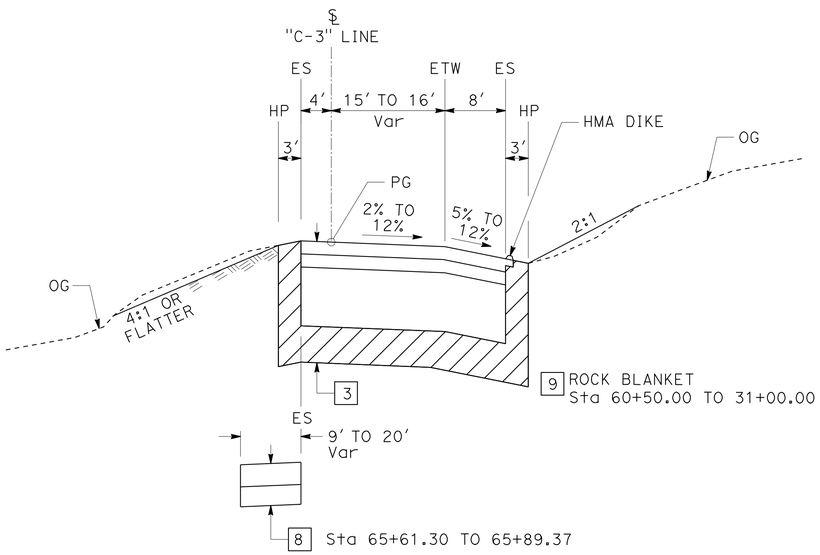


## KATELLA Ave NORTHBOUND LOOP ON-RAMP

Sta 60+13.48 TO 65+89.37

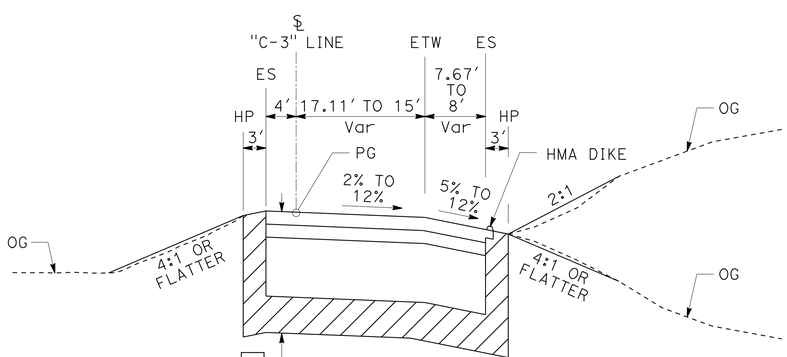


## KATELLA Ave NORTHBOUND LOOP ON-RAMP

Sta 59+20.00 TO 60+13.48

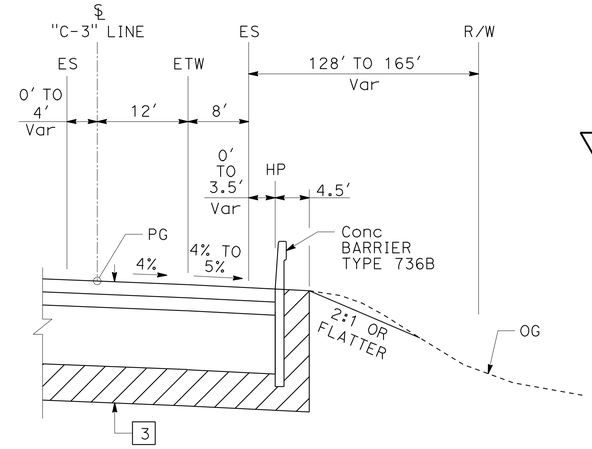


1

## KATELLA Ave NORTHBOUND LOOP ON-RAMP

Sta 70+00.46 TO 71+00.00

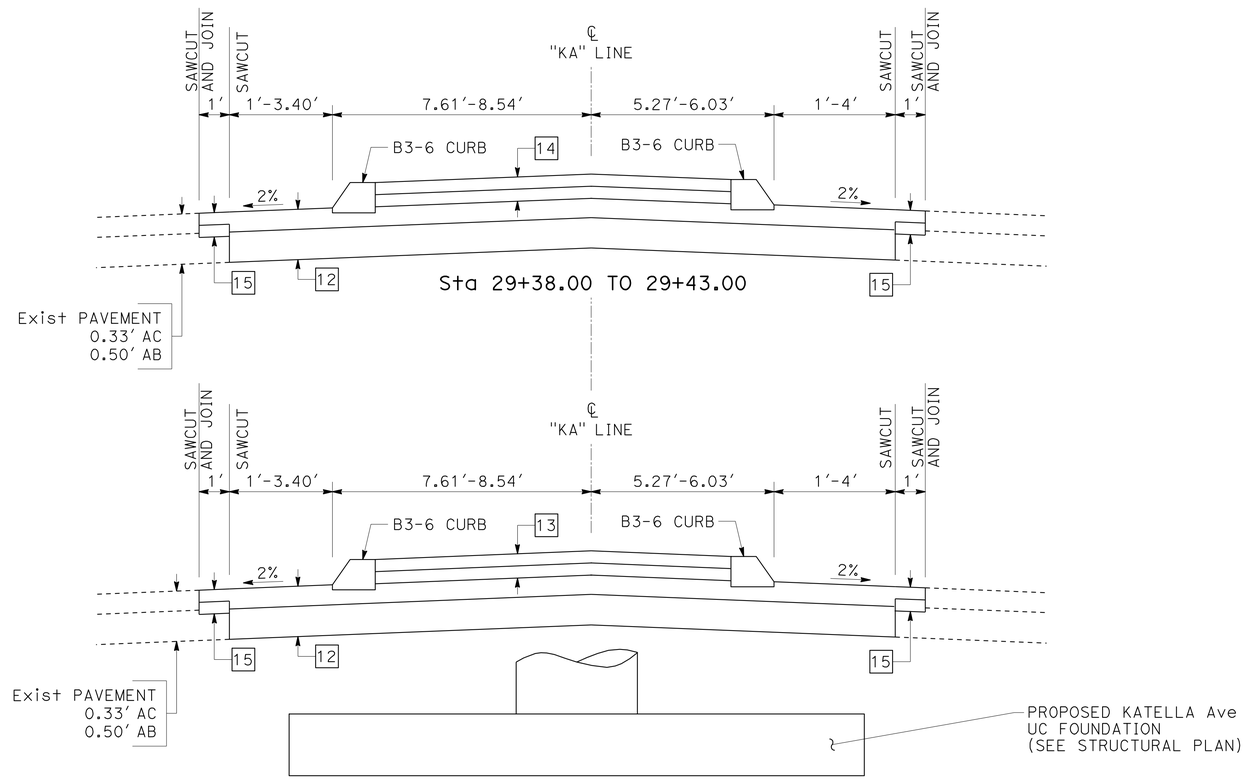


## KATELLA Ave

Sta 29+16.00 TO 29+43.00

1 REVISED PER ADDENDUM No. 1
DATED AUGUST 22, 2011

# TYPICAL CROSS SECTIONS

NO SCALE

X-17

STATE OF CALIFORNIA - DEPARTMENT OF TRANSPORTATION
Caltrans

CONSULTANT FUNCTIONAL SUPERVISOR: R. SCOTT BACSIKIN
CALCULATED-DESIGNED BY: SHIVA BOUSTANI
CHECKED BY: LIEM A. NGUYEN
REVISED BY
DATE REVISED

LAST REVISION 10-12-10
DATE PLOTTED => 19-AUG-2011
TIME PLOTTED => 15:43

| Dist | COUNTY | ROUTE | POST MILES TOTAL PROJECT | SHEET No. | TOTAL SHEETS |
|---|---|---|---|---|---|
| 12 | Ora | 57 | 12.2/15.2 | 21 | 527 |

REGISTERED CIVIL ENGINEER 11/15/10 DATE

4-18-11
PLANS APPROVAL DATE

REGISTERED PROFESSIONAL ENGINEER R.SCOTT BACSIKIN No. C 48774 Exp. 9-30-12 CIVIL STATE OF CALIFORNIA

*THE STATE OF CALIFORNIA OR ITS OFFICERS OR AGENTS SHALL NOT BE RESPONSIBLE FOR THE ACCURACY OR COMPLETENESS OF SCANNED COPIES OF THIS PLAN SHEET.*

HDR ENGINEERING, INC.
3230 EL CAMINO REAL
SUITE 200
IRVINE, CA 92602-1377

OCTA
550 SOUTH MAIN STREET
P.O. BOX 14184
ORANGE, CA 92863-1584

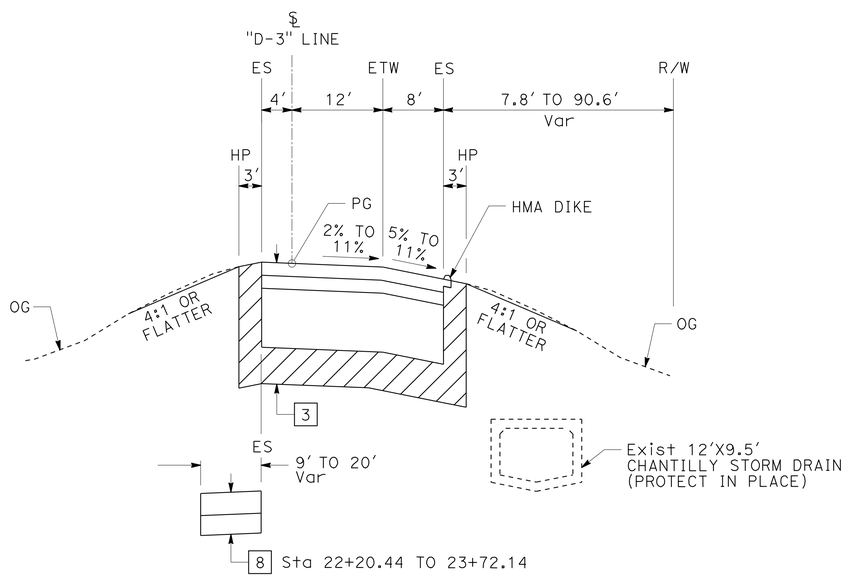


## BALL ROAD NORTHBOUND ON-RAMP

Sta 16+46.39 TO 22+50.00

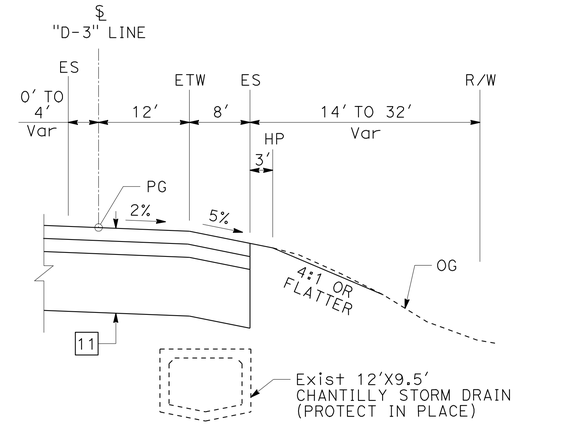


## BALL ROAD NORTHBOUND ON-RAMP

Sta 23+72.14 TO 29+58.00

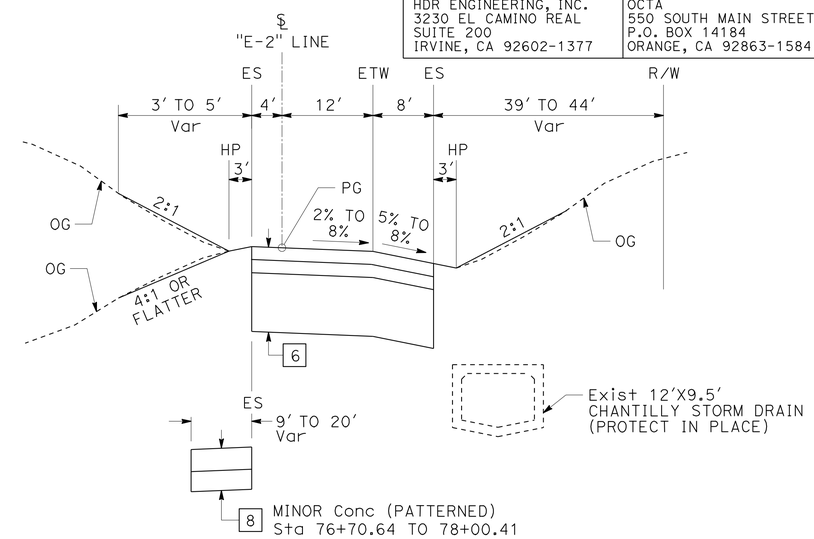


## LINCOLN AVENUE NORTHBOUND OFF-RAMP

Sta 76+70.64 TO 78+57.41

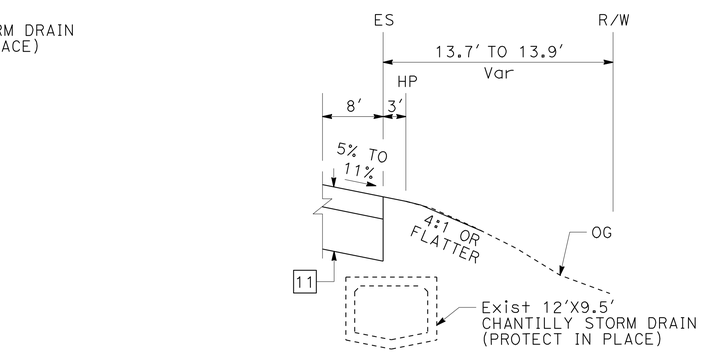


Sta 20+05.00 TO 23+72.14

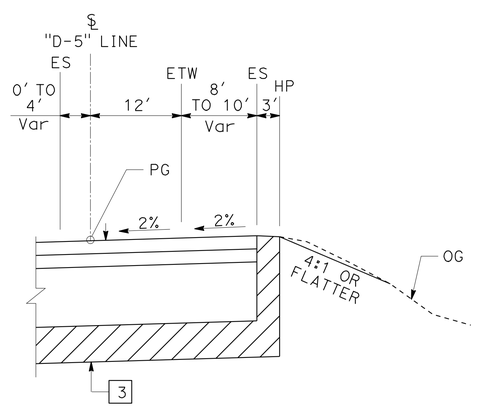


## BALL ROAD NORTHBOUND LOOP ON-RAMP

Sta 15+71.72 TO 17+60.00

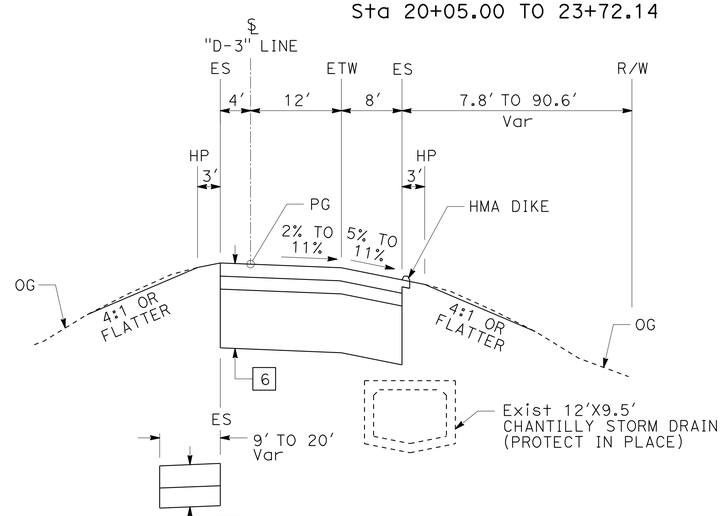


## BALL ROAD NORTHBOUND ON-RAMP

Sta 22+50.00 TO 20+05.00

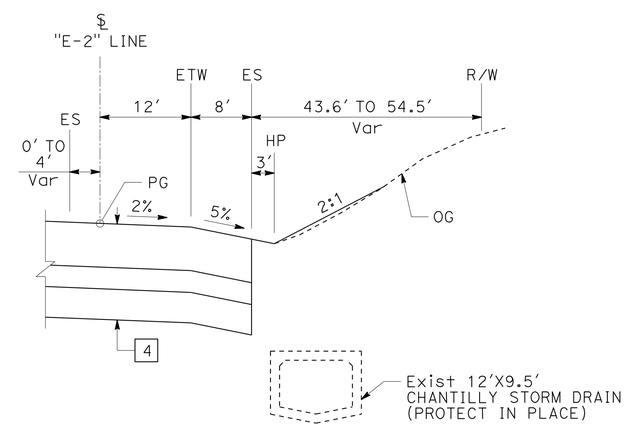


## LINCOLN AVENUE NORTHBOUND OFF-RAMP

Sta 74+00.00 TO 76+70.64

# TYPICAL CROSS SECTIONS

NO SCALE

1 REVISED PER ADDENDUM No. 1 DATED AUGUST 22, 2011

X-20

STATE OF CALIFORNIA - DEPARTMENT OF TRANSPORTATION
Caltrans

CONSULTANT FUNCTIONAL SUPERVISOR: R. SCOTT BACSIKIN
CALCULATED-DESIGNED BY: SHIVA BOUSTANI
CHECKED BY: LIEM A. NGUYEN
REVISED BY
DATE REVISED

LAST REVISION 10-12-10
DATE PLOTTED => 19-AUG-2011
TIME PLOTTED => 15:43

| Dist | COUNTY | ROUTE | POST MILES TOTAL PROJECT | SHEET No. | TOTAL SHEETS |
|---|---|---|---|---|---|
| 12 | Ora | 57 | 12.2/15.2 | 22 | 527 |

REGISTERED CIVIL ENGINEER 11/15/10 DATE

4-18-11
PLANS APPROVAL DATE

REGISTERED PROFESSIONAL ENGINEER R.SCOTT BACSIKIN No. C 48774 Exp. 9-30-12 CIVIL STATE OF CALIFORNIA

*THE STATE OF CALIFORNIA OR ITS OFFICERS OR AGENTS SHALL NOT BE RESPONSIBLE FOR THE ACCURACY OR COMPLETENESS OF SCANNED COPIES OF THIS PLAN SHEET.*

HDR ENGINEERING, INC.
3230 EL CAMINO REAL
SUITE 200
IRVINE, CA 92602-1377

OCTA
550 SOUTH MAIN STREET
P.O. BOX 14184
ORANGE, CA 92863-1584

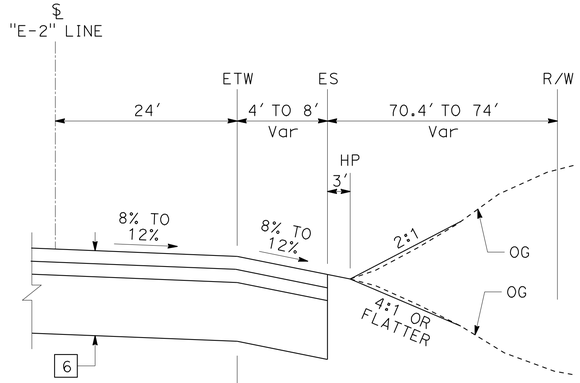


Sta 82+40.21 TO 82+61.36

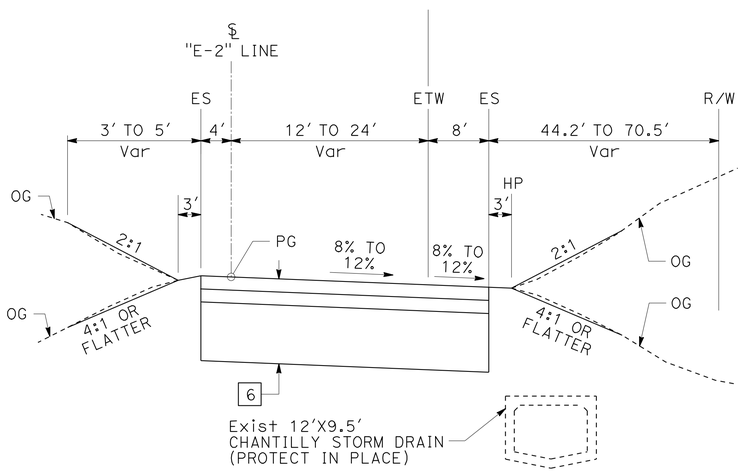


## LINCOLN AVENUE NORTHBOUND OFF-RAMP

Sta 78+57.41 TO 82+61.36

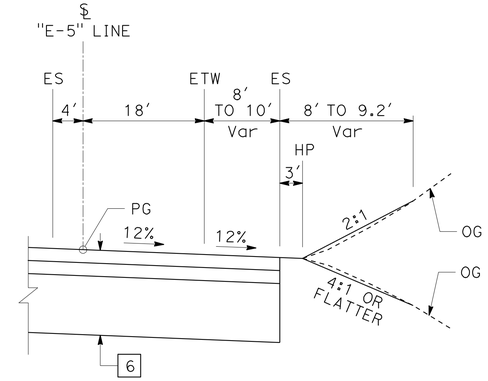


## LINCOLN AVENUE NORTHBOUND LOOP ON-RAMP

Sta 83+12.82 TO 83+52.50

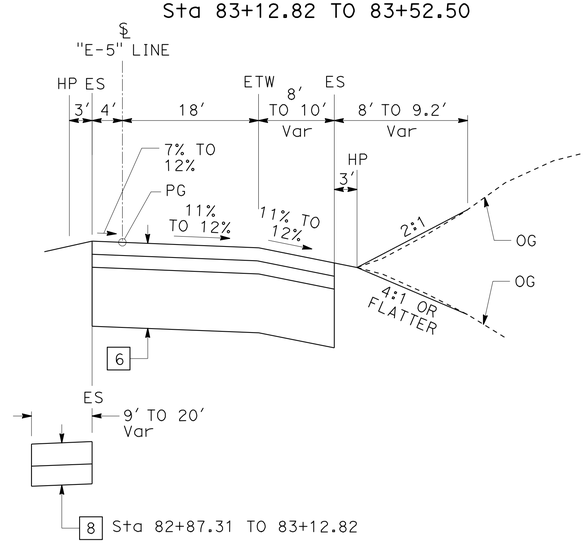


## LINCOLN AVENUE NORTHBOUND LOOP ON-RAMP

Sta 80+00.00 TO 83+12.82

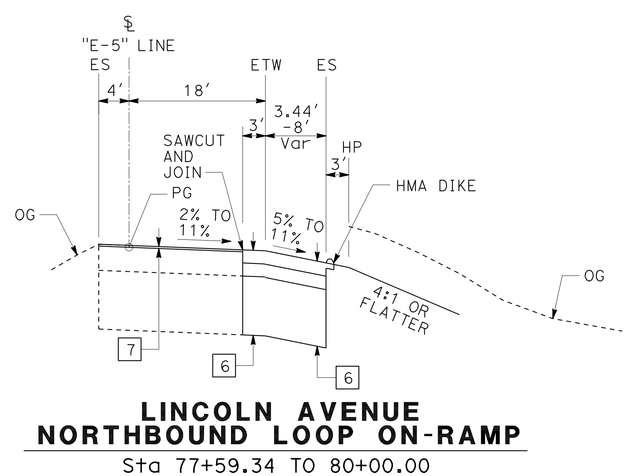


## LINCOLN AVENUE NORTHBOUND LOOP ON-RAMP

Sta 77+59.34 TO 80+00.00

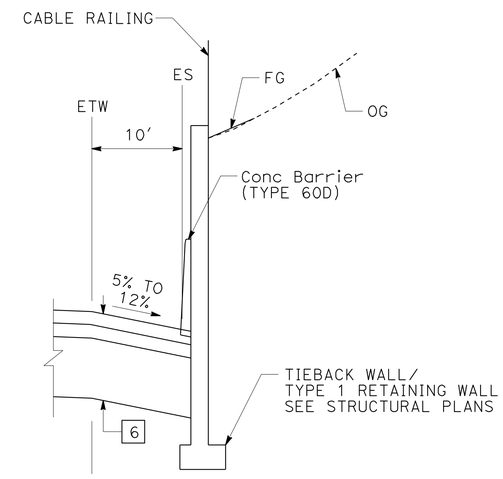


Sta 84+66.77 TO 86+96.37

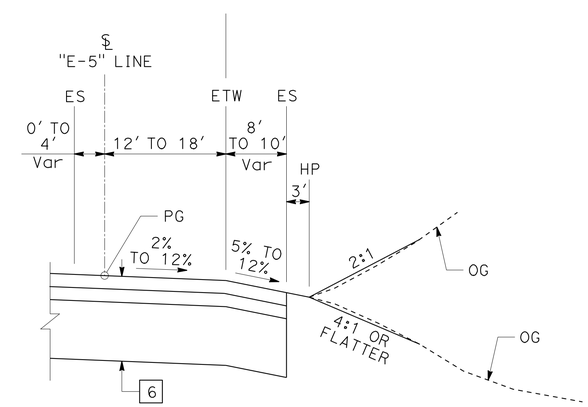


## LINCOLN AVENUE NORTHBOUND LOOP ON-RAMP

Sta 83+52.50 TO 86+96.37

# TYPICAL CROSS SECTIONS

NO SCALE

X-21

1 REVISED PER ADDENDUM No. 1 DATED AUGUST 22, 2011

STATE OF CALIFORNIA - DEPARTMENT OF TRANSPORTATION
Caltrans

CONSULTANT FUNCTIONAL SUPERVISOR: R. SCOTT BACSIKIN
CALCULATED-DESIGNED BY: SHIVA BOUSTANI
CHECKED BY: LIEM A. NGUYEN
REVISED BY
DATE REVISED

LAST REVISION 10-12-10
DATE PLOTTED => 19-AUG-2011
TIME PLOTTED => 15:43

| Dist | COUNTY | ROUTE | POST MILES TOTAL PROJECT | SHEET No. | TOTAL SHEETS |
|---|---|---|---|---|---|
| 12 | Ora | 57 | 12.2/15.2 | 25 | 527 |

REGISTERED CIVIL ENGINEER 11/15/10 DATE

4-18-11
PLANS APPROVAL DATE

REGISTERED PROFESSIONAL ENGINEER R.SCOTT BACSIKIN No. C 48774 Exp. 9-30-12 CIVIL STATE OF CALIFORNIA

*THE STATE OF CALIFORNIA OR ITS OFFICERS OR AGENTS SHALL NOT BE RESPONSIBLE FOR THE ACCURACY OR COMPLETENESS OF SCANNED COPIES OF THIS PLAN SHEET.*

HDR ENGINEERING, INC.
3230 EL CAMINO REAL
SUITE 200
IRVINE, CA 92602-1377

OCTA
550 SOUTH MAIN STREET
P.O. BOX 14184
ORANGE, CA 92863-1584

## NOTES:

1. FOR ACCURATE RIGHT OF WAY DATA, CONTACT RIGHT OF WAY ENGINEERING AT THE DISTRICT OFFICE.

2. CONTRACTOR TO GROUND EACH TEMPORARY AND PERMANENT CL-6 FENDING POST WITH #2 BARE COPPER WIRE, CORED AND ATTACHED TO THE METAL POST.

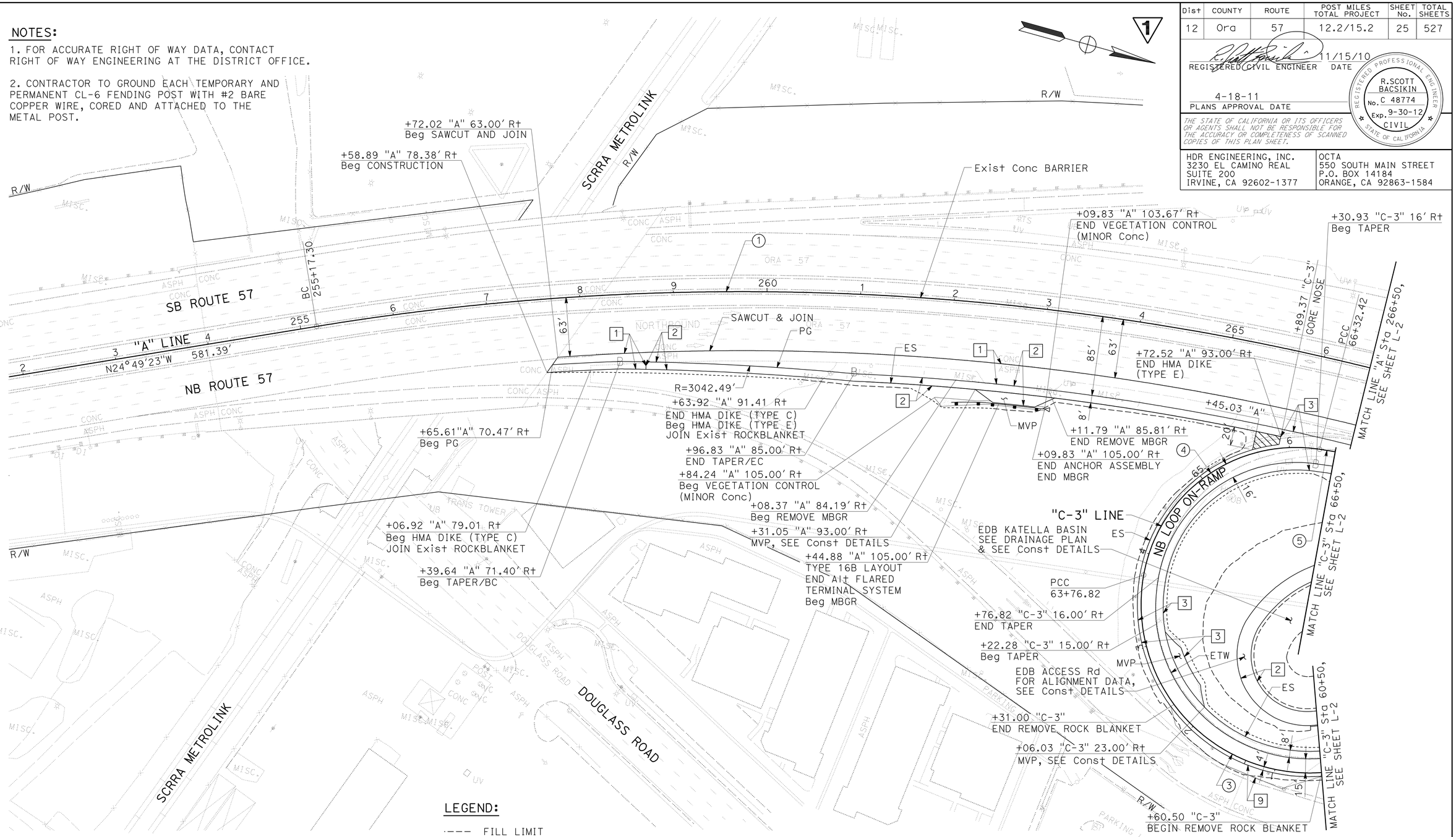


## LEGEND:

- FILL LIMIT
- CUT LIMIT
- MINOR CONCRETE (PATTERNED) SEE STRUCTURAL SECTION [8] TYPICAL CROSS SECTIONS SHEET X-1
- VEGETATION CONTROL (MINOR Conc)
- (X) CURVE DATA NUMBERS
- [X] STRUCTURAL SECTION NUMBERS SEE TYPICAL CROSS SECTIONS SHEET X-1

| CURVE DATA | | | | |
|---|---|---|---|---|
| No. | R | Δ | T | L |
| 1 | 2800.00' | 44°09'53" | 1135.96' | 2158.30' |
| 3 | 180.00' | 167°44'34" | 1676.38' | 526.98' |
| 4 | 165.00' | 88°45'22" | 161.46' | 255.60' |
| 5 | 1417.98' | 06°46'56" | 84.02' | 167.85' |

## ABBREVIATIONS:

CHP CALIFORNIA HIGHWAY PATROL
EDB EXTENDED DETENTION BASIN
MVP MAINTENANCE VEHICLE PULLOUT
POB POINT OF BEGINNING
POE POINT OF ENDING
SW SOUND WALL

**1 REVISED PER ADDENDUM No. 1 DATED AUGUST 22, 2011**

# LAYOUT

SCALE: 1" = 50'

**L-1**

STATE OF CALIFORNIA - DEPARTMENT OF TRANSPORTATION
Caltrans

CONSULTANT FUNCTIONAL SUPERVISOR: R. SCOTT BACSIKIN
CALCULATED-DESIGNED BY: SHIVA BOUSTANI
CHECKED BY: LIEM A. NGUYEN
REVISED BY
DATE REVISED

LAST REVISION 10-12-10 | DATE PLOTTED => 19-AUG-2011 | TIME PLOTTED => 15:43

| Dist | COUNTY | ROUTE | POST MILES TOTAL PROJECT | SHEET No. | TOTAL SHEETS |
|---|---|---|---|---|---|
| 12 | Ora | 57 | 12.2/15.2 | 26 | 527 |

REGISTERED CIVIL ENGINEER 11/15/10 DATE

4-18-11
PLANS APPROVAL DATE

REGISTERED PROFESSIONAL ENGINEER R.SCOTT BACSIKIN No. C 48774 Exp. 9-30-12 CIVIL STATE OF CALIFORNIA

*THE STATE OF CALIFORNIA OR ITS OFFICERS OR AGENTS SHALL NOT BE RESPONSIBLE FOR THE ACCURACY OR COMPLETENESS OF SCANNED COPIES OF THIS PLAN SHEET.*

HDR ENGINEERING, INC.
3230 EL CAMINO REAL
SUITE 200
IRVINE, CA 92602-1377

OCTA
550 SOUTH MAIN STREET
P.O. BOX 14184
ORANGE, CA 92863-1584

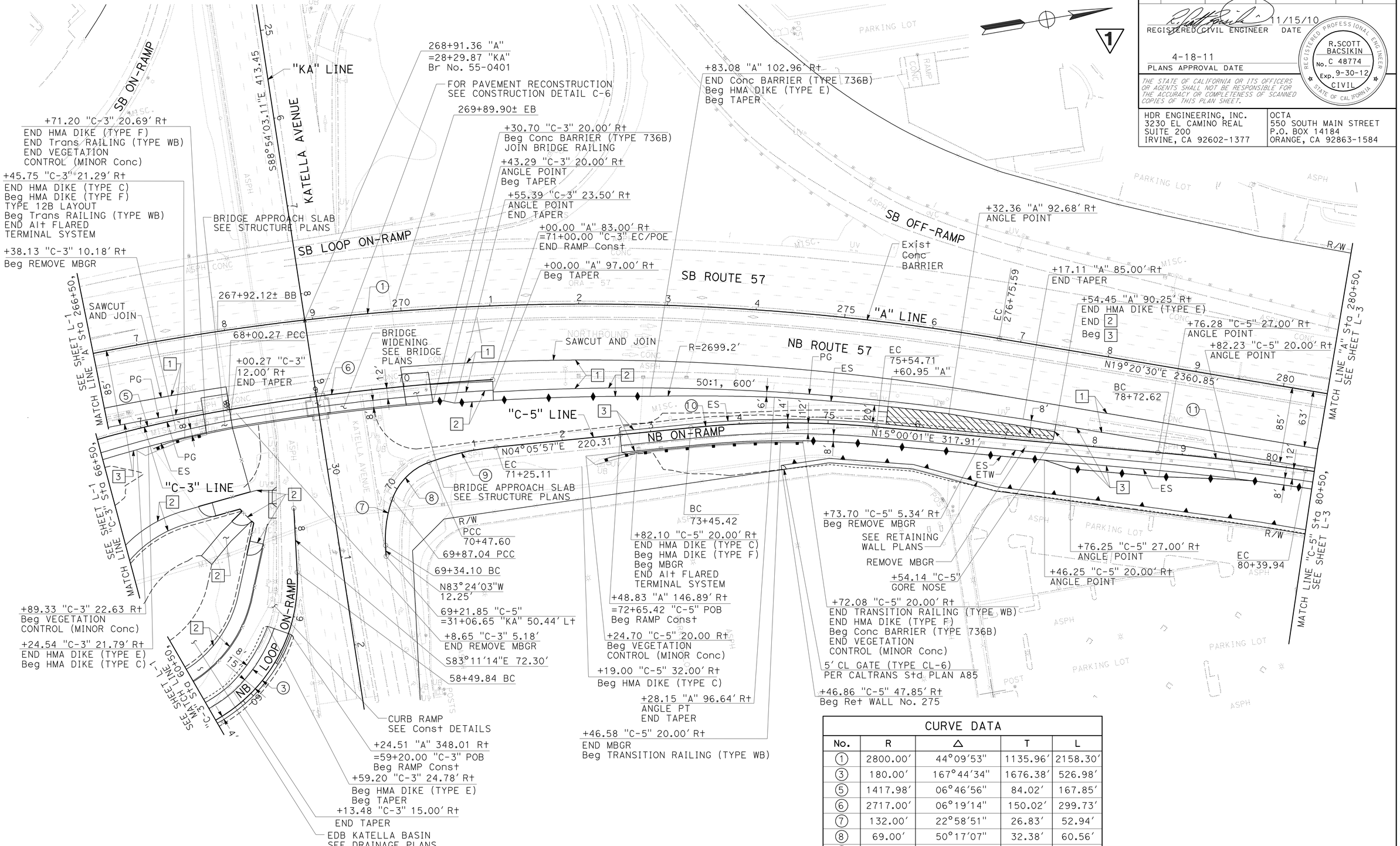


| CURVE DATA | | | | |
|---|---|---|---|---|
| No. | R | Δ | T | L |
| 1 | 2800.00' | 44°09'53" | 1135.96' | 2158.30' |
| 3 | 180.00' | 167°44'34" | 1676.38' | 526.98' |
| 5 | 1417.98' | 06°46'56" | 84.02' | 167.85' |
| 6 | 2717.00' | 06°19'14" | 150.02' | 299.73' |
| 7 | 132.00' | 22°58'51" | 26.83' | 52.94' |
| 8 | 69.00' | 50°17'07" | 32.38' | 60.56' |
| 9 | 312.00' | 14°14'02" | 39.00' | 77.51' |
| 10 | 1100.00' | 10°54'04" | 104.96' | 209.29' |
| 11 | 3000.00' | 03°11'44" | 83.68' | 167.32' |

1 REVISED PER ADDENDUM No. 1 DATED AUGUST 22, 2011

# LAYOUT

SCALE: 1" = 50' **L-2**

| REVISED BY | DATE REVISED |
|---|---|
| SHIVA BOUSTANI | LIEM A. NGUYEN |

CALCULATED-DESIGNED BY | CHECKED BY

CONSULTANT FUNCTIONAL SUPERVISOR: R. SCOTT BACSIKIN

STATE OF CALIFORNIA - DEPARTMENT OF TRANSPORTATION

Caltrans

LAST REVISION | DATE PLOTTED => 19-AUG-2011 | TIME PLOTTED => 15:43

10-12-10

| Dist | COUNTY | ROUTE | POST MILES TOTAL PROJECT | SHEET No. | TOTAL SHEETS |
|---|---|---|---|---|---|
| 12 | Ora | 57 | 12.2/15.2 | 27 | 527 |

REGISTERED CIVIL ENGINEER 3/14/11 DATE

4-18-11
PLANS APPROVAL DATE

REGISTERED PROFESSIONAL ENGINEER R.SCOTT BACSIKIN No. C 48774 Exp. 9-30-12 CIVIL STATE OF CALIFORNIA

*THE STATE OF CALIFORNIA OR ITS OFFICERS OR AGENTS SHALL NOT BE RESPONSIBLE FOR THE ACCURACY OR COMPLETENESS OF SCANNED COPIES OF THIS PLAN SHEET.*

HDR ENGINEERING, INC.
3230 EL CAMINO REAL
SUITE 200
IRVINE, CA 92602-1377

OCTA
550 SOUTH MAIN STREET
P.O. BOX 14184
ORANGE, CA 92863-1584

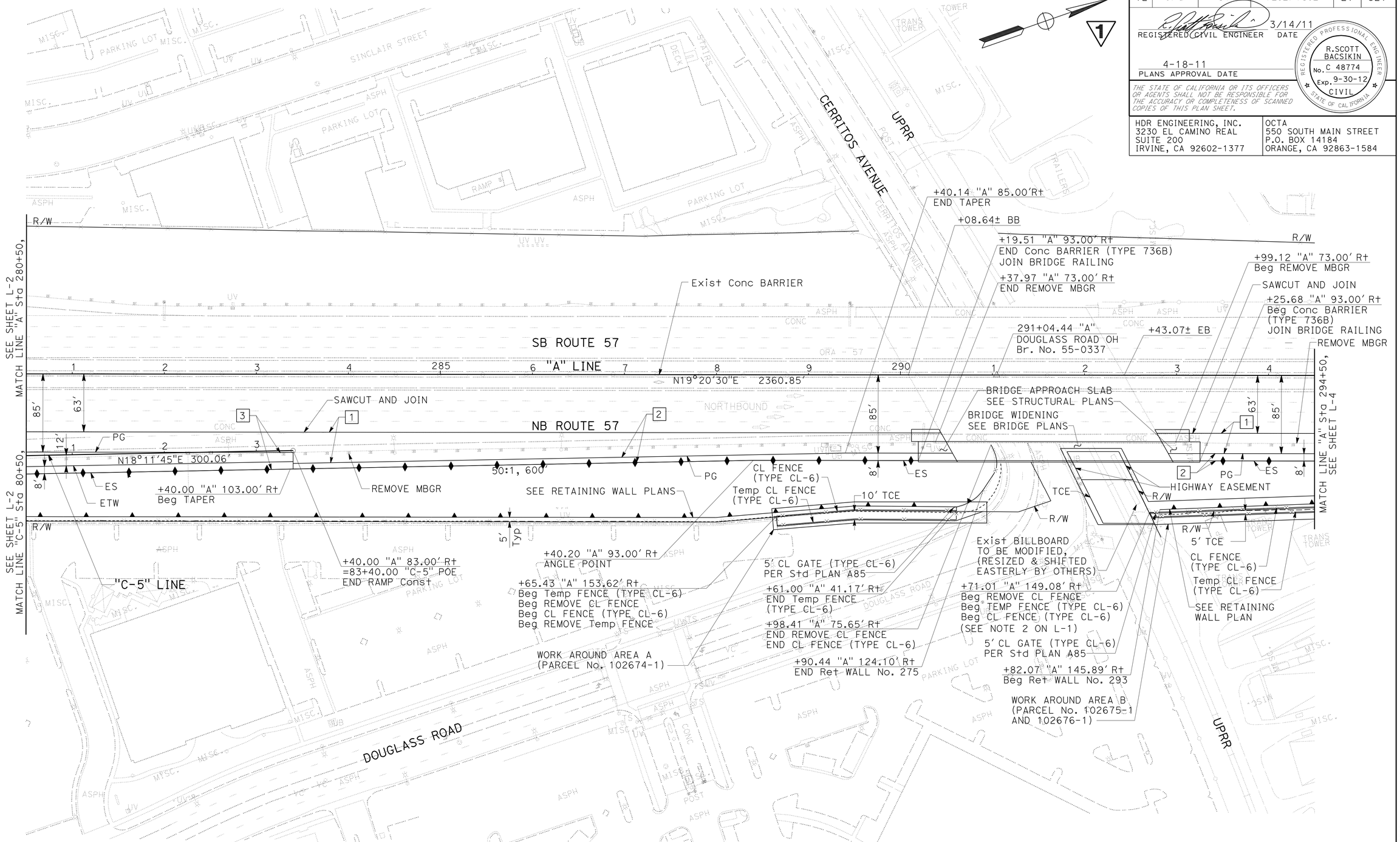


1 REVISED PER ADDENDUM No. 1 DATED AUGUST 22, 2011

# LAYOUT

SCALE: 1" = 50' **L-3**

STATE OF CALIFORNIA - DEPARTMENT OF TRANSPORTATION
Caltrans

CONSULTANT FUNCTIONAL SUPERVISOR: R. SCOTT BACSIKIN

CALCULATED-DESIGNED BY: SHIVA BOUSTANI
CHECKED BY: LIEM A. NGUYEN

REVISED BY
DATE REVISED

LAST REVISION 3-14-11
DATE PLOTTED => 19-AUG-2011
TIME PLOTTED => 15:43

| Dist | COUNTY | ROUTE | POST MILES TOTAL PROJECT | SHEET No. | TOTAL SHEETS |
|---|---|---|---|---|---|
| 12 | Ora | 57 | 12.2/15.2 | 28 | 527 |

REGISTERED CIVIL ENGINEER 3/14/14 DATE

4-18-11
PLANS APPROVAL DATE

REGISTERED PROFESSIONAL ENGINEER R.SCOTT BACSIKIN No. C 48774 Exp. 9-30-12 CIVIL STATE OF CALIFORNIA

*THE STATE OF CALIFORNIA OR ITS OFFICERS OR AGENTS SHALL NOT BE RESPONSIBLE FOR THE ACCURACY OR COMPLETENESS OF SCANNED COPIES OF THIS PLAN SHEET.*

HDR ENGINEERING, INC.
3230 EL CAMINO REAL
SUITE 200
IRVINE, CA 92602-1377

OCTA
550 SOUTH MAIN STREET
P.O. BOX 14184
ORANGE, CA 92863-1584

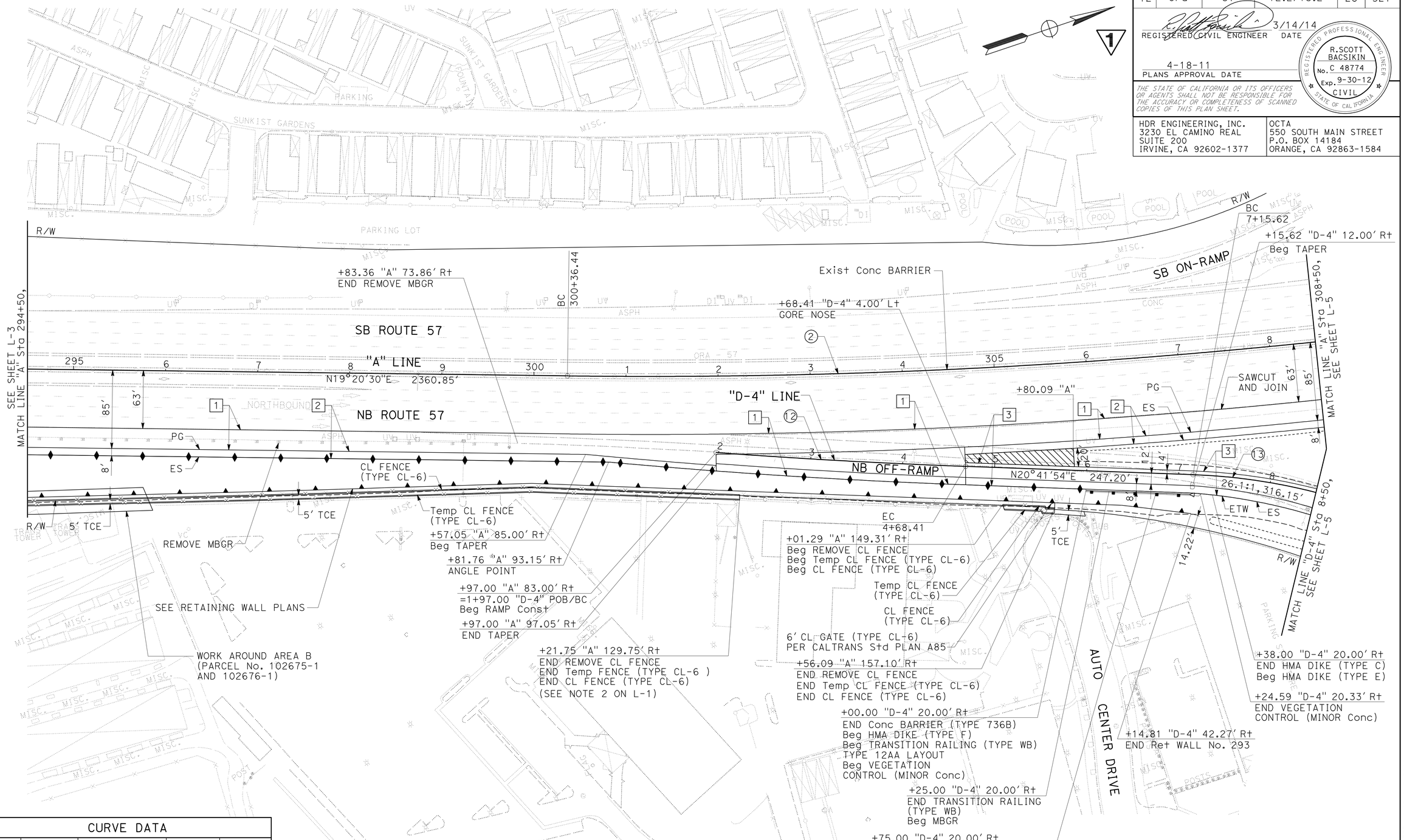


| CURVE DATA | | | | |
|---|---|---|---|---|
| No. | R | Δ | T | L |
| 2 | 7000.00' | 18°18'48" | 1128.32' | 2237.40' |
| 12 | 7083.00' | 02°11'44" | 135.72' | 271.41' |
| 13 | 630.00' | 29°37'23" | 166.59' | 325.72' |

1 **REVISED PER ADDENDUM No. 1 DATED AUGUST 22, 2011**

# LAYOUT

SCALE: 1" = 50' **L-4**

STATE OF CALIFORNIA - DEPARTMENT OF TRANSPORTATION
Caltrans

CONSULTANT FUNCTIONAL SUPERVISOR: R. SCOTT BACSIKIN

CALCULATED-DESIGNED BY: SHIVA BOUSTANI
CHECKED BY: LIEM A. NGUYEN

REVISED BY
DATE REVISED

LAST REVISION 3-14-11
DATE PLOTTED => 19-AUG-2011
TIME PLOTTED => 15:43

| Dist | COUNTY | ROUTE | POST MILES TOTAL PROJECT | SHEET No. | TOTAL SHEETS |
|---|---|---|---|---|---|
| 12 | Ora | 57 | 12.2/15.2 | 29 | 527 |

REGISTERED CIVIL ENGINEER 11/15/10 DATE

4-18-11
PLANS APPROVAL DATE

REGISTERED PROFESSIONAL ENGINEER R.SCOTT BACSKIN No. C 48774 Exp. 9-30-12 CIVIL STATE OF CALIFORNIA

*THE STATE OF CALIFORNIA OR ITS OFFICERS OR AGENTS SHALL NOT BE RESPONSIBLE FOR THE ACCURACY OR COMPLETENESS OF SCANNED COPIES OF THIS PLAN SHEET.*

HDR ENGINEERING, INC.
3230 EL CAMINO REAL
SUITE 200
IRVINE, CA 92602-1377

OCTA
550 SOUTH MAIN STREET
P.O. BOX 14184
ORANGE, CA 92863-1584

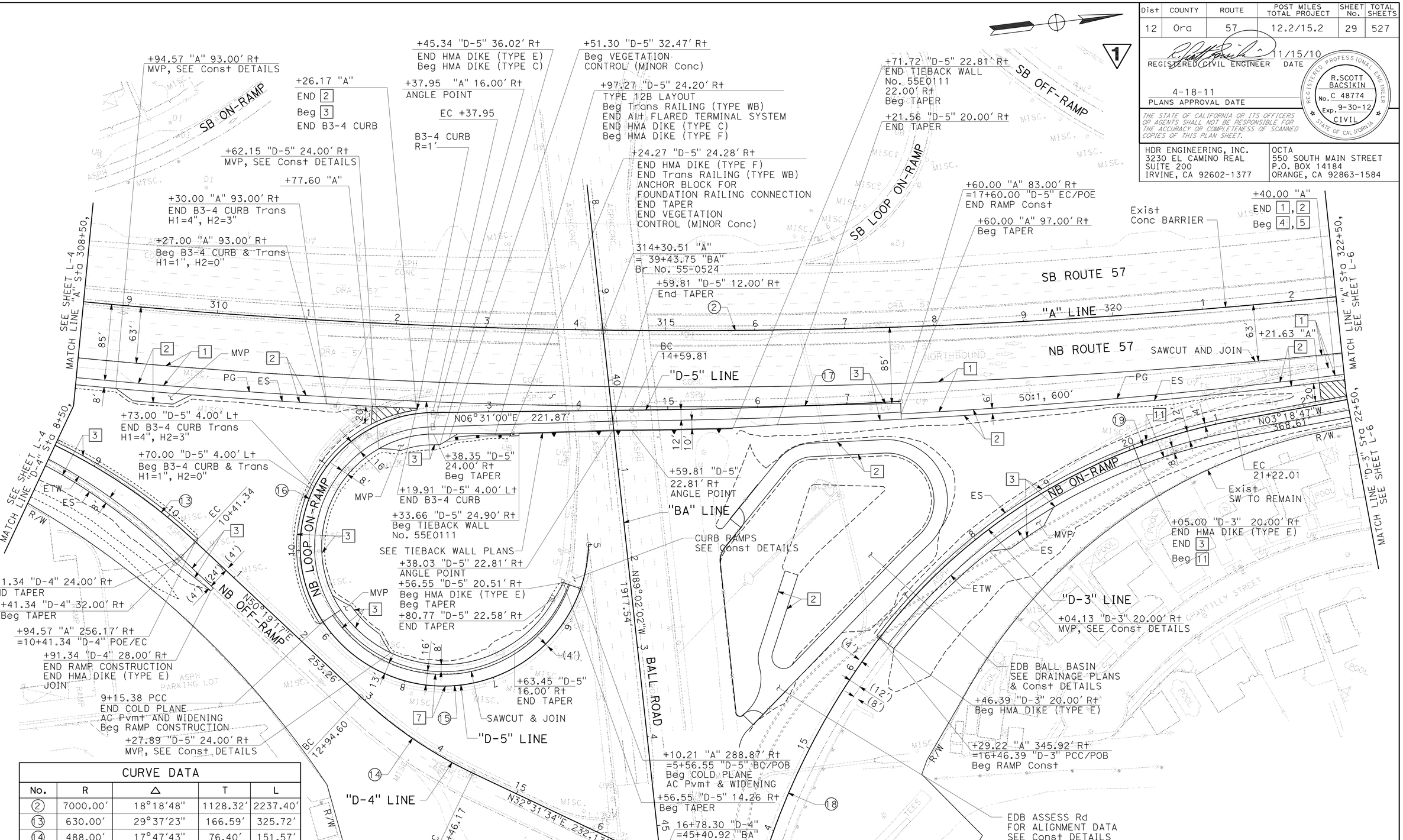


| CURVE DATA | | | | |
|---|---|---|---|---|
| No. | R | Δ | T | L |
| 2 | 7000.00' | 18°18'48" | 1128.32' | 2237.40' |
| 13 | 630.00' | 29°37'23" | 166.59' | 325.72' |
| 14 | 488.00' | 17°47'43" | 76.40' | 151.57' |
| 15 | 162.00' | 144°41'11" | 409.09' | 508.94' |
| 16 | 150.00' | 123°12'32" | 277.47' | 322.56' |
| 17 | 7083.00' | 2°25'42" | 150.12' | 300.19' |
| 18 | 802.00' | 22°41'59" | 160.98' | 317.74' |
| 19 | 650.00' | 41°55'28" | 249.02' | 475.62' |

**LAYOUT**

SCALE: 1" = 50'

1 **REVISED PER ADDENDUM No. 1 DATED AUGUST 22, 2011**

**L-5**

STATE OF CALIFORNIA - DEPARTMENT OF TRANSPORTATION

Caltrans

CONSULTANT FUNCTIONAL SUPERVISOR: R. SCOTT BACSKIN

CALCULATED-DESIGNED BY: SHIVA BOUSTANI

CHECKED BY: LIEM A. NGUYEN

REVISED BY

DATE REVISED

LAST REVISION 10-12-10 | DATE PLOTTED => 19-AUG-2011 | TIME PLOTTED => 15:44

| Dist | COUNTY | ROUTE | POST MILES TOTAL PROJECT | SHEET No. | TOTAL SHEETS |
|---|---|---|---|---|---|
| 12 | Ora | 57 | 12.2/15.2 | 33 | 527 |

REGISTERED CIVIL ENGINEER 11/15/10 DATE

4-18-11
PLANS APPROVAL DATE

REGISTERED PROFESSIONAL ENGINEER R.SCOTT BACSIKIN No. C 48774 Exp. 9-30-12 CIVIL STATE OF CALIFORNIA

*THE STATE OF CALIFORNIA OR ITS OFFICERS OR AGENTS SHALL NOT BE RESPONSIBLE FOR THE ACCURACY OR COMPLETENESS OF SCANNED COPIES OF THIS PLAN SHEET.*

HDR ENGINEERING, INC.
3230 EL CAMINO REAL
SUITE 200
IRVINE, CA 92602-1377

OCTA
550 SOUTH MAIN STREET
P.O. BOX 14184
ORANGE, CA 92863-1584

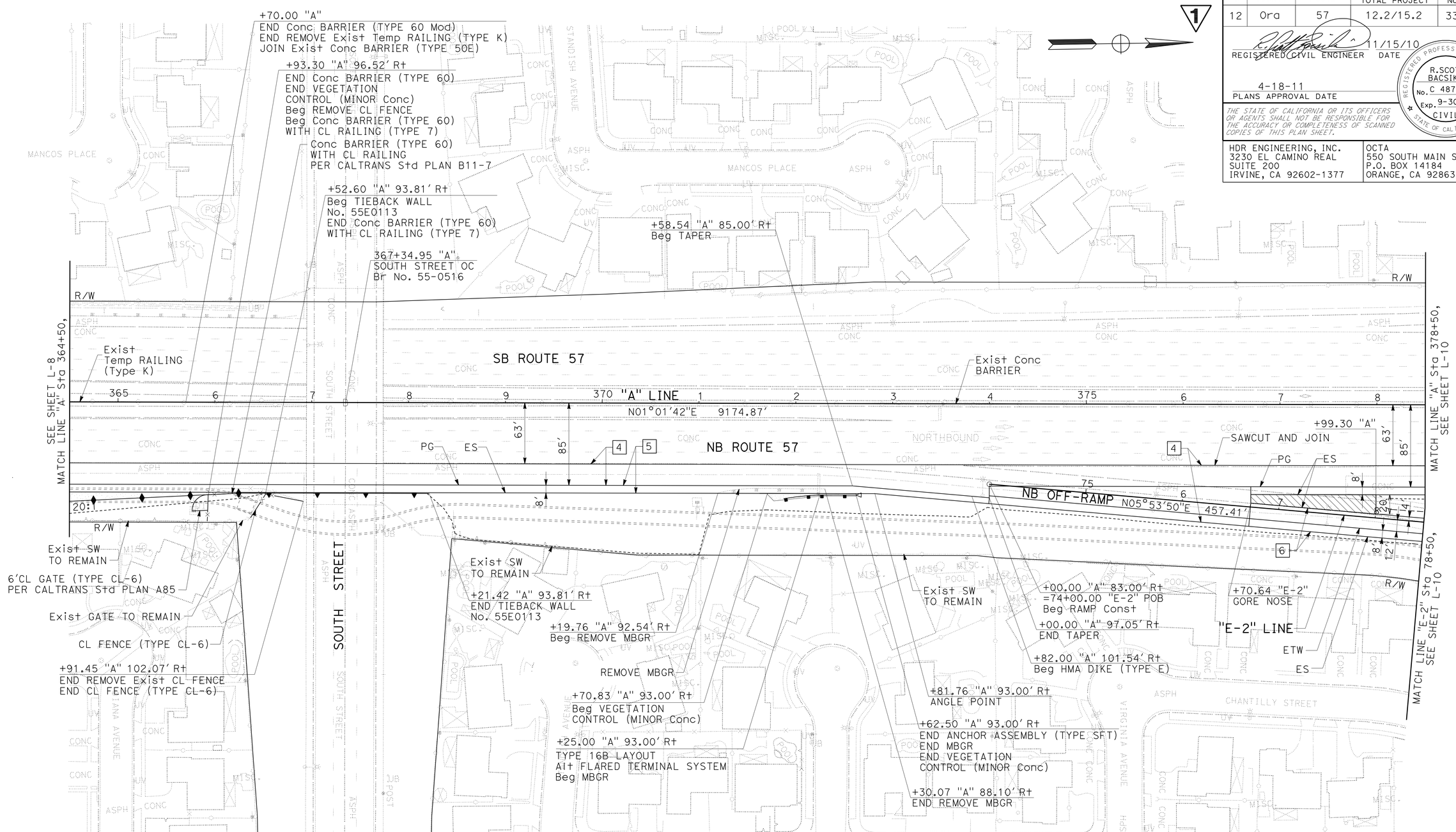


1 **REVISED PER ADDENDUM No. 1 DATED AUGUST 22, 2011**

# LAYOUT

SCALE: 1" = 50' **L-9**

| REVISED BY | DATE REVISED |
|---|---|
| SHIVA BOUSTANI | LIEM A. NGUYEN |

CALCULATED-DESIGNED BY
CHECKED BY

CONSULTANT FUNCTIONAL SUPERVISOR
R. SCOTT BACSIKIN

STATE OF CALIFORNIA - DEPARTMENT OF TRANSPORTATION
Caltrans

LAST REVISION 10-12-10
DATE PLOTTED => 19-AUG-2011
TIME PLOTTED => 15:44

| Dist | COUNTY | ROUTE | POST MILES TOTAL PROJECT | SHEET No. | TOTAL SHEETS |
|---|---|---|---|---|---|
| 12 | Ora | 57 | 12.2/15.2 | 34 | 527 |

REGISTERED CIVIL ENGINEER 11/15/10 DATE

4-18-11
PLANS APPROVAL DATE

REGISTERED PROFESSIONAL ENGINEER R.SCOTT BACSIKIN No. C 48774 Exp. 9-30-12 CIVIL STATE OF CALIFORNIA

*THE STATE OF CALIFORNIA OR ITS OFFICERS OR AGENTS SHALL NOT BE RESPONSIBLE FOR THE ACCURACY OR COMPLETENESS OF SCANNED COPIES OF THIS PLAN SHEET.*

HDR ENGINEERING, INC.
3230 EL CAMINO REAL
SUITE 200
IRVINE, CA 92602-1377

OCTA
550 SOUTH MAIN STREET
P.O. BOX 14184
ORANGE, CA 92863-1584

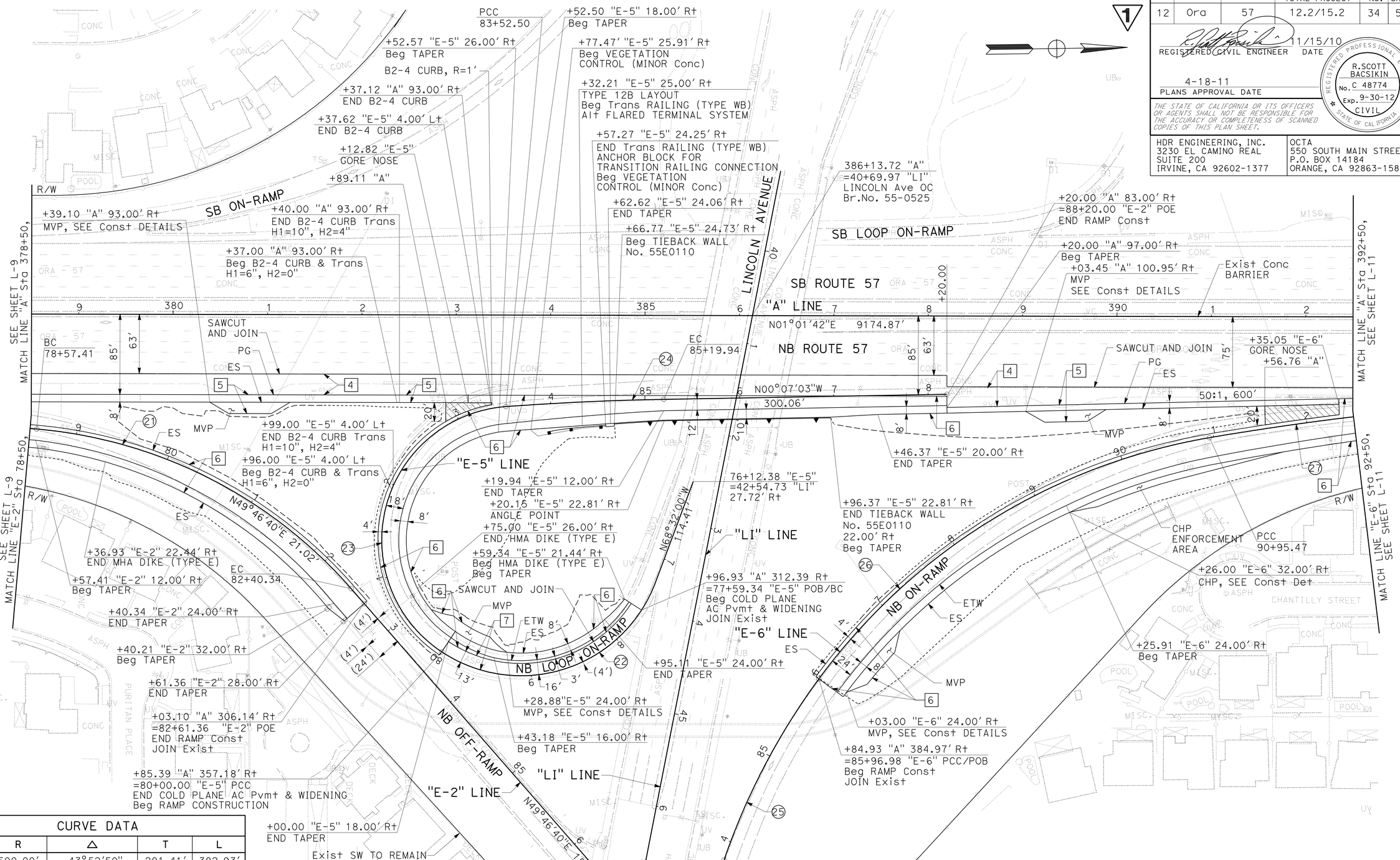


| CURVE DATA | | | | |
|---|---|---|---|---|
| No. | R | Δ | T | L |
| 21 | 500.00' | 43°52'50" | 201.41' | 382.93' |
| 22 | 152.00' | 102°56'47" | 190.91' | 273.11' |
| 23 | 142.00' | 142°16'18" | 415.59' | 352.60' |
| 24 | 3000.00' | 03°11'52" | 83.74' | 167.44' |
| 25 | 716.00' | 17°23'21" | 109.49' | 217.30' |
| 26 | 650.00' | 43°56'26" | 262.22' | 498.49' |
| 27 | 3000.00' | 08°13'17" | 215.61' | 430.47' |

1 REVISED PER ADDENDUM No. 1 DATED AUGUST 22, 2011

# LAYOUT

SCALE: 1" = 50' **L-10**

STATE OF CALIFORNIA - DEPARTMENT OF TRANSPORTATION

Caltrans

CONSULTANT FUNCTIONAL SUPERVISOR: R. SCOTT BACSIKIN

CALCULATED-DESIGNED BY: SHIVA BOUSTANI

CHECKED BY: LIEM A. NGUYEN

REVISED BY

DATE REVISED

LAST REVISION 10-12-10 | DATE PLOTTED => 19-AUG-2011 | TIME PLOTTED => 15:44

| Dist | COUNTY | ROUTE | POST MILES TOTAL PROJECT | SHEET No. | TOTAL SHEETS |
|---|---|---|---|---|---|
| 12 | Ora | 57 | 12.2/15.2 | 35 | 527 |

REGISTERED CIVIL ENGINEER 11/15/10 DATE

4-18-11
PLANS APPROVAL DATE

REGISTERED PROFESSIONAL ENGINEER R.SCOTT BACSIKIN No. C 48774 Exp. 9-30-12 CIVIL STATE OF CALIFORNIA

*THE STATE OF CALIFORNIA OR ITS OFFICERS OR AGENTS SHALL NOT BE RESPONSIBLE FOR THE ACCURACY OR COMPLETENESS OF SCANNED COPIES OF THIS PLAN SHEET.*

HDR ENGINEERING, INC.
3230 EL CAMINO REAL
SUITE 200
IRVINE, CA 92602-1377

OCTA
550 SOUTH MAIN STREET
P.O. BOX 14184
ORANGE, CA 92863-1584

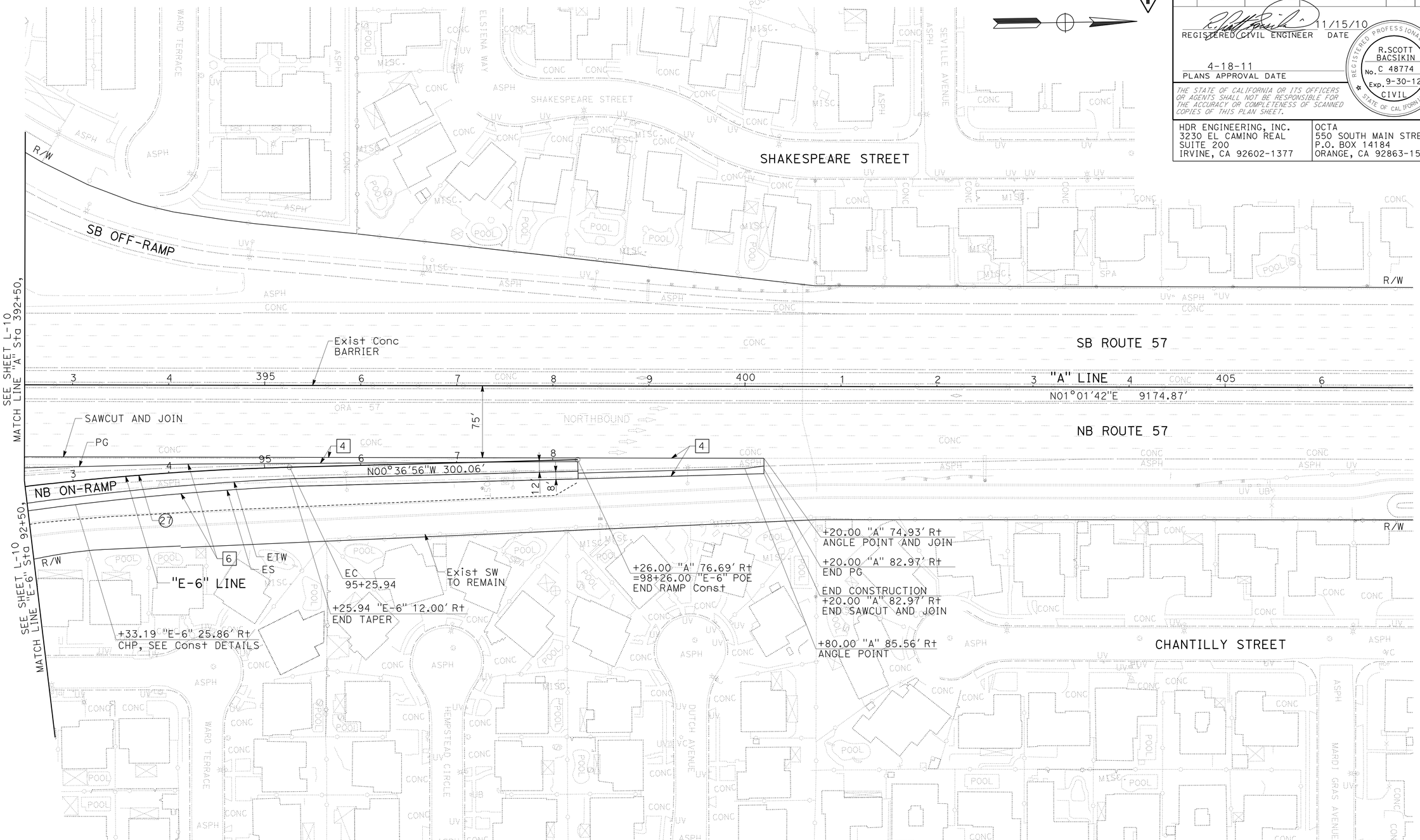


| CURVE DATA | | | | |
|---|---|---|---|---|
| No. | R | Δ | T | L |
| 27 | 3000.00' | 08°13'17" | 215.61' | 430.47' |

1 REVISED PER ADDENDUM No. 1 DATED AUGUST 22, 2011

# LAYOUT

SCALE: 1" = 50'

L-11

| REVISED BY | DATE REVISED |
|---|---|
| SHIVA BOUSTANI | LIEM A. NGUYEN |

CALCULATED-DESIGNED BY
CHECKED BY

CONSULTANT FUNCTIONAL SUPERVISOR
R. SCOTT BACSIKIN

STATE OF CALIFORNIA - DEPARTMENT OF TRANSPORTATION
Caltrans

LAST REVISION 10-12-10
DATE PLOTTED => 19-AUG-2011
TIME PLOTTED => 15:44

| Dist | COUNTY | ROUTE | POST MILES TOTAL PROJECT | SHEET No. | TOTAL SHEETS |
|---|---|---|---|---|---|
| 12 | Ora | 57 | 12.2/15.2 | 37 | 527 |

REGISTERED CIVIL ENGINEER 11/15/10 DATE

4-18-11
PLANS APPROVAL DATE

REGISTERED PROFESSIONAL ENGINEER R.SCOTT BACSIKIN No. C 48774 Exp. 9-30-12 CIVIL STATE OF CALIFORNIA

*THE STATE OF CALIFORNIA OR ITS OFFICERS OR AGENTS SHALL NOT BE RESPONSIBLE FOR THE ACCURACY OR COMPLETENESS OF SCANNED COPIES OF THIS PLAN SHEET.*

HDR ENGINEERING, INC.
3230 EL CAMINO REAL
SUITE 200
IRVINE, CA 92602-1377

OCTA
550 SOUTH MAIN STREET
P.O. BOX 14184
ORANGE, CA 92863-1584

1

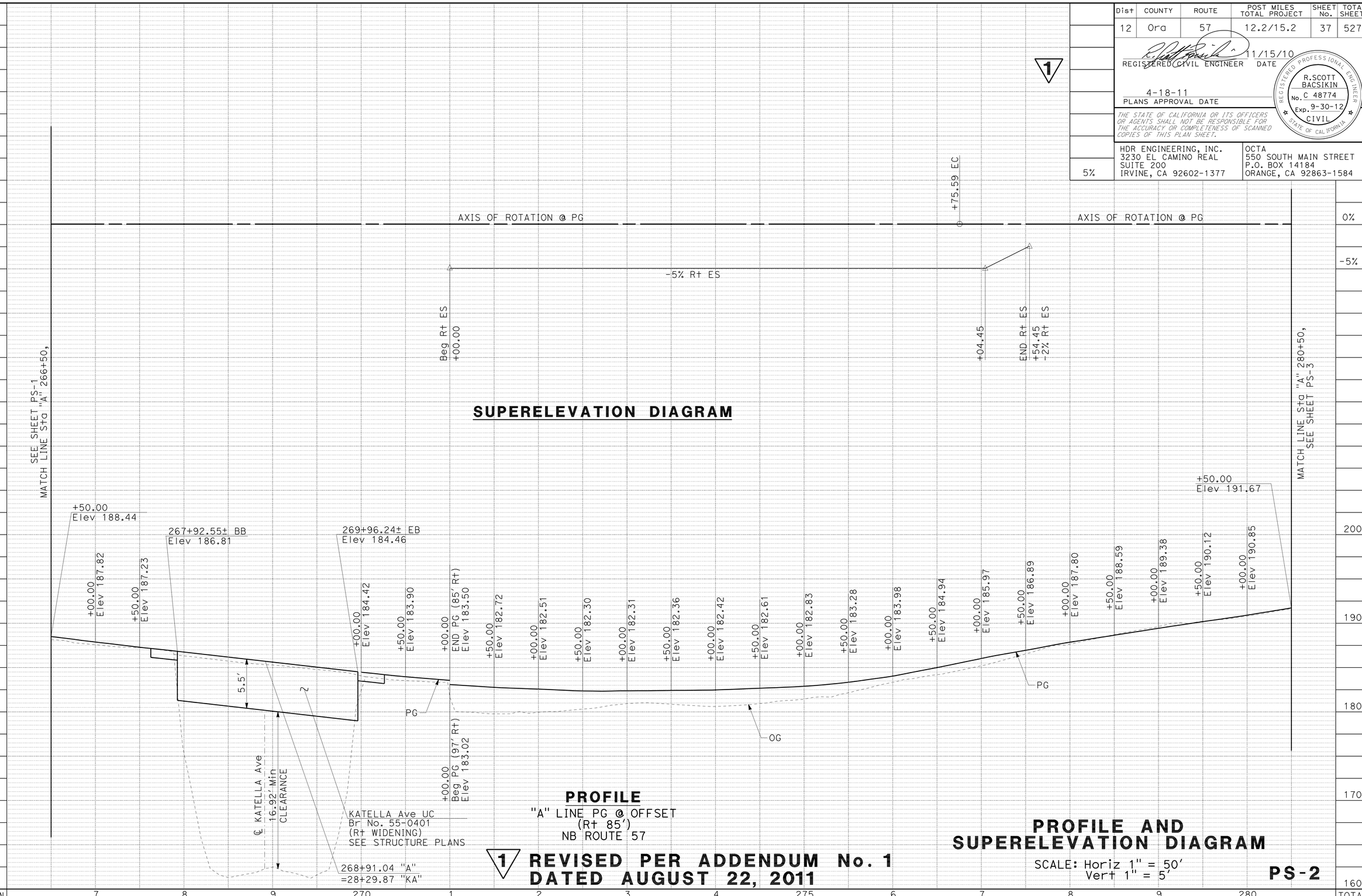


## SUPERELEVATION DIAGRAM

## PROFILE

"A" LINE PG @ OFFSET
(Rt 85')
NB ROUTE 57

1 **REVISED PER ADDENDUM No. 1**
**DATED AUGUST 22, 2011**

## PROFILE AND SUPERELEVATION DIAGRAM

SCALE: Horiz 1" = 50'
Vert 1" = 5'

**PS-2**

REVISED BY | DATE REVISED
SHIVA BOUSTANI | LIEM A. NGUYEN
CALCULATED-DESIGNED BY | CHECKED BY
CONSULTANT FUNCTIONAL SUPERVISOR | R. SCOTT BACSIKIN
STATE OF CALIFORNIA - DEPARTMENT OF TRANSPORTATION
Caltrans

LAST REVISION 10-12-10
DATE PLOTTED => 19-AUG-2011
TIME PLOTTED => 15:44

| Dist | COUNTY | ROUTE | POST MILES TOTAL PROJECT | SHEET No. | TOTAL SHEETS |
|---|---|---|---|---|---|
| 12 | Ora | 57 | 12.2/15.2 | 38 | 527 |

REGISTERED CIVIL ENGINEER 11/15/10 DATE

4-18-11
PLANS APPROVAL DATE

REGISTERED PROFESSIONAL ENGINEER R.SCOTT BACSIKIN No. C 48774 Exp. 9-30-12 CIVIL STATE OF CALIFORNIA

*THE STATE OF CALIFORNIA OR ITS OFFICERS OR AGENTS SHALL NOT BE RESPONSIBLE FOR THE ACCURACY OR COMPLETENESS OF SCANNED COPIES OF THIS PLAN SHEET.*

HDR ENGINEERING, INC.
3230 EL CAMINO REAL
SUITE 200
IRVINE, CA 92602-1377

OCTA
550 SOUTH MAIN STREET
P.O. BOX 14184
ORANGE, CA 92863-1584

1

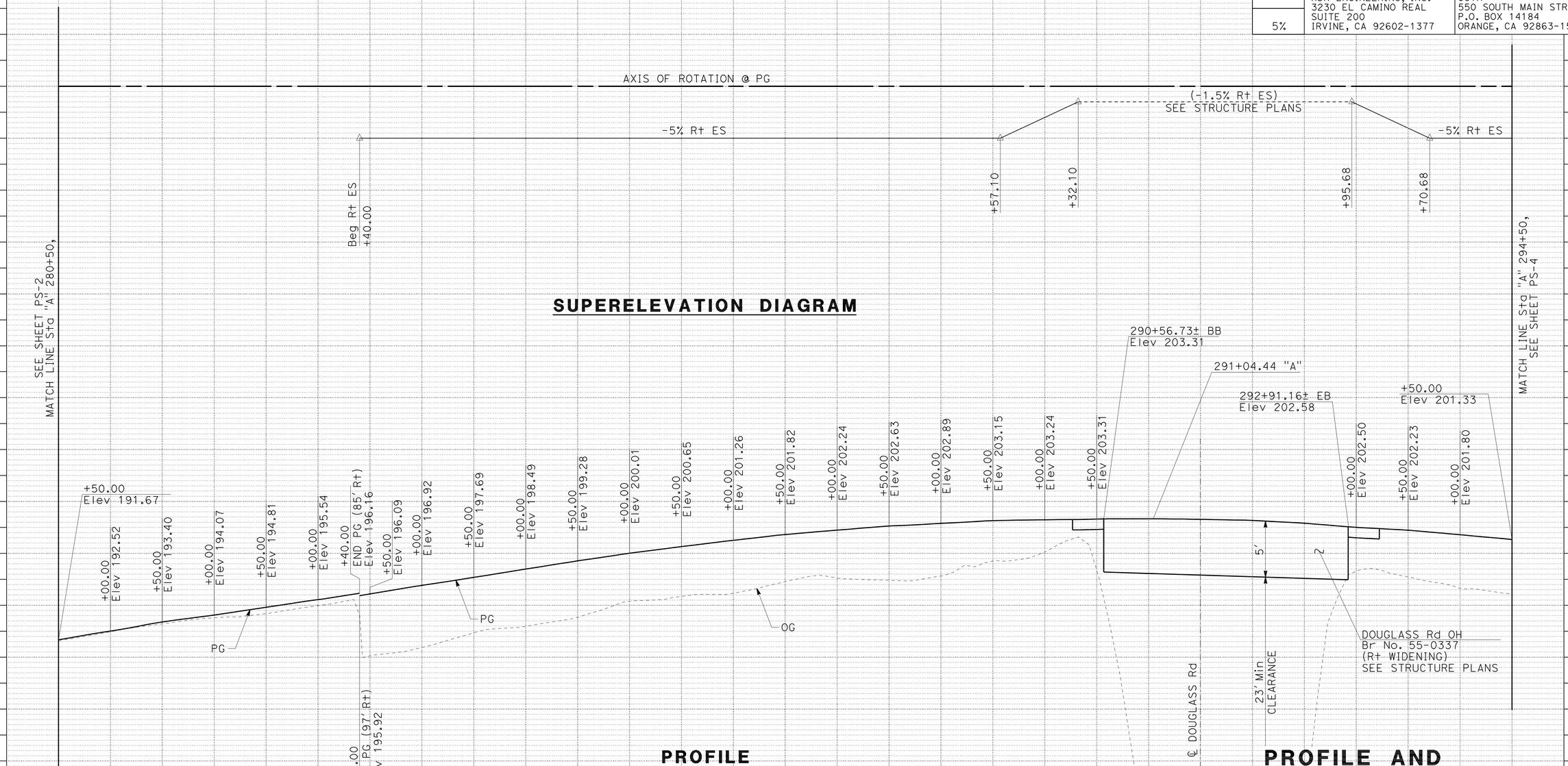


## SUPERELEVATION DIAGRAM

## PROFILE

"A" LINE PG @ Var OFFSET
(Rt 85' TO 97')
NB ROUTE 57

## PROFILE AND SUPERELEVATION DIAGRAM

SCALE: Horiz 1" = 50'
Vert 1" = 5'

1 REVISED PER ADDENDUM No. 1 DATED AUGUST 22, 2011

PS-3

STATE OF CALIFORNIA - DEPARTMENT OF TRANSPORTATION
Caltrans

CONSULTANT FUNCTIONAL SUPERVISOR: R. SCOTT BACSIKIN
CALCULATED-DESIGNED BY: SHIVA BOUSTANI
CHECKED BY: LIEM A. NGUYEN
REVISED BY
DATE REVISED

LAST REVISION DATE PLOTTED => 19-AUG-2011
TIME PLOTTED => 15:44
10-12-10

| Dist | COUNTY | ROUTE | POST MILES TOTAL PROJECT | SHEET No. | TOTAL SHEETS |
|---|---|---|---|---|---|
| 12 | Ora | 57 | 12.2/15.2 | 40 | 527 |

REGISTERED CIVIL ENGINEER 11/15/10 DATE

4-18-11
PLANS APPROVAL DATE

REGISTERED PROFESSIONAL ENGINEER R.SCOTT BACSIKIN No. C 48774 Exp. 9-30-12 CIVIL STATE OF CALIFORNIA

*THE STATE OF CALIFORNIA OR ITS OFFICERS OR AGENTS SHALL NOT BE RESPONSIBLE FOR THE ACCURACY OR COMPLETENESS OF SCANNED COPIES OF THIS PLAN SHEET.*

HDR ENGINEERING, INC.
3230 EL CAMINO REAL
SUITE 200
IRVINE, CA 92602-1377

OCTA
550 SOUTH MAIN STREET
P.O. BOX 14184
ORANGE, CA 92863-1584

1

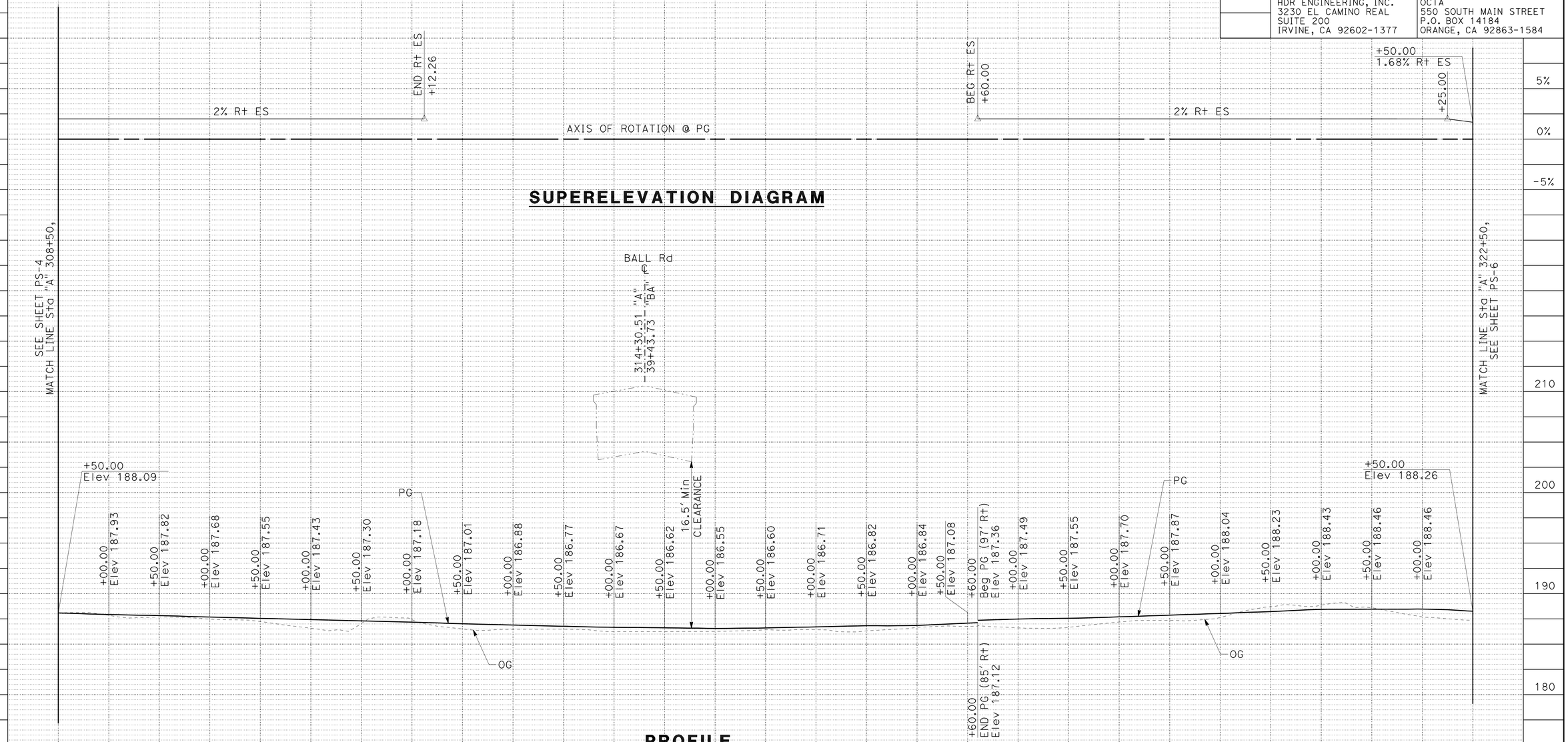


**PROFILE**
"A" LINE PG @ Var OFFSET
(R+ 85' TO 97')
NB ROUTE 57

1 **REVISED PER ADDENDUM No. 1 DATED AUGUST 22, 2011**

**PROFILE AND SUPERELEVATION DIAGRAM**

SCALE: Horiz 1" = 50'
Vert 1" = 5'

**PS-5**

STATE OF CALIFORNIA - DEPARTMENT OF TRANSPORTATION

Caltrans

CONSULTANT FUNCTIONAL SUPERVISOR: R. SCOTT BACSIKIN

CALCULATED-DESIGNED BY: SHIVA BOUSTANI

CHECKED BY: LIEM A. NGUYEN

REVISED BY

DATE REVISED

LAST REVISION 10-12-10

DATE PLOTTED => 19-AUG-2011
TIME PLOTTED => 15:44

| Dist | COUNTY | ROUTE | POST MILES TOTAL PROJECT | SHEET No. | TOTAL SHEETS |
|---|---|---|---|---|---|
| 12 | Ora | 57 | 12.2/15.2 | 45 | 527 |

REGISTERED CIVIL ENGINEER 11/15/10 DATE

4-18-11
PLANS APPROVAL DATE

REGISTERED PROFESSIONAL ENGINEER R.SCOTT BACSIKIN No. C 48774 Exp. 9-30-12 CIVIL STATE OF CALIFORNIA

*THE STATE OF CALIFORNIA OR ITS OFFICERS OR AGENTS SHALL NOT BE RESPONSIBLE FOR THE ACCURACY OR COMPLETENESS OF SCANNED COPIES OF THIS PLAN SHEET.*

HDR ENGINEERING, INC.
3230 EL CAMINO REAL
SUITE 200
IRVINE, CA 92602-1377

OCTA
550 SOUTH MAIN STREET
P.O. BOX 14184
ORANGE, CA 92863-1584

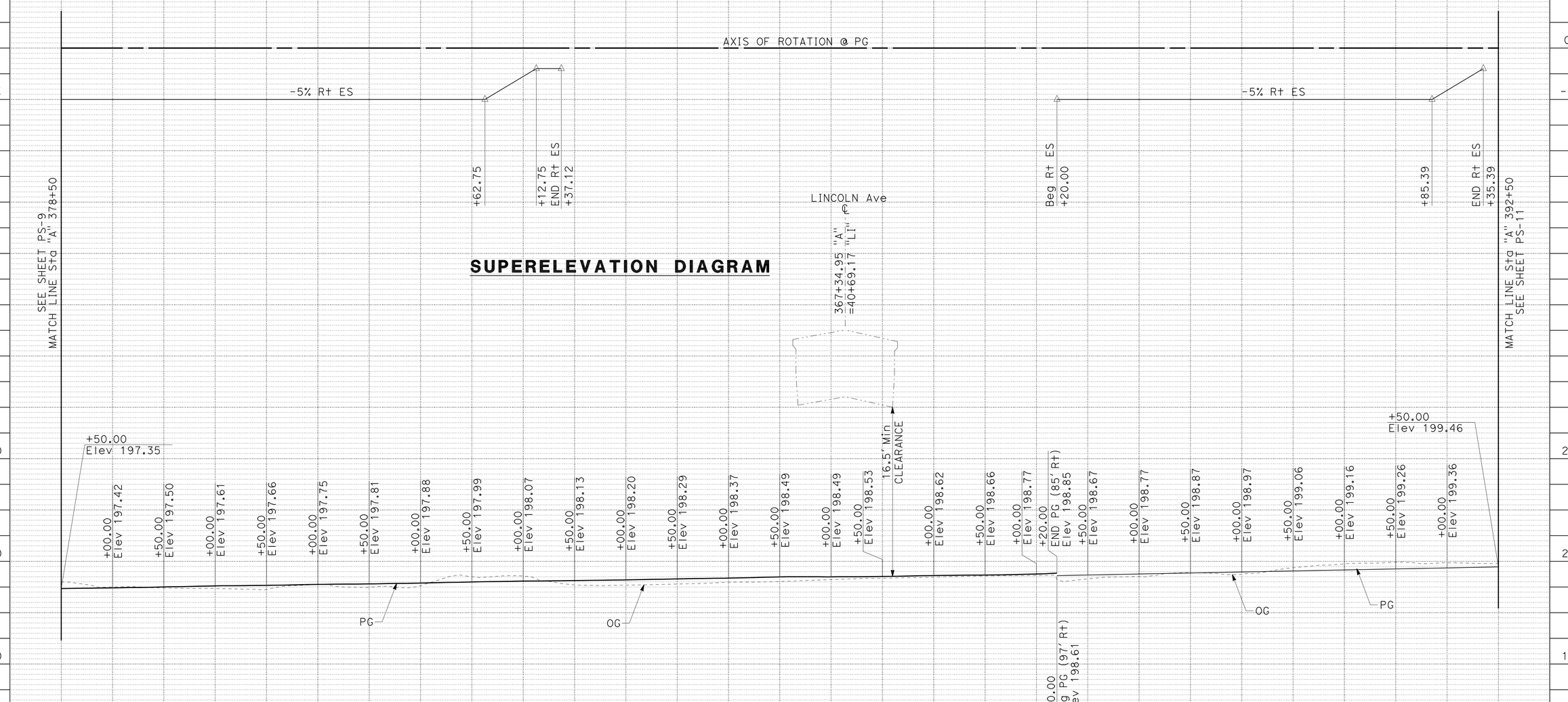


## PROFILE

"A" LINE PG @ Var OFFSET
(Rt 85' TO 97')
NB ROUTE 57

## PROFILE AND SUPERELEVATION DIAGRAM

SCALE: Horiz 1" = 50'
Vert 1" = 5'

1 REVISED PER ADDENDUM No. 1 DATED AUGUST 22, 2011

PS-10

| STATION | 9 | 380 | 1 | 2 | 3 | 4 | 385 | 6 | 7 | 8 | 9 | 390 | 1 | 2 | TOTAL |
|---|---|---|---|---|---|---|---|---|---|---|---|---|---|---|---|
| CY Exc | | | | | | | | | | | | | | | |

STATE OF CALIFORNIA - DEPARTMENT OF TRANSPORTATION
Caltrans

CONSULTANT FUNCTIONAL SUPERVISOR: R. SCOTT BACSIKIN

CALCULATED-DESIGNED BY: SHIVA BOUSTANI
CHECKED BY: LIEM A. NGUYEN

REVISED BY / DATE REVISED

LAST REVISION 10-12-10 | DATE PLOTTED => 19-AUG-2011 | TIME PLOTTED => 15:44

| Dist | COUNTY | ROUTE | POST MILES TOTAL PROJECT | SHEET No. | TOTAL SHEETS |
|---|---|---|---|---|---|
| 12 | Ora | 57 | 12.2/15.2 | 47 | 527 |

REGISTERED CIVIL ENGINEER 11/15/10 DATE

4-18-11
PLANS APPROVAL DATE

REGISTERED PROFESSIONAL ENGINEER R.SCOTT BACSIKIN No. C 48774 Exp. 9-30-12 CIVIL STATE OF CALIFORNIA

*THE STATE OF CALIFORNIA OR ITS OFFICERS OR AGENTS SHALL NOT BE RESPONSIBLE FOR THE ACCURACY OR COMPLETENESS OF SCANNED COPIES OF THIS PLAN SHEET.*

HDR ENGINEERING, INC.
3230 EL CAMINO REAL
SUITE 200
IRVINE, CA 92602-1377

OCTA
550 SOUTH MAIN STREET
P.O. BOX 14184
ORANGE, CA 92863-1584

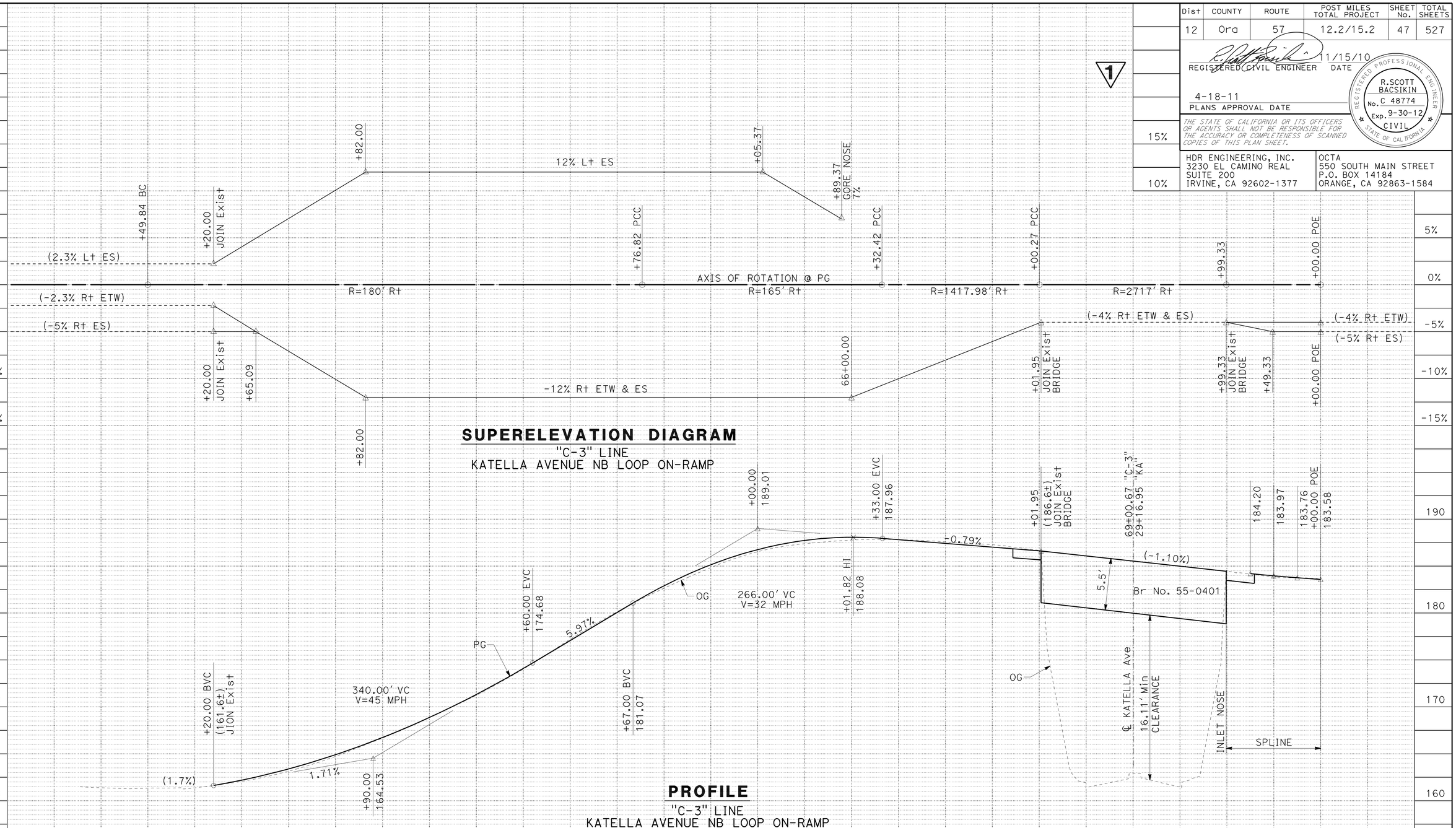


1 REVISED PER ADDENDUM No. 1 DATED AUGUST 22, 2011

## PROFILE AND SUPERELEVATION DIAGRAM

SCALE: Horiz 1" = 50'
Vert 1" = 5'

**PS-12**

| STATION | 8 | 9 | 60 | 1 | 2 | 3 | 4 | 65 | 6 | 7 | 8 | 9 | 70 | 1 | TOTAL |
|---|---|---|---|---|---|---|---|---|---|---|---|---|---|---|---|
| CY Exc | | | | | | | | | | | | | | | |

STATE OF CALIFORNIA - DEPARTMENT OF TRANSPORTATION
Caltrans

CONSULTANT FUNCTIONAL SUPERVISOR: R. SCOTT BACSIKIN
CALCULATED-DESIGNED BY: SHIVA BOUSTANI
CHECKED BY: LIEM A. NGUYEN
REVISED BY / DATE REVISED

LAST REVISION 10-12-10
DATE PLOTTED => 19-AUG-2011
TIME PLOTTED => 15:44

| Dist | COUNTY | ROUTE | POST MILES TOTAL PROJECT | SHEET No. | TOTAL SHEETS |
|---|---|---|---|---|---|
| 12 | Ora | 57 | 12.2/15.2 | 48 | 527 |

REGISTERED CIVIL ENGINEER 11/15/10 DATE

4-18-11
PLANS APPROVAL DATE

REGISTERED PROFESSIONAL ENGINEER R.SCOTT BACSIKIN No. C 48774 Exp. 9-30-12 CIVIL STATE OF CALIFORNIA

*THE STATE OF CALIFORNIA OR ITS OFFICERS OR AGENTS SHALL NOT BE RESPONSIBLE FOR THE ACCURACY OR COMPLETENESS OF SCANNED COPIES OF THIS PLAN SHEET.*

HDR ENGINEERING, INC.
3230 EL CAMINO REAL
SUITE 200
IRVINE, CA 92602-1377

OCTA
550 SOUTH MAIN STREET
P.O. BOX 14184
ORANGE, CA 92863-1584

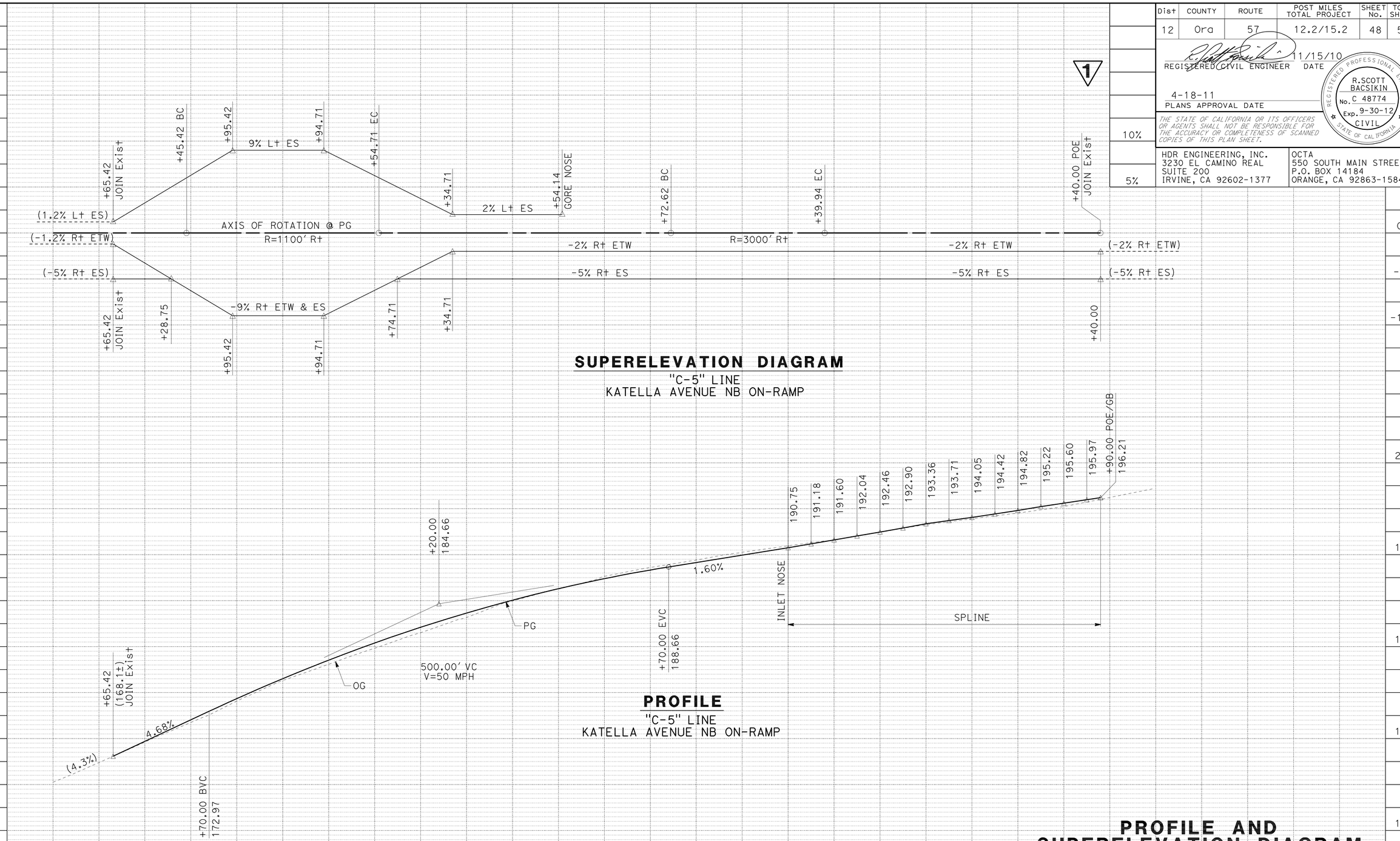


**PROFILE AND SUPERELEVATION DIAGRAM**

SCALE: Horiz 1" = 50'
Vert 1" = 5'

1 **REVISED PER ADDENDUM No. 1 DATED AUGUST 22, 2011**

**PS-13**

| STATION | 2 | 3 | 4 | 75 | 6 | 7 | 8 | 9 | 80 | 1 | 2 | 3 | 4 | TOTAL |
|---|---|---|---|---|---|---|---|---|---|---|---|---|---|---|
| CY Exc | | | | | | | | | | | | | | |

REVISED BY | DATE REVISED
SHIVA BOUSTANI | LIEM A. NGUYEN
CALCULATED-DESIGNED BY | CHECKED BY
CONSULTANT FUNCTIONAL SUPERVISOR: R. SCOTT BACSIKIN
STATE OF CALIFORNIA - DEPARTMENT OF TRANSPORTATION
Caltrans

LAST REVISION 10-12-10 | DATE PLOTTED => 19-AUG-2011 | TIME PLOTTED => 15:45

| Dist | COUNTY | ROUTE | POST MILES TOTAL PROJECT | SHEET No. | TOTAL SHEETS |
|---|---|---|---|---|---|
| 12 | Ora | 57 | 12.2/15.2 | 50 | 527 |

REGISTERED CIVIL ENGINEER 11/15/10 DATE

4-18-11
PLANS APPROVAL DATE

REGISTERED PROFESSIONAL ENGINEER R.SCOTT BACSIKIN No. C 48774 Exp. 9-30-12 CIVIL STATE OF CALIFORNIA

*THE STATE OF CALIFORNIA OR ITS OFFICERS OR AGENTS SHALL NOT BE RESPONSIBLE FOR THE ACCURACY OR COMPLETENESS OF SCANNED COPIES OF THIS PLAN SHEET.*

HDR ENGINEERING, INC.
3230 EL CAMINO REAL
SUITE 200
IRVINE, CA 92602-1377

OCTA
550 SOUTH MAIN STREET
P.O. BOX 14184
ORANGE, CA 92863-1584

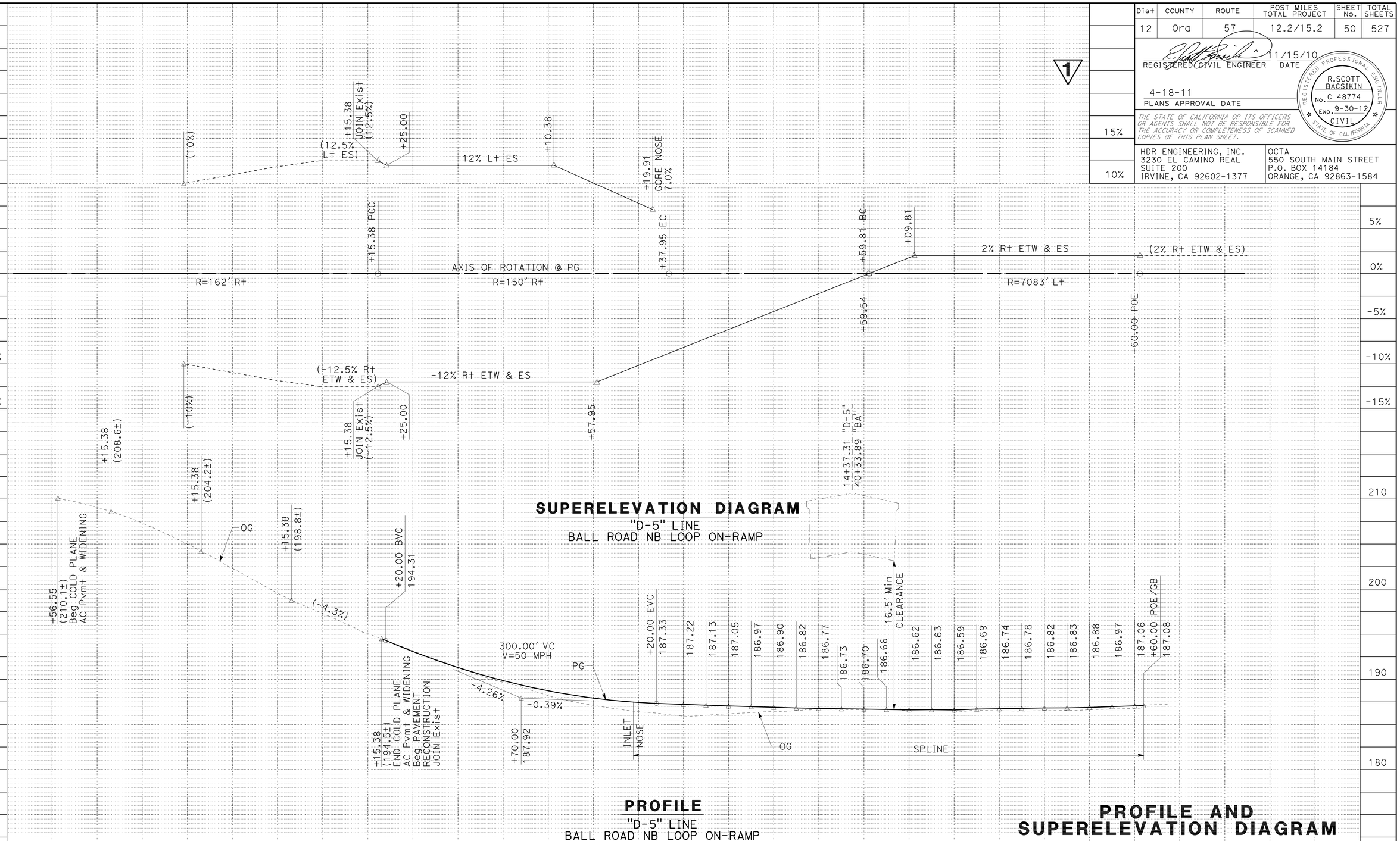


# PROFILE AND SUPERELEVATION DIAGRAM

SCALE: Horiz 1" = 50'
Vert 1" = 5'

**1 REVISED PER ADDENDUM No. 1 DATED AUGUST 22, 2011**

**PS-15**

| STATION | 6 | 7 | 8 | 9 | 10 | 1 | 2 | 3 | 4 | 15 | 6 | 7 | 8 | TOTAL |
|---|---|---|---|---|---|---|---|---|---|---|---|---|---|---|
| CY Exc | | | | | | | | | | | | | | |

STATE OF CALIFORNIA - DEPARTMENT OF TRANSPORTATION

Caltrans

CONSULTANT FUNCTIONAL SUPERVISOR: R. SCOTT BACSIKIN

CALCULATED-DESIGNED BY: SHIVA BOUSTANI

CHECKED BY: LIEM A. NGUYEN

REVISED BY / DATE REVISED

LAST REVISION 10-12-10

DATE PLOTTED => 19-AUG-2011
TIME PLOTTED => 15:45

| Dist | COUNTY | ROUTE | POST MILES TOTAL PROJECT | SHEET No. | TOTAL SHEETS |
|---|---|---|---|---|---|
| 12 | Ora | 57 | 12.2/15.2 | 51 | 527 |

REGISTERED CIVIL ENGINEER 11/15/10 DATE

4-18-11
PLANS APPROVAL DATE

REGISTERED PROFESSIONAL ENGINEER R.SCOTT BACSIKIN No. C 48774 Exp. 9-30-12 CIVIL STATE OF CALIFORNIA

*THE STATE OF CALIFORNIA OR ITS OFFICERS OR AGENTS SHALL NOT BE RESPONSIBLE FOR THE ACCURACY OR COMPLETENESS OF SCANNED COPIES OF THIS PLAN SHEET.*

HDR ENGINEERING, INC.
3230 EL CAMINO REAL
SUITE 200
IRVINE, CA 92602-1377

OCTA
550 SOUTH MAIN STREET
P.O. BOX 14184
ORANGE, CA 92863-1584

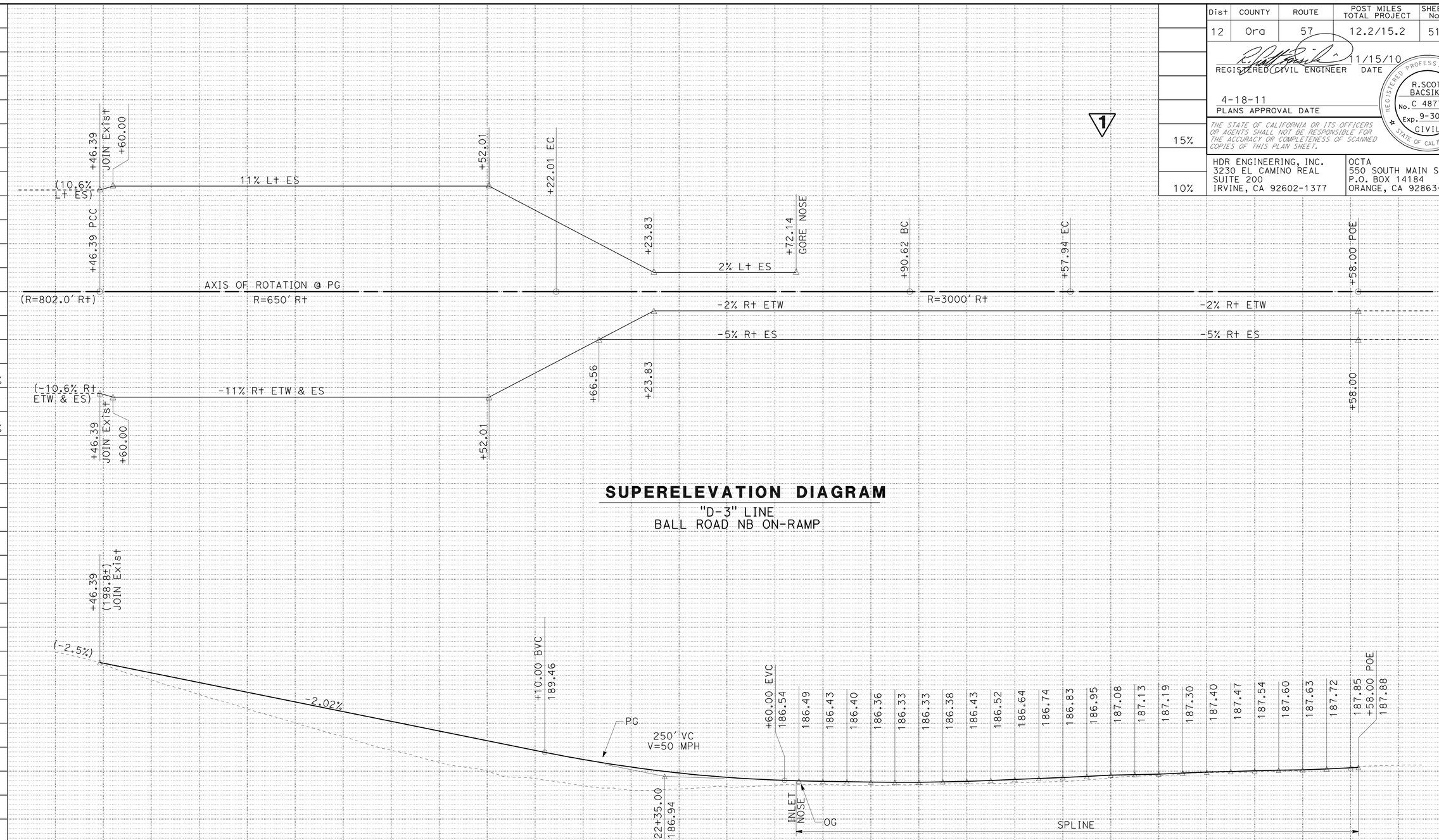


1 REVISED PER ADDENDUM No. 1 DATED AUGUST 22, 2011

REVISED BY | DATE REVISED
SHIVA BOUSTANI | LIEM A. NGUYEN
CALCULATED-DESIGNED BY | CHECKED BY
CONSULTANT FUNCTIONAL SUPERVISOR | R. SCOTT BACSIKIN
STATE OF CALIFORNIA - DEPARTMENT OF TRANSPORTATION
Caltrans

LAST REVISION 10-12-10 | DATE PLOTTED => 19-AUG-2011 | TIME PLOTTED => 15:45

| Dist | COUNTY | ROUTE | POST MILES TOTAL PROJECT | SHEET No. | TOTAL SHEETS |
|---|---|---|---|---|---|
| 12 | Ora | 57 | 12.2/15.2 | 52 | 527 |

REGISTERED CIVIL ENGINEER 11/15/10 DATE

4-18-11
PLANS APPROVAL DATE

REGISTERED PROFESSIONAL ENGINEER R.SCOTT BACSIKIN No. C 48774 Exp. 9-30-12 CIVIL STATE OF CALIFORNIA

*THE STATE OF CALIFORNIA OR ITS OFFICERS OR AGENTS SHALL NOT BE RESPONSIBLE FOR THE ACCURACY OR COMPLETENESS OF SCANNED COPIES OF THIS PLAN SHEET.*

HDR ENGINEERING, INC.
3230 EL CAMINO REAL
SUITE 200
IRVINE, CA 92602-1377

OCTA
550 SOUTH MAIN STREET
P.O. BOX 14184
ORANGE, CA 92863-1584

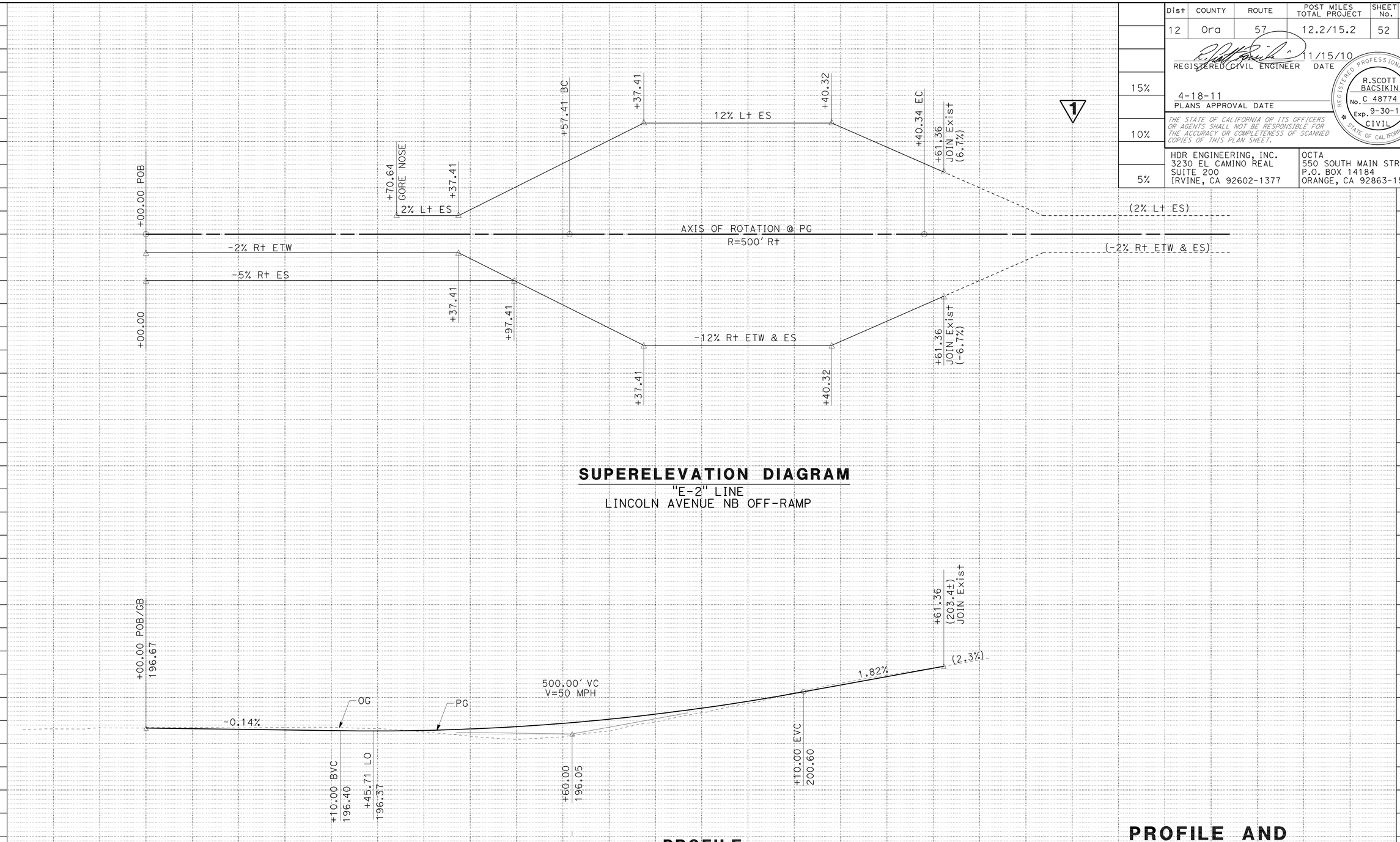


## SUPERELEVATION DIAGRAM
"E-2" LINE
LINCOLN AVENUE NB OFF-RAMP

## PROFILE
"E-2" LINE
LINCOLN AVENUE NB OFF-RAMP

## PROFILE AND SUPERELEVATION DIAGRAM
SCALE: Horiz 1" = 50'
Vert 1" = 5'

1 REVISED PER ADDENDUM No. 1 DATED AUGUST 22, 2011

PS-17

| STATION | 4 | 75 | 6 | 7 | 8 | 9 | 80 | 1 | 2 | 3 | 4 | TOTAL |
|---|---|---|---|---|---|---|---|---|---|---|---|---|
| CY Exc | | | | | | | | | | | | |

STATE OF CALIFORNIA - DEPARTMENT OF TRANSPORTATION
Caltrans

CONSULTANT FUNCTIONAL SUPERVISOR: R. SCOTT BACSIKIN
CALCULATED-DESIGNED BY: SHIVA BOUSTANI
CHECKED BY: LIEM A. NGUYEN
REVISED BY
DATE REVISED

LAST REVISION 10-12-10 | DATE PLOTTED => 19-AUG-2011 | TIME PLOTTED => 15:45

| Dist | COUNTY | ROUTE | POST MILES TOTAL PROJECT | SHEET No. | TOTAL SHEETS |
|---|---|---|---|---|---|
| 12 | Ora | 57 | 12.2/15.2 | 53 | 527 |

REGISTERED CIVIL ENGINEER 11/15/10 DATE

4-18-11
PLANS APPROVAL DATE

REGISTERED PROFESSIONAL ENGINEER R.SCOTT BACSIKIN No. C 48774 Exp. 9-30-12 CIVIL STATE OF CALIFORNIA

*THE STATE OF CALIFORNIA OR ITS OFFICERS OR AGENTS SHALL NOT BE RESPONSIBLE FOR THE ACCURACY OR COMPLETENESS OF SCANNED COPIES OF THIS PLAN SHEET.*

HDR ENGINEERING, INC.
3230 EL CAMINO REAL
SUITE 200
IRVINE, CA 92602-1377

OCTA
550 SOUTH MAIN STREET
P.O. BOX 14184
ORANGE, CA 92863-1584

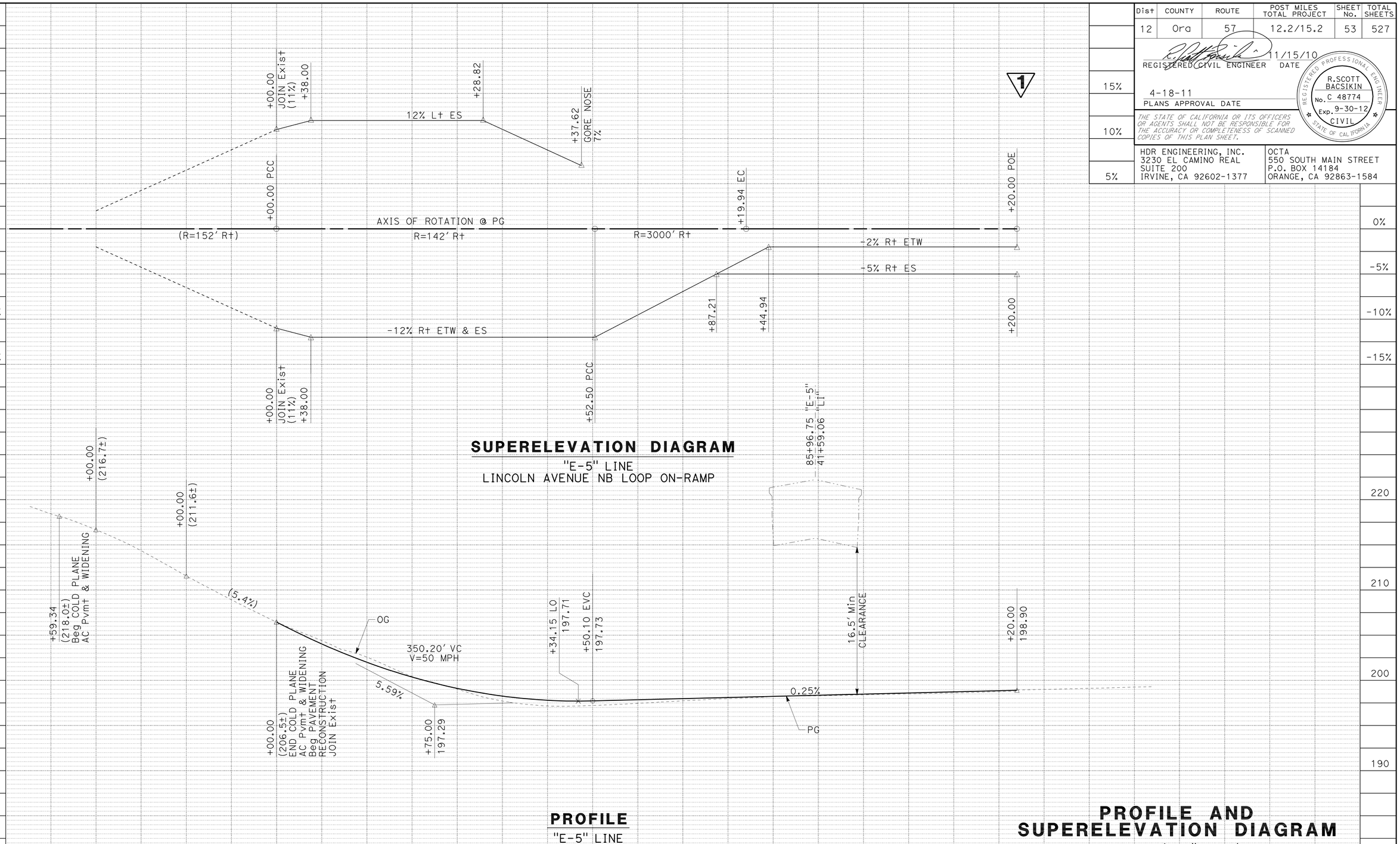


## SUPERELEVATION DIAGRAM

"E-5" LINE
LINCOLN AVENUE NB LOOP ON-RAMP

## PROFILE

"E-5" LINE
LINCOLN AVENUE NB LOOP ON-RAMP

## PROFILE AND SUPERELEVATION DIAGRAM

SCALE: Horiz 1" = 50'
Vert 1" = 5'

1 REVISED PER ADDENDUM No. 1 DATED AUGUST 22, 2011

PS-18

STATE OF CALIFORNIA - DEPARTMENT OF TRANSPORTATION
Caltrans

CONSULTANT FUNCTIONAL SUPERVISOR: R. SCOTT BACSIKIN
CALCULATED-DESIGNED BY: SHIVA BOUSTANI
CHECKED BY: LIEM A. NGUYEN
REVISED BY / DATE REVISED

LAST REVISION 10-12-10
DATE PLOTTED => 19-AUG-2011
TIME PLOTTED => 15:45

| Dist | COUNTY | ROUTE | POST MILES TOTAL PROJECT | SHEET No. | TOTAL SHEETS |
|---|---|---|---|---|---|
| 12 | Ora | 57 | 12.2/15.2 | 54 | 527 |

REGISTERED CIVIL ENGINEER 11/15/10 DATE

4-18-11
PLANS APPROVAL DATE

REGISTERED PROFESSIONAL ENGINEER R.SCOTT BACSIKIN No. C 48774 Exp. 9-30-12 CIVIL STATE OF CALIFORNIA

*THE STATE OF CALIFORNIA OR ITS OFFICERS OR AGENTS SHALL NOT BE RESPONSIBLE FOR THE ACCURACY OR COMPLETENESS OF SCANNED COPIES OF THIS PLAN SHEET.*

HDR ENGINEERING, INC.
3230 EL CAMINO REAL
SUITE 200
IRVINE, CA 92602-1377

OCTA
550 SOUTH MAIN STREET
P.O. BOX 14184
ORANGE, CA 92863-1584

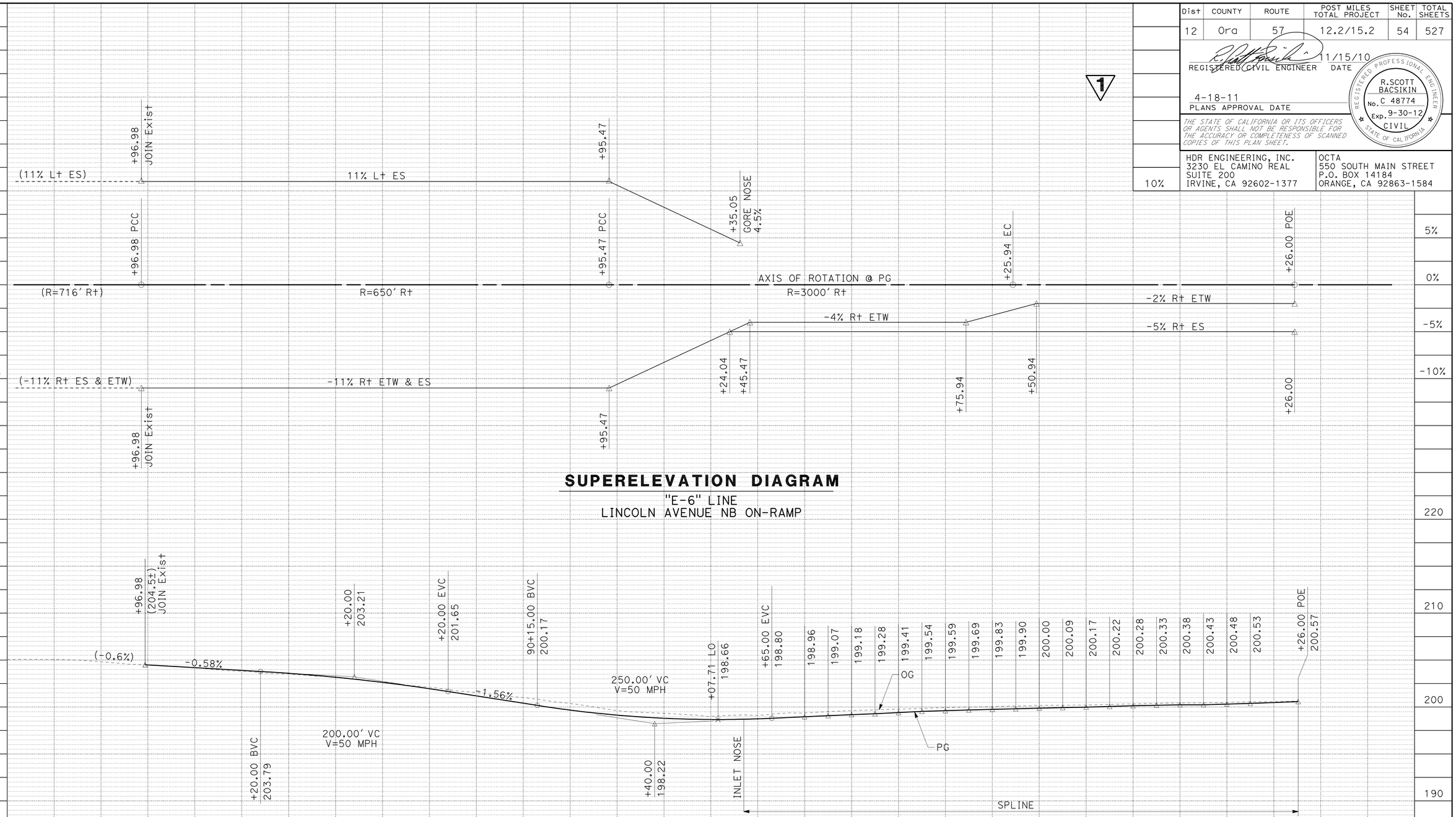


## SUPERELEVATION DIAGRAM

"E-6" LINE
LINCOLN AVENUE NB ON-RAMP

## PROFILE

"E-6" LINE
LINCOLN AVENUE NB ON-RAMP

## PROFILE AND SUPERELEVATION DIAGRAM

SCALE: Horiz 1" = 50'
Vert 1" = 5'

1 REVISED PER ADDENDUM No. 1 DATED AUGUST 22, 2011

PS-19

STATE OF CALIFORNIA - DEPARTMENT OF TRANSPORTATION
Caltrans

CONSULTANT FUNCTIONAL SUPERVISOR: R. SCOTT BACSIKIN
CALCULATED-DESIGNED BY: SHIVA BOUSTANI
CHECKED BY: LIEM A. NGUYEN
REVISED BY / DATE REVISED

LAST REVISION DATE PLOTTED => 19-AUG-2011
TIME PLOTTED => 15:45
10-12-10

| Dist | COUNTY | ROUTE | POST MILES TOTAL PROJECT | SHEET No. | TOTAL SHEETS |
|---|---|---|---|---|---|
| 12 | Ora | 57 | 12.2/15.2 | 60 | 527 |

REGISTERED CIVIL ENGINEER 11/15/10 DATE

4-18-11
PLANS APPROVAL DATE

REGISTERED PROFESSIONAL ENGINEER R.SCOTT BACSIKIN No. C 48774 Exp. 9-30-12 CIVIL STATE OF CALIFORNIA

*THE STATE OF CALIFORNIA OR ITS OFFICERS OR AGENTS SHALL NOT BE RESPONSIBLE FOR THE ACCURACY OR COMPLETENESS OF SCANNED COPIES OF THIS PLAN SHEET.*

HDR ENGINEERING, INC.
3230 EL CAMINO REAL
SUITE 200
IRVINE, CA 92602-1377

OCTA
550 SOUTH MAIN STREET
P.O. BOX 14184
ORANGE, CA 92863-1584

NOTE:

FOR STRUCTURAL PAVEMENT SECTION TYPES, SEE TYPICAL CROSS SECTIONS SHEET X-1.

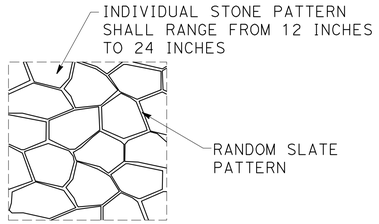


FOR CONTRASTING SURFACE TREATMENT

**MINOR CONCRETE (PATTERNED)**

NOT TO SCALE

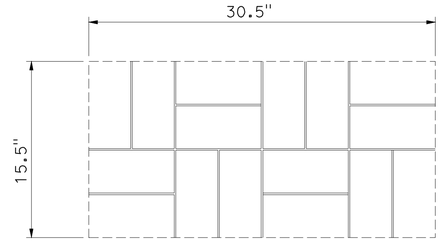


FOR KATELLA AVE RAISED MEDIAN

**MINOR CONCRETE (PATTERNED)**

NOT TO SCALE

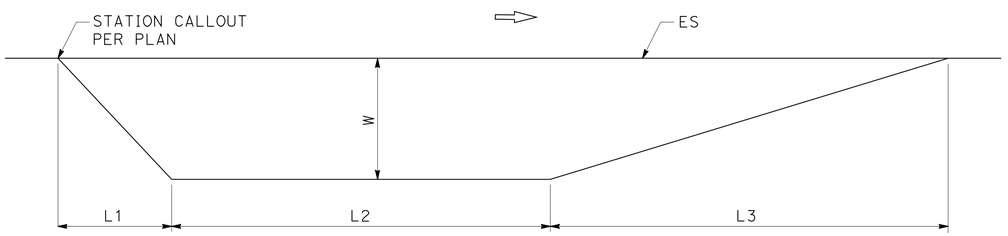


**CHP ENFORCEMENT AREA PLAN**

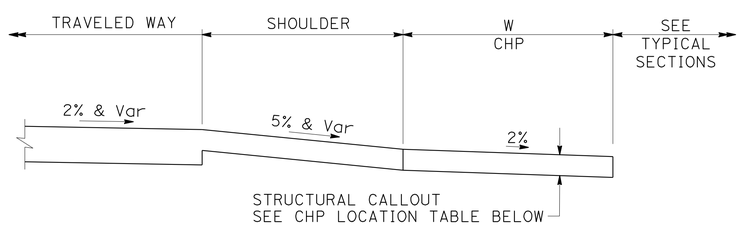


**CHP ENFORCEMENT AREA WITHOUT HMA DIKE**

NOT TO SCALE

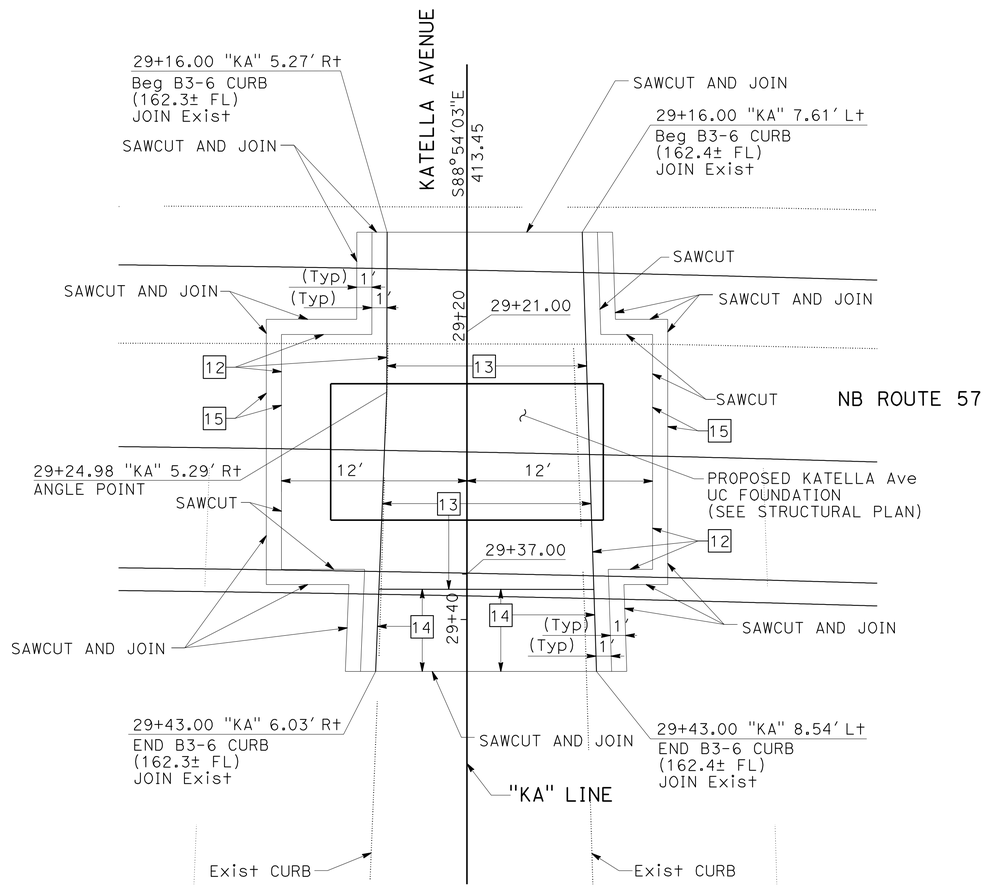


**KATELLA Ave IMPROVEMENT**

SCALE: 1" = 5'

1 **REVISED PER ADDENDUM No. 1 DATED AUGUST 22, 2011**

| CHP ENFORCEMENT AREA LOCATION TABLE | | | | | | | |
|---|---|---|---|---|---|---|---|
| LINE | STATION, OFFSET | HMA DIKE TYPE | L1 | L2 | L3 | W | STRUCTURAL SECTION |
| "E-6" | 89+26.00, 32.00' R+ | NONE | 30' | 100' | 105' | 7' | 3 |

**CONSTRUCTION DETAILS**

AS SHOWN

C-6

STATE OF CALIFORNIA - DEPARTMENT OF TRANSPORTATION

Caltrans

CONSULTANT FUNCTIONAL SUPERVISOR: R. SCOTT BACSIKIN

CALCULATED-DESIGNED BY: SHIVA BOUSTANI | REVISED BY: 11/15/10

CHECKED BY: LIEM A. NGUYEN | DATE REVISED: 11/15/10

LAST REVISION: DATE PLOTTED => 19-AUG-2011 TIME PLOTTED => 15:45 11-15-10

| Dist | COUNTY | ROUTE | POST MILES TOTAL PROJECT | SHEET No. | TOTAL SHEETS |
|---|---|---|---|---|---|
| 12 | Ora | 57 | 12.2/15.2 | 60A | 527 |

REGISTERED CIVIL ENGINEER 6/16/11 DATE

4-18-11
PLANS APPROVAL DATE

REGISTERED PROFESSIONAL ENGINEER R.SCOTT BACSIKIN No. C 48774 Exp. 9-30-12 CIVIL STATE OF CALIFORNIA

*THE STATE OF CALIFORNIA OR ITS OFFICERS OR AGENTS SHALL NOT BE RESPONSIBLE FOR THE ACCURACY OR COMPLETENESS OF SCANNED COPIES OF THIS PLAN SHEET.*

HDR ENGINEERING,INC.
3230 EL CAMINO REAL
SUITE 200
IRVINE, CA 92602-1377

OCTA
550 SOUTH MAIN STREET
P.O. BOX 14184
ORANGE, CA 92863-1584

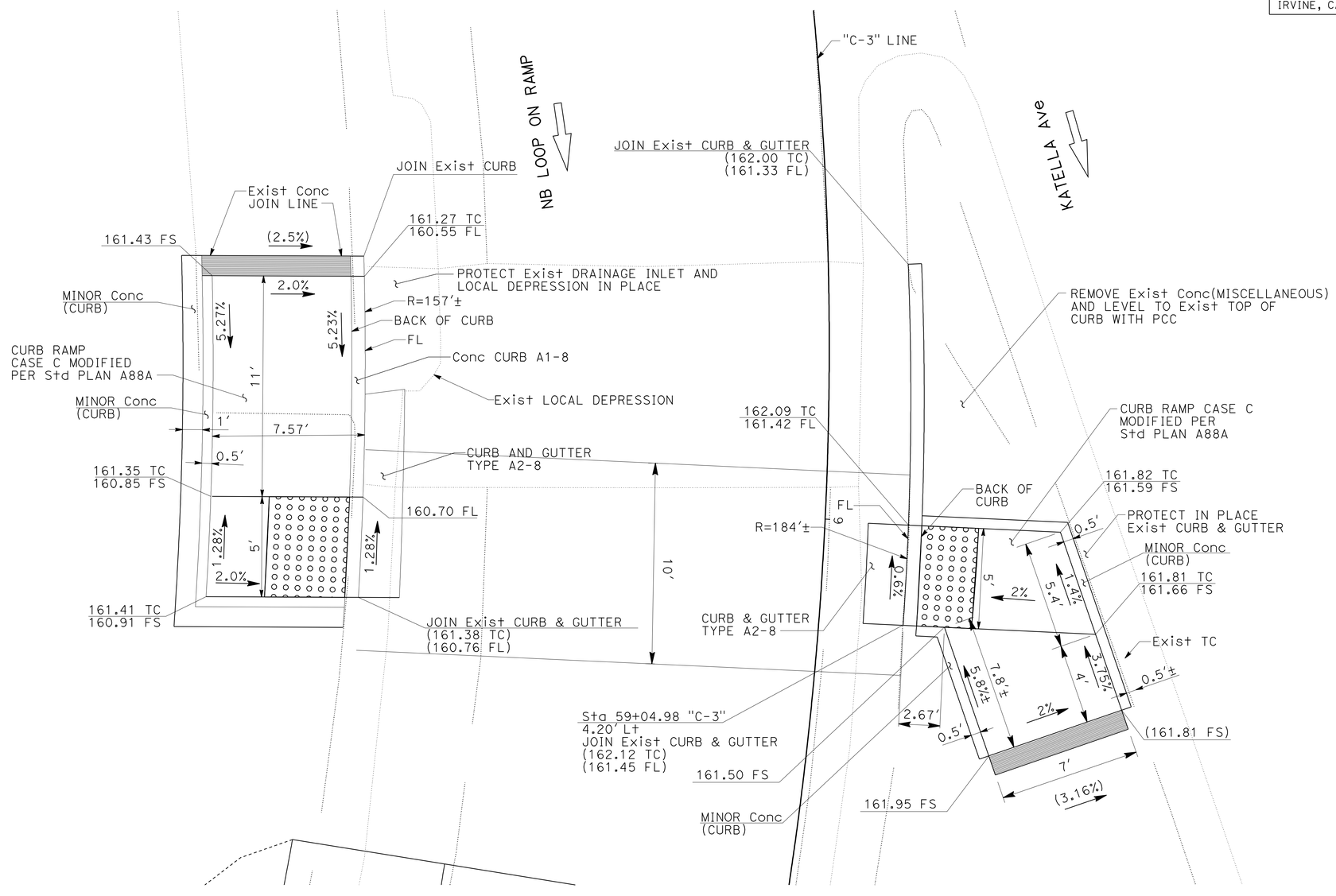


## CURB RAMP AT NB KATELLA Ave LOOP ON RAMP

"C-3" LINE
SCALE: 1" = 3'

1 ADDED PER ADDENDUM No. 1 DATED AUGUST 22, 2011

## CONSTRUCTION DETAILS

AS SHOWN

C-7

STATE OF CALIFORNIA - DEPARTMENT OF TRANSPORTATION
Caltrans

CONSULTANT FUNCTIONAL SUPERVISOR: R. SCOTT BACSIKIN
CALCULATED-DESIGNED BY: SHIVA BOUSTANI
CHECKED BY: LIEM A. NGUYEN
REVISED BY
DATE REVISED

LAST REVISION 06-16-11
DATE PLOTTED => 19-AUG-2011
TIME PLOTTED => 15:45

| Dist | COUNTY | ROUTE | POST MILES TOTAL PROJECT | SHEET No. | TOTAL SHEETS |
|---|---|---|---|---|---|
| 12 | Ora | 57 | 12.2/15.2 | 60B | 527 |

REGISTERED CIVIL ENGINEER 6/16/11 DATE

4-18-11
PLANS APPROVAL DATE

REGISTERED PROFESSIONAL ENGINEER R.SCOTT BACSIKIN No. C 48774 Exp. 9-30-12 CIVIL STATE OF CALIFORNIA

*THE STATE OF CALIFORNIA OR ITS OFFICERS OR AGENTS SHALL NOT BE RESPONSIBLE FOR THE ACCURACY OR COMPLETENESS OF SCANNED COPIES OF THIS PLAN SHEET.*

HDR ENGINEERING,INC.
3230 EL CAMINO REAL
SUITE 200
IRVINE, CA 92602-1377

OCTA
550 SOUTH MAIN STREET
P.O. BOX 14184
ORANGE, CA 92863-1584

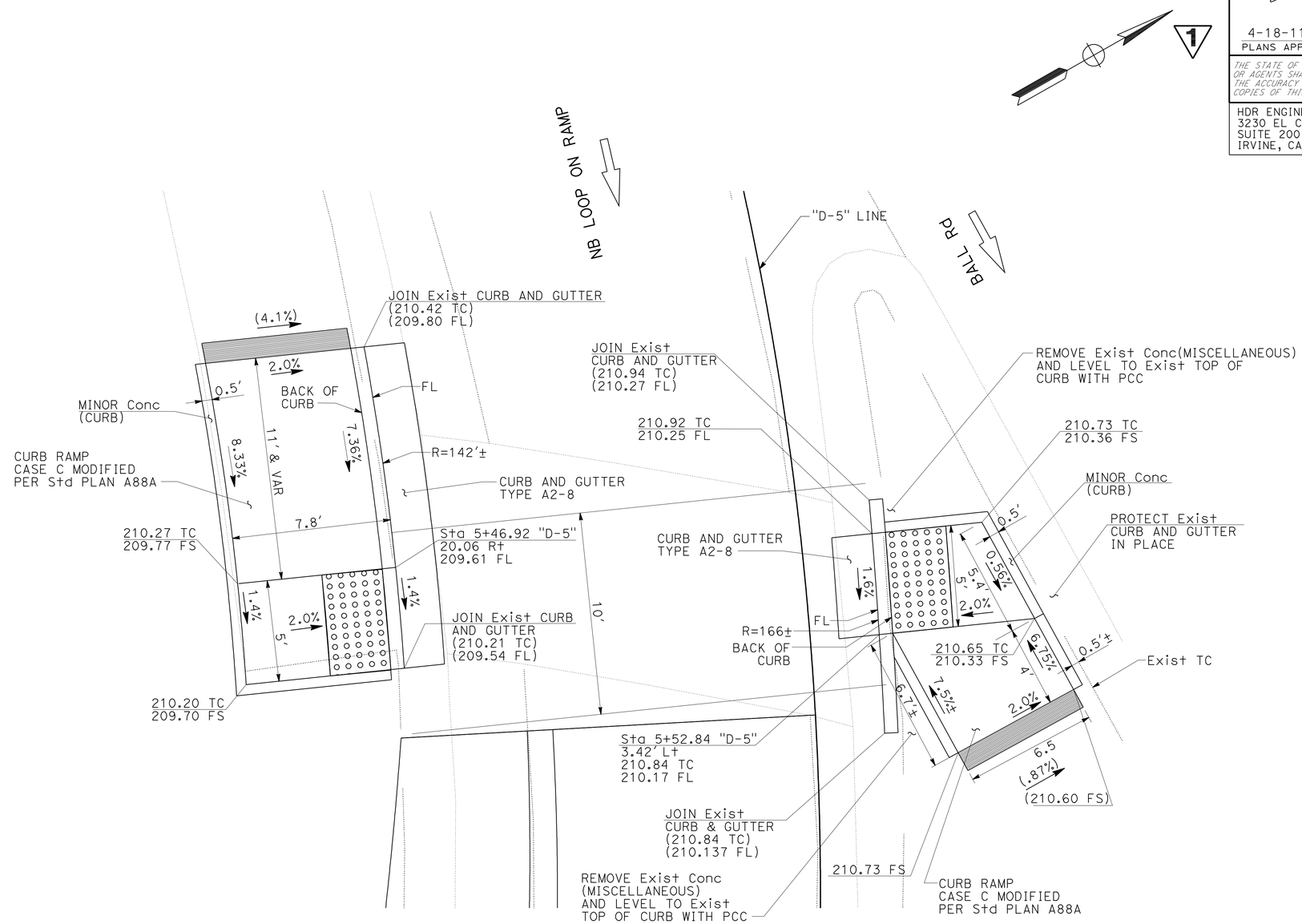


## CURB RAMP AT BALL Rd LOOP ON RAMP

"D-5" LINE
SCALE: 1" = 3'

1 ADDED PER ADDENDUM No. 1 DATED AUGUST 22, 2011

## CONSTRUCTION DETAILS

AS SHOWN

C-8

STATE OF CALIFORNIA - DEPARTMENT OF TRANSPORTATION
Caltrans

CONSULTANT FUNCTIONAL SUPERVISOR: R. SCOTT BACSIKIN

CALCULATED-DESIGNED BY: SHIVA BOUSTANI
CHECKED BY: LIEM A. NGUYEN

REVISED BY
DATE REVISED

LAST REVISION 06/16/11 | DATE PLOTTED => 19-AUG-2011 | TIME PLOTTED => 15:45

| Dist | COUNTY | ROUTE | POST MILES TOTAL PROJECT | SHEET No. | TOTAL SHEETS |
|---|---|---|---|---|---|
| 12 | Ora | 57 | 12.2/15.2 | 61 | 527 |

V. Haghdoust 11/15/10
REGISTERED CIVIL ENGINEER DATE

4-18-11
PLANS APPROVAL DATE

REGISTERED PROFESSIONAL ENGINEER
VAHID HAGHDOUST
No. C 74716
Exp. 12-31-11
CIVIL
STATE OF CALIFORNIA

*THE STATE OF CALIFORNIA OR ITS OFFICERS OR AGENTS SHALL NOT BE RESPONSIBLE FOR THE ACCURACY OR COMPLETENESS OF SCANNED COPIES OF THIS PLAN SHEET.*

HDR ENGINEERING, INC.
3230 EL CAMINO REAL
SUITE 200
IRVINE, CA 92602-1377

OCTA
550 SOUTH MAIN STREET
P.O. BOX 14184
ORANGE, CA 92863-1584

NOTE:

1. FOR ACCURATE RIGHT OF WAY DATA, CONTACT RIGHT OF WAY ENGINEERING AT THE DISTRICT OFFICE.
2. THE INFORMATION ON THESE DRAWINGS ARE ACCURATE FOR WATER POLLUTION CONTROL PURPOSES ONLY.
3. FIELD CONDITIONS MAY NECESSITATE MODIFICATIONS TO THESE DRAWINGS.

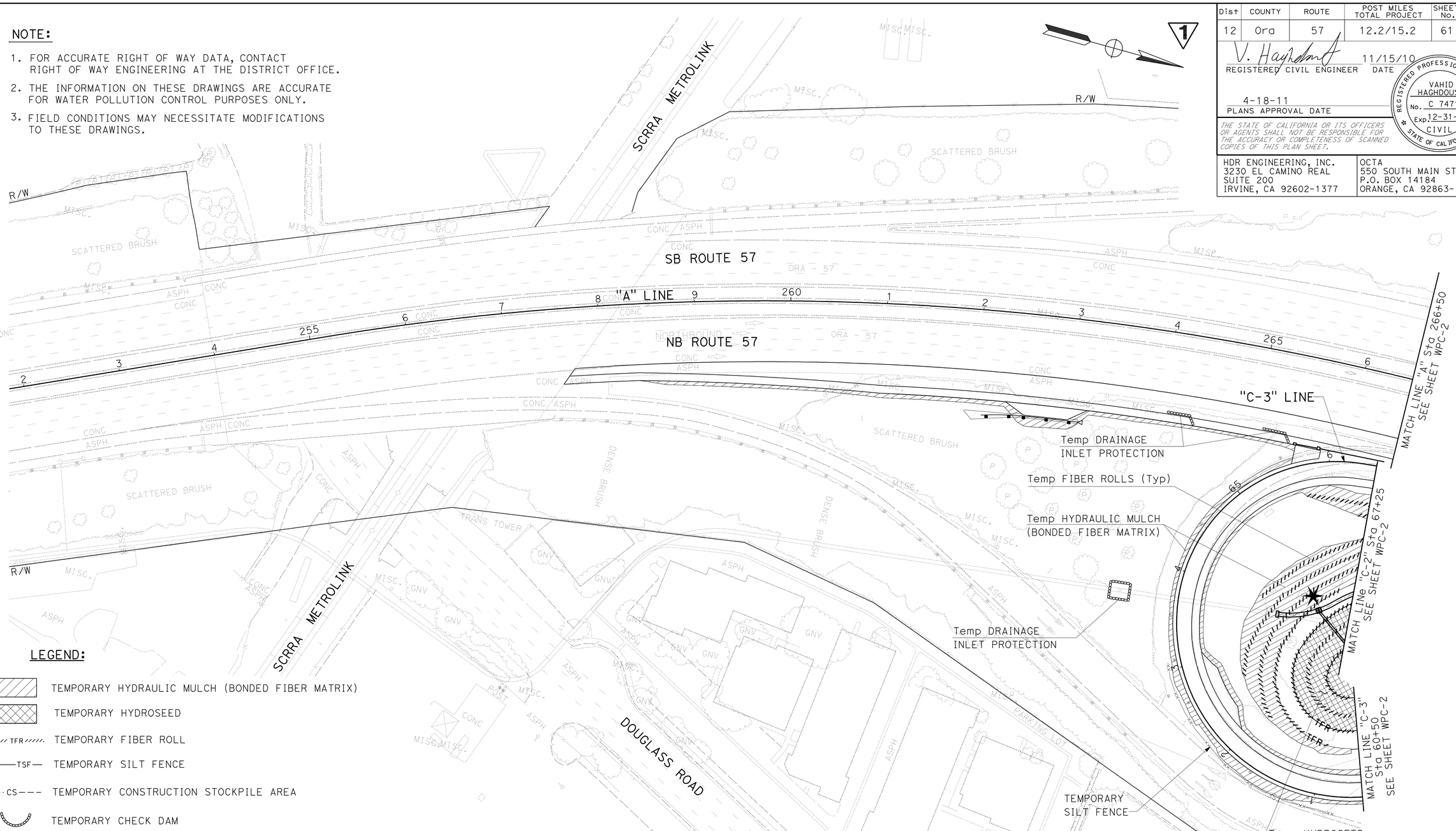


LEGEND:

- TEMPORARY HYDRAULIC MULCH (BONDED FIBER MATRIX)
- TEMPORARY HYDROSEED
- TFR — TEMPORARY FIBER ROLL
- TSF — TEMPORARY SILT FENCE
- CS — TEMPORARY CONSTRUCTION STOCKPILE AREA
- TEMPORARY CHECK DAM
- TEMPORARY CONSTRUCTION ENTRANCE
- TEMPORARY DRAINAGE INLET PROTECTION (TYPE 3A)
- TEMPORARY DRAINAGE INLET PROTECTION (TYPE 3B)
- STORM WATER DISCHARGE LOCATION

# TEMPORARY WATER POLLUTION CONTROL PLAN

SCALE: 1" = 50'

WPC-1

1 REVISED PER ADDENDUM No. 1 DATED AUGUST 22, 2011

THIS PLAN ACCURATE FOR TEMPORARY WATER POLLUTION CONTROL WORK ONLY

STATE OF CALIFORNIA - DEPARTMENT OF TRANSPORTATION
Caltrans

CONSULTANT FUNCTIONAL SUPERVISOR: R. SCOTT BACSIKIN

CALCULATED-DESIGNED BY: VAHID HAGHDOUST
CHECKED BY: STEVE LEATHERS

REVISED BY / DATE REVISED

LAST REVISION 10-12-10 | DATE PLOTTED => 19-AUG-2011 | TIME PLOTTED => 15:46

| Dist | COUNTY | ROUTE | POST MILES TOTAL PROJECT | SHEET No. | TOTAL SHEETS |
|---|---|---|---|---|---|
| 12 | Ora | 57 | 12.2/15.2 | 62 | 527 |

REGISTERED CIVIL ENGINEER — DATE 11/15/10

4-18-11
PLANS APPROVAL DATE

REGISTERED PROFESSIONAL ENGINEER — VAHID HAGHDOUST — No. C 74716 — Exp. 12-31-11 — CIVIL — STATE OF CALIFORNIA

*THE STATE OF CALIFORNIA OR ITS OFFICERS OR AGENTS SHALL NOT BE RESPONSIBLE FOR THE ACCURACY OR COMPLETENESS OF SCANNED COPIES OF THIS PLAN SHEET.*

HDR ENGINEERING, INC.
3230 EL CAMINO REAL
SUITE 200
IRVINE, CA 92602-1377

OCTA
550 SOUTH MAIN STREET
P.O. BOX 14184
ORANGE, CA 92863-1584

NOTE:

1. FOR ACCURATE RIGHT OF WAY DATA, CONTACT RIGHT OF WAY ENGINEERING AT THE DISTRICT OFFICE.

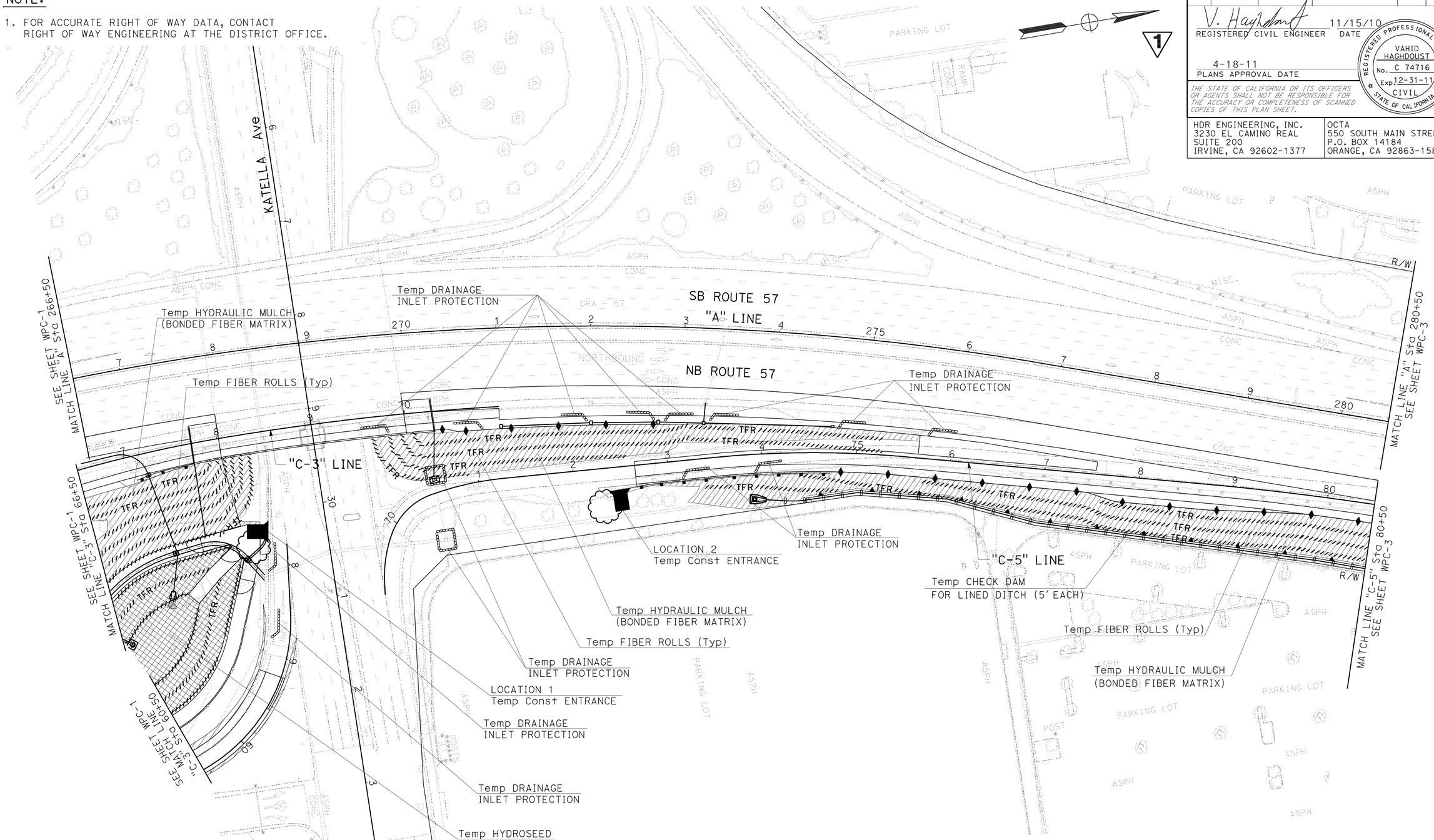


1 REVISED PER ADDENDUM No. 1 DATED AUGUST 22, 2011

THIS PLAN ACCURATE FOR TEMPORARY WATER POLLUTION CONTROL WORK ONLY

# TEMPORARY WATER POLLUTION CONTROL PLAN

SCALE: 1" = 50'

WPC-2

STATE OF CALIFORNIA - DEPARTMENT OF TRANSPORTATION

Caltrans

CONSULTANT FUNCTIONAL SUPERVISOR: R. SCOTT BACSIKIN

CALCULATED-DESIGNED BY: VAHID HAGHDOUST

CHECKED BY: STEVE LEATHERS

REVISED BY

DATE REVISED

LAST REVISION 10-12-10

DATE PLOTTED => 19-AUG-2011
TIME PLOTTED => 15:46

| Dist | COUNTY | ROUTE | POST MILES TOTAL PROJECT | SHEET No. | TOTAL SHEETS |
|---|---|---|---|---|---|
| 12 | Ora | 57 | 12.2/15.2 | 65 | 527 |

V. Haghdoust 11/15/10
REGISTERED CIVIL ENGINEER DATE

4-18-11
PLANS APPROVAL DATE

REGISTERED PROFESSIONAL ENGINEER VAHID HAGHDOUST No. C 74716 Exp. 12-31-11 CIVIL STATE OF CALIFORNIA

*THE STATE OF CALIFORNIA OR ITS OFFICERS OR AGENTS SHALL NOT BE RESPONSIBLE FOR THE ACCURACY OR COMPLETENESS OF SCANNED COPIES OF THIS PLAN SHEET.*

HDR ENGINEERING, INC.
3230 EL CAMINO REAL
SUITE 200
IRVINE, CA 92602-1377

OCTA
550 SOUTH MAIN STREET
P.O. BOX 14184
ORANGE, CA 92863-1584

NOTE:

1. FOR ACCURATE RIGHT OF WAY DATA, CONTACT RIGHT OF WAY ENGINEERING AT THE DISTRICT OFFICE.

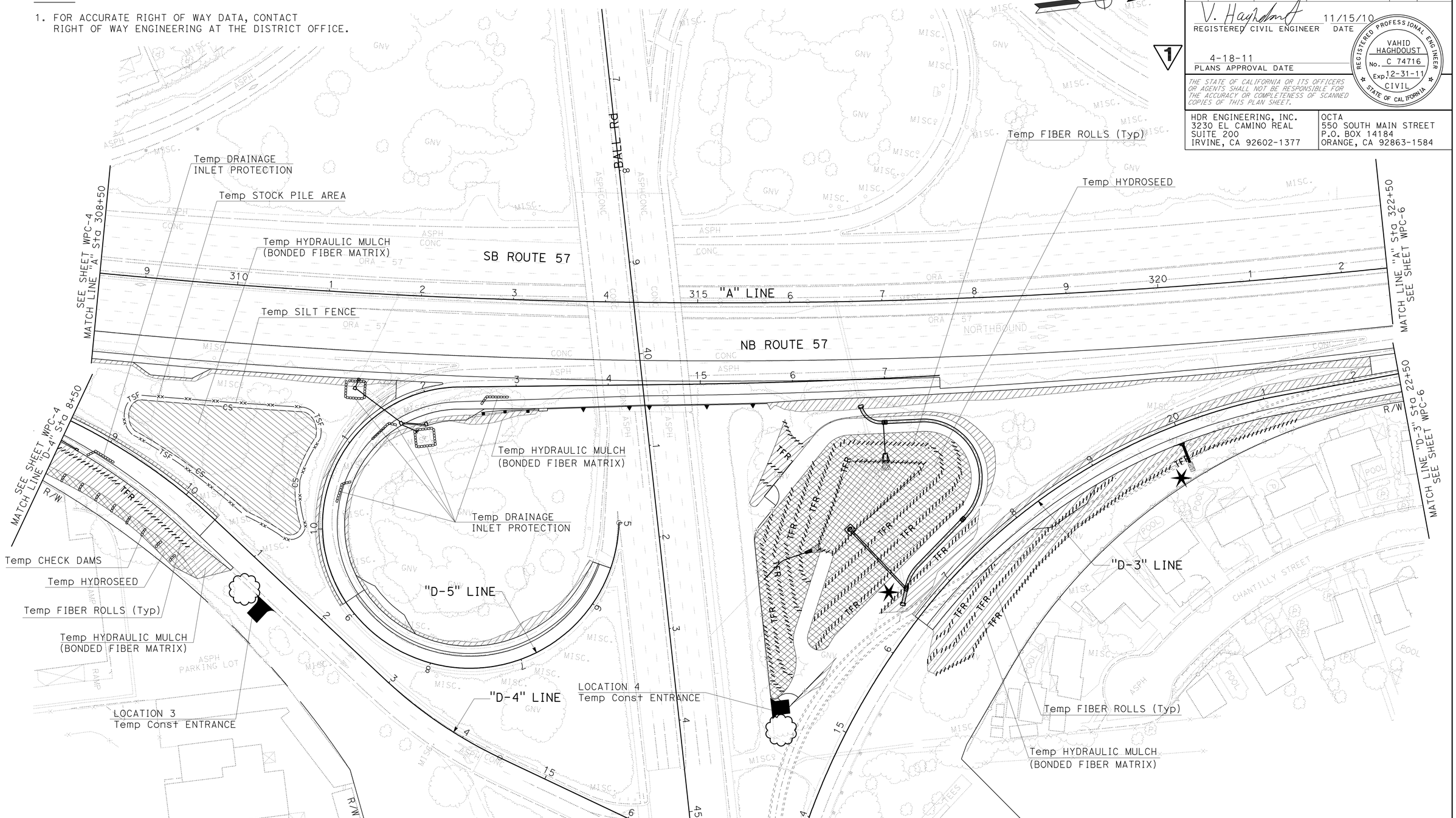


# TEMPORARY WATER POLLUTION CONTROL PLAN

SCALE: 1" = 50'

1 REVISED PER ADDENDUM No. 1 DATED AUGUST 22, 2011

THIS PLAN ACCURATE FOR TEMPORARY WATER POLLUTION CONTROL WORK ONLY

WPC-5

STATE OF CALIFORNIA - DEPARTMENT OF TRANSPORTATION

Caltrans

CONSULTANT FUNCTIONAL SUPERVISOR: R. SCOTT BACSIKIN

CALCULATED-DESIGNED BY: VAHID HAGHDOUST

CHECKED BY: STEVE LEATHERS

REVISED BY

DATE REVISED

LAST REVISION DATE PLOTTED => 19-AUG-2011
TIME PLOTTED => 15:46
10-12-10

| Dist | COUNTY | ROUTE | POST MILES TOTAL PROJECT | SHEET No. | TOTAL SHEETS |
|---|---|---|---|---|---|
| 12 | Ora | 57 | 12.2/15.2 | 71 | 527 |

V. Haghdoust 11/15/10
REGISTERED CIVIL ENGINEER DATE

4-18-11
PLANS APPROVAL DATE

REGISTERED PROFESSIONAL ENGINEER
VAHID HAGHDOUST
No. C 74716
Exp. 12-31-11
CIVIL
STATE OF CALIFORNIA

*THE STATE OF CALIFORNIA OR ITS OFFICERS OR AGENTS SHALL NOT BE RESPONSIBLE FOR THE ACCURACY OR COMPLETENESS OF SCANNED COPIES OF THIS PLAN SHEET.*

HDR ENGINEERING, INC.
3230 EL CAMINO REAL
SUITE 200
IRVINE, CA 92602-1377

OCTA
550 SOUTH MAIN STREET
P.O. BOX 14184
ORANGE, CA 92863-1584

NOTE:

1. FOR ACCURATE RIGHT OF WAY DATA, CONTACT RIGHT OF WAY ENGINEERING AT THE DISTRICT OFFICE.

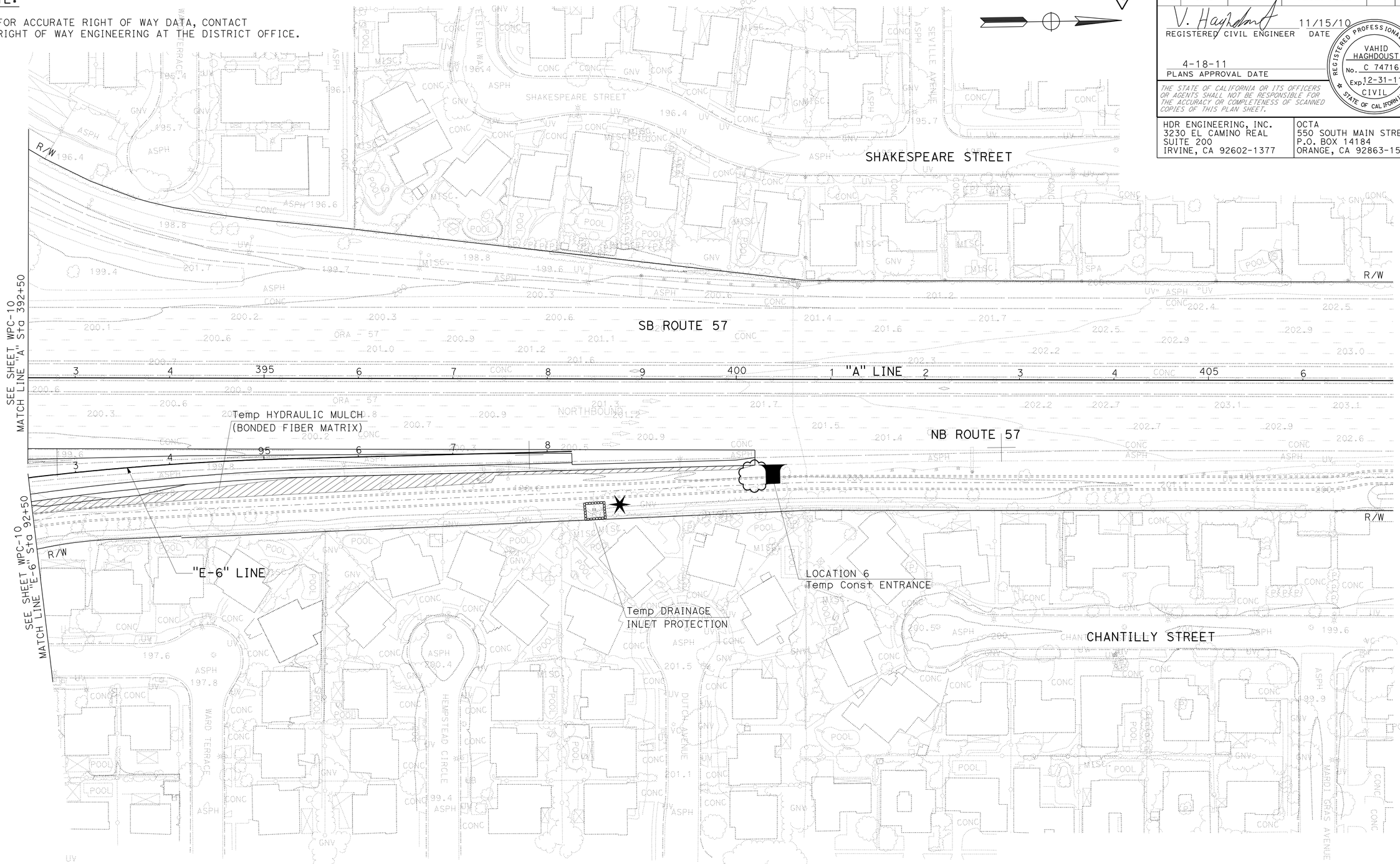


1 REVISED PER ADDENDUM No. 1 DATED AUGUST 22, 2011

THIS PLAN ACCURATE FOR TEMPORARY WATER POLLUTION CONTROL WORK ONLY

# TEMPORARY WATER POLLUTION CONTROL PLAN

SCALE: 1" = 50'

WPC-11

STATE OF CALIFORNIA - DEPARTMENT OF TRANSPORTATION

Caltrans

CONSULTANT FUNCTIONAL SUPERVISOR: R. SCOTT BACSIKIN

CALCULATED-DESIGNED BY: VAHID HAGHDOUST

CHECKED BY: STEVE LEATHERS

REVISED BY

DATE REVISED

LAST REVISION 10-12-10 | DATE PLOTTED => 19-AUG-2011 | TIME PLOTTED => 15:46

| Dist | COUNTY | ROUTE | POST MILES TOTAL PROJECT | SHEET No. | TOTAL SHEETS |
|---|---|---|---|---|---|
| 12 | Ora | 57 | 12.2/15.2 | 72 | 527 |

V. Haghdoust 11/15/10
REGISTERED CIVIL ENGINEER DATE

4-18-11
PLANS APPROVAL DATE

REGISTERED PROFESSIONAL ENGINEER
VAHID HAGHDOUST
No. C 74716
Exp. 12-31-11
CIVIL
STATE OF CALIFORNIA

*THE STATE OF CALIFORNIA OR ITS OFFICERS OR AGENTS SHALL NOT BE RESPONSIBLE FOR THE ACCURACY OR COMPLETENESS OF SCANNED COPIES OF THIS PLAN SHEET.*

HDR ENGINEERING, INC.
3230 EL CAMINO REAL
SUITE 200
IRVINE, CA 92602-1377

OCTA
550 SOUTH MAIN STREET
P.O. BOX 14184
ORANGE, CA 92863-1584

1

# WATER POLLUTION AND EROSION CONTROL

| SHEET No. | TEMPORARY FIBER ROLL* | TEMPORARY HYDRAULIC MULCH* (BONDED FIBER MATRIX) | TEMPORARY DRAINAGE INLET PROTECTION | | TEMPORARY CONSTRUCTION ENTRANCE | TEMPORARY CHECK DAM | TEMPORARY SILT FENCE* | TEMPORARY HYDROSEED* | MOVE-IN/MOVE-OUT (TEMPORARY EROSION CONTROL) | STORM WATER DISCHARGE LOCATION (N) |
|---|---|---|---|---|---|---|---|---|---|---|
| | | | (TYPE 3A) | (TYPE 3B) | | | | | | |
| | LF | SQYD | EA | EA | EA | LF | LF | SQYD | EA | EA |
| WPC-1 | 1625 | 2671 | 2 | 1 | | | 313 | 6075 | | 1 |
| WPC-2 | 6071 | 7939 | 10 | 2 | 2 | 160 | | 11419 | | |
| WPC-3 | 5853 | 10005 | 2 | | | 295 | 294 | | | 1 |
| WPC-4 | 3631 | 6309 | 3 | | | 360 | | 2205 | | |
| WPC-5 | 4038 | 5804 | 4 | 2 | 2 | 80 | 763 | 39938 | | 2 |
| WPC-6 | | 1231 | | 2 | | 240 | | 15053 | | 2 |
| WPC-7 | | 2078 | | 1 | | 160 | | 17269 | | 1 |
| WPC-8 | | 5055 | | 1 | | 80 | | 6221 | | 1 |
| WPC-9 | | 1916 | | 3 | | 160 | | 14738 | | 3 |
| WPC-10 | 175 | 3438 | 2 | 5 | | 100 | | 5716 | | 4 |
| WPC-11 | | 1018 | | 1 | 1 | | | | | 1 |
| | | | | | | | | | | |
| TOTALS | 21393 | 47463 | 41 | | 5 | 1635 | 1370 | 118634 | 7 | 16 |

* QUANTITY INCLUDES INCREASEMENT OF 25% PER EACH ADDITIONAL RAINY SEASON.
(N) NOT A SEPARATE PAY ITEM. FOR INFORMATION ONLY.

1 REVISED PER ADDENDUM No. 1 DATED AUGUST 22, 2011

## TEMPORARY WATER POLLUTION AND EROSION CONTROL QUANTITIES

WPCQ-1

STATE OF CALIFORNIA - DEPARTMENT OF TRANSPORTATION
Caltrans

CONSULTANT FUNCTIONAL SUPERVISOR: R. SCOTT BACSIKIN
CALCULATED-DESIGNED BY: VAHID HAGHDOUST
CHECKED BY: STEVE LEATHERS
REVISED BY
DATE REVISED

LAST REVISION 10-12-10 | DATE PLOTTED => 19-AUG-2011 | TIME PLOTTED => 15:46

| Dist | COUNTY | ROUTE | POST MILES TOTAL PROJECT | SHEET No. | TOTAL SHEETS |
|---|---|---|---|---|---|
| 12 | Ora | 57 | 12.2/15.2 | 81 | 527 |

REGISTERED CIVIL ENGINEER 11/15/10 DATE

4-18-11
PLANS APPROVAL DATE

REGISTERED PROFESSIONAL ENGINEER R.SCOTT BACSIKIN No. C 48774 Exp. 9-30-12 CIVIL STATE OF CALIFORNIA

*THE STATE OF CALIFORNIA OR ITS OFFICERS OR AGENTS SHALL NOT BE RESPONSIBLE FOR THE ACCURACY OR COMPLETENESS OF SCANNED COPIES OF THIS PLAN SHEET.*

HDR ENGINEERING, INC.
3230 EL CAMINO REAL
SUITE 200
IRVINE, CA 92602-1377

OCTA
550 SOUTH MAIN STREET
P.O. BOX 14184
ORANGE, CA 92863-1584

NOTE:

1. FOR ACCURATE RIGHT OF WAY DATA, CONTACT RIGHT OF WAY ENGINEERING AT THE DISTRICT OFFICE.

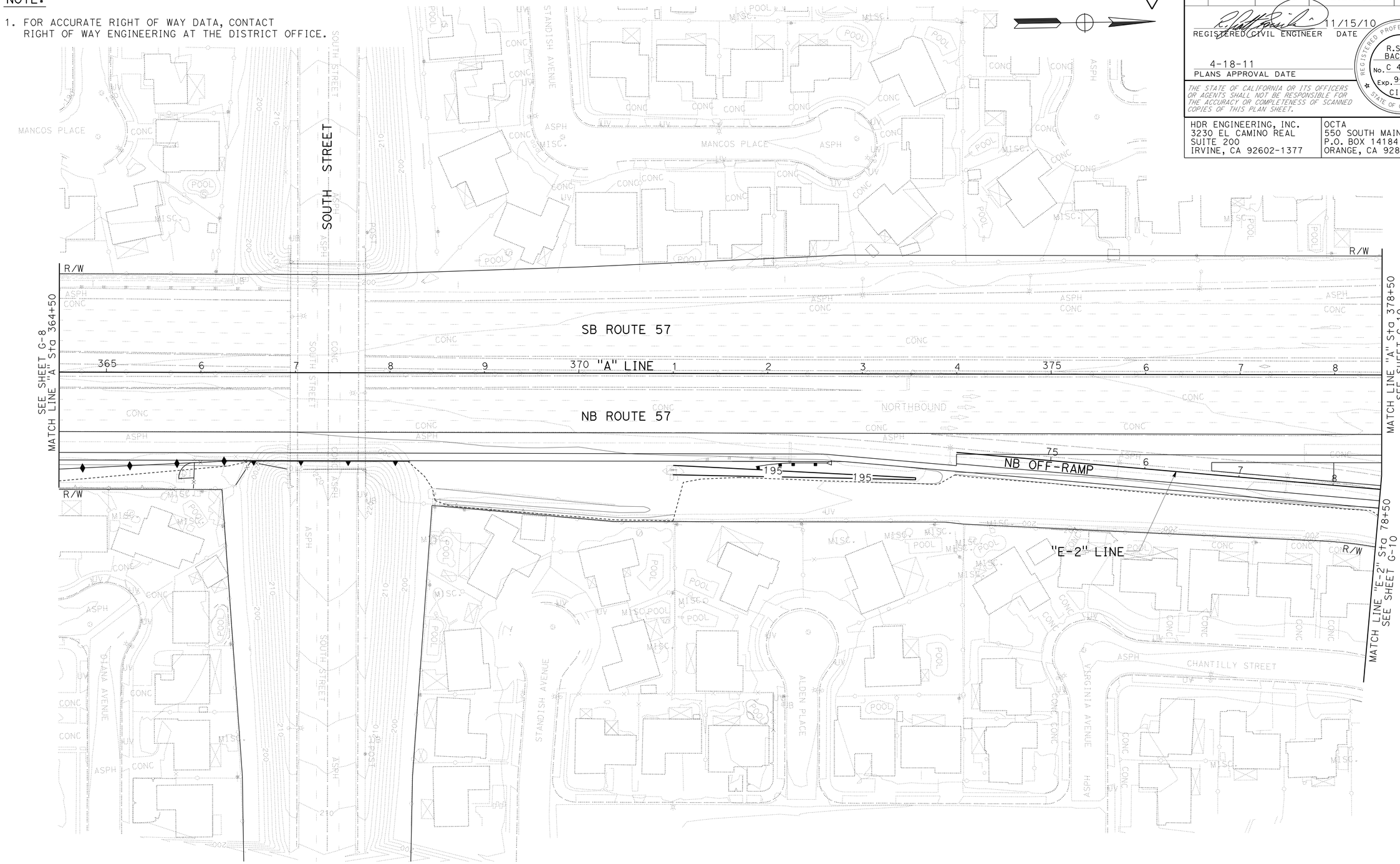


1 REVISED PER ADDENDUM No. 1 DATED AUGUST 22, 2011

THIS PLAN ACCURATE FOR CONTOUR GRADING WORK ONLY

# CONTOUR GRADING

SCALE: 1" = 50'

G-9

STATE OF CALIFORNIA - DEPARTMENT OF TRANSPORTATION

Caltrans

CONSULTANT FUNCTIONAL SUPERVISOR: R. SCOTT BACSIKIN

CALCULATED-DESIGNED BY: SHIVA BOUSTANI

CHECKED BY: LIEM A. NGUYEN

REVISED BY

DATE REVISED

LAST REVISION 10-12-10

DATE PLOTTED => 19-AUG-2011
TIME PLOTTED => 15:46

| Dist | COUNTY | ROUTE | POST MILES TOTAL PROJECT | SHEET No. | TOTAL SHEETS |
|---|---|---|---|---|---|
| 12 | Ora | 57 | 12.2/15.2 | 82 | 527 |

REGISTERED CIVIL ENGINEER 11/15/10 DATE

4-18-11
PLANS APPROVAL DATE

REGISTERED PROFESSIONAL ENGINEER R.SCOTT BACSIKIN No. C 48774 Exp. 9-30-12 CIVIL STATE OF CALIFORNIA

*THE STATE OF CALIFORNIA OR ITS OFFICERS OR AGENTS SHALL NOT BE RESPONSIBLE FOR THE ACCURACY OR COMPLETENESS OF SCANNED COPIES OF THIS PLAN SHEET.*

HDR ENGINEERING, INC.
3230 EL CAMINO REAL
SUITE 200
IRVINE, CA 92602-1377

OCTA
550 SOUTH MAIN STREET
P.O. BOX 14184
ORANGE, CA 92863-1584

NOTE:

1. FOR ACCURATE RIGHT OF WAY DATA, CONTACT RIGHT OF WAY ENGINEERING AT THE DISTRICT OFFICE.

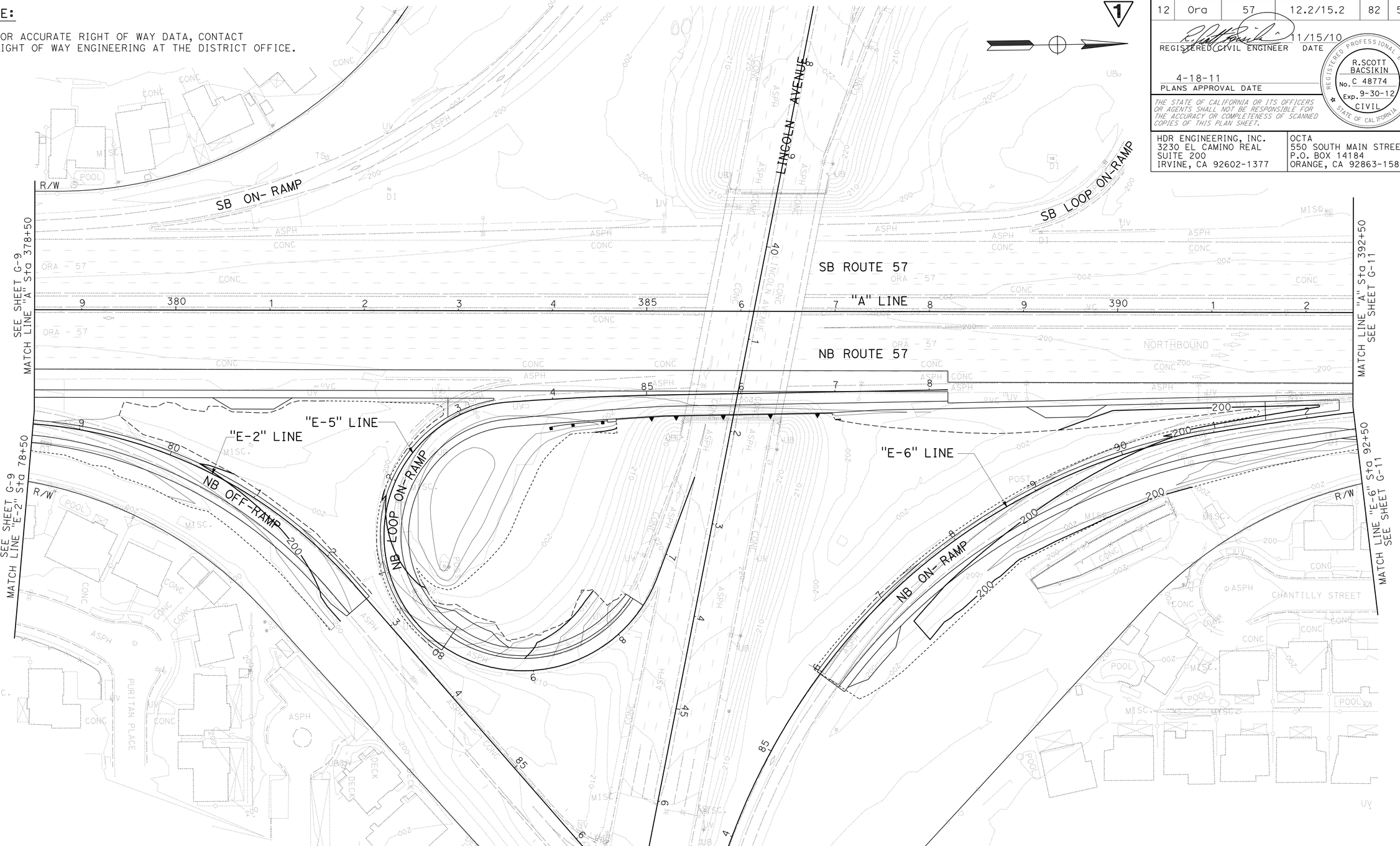


# CONTOUR GRADING

SCALE: 1" = 50'

G-10

1 REVISED PER ADDENDUM No. 1 DATED AUGUST 22, 2011

THIS PLAN ACCURATE FOR CONTOUR GRADING WORK ONLY

STATE OF CALIFORNIA - DEPARTMENT OF TRANSPORTATION

Caltrans

CONSULTANT FUNCTIONAL SUPERVISOR: R. SCOTT BACSIKIN

CALCULATED-DESIGNED BY: SHIVA BOUSTANI

CHECKED BY: LIEM A. NGUYEN

REVISED BY / DATE REVISED

LAST REVISION 10-12-10 | DATE PLOTTED => 19-AUG-2011 | TIME PLOTTED => 15:47

BORDER LAST REVISED 7/2/2010 | USERNAME => trstrk | DGN FILE => c0F040ha010.dgn | RELATIVE BORDER SCALE IS IN INCHES 0 1 2 3 | UNIT 12-2998 | PROJECT NUMBER & PHASE 12000001091

| Dist | COUNTY | ROUTE | POST MILES TOTAL PROJECT | SHEET No. | TOTAL SHEETS |
|---|---|---|---|---|---|
| 12 | Ora | 57 | 12.2/15.2 | 83 | 527 |

REGISTERED CIVIL ENGINEER 11/15/10 DATE

4-18-11
PLANS APPROVAL DATE

REGISTERED PROFESSIONAL ENGINEER R.SCOTT BACSIKIN No. C 48774 Exp. 9-30-12 CIVIL STATE OF CALIFORNIA

*THE STATE OF CALIFORNIA OR ITS OFFICERS OR AGENTS SHALL NOT BE RESPONSIBLE FOR THE ACCURACY OR COMPLETENESS OF SCANNED COPIES OF THIS PLAN SHEET.*

HDR ENGINEERING, INC.
3230 EL CAMINO REAL
SUITE 200
IRVINE, CA 92602-1377

OCTA
550 SOUTH MAIN STREET
P.O. BOX 14184
ORANGE, CA 92863-1584

NOTE:

1. FOR ACCURATE RIGHT OF WAY DATA, CONTACT RIGHT OF WAY ENGINEERING AT THE DISTRICT OFFICE.

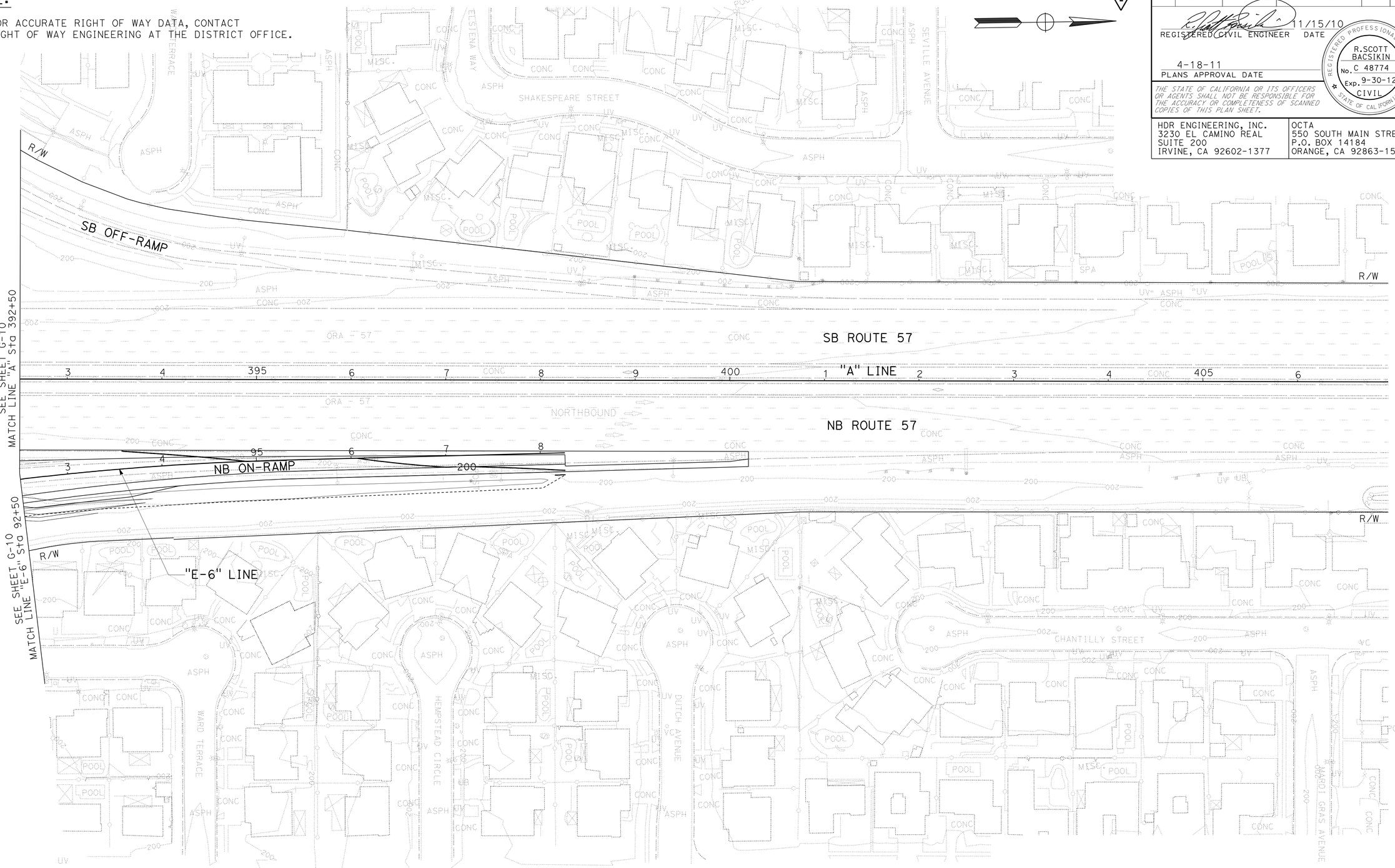


1 REVISED PER ADDENDUM No. 1 DATED AUGUST 22, 2011

THIS PLAN ACCURATE FOR CONTOUR GRADING WORK ONLY

# CONTOUR GRADING

SCALE: 1" = 50'

G-11

STATE OF CALIFORNIA - DEPARTMENT OF TRANSPORTATION

Caltrans

CONSULTANT FUNCTIONAL SUPERVISOR: R. SCOTT BACSIKIN

CALCULATED-DESIGNED BY: SHIVA BOUSTANI

CHECKED BY: LIEM A. NGUYEN

REVISED BY

DATE REVISED

LAST REVISION 10-12-10

DATE PLOTTED => 19-AUG-2011
TIME PLOTTED => 15:47

| Dist | COUNTY | ROUTE | POST MILES TOTAL PROJECT | SHEET No. | TOTAL SHEETS |
|---|---|---|---|---|---|
| 12 | Ora | 57 | 12.2/15.2 | 88 | 527 |

V. Haghdoust 11/15/10
REGISTERED CIVIL ENGINEER DATE

4-18-11
PLANS APPROVAL DATE

REGISTERED PROFESSIONAL ENGINEER VAHID HAGHDOUST No. C 74716 Exp. 12-31-11 CIVIL STATE OF CALIFORNIA

*THE STATE OF CALIFORNIA OR ITS OFFICERS OR AGENTS SHALL NOT BE RESPONSIBLE FOR THE ACCURACY OR COMPLETENESS OF SCANNED COPIES OF THIS PLAN SHEET.*

HDR ENGINEERING, INC.
3230 EL CAMINO REAL
SUITE 200
IRVINE, CA 92602-1377

OCTA
550 SOUTH MAIN STREET
P.O. BOX 14184
ORANGE, CA 92863-1584

NOTE:

1. FOR ACCURATE RIGHT OF WAY DATA, CONTACT RIGHT OF WAY ENGINEERING AT THE DISTRICT OFFICE.

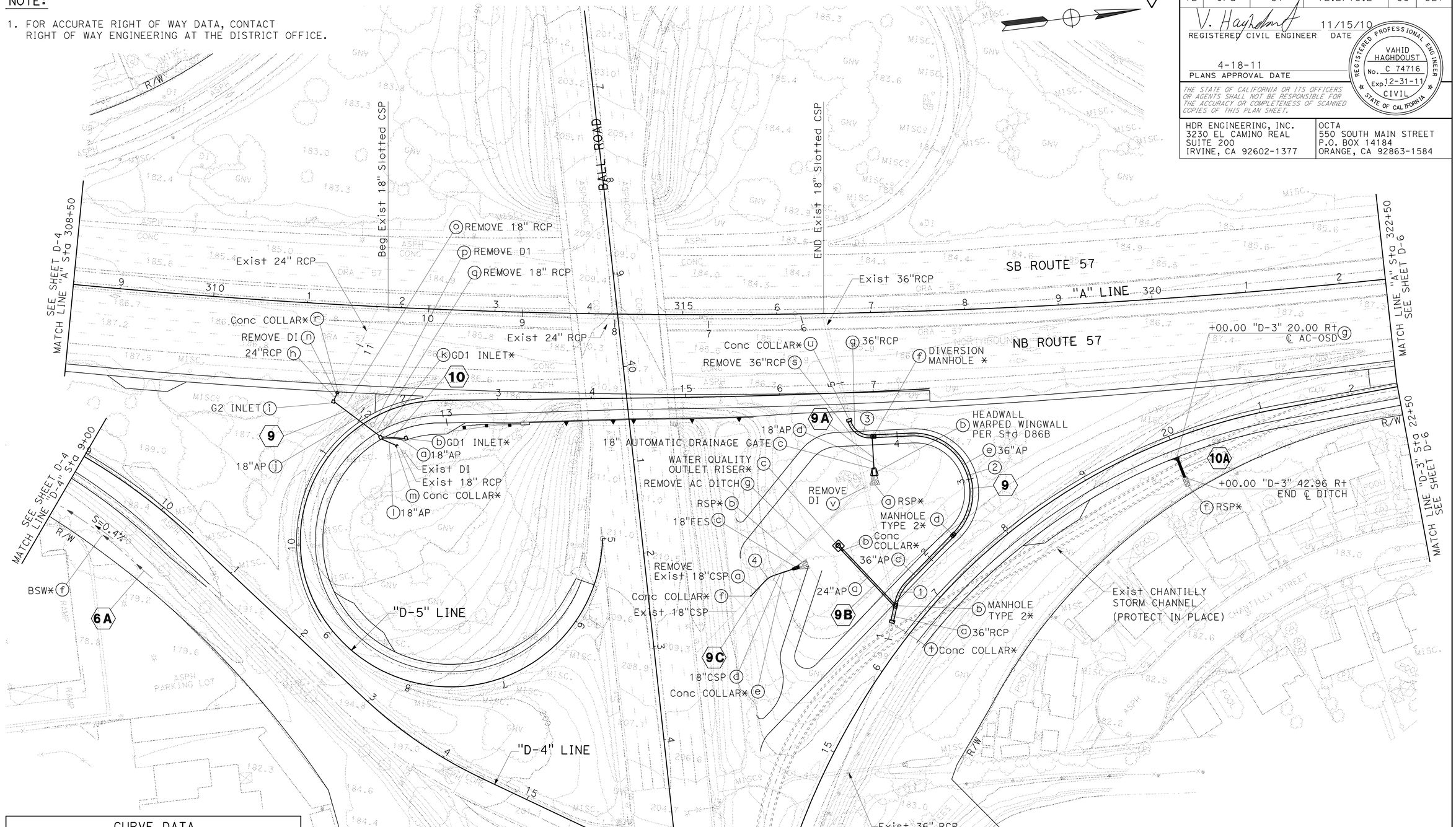


| CURVE DATA | | | | |
|---|---|---|---|---|
| No. | R | △ | T | L |
| 1 | 45.00′ | 31°58′37″ | 12.89′ | 25.12′ |
| 2 | 62.00′ | 136°53′45″ | 156.98′ | 148.14′ |
| 3 | 22.50′ | 79°11′01″ | 18.61′ | 31.09′ |
| 4 | 22.50′ | 27°37′37″ | 5.53′ | 10.85′ |

1 REVISED PER ADDENDUM No. 1 DATED AUGUST 22, 2011

THIS PLAN ACCURATE FOR DRAINAGE WORK ONLY

# DRAINAGE PLAN

SCALE: 1" = 50′

D-5

STATE OF CALIFORNIA - DEPARTMENT OF TRANSPORTATION

Caltrans

CONSULTANT FUNCTIONAL SUPERVISOR: R. SCOTT BACSIKIN

CALCULATED-DESIGNED BY: VAHID HAGHDOUST

CHECKED BY: STEVE LEATHERS

REVISED BY

DATE REVISED

LAST REVISION 10-12-10 | DATE PLOTTED => 19-AUG-2011 | TIME PLOTTED => 15:47

| Dist | COUNTY | ROUTE | POST MILES TOTAL PROJECT | SHEET No. | TOTAL SHEETS |
|---|---|---|---|---|---|
| 12 | Ora | 57 | 12.2/15.2 | 89 | 527 |

V. Haghdoust 11/15/10
REGISTERED CIVIL ENGINEER DATE

4-18-11
PLANS APPROVAL DATE

REGISTERED PROFESSIONAL ENGINEER VAHID HAGHDOUST No. C 74716 Exp. 12-31-11 CIVIL STATE OF CALIFORNIA

*THE STATE OF CALIFORNIA OR ITS OFFICERS OR AGENTS SHALL NOT BE RESPONSIBLE FOR THE ACCURACY OR COMPLETENESS OF SCANNED COPIES OF THIS PLAN SHEET.*

HDR ENGINEERING, INC.
3230 EL CAMINO REAL
SUITE 200
IRVINE, CA 92602-1377

OCTA
550 SOUTH MAIN STREET
P.O. BOX 14184
ORANGE, CA 92863-1584

NOTE:

1. FOR ACCURATE RIGHT OF WAY DATA, CONTACT RIGHT OF WAY ENGINEERING AT THE DISTRICT OFFICE.

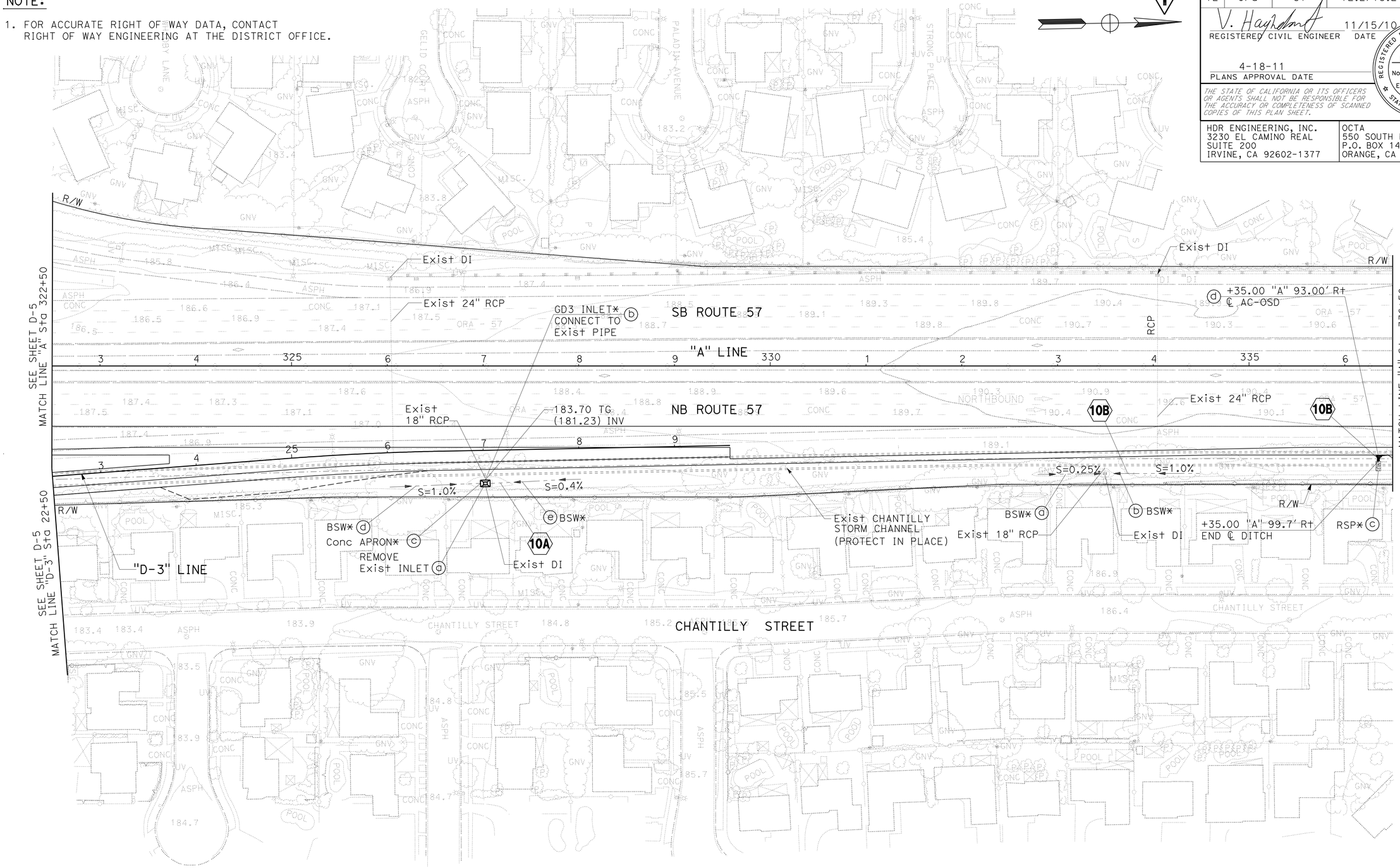


## DRAINAGE PLAN

SCALE: 1" = 50'

**1 REVISED PER ADDENDUM No. 1 DATED AUGUST 22, 2011**

THIS PLAN ACCURATE FOR DRAINAGE WORK ONLY

D-6

STATE OF CALIFORNIA - DEPARTMENT OF TRANSPORTATION

Caltrans

CONSULTANT FUNCTIONAL SUPERVISOR: R. SCOTT BACSIKIN

CALCULATED-DESIGNED BY: VAHID HAGHDOUST

CHECKED BY: STEVE LEATHERS

REVISED BY

DATE REVISED

LAST REVISION DATE PLOTTED => 19-AUG-2011 TIME PLOTTED => 15:47 10-12-10

BORDER LAST REVISED 7/2/2010

USERNAME => trstrk
DGN FILE => c0F040ia006.dgn

RELATIVE BORDER SCALE IS IN INCHES 0 1 2 3

UNIT 12-2998

PROJECT NUMBER & PHASE 12000001091

| Dist | COUNTY | ROUTE | POST MILES TOTAL PROJECT | SHEET No. | TOTAL SHEETS |
|---|---|---|---|---|---|
| 12 | Ora | 57 | 12.2/15.2 | 90 | 527 |

V. Haghdoust 11/15/10
REGISTERED CIVIL ENGINEER DATE

4-18-11
PLANS APPROVAL DATE

REGISTERED PROFESSIONAL ENGINEER VAHID HAGHDOUST No. C 74716 Exp. 12-31-11 CIVIL STATE OF CALIFORNIA

*THE STATE OF CALIFORNIA OR ITS OFFICERS OR AGENTS SHALL NOT BE RESPONSIBLE FOR THE ACCURACY OR COMPLETENESS OF SCANNED COPIES OF THIS PLAN SHEET.*

HDR ENGINEERING, INC.
3230 EL CAMINO REAL
SUITE 200
IRVINE, CA 92602-1377

OCTA
550 SOUTH MAIN STREET
P.O. BOX 14184
ORANGE, CA 92863-1584

NOTE:

1. FOR ACCURATE RIGHT OF WAY DATA, CONTACT RIGHT OF WAY ENGINEERING AT THE DISTRICT OFFICE.

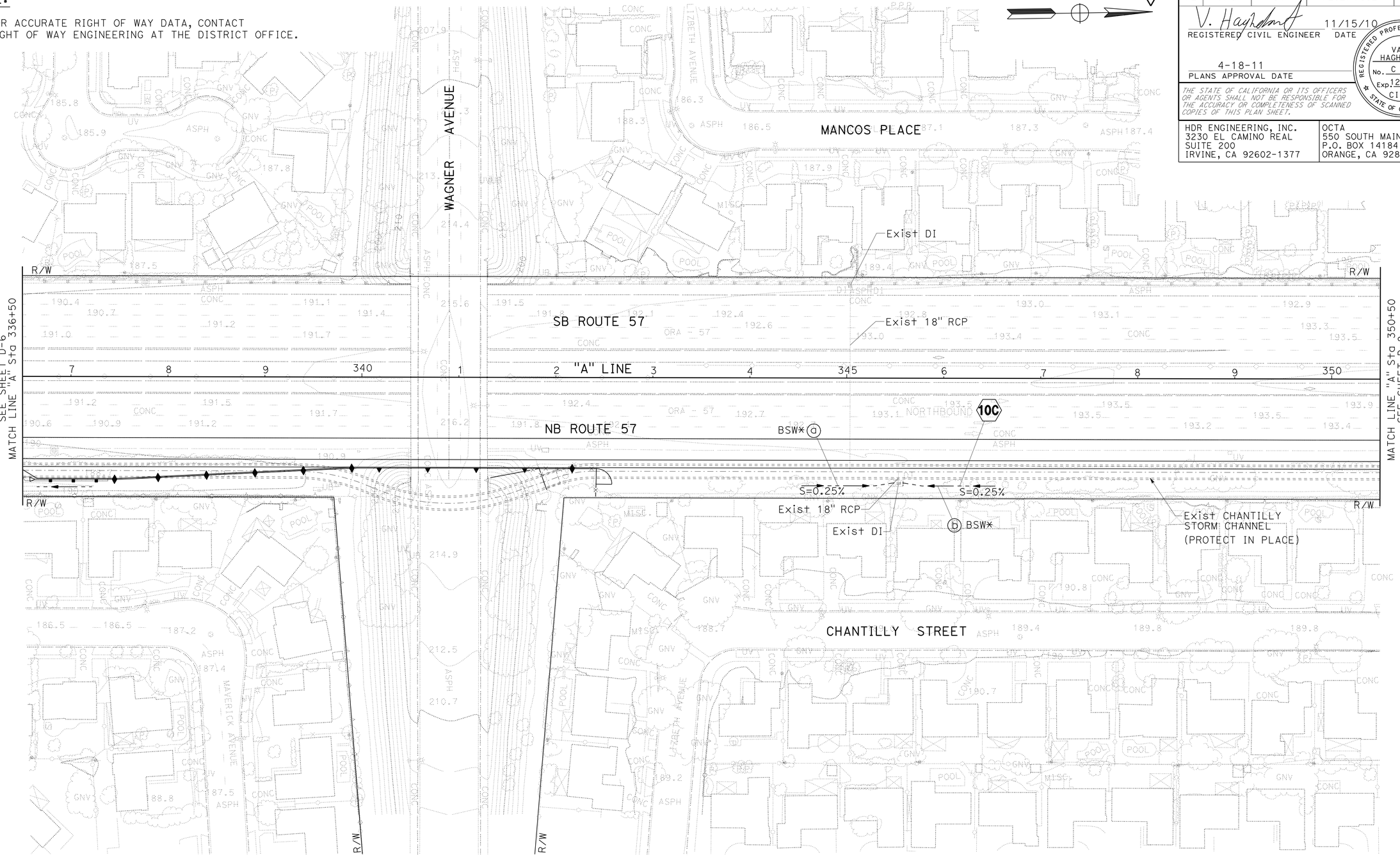


1 REVISED PER ADDENDUM No. 1 DATED AUGUST 22, 2011

THIS PLAN ACCURATE FOR DRAINAGE WORK ONLY

## DRAINAGE PLAN

SCALE: 1" = 50'

D-7

STATE OF CALIFORNIA - DEPARTMENT OF TRANSPORTATION

Caltrans

CONSULTANT FUNCTIONAL SUPERVISOR: R. SCOTT BACSIKIN

CALCULATED-DESIGNED BY: VAHID HAGHDOUST

CHECKED BY: STEVE LEATHERS

REVISED BY

DATE REVISED

LAST REVISION DATE PLOTTED => 19-AUG-2011
TIME PLOTTED => 15:47

| Dist | COUNTY | ROUTE | POST MILES TOTAL PROJECT | SHEET No. | TOTAL SHEETS |
|---|---|---|---|---|---|
| 12 | Ora | 57 | 12.2/15.2 | 91 | 527 |

V. Haghdoust 11/15/10
REGISTERED CIVIL ENGINEER DATE

4-18-11
PLANS APPROVAL DATE

REGISTERED PROFESSIONAL ENGINEER
VAHID HAGHDOUST
No. C 74716
Exp. 12-31-11
CIVIL
STATE OF CALIFORNIA

*THE STATE OF CALIFORNIA OR ITS OFFICERS OR AGENTS SHALL NOT BE RESPONSIBLE FOR THE ACCURACY OR COMPLETENESS OF SCANNED COPIES OF THIS PLAN SHEET.*

HDR ENGINEERING, INC.
3230 EL CAMINO REAL
SUITE 200
IRVINE, CA 92602-1377

OCTA
550 SOUTH MAIN STREET
P.O. BOX 14184
ORANGE, CA 92863-1584

NOTE:

1. FOR ACCURATE RIGHT OF WAY DATA, CONTACT RIGHT OF WAY ENGINEERING AT THE DISTRICT OFFICE.

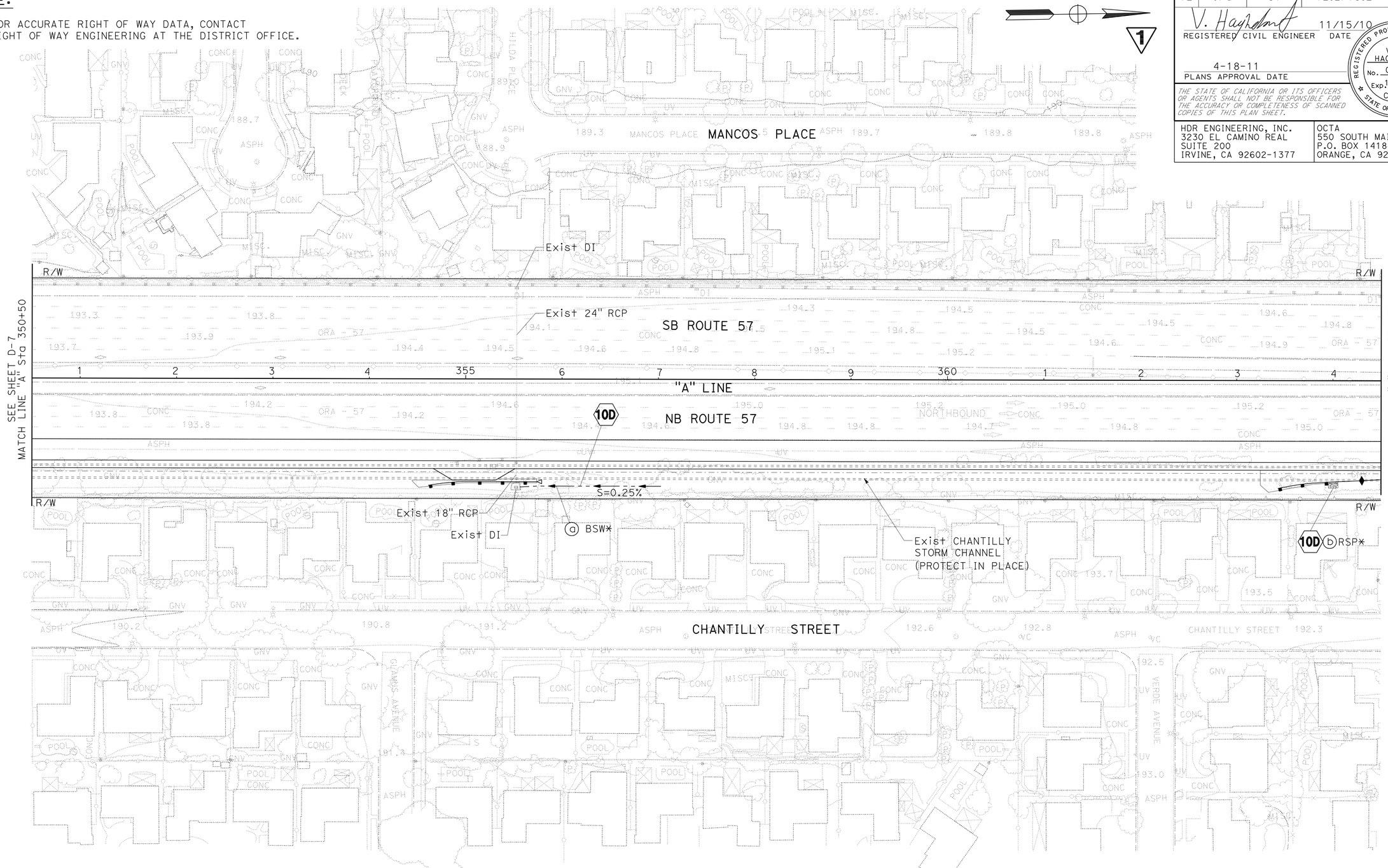


# DRAINAGE PLAN

SCALE: 1" = 50'

1 REVISED PER ADDENDUM No. 1 DATED AUGUST 22, 2011

THIS PLAN ACCURATE FOR DRAINAGE WORK ONLY

D-8

STATE OF CALIFORNIA - DEPARTMENT OF TRANSPORTATION
Caltrans

CONSULTANT FUNCTIONAL SUPERVISOR: R. SCOTT BACSIKIN

CALCULATED-DESIGNED BY: VAHID HAGHDOUST
CHECKED BY: STEVE LEATHERS

REVISED BY
DATE REVISED

LAST REVISION DATE PLOTTED => 19-AUG-2011
TIME PLOTTED => 15:48

BORDER LAST REVISED 7/2/2010 | USERNAME => trstrk | DGN FILE => c0F040ia008.dgn | RELATIVE BORDER SCALE IS IN INCHES 0 1 2 3 | UNIT 12-2998 | PROJECT NUMBER & PHASE 12000001091

| Dist | COUNTY | ROUTE | POST MILES TOTAL PROJECT | SHEET No. | TOTAL SHEETS |
|---|---|---|---|---|---|
| 12 | Ora | 57 | 12.2/15.2 | 92 | 527 |

V. Haghdoust 11/15/10
REGISTERED CIVIL ENGINEER DATE

4-18-11
PLANS APPROVAL DATE

REGISTERED PROFESSIONAL ENGINEER VAHID HAGHDOUST No. C 74716 Exp. 12-31-11 CIVIL STATE OF CALIFORNIA

*THE STATE OF CALIFORNIA OR ITS OFFICERS OR AGENTS SHALL NOT BE RESPONSIBLE FOR THE ACCURACY OR COMPLETENESS OF SCANNED COPIES OF THIS PLAN SHEET.*

HDR ENGINEERING, INC.
3230 EL CAMINO REAL
SUITE 200
IRVINE, CA 92602-1377

OCTA
550 SOUTH MAIN STREET
P.O. BOX 14184
ORANGE, CA 92863-1584

NOTE:

1. FOR ACCURATE RIGHT OF WAY DATA, CONTACT RIGHT OF WAY ENGINEERING AT THE DISTRICT OFFICE.

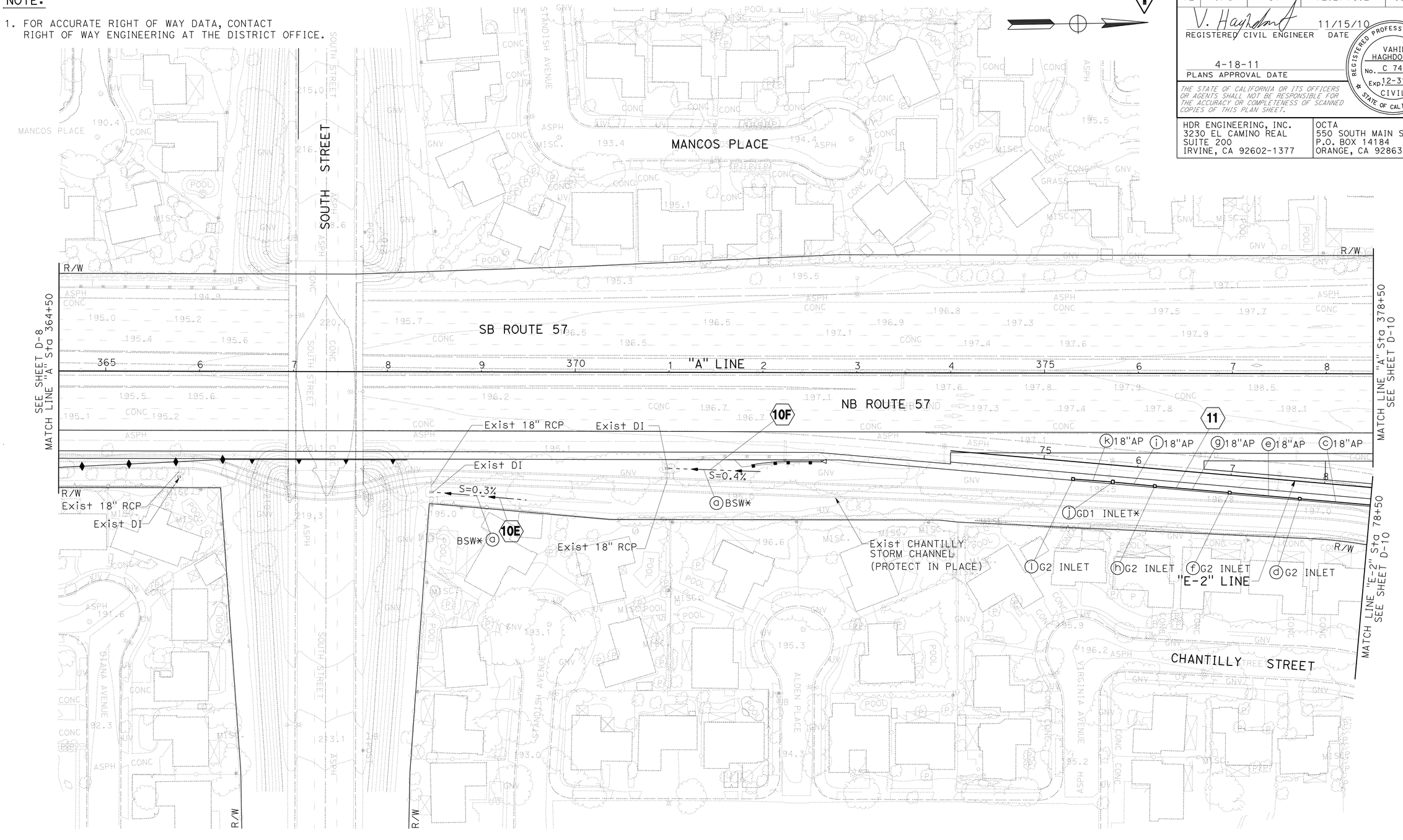


1 REVISED PER ADDENDUM No. 1 DATED AUGUST 22, 2011

THIS PLAN ACCURATE FOR DRAINAGE WORK ONLY

# DRAINAGE PLAN

SCALE: 1" = 50'

D-9

STATE OF CALIFORNIA - DEPARTMENT OF TRANSPORTATION

Caltrans

CONSULTANT FUNCTIONAL SUPERVISOR: R. SCOTT BACSIKIN

CALCULATED-DESIGNED BY: VAHID HAGHDOUST

CHECKED BY: STEVE LEATHERS

REVISED BY

DATE REVISED

LAST REVISION 10-12-10

DATE PLOTTED => 19-AUG-2011
TIME PLOTTED => 15:48

| Dist | COUNTY | ROUTE | POST MILES TOTAL PROJECT | SHEET No. | TOTAL SHEETS |
|---|---|---|---|---|---|
| 12 | Ora | 57 | 12.2/15.2 | 93 | 527 |

V. Haghdoust 11/15/10
REGISTERED CIVIL ENGINEER DATE

4-18-11
PLANS APPROVAL DATE

REGISTERED PROFESSIONAL ENGINEER VAHID HAGHDOUST No. C 74716 Exp. 12-31-11 CIVIL STATE OF CALIFORNIA

*THE STATE OF CALIFORNIA OR ITS OFFICERS OR AGENTS SHALL NOT BE RESPONSIBLE FOR THE ACCURACY OR COMPLETENESS OF SCANNED COPIES OF THIS PLAN SHEET.*

HDR ENGINEERING, INC.
3230 EL CAMINO REAL
SUITE 200
IRVINE, CA 92602-1377

OCTA
550 SOUTH MAIN STREET
P.O. BOX 14184
ORANGE, CA 92863-1584

NOTE:

1. FOR ACCURATE RIGHT OF WAY DATA, CONTACT RIGHT OF WAY ENGINEERING AT THE DISTRICT OFFICE.

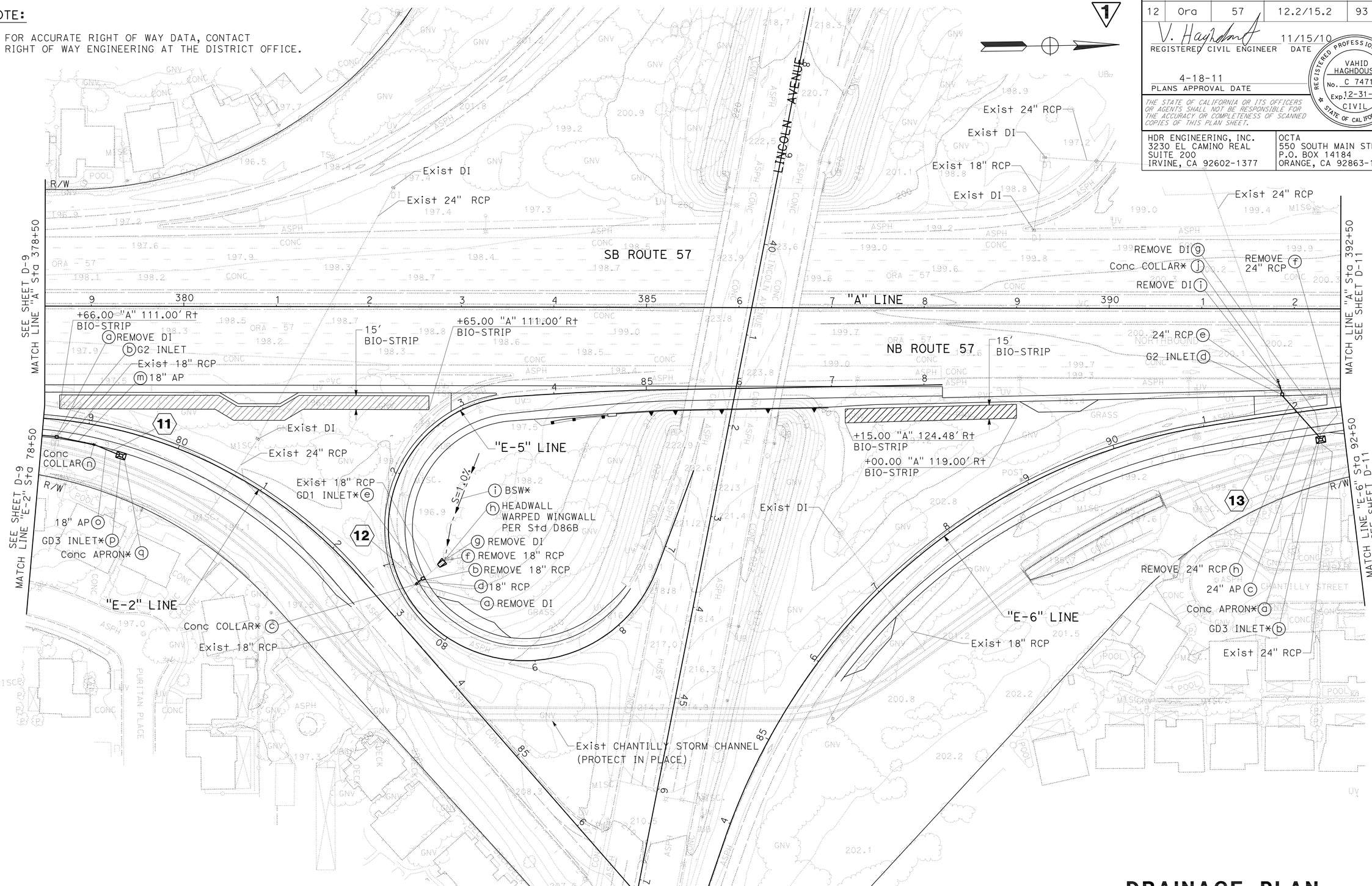


# DRAINAGE PLAN

SCALE: 1" = 50'

D-10

1 REVISED PER ADDENDUM No. 1 DATED AUGUST 22, 2011

THIS PLAN ACCURATE FOR DRAINAGE WORK ONLY

STATE OF CALIFORNIA - DEPARTMENT OF TRANSPORTATION

Caltrans

CONSULTANT FUNCTIONAL SUPERVISOR: R. SCOTT BACSIKIN

CALCULATED-DESIGNED BY: VAHID HAGHDOUST

CHECKED BY: STEVE LEATHERS

REVISED BY

DATE REVISED

LAST REVISION 10-12-10

DATE PLOTTED => 19-AUG-2011
TIME PLOTTED => 15:48

| Dist | COUNTY | ROUTE | POST MILES TOTAL PROJECT | SHEET No. | TOTAL SHEETS |
|---|---|---|---|---|---|
| 12 | Ora | 57 | 12.2/15.2 | 94 | 527 |

V. Haghdoust 11/15/10
REGISTERED CIVIL ENGINEER DATE

4-18-11
PLANS APPROVAL DATE

REGISTERED PROFESSIONAL ENGINEER VAHID HAGHDOUST No. C 74716 Exp. 12-31-11 CIVIL STATE OF CALIFORNIA

*THE STATE OF CALIFORNIA OR ITS OFFICERS OR AGENTS SHALL NOT BE RESPONSIBLE FOR THE ACCURACY OR COMPLETENESS OF SCANNED COPIES OF THIS PLAN SHEET.*

HDR ENGINEERING, INC.
3230 EL CAMINO REAL
SUITE 200
IRVINE, CA 92602-1377

OCTA
550 SOUTH MAIN STREET
P.O. BOX 14184
ORANGE, CA 92863-1584

NOTE:

1. FOR ACCURATE RIGHT OF WAY DATA, CONTACT RIGHT OF WAY ENGINEERING AT THE DISTRICT OFFICE.

**NO WORK ON THIS SHEET**

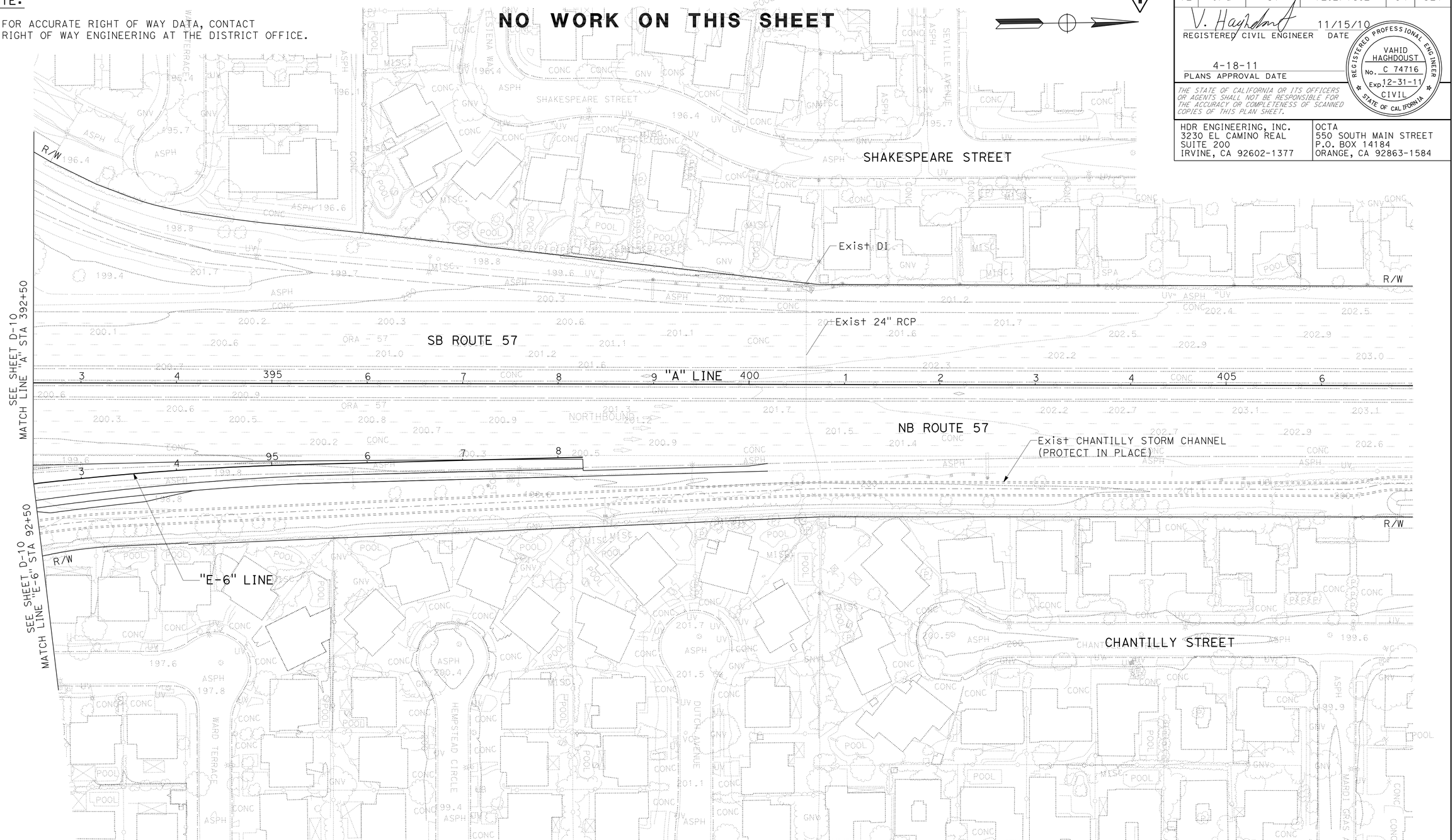


1 **REVISED PER ADDENDUM No. 1 DATED AUGUST 22, 2011**

THIS PLAN ACCURATE FOR DRAINAGE WORK ONLY

## DRAINAGE PLAN

SCALE: 1" = 50'

**D-11**

STATE OF CALIFORNIA - DEPARTMENT OF TRANSPORTATION
Caltrans

CONSULTANT FUNCTIONAL SUPERVISOR: R. SCOTT BACSIKIN

CALCULATED-DESIGNED BY: VAHID HAGHDOUST
CHECKED BY: STEVE LEATHERS

REVISED BY
DATE REVISED

LAST REVISION 10-12-10
DATE PLOTTED => 19-AUG-2011
TIME PLOTTED => 15:48

| Dist | COUNTY | ROUTE | POST MILES TOTAL PROJECT | SHEET No. | TOTAL SHEETS |
|---|---|---|---|---|---|
| 12 | Ora | 57 | 12.2/15.2 | 98 | 527 |

V. Haghdoust 11/15/10
REGISTERED CIVIL ENGINEER DATE

4-18-11
PLANS APPROVAL DATE

REGISTERED PROFESSIONAL ENGINEER VAHID HAGHDOUST No. C 74716 Exp. 12-31-11 CIVIL STATE OF CALIFORNIA

*THE STATE OF CALIFORNIA OR ITS OFFICERS OR AGENTS SHALL NOT BE RESPONSIBLE FOR THE ACCURACY OR COMPLETENESS OF SCANNED COPIES OF THIS PLAN SHEET.*

HDR ENGINEERING, INC.
3230 EL CAMINO REAL
SUITE 200
IRVINE, CA 92602-1377

OCTA
550 SOUTH MAIN STREET
P.O. BOX 14184
ORANGE, CA 92863-1584

1

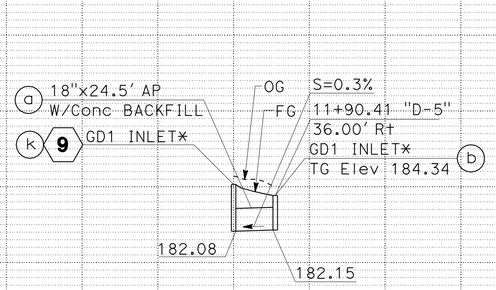


**DRAINAGE SYSTEM No. 10**
11+90.41 "D-5"

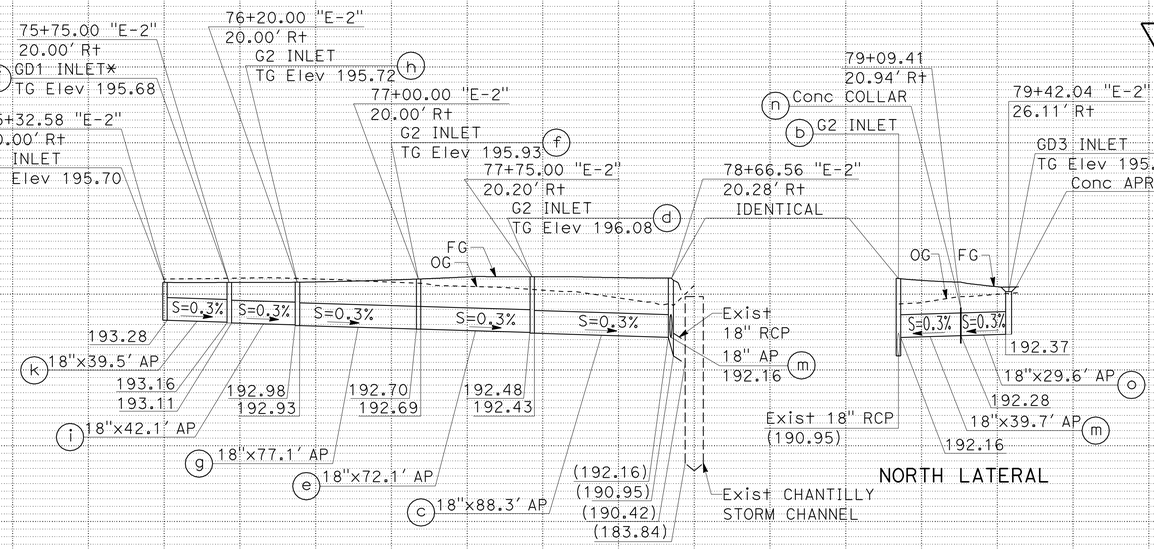


**DRAINAGE SYSTEM No. 11**
78+60.00 "E-2"

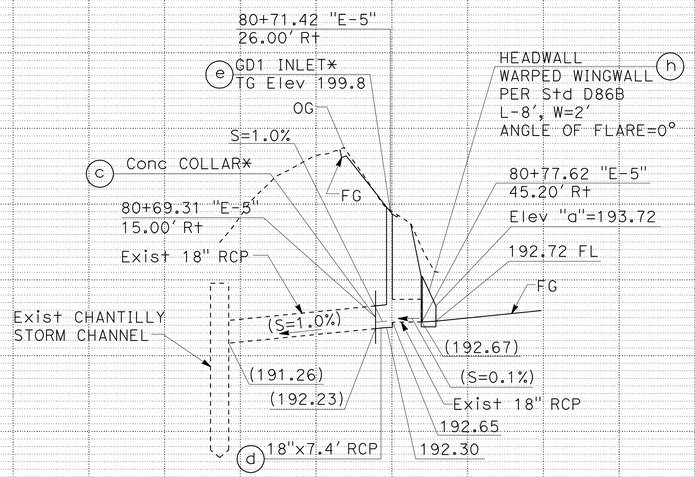


**DRAINAGE SYSTEM No. 12**
80+71.52 "E-5"

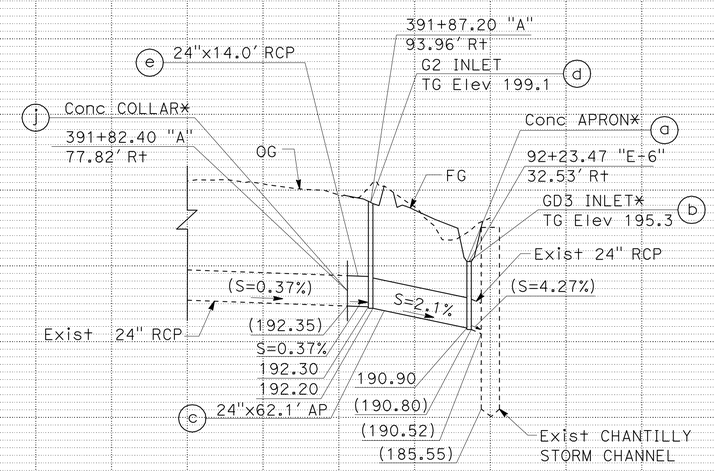


**DRAINAGE SYSTEM No. 13**
92+23.47 "E-6"

# DRAINAGE PROFILES

SCALE: HORIZ 1" = 50'
VERT1" = 5'

1 **REVISED PER ADDENDUM No. 1 DATED AUGUST 22, 2011**

**DP-4**

REVISED BY | DATE REVISED
VAHID HAGHDOUST | STEVE LEATHERS
CALCULATED-DESIGNED BY | CHECKED BY
CONSULTANT FUNCTIONAL SUPERVISOR: R. SCOTT BACSIKIN
STATE OF CALIFORNIA - DEPARTMENT OF TRANSPORTATION
Caltrans

STATION | TOTAL
CY | Exc

LAST REVISION 10-12-10 | DATE PLOTTED => 19-AUG-2011 | TIME PLOTTED => 15:48

| Dist | COUNTY | ROUTE | POST MILES TOTAL PROJECT | SHEET No. | TOTAL SHEETS |
|---|---|---|---|---|---|
| 12 | Ora | 57 | 12.2/15.2 | 99 | 527 |

REGISTERED CIVIL ENGINEER 11/15/10 DATE

4-18-11
PLANS APPROVAL DATE

REGISTERED PROFESSIONAL ENGINEER VAHID HAGHDOUST No. C 74716 Exp. 12-31-11 CIVIL STATE OF CALIFORNIA

*THE STATE OF CALIFORNIA OR ITS OFFICERS OR AGENTS SHALL NOT BE RESPONSIBLE FOR THE ACCURACY OR COMPLETENESS OF SCANNED COPIES OF THIS PLAN SHEET.*

HDR ENGINEERING, INC.
3230 EL CAMINO REAL
SUITE 200
IRVINE, CA 92602-1377

OCTA
550 SOUTH MAIN STREET
P.O. BOX 14184
ORANGE, CA 92863-1584

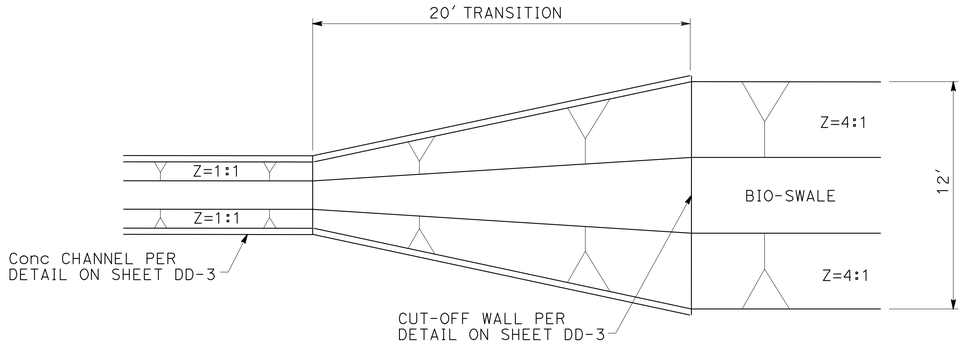


## SWALE TO CHANNEL TRANSITION

DRAINAGE SYSTEM Nos. 6A g

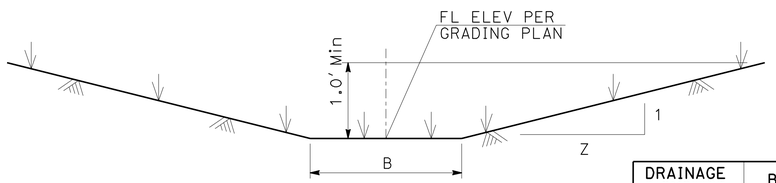


| DRAINAGE SYSTEM No. | UNIT | B (ft) | Z (ft) |
|---|---|---|---|
| 6A | f | 4 | 4 |
| 10A | d | 4 | 4 |
| 10A | e | 4 | 4 |
| 10B | a | 4 | 4 |
| 10B | b | 4 | 4 |
| 10C | a | 4 | 4 |
| 10C | b | 4 | 4 |
| 10D | a | 4 | 4 |
| 10E | a | 4 | 4 |
| 10F | a | 2 | 4 |
| 12 | i | 4 | 20 |

SWALE NOTES:

1. BIO-SWALE SEED MIX PER LANDSCAPE PLANS.

## BIO-SWALE TYPICAL SECTION

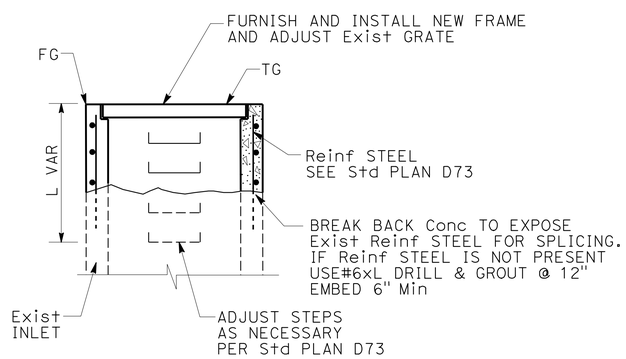


## ADJUST INLET DETAIL

DRAINAGE SYSTEM Nos. 3 a b

| D | L | T |
|---|---|---|
| 12" | 1.0' | 4" |
| 18" | 1.0' | 5" |
| 24" | 1.0' | 6" |
| 36" | 1.5' | 8" |
| 48" | 1.5' | 10" |
| 54" | 1.5' | 10" |
| 60" | 1.75' | 11" |
| 66" | 1.75' | 11" |
| 72" | 2.0' | 12" |

USE TABLE
UNLESS OTHERWISE
NOTED ON PLANS

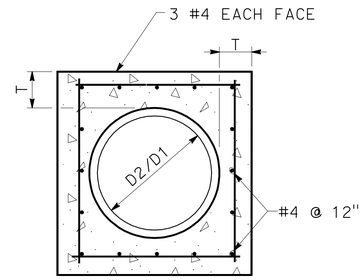


## SECTION A-A

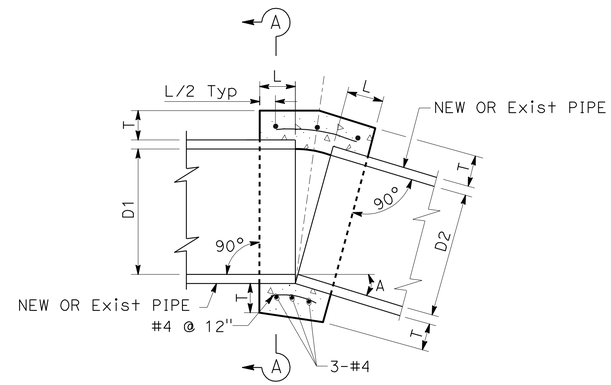


NOTES - CONCRETE COLLAR:

1. WHERE PIPES OF DIFFERENT DIAMETERS ARE JOINED WITH A CONCRETE COLLAR L & T SHALL BE THOSE OF THE LARGER PIPE D=D1 OR D2 WHICHEVER IS GREATER.
2. FOR PIPE SIZE NOT LISTED USE NEXT LARGER SIZE.
3. OMIT REINFORCING ON PIPES 24" AND LESS IN DIAMETER AND IN ALL PIPES WHERE ANGLE A IS LESS THAN 10°.
4. JOIN PIPES AT INVERT
5. REINFORCEMENT SHALL BE PLACED 1½" CLEAR FROM OUT SIDE DIAMETER OF PIPE.

## CONCRETE COLLAR

DRAINAGE SYSTEM Nos.

2 b d
3 s
4 d
5 b
6 b
9 v w x
9C e f
10 b
12 e
13 j

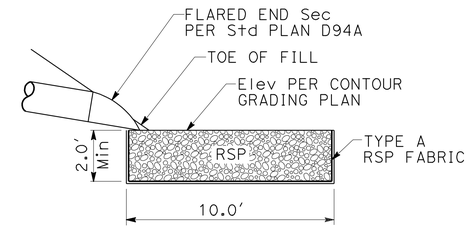


## SECTION B-B

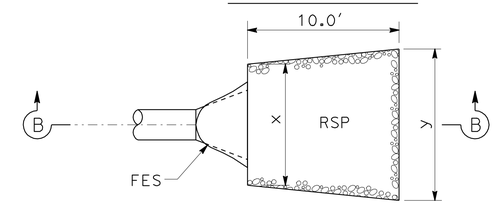


## PLAN

| DRAINAGE SYSTEM No. | UNIT | x (ft) | y (ft) |
|---|---|---|---|
| 2A | a | 5 | 10 |
| 6A | a | 3.75 | 10 |
| 7 | a | 5 | 10 |
| 9A | a | 5 | 10 |
| 9C | b | 5 | 10 |
| 10A | f | 5 | 5 |
| 10B | c | 5 | 5 |
| 10D | b | 5 | 5 |

RSP NOTES:

1. RSP TYPE SHALL BE FACING (BACKING No. 1) AND PLACEMENT SHALL BE METHOD B.
2. FINISH GRADE (FG) SHALL BE FLUSH WITH ORIGINAL GROUND (OG).
3. RSP FABRIC SHALL BE PROVIDED AT ALL SOIL INTERFACES.
4. RSP SHOULD EXTEND TO THE TOP OF BANK ON THE OPPOSITE SIDE OF THE SWALE, OR DITCH.

## ROCK SLOPE PROTECTION AT PIPE OUTLET

DRAINAGE SYSTEM Nos.

2A a
7 a
9C b
6A a
9A a
10A f
10B c
10D b

## DRAINAGE DETAILS

NO SCALE

1 REVISED PER ADDENDUM No. 1 DATED AUGUST 22, 2011

DD-1

STATE OF CALIFORNIA - DEPARTMENT OF TRANSPORTATION
Caltrans
CONSULTANT FUNCTIONAL SUPERVISOR: R. SCOTT BACSIKIN
CALCULATED-DESIGNED BY: VAHID HAGHDOUST
CHECKED BY: STEVE LEATHERS
REVISED BY
DATE REVISED

LAST REVISION 10-12-10
DATE PLOTTED => 19-AUG-2011
TIME PLOTTED => 15:49

| Dist | COUNTY | ROUTE | POST MILES TOTAL PROJECT | SHEET No. | TOTAL SHEETS |
|---|---|---|---|---|---|
| 12 | Ora | 57 | 12.2/15.2 | 109 | 527 |

V. Haghdoust 3/24/11
REGISTERED CIVIL ENGINEER DATE

4-18-11
PLANS APPROVAL DATE

REGISTERED PROFESSIONAL ENGINEER VAHID HAGHDOUST No. C 74716 Exp. 12-31-11 CIVIL STATE OF CALIFORNIA

*THE STATE OF CALIFORNIA OR ITS OFFICERS OR AGENTS SHALL NOT BE RESPONSIBLE FOR THE ACCURACY OR COMPLETENESS OF SCANNED COPIES OF THIS PLAN SHEET.*

HDR ENGINEERING, INC.
3230 EL CAMINO REAL
SUITE 200
IRVINE, CA 92602-1377

OCTA
550 SOUTH MAIN STREET
P.O. BOX 14184
ORANGE, CA 92863-1584

1

## ABBREVIATIONS:

G1, G2, GD-1, GD-3 - INLET TYPES
S - STANDARD JOINT TYPE
P - POSITIVE JOINT TYPE
HDPEP - HIGH DENSITY POLYETHYLENE CORRUGATED

| ALTERNATIVE PIPE CULVERTS | | |
|---|---|---|
| SIZE | ALLOWABLE PIPE MATERIAL | |
| 18" | RCP | HDPEP (TYPES) |
| 24" | RCP | HDPEP (TYPES) |
| 36" | RCP | HDPEP (TYPES) |
| 48" | RCP | HDPEP (TYPES) |

# DRAINAGE QUANTITIES

| DRAINAGE PLAN SHEET No. | DRAINAGE SYSTEM No. ⬡ | DRAINAGE UNIT ◯ | MINOR Conc (CHANNEL LINING) | MINOR Conc (MINOR STRUCTURE) | Misc IRON & STEEL | APC FRAME & GRATE (24-12) (N) | APC 18" APC | APC 24" APC | APC 36" APC | APC 48" APC | RCP 18" RCP | RCP 24" RCP | RCP 36" RCP | RCP 48" RCP | CSP 18" CSP (0.064" THICK) | CSP 24" CSP (0.079" THICK) | CSP 48" CSP (0.079" THICK) | 3" PLASTIC PIPE (SCHEDULE 40) | 18" AUTOMATIC DRAINAGE GATE | RSP FABRIC | RSP (FACING, METHOD B) | WELDED WIRE FABRIC (6"x6" W1.4xW1.4) (N) | REMOVE PIPE | REMOVE INLET | ABANDON CULVERT | ADJUST INLET | 24" PRECAST Conc PIPE MANHOLE | REMOVE Conc (CHANNEL) | REMOVE FES | REMOVE RSP (N) | HOT MIX ASPHALT (TYPE A) | SAND BACKFILL | 18" Alt FES | Conc COLLAR (N) | 48" DIAMETER SIDE CONNECTION (N) | REMOVE Conc (Misc) | DITCH EXCAVATION | HEIGHT OF INLET (N) | JOINT TYPE (N) | DESCRIPTION | STATION | DRAINAGE UNIT ◯ | DRAINAGE SYSTEM No. ⬡ | DRAINAGE PLAN SHEET No. |
|---|---|---|---|---|---|---|---|---|---|---|---|---|---|---|---|---|---|---|---|---|---|---|---|---|---|---|---|---|---|---|---|---|---|---|---|---|---|---|---|---|---|---|---|---|
| | | | CY | CY | LB | EA | LF | LF | LF | LF | LF | LF | LF | LF | LF | LF | LF | LF | EA | SQYD | CY | SQYD | LF | EA | LF | EA | LF | CY | EA | CY | TON | CY | EA | EA | EA | CY | CY | FT | | | | | | |
| D-2 | 1 | a | | | | | | | | | | | | | | | | | | | | | | 1 | | | | | | | | | | | | | | | | REMOVE DI | 73.46′ Rt "A" 265+76.24 | a | 1 | D-2 |
| | | b | | | | | | | | | | | | | | | | | | | | | 193 | | | | | | | | | | | | | | | | | REMOVE 18" CSP | | b | | |
| | | c | | | | | 83.8 | | | | | | | | | | | | | | | | | | | | | | | | | | | | | | | | P | 18" AP | | c | | |
| | | d | | 2.05 | 435 | | | | | | | | | | | | | | | | | | | | | | | | | | | | | | | | | | | MANHOLE TYPE 1 | 115.53′ Rt "A" 267+10.53 | d | | |
| | | e | | | | | 146.3 | | | | | | | | | | | | | | | | | | | | | | | | | | | | | | S | 18" AP | | e | | |
| | | f | | 1.82 | 326 | 1 | | | | | | | | | | | | | | | | | | | | | | | | | | | | | | | 5 | | G2 INLET | 93.00′ Rt "A" 265+69.96 | f | | |
| | | g | | | | | 22.1 | | | | | | | | | | | | | | | | | | | | | | | | | | | | | | | S | 18" AP | | g | | |
| | | h | | 1.17 | 326 | 1 | | | | | | | | | | | | | | | | | | | | | | | | | | | | | | | 4 | | G1 INLET | 93.00′ Rt "A" 265+44.10 | h | | |
| | | i | | | | | | | | | | | | | | | | 78 | | | | | | | | | | | | | | | | | | | | | 3" PLASTIC PIPE (SCHEDULE 40) | | i | | |
| D-2 | 2 | a | | | | | | | | | | | | | | | | | | | | | 180.3 | | | | | | | | | | | | | | | | | REMOVE 48" RCP | | a | 2 | D-2 |
| | | b | | | | | | | | | | | | | | | | | | | | | | 1 | | | | | | | | | | | | | | | | REMOVE DI | 250.35′ Rt "A" 267+65.78 | b | | |
| | | c | | | | | | | | | | | | | | | | | | | | | 52.6 | | | | | | | | | | | | | | | | | REMOVE 36" RCP | | c | | |
| | | d | | | | | | | | | | | | | | | | | | | | | | | | | | | | | | | | 1 | | | | | | Conc COLLAR | 268.11′ Rt "A" 265+64.12 | d | | |
| | | e | | | | | | | | | | | | 61 | | | | | | | | | | | | | | | | | | | | | | | | | S | 48" RCP | | e | | |
| | | f | | 3.38 | 435 | | | | | | | | | | | | | | | | | | | | | | 1 | | | | | | | | | | | | | MANHOLE TYPE 2 | 254.99′ Rt "A" 266+09.29 | f | | |
| | | g | | | | | | | | 117.2 | | | | | | | | | | | | | | | | | | | | | | | | | | | | S | 48" AP | | g | | |
| | | h | | 3.19 | 435 | | | | | | | | | | | | | | | | | | | | | | 1 | | | | | | | | | | | | | DIVERSION MH | 201.52′ Rt "A" 267+25.45 | h | | |
| | | i | | | | | | | | 77.3 | | | | | | | | | | | | | | | | | | | | | | | | | | | | S | 48" AP | | i | | |
| | | j | | 3.11 | 435 | | | | | | | | | | | | | | | | | | | | | | 1 | | | | | | | | | | | | | MANHOLE TYPE 2 | 219.80′ Rt "A" 268+05.46 | j | | |
| | | k | | | | | | | | 23.2 | | | | | | | | | | | | | | | | | | | | | | | | | | | | S | 48" RCP | | k | | |
| | | l | | | | | | | | | | | | | | | | | | | | | | | | | | | | | | | | | 1 | | | | | SIDE CONNECTION TO Exist CB | 241.25′ Rt "A" 268+21.40 | l | | |
| | | m | | 2.84 | 112 | | | | | | | | | | | | | | | | | 12 | | | | | | | | | | | | | | | | | INLET AT Conc CHANNEL END | | m | | |
| | | n | | | | | | | | | | | | | | | | | | | | | 273 | | | | | | | | | | | | | | | | | REMOVE 30" RCP | | n | | |
| | | o | | | | | | | | | | | | | | | | | | | | | | | | | | | | | | | | | | 1.7 | | | | REMOVE TRANSITION STRUCTURE | | o | | |
| D-2 | 2A | a | | | | | | | | | | | | | | | | | | 12 | 5.6 | | | | | | | | | | | | | | | | | | | RSP | | a | 2A | D-2 |
| | | b | | 2.88 | 117 | | | | | | | | | | | | | | | | | | | | | | | | | | | | | | | | | | | HEADWALL W/Ped WINGWALL | | b | | |
| | | c | | | | | | | | | | | | | | | | | 1 | | | | | | | | | | | | | | | | | | | | | 18" AUTOMATIC DRAIN GATE | | c | | |
| | | d | | | | | 38.9 | | | | | | | | | | | | | | | | | | | | | | | | | | | | | | | S | 18" AP | | d | | |
| D-2 | 2B | a | | | | | | 41.1 | | | | | | | | | | | | | | | | | | | | | | | | | | | | | | | S | 24" AP | | a | 2B | D-2 |
| | | b | | | | | | | | | | | | | | | | | | | | | | | | | | | | | | | | 1 | | | | | | Conc COLLAR | 192.41′ Rt "A" 266+50.46 | b | | |
| | | c | | 5.1 | 396 | | | | | | | | | | 4.5 | 6.4 | | | | | | | | | | | | | | | | | | | | | | | WATER QUALITY RISER | | c | | |
| SHEET TOTALS | | | | 25.5 | 3017 | 2 | 291.1 | 41.1 | | 217.7 | | | | 61 | | 4.5 | 6.4 | 78 | 1 | 12 | 5.6 | 12 | 698.9 | 2 | | | 3 | | | | | | | 2 | 1 | 1.7 | | | | SHEET TOTALS | | | | |

(N) - NOT A SEPARATE PAY ITEM, FOR INFORMATION ONLY

DRAINAGE QUANTITIES

1 REVISED PER ADDENDUM No. 1 DATED AUGUST 22, 2011

DQ-1

VAHID HAGHDOUST | REVISED BY
STEVE LEATHERS | DATE REVISED
CALCULATED-DESIGNED BY
CHECKED BY
CONSULTANT FUNCTIONAL SUPERVISOR
R. SCOTT BACSIKIN
STATE OF CALIFORNIA - DEPARTMENT OF TRANSPORTATION
Caltrans

LAST REVISION 10-12-10 | DATE PLOTTED => 19-AUG-2011 | TIME PLOTTED => 15:49

| Dist | COUNTY | ROUTE | POST MILES TOTAL PROJECT | SHEET No. | TOTAL SHEETS |
|---|---|---|---|---|---|
| 12 | Ora | 57 | 12.2/15.2 | 110 | 527 |

V. Haghdoust 3/24/11
REGISTERED CIVIL ENGINEER DATE

4-18-11
PLANS APPROVAL DATE

REGISTERED PROFESSIONAL ENGINEER VAHID HAGHDOUST No. C 74716 Exp. 12-31-11 CIVIL STATE OF CALIFORNIA

*THE STATE OF CALIFORNIA OR ITS OFFICERS OR AGENTS SHALL NOT BE RESPONSIBLE FOR THE ACCURACY OR COMPLETENESS OF SCANNED COPIES OF THIS PLAN SHEET.*

HDR ENGINEERING, INC.
3230 EL CAMINO REAL
SUITE 200
IRVINE, CA 92602-1377

OCTA
550 SOUTH MAIN STREET
P.O. BOX 14184
ORANGE, CA 92863-1584

# DRAINAGE QUANTITIES

| DRAINAGE PLAN SHEET No. | DRAINAGE SYSTEM No. ⬡ | DRAINAGE UNIT ◯ | MINOR Conc (CHANNEL LINING) | MINOR Conc (MINOR STRUCTURE) | Misc IRON & STEEL | APC FRAME & GRATE (24-12) (N) | APC 18" APC | APC 24" APC | APC 36" APC | APC 48" APC | RCP 18" RCP | RCP 24" RCP | RCP 36" RCP | RCP 48" RCP | CSP 18" CSP (0.064" THICK) | CSP 24" CSP (0.079" THICK) | CSP 48" CSP (0.079" THICK) | 3" PLASTIC PIPE (SCHEDULE 40) | 18" AUTOMATIC DRAINAGE GATE | RSP FABRIC | RSP (FACING, METHOD B) | WELDED WIRE FABRIC (6"x6" W1.4xW1.4) (N) | REMOVE PIPE | REMOVE INLET | ABANDON CULVERT | ADJUST INLET | 24" PRECAST Conc PIPE MANHOLE | REMOVE Conc (CHANNEL) | REMOVE FES | REMOVE RSP (N) | HOT MIX ASPHALT (TYPE A) | SAND BACKFILL | 18" Alt FES | Conc COLLAR (N) | 48" DIAMETER SIDE CONNECTION (N) | REMOVE Conc (Misc) | DITCH EXCAVATION | HEIGHT OF INLET (N) | JOINT TYPE (N) | DESCRIPTION | STATION | DRAINAGE UNIT ◯ | DRAINAGE SYSTEM No. ⬡ | DRAINAGE PLAN SHEET No. |
|---|---|---|---|---|---|---|---|---|---|---|---|---|---|---|---|---|---|---|---|---|---|---|---|---|---|---|---|---|---|---|---|---|---|---|---|---|---|---|---|---|---|---|---|
| | | | CY | CY | LB | EA | LF | LF | LF | LF | LF | LF | LF | LF | LF | LF | LF | LF | EA | SQYD | CY | SQYD | LF | EA | LF | EA | LF | CY | EA | CY | TON | CY | EA | EA | EA | CY | CY | FT | | | | | |
| D-2 | 2C | a | | 2.35 | 652 | 2 | | | | | | | | | | | | | | | | | | | | | | | | | | | | | | | | | | GD3 INLET | 156.51′ Rt "A" 270+24.99 | a | 2C | D-2 |
| | | b | | 0.73 | | | | | | | | | | | | | | | | | | | | | | | | | | | | | | | | | | | | Conc APRON | | b | | |
| | | c | | | | | | | | | | | | | | | | | | | | | | 1 | | | | | | | | | | | | | | | | REMOVE DI | 149.50′ Rt "A" 270+24.10 | c | | |
| | | d | | | | | | | | | | | | | | | | | | | | | 5.6 | | | | | | | | | | | | | | | | | REMOVE 18" RCP | | d | | |
| | | e | | | | | | | | | | | | | | | | 53 | | | | | | | | | | | | | | | | | | | | | | 3" PLASTIC PIPE (SCHEDULE 40) | | e | | |
| D-2 | 3 | a | | | | | | | | | | | | | | | | | | | | | | | | 1 | | | | | | | | | | | | | | Exist DI (Adj GRADE) | 163.06′ Rt "A" 272+71.33 | a | 3 | D-2 |
| | | b | | | | | | | | | | | | | | | | | | | | | | | | 1 | | | | | | | | | | | | | | Exist DI (Adj GRADE) | 161.53′ Rt "A" 272+97.96 | b | | |
| | | c | | | | | | | | | | | | | | | | | | | | | 16 | | | | | | | | | | | | | | | | | REMOVE 18" CSP | | c | | |
| | | d | | | | | | | | | | | | | | | | | | | | | | 1 | | | | | | | | | | | | | | | | REMOVE DI | 82.50′ Rt "A" 272+74.58 | d | | |
| | | e | | | | | | | | | | | | | | | | | | | | | 46 | | | | | | | | | | | | | | | | | REMOVE 18" CSP | | e | | |
| | | f | | | | | | | | | | | | | | | | | | | | | | 1 | | | | | | | | | | | | | | | | REMOVE DI | 82.50′ Rt "A" 273+24.94 | f | | |
| | | g | | | | | | | | | | | | | | | | | | | | | 70 | | | | | | | | | | | | | | | | | REMOVE 18" CSP | | g | | |
| | | h | | | | | | | | | | | | | | | | | | | | | | 1 | | | | | | | | | | | | | | | | REMOVE DI | 82.50′ Rt "A" 271+99.73 | h | | |
| | | i | | 2.78 | 580 | 2 | | | | | | | | | | | | | | | | | | | | | | | | | | | | | | | | | | GD1 INLET | 99.63′ Rt "A" 272+74.01 | i | | |
| | | j | | | | | 44.9 | | | | | | | | | | | | | | | | | | | | | | | | | | | | | | | S | 18" AP | | j | | |
| | | k | | 1.72 | 326 | 1 | | | | | | | | | | | | | | | | | | | | | | | | | | | | | | | | | | G2 INLET | 98.67′ Rt "A" 273+23.57 | k | | |
| | | l | | | | | | | | | | | | | 19.7 | | | | | | | | | | | | | | | | | | | | | | | S | 18" CSP | | l | | |
| | | m | | | | | 133.4 | | | | | | | | | | | | | | | | | | | | | | | | | | | | | | | S | 18" AP | | m | | |
| | | n | | 1.2 | 326 | 1 | | | | | | | | | | | | | | | | | | | | | | | | | | | | | | | | | | G1 INLET | 95.93′ Rt "A" 274+64.79 | n | | |
| | | o | | | | | 67.9 | | | | | | | | | | | | | | | | | | | | | | | | | | | | | | | S | 18" AP | | o | | |
| | | p | | 2.1 | 580 | 2 | | | | | | | | | | | | | | | | | | | | | | | | | | | | | | | | | | GD1 INLET | 101.06′ Rt "A" 272+00.60 | p | | |
| | | q | | | | | 92.1 | | | | | | | | | | | | | | | | | | | | | | | | | | | | | | | S | 18" AP | | q | | |
| | | r | | 1.2 | 326 | 1 | | | | | | | | | | | | | | | | | | | | | | | | | | | | | | | | | | G1 INLET | 102.96′ Rt "A" 271+02.06 | r | | |
| | | s | | | | | | | | | | | | | | | | | | | | | | | | | | | | | | | | 1 | | | | | | Conc COLLAR | 79.05′ Rt "A" 273+24.73 | s | | |
| D-2 | 4 | a | | | | | | | | | | | | | | | | | | | | | 15 | | | | | | | | | | | | | | | | | REMOVE 24" RCP | | a | 4 | D-2 |
| | | b | | | | | | | | | | | | | | | | | | | | | | | 43.1 | | | | | | | 12 | | | | | | | | Abn & REMOVE INTERFERING PIPE | | b | | |
| | | c | | | | | | | | | | 33.1 | | | | | | | | | | | | | | | | | | | | | | | | | S | 24" RCP | | c | | |
| | | d | | | | | | | | | | | | | | | | | | | | | | | | | | | | | | | | 1 | | | | | | Conc COLLAR | 195.34′ Rt "A" 263+30.75 | d | | |
| D-2 | 5A | a | 41 | | | | | | | | | | | | | | | | | | | 369 | | | | | | | | | | | | | | 106 | | | | Conc CHANNEL | | a | 5A | D-2 |
| SHEET TOTALS | | | 41 | 12.1 | 2790 | 9 | 338.3 | | | | | 33.1 | | | 19.7 | | | 53 | | | | 369 | 152.6 | 4 | 43.1 | 2 | | | | | | 12 | | 2 | | | 106 | | | SHEET TOTALS | | | | |

(N) - NOT A SEPARATE PAY ITEM, FOR INFORMATION ONLY

DRAINAGE QUANTITIES

1 REVISED PER ADDENDUM No. 1 DATED AUGUST 22, 2011



STATE OF CALIFORNIA - DEPARTMENT OF TRANSPORTATION
Caltrans

CONSULTANT FUNCTIONAL SUPERVISOR: R. SCOTT BACSIKIN
CALCULATED-DESIGNED BY: VAHID HAGHDOUST
CHECKED BY: STEVE LEATHERS
REVISED BY
DATE REVISED

LAST REVISION 10-12-10
DATE PLOTTED => 19-AUG-2011
TIME PLOTTED => 15:49

| Dist | COUNTY | ROUTE | POST MILES TOTAL PROJECT | SHEET No. | TOTAL SHEETS |
|---|---|---|---|---|---|
| 12 | Ora | 57 | 12.2/15.2 | 111 | 527 |

1

V. Haghdoust 3/24/11
REGISTERED CIVIL ENGINEER DATE

4-18-11
PLANS APPROVAL DATE

REGISTERED PROFESSIONAL ENGINEER VAHID HAGHDOUST No. C 74716 Exp. 12-31-11 CIVIL STATE OF CALIFORNIA

*THE STATE OF CALIFORNIA OR ITS OFFICERS OR AGENTS SHALL NOT BE RESPONSIBLE FOR THE ACCURACY OR COMPLETENESS OF SCANNED COPIES OF THIS PLAN SHEET.*

HDR ENGINEERING, INC.
3230 EL CAMINO REAL
SUITE 200
IRVINE, CA 92602-1377

OCTA
550 SOUTH MAIN STREET
P.O. BOX 14184
ORANGE, CA 92863-1584

# DRAINAGE QUANTITIES

| DRAINAGE PLAN SHEET No. | DRAINAGE SYSTEM No. ⬡ | DRAINAGE UNIT ◯ | MINOR Conc (CHANNEL LINING) | MINOR Conc (MINOR STRUCTURE) | Misc IRON & STEEL | APC FRAME & GRATE (24-12) (N) | APC 18" APC | APC 24" APC | APC 36" APC | APC 48" APC | RCP 18" RCP | RCP 24" RCP | RCP 36" RCP | RCP 48" RCP | CSP 18" CSP (0.064" THICK) | CSP 24" CSP (0.079" THICK) | CSP 48" CSP (0.079" THICK) | 3" PLASTIC PIPE (SCHEDULE 40) | 18" AUTOMATIC DRAINAGE GATE | RSP FABRIC | RSP (FACING, METHOD B) | WELDED WIRE FABRIC (6"x6" W1.4xW1.4) (N) | REMOVE PIPE | REMOVE INLET | ABANDON CULVERT | ADJUST INLET | 24" PRECAST Conc PIPE MANHOLE | REMOVE Conc (CHANNEL) | REMOVE FES | REMOVE RSP (N) | HOT MIX ASPHALT (TYPE A) | SAND BACKFILL | 18" Alt FES | Conc COLLAR (N) | 48" DIAMETER SIDE CONNECTION (N) | REMOVE Conc (Misc) | DITCH EXCAVATION | HEIGHT OF INLET (N) | JOINT TYPE (N) | DESCRIPTION | STATION | DRAINAGE UNIT ◯ | DRAINAGE SYSTEM No. ⬡ | DRAINAGE PLAN SHEET No. |
|---|---|---|---|---|---|---|---|---|---|---|---|---|---|---|---|---|---|---|---|---|---|---|---|---|---|---|---|---|---|---|---|---|---|---|---|---|---|---|---|---|---|---|---|---|
| | | | CY | CY | LB | EA | LF | LF | LF | LF | LF | LF | LF | LF | LF | LF | LF | LF | EA | SQYD | CY | SQYD | LF | EA | LF | EA | LF | CY | EA | CY | TON | CY | EA | EA | EA | CY | CY | FT | | | | | | |
| D-3 | 5 | a | | | | | 5 | | | | | | | | | | | | | | | | | | | | | | | | | | | | | | | | S | 18" AP | | a | 5 | D-3 |
| | | b | | | | | | | | | | | | | | | | | | | | | | | | | | | | | | | | 1 | | | | | | Conc COLLAR | 64.84' Rt "C-5" 82+24.68 | b | | |
| | | c | | | | | 44.8 | | | | | | | | | | | | | | | | | | | | | | | | | | | | | | | | S | 18" AP | | c | | |
| | | d | | 2.07 | 580 | 2 | | | | | | | | | | | | | | | | | | | | | | | | | | | | | | | | 4.4 | | GD1 INLET | 19.50' Rt "C-5" 82+25.58 | d | | |
| | | e | | | | | 20 | | | | | | | | | | | | | | | | | | | | | | | | | | | | | | | | S | 18" AP | | e | | |
| | | f | | 1.56 | 326 | 1 | | | | | | | | | | | | | | | | | | | | | | | | | | | | | | | | 3.97 | | G2 INLET | 19.50' Rt "C-5" 82+48.53 | f | | |
| | | g | | | | | | | | | | | | | | | | | | | | | | | | | | | | 2.5 | | | | | | | | | | REMOVE RSP | | g | | |
| | | h | | | | | | | | | | | | | | | | | | | | | | | | | | | 1 | | | | | | | | | | | REMOVE FES | | h | | |
| | | i | | | | | | | | | | | | | | | | | | | | | 17.4 | | | | | | | | | | | | | | | | | REMOVE 18" CSP | | i | | |
| | | j | | | | | | | | | | | | | | | | | | | | | | 1 | | | | | | | | | | | | | | 4 | | REMOVE DI | 1.65' Rt "C-5" 82+25.72 | j | | |
| | | k | | | | | | | | | | | | | | | | | | | | | 54 | | | | | | | | | | | | | | | | | REMOVE 18" CSP | | k | | |
| | | l | | | | | | | | | | | | | | | | | | | | | | 1 | | | | | | | | | | | | | | 4.2 | | REMOVE DI | 1.61' Rt "C-5" 82+50.85 | l | | |
| D-3 | 5A | a | 10.4 | | | | | | | | | | | | | | | | | | | 93.6 | | | | | | | | | | | | | | | 27 | | | Conc CHANNEL | | a | 5A | D-3 |
| | | b | | 0.3 | 8 | | | | | | | | | | | | | | | | | | | | | | | | | | | | | | | | | | | PIPE ENTRANCE TO Conc CHANNEL | | b | | |
| | | c | 54.6 | | | | | | | | | | | | | | | | | | | 491.4 | | | | | | | | | | | | | | | 141.75 | | | Conc CHANNEL | | c | | |
| | | d | | | | | | | | | | | | | | | | 51 | | | | | | | | | | | | | | | | | | | | | | 3" PLASTIC PIPE (SCHEDULE 40) | | d | | |
| D-3 | 6A | a | | | | | | | | | | | | | | | | | | 12 | 5.6 | | | | | | | | | | | | | | | | | | | RSP | | a | 6A | D-3 |
| | | b | 10.2 | | | | | | | | | | | | | | | | | | | 92 | | | | | | | | | | | | | | | 24.2 | | | Conc CHANNEL | | b | | |
| | | i | | | | | | | | | | | | | | | | 52 | | | | | | | | | | | | | | | | | | | | | | 3" PLASTIC PIPE (SCHEDULE 40) | | i | | |
| SHEET TOTALS | | | 75.2 | 3.9 | 914 | 3 | 69.8 | | | | | | | | | | | 103 | | 12 | 5.6 | 677 | 71.4 | 2 | | | | | 1 | 2.5 | | | | 1 | | | 193 | | | SHEET TOTALS | | | | |

(N) - NOT A SEPARATE PAY ITEM, FOR INFORMATION ONLY

DRAINAGE QUANTITIES

1 REVISED PER ADDENDUM No. 1 DATED AUGUST 22, 2011

DQ-3

STATE OF CALIFORNIA - DEPARTMENT OF TRANSPORTATION
Caltrans

CONSULTANT FUNCTIONAL SUPERVISOR: R. SCOTT BACSIKIN

CALCULATED-DESIGNED BY: VAHID HAGHDOUST
CHECKED BY: STEVE LEATHERS
REVISED BY
DATE REVISED

LAST REVISION 10-12-10
DATE PLOTTED => 19-AUG-2011
TIME PLOTTED => 15:49

| Dist | COUNTY | ROUTE | POST MILES TOTAL PROJECT | SHEET No. | TOTAL SHEETS |
|---|---|---|---|---|---|
| 12 | Ora | 57 | 12.2/15.2 | 112 | 527 |

REGISTERED CIVIL ENGINEER 3/24/11 DATE

4-18-11
PLANS APPROVAL DATE

REGISTERED PROFESSIONAL ENGINEER VAHID HAGHDOUST No. C 74716 Exp. 12-31-11 CIVIL STATE OF CALIFORNIA

*THE STATE OF CALIFORNIA OR ITS OFFICERS OR AGENTS SHALL NOT BE RESPONSIBLE FOR THE ACCURACY OR COMPLETENESS OF SCANNED COPIES OF THIS PLAN SHEET.*

HDR ENGINEERING, INC.
3230 EL CAMINO REAL
SUITE 200
IRVINE, CA 92602-1377

OCTA
550 SOUTH MAIN STREET
P.O. BOX 14184
ORANGE, CA 92863-1584

# DRAINAGE QUANTITIES

| DRAINAGE PLAN SHEET No. | DRAINAGE SYSTEM No. ⬡ | DRAINAGE UNIT ◯ | MINOR Conc (CHANNEL LINING) | MINOR Conc (MINOR STRUCTURE) | Misc IRON & STEEL | APC FRAME & GRATE (24-12) (N) | APC 18" APC | APC 24" APC | APC 36" APC | APC 48" APC | RCP 18" RCP | RCP 24" RCP | RCP 36" RCP | RCP 48" RCP | CSP 18" CSP (0.064" THICK) | CSP 24" CSP (0.079" THICK) | CSP 48" CSP (0.079" THICK) | 3" PLASTIC PIPE (SCHEDULE 40) | 18" AUTOMATIC DRAINAGE GATE | RSP FABRIC | RSP (FACING, METHOD B) | WELDED WIRE FABRIC (6"x6" W1.4xW1.4) (N) | REMOVE PIPE | REMOVE INLET | ABANDON CULVERT | ADJUST INLET | 24" PRECAST Conc PIPE MANHOLE | REMOVE Conc (CHANNEL) | REMOVE FES | REMOVE RSP (N) | HOT MIX ASPHALT (TYPE A) | SAND BACKFILL | 18" Alt FES | Conc COLLAR (N) | 48" DIAMETER SIDE CONNECTION (N) | REMOVE Conc (Misc) | DITCH EXCAVATION | HEIGHT OF INLET (N) | JOINT TYPE (N) | DESCRIPTION | STATION | DRAINAGE UNIT ◯ | DRAINAGE SYSTEM No. ⬡ | DRAINAGE PLAN SHEET No. |
|---|---|---|---|---|---|---|---|---|---|---|---|---|---|---|---|---|---|---|---|---|---|---|---|---|---|---|---|---|---|---|---|---|---|---|---|---|---|---|---|---|---|---|---|---|
| | | | CY | CY | LB | EA | LF | LF | LF | LF | LF | LF | LF | LF | LF | LF | LF | LF | EA | SQYD | CY | SQYD | LF | EA | LF | EA | LF | CY | EA | CY | TON | CY | EA | EA | EA | CY | CY | FT | | | | | | |
| D-4 | 6 | a | | | | | 5 | | | | | | | | | | | | | | | | | | | | | | | | | | | | | | | | S | 18" AP | | a | 6 | D-4 |
| | | b | | | | | | | | | | | | | | | | | | | | | | | | | | | | | | | | 1 | | | | | | Conc COLLAR | 115.39′ Rt "A" 299+24.55 | b | | |
| | | c | | | | | 22.4 | | | | | | | | | | | | | | | | | | | | | | | | | | | | | | | | P | 18" AP | | c | | |
| | | d | | 1.85 | 326 | 1 | | | | | | | | | | | | | | | | | | | | | | | | | | | | | | | | 5.12 | | G2 INLET | 92.50′ Rt "A" 299+24.52 | d | | |
| | | e | | | | | 47.1 | | | | | | | | | | | | | | | | | | | | | | | | | | | | | | | | S | 18" AP | | e | | |
| | | f | | 1.88 | 580 | 2 | | | | | | | | | | | | | | | | | | | | | | | | | | | | | | | | 4.05 | | GD1 INLET | 92.50′ Rt "A" 298+74.54 | f | | |
| | | g | | | | | 21.7 | | | | | | | | | | | | | | | | | | | | | | | | | | | | | | | | S | 18" AP | | g | | |
| | | h | | 1.88 | 580 | 2 | | | | | | | | | | | | | | | | | | | | | | | | | | | | | | | | 4.04 | | GD1 INLET | 92.50′ Rt "A" 298+49.93 | h | | |
| | | i | | | | | | | | | | | | | | | | | | | | | | | | | | | | 2.5 | | | | | | | | | | REMOVE RSP | | i | | |
| | | j | | | | | | | | | | | | | | | | | | | | | | | | | | | 1 | | | | | | | | | | | REMOVE FES | | j | | |
| | | k | | | | | | | | | | | | | | | | | | | | | 42 | | | | | | | | | | | | | | | | | REMOVE 18" CSP | | k | | |
| | | l | | | | | | | | | | | | | | | | | | | | | | 1 | | | | | | | | | | | | | | 4.62 | | REMOVE DI | 73.10′ Rt "A" 299+24.69 | l | | |
| | | m | | | | | | | | | | | | | | | | | | | | | 48 | | | | | | | | | | | | | | | | | REMOVE 18" CSP | | m | | |
| | | n | | | | | | | | | | | | | | | | | | | | | | 1 | | | | | | | | | | | | | | 4.56 | | REMOVE DI | 71.90′ Rt "A" 298+74.59 | n | | |
| | | o | | | | | | | | | | | | | | | | | | | | | 22 | | | | | | | | | | | | | | | | | REMOVE 18" CSP | | o | | |
| | | p | | | | | | | | | | | | | | | | | | | | | | 1 | | | | | | | | | | | | | | 4.35 | | REMOVE DI | 71.90′ Rt "A" 298+49.94 | p | | |
| D-4 | 6A | b | 15.2 | | | | | | | | | | | | | | | | | | | 137 | | | | | | | | | | | | | | 36.1 | | | Conc CHANNEL | | b | 6A | D-4 |
| | | c | 0.3 | | | | | | | | | | | | | | | | | | | 2.73 | | | | | | | | | | | | | | 0.9 | | | CHANNEL TRANSITION STRUCTURE | 131.54′ Rt "A" 296+99.24 | c | | |
| | | d | 13.6 | | | | | | | | | | | | | | | | | | | 123 | | | | | | | | | | | | | | 46 | | | Conc CHANNEL | | d | | |
| | | e | 0.3 | | 8 | | | | | | | | | | | | | | | | | | | | | | | | | | | | | | | | | | | PIPE ENTRANCE TO Conc CHANNEL | | e | | |
| | | f | 46.6 | | | | | | | | | | | | | | | | | | | 420 | | | | | | | | | | | | | | 120.4 | | | Conc CHANNEL | | f | | |
| | | g | 5.68 | | | | | | | | | | | | | | | | | | | | | | | | | | | | | | | | | | | | | SWALE TO CHANNEL TRANSITION | | g | | |
| | | h | | | | | | | | | | | | | | | | | | | | | | | | | | | | | | | | | | 43.1 | | | BIOSWALE | 47.38′ Rt "D-4" 7+35.89 | h | | |
| | | | | | | | | | | | | | | | | | | | | | | | | | | | | | | | | | | | | | | | | | 58.25′ Rt "D-4" 9+00.00 | | | |
| SHEET TOTALS | | | 81.7 | 5.6 | 1494 | 5 | 96.2 | | | | | | | | | | | | | | | 682.7 | 112 | 3 | | | | | 1 | 2.5 | | | | 1 | | | 246.5 | | | SHEET TOTALS | | | | |

(N) - NOT A SEPARATE PAY ITEM, FOR INFORMATION ONLY

DRAINAGE QUANTITIES

1 REVISED PER ADDENDUM No. 1 DATED AUGUST 22, 2011

DQ-4

STATE OF CALIFORNIA - DEPARTMENT OF TRANSPORTATION
Caltrans

CONSULTANT FUNCTIONAL SUPERVISOR: R. SCOTT BACSIKIN

CALCULATED-DESIGNED BY: VAHID HAGHDOUST
CHECKED BY: STEVE LEATHERS
REVISED BY
DATE REVISED

LAST REVISION 10-12-10
DATE PLOTTED => 19-AUG-2011
TIME PLOTTED => 15:49

| Dist | COUNTY | ROUTE | POST MILES TOTAL PROJECT | SHEET No. | TOTAL SHEETS |
|---|---|---|---|---|---|
| 12 | Ora | 57 | 12.2/15.2 | 113 | 527 |

V. Haghdoust 3/24/11
REGISTERED CIVIL ENGINEER DATE

4-18-11
PLANS APPROVAL DATE

REGISTERED PROFESSIONAL ENGINEER VAHID HAGHDOUST No. C 74716 Exp. 12-31-11 CIVIL STATE OF CALIFORNIA

*THE STATE OF CALIFORNIA OR ITS OFFICERS OR AGENTS SHALL NOT BE RESPONSIBLE FOR THE ACCURACY OR COMPLETENESS OF SCANNED COPIES OF THIS PLAN SHEET.*

HDR ENGINEERING, INC.
3230 EL CAMINO REAL
SUITE 200
IRVINE, CA 92602-1377

OCTA
550 SOUTH MAIN STREET
P.O. BOX 14184
ORANGE, CA 92863-1584

# DRAINAGE QUANTITIES

| DRAINAGE PLAN SHEET No. | DRAINAGE SYSTEM No. | DRAINAGE UNIT | MINOR Conc (CHANNEL LINING) | MINOR Conc (MINOR STRUCTURE) | Misc IRON & STEEL | APC FRAME & GRATE (24-12) (N) | APC 18" APC | APC 24" APC | APC 36" APC | APC 48" APC | RCP 18" RCP | RCP 24" RCP | RCP 36" RCP | RCP 48" RCP | CSP 18" CSP (0.064" THICK) | CSP 24" CSP (0.079" THICK) | CSP 48" CSP (0.079" THICK) | 3" PLASTIC PIPE (SCHEDULE 40) | 18" AUTOMATIC DRAINAGE GATE | RSP FABRIC | RSP (FACING, METHOD B) | WELDED WIRE FABRIC (6"x6" W1.4xW1.4) (N) | REMOVE PIPE | REMOVE INLET | ABANDON CULVERT | ADJUST INLET | 24" PRECAST Conc PIPE MANHOLE | REMOVE Conc (CHANNEL) | REMOVE FES | REMOVE RSP (N) | HOT MIX ASPHALT (TYPE A) | SAND BACKFILL | 18" Alt FES | Conc COLLAR (N) | 48" DIAMETER SIDE CONNECTION (N) | REMOVE Conc (Misc) | DITCH EXCAVATION | HEIGHT OF INLET (N) | JOINT TYPE (N) | DESCRIPTION | STATION | DRAINAGE UNIT | DRAINAGE SYSTEM No. | DRAINAGE PLAN SHEET No. |
|---|---|---|---|---|---|---|---|---|---|---|---|---|---|---|---|---|---|---|---|---|---|---|---|---|---|---|---|---|---|---|---|---|---|---|---|---|---|---|---|---|---|---|---|---|
| | | | CY | CY | LB | EA | LF | LF | LF | LF | LF | LF | LF | LF | LF | LF | LF | LF | EA | SQYD | CY | SQYD | LF | EA | LF | EA | LF | CY | EA | CY | TON | CY | EA | EA | EA | CY | CY | FT | | | | | | |
| D-4 | 7 | a | | | | | | | | | | | | | | | | | | 12 | 5.6 | | | | | | | | | | | | | | | | | | | RSP | | a | 7 | D-4 |
| | | b | | | | | | | | | | | | | | | | | | | | | | | | | | | | | | | 1 | | | | | | | 18" FES | 37.39′ Rt "D-4" 8+44.76 | b | | |
| | | c | | | | | 12.6 | | | | | | | | | | | | | | | | | | | | | | | | | | | | | | | | P | 18" AP | | c | | |
| | | d | | 2.07 | 580 | 2 | | | | | | | | | | | | | | | | | | | | | | | | | | | | | | | | 4.4 | | GD1 INLET | 24.76′ Rt "D-4" 8+45.09 | d | | |
| | | e | | | | | 22.2 | | | | | | | | | | | | | | | | | | | | | | | | | | | | | | | | S | 18" AP | | e | | |
| | | f | | 1.15 | 326 | 1 | | | | | | | | | | | | | | | | | | | | | | | | | | | | | | | | 3.9 | | G1 INLET | 25.73′ Rt "D-4" 8+71.11 | f | | |
| | | g | | | | | | | | | | | | | | | | | | | | | | | | | | | | 2.5 | | | | | | | | | | REMOVE RSP | | g | | |
| | | h | | | | | | | | | | | | | | | | | | | | | | | | | | | 1 | | | | | | | | | | | REMOVE FES | | h | | |
| | | i | | | | | | | | | | | | | | | | | | | | | 18 | | | | | | | | | | | | | | | | | REMOVE 18" CSP DOWN DRAIN | | i | | |
| | | j | | | | | | | | | | | | | | | | | | | | | | 1 | | | | | | | | | | | | | | 2.5 | | REMOVE DI | 16.81′ Rt "D-4" 8+46.41 | j | | |
| D-4 | 8 | a | | | | | 6.2 | | | | | | | | | | | | | | | | | | | | | | | | | | | | | | | | S | 18" AP | | a | 8 | D-4 |
| | | b | | 1.21 | 326 | 1 | | | | | | | | | | | | | | | | | | | | | | | | | | | | | | | | 4.2 | | G1 INLET | 24.41′ Rt "D-4" 8+35.73 | b | | |
| D-5 | 6A | f | | | | | | | | | | | | | | | | | | | | | | | | | | | | | | | | | | | 36.8 | | | BIOSWALE | 58.25′ Rt "D-4" 9+00.00 | f | 6A | D-5 |
| | | | | | | | | | | | | | | | | | | | | | | | | | | | | | | | | | | | | | | | | | 60.90′ Rt "D-4" 10+42.89 | | | |
| D-5 | 9 | a | | | | | | | | | | | 19.5 | | | | | | | | | | | | | | | | | | | | | | | | | | S | 36" RCP | | a | 9 | D-5 |
| | | b | | 4.27 | 435 | | | | | | | | | | | | | | | | | | | | | | 1 | | | | | | | | | | | | | MANHOLE TYPE 2 | 312.89′ Rt "A"317+17.87 | b | | |
| | | c | | | | | | | 93.9 | | | | | | | | | | | | | | | | | | | | | | | | | | | | | | S | 36" AP | | c | | |
| | | d | | 3.99 | 435 | | | | | | | | | | | | | | | | | | | | | | 1 | | | | | | | | | | | | | MANHOLE TYPE 2 | 239.67′ Rt "A"317+79.27 | d | | |
| | | e | | | | | | | 185.7 | | | | | | | | | | | | | | | | | | | | | | | | | | | | | | S | 36" AP | | e | | |
| | | f | | 2.22 | 435 | | | | | | | | | | | | | | | | | | | | | | 0.67 | | | | | | | | | | | | | DIVERSION MANHOLE | 131.97′ Rt "A" 316+99.63 | f | | |
| | | g | | | | | | | | | | | 32 | | | | | | | | | | | | | | | | | | | | | | | | | | S | 36" RCP | | g | | |
| | | h | | | | | | | | | | 9 | | | | | | | | | | | | | | | | | | | | | | | | | | | S | 24" RCP | | h | | |
| | | i | | 1.6 | 326 | 1 | | | | | | | | | | | | | | | | | | | | | | | | | | | | | | | | 4.15 | | G2 INLET | 102.10′ Rt "A" 311+33.88 | i | | |
| | | j | | | | | 60.0 | | | | | | | | | | | | | | | | | | | | | | | | | | | | | | | | S | 18" AP | | j | | |
| | | k | | 1.62 | 580 | 2 | | | | | | | | | | | | | | | | | | | | | | | | | | | | | | | | 2.91 | | GD1 INLET | 24.00′ Rt "D-5" 11+60.40 | k | | |
| | | l | | | | | 17.9 | | | | | | | | | | | | | | | | | | | | | | | | | | | | | | | | S | 18" AP | | l | | |
| | | m | | | | | | | | | | | | | | | | | | | | | | | | | | | | | | | | 1 | | | | | | Conc COLLAR | 37.97′ Rt "D-5" 11+74.53 | m | | |
| SHEET TOTALS | | | | 18.1 | 3443 | 7 | 118.9 | | 279.6 | | | 9 | 51.5 | | | | | | | 12 | 5.6 | | 18 | 1 | | | 2.7 | | 1 | 2.5 | | | 1 | 1 | | | 36.8 | | | SHEET TOTALS | | | | |

(N) - NOT A SEPARATE PAY ITEM, FOR INFORMATION ONLY

DRAINAGE QUANTITIES

1 REVISED PER ADDENDUM No. 1 DATED AUGUST 22, 2011



STATE OF CALIFORNIA - DEPARTMENT OF TRANSPORTATION
Caltrans

CONSULTANT FUNCTIONAL SUPERVISOR: R. SCOTT BACSIKIN
CALCULATED-DESIGNED BY: VAHID HAGHDOUST
CHECKED BY: STEVE LEATHERS
REVISED BY
DATE REVISED

LAST REVISION 10-12-10
DATE PLOTTED => 19-AUG-2011
TIME PLOTTED => 15:49

| Dist | COUNTY | ROUTE | POST MILES TOTAL PROJECT | SHEET No. | TOTAL SHEETS |
|---|---|---|---|---|---|
| 12 | Ora | 57 | 12.2/15.2 | 114 | 527 |

V. Haghdoust 3/24/11
REGISTERED CIVIL ENGINEER DATE

4-18-11
PLANS APPROVAL DATE

REGISTERED PROFESSIONAL ENGINEER VAHID HAGHDOUST No. C 74716 Exp. 12-31-11 CIVIL STATE OF CALIFORNIA

*THE STATE OF CALIFORNIA OR ITS OFFICERS OR AGENTS SHALL NOT BE RESPONSIBLE FOR THE ACCURACY OR COMPLETENESS OF SCANNED COPIES OF THIS PLAN SHEET.*

HDR ENGINEERING, INC.
3230 EL CAMINO REAL
SUITE 200
IRVINE, CA 92602-1377

OCTA
550 SOUTH MAIN STREET
P.O. BOX 14184
ORANGE, CA 92863-1584

# DRAINAGE QUANTITIES

| DRAINAGE PLAN SHEET No. | DRAINAGE SYSTEM No. ⬡ | DRAINAGE UNIT ◯ | MINOR Conc (CHANNEL LINING) | MINOR Conc (MINOR STRUCTURE) | Misc IRON & STEEL | APC FRAME & GRATE (24-12) (N) | APC 18" APC | APC 24" APC | APC 36" APC | APC 48" APC | RCP 18" RCP | RCP 24" RCP | RCP 36" RCP | RCP 48" RCP | CSP 18" CSP (0.064" THICK) | CSP 24" CSP (0.079" THICK) | CSP 48" CSP (0.079" THICK) | 3" PLASTIC PIPE (SCHEDULE 40) | 18" AUTOMATIC DRAINAGE GATE | RSP FABRIC | RSP (FACING, METHOD B) | WELDED WIRE FABRIC (6"x6" W1.4xW1.4) (N) | REMOVE PIPE | REMOVE INLET | ABANDON CULVERT | ADJUST INLET | 24" PRECAST Conc PIPE MANHOLE | REMOVE Conc (CHANNEL) | REMOVE FES | REMOVE RSP (N) | HOT MIX ASPHALT (TYPE A) | SAND BACKFILL | 18" AI+ FES | Conc COLLAR (N) | 48" DIAMETER SIDE CONNECTION (N) | REMOVE Conc (Misc) | DITCH EXCAVATION | HEIGHT OF INLET (N) | JOINT TYPE (N) | DESCRIPTION | STATION | DRAINAGE UNIT ◯ | DRAINAGE SYSTEM No. ⬡ | DRAINAGE PLAN SHEET No. |
|---|---|---|---|---|---|---|---|---|---|---|---|---|---|---|---|---|---|---|---|---|---|---|---|---|---|---|---|---|---|---|---|---|---|---|---|---|---|---|---|---|---|---|---|
| | | | CY | CY | LB | EA | LF | LF | LF | LF | LF | LF | LF | LF | LF | LF | LF | LF | EA | SQYD | CY | SQYD | LF | EA | LF | EA | LF | CY | EA | CY | TON | CY | EA | EA | EA | CY | CY | FT | | | | | |
| D-5 | | n | | | | | | | | | | | | | | | | | | | | | | 1 | | | | | | | | | | | | | | 4 | | REMOVE DI | 93.00′ R+ "A" 311+37.04 | n | | D-5 |
| | | o | | | | | | | | | | | | | | | | | | | | | 48 | | | | | | | | | | | | | | | | | REMOVE 18" RCP | | o | | |
| | | p | | | | | | | | | | | | | | | | | | | | | | 1 | | | | | | | | | | | | | | 2.6 | | REMOVE DI | 5.80′ R+ "D-5" 11+60.03 | p | | |
| | | q | | | | | | | | | | | | | | | | | | | | | 33 | | | | | | | | | | | | | | | | | REMOVE 18" RCP | | q | | |
| | | r | | | | | | | | | | | | | | | | | | | | | | | | | | | | | | | | 1 | | | | | | CONCRETE COLLAR | 93.78′ R+ "A" 311+37.22 | r | | |
| | | s | | | | | | | | | | | | | | | | | | | | | 280 | | | | | | | | | | | | | | | | | REMOVE 36" RCP | | s | | |
| | | t | | | | | | | | | | | | | | | | | | | | | | | | | | | | | | | | 1 | | | | | | CONCRETE COLLAR | 329.87′ R+ "A" 317+13.92 | t | | |
| | | u | | | | | | | | | | | | | | | | | | | | | | | | | | | | | | | | 1 | | | | | | CONCRETE COLLAR | 114.33′ R+ "A" 316+74.76 | u | | |
| | | v | | | | | | | | | | | | | | | | | | | | | | 1 | | | | | | | | | | | | | | | | REMOVE DI | 185.76′ R+ "A" 316+90.16 | v | | |
| | | | | | | | | | | | | | | | | | | | | | | | | | | | | | | | | | | | | | | | | | | | |
| D-5 | 9A | a | | | | | | | | | | | | | | | | | | 12 | 5.6 | | | | | | | | | | | | | | | | | | | RSP | | a | 9A | D-5 |
| | | b | | 2.88 | 117 | | | | | | | | | | | | | | | | | | | | | | | | | | | | 1 | | | | | | | HEADWALL, WARPED WINGWALL | | b | | |
| | | c | | | | | | | | | | | | | | | | | 1 | | | | | | | | | | | | | | | | | | | | | 18" AUTOMATIC DRAIN GATE | | c | | |
| | | d | | | | | 32.3 | | | | | | | | | | | | | | | | | | | | | | | | | | | | | | | S | 18" AP | | d | | |
| D-5 | 9B | a | | | | | | | | | | | | | | | | | | | | | | | | | | | | | | | | | | | | | | | | | | |
| | | | | | | | | 80.1 | | | | | | | | | | | | | | | | | | | | | | | | | | | | | | | S | 24" AP | | a | 9B | D-5 |
| | | b | | | | | | | | | | | | | | | | | | | | | | | | | | | | | | | | 1 | | | | | | CONCRETE COLLAR | 252.57′ R+ "A" 316+65.15 | b | | |
| | | c | | 5.1 | 382 | | | | | | | | | | | 4.5 | 5 | | | | | | | | | | | | | | | | | | | | | | WATER QUALITY OUTLET RISER | | c | | |
| | | | | | | | | | | | | | | | | | | | | | | | | | | | | | | | | | | | | | | | | | | | |
| D-5 | 9C | a | | | | | | | | | | | | | | | | | | | | | 23.1 | | | | | | | | | | | | | | | | | REMOVE 18" CSP | | a | 9C | D-5 |
| | | b | | | | | | | | | | | | | | | | | | 12 | 5.6 | | | | | | | | | | | | | | | | | | | RSP | | b | | |
| | | c | | | | | | | | | | | | | | | | | | | | | | | | | | | | | | | 1 | | | | | | | 18" FES | 271.87′ R+ "A" 316+13.25 | c | | |
| | | d | | | | | | | | | | | | | 54.4 | | | | | | | | | | | | | | | | | | | | | | | | P | 18" CSP | | d | | |
| | | e | | | | | | | | | | | | | | | | | | | | | | | | | | | | | | | | 1 | | | | | | Conc COLLAR | 274.77′ R+ "A" 316+04.67 | e | | |
| | | f | | | | | | | | | | | | | | | | | | | | | | | | | | | | | | | | 1 | | | | | | Conc COLLAR | 300.07′ R+ "A" 315+70.34 | f | | |
| | | g | | | | | | | | | | | | | | | | | | | | | | | | | | 1.1 | | | | | | | | | | | | REMOVE DITCH | | g | | |
| | | | | | | | | | | | | | | | | | | | | | | | | | | | | | | | | | | | | | | | | | | | |
| D-5 | 10 | a | | | | | | 24.5 | | | | | | | | | | | | | | | | | | | | | | | | | | | | | | | S | 18" AP | | a | 10 | D-5 |
| | | b | | 1.25 | 580 | 2 | | | | | | | | | | | | | | | | | | | | | | | | | | | | | | | | 2.19 | | GD1 INLET | 36.00′ R+ "D-5" 11+90.41 | b | | |
| D-5 | 10A | f | | | | | | | | | | | | | | | | | | 12 | 3.7 | | | | | | | | | | | | | | | | | | | RSP | | f | 10A | D-5 |
| | | g | | | | | | | | | | | | | | | | | | | | | | | | | | | | | 1.2 | | | | | | | | | AC-OSD | 20.00′ R+ "D-3" 20+00.00 | g | | |
| | | | | | | | | | | | | | | | | | | | | | | | | | | | | | | | | | | | | | | | | | | | |
| | | | | | | | | | | | | | | | | | | | | | | | | | | | | | | | | | | | | | | | | | | | |
| SHEET TOTALS | | | | 9.2 | 1079 | 2 | 32.3 | 104.6 | | | | | | | 54.4 | 4.5 | 5 | | 1 | 36 | 14.9 | | 384.1 | 3 | | | | 1.1 | | | 1.2 | | 2 | 6 | | | | | | SHEET TOTALS | | | | |

(N) - NOT A SEPARATE PAY ITEM, FOR INFORMATION ONLY

DRAINAGE QUANTITIES

1 REVISED PER ADDENDUM No. 1 DATED AUGUST 22, 2011

DQ-6

STATE OF CALIFORNIA - DEPARTMENT OF TRANSPORTATION
Caltrans

CONSULTANT FUNCTIONAL SUPERVISOR: R. SCOTT BACSIKIN

CALCULATED-DESIGNED BY: VAHID HAGHDOUST
CHECKED BY: STEVE LEATHERS
REVISED BY
DATE REVISED

LAST REVISION 10-12-10 | DATE PLOTTED => 19-AUG-2011 | TIME PLOTTED => 15:49

| Dist | COUNTY | ROUTE | POST MILES TOTAL PROJECT | SHEET No. | TOTAL SHEETS |
|---|---|---|---|---|---|
| 12 | Ora | 57 | 12.2/15.2 | 115 | 527 |

V. Haghdoust 3/24/11
REGISTERED CIVIL ENGINEER DATE

4-18-11
PLANS APPROVAL DATE

REGISTERED PROFESSIONAL ENGINEER VAHID HAGHDOUST No. C 74716 Exp. 12-31-11 CIVIL STATE OF CALIFORNIA

*THE STATE OF CALIFORNIA OR ITS OFFICERS OR AGENTS SHALL NOT BE RESPONSIBLE FOR THE ACCURACY OR COMPLETENESS OF SCANNED COPIES OF THIS PLAN SHEET.*

HDR ENGINEERING, INC.
3230 EL CAMINO REAL
SUITE 200
IRVINE, CA 92602-1377

OCTA
550 SOUTH MAIN STREET
P.O. BOX 14184
ORANGE, CA 92863-1584

# DRAINAGE QUANTITIES

| DRAINAGE PLAN SHEET No. | DRAINAGE SYSTEM No. ⬡ | DRAINAGE UNIT ◯ | MINOR Conc (CHANNEL LINING) | MINOR Conc (MINOR STRUCTURE) | Misc IRON & STEEL | APC FRAME & GRATE (24-12) (N) | APC 18" APC | APC 24" APC | APC 36" APC | APC 48" APC | RCP 18" RCP | RCP 24" RCP | RCP 36" RCP | RCP 48" RCP | CSP 18" CSP (0.064" THICK) | CSP 24" CSP (0.079" THICK) | CSP 48" CSP (0.079" THICK) | 3" PLASTIC PIPE (SCHEDULE 40) | 18" AUTOMATIC DRAINAGE GATE | RSP FABRIC | RSP (FACING, METHOD B) | WELDED WIRE FABRIC (6"x6" W1.4xW1.4) (N) | REMOVE PIPE | REMOVE INLET | ABANDON CULVERT | ADJUST INLET | 24" PRECAST Conc PIPE MANHOLE | REMOVE Conc (CHANNEL) | REMOVE FES | REMOVE RSP (N) | HOT MIX ASPHALT (TYPE A) | SAND BACKFILL | 18" Alt FES | Conc COLLAR (N) | 48" DIAMETER SIDE CONNECTION (N) | REMOVE Conc (Misc) | DITCH EXCAVATION | HEIGHT OF INLET (N) | JOINT TYPE (N) | DESCRIPTION | STATION | DRAINAGE UNIT ◯ | DRAINAGE SYSTEM No. ⬡ | DRAINAGE PLAN SHEET No. |
|---|---|---|---|---|---|---|---|---|---|---|---|---|---|---|---|---|---|---|---|---|---|---|---|---|---|---|---|---|---|---|---|---|---|---|---|---|---|---|---|---|---|---|---|---|
| | | | CY | CY | LB | EA | LF | LF | LF | LF | LF | LF | LF | LF | LF | LF | LF | LF | EA | SQYD | CY | SQYD | LF | EA | LF | EA | LF | CY | EA | CY | TON | CY | EA | EA | EA | CY | CY | FT | | | | | | |
| D-6 | 10A | a | | 1.62 | 652 | 2 | | | | | | | | | | | | | | | | | | 1 | | | | | | | | | | | | | | | | REMOVE INLET | | a | 10A | D-6 |
| | | b | | 0.73 | | | | | | | | | | | | | | | | | | | | | | | | | | | | | | | | | | 2.50 | | GD3 INLET | 122.76′ Rt "A" 327+02.40 | b | | |
| | | c | | | | | | | | | | | | | | | | | | | | | | | | | | | | | | | | | | | | | | Conc APRON | | c | | |
| | | d | | | | | | | | | | | | | | | | | | | | | | | | | | | | | | | | | | | 29.7 | | | BIOSWALE | 126.51′ Rt "A" 326+03.10 | d | | |
| | | | | | | | | | | | | | | | | | | | | | | | | | | | | | | | | | | | | | | | | | 122.76′ Rt "A" 327+00.76 | | | |
| | | e | | | | | | | | | | | | | | | | | | | | | | | | | | | | | | | | | | | 29.7 | | | BIOSWALE | 123.09′ Rt "A" 327+04.09 | e | | |
| | | | | | | | | | | | | | | | | | | | | | | | | | | | | | | | | | | | | | | | | | 118.46′ Rt "A" 328+02.15 | | | |
| D-6 | 10B | a | | | | | | | | | | | | | | | | | | | | | | | | | | | | | | | | | | | 20.7 | | | BIOSWALE | 113.43′ Rt "A" 332+79.25 | a | 10B | D-6 |
| | | | | | | | | | | | | | | | | | | | | | | | | | | | | | | | | | | | | | | | | | 112.75′ Rt "A" 333+47.63 | | | |
| | | b | | | | | | | | | | | | | | | | | | | | | | | | | | | | | | | | | | | 29.7 | | | BIOSWALE | 190.59′ Rt "A" 333+50.96 | b | | |
| | | | | | | | | | | | | | | | | | | | | | | | | | | | | | | | | | | | | | | | | | 190.90′ Rt "A" 334+48.46 | | | |
| | | | | | | | | | | | | | | | | | | | | 12 | 3.7 | | | | | | | | | | | | | | | | | | | RSP | | c | | |
| | | | | | | | | | | | | | | | | | | | | | | | | | | | | | | | 0.18 | | | | | | | | | AC-OSD | 93.00′ Rt "A" 336+35.00 | d | | |
| D-7 | 10C | a | | | | | | | | | | | | | | | | | | | | | | | | | | | | | | | | | | | 29.7 | | | BIOSWALE | 111.10′ Rt "A" 344+53.43 | a | 10C | D-7 |
| | | | | | | | | | | | | | | | | | | | | | | | | | | | | | | | | | | | | | | | | | 108.59′ Rt "A" 345+51.77 | | | |
| | | b | | | | | | | | | | | | | | | | | | | | | | | | | | | | | | | | | | | 29.7 | | | BIOSWALE | 108.59′ Rt "A" 345+55.10 | b | | |
| | | | | | | | | | | | | | | | | | | | | | | | | | | | | | | | | | | | | | | | | | 111.08′ Rt "A" 346+53.43 | | | |
| D-8 | 10D | a | | | | | | | | | | | | | | | | | | | | | | | | | | | | | | | | | | | 44.6 | | | BIOSWALE | 112.26′ Rt "A" 355+54.20 | a | 10D | D-8 |
| | | | | | | | | | | | | | | | | | | | | | | | | | | | | | | | | | | | | | | | | | 110.99′ Rt "A" 357+02.89 | | | |
| | | | | | | | | | | | | | | | | | | | | 12 | 3.7 | | | | | | | | | | | | | | | | | | | RSP | | b | | |
| D-9 | 10E | a | | | | | | | | | | | | | | | | | | | | | | | | | | | | | | | | | | | 29.7 | | | BIOSWALE | 128.01′ Rt "A" 368+48.90 | a | 10E | D-9 |
| | | | | | | | | | | | | | | | | | | | | | | | | | | | | | | | | | | | | | | | | | 136.35′ Rt "A" 369+48.48 | | | |
| D-9 | 10F | a | | | | | | | | | | | | | | | | | | | | | | | | | | | | | | | | | | | 32.4 | | | BIOSWALE | 102.33′ Rt "A" 371+00.09 | a | 10F | D-9 |
| | | | | | | | | | | | | | | | | | | | | | | | | | | | | | | | | | | | | | | | | | 105.62′ Rt "A" 371+97.68 | | | |
| D-10 | 11 | a | | | | | | | | | | | | | | | | | | | | | | 1 | | | | | | | | | | | | | | | | REMOVE DI | 18.46′ Rt "E-2" 78+66.69 | a | 11 | D-10 |
| | | b | | 1.82 | 326 | 1 | | | | | | | | | | | | | | | | | | | | | | | | | | | | | | | | 5 | | G2 INLET | 20.28′ Rt "E-2" 78+66.56 | b | | |
| D-9 | | c | | | | | 88.3 | | | | | | | | | | | | | | | | | | | | | | | | | | | | | | | | S | 18" AP | | c | | D-9 |
| | | d | | 1.1 | 326 | 1 | | | | | | | | | | | | | | | | | | | | | | | | | | | | | | | | 3.7 | | G2 INLET | 20.00′ Rt "E-2" 77+75.00 | d | | |
| | | e | | | | | 72.1 | | | | | | | | | | | | | | | | | | | | | | | | | | | | | | | | S | 18" RCP | | e | | |
| | | f | | 1.36 | 326 | 1 | | | | | | | | | | | | | | | | | | | | | | | | | | | | | | | | 3.2 | | G2 INLET | 20.00′ Rt "E-2" 77+00.00 | f | | |
| | | g | | | | | 77.1 | | | | | | | | | | | | | | | | | | | | | | | | | | | | | | | | S | 18" AP | | g | | |
| | | h | | 0.95 | 326 | 1 | | | | | | | | | | | | | | | | | | | | | | | | | | | | | | | | 2.8 | | G2 INLET | 20.00′ Rt "E-2" 76+20.00 | h | | |
| | | i | | | | | 42.1 | | | | | | | | | | | | | | | | | | | | | | | | | | | | | | | | S | 18" AP | | i | | |
| | | | | | | | | | | | | | | | | | | | | | | | | | | | | | | | | | | | | | | | | | | | | |
| SHEET TOTALS | | | | 7.58 | 1956 | 6 | 279.6 | | | | | | | | | | | | | 24 | 7.4 | | | 2 | | | | | | | 0.2 | | | | | | 275.9 | | | SHEET TOTALS | | | | |

(N) - NOT A SEPARATE PAY ITEM, FOR INFORMATION ONLY

DRAINAGE QUANTITIES

1 REVISED PER ADDENDUM No. 1 DATED AUGUST 22, 2011

DQ-7

STATE OF CALIFORNIA - DEPARTMENT OF TRANSPORTATION
Caltrans

CONSULTANT FUNCTIONAL SUPERVISOR: R. SCOTT BACSIKIN
CALCULATED-DESIGNED BY: VAHID HAGHDOUST
CHECKED BY: STEVE LEATHERS
REVISED BY
DATE REVISED

LAST REVISION 10-12-10
DATE PLOTTED => 19-AUG-2011
TIME PLOTTED => 15:49

| Dist | COUNTY | ROUTE | POST MILES TOTAL PROJECT | SHEET No. | TOTAL SHEETS |
|---|---|---|---|---|---|
| 12 | Ora | 57 | 12.2/15.2 | 116 | 527 |

V. Haghdoust 3/24/11
REGISTERED CIVIL ENGINEER DATE

4-18-11
PLANS APPROVAL DATE

REGISTERED PROFESSIONAL ENGINEER VAHID HAGHDOUST No. C 74716 Exp. 12-31-11 CIVIL STATE OF CALIFORNIA

*THE STATE OF CALIFORNIA OR ITS OFFICERS OR AGENTS SHALL NOT BE RESPONSIBLE FOR THE ACCURACY OR COMPLETENESS OF SCANNED COPIES OF THIS PLAN SHEET.*

HDR ENGINEERING, INC.
3230 EL CAMINO REAL
SUITE 200
IRVINE, CA 92602-1377

OCTA
550 SOUTH MAIN STREET
P.O. BOX 14184
ORANGE, CA 92863-1584

# DRAINAGE QUANTITIES

| DRAINAGE PLAN SHEET No. | DRAINAGE SYSTEM No. ⬡ | DRAINAGE UNIT ◯ | MINOR Conc (CHANNEL LINING) | MINOR Conc (MINOR STRUCTURE) | Misc IRON & STEEL | APC FRAME & GRATE (24-12) (N) | APC 18" APC | APC 24" APC | APC 36" APC | APC 48" APC | RCP 18" RCP | RCP 24" RCP | RCP 36" RCP | RCP 48" RCP | CSP 18" CSP (0.064" THICK) | CSP 24" CSP (0.079" THICK) | CSP 48" CSP (0.079" THICK) | 3" PLASTIC PIPE (SCHEDULE 40) | 18" AUTOMATIC DRAINAGE GATE | RSP FABRIC | RSP (FACING, METHOD B) | WELDED WIRE FABRIC (6"x6" W1.4xW1.4) (N) | REMOVE PIPE | REMOVE INLET | ABANDON CULVERT | ADJUST INLET | 24" PRECAST Conc PIPE MANHOLE | REMOVE Conc (CHANNEL) | REMOVE FES | REMOVE RSP (N) | HOT MIX ASPHALT (TYPE A) | SAND BACKFILL | 18" Alt FES | Conc COLLAR (N) | 48" DIAMETER SIDE CONNECTION (N) | REMOVE Conc (Misc) | DITCH EXCAVATION | HEIGHT OF INLET (N) | JOINT TYPE (N) | DESCRIPTION | STATION | DRAINAGE UNIT ◯ | DRAINAGE SYSTEM No. ⬡ | DRAINAGE PLAN SHEET No. |
|---|---|---|---|---|---|---|---|---|---|---|---|---|---|---|---|---|---|---|---|---|---|---|---|---|---|---|---|---|---|---|---|---|---|---|---|---|---|---|---|---|---|---|---|---|
| | | | CY | CY | LB | EA | LF | LF | LF | LF | LF | LF | LF | LF | LF | LF | LF | LF | EA | SQYD | CY | SQYD | LF | EA | LF | EA | LF | CY | EA | CY | TON | CY | EA | EA | EA | CY | CY | FT | | | | | | |
| D-9 | 11 | j | | 1.54 | 580 | 2 | | | | | | | | | | | | | | | | | | | | | | | | | | | | | | | | 2.6 | | GD1 INLET | 20.00′ Rt "E-2" 75+75.00 | j | 11 | D-9 |
| | | k | | | | | 39.5 | | | | | | | | | | | | | | | | | | | | | | | | | | | | | | | | S | 18" AP | | k | | |
| | | l | | 1.31 | 326 | 1 | | | | | | | | | | | | | | | | | | | | | | | | | | | | | | | | 2.4 | | G2 INLET | 20.00′ Rt "E-2" 75+32.58 | l | | |
| D-10 | | m | | | | | 39.7 | | | | | | | | | | | | | | | | | | | | | | | | | | | | | | | | S | 18" AP | | m | | D-10 |
| | | n | | | | | | | | | | | | | | | | | | | | | | | | | | | | | | | | 1 | | | | | | CONCRETE COLLAR | 20.94′ Rt "E-2" 79+09.41 | n | | |
| | | o | | | | | 29.6 | | | | | | | | | | | | | | | | | | | | | | | | | | | | | | | | S | 18" AP | | o | | |
| | | p | | 1.31 | 652 | 2 | | | | | | | | | | | | | | | | | | | | | | | | | | | | | | | | 2.8 | | GD3 INLET | 26.11′ Rt "E-2" 79+42.04 | p | | |
| | | q | | 0.73 | | | | | | | | | | | | | | | | | | | | | | | | | | | | | | | | | | | | CONCRETE APRON | | q | | |
| | | | | | | | | | | | | | | | | | | | | | | | | | | | | | | | | | | | | | | | | | | | | |
| D-10 | 12 | a | | | | | | | | | | | | | | | | | | | | | | 1 | | | | | | | | | | | | | | | | REMOVE DI | 17.24′ Rt "E-5" 80+69.66 | a | 12 | D-10 |
| | | b | | | | | | | | | | | | | | | | | | | | | 7 | | | | | | | | | | | | | | | | | REMOVE 18" RCP | | b | | |
| | | c | | | | | | | | | | | | | | | | | | | | | | | | | | | | | | | | 1 | | | | | | CONCRETE COLLAR | 15.00′ Rt "E-5" 80+69.31 | c | | |
| | | d | | | | | | | | | 7.4 | | | | | | | | | | | | | | | | | | | | | | | | | | S | 18" RCP | | d | | |
| | | e | | 3.23 | 580 | 1 | | | | | | | | | | | | | | | | | | | | | | | | | | | | | | | | 8.03 | | GD1 INLET | 26.00′ Rt "E-5" 80+71.52 | e | | |
| | | f | | | | | | | | | | | | | | | | | | | | | 11.6 | | | | | | | | | | | | | | | | | REMOVE 18" RCP | | f | | |
| | | g | | | | | | | | | | | | | | | | | | | | | | 1 | | | | | | | | | | | | | | | | REMOVE DI | 272.00′ Rt "A" 382+85.00 | g | | |
| | | h | | 2.88 | 117 | | | | | | | | | | | | | | | | | | | | | | | | | | | | | | | | | | | HEADWALL W/WARPED WINGWALL | | h | | |
| | | | | | | | | | | | | | | | | | | | | | | | | | | | | | | | | | | | | 107 | | | | BIOSWALE | 53.62′ Rt "E-5" 80+81.53 | i | | |
| | | | | | | | | | | | | | | | | | | | | | | | | | | | | | | | | | | | | | | | | | | | | |
| | | | | | | | | | | | | | | | | | | | | | | | | | | | | | | | | | | | | | | | | | 50.21′ Rt "E-5" 82+92.26 | | | |
| D-10 | 13 | a | | 0.73 | | | | | | | | | | | | | | | | | | | | | | | | | | | | | | | | | | | | CONCRETE APRON | | a | 13 | D-10 |
| | | b | | 2.39 | 652 | 2 | | | | | | | | | | | | | | | | | | | | | | | | | | | | | | | | 5.4 | | GD3 INLET | 32.53′ Rt "E-6" 92+23.47 | b | | |
| | | c | | | | | | | | | | | | | | | | | | | | | | | | | | | | | | | | | | | | | | 24" AP | | c | | |
| | | d | | 2.28 | 326 | 1 | | | | | | | | | | | | | | | | | | | | | | | | | | | | | | | | 6.9 | | G2 INLET | 93.96′ Rt "A" 391+87.20 | d | | |
| | | e | | | | | | | | | | | | | | | | | | | | | | | | | | | | | | | | | | | | | | 24" AP | | e | | |
| | | f | | | | | | | | | | | | | | | | | | | | | 11 | | | | | | | | | | | | | | | | | REMOVE 24" RCP | | f | | |
| | | g | | | | | | | | | | | | | | | | | | | | | | 1 | | | | | | | | | | | | | | | | REMOVE DI | 85.11′ Rt "A" 391+84.25 | g | | |
| | | h | | | | | | | | | | | | | | | | | | | | | 59 | | | | | | | | | | | | | | | | | REMOVE 24" RCP | | h | | |
| | | i | | | | | | | | | | | | | | | | | | | | | | 1 | | | | | | | | | | | | | | | | REMOVE DI | 129.75′ Rt "A" 392+26.76 | i | | |
| | | j | | | | | | | | | | | | | | | | | | | | | | | | | | | | | | | | 1 | | | | | | CONCRETE COLLAR | 77.82′ Rt "A" 391+82.40 | j | | |
| | | | | | | | | | | | | | | | | | | | | | | | | | | | | | | | | | | | | | | | | | | | | |
| | | | | | | | | | | | | | | | | | | | | | | | | | | | | | | | | | | | | | | | | | | | | |
| | | | | | | | | | | | | | | | | | | | | | | | | | | | | | | | | | | | | | | | | | | | | |
| SHEET TOTALS | | | | 16.40 | 3233 | 9 | 108.8 | | | | 7.4 | | | | | | | | | | | | 88.6 | 4 | | | | | | | | | | 3 | | | 107 | | | SHEET TOTALS | | | | |

(N) - NOT A SEPARATE PAY ITEM, FOR INFORMATION ONLY

DRAINAGE QUANTITIES

1 REVISED PER ADDENDUM No. 1 DATED AUGUST 22, 2011



STATE OF CALIFORNIA - DEPARTMENT OF TRANSPORTATION
Caltrans

CONSULTANT FUNCTIONAL SUPERVISOR: R. SCOTT BACSIKIN
CALCULATED-DESIGNED BY: VAHID HAGHDOUST
CHECKED BY: STEVE LEATHERS
REVISED BY
DATE REVISED

LAST REVISION 10-12-10
DATE PLOTTED => 19-AUG-2011
TIME PLOTTED => 15:49

| Dist | COUNTY | ROUTE | POST MILES TOTAL PROJECT | SHEET No. | TOTAL SHEETS |
|---|---|---|---|---|---|
| 12 | Ora | 57 | 12.2/15.2 | 117 | 527 |

REGISTERED CIVIL ENGINEER 3/24/11 DATE

4-18-11
PLANS APPROVAL DATE

REGISTERED PROFESSIONAL ENGINEER VAHID HAGHDOUST No. C 74716 Exp. 12-31-11 CIVIL STATE OF CALIFORNIA

*THE STATE OF CALIFORNIA OR ITS OFFICERS OR AGENTS SHALL NOT BE RESPONSIBLE FOR THE ACCURACY OR COMPLETENESS OF SCANNED COPIES OF THIS PLAN SHEET.*

HDR ENGINEERING, INC.
3230 EL CAMINO REAL
SUITE 200
IRVINE, CA 92602-1377

OCTA
550 SOUTH MAIN STREET
P.O. BOX 14184
ORANGE, CA 92863-1584

# DRAINAGE QUANTITIES SUMMARY

| SHEET No. | MINOR Conc (CHANNEL LINING) | MINOR Conc (MINOR STRUCTURE) | Misc IRON & STEEL | APC FRAME & GRATE (24-12) (N) | APC 18" APC | APC 24" APC | APC 36" APC | APC 48" APC | RCP 18" RCP | RCP 24" RCP | RCP 36" RCP | RCP 48" RCP | CSP 18" CSP (0.064" THICK) | CSP 24" CSP (0.079" THICK) | CSP 48" CSP (0.079" THICK) | 3" PLASTIC PIPE (SCHEDULE 40) | 18" AUTOMATIC DRAINAGE GATE | RSP FABRIC | RSP (FACING, METHOD B) | WELDED WIRE FABRIC (6"x6" W1.4xW1.4) (N) | REMOVE PIPE | REMOVE INLET | ABANDON CULVERT | ADJUST INLET | 24" PRECAST Conc PIPE MANHOLE | REMOVE Conc (CHANNEL) | REMOVE FES | REMOVE RSP (N) | HOT MIX ASPHALT (TYPE A) * | SAND BACKFILL | 18" Alt FES | Conc COLLAR (N) | 48" DIAMETER SIDE CONNECTION (N) | REMOVE Conc (Misc) * | DITCH EXCAVATION | SHEET No. |
|---|---|---|---|---|---|---|---|---|---|---|---|---|---|---|---|---|---|---|---|---|---|---|---|---|---|---|---|---|---|---|---|---|---|---|---|---|
| | CY | CY | LB | EA | LF | LF | LF | LF | LF | LF | LF | LF | LF | LF | LF | LF | EA | SQYD | CY | SQYD | LF | EA | LF | EA | LF | CY | EA | CY | TON | CY | EA | EA | EA | CY | CY | |
| DQ-1 | | 25.5 | 3017 | 2 | 291.1 | 41.1 | | 217.7 | | | | 61 | | 4.5 | 6.4 | 78 | 1 | 12 | 5.6 | 12 | 698.9 | 2 | | | 3 | | | | | | | 2 | 1 | 1.7 | | DQ-1 |
| DQ-2 | 41 | 12.1 | 2790 | 9 | 338.3 | | | | | 33.1 | | | 19.7 | | | 53 | | | | 369 | 152.6 | 4 | 43.1 | 2 | | | | | | 12 | | 2 | | | 106 | DQ-2 |
| DQ-3 | 75.2 | 3.9 | 914 | 3 | 69.8 | | | | | | | | | | | 103 | | 12 | 5.6 | 677 | 71.4 | 2 | | | | | 1 | 2.5 | | | | 1 | | | 193 | DQ-3 |
| DQ-4 | 81.7 | 5.6 | 1494 | 5 | 96.2 | | | | | | | | | | | | | | | 682.7 | 112 | 3 | | | | | 1 | 2.5 | | | | 1 | | | 246.5 | DQ-4 |
| DQ-5 | | 18.1 | 3443 | 7 | 118.9 | | 279.6 | | | 9 | 51.5 | | | | | | | 12 | 5.6 | | 18 | 1 | | | 2.7 | | 1 | 2.5 | | | 1 | 1 | | | 36.8 | DQ-5 |
| DQ-6 | | 9.2 | 1079 | 2 | 32.3 | 104.6 | | | | | | | 54.4 | 4.5 | 5 | | 1 | 36 | 14.9 | | 384.1 | 3 | | | | 1.1 | | | 1.2 | | 2 | 6 | | | | DQ-6 |
| DQ-7 | | 7.6 | 1956 | 6 | 279.6 | | | | | | | | | | | | | 24 | 7.4 | | | 2 | | | | | | | 0.2 | | | | | | 275.9 | DQ-7 |
| DQ-8 | | 16.4 | 3233 | 9 | 108.9 | | | | 7.4 | | | | | | | | | | | | 88.6 | 4 | | | | | | | | | | 3 | | | 107 | DQ-8 |
| GRAND TOTALS | 197.9 | 98.4 | 17926 | 43 | 1335 | 145.7 | 279.6 | 217.7 | 7.4 | 42.1 | 51.5 | 61 | 74.1 | 9 | 11.4 | 234 | 2 | 96 | 39.1 | 1740.7 | 1525.6 | 21 | 43.1 | 2 | 5.7 | 1.1 | 3 | 7.5 | 1.4 | 12 | 3 | 16 | 1 | 1.7 | 965.2 | GRAND TOTALS |

(N) - NOT A SEPARATE PAY ITEM, FOR INFORMATION ONLY
* FOR ADDITIONAL QUANTITIES, SEE SHEET Q-2, Q-4, Q-7, AND SCQ-8.

## DRAINAGE QUANTITIES

1 REVISED PER ADDENDUM No. 1 DATED AUGUST 22, 2011

DQ-9

| | |
|---|---|
| REVISED BY | VAHID HAGHDOUST |
| DATE REVISED | STEVE LEATHERS |
| CALCULATED-DESIGNED BY | |
| CHECKED BY | |
| CONSULTANT FUNCTIONAL SUPERVISOR | R. SCOTT BACSIKIN |

STATE OF CALIFORNIA - DEPARTMENT OF TRANSPORTATION
Caltrans

LAST REVISION 10-12-10
DATE PLOTTED => 19-AUG-2011
TIME PLOTTED => 15:49

| Dist | COUNTY | ROUTE | POST MILES TOTAL PROJECT | SHEET No. | TOTAL SHEETS |
|---|---|---|---|---|---|
| 12 | Ora | 57 | 12.2/15.2 | 120 | 527 |

REGISTERED CIVIL ENGINEER 3/30/11 DATE

4-18-11
PLANS APPROVAL DATE

REGISTERED PROFESSIONAL ENGINEER R.SCOTT BACSIKIN No. C 48774 Exp. 9-30-12 CIVIL STATE OF CALIFORNIA

*THE STATE OF CALIFORNIA OR ITS OFFICERS OR AGENTS SHALL NOT BE RESPONSIBLE FOR THE ACCURACY OR COMPLETENESS OF SCANNED COPIES OF THIS PLAN SHEET.*

HDR ENGINEERING, INC.
3230 EL CAMINO REAL
SUITE 200
IRVINE, CA 92602-1377

OCTA
550 SOUTH MAIN STREET
P.O. BOX 14184
ORANGE, CA 92863-1584

NOTE:

1. FOR ACCURATE RIGHT OF WAY DATA, CONTACT RIGHT OF WAY ENGINEERING AT THE DISTRICT OFFICE.

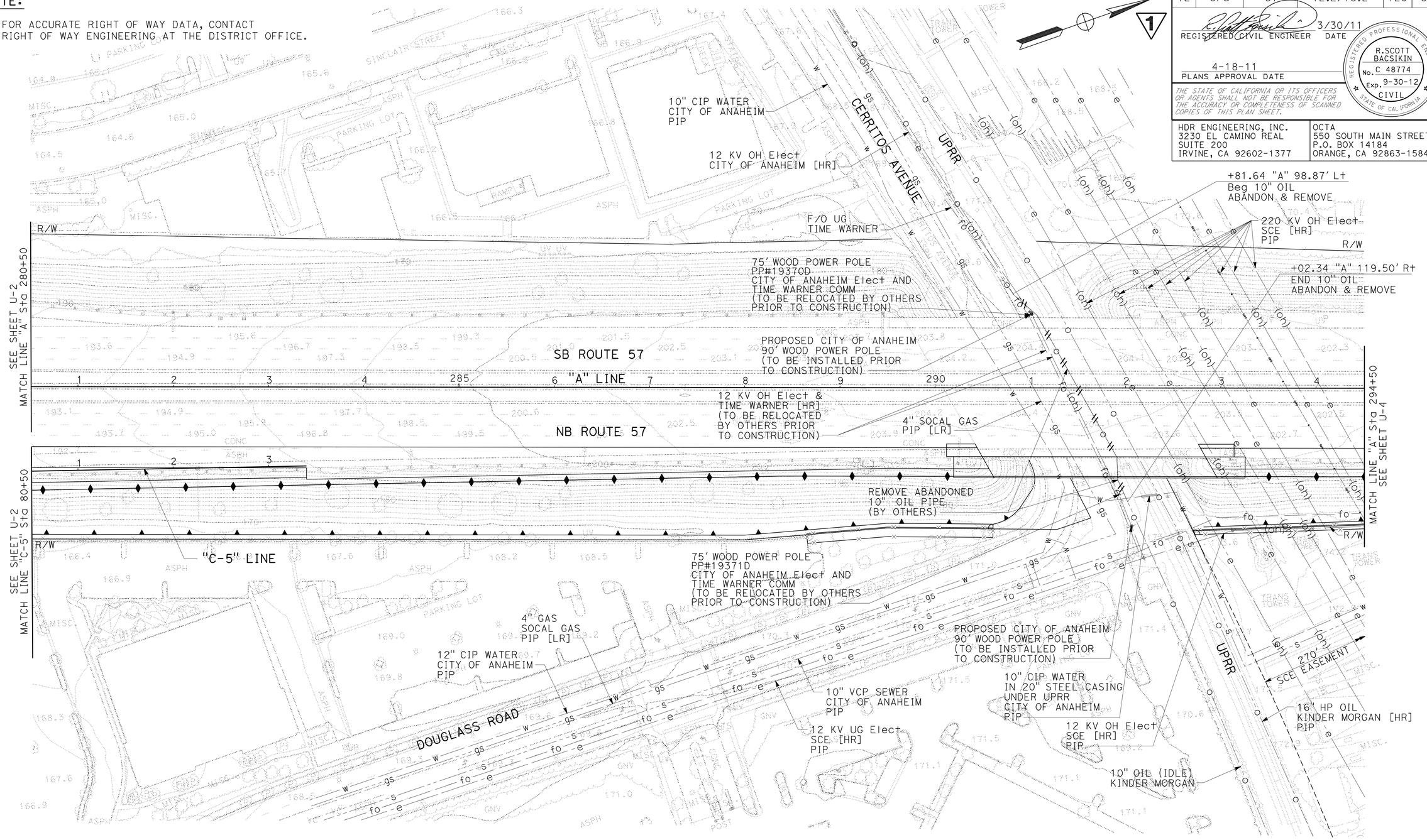


## UTILITY PLAN

SCALE: 1" = 50'

U-3

1 REVISED PER ADDENDUM No. 1 DATED AUGUST 22, 2011

THIS PLAN ACCURATE FOR UTILITY WORK ONLY

STATE OF CALIFORNIA - DEPARTMENT OF TRANSPORTATION

Caltrans

CONSULTANT FUNCTIONAL SUPERVISOR: R. SCOTT BACSIKIN

CALCULATED-DESIGNED BY: SHIVA BOUSTANI

CHECKED BY: LIEM A. NGUYEN

REVISED BY

DATE REVISED

LAST REVISION 03-30-11 | DATE PLOTTED => 19-AUG-2011 | TIME PLOTTED => 15:50

| Dist | COUNTY | ROUTE | POST MILES TOTAL PROJECT | SHEET No. | TOTAL SHEETS |
|---|---|---|---|---|---|
| 12 | Ora | 57 | 12.2/15.2 | 121 | 527 |

REGISTERED CIVIL ENGINEER 11/15/10 DATE

4-18-11
PLANS APPROVAL DATE

REGISTERED PROFESSIONAL ENGINEER R.SCOTT BACSKIN No. C 48774 Exp. 9-30-12 CIVIL STATE OF CALIFORNIA

*THE STATE OF CALIFORNIA OR ITS OFFICERS OR AGENTS SHALL NOT BE RESPONSIBLE FOR THE ACCURACY OR COMPLETENESS OF SCANNED COPIES OF THIS PLAN SHEET.*

HDR ENGINEERING, INC.
3230 EL CAMINO REAL
SUITE 200
IRVINE, CA 92602-1377

OCTA
550 SOUTH MAIN STREET
P.O. BOX 14184
ORANGE, CA 92863-1584

NOTE:

1. FOR ACCURATE RIGHT OF WAY DATA, CONTACT RIGHT OF WAY ENGINEERING AT THE DISTRICT OFFICE.

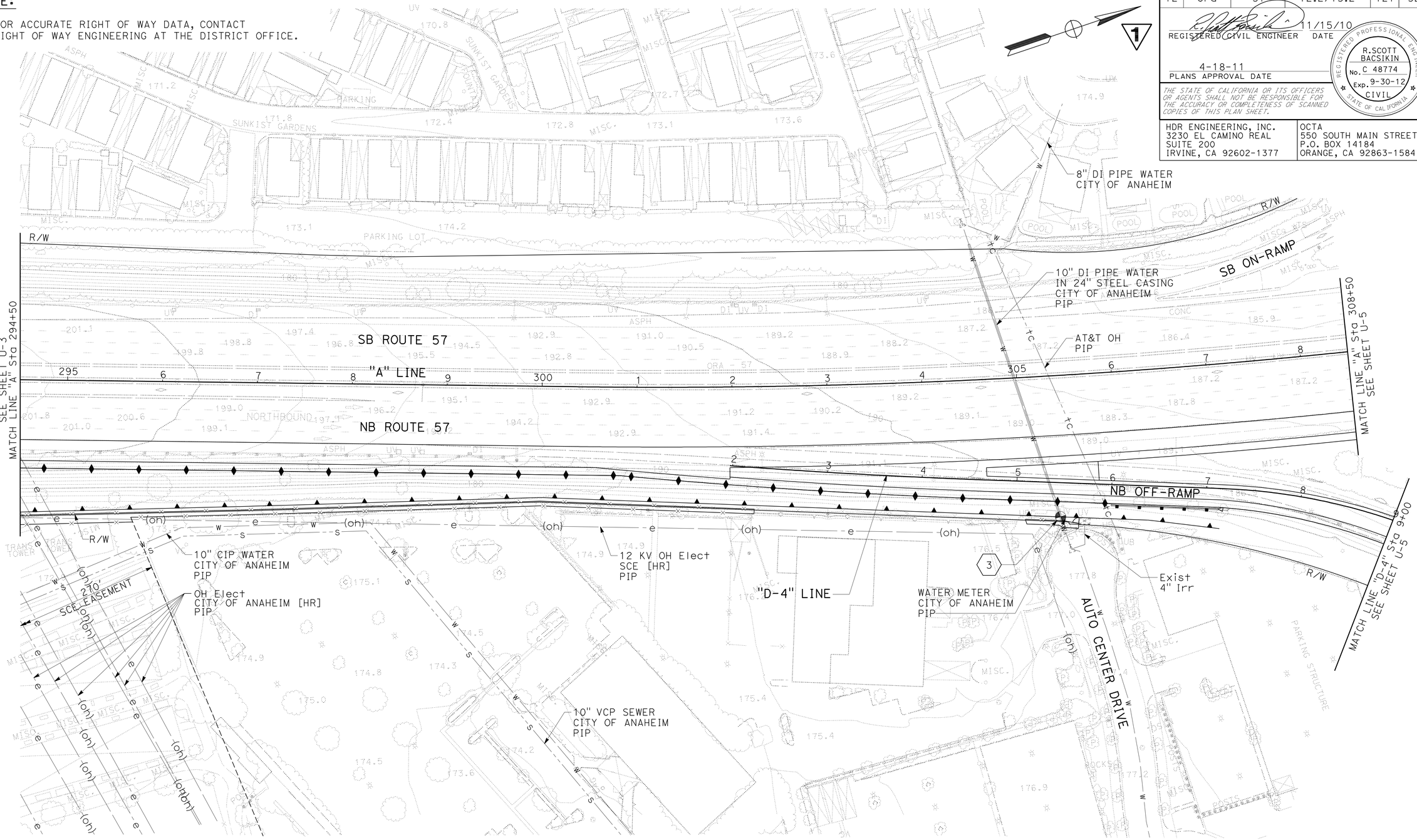


| POTHOLE INFORMATION | | | | | |
|---|---|---|---|---|---|
| No. | UTILITY | NORTHING | EASTING | UTILITY ELEVATION | UTILITY DEPTH |
| 3 | 10" DI WATER | 6067683.200 | 2244242.154 | 172.78 | 4.22' TOP |

# UTILITY PLAN

SCALE: 1" = 50'

U-4

1 REVISED PER ADDENDUM No. 1 DATED AUGUST 22, 2011

THIS PLAN ACCURATE FOR UTILITY WORK ONLY

STATE OF CALIFORNIA - DEPARTMENT OF TRANSPORTATION

Caltrans

CONSULTANT FUNCTIONAL SUPERVISOR: R. SCOTT BACSKIN

CALCULATED-DESIGNED BY: SHIVA BOUSTANI

CHECKED BY: LIEM A. NGUYEN

REVISED BY

DATE REVISED

LAST REVISION 10-12-10

DATE PLOTTED => 19-AUG-2011
TIME PLOTTED => 15:50

| Dist | COUNTY | ROUTE | POST MILES TOTAL PROJECT | SHEET No. | TOTAL SHEETS |
|---|---|---|---|---|---|
| 12 | Ora | 57 | 12.2/15.2 | 152 | 527 |

REGISTERED CIVIL ENGINEER 11/15/10 DATE

4-18-11
PLANS APPROVAL DATE

REGISTERED PROFESSIONAL ENGINEER PETER KIM No. C 51616 Exp. 6-30-12 CIVIL STATE OF CALIFORNIA

*THE STATE OF CALIFORNIA OR ITS OFFICERS OR AGENTS SHALL NOT BE RESPONSIBLE FOR THE ACCURACY OR COMPLETENESS OF SCANNED COPIES OF THIS PLAN SHEET.*

HDR ENGINEERING, INC.
3230 EL CAMINO REAL
SUITE 200
IRVINE, CA 92602-1377

OCTA
550 SOUTH MAIN STREET
P.O. BOX 14184
ORANGE, CA 92863-1584

## NOTE:

1. FOR COMPLETE RIGHT OF WAY AND ACCURATE ACCESS DATA, SEE RIGHT OF WAY RECORD MAPS AT DISTRICT OFFICE.
2. EXACT LOCATION AND POSITION OF CONSTRUCTION AREA SIGNS TO BE DETERMINED BY THE ENGINEER.
3. SEE SIGN PLANS, TRAFFIC HANDLING PLANS AND CONSTRUCTION AREA SIGN PLANS FOR ADDITIONAL SIGNS.
4. STATION/OFFSET DATA SHOWN FOR TEMPORARY RAILING (TYPE K) IS TO THE CENTER OF THE RAILING.
5. FOR TEMPORARY PAVEMENT, SEE STRUCTURAL SECTIONS 15 AND 16 ON SC-11.
6. TEMPORARY PAVEMENT SHALL BE COMPLETELY REMOVED UPON COMPLETION OF THE CONSTRUCTION PHASES OF THE PROJECT.

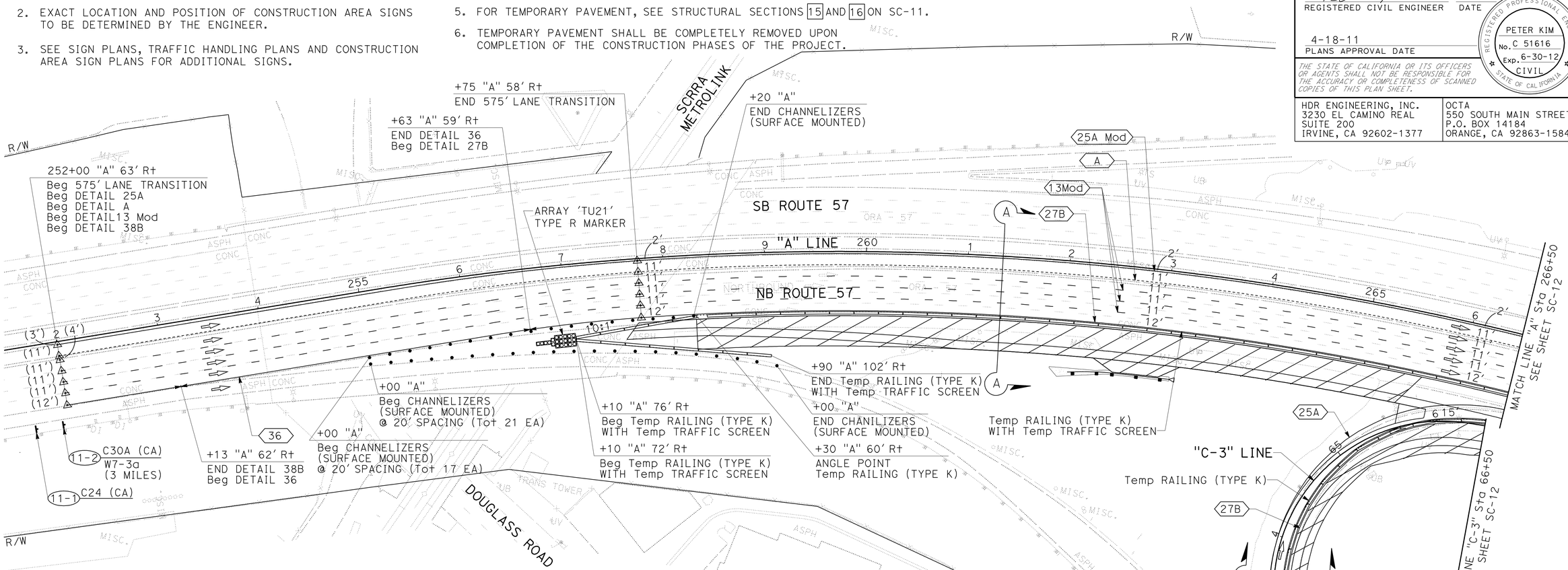


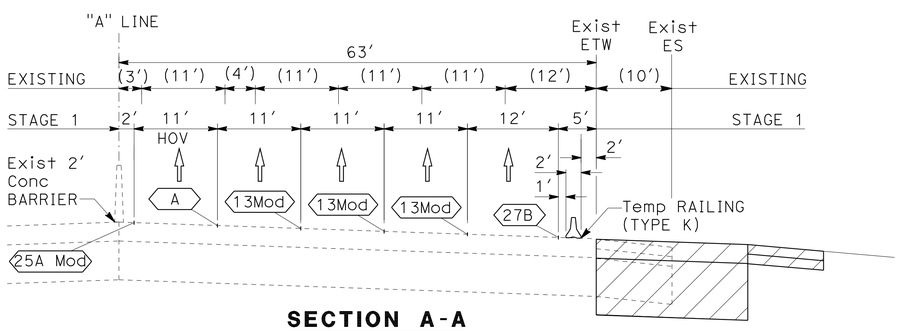


**SECTION A-A**
NO SCALE

15 0.40' HMA TYPE A
0.75' CL2 AB
1.00' OVER EXCAVATION

16 0.40' HMA TYPE A
0.75' CL2 AB

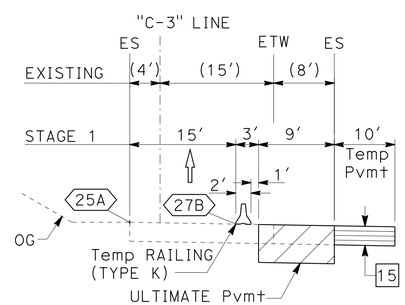


**SECTION B-B**
NO SCALE

## LEGEND:

- PAVEMENT DELINEATION DETAIL PAINT TRAFFIC STRIPE (2 COAT)
- CHANGE IN PAVEMENT DELINEATION
- DIRECTION OF TRAVEL
- TEMPORARY RAILING (TYPE K) WITH TEMPORARY TRAFFIC SCREEN AS NOTED (PLAN VIEW)
- TEMPORARY RAILING (TYPE K) WITH Temp TRAFFIC SCREEN (SECTION VIEW)
- TEMPORARY CRASH CUSHION ARRAY PER PLAN
- CONSTRUCTION AREA
- CONSTRUCTION AREA SIGN NUMBER (STAGE CONSTRUCTION)
- CONSTRUCTION AREA SIGN (1 POST)
- CHANNELIZER (SURFACE MOUNTED)

**1 REVISED PER ADDENDUM No. 1 DATED AUGUST 22, 2011**

THIS PLAN ACCURATE FOR STAGE CONSTRUCTION AND TRAFFIC HANDLING WORK ONLY

# STAGE CONSTRUCTION AND TRAFFIC HANDLING PLAN

**(STAGE 1)**

SCALE: 1" = 50'

**SC-11**

STATE OF CALIFORNIA - DEPARTMENT OF TRANSPORTATION
Caltrans

CONSULTANT FUNCTIONAL SUPERVISOR: R. SCOTT BACSIKIN
CALCULATED-DESIGNED BY: PETER KIM
CHECKED BY: HON YOW
REVISED BY
DATE REVISED

LAST REVISION 10-12-10
DATE PLOTTED => 19-AUG-2011
TIME PLOTTED => 15:50

| Dist | COUNTY | ROUTE | POST MILES TOTAL PROJECT | SHEET No. | TOTAL SHEETS |
|---|---|---|---|---|---|
| 12 | Ora | 57 | 12.2/15.2 | 153 | 527 |

REGISTERED CIVIL ENGINEER 11/15/10 DATE

4-18-11
PLANS APPROVAL DATE

REGISTERED PROFESSIONAL ENGINEER PETER KIM No. C 51616 Exp. 6-30-12 CIVIL STATE OF CALIFORNIA

*THE STATE OF CALIFORNIA OR ITS OFFICERS OR AGENTS SHALL NOT BE RESPONSIBLE FOR THE ACCURACY OR COMPLETENESS OF SCANNED COPIES OF THIS PLAN SHEET.*

HDR ENGINEERING, INC.
3230 EL CAMINO REAL
SUITE 200
IRVINE, CA 92602-1377

OCTA
550 SOUTH MAIN STREET
P.O. BOX 14184
ORANGE, CA 92863-1584

## NOTES:

1. FOR COMPLETE RIGHT OF WAY AND ACCURATE ACCESS DATA, SEE RIGHT OF WAY RECORD MAPS AT DISTRICT OFFICE.
2. SEE SHEET TH-12 FOR TRAFFIC HANDLING WORK ON KATELLA Ave.

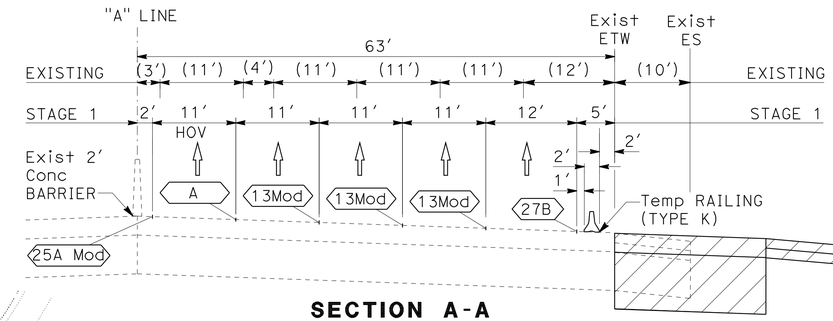


## SECTION A-A
NO SCALE

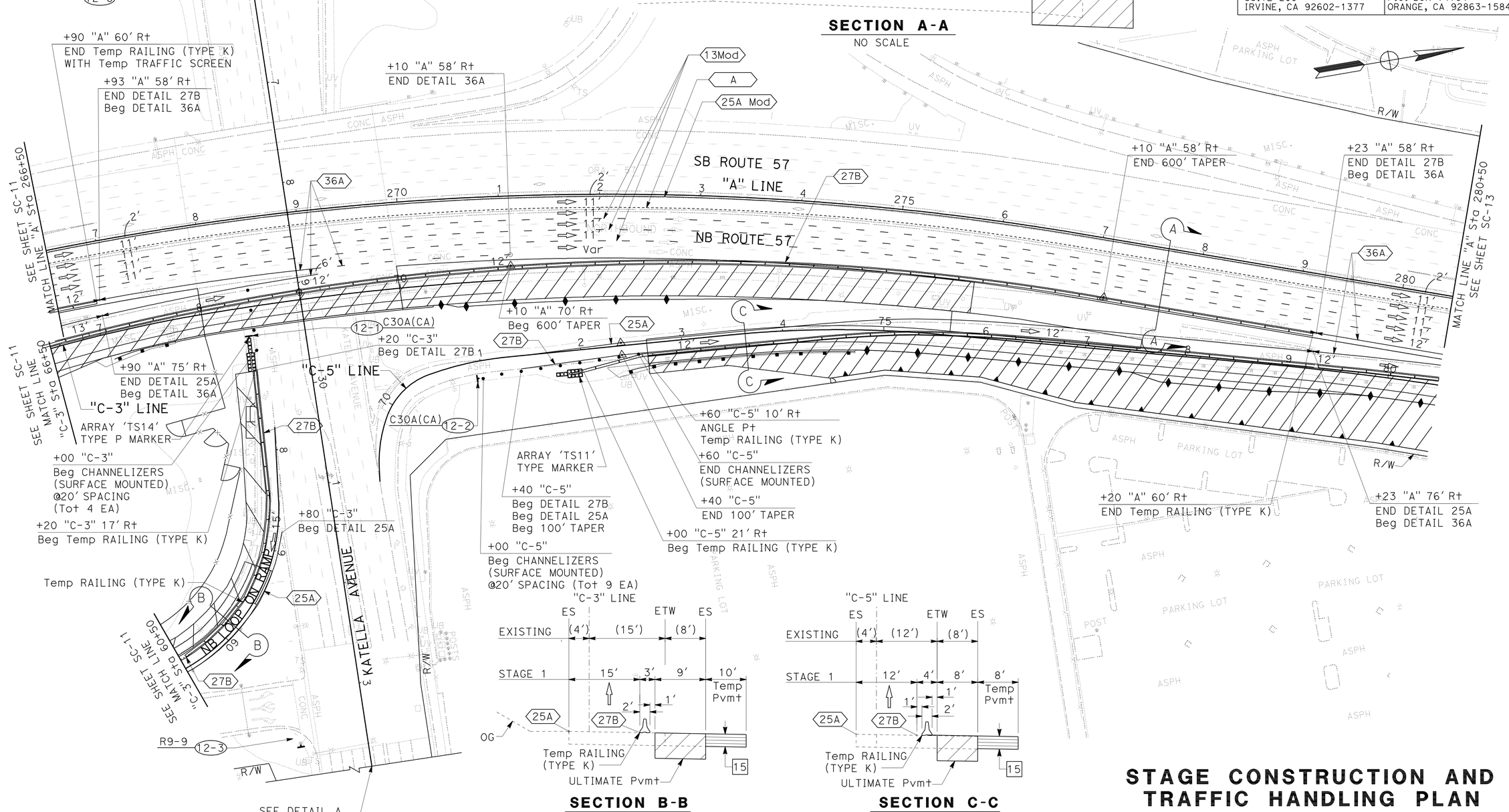





## SECTION B-B
NO SCALE




## SECTION C-C
NO SCALE

# STAGE CONSTRUCTION AND TRAFFIC HANDLING PLAN

**(STAGE 1)**

SCALE: 1" = 50'

**SC-12**

**1 REVISED PER ADDENDUM No. 1 DATED AUGUST 22, 2011**

THIS PLAN ACCURATE FOR STAGE CONSTRUCTION AND TRAFFIC HANDLING WORK ONLY

STATE OF CALIFORNIA - DEPARTMENT OF TRANSPORTATION

CONSULTANT FUNCTIONAL SUPERVISOR: R. SCOTT BACSIKIN

CALCULATED-DESIGNED BY: PETER KIM

CHECKED BY: HON YOW

REVISED BY / DATE REVISED

LAST REVISION 10-12-10 | DATE PLOTTED => 19-AUG-2011 | TIME PLOTTED => 15:50

| Dist | COUNTY | ROUTE | POST MILES TOTAL PROJECT | SHEET No. | TOTAL SHEETS |
|---|---|---|---|---|---|
| 12 | Ora | 57 | 12.2/15.2 | 154 | 527 |

REGISTERED CIVIL ENGINEER 11/15/10 DATE

4-18-11
PLANS APPROVAL DATE

REGISTERED PROFESSIONAL ENGINEER
PETER KIM
No. C 51616
Exp. 6-30-12
CIVIL
STATE OF CALIFORNIA

*THE STATE OF CALIFORNIA OR ITS OFFICERS OR AGENTS SHALL NOT BE RESPONSIBLE FOR THE ACCURACY OR COMPLETENESS OF SCANNED COPIES OF THIS PLAN SHEET.*

HDR ENGINEERING, INC.
3230 EL CAMINO REAL
SUITE 200
IRVINE, CA 92602-1377

OCTA
550 SOUTH MAIN STREET
P.O. BOX 14184
ORANGE, CA 92863-1584

NOTE:

1. FOR ACCURATE RIGHT OF WAY DATA, CONTACT RIGHT OF WAY ENGINEERING AT THE DISTRICT OFFICE.
2. SEE SHEET TH-12 FOR TRAFFIC HANDLING WORK ON DOUGLASS ROAD.

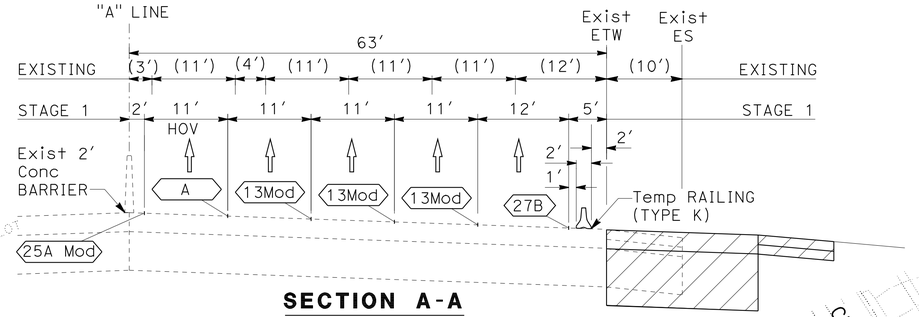


**SECTION A-A**
NO SCALE

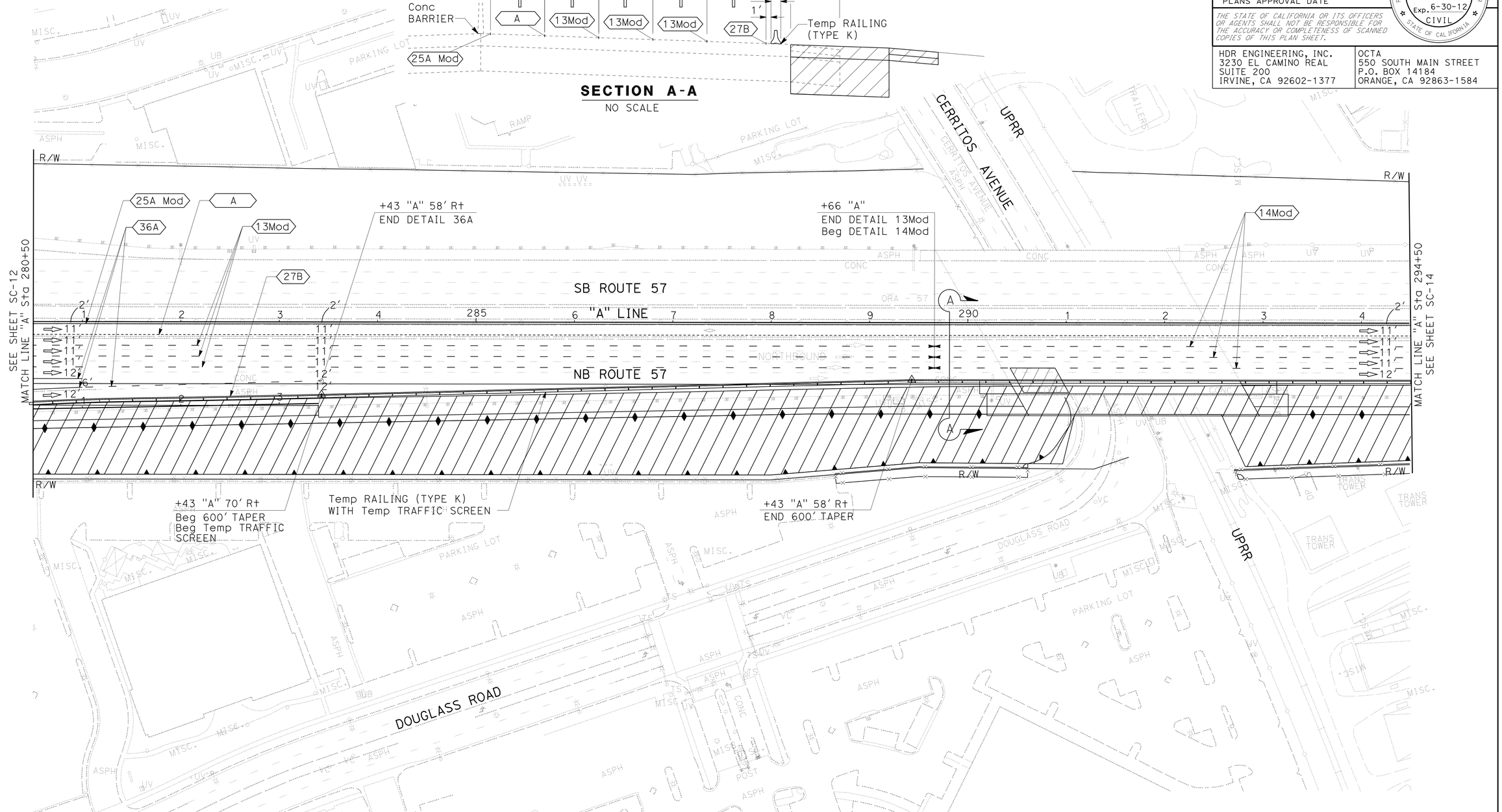


# STAGE CONSTRUCTION AND TRAFFIC HANDLING PLAN

**(STAGE 1)**

SCALE: 1" = 50'

**SC-13**

1 **REVISED PER ADDENDUM No. 1 DATED AUGUST 22, 2011**

THIS PLAN ACCURATE FOR STAGE CONSTRUCTION AND TRAFFIC HANDLING WORK ONLY

STATE OF CALIFORNIA - DEPARTMENT OF TRANSPORTATION
Caltrans

CONSULTANT FUNCTIONAL SUPERVISOR: R. SCOTT BACSIKIN

CALCULATED-DESIGNED BY: PETER KIM
CHECKED BY: HON YOW

REVISED BY
DATE REVISED

LAST REVISION
DATE PLOTTED => 19-AUG-2011
TIME PLOTTED => 15:50
10-12-10

| Dist | COUNTY | ROUTE | POST MILES TOTAL PROJECT | SHEET No. | TOTAL SHEETS |
|---|---|---|---|---|---|
| 12 | Ora | 57 | 12.2/15.2 | 155 | 527 |

REGISTERED CIVIL ENGINEER 11/15/10 DATE

4-18-11
PLANS APPROVAL DATE

REGISTERED PROFESSIONAL ENGINEER
PETER KIM
No. C 51616
Exp. 6-30-12
CIVIL
STATE OF CALIFORNIA

*THE STATE OF CALIFORNIA OR ITS OFFICERS OR AGENTS SHALL NOT BE RESPONSIBLE FOR THE ACCURACY OR COMPLETENESS OF SCANNED COPIES OF THIS PLAN SHEET.*


HDR ENGINEERING, INC.
3230 EL CAMINO REAL
SUITE 200
IRVINE, CA 92602-1377

OCTA
550 SOUTH MAIN STREET
P.O. BOX 14184
ORANGE, CA 92863-1584


NOTE:

1. FOR ACCURATE RIGHT OF WAY DATA, CONTACT RIGHT OF WAY ENGINEERING AT THE DISTRICT OFFICE.

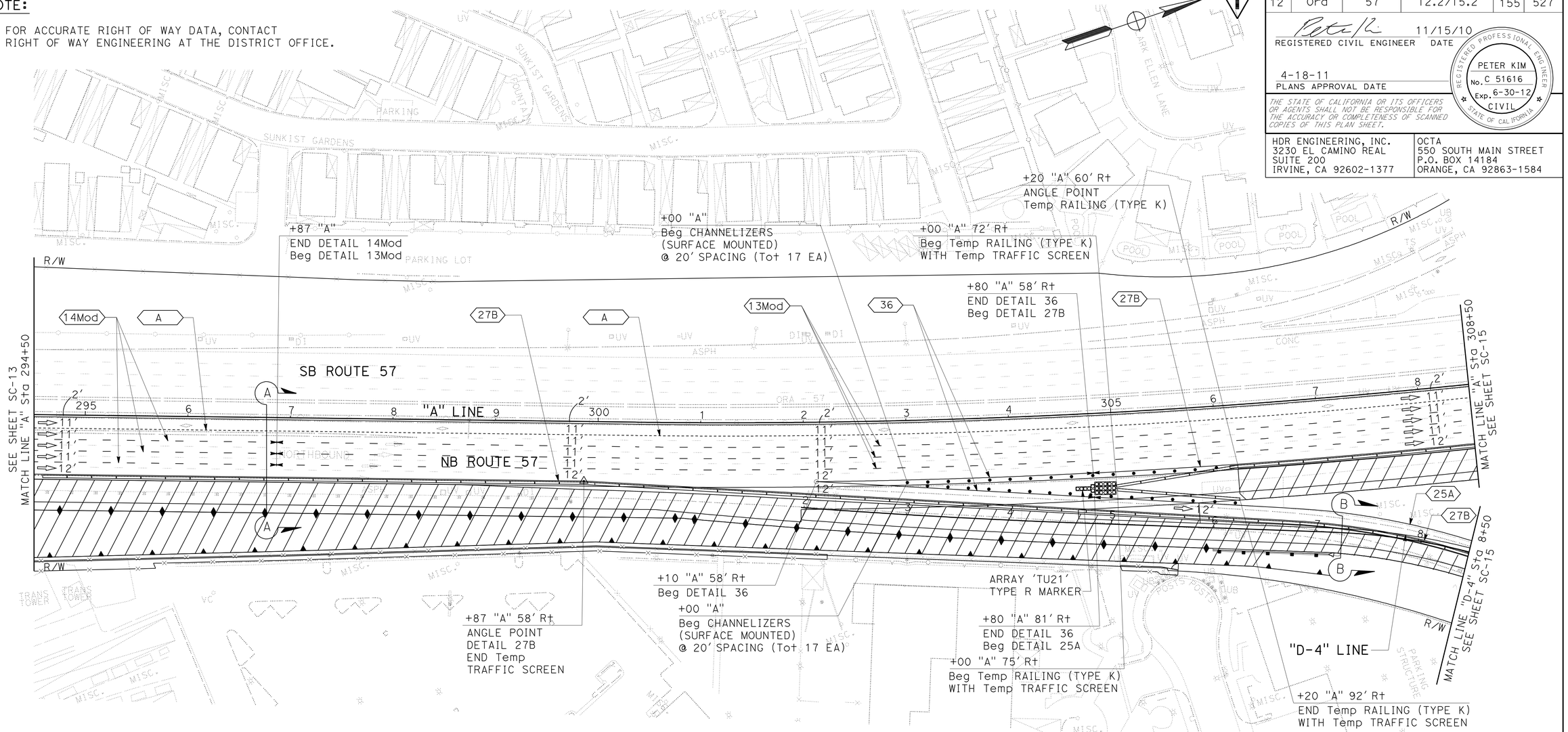


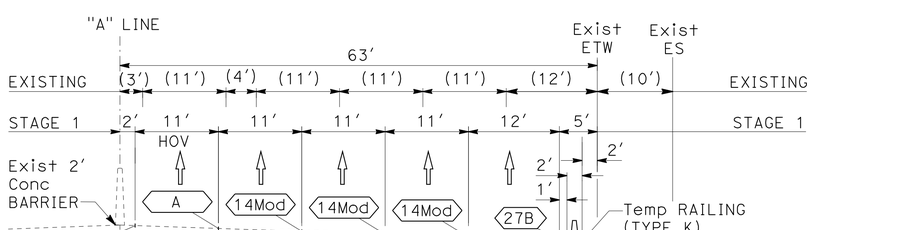


**SECTION A-A**
NO SCALE

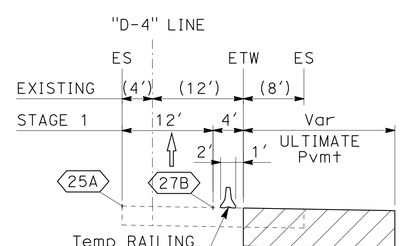


**SECTION B-B**
NO SCALE

# STAGE CONSTRUCTION AND TRAFFIC HANDLING PLAN

**(STAGE 1)**

SCALE: 1" = 50'

**SC-14**

1 **REVISED PER ADDENDUM No. 1 DATED AUGUST 22, 2011**

THIS PLAN ACCURATE FOR STAGE CONSTRUCTION AND TRAFFIC HANDLING WORK ONLY

STATE OF CALIFORNIA - DEPARTMENT OF TRANSPORTATION

Caltrans

CONSULTANT FUNCTIONAL SUPERVISOR: R. SCOTT BACSIKIN

CALCULATED-DESIGNED BY: PETER KIM

CHECKED BY: HON YOW

REVISED BY

DATE REVISED

LAST REVISION 10-12-10

DATE PLOTTED => 19-AUG-2011
TIME PLOTTED => 15:51

| Dist | COUNTY | ROUTE | POST MILES TOTAL PROJECT | SHEET No. | TOTAL SHEETS |
|---|---|---|---|---|---|
| 12 | Ora | 57 | 12.2/15.2 | 156 | 527 |

REGISTERED CIVIL ENGINEER 11/15/10 DATE

4-18-11
PLANS APPROVAL DATE

REGISTERED PROFESSIONAL ENGINEER PETER KIM No. C 51616 Exp. 6-30-12 CIVIL STATE OF CALIFORNIA

*THE STATE OF CALIFORNIA OR ITS OFFICERS OR AGENTS SHALL NOT BE RESPONSIBLE FOR THE ACCURACY OR COMPLETENESS OF SCANNED COPIES OF THIS PLAN SHEET.*

HDR ENGINEERING, INC.
3230 EL CAMINO REAL
SUITE 200
IRVINE, CA 92602-1377

OCTA
550 SOUTH MAIN STREET
P.O. BOX 14184
ORANGE, CA 92863-1584

NOTE:

1. FOR ACCURATE RIGHT OF WAY DATA, CONTACT RIGHT OF WAY ENGINEERING AT THE DISTRICT OFFICE.

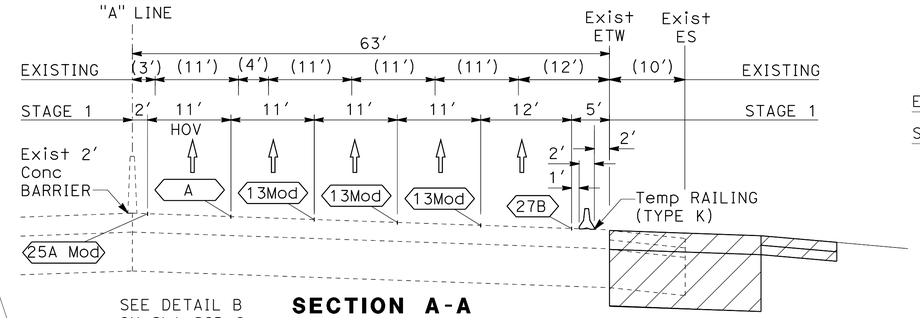


**SECTION A-A**
NO SCALE

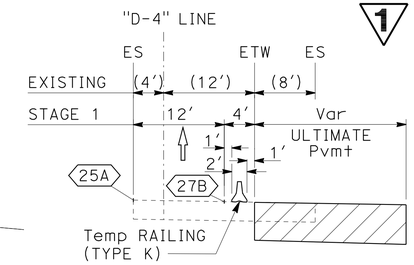


**SECTION B-B**
NO SCALE

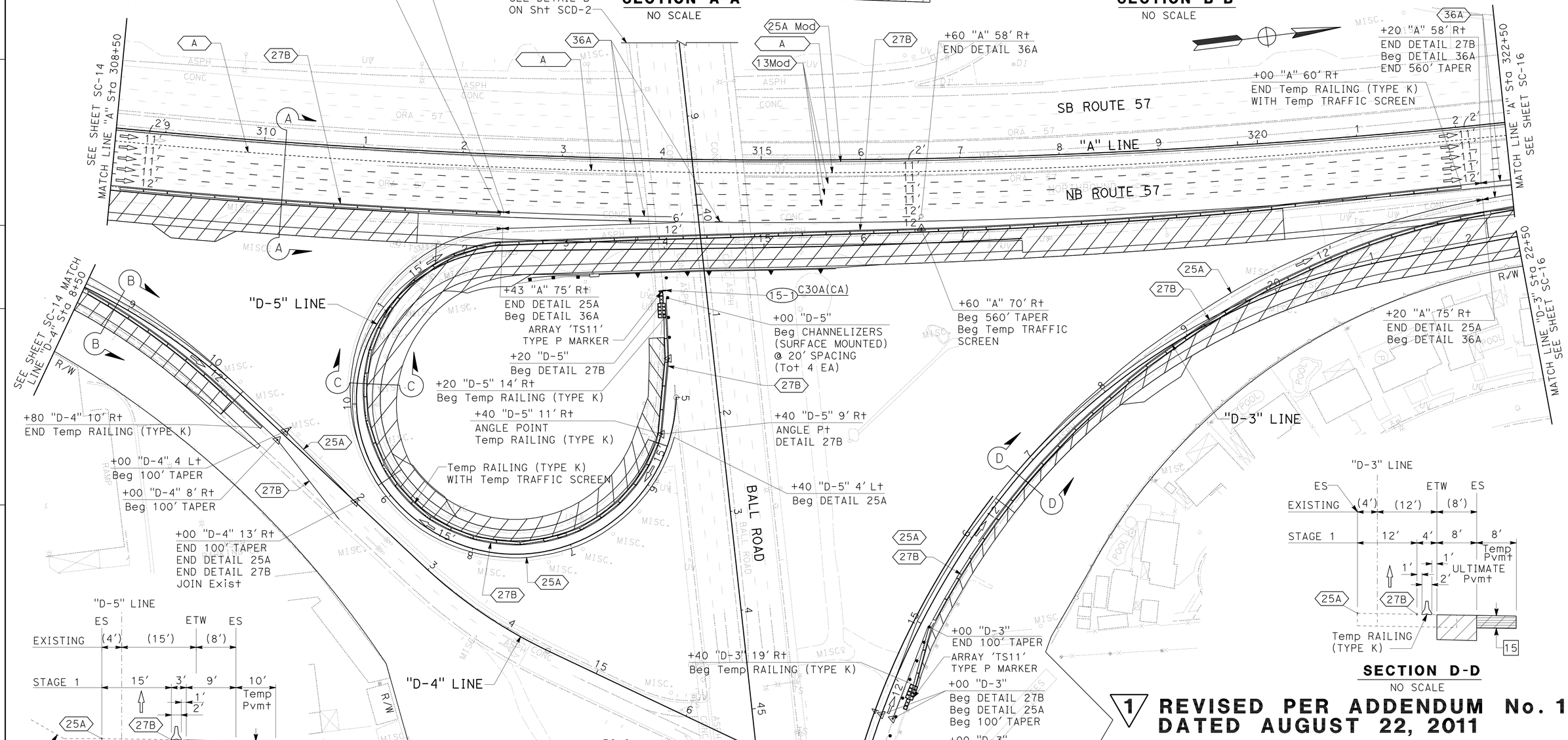





**SECTION C-C**
NO SCALE




**SECTION D-D**
NO SCALE

1 **REVISED PER ADDENDUM No. 1 DATED AUGUST 22, 2011**

# STAGE CONSTRUCTION AND TRAFFIC HANDLING PLAN

**(STAGE 1)**

SCALE: 1" = 50'

**SC-15**

THIS PLAN ACCURATE FOR STAGE CONSTRUCTION AND TRAFFIC HANDLING WORK ONLY

STATE OF CALIFORNIA - DEPARTMENT OF TRANSPORTATION
Caltrans
CONSULTANT FUNCTIONAL SUPERVISOR: R. SCOTT BACSIKIN
CALCULATED-DESIGNED BY: PETER KIM
CHECKED BY: HON YOW
REVISED BY / DATE REVISED

LAST REVISION 08-30-10 | DATE PLOTTED => 19-AUG-2011 | TIME PLOTTED => 15:51

| Dist | COUNTY | ROUTE | POST MILES TOTAL PROJECT | SHEET No. | TOTAL SHEETS |
|---|---|---|---|---|---|
| 12 | Ora | 57 | 12.2/15.2 | 157 | 527 |

REGISTERED CIVIL ENGINEER 11/15/10 DATE

4-18-11
PLANS APPROVAL DATE

REGISTERED PROFESSIONAL ENGINEER PETER KIM No. C 51616 Exp. 6-30-12 CIVIL STATE OF CALIFORNIA

*THE STATE OF CALIFORNIA OR ITS OFFICERS OR AGENTS SHALL NOT BE RESPONSIBLE FOR THE ACCURACY OR COMPLETENESS OF SCANNED COPIES OF THIS PLAN SHEET.*

HDR ENGINEERING, INC.
3230 EL CAMINO REAL
SUITE 200
IRVINE, CA 92602-1377

OCTA
550 SOUTH MAIN STREET
P.O. BOX 14184
ORANGE, CA 92863-1584

NOTE:

1. FOR ACCURATE RIGHT OF WAY DATA, CONTACT RIGHT OF WAY ENGINEERING AT THE DISTRICT OFFICE.

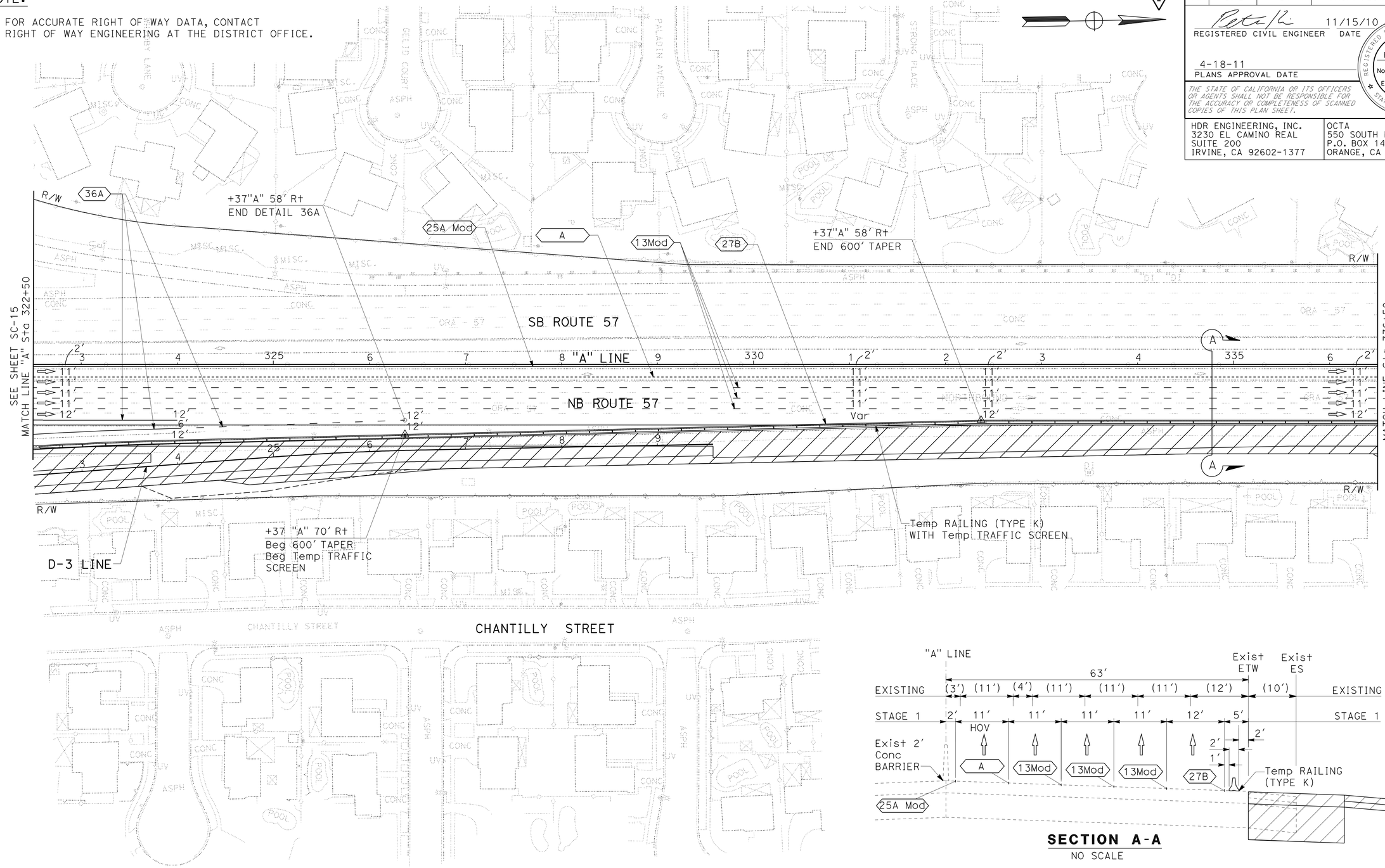


**SECTION A-A**
NO SCALE

# STAGE CONSTRUCTION AND TRAFFIC HANDLING PLAN

**(STAGE 1)**

SCALE: 1" = 50'

**SC-16**

1 **REVISED PER ADDENDUM No. 1 DATED AUGUST 22, 2011**

THIS PLAN ACCURATE FOR STAGE CONSTRUCTION AND TRAFFIC HANDLING WORK ONLY

STATE OF CALIFORNIA - DEPARTMENT OF TRANSPORTATION

Caltrans

CONSULTANT FUNCTIONAL SUPERVISOR: R. SCOTT BACSIKIN

CALCULATED-DESIGNED BY: PETER KIM

CHECKED BY: HON YOW

REVISED BY

DATE REVISED

LAST REVISION 10-12-10 DATE PLOTTED => 19-AUG-2011 TIME PLOTTED => 15:51

| Dist | COUNTY | ROUTE | POST MILES TOTAL PROJECT | SHEET No. | TOTAL SHEETS |
|---|---|---|---|---|---|
| 12 | Ora | 57 | 12.2/15.2 | 158 | 527 |

REGISTERED CIVIL ENGINEER 11/15/10 DATE

4-18-11
PLANS APPROVAL DATE

REGISTERED PROFESSIONAL ENGINEER
PETER KIM
No. C 51616
Exp. 6-30-12
CIVIL
STATE OF CALIFORNIA

*THE STATE OF CALIFORNIA OR ITS OFFICERS OR AGENTS SHALL NOT BE RESPONSIBLE FOR THE ACCURACY OR COMPLETENESS OF SCANNED COPIES OF THIS PLAN SHEET.*

HDR ENGINEERING, INC.
3230 EL CAMINO REAL
SUITE 200
IRVINE, CA 92602-1377

OCTA
550 SOUTH MAIN STREET
P.O. BOX 14184
ORANGE, CA 92863-1584

NOTE:

1. FOR ACCURATE RIGHT OF WAY DATA, CONTACT RIGHT OF WAY ENGINEERING AT THE DISTRICT OFFICE.

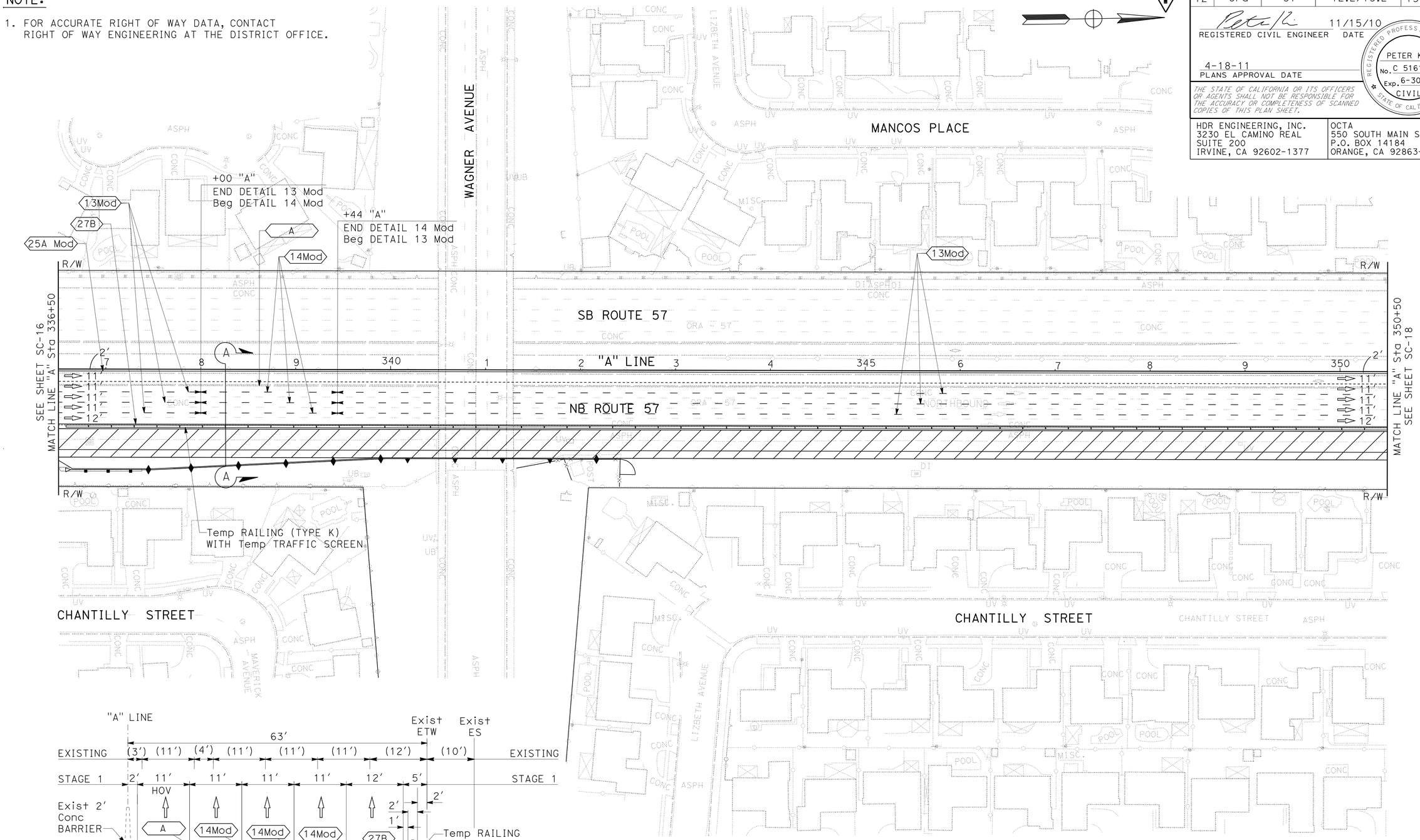


**SECTION A-A**
NO SCALE

# STAGE CONSTRUCTION AND TRAFFIC HANDLING PLAN

**(STAGE 1)**

SCALE: 1" = 50'

**SC-17**

1 **REVISED PER ADDENDUM No. 1 DATED AUGUST 22, 2011**

THIS PLAN ACCURATE FOR STAGE CONSTRUCTION AND TRAFFIC HANDLING WORK ONLY

STATE OF CALIFORNIA - DEPARTMENT OF TRANSPORTATION
Caltrans

CONSULTANT FUNCTIONAL SUPERVISOR: R. SCOTT BACSIKIN

CALCULATED-DESIGNED BY: PETER KIM
CHECKED BY: HON YOW
REVISED BY
DATE REVISED

LAST REVISION 10-12-10
DATE PLOTTED => 19-AUG-2011
TIME PLOTTED => 15:51

| Dist | COUNTY | ROUTE | POST MILES TOTAL PROJECT | SHEET No. | TOTAL SHEETS |
|---|---|---|---|---|---|
| 12 | Ora | 57 | 12.2/15.2 | 159 | 527 |

REGISTERED CIVIL ENGINEER 11/15/10 DATE

4-18-11
PLANS APPROVAL DATE

REGISTERED PROFESSIONAL ENGINEER
PETER KIM
No. C 51616
Exp. 6-30-12
CIVIL
STATE OF CALIFORNIA

*THE STATE OF CALIFORNIA OR ITS OFFICERS OR AGENTS SHALL NOT BE RESPONSIBLE FOR THE ACCURACY OR COMPLETENESS OF SCANNED COPIES OF THIS PLAN SHEET.*

HDR ENGINEERING, INC.
3230 EL CAMINO REAL
SUITE 200
IRVINE, CA 92602-1377

OCTA
550 SOUTH MAIN STREET
P.O. BOX 14184
ORANGE, CA 92863-1584

NOTE:

1. FOR ACCURATE RIGHT OF WAY DATA, CONTACT RIGHT OF WAY ENGINEERING AT THE DISTRICT OFFICE.

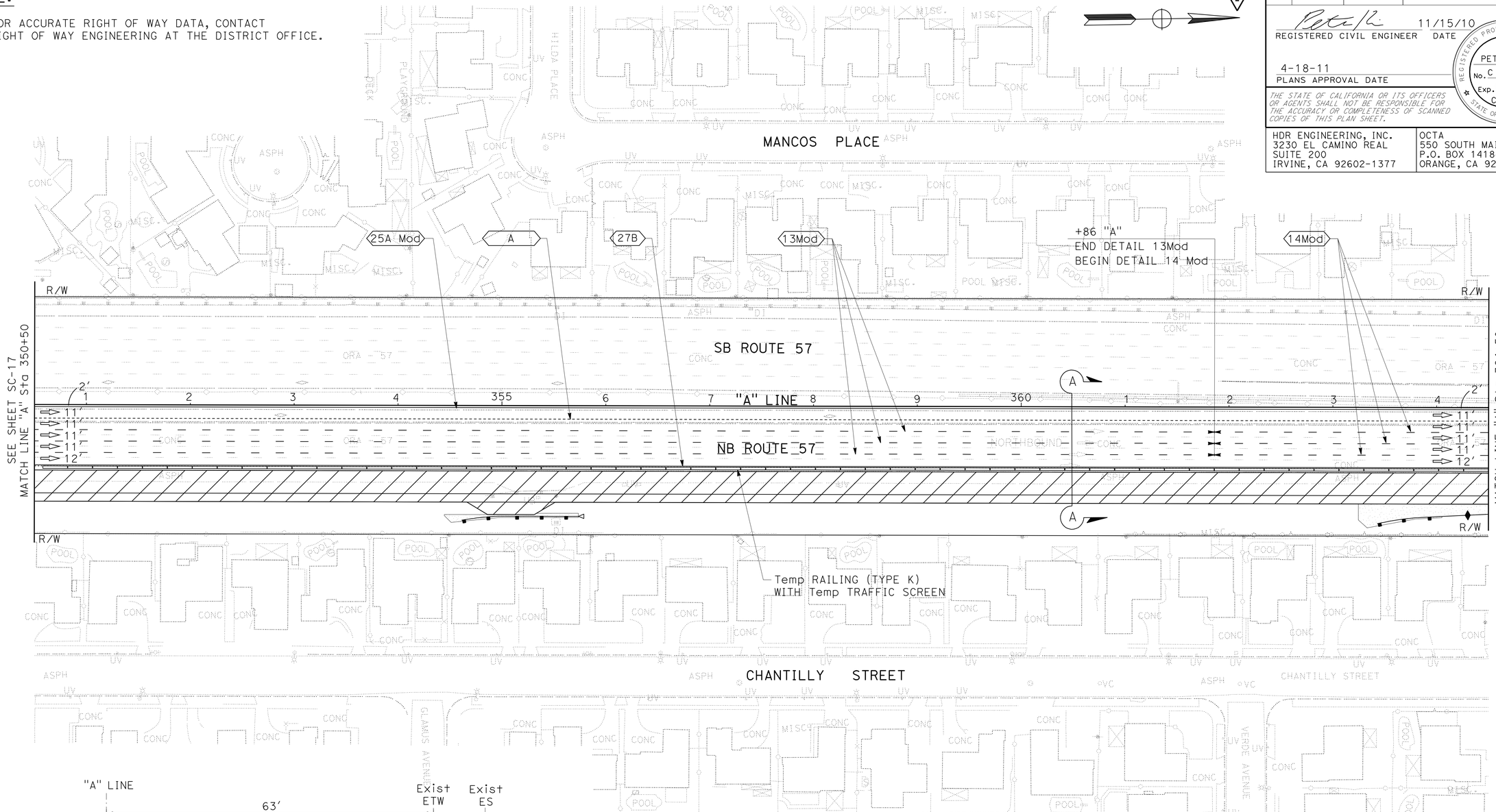


SEE SHEET SC-17
MATCH LINE "A" Sta 350+50

MATCH LINE "A" Sta 364+50
SEE SHEET SC-19

Temp RAILING (TYPE K)
WITH Temp TRAFFIC SCREEN

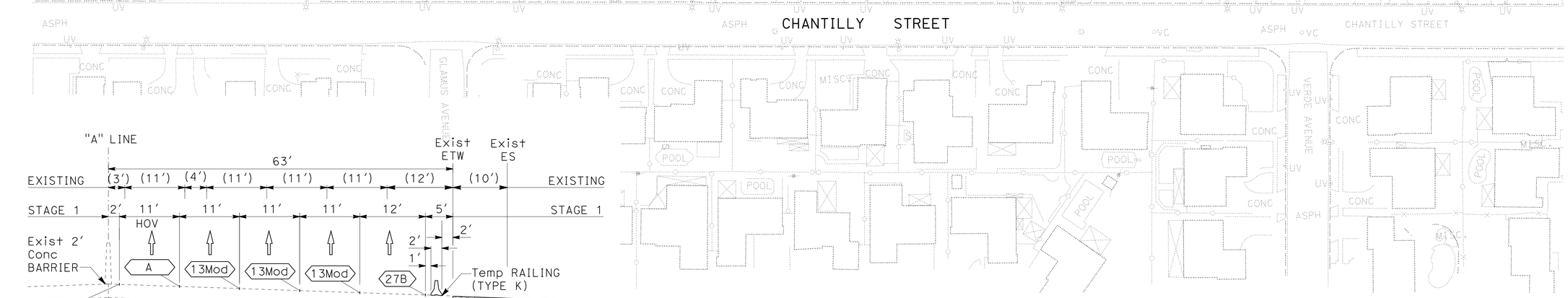


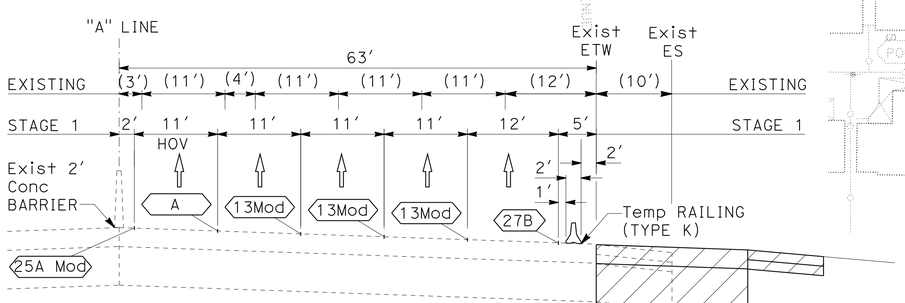


**SECTION A-A**
NO SCALE

1 **REVISED PER ADDENDUM No. 1 DATED AUGUST 22, 2011**

THIS PLAN ACCURATE FOR STAGE CONSTRUCTION AND TRAFFIC HANDLING WORK ONLY

# STAGE CONSTRUCTION AND TRAFFIC HANDLING PLAN

**(STAGE 1)**

SCALE: 1" = 50'

**SC-18**

STATE OF CALIFORNIA - DEPARTMENT OF TRANSPORTATION
Caltrans

CONSULTANT FUNCTIONAL SUPERVISOR: R. SCOTT BACSIKIN
CALCULATED-DESIGNED BY: PETER KIM
CHECKED BY: HON YOW
REVISED BY
DATE REVISED

LAST REVISION 10-12-10
DATE PLOTTED => 19-AUG-2011
TIME PLOTTED => 15:55

| Dist | COUNTY | ROUTE | POST MILES TOTAL PROJECT | SHEET No. | TOTAL SHEETS |
|---|---|---|---|---|---|
| 12 | Ora | 57 | 12.2/15.2 | 160 | 527 |

REGISTERED CIVIL ENGINEER 11/15/10 DATE

4-18-11
PLANS APPROVAL DATE

REGISTERED PROFESSIONAL ENGINEER
PETER KIM
No. C 51616
Exp. 6-30-12
CIVIL
STATE OF CALIFORNIA

*THE STATE OF CALIFORNIA OR ITS OFFICERS OR AGENTS SHALL NOT BE RESPONSIBLE FOR THE ACCURACY OR COMPLETENESS OF SCANNED COPIES OF THIS PLAN SHEET.*

HDR ENGINEERING, INC.
3230 EL CAMINO REAL
SUITE 200
IRVINE, CA 92602-1377

OCTA
550 SOUTH MAIN STREET
P.O. BOX 14184
ORANGE, CA 92863-1584

NOTE:

1. FOR ACCURATE RIGHT OF WAY DATA, CONTACT RIGHT OF WAY ENGINEERING AT THE DISTRICT OFFICE.

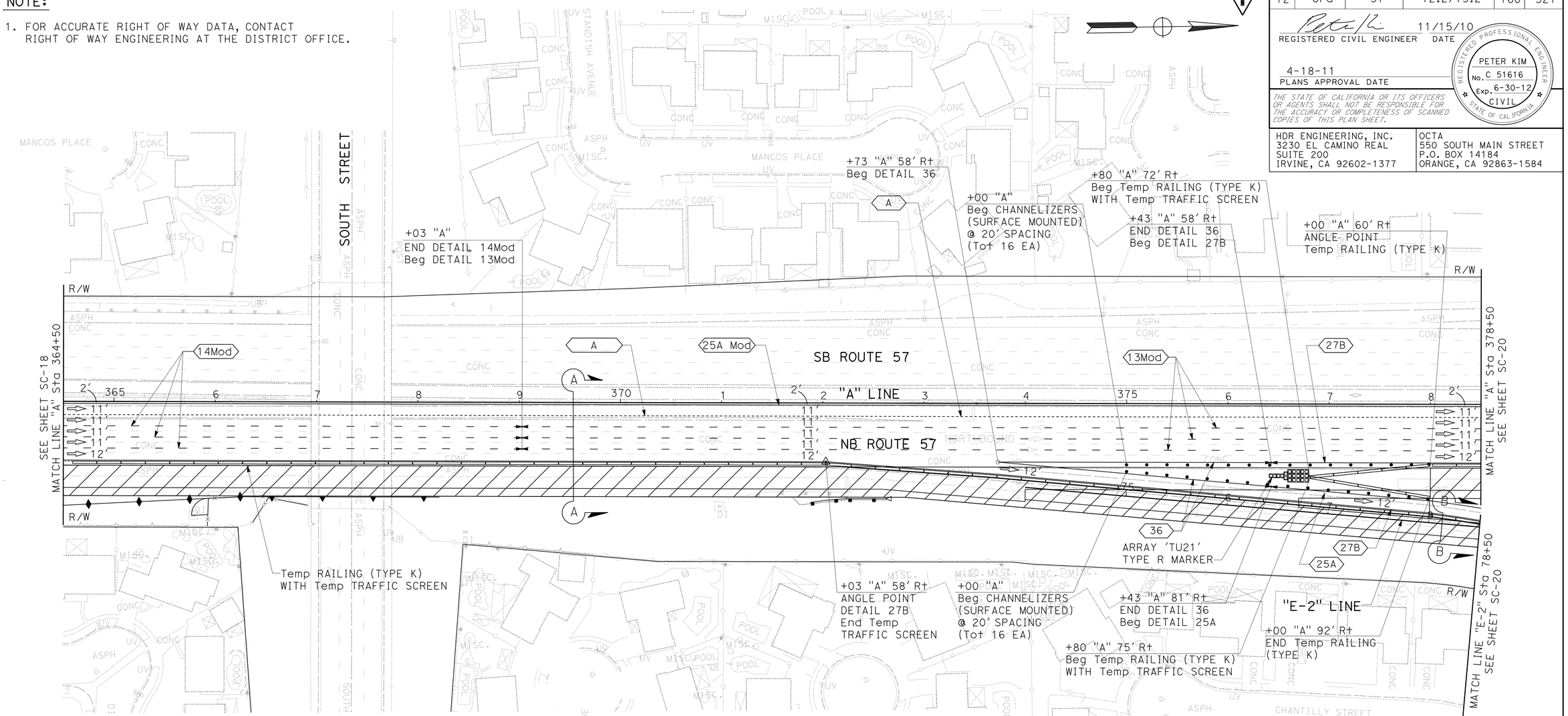


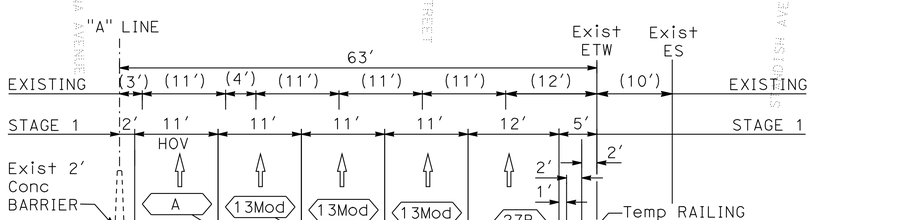


**SECTION A-A**
NO SCALE

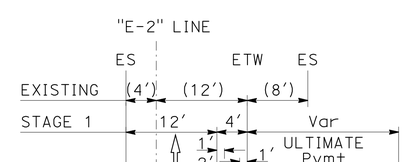


**SECTION B-B**
NO SCALE

# STAGE CONSTRUCTION AND TRAFFIC HANDLING PLAN

**(STAGE 1)**

SCALE: 1" = 50'

**SC-19**

1 **REVISED PER ADDENDUM No. 1 DATED AUGUST 22, 2011**

THIS PLAN ACCURATE FOR STAGE CONSTRUCTION AND TRAFFIC HANDLING WORK ONLY

REVISED BY | DATE REVISED
PETER KIM | HON YOW
CALCULATED-DESIGNED BY | CHECKED BY
CONSULTANT FUNCTIONAL SUPERVISOR
R. SCOTT BACSIKIN
STATE OF CALIFORNIA - DEPARTMENT OF TRANSPORTATION
Caltrans

LAST REVISION 10-12-10 | DATE PLOTTED => 19-AUG-2011 | TIME PLOTTED => 15:51

| Dist | COUNTY | ROUTE | POST MILES TOTAL PROJECT | SHEET No. | TOTAL SHEETS |
|---|---|---|---|---|---|
| 12 | Ora | 57 | 12.2/15.2 | 161 | 527 |

REGISTERED CIVIL ENGINEER 11/15/10 DATE

4-18-11
PLANS APPROVAL DATE

REGISTERED PROFESSIONAL ENGINEER PETER KIM No. C 51616 Exp. 6-30-12 CIVIL STATE OF CALIFORNIA

*THE STATE OF CALIFORNIA OR ITS OFFICERS OR AGENTS SHALL NOT BE RESPONSIBLE FOR THE ACCURACY OR COMPLETENESS OF SCANNED COPIES OF THIS PLAN SHEET.*

HDR ENGINEERING, INC.
3230 EL CAMINO REAL
SUITE 200
IRVINE, CA 92602-1377

OCTA
550 SOUTH MAIN STREET
P.O. BOX 14184
ORANGE, CA 92863-1584

NOTE:

1. FOR ACCURATE RIGHT OF WAY DATA, CONTACT RIGHT OF WAY ENGINEERING AT THE DISTRICT OFFICE.

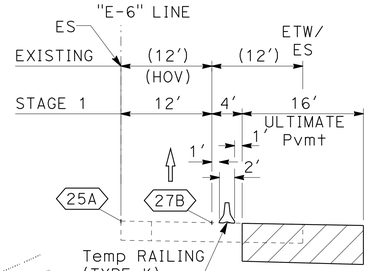


**SECTION D-D**
NO SCALE

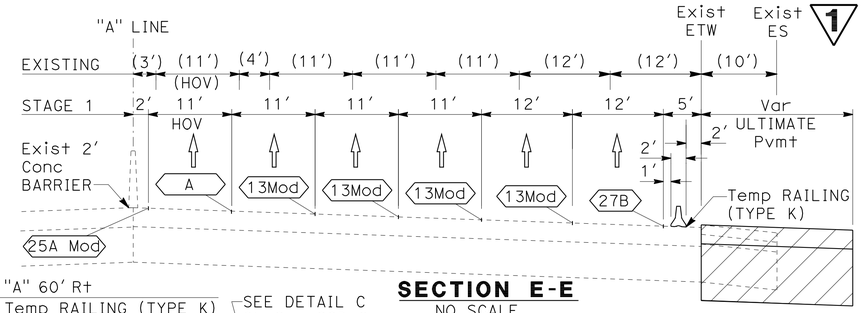


**SECTION E-E**
NO SCALE

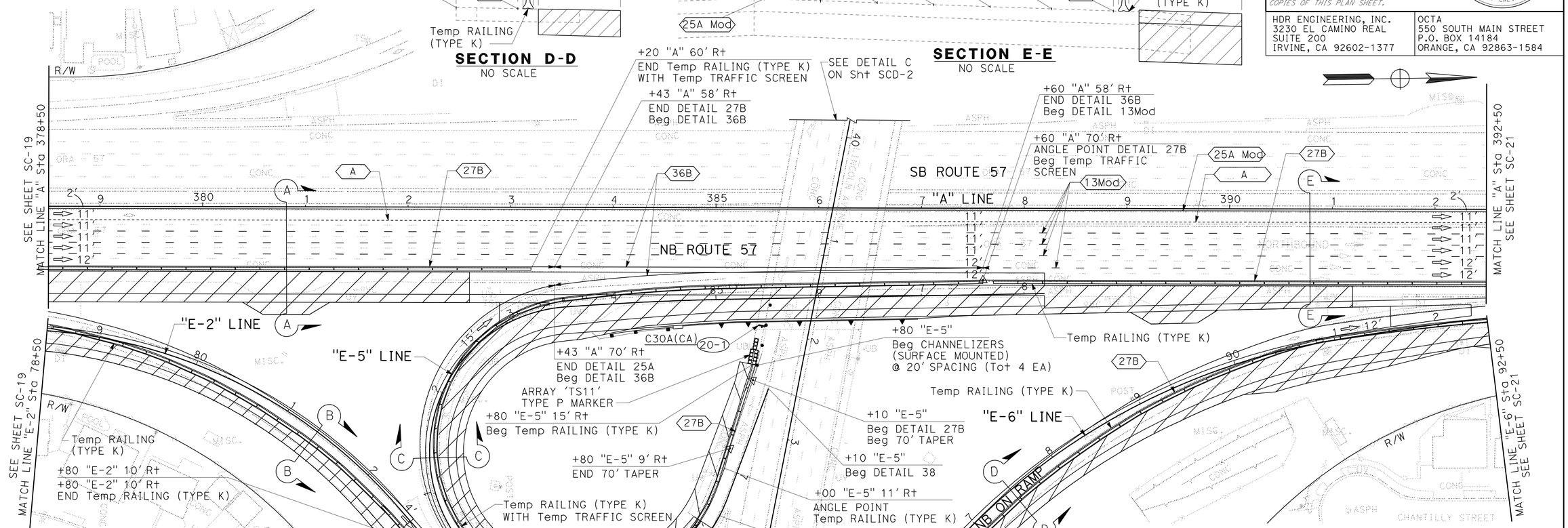


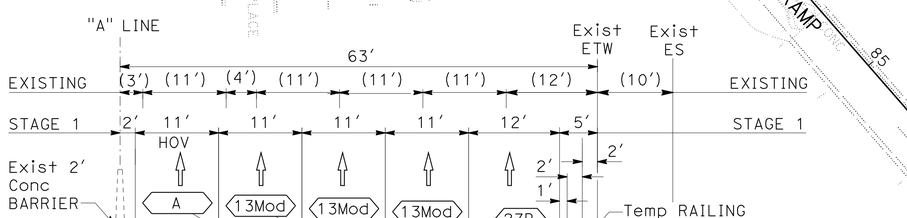


**SECTION A-A**
NO SCALE

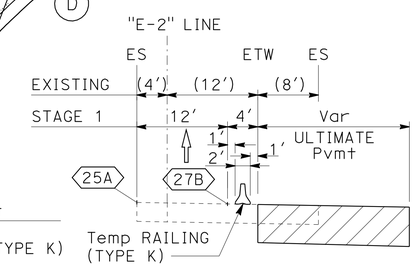


**SECTION B-B**
NO SCALE

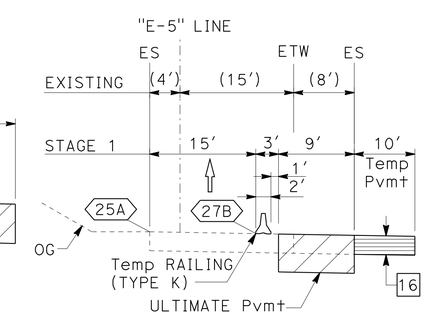


**SECTION C-C**
NO SCALE

1 **REVISED PER ADDENDUM No. 1 DATED AUGUST 22, 2011**

THIS PLAN ACCURATE FOR STAGE CONSTRUCTION AND TRAFFIC HANDLING WORK ONLY

# STAGE CONSTRUCTION AND TRAFFIC HANDLING PLAN

**(STAGE 1)**

SCALE: 1" = 50'

**SC-20**

STATE OF CALIFORNIA - DEPARTMENT OF TRANSPORTATION
Caltrans
CONSULTANT FUNCTIONAL SUPERVISOR: R. SCOTT BACSIKIN
CALCULATED-DESIGNED BY: PETER KIM
CHECKED BY: HON YOW
REVISED BY
DATE REVISED

LAST REVISION 10-12-10
DATE PLOTTED => 19-AUG-2011
TIME PLOTTED => 15:51

| Dist | COUNTY | ROUTE | POST MILES TOTAL PROJECT | SHEET No. | TOTAL SHEETS |
|---|---|---|---|---|---|
| 12 | Ora | 57 | 12.2/15.2 | 162 | 527 |

REGISTERED CIVIL ENGINEER 11/15/10 DATE

4-18-11
PLANS APPROVAL DATE

REGISTERED PROFESSIONAL ENGINEER
PETER KIM
No. C 51616
Exp. 6-30-12
CIVIL
STATE OF CALIFORNIA

*THE STATE OF CALIFORNIA OR ITS OFFICERS OR AGENTS SHALL NOT BE RESPONSIBLE FOR THE ACCURACY OR COMPLETENESS OF SCANNED COPIES OF THIS PLAN SHEET.*

HDR ENGINEERING, INC.
3230 EL CAMINO REAL
SUITE 200
IRVINE, CA 92602-1377

OCTA
550 SOUTH MAIN STREET
P.O. BOX 14184
ORANGE, CA 92863-1584

NOTE:

1. FOR ACCURATE RIGHT OF WAY DATA, CONTACT RIGHT OF WAY ENGINEERING AT THE DISTRICT OFFICE.

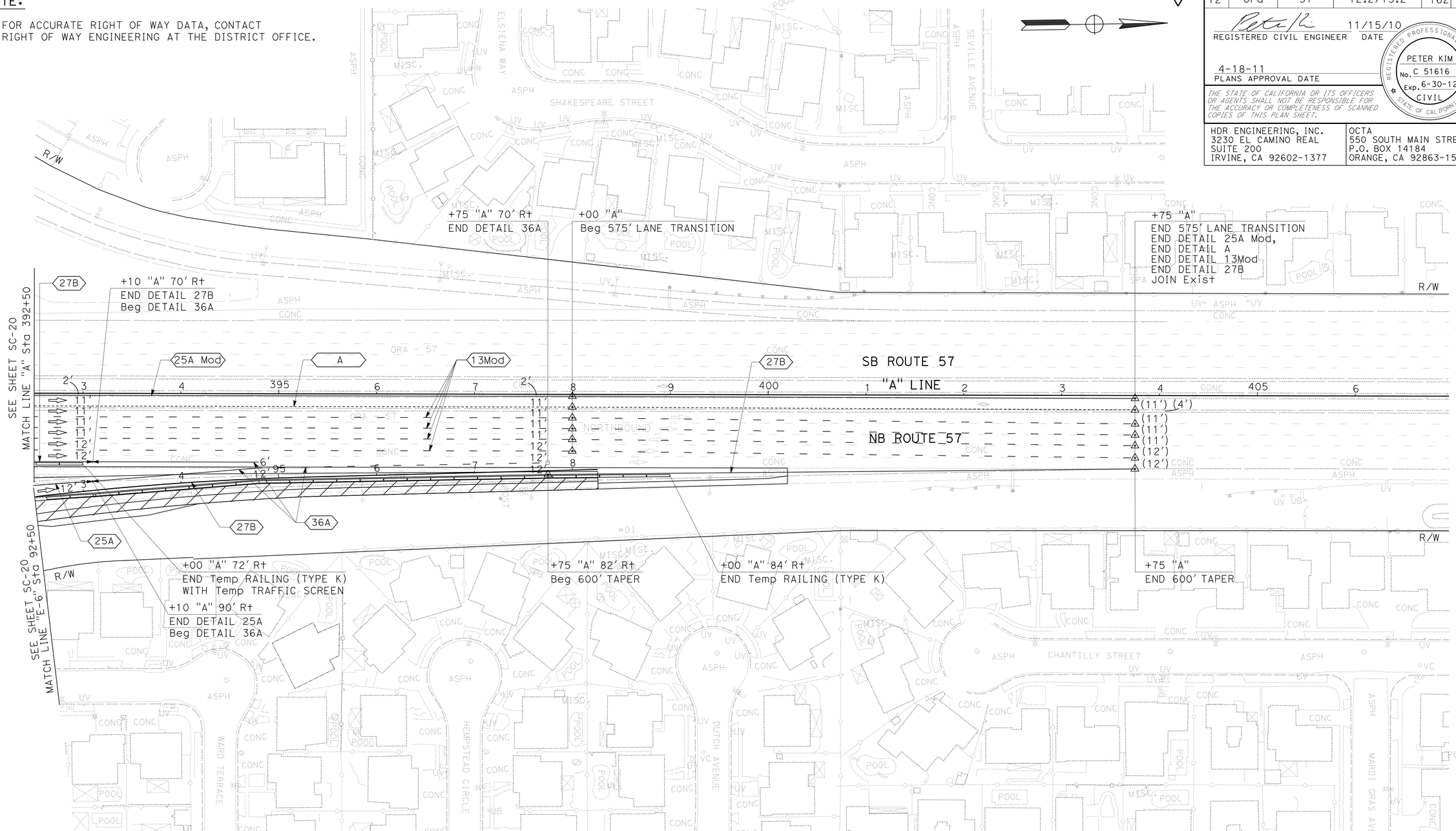


# STAGE CONSTRUCTION AND TRAFFIC HANDLING PLAN

(STAGE 1)

SCALE: 1" = 50'

SC-21

1 REVISED PER ADDENDUM No. 1 DATED AUGUST 22, 2011

THIS PLAN ACCURATE FOR STAGE CONSTRUCTION AND TRAFFIC HANDLING WORK ONLY

STATE OF CALIFORNIA - DEPARTMENT OF TRANSPORTATION
Caltrans

CONSULTANT FUNCTIONAL SUPERVISOR: R. SCOTT BACSIKIN

CALCULATED-DESIGNED BY: PETER KIM
CHECKED BY: HON YOW

REVISED BY / DATE REVISED

LAST REVISION 10-12-10 | DATE PLOTTED => 19-AUG-2011 | TIME PLOTTED => 15:52

| Dist | COUNTY | ROUTE | POST MILES TOTAL PROJECT | SHEET No. | TOTAL SHEETS |
|---|---|---|---|---|---|
| 12 | Ora | 57 | 12.2/15.2 | 182 | 527 |

REGISTERED CIVIL ENGINEER 11/15/10 DATE

4-18-11
PLANS APPROVAL DATE

REGISTERED PROFESSIONAL ENGINEER PETER KIM No. C 51616 Exp. 6-30-12 CIVIL STATE OF CALIFORNIA

*THE STATE OF CALIFORNIA OR ITS OFFICERS OR AGENTS SHALL NOT BE RESPONSIBLE FOR THE ACCURACY OR COMPLETENESS OF SCANNED COPIES OF THIS PLAN SHEET.*

HDR ENGINEERING, INC.
3230 EL CAMINO REAL
SUITE 200
IRVINE, CA 92602-1377

OCTA
550 SOUTH MAIN STREET
P.O. BOX 14184
ORANGE, CA 92863-1584

## NOTES:

1. ALL CONFLICTING STRIPING, AND PAVEMENT MARKINGS SHALL BE REMOVED PRIOR TO STARTING WORK ON EACH STAGE. ALL CONFLICTING SIGNING SHALL BE REMOVED OR COVERED AS DIRECTED BY THE ENGINEER PRIOR TO STARTING WORK ON EACH STAGE.
2. ALL STAGE CONSTRUCTION TRAFFIC STRIPING AND PAVEMENT MARKINGS SHALL BE PAINT (2 COAT).
3. LANE WIDTHS SHALL BE 11 FEET MINIMUM UNLESS OTHERWISE NOTED.
4. A MINIMUM CLEARANCE OF 2 FEET SHALL BE PROVIDED BETWEEN EXISTING OR Temp EDGE OF TRAVELED WAY AND Temp RAILING (TYPE K) UNLESS OTHERWISE NOTED.
5. CONTRACTOR SHALL NOTIFY THE ENGINEER WITH REGARD TO MESSAGES FOR CLOSURES ON PORTABLE CHANGEABLE MESSAGE SIGNS FIVE (5) WORKING DAYS PRIOR TO CLOSURE.
6. REMOVAL OF TRAFFIC STRIPES AND PAVEMENT MARKINGS BY GRINDING METHOD IN PAVEMENT AREAS THAT ARE TO REMAIN IN PLACE AFTER CONTRACT COMPLETION WILL NOT BE ALLOWED.
7. CHANNELIZERS SHALL BE PLACED IN CONFORMANCE WITH THE MANUFACTURER'S INSTRUCTIONS AND SHALL BE CEMENTED TO THE SURFACE WITH ADHESIVE RECOMMENDED BY THE MANUFACTURER, EXCEPT EPOXY ADHESIVE SHALL NOT BE USED IN AREAS WHERE REMOVAL OF THE CHANNELIZER WILL BE REQUIRED AND THE PAVEMENT SURFACE WILL REMAIN IN PLACE.
8. FOR ADDITIONAL PAVEMENT DELINEATION DETAILS SEE SHEET PDD-1. FOR TEMPORARY STRIPING USE PAINT INSTEAD OF THERMOPLASTIC.

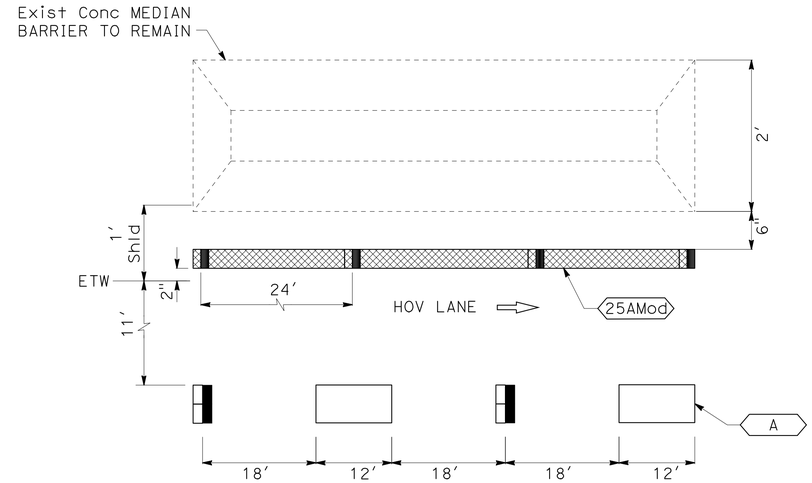


DETAIL A
DURING STAGE CONSTRUCTION
HOV INGRESS/EGRESS MARKING
NO SCALE

## LEGEND:

- TYPE A PAVEMENT MARKER
- TYPE C PAVEMENT MARKER
- TYPE G PAVEMENT MARKER
- TYPE H RAISED PAVEMENT MARKER
- 4" PAINTED WHITE TRAFFIC STRIPE (2-COAT)
- 4" PAINTED YELLOW TRAFFIC STRIPE (2-COAT)
- 8" PAINTED WHITE TRAFFIC STRIPE (2-COAT)
- DIRECTION OF TRAVEL

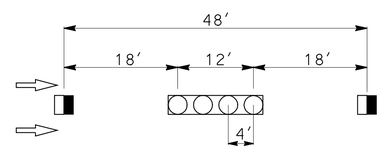


DETAIL 13 Mod
NO SCALE

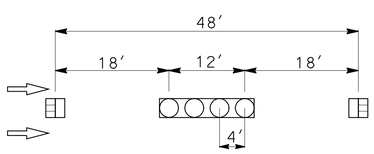


DETAIL 14 Mod
NO SCALE

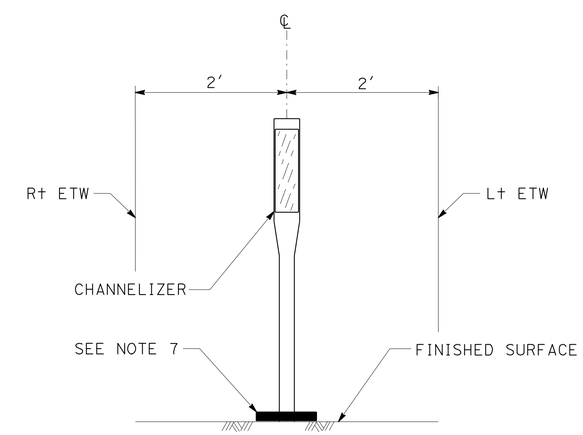


CHANNELIZER (SURFACE MOUNTED)
TYPICAL LEFT AND RIGHT SHOULDER INSTALLATION
UNLESS NOTED OTHERWISE
NO SCALE

1 REVISED PER ADDENDUM No. 1 DATED AUGUST 22, 2011

THIS PLAN ACCURATE FOR STAGE CONSTRUCTION AND TRAFFIC HANDLING WORK ONLY

# STAGE CONSTRUCTION AND TRAFFIC HANDLING DETAIL PLAN

SCD-1

STATE OF CALIFORNIA - DEPARTMENT OF TRANSPORTATION
Caltrans

CONSULTANT FUNCTIONAL SUPERVISOR: R. SCOTT BACSIKIN
CALCULATED-DESIGNED BY: PETER KIM
CHECKED BY: HON YOW
REVISED BY / DATE REVISED

LAST REVISION 10-12-10 | DATE PLOTTED => 19-AUG-2011 | TIME PLOTTED => 15:52

| Dist | COUNTY | ROUTE | POST MILES TOTAL PROJECT | SHEET No. | TOTAL SHEETS |
|---|---|---|---|---|---|
| 12 | Ora | 57 | 12.2/15.2 | 184 | 527 |

REGISTERED CIVIL ENGINEER 11/15/10 DATE

PLANS APPROVAL DATE 4-18-11

REGISTERED PROFESSIONAL ENGINEER PETER KIM No. C 51616 Exp. 6-30-12 CIVIL STATE OF CALIFORNIA

THE STATE OF CALIFORNIA OR ITS OFFICERS OR AGENTS SHALL NOT BE RESPONSIBLE FOR THE ACCURACY OR COMPLETENESS OF SCANNED COPIES OF THIS PLAN SHEET.

HDR ENGINEERING, INC.
3230 EL CAMINO REAL
SUITE 200
IRVINE, CA 92602-1377

OCTA
550 SOUTH MAIN STREET
P.O. BOX 14184
ORANGE, CA 92863-1584

# STAGE CONSTRUCTION QUANTITIES

| SHEET | LOCATION/Sta | DETAILS | PAINT TRAFFIC STRIPE (2-COAT) 4" BROKEN WHITE | 4" SOLID WHITE | 4" SOLID YELLOW | 8" BROKEN WHITE | 8" SOLID WHITE | PAVEMENT MARKER NON-REF TYPE A | RETROREFLECTIVE TYPE G | TYPE H | TYPE C | PAINT PAVEMENT MARKING (2-COAT) ARROWS | 12" WHITE | TEMP RAILING (TYPE K) | TEMP TRAFFIC SCREEN | TEMP CRASH CUSHION MODULE | REMOVE PAINTED TRAFFIC STRIPE | REMOVE PAINTED PVMT MARKING | REMOVE PVMT MARKER | CHANNELIZER (SURFACE MOUNTED) | TYPE III BARRICADE |
|---|---|---|---|---|---|---|---|---|---|---|---|---|---|---|---|---|---|---|---|---|---|
| | | | LF | LF | LF | LF | LF | EA | EA | EA | EA | SQFT | SQFT | LF | LF | EA | LF | SQFT | EA | EA | EA |
| SC-11 | ROUTE 57 "A" NB | 13 Mod | 4350 | | | | | 363 | 92 | | | | | | | | 1088 | | 455 | | |
| | ROUTE 57 "A" NB | A | | | | 1450 | | | 62 | | | | | | | | 4350 | | 122 | | |
| | ROUTE 57 "A" NB | 25A Mod | | | 1450 | | | | | 62 | | | | | | | 1450 | | 61 | | |
| | ROUTE 57 "A" NB | 27B | | 987 | | | | | | | | | | | | | 987 | | | | |
| | ROUTE 57 "A" NB | 36 | | | | | 350 | | 16 | | | | | | | | 700 | | 16 | | |
| | ROUTE 57 "A" NB | 38B | | | | | 113 | | 10 | | | | | | | | 226 | | 10 | | |
| | ROUTE 57 "A" NB | | | | | | | | | | | | | 940 | 940 | 21 | | | | 38 | |
| | NB ON-RAMP"C-3" | 25A | | | 600 | | | | | 26 | | | | | | | 600 | | 26 | | |
| | NB ON-RAMP"C-3" | 27B | | 600 | | | | | | | | | | | | | 600 | | | | |
| | NB ON-RAMP"C-3" | | | | | | | | | | | | | 600 | | | | | | | |
| SC-12 | ROUTE 57 "A" NB | 13 Mod | 4200 | | | | | 351 | 89 | | | | | | | | 1050 | | 439 | | |
| | ROUTE 57 "A" NB | A | | | | 1400 | | | 60 | | | | | | | | 4200 | | 118 | | |
| | ROUTE 57 "A" NB | 25A Mod | | | 1400 | | | | | 60 | | | | | | | 1400 | | 59 | | |
| | ROUTE 57 "A" NB | 27B | | 1316 | | | | | | | | | | | | | 1316 | | | | |
| | ROUTE 57 "A" NB | 36A | 200 | 337 | | | 337 | | 15 | | | | | | | | 1061 | | 15 | | |
| | ROUTE 57 "A" NB | | | | | | | | | | | | | 1270 | 1270 | | | | | | |
| | NB ON-RAMP"C-3" | 25A | | | 170 | | | | | 8 | | | | | | | 170 | | 8 | | |
| | NB ON-RAMP"C-3" | 27B | | 330 | | | | | | | | | | | | | 330 | | | | |
| | NB ON-RAMP"C-3" | | | | | | | | | | | | | 330 | | 14 | | | | 4 | |
| | NB ON-RAMP"C-5" | 25A | | | 783 | | | | | 34 | | | | | | | 783 | | 34 | | |
| | NB ON-RAMP"C-5" | 27B | | 910 | | | | | | | | | | | | | 910 | | | | |
| | NB ON-RAMP"C-5" | | | | | | | | | | | | | 850 | | 11 | | | | 9 | |
| SC-13 | ROUTE 57 "A" NB | 13 Mod | 2748 | | | | | 230 | 58 | | | | | | | | 687 | | 288 | | |
| | ROUTE 57 "A" NB | A | | | | 1400 | | | 60 | | | | | | | | 4200 | | 118 | | |
| | ROUTE 57 "A" NB | 25A Mod | | | 1400 | | | | | 60 | | | | | | | 1400 | | 59 | | |
| | ROUTE 57 "A" NB | 27B | | 1400 | | | | | | | | | | | | | 1400 | | | | |
| | ROUTE 57 "A" NB | 36A | 243 | 50 | | | 50 | | 3 | | | | | | | | 211 | | 3 | | |
| | ROUTE 57 "A" NB | 14 Mod | 1452 | | | | | 122 | | | 31 | | | | | | 363 | | 153 | | |
| | ROUTE 57 "A" NB | | | | | | | | | | | | | 1400 | 1100 | | | | | | |
| | SUB-TOTAL | | 13193 | 5930 | 5803 | 4250 | 850 | 1066 | 465 | 250 | 31 | 0 | 0 | 5390 | 3310 | 46 | 29482 | 0 | 1984 | 51 | 0 |
| | SHEET TOTAL | | 30026 | | | | | 1066 | 746 | | | 0 | | 5390 | 3310 | 46 | 29482 | 0 | 1984 | 51 | 0 |

1 REVISED PER ADDENDUM No. 1 DATED AUGUST 22, 2011

STAGE CONSTRUCTION QUANTITIES

SCQ-1

REVISED BY | DATE REVISED

PETER KIM | HON YOW

CALCULATED-DESIGNED BY | CHECKED BY

CONSULTANT FUNCTIONAL SUPERVISOR

R. SCOTT BACSIKIN

STATE OF CALIFORNIA - DEPARTMENT OF TRANSPORTATION

Caltrans

LAST REVISION 10-12-10 | DATE PLOTTED => 19-AUG-2011 | TIME PLOTTED => 15:52

| Dist | COUNTY | ROUTE | POST MILES TOTAL PROJECT | SHEET No. | TOTAL SHEETS |
|---|---|---|---|---|---|
| 12 | Ora | 57 | 12.2/15.2 | 185 | 527 |

REGISTERED CIVIL ENGINEER 11/15/10 DATE

4-18-11
PLANS APPROVAL DATE

REGISTERED PROFESSIONAL ENGINEER PETER KIM No. C 51616 Exp. 6-30-12 CIVIL STATE OF CALIFORNIA

*THE STATE OF CALIFORNIA OR ITS OFFICERS OR AGENTS SHALL NOT BE RESPONSIBLE FOR THE ACCURACY OR COMPLETENESS OF SCANNED COPIES OF THIS PLAN SHEET.*

HDR ENGINEERING, INC.
3230 EL CAMINO REAL
SUITE 200
IRVINE, CA 92602-1377

OCTA
550 SOUTH MAIN STREET
P.O. BOX 14184
ORANGE, CA 92863-1584

# STAGE CONSTRUCTION QUANTITIES

| SHEET | LOCATION/Sta | DETAILS | PAINT TRAFFIC STRIPE (2-COAT) 4" BROKEN WHITE | 4" SOLID WHITE | 4" SOLID YELLOW | 8" BROKEN WHITE | 8" SOLID WHITE | PAVEMENT MARKER NON-REF TYPE A | RETROREFLECTIVE TYPE G | TYPE H | TYPE C | PAINT PAVEMENT MARKING (2-COAT) ARROWS | 12" WHITE | TEMP RAILING (TYPE K) | TEMP TRAFFIC SCREEN | TEMP CRASH CUSHION MODULE | REMOVE PAINTED TRAFFIC STRIPE | REMOVE PAINTED PVMT MARKING | REMOVE PVMT MARKER | CHANNELIZER (SURFACE MOUNTED) | TYPE III BARRICADE |
|---|---|---|---|---|---|---|---|---|---|---|---|---|---|---|---|---|---|---|---|---|---|
| | | | LF | LF | LF | LF | LF | EA | EA | EA | EA | SQFT | SQFT | LF | LF | EA | LF | SQFT | EA | EA | EA |
| SC-14 | ROUTE 57 "A" NB | 13 Mod | 3489 | | | | | 292 | 74 | | | | | | | | 872 | | 365 | | |
| | ROUTE 57 "A" NB | 14 Mod | 711 | | | | | 60 | | | 16 | | | | | | 178 | | 76 | | |
| | ROUTE 57 "A" NB | 25A Mod | | | 1400 | | | | | 59 | | | | | | | 1400 | | 59 | | |
| | ROUTE 57 "A" NB | 27B | | 1400 | | | | | | | | | | | | | 1400 | | | | |
| | ROUTE 57 "A" NB | 36 | | | | | 540 | | 24 | | | | | | | | 1080 | | 24 | | |
| | ROUTE 57 "A" NB | A | | | | 1400 | | | 60 | | | | | | | | 1638 | | 77 | | |
| | ROUTE 57 "A" NB | | | | | | | | | | | | | 1400 | 1400 | 21 | | | | 34 | |
| | NB OFF-RAMP"D-4" | 25A | | | 370 | | | | | 16 | | | | | | | 370 | | 16 | | |
| | NB OFF-RAMP"D-4" | 27B | | 370 | | | | | | | | | | | | | 370 | | | | |
| | NB OFF-RAMP"D-4" | | | | | | | | | | | | | 490 | | | | | | | |
| SC-15 | ROUTE 57 "A" NB | 13 Mod | 4200 | | | | | 351 | 89 | | | | | | | | 1050 | | 439 | | |
| | ROUTE 57 "A" NB | A | | | | 1400 | | | 60 | | | | | | | | 4063 | | 131 | | |
| | ROUTE 57 "A" NB | 25A Mod | | | 1400 | | | | | 59 | | | | | | | 1400 | | 59 | | |
| | ROUTE 57 "A" NB | 27B | | 1370 | | | | | | | | | | | | | 1370 | | | | |
| | ROUTE 57 "A" NB | 36A | 250 | 210 | | | 210 | | 10 | | | | | | | | 693 | | 10 | | |
| | ROUTE 57 "A" NB | | | | | | | | | | | | | 1350 | 1350 | | | | | | |
| | NB OFF-RAMP"D-4" | 25A | | | 350 | | | | | 16 | | | | | | | 350 | | 16 | | |
| | NB OFF-RAMP"D-4" | 27B | | 350 | | | | | | | | | | | | | 350 | | | | |
| | NB OFF-RAMP"D-4" | | | | | | | | | | | | | 230 | | | | | | | |
| | NB ON-RAMP"D-5" | 25A | | | 703 | | | | | 30 | | | | | | | 703 | | 30 | | |
| | NB ON-RAMP"D-5" | 27B | | 823 | | | | | | | | | | | | | 823 | | | | |
| | NB ON-RAMP"D-5" | | | | | | | | | | | | | 820 | | 11 | | | | 4 | |
| | NB ON-RAMP"D-3" | 25A | | | 720 | | | | | 31 | | | | | | | 720 | | 31 | | |
| | NB ON-RAMP"D-3" | 27B | | 750 | | | | | | | | | | | | | 750 | | | | |
| | NB ON-RAMP"D-3" | | | | | | | | | | | | | 710 | | 11 | | | | 11 | |
| SC-16 | ROUTE 57 "A" NB | 13 Mod | 4200 | | | | | 351 | 89 | | | | | | | | 1050 | | 439 | | |
| | ROUTE 57 "A" NB | A | | | | 1400 | | | 60 | | | | | | | | 4200 | | 118 | | |
| | ROUTE 57 "A" NB | 25A Mod | | | 1400 | | | | | 60 | | | | | | | 1400 | | 59 | | |
| | ROUTE 57 "A" NB | 27B | | 1400 | | | | | | | | | | | | | 1400 | | | | |
| | ROUTE 57 "A" NB | 36A | 240 | 150 | | | 150 | | 7 | | | | | | | | 510 | | 7 | | |
| | ROUTE 57 "A" NB | | | | | | | | | | | | | 1400 | 1000 | | | | | | |
| | SUB-TOTAL | | 13090 | 6823 | 6343 | 4200 | 900 | 1054 | 473 | 271 | 16 | 0 | 0 | 6400 | 3750 | 43 | 28140 | | 1956 | 49 | 0 |
| | SHEET TOTAL | | 31356 | | | | | 1054 | 760 | | | 0 | | 6400 | 3750 | 43 | 28140 | | 1956 | 49 | 0 |

1 REVISED PER ADDENDUM No. 1 DATED AUGUST 22, 2011

STAGE CONSTRUCTION QUANTITIES

SCQ-2

REVISED BY | DATE REVISED
PETER KIM | HON YOW
CALCULATED-DESIGNED BY | CHECKED BY
CONSULTANT FUNCTIONAL SUPERVISOR
R. SCOTT BACSIKIN
STATE OF CALIFORNIA - DEPARTMENT OF TRANSPORTATION
Caltrans

LAST REVISION 10-12-10 | DATE PLOTTED => 19-AUG-2011 | TIME PLOTTED => 15:52

| Dist | COUNTY | ROUTE | POST MILES TOTAL PROJECT | SHEET No. | TOTAL SHEETS |
|---|---|---|---|---|---|
| 12 | Ora | 57 | 12.2/15.2 | 186 | 527 |

REGISTERED CIVIL ENGINEER 11/15/10 DATE

4-18-11
PLANS APPROVAL DATE

REGISTERED PROFESSIONAL ENGINEER PETER KIM No. C 51616 Exp. 6-30-12 CIVIL STATE OF CALIFORNIA

*THE STATE OF CALIFORNIA OR ITS OFFICERS OR AGENTS SHALL NOT BE RESPONSIBLE FOR THE ACCURACY OR COMPLETENESS OF SCANNED COPIES OF THIS PLAN SHEET.*

HDR ENGINEERING, INC.
3230 EL CAMINO REAL
SUITE 200
IRVINE, CA 92602-1377

OCTA
550 SOUTH MAIN STREET
P.O. BOX 14184
ORANGE, CA 92863-1584

# STAGE CONSTRUCTION QUANTITIES

| SHEET | LOCATION/Sta | DETAILS | PAINT TRAFFIC STRIPE (2-COAT) 4" BROKEN WHITE | 4" SOLID WHITE | 4" SOLID YELLOW | 8" BROKEN WHITE | 8" SOLID WHITE | PAVEMENT MARKER NON-REF TYPE A | RETROREFLECTIVE TYPE G | TYPE H | TYPE C | PAINT PAVEMENT MARKING (2-COAT) ARROWS | 12" WHITE | TEMP RAILING (TYPE K) | TEMP TRAFFIC SCREEN | TEMP CRASH CUSHION MODULE | REMOVE PAINTED TRAFFIC STRIPE | REMOVE PAINTED PVMT MARKING | REMOVE PVMT MARKER | CHANNELIZER (SURFACE MOUNTED) | TYPE III BARRICADE |
|---|---|---|---|---|---|---|---|---|---|---|---|---|---|---|---|---|---|---|---|---|---|
| | | | LF | LF | LF | LF | LF | EA | EA | EA | EA | SQFT | SQFT | LF | LF | EA | LF | SQFT | EA | EA | EA |
| SC-17 | ROUTE 57 "A" NB | 13 Mod | 3768 | | | | | 315 | 80 | | | | | | | | 942 | | 394 | | |
| | ROUTE 57 "A" NB | 14 Mod | 432 | | | | | 37 | | | 12 | | | | | | 108 | | 49 | | |
| | ROUTE 57 "A" NB | A | | | | 1400 | | | 60 | | | | | | | | 4200 | | 118 | | |
| | ROUTE 57 "A" NB | 25A Mod | | | 1400 | | | | | 60 | | | | | | | 1400 | | 59 | | |
| | ROUTE 57 "A" NB | 27B | | 1400 | | | | | | | | | | | | | 1400 | | | | |
| | ROUTE 57 "A" NB | | | | | | | | | | | | | 1400 | 1400 | | | | | | |
| SC-18 | ROUTE 57 "A" NB | 13 Mod | 3408 | | | | | 285 | 72 | | | | | | | | 852 | | 357 | | |
| | ROUTE 57 "A" NB | 14 Mod | 792 | | | | | 68 | | | 20 | | | | | | 198 | | 87 | | |
| | ROUTE 57 "A" NB | A | | | | 1400 | | | 60 | | | | | | | | 4200 | | 118 | | |
| | ROUTE 57 "A" NB | 25A Mod | | | 1400 | | | | | 60 | | | | | | | 1400 | | 59 | | |
| | ROUTE 57 "A" NB | 27B | | 1400 | | | | | | | | | | | | | 1400 | | | | |
| | ROUTE 57 "A" NB | | | | | | | | | | | | | 1400 | 1400 | | | | | | |
| SC-19 | ROUTE 57 "A" NB | 13 Mod | 2841 | | | | | 238 | 60 | | | | | | | | 710 | | 298 | | |
| | ROUTE 57 "A" NB | 14 Mod | 1359 | | | | | 115 | | | 31 | | | | | | 340 | | 146 | | |
| | ROUTE 57 "A" NB | A | | | | 1400 | | | 60 | | | | | | | | 3925 | | 143 | | |
| | | | | | | | | | | | | | | | | | | | | | |
| | ROUTE 57 "A" NB | 25A Mod | | | 1400 | | | | | 59 | | | | | | | 1400 | | 59 | | |
| | ROUTE 57 "A" NB | 27B | | 1400 | | | | | | | | | | | | | 1400 | | | | |
| | ROUTE 57 "A" NB | 36 | | | | | 540 | | 24 | | | | | | | | 1080 | | 24 | | |
| | ROUTE 57 "A" NB | | | | | | | | | | | | | 1400 | 1400 | 21 | | | | 32 | |
| | NB OFF-RAMP "E-2" | 25A | | | 207 | | | | | 10 | | | | | | | 207 | | 10 | | |
| | NB OFF-RAMP "E-2" | 27B | | 207 | | | | | | | | | | | | | 207 | | | | |
| | NB OFF-RAMP "E-2" | | | | | | | | | | | | | 330 | | | | | | | |
| SC-20 | ROUTE 57 "A" NB | 13 Mod | 4690 | | | | | 392 | 99 | | | | | | | | 1173 | | 490 | | |
| | ROUTE 57 "A" NB | A | | | | 1400 | | | 60 | | | | | | | | 3825 | | 151 | | |
| | | | | | | | | | | | | | | | | | | | | | |
| | ROUTE 57 "A" NB | 25A Mod | | | 1400 | | | | | 59 | | | | | | | 1400 | | 59 | | |
| | ROUTE 57 "A" NB | 27B | | 1400 | | | | | | | | | | | | | 1400 | | | | |
| | ROUTE 57 "A" NB | 36B | | 420 | | | 420 | | 19 | | | | | | | | 1260 | | 19 | | |
| | ROUTE 57 "A" NB | | | | | | | | | | | | | 1400 | 1400 | | | | | | |
| | NB OFF-RAMP "E-2" | 25A | | | 550 | | | | | 24 | | | | | | | 550 | | 24 | | |
| | NB OFF-RAMP "E-2" | 27B | | 550 | | | | | | | | | | | | | 550 | | | | |
| | NB OFF-RAMP "E-2" | | | | | | | | | | | | | 430 | | | | | | | |
| | NB ON-RAMP "E-5" | 25A | | | 603 | | | | | 26 | | | | | | | 603 | | 26 | | |
| | NB ON-RAMP "E-5" | 27B | | 733 | | | | | | | | | | | | | 733 | | | | |
| | NB ON-RAMP "E-5" | | | | | | | | | | | | | 760 | | 11 | | | | 4 | |
| | NB ON-RAMP "E-6" | 25A | | | 1040 | | | | | 44 | | | | | | | 1040 | | 44 | | |
| | NB ON-RAMP "E-6" | 27B | | 1040 | | | | | | | | | | | | | 1040 | | | | |
| | NB ON-RAMP "E-6" | | | | | | | | | | | | | 870 | | 11 | | | | 11 | |
| | | | | | | | | | | | | | | | | | | | | | |
| | SUB-TOTAL | | 17290 | 8550 | 8000 | 5600 | 960 | 1450 | 594 | 342 | 63 | 0 | 0 | 7990 | 5600 | 43 | 38943 | 0 | 2734 | 47 | 0 |
| | SHEET TOTAL | | 40400 | | | | | 1450 | 999 | | | 0 | | 7990 | 5600 | 43 | 38943 | 0 | 2734 | 47 | 0 |

STATE OF CALIFORNIA - DEPARTMENT OF TRANSPORTATION
Caltrans

CONSULTANT FUNCTIONAL SUPERVISOR: R. SCOTT BACSIKIN
CALCULATED-DESIGNED BY: PETER KIM
CHECKED BY: HON YOW
REVISED BY
DATE REVISED

## STAGE CONSTRUCTION QUANTITIES

1 REVISED PER ADDENDUM No. 1 DATED AUGUST 22, 2011

SCQ-3

LAST REVISION 10-12-10
DATE PLOTTED => 19-AUG-2011
TIME PLOTTED => 15:52

| Dist | COUNTY | ROUTE | POST MILES TOTAL PROJECT | SHEET No. | TOTAL SHEETS |
|---|---|---|---|---|---|
| 12 | Ora | 57 | 12.2/15.2 | 187 | 527 |

REGISTERED CIVIL ENGINEER 11/15/10 DATE

4-18-11
PLANS APPROVAL DATE

REGISTERED PROFESSIONAL ENGINEER PETER KIM No. C 51616 Exp. 6-30-12 CIVIL STATE OF CALIFORNIA

*THE STATE OF CALIFORNIA OR ITS OFFICERS OR AGENTS SHALL NOT BE RESPONSIBLE FOR THE ACCURACY OR COMPLETENESS OF SCANNED COPIES OF THIS PLAN SHEET.*

HDR ENGINEERING, INC.
3230 EL CAMINO REAL
SUITE 200
IRVINE, CA 92602-1377

OCTA
550 SOUTH MAIN STREET
P.O. BOX 14184
ORANGE, CA 92863-1584

# STAGE CONSTRUCTION QUANTITIES

| SHEET | LOCATION/Sta | DETAILS | PAINT TRAFFIC STRIPE (2-COAT) 4" BROKEN WHITE | 4" SOLID WHITE | 4" SOLID YELLOW | 8" BROKEN WHITE | 8" SOLID WHITE | PAVEMENT MARKER NON-REF TYPE A | RETROREFLECTIVE TYPE G | TYPE H | TYPE C | PAINT PAVEMENT MARKING (2-COAT) ARROWS | 12" WHITE | TEMP RAILING (TYPE K) | TEMP TRAFFIC SCREEN | TEMP CRASH CUSHION MODULE | REMOVE PAINTED TRAFFIC STRIPE | REMOVE PAINTED PVMT MARKING | REMOVE PVMT MARKER | CHANNELIZER (SURFACE MOUNTED) | TYPE III BARRICADE |
|---|---|---|---|---|---|---|---|---|---|---|---|---|---|---|---|---|---|---|---|---|---|
| | | | LF | LF | LF | LF | LF | EA | EA | EA | EA | SQFT | SQFT | LF | LF | EA | LF | SQFT | EA | EA | EA |
| SC-21 | ROUTE 57 "A" NB | 13 Mod | 4500 | | | | | 376 | 95 | | | | | | | | 1125 | | 471 | | |
| | ROUTE 57 "A" NB | A | | | | 1125 | | | 48 | | | | | | | | 3375 | | 95 | | |
| | ROUTE 57 "A" NB | 25A Mod | | | 1125 | | | | | 48 | | | | | | | 1125 | | 48 | | |
| | ROUTE 57 "A" NB | 27B | | 1185 | | | | | | | | | | | | | 1185 | | | | |
| | ROUTE 57 "A" NB | 36A | 270 | 200 | | | 200 | | 9 | | | | | | | | 668 | | 9 | | |
| | ROUTE 57 "A" NB | | | | | | | | | | | | | 630 | | | | | | | |
| | NB ON-RAMP "E-6" | 25A | | | 60 | | | | | 4 | | | | | | | 60 | | 4 | | |
| | NB ON-RAMP "E-6" | 27B | | 60 | | | | | | | | | | | | | 60 | | | | |
| | NB ON-RAMP "E-6" | | | | | | | | | | | | | 60 | | | | | | | |
| SC-22 | KATELLA AVE "KA" | 12 | 2200 | | | | | | 47 | | | | | | | | | | 47 | | |
| | KATELLA AVE "KA" | 25A | | | 1100 | | | | | 47 | | | | | | | 1100 | | 47 | | |
| | KATELLA AVE "KA" | | | | | | | | | | | | | 820 | 820 | 22 | | | | 22 | 3 |
| | "CERRITOS" | 27B | | 350 | | | | | | | | | | | | | 350 | | | | |
| | "CERRITOS" | | | | | | | | | | | | | 440 | 440 | 11 | | | | | 2 |
| SC-23 | ROUTE 57 "A" NB | 27B | | 40 | | | | | | | | | | | | | 40 | | | | |
| | ROUTE 57 "A" NB | | | | | | | | | | | | | 40 | 40 | | | | | | |
| SC-24 | ROUTE 57 "A" NB | 27B | | 1030 | | | | | | | | | | | | | 1030 | | | | |
| | ROUTE 57 "A" NB | 36 | | | | | | | 24 | | | | | | | | 1080 | | 24 | | |
| | ROUTE 57 "A" NB | | | | | | 540 | | | | | | | 760 | 760 | 21 | | | | 30 | |
| | NB OFF-RAMP "D-4" | 25A | | | 1010 | | | | | 43 | | | | | | | 1010 | | 43 | | |
| | NB OFF-RAMP "D-4" | 27B | | 1010 | | | | | | | | | | | | | 1010 | | | | |
| | NB OFF-RAMP "D-4" | | | | | | | | | | | | | 990 | 990 | | | | | | |
| SC-25 | ROUTE 57 "A" NB | 27B | | 30 | | | | | | | | | | | | | 30 | | | | |
| | ROUTE 57 "A" NB | | | | | | | | | | | | | 50 | 50 | | | | | | |
| | NB OFF-RAMP "D-4" | 25A | | | 350 | | | | | 16 | | | | | | | 350 | | 16 | | |
| | NB OFF-RAMP "D-4" | 27B | | 350 | | | | | | | | | | | | | 350 | | | | |
| | NB OFF-RAMP "D-4" | | | | | | | | | | | | | 230 | 230 | | | | | | |
| | NB OFF-RAMP "D-3" | 25A | | | 750 | | | | | 32 | | | | | | | 750 | | 32 | | |
| | NB OFF-RAMP "D-3" | 27B | | 750 | | | | | | | | | | | | | 750 | | | | |
| | NB OFF-RAMP "D-3" | | | | | | | | | | | | | 710 | 710 | 11 | | | | 10 | |
| | SUBTOTAL | | 6970 | 5005 | 4395 | 1125 | 740 | 376 | 223 | 190 | 0 | 0 | 0 | 4730 | 4040 | 65 | 15448 | 0 | 836 | 62 | 5 |
| | SHEET TOTAL | | 18235 | | | | | 376 | 413 | | | 0 | | 4730 | 4040 | 65 | 15448 | 0 | 836 | 62 | 5 |

STAGE CONSTRUCTION QUANTITIES

1 REVISED PER ADDENDUM No. 1 DATED AUGUST 22, 2011

SCQ-4

STATE OF CALIFORNIA - DEPARTMENT OF TRANSPORTATION
Caltrans

CONSULTANT FUNCTIONAL SUPERVISOR: R. SCOTT BACSIKIN
CALCULATED-DESIGNED BY: HON YOW
CHECKED BY:
REVISED BY: PETER KIM
DATE REVISED:

LAST REVISION 10-12-10 | DATE PLOTTED => 19-AUG-2011 | TIME PLOTTED => 15:52

| Dist | COUNTY | ROUTE | POST MILES TOTAL PROJECT | SHEET No. | TOTAL SHEETS |
|---|---|---|---|---|---|
| 12 | Ora | 57 | 12.2/15.2 | 190 | 527 |

REGISTERED CIVIL ENGINEER DATE 11/15/10

PLANS APPROVAL DATE 4-18-11

REGISTERED PROFESSIONAL ENGINEER PETER KIM No. C 51616 Exp. 6-30-12 CIVIL STATE OF CALIFORNIA

THE STATE OF CALIFORNIA OR ITS OFFICERS OR AGENTS SHALL NOT BE RESPONSIBLE FOR THE ACCURACY OR COMPLETENESS OF SCANNED COPIES OF THIS PLAN SHEET.

HDR ENGINEERING, INC.
3230 EL CAMINO REAL
SUITE 200
IRVINE, CA 92602-1377

OCTA
550 SOUTH MAIN STREET
P.O. BOX 14184
ORANGE, CA 92863-1584

# STAGE CONSTRUCTION QUANTITIES

| SHEET | LOCATION/Sta | DETAILS | PAINT TRAFFIC STRIPE (2-COAT)* | | | | | PAVEMENT MARKER | | | | PAINT PAVEMENT MARKING (2-COAT) | | TEMP RAILING (TYPE K) | TEMP TRAFFIC SCREEN | TEMP CRASH CUSHION MODULE | REMOVE PAINTED TRAFFIC STRIPE | REMOVE PAINTED PVMT MARKING | REMOVE PVMT MARKER* | CHANNELIZER (SURFACE MOUNTED) | TYPE III BARRICADE |
|---|---|---|---|---|---|---|---|---|---|---|---|---|---|---|---|---|---|---|---|---|---|
| | | | 4" BROKEN WHITE | 4" SOLID WHITE | 4" SOLID YELLOW | 8" BROKEN WHITE | 8" SOLID WHITE | NON-REFLECTIVE* TYPE A | RETROREFLECTIVE* TYPE G | TYPE H | TYPE C | ARROWS | 12" WHITE | | | | | | | | |
| | | | LF | LF | LF | LF | LF | EA | EA | EA | EA | SQFT | SQFT | LF | LF | EA | LF | SQFT | EA | EA | EA |
| SC-37 | ROUTE 57 "A" NB | 27B | | 250 | | | | | | | | | | | | | 250 | | | | |
| | ROUTE 57 "A" NB | 36B | | 250 | | | 250 | | 11 | | | | | | | | 750 | | 11 | | |
| SC-38 | NB ON-RAMP "C-3" | 25A | | | 600 | | | | | 26 | | | | | | | 600 | | 26 | | |
| | NB ON-RAMP "C-3" | 27B | | 600 | | | | | | | | | | | | | 600 | | | | |
| | NB ON-RAMP "C-3" | | | | | | | | | | | | | 600 | 600 | | | | | | |
| SC-39 | ROUTE 57 "A" NB | 27B | | 1357 | | | | | | | | | | | | | 1357 | | | | |
| | ROUTE 57 "A" NB | 36A | 150 | 160 | | | 160 | | 8 | | | | | | | | 518 | | 8 | | |
| | ROUTE 57 "A" NB | | | | | | | | | | | | | 1040 | 1040 | | | | | | |
| | NB ON-RAMP "C-3" | 25A | | | 1385 | | | | | 59 | | | | | | | 1385 | | 59 | | |
| | NB ON-RAMP "C-3" | 27B | | 1540 | | | | | | | | | | | | | 1540 | | | | |
| | NB ON-RAMP "C-3" | | | | | | | | | | | | | 1330 | 1330 | 14 | | | | 12 | |
| SC-40 | ROUTE 57 "A" NB | 27B | | 1767 | | | | | | | | | | | | | 1767 | | | | |
| | ROUTE 57 "A" NB | 36A | 150 | | | | 917 | | 39 | | | | | | | | 1872 | | 39 | | |
| | | 13Mod | | | | | | | | | | | | | | | | | | | |
| | | | | | | | | | | | | | | 330 | 330 | | | | | | |
| | SUBTOTAL | | 300 | 5924 | 1985 | 0 | 1327 | 0 | 58 | 85 | 0 | 0 | 0 | 2970 | 2970 | 14 | 10638 | 0 | 143 | 12 | |
| | SHEET TOTAL | | 9536 | | | | | 0 | 143 | | | 0 | | 2970 | 2970 | 14 | 10638 | 0 | 143 | 12 | |

| | | | | | | | | | | | | | |
|---|---|---|---|---|---|---|---|---|---|---|---|---|---|
| SHEET TOTAL SCQ-1 | 30026 | 1066 | 746 | 0 | 5390 | 3310 | 46 | 29482 | 0 | 1984 | 51 | 0 |
| SHEET TOTAL SCQ-2 | 31356 | 1054 | 760 | 0 | 6400 | 3750 | 43 | 28140 | 0 | 1956 | 49 | 0 |
| SHEET TOTAL SCQ-3 | 40400 | 1450 | 999 | 0 | 7990 | 5600 | 43 | 38943 | 0 | 2734 | 47 | 0 |
| SHEET TOTAL SCQ-4 | 18235 | 376 | 413 | 0 | 4730 | 4040 | 65 | 15448 | 0 | 836 | 62 | 5 |
| SHEET TOTAL SCQ-5 | 14193 | 0 | 211 | 1000 | 5960 | 5960 | 32 | 14761 | 1000 | 211 | 41 | 0 |
| SHEET TOTAL SCQ-6 | 19136 | 61 | 295 | 220 | 7560 | 7560 | 47 | 19724 | 220 | 317 | 54 | 0 |
| SHEET TOTAL SCQ-7 | 9536 | 0 | 143 | 0 | 2970 | 2970 | 14 | 10638 | 0 | 143 | 12 | 0 |
| | | | | | | | | | | | | |
| GRAND TOTAL | 162882 | 4007 | 3567 | 1220 | 41000 | 33190 | 290 | 157136 | 1220 | 8181 | 316 | 5 |

* FOR ADDITIONAL QUANTITIES, SEE SHEET PDQ-1.

STAGE CONSTRUCTION QUANTITIES

1 REVISED PER ADDENDUM No. 1 DATED AUGUST 22, 2011

SCQ-7

STATE OF CALIFORNIA - DEPARTMENT OF TRANSPORTATION

Caltrans

CONSULTANT FUNCTIONAL SUPERVISOR: R. SCOTT BACSIKIN

CALCULATED-DESIGNED BY: PETER KIM

CHECKED BY: HON YOW

REVISED BY / DATE REVISED

LAST REVISION 10-12-10

DATE PLOTTED => 19-AUG-2011
TIME PLOTTED => 15:52

| DIST | COUNTY | ROUTE | POST MILES TOTAL PROJECT | SHEET No | TOTAL SHEETS |
|---|---|---|---|---|---|
| 12 | Ora | 57 | 12.2/15.2 | 228 | 527 |

REGISTERED CIVIL ENGINEER — DATE 08-09-10

4-18-11
PLANS APPROVAL DATE

REGISTERED PROFESSIONAL ENGINEER — ERIC A. JOHNSON — No. C57355 — Exp. 12/31/11 — CIVIL — STATE OF CALIFORNIA

*The State of California or its officers or agents shall not be responsible for the accuracy or completeness of scanned copies of this plan sheet.*

OCTA
550 S. MAIN STREET
ORANGE, CA 92863

HDR ENGINEERING, INC.
3230 EL CAMINO REAL, SUITE 200
IRVINE, CA 92602-1377

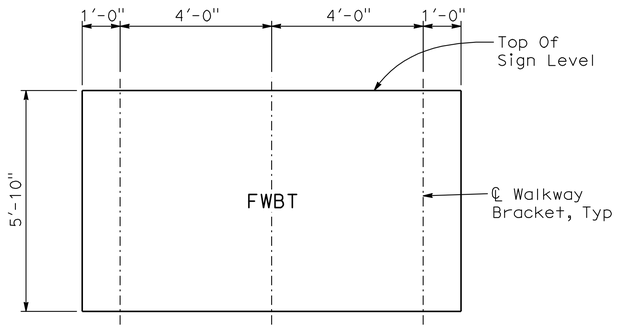


## MOUNTING BRACKET ASSEMBLY SPACING

SCALE ½"=1'-0"

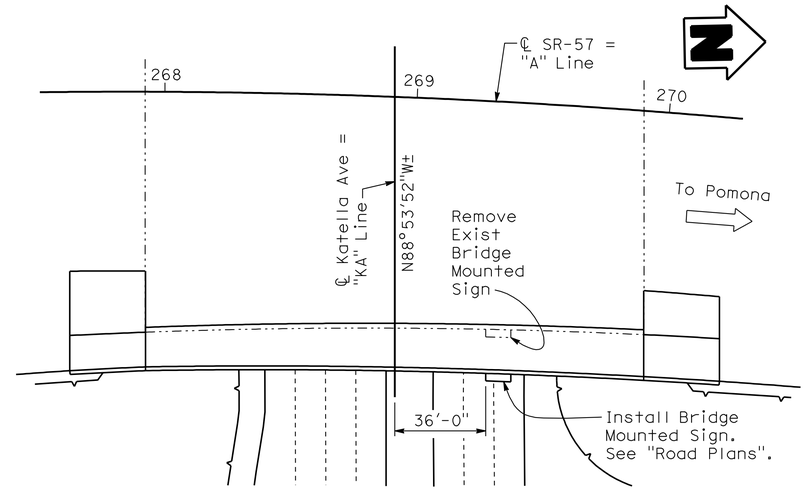


## LOCATION PLAN

SCALE 1"=30'

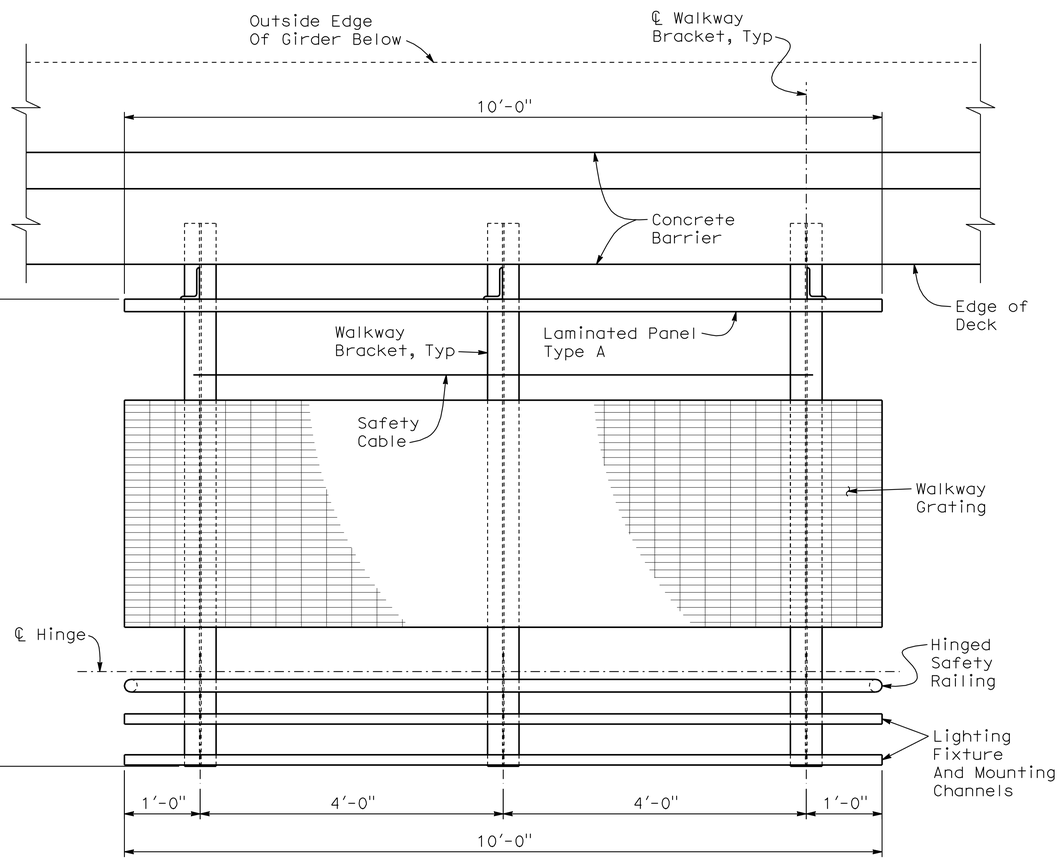


## LAYOUT

SCALE 1"=1'-0"

S16 S17 S17A S18 S19 ES15A

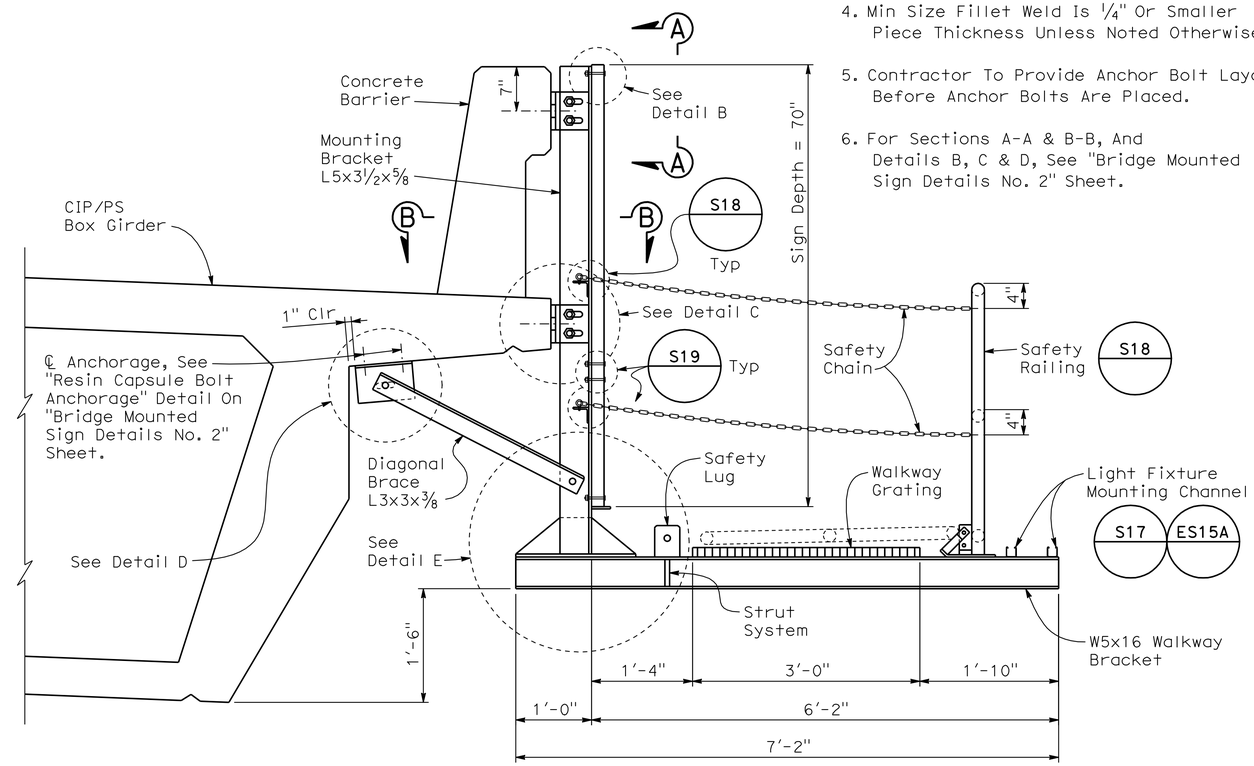


## TYPICAL MOUNTING BRACKET ASSEMBLY

SCALE 1"=1'-0"

**NOTES:**

1. For Notes Not Shown See Standard Plans.
2. Unless Otherwise Shown All Steel Shall Be Galvanized After Fabrication.
3. All High Strength (HS) Bolts Shall Be Wrench Tightened.
4. Min Size Fillet Weld Is ¼" Or Smaller Piece Thickness Unless Noted Otherwise.
5. Contractor To Provide Anchor Bolt Layout Before Anchor Bolts Are Placed.
6. For Sections A-A & B-B, And Details B, C & D, See "Bridge Mounted Sign Details No. 2" Sheet.

**NOTE:**

The Contractor Shall Verify All Controlling Field Dimensions Before Ordering Or Fabricating Any Materials.

1 REVISED PER ADDENDUM No. 1 DATED AUGUST 22, 2011

# SIGN DETAILS SD-12

| | | | |
|---|---|---|---|
| DESIGN | BY D. Peavey | CHECKED J. Ramirez | |
| DETAILS | BY E. Gray | CHECKED D. Peavey | |
| QUANTITIES | BY D. Peavey | CHECKED J. Ramirez | |

DESIGN OVERSIGHT

SIGN OFF DATE

PREPARED FOR THE STATE OF CALIFORNIA DEPARTMENT OF TRANSPORTATION

ERIC A. JOHNSON
PROJECT ENGINEER

BRIDGE NO. 55-0401
POST MILE 12.54

KATELLA AVENUE UC (WIDEN)
BRIDGE MOUNTED SIGN DETAILS No. 1

DESIGN DETAIL SHEET (ENGLISH) (REV. 06-01-09)

ORIGINAL SCALE IN INCHES FOR REDUCED PLANS 0 1 2 3

CU 12231
EA 0F0401

DISREGARD PRINTS BEARING EARLIER REVISION DATES

REVISION DATES (PRELIMINARY STAGE ONLY) 10/09 2/10 5/10 8/10 8/10 6/11

SHEET OF

FILE => c0F040ob012.add

USERNAME => trestrk DATE PLOTTED => 19-AUG-2011 TIME PLOTTED => 15:53

| DIST | COUNTY | ROUTE | POST MILES TOTAL PROJECT | SHEET No | TOTAL SHEETS |
|---|---|---|---|---|---|
| 12 | Ora | 57 | 12.2/15.2 | 229 | 527 |

REGISTERED CIVIL ENGINEER 08-09-10 DATE

4-18-11
PLANS APPROVAL DATE

REGISTERED PROFESSIONAL ENGINEER ERIC A. JOHNSON No. C57355 Exp. 12/31/11 CIVIL STATE OF CALIFORNIA

*The State of California or its officers or agents shall not be responsible for the accuracy or completeness of scanned copies of this plan sheet.*

OCTA
550 S. MAIN STREET
ORANGE, CA 92863

HDR ENGINEERING, INC.
3230 EL CAMINO REAL, SUITE 200
IRVINE, CA 92602-1377

NOTES:

1. For Details Not Shown See Standard Plans.
2. The Exterior Mounting Bracket To Face Outward.
3. Contractor To Provide Anchor Bolt Layout Before Anchor Bolts Are Placed.
4. Resin Capsule Bolts Shall Not Interfere With Reinforcement.
5. Resin Capsule Anchorage Is Subject To Approval Of The Engineer. Installation Procedure Shall Comply With Manufacturer's Instruction.
6. For Location of Sections A-A & B-B, And Details B, C & D, See "Bridge Mounted Sign Details No. 1" Sheet.

1

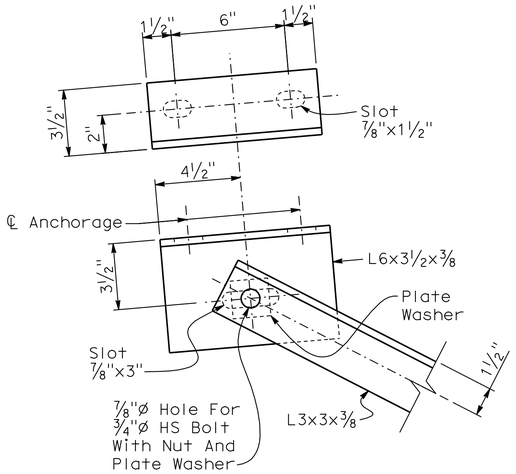


**DETAIL D**
SCALE 3"=1'-0"

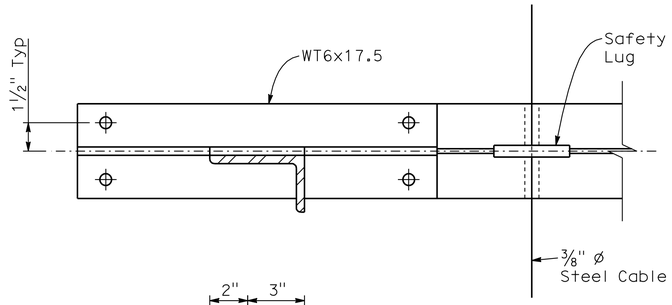


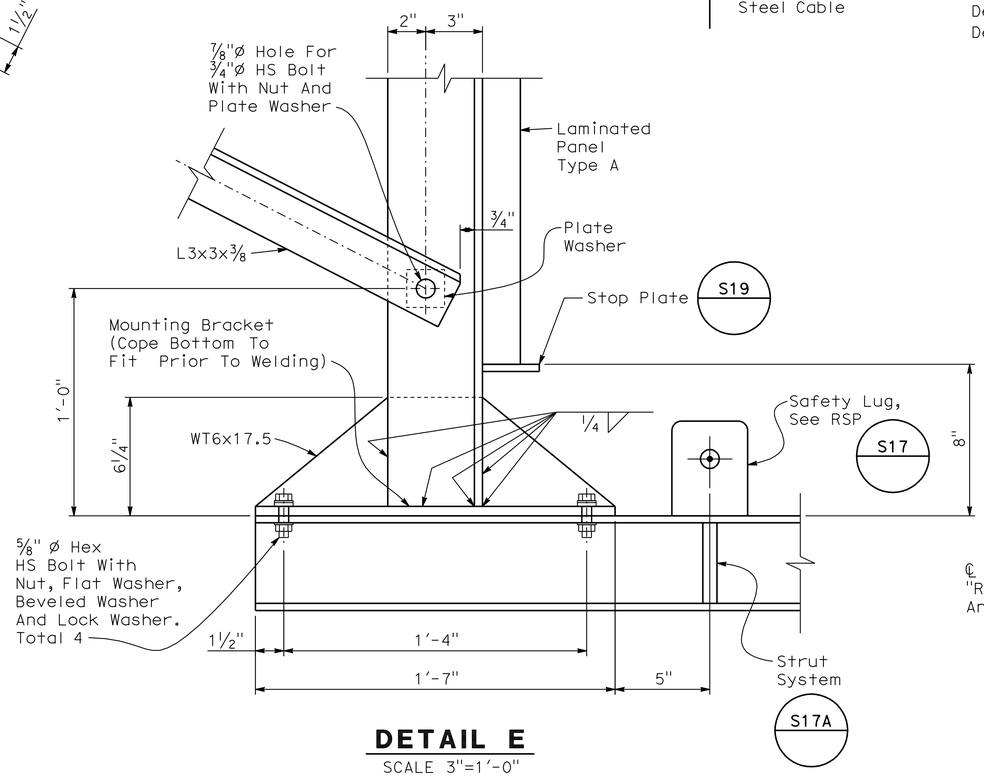


**DETAIL E**
SCALE 3"=1'-0"

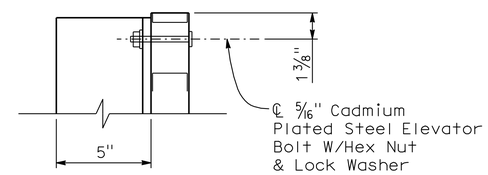


**DETAIL B**
SCALE 3"=1'-0"

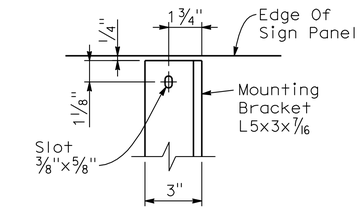


**SECTION A-A**
SCALE 3"=1'-0"

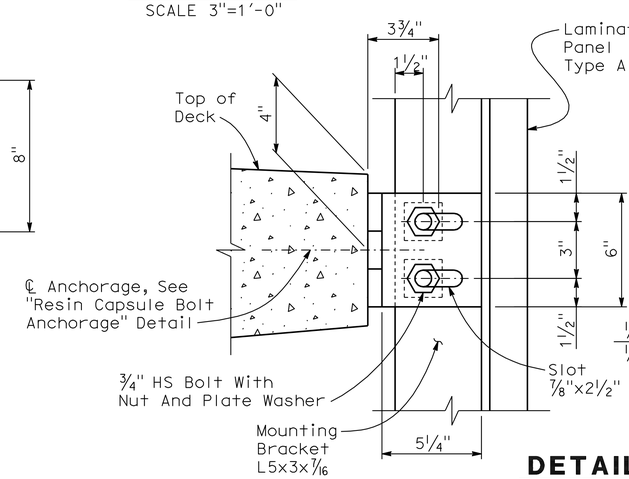


**DETAIL C**
SCALE 3"=1'-0"

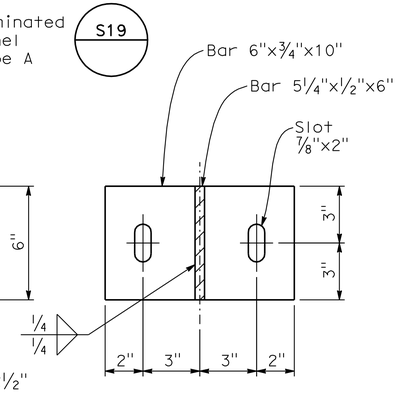


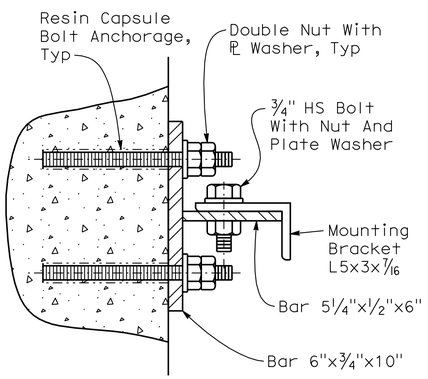


**SECTION B-B**
SCALE 3"=1'-0"

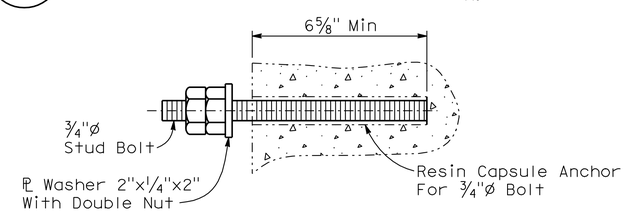


Note: Mounting Bracket Not Shown For Clarity

**RESIN CAPSULE BOLT ANCHORAGE**
NO SCALE

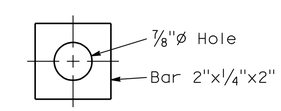


**PLATE WASHER**
FOR ALL SLOTTED HOLES
SCALE 6"=1'-0"

NOTE:
The Contractor Shall Verify All Controlling Field Dimensions Before Ordering Or Fabricating Any Materials.

1 **REVISED PER ADDENDUM No. 1 DATED AUGUST 22, 2011**

# SIGN DETAILS SD-13

| | | | |
|---|---|---|---|
| DESIGN | BY D. Peavey | CHECKED J. Ramirez | |
| DETAILS | BY E. Gray | CHECKED D. Peavey | |
| QUANTITIES | BY D. Peavey | CHECKED J. Ramirez | |

DESIGN OVERSIGHT
SIGN OFF DATE

PREPARED FOR THE STATE OF CALIFORNIA DEPARTMENT OF TRANSPORTATION

ERIC A. JOHNSON
PROJECT ENGINEER

BRIDGE NO. 55-0401
POST MILE 12.54

KATELLA AVENUE UC (WIDEN)
BRIDGE MOUNTED SIGN DETAILS No. 2

DESIGN DETAIL SHEET (ENGLISH) (REV. 06-01-09)

ORIGINAL SCALE IN INCHES FOR REDUCED PLANS 0 1 2 3

CU 12231
EA 0F0401

DISREGARD PRINTS BEARING EARLIER REVISION DATES

REVISION DATES (PRELIMINARY STAGE ONLY) 10/09 2/10 5/10 6/10 8/10 6/11

SHEET OF

FILE => c0F040ob013.add

USERNAME => tfrstrk DATE PLOTTED => 19-AUG-2011 TIME PLOTTED => 15:53

| Dist | COUNTY | ROUTE | POST MILES TOTAL PROJECT | SHEET No. | TOTAL SHEETS |
|---|---|---|---|---|---|
| 12 | Ora | 57 | 12.2/15.2 | 243 | 527 |

REGISTERED CIVIL ENGINEER 11/15/10 DATE

4-18-11
PLANS APPROVAL DATE

REGISTERED PROFESSIONAL ENGINEER R.SCOTT BACSIKIN No. C 48774 Exp. 9-30-12 CIVIL STATE OF CALIFORNIA

*THE STATE OF CALIFORNIA OR ITS OFFICERS OR AGENTS SHALL NOT BE RESPONSIBLE FOR THE ACCURACY OR COMPLETENESS OF SCANNED COPIES OF THIS PLAN SHEET.*

HDR ENGINEERING, INC.
3230 EL CAMINO REAL
SUITE 200
IRVINE, CA 92602-1377

OCTA
550 SOUTH MAIN STREET
P.O. BOX 14184
ORANGE, CA 92863-1584

1

# ROADWAY QUANTITIES

| SHEET No. | LOCATION | STATION LIMITS | PAVEMENT Str SECTION TYPE ☐ | JOINTED PLAIN Conc Pvmt CY | MINOR Conc (PATTERNED) CY | RUBBERIZED HOT MIX ASPHALT (GAP GRADED) TON | HOT MIX ASPHALT (TYPE A) TON | TACK COAT TON | LEAN Conc BASE CY | CLASS 2 AGGREGATE BASE CY | CLASS 2 AGGREGATE SUBBASE CY | ASPHALTIC EMULSION (CURING SEAL) TON | COLD PLANE AC PAVEMENT SQYD | REMOVE ROCK BLANKET SQYD |
|---|---|---|---|---|---|---|---|---|---|---|---|---|---|---|
| L-1 | NB ROUTE 57 | "A" 257+65.61 TO "A" 266+50.00 | 1 | 675 | | | | 2 | 225 | | 450 | 2 | | |
| L-1 | NB ROUTE 57 | "A" 257+65.61 TO "A" 266+50.00 | 2 | | | 67 | 90 | | | 210 | | | | |
| L-1 | NB LOOP ON-RAMP AT KATELLA Ave | "C-3" 60+50.00 TO "C-3" 66+50.00 | 3 | | | 255 | 255 | | | 724 | | | | |
| L-1 | NB LOOP ON-RAMP AT KATELLA Ave - EDB KATELLA BASIN | "C-3" 60+50.00 TO "C-3" 66+50.00 | 2 | | | 40 | 53 | | | 125 | | | | |
| L-1 | NB LOOP ON-RAMP AT KATELLA Ave | "C-3" 60+50.00 TO "C-3" 66+50.00 | 8 | | 5 | | | | | 7 | | | | |
| L-1 | NB LOOP ON-RAMP AT KATELLA Ave | "C-3" 60+50.00 TO "C-3" 62+32.00 | 9 | | | | | | | | | | | 154 |
| L-2 | NB ROUTE 57 | "A" 266+50.00 TO "A" 280+50.00 | 1 | 1142 | | | | 3 | 381 | | 761 | 3 | | |
| L-2 | NB ROUTE 57 | "A" 266+50.00 TO "A" 280+50.00 | 2 | | | 63 | 84 | | | 198 | | | | |
| L-2 | NB LOOP ON-RAMP AT KATELLA Ave | "C-3" 59+20.00 TO "C-3" 71+00.00 | 3 | | | 106 | 106 | | | 300 | | | | |
| L-2 | NB ON-RAMP AT KATELLA Ave | "C-5" 72+65.42 TO "C-5" 80+50.00 | 3 | | | 312 | 312 | | | 886 | | | | |
| L-2 | NB LOOP ON-RAMP AT KATELLA Ave - EDB KATELLA BASIN | "C-3" 59+20.00 TO "C-3" 71+00.00 | 2 | | | 83 | 110 | | | 259 | | | | |
| L-2 | NB ON-RAMP AT KATELLA Ave | "C-5" 72+65.42 TO "C-5" 80+50.00 | 8 | | 36 | | | | | 55 | | | | |
| L-2 | KATELLA Ave | "KA" 29+16.00 TO "KA" 29+43.00 | 12 | | | | 15 | | | 11 | | | | |
| L-2 | KATELLA Ave | "KA" 29+16.00 TO "KA" 29+38.00 | 13 | | | | 5 | | | | 4 | | | |
| L-2 | KATELLA Ave | "KA" 29+38.00 TO "KA" 29+43.00 | 14 | | 1 | | | | | | 1 | | | |
| L-2 | KATELLA Ave | "KA" 29+16.00 TO "KA" 29+43.00 | 15 | | | | 1 | | | | | | 8 | |
| L-3 | NB ROUTE 57 | "A" 280+50.00 TO "A" 294+50.00 | 1 | 1077 | | | | 1 | 359 | | 718 | 1 | | |
| L-3 | NB ROUTE 57 | "A" 283+40.00 TO "A" 294+50.00 | 2 | | | 60 | 80 | | | 188 | | | | |
| L-3 | NB ROUTE 57 | "C-5" 80+50.70 TO "C-5" 83+40.00 | 3 | | | 91 | 91 | | | 258 | | | | |
| L-4 | NB ROUTE 57 | "A" 294+50.00 TO "A" 308+50.00 | 1 | 1464 | | | | 1 | 488 | | 976 | 1 | | |
| L-4 | NB ROUTE 57 | "A" 294+50.00 TO "A" 300+50.00 | 2 | | | 124 | 166 | | | 389 | | | | |
| L-4 | NB OFF-RAMP AT BALL Rd | "D-4" 1+97.00 TO "D-4" 8+50.00 | 3 | | | 142 | 142 | | | 402 | | | | |
| L-4 | NB OFF-RAMP AT BALL Rd | "D-4" 1+97.00 TO "D-4" 8+50.00 | 8 | | 21 | | | | | 31 | | | | |
| L-5 | NB ROUTE 57 | "A" 308+50.00 TO "A" 322+50.00 | 1 | 1346 | | | | 4 | 449 | | 898 | 4 | | |
| L-5 | NB ROUTE 57 | "A" 308+50.00 TO "A" 322+50.00 | 2 | | | 77 | 102 | | | 240 | | | | |
| L-5 | NB OFF-RAMP AT BALL Rd | "D-4" 8+50.00 TO "D-4" 10+91.34 | 3 | | | 96 | 96 | | | 272 | | | | |
| L-5 | NB LOOP ON-RAMP AT BALL Rd | "D-5" 5+56.55 TO "D-5" 17+60.00 | 3 | | | 405 | 405 | | | 1149 | | | | |
| L-5 | NB ON-RAMP AT BALL Rd | "D-3" 16+46.39 TO "D-3" 20+05.00 | 3 | | | 114 | 114 | | | 324 | | | | |
| L-5 | NB ON-RAMP AT BALL Rd | "D-3" 20+05.00 TO "D-3" 22+50.00 | 11 | | | 87 | 240 | | | 86 | | | | |
| L-5 | NB LOOP ON-RAMP AT BALL Rd | "D-5" 5+56.55 TO "D-5" 17+60.00 | 8 | | 6 | | | | | 9 | | | | |
| L-5 | NB LOOP ON-RAMP AT BALL RD | "D-5" 5+56.55 TO "D-5" 9+15.38 | 7 | | | 67 | | | | | | | 498 | |
| L-5 | NB ON-RAMP AT BALL RD | "D-3" 22+20.44 TO "D-3" 22+50.00 | 8 | | 7 | | | | | 10 | | | | |
| L-5 | NB ROUTE 57 - EDB BALL BASIN | "A" 308+50.00 TO "A" 322+50.00 | 2 | | | 135 | 180 | | | 423 | | | | |
| | | SHEET TOTAL | | 5704 | 76 | 2324 | 2647 | 11 | 1902 | 6556 | 3808 | 11 | 506 | 154 |

1 REVISED PER ADDENDUM No. 1 DATED AUGUST 22, 2011

## SUMMARY OF QUANTITIES

Q-1

SHIVA BOUSTANI — REVISED BY
LIEM A. NGUYEN — DATE REVISED
CALCULATED-DESIGNED BY
CHECKED BY
R. SCOTT BACSIKIN — CONSULTANT FUNCTIONAL SUPERVISOR
STATE OF CALIFORNIA - DEPARTMENT OF TRANSPORTATION
Caltrans

LAST REVISION 10-12-10 | DATE PLOTTED => 19-AUG-2011 | TIME PLOTTED => 15:53

| Dist | COUNTY | ROUTE | POST MILES TOTAL PROJECT | SHEET No. | TOTAL SHEETS |
|---|---|---|---|---|---|
| 12 | Ora | 57 | 12.2/15.2 | 244 | 527 |

REGISTERED CIVIL ENGINEER 11/15/10 DATE

4-18-11
PLANS APPROVAL DATE

REGISTERED PROFESSIONAL ENGINEER R.SCOTT BACSIKIN No. C 48774 Exp. 9-30-12 CIVIL STATE OF CALIFORNIA

*THE STATE OF CALIFORNIA OR ITS OFFICERS OR AGENTS SHALL NOT BE RESPONSIBLE FOR THE ACCURACY OR COMPLETENESS OF SCANNED COPIES OF THIS PLAN SHEET.*

HDR ENGINEERING, INC.
3230 EL CAMINO REAL
SUITE 200
IRVINE, CA 92602-1377

OCTA
550 SOUTH MAIN STREET
P.O. BOX 14184
ORANGE, CA 92863-1584

# ROADWAY QUANTITIES

| SHEET No. | LOCATION | STATION LIMITS | PAVEMENT Str SECTION TYPE ☐ | JOINTED PLAIN Conc Pvmt CY | MINOR Conc (PATTERNED) CY | RUBERIZED HOT MIX ASPHALT (GAP GRADED) TON | HOT MIX ASPHALT (TYPE A) * TON | TACK COAT TON | LEAN Conc BASE CY | CLASS 2 AGGREGATE BASE ** CY | CLASS 2 AGGREGATE SUBBASE CY | ASPHALTIC EMULSION (CURING SEAL) TON | COLD PLANE AC PAVEMENT SQYD | REMOVE ROCK BLANKET SQYD |
|---|---|---|---|---|---|---|---|---|---|---|---|---|---|---|
| L-6 | NB ROUTE 57 | "A" 322+50.00 TO "A" 329+58.00 | 4 | 1320 | | | | 1 | 440 | | 880 | 1 | | |
| L-6 | NB ROUTE 57 | "A" 329+58.00 TO "A" 332+00.00 | 10 | 21 | | | | | 7 | | | | | |
| L-6 | NB ROUTE 57 | "A" 322+50.00 TO "A" 336+50.00 | 5 | | | 60 | 80 | | | 188 | | | | |
| L-6 | NB ON-RAMP AT BALL Rd | "D-3" 22+50.00 TO "D-3" 29+58.00 | 11 | | | 274 | 752 | | | 270 | | | | |
| L-6 | NB ON-RAMP AT BALL Rd | "D-3" 22+50.00 TO "D-3" 23+72.14 | 8 | | 20 | | | | | 31 | | | | |
| L-7 | NB ROUTE 57 | "A" 336+50.00 TO "A" 350+50.00 | 4 | 1196 | | | | 1 | 399 | | 797 | 1 | | |
| L-7 | NB ROUTE 57 | "A" 336+50.00 TO "A" 350+50.00 | 5 | | | 126 | 169 | | | 396 | | | | |
| L-8 | NB ROUTE 57 | "A" 350+50.00 TO "A" 364+50.00 | 4 | 1198 | | | | 1 | 399 | | 799 | 1 | | |
| L-8 | NB ROUTE 57 | "A" 350+50.00 TO "A" 364+50.00 | 5 | | | 144 | 191 | | | 449 | | | | |
| L-9 | NB ROUTE 57 | "A" 364+50.00 TO "A" 378+50.00 | 4 | 1456 | | | | 1 | 485 | | 970 | 1 | | |
| L-9 | NB ROUTE 57 | "A" 364+50.00 TO "A" 378+50.00 | 5 | | | 124 | 165 | | | 387 | | | | |
| L-9 | NB OFF-RAMP AT LINCOLN Ave | "E-2" 74+00.00 TO "E-2" 78+50.00 | 6 | | | 64 | 64 | | | 183 | | | | |
| L-9 | NB OFF-RAMP AT LINCOLN Ave | "E-2" 76+70.64 TO "E-2" 78+00.41 | 8 | | 23 | | | | | 35 | | | | |
| L-10 | NB ROUTE 57 | "A" 378+50.00 TO "A" 392+50.00 | 4 | 1109 | | | | 4 | 370 | | 740 | 4 | | |
| L-10 | NB ROUTE 57 | "A" 378+50.00 TO "A" 392+50.00 | 5 | | | 87 | 116 | | | 273 | | | | |
| L-10 | NB OFF-RAMP AT LINCOLN Ave | "E-2" 78+50.00 TO "E-2" 82+61.36 | 6 | | | 182 | 182 | | | 516 | | | | |
| L-10 | NB LOOP ON-RAMP AT LINCOLN Ave | "E-5" 77+59.34 TO "E-5" 88+00.00 | 7 | | | 45 | | | | | | | 333 | |
| L-10 | NB ON-RAMP AT LINCOLN Ave | "E-6" 85+96.98 TO "E-6" 92+50.00 | 6 | | | 381 | 381 | | | 1081 | | | | |
| L-10 | NB LOOP ON-RAMP AT LINCOLN Ave | "E-5" 77+59.34 TO "E-5" 88+20.00 | 6 | | | 346 | 346 | | | 983 | | | | |
| L-10 | NB LOOP ON-RAMP AT LINCOLN Ave | "E-5" 82+87.31 TO "E-5" 83+12.82 | 8 | | 4 | | | | | 6 | | | | |
| L-10 | NB ON-RAMP AT LINCOLN Ave | "E-6" 91+56.00 TO "E-6" 92+35.05 | 8 | | 15 | | | | | 22 | | | | |
| L-11 | NB ROUTE 57 | "A" 392+50.00 TO "A" 400+20.00 | 4 | 244 | | | | 1 | 81 | | 162 | 1 | | |
| L-11 | NB ROUTE 57 | "A" 398+26.00 TO "A" 400+20.00 | 5 | | | 13 | 18 | | | 42 | | | | |
| L-11 | NB ON-RAMP AT LINCOLN Ave | "E-6" 92+50.00 TO "E-6" 98+26.00 | 6 | | | 246 | 249 | | | 698 | | | | |
| | | SHEET TOTAL | | 6544 | 62 | 2092 | 2713 | 9 | 2181 | 5560 | 4348 | 9 | 333 | 0 |
| | | Q-1 TOTAL | | 5704 | 76 | 2324 | 2647 | 11 | 1902 | 6556 | 3808 | 11 | 506 | 154 |
| | | GRAND TOTAL | | 12248 | 138 | 4416 | 5360 | 20 | 4083 | 12116 | 8156 | 20 | 839 | 154 |

* FOR ADDITIONAL QUANTITIES, SEE DQ-9, Q-4, AND SCQ-8.
** FOR ADDITIONAL QUANTITIES, SEE SCQ-8.

1 REVISED PER ADDENDUM No. 1 DATED AUGUST 22, 2011

## SUMMARY OF QUANTITIES

Q-2

STATE OF CALIFORNIA - DEPARTMENT OF TRANSPORTATION
Caltrans

CONSULTANT FUNCTIONAL SUPERVISOR: R. SCOTT BACSIKIN
CALCULATED-DESIGNED BY: SHIVA BOUSTANI
CHECKED BY: LIEM A. NGUYEN
REVISED BY
DATE REVISED

LAST REVISION 10-12-10
DATE PLOTTED => 19-AUG-2011
TIME PLOTTED => 15:53

| Dist | COUNTY | ROUTE | POST MILES TOTAL PROJECT | SHEET No. | TOTAL SHEETS |
|---|---|---|---|---|---|
| 12 | Ora | 57 | 12.2/15.2 | 246 | 527 |

REGISTERED CIVIL ENGINEER 11/15/10 DATE

4-18-11
PLANS APPROVAL DATE

REGISTERED PROFESSIONAL ENGINEER R.SCOTT BACSIKIN No. C 48774 Exp. 9-30-12 CIVIL STATE OF CALIFORNIA

*THE STATE OF CALIFORNIA OR ITS OFFICERS OR AGENTS SHALL NOT BE RESPONSIBLE FOR THE ACCURACY OR COMPLETENESS OF SCANNED COPIES OF THIS PLAN SHEET.*

HDR ENGINEERING, INC.
3230 EL CAMINO REAL
SUITE 200
IRVINE, CA 92602-1377

OCTA
550 SOUTH MAIN STREET
P.O. BOX 14184
ORANGE, CA 92863-1584

1

# HOT MIX ASPHALT DIKE

| SHEET No. | LOCATION | STATION LIMITS | SIDE | PLACE HOT MIX ASPHALT DIKE (TYPE C) | (TYPE E) | (TYPE F) | HOT MIX ASPHALT (TYPE A) * (TYPE C) | (TYPE E) | (TYPE F) |
|---|---|---|---|---|---|---|---|---|---|
| | | | | LF | LF | LF | TON | TON | TON |
| L-1 | NB ROUTE 57 | "A" 258+06.92 TO "A" 260+63.92 | R† | 250 | | | 0.95 | | |
| L-1 | NB ROUTE 57 | "A" 260+63.92 TO "A" 265+72.52 | R† | | 498 | | | 6.47 | |
| L-1, L-2 | NB KATELLA LOOP ON RAMP | "C-3" 59+20.00 TO "C-3" 67+21.81 | R† | | 711 | | | 9.24 | |
| L-1, L-2 | NB KATELLA LOOP ON RAMP | "C-3" 67+27.81 TO "C-3" 67+65.20 | R† | 37 | | | 0.14 | | |
| L-2 | NB KATELLA LOOP ON RAMP | "C-3" 67+65.20 TO "C-3" 68+00.46 | R† | | | 35 | | | 0.23 |
| L-2 | NB ROUTE 57 | "A" 272+83.08 TO "A" 277+54.45 | R† | | 458 | | | 5.95 | |
| L-2 | NB KATELLA ON RAMP | "C-5" 72+19.00 TO "C-5" 72+82.10 | R† | 64 | | | 0.24 | | |
| L-2 | NB KATELLA ON RAMP | "C-5" 72+82.10 TO "C-5" 74+72.08 | R† | | | 188 | | | 1.24 |
| L-4 | NB BALL OFF RAMP | "D-4" 6+00.00 TO "D-4" 6+75.00 | R† | | | 75 | | | 0.50 |
| L-4 | NB BALL OFF RAMP | "D-4" 6+75.00 TO "D-4" 7+38.00 | R† | 62 | | | 0.24 | | |
| L-4, L-5 | NB BALL OFF RAMP | "D-4" 7+38.00 TO "D-4" 10+91.34 | R† | | 341 | | | 4.43 | |
| L-5 | NB BALL LOOP ON RAMP | "D-5" 5+56.55 TO "D-5" 12+45.34 | R† | | 583 | | | 7.58 | |
| L-5 | NB BALL LOOP ON RAMP | "D-5" 12+45.34 TO "D-5" 13+00.77 | R† | 57 | | | 0.22 | | |
| L-5 | NB BALL LOOP ON RAMP | "D-5" 13+00.77 TO "D-5" 13+24.27 | R† | | | 25 | | | 0.17 |
| L-5 | NB BALL ON RAMP | "D-3" 16+46.39 TO "D-3" 20+05.00 | R† | | 353 | | | 4.59 | |
| L-6, L-7 | NB ROUTE 57 | "A" 336+30.00 TO "A" 339+90.63 | R† | | 361 | | | 4.69 | |
| L-9, L-10 | NB LINCOLN LOOP OFF RAMP | "A" 373+82.00 TO "E-2" 79+36.93 | R† | | 550 | | | 7.15 | |
| L-10 | NB LINCOLN LOOP ON RAMP | "E-5" 77+59.34 TO "E-5" 80+75.00 | R† | | 264 | | | 3.43 | |
| SHEET TOTAL | | | | | | | 1.79 | 53.53 | 2.14 |
| GRAND TOTAL | | | | 470 | 4119 | 323 | | 57.46 | |

* FOR ADDITIONAL QUANTITIES, SEE DQ-9, Q-2, AND SCQ-8.

# CURBS

| SHEET No. | LOCATION | STATION LIMITS | MINOR CONCRETE (CURB) (TYPE B3-4) | (TYPE B2-4) | (TYPE B3-6) | (TYPE A1-8) |
|---|---|---|---|---|---|---|
| | | | LF | LF | LF | LF |
| L-2 | KATELLA Ave | "KA" 29+16.00 TO "KA" 29+43.00 | | | 60 | |
| L-5 | NB BALL LOOP ON RAMP | "A" 311+27.00 TO "D-5" 10+70.00 | 258 | | | |
| L-10 | NB LINCOLN LOOP ON RAMP | "A" 382+37.00 TO "E-5" 81+96.00 | | 249 | | |
| L-2, C-7 | NB KATELLA LOOP ON RAMP | "C-3" 58+86.39 TO "C-3" 59+02.06 | | | | 21 |
| L-5, C-8 | NB BALL LOOP ON RAMP | "D-5" 5+32.57 TO "D-5" 5+52.09 | | | | 39 |
| | | | | | | |
| SHEET TOTAL | | | 258 | 249 | 60 | 60 |
| GRAND TOTAL | | | 627 | | | |

# DETECTABLE WARNING SURFACE

| SHEET No. | LOCATION | STATION LIMITS | CURB RAMP DETECTABLE WARNING SURFACE |
|---|---|---|---|
| | | | SF |
| L-2, C-7 | NB KATELLA LOOP ON RAMP | "KA" 29+16.00 TO "KA" 29+43.00 | 15 |
| L-5, C-8 | NB BALL LOOP ON RAMP | "A" 311+27.00 TO "D-5" 10+70.00 | 31 |
| | | | |
| SHEET TOTAL | | | 46 |
| GRAND TOTAL | | | 46 |

# CURB AND GUTTER

| SHEET No. | LOCATION | STATION LIMITS | MINOR CONCRETE (CURB AND GUTTER) (TYPE A2-8) |
|---|---|---|---|
| | | | LF |
| L-2, C-7 | NB KATELLA LOOP ON RAMP | "C-3" 58+86.41 TO "C-3" 59+01.49 | 14 |
| L-5, C-8 | NB BALL LOOP ON RAMP | "D-5" 5+33.25 TO "D-5" 5+54.30 | 29 |
| | | | |
| SHEET TOTAL | | | 43 |
| GRAND TOTAL | | | 43 |

# CURB RAMP

| SHEET No. | LOCATION | STATION LIMITS | MINOR CONCRETE (CURB RAMP) |
|---|---|---|---|
| | | | CY |
| L-2, C-7 | NB KATELLA LOOP ON RAMP | "C-3" 58+86.41 TO "C-3" 59+01.49 | 1 |
| L-5, C-8 | NB BALL LOOP ON RAMP | "D-5" 5+33.25 TO "D-5" 5+54.30 | 3 |
| | | | |
| SHEET TOTAL | | | 4 |
| GRAND TOTAL | | | 4 |

1 REVISED PER ADDENDUM No. 1 DATED AUGUST 22, 2011

# SUMMARY OF QUANTITIES

Q-4

REVISED BY | DATE REVISED
SHIVA BOUSTANI | LIEM A. NGUYEN
CALCULATED-DESIGNED BY | CHECKED BY
CONSULTANT FUNCTIONAL SUPERVISOR | R. SCOTT BACSIKIN
STATE OF CALIFORNIA - DEPARTMENT OF TRANSPORTATION
Caltrans

LAST REVISION | DATE PLOTTED => 19-AUG-2011
10-12-10 | TIME PLOTTED => 15:53

| Dist | COUNTY | ROUTE | POST MILES TOTAL PROJECT | SHEET No. | TOTAL SHEETS |
|---|---|---|---|---|---|
| 12 | Ora | 57 | 12.2/15.2 | 249 | 527 |

REGISTERED CIVIL ENGINEER 11/15/10 DATE

4-18-11
PLANS APPROVAL DATE

REGISTERED PROFESSIONAL ENGINEER R.SCOTT BACSIKIN No. C 48774 Exp. 9-30-12 CIVIL STATE OF CALIFORNIA

*THE STATE OF CALIFORNIA OR ITS OFFICERS OR AGENTS SHALL NOT BE RESPONSIBLE FOR THE ACCURACY OR COMPLETENESS OF SCANNED COPIES OF THIS PLAN SHEET.*

HDR ENGINEERING, INC.
3230 EL CAMINO REAL
SUITE 200
IRVINE, CA 92602-1377

OCTA
550 SOUTH MAIN STREET
P.O. BOX 14184
ORANGE, CA 92863-1584

1

## SEAL PAVEMENT JOINT

| SHEET No. | STATION LIMITS | SEAL ISOLATION JOINT | SEAL PAVEMENT JOINT | |
|---|---|---|---|---|
| | | | LONGITUDINAL | TRANSVERSE |
| | | LF | LF | LF |
| L-1 | "A" 255+58.89 TO "A" 266+50.00 | 878 | 750 | 1366 |
| L-2 | "A" 266+50.00 TO "A" 280+50.00 | 1190 | 1790 | 2658 |
| L-3 | "A" 280+50.00 TO "A" 294+50.00 | 1160 | 1330 | 2335 |
| L-4 | "A" 294+50.00 TO "A" 308+50.00 | 1400 | 2080 | 3233 |
| L-5 | "A" 308+50.00 TO "A" 322+50.00 | 1400 | 1900 | 2817 |
| L-6 | "A" 322+50.00 TO "A" 336+50.00 | 1400 | 2000 | 2848 |
| L-7 | "A" 336+50.00 TO "A" 350+50.00 | 1400 | 1400 | 2567 |
| L-8 | "A" 350+50.00 TO "A" 364+50.00 | 1400 | 1400 | 2567 |
| L-9 | "A" 364+50.00 TO "A" 378+50.00 | 1400 | 2250 | 3398 |
| L-10 | "A" 378+50.00 TO "A" 392+50.00 | 1400 | 1370 | 2388 |
| L-11 | "A" 392+50.00 TO "A" 400+20.00 | 770 | 200 | 267 |
| | | | 16470 | 26444 |
| | TOTAL | 13798 | 42914 | |

## VEGETATION CONTROL (MINOR CONCRETE)

| SHEET No. | LOCATION | SIDE | STATION LIMITS | |
|---|---|---|---|---|
| | | | | SQYD |
| L-1 | NB ROUTE 57 | R† | "A" 261+87.24 TO "A" 263+09.83 | 57 |
| L-2 | KATELLA Ave NB LOOP ON-RAMP | R† | "C-3" 66+89.33 TO "C-3" 67+71.20 | 43 |
| L-2 | KATELLA Ave NB ON-RAMP | R† | "C-5" 72+24.70 TO "C-5" 74+72.08 | 98 |
| L-4 | BALL Rd NB OFF-RAMP | R† | "D-4" 6+00.00 TO "D-4" 7+24.59 | 37 |
| L-5 | BALL Rd NB LOOP ON-RAMP | R† | "D-5" 12+51.30 TO "D-5" 13+24.27 | 33 |
| L-7 | NB ROUTE 57 | R† | "A" 336+51.46 TO "A" 337+38.13 | 28 |
| L-8 | NB ROUTE 57 | R† | "A" 354+44.72 TO "A" 355+73.88 | 59 |
| L-8, L-9 | NB ROUTE 57 | R† | "A" 363+24.81 TO "A" 366+52.60 | 314 |
| L-9 | NB ROUTE 57 | R† | "A" 371+70.83 TO "A" 372+62.50 | 42 |
| L-10 | LINCOLN Ave NB LOOP ON-RAMP | R† | "E-5" 83+77.47 TO "E-5" 84+57.27 | 38 |
| | | | TOTAL | 749 |

## * REMOVE CONCRETE (MISCELLANEOUS)

| SHEET No. | LOCATION | SIDE | STATION LIMITS | |
|---|---|---|---|---|
| | | | | CY |
| L-2, C-7 | KATELLA Ave LOOP ON-RAMP | R† | "C-3" 58+85.86 TO "C-3" 59+11.71 | 0.4 |
| L-5, C-8 | BALL Rd LOOP ON-RAMP | R† | "D-5" 5+32.30 TO "D-5" 5+59.56 | 3.4 |
| | | | TOTAL | 3.8 |

* FOR ADDITIONAL QUANTITIES, SEE SHEET DQ-9

## REMOVE CONCRETE CURB

| SHEET No. | LOCATION | STATION LIMITS | REMOVE CONCRETE CURB |
|---|---|---|---|
| | | | LF |
| L-2 | KATELLA AVENUE | "KA" 29+16.00 TO "KA" 29+43.00 | 60 |
| L-2, C-7 | KATELLA Ave NB LOOP ON-RAMP | "C-3" 58+86.20 TO "C-3" 59+10.85 | 25 |
| L-5, C-8 | BALL Rd NB LOOP ON-RAMP | "D-5" 5+34.29 TO "D-5" 5+58.71 | 38 |
| | | TOTAL | 153 |

## REMOVE METAL BEAM GUARD RAILING

| SHEET No. | LOCATION | STATION LIMITS | METAL BEAM GUARD RAILING |
|---|---|---|---|
| | | | LF |
| L-1 | NB ROUTE 57 | "A" 262+08.37 TO "A" 263+11.79 | 100 |
| L-2 | NB KATELLA LOOP ON RAMP | "C-3" 67+38.13 TO "C-3" 68+08.65 | 71 |
| L-2, L-3 | NB KATELLA ON RAMP/ NB ROUTE 57 | "C-5" 76+73.70 TO "A" 290+37.97 | 1364 |
| L-3, L-4 | NB ROUTE 57 | "A" 292+99.12 TO "A" 299+83.36 | 684 |
| L-8 | NB ROUTE 57 | "A" 354+83.60 TO "A" 355+61.22 | 78 |
| L-9 | NB ROUTE 57 | "A" 371+19.76 TO "A" 372+30.07 | 111 |
| | | TOTAL | 2408 |

## REMOVE CHAIN LINK FENCE

| SHEET No. | LOCATION | STATION LIMITS | CL FENCE |
|---|---|---|---|
| | | | LF |
| L-3 | NB ROUTE 57 | "A" 288+65.53 TO "A" 290+89.36 | 244 |
| L-4 | NB ROUTE 57 | "A" 292+71.93 TO "A" 302+21.70 | 954 |
| L-4 | NB ROUTE 57 | "A" 305+01.53 TO "A" 305+87.01 | 90 |
| L-7 | NB ROUTE 57 | "A" 341+32.64 TO "A" 342+43.15 | 197 |
| L-9 | NB ROUTE 57 | "A" 365+93.18 TO "A" 366+91.45 | 180 |
| | | TOTAL | 1665 |

1 REVISED PER ADDENDUM No. 1 DATED AUGUST 22, 2011

# SUMMARY OF QUANTITIES

Q-7

REVISED BY | DATE REVISED
SHIVA BOUSTANI | LIEM A. NGUYEN
CALCULATED-DESIGNED BY | CHECKED BY
CONSULTANT FUNCTIONAL SUPERVISOR
R. SCOTT BACSIKIN
STATE OF CALIFORNIA - DEPARTMENT OF TRANSPORTATION
Caltrans

LAST REVISION 10-12-10 | DATE PLOTTED => 19-AUG-2011 | TIME PLOTTED => 15:53

| Dist | COUNTY | ROUTE | POST MILES TOTAL PROJECT | SHEET No. | TOTAL SHEETS |
|---|---|---|---|---|---|
| 12 | Ora | 57 | 12.2/15.2 | 267 | 527 |

REGISTERED CIVIL ENGINEER 11/15/10 DATE

4-18-11
PLANS APPROVAL DATE

REGISTERED PROFESSIONAL ENGINEER ERIC A. JOHNSON No. C57355 Exp. 12/31/11 CIVIL STATE OF CALIFORNIA

*THE STATE OF CALIFORNIA OR ITS OFFICERS OR AGENTS SHALL NOT BE RESPONSIBLE FOR THE ACCURACY OR COMPLETENESS OF SCANNED COPIES OF THIS PLAN SHEET.*

HDR ENGINEERING, INC.
3230 EL CAMINO REAL
SUITE 200
IRVINE, CA 92602-1377

OCTA
550 SOUTH MAIN STREET
P.O. BOX 14184
ORANGE, CA 92863-1584

**NOTE:**

A. GEOCOMPOSITE DRAIN, TREATED PERMEABLE BASE, AND 3" DIA SLOTTED PLASTIC PIPE CONTINUOS BEHIND RETAINING WALL. CAP ENDS OF PIPE. PROVIDE 'TEE' CONNECTION AT EACH 4" DIA DRAIN. (1)

B. CONNECT THE LOW END OF PLASTIC PIPE TO THE MAIN OUTLET PIPE AS APPLICABLE.

STANDARD PLAN SHEET
DETAIL NUMBER

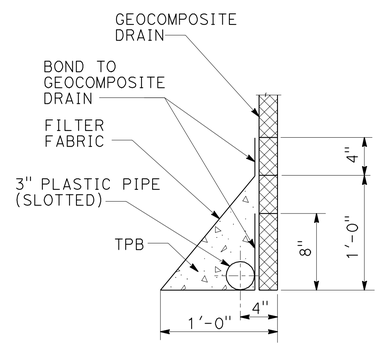


## DETAIL "A"
NO SCALE

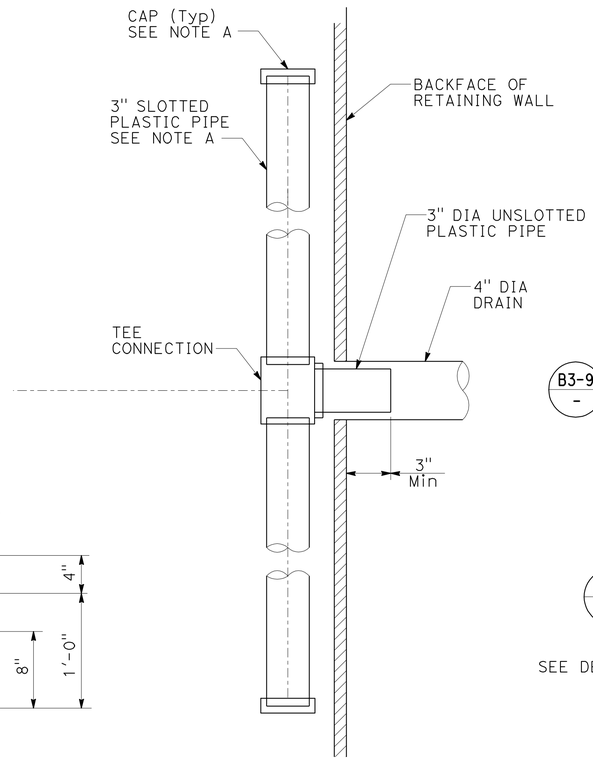


## SECTION A - A
NO SCALE

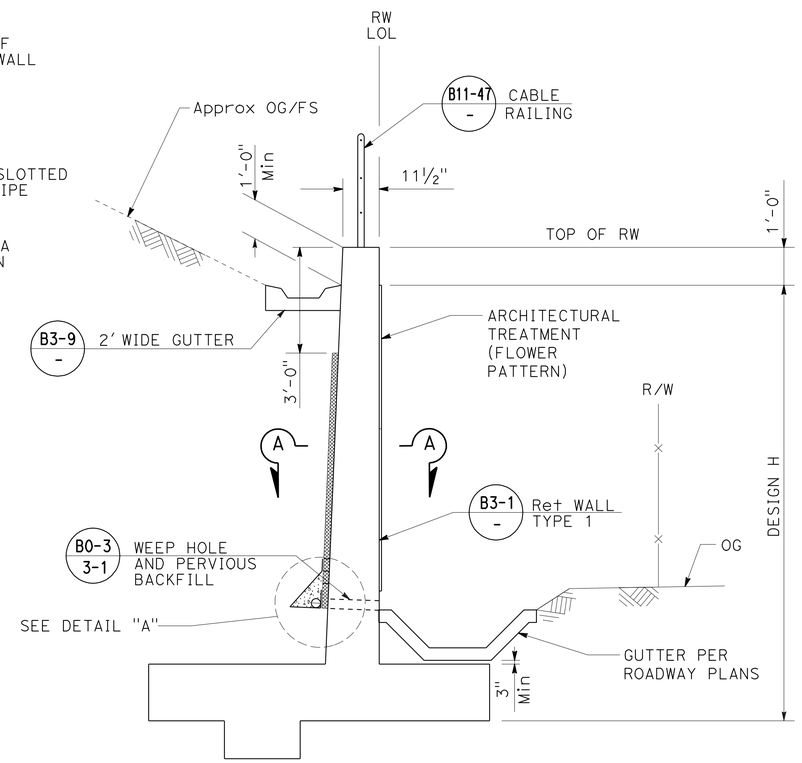


## CANTILEVER RETAINING WALL WEEP HOLE AND GEOCOMPOSITE DRAIN
NO SCALE

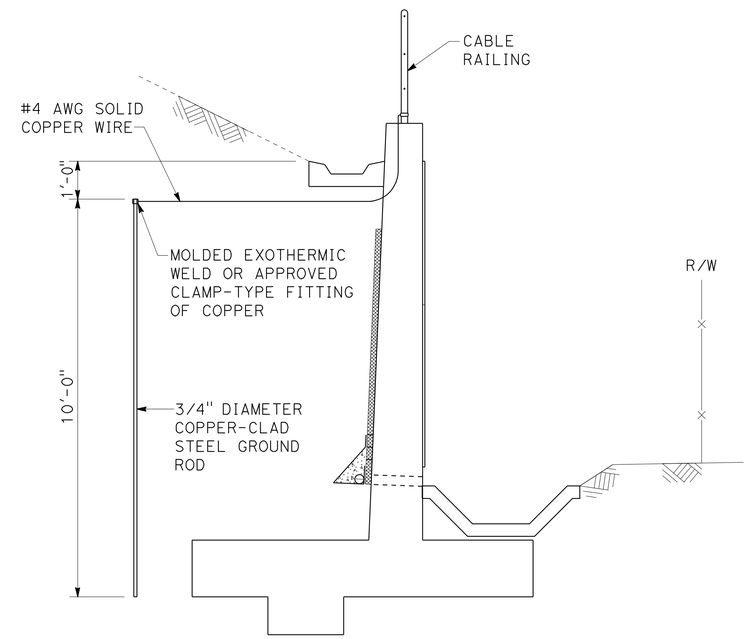


## GROUDING DETAIL
NO SCALE

NOTE: PLACE GROUND ROD BEYOND EDGE OF HEEL OF RETAINING WALL FOOTING

(1) **REVISED PER ADDENDUM No. 1 DATED AUGUST 22, 2011**

THIS PLAN ACCURATE FOR RETAINING WALL WORK ONLY

# RETAINING WALL DETAILS DETAILS No. 1
SCALE AS SHOWN

**R-18**

STATE OF CALIFORNIA - DEPARTMENT OF TRANSPORTATION
Caltrans

CONSULTANT FUNCTIONAL SUPERVISOR: R. SCOTT BACSIKIN
CALCULATED-DESIGNED BY: ERIC A. JOHNSON
CHECKED BY: BORIS REZNIKOV
REVISED BY
DATE REVISED

LAST REVISION DATE PLOTTED => 19-AUG-2011
TIME PLOTTED => 15:54
08-30-10

| Dist | COUNTY | ROUTE | POST MILES TOTAL PROJECT | SHEET No. | TOTAL SHEETS |
|---|---|---|---|---|---|
| 12 | Ora | 57 | 12.2/15.2 | 268 | 527 |

Eric A Johnson 11/15/10
REGISTERED CIVIL ENGINEER DATE

4-18-11
PLANS APPROVAL DATE

REGISTERED PROFESSIONAL ENGINEER
ERIC A. JOHNSON
No. C57355
Exp. 12/31/11
CIVIL
STATE OF CALIFORNIA

*THE STATE OF CALIFORNIA OR ITS OFFICERS OR AGENTS SHALL NOT BE RESPONSIBLE FOR THE ACCURACY OR COMPLETENESS OF SCANNED COPIES OF THIS PLAN SHEET.*

HDR ENGINEERING, INC.
3230 EL CAMINO REAL
SUITE 200
IRVINE, CA 92602-1377

OCTA
550 SOUTH MAIN STREET
P.O. BOX 14184
ORANGE, CA 92863-1584

1

**NOTE:**

A. FOR GEOCOMPOSITE DRAIN, TREATED PERMEABLE BASE, AND 3" DIA SLOTTED PLASTIC PIPE CONTINUOS BEHIND RETAINING WALL, SEE "RETAINING WALL DETAILS No. 1" SHEET.

B. CONNECT THE LOW END OF PLASTIC PIPE TO THE MAIN OUTLET PIPE AS APPLICABLE.

STANDARD PLAN SHEET
DETAIL NUMBER

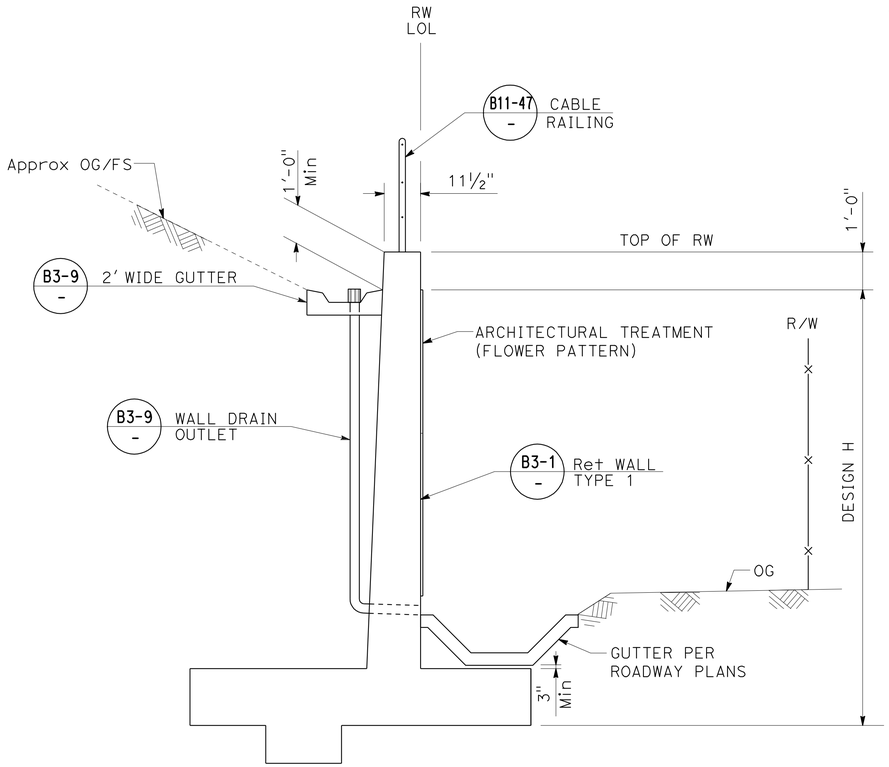


## CANTILEVER RETAINING WALL
## WALL DRAIN OUTLET DETAIL

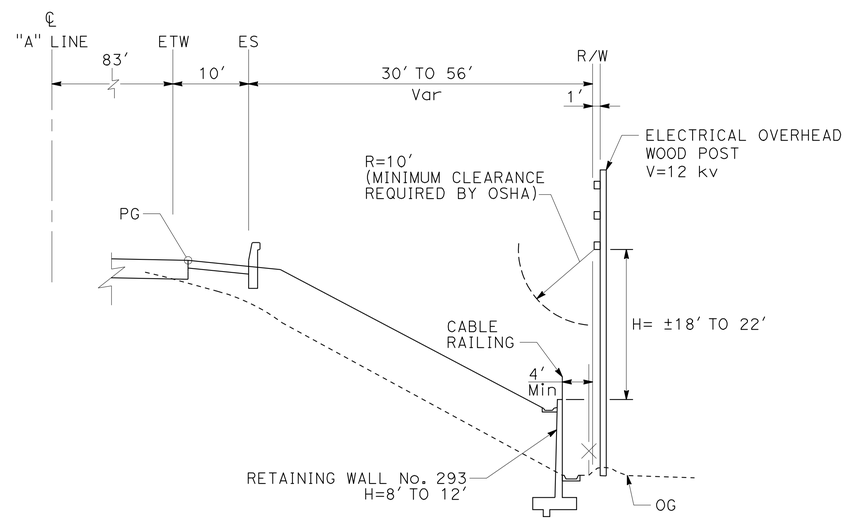


## RETAINING WALL No. 293
## RESTRICTIVE CONDITION
Sta 292+82.07 TO 307+14.81

| WALL DRAIN LOCATIONS | |
|---|---|
| RETANING WALL No. 275 | RETANING WALL No. 293 |
| STATIONS | STATIONS |
| 10+02.00 | 10+02.00 |
| 11+00.00 | 11+50.00 |
| 12+40.00 | 13+00.00 |
| 12+88.00 | 14+50.00 |
| 14+40.00 | 16+00.00 |
| 15+28.00 | 17+92.00 |
| 16+00.00 | 19+40.00 |
| 17+00.00 | 20+40.00 |
| 18+00.00 | 22+40.00 |
| 19+00.00 | 23+42.00 |
| 20+00.00 | |
| 21+00.00 | |
| 22+00.00 | |
| 23+00.00 | |
| 24+00.00 | |
| 25+00.00 | |
| 26+06.00 | |

1 **REVISED PER ADDENDUM No. 1 DATED AUGUST 22, 2011**

## RETAINING WALL DETAILS
## DETAILS No. 2
SCALE AS SHOWN

**R-19**

STATE OF CALIFORNIA - DEPARTMENT OF TRANSPORTATION
Caltrans

CONSULTANT FUNCTIONAL SUPERVISOR: R. SCOTT BACSIKIN
CALCULATED-DESIGNED BY: ERIC A. JOHNSON
CHECKED BY: BORIS REZNIKOV
REVISED BY
DATE REVISED

LAST REVISION 08-30-10
DATE PLOTTED => 19-AUG-2011
TIME PLOTTED => 15:54

| Dist | COUNTY | ROUTE | POST MILES TOTAL PROJECT | SHEET No. | TOTAL SHEETS |
|---|---|---|---|---|---|
| 12 | Ora | 57 | 12.2/15.2 | 393A | 527 |

REGISTERED CIVIL ENGINEER 6/16/11 DATE

4-18-11
PLANS APPROVAL DATE

REGISTERED PROFESSIONAL ENGINEER CARY PALMER STEWART No. C 43012 Exp. 3-31-12 CIVIL STATE OF CALIFORNIA

*THE STATE OF CALIFORNIA OR ITS OFFICERS OR AGENTS SHALL NOT BE RESPONSIBLE FOR THE ACCURACY OR COMPLETENESS OF SCANNED COPIES OF THIS PLAN SHEET.*

HDR ENGINEERING,INC.
3230 EL CAMINO REAL
SUITE 200
IRVINE, CA 92602-1377

OCTA
550 SOUTH MAIN STREET
P.O. BOX 14184
ORANGE, CA 92863-1584

1

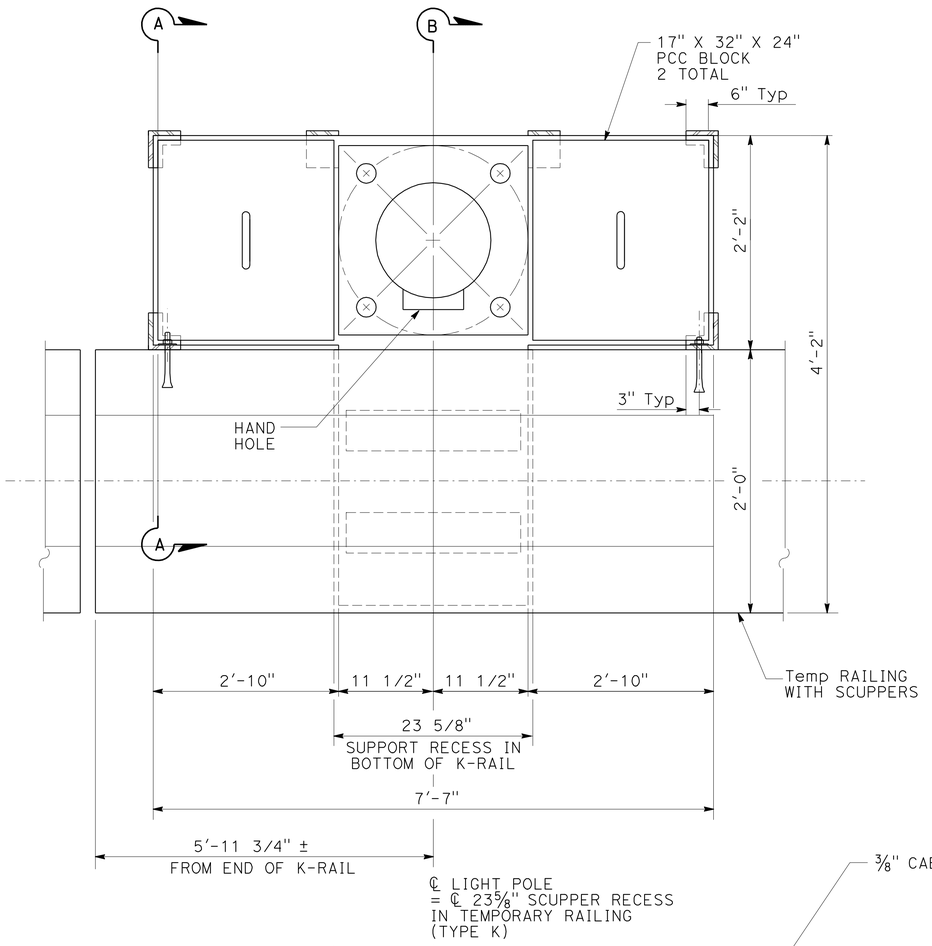


B
PLAN

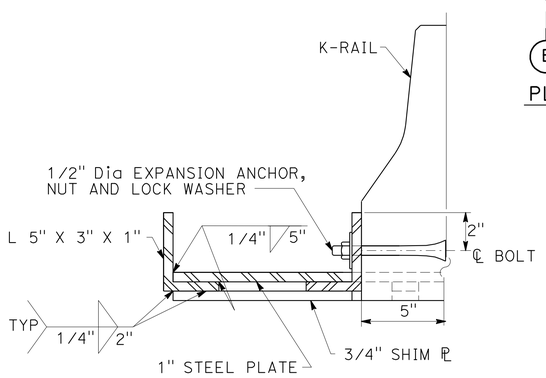


SECTION A-A

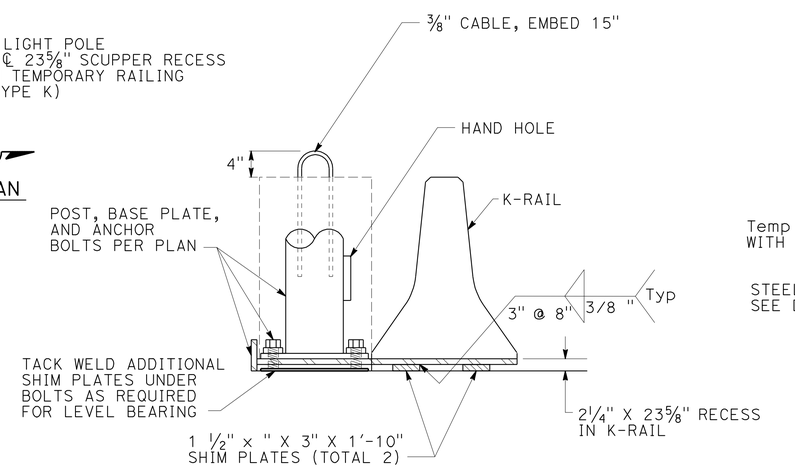


SECTION B-B

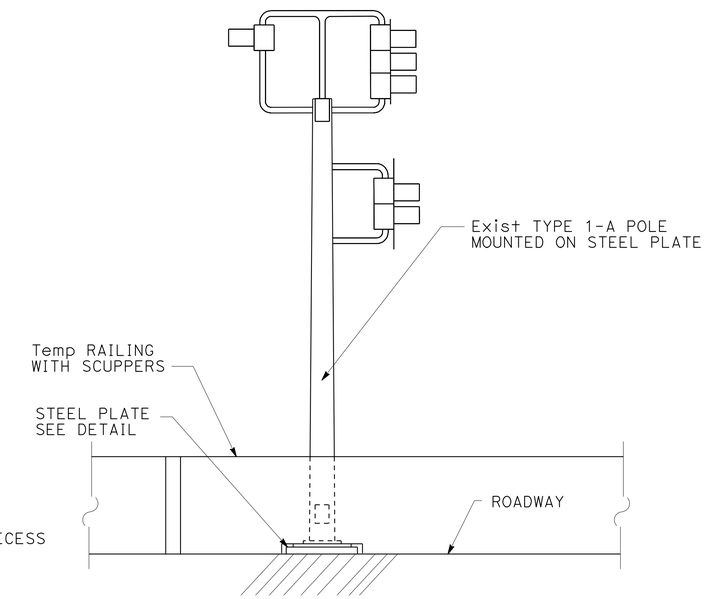


ELEVATION

TEMPORARY SIGNAL BASE DETAIL

# TEMPORARY RAMP METERING DETAILS

NO SCALE

1 **ADDED PER ADDENDUM No. 1 DATED AUGUST 22, 2011**

THIS PLAN IS ACCURATE FOR ELECTRICAL WORK ONLY.

E-78

STATE OF CALIFORNIA - DEPARTMENT OF TRANSPORTATION
Caltrans

CONSULTANT FUNCTIONAL SUPERVISOR: R. SCOTT BACSIKIN
CALCULATED-DESIGNED BY: LAYCEE KOLKMAN
CHECKED BY: CARY P. STEWART
REVISED BY
DATE REVISED

LAST REVISION 06-16-11
DATE PLOTTED => 19-AUG-2011
TIME PLOTTED => 15:54

| Dist | COUNTY | ROUTE | POST MILES TOTAL PROJECT | SHEET No. | TOTAL SHEETS |
|---|---|---|---|---|---|
| 12 | Ora | 57 | 12.2/15.2 | 431A | 527 |

Randell D. Hiatt
REGISTERED CIVIL ENGINEER

May 20, 2011
PLANS APPROVAL DATE

REGISTERED PROFESSIONAL ENGINEER
Randell D. Hiatt
No. C50200
Exp. 6-30-11
CIVIL
STATE OF CALIFORNIA

*The State of California or its officers or agents shall not be responsible for the accuracy or completeness of electronic copies of this plan sheet.*

1

*To accompany plans dated* 4-18-11

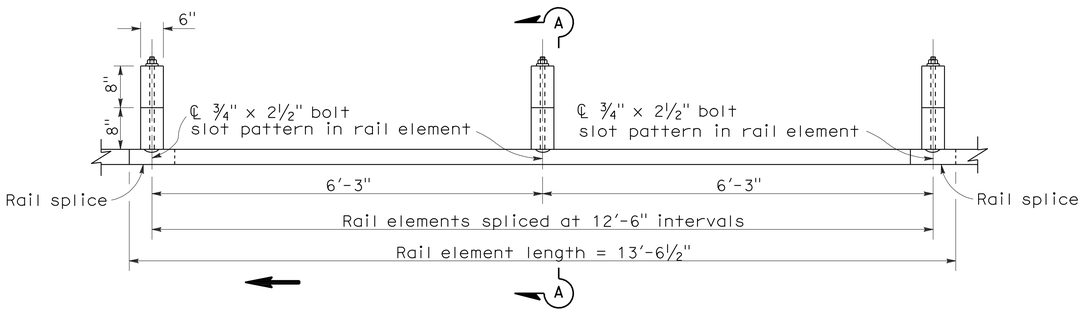


PLAN

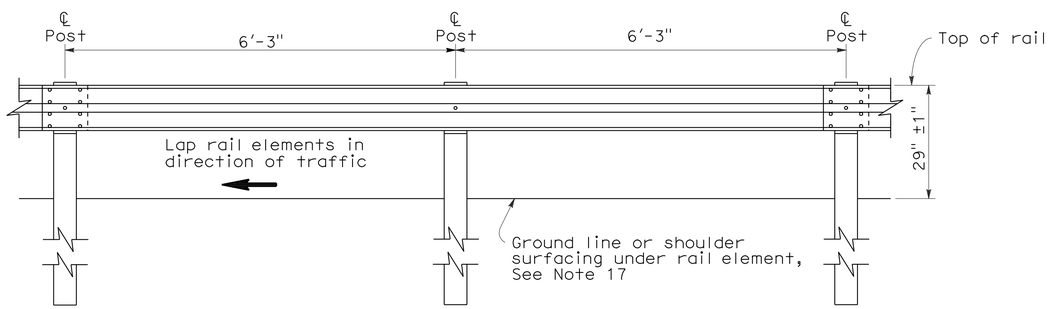


ELEVATION

## METAL BEAM GUARD RAILING WITH WOOD POST AND BLOCKS

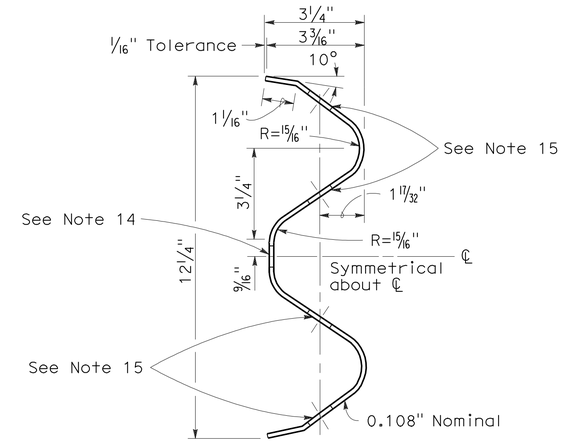


SECTION THRU RAIL ELEMENT

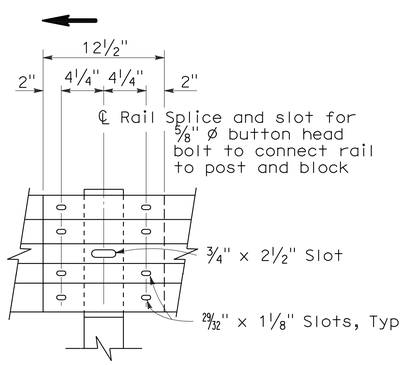


ELEVATION

## RAIL ELEMENT SPLICE DETAIL

a) Connect the over lapped end of the rail elements with ⅝" ø x 1⅜" button head oval shoulder splice bolts inserted into the 29⁄32" x 1⅛" slots and bolted together with ⅝" ø recessed hex nuts. Recess of hex nut points toward rail element. A total of 8 bolts and nuts are to be used at each rail splice connection.

b) The ends of the rail elements are to be overlapped in the direction of traffic (see details).

c) Where end cap is to be attached to the end of a rail element, a total of 4 of the above described splice bolts and nuts are to be used.

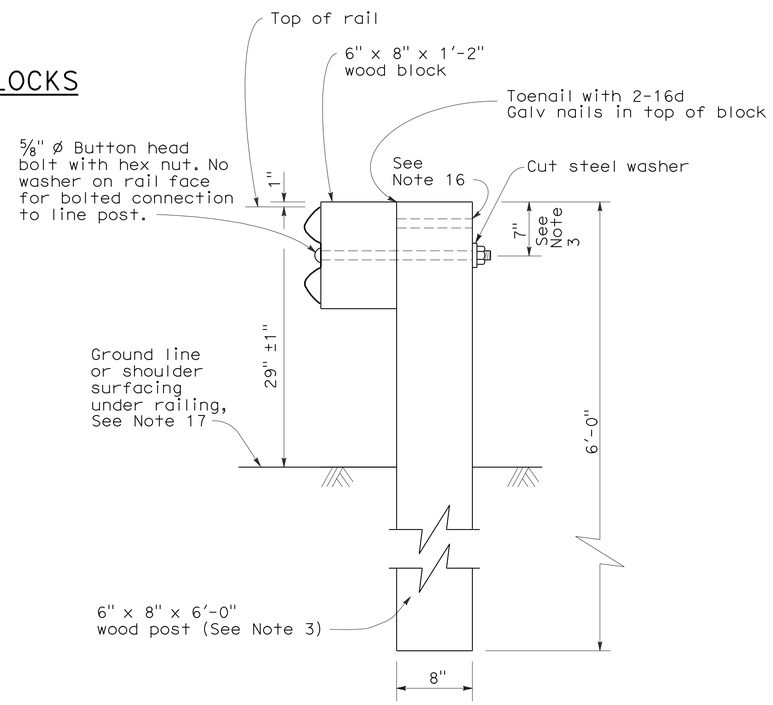


SECTION A-A

## TYPICAL WOOD LINE POST INSTALLATION

See Note 4

## NOTES:

1. For details of steel post installations, see Standard Plan A77A2.
2. For details of standard hardware used to construct guard railing, see Standard Plan A77B1.
3. For details of wood posts and wood blocks used to construct guard railing, see Standard Plan A77C1.
4. For additional installation details, see Standard Plan A77C3.
5. Guard railing post spacing to be 6'-3" center to center, except as otherwise noted.
6. For guard railing typical layouts, see the A77E, A77F and A77G Series of Standard Plans.
7. For terminal system end treatment details, see the A77L Series of Standard Plans. To connect railing to terminal system end treatment, transition the top of railing height at a ratio of 120:1 to terminal system end treatment height plus one 12'-6" standard railing section at the transitioned height for a horizontal connection to the end treatment.
8. For guard railing end anchor details, see Standard Plans A77H1 and A77I2.
9. For details of guard railing transition to bridge railing, see Standard Plan A77J4.
10. For additional details of guard railing connection to bridge railings, see Standard Plans A77J1, A77J2 and A77K1.
11. For guard railing connection details to abutments and walls, see Standard Plan A77J3.
12. Direction of adjacent traffic indicated by →.
13. For typical guard railing delineation and dike positioning details, see Standard Plan A77C4.
14. Slotted hole for bolted connection of rail element to block and post. See "Section Thru Rail Element".
15. Slotted holes for splice bolts to overlap ends of rail element. See "Section Thru Rail Element".
16. Additional hole in uppermost portion of line post is for potential future adjustments of railing height. See Standard Plan A77C1.
17. Install posts in soil.

STATE OF CALIFORNIA
DEPARTMENT OF TRANSPORTATION

# METAL BEAM GUARD RAILING STANDARD RAILING SECTION (WOOD POST WITH WOOD BLOCK)

NO SCALE

RSP A77A1 DATED MAY 20, 2011 SUPERSEDES STANDARD PLAN A77A1 DATED MAY 1, 2006 - PAGE 41 OF THE STANDARD PLANS BOOK DATED MAY 2006.

**1 ADDED PER ADDENDUM No. 1 DATED AUGUST 22, 2011**

**REVISED STANDARD PLAN RSP A77A1**

**2006 REVISED STANDARD PLAN RSP A77A1**

3-10-11

1 ADDED PER ADDENDUM No. 1 DATED AUGUST 22, 2011

To accompany plans dated 4-18-11

| Dist | COUNTY | ROUTE | POST MILES TOTAL PROJECT | SHEET No. | TOTAL SHEETS |
|---|---|---|---|---|---|
| 12 | Ora | 57 | 12.2/15.2 | 431B | 527 |

Randell D. Hiatt
REGISTERED CIVIL ENGINEER

May 20, 2011
PLANS APPROVAL DATE

REGISTERED PROFESSIONAL ENGINEER
Randell D. Hiatt
No. C50200
Exp. 6-30-11
CIVIL
STATE OF CALIFORNIA

1

*The State of California or its officers or agents shall not be responsible for the accuracy or completeness of electronic copies of this plan sheet.*

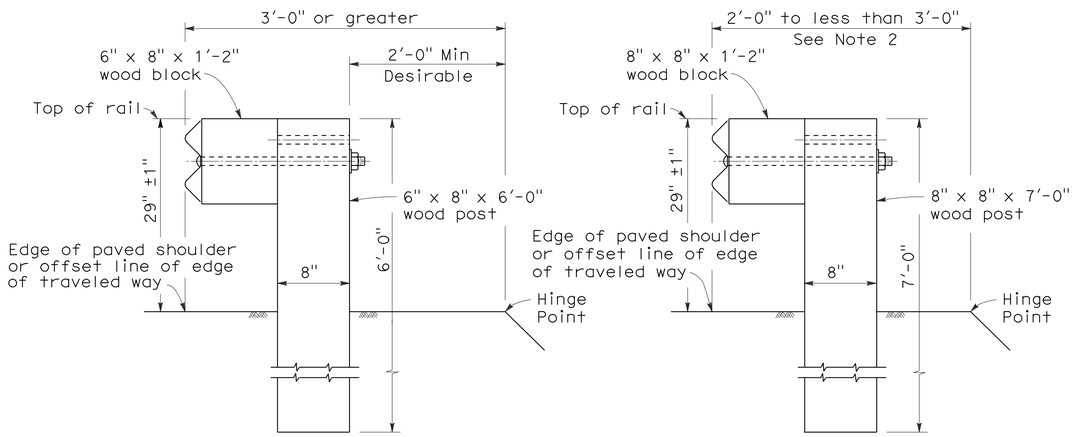


DETAIL A
TYPICAL ROADWAY INSTALLATION
See Note 1

DETAIL B
NARROW ROADWAY INSTALLATION
See Note 1

POST EMBEDMENT

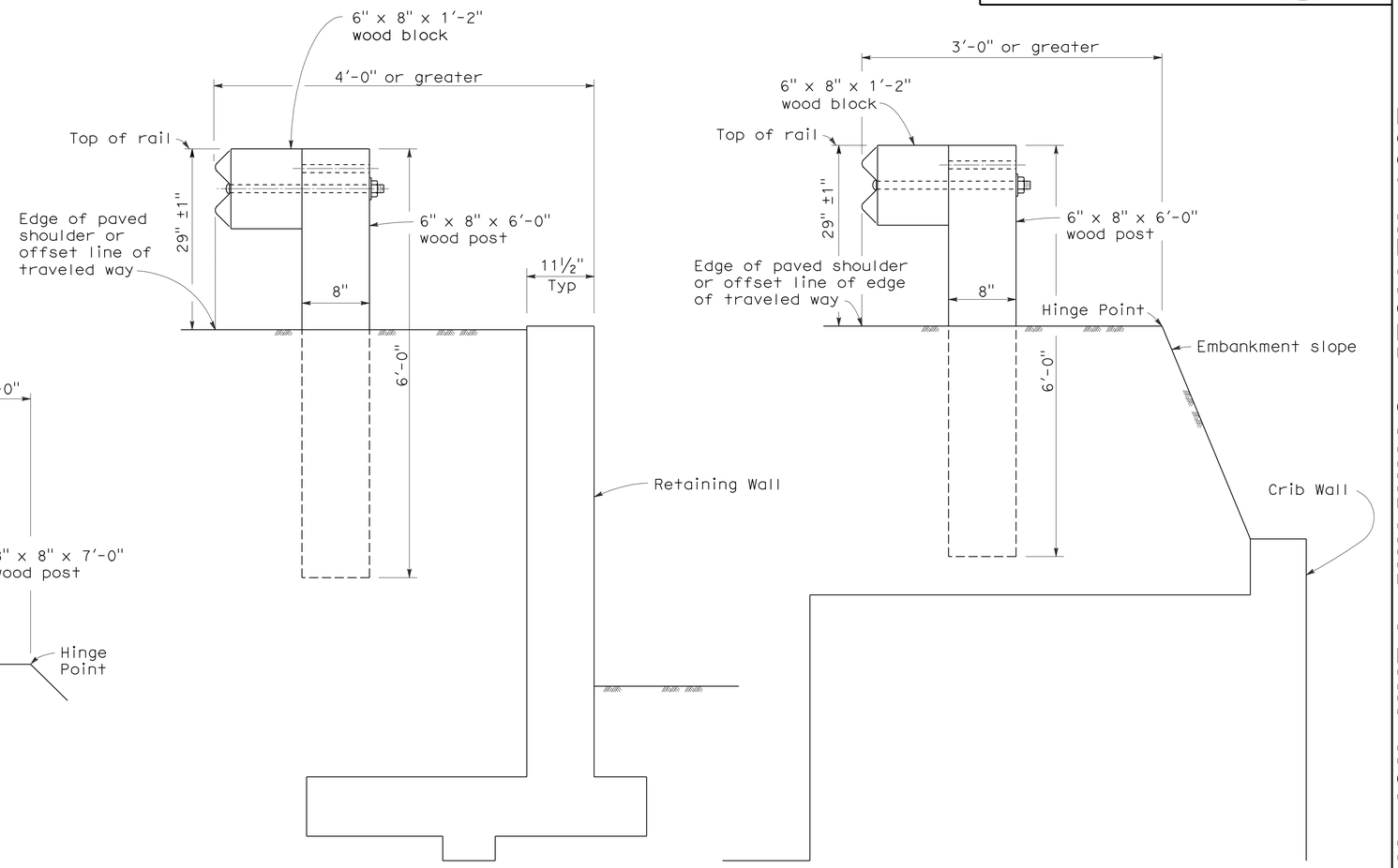


DETAIL C

DETAIL D

INSTALLATION AT EARTH RETAINING WALLS

NOTES:

1. These installation details also applicable to steel line post installations. For Detail A, C, and D, where steel line post installations are constructed, W6 x 9 steel post, 6'-0" in length, with 6" x 8" x 1'-2" notched wood blocks or notched recycled plastic blocks are to be used in place of the size of wood post and wood block shown. For Detail B, where steel line post installations are constructed, W6 x 9 steel post, 7'-0" in length, with 6" x 8" x 1'-2" notched wood blocks or notched recycled plastic blocks are to be used in place of the size of wood post and wood block shown. For additional installation details, see Standard Plans A77A1 and A77A2.

2. Where the distance between the face of the rail and the hinge point is less than 2'-0", see the Project Plans for special details.

3. For dike positioning with guard railing installations, see Standard Plan A77C4.

STATE OF CALIFORNIA
DEPARTMENT OF TRANSPORTATION

# METAL BEAM GUARD RAILING TYPICAL LINE POST EMBEDMENT AND HINGE POINT OFFSET DETAILS

NO SCALE

RSP A77C3 DATED MAY 20, 2011 SUPERSEDES STANDARD PLAN A77C3
DATED MAY 1, 2006 - PAGE 46 OF THE STANDARD PLANS BOOK DATED MAY 2006.

**REVISED STANDARD PLAN RSP A77C3**

2006 REVISED STANDARD PLAN RSP A77C3

3-10-11

| Dist | COUNTY | ROUTE | POST MILES TOTAL PROJECT | SHEET No. | TOTAL SHEETS |
|---|---|---|---|---|---|
| 12 | Ora | 57 | 12.2/15.2 | 431C | 527 |

Randell D. Hiatt
REGISTERED CIVIL ENGINEER

May 20, 2011
PLANS APPROVAL DATE

REGISTERED PROFESSIONAL ENGINEER
Randell D. Hiatt
No. C50200
Exp. 6-30-11
CIVIL
STATE OF CALIFORNIA

1

*The State of California or its officers or agents shall not be responsible for the accuracy or completeness of electronic copies of this plan sheet.*

*To accompany plans dated* 4-18-11

## NOTES:

1. When necessary to place dike in front of face of guard railing, only Type C dike may be used. For dike details, see Standard Plan A87B.
2. For standard railing post embedment, see Standard Plans A77C3.
3. Guard railing delineation to be used where shown on the Project Plans.
4. When dike or curb is placed under guard railing, the maximum height of the dike or curb shall be 4". Mountable dike should not be used. For dike and curb details, see Standard Plans A87A and A87B.
5. For details of typical distance between the face of rail and hinge point, see Standard Plan A77C3.
6. For steel line posts, use 1/4 - 20 self-tapping screws in 0.22" diameter holes or 1/4" bolts in 9/32" diameter holes.

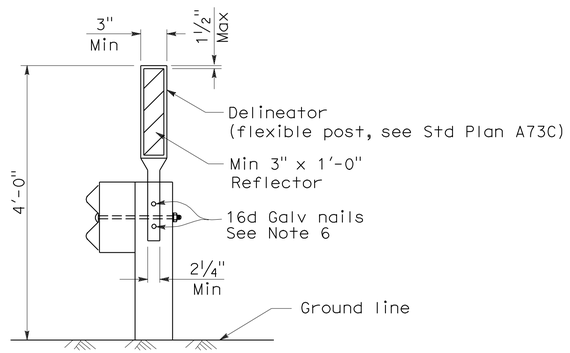


GUARD RAILING DELINEATION

See Note 3

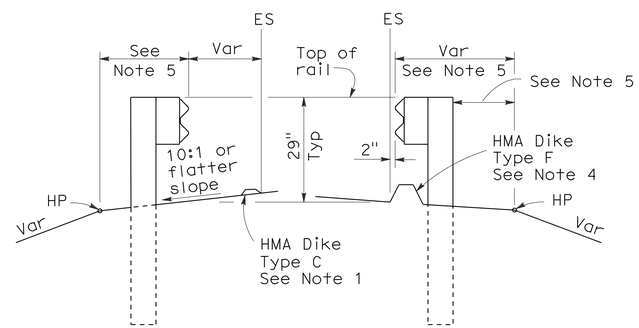


DIKE POSITIONING

See Note 1

STATE OF CALIFORNIA
DEPARTMENT OF TRANSPORTATION

# METAL BEAM GUARD RAILING TYPICAL RAILING DELINEATION AND DIKE POSITIONING DETAILS

NO SCALE

RSP A77C4 DATED MAY 20, 2011 SUPERSEDES RSP A77C4 DATED JUNE 6, 2008 AND STANDARD PLAN A77C4 DATED MAY 1, 2006 - PAGE 47 OF THE STANDARD PLANS BOOK DATED MAY 2006.

**REVISED STANDARD PLAN RSP A77C4**

**2006 REVISED STANDARD PLAN RSP A77C4**

**1 ADDED PER ADDENDUM No. 1 DATED AUGUST 22, 2011**

3-10-11

| Dist | COUNTY | ROUTE | POST MILES TOTAL PROJECT | SHEET No. | TOTAL SHEETS |
|---|---|---|---|---|---|
| 12 | Ora | 57 | 12.2/15.2 | 431D | 527 |

Randell D. Hiatt
REGISTERED CIVIL ENGINEER

May 20, 2011
PLANS APPROVAL DATE

REGISTERED PROFESSIONAL ENGINEER
Randell D. Hiatt
No. C50200
Exp. 6-30-11
CIVIL
STATE OF CALIFORNIA

*The State of California or its officers or agents shall not be responsible for the accuracy or completeness of electronic copies of this plan sheet.*

1

*To accompany plans dated* 4-18-11

2006 REVISED STANDARD PLAN RSP A77H1

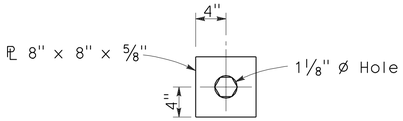


DETAIL A
CABLE CONNECTION
END PLATE

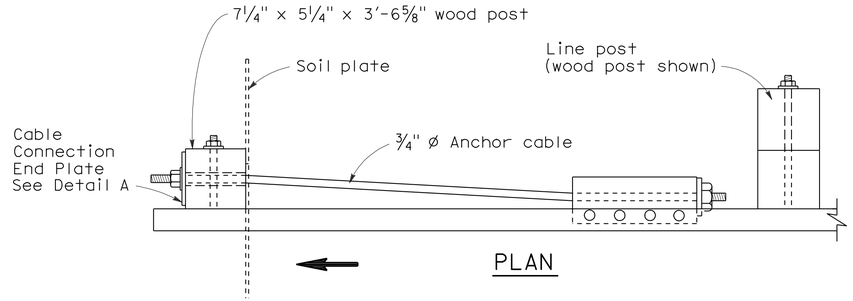


PLAN

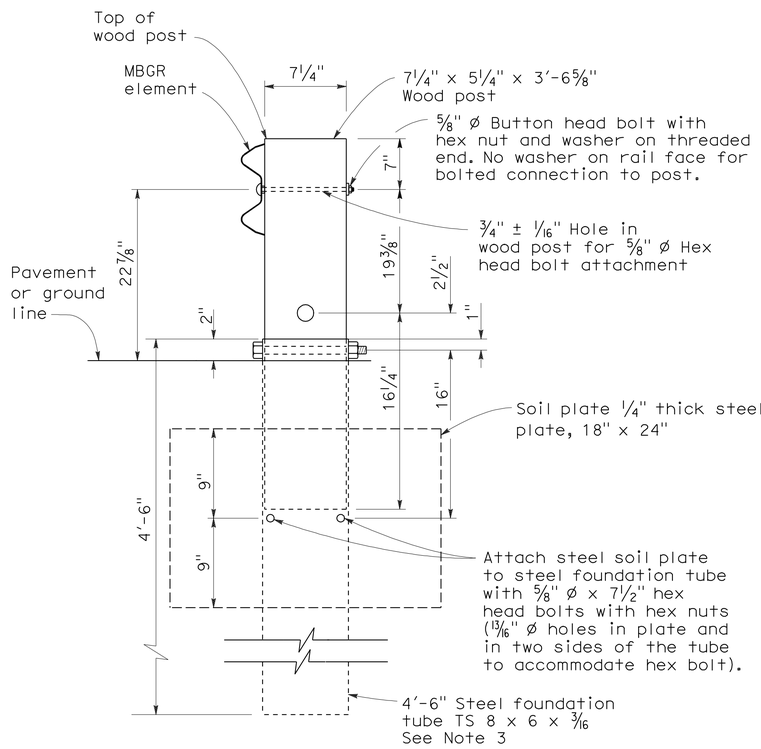


SECTION A-A

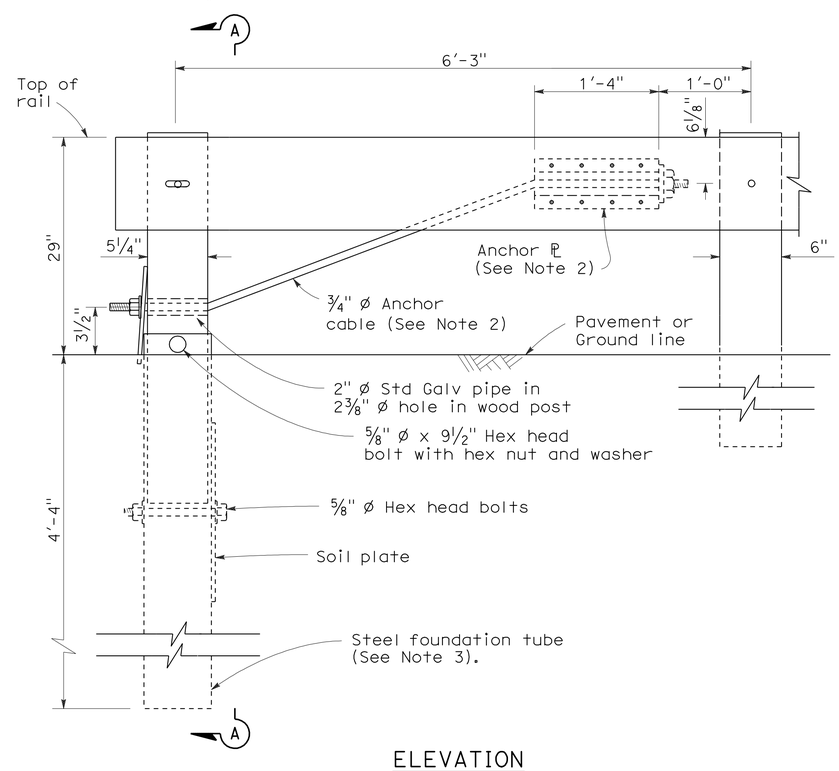


ELEVATION
END ANCHOR
ASSEMBLY (TYPE SFT)
See Note 1

## NOTES:

1. See the A77E, A77F and A77G series of Standard Plans for typical use of End Anchor Assembly (Type SFT).
2. For details of the anchor plate and 3/4" cable, see Standard Plan A77H3.
3. A 6'-0" length steel foundation tube, TS 8 x 6 x 3/16, without a soil plate, may be furnished and installed in place of the 4'-6" length steel foundation tube and soil plate shown. Minimum embedment of the 6'-0" length tube shall be 5'-9". A 5/8" Ø hex head bolt and nut shall be installed in the hole in the 6'-0" length tube to keep the wood post from dropping into the tube.
4. Direction of traffic indicated by ⟹.
5. Install line post, steel foundation tube and soil plate in soil.

STATE OF CALIFORNIA
DEPARTMENT OF TRANSPORTATION

# METAL RAILING END ANCHOR ASSEMBLY (TYPE SFT)

NO SCALE

1 **ADDED PER ADDENDUM No. 1 DATED AUGUST 22, 2011**

RSP A77H1 DATED MAY 20, 2011 SUPERSEDES STANDARD PLAN A77H1
DATED MAY 1, 2006 - PAGE 67 OF THE STANDARD PLANS BOOK DATED MAY 2006.

**REVISED STANDARD PLAN RSP A77H1**

1 ADDED PER ADDENDUM No. 1 DATED AUGUST 22, 2011

| DIST | COUNTY | ROUTE | POST MILES TOTAL PROJECT | SHEET NO. | TOTAL SHEETS |
|---|---|---|---|---|---|
| 12 | Ora | 57 | 12.2/15.2 | 431E | 527 |

REGISTERED CIVIL ENGINEER

June 5, 2009
PLANS APPROVAL DATE

1

*The State of California or its officers or agents shall not be responsible for the accuracy or completeness of electronic copies of this plan sheet.*

REGISTERED PROFESSIONAL ENGINEER Glenn DeCou No. C34547 Exp. 9-30-09 CIVIL STATE OF CALIFORNIA

*To accompany plans dated* 4-18-11

NOTES:

1. H is 2'-6" for fabric less than 5'-0" high. H is 3'-0" for fabric 5'-0" and over.
2. T is not less than 3 times maximum cross section of post with minimum of 8".
3. Arms with barbed wire to be used where shown on plans.
4. See Revised Standard Plan RSP A85 for Chain Link Fencing dimensions.
5. Reinforcing must comply with ASTM A 706.
6. See Detail A on New Standard Plan NSP A86B for connection at headwall.

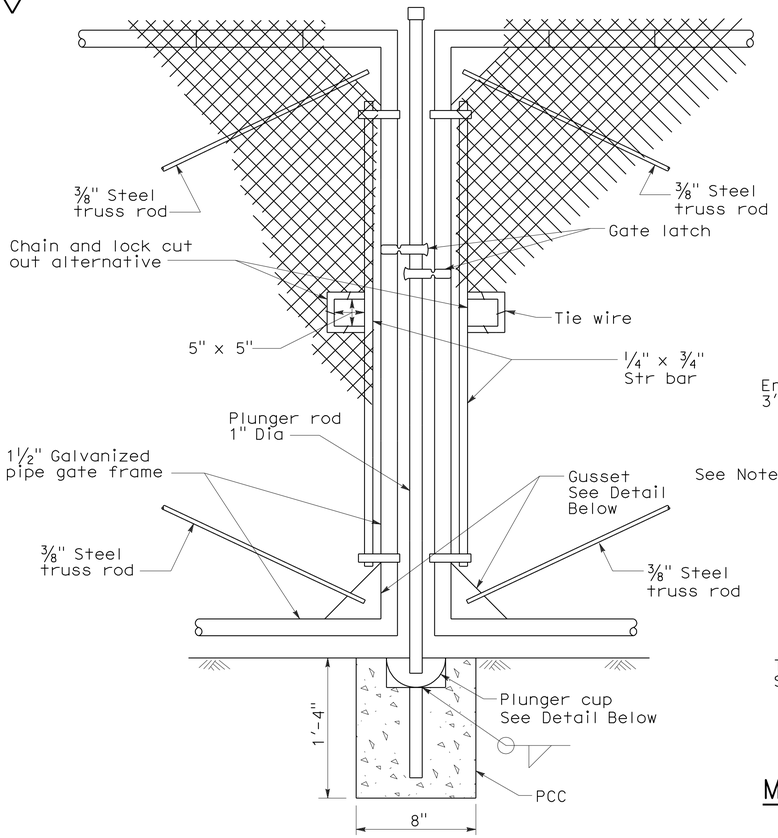


TYPICAL DOUBLE GATE REMOVABLE CENTER POST

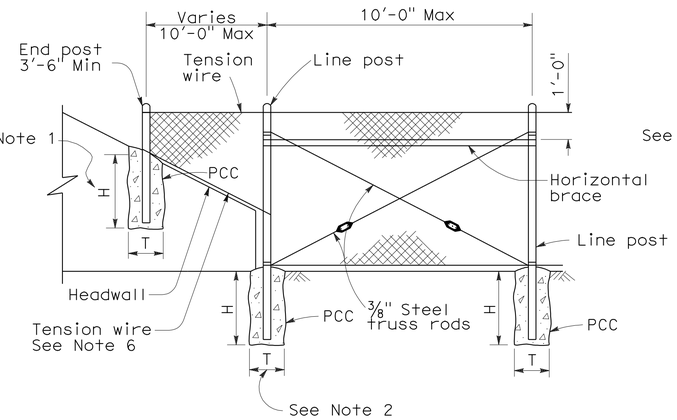


METHOD OF TYING FENCE TO HEADWALL

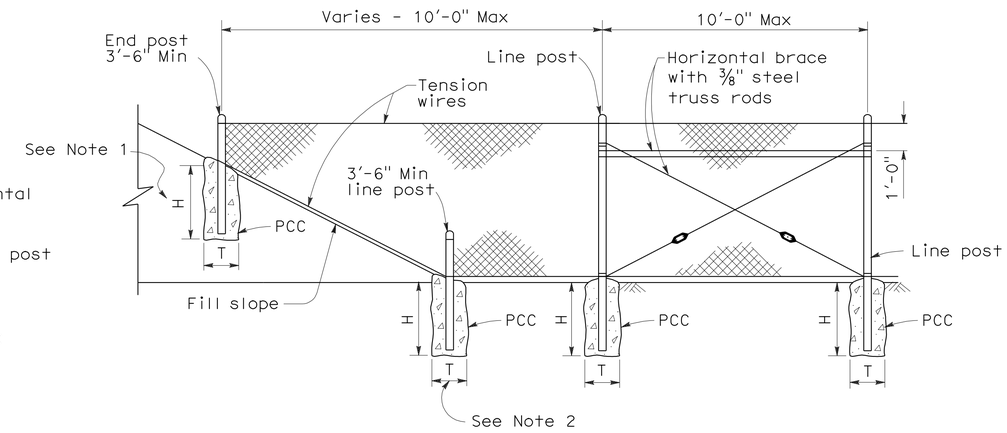


METHOD OF ERECTING FENCE FOR FILL SLOPE

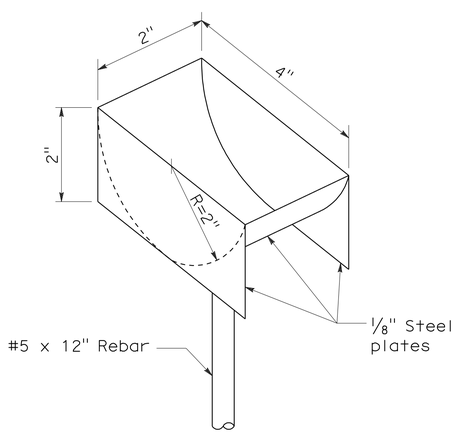


PLUNGER CUP DETAIL

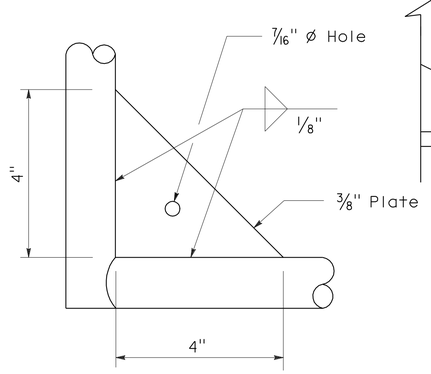


GUSSET DETAIL

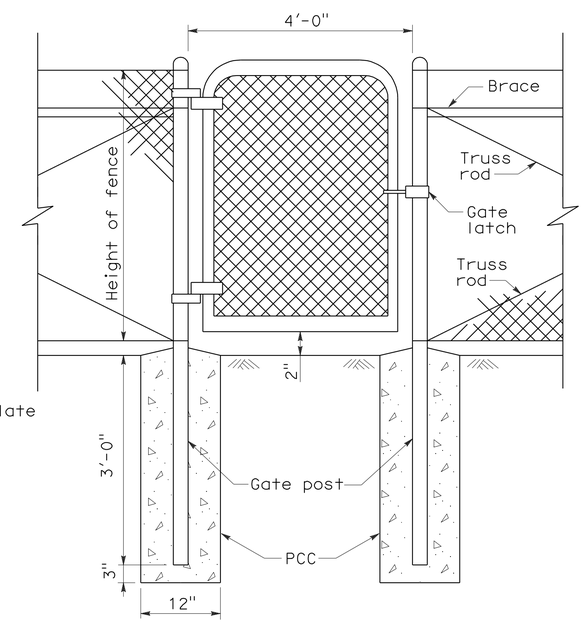


WALK GATE

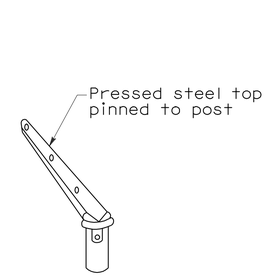


POST TOP END

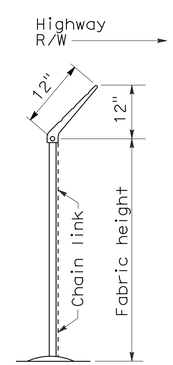


END ELEVATION

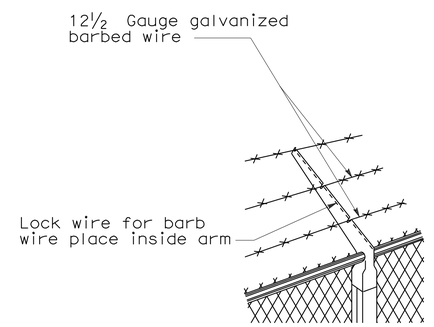


LINE POST TOP
Vertical arms when desired

BARBED WIRE POST TOP
See Note 3

STATE OF CALIFORNIA
DEPARTMENT OF TRANSPORTATION

# CHAIN LINK FENCE DETAILS

NO SCALE

NSP A85A DATED JUNE 5, 2009 SUPPLEMENTS THE STANDARD PLANS BOOK DATED MAY 2006.

**NEW STANDARD PLAN NSP A85A**

2006 NEW STANDARD PLAN NSP A85A

5-7-09

| DIST | COUNTY | ROUTE | POST MILES TOTAL PROJECT | SHEET NO. | TOTAL SHEETS |
|---|---|---|---|---|---|
| 12 | Ora | 57 | 12.2/15.2 | 431F | 527 |

Glenn DeCou
REGISTERED CIVIL ENGINEER

June 5, 2009
PLANS APPROVAL DATE

REGISTERED PROFESSIONAL ENGINEER Glenn DeCou No. C34547 Exp. 9-30-09 CIVIL STATE OF CALIFORNIA

*The State of California or its officers or agents shall not be responsible for the accuracy or completeness of electronic copies of this plan sheet.*

1

*To accompany plans dated* 4-18-11

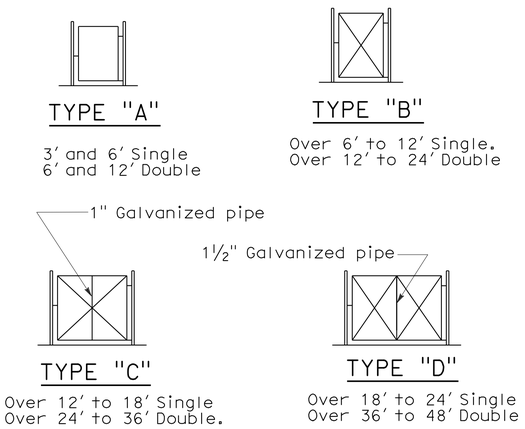


TYPICAL FRAMEWORK SHOWING NUMBER OF BAYS IN GATE

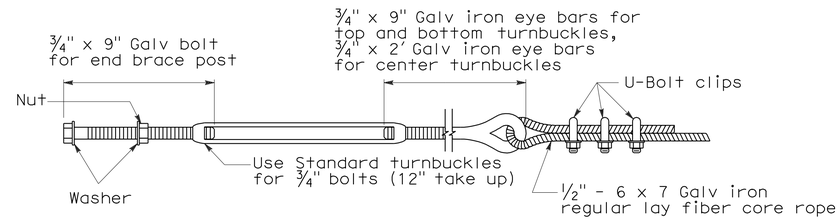


TURNBUCKLE A

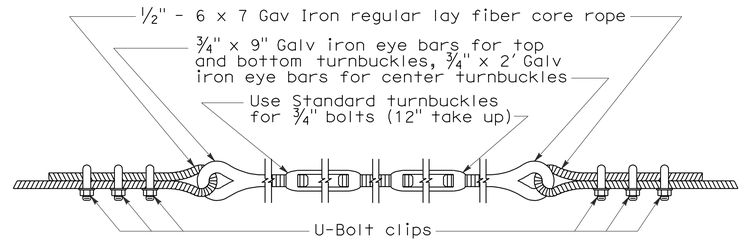


TURNBUCKLE B

## NOTES:

1. All material for abutment connection to be galvanized.
2. The chain link fabric shall be replaced by barbed wire strands at 12" maximum centers between the double posts.
3. When the width of the culvert makes it necessary to anchor a post to the top of the culvert, a cast iron shoe or other device approved by the Engineer shall be used.
4. Fencing over stream and around headwall may also use Barbed Wire or Wire Mesh fencing with either wood post or steel post installation.
5. See Revised Standard Plan RSP A85 for Chain Link fence dimensions. See Standard Plan A86 for Barbed Wire and Wire Mesh fence dimensions and for wood post and steel post installation.

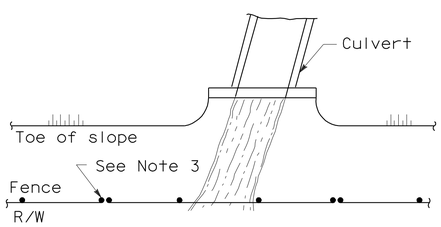


PLAN

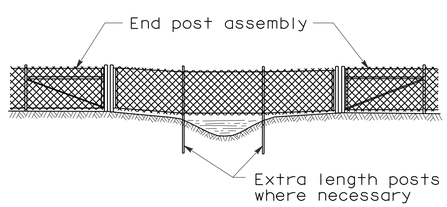


ELEVATION

INSTALLATION OVER STREAM

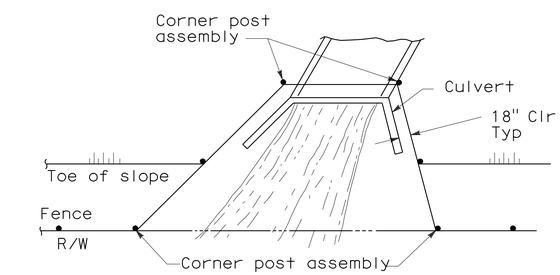


PLAN

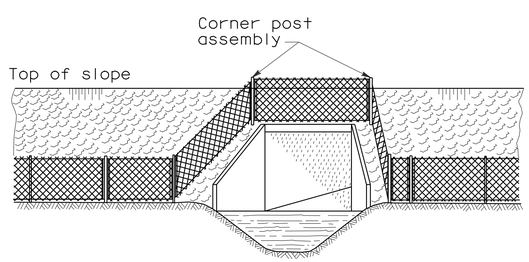


ELEVATION

INSTALLATION AROUND HEADWALL

See Note 4

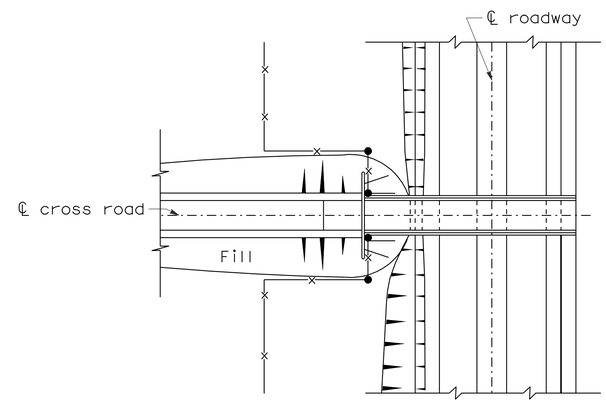


PLAN OF ROADWAY - UNDERPASS

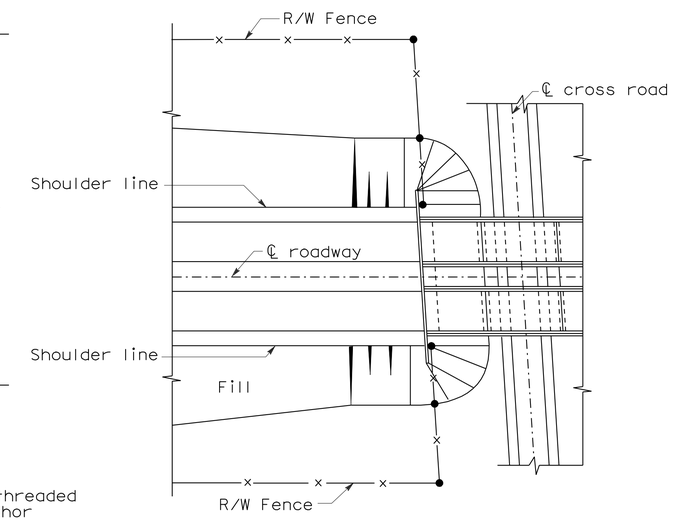


PLAN OF ROADWAY - OVERPASS

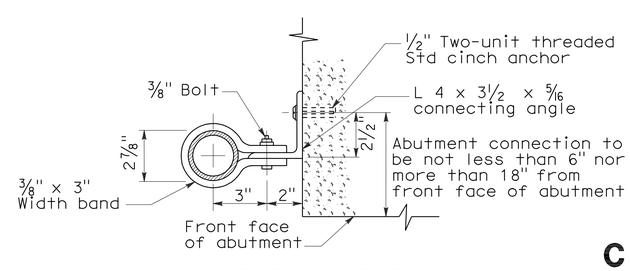


ABUTMENT CONNECTION

TYPICAL INSTALLATION AT BRIDGES

STATE OF CALIFORNIA
DEPARTMENT OF TRANSPORTATION

# CHAIN LINK FENCE DETAILS

NO SCALE

NSP A85B DATED JUNE 5, 2009 SUPPLEMENTS THE STANDARD PLANS BOOK DATED MAY 2006.

1 **ADDED PER ADDENDUM No. 1 DATED AUGUST 22, 2011**

**NEW STANDARD PLAN NSP A85B**

**2006 NEW STANDARD PLAN NSP A85B**

5-12-09

| DIST | COUNTY | ROUTE | POST MILES TOTAL PROJECT | SHEET NO. | TOTAL SHEETS |
|---|---|---|---|---|---|
| 12 | Ora | 57 | 12.2/15.2 | 431G | 527 |

REGISTERED CIVIL ENGINEER

September 1, 2006
PLANS APPROVAL DATE

REGISTERED PROFESSIONAL ENGINEER — Hector David Cordova — No. C41957 — Exp. 3-31-08 — CIVIL — STATE OF CALIFORNIA

*The State of California or its officers or agents shall not be responsible for the accuracy or completeness of electronic copies of this plan sheet.*

*To accompany plans dated* 4-18-11

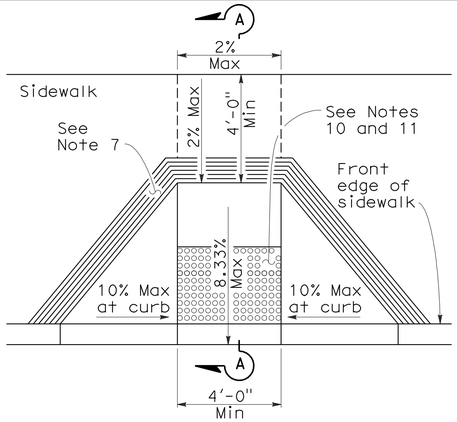


CASE A

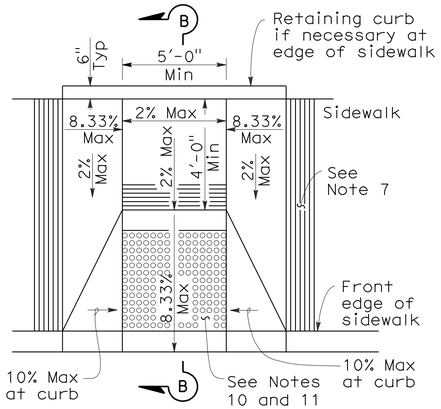


CASE B

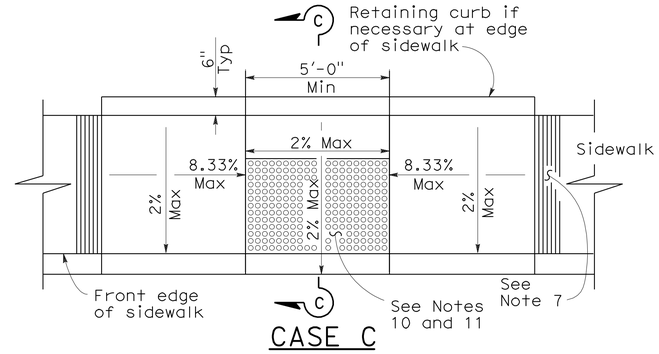


CASE C

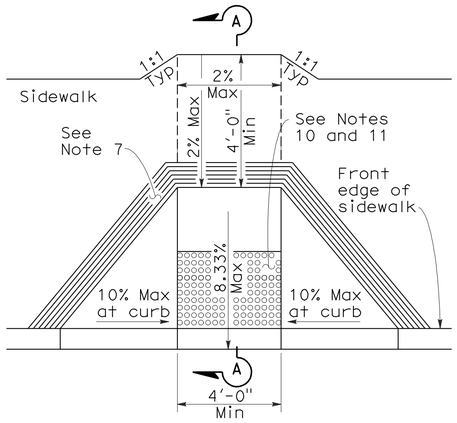


CASE D

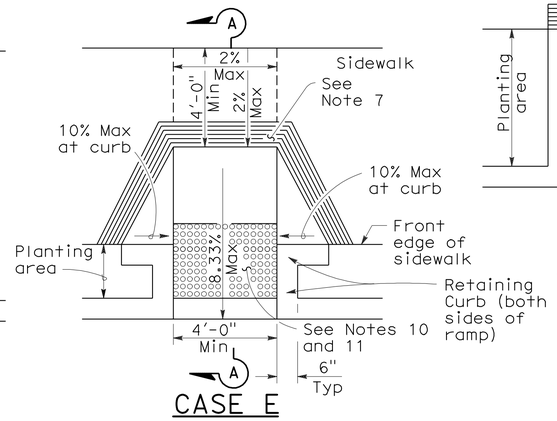


CASE E

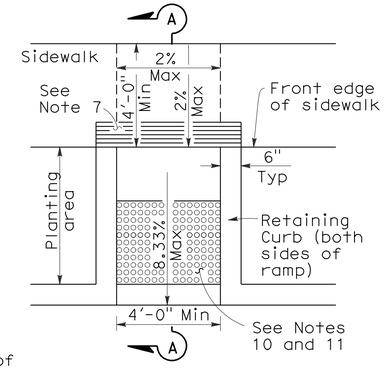


CASE F

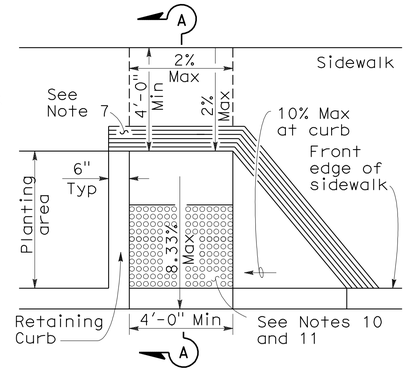


CASE G
See Note 4

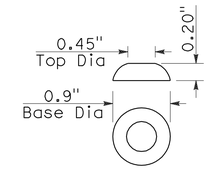


RAISED TRUNCATED DOME

1

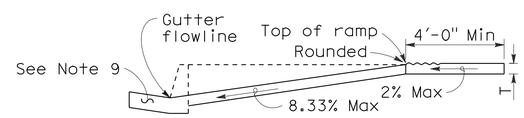


SECTION A-A

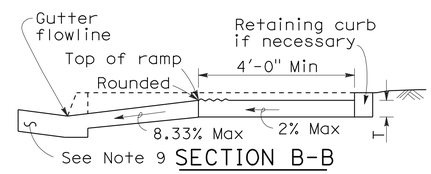


SECTION B-B

Depress entire sidewalk as required

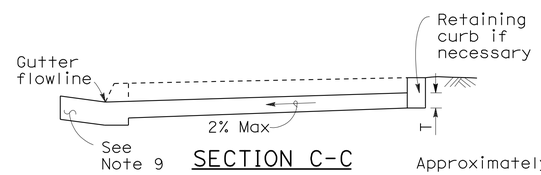


SECTION C-C

## NOTES:

1. As site conditions dictate, Case A through Case G curb ramps may be used for corner installations similar to those shown in Detail A and Detail B. The case of curb ramps used in Detail A do not have to be the same. Case A through Case G curb ramps also may be used at mid block locations, as site conditions dictate.
2. If distance from curb to back of sidewalk is too short to accommodate ramp and 4'-0" platform (landing) as shown in Case A, the sidewalk may be depressed longitudinally as in Case B, or C or may be widened as in Case D.
3. When ramp is located in center of curb return, crosswalk configuration must be similar to that shown for Detail B.
4. As site conditions dictate, the retaining curb side and the flared side of the Case G ramp shall be constructed in reversed position.
5. If located on a curve, the sides of the ramp need not be parallel, but the minimum width of the ramp shall be 4'-0".
6. Side slope of ramp flares vary uniformly from a maximum of 10% at curb to conform with longitudinal sidewalk slope adjacent to top of the ramp, except in Case C and Case F.
7. The curb ramp shall be outlined, as shown, with a 1'-0" wide border with 1/4" grooves approximately 3/4" on center. See grooving detail.
8. Transitions from ramps and landing to walks, gutters or streets shall be flush and free of abrupt changes.
9. Maximum slopes of adjoining gutters, the road surface immediately adjacent to the curb ramp or accessible route shall not exceed 5 percent within 4'-0" of the top and bottom of the curb ramp.
10. Curb ramps shall have a detectable warning surface that extends the full width and 3'-0" depth of the ramp. Detectable Warning Surfaces shall conform to the details on this plan and the requirements in the Special Provisions.
11. The edge of the detectable warning surface nearest the street shall be between 6" and 8" from the gutter flowline.
12. Sidewalk and ramp thickness, "T", shall be 3 1/2" minimum.
13. Utility pull boxes, manholes, vaults and all other utility facilities within the boundaries of the curb ramp will be relocated or adjusted to grade by the owner prior to, or in conjunction with, curb ramp construction.
14. For retrofit conditions, removal and replacement of curb apron will be at the Contractor's option, unless otherwise shown on project plans.

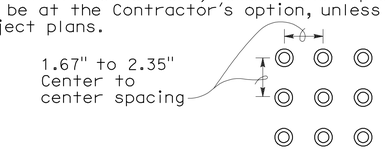


RAISED TRUNCATED DOME PATTERN (IN-LINE)

DETECTABLE WARNING SURFACE

See Note 10

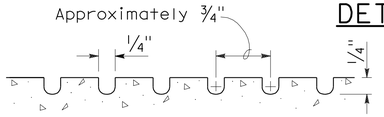


GROOVING DETAIL

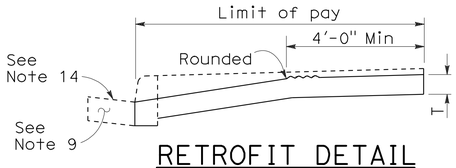


RETROFIT DETAIL

Existing curb and sidewalk

**1 ADDED PER ADDENDUM No. 1 DATED AUGUST 22, 2011**

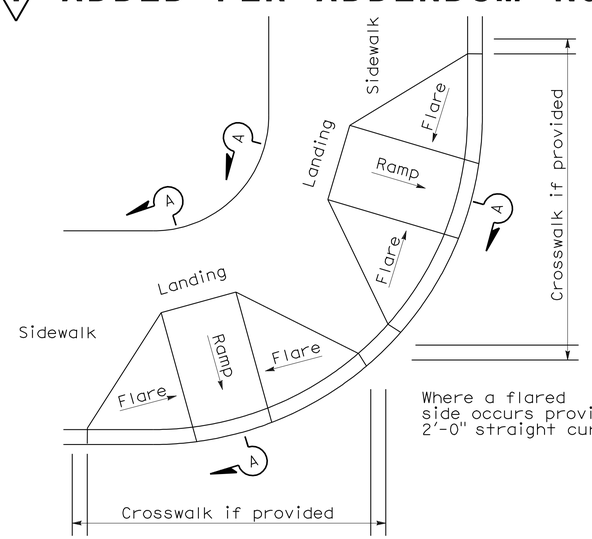


DETAIL A

TYPICAL TWO-RAMP CORNER INSTALLATION

See Note 1

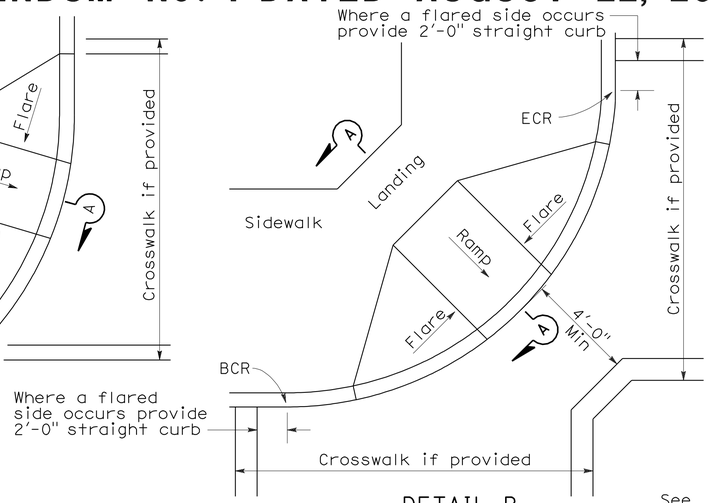


DETAIL B

TYPICAL ONE-RAMP CORNER INSTALLATION

See Notes 1 and 3

STATE OF CALIFORNIA
DEPARTMENT OF TRANSPORTATION

# CURB RAMP DETAILS

NO SCALE

RSP A88A DATED SEPTEMBER 1, 2006 SUPERSEDES STANDARD PLAN A88A DATED MAY 1, 2006 - PAGE 115 OF THE STANDARD PLANS BOOK DATED MAY 2006.

**REVISED STANDARD PLAN RSP A88A**

**2006 REVISED STANDARD PLAN RSP A88A**

8-3-06

| DIST | COUNTY | ROUTE | POST MILES TOTAL PROJECT | SHEET NO. | TOTAL SHEETS |
|---|---|---|---|---|---|
| 12 | Ora | 57 | 12.2/15.2 | 431H | 527 |

William K. Farnbach
REGISTERED CIVIL ENGINEER

June 5, 2009
PLANS APPROVAL DATE

REGISTERED PROFESSIONAL ENGINEER
William K. Farnbach
No. C49042
Exp. 9-30-10
CIVIL
STATE OF CALIFORNIA

*The State of California or its officers or agents shall not be responsible for the accuracy or completeness of electronic copies of this plan sheet.*

1

*To accompany plans dated* 4-18-11

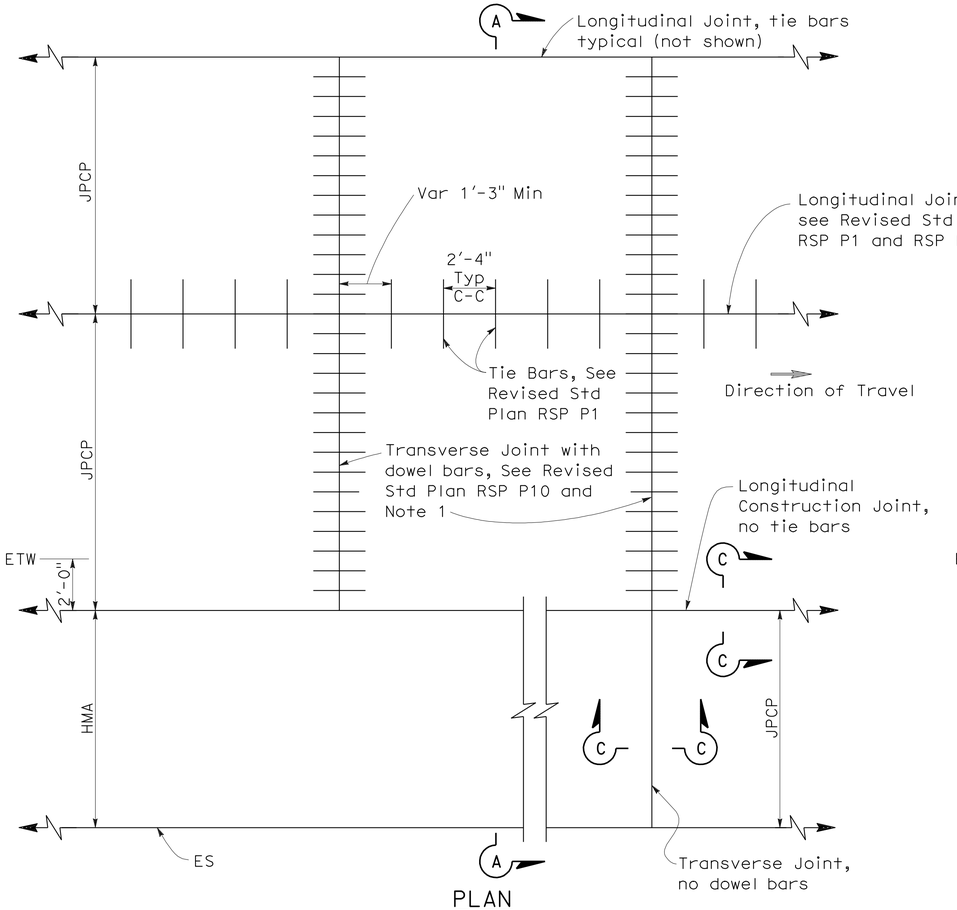


PLAN

NEW CONSTRUCTION

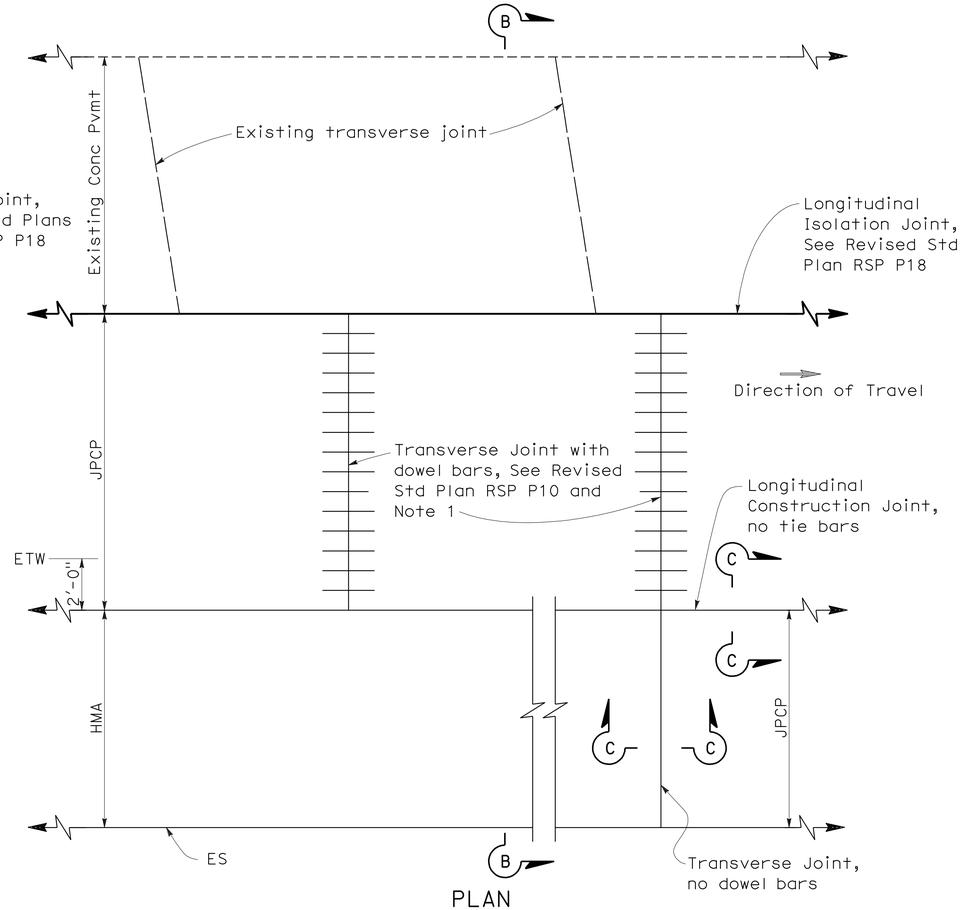


PLAN

LANE/SHOULDER ADDITION OR RECONSTRUCTION

NOTES:

1. Transverse joints shall be constructed at right angles to the longitudinal pavement joints in new Jointed Plain Concrete Pavement and spaced at successive repeated intervals of 12', 15', 13' and 14'.
2. For locations of rumble strips, see project plans. For rumble strip details not shown, see Standard Plans A40A and A40B.
3. Joint spacing patterns do not apply to intersections.

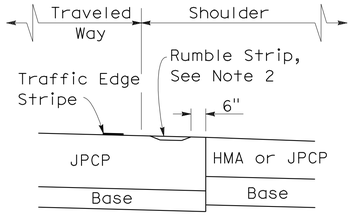


DETAIL "A"

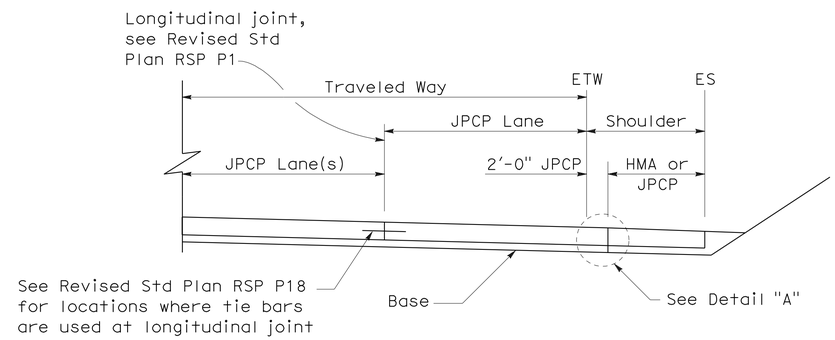


SECTION A-A

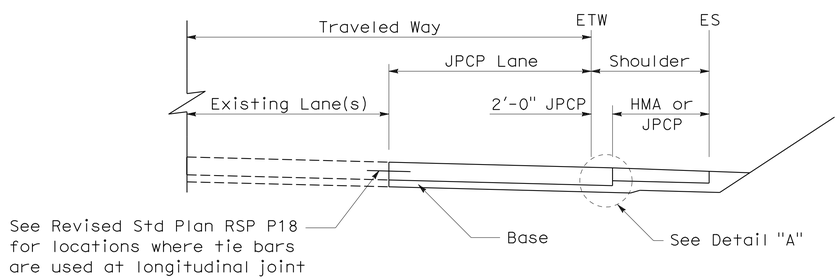


SECTION B-B

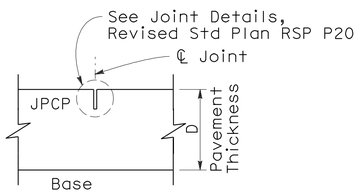


SECTION C-C

TRANSVERSE/LONGITUDINAL JOINT

(no dowel bars/tie bars)

STATE OF CALIFORNIA
DEPARTMENT OF TRANSPORTATION

# JOINTED PLAIN CONCRETE PAVEMENT-WIDENED SLAB DETAILS

NO SCALE

1 **ADDED PER ADDENDUM No. 1 DATED AUGUST 22, 2011**

RSP P2 DATED JUNE 5, 2009 SUPERCEDES STANDARD PLAN P2
DATED MAY 1, 2006 - PAGE 120 OF THE STANDARD PLANS BOOK DATED MAY 2006.

**REVISED STANDARD PLAN RSP P2**

**2006 REVISED STANDARD PLAN RSP P2**

5-19-09

1 ADDED PER ADDENDUM No. 1 DATED AUGUST 22, 2011

| DIST | COUNTY | ROUTE | POST MILES TOTAL PROJECT | SHEET NO. | TOTAL SHEETS |
|---|---|---|---|---|---|
| 12 | Ora | 57 | 12.2/15.2 | 431I | 527 |

REGISTERED CIVIL ENGINEER

May 15, 2009
PLANS APPROVAL DATE

REGISTERED PROFESSIONAL ENGINEER William K. Farnbach No. C49042 Exp. 9-30-10 CIVIL STATE OF CALIFORNIA

*The State of California or its officers or agents shall not be responsible for the accuracy or completeness of electronic copies of this plan sheet.*

*To accompany plans dated* 4-18-11

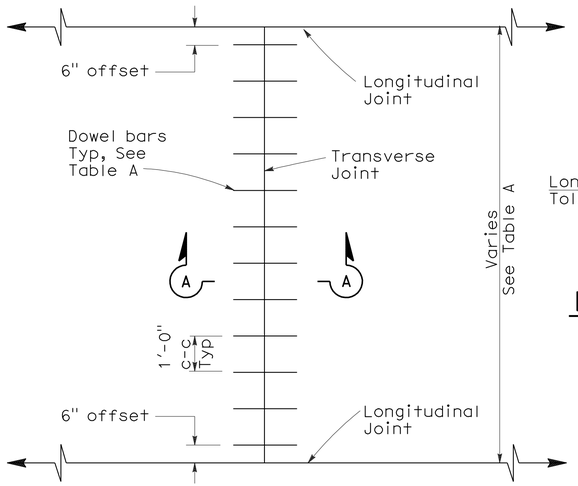


TRANSVERSE JOINT DOWEL BAR LAYOUT

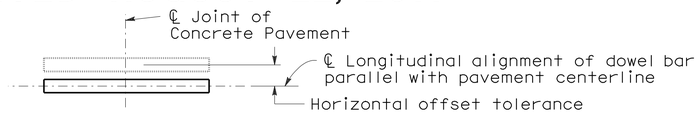


PLAN

HORIZONTAL OFFSET TOLERANCE

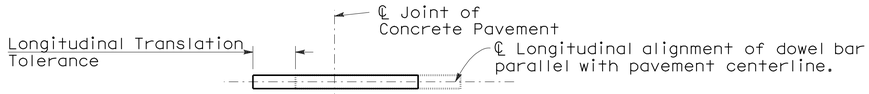


PLAN

LONGITUDINAL TRANSLATION TOLERANCE

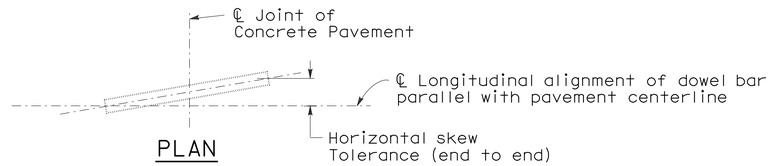


PLAN

HORIZONTAL SKEW TOLERANCE

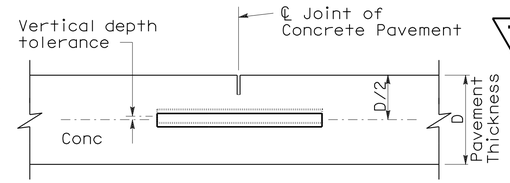


ELEVATION

VERTICAL DEPTH TOLERANCE

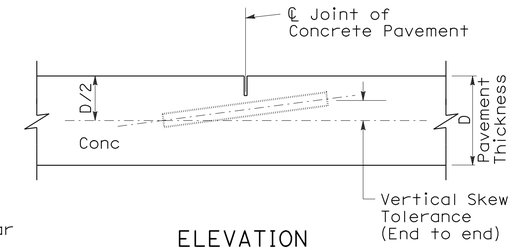


ELEVATION

VERTICAL SKEW TOLERANCE

NOTES:

1. See Revised Standard Plan RSP P1 for typical dowel bar placement and locations.
2. 1½" Dia smooth dowel bars are to be used with a pavement thickness, D, equal to or greater than 0.70 feet. For pavement thickness, D, less than 0.70 feet, use 1¼" Dia smooth dowel bars.
3. For widths not shown, see Project Plans.
4. If fresh concrete pavement is placed adjacent to existing concrete pavement, the top corner of the existing concrete pavement does not need to be rounded to the ¼" radius, as shown.

TABLE A (See Note 3)

| Dowel Bar Transverse Spacing Table | |
|---|---|
| Width between Longitudinal Joints | Number of Dowels between Longitudinal Joints |
| 14'-0" | 14 |
| 13'-0" | 13 |
| 12'-0" | 12 |
| 11'-0" | 11 |
| 10'-0" | 10 |
| 8'-0" | 8 |
| 5'-0" | 5 |
| 4'-0" | 4 |

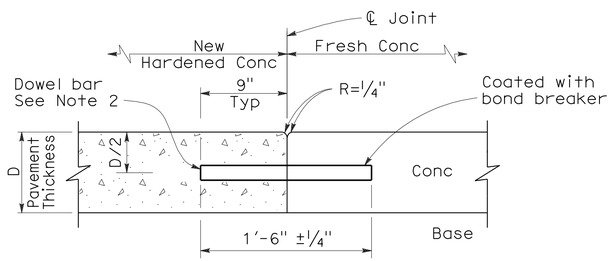


SECTION A-A

TRANSVERSE CONSTRUCTION JOINT DETAIL

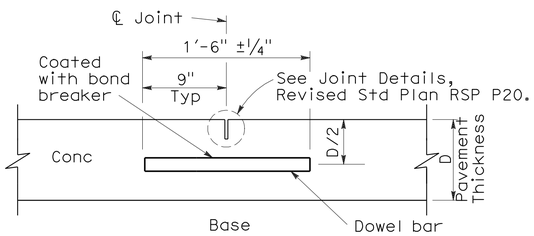


TRANSVERSE CONTRACTION JOINT

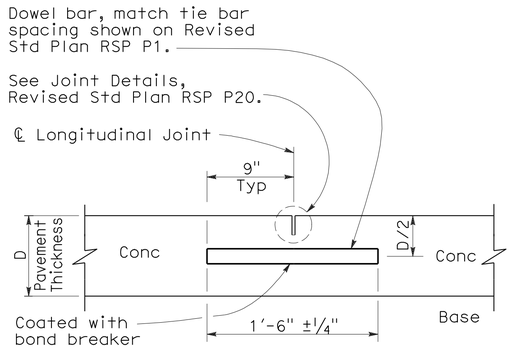


LONGITUDINAL CONTRACTION JOINT WITH DOWEL BARS

(See Revised Std Plan RSP P18)

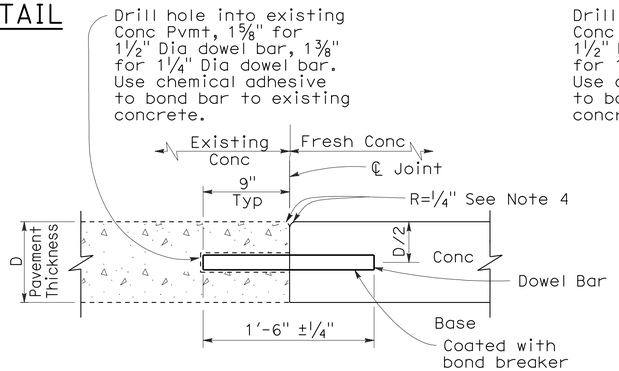


TRANSVERSE CONSTRUCTION JOINT FOR EXISTING CONCRETE PAVEMENT

(Drill and bond locations)

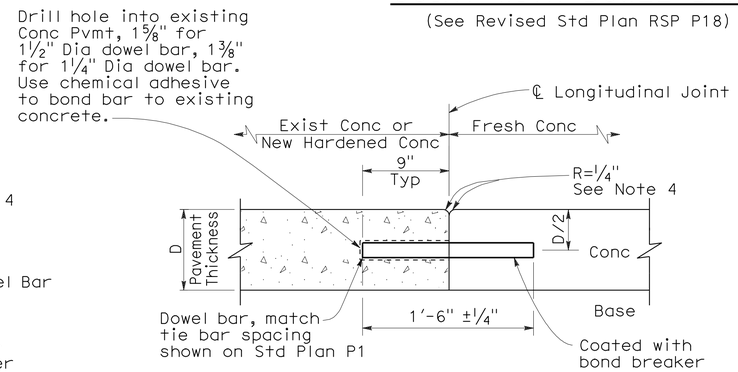


LONGITUDINAL CONSTRUCTION JOINT WITH DOWEL BARS

(See Revised Std Plan RSP P18)

STATE OF CALIFORNIA
DEPARTMENT OF TRANSPORTATION

# CONCRETE PAVEMENT-DOWEL BAR DETAILS

NO SCALE

RSP P10 DATED MAY 15, 2009 SUPERSEDES STANDARD PLAN P10 DATED MAY 1, 2006 - PAGE 124 OF THE STANDARD PLANS BOOK DATED MAY 2006.

**REVISED STANDARD PLAN RSP P10**

**2006 REVISED STANDARD PLAN RSP P10**

5-8-09

| DIST | COUNTY | ROUTE | POST MILES TOTAL PROJECT | SHEET NO. | TOTAL SHEETS |
|---|---|---|---|---|---|
| 12 | Ora | 57 | 12.2/15.2 | 431J | 527 |

William K. Farnbach
REGISTERED CIVIL ENGINEER

May 15, 2009
PLANS APPROVAL DATE

REGISTERED PROFESSIONAL ENGINEER
William K. Farnbach
No. C49042
Exp. 9-30-10
CIVIL
STATE OF CALIFORNIA

*The State of California or its officers or agents shall not be responsible for the accuracy or completeness of electronic copies of this plan sheet.*

1

*To accompany plans dated* 4-18-11

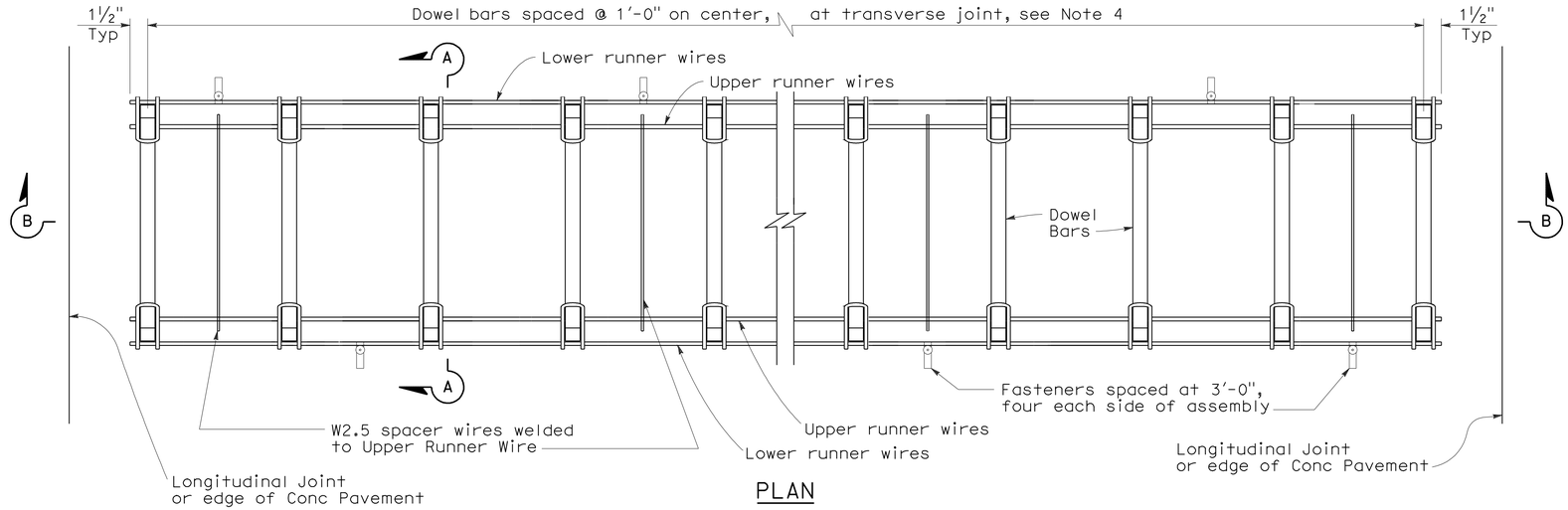


PLAN

## DOWEL BAR BASKET (TRANSVERSE JOINT)

See Note 1

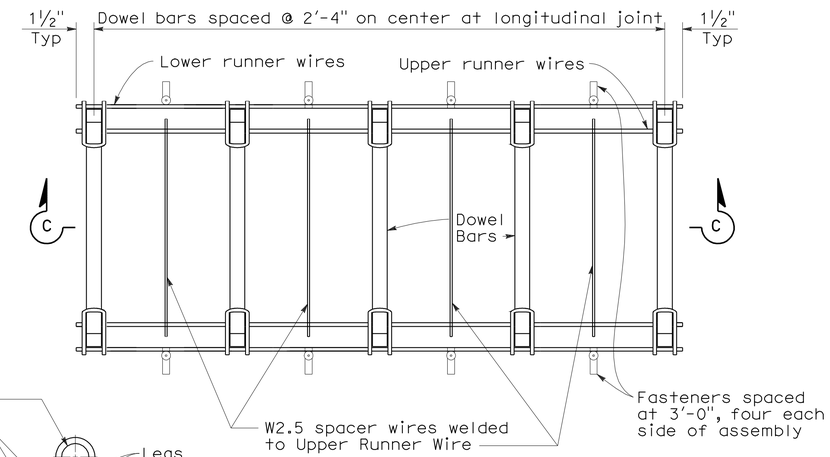


PLAN

## DOWEL BAR BASKET (LONGITUDINAL JOINT)

See Note 1

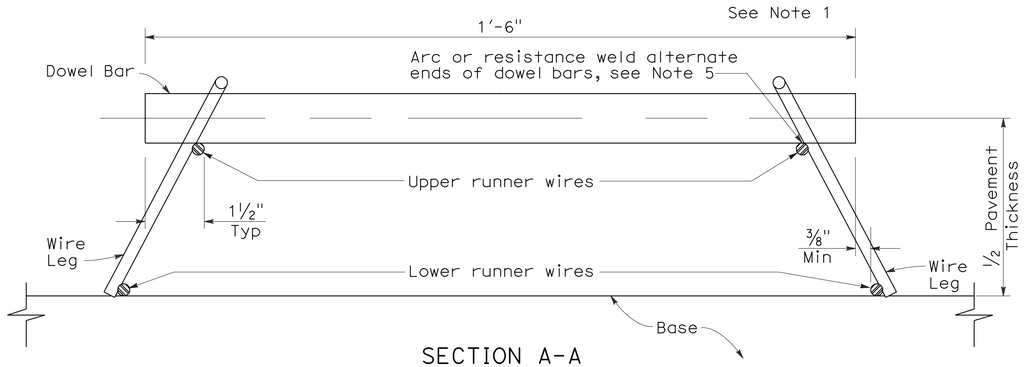


SECTION A-A

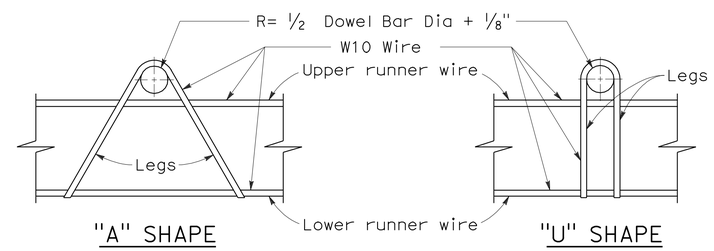


"A" SHAPE "U" SHAPE

ASSEMBLY FRAME DETAILS

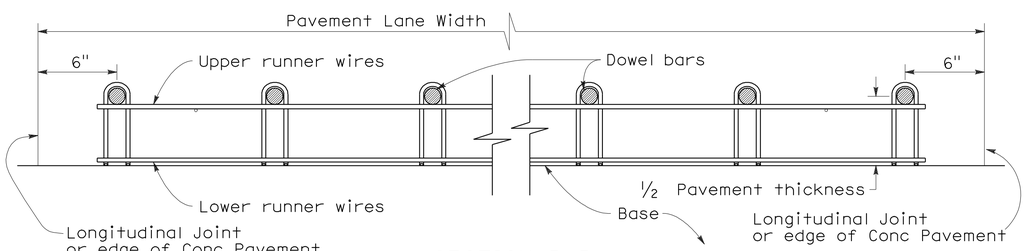


SECTION B-B

See Note 1

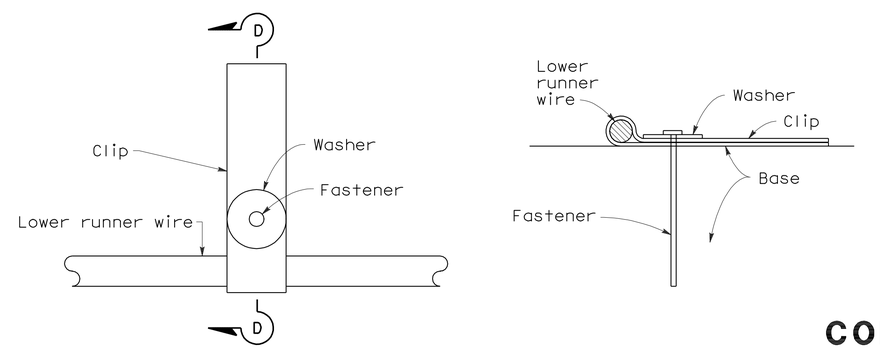


PLAN SECTION D-D

FASTENER DETAIL

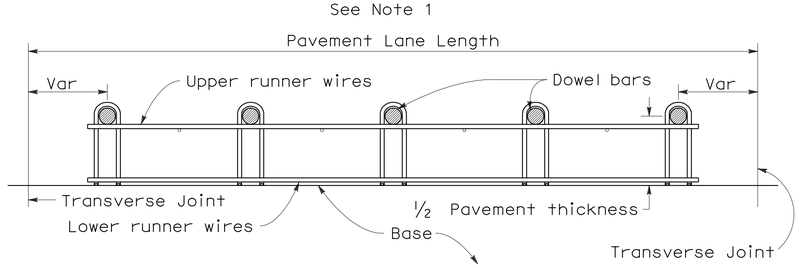


SECTION C-C

See Notes 1 and 4

## NOTES:

1. "U" frame shape assembly shown. "U" frame shape or "A" frame shape are acceptable.
2. Wire sizes shown are minimum required.
3. All wire intersections are to be resistance welded.
4. Use tie bar spacing for longitudinal dowel bar locations. See Revised Std Plans RSPs P1, P2, and P3 for tie bar requirements.
5. Weld may be at top or bottom of dowel bar.

STATE OF CALIFORNIA
DEPARTMENT OF TRANSPORTATION

# CONCRETE PAVEMENT-DOWEL BAR BASKET DETAILS

NO SCALE

1 **ADDED PER ADDENDUM No. 1 DATED AUGUST 22, 2011**

RSP P12 DATED MAY 15, 2009 SUPERSEDES RSP P12 DATED NOVEMBER 17, 2006 AND STANDARD PLAN P12 DATED MAY 1, 2006 - PAGE 125 OF THE STANDARD PLANS BOOK DATED MAY 2006.

**REVISED STANDARD PLAN RSP P12**

**2006 REVISED STANDARD PLAN RSP P12**

5-8-09

| DIST | COUNTY | ROUTE | POST MILES TOTAL PROJECT | SHEET NO. | TOTAL SHEETS |
|---|---|---|---|---|---|
| 12 | Ora | 57 | 12.2/15.2 | 431K | 527 |

William K. Farnbach
REGISTERED CIVIL ENGINEER

May 15, 2009
PLANS APPROVAL DATE

REGISTERED PROFESSIONAL ENGINEER
William K. Farnbach
No. C49042
Exp. 9-30-10
CIVIL
STATE OF CALIFORNIA

1

*The State of California or its officers or agents shall not be responsible for the accuracy or completeness of electronic copies of this plan sheet.*

*To accompany plans dated* 4-18-11

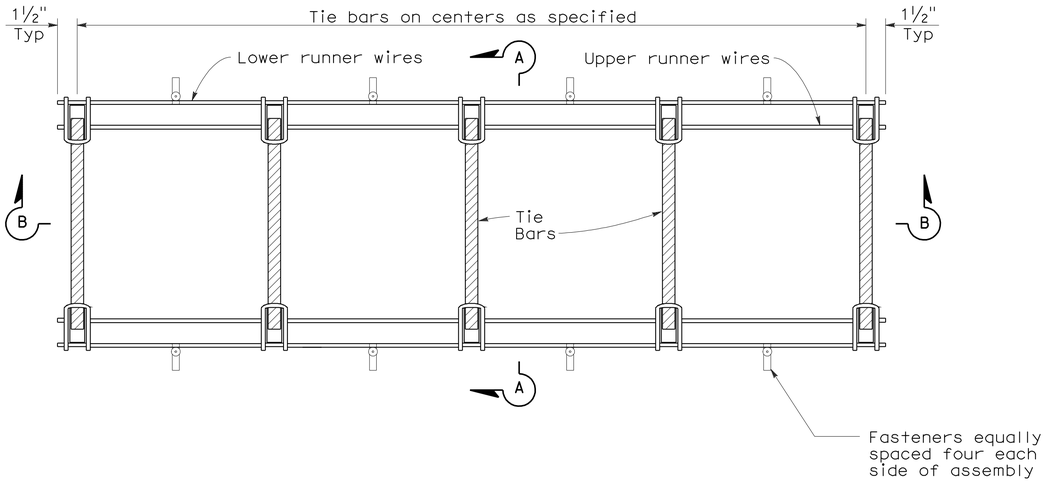


PLAN

## TIE BAR BASKET

(TIE BARS AT LONGITUDINAL JOINT)
See Note 1

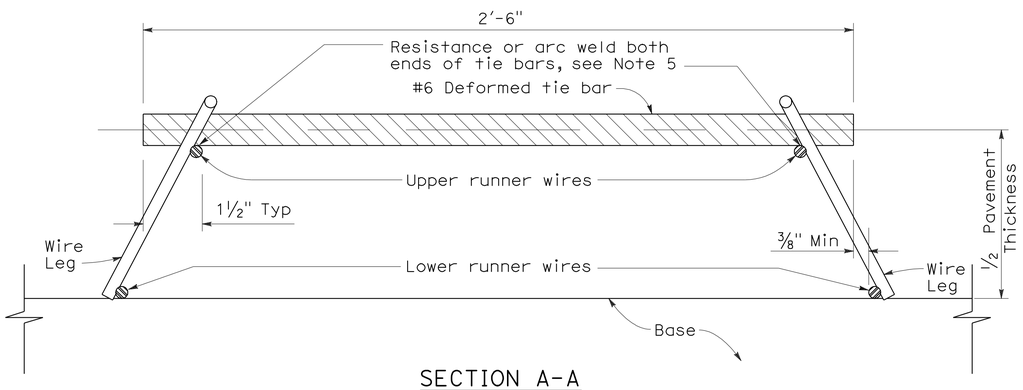


SECTION A-A

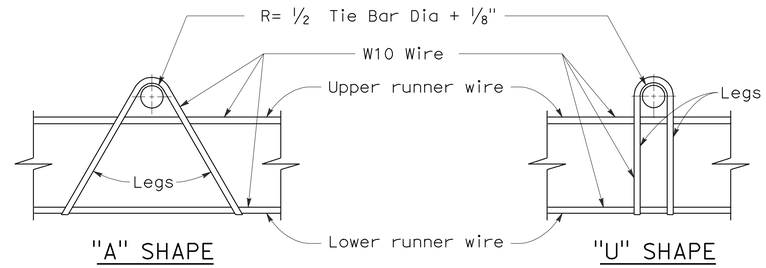


ASSEMBLY FRAME DETAILS

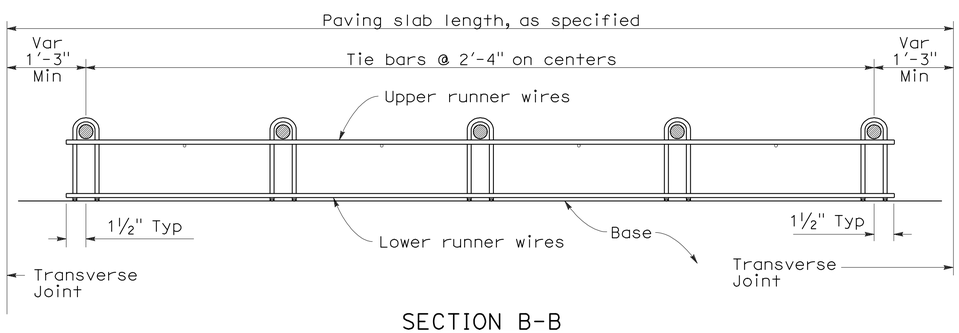


SECTION B-B
See Note 1

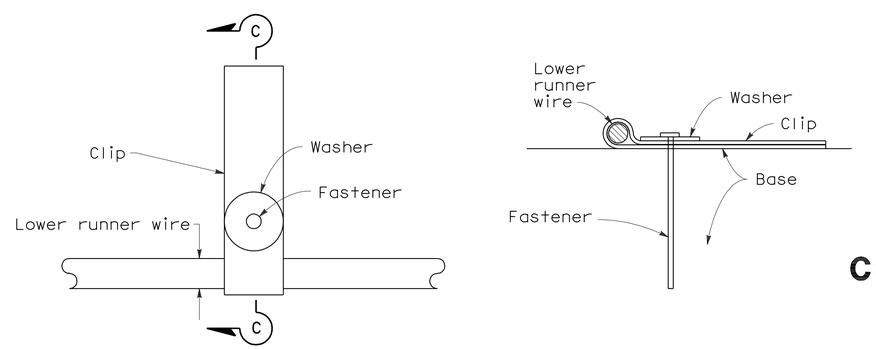


PLAN

SECTION C-C

FASTENER DETAIL

## NOTES:

1. "U" frame shape assembly shown. "U" frame shape or "A" frame shape are acceptable.
2. Wire sizes shown are minimum required.
3. All wire intersections are to be resistance welded.
4. Not for use on nondoweled skewed jointed plain concrete pavement.
5. Weld may be at top or bottom of tie bar.

STATE OF CALIFORNIA
DEPARTMENT OF TRANSPORTATION

# CONCRETE PAVEMENT-TIE BAR BASKET DETAILS

NO SCALE

**1 ADDED PER ADDENDUM No. 1 DATED AUGUST 22, 2011**

RSP P17 DATED MAY 15, 2009 SUPERSEDES RSP P17 DATED NOVEMBER 17, 2006 AND STANDARD PLAN P17 DATED MAY 1, 2006 - PAGE 126 OF THE STANDARD PLANS BOOK DATED MAY 2006.

**REVISED STANDARD PLAN RSP P17**

**2006 REVISED STANDARD PLAN RSP P17**

5-8-09

NOTE:

1. Tie bars, dowel bars, and reinforcement are not shown in joint seal details, see Revised Standard Plans RSP P1, RSP P3, RSP P10, RSP P35, RSP P45, or RSP P46 as applicable.

1 ADDED PER ADDENDUM No. 1 DATED AUGUST 22, 2011

| DIST | COUNTY | ROUTE | POST MILES TOTAL PROJECT | SHEET NO. | TOTAL SHEETS |
|---|---|---|---|---|---|
| 12 | Ora | 57 | 12.2/15.2 | 431L | 527 |

William K. Farnbach
REGISTERED CIVIL ENGINEER

May 15, 2009
PLANS APPROVAL DATE

1

REGISTERED PROFESSIONAL ENGINEER
William K. Farnbach
No. C49042
Exp. 9-30-10
CIVIL
STATE OF CALIFORNIA

*The State of California or its officers or agents shall not be responsible for the accuracy or completeness of electronic copies of this plan sheet.*

*To accompany plans dated* 4-18-11

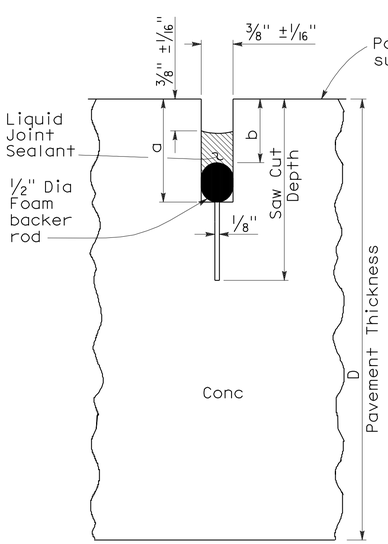


LIQUID SEALANT

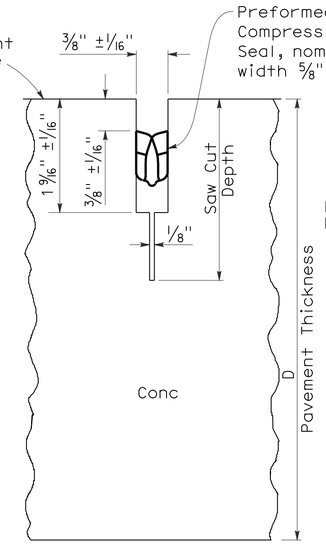


COMPRESSION SEAL

## TYPE A1

Transverse Contraction Joints

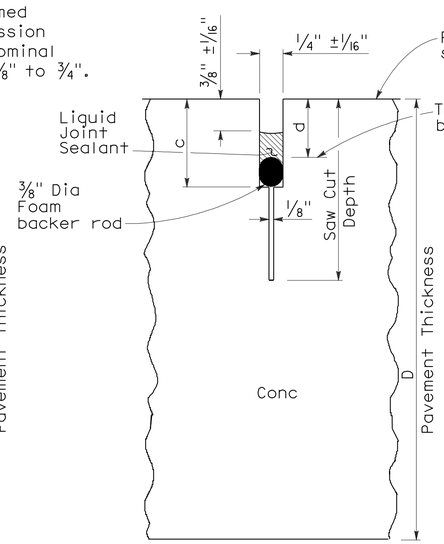


LIQUID SEALANT

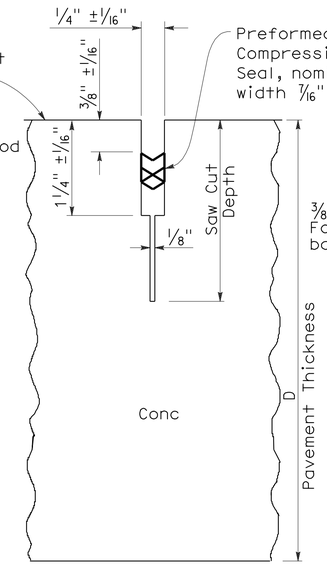


COMPRESSION SEAL

## TYPE A2

Longitudinal Contraction Joints

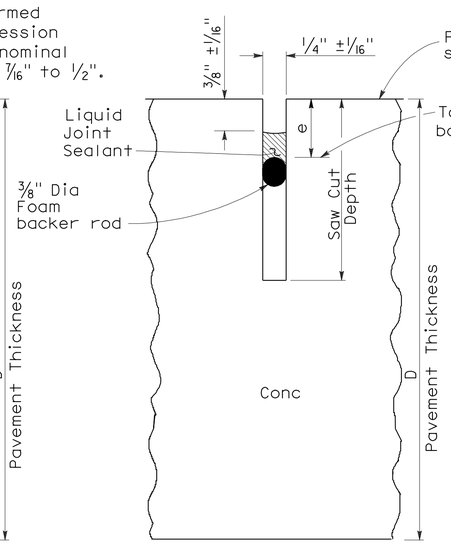


LIQUID SEALANT

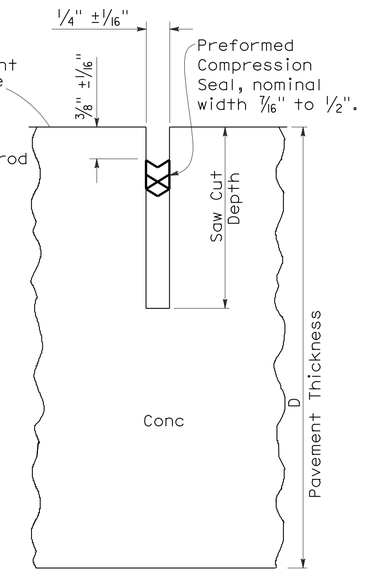


COMPRESSION SEAL

## TYPE B

Longitudinal or Transverse Contraction Joint

### LIQUID SEALANT RESERVOIR DEPTH

| LIQUID SEALANT MATERIAL | 3/8" Joint Width Type A1 | | 1/4" Joint Width Type A2 | | 1/4" Joint Width Type B |
|---|---|---|---|---|---|
| | DIMENSION | | DIMENSION | | DIMENSION |
| | a | b | c | d | e |
| SILCONE | 1" ±1/16" | 5/8" ±1/16" | 15/16" ±1/16" | 9/16" ±1/16" | 9/16" ±1/16" |
| ASPHALT RUBBER | 1 3/16" ±1/16" | 3/4" ±1/16" | 1 1/16" ±1/16" | 11/16" ±1/16" | 11/16" ±1/16" |

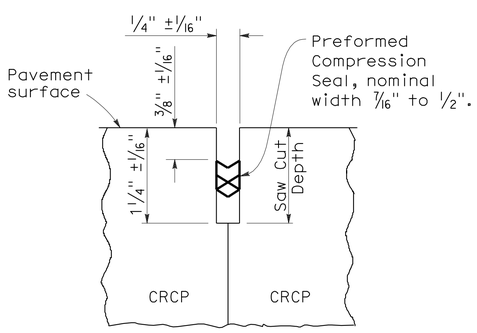


COMPRESSION SEAL

## TYPE C

Transverse and Longitudinal Construction Joints (For CRCP)

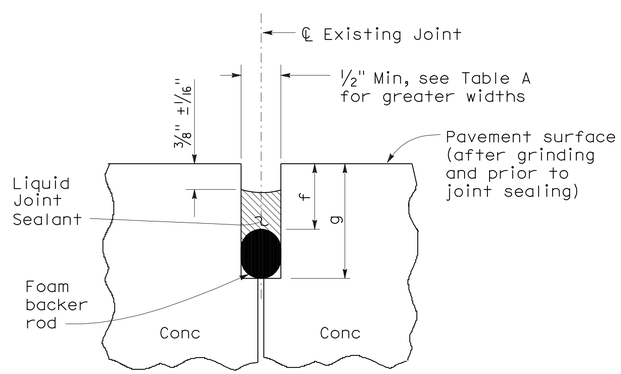


LIQUID SEALANT

## TYPE R

Retrofit Transverse and Longitudinal Joints

### TABLE A (TYPE R JOINT)

| Sawn Joint Width | Backer Rod Diameter ± 1/16" | DIMENSION "f" | DIMENSION "g" |
|---|---|---|---|
| 1" | 1 5/16" | 7/8" | 2 1/4" |
| 7/8" | 1 3/16" | 13/16" | 2" |
| 3/4" | 1" | 3/4" | 1 3/4" |
| 5/8" | 7/8" | 11/16" | 1 1/2" |
| 1/2" | 11/16" | 5/8" | 1 1/4" |

STATE OF CALIFORNIA
DEPARTMENT OF TRANSPORTATION

# CONCRETE PAVEMENT-JOINT DETAILS

NO SCALE

RSP P20 DATED MAY 15, 2009 SUPERSEDES STANDARD PLAN P20
DATED MAY 1, 2006 - PAGE 128 OF THE STANDARD PLANS BOOK DATED MAY 2006.

**REVISED STANDARD PLAN RSP P20**

**2006 REVISED STANDARD PLAN RSP P20**

5-8-09

| DIST | COUNTY | ROUTE | POST MILES TOTAL PROJECT | SHEET NO. | TOTAL SHEETS |
|---|---|---|---|---|---|
| 12 | Ora | 57 | 12.2/15.2 | 431M | 527 |

LICENSED LANDSCAPE ARCHITECT

June 5, 2009
PLANS APPROVAL DATE

LICENSED LANDSCAPE ARCHITECT Gregory A. Balzer 2576 10 January 2-28-11 (Renewal) Date 5-14-09 Date STATE OF CALIFORNIA

*The State of California or its officers or agents shall not be responsible for the accuracy or completeness of electronic copies of this plan sheet.*

*To accompany plans dated* 4-18-11

2006 REVISED STANDARD PLAN RSP H1

## A

| | |
|---|---|
| AB | aggregate base |
| ABS | acrylonitrile-butadiene-styrene |
| AC | asphalt concrete |
| Adj | adjacent/adjustable |
| AIC | auxiliary irrigation controller |
| Alt | alternative |
| AMEND | amendment |
| ARV | air release valve |
| AUTO | automatic |
| AUX | auxiliary |
| AVB | atmospheric vacuum breaker |

## B

| | |
|---|---|
| B&B | balled and burlapped |
| B/B | brass/bronze |
| B/B/PL | brass/bronze/plastic |
| B/PL | brass/plastic |
| BFM | bonded fiber matrix |
| Bit Ctd | bituminous coated |
| BP | booster pump |
| BPA | backflow preventer assembly |
| BPAE | backflow preventer assembly in enclosure |
| BPE | backflow preventer enclosure |
| BV | ball valve |

## C

| | |
|---|---|
| CAP | corrugated aluminum pipe |
| CARV | combination air release valve |
| CCA | cam coupler assembly |
| CEC | controller enclosure cabinet |
| CHDPE | corrugated high density polyethylene |
| CL | chain link |
| CNC | control and neutral conductors |
| Conc | concrete |
| Cond | conduit |
| CSP | corrugated steel pipe |
| CST | center strip |
| CV | check valve |

## D

| | |
|---|---|
| Dia | diameter |
| DIP | ductile iron pipe |
| DN | diameter nominal |

## E

| | |
|---|---|
| EA | each |
| Elect | electric/electrical |
| Elev | elevation |
| ENCL | enclosure |
| EP | edge of pavement |
| ES | edge of shoulder |
| EST | end strip |
| ESTB | establishment |
| ETW | edge of traveled way |

## F

| | |
|---|---|
| F | full circle |
| F/P | full/part circle |
| FAU | filter assembly unit |
| FCV | flow control valve |
| FERT | fertilizer |
| FG | finished grade |
| FIPT | female iron pipe thread |
| FIS | fertilizer injector system |
| FL | flow line |
| FM | flow monitor |
| FS | flow sensor |
| Ft | foot/feet |
| FV | flush valve |

## G

| | |
|---|---|
| GAL | Gallon(s) |
| Galv | galvanized |
| GARV | garden valve |
| GPH | gallons per hour |
| GPM | gallons per minute |
| GSP | galvanized steel pipe |
| GV | gate valve |

## H

| | |
|---|---|
| H | half circle |
| HB | hose bib |
| HDPE | high density polyethylene |
| HP | horsepower/hinge point |
| HPL | high pressure line |
| Hwy | highway |

## I

| | |
|---|---|
| IC | irrigation controller |
| ICC | irrigation controller(s) in controller enclosure cabinet |
| ID | inside diameter |
| In | inches |
| IFS | irrigation filtration system |
| IPS | iron pipe size |
| IPT | iron pipe thread |
| Irr | irrigation |

## L

| | |
|---|---|
| L | length |
| LF | linear foot |

## M

| | |
|---|---|
| Max | maximum |
| MBGR | metal beam guard railing |
| MCV | manual control valve |
| MIC | master irrigation controller |
| Min | minimum |
| MIPT | male iron pipe thread |
| Misc | miscellaneous |
| Mtl | material |
| MVP | maintenance vehicle pullout |

## N

| | |
|---|---|
| NCN | no common name |
| NL | nozzle line |
| No. | number |
| NPT | national pipe thread |

## O

| | |
|---|---|
| O/C | on center |
| OD | outside diameter |
| Oz | ounce |

## P

| | |
|---|---|
| P | part circle |
| PB | pull box |
| PCC | portland cement concrete |
| PE | polyethylene |
| Pkt | packet |
| PL | plastic |
| PLT | plant/planting |
| PLT ESTB | plant establishment |
| PM | post mile |
| PR | pressure rated |
| PRLV | pressure relief valve |
| PSFM | polymer stabilized fiber matrix |
| PSI | pounds per square inch |
| PRV | pressure reducing valve |
| PVC | polyvinyl chloride |
| Pvmt | pavement |

## Q

| | |
|---|---|
| Q | quarter circle |
| QCV | quick coupling valve |

## R

| | |
|---|---|
| R | radius |
| RCP | reinforced concrete pipe |
| RCV | remote control valve |
| RCVM | remote control valve (master) |
| RCVMF | remote control valve (master) w/ flow meter |
| RCW | recycled/reclaimed water |
| RECP | rolled erosion control product |
| REQ | required |
| R/W | right of way |

## S

| | |
|---|---|
| S | slip |
| SCC | sprinkler control conduit |
| SCH | schedule |
| SF | state-furnished |
| Shld | shoulder |
| SQFT | square foot/feet |
| SQYD | square yard(s) |
| SST | side strip |
| Sta | station |
| Std | standard |
| SW | sidewalk/sound wall |

## T

| | |
|---|---|
| T | third circle/thread |
| TLS | truck loading standpipe |
| TQ | three quarter circle |
| TRM | turf reinforcement mat |
| TRVD | traveled |
| TT | two third circle |
| Typ | typical |

## U

| | |
|---|---|
| UG | underground |

## V

| | |
|---|---|
| VAU | valve assembly unit |

## W

| | |
|---|---|
| W | width |
| W/ | with |
| WM | water meter |
| WS | wye strainer |
| WSP | welded steel pipe |
| WWM | welded wire mesh |

1 **ADDED PER ADDENDUM No. 1 DATED AUGUST 22, 2011**

NOTE:

FOR ADDITIONAL ABBREVIATIONS, SEE STANDARD PLANS A10A AND A10B.

STATE OF CALIFORNIA
DEPARTMENT OF TRANSPORTATION

# PLANTING AND IRRIGATION ABBREVIATIONS

NO SCALE

RSP H1 DATED JUNE 5, 2009 SUPERSEDES STANDARD PLAN H1
DATED MAY 1, 2006 - PAGE 201 OF THE STANDARD PLANS BOOK DATED MAY 2006.

**REVISED STANDARD PLAN RSP H1**

| DIST | COUNTY | ROUTE | POST MILES TOTAL PROJECT | SHEET NO. | TOTAL SHEETS |
|---|---|---|---|---|---|
| 12 | Ora | 57 | 12.2/15.2 | 431N | 527 |

LICENSED LANDSCAPE ARCHITECT

June 5, 2009
PLANS APPROVAL DATE

*The State of California or its officers or agents shall not be responsible for the accuracy or completeness of electronic copies of this plan sheet.*

Gregory A. Balzer 2516 — 10-31-11 renewal date — 2-28-11 date — 5-14-09 date — LICENSED LANDSCAPE ARCHITECT — STATE OF CALIFORNIA

1

*To accompany plans dated* 4-18-11

| EXISTING | PROPOSED | ITEM DESCRIPTION |
|---|---|---|
| | | WATER METER (WM) |
| | | BACKFLOW PREVENTER ASSEMBLY (BPA) |
| | | BACKFLOW PREVENTER ASSEMBLY IN ENCLOSURE (BPAE) |
| | | BACKFLOW PREVENTER ENCLOSURE (BPE) |
| | | BOOSTER PUMP (BP) |
| | | TRUCK LOADING STANDPIPE (TLS) |
| FS | FS | FLOW SENSOR (FS) |
| X | X | MASTER IRRIGATION CONTROLLER (MIC) |
| | | AUXILIARY IRRIGATION CONTROLLER (AIC) |
| | | IRRIGATION CONTROLLER (IC)/ IRRIGATION CONTROLLER (IC) (BATTERY) IRRIGATION CONTROLLER (IC) (SOLAR) |
| | | IRRIGATION CONTROLLER(S) IN CONTROLLER ENCLOSURE CABINET (ICC) |
| | | CONTROL AND NEUTRAL CONDUCTORS (CNC) |
| SCC | SCC | SPRINKLER CONTROL CONDUIT (SCC) |
| | | IRRIGATION CROSSOVER |
| | | EXTEND IRRIGATION CROSSOVER |
| | | IRRIGATION SLEEVE |
| dip | DIP | DUCTILE IRON PIPE (SUPPLY LINE) (MAIN) (DIP) |
| | | GALVANIZED STEEL PIPE (SUPPLY LINE) (MAIN) (GSP) |
| | | GALVANIZED STEEL PIPE (SUPPLY LINE) (LATERAL) (GSP) |
| | | PLASTIC PIPE (PR 200) (SUPPLY LINE) (MAIN) |
| | | PLASTIC PIPE (PR 200) (SUPPLY LINE) (LATERAL) |
| | | PLASTIC PIPE (IRRIGATION LINE) |
| | | REMOTE CONTROL VALVE (RCV) REMOTE CONTROL VALVE (MASTER) (RCVM) REMOTE CONTROL VALVE (MASTER) W/FLOW METER (RCVMF) |
| | | MANUAL CONTROL VALVE (MCV) |
| | | VALVE ASSEMBLY UNIT (VAU) |
| | | WYE STRAINER (WS) |
| | | FILTER ASSEMBLY UNIT (FAU) |
| | | GATE VALVE (GV) |
| | | BALL VALVE (BV) |

| EXISTING | PROPOSED | ITEM DESCRIPTION |
|---|---|---|
| | | QUICK COUPLING VALVE (QCV) |
| | | CAM COUPLER ASSEMBLY (CCA) |
| | | PRESSURE REDUCING VALVE (PRV) |
| | | PRESSURE RELIEF VALVE (PRLV) |
| | | FLOW CONTROL VALVE (FCV) |
| | | COMBINATION AIR RELEASE VALVE (CARV) |
| | | CHECK VALVE (CV) |
| | | FLUSH VALVE (FV) |
| | | NOZZLE LINE W/TURNING UNION |
| | | IRRIGATION SYSTEM |
| | | IRRIGATION SYSTEM TO BE REMOVED |
| | | CHAIN LINK GATE |
| | | QUICK COUPLING VALVE W/SPRINKLER PROTECTOR |
| 3 | 3 | SPRINKLER W/SPRINKLER PROTECTOR |
| | C | CONNECT TO EXISTING SYSTEM |
| | | CAP |
| | | CAP EXISTING |

## VALVE CODE

RCV SIZE
IRRIGATION CONTROLLER
CONTROLLER STATION
VALVE IN PARALLEL (IF APPLICABLE)
GPM
QUANTITY OF SPRINKLERS (WHEN SHOWN)

* 2½"-A-2b-40 -60

MCV SIZE
VALVE NUMBER
GPM
QUANTITY OF TYPE SPRINKLERS (WHEN SHOWN)

* 2"-3-30 -50

* VALVE CODES FOR EXISTING VALVES ARE SHOWN IN A DASHED ENCLOSURE.

1 **ADDED PER ADDENDUM No. 1 DATED AUGUST 22, 2011**

STATE OF CALIFORNIA
DEPARTMENT OF TRANSPORTATION

# PLANTING AND IRRIGATION SYMBOLS

NO SCALE

RSP H2 DATED JUNE 5, 2009 SUPERSEDES RSP H2 DATED MARCH 7, 2008 AND STANDARD PLAN H2 DATED MAY 1, 2006 - PAGE 202 OF THE STANDARD PLANS BOOK DATED MAY 2006.

**REVISED STANDARD PLAN RSP H2**

**2006 REVISED STANDARD PLAN RSP H2**

5-11-09

| DIST | COUNTY | ROUTE | POST MILES TOTAL PROJECT | SHEET NO. | TOTAL SHEETS |
|---|---|---|---|---|---|
| 12 | Ora | 57 | 12.2/15.2 | 4310 | 527 |

LICENSED LANDSCAPE ARCHITECT

June 5, 2009
PLANS APPROVAL DATE

LICENSED LANDSCAPE ARCHITECT — Gregory A. Balzer 2516 — 10 expiration 2-28-11 renewal date — 5-14-09 date — STATE OF CALIFORNIA

*The State of California or its officers or agents shall not be responsible for the accuracy or completeness of electronic copies of this plan sheet.*

1

*To accompany plans dated* 4-18-11

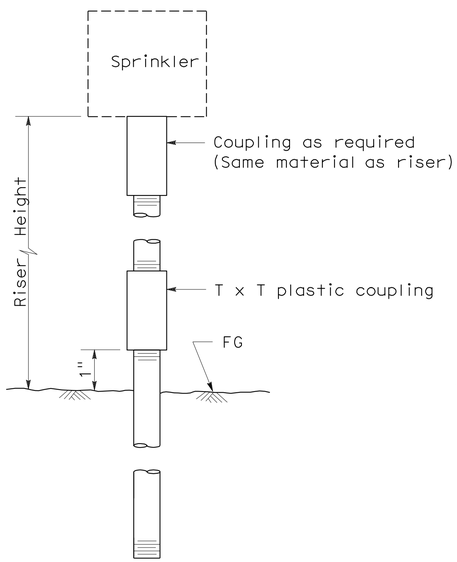


ELEVATION
RISER TYPE I

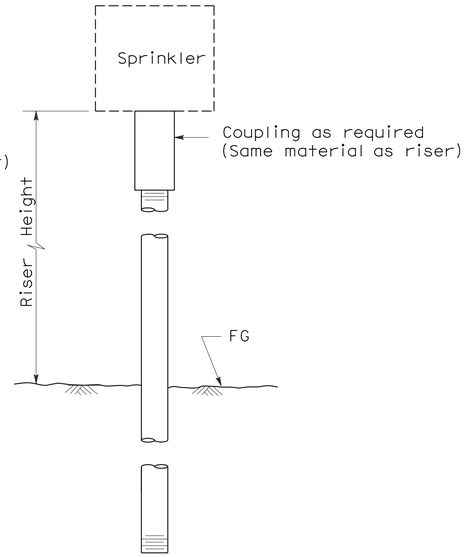


ELEVATION
RISER TYPE II

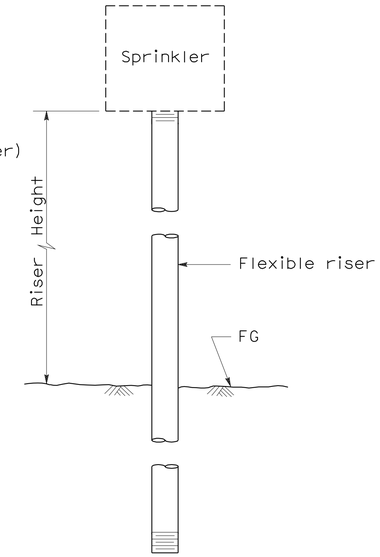


ELEVATION
RISER TYPE III

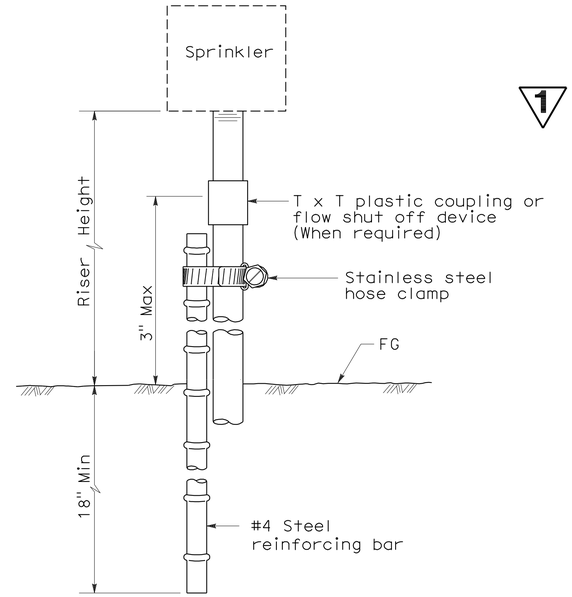


ELEVATION
RISER TYPE IV

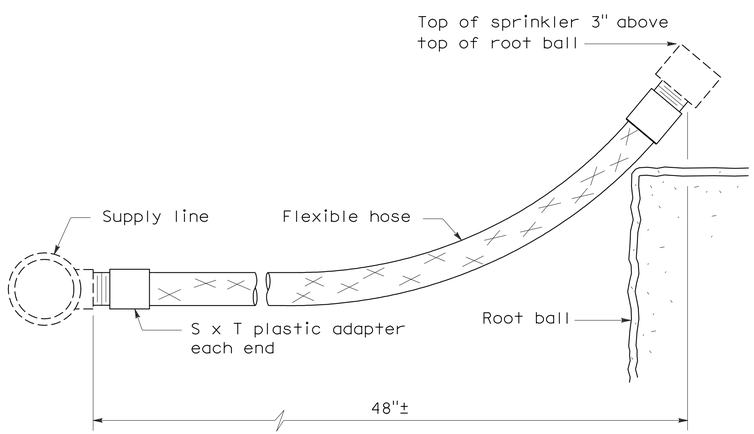


ELEVATION
RISER TYPE V

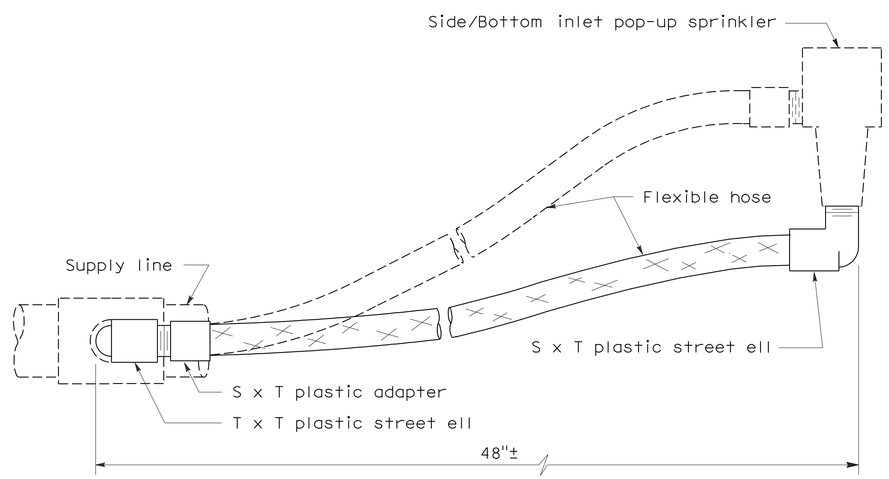


ELEVATION
RISER TYPE VI

STATE OF CALIFORNIA
DEPARTMENT OF TRANSPORTATION

# PLANTING AND IRRIGATION DETAILS

NO SCALE

RSP H5 DATED JUNE 5, 2009 SUPERSEDES STANDARD PLAN H5
DATED MAY 1, 2006 - PAGE 205 OF THE STANDARD PLANS BOOK DATED MAY 2006.

**1 ADDED PER ADDENDUM No. 1 DATED AUGUST 22, 2011**

**REVISED STANDARD PLAN RSP H5**

**2006 REVISED STANDARD PLAN RSP H5**

5-28-09

| DIST | COUNTY | ROUTE | POST MILES TOTAL PROJECT | SHEET NO. | TOTAL SHEETS |
|---|---|---|---|---|---|
| 12 | Ora | 57 | 12.2/15.2 | 431P | 527 |

LICENSED LANDSCAPE ARCHITECT

June 5, 2009
PLANS APPROVAL DATE

*The State of California or its officers or agents shall not be responsible for the accuracy or completeness of electronic copies of this plan sheet.*

LICENSED LANDSCAPE ARCHITECT — Gregory A. Balzer 2576 — 10 January 2-28-11 (Renewal Date) — 5-14-09 (Date) — STATE OF CALIFORNIA

1

*To accompany plans dated* 4-18-11

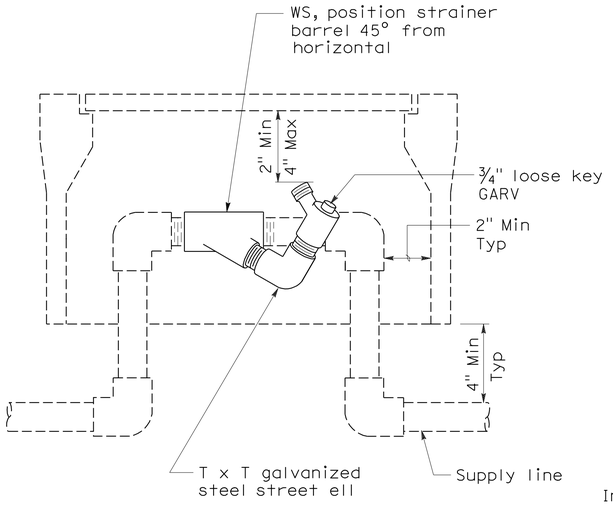


ELEVATION
## WYE STRAINER

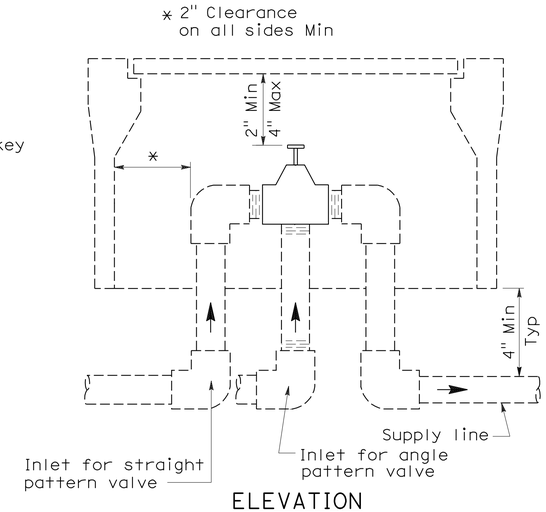


ELEVATION
## VALVE

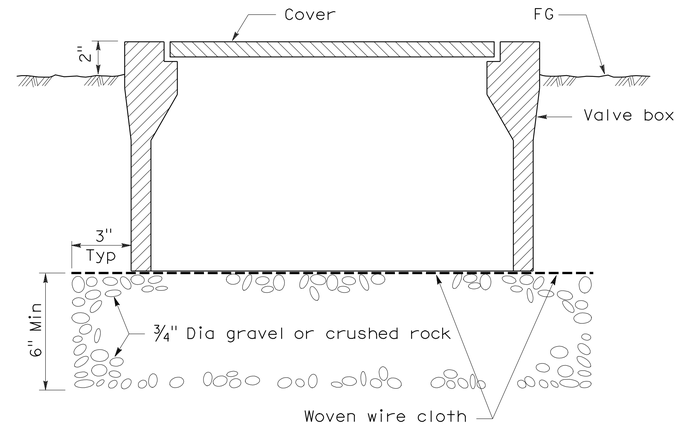


SECTION
## VALVE BOX

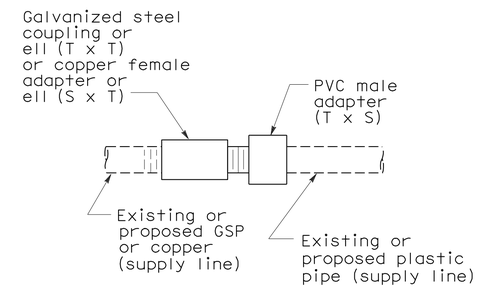


PLAN
## GALVANIZED OR COPPER PIPE CONNECTION TO PLASTIC PIPE

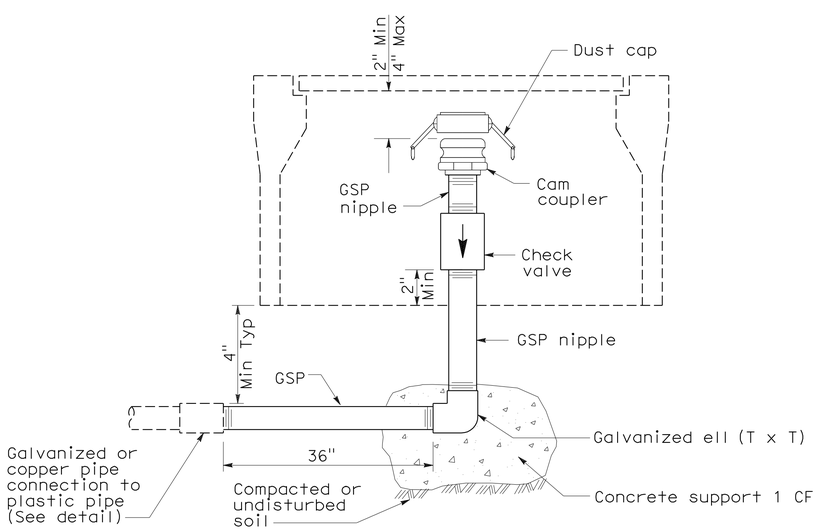


ELEVATION
## CAM COUPLER ASSEMBLY

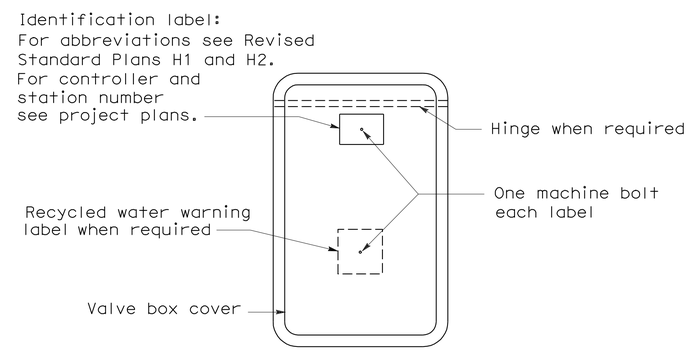


PLAN

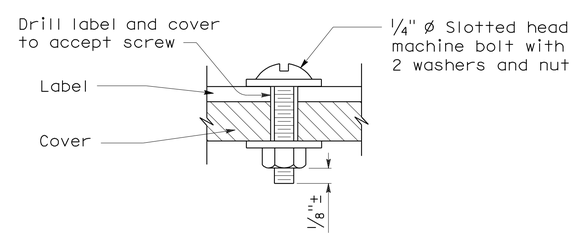


SECTION
## VALVE BOX IDENTIFICATION

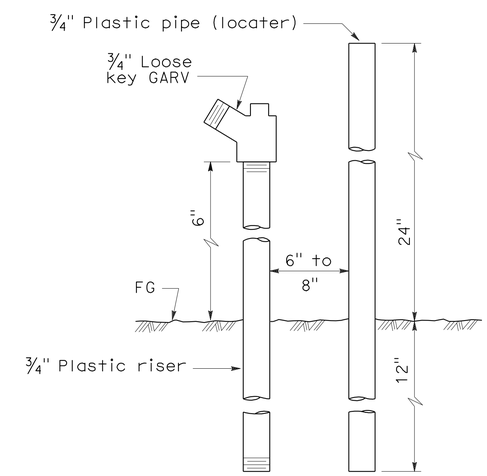


ELEVATION
## FLUSH VALVE

STATE OF CALIFORNIA
DEPARTMENT OF TRANSPORTATION

# PLANTING AND IRRIGATION DETAILS

NO SCALE

1 **ADDED PER ADDENDUM No. 1 DATED AUGUST 22, 2011**

RSP H7 DATED JUNE 5, 2009 SUPERSEDES STANDARD PLAN H7
DATED MAY 1, 2006 - PAGE 207 OF THE STANDARD PLANS BOOK DATED MAY 2006.

**REVISED STANDARD PLAN RSP H7**

**2006 REVISED STANDARD PLAN RSP H7**

5-28-09

| DIST | COUNTY | ROUTE | POST MILES TOTAL PROJECT | SHEET NO. | TOTAL SHEETS |
|---|---|---|---|---|---|
| 12 | Ora | 57 | 12.2/15.2 | 431Q | 527 |

Gregory A. Balzer
LICENSED LANDSCAPE ARCHITECT

June 5, 2009
PLANS APPROVAL DATE

*The State of California or its officers or agents shall not be responsible for the accuracy or completeness of electronic copies of this plan sheet.*

LICENSED LANDSCAPE ARCHITECT Gregory A. Balzer 2576 Signature 10-31-11 Renewal Date 5-14-09 Date STATE OF CALIFORNIA

1

*To accompany plans dated* 4-18-11

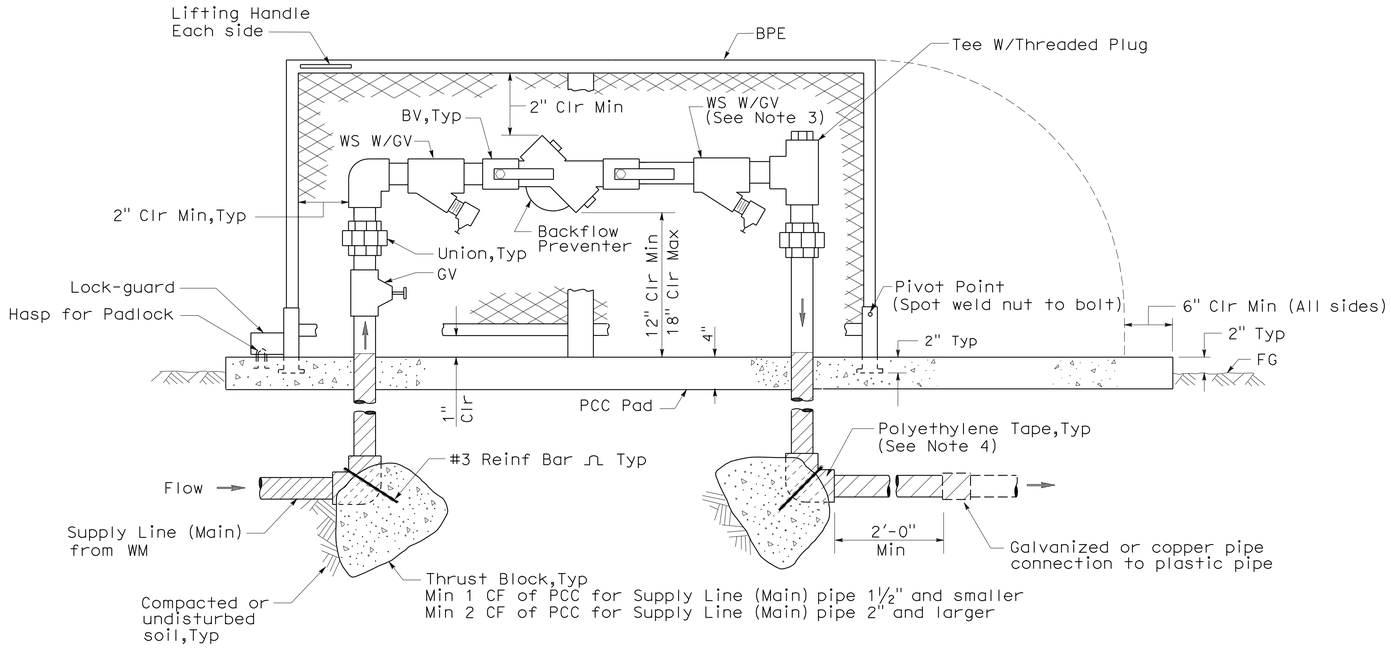


ELEVATION

## BACKFLOW PREVENTER ASSEMBLY IN ENCLOSURE (ONE PIECE)

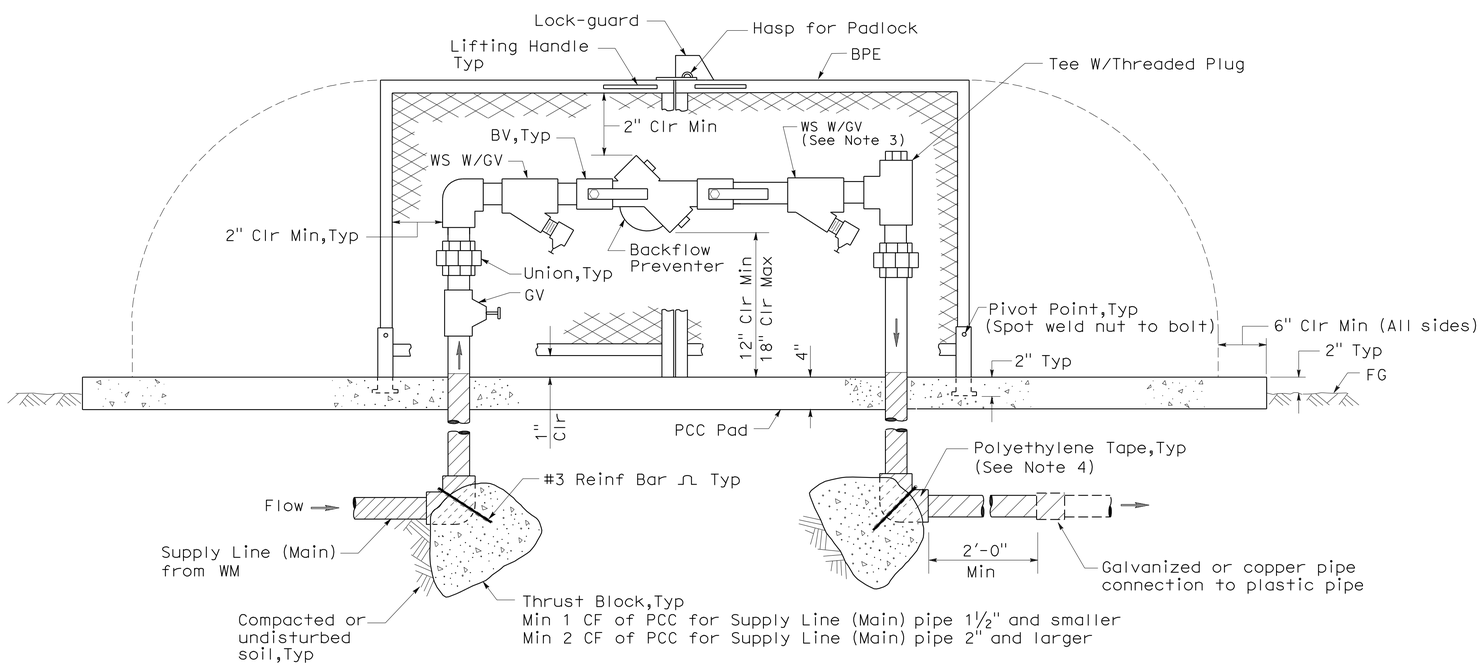


ELEVATION

## BACKFLOW PREVENTER ASSEMBLY IN ENCLOSURE (TWO PIECE)

NOTES:

1. Wye strainer and fittings must be the same size as the backflow preventer shown on the plans.
2. Backflow preventer assembly manifold pipe must be the same pipe as the supply line (main) pipe to be installed from the water meter to the backflow preventer assembly.
3. Wye strainer location shown downstream of the backflow preventer is for District 11 projects only.
4. All metal in contact with soil and Portland Cement Concrete must be polyethylene wrapped using 2" wide plastic backed adhesive tape 20 mil thick with ½" overlap.

1 **ADDED PER ADDENDUM No. 1 DATED AUGUST 22, 2011**

STATE OF CALIFORNIA
DEPARTMENT OF TRANSPORTATION

# PLANTING AND IRRIGATION DETAILS

NO SCALE

RSP H8 DATED JUNE 5, 2009 SUPERSEDES STANDARD PLAN H8
DATED MAY 1, 2006 - PAGE 208 OF THE STANDARD PLANS BOOK DATED MAY 2006.

**REVISED STANDARD PLAN RSP H8**

**2006 REVISED STANDARD PLAN RSP H8**

5-28-09

| Dist | COUNTY | ROUTE | POST MILES TOTAL PROJECT | SHEET No. | TOTAL SHEETS |
|---|---|---|---|---|---|
| 12 | Ora | 57 | 12.2/15.2 | 431R | 527 |

Randell D. Hiatt
REGISTERED CIVIL ENGINEER

May 20, 2011
PLANS APPROVAL DATE

REGISTERED PROFESSIONAL ENGINEER
Randell D. Hiatt
No. C50200
Exp. 6-30-11
CIVIL
STATE OF CALIFORNIA

1

*The State of California or its officers or agents shall not be responsible for the accuracy or completeness of electronic copies of this plan sheet.*

*To accompany plans dated* 4-18-11

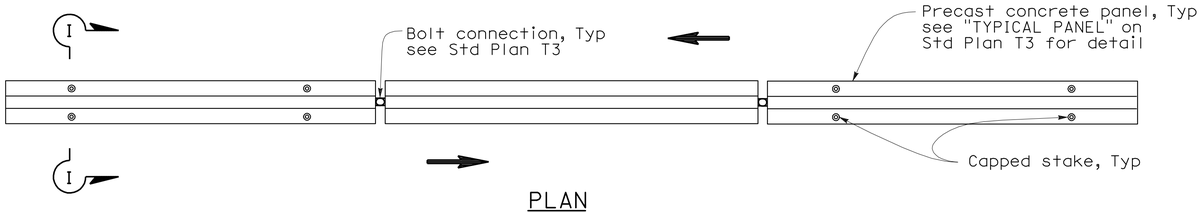


PLAN

RAILING STAKING CONFIGURATION FOR TWO-WAY TRAFFIC

See Note 1

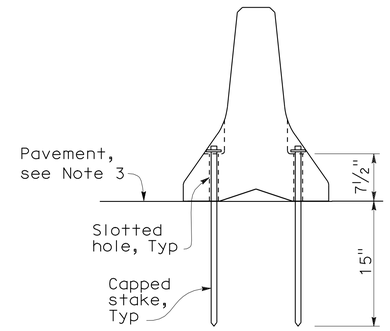


SECTION I-I

## NOTES:

1. Where Type K Temporary Railing is placed as a temporary or long term barrier in two-way traffic on highways with less than 24" from the edge of traveled way, use four capped stakes per every other panel with end panels staked.
2. Where Type K Temporary Railing is placed 3" to 24" from the edge of an excavation on highways, use two capped stakes per panel along the traffic side.
3. Staked Type K Temporary Railing must be supported by at least 4" thick concrete, hot mix asphalt or existing asphalt concrete pavement.
4. The minimum yield strength for the washer must be 60,000 psi.
5. Direction of adjacent traffic indicated by ⟹.

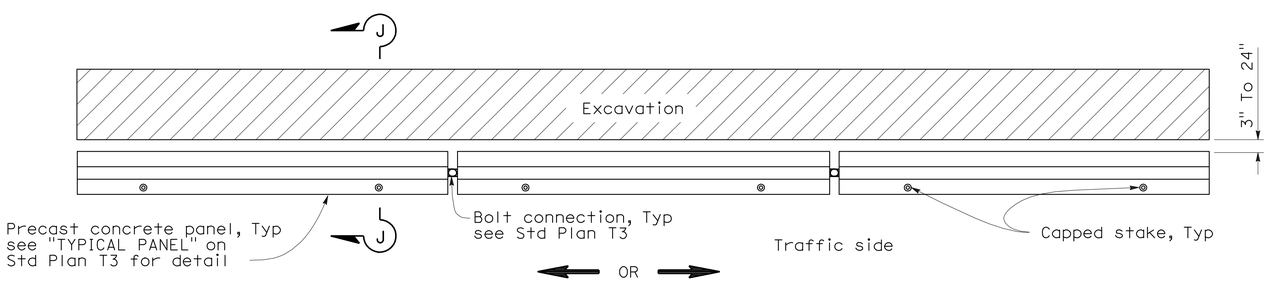


PLAN

RAILING STAKING CONFIGURATION ADJACENT TO AN EXCAVATION

See Note 2

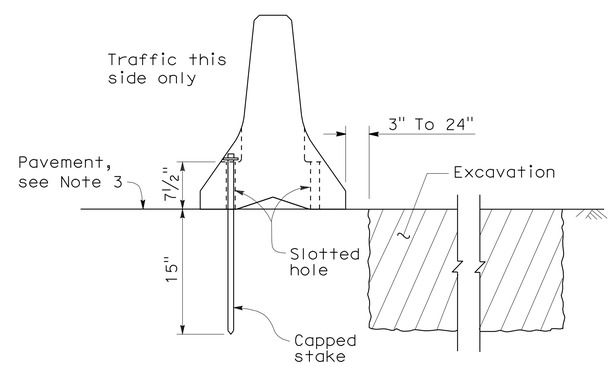


SECTION J-J

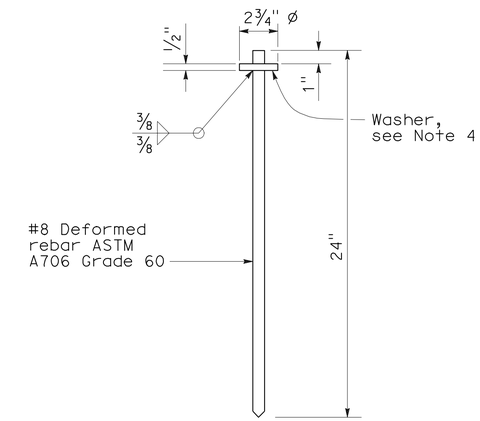


CAPPED STAKE DETAIL

STATE OF CALIFORNIA
DEPARTMENT OF TRANSPORTATION

# TEMPORARY RAILING (TYPE K)

NO SCALE

NSP T3A DATED MAY 20, 2011 SUPPLEMENTS THE STANDARD PLANS BOOK DATED MAY 2006.

**1 ADDED PER ADDENDUM No. 1 DATED AUGUST 22, 2011**

**NEW STANDARD PLAN NSP T3A**

**2006 NEW STANDARD PLAN NSP T3A**

8-31-10

| DIST | COUNTY | ROUTE | POST MILES TOTAL PROJECT | SHEET No | TOTAL SHEETS |
|---|---|---|---|---|---|
| 12 | Ora | 57 | 12.2/15.2 | 435 | 527 |

REGISTERED CIVIL ENGINEER 08-09-10 DATE

4-18-11
PLANS APPROVAL DATE

REGISTERED PROFESSIONAL ENGINEER ERIC A. JOHNSON No. C57355 Exp. 12/31/11 CIVIL STATE OF CALIFORNIA

*The State of California or its officers or agents shall not be responsible for the accuracy or completeness of scanned copies of this plan sheet.*

OCTA
550 S. MAIN STREET
ORANGE, CA 92863

HDR ENGINEERING, INC.
3230 EL CAMINO REAL, SUITE 200
IRVINE, CA 92602-1377

## LEGEND

- Indicates New Construction
- Indicates Existing
- XXX.XX — Indicates Bottom Of Footing Elevation
- XXX.XX± — Indicates Bottom Of Exist Footing Elevation

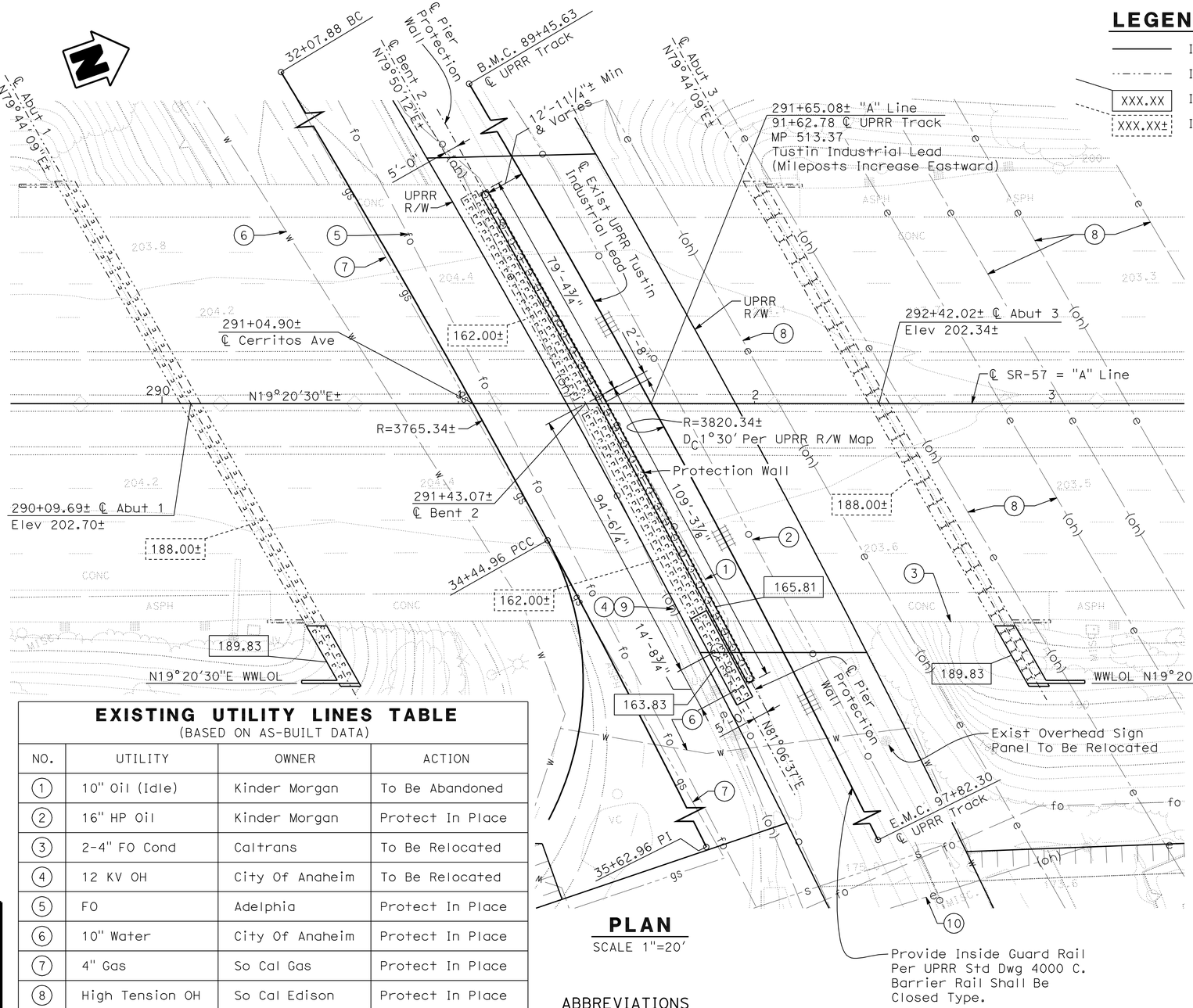


## PLAN

SCALE 1"=20'

## PILE DATA TABLE (DRIVEN PILES)

| Location | Pile Type | Nominal Resistance (kips) | | Design Tip Elevation (ft) | Specified Tip Elevation (ft) | Nominal Driving Resistance (kips) |
|---|---|---|---|---|---|---|
| | | Compression | Tension | | | |
| Abut 1 | Conc Pile, Class 90 Alt X | 170 | - | 141.0(a)<br>144.0(c)<br>169.0(d) | 141.0 | 170 |
| Bent 2 | Conc Pile, Class 90 Alt X | 180 | - | 122.0(a)<br>132.0(c)<br>143.0(d) | 122.0 | 180 |
| Abut 3 | HP 10x42 Steel Pile | 140 | - | 134.0(a)<br>139.0(c)<br>169.0(d) | 134.0 | 140 |

Notes:
1. Design Tip Elevations Are Controlled By:
   (a) Compression; (c) Settlement; (d) Lateral Load.
2. The Specified Tip Elevation Shall Not Be Raised Above The Design Tip Elevations For Lateral And Tolerable Settlement.

## PILE DATA TABLE (CIDH PILES)

| Location | Pile Type | Cut-off Elevation (ft) | Nominal Resistance (kips) | | Design Tip Elevation (ft) | Specified Tip Elevation (ft) |
|---|---|---|---|---|---|---|
| | | | Compression | Tension | | |
| Protection Wall | 24" Dia CIDH | 166.06 | 35 | - | 159.0(a)<br>159.0(c)<br>139.0(d) | 139.0 |

Notes:
1. Design Tip Elevations Are Controlled By:
   (a) Compression; (c) Settlement; (d) Lateral Load.
2. The Specified Tip Elevation Shall Not Be Raised Above The Design Tip Elevations For Compression, Lateral, And Tolerable Settlement.

## EXISTING UTILITY LINES TABLE

(BASED ON AS-BUILT DATA)

| NO. | UTILITY | OWNER | ACTION |
|---|---|---|---|
| 1 | 10" Oil (Idle) | Kinder Morgan | To Be Abandoned |
| 2 | 16" HP Oil | Kinder Morgan | Protect In Place |
| 3 | 2-4" FO Cond | Caltrans | To Be Relocated |
| 4 | 12 KV OH | City Of Anaheim | To Be Relocated |
| 5 | FO | Adelphia | Protect In Place |
| 6 | 10" Water | City Of Anaheim | Protect In Place |
| 7 | 4" Gas | So Cal Gas | Protect In Place |
| 8 | High Tension OH | So Cal Edison | Protect In Place |
| 9 | CATV OH | Adelphia | To Be Relocated |
| 10 | 12 KV OH | City Of Anaheim | Protect In Place |

**NOTE:**
The Contractor Shall Verify All Controlling Field Dimensions Before Ordering Or Fabricating Any Materials.

## ABBREVIATIONS

HP = High Pressure
FO = Fiber Optic
KV = Kilovolts

GEOTECHNICAL PROFESSIONAL APPROVAL DATE

**1 REVISED PER ADDENDUM No. 1 DATED AUGUST 22, 2011**

Sudhakar Vatti
DESIGN OVERSIGHT Sudhakar Vatti
8-12-11
SIGN OFF DATE

| | | | |
|---|---|---|---|
| SCALE: 1"=20' | VERT.DATUM | HORZ.DATUM | |
| PHOTOGRAMMETRY AS OF: | | ALIGNMENT TIES | |
| SURVEYED | BY E. Martinez | DRAFTED | BY |
| FIELD CHECKED | BY D. Williams | CHECKED | BY |

| | BY | CHECKED |
|---|---|---|
| DESIGN | J. Ramirez | W. Chu |
| DETAILS | E. Gray | W. Chu |
| QUANTITIES | J. Ramirez | Z. Daniel |

PREPARED FOR THE STATE OF CALIFORNIA DEPARTMENT OF TRANSPORTATION

ERIC A. JOHNSON
PROJECT ENGINEER

BRIDGE NO. 55-0337
POST MILE 13.0

# DOUGLASS OH (WIDEN)
# FOUNDATION PLAN

FOUNDATION PLAN SHEET (ENGLISH) (REV. 06-01-09)

ORIGINAL SCALE IN INCHES FOR REDUCED PLANS 0 1 2 3

CU 12231
EA 0F0401

DISREGARD PRINTS BEARING EARLIER REVISION DATES

REVISION DATES (PRELIMINARY STAGE ONLY) 10/09 2/10 5/10 6/10 8/10

SHEET 4 OF 27

FILE => 55-0337r-e-fp101.add

USERNAME => ttstrk DATE PLOTTED => 19-AUG-2011 TIME PLOTTED => 15:38

| DIST | COUNTY | ROUTE | POST MILES TOTAL PROJECT | SHEET No | TOTAL SHEETS |
|---|---|---|---|---|---|
| 12 | Ora | 57 | 12.2/15.2 | 437 | 527 |

REGISTERED CIVIL ENGINEER 08-09-10 DATE

4-18-11
PLANS APPROVAL DATE

REGISTERED PROFESSIONAL ENGINEER ERIC A. JOHNSON No. C57355 Exp. 12/31/11 CIVIL STATE OF CALIFORNIA

*The State of California or its officers or agents shall not be responsible for the accuracy or completeness of scanned copies of this plan sheet.*

OCTA
550 S. MAIN STREET
ORANGE, CA 92863

HDR ENGINEERING, INC.
3230 EL CAMINO REAL, SUITE 200
IRVINE, CA 92602-1377

## LEGEND

Indicates Bridge Removal (Portion)

Indicates Abutment Closure Pour

**Note:**

1. For Wingwall Corner Detail, See "Abutment Details No. 1" Sheet.
2. For Section B-B, Section D-D, Section E-E, Footing Corner Detail, And Internal Key, See "Abutment Details No. 2" Sheet.
3. Do Not Place Wingwall And Abutment Closure Pour Until Stressing Of CIP P/S Box Girder Is Complete.

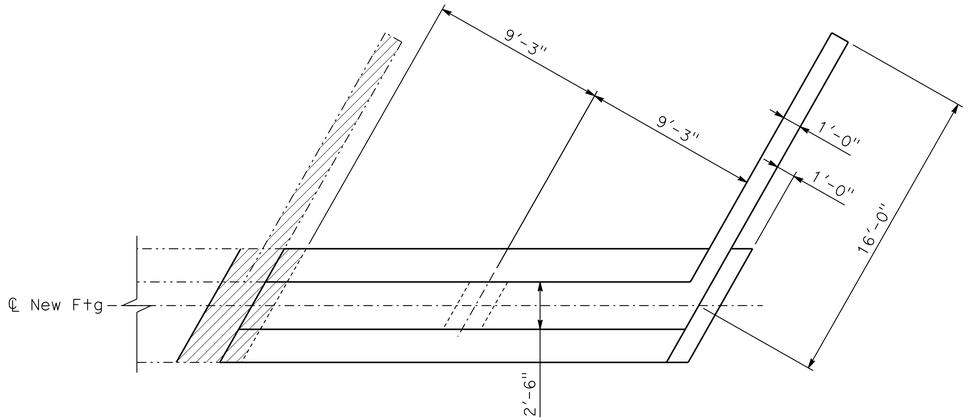


## PLAN
SCALE: 1/4" = 1'-0"

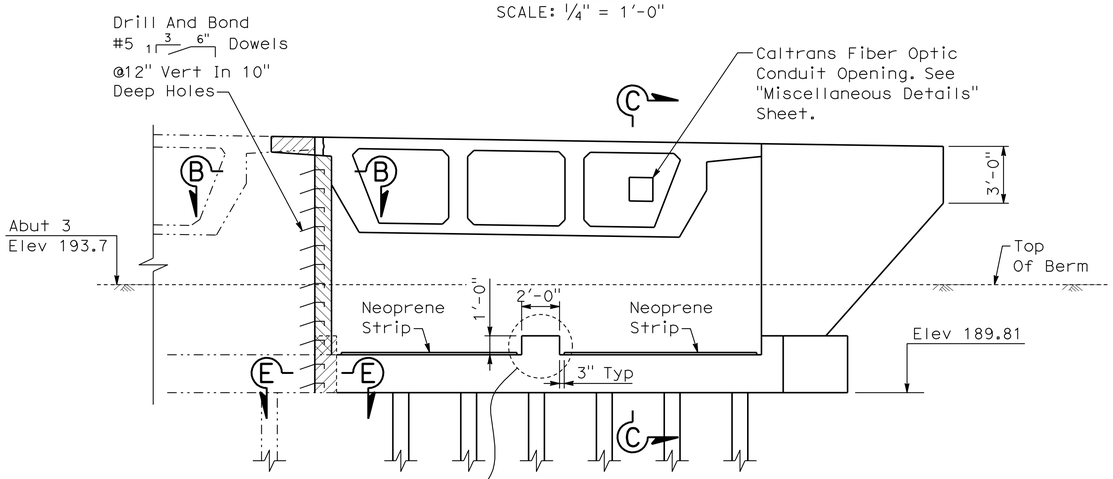


## ELEVATION
SCALE: 1/4" = 1'-0"

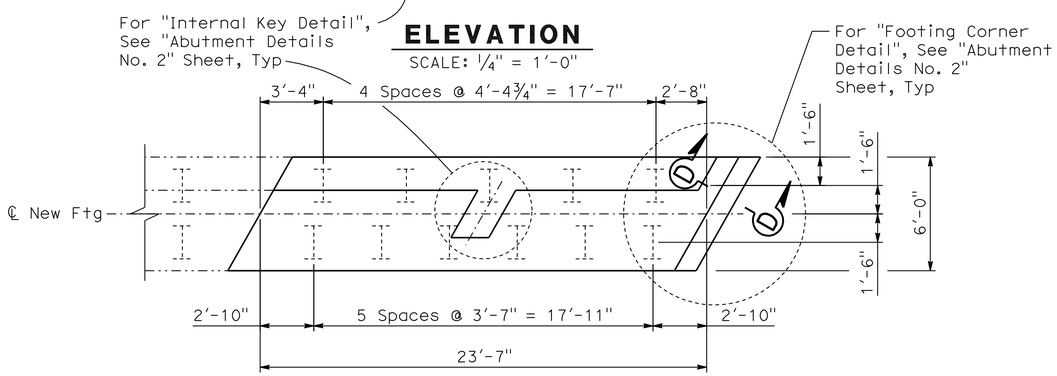


## PILE LAYOUT PLAN
SCALE: 1/4" = 1'-0"

**NOTE:**

The Contractor Shall Verify All Controlling Field Dimensions Before Ordering Or Fabricating Any Materials.

**1 REVISED PER ADDENDUM No. 1 DATED AUGUST 22, 2011**

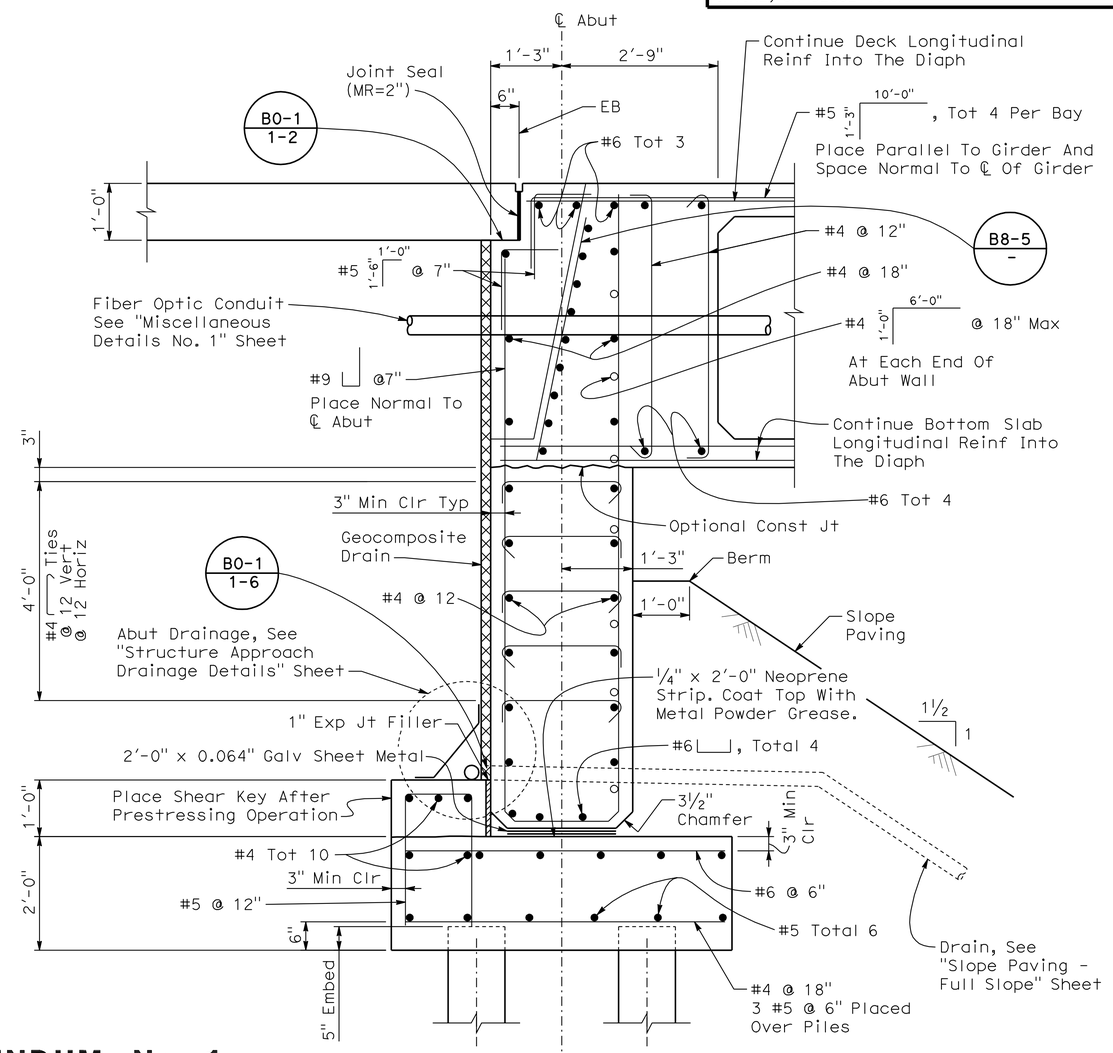


## SECTION C-C
SCALE: 3/4"=1'-0"

Sudhakar Vatti
DESIGN OVERSIGHT Sudhakar Vatti
8-12-11
SIGN OFF DATE

| | BY | CHECKED |
|---|---|---|
| DESIGN | J. Ramirez | W. Chu |
| DETAILS | E. Gray | W. Chu |
| QUANTITIES | J. Ramirez | Z. Daniel |

PREPARED FOR THE STATE OF CALIFORNIA DEPARTMENT OF TRANSPORTATION

ERIC A. JOHNSON
PROJECT ENGINEER

BRIDGE NO. 55-0337
POST MILE 13.0

# DOUGLASS OH (WIDEN)
# ABUTMENT 3 LAYOUT

DESIGN DETAIL SHEET (ENGLISH) (REV. 06-01-09)

ORIGINAL SCALE IN INCHES FOR REDUCED PLANS 0 1 2 3

CU 12231
EA 0F0401

DISREGARD PRINTS BEARING EARLIER REVISION DATES

REVISION DATES (PRELIMINARY STAGE ONLY) 10/09 2/10 5/10 6/10 8/10

SHEET 6 OF 27

FILE => 55-0337r-f-a01_lo3.add

USERNAME => trstrk DATE PLOTTED => 19-AUG-2011 TIME PLOTTED => 15:38

| DIST | COUNTY | ROUTE | POST MILES TOTAL PROJECT | SHEET No | TOTAL SHEETS |
|---|---|---|---|---|---|
| 12 | Ora | 57 | 12.2/15.2 | 438 | 527 |

REGISTERED CIVIL ENGINEER 08-09-10 DATE

4-18-11
PLANS APPROVAL DATE

REGISTERED PROFESSIONAL ENGINEER ERIC A. JOHNSON No. C57355 Exp. 12/31/11 CIVIL STATE OF CALIFORNIA

*The State of California or its officers or agents shall not be responsible for the accuracy or completeness of scanned copies of this plan sheet.*

OCTA
550 S. MAIN STREET
ORANGE, CA 92863

HDR ENGINEERING, INC.
3230 EL CAMINO REAL, SUITE 200
IRVINE, CA 92602-1377

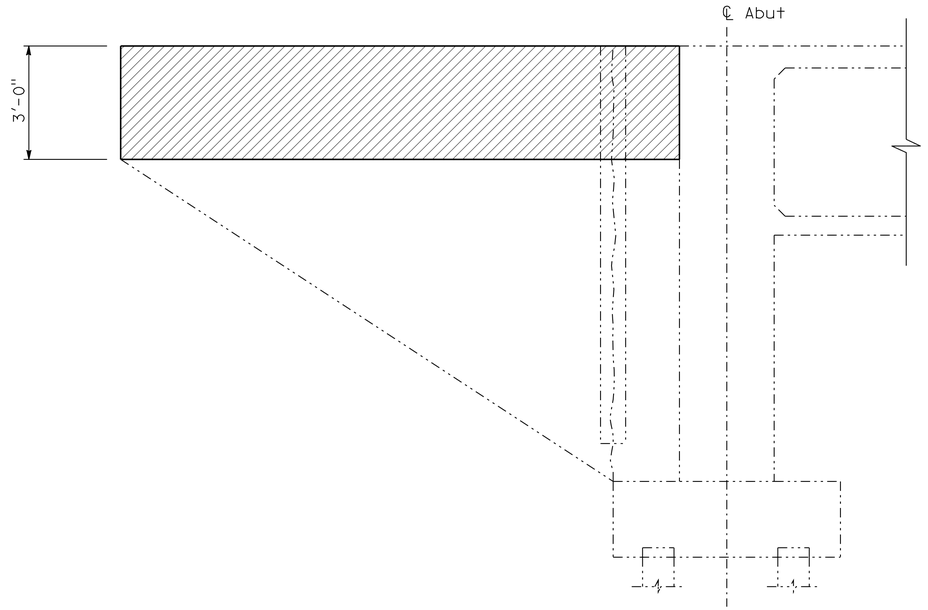


## LIMITS OF BRIDGE REMOVAL

SCALE ½"=1'-0"

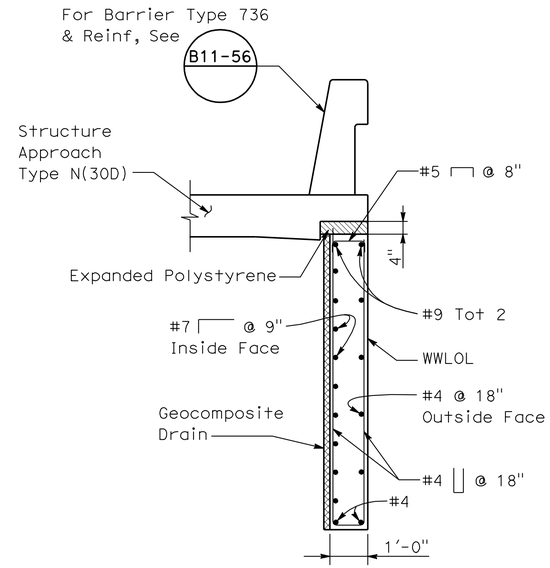


## SECTION F-F

SCALE ½"=1'-0"

## LEGEND

Indicates Bridge Removal (Portion)

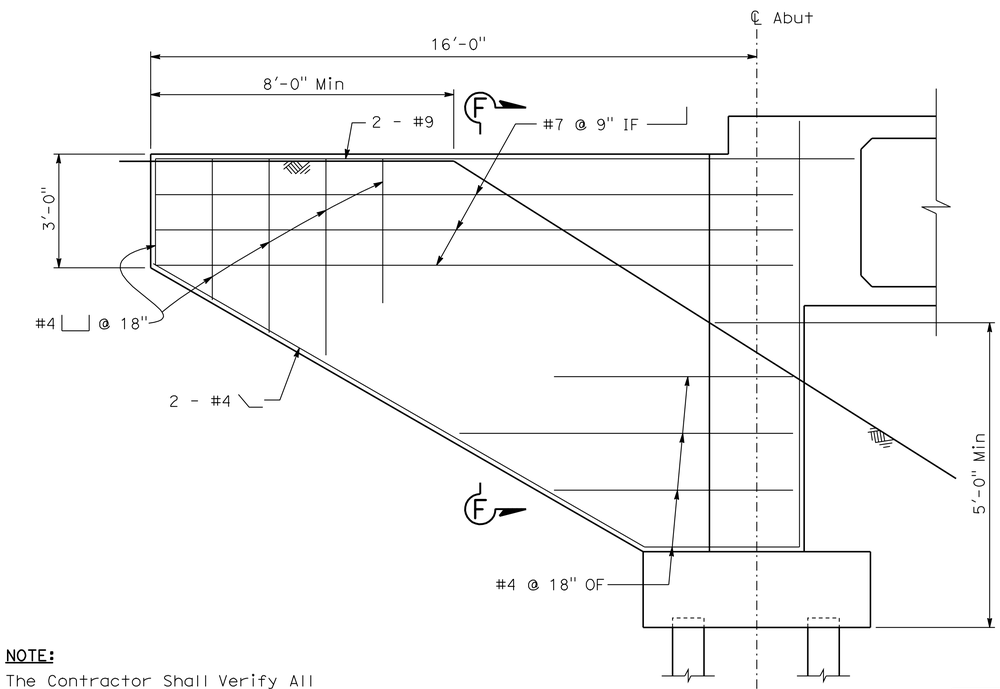


## WINGWALL ELEVATION

SCALE ½"=1'-0"

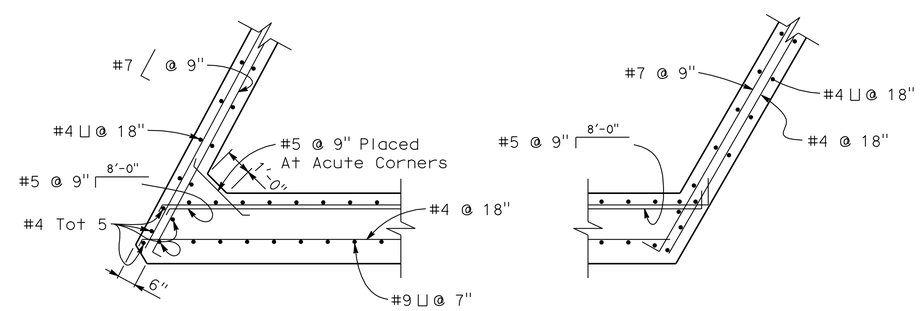


## WINGWALL CORNER DETAIL

NTS

**NOTE:**

The Contractor Shall Verify All Controlling Field Dimensions Before Ordering Or Fabricating Any Materials.

**1 REVISED PER ADDENDUM No. 1 DATED AUGUST 22, 2011**

Sudhakar Vatti
DESIGN OVERSIGHT Sudhakar Vatti
8-12-11
SIGN OFF DATE

| | BY | CHECKED |
|---|---|---|
| DESIGN | J. Ramirez | W. Chu |
| DETAILS | E. Gray | W. Chu |
| QUANTITIES | J. Ramirez | Z. Daniel |

PREPARED FOR THE STATE OF CALIFORNIA DEPARTMENT OF TRANSPORTATION

ERIC A. JOHNSON
PROJECT ENGINEER

BRIDGE NO. 55-0337
POST MILE 13.0

# DOUGLASS OH (WIDEN)
# ABUTMENT DETAILS NO. 1

DESIGN DETAIL SHEET (ENGLISH) (REV. 06-01-09)

ORIGINAL SCALE IN INCHES FOR REDUCED PLANS 0 1 2 3

CU 12231
EA 0F0401

DISREGARD PRINTS BEARING EARLIER REVISION DATES

REVISION DATES (PRELIMINARY STAGE ONLY) 10/09 2/10 5/10 6/10 8/10

SHEET 7 OF 27

FILE => 55-0337r-f-a01dt01.dgn

USERNAME => ttistrk DATE PLOTTED => 19-AUG-2011 TIME PLOTTED => 15:39

| DIST | COUNTY | ROUTE | POST MILES TOTAL PROJECT | SHEET No | TOTAL SHEETS |
|---|---|---|---|---|---|
| 12 | Ora | 57 | 12.2/15.2 | 444 | 527 |

REGISTERED CIVIL ENGINEER 08-09-10 DATE

4-18-11
PLANS APPROVAL DATE

REGISTERED PROFESSIONAL ENGINEER ERIC A. JOHNSON No. C57355 Exp. 12/31/11 CIVIL STATE OF CALIFORNIA

*The State of California or its officers or agents shall not be responsible for the accuracy or completeness of scanned copies of this plan sheet.*

OCTA
550 S. MAIN STREET
ORANGE, CA 92863

HDR ENGINEERING, INC.
3230 EL CAMINO REAL, SUITE 200
IRVINE, CA 92602-1377

## LEGEND

1

- Indicates Existing Structure
- Indicates New Construction
- Indicates Bridge Removal (Portion)
- Indicates Closure Pour

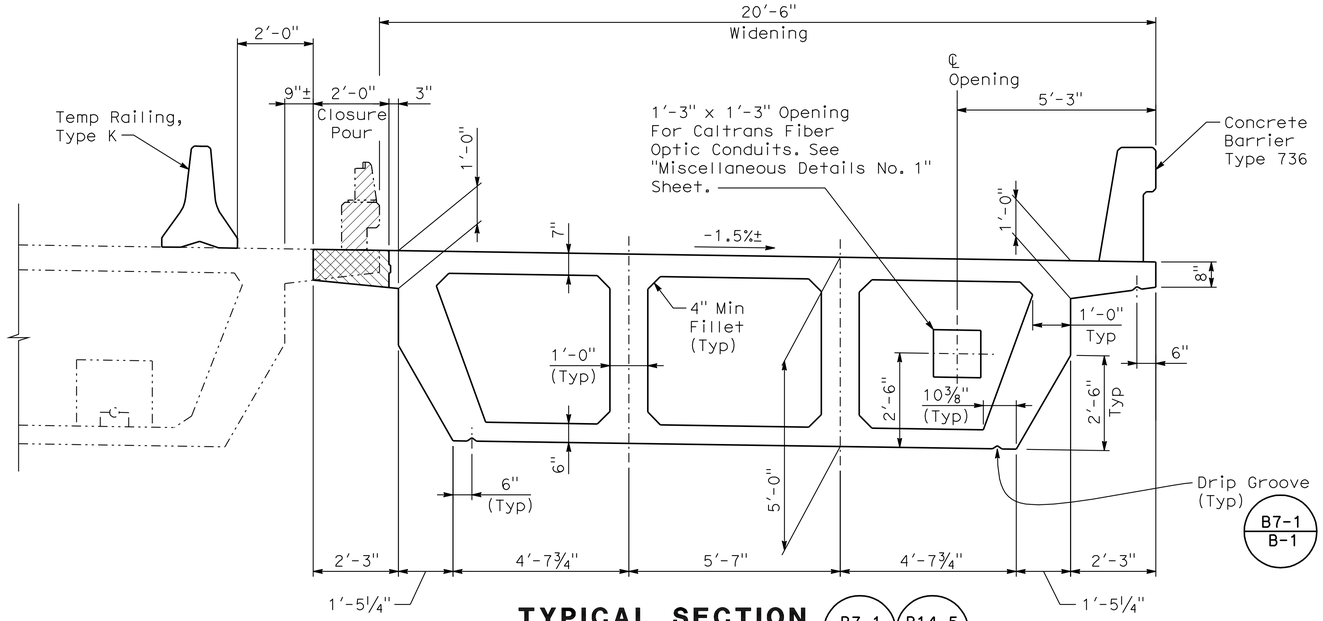


## TYPICAL SECTION

SCALE: ½"=1'-0"

B7-1 / - B14-5 / -

## NOTES:

1. Interior Webs Are Vertical.
2. All Dimensions Given Are Typical Unless Noted.
3. Existing Transverse Bars At Closure Pour Will Be Retained.
4. For Additional Reinforcement See Details, "Girder Reinforcement" Sheet.
5. Falsework Release:
   Alternative 1:
   Falsework Shall Be Released As Soon As Permitted By The Specifications. Closure Pour Shall Not Be Placed Sooner Than 60 Days After The Falsework Has Been Released.

   Alternative 2:
   Falsework Shall Not Be Released Less Than 28 Days After The Last Concrete Has Been Placed. Closure Pour Shall Not Be Placed Sooner Than 14 Days After The Falsework Has Been Released.

   When Falsework Release Alternative 2 Is Used, Camber Values Are 0.75 Times Those Shown.
6. Extend Reinforcement Into Diaphragm.

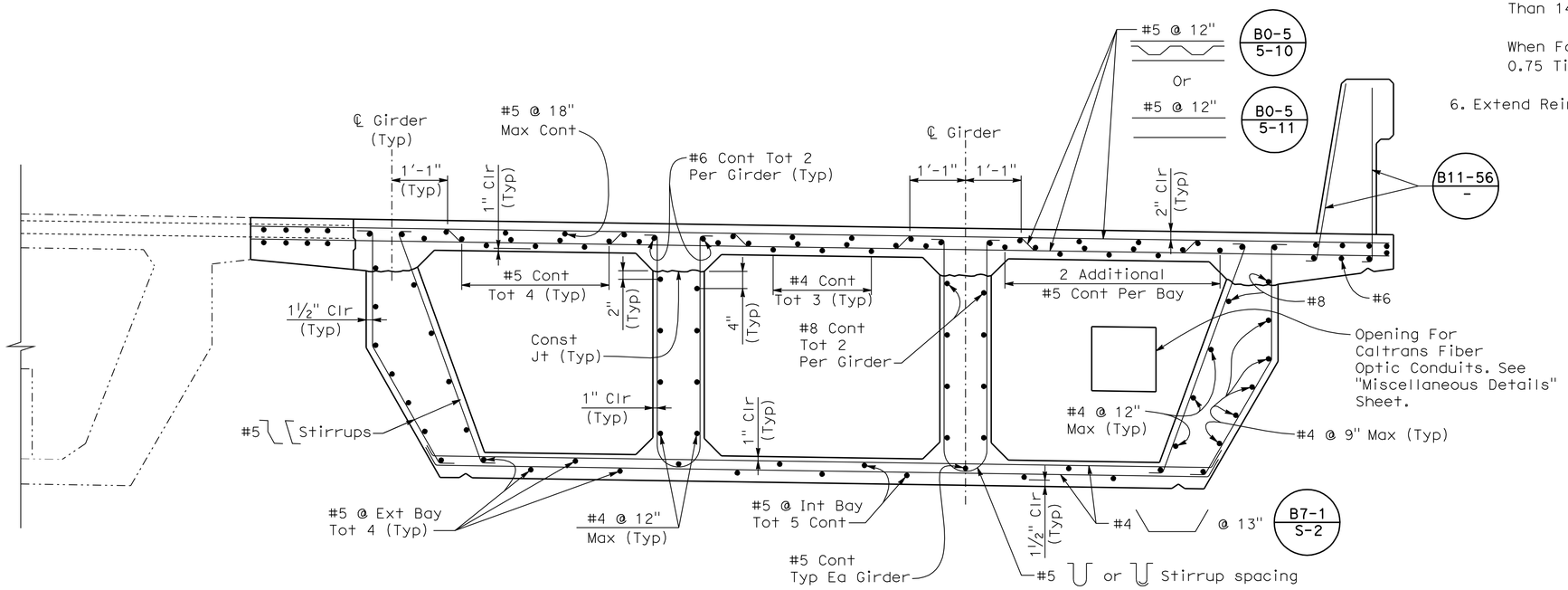


## TYPICAL SECTION

SCALE: ¾"=1'-0"

B0-5 / - B7-1 / - B11-56 / -

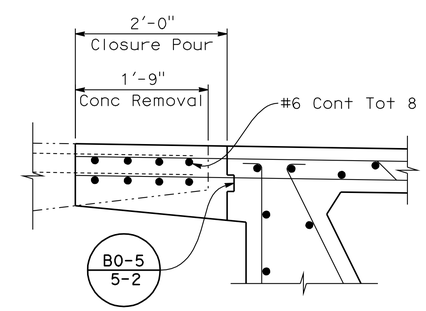


## CLOSURE POUR DETAIL

NO SCALE

1 **REVISED PER ADDENDUM No. 1 DATED AUGUST 22, 2011**

**NOTE:**

The Contractor Shall Verify All Controlling Field Dimensions Before Ordering Or Fabricating Any Materials.

Sudhakar Vatti
DESIGN OVERSIGHT Sudhakar Vatti
8-12-11
SIGN OFF DATE

| | BY | CHECKED |
|---|---|---|
| DESIGN | J. Ramirez | W. Chu |
| DETAILS | E. Gray | W. Chu |
| QUANTITIES | J. Ramirez | Z. Daniel |

PREPARED FOR THE STATE OF CALIFORNIA DEPARTMENT OF TRANSPORTATION

ERIC A. JOHNSON
PROJECT ENGINEER

BRIDGE NO. 55-0337
POST MILE 13.0

# DOUGLASS OH (WIDEN)
# TYPICAL SECTION

DESIGN DETAIL SHEET (ENGLISH) (REV. 06-01-09)

ORIGINAL SCALE IN INCHES FOR REDUCED PLANS 0 1 2 3

CU 12231
EA 0F0401

DISREGARD PRINTS BEARING EARLIER REVISION DATES

REVISION DATES (PRELIMINARY STAGE ONLY) 10/09 2/10 5/10 6/10 8/10

SHEET 13 OF 27

FILE => 55-0337r-k-ts01.add

USERNAME => trsttrk DATE PLOTTED => 19-AUG-2011 TIME PLOTTED => 15:39

| DIST | COUNTY | ROUTE | POST MILES TOTAL PROJECT | SHEET No | TOTAL SHEETS |
|---|---|---|---|---|---|
| 12 | Ora | 57 | 12.2/15.2 | 448 | 527 |

REGISTERED CIVIL ENGINEER 08-09-10 DATE

4-18-11
PLANS APPROVAL DATE

REGISTERED PROFESSIONAL ENGINEER ERIC A. JOHNSON No. C57355 Exp. 12/31/11 CIVIL STATE OF CALIFORNIA

*The State of California or its officers or agents shall not be responsible for the accuracy or completeness of scanned copies of this plan sheet.*

OCTA
550 S. MAIN STREET
ORANGE, CA 92863

HDR ENGINEERING, INC.
3230 EL CAMINO REAL, SUITE 200
IRVINE, CA 92602-1377

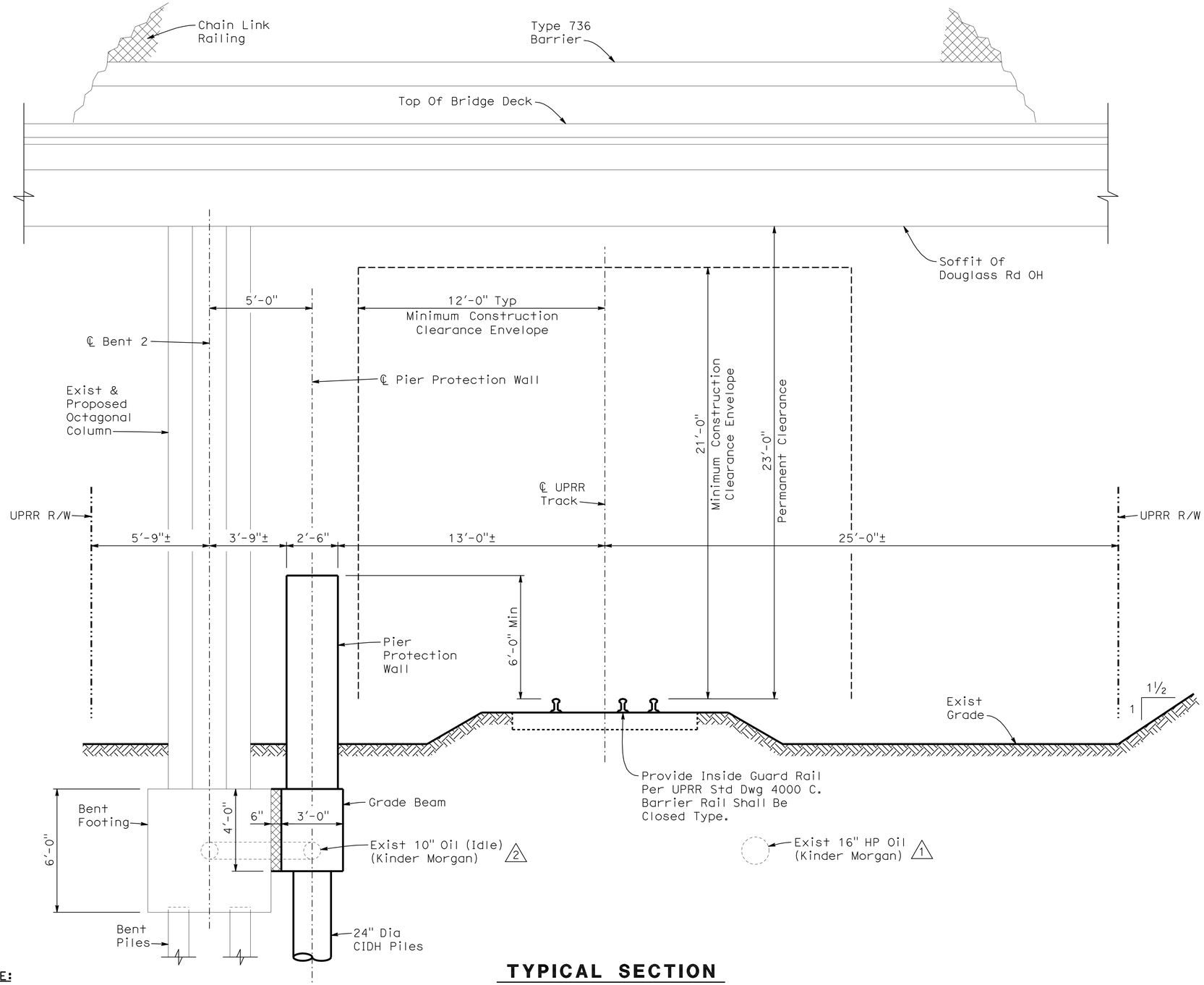


## TYPICAL SECTION

SCALE 3/8"=1'-0"

**NOTE:**

The Contractor Shall Verify All Controlling Field Dimensions Before Ordering Or Fabricating Any Materials.

**1 REVISED PER ADDENDUM No. 1 DATED AUGUST 22, 2011**

## CONSTRUCTION NOTES:

1 Protect In Place

2 Abandoned. Contractor Shall Remove Conflicting Portion During Construction.

6" Polystyrene Strip

General Notes:

1. The Proposed Grade Separation Project Shall Not Increase The Quantity And/Or Characteristics Of The Flow In The Railroad's Ditches And/Or Drainage Structures.
2. The Elevation Of The Existing Top-Of-Rail Profile Shall Be Verified Before Beginning Construction. All Discrepancies Shall Be Brought To The Attention Of The Railroad Prior To Construction.
3. The Contractor Must Submit A Proposed Method Of Erosion And Sediment Control And Have The Method Approved By The Railroad.
4. All Shoring Systems That Impact The Railroad's Operations And/Or Supports The Railroad's Embankment Shall Be Designed And Constructed Per Current Railroad Guidelines For Temporary Shoring.
5. All Demolitions Within The Railroad's Right-Of-Way And/Or Demolition That May Impact The Railroad's Tracks Or Operations Shall Be In Compliance With The Railroad's Demolition Guidelines.
6. Erection Over The Railroad's Right-Of-Way Shall Be Designed To Cause No Interruption To The Railroads Operation, Enabling The Track(S) To Remain Open To Traffic Per The Railroad's Requirements.
7. Railroad Requirements Do Not Allow Work Within 50 Feet Of Track Centerline When A Train Passes The Work Site And All Personnel Must Clear The Area Within 25 Feet Of The Track Centerline And Secure All Equipment.
8. False-Work Clearances Shall Comply With Minimum Construction Clearances.
9. All Permanent Clearances Shall Be Verified Before Project Closing.

Sudhakar Vatti
DESIGN OVERSIGHT Sudhakar Vatti
8-12-11
SIGN OFF DATE

| | BY | CHECKED |
|---|---|---|
| DESIGN | Z. Daniel | E. Johnson |
| DETAILS | E. Gray | E. Johnson |
| QUANTITIES | Z. Daniel | E. Johnson |

PREPARED FOR THE STATE OF CALIFORNIA DEPARTMENT OF TRANSPORTATION

ERIC A. JOHNSON
PROJECT ENGINEER

BRIDGE NO. 55-0337
POST MILE 13.0

# DOUGLASS OH (WIDEN)

## MISCELLANEOUS DETAILS NO. 2

DESIGN DETAIL SHEET (ENGLISH) (REV. 06-01-09)

ORIGINAL SCALE IN INCHES FOR REDUCED PLANS 0 1 2 3

CU 12231
EA 0F0401

DISREGARD PRINTS BEARING EARLIER REVISION DATES

REVISION DATES (PRELIMINARY STAGE ONLY) ~~10/09~~ ~~2/10~~ ~~5/10~~ ~~6/10~~ 8/10

SHEET 17 OF 27

FILE => 55-0337r-p-miscdt02.add

USERNAME => rtsrtk DATE PLOTTED => 19-AUG-2011 TIME PLOTTED => 15:39

| DIST | COUNTY | ROUTE | POST MILES TOTAL PROJECT | SHEET No | TOTAL SHEETS |
|---|---|---|---|---|---|
| 12 | Ora | 57 | 12.2/15.2 | 449 | 527 |

REGISTERED CIVIL ENGINEER — DATE 08-09-10

PLANS APPROVAL DATE 4-18-11

REGISTERED PROFESSIONAL ENGINEER — ERIC A. JOHNSON No. C57355 Exp. 12/31/11 CIVIL — STATE OF CALIFORNIA

*The State of California or its officers or agents shall not be responsible for the accuracy or completeness of scanned copies of this plan sheet.*

OCTA
550 S. MAIN STREET
ORANGE, CA 92863

HDR ENGINEERING, INC.
3230 EL CAMINO REAL, SUITE 200
IRVINE, CA 92602-1377

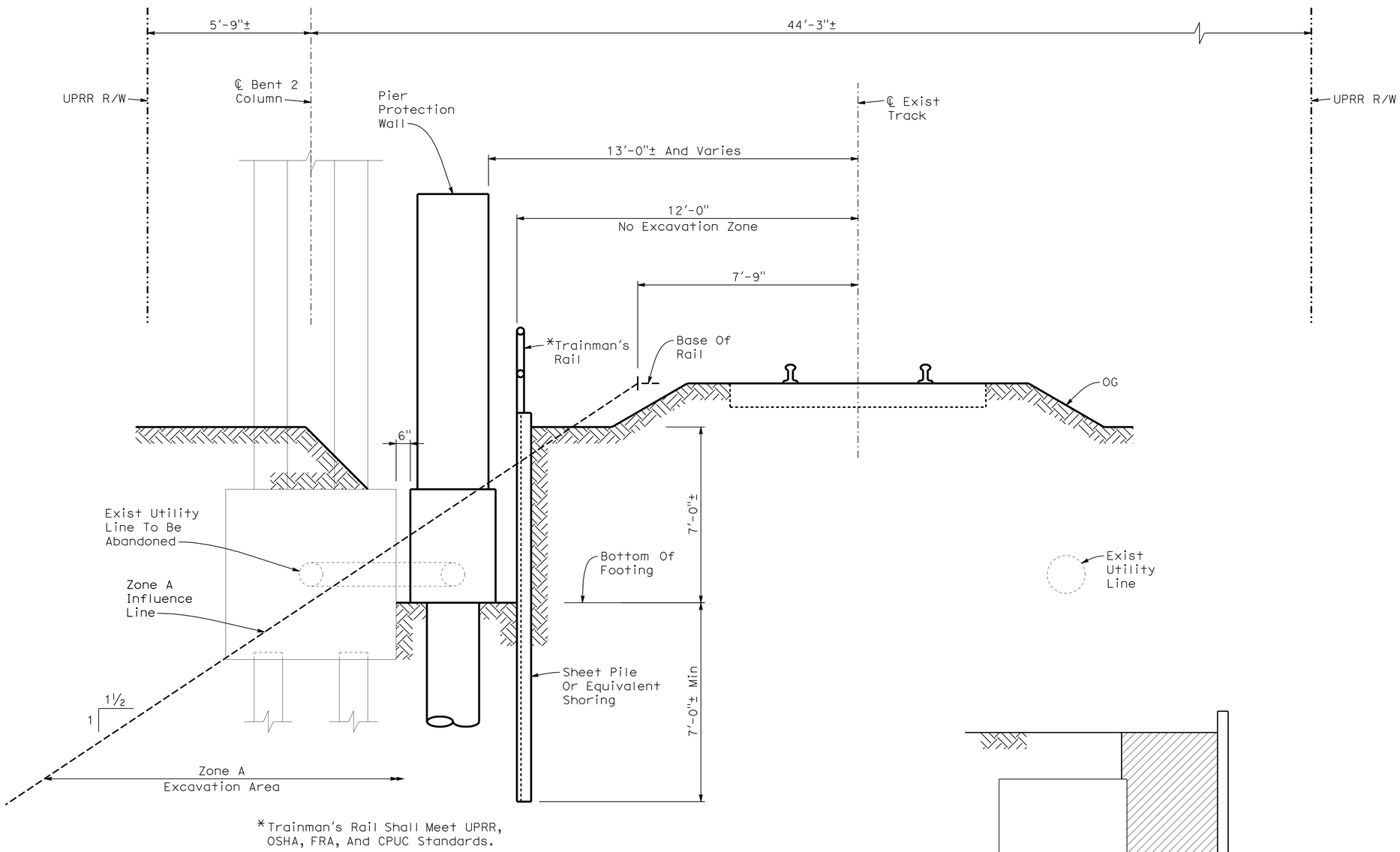


## TYPICAL SECTION

SCALE ½"=1'-0"

1 **REVISED PER ADDENDUM No. 1 DATED AUGUST 22, 2011**

**NOTE:**

The Contractor Shall Verify All Controlling Field Dimensions Before Ordering Or Fabricating Any Materials.

SHORING NOTES:

1. For Dimensions Not Shown See "Protection Wall Details No. 1" And "Protection Wall Details No. 2" Sheets.
2. Shoring For Pier Protection Wall Shall Be Designed For Railroad Live Load Surcharge In Addition To OSHA Standard Loads For Excavation In Zone A.
3. Applicable Railroad Live Load: Cooper E80.
4. For Excavation Which Encroaches Into Zone A, Shoring Plans Shall Be Accompanied By Design Calculations. Plans And Calculations Shall Be Stamped And Signed By A Professional Engineer Registered In The State Of California.




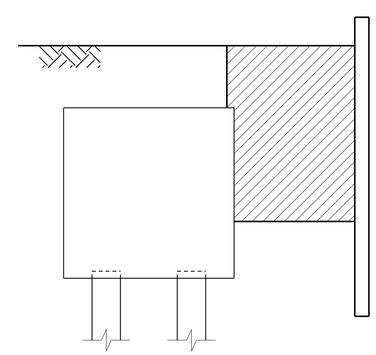

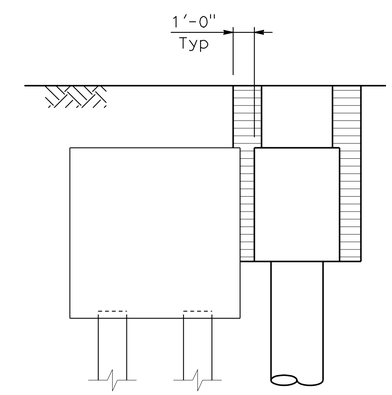


Limits Of Structure Excavation (Retaining Wall)

Limits Of Structure Excavation (Retaining Wall)

Sudhakar Vatti
DESIGN OVERSIGHT Sudhakar Vatti
8-12-11
SIGN OFF DATE

| | BY | CHECKED |
|---|---|---|
| DESIGN | Z. Daniel | E. Johnson |
| DETAILS | E. Gray | E. Johnson |
| QUANTITIES | Z. Daniel | E. Johnson |

PREPARED FOR THE STATE OF CALIFORNIA DEPARTMENT OF TRANSPORTATION

ERIC A. JOHNSON
PROJECT ENGINEER

BRIDGE NO. 55-0337
POST MILE 13.0

# DOUGLASS OH (WIDEN)

## MISCELLANEOUS DETAILS NO. 3

DESIGN DETAIL SHEET (ENGLISH) (REV. 06-01-09)

ORIGINAL SCALE IN INCHES FOR REDUCED PLANS 0 1 2 3

CU 12231
EA 0F0401

DISREGARD PRINTS BEARING EARLIER REVISION DATES

REVISION DATES (PRELIMINARY STAGE ONLY) 10/09 2/10 5/10 6/10 8/10

SHEET 18 OF 27

FILE => 55-0337r-p-miscdt03.add

USERNAME => trstrk DATE PLOTTED => 19-AUG-2011 TIME PLOTTED => 15:39

| DIST | COUNTY | ROUTE | POST MILES TOTAL PROJECT | SHEET No | TOTAL SHEETS |
|---|---|---|---|---|---|
| 12 | Ora | 57 | 12.2/15.2 | 459 | 527 |

Eric A. Johnson 08-09-10
REGISTERED CIVIL ENGINEER DATE

4-18-11
PLANS APPROVAL DATE

REGISTERED PROFESSIONAL ENGINEER ERIC A. JOHNSON No. C57355 Exp. 12/31/11 CIVIL STATE OF CALIFORNIA

*The State of California or its officers or agents shall not be responsible for the accuracy or completeness of scanned copies of this plan sheet.*

OCTA
550 S. MAIN STREET
ORANGE, CA 92863

HDR ENGINEERING, INC.
3230 EL CAMINO REAL, SUITE 200
IRVINE, CA 92602-1377

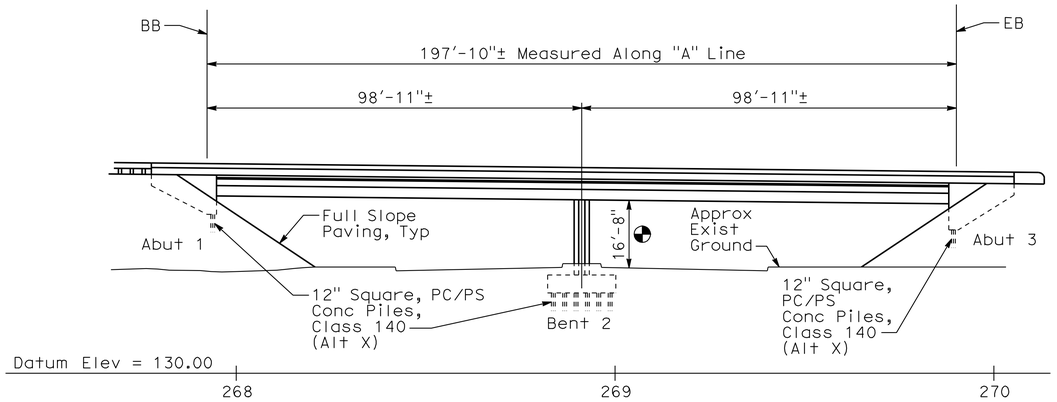


## ELEVATION

SCALE 1"=20'

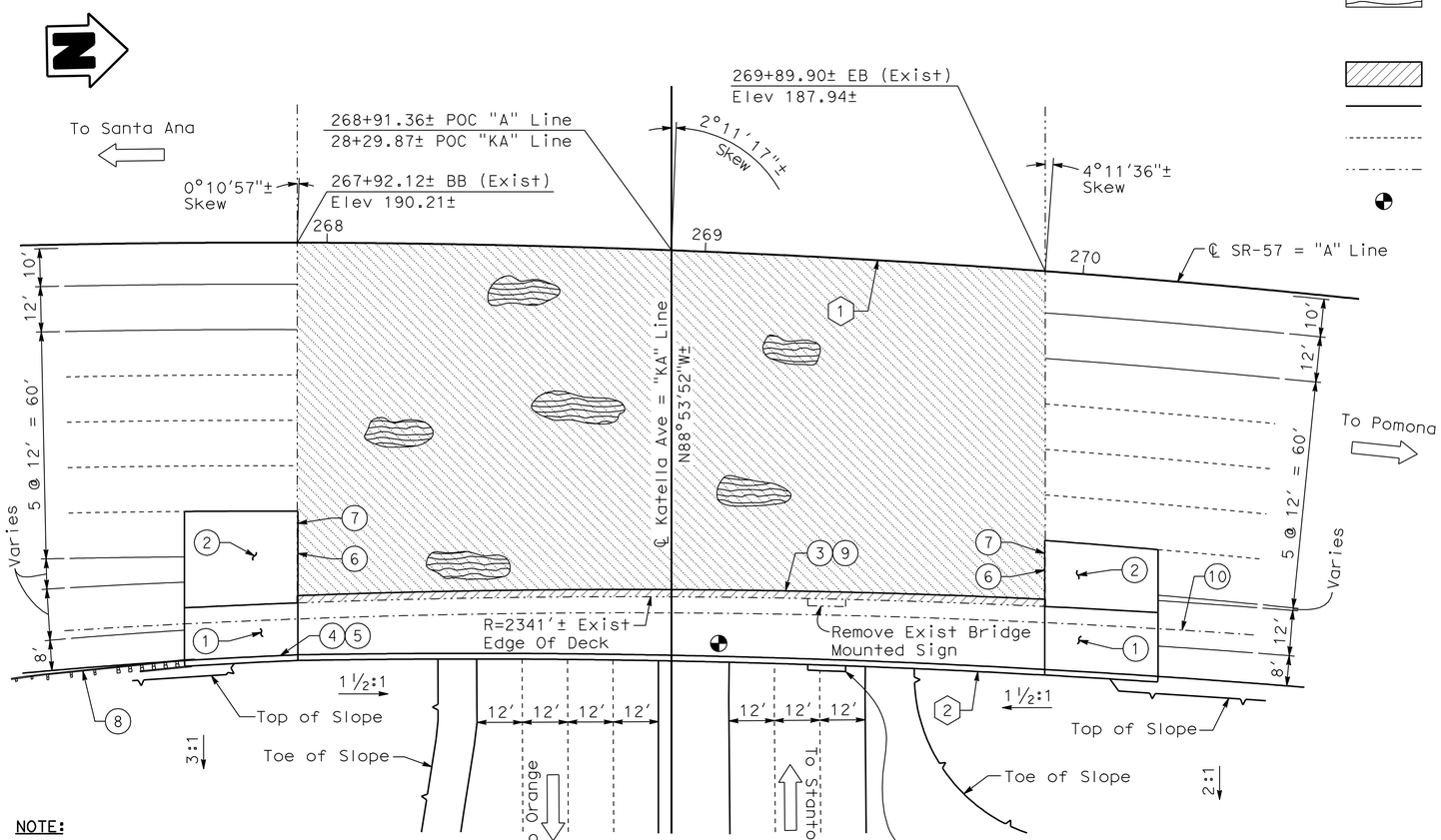


## PLAN

SCALE 1"=20'

**NOTE:**

The Contractor Shall Verify All Controlling Field Dimensions Before Ordering Or Fabricating Any Materials.

## LEGEND

1. Structure Approach Slab Type N(30D)
2. Structure Approach Slab Type R(30D)
3. Remove Exist Type 9 Barrier And Overhang And Salvage Metal Railing
4. Paint "KATELLA AVENUE UNDERCROSSING"
5. Paint "BRIDGE No. 55-0401" And Year Constructed
6. Joint Seal Replacement (Exist)
7. Paving Notch Extension
8. Metal Beam Guard Railing, See "Road Plans"
9. Exist Fiber Optic Lines (To Be Relocated)
10. NPS 3 Supply Line (Bridge) (Relocated)

Indicates Limits Of Clean And Treat Existing NB Portion Of The Bridge Deck With High Molecular Weight Methacrylate.

Indicates Removal Of Unsound Concrete And Place Rapid Setting Concrete Patch. Actual Area Is Included In The Deck Repair Table On "General Plan No. 2" Sheet.

Indicates Bridge Removal (Portion)

Indicates New Construction

Indicates Foundation or Hidden Lines

Indicates Existing Structure

Min Vert Clearance 16'-8" (Structure)

## CURVE DATA

| (1) "A" Line | (2) Edge Of Deck |
|---|---|
| R = 2800'± | R = 2695.50' |
| Δ = 44°09'31"± | Δ = 4°49'41" |
| T = 1135.78'± | T = 113.64'± |
| L = 2158.00'± | L = 227.14'± |

## Notes:

1. For General Notes See "Index To Plans" Sheet.
2. For Pile Data Table See "Foundation Plan" Sheet.

KATELLA AVENUE UC (WIDEN) #55-0401
QUANTITIES

| | | |
|---|---|---|
| REMOVE SIGN STRUCTURE | 1 | EA |
| SALVAGE METAL BRIDGE RAILING | 230 | LF |
| REMOVE UNSOUND CONCRETE | 60 | CF |
| CLEAN BRIDGE DECK | 17,750 | SQFT |
| BRIDGE REMOVAL (PORTION), LOCATION A | LUMP | SUM |
| STRUCTURE EXCAVATION (BRIDGE) | 120 | CY |
| STRUCTURE BACKFILL (BRIDGE) | 60 | CY |
| AGGREGATE BASE (APPROACH SLAB) | 5 | CY |
| FURNISH PILING (CLASS 140)(ALTERNATIVE X) | 1,521 | LF |
| DRIVE PILE (CLASS 140)(ALTERNATIVE X) | 26 | EA |
| STRUCTURAL CONCRETE, BRIDGE FOOTING | 30 | CY |
| STRUCTURAL CONCRETE, BRIDGE | 315 | CY |
| STRUCTURAL CONCRETE, APPROACH SLAB(TYPE N) | 38 | CY |
| STRUCTURAL CONCRETE, APPROACH SLAB (TYPE R) | 46 | CY |
| PAVING NOTCH EXTENSION | 32 | CF |
| DRILL AND BOND DOWEL | 30 | LF |
| RAPID SETTING CONCRETE (PATCH) | 60 | CF |
| JOINT SEAL (MR 1") | 75 | LF |
| BAR REINFORCING STEEL (BRIDGE) | 112,000 | LB |
| TREAT BRIDGE DECK | 17,750 | SQFT |
| FURNISH BRIDGE DECK TREATMENT MATERIAL | 200 | GAL |
| PUBLIC SAFETY PLAN | LUMP | SUM |
| SLOPE PAVING (CONCRETE) | 12 | CY |
| MISCELLANEOUS METAL (BRIDGE) | 900 | LB |
| CONCRETE BARRIER (TYPE 736) | 258 | LF |
| NPS 3 SUPPLY LINE (BRIDGE) | 238 | LF |

**(1) REVISED PER ADDENDUM No. 1 DATED AUGUST 22, 2011**

Sudhakar Vatti
DESIGN OVERSIGHT Sudhakar Vatti
8-12-11
SIGN OFF DATE

| | BY | CHECKED |
|---|---|---|
| DESIGN | Z. Daniel | W. Chu |
| DETAILS | E. Gray | W. Chu |
| QUANTITIES | Z. Daniel | J. Ramirez |

LOAD & RESISTANCE FACTOR DESIGN — LIVE LOADING: HL93 W/"LOW-BOY"; PERMIT DESIGN VEHICLE

| | BY | CHECKED |
|---|---|---|
| LAYOUT | Z. Daniel | W. Chu |
| SPECIFICATIONS | E. Johnson | PLANS AND SPECS COMPARED |

PREPARED FOR THE STATE OF CALIFORNIA DEPARTMENT OF TRANSPORTATION

ERIC A. JOHNSON
PROJECT ENGINEER

BRIDGE NO. 55-0401
POST MILES 12.54

# KATELLA AVENUE UC (WIDEN)
# GENERAL PLAN NO. 1

DESIGN GENERAL PLAN SHEET (ENGLISH) (REV. 06-01-09)

ORIGINAL SCALE IN INCHES FOR REDUCED PLANS 0 1 2 3

CU 12231
EA 0F0401

DISREGARD PRINTS BEARING EARLIER REVISION DATES

REVISION DATES (PRELIMINARY STAGE ONLY): 10/09 2/10 5/10 6/10 8/10

SHEET 1 OF 21

FILE => 55-0401r-a-gp01.add

USERNAME => rtstrk DATE PLOTTED => 19-AUG-2011 TIME PLOTTED => 15:39

| DIST | COUNTY | ROUTE | POST MILES TOTAL PROJECT | SHEET No | TOTAL SHEETS |
|---|---|---|---|---|---|
| 12 | Ora | 57 | 12.2/15.2 | 460 | 527 |

REGISTERED CIVIL ENGINEER 08-09-10 DATE

4-18-11
PLANS APPROVAL DATE

*The State of California or its officers or agents shall not be responsible for the accuracy or completeness of scanned copies of this plan sheet.*

REGISTERED PROFESSIONAL ENGINEER ERIC A. JOHNSON No. C57355 Exp. 12/31/11 CIVIL STATE OF CALIFORNIA

OCTA
550 S. MAIN STREET
ORANGE, CA 92863

HDR ENGINEERING, INC.
3230 EL CAMINO REAL, SUITE 200
IRVINE, CA 92602-1377

## LEGEND

1

(3) Remove Exist Type 9 Barrier And Overhang And Salvage Metal Railing

(9) Exist Fiber Optic Lines (To Be Relocated)

Indicates Bridge Removal (Portion)

Indicates New Construction

Indicates Foundation or Hidden Lines

Indicates Existing Structure

## DECK REPAIR TABLE

| BRIDGE NAME | BRIDGE NUMBER | TOTAL DECK AREA (SQ FT) | APPROXIMATE AREA DAMAGED (%) | APPROXIMATE DEPTH (INCHES) | REMOVE UNSOUND CONCRETE (CF) | RAPID SETTING CONCRETE PATCH (CF) |
|---|---|---|---|---|---|---|
| Katella Ave UC | 55-0401 | 17,773 | 2 | 2 | 60 | 60 |

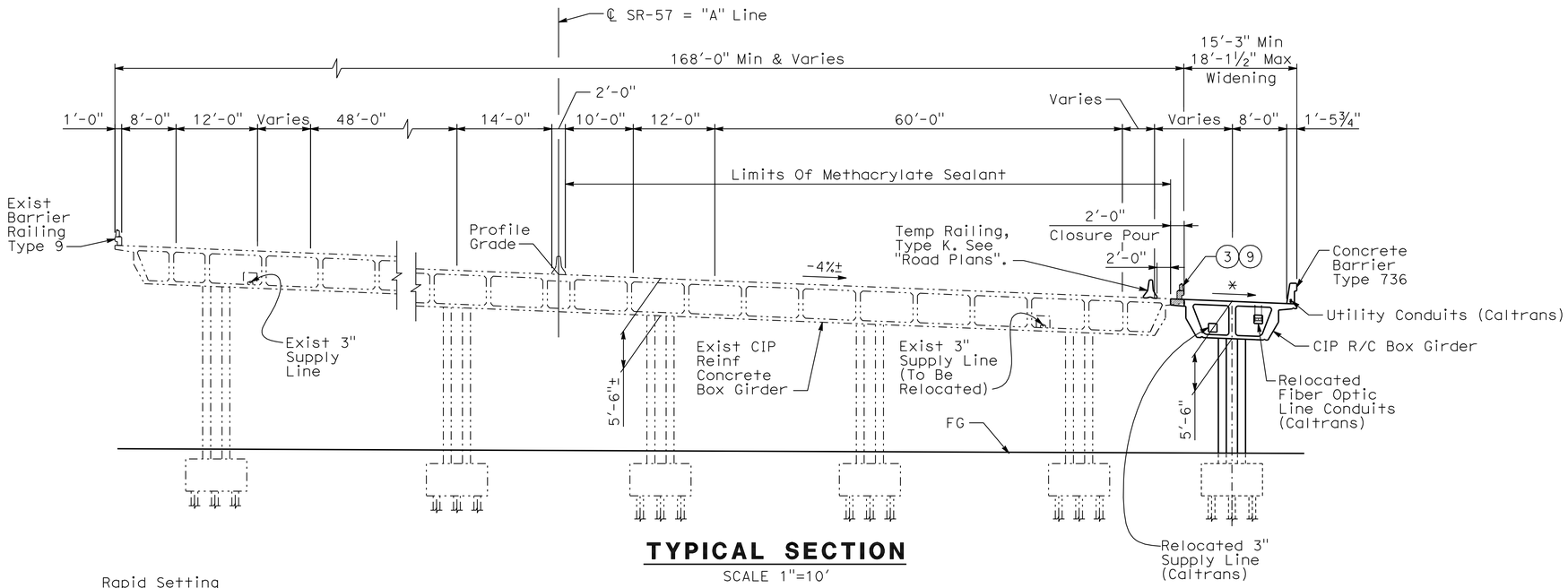


## TYPICAL SECTION

SCALE 1"=10'

* Match Existing

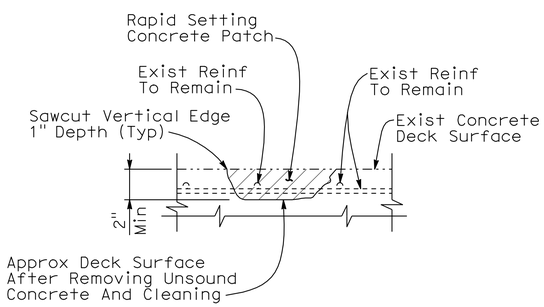


## DECK DAMAGE REPAIR DETAIL

Location Will Be Determined By The Engineer. Reinforcement May Be Encountered During Deck Concrete Removal And Is To Remain Undamaged.

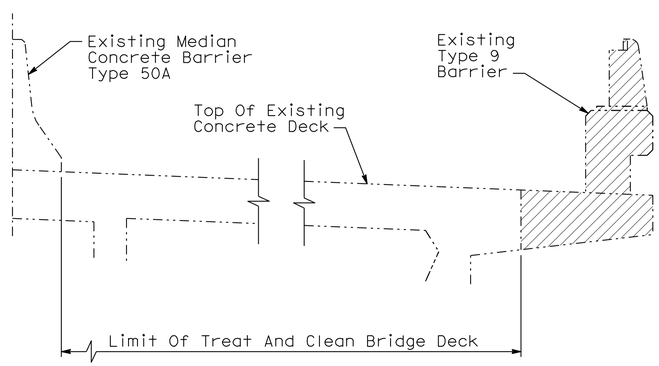


## TYPICAL LIMITS OF DECK WORK

NO SCALE

## Deck Repair Notes:

1. Existing Reinforcement Shall Be Protected In Place During Unsound Concrete Removal And Patching Operations.
2. It Is The Responsibility Of The Contractor To Repair Any Reinforcement That Is Accidentally Cut By Saw Cutting Operations.
3. When Existing Transverse Reinforcement Is Exposed In The Deck Surface, Saw Cutting Shall Be Waived With The Approval Of The Engineer.
4. The Saw Cut Depth Shall Not Exceed 1 Inch Or The Concrete Cover Over The Top Steel Reinforcing Bars, Whichever Is Less.
5. Remove Unsound Portland Cement Concrete And Unsound Concrete Patches To Expose Sound, Hard Concrete Substrate. Replace Original Deck Surface With Rapid Setting Concrete Patch.

**NOTE:**

The Contractor Shall Verify All Controlling Field Dimensions Before Ordering Or Fabricating Any Materials.

1 **REVISED PER ADDENDUM No. 1 DATED AUGUST 22, 2011**

Sudhakar Vatti
DESIGN OVERSIGHT Sudhakar Vatti
8-12-11
SIGN OFF DATE

| | BY | CHECKED | | | |
|---|---|---|---|---|---|
| DESIGN | Z. Daniel | W. Chu | LOAD & RESISTANCE FACTOR DESIGN | LIVE LOADING: HL93 W/"LOW-BOY"; PERMIT DESIGN VEHICLE | |
| DETAILS | E. Gray | W. Chu | LAYOUT | Z. Daniel | W. Chu |
| QUANTITIES | Z. Daniel | J. Ramirez | SPECIFICATIONS | E. Johnson | PLANS AND SPECS COMPARED |

PREPARED FOR THE STATE OF CALIFORNIA DEPARTMENT OF TRANSPORTATION

ERIC A. JOHNSON
PROJECT ENGINEER

BRIDGE NO. 55-0401
POST MILES 12.54

# KATELLA AVENUE UC (WIDEN)
## GENERAL PLAN NO. 2

DESIGN GENERAL PLAN SHEET (ENGLISH) (REV. 06-01-09)

ORIGINAL SCALE IN INCHES FOR REDUCED PLANS 0 1 2 3

CU 12231
EA 0F0401

DISREGARD PRINTS BEARING EARLIER REVISION DATES

REVISION DATES (PRELIMINARY STAGE ONLY) 10/09 2/10 5/10 6/10 8/10

SHEET 2 OF 21

FILE => 55-0401r-a-gp02.add

USERNAME => trstrk DATE PLOTTED => 19-AUG-2011 TIME PLOTTED => 15:39

| DIST | COUNTY | ROUTE | POST MILES TOTAL PROJECT | SHEET No | TOTAL SHEETS |
|---|---|---|---|---|---|
| 12 | Ora | 57 | 12.2/15.2 | 461 | 527 |

1

Eric A Johnson 08-09-10
REGISTERED CIVIL ENGINEER DATE

4-18-11
PLANS APPROVAL DATE

REGISTERED PROFESSIONAL ENGINEER
ERIC A. JOHNSON
No. C57355
Exp. 12/31/11
CIVIL
STATE OF CALIFORNIA

*The State of California or its officers or agents shall not be responsible for the accuracy or completeness of scanned copies of this plan sheet.*

OCTA
550 S. MAIN STREET
ORANGE, CA 92863

HDR ENGINEERING, INC.
3230 EL CAMINO REAL, SUITE 200
IRVINE, CA 92602-1377

## INDEX TO PLANS


| SHEET NO. | DESCRIPTION |
|---|---|
| 1. | General Plan No. 1 |
| 2. | General Plan No. 2 |
| 3. | Index To Plans |
| 4. | Foundation Plan |
| 5. | Abutment 1 Layout |
| 6. | Abutment 3 Layout |
| 7. | Abutment Details |
| 8. | Bent Layout |
| 9. | Bent Details |
| 10. | Typical Section |
| 11. | Girder Layout |
| 12. | Girder Reinforcement |
| 13. | Miscellaneous Details |
| 14. | Structure Approach Drainage Details |
| 15. | Structure Approach Type R(30D) |
| 16. | Structure Approach Type N(30D) |
| 17. | Slope Paving - Full Slope |
| 18. | Log of Test Borings - 1 of 4 |
| 19. | Log of Test Borings - 2 of 4 |
| 20. | Log of Test Borings - 3 of 4 |
| 21. | Log of Test Borings (As-Built) - 4 of 4 |


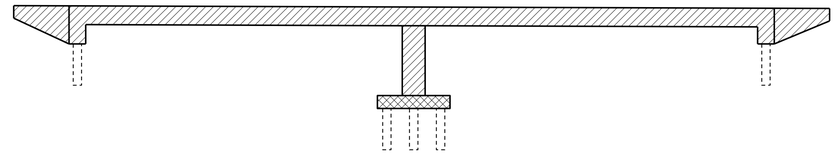

Structural Concrete, Bridge (4,000 psi)

Structural Concrete, Bridge Footing (3,600 psi)

## CONCRETE TYPE LIMITS

NTS

## GENERAL NOTES
## LOAD AND RESISTANCE FACTOR DESIGN

DESIGN: AASHTO LRFD Bridge Design Specifications, 4th Edition, 2007 and The CALTRANS Amendments V.4

SEISMIC DESIGN: Caltrans SEISMIC DESIGN CRITERIA (SDC) Version 1.4, June 2006

DEAD LOAD: Includes 35 psf for Future Wearing Surface

LIVE LOADING: HL93 and Permit Design Load

SEISMIC LOADING:
CALTRANS MTD 20-1, SDC APPENDIX B (September, 2009)
ARS: As Shown
Soil Profile: Initial $V_{S30}$ = 850 (ft/sec), Liquefaction: __ Yes, X No
PGA = 0.48 (in g), M (for PGA) = 6.6 (Mw)

REINFORCED CONCRETE: New Concrete (Bridge)
fy = 60 ksi
f'c = 3.6 ksi (Except Specified Elsewhere)
n = 8

## CALTRANS STANDARD PLANS DATED MAY 2006

| | |
|---|---|
| A10A | ACRONYMS AND ABBREVIATIONS (SHEET 1 OF 2) |
| A10B | ACRONYMS AND ABBREVIATIONS (SHEET 1 OF 2) |
| A10C | SYMBOLS (SHEET 1 OF 2) |
| A10D | SYMBOLS (SHEET 2 OF 2) |
| A62B | LIMITS OF PAYMENT FOR EXCAVATION AND BACKFILL - BRIDGE SURCHARGE AND WALL |
| A62C | LIMITS OF PAYMENT FOR EXCAVATION AND BACKFILL BRIDGE |
| B0-1 | BRIDGE DETAILS |
| B0-3 | BRIDGE DETAILS |
| B0-5 | BRIDGE DETAILS |
| B2-5 | PILE DETAILS CLASS 90 AND CLASS 140 |
| B6-21 | JOINT SEALS (MAXIMUM MOVEMENT RATING = 2") |
| B7-1 | BOX GIRDER DETAILS |
| B7-10 | UTILITY OPENING - BOX GIRDER |
| B11-56 | CONCRETE BARRIER TYPE 736 |
| B14-4 | WATER SUPPLY LINE (BRIDGE) (PIPE SIZES LESS THAN 4") |
| B14-5 | WATER SUPPLY LINE (DETAILS) (PIPE SIZES LESS THAN 4") |
| D99B | EDGE DRAIN OUTLET AND VENT DETAILS |

STANDARD PLAN SHEET NO.

DETAIL NO.

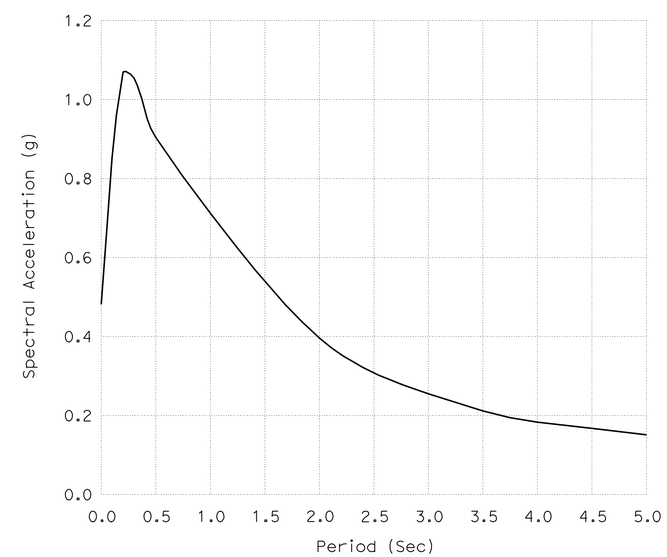


## ARS CURVE FOR SAFETY EARTHQUAKE EVENTS (NON-LIQUEFACTION CASE)

NOTE:
The Contractor Shall Verify All Controlling Field Dimensions Before Ordering Or Fabricating Any Materials.

1 REVISED PER ADDENDUM No. 1 DATED AUGUST 22, 2011

Sudhakar Vatti
DESIGN OVERSIGHT Sudhakar Vatti
8-12-11
SIGN OFF DATE

| | BY | CHECKED |
|---|---|---|
| DESIGN | Z. Daniel | W. Chu |
| DETAILS | E. Gray | W. Chu |
| QUANTITIES | Z. Daniel | J. Ramirez |

PREPARED FOR THE STATE OF CALIFORNIA DEPARTMENT OF TRANSPORTATION

ERIC A. JOHNSON
PROJECT ENGINEER

BRIDGE NO. 55-0401
POST MILE 12.54

# KATELLA AVENUE UC (WIDEN)
## INDEX TO PLANS

DESIGN DETAIL SHEET (ENGLISH) (REV. 06-01-09)

ORIGINAL SCALE IN INCHES FOR REDUCED PLANS 0 1 2 3

CU 12231
EA 0F0401

DISREGARD PRINTS BEARING EARLIER REVISION DATES

REVISION DATES (PRELIMINARY STAGE ONLY) 10/09 2/10 5/10 6/10 8/10

SHEET 3 OF 21

FILE => 55-0401r-a-itp01.add

USERNAME => trestrk DATE PLOTTED => 19-AUG-2011 TIME PLOTTED => 15:40

| DIST | COUNTY | ROUTE | POST MILES TOTAL PROJECT | SHEET No | TOTAL SHEETS |
|---|---|---|---|---|---|
| 12 | Ora | 57 | 12.2/15.2 | 462 | 527 |

REGISTERED CIVIL ENGINEER 08-09-10 DATE

4-18-11
PLANS APPROVAL DATE

*The State of California or its officers or agents shall not be responsible for the accuracy or completeness of scanned copies of this plan sheet.*

REGISTERED PROFESSIONAL ENGINEER ERIC A. JOHNSON No. C57355 Exp. 12/31/11 CIVIL STATE OF CALIFORNIA

OCTA
550 S. MAIN STREET
ORANGE, CA 92863

HDR ENGINEERING, INC.
3230 EL CAMINO REAL, SUITE 200
IRVINE, CA 92602-1377

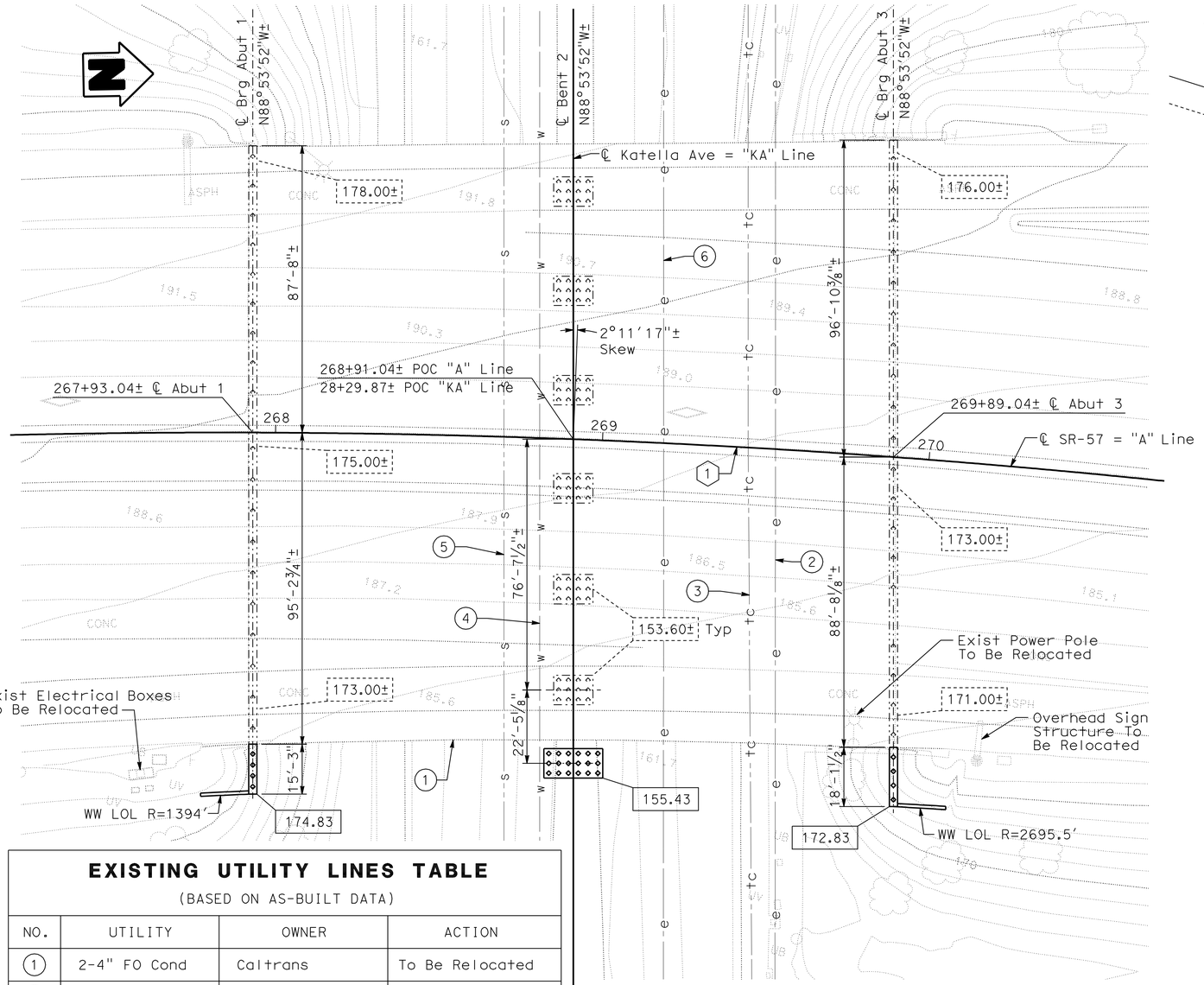


## LEGEND

1

- Indicates New Construction
- Indicates Existing
- XXX.XX — Indicates Bottom Of Footing Elevation
- XXX.XX± — Indicates Bottom Of Exist Footing Elevation

NOTE:

1. Locations Of Utilities Are Approximate. See Utility Plans For Additional Information.

## PILE DATA TABLE

| Location | Pile Type | Nominal Resistance (kips) | | Design Tip Elevation (ft) | Specified Tip Elevation (ft) | Nominal Driving Resistance (kips) |
|---|---|---|---|---|---|---|
| | | Compression | Tension | | | |
| Abut 1 | 12" Square PC/PS Conc Pile, Class 140 (Alt X) | 230 | - | 102.0(a)<br>125.0(c)<br>154.0(d) | 102.0 | 230 |
| Bent 2 | 12" Square PC/PS Conc Pile, Class 140 (Alt X) | 230 | 70 | 103.0(a)<br>128.0(b)<br>115.0(c)<br>135.0(d) | 103.0 | 230 |
| Abut 3 | 12" Square PC/PS Conc Pile, Class 140 (Alt X) | 240 | - | 103.0(a)<br>125.0(c)<br>152.0(d) | 103.0 | 240 |

Notes:
1. Design Tip Elevations For Abutments Are Controlled By:
   (a) Compression; (c) Settlement; (d) Lateral Load.
2. Design Tip Elevations For Bents Are Controlled By:
   (a) Compression; (b) Tension; (c) Settlement; (d) Lateral Load.
3. The Specified Tip Elevation Shall Not Be Raised Above The Design Tip Elevations For Tension, Lateral, And Tolerable Settlement.

## EXISTING UTILITY LINES TABLE

(BASED ON AS-BUILT DATA)

| NO. | UTILITY | OWNER | ACTION |
|---|---|---|---|
| 1 | 2-4" FO Cond | Caltrans | To Be Relocated |
| 2 | 12 KV UG | City Of Anaheim | Protect In Place |
| 3 | Conduit Bank | AT&T, SBC, Pac-Bell | Protect In Place |
| 4 | 12" Water | City Of Anaheim | Protect In Place |
| 5 | 30" VCP | Sewer OCSD | Protect In Place |
| 6 | Elect Conduit | SCE | Protect In Place |

NOTE:

The Contractor Shall Verify All Controlling Field Dimensions Before Ordering Or Fabricating Any Materials.

GEOTECHNICAL PROFESSIONAL APPROVAL DATE

## PLAN

SCALE 1"=20'

1 REVISED PER ADDENDUM No. 1 DATED AUGUST 22, 2011

### ABBREVIATIONS

HP = High Pressure
FO = Fiber Optic
KV = Kilovolts
UG = Underground

### CURVE DATA

1 "A" Line
R = 2800'±
Δ = 44°09'31"±
T = 1135.78'±
L = 2158.00'±

### BENCHMARKS AND DATUM

**BASIS OF BEARINGS**

The Bearings Shown Hereon Are Based Upon The Bearing Between OCS Horizontal Control Station GPS No. 0560 And Station 0111 Being North 4°59'28" East, Per Records On File In The Office Of The County Surveyor.

**DATUM STATEMENT**

Coordinates Shown Are Based On The California Coordinate System (CCS83), Zone VI, 1983 NAD, (1991.35 Epoch OCS GPS Adjustment). All Coordinates Shown Are Grid, Unless Otherwise Noted. The Average Combination Factor Of The Two Stations Listed Above Is 0.99999204.

**BENCHMARK**

Elevations Shown Hereon Are Based On OCS Vertical Control Data Sheet Designation 1K-29-80 As Elevation 202.237' NAVD 88 (OCS 2006 Adjustment), Per Records On File In The Office Of The County Surveyor.

Designation: 1B-99-99

Elevation: 158.271 (NAVD 88; Year Leveled-2006)

Description:
Described By OCS 2002 - Found 3 3/4" OCS Aluminum Benchmark Disk Stamped "1B-99-99", Set In The Southeast Corner Of A 4' By 22' Concrete Catch Basin. Monument Is Located In The Northwesterly Corner Of The Intersection Of Katella Avenue And Howell Street, 48' Northerly Of The Centerline Of Katella Avenue And 125' Westerly Of The Centerline Of Howell Street. Monument Is Set Level With The Sidewalk.

Sudhakar Vatti
DESIGN OVERSIGHT Sudhakar Vatti
8-12-11
SIGN OFF DATE

SCALE: 1"=20' | VERT.DATUM 1991 | HORZ.DATUM 1991
PHOTOGRAMMETRY AS OF: | ALIGNMENT TIES
SURVEYED BY E. Martinez | DRAFTED BY
FIELD CHECKED BY D. Williams | CHECKED BY

| | BY | CHECKED |
|---|---|---|
| DESIGN | Z. Daniel | W. Chu |
| DETAILS | E. Gray | W. Chu |
| QUANTITIES | Z. Daniel | J. Ramirez |

PREPARED FOR THE STATE OF CALIFORNIA DEPARTMENT OF TRANSPORTATION

ERIC A. JOHNSON
PROJECT ENGINEER

BRIDGE NO. 55-0401
POST MILE 12.54

# KATELLA AVENUE UC (WIDEN)
# FOUNDATION PLAN

FOUNDATION PLAN SHEET (ENGLISH) (REV. 06-01-09)

ORIGINAL SCALE IN INCHES FOR REDUCED PLANS 0 1 2 3

EA 0F0404

DISREGARD PRINTS BEARING EARLIER REVISION DATES
REVISION DATES (PRELIMINARY STAGE ONLY) 10/09 2/10 5/10 6/10 8/10

SHEET 4 OF 21

FILE => 55-0401r-e-fp101.add

USERNAME => trstrk DATE PLOTTED => 19-AUG-2011 TIME PLOTTED => 15:40

| DIST | COUNTY | ROUTE | POST MILES TOTAL PROJECT | SHEET No | TOTAL SHEETS |
|---|---|---|---|---|---|
| 12 | Ora | 57 | 12.2/15.2 | 463 | 527 |

Eric A. Johnson 08-09-10
REGISTERED CIVIL ENGINEER DATE

4-18-11
PLANS APPROVAL DATE

REGISTERED PROFESSIONAL ENGINEER ERIC A. JOHNSON No. C57355 Exp. 12/31/11 CIVIL STATE OF CALIFORNIA

*The State of California or its officers or agents shall not be responsible for the accuracy or completeness of scanned copies of this plan sheet.*

OCTA
550 S. MAIN STREET
ORANGE, CA 92863

HDR ENGINEERING, INC.
3230 EL CAMINO REAL, SUITE 200
IRVINE, CA 92602-1377

## LEGEND

Indicates Bridge Removal (Portion)

Indicates Closure Pour

**Notes:**

1. For Section B-B, See "Abutment Details" Sheet.

1

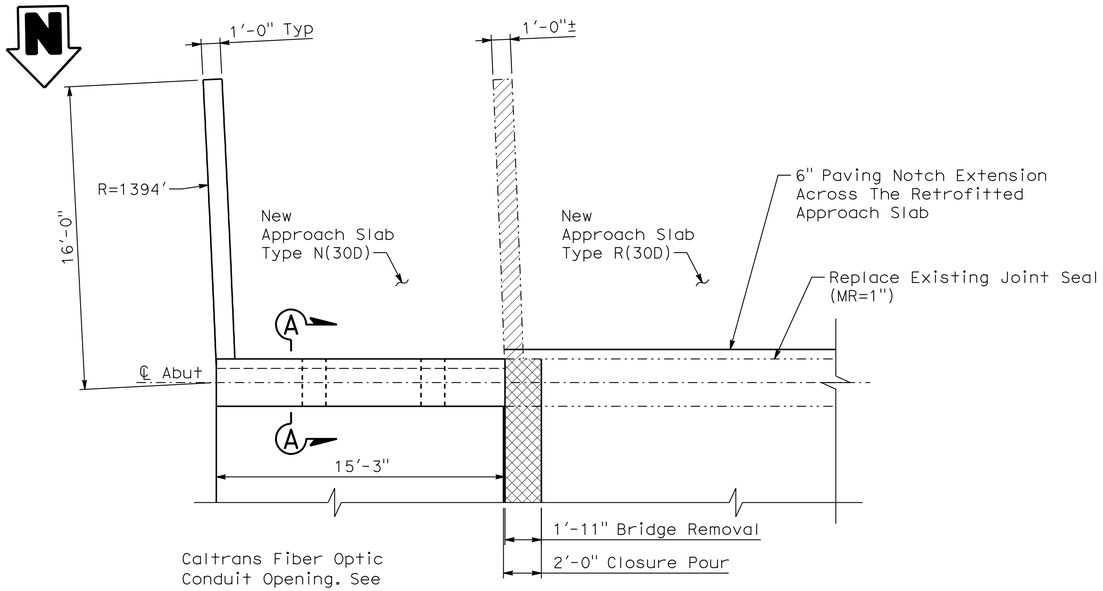


## PLAN

SCALE: 1/4" = 1'-0"

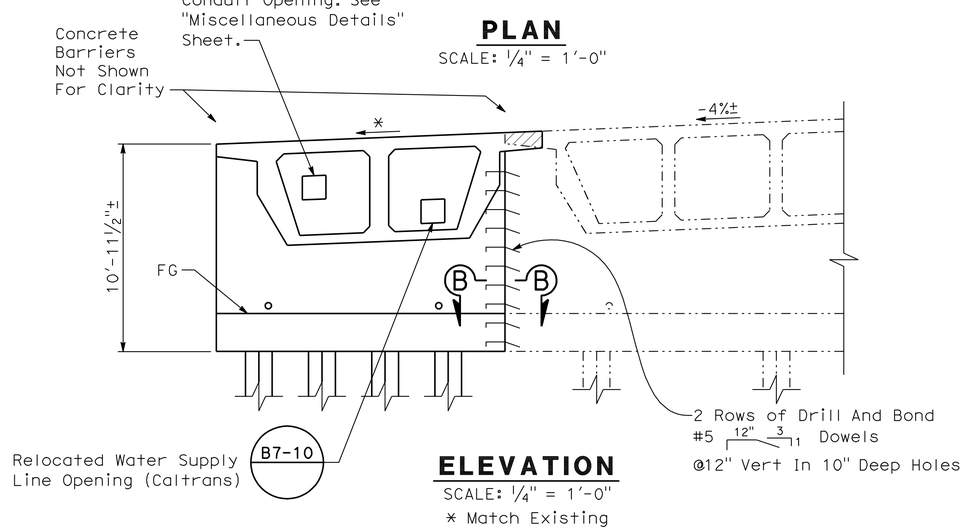


## ELEVATION

SCALE: 1/4" = 1'-0"

* Match Existing

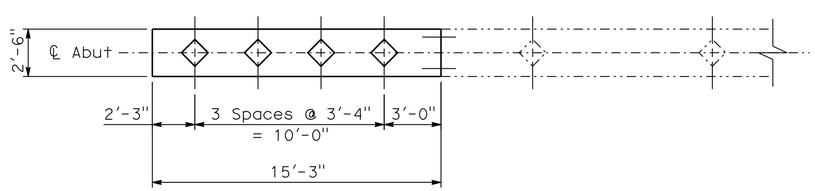


## PILE LAYOUT PLAN

SCALE: 1/4" = 1'-0"

**NOTE:**

The Contractor Shall Verify All Controlling Field Dimensions Before Ordering Or Fabricating Any Materials.

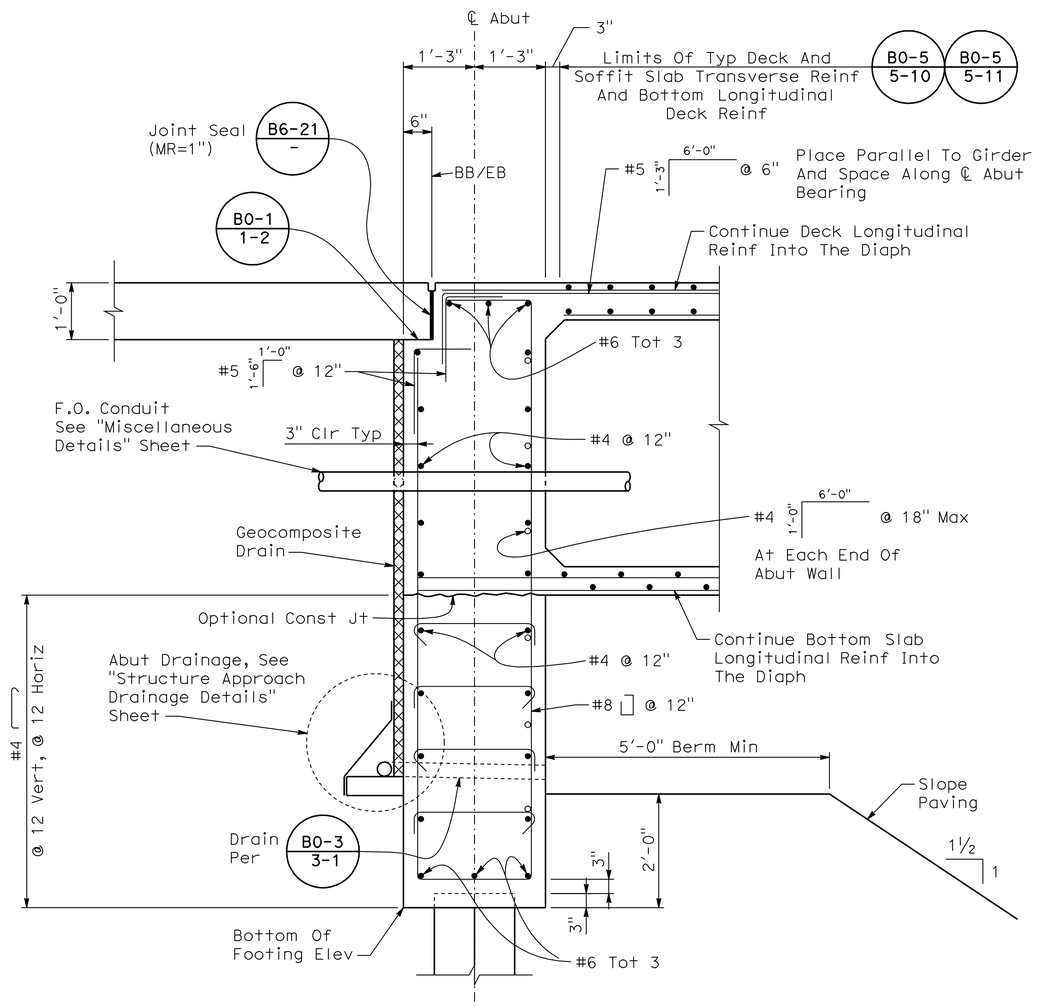


## SECTION A-A

SCALE: 3/4"=1'-0"

Note:
Water Supply Line Not Shown For Clarity

**1 REVISED PER ADDENDUM No. 1 DATED AUGUST 22, 2011**

Sudhakar Vatti
DESIGN OVERSIGHT Sudhakar Vatti
8-12-11
SIGN OFF DATE

| | BY | CHECKED |
|---|---|---|
| DESIGN | Z. Daniel | W. Chu |
| DETAILS | E. Gray | W. Chu |
| QUANTITIES | Z. Daniel | J. Ramirez |

PREPARED FOR THE STATE OF CALIFORNIA DEPARTMENT OF TRANSPORTATION

ERIC A. JOHNSON
PROJECT ENGINEER

BRIDGE NO. 55-0401
POST MILE 12.54

# KATELLA AVENUE UC (WIDEN)

## ABUTMENT 1 LAYOUT

DESIGN DETAIL SHEET (ENGLISH) (REV. 06-01-09)

ORIGINAL SCALE IN INCHES FOR REDUCED PLANS 0 1 2 3

CU 12231
EA 0F0401

DISREGARD PRINTS BEARING EARLIER REVISION DATES

REVISION DATES (PRELIMINARY STAGE ONLY) 10/09 2/10 5/10 6/10 8/10

SHEET 5 OF 21

FILE => 55-0401r-f-a01_lo1.add

USERNAME => trestrk DATE PLOTTED => 19-AUG-2011 TIME PLOTTED => 15:40

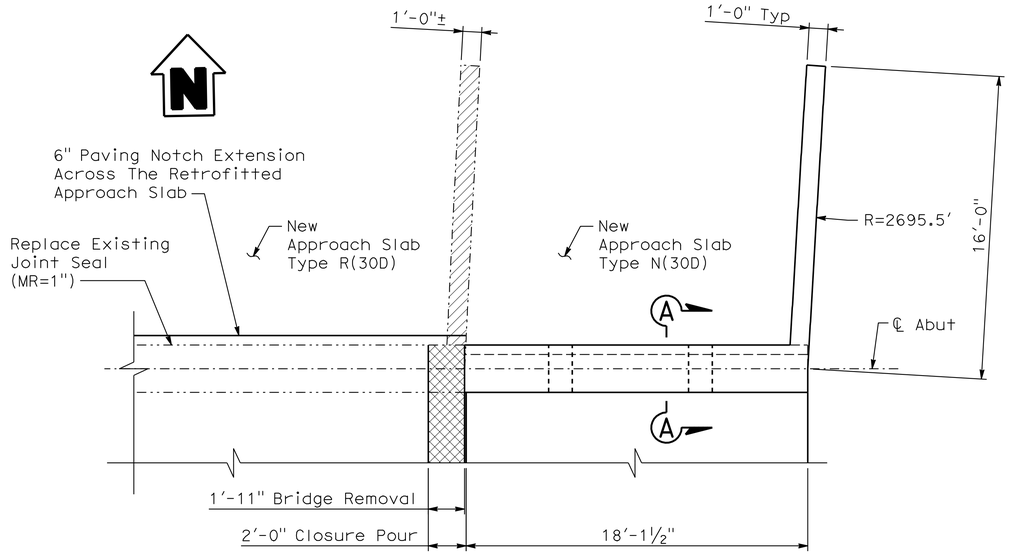


## PLAN

SCALE: ¼" = 1'-0"

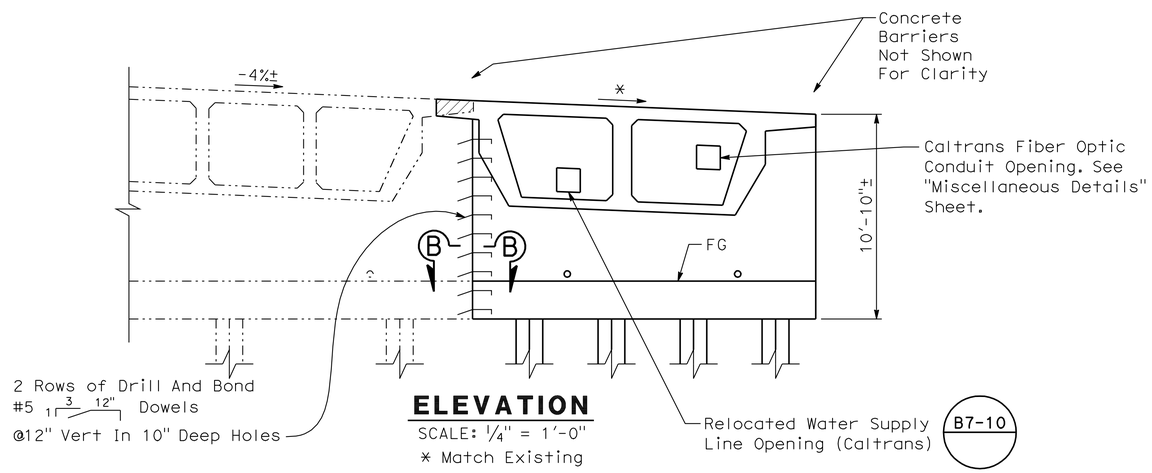


## ELEVATION

SCALE: ¼" = 1'-0"

* Match Existing

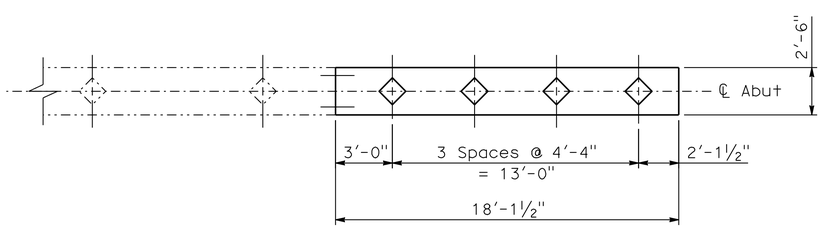


## PILE LAYOUT PLAN

SCALE: ¼" = 1'-0"

**NOTE:**

The Contractor Shall Verify All Controlling Field Dimensions Before Ordering Or Fabricating Any Materials.

## LEGEND

Indicates Bridge Removal (Portion)

Indicates Closure Pour

**Notes:**

1. For Section B-B, See "Abutment Details" Sheet.
2. For Section A-A, See "Abutment 1 Layout" Sheet.

1

| DIST | COUNTY | ROUTE | POST MILES TOTAL PROJECT | SHEET No | TOTAL SHEETS |
|---|---|---|---|---|---|
| 12 | Ora | 57 | 12.2/15.2 | 464 | 527 |

Eric A Johnson 08-09-10
REGISTERED CIVIL ENGINEER DATE

4-18-11
PLANS APPROVAL DATE

REGISTERED PROFESSIONAL ENGINEER
ERIC A. JOHNSON
No. C57355
Exp. 12/31/11
CIVIL
STATE OF CALIFORNIA

*The State of California or its officers or agents shall not be responsible for the accuracy or completeness of scanned copies of this plan sheet.*

OCTA
550 S. MAIN STREET
ORANGE, CA 92863

HDR ENGINEERING, INC.
3230 EL CAMINO REAL, SUITE 200
IRVINE, CA 92602-1377

1 **REVISED PER ADDENDUM No. 1 DATED AUGUST 22, 2011**

Sudhakar Vatti
DESIGN OVERSIGHT Sudhakar Vatti
8-12-11
SIGN OFF DATE

| | BY | CHECKED |
|---|---|---|
| DESIGN | Z. Daniel | W. Chu |
| DETAILS | E. Gray | W. Chu |
| QUANTITIES | Z. Daniel | J. Ramirez |

PREPARED FOR THE STATE OF CALIFORNIA DEPARTMENT OF TRANSPORTATION

ERIC A. JOHNSON
PROJECT ENGINEER

BRIDGE NO. 55-0401
POST MILE 12.54

# KATELLA AVENUE UC (WIDEN)
## ABUTMENT 3 LAYOUT

DESIGN DETAIL SHEET (ENGLISH) (REV. 06-01-09)

ORIGINAL SCALE IN INCHES FOR REDUCED PLANS 0 1 2 3

CU 12231
EA 0F0401

DISREGARD PRINTS BEARING EARLIER REVISION DATES

REVISION DATES (PRELIMINARY STAGE ONLY) 10/09 2/10 5/10 6/10 8/10

SHEET 6 OF 21

FILE => 55-0401r-f-a01_1o3.add

USERNAME => rtestrk DATE PLOTTED => 19-AUG-2011 TIME PLOTTED => 15:40

| DIST | COUNTY | ROUTE | POST MILES TOTAL PROJECT | SHEET No | TOTAL SHEETS |
|---|---|---|---|---|---|
| 12 | Ora | 57 | 12.2/15.2 | 466 | 527 |

1

Eric A Johnson 08-09-10
REGISTERED CIVIL ENGINEER DATE

4-18-11
PLANS APPROVAL DATE

REGISTERED PROFESSIONAL ENGINEER ERIC A. JOHNSON No. C57355 Exp. 12/31/11 CIVIL STATE OF CALIFORNIA

*The State of California or its officers or agents shall not be responsible for the accuracy or completeness of scanned copies of this plan sheet.*

OCTA
550 S. MAIN STREET
ORANGE, CA 92863

HDR ENGINEERING, INC.
3230 EL CAMINO REAL, SUITE 200
IRVINE, CA 92602-1377

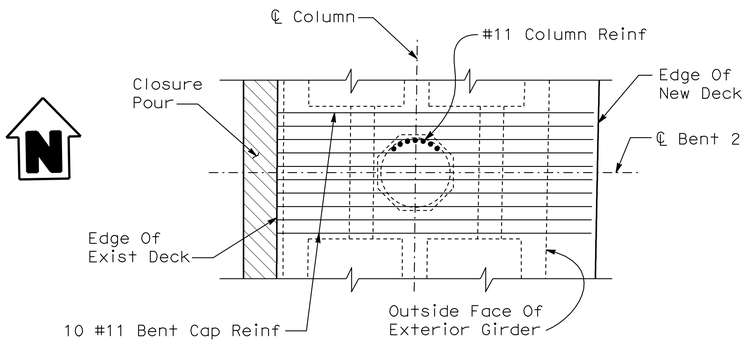


**PLAN**
SCALE: 1/4" = 1'-0"

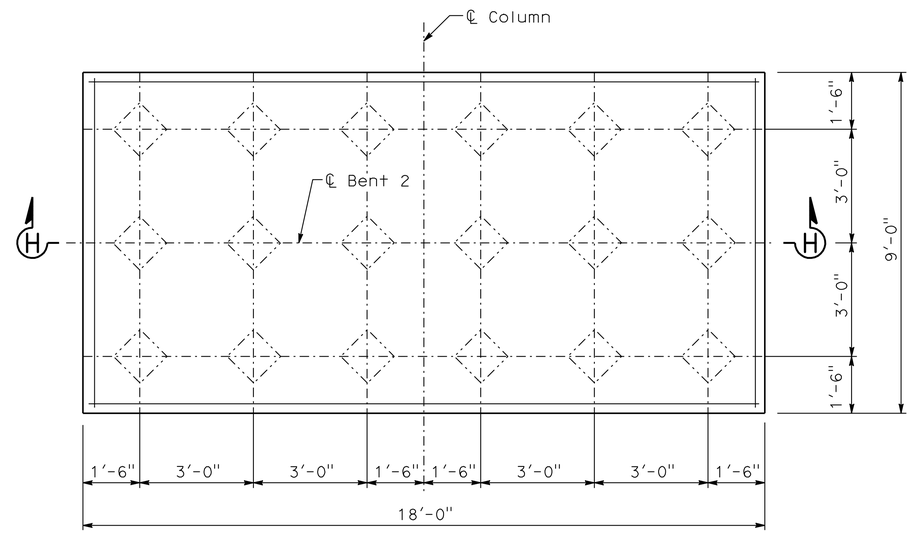


**FOOTING PLAN**
SCALE: 1/2" = 1'-0"

## LEGEND

Indicates Bridge Removal (Portion)

Indicates Closure Pour

NOTES:

1. For Section E-E And F-F, See "Bent Details" Sheet.
2. Hoops Shall Be Ultimately Spliced.

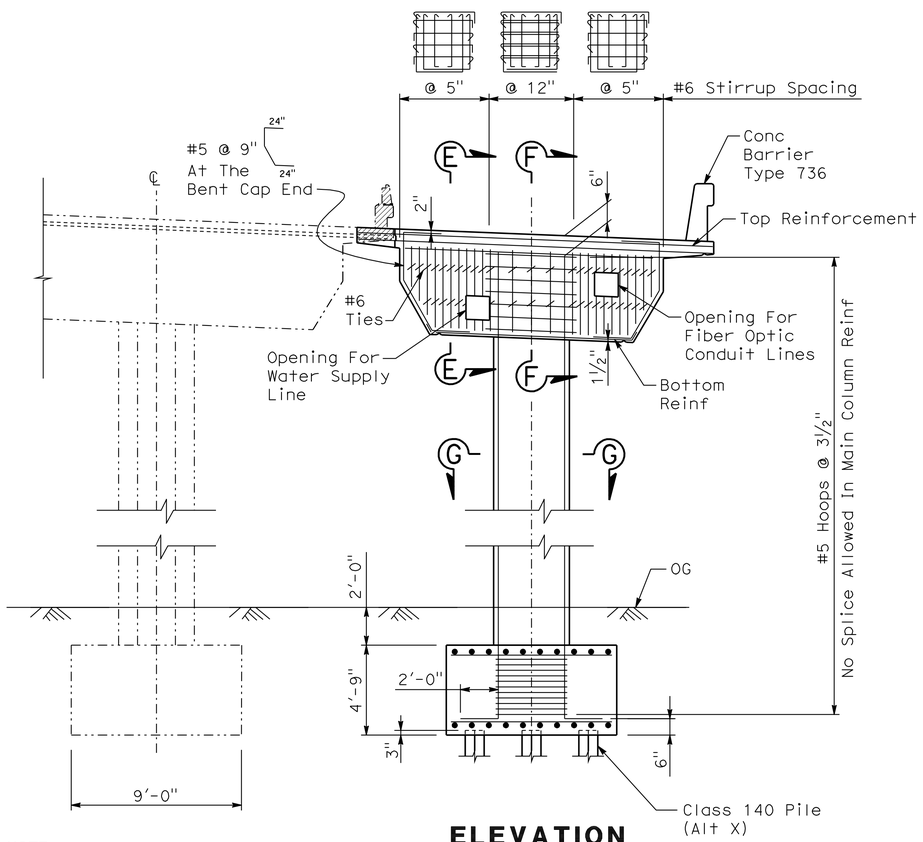


**ELEVATION**
SCALE: 1/4" = 1'-0"

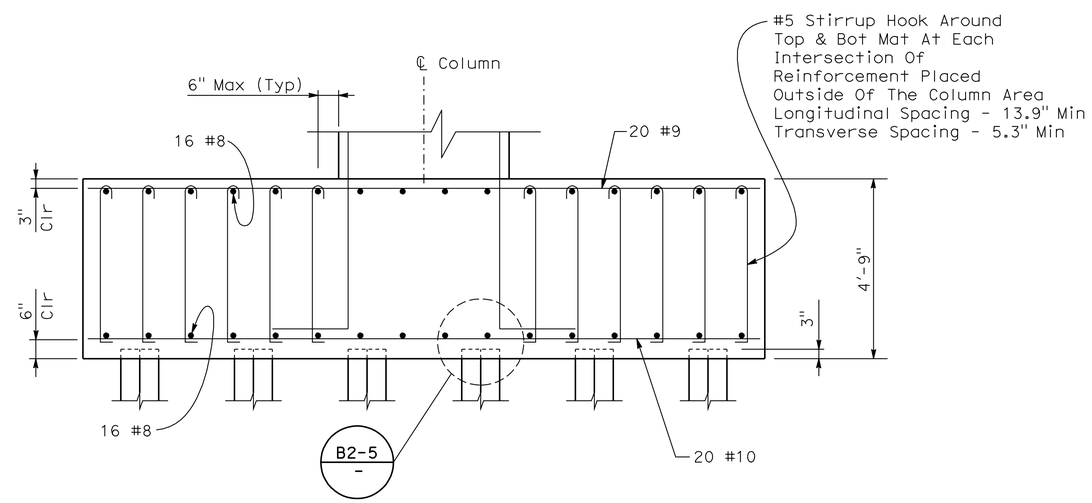


**SECTION H-H**
SCALE: 1/2" = 1'-0"

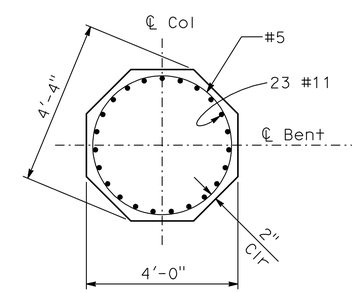


**SECTION G-G**
SCALE: 1/2" = 1'-0"

NOTE:

The Contractor Shall Verify All Controlling Field Dimensions Before Ordering Or Fabricating Any Materials.

1 **REVISED PER ADDENDUM No. 1 DATED AUGUST 22, 2011**

Sudhakar Vatti
DESIGN OVERSIGHT Sudhakar Vatti
8-12-11
SIGN OFF DATE

| | BY | CHECKED |
|---|---|---|
| DESIGN | Z. Daniel | W. Chu |
| DETAILS | E. Gray | W. Chu |
| QUANTITIES | Z. Daniel | J. Ramirez |

PREPARED FOR THE STATE OF CALIFORNIA DEPARTMENT OF TRANSPORTATION

ERIC A. JOHNSON
PROJECT ENGINEER

BRIDGE NO. 55-0401
POST MILE 12.54

# KATELLA AVENUE UC (WIDEN)
## BENT LAYOUT

DESIGN DETAIL SHEET (ENGLISH) (REV. 06-01-09)

ORIGINAL SCALE IN INCHES FOR REDUCED PLANS 0 1 2 3

CU 12231
EA 0F0401

DISREGARD PRINTS BEARING EARLIER REVISION DATES

REVISION DATES (PRELIMINARY STAGE ONLY) 10/09 2/10 5/10 6/10 8/10

SHEET 8 OF 21

FILE => 55-0401r-h-b01dt101.add

USERNAME => tr6ttk DATE PLOTTED => 19-AUG-2011 TIME PLOTTED => 15:40

| DIST | COUNTY | ROUTE | POST MILES TOTAL PROJECT | SHEET No | TOTAL SHEETS |
|---|---|---|---|---|---|
| 12 | Ora | 57 | 12.2/15.2 | 468 | 527 |

REGISTERED CIVIL ENGINEER 08-09-10 DATE

4-18-11
PLANS APPROVAL DATE

REGISTERED PROFESSIONAL ENGINEER ERIC A. JOHNSON No. C57355 Exp. 12/31/11 CIVIL STATE OF CALIFORNIA

*The State of California or its officers or agents shall not be responsible for the accuracy or completeness of scanned copies of this plan sheet.*

OCTA
550 S. MAIN STREET
ORANGE, CA 92863

HDR ENGINEERING, INC.
3230 EL CAMINO REAL, SUITE 200
IRVINE, CA 92602-1377

## LEGEND

1

- Indicates Existing Structure
- Indicates New Construction
- Indicates Bridge Removal (Portion)
- Indicates Closure Pour

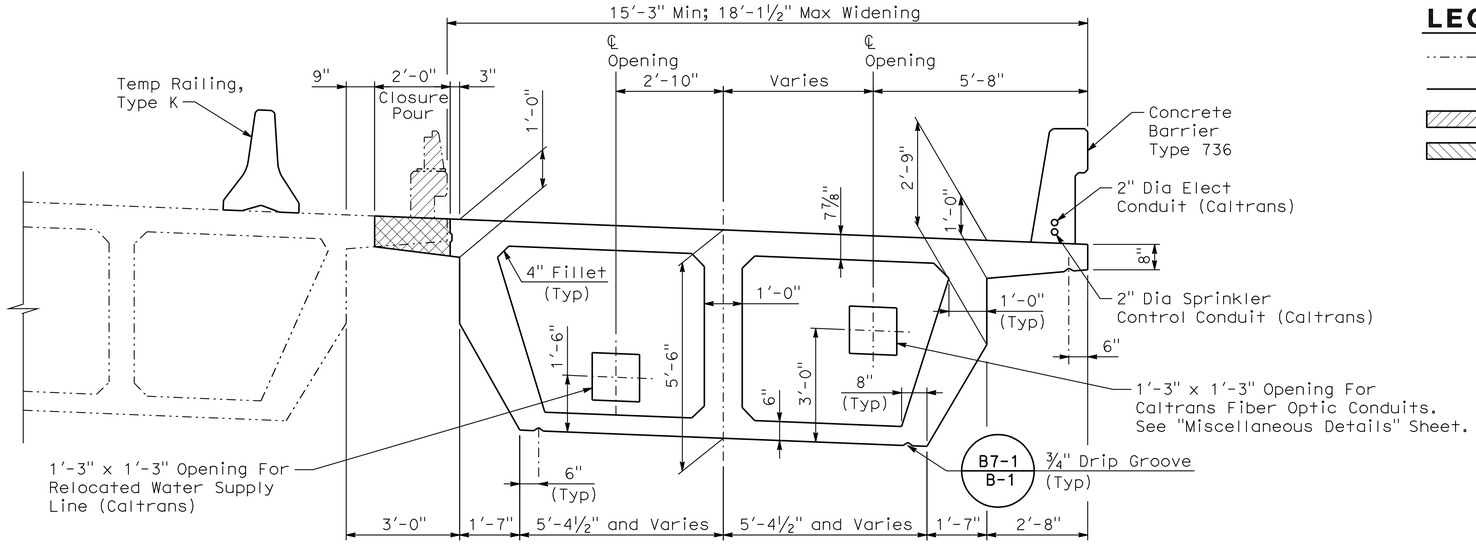


## TYPICAL SECTION

B7-1 / - B14-5 / -

SCALE: ½"=1'-0"

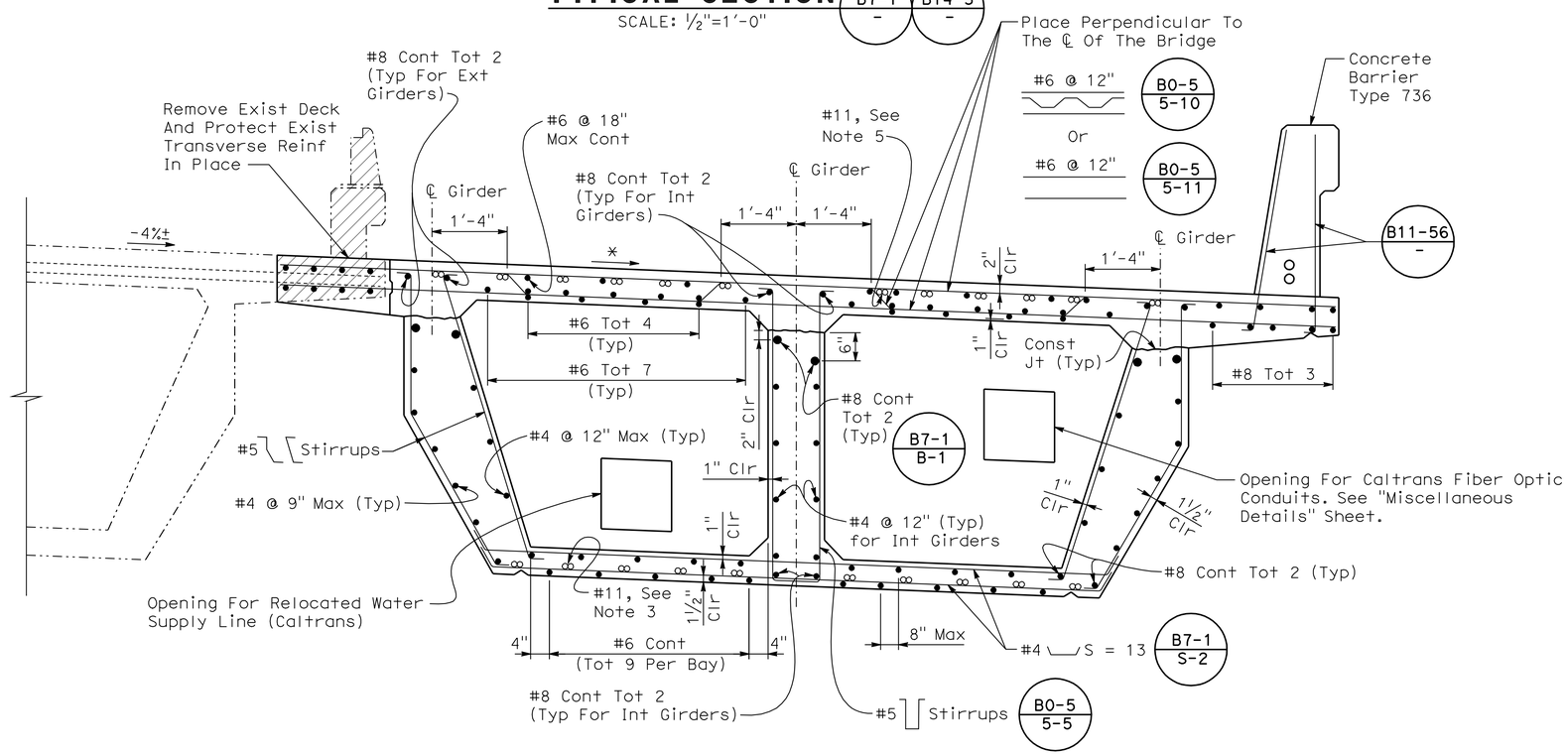


## TYPICAL SECTION

B0-5 / - B7-1 / - B7-10 / - B11-56 / -

SCALE: ¾"=1'-0"

* Match Existing

## NOTES:

1. Interior Web Is Vertical.
2. Existing Transverse Bars At Closure Pour Shall Be Retained.
3. For Additional Reinforcement Details, See "Girder Reinforcement" Sheet.
4. Falsework Release:
   Alternative 1:
   Falsework Shall Be Released As Soon As Permitted By The Specifications. Closure Pour Shall Not Be Placed Sooner Than 60 Days After The Falsework Has Been Released.

   Alternative 2:
   Falsework Shall Not Be Released Less Than 28 Days After The Last Concrete Has Been Placed. Closure Pour Shall Not Be Placed Sooner Than 14 Days After The Falsework Has Been Released. When Falsework Release Alt 2 Is Used, Camber Values Are 0.75 Times Those Shown.

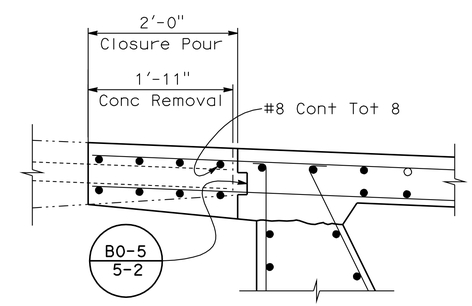


## CLOSURE POUR DETAIL

NO SCALE

## NOTE:

The Contractor Shall Verify All Controlling Field Dimensions Before Ordering Or Fabricating Any Materials.

1 **REVISED PER ADDENDUM No. 1 DATED AUGUST 22, 2011**

Sudhakar Vatti
DESIGN OVERSIGHT Sudhakar Vatti
8-12-11
SIGN OFF DATE

| | BY | CHECKED |
|---|---|---|
| DESIGN | Z. Daniel | W. Chu |
| DETAILS | E. Gray | W. Chu |
| QUANTITIES | Z. Daniel | J. Ramirez |

PREPARED FOR THE STATE OF CALIFORNIA DEPARTMENT OF TRANSPORTATION

ERIC A. JOHNSON
PROJECT ENGINEER

BRIDGE NO. 55-0401
POST MILE 12.54

# KATELLA AVENUE UC (WIDEN)

## TYPICAL SECTION

DESIGN DETAIL SHEET (ENGLISH) (REV. 06-01-09)

ORIGINAL SCALE IN INCHES FOR REDUCED PLANS 0 1 2 3

CU 12231
EA 0F0401

DISREGARD PRINTS BEARING EARLIER REVISION DATES

REVISION DATES (PRELIMINARY STAGE ONLY) ~~10/09~~ ~~2/10~~ ~~5/10~~ ~~6/10~~ 8/10

SHEET 10 OF 21

FILE => 55-0401r-k-ts01.add

USERNAME => tfrstrk DATE PLOTTED => 19-AUG-2011 TIME PLOTTED => 15:40

| DIST | COUNTY | ROUTE | POST MILES TOTAL PROJECT | SHEET No | TOTAL SHEETS |
|---|---|---|---|---|---|
| 12 | Ora | 57 | 12.2/15.2 | 469 | 527 |

REGISTERED CIVIL ENGINEER — DATE 08-09-10

4-18-11
PLANS APPROVAL DATE

REGISTERED PROFESSIONAL ENGINEER — ERIC A. JOHNSON — No. C57355 — Exp. 12/31/11 — CIVIL — STATE OF CALIFORNIA

*The State of California or its officers or agents shall not be responsible for the accuracy or completeness of scanned copies of this plan sheet.*

OCTA
550 S. MAIN STREET
ORANGE, CA 92863

HDR ENGINEERING, INC.
3230 EL CAMINO REAL, SUITE 200
IRVINE, CA 92602-1377

1

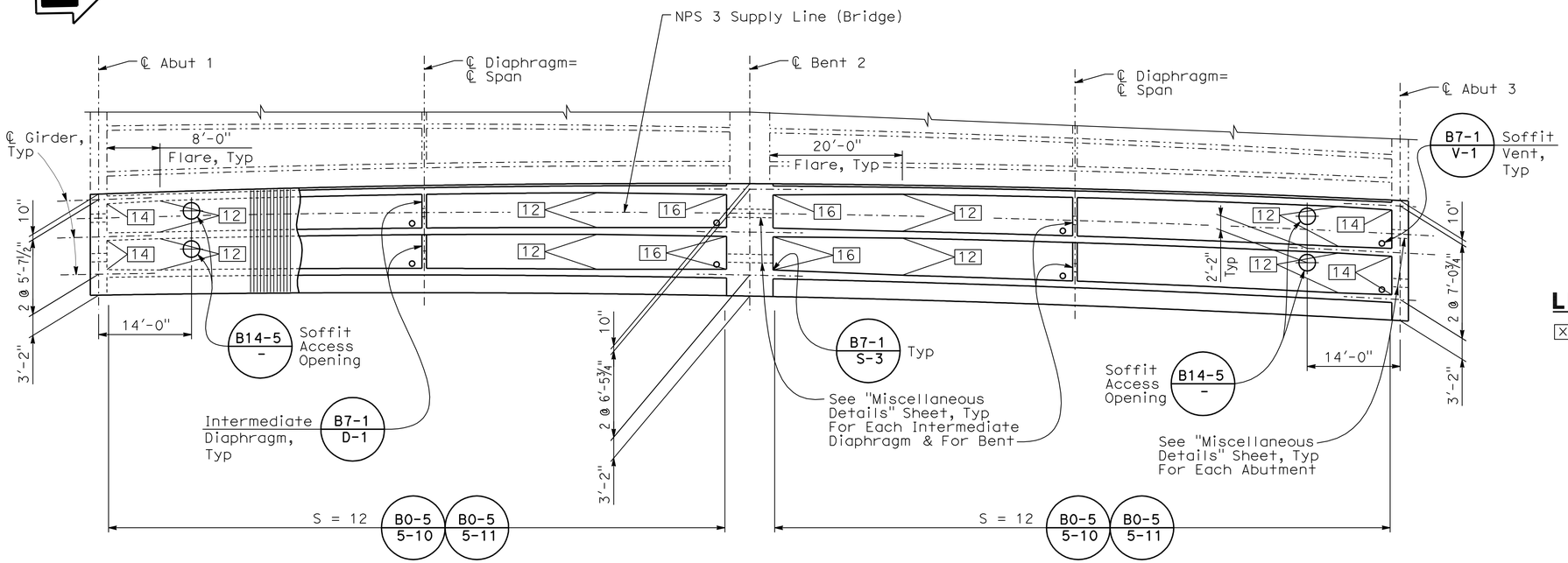


## GIRDER LAYOUT

1"=10'-0"

B0-5 - | B7-1 - | B7-10 - | B14-5 -

## LEGEND

XX Indicates Girder Stem Width

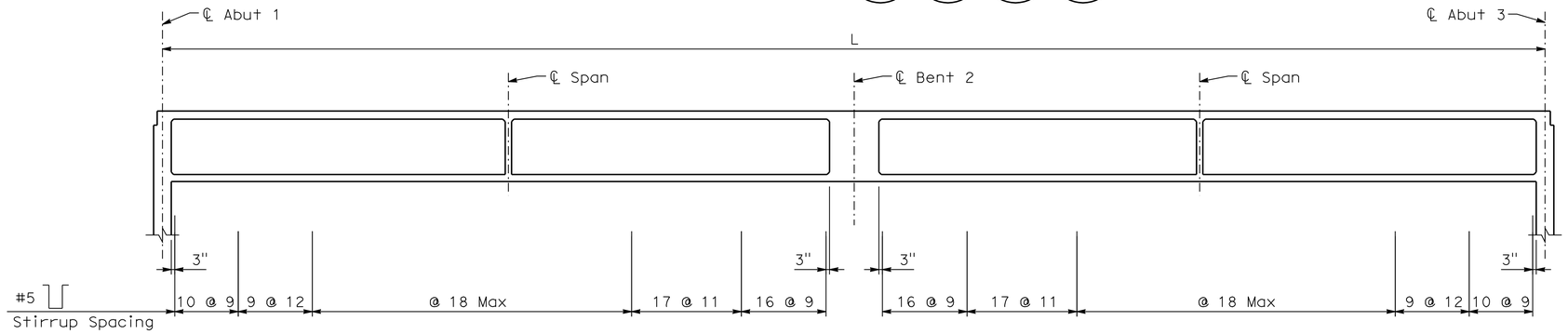


## LONGITUDINAL SECTION

No Scale

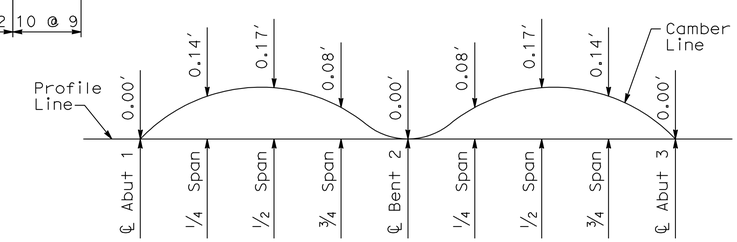


## CAMBER DIAGRAM

No Scale

Camber Diagram Does Not Include Allowance For Falsework Settlement.

**NOTE:**

The Contractor Shall Verify All Controlling Field Dimensions Before Ordering Or Fabricating Any Materials.

1 **REVISED PER ADDENDUM No. 1 DATED AUGUST 22, 2011**

Sudhakar Vatti
DESIGN OVERSIGHT — Sudhakar Vatti
8-12-11
SIGN OFF DATE

| | BY | CHECKED |
|---|---|---|
| DESIGN | Z. Daniel | W. Chu |
| DETAILS | E. Gray | W. Chu |
| QUANTITIES | Z. Daniel | J. Ramirez |

PREPARED FOR THE STATE OF CALIFORNIA DEPARTMENT OF TRANSPORTATION

ERIC A. JOHNSON
PROJECT ENGINEER

CU 12231
EA 0F0401

BRIDGE NO. 55-0401
POST MILE 12.54

# KATELLA AVENUE UC (WIDEN)

## GIRDER LAYOUT

DISREGARD PRINTS BEARING EARLIER REVISION DATES — REVISION DATES (PRELIMINARY STAGE ONLY) 10/09 2/10 5/10 6/10 8/10

SHEET 11 OF 21

DESIGN DETAIL SHEET (ENGLISH) (REV. 06-01-09)

ORIGINAL SCALE IN INCHES FOR REDUCED PLANS 0 1 2 3

FILE => 55-0401r-l-gl01.add

USERNAME => ttstrk DATE PLOTTED => 19-AUG-2011 TIME PLOTTED => 15:41

| DIST | COUNTY | ROUTE | POST MILES TOTAL PROJECT | SHEET No | TOTAL SHEETS |
|---|---|---|---|---|---|
| 12 | Ora | 57 | 12.2/15.2 | 470 | 527 |

Eric A Johnson 08-09-10
REGISTERED CIVIL ENGINEER DATE

4-18-11
PLANS APPROVAL DATE

REGISTERED PROFESSIONAL ENGINEER
ERIC A. JOHNSON
No. C57355
Exp. 12/31/11
CIVIL
STATE OF CALIFORNIA

*The State of California or its officers or agents shall not be responsible for the accuracy or completeness of scanned copies of this plan sheet.*

OCTA
550 S. MAIN STREET
ORANGE, CA 92863

HDR ENGINEERING, INC.
3230 EL CAMINO REAL, SUITE 200
IRVINE, CA 92602-1377

1

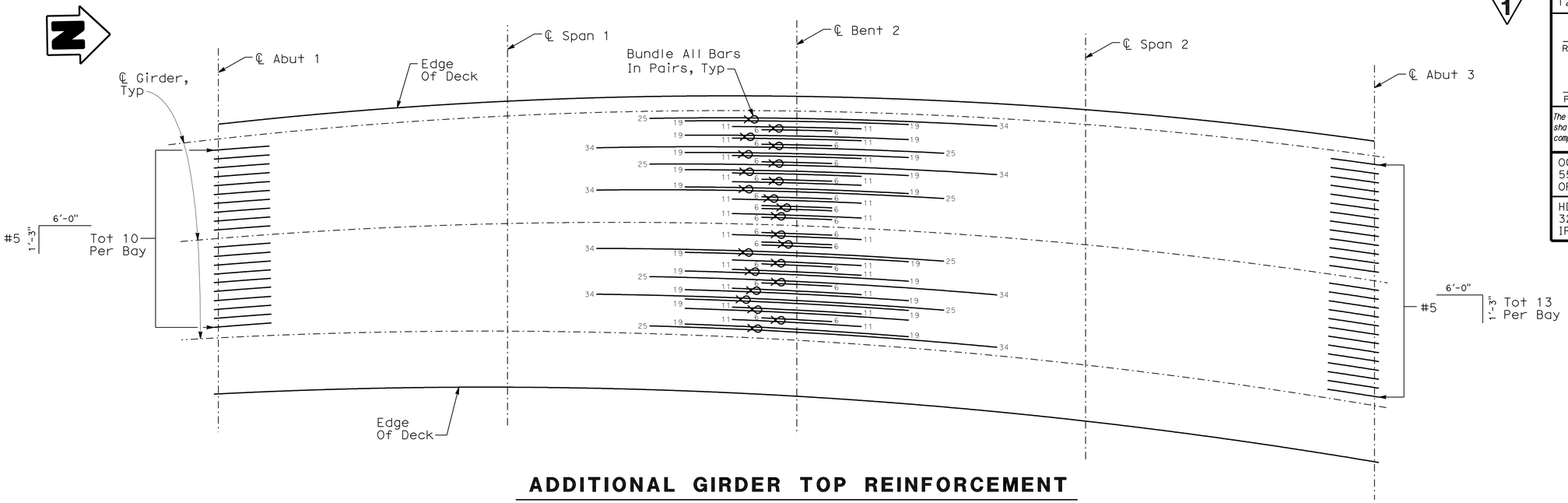


## ADDITIONAL GIRDER TOP REINFORCEMENT

No Scale

### Notes:

1. All Bars #11 Except As Noted. Numbers At End Of Bars Indicate Length In Feet From ℄ Bent For Top Reinforcement And From ℄ Span For Bottom Reinforcement.
2. Splicing Of Top Reinforcement Not Allowed.
3. Splicing Of Bottom Reinforcement Not Permitted In The Regions Shown On Plan. All Other Areas Shall Have "Service" Or Lap Splice With Min Of 87 Inches.

### LEGEND

⊗ Indicates Horizontally Bundled Bars

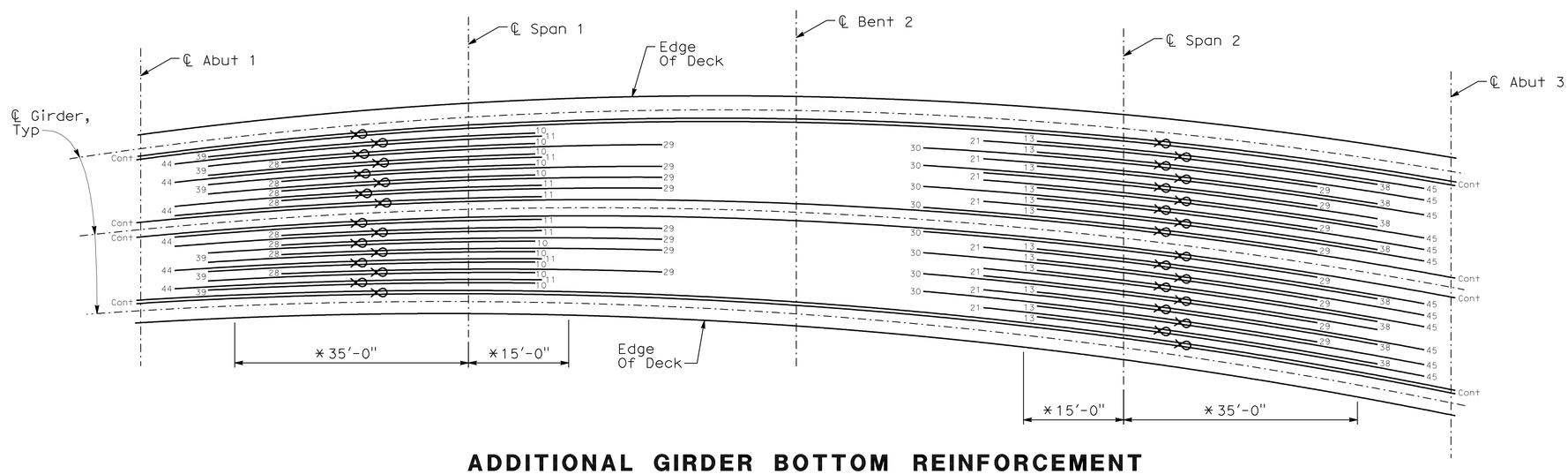


## ADDITIONAL GIRDER BOTTOM REINFORCEMENT

No Scale

* No Splices Permitted In This Region

**NOTE:**

The Contractor Shall Verify All Controlling Field Dimensions Before Ordering Or Fabricating Any Materials.

1 **REVISED PER ADDENDUM No. 1 DATED AUGUST 22, 2011**

Sudhakar Vatti
DESIGN OVERSIGHT Sudhakar Vatti
8-12-11
SIGN OFF DATE

| | BY | CHECKED |
|---|---|---|
| DESIGN | Z. Daniel | W. Chu |
| DETAILS | E. Gray | W. Chu |
| QUANTITIES | Z. Daniel | J. Ramirez |

PREPARED FOR THE STATE OF CALIFORNIA DEPARTMENT OF TRANSPORTATION

ERIC A. JOHNSON
PROJECT ENGINEER

BRIDGE NO. 55-0401
POST MILE 12.54

# KATELLA AVENUE UC (WIDEN)
# GIRDER REINFORCEMENT

DESIGN DETAIL SHEET (ENGLISH) (REV. 06-01-09)

ORIGINAL SCALE IN INCHES FOR REDUCED PLANS 0 1 2 3

CU 12231
EA 0F0401

DISREGARD PRINTS BEARING EARLIER REVISION DATES

REVISION DATES (PRELIMINARY STAGE ONLY) 10/09 2/10 5/10 6/10 8/10

SHEET 12 OF 21

FILE => 55-0401r-o-gir_rf01.add

USERNAME => trestrk DATE PLOTTED => 19-AUG-2011 TIME PLOTTED => 15:41

| DIST | COUNTY | ROUTE | POST MILES TOTAL PROJECT | SHEET No | TOTAL SHEETS |
|---|---|---|---|---|---|
| 12 | Ora | 57 | 12.2/15.2 | 508 | 527 |

Eric A. Johnson 08-09-10
REGISTERED CIVIL ENGINEER DATE

4-18-11
PLANS APPROVAL DATE

REGISTERED PROFESSIONAL ENGINEER ERIC A. JOHNSON No. C57355 Exp. 12/31/11 CIVIL STATE OF CALIFORNIA

*The State of California or its officers or agents shall not be responsible for the accuracy or completeness of scanned copies of this plan sheet.*

OCTA
550 S. MAIN STREET
ORANGE, CA 92863

HDR ENGINEERING, INC.
3230 EL CAMINO REAL, SUITE 200
IRVINE, CA 92602-1377

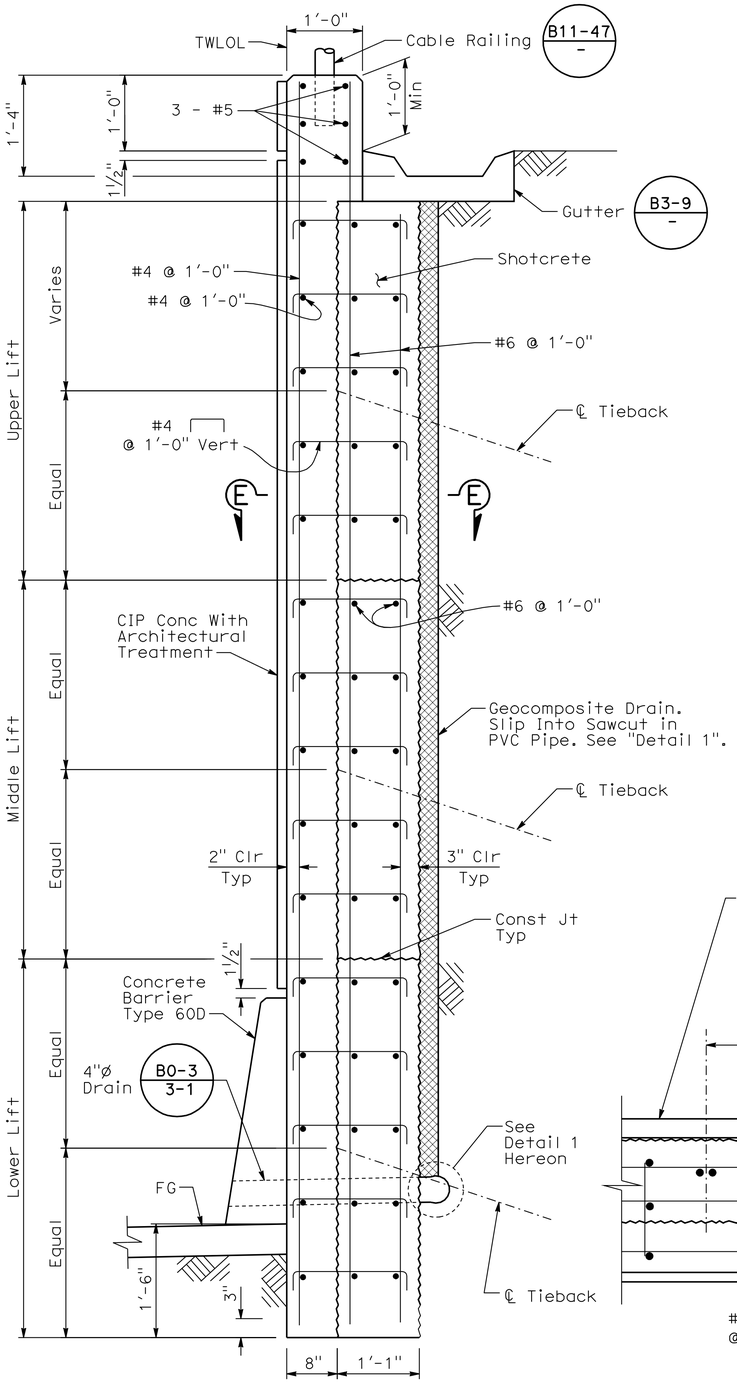


## SECTION A-A

SCALE 1"=1'-0"
Sections B-B and C-C Similar

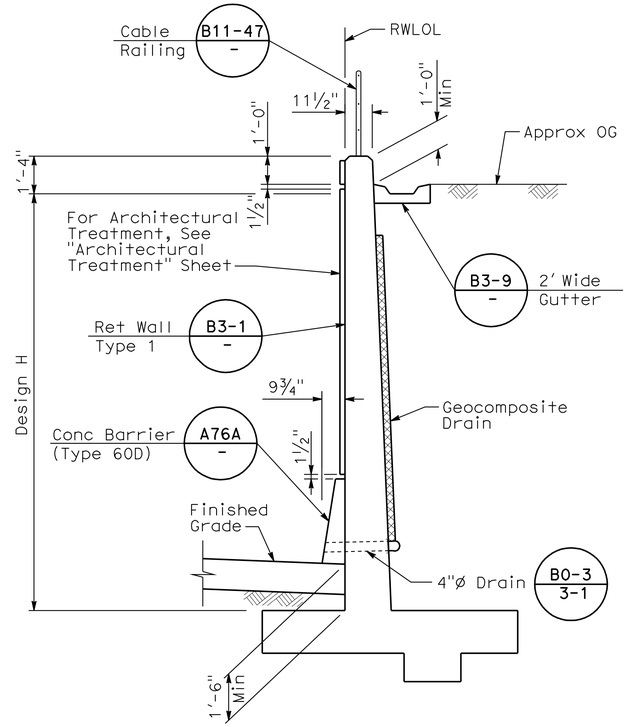


## SECTION D-D

SCALE ⅜" =1'-0"

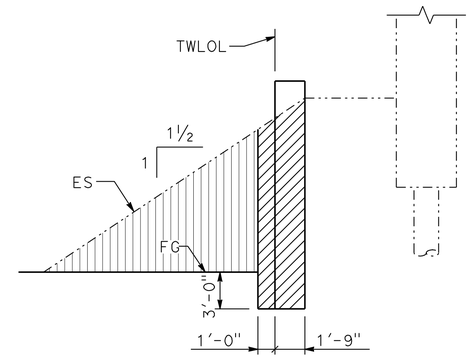


## EXCAVATION

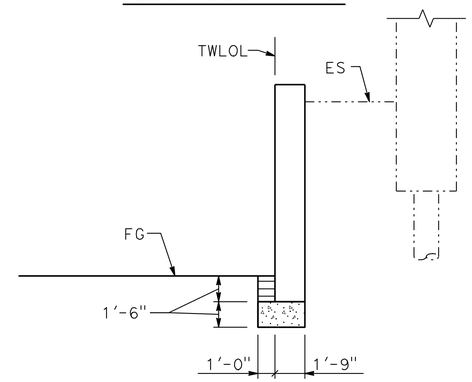


## BACKFILL

## LIMITS OF PAYMENT FOR TIEBACK WALL EXCAVATION AND BACKFILL

NO SCALE

1 REVISED PER ADDENDUM No. 1 DATED AUGUST 22, 2011

LEGEND:

- Indicates Structure Excavation (Tieback Wall)
- Indicates Structure Backfill (Tieback Wall)
- Indicates Lean Concrete Backfill
- Indicates Roadway Excavation

NOTES:

1. All Vertical Reinf In The Lift Shall Be Prepared For Coupling Depending On The Type Of Approved Coupler Used.
2. All Couplers Shall Be Protected With Approved Internal Coupler Protector At The End Of Next Lift Reinf.

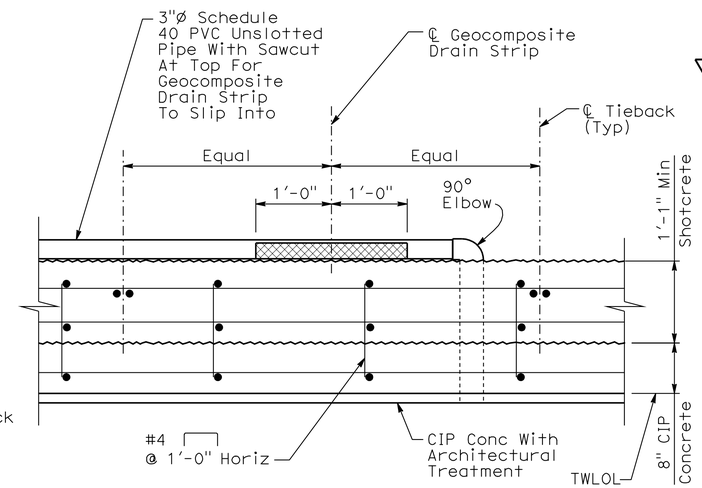


## SECTION E-E

SCALE 1"=1'-0"

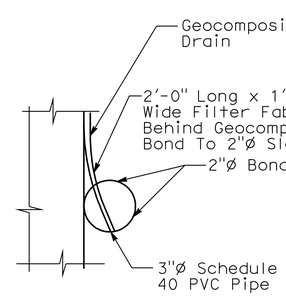


## DETAIL 1

NO SCALE

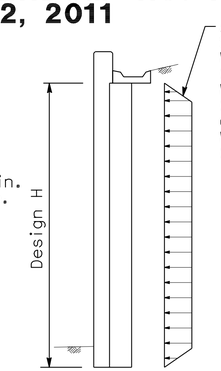


## LOADING DIAGRAM AT REST

NO SCALE

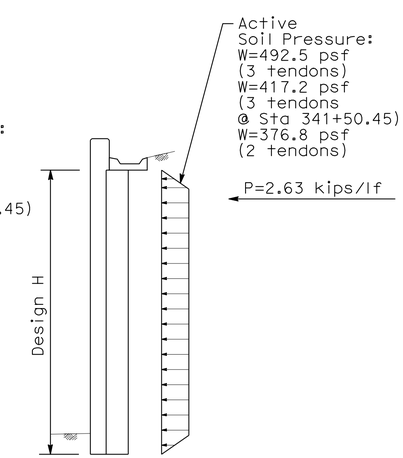


## LOADING DIAGRAM WITH EARTHQUAKE LOAD

NO SCALE

Sudhakar Vatti
DESIGN OVERSIGHT Sudhakar Vatti
8-12-11
SIGN OFF DATE

| | BY | CHECKED |
|---|---|---|
| DESIGN | D. Peavey | E. Johnson |
| DETAILS | E. Gray | E. Johnson |
| QUANTITIES | D. Peavey | E. Johnson |

PREPARED FOR THE STATE OF CALIFORNIA DEPARTMENT OF TRANSPORTATION

ERIC A. JOHNSON
PROJECT ENGINEER

BRIDGE NO. 55E0112
POST MILE 13.9

# WAGNER AVE OC - RET WALL
# RETAINING WALL SECTIONS

DESIGN DETAIL SHEET (ENGLISH) (REV. 06-01-09)

ORIGINAL SCALE IN INCHES FOR REDUCED PLANS 0 1 2 3

CU 12231
EA 0F0401

DISREGARD PRINTS BEARING EARLIER REVISION DATES

REVISION DATES (PRELIMINARY STAGE ONLY) 10/09 2/10 5/10 6/10 8/10

SHEET 5 OF 12

FILE => 55E0112r-f-rw_1o02.add

USERNAME => trestrk DATE PLOTTED => 19-AUG-2011 TIME PLOTTED => 15:41

| DIST | COUNTY | ROUTE | POST MILES TOTAL PROJECT | SHEET No | TOTAL SHEETS |
|---|---|---|---|---|---|
| 12 | Ora | 57 | 12.2/15.2 | 519 | 527 |

1

Eric A Johnson 08-09-10
REGISTERED CIVIL ENGINEER DATE

4-18-11
PLANS APPROVAL DATE

REGISTERED PROFESSIONAL ENGINEER ERIC A. JOHNSON No. C57355 Exp. 12/31/11 CIVIL STATE OF CALIFORNIA

*The State of California or its officers or agents shall not be responsible for the accuracy or completeness of scanned copies of this plan sheet.*

OCTA
550 S. MAIN STREET
ORANGE, CA 92863

HDR ENGINEERING, INC.
3230 EL CAMINO REAL, SUITE 200
IRVINE, CA 92602-1377

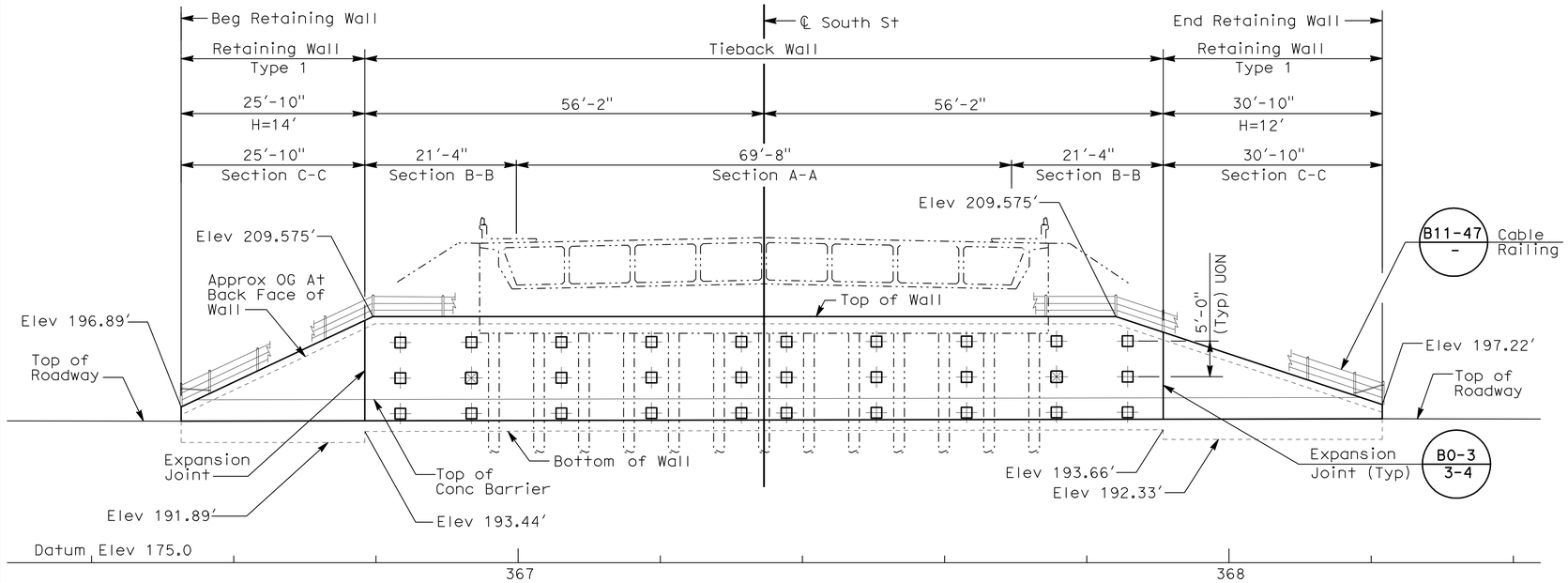


## ELEVATION

SCALE 1"=10'

Note: For Sections A-A, B-B, And C-C, See "Retaining Wall Section" Sheet

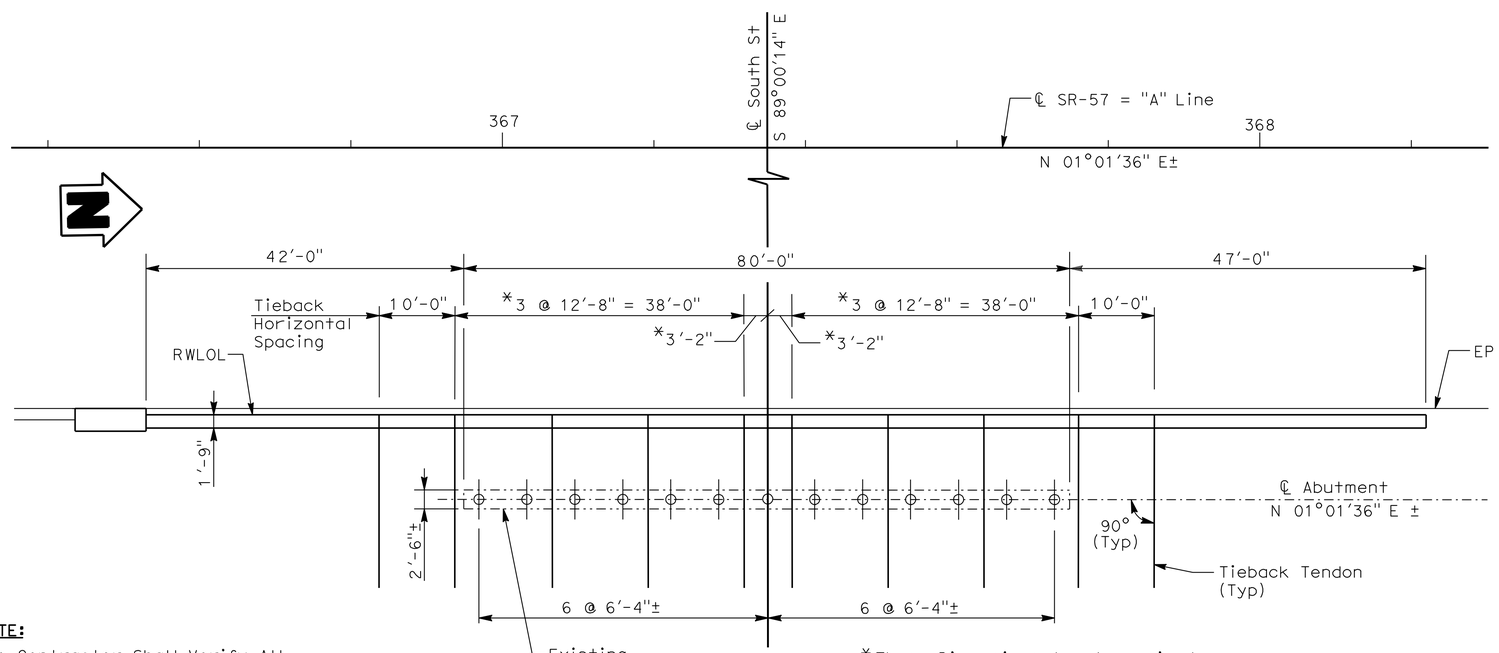


## PLAN

SCALE 1"=10'

**NOTE:**

The Contractor Shall Verify All Controlling Field Dimensions Before Ordering Or Fabricating Any Materials.

*These Dimensions Are Approximate. After Contractor Verification Of Existing Pile Locations, The Tieback Shall Be Placed Centered Between The Adjacent Piles.

## LEGEND

Indicates Existing 16" CIDH Piles.

Indicates Location Of Tieback Assembly Or As Directed By The Engineer.

Tiebacks # 1-10 Top Row (10° Inclination)
Tiebacks # 11-20 Middle Row (10° Inclination)
Tiebacks # 21-30 Bottom Row
Tiebacks # 21, 22, 29, 30 Drilled At 45°
Tiebacks # 23-28 Drilled At 35°

Indicates Location Of Tieback Assembly Requiring Performance Test Or As Directed By The Engineer.

## NOTES:

1. Prior To Installing Tiebacks, Contractor Shall Verify The Existing Footing And Pile Locations By Exposing, By Hand, One Pile At Each End Of Each Abutment.

## TIEBACK DESIGN FORCE TABLE

| Tieback Wall Name | Tieback Wall Section | Tieback Location (Station) | Lift Ht (Ft) / T (Kip) Upper | Lift Ht (Ft) / T (Kip) Middle | Lift Ht (Ft) / T (Kip) Lower |
|---|---|---|---|---|---|
| 55E0113 | A-A | 366+99.75 To 367+69.42 | 4.7 / 47.7 | 5 / 25.8 | 5 / 25.9 |
| | B-B | 366+78.42 To 366+99.75 | 4.7 / 16.2 | 5 / 20.4 | 5 / 23.7 |
| | B-B | 367+69.42 To 367+90.75 | 4.7 / 16.2 | 5 / 20.4 | 5 / 23.7 |

1 **REVISED PER ADDENDUM No. 1 DATED AUGUST 22, 2011**

Sudhakar Vatti
DESIGN OVERSIGHT Sudhakar Vatti
8-12-11
SIGN OFF DATE

| | BY | CHECKED |
|---|---|---|
| DESIGN | D. Peavey | E. Johnson |
| DETAILS | E. Gray | E. Johnson |
| QUANTITIES | D. Peavey | E. Johnson |

PREPARED FOR THE STATE OF CALIFORNIA DEPARTMENT OF TRANSPORTATION

ERIC A. JOHNSON
PROJECT ENGINEER

BRIDGE NO. 55E0113
POST MILE 14.4

# SOUTH ST OC - RET WALL
# RETAINING WALL LAYOUT

DESIGN DETAIL SHEET (ENGLISH) (REV. 06-01-09)

ORIGINAL SCALE IN INCHES FOR REDUCED PLANS 0 1 2 3

CU 12231
EA 0F0401

DISREGARD PRINTS BEARING EARLIER REVISION DATES

REVISION DATES (PRELIMINARY STAGE ONLY) 10/09 2/10 5/10 6/10 8/10

SHEET 4 OF 12

FILE => 55E0113r-f-rw_lo01.add

USERNAME => trstrk DATE PLOTTED => 19-AUG-2011 TIME PLOTTED => 15:41